Body and Equipment Mounting Manual

Ford**Ranger** 2011.5

Date of Publication: 05/2011

Body and Equipment Mounting Manual Ford Ranger 2011.5

1 General Information

1.1 About This Manual.....4
1.1.1 Introduction.....4
1.1.2 Important Safety Instructions.....4
1.1.3 Warnings, Cautions and Notes in This Manual.....4
1.1.4 How to Use This Manual.....4
1.2 Commercial and Legal Aspects.....5
1.2.1 Terminology.....5
1.2.2 Warranty on Ford Vehicles.....5
1.2.3 Legal and Vehicle Type Approval.....5
1.2.4 Alternative Type Approval.....5
1.2.5 Legal Obligations and Liabilities.....5
1.2.6 General Product Safety Requirement.....5
1.2.7 Product Liability.....6
1.2.8 Restraints System.....6
1.2.9 Drilling and Welding.....6
1.2.10 Minimum Requirements for Brake system and Load Apportioning Valves 6
1.2.11 Road Safety.....6
1.3 Conversion Homologation.....7
1.4 Electromagnetic Compatibility (EMC).....8
1.4.1 Suggested Antenna Location.....9
1.5 Vehicle Duty Cycle Guidelines.....10
1.5.1 Conversion Affect on Fuel Economy and Performance.....10
1.5.2 Vehicle Ride and Handling Attributes.....10
1.6 Jacking.....11
1.7 Lifting.....13
1.8 Noise, Vibration and Harshness (NVH).....14
1.9 Vehicle Transportation Aids and Vehicle Storage.....15
1.10 Package and Ergonomics.....16
1.10.1 General Component Package Guidelines.....16
1.10.2 Driver Reach Zones.....16
1.10.3 Driver Field of View.....16
1.10.4 Conversion Affects on Parking Aids.....16
1.10.5 Aids for Vehicle Entry and Exit.....16
1.11 Package and Ergonomics—Specifications.....17
1.11.1 Recommended Body Dimensions.....17
1.11.2 Chassis Cab Body - Basic Dimensions and Weights.....19
1.11.3 Kerb Weights.....21
1.11.4 Front, Rear and Side Under-run Protection.....22
1.12 Hardware—Specifications.....23
1.13 Load Distribution—Specifications.....24
1.13.1 Load Distribution Calculations - Driver and Passenger Weight Distribution.....24
1.13.2 Center of Gravity.....26
1.14 Towing.....29
1.14.1 Towing Requirements.....29
1.14.2 Towing.....29
1.14.3 Towing capacities.....29
1.14.4 Towing Specifications.....30

2 Chassis

2.1 Suspension System.....31

4 Electrical

4.1 Battery and Cables.....32
4.1.1 Battery Information.....32
4.1.2 Generator and Alternator.....33
4.2 Exterior Lighting.....34
4.2.1 Reversing Lamps.....34
4.2.2 Additional External Lamps.....34
4.2.3 Lamps – Hazard / Direction Indication.....34
4.2.4 Electrically operated Door Mirrors.....34

5 Body and Paint

5.1 Body.....35
5.1.1 Body Structures - General Information.....35
5.1.2 Integrated Bodies and Conversions.....35
5.1.3 Chassis Cab.....36
5.1.4 Front End Integrity for Cooling, Crash, Aerodynamics and Lighting.....42
5.1.5 Tipper Bodies.....42
5.1.6 Tank and Dry Bulk Carriers.....42
5.1.7 Roof Racks.....43
5.2 Air Bag Supplemental Restraint System (SRS).....45
5.2.1 Air Bags.....45
5.3 Safety Belt System.....48
5.4 Corrosion Prevention.....49
5.4.1 General.....49
5.4.2 Repairing Damaged Paint.....49
5.4.3 Under Body Protection and Material.....49
5.4.4 Painting Road Wheels.....49
5.4.5 Contact Corrosion.....49
5.5 Frame and Body Mounting.....50
5.5.1 Mounting Points and Tubing.....50
5.5.2 Self-Supporting Body Structure.....51
5.5.3 Frame Drilling and Tube Reinforcing.....52
5.5.4 Ancillary Equipment - Sub Frame Mounting.....52
5.5.5 Area for Fitting Additional Body Attachments to the Rear of the Bumper. 52
5.5.6 Water Tank on Camper Vehicles.....53

1 General Information

1.1 About This Manual

1.1.1 Introduction

This manual has been written in a format that is designed to meet the needs of Vehicle Converters. The objective is to use common formats with the workshop manual which is used by technicians worldwide.

This guide is published by Ford and provides general descriptions and advice for converting vehicles. These requirements must be complied with before a Ford Dealer should take delivery of motor vehicle accessories from an external supplier either for themselves or on behalf of a motor vehicle client.

It must be emphasized that any change to the basic vehicle which does not meet the enclosed guideline standards may severely inhibit the ability of the vehicle to perform its function. Mechanical failures, structure failure, component unreliability or vehicle instability will lead to customer dissatisfaction. Appropriate design and application of body, equipment and or accessories is key to ensuring that customer satisfaction is not adversely affected.

The information contained within this publication takes the form of recommendations to be followed when vehicle modifications are undertaken. It must be remembered that certain modifications may invalidate legal approvals and application for re-certification may be necessary.

Ford cannot guarantee the operation of the vehicle if non-Ford approved electrical systems are installed. Ford electrical systems are designed and tested to function under operational extremes, and have been subjected to the equivalent of ten years of driving under such conditions.

1.1.2 Important Safety Instructions

Appropriate conversion procedures are essential for the safe, reliable operation of all vehicles as well as the personal safety of the individual carrying out the work.

This manual cannot possibly anticipate all such variations and provide advice or cautions as to each. Anyone who departs from the instructions provided in this manual must first establish that he compromises neither his personal safety nor the vehicle integrity by his choice of methods, tools or components.

1.1.3 Warnings, Cautions and Notes in This Manual

WARNING: Warnings are used to indicate that failure to follow a procedure correctly may result in personal injury.

CAUTION: Cautions are used to indicate that failure to follow a procedure correctly may result in damage to the vehicle or equipment being used.

NOTE: Notes are used to provide additional essential information required to carry out a complete and satisfactory repair.

As you read through this manual, you will come across WARNINGS, CAUTIONS and NOTES.

A warning, caution or note is placed at the beginning of a series of steps if it applies to multiple steps. If the warning, caution or note only applies to one step, it is placed at the beginning of the specific step (after the step number).

1.1.4 How to Use This Manual

This manual covers vehicle conversion procedures.

The pages at the start of this manual list the content, by group. A group covers a specific portion of the vehicle. The manual is divided into four groups, General Information, Chassis, Electrical, Body and Paint. The number of the group is the first number of a section number. Each title listed in the contents links to the relevant section of the manual.

In some section of the book it may refer you to see additional sections for information, links have been provided, these links are in blue text.

This manual is designed to be used online or as printed material, document links for the online version are also shown with page numbers for the printed version, this will help guide you to the start of the section which contains the relevant information.

There is also an alphabetical index at the back of the manual. As with the contents pages you will be able to link to sections. To do this just click on the page number.

All left and right-handed references to the vehicle are taken from a position sitting in the driver seat looking forward unless otherwise stated.

1.2 Commercial and Legal Aspects

1.2.1 Terminology

NOTE: Any modifications to the vehicle must be noted in the owner's handbook or new descriptive literature included with the owner's documentation.

Vehicle Converter refers to any re-seller altering the vehicle by converting the body and adding or modifying any equipment not originally specified and or supplied by Ford.

Unique component or similar wording refers to non-Ford specified or after sale fitment not covered by Ford warranty.

1.2.2 Warranty on Ford Vehicles

Please contact The National Sales Company in the country where the vehicle will be registered or refer to the vehicle Owner Guide for details of the terms of any applicable Ford warranty.

The Vehicle Converter should warrant its design, materials and construction for a period at least equal to any applicable Ford warranty.

The Vehicle Converter must ensure that any alteration made to a Ford vehicle or component does not reduce the safety, function, or durability of the vehicle or any component.

The Vehicle Converter shall be solely responsible for any damage resulting from any alteration made by the Vehicle Converter or any of its agents to a Ford Vehicle Component.

The Vehicle Converter releases Ford from all claims by any third party for any cost or loss (including any consequential damages) arising from work performed by a Vehicle Converter unless Ford has given its prior written consent to such liability.

1.2.3 Legal and Vehicle Type Approval

- All components embodied on Ford vehicles are approved to the applicable legal requirements.
- Ford vehicles have Type Approval for the intended marketing territories.

WARNING: Exception - Incomplete vehicles require further approval when completed by the Body Builder.

- The Ranger range has Type Approval for many territories, although the full range of vehicles shown in this manual are not necessarily released in all territories. Check with your local Ford National Sales Company representative.
- Significant changes to the vehicle may affect its legal compliance. Strict adherence to the original design intent for brakes, weight distribution, lighting, occupant safety and hazardous materials compliance in particular is mandatory.

1.2.4 Alternative Type Approval

If significant changes are made the Body Builder must negotiate with the relevant authority. Any changes to the vehicle operating conditions must be advised to the customer.

1.2.5 Legal Obligations and Liabilities

The Vehicle Converter should consult with its legal advisor on any questions concerning its legal obligations and liabilities.

Ford recomends that the Vehicle Converter and Ford Dealer must understand their individual and joint responsibilities in supplying a safe and compliant motor vehicle fitted with safe and compliant accessories.

1.2.6 General Product Safety Requirement

The Vehicle Converter shall ensure that any vehicle it places on the market complies with all local laws relating to the safe carriage of loads on public roads. The Vehicle Converter shall also ensure that any alteration it makes to a Ford vehicle or component does not reduce its compliance with local design rules.

The Vehicle Converter must provide sufficient Load Restraint tie down points or compartmentised storage areas that enable the driver to safely carry loads that match the use criteria for which the body was designed.

The Vehicle Converter shall release Ford from all liability for damages resulting from:

- Failure to comply with these Body Equipment Mounting directives, in particular warnings.
- Faulty design, production, installation, assembly or alteration not originally specified by Ford.
- Failure to comply with the basic fit for purpose principles inherent in the original product.

WARNINGS:

Do not exceed the gross vehicle mass, gross train mass, axle plates and trailer plate.

Do not change the tire size or load rating.

Do not modify the steering system.

Excessive heat can build up from the exhaust system, in particular from the catalytic converter and from the Diesel particulate filter (cDPF). Ensure adequate heat shields are maintained. Maintain sufficient clearance to hot parts.

Do not modify or remove heat protection shields.

Do not route any electrical cables with the Antilock Brakes System and Traction Control System cables because of extraneous signal risk. It is generally not recommended to hang electrical cables off existing looms or pipes.

Do not change original location or remove warning labels provided with the base vehicle in view to the driver. Ensure that labels in view to the driver remain in full view to the driver.

NOTE: For further information please contact your local National Sales Company representative, or Local Ford Dealer.

1.2.7 Product Liability

The Vehicle Converter shall be liable for any product liability (whether for death, personal injury, or property damage) arising from any alteration to a Ford vehicle or component made by the Vehicle Converter or any of its agents. Ford shall not be liable for any such liability (except as provided by law).

The Vehicle Converter or equipment manufacturer is liable for the:

- Operational reliability and road-worthiness of the vehicle to its original intent.
- Operational reliability and road-worthiness of any component or conversion, not listed in original Ford documentation.
- Operational reliability and road-worthiness of the vehicle as a whole (for example the body changes and/or additional equipment must not have a negative effect on the driving, braking or steering characteristics of the vehicle).
- Subsequent damage resulting from the conversion or attachment and installation of unique components, including unique electrical or electronic systems.
- Functional safety and freedom of movement of all moving parts (for example axles, springs, propeller shafts, steering mechanisms, brake and transmission linkage).
- Functional safety and freedom of the tested and approved flexibility of the body and integral chassis structure.

1.2.8 Restraints System

WARNINGS:

Modifications to the restraints system are not allowed.

Airbags are explosive. For safe removal and storage during conversion follow the procedures in the Ford workshop manual or consult your local National Sales Company representative.

Do not alter, modify or relocate the airbag, sensor and modules of the restraints system or any of its components.

Attachments or modifications to the front end of the vehicle may affect the airbag fire timing and result in uncontrolled deployment.

Modifications to the B-Pillar body structure may affect the side airbag fire timing and result in uncontrolled side airbag deployment.

Refer to: 5.2 Air Bag Supplemental Restraint System (SRS) (page 45).

1.2.9 Drilling and Welding

Drilling and welding of frames and body structures have to be conducted following the guidelines within this document.

1.2.10 Minimum Requirements for Brake system and Load Apportioning Valves

- It is not necessary or recommended to modify the load apportioning valves, however, if a special conversion should require modifications,
  - Maintain original settings.
  - Maintain brake certification load distribution.
- Changes to the Antilock Brake System (ABS), Traction Control System (TCS) and Electronic Stability Program (ESP) system are not permitted.

1.2.11 Road Safety

The respective instructions should be strictly observed to maintain operational and road safety of the vehicle.

1.3 Conversion Homologation

The Vehicle Converter must observe any statutory rules and regulations. When the conversion needs a new approval the following information must be quoted.

- All dimensional, weight and centre of gravity data.
- The fixing of the body to the donor vehicle.
- Operating conditions.

The responsible Technical Service may require additional information and/or testing.

NOTE: For further information please contact your local National Sales Company representative, or Local Ford Dealer.

Draft

1.4 Electromagnetic Compatibility (EMC)

WARNINGS:

Your vehicle has been tested and certified to European legislation relating to electromagnetic compatibility (2004/104/EC). It is your responsibility to ensure that any equipment fitted complies with applicable local legislation. Ensure you have any equipment fitted by properly trained technicians.

Radio frequency (RF) transmitter equipment (for example: cellular telephones, amateur radio transmitters and so on.) may only be fitted to your vehicle if they comply with the parameters shown in the following 'Frequency Overview' table. There are no special provisions or conditions for installations or use.

Do not mount any transceiver, microphones, speakers, or any other item in the deployment path of the airbag system.

Do not fasten antenna cables to original vehicle wiring, fuel pipes and brake pipes.

Keep antenna and power cables at least 100mm from any electronic modules and airbags and associated wiring.

Frequency Overview

Frequency Band MHz	Maximum Output Power Watts (Peak RMS)	Antenna Position
1-30	50W	1
30-54	50W	1
68-87.5	50W	1
142-176	50W	1
380-512	50W	1
806-940	10W	1
806-940	2W*	1
1200-1400	10W	1
1710-1885	10W	1
1710-1885	1W*	1
1885-2025	10W	1
1885-2025	1W*	1
2400-2500	0.1W	Anywhere

* Only for GSM/3G cellular phones, with a patch antenna installed inside of the front windscreen

1.4.1 Suggested Antenna Location

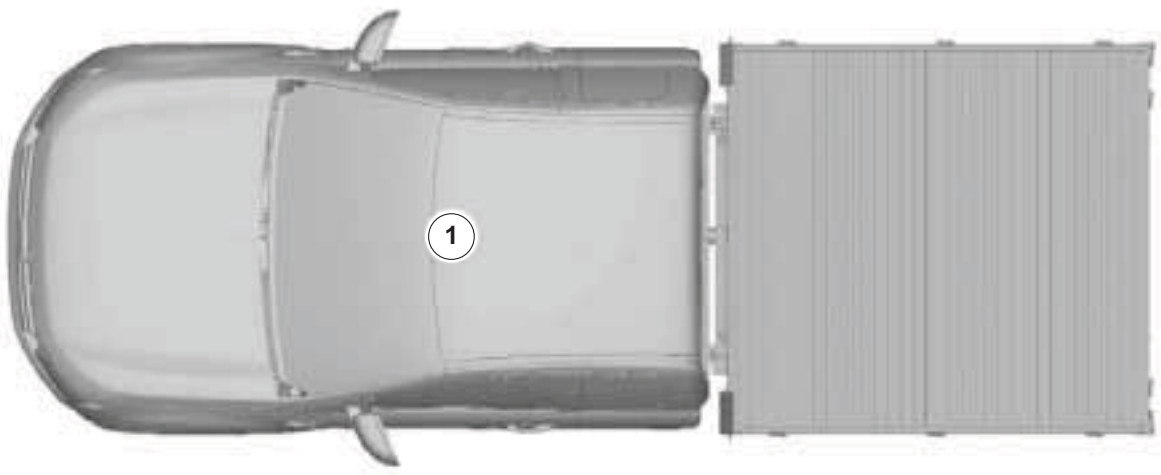

E134105

The antenna can be mounted on the roof of the vehicle, with the exception of cellular phone car kit antennas which transmit power below 2W. Such low powered systems should have their antenna located at the bottom of the A-pillar behind the trim or on the front windscreen.

NOTE: After the installation of RF transmitters, check for disturbances from and to all electrical equipment in the vehicle, both in the standby and transmit modes.

Check all electrical equipment:

- With ignition **ON**
- With the engine running
- During a road test at various speeds.

Check that electromagnetic fields generated inside the vehicle cabin by the transmitter installed do not exceed human exposure limits specified in EU directive 2004/40/EC

1.5 Vehicle Duty Cycle Guidelines

It is necessary to take into account the customer usage profile and the anticipated vehicle duty cycles of the modified vehicle in order to choose the appropriate specification of the base vehicle.

It is necessary to select the appropriate drive, engine, gear ratio, gross vehicle mass, gross train mass, axle plates and payloads of the base vehicle to match the customer requirements.

Where possible make sure that the base vehicle is ordered with any necessary plant fit options.

NOTE: For further information please contact your local National Sales Company representative, or Local Ford Dealer.

1.5.1 Conversion Affect on Fuel Economy and Performance

Any conversion may effect the fuel consumption and performance depending on the aerodynamics and the weight added by the conversion. The published information for fuel consumption and performance of the base vehicle therefore may not be valid. It is advisable to control the weight, but without deteriorating other vehicle attributes and functions (especially those related to safety and durability).

1.5.2 Vehicle Ride and Handling Attributes

CAUTION: Do not exceed the axle plate, gross vehicle mass, trailer plate and gross trailer mass limits.

Due to the displacement of the center of gravity occurred by the conversion the ride and handling attributes may be different to the base vehicle.

NOTE: This vehicle should be evaluated for safe operation prior to sale.

Draft

1.6 Jacking

WARNINGS:

Always position the vehicle on a hard level surface. If the vehicle must be jacked up on a soft surface use load spreading blocks under the jack. Always chock the wheel diagonally opposite the jacking point. Failure to follow these instructions may result in personal injury.

Do not get under a vehicle that is supported by a jack.

This jack is only intended for changing wheels.

CAUTIONS:

It is important that only the correct jacking and support locations are used at all times.

Make sure that access to the spare wheel is maintained when converting the vehicle or relocating the spare wheel.

NOTE: When using the vehicle jack, refer to the owner guide for correct operating instructions.

NOTE: Make sure that reinforcements are installed to maintain the integrity of the original body structure for/at jacking points.

NOTE: Any modifications to the vehicle must be noted in the owner's handbook or new descriptive literature included with the owner's documentation.

The spare wheel winch is located above the spare wheel and can be accessed from the rear of the chassis frame.

The jack must be assembled and fixed appropriately to the body to ensure safety, durability and accessibility.

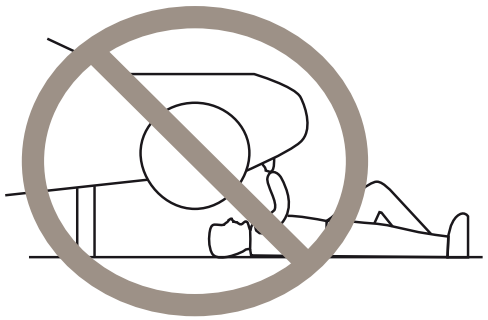

E140512

1. Ensure screwthread is adequately lubricated before use.
2. The jack should be used on level firm ground wherever possible.
3. Apply park brake fully before lifting the vehicle.
4. It is recommended that the wheels of the vehicle should be chocked, and no person should remain in a vehicle being jacked.
5. No person should place any portion of their body under a vehicle that is supported by a jack.

All Vehicles

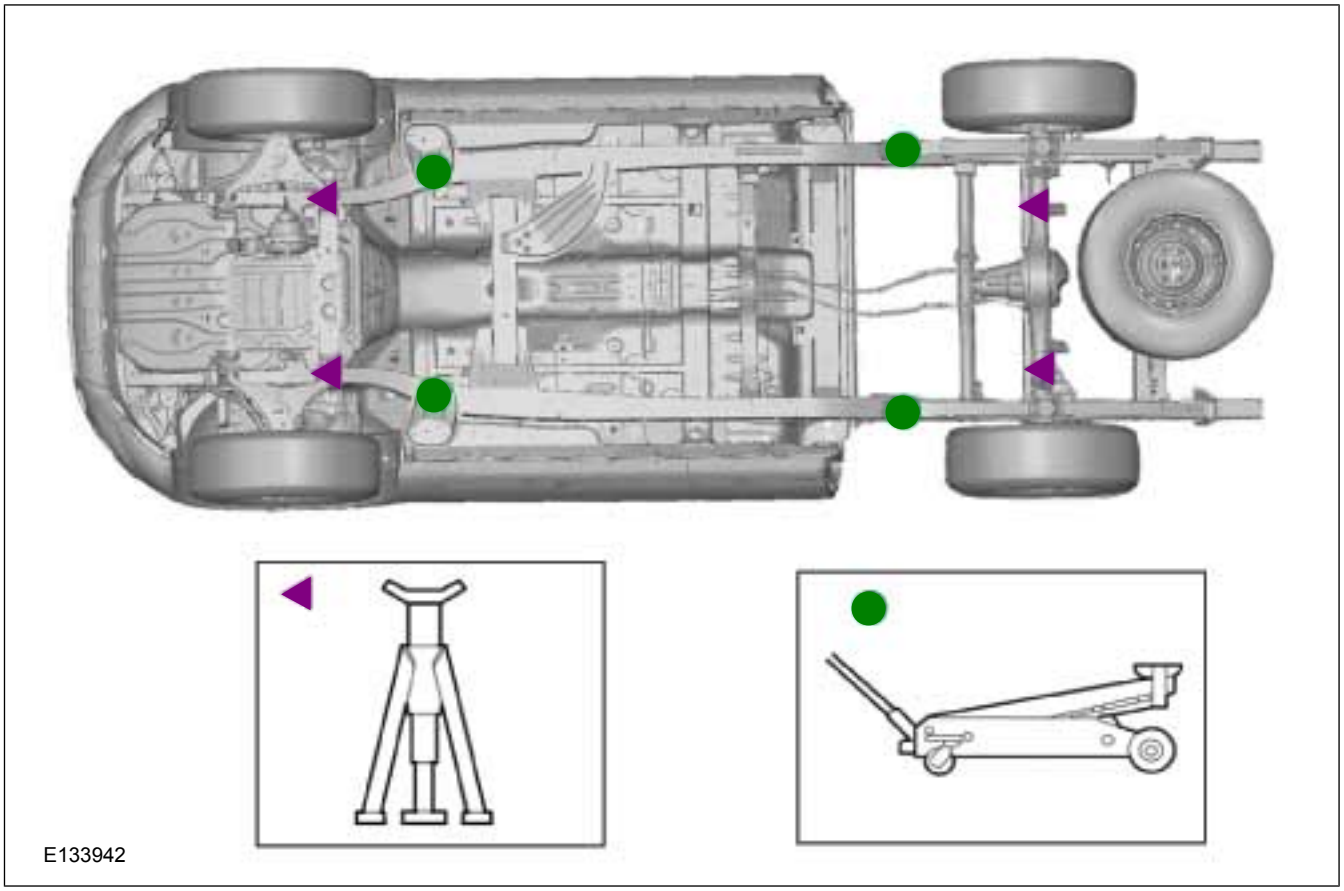

Dimensions - not to exceed for Chassis Cab body Length

Description		Single Cab	Stretch Cab	Double Cab
A	Frame length behind back of cab (not including rear light cross-member)	2251	1781	1483
B	Under run bar and towing attachment legislation to be maintained			
C	Maximum recommended external body height	2.4m over the top of frame		
D	Front outside of body to rear axle	1241	771	473
E	Maximum recomended rear overhang	Maximum 50% overhang, provided the the Center of Gravity of body and payload is not rearwards of the rear axle centerline		
F	Clearance between the back of the cab and the body	25mm Minimum		
G	Ensure local lighting legislation is maintained			
H	Clearance between the top of the cab and the body	30mm		
J	Maximum external body width	1880		

All dimensions (shown in mm) are subject to manufacturing tolerances and refer to min specification models which do not include additional equipment. The illustrations are for guidance only.

1.11.2 Chassis Cab Body - Basic Dimensions and Weights

NOTE: Single Cab illustrated.

Draft

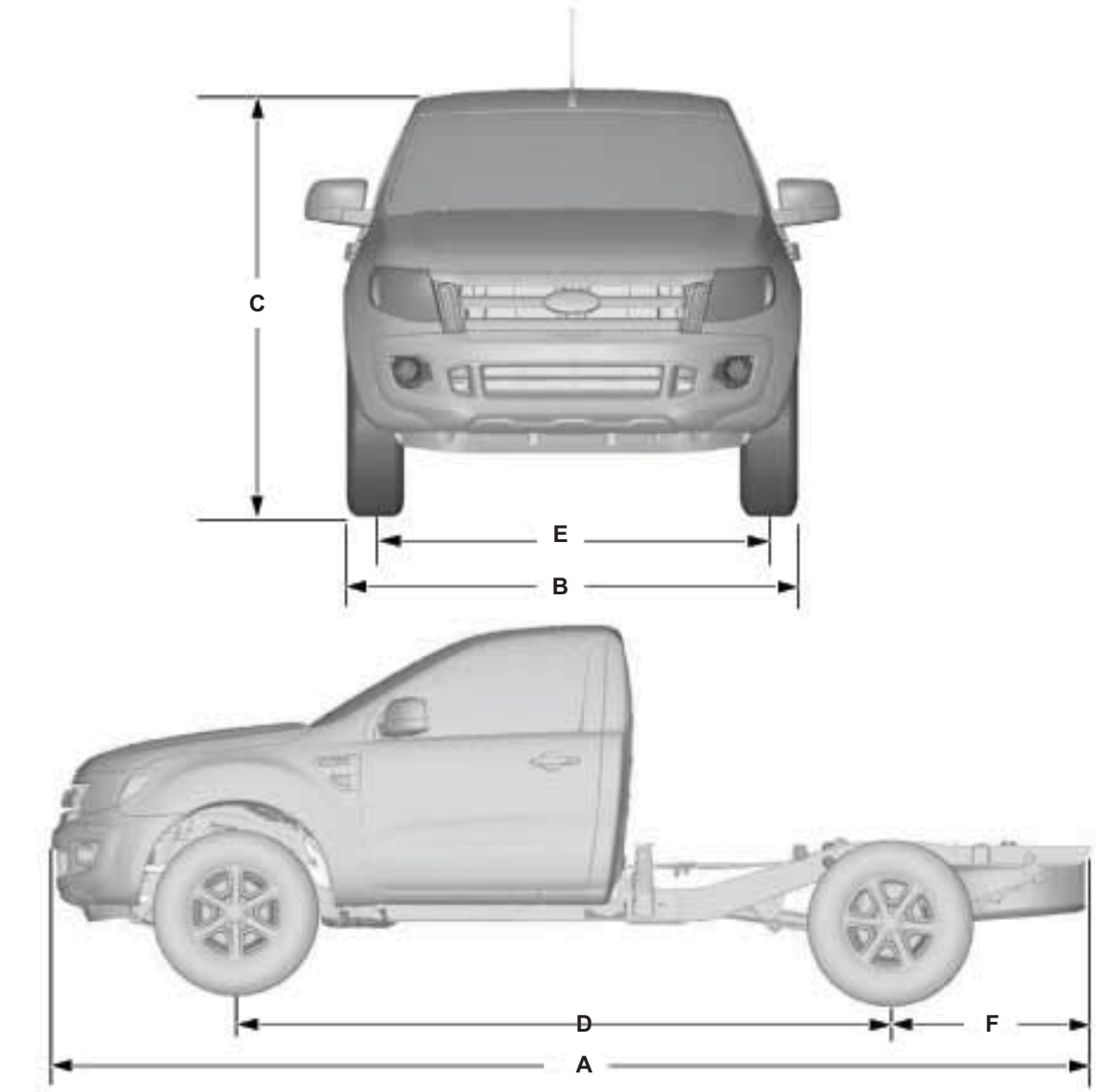

E134164

Chassis Cab Body - Basic Dimensions and Weights

Description		Single Cab	Stretch Cab	Double Cab
A	Wheelbase (mm)	5110		
B	Overall width - excluding exterior mirrors 4x2 (mm)	1850		
B	Overall width - excluding exterior mirrors 4x2 (mm)	1850		
C	Overall height 4x2 (mm)	1703	1706	1716
	Overall height 4x4 (mm)	1800-1806	1804 - 1810	1815 - 1821
D	Wheelbase (mm)	3220		
E	Track - front 4x2 (mm)	1590		
E	Track - front 4x4 (mm)	1560		
E	Track - rear 4x2 (mm)	1590		
E	Track - rear 4x4 (mm)	1560		
F	Rear Overhang (mm)	985		
-	Gross Vehicle Mas GVM (kg)	2925		
-	Gross Vehicle Mas GVM (kg)*	3200		
-	Front Axle Load (kg)	1325		
-	Front Axle Load (kg)*	1480		
-	Rear Axle Load (kg)	1755		
-	Rear Axle Load (kg)*	1850		

* Vehicles with increased ride height.

1.11.3 Kerb Weights

Kerb weight is the weight of the complete vehicle including full fluids (water, oil and Fuel), but without payload, driver or any passengers.

Single Cab

Model	Weight Range (KG)
2.5L Petrol 4x2	TBC
2.2L Diesel 4x2	TBC
2.2L Diesel 4x4	TBC
3.2L Diesel 4x4	TBC

Double Cab

Model	Weight Range (KG)
2.2L Diesel 4x2*	TBC
2.2L Diesel 4x4	TBC
3.2L Diesel 4x4	TBC

* Vehicles with increased ride height.

Stretch Cab

Model	Weight Range (KG)
2.2L Diesel 4x2*	TBC
3.2L Diesel 4x2*	TBC
2.2L Diesel 4x4	TBC
3.2L Diesel 4x4	TBC

* Vehicles with increased ride height.

1.11.4 Front, Rear and Side Under-run Protection

WARNING: Check local legislation for legal requirements.

Front Under run Protection, Rear Under run Protection and Side Under run Protection must meet the requirements of local design rules.

Draft

1.12 Hardware—Specifications

Material Specification, Strength and Torque

Standard Hardware and Tightening Torques (Nm) Bolts/Studs: ISO 898-1, Nuts: ISO 898-2						
	Grade 4.8		**Grade 8.8**		**Grade 10.9**	
Thread Size	**Minimum**	**Maximum**	**Minimum**	**Maximum**	**Minimum**	**Maximum**
M4	1.1	1.4	2.4	3.4		
M5	2.2	2.7	4.9	6.7		
M6	3.7	4.7	8.5	11.5	11.0	15.0
M8			20.0	28.0	25.0	35.0
M10			41.0	55.0	50.0	70.0
M12			68.0	92.0	95.0	125.0
M14			113	153	150	200
M16			170.0	230.0	230.0	310.0
M18			252.0	317.0	317.5	399.4
M20			345.0	430.0	434.7	541.8
M22			470.0	590.0	592.2	743.4
M24			600.0	750.0	756.0	945.0

Draft

1.13 Load Distribution—Specifications

1.13.1 Load Distribution Calculations - Driver and Passenger Weight Distribution

CAUTIONS:

- **Do not exceed the axle plated weights.**
- **Do not exceed the gross vehicle weight.**
- **Tire manufacturer specification must be maintained.**

NOTE: Uneven load distribution could result in unacceptable handling and braking characteristics.

NOTE: Over loading of the vehicle could result in unacceptable ground clearance.

NOTE: The centre of mass of the body equipment and the payload it contains should be located within the dimensions given.

NOTE: Avoid one-sided load distribution.

NOTE: For further information please contact your local National Sales Company representative, or Local Ford Dealer.

Single Cab

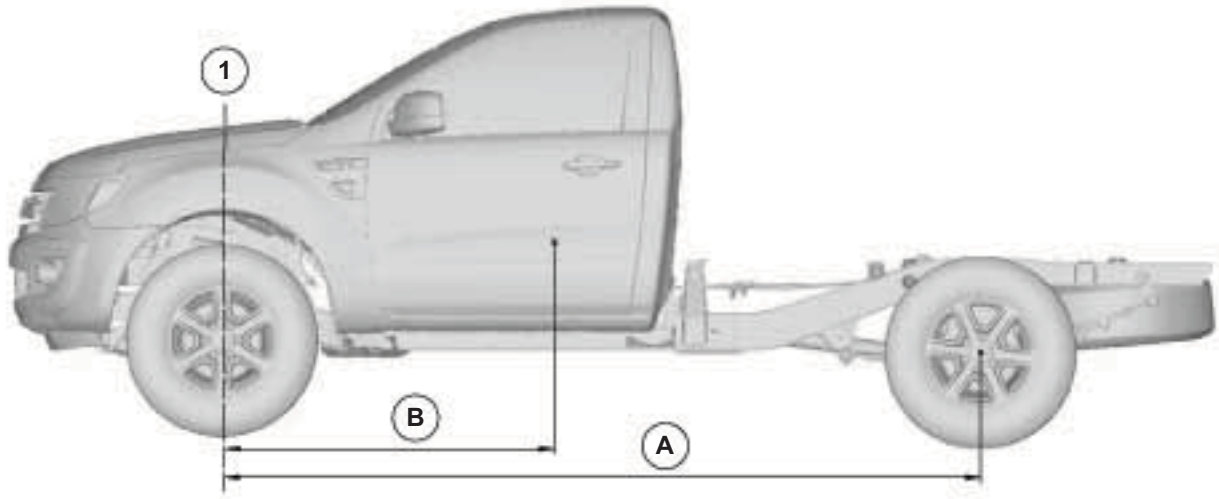

E133921

Single Cab Driver and Passenger Weight Distribution

'A' Wheelbase (mm)	'B' Front Row Seats and Driver (mm)	Weight distribution Per Person (Kg)		
		On Front Axle	On Rear Axle	Total
3220	1490	40	35	75

Stretch Cab

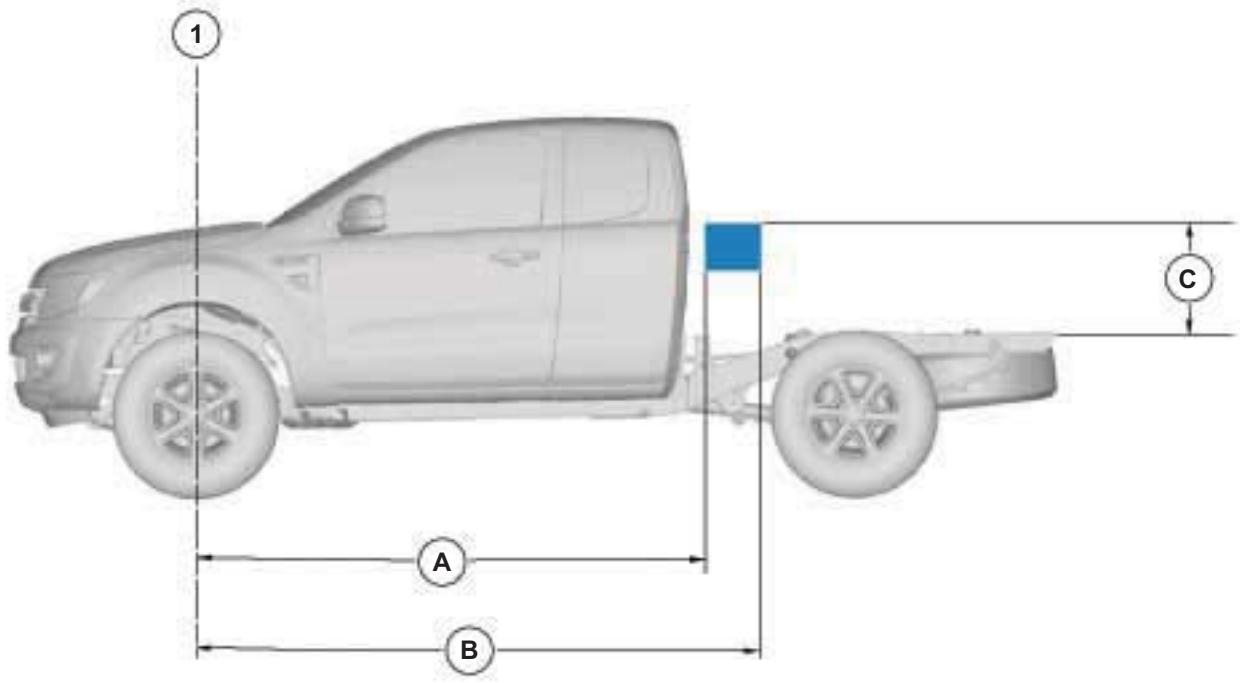

E134584

Stretch Cab Center of Gravity Critical Zone

Model	Recommended C of G location for added mass		
	'A' Min (mm)	'B' Max (mm)	'C' Max (mm)
4x2	2395	3220	740
4x2*	2365	3435	590
4x4	2365	3435	590

* Vehicles with increased ride height.

1.14 Towing

1.14.1 Towing Requirements

When a towing device is required, the Vehicle Converter should use a Ford approved tow bar.

Refer to: 1.13 (page 24).
Load Distribution

Refer to: 1.6 Jacking (page 11).

1.14.2 Towing

For towing devices fitted by the Vehicle Converter the following applies:

- Towing allowances must not exceed those of the standard vehicle.
- Any modifications to the vehicle must be noted in the owner's handbook or new descriptive literature included with the owner's documentation.
- Tow bar installations must meet the requirements of the local design rules.
- Whenever frame drilling is necessary use tube reinforcement.

Refer to: 5.5 Frame and Body Mounting (page 50).

1.14.3 Towing capacities

WARNING: Do not exceed the gross vehicle weight, gross train weight and gross axle weights stated on the vehicle identification plate.

Australia and New Zealand

Variant	Drive	Transmission	Without trailer brake kg (lbs)	With trailer brake kg (lbs)	Trailer nose weight kg (lbs)
2.5L Petrol	4X2	Manual	750 (1653.5)	2200 (4850)	250 (551)
2.2L Diesel (110kW)	4x2	Manual	750 (1653.5)	2500 (5511)	250 (551)
	4x2*	Manual and Auto	750 (1653.5)	3350 (7385)	335 (738)
	4x4	Manual and Auto	750 (1653.5)	3350 (7385)	335 (738)
3.2L Diesel	4x2*	Manual and Auto	750 (1653.5)	3350 (7385)	335 (738)
	4x4	Manual and Auto	750 (1653.5)	3350 (7385)	335 (738)

* Vehicles with increased ride height.

Rest Of World

Variant	Drive	Transmission	Without trailer brake kg (lbs)	With trailer brake kg (lbs)	Trailer nose weight kg (lbs)
2.5L Petrol	4X2	Manual	750 (1653.5)	2200 (4850)	165 (364)
	4x2*	Manual	750 (1653.5)	1700 (3748)	225 (496)
	4x4	Manual	750 (1653.5)	1100 (2425)	225 (496)
2.2L Diesel (88kW & 92kW)	4X2	Manual	750 (1653.5)	2200 (4850)	165 (364)
	4x2*	Manual	750 (1653.5)	1600 (3527)	225 (496)
	4x4	Manual	750 (1653.5)	1600 (3527)	225 (496)
2.2L Diesel (110kW)	4x2	Manual	750 (1653.5)	2500 (5511)	165 (364)
	4x2* (Drive ratio 3.31)	Manual	750 (1653.5)	1800 (3968)	225 (496)
	4x2* (Drive ratio 3.55)	Manual	750 (1653.5)	3350 (7385)	225 (496)
	4x2*	Auto	750 (1653.5)	3350 (7385)	225 (496)
	4x4	Manual and Auto	750 (1653.5)	3350 (7385)	225 (496)
3.2L Diesel	4x2* and 4x4 (Drive ratio 3.31)	Manual	750 (1653.5)	1800 (3968)	225 (496)
	4x2* and 4x4 (Drive ratio 3.55)	Manual	750 (1653.5)	3350 (7385)	225 (496)
	4x2*	Auto	750 (1653.5)	3350 (7385)	225 (496)
	4x4	Auto	750 (1653.5)	3350 (7385)	225 (496)

* Vehicles with increased ride height.

1.14.4 Towing Specifications

For any further details and advice please consult your local National Sales Company representative, or Local Ford Dealer.

2 Chassis

2.1 Suspension System

WARNINGS:

Do not modify, drill, cut or weld any suspension components, specifically the steering gear system, subframe or anti-roll bars, springs or shock absorbers including mounting brackets.

The rear leaf springs are pre-stressed in manufacture and should not be altered for rate or height in any way during vehicle conversion. Adding or removing leaves may result in failure or reduced function of the spring as well as other vehicle related issues for which Ford Motor Company can not be held responsible.

CAUTIONS:

Modifications to the suspension system can cause a deterioration of the vehicle handling characteristics and durability.

When carrying out welding work the springs must be covered to protect them against weld splatter.

Do not touch springs with welding electrodes or welding tongs.

NOTE: Do not modify the wheelbase or add any type of frame extension to vehicles fitted with Electronic Stability Program ESP.

NOTE: Do not damage the surface or corrosion protection of the spring during disassembly and installation.

NOTE: Do not add any additional axles.

Draft

4 Electrical

4.1 Battery and Cables

4.1.1 Battery Information

If a battery is disconnected, there is no requirement to reprogram the vehicle; the vehicle retains its 'normal' power management setting and remembers exactly what its previous configuration was (although the central locking latches may cycle if one of these was opened manually in the intervening period). With the radio, all of the settings are retained, but the key code needs to be entered to restore functionality. The clock will need resetting.

Battery Voltage Requirements and Testing

All voltages are to be measured with an accuracy of: + /– 5% of values published.

To maximize battery life, at the time of arrival at the vehicle converter, all batteries must have a minimum Open Circuit Voltage (OCV) of not less than 12.75 volts.

When the battery is installed and connected to the vehicle's electrical system with no load, the Closed Circuit Voltage (CCV) must not be less than 12.65 volts. When the vehicle is released to the customer, the CCV must not be less than 12.50 volts.

Surface Charge Dissipation

Prior to carrying out manual voltage checks, it is necessary to establish that the battery voltage is stable and free from surface charges, that could be present due to certain engine run conditions making the voltage readings unreliable and inaccurate.

To ensure surface charges are not present the following actions are recommended:

1. Turn the ignition key to position II and switch on the headlamps (main beam) and if fitted, the heated front window, rear window demister and the heater blower motor (on position II). Leave the vehicle in this condition for at least 1 minute to dissipate what ever surface charge is present in the battery.
2. Turn the ignition key to position 0 and switch off the loads; headlamps, heated windshield/rear window demister and heater blower motor. Leave the vehicle in this condition for at least 5 minutes, before taking a battery voltage reading.

Delayed Vehicles

Vehicles held at the vehicle convertor premises and not in use for longer than 4 days, should have the battery's negative cable disconnected. Before shipping to the customer, the battery negative cable must be re-connected and the voltage re-checked. The voltage should be not less than 12.5 volts.

Battery Charging Procedure

1. Cold batteries will not readily accept a charge. Therefore, batteries should be allowed to warm up to approximately 5°C (41°F) before charging. This may require four to eight hours at room temperature depending on the initial temperature and battery size.
2. A battery which has been completely discharged may be slow to accept a charge initially, and in some cases may not accept a charge at the normal charger setting. When batteries are in this condition, charging can be started by use of the dead battery switch on chargers that have this facility equipped.
3. To determine whether a battery is accepting a charge, follow the manufacturers instructions for the charger and the dead battery switch. If the switch is the spring-loaded type, it should be held in the ON position for up to three minutes.
4. After releasing the dead battery switch and with the charger still on, measure the battery voltage. If it shows 12 volts or higher, the battery is accepting a charge and is capable of being recharged. However, it may require up to two hours of charging, with batteries colder than 5°C (41°F) before the charge rate is high enough to show a charge on a ammeter. It has been found that all non-damaged batteries can be charged by this procedure. If a battery cannot be charged by this procedure, a new one should be installed.
5. A rapid recharge procedure has been developed for recharging batteries that have passed the load test and only need a recharge. This can be due to in-service no-start battery failures (vehicle will not crank due to low battery state of charge) or battery discharged in vehicle due to key-off loads.
6. With the cables then disconnected, the battery can be rapidly recharged by using either of the following methods:

- Carry out a two hour charge using 20A constant current (manual setting on charger).
- Carry out a two hour charge using a constant potential (automatic setting on charger).

Battery Cable Fixing Torque

The battery cables should be fixed to the terminal posts with a torque of 4.8 Nm -/+ 0.8Nm.

Battery Part Numbers and Usage

Ford Plant	Battery Supplier	Specifications	Size
Standard Duty Battery			
Thailand	Siam GS	60Ah, 590CCA, 105RC (Calcium Technology)	T6
South Africa	First National Battery	60Ah, 590CCA, 105RC (Silver Calcium Technology)	T6
South America	Moura	60Ah, 590CCA, 105RC (Silver Calcium Technology)	T6
Heavy Duty Battery			
Thailand	Siam GS	68Ah, 750CCA, 150RC (Calcium Technology)	T7
South Africa	First National Battery	68Ah, 750CCA, 150RC (Silver Calcium Technology)	T7
South America	Moura	75Ah, 750CCA, 105RC (Silver Calcium Technology)	T7

Connection of Auxiliary Loads

WARNING: Under no circumstances should any additional connections be made directly to any of the vehicle's battery terminals.

- For auxiliary customer electrical loads, these must only be made via the customer connection points provided.

Battery Rules:

WARNING: For vehicles fitted with non-sealed batteries (non-maintenance free), it is essential that regular checks are made to determine that the electrolyte (acid) levels are correctly maintained.

- For external charging of batteries ensure that the maximum voltage of 14.6V is not exceeded.

4.1.2 Generator and Alternator

Alternator Current Output

All vehicles are fitted with 110A alternators.

4.2 Exterior Lighting

WARNING: Make sure that the modified vehicle complies with all relevant legal requirements.

4.2.1 Reversing Lamps

The reverse lamps are activated by the reverse switch on the transmission and passing through the Central Junction Box where the signal is sensed. A marginal increase in current (via a relay or buffered electrical input) is permissible to trigger a rear-view camera system, or audible device.

Lighting Loads

Lamp	Controlling Device	Vehicle	Trailer Tow
Number plate lamp	Body control module	2x5W	28W
Position / Parking lamp	Body control module	5W	
Front direction indicator	Body control module	21W	-
Brake lamps	Body control module	21W	28W
Rear direction indicator	Body control module	21W	24W
Reverse lamp	Body control module	21W	24W
Rear fog lamp	Body control module	21W	48W

Trailer tow maximum power ratings shown, also see trailer tow below.

Lighting Fuses		
F74	20A	Headlamp
F75	15A	Front fog lamp
F76	10A	Reversing lamp

Trailer Tow

Vehicles fitted with a trailer tow as standard also come with a trailer control module for lighting.

When fitting low power LED lights that require less than 2W, the lights may flicker when in use. A trailer patch harness should be used with low power LED lights.

CAUTION: Do not connect the trailer patch harness to the vehicle when the trailer is not connected.

NOTE: The trailer patch harness is available from your Ford authorised dealer.

4.2.3 Lamps – Hazard / Direction Indication

The maximum permissible load with the standard system is:

- 3 x 5W – front and rear indicators + side repeaters (Left Hand Side)
- 3 x 5W – front and rear indicators + side repeaters (Right Hand Side)

4.2.2 Additional External Lamps

All power for additional exterior lamps must be taken through the Auxiliary Fuse Box with a suitable switch and / or relay as required.

4.2.4 Electrically operated Door Mirrors

WARNING: Do not tamper with the base system (controlled by Central Junction Box and multiplex architecture) and any feeds taken from the associated wiring or controller.

NOTE: These options are not suitable for aftermarket or Body Builder fit.

5 Body and Paint

5.1 Body

5.1.1 Body Structures - General Information

CAUTION: Load carrying structures should not be mounted onto an existing load tray or load box.

When carrying out vehicle conversions/modifications the following points should be considered:

- Make sure that the vehicle structural integrity is maintained.
- Do not drill into closed frame body members.
- Make sure that the design for the body alterations or additional structure disperse the load evenly.

CAUTION: Uneven load distribution could result in unacceptable handling and braking characteristics.

- Re-paint metal edges after cutting or drilling. All metal edges must comply with exterior and interior protection legislation.
- All fixings through the floor, sides or roof must be sealed.
- Make sure that fixings in the 'B'-pillar area do not encroach on the seat belts or seat belt reels.

5.1.2 Integrated Bodies and Conversions

For integral structures such as ambulances or motor-homes with increased rear overhang built onto the chassis the following applies:

- Reduced departure angles, e.g. rear entry step, should be discussed with the end user / customer. Consider removable components to avoid damage on ferries or low-loaders.
- Unique spare wheel stowage may be required if obscured by rear step, check for accessibility.
- The recommended dimensions for wheelhouses on conversions are outlined in the following figure.

Wheelhouse Envelope

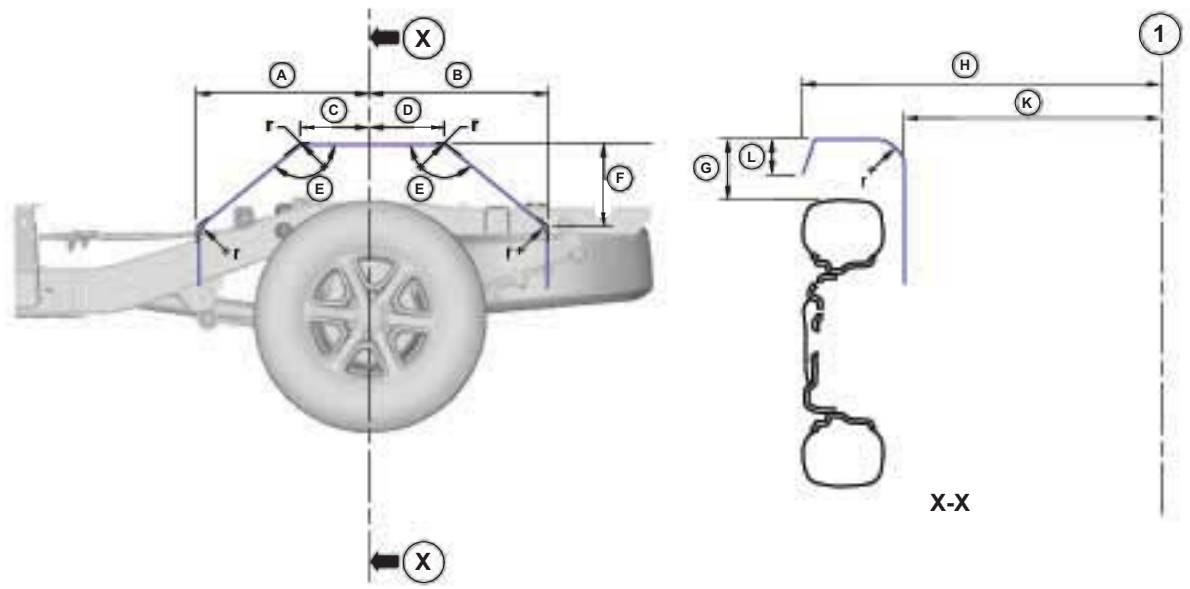

E134132

Wheelhouse Dimensions									
Dimension	215/ 70R16	255/ 70R16	265/ 65R17	265/ 65R18	Dimension	215/ 70R16	255/ 70R16	255/ 70R16	265/65R17
A	455mm				G*	190mm			
B	425mm				H	914mm	915mm	922mm	922mm
C	305mm				K	588mm			
D	275mm				L	25mm			
E	110°				r	20mm			
F	420mm				1	Center line of Vehicle			
X	Section through Center of Wheelhouse								
* Dimension G is to the bottom of the swage									

5.1.3 Chassis Cab

WARNING: Excessive heat can build up from the exhaust system, in particular from the catalytic converter. Ensure adequate heat shields are maintained.

CAUTION: Uneven load distribution could result in unacceptable handling and braking characteristics.

When carrying out vehicle conversions / modifications the following points should be considered:

- Make sure that all of the reinforced holes provided in the chassis frame top surface are used for full length bodies or sub-frames, see figures shown.
- Make sure that the vehicle structural integrity is maintained.
- Do not drill into closed frame body members.
- Make sure that the design for the body alterations or additional structure disperse the load evenly.
- Re-paint metal edges after cutting or drilling. All metal edges must comply with exterior and interior protection legislation.
- All fixings through the floor, sides or roof must be sealed.

Refer to: 5.4 Corrosion Prevention (page 49).

- Ensure that any additional equipment in the vicinity of the fuel tank will not damage the tank in a crash condition.

For any conversion structure attached to or mounted onto the base vehicle cab structure the following applies:

- Ensure that neither the conversion structure nor the existing vehicle structure get pre-loaded by the assembly process.
- Adhesive jointing is recommended but should be supplemented with mechanical fasteners to prevent initial peel and long term failure.
- Spread bolt loads to minimize local stress.

NOTE: The following chassis frame images and dimensions are showing the previous Ranger (J97) chassis frame above the new Ranger (P375) chassis frame for comparison purposes.

Body Attachment Holes in Chassis Frame - Single cab

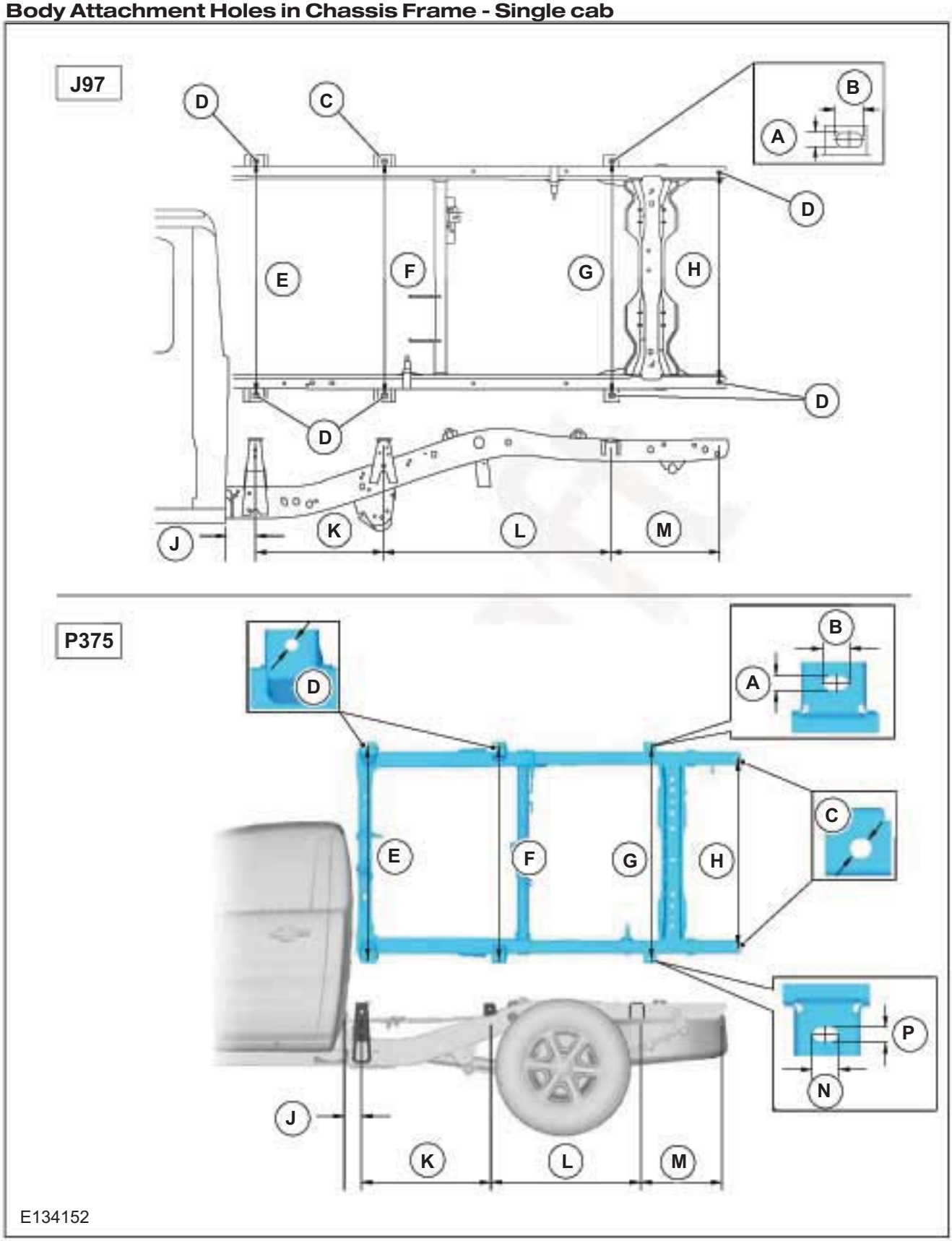

Dimensions (mm) for Body Attachment Holes in Chassis Frame - Single Cab

Dimension	J97	P375	Dimension	J97	P375
A	20	16	H	1024	1086
B	13	28	J	-	95
C	13	23	K	568	768
D	20	20	L	1007	890
E	1150	1244	M	496	505
F	1140	1244	N	-	26
G	1140	1244	P	-	20

Draft

Body Attachment Holes in Chassis Frame - Double cab

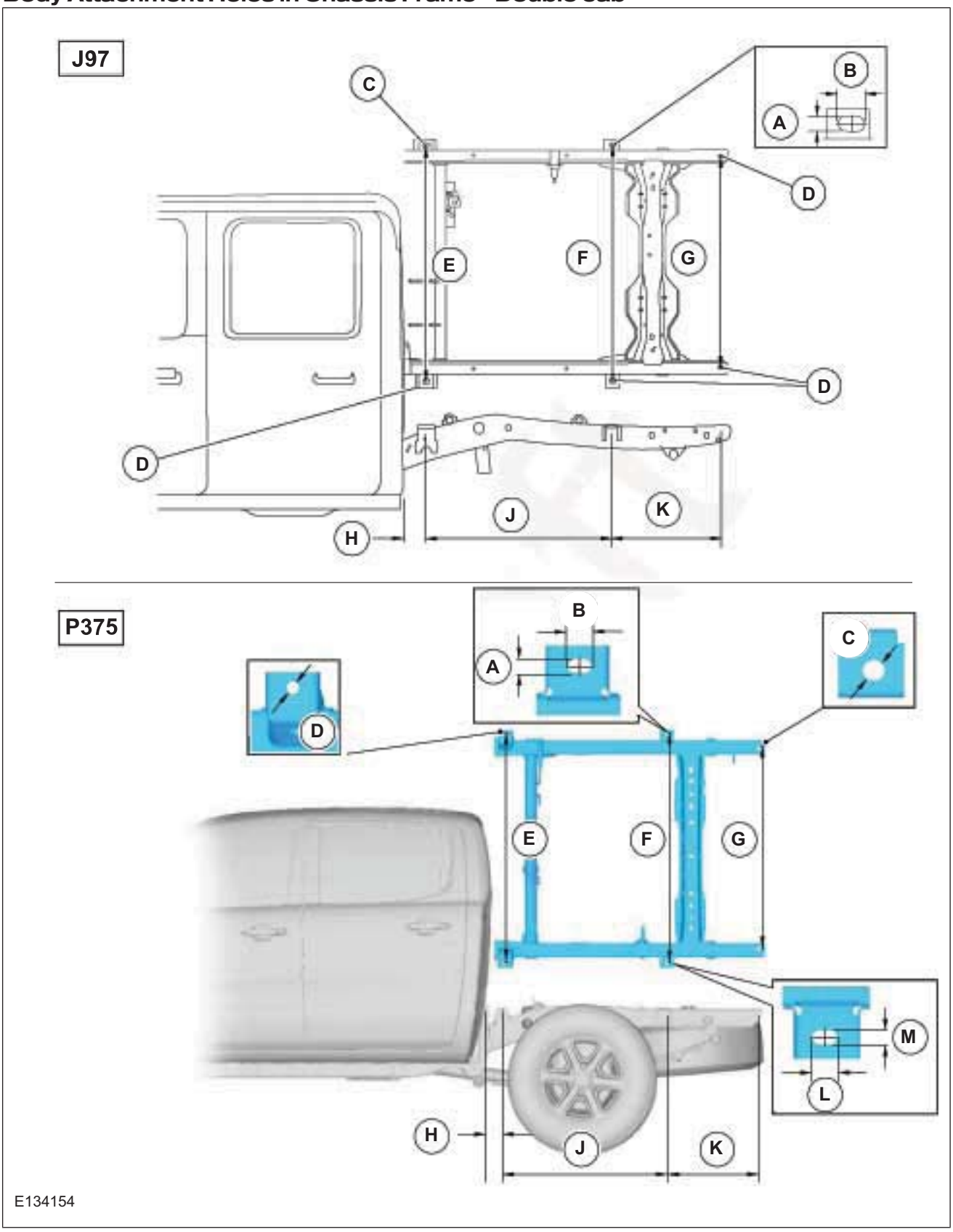

Dimensions (mm) for Body Attachment Holes in Chassis Frame - Double cab

Dimension	J97	P375	Dimension	J97	P375
A	20	16	G	1024	1024
B	13	28	H	-	95
C	13	23	J	776	890
D	20	20	K	498	505
E	1130	1244	L	-	26
F	1140	1244	M	-	20

Draft

Body Attachment Holes in Chassis Frame - Stretch cab

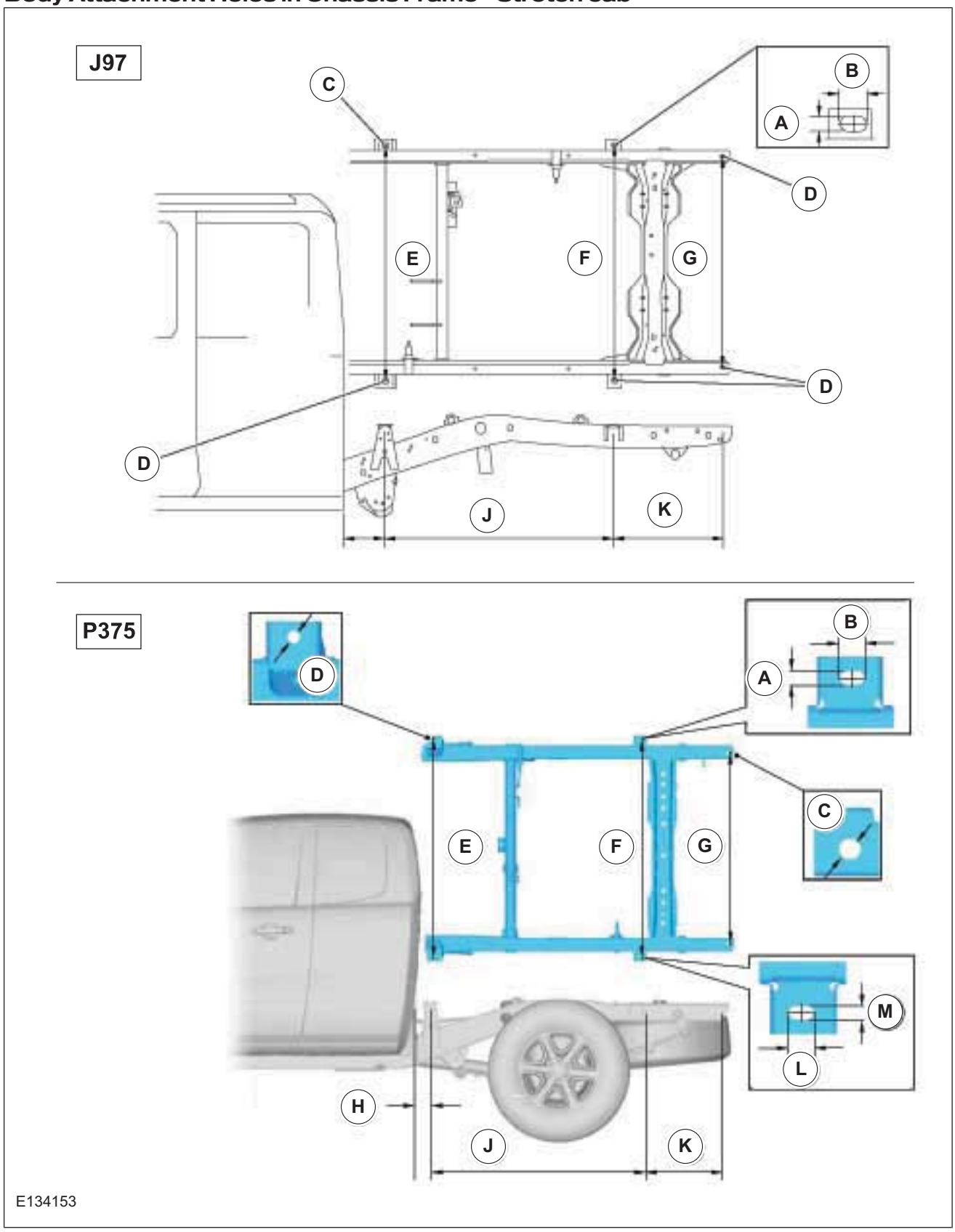

E134153

Dimensions (mm) for Body Attachment Holes in Chassis Frame - Stretch Cab

Dimension	J97	P375	Dimension	J97	P375
A	20	16	G	1024	1024
B	13	28	H	-	95
C	13	23	J	776	1188
D	20	20	K	498	505
E	1130	1244	L	-	26
F	1140	1244	M	-	20

5.1.4 Front End Integrity for Cooling, Crash, Aerodynamics and Lighting

Cooling Continuous air flow through the front end and engine compartment is not to be hindered by adding any additional equipment. If uncertain please consult the Ford dealer.

Lighting Do not alter the lighting system.

Crash Do not cut, drill or weld any parts that are load path relevant in case of crash. Do not add material in the crash zone. This could affect the crash sensor calibration.

The side airbag system is not permitted if:

- A swiveling device is fitted on the front seats.
- A side wall or any other additional material or structure is attached to the B-pillar inner and/or outer area.

Static & Dynamic Sealing and Finishing Ensure proper sealing against ingress of water, salt, dust etc. after cutting or drilling the body. Use Ford approved sealing and finishing material, and underbody corrosion protection.

Refer to: 5.4 Corrosion Prevention (page 49).

5.1.5 Tipper Bodies

For tipper conversions single and double Chassis Cab versions except extended rear chassis frame can be used. All variants allow single and three way tipping.

It is recommended to have the tipping system operative only when the engine is running. It is also recommended to have the master control switch in the security of the cab. According routing of wires and hydraulic lines please refer to section hydraulic lift.

Ensure that axle plated weights including the front axle minimum are not exceeded.

For tipper sub-frames please refer to the following guidelines:

- Design for full length continuous frame with mountings for motor, pump unit, reservoir, pivot points and ram.
- Use all mounting points on chassis frame to mount sub-frame.
- Very stiff sub-frames may damage the chassis frame by preventing its natural flexing, therefore compliant mounts should be used, with up to plus and minus 12mm compliance with the vehicle laden or un-laden (whichever is worst case). Compliant mounts should be rated with a minimum of 2mm deflection per 200kg mass at each chassis frame forward mount. Compliant mounts shall have captive fail safe bolts.
- Use two M10 grade 8.8 minimum bolts, washers and self locking nuts at each solid and compliant chassis frame location.
- Sub-frame must extend to the back of the cab and attach to all mounting locations, with the forward end designed to minimize local frame stress. It is however, preferable to mount the sub-frame onto the mounting brackets with a clearance to the chassis frame top surface.
- Side tipping loads/forces must be resolved by the sub-frame. It is not recommended to strain the chassis frame.

5.1.6 Tank and Dry Bulk Carriers

Due to the high rigidity of tanks it is necessary to isolate the tank and its sub-frame from the chassis frame allowing the chassis frame to naturally flex. Please refer to the following guidelines:

- Mount tank to full length of sub-frame.
- Mount sub-frame to all chassis frame mounting points.
- The forward location mounts must be compliant to allow relative chassis frame to sub-frame deflections.
- Sub-frame must extend to the back of the cab and not contact chassis frame at forward end under worst case deflection.

- Compliant mounts should be used, with up to plus and minus 12mm compliance with the vehicle laden or un-laden (whichever is worst case). Compliant mounts should be rated with a minimum of 2mm deflection per 200kg mass at each chassis frame forward mount. Compliant mounts shall have captive fail safe bolts.
- Use two M10 grade 8.8 minimum bolts, washers and self lock nuts per chassis frame mount bracket at each solid and compliant location.

5.1.7 Roof Racks

Roof racks may be fitted to all variants as illustrated in figure, providing the following is satisfied:

- The carried load does not exceed 80kg (Body Builder to ensure owner's hand book identifies this limitation).
- The carried load does not exceed 300mm load height (converter to ensure owner's information book identifies this limitation).
- The load is evenly distributed (converter to ensure owner's information book identifies this limitation).
- The rack and subsequent carried load is supported in the roof drip rails irrespective of rack retaining method.

Double Cab / Stretch Cab

The forgoing limitations are based on ensuring body structure integrity, vehicle handling, braking and plated axle weights. Such considerations must also be applied to any double cab and stretch cab applications, in particular steering, braking and front axle plated weight and the extra continuous loads on the "A" pillar, which should not exceed 60 kg total incremental load.

Ensure that the planned loaded vehicle operates within its designed Center of Gravity condition. For details please consult the Ford dealer.

Draft

Roof Rack Vehicle Converter Special Fit

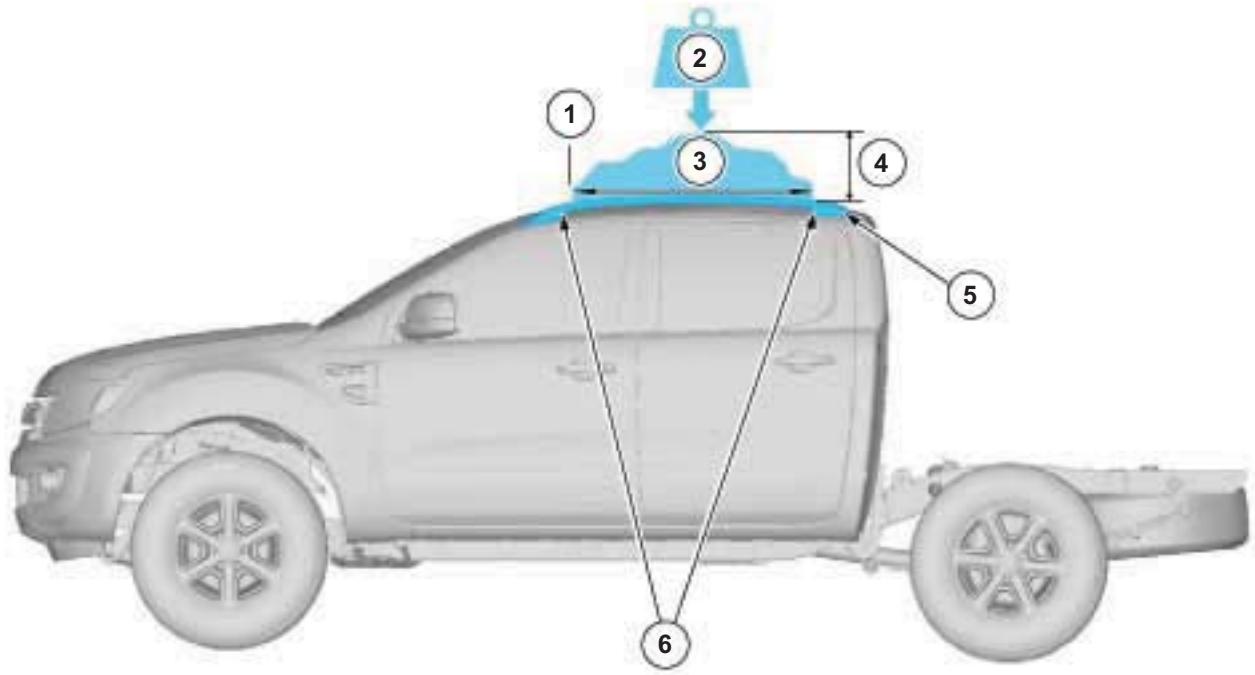

E134129

Item	Description
1	Rear edge of front attachment point
2	80kg Maximum
3	Maximum roof rack length: Within length of drain channel
4	Maximum Load Height 300mm
5	Drain Channel
6	Roof Rack Supports

5.2 Air Bag Supplemental Restraint System (SRS)

5.2.1 Air Bags

Front Seats

Side airbags are not compatible with swiveling front seats.

Do not specify the base vehicle with side airbags when planning to retrofit a swiveling device on the front seats and/or an armrest on the outer side of the front seats, this may affect the function and/or deployment of the side airbags.

The acceleration based airbag sensors for side airbags are located nearby the bottom of the C-pillar inner for RAP and DBL Cab vehicles. The pressure based airbag sensors for side airbags are located near the centre of the front doors' inner door sheet metal for all Cab styles.

WARNING: Modifications or reinforcements in the area of the sensors may affect the side airbag fire timing and result in uncontrolled side air bag deployment.

Please note that vehicles not equipped with side airbags but equipped with front airbags only are not affected.

Drilling or grinding operations in this area are only permitted when battery cables are disconnected.

Driver and Passenger Front Airbag Deployment Zones

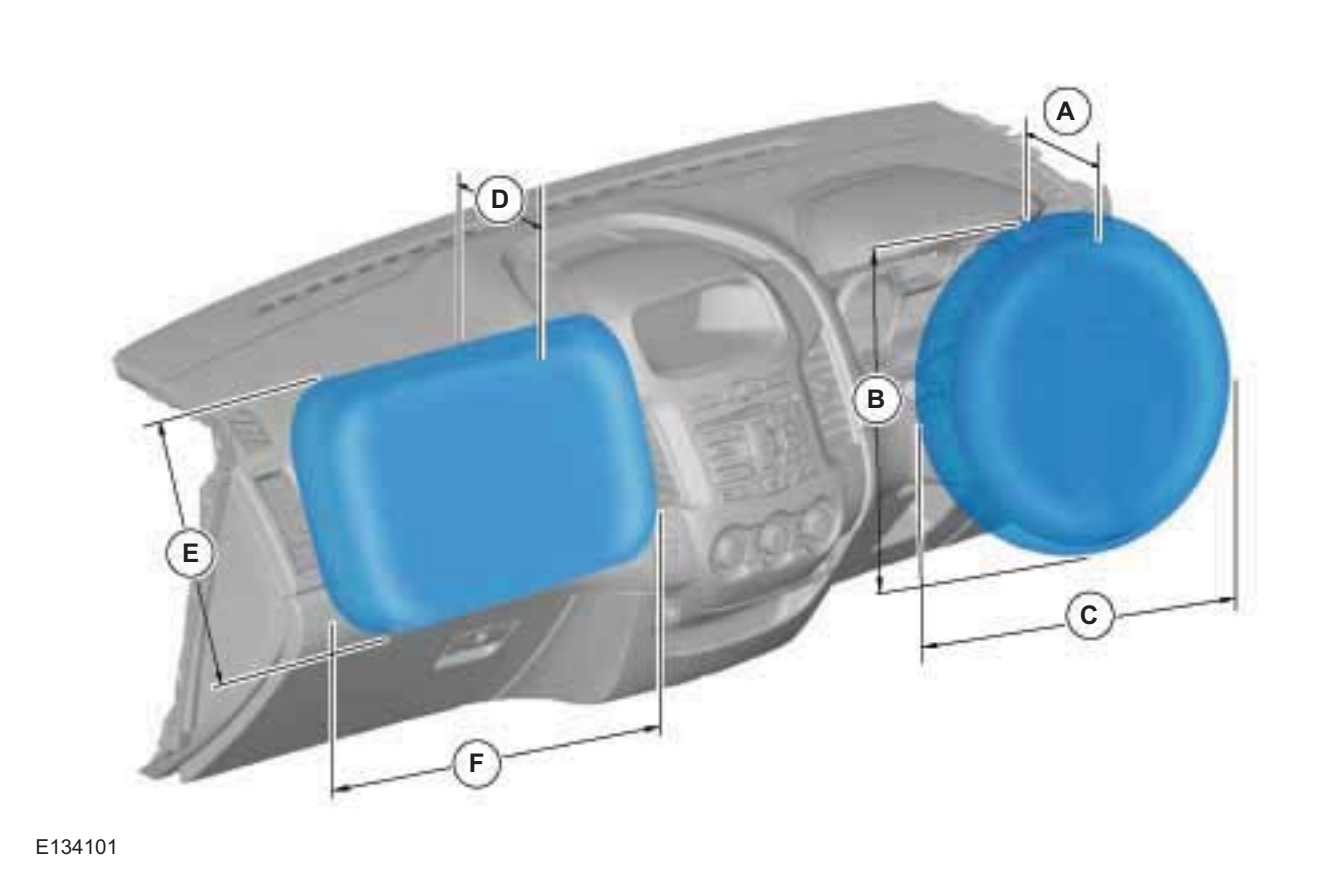

Dimensions (mm)			
A	400	D	660
B	700	E	630
C	700	F	700

Side Airbag

Driver and Passenger Front Airbag Deployment Zones

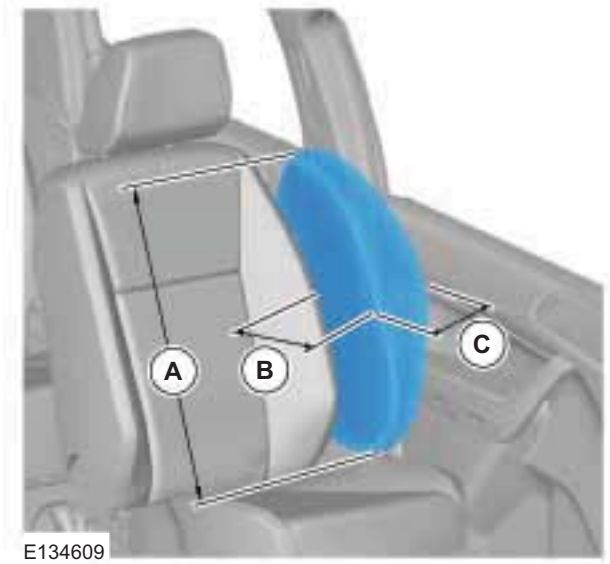

Dimensions (mm)			
A	550	C	250
B	350		

Curtain Airbag - Single cab

Driver and Passenger Front Airbag Deployment Zones

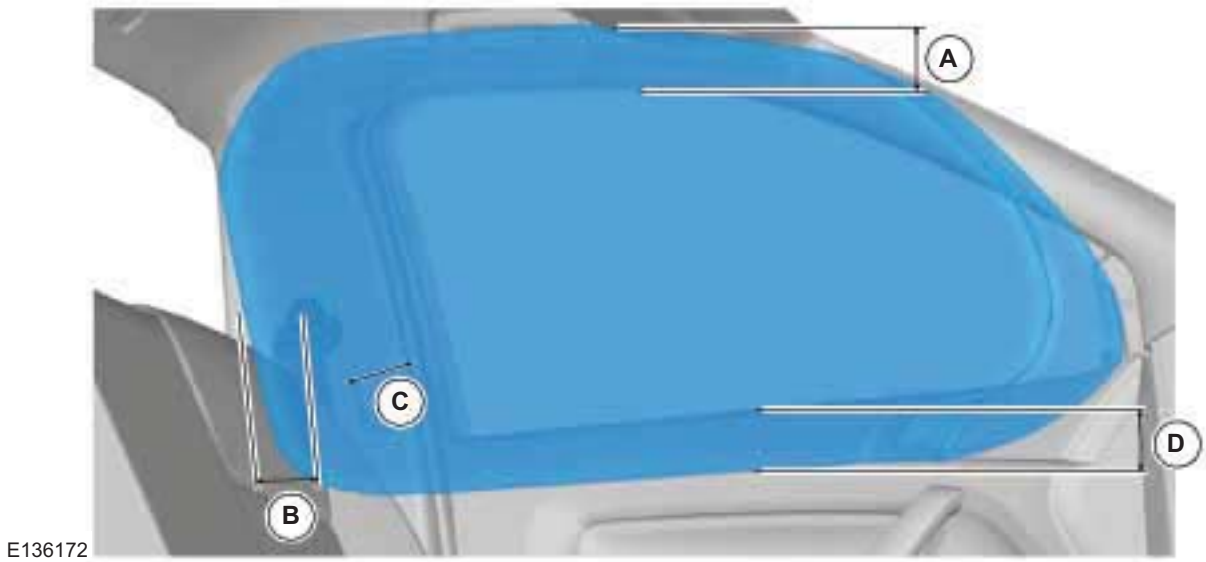

Dimensions (mm)			
A	140	C	250
B	40	D	100

Curtain Airbag - Double cab

Driver and Passenger Front Airbag Deployment Zones

Dimensions (mm)			
A	140	C	250
B	40	D	100

Curtain Airbag - Stretch cab

Driver and Passenger Front Airbag Deployment Zones

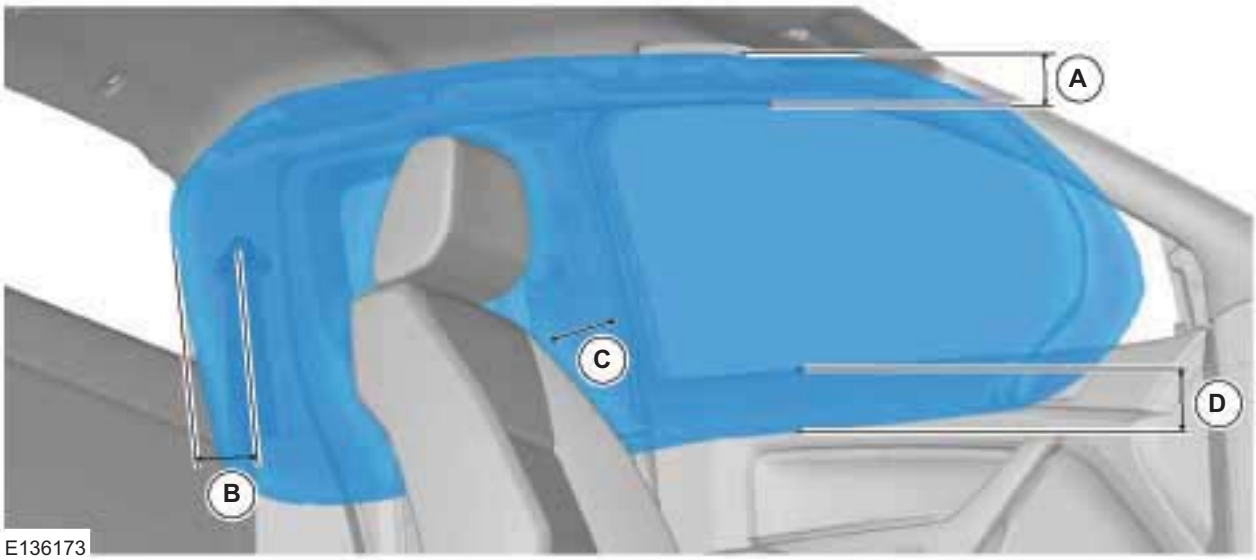

Dimensions (mm)			
A	140	C	250
B	40	D	100

5.3 Safety Belt System

WARNING: Follow removal and installation procedures for the seat belt system to ensure correct function of the restraints system.

The removal and reinstallation of the seat belt, restrainer or any component of the seat belt system should be avoided. However if removal and re-installation of the system is required during the conversion, follow the removal and installation guidelines of the seat belt system as described in the workshop manual. Please consult your local National Sales Company representative for further information.

When removing the seat belt system, a seat belt webbing forked retainer should be applied to the webbing 200mm below the webbing button stop. This prevents a situation where all the webbing runs back into the retractor and the retractor becomes locked.

When reinstalling, fit the retractor to the body first and gently pull the webbing out of the retractor to allow fitment of the D loop. Then remove the forked retainer. If the retractor is locked, allow a small amount of webbing to reel back into the retractor to allow the webbing lock to release. Do not attempt to release the retractor by pulling on the webbing with significant force or by manually interfering with the locking mechanism.

Draft

5.4 Corrosion Prevention

5.4.1 General

Avoid drilling into closed frame body members to avoid the risk of corrosion from swarf.

If drilling is required, however:

- Re-paint metal edges and protect against corrosion after cutting or drilling operations.
- Endeavor to remove all swarf from inside the side member and treat to prevent corrosion.
- Apply corrosion protection inside and outside of the chassis frame.

5.4.2 Repairing Damaged Paint

After cutting or reworking any sheet metal on the vehicle the damaged paint must be repaired.

Ensure all materials are compatible with the relevant Ford specifications and maintain the original performance where possible.

5.4.3 Under Body Protection and Material

WARNING: Do not over-coat or contaminate surfaces of components such as brakes or catalytic converters.

Ensure all materials are compatible with the relevant Ford specifications and maintain the original performance where possible.

Some proprietary products affect the original coatings. For specifications of corrosion protection materials, please consult your local National Sales Company representative.

5.4.4 Painting Road Wheels

WARNING: Do not paint wheel clamp surfaces in contact with other wheels, brake drum or disc, hub and holes or surface under wheel nuts. Any further treatment in these areas may affect the wheel clamp performance and the vehicle safety. Mask the wheel when changing the color or repairing paint.

5.4.5 Contact Corrosion

When using different materials with a different electrochemical potential, ensure that materials are isolated from each other to prevent contact corrosion caused by a potential difference.

Use appropriate isolation materials.

Where possible, choose materials with low level of electrochemical potential difference.

Draft

5.5 Frame and Body Mounting

5.5.1 Mounting Points and Tubing

Holes on frame are a result of the production process. They are not designed for fixing additional equipment. Always use chassis mounts as shown in sub frame for low floor or other equipment. If additional fixings are required please follow the recommendation given in the figure shown. This does not apply to areas of load applications such as spring fixings or damper fixings.

NOTE: After drilling, deburr and countersink all holes and remove chips from the frame. Follow corrosion prevention.

Refer to: 5.4 Corrosion Prevention (page 49).

Frame Drilling and Welding

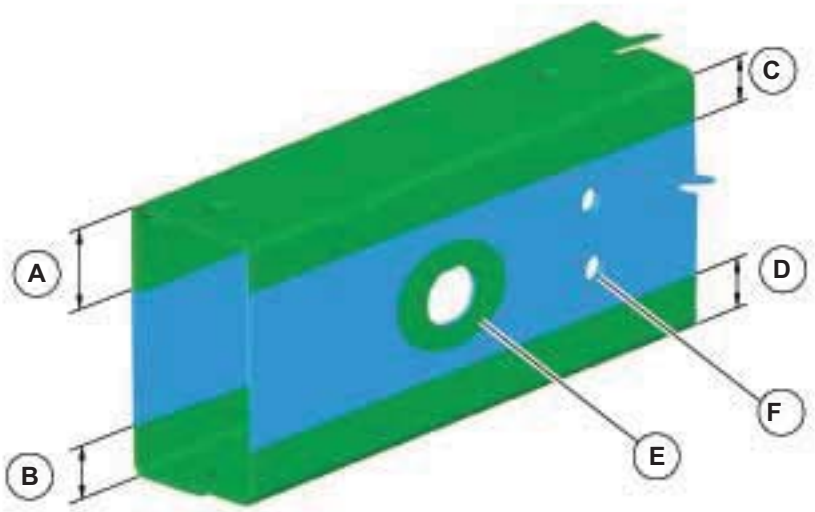

E134173

Dimensions (mm)for Body Attachment Holes in chassis Frame Top Flange Medium Wheelbase			
A	19	D	110
B	11	E	Do not drill within 20mm hole, or in the areas shaded in green.
C	100	F	No more than 2 holes to be drilled in a vertical line.

1. No Welding is Allowed to the Vehicle Structure.
2. To make holes in frames do not use a gas flame. Drill holes using sharp drills.
3. Use cold riveting only when attaching brackets with rivets.
4. Use high tensile bolts and appropriate nuts when bolted attachments are used.
   - Bolt Specifications :
   - Metric – Property class 8.8 or 10.9
   - Japanese – 7T or 9T
   - SAE – Grade 8 5.
5. Deburr holes after drilling to fit bolts or rivets. Chamfer 1.0mm x 45 degree on the bolt head side of the hole to facilitate bolt seating.
6. Holes must NOT be drilled near side member profile changes.
7. Existing holes in top and bottom flanges must NOT be bored out.
8. No more than two holes are to be drilled in a vertical line down from the frame web.
9. Corrosion protection is to be applied post drilling operations to the vehicle. Corrosion protection & protective coatings for all modifications should conform to all local design rules.
10. Reinforcements should be added to the vehicle structure where appropriate, to avoid excessive load concentrations.

Typical Design Principle of a Self-Supporting Body Structure

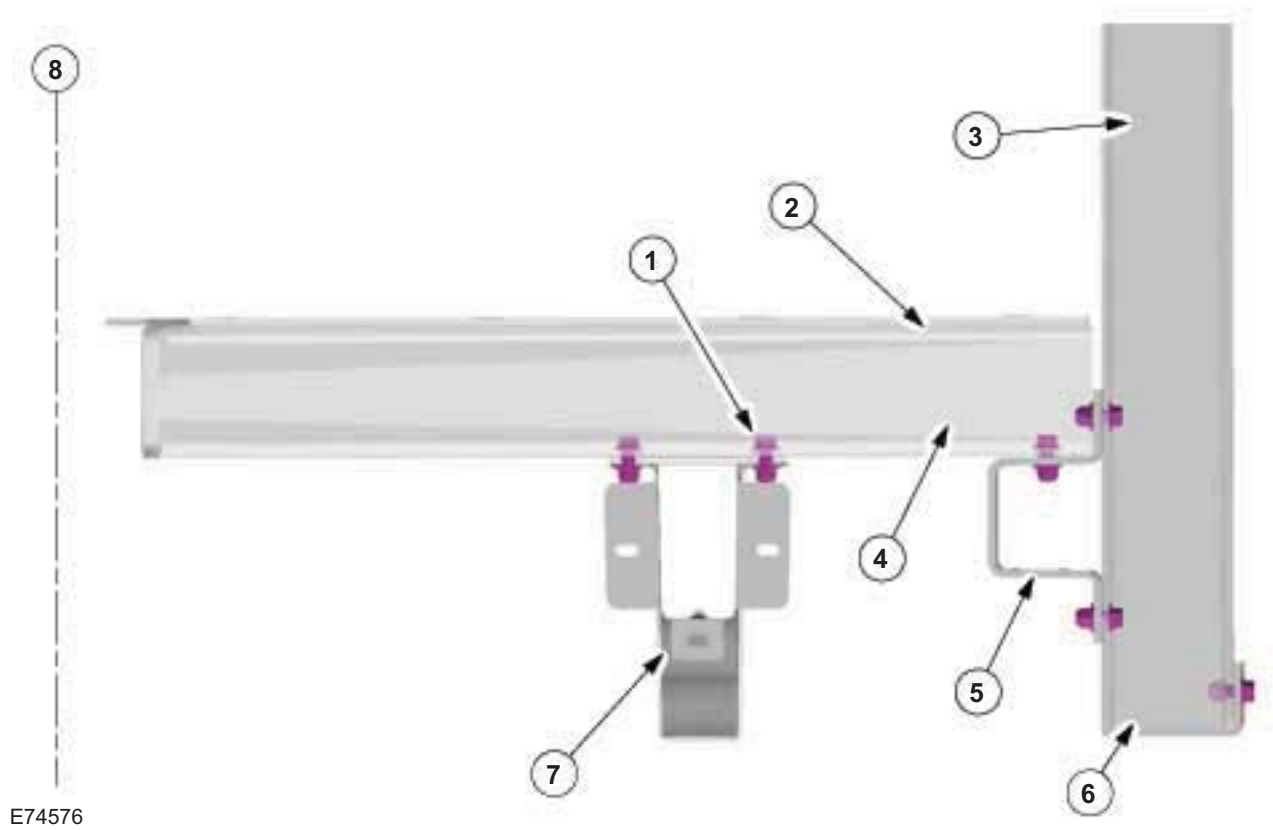

Item	Description
1	Use all standard locations with 2x M10 fixings
2	Floor Panel
3	Body side frames
4	Floor cross members
5	Continuous floor U-profile frame
6	Longitudinal L-profile
7	Chassis frame rail of base vehicle
8	Vehicle center line of base vehicle

Also see:

Refer to: 5.1 Body (page 35).

5.5.2 Self-Supporting Body Structure

Bodies and structures can be judged as self-supporting providing they maintain the following rules:

- Cross members are used at each chassis mounting point, please refer to figures shown.
- Each cross member has a suitably engineered connection to the body side wall (3) or to the continuous floor frame (5), see figure shown.
- The body side wall or the continuous floor frame supports any overhang beyond the chassis frame, whether on standard frame or extended frame.

Alternatively, the self-supporting body structure can also be designed as shown in figure shown.

- This concept is based on a self-supporting structure where the floor is mounted directly onto the top surface of the chassis frame.
- See figure shown for a generic vehicle cross section where the cross members and opposing out riggers are flush with the surface of the chassis frame side members.
- It is important to the overall function of the vehicle structure that the out riggers are each connected to a continuous longitudinal floor side frame or a structural body side structure assembly.

Low floor-re-work for guidance only:

- Engineer unique cross members and out-riggers spaced at approximately 600mm maximum pitch.
- Out-rigger moment to be re-acted with cross-member between chassis frame with common through bolts where possible.
- Drill frame and add spacer tubes.

  Refer to: 5.5 Frame and Body Mounting (page 50).
- Out-rigger outboard ends should be attached to load bearing body side / floor edge frame or body side structure (including over wheel support).
- Structural wheel box should maintain longitudinal continuity with a rigid attachment to the floor edge frame or to the body side structure.
- Floor boards should be substantially attached to cross members and outriggers, but not to the chassis frame top surface.
- Low floor exhaust heat shields.

5.5.3 Frame Drilling and Tube Reinforcing

The chassis frame may be drilled and reinforcing spacer tubes may be welded in place, providing the following is applied:

- Adhere to all details shown in figure.
- Drill and weld only side walls of the chassis frame.
- Locate and drill holes accurately, using a drill guide to ensure holes are square to frame vertical center line (note: allow for side member draft angle).
- Drill undersize and ream out to size.
- Endeavor to remove all swarf from inside side member, and treat to prevent corrosion.
- Fully weld each end of the tube and grind flat and square, in groups if applicable. Be aware of side member draft angle.
- Apply corrosion protection inside and outside of the chassis frame.

  Refer to: 5.4 Corrosion Prevention (page 49).
- Holes should be in groups of two (2), either vertically spaced at 30 to 35mm from chassis frame top and/or bottom surface, or horizontally at 50mm minimum pitch, 30 to 35mm from top and/or bottom chassis frame surface.
- Always use M10 bolts with grade 8.8 minimum.
- Do not position tubes at the medium chassis frame height, this may create “oil canning” of the deep section side walls.
- Where possible, the outrigger moments should be resolved by matching inner cross members between the chassis side members inline with the outriggers.
- A diameter of 16.5mm is the maximum allowable hole size in the chassis frame side wall, irrespective of the usage.

Avoid drilling into closed frame body members to avoid the risk of corrosion from swarf.

Refer to: 5.4 Corrosion Prevention (page 49).

Drilling and welding of frames and body structure have to be conducted following the program guidelines. Please consult the Ford dealer for details.

5.5.4 Ancillary Equipment - Sub Frame Mounting

Typical sub-frames and longitudinal members for flatbed and low or drop-side bodies or equipment exceeding the standard or Regular Production Order frame length should adhere to the following guidelines:

- Flat-beds and low bodies mounted on integral longitudinal members (channel or box section metal – not wood) must use both sides of all frame mounting brackets.
- Longitudinal members must be relieved at the front end if they are to contact the chassis frame top surface, to minimize stress concentrations. It is preferable however, to mount the longitudinal onto the mounting brackets, with a clearance to the chassis frame top surface.
- Each set of brackets must use two (2) x M10 bolts grade 8.8 minimum.
- Minimum floor heights will require wheel arch boxes to clear the rear tires, see Vehicle Data sheets for relevant tire jounce.

5.5.5 Area for Fitting Additional Body Attachments to the Rear of the Bumper.

NOTE: With the vehicle on level ground and with all measurements taken rear ward of the bumper bar edge: The area designated for the fitting of attachment is defined as 220mm horizontally by 95mm vertical downward to the road surface, with a max width of 1390mm about vehicle center line.

It is not the manufactures recommendation to fit additional body attachments (Tow bars, Steps, Bicycle racks & Carriers) outside of the designated area.

5.5.6 Water Tank on Camper Vehicles

NOTE: It is recommended that a decal or label is fitted adjacent to the filler aperture identifying the correct fluid to be used, for example: 'Water only' for water tanks.

Draft

Index

A

About This Manual....4
Additional External Lamps....34
Aids for Vehicle Entry and Exit....16
Air Bags....45
Air Bag Supplemental Restraint System (SRS)....45
Alternative Type Approval....5
Ancillary Equipment - Sub Frame Mounting....52
Area for Fitting Additional Body Attachments to the Rear of the Bumper....52

B

Battery and Cables....32
Battery Information....32
Body....35
Body Structures - General Information....35

C

Center of Gravity....26
Chassis Cab Body - Basic Dimensions and Weights....19
Chassis Cab....36
Commercial and Legal Aspects....5
Contact Corrosion....49
Conversion Affect on Fuel Economy and Performance....10
Conversion Affects on Parking Aids....16
Conversion Homologation....7
Corrosion Prevention....49

D

Drilling and Welding....6
Driver Field of View....16
Driver Reach Zones....16

E

Electrically operated Door Mirrors....34
Electromagnetic Compatibility (EMC)....8
Exterior Lighting....34

F

Frame and Body Mounting....50
Frame Drilling and Tube Reinforcing....52
Front, Rear and Side Under-run Protection....22
Front End Integrity for Cooling, Crash, Aerodynamics and Lighting....42

G

General Component Package Guidelines....16
General....49
General Product Safety Requirement....5
Generator and Alternator....33

H

Hardware—Specifications....23
How to Use This Manual....4

I

Important Safety Instructions....4
Integrated Bodies and Conversions....35
Introduction....4

J

Jacking....11

K

Kerb Weights....21

L

Lamps – Hazard / Direction Indication....34
Legal and Vehicle Type Approval....5
Legal Obligations and Liabilities....5
Lifting....13
Load Distribution—Specifications....24
Load Distribution Calculations - Driver and Passenger Weight Distribution....24

M

Minimum Requirements for Brake system and Load Apportioning Valves....6
Mounting Points and Tubing....50

N

Noise, Vibration and Harshness (NVH)....14

P

Package and Ergonomics—Specifications....17
Package and Ergonomics....16
Painting Road Wheels....49
Product Liability....6

R

Recommended Body Dimensions....17
Repairing Damaged Paint....49
Restraints System....6
Reversing Lamps....34
Road Safety....6
Roof Racks....43

S

Safety Belt System....48
Self-Supporting Body Structure....51
Suggested Antenna Location....9
Suspension System....31

T

Tank and Dry Bulk Carriers.....42
Terminology.....5
Tipper Bodies.....42
Towing capacities.....29
Towing Requirements.....29
Towing Specifications.....30
Towing.....29

U

Under Body Protection and Material.....49

V

Vehicle Duty Cycle Guidelines.....10
Vehicle Ride and Handling Attributes.....10
Vehicle Transportation Aids and Vehicle Storage.....15

W

Warnings, Cautions and Notes in This Manual.....4
Warranty on Ford Vehicles.....5
Water Tank on Camper Vehicles.....53

Draft

FOREWORD

To the best of our knowledge, the illustrations, technical information, data and descriptions in this issue were correct at the time of going to print. The right to change prices, specifications, and equipment and maintenance instructions at any time without notice is reserved as part of FORD policy of continuous development and improvement for the benefit of our customers.

No part of this publication may be reproduced, stored in a data processing system or transmitted in any form, electronic, mechanical, photocopy, recording, translation or by any other means without prior permission of Ford Motor Company. No liability can be accepted for any inaccuracies in this publication, although every possible care has been taken to make it as complete and accurate as possible.

© Ford Motor Company 2011

GROUP

5

FORD RANGER 2011.50MY
BODY REPAIR MANUAL

Body and Paint

SECTION TITLE PAGE

Body and Paint

Body System - General Information....501-00
Front End Body Panels....501-02
Body Closures....501-03
Interior Trim and Ornamentation....501-05
Exterior Trim and Ornamentation....501-08
Rear View Mirrors....501-09
Seating....501-10
Glass, Frames and Mechanisms....501-11
Instrument Panel and Console....501-12
Handles, Locks, Latches and Entry Systems....501-14
Wipers and Washers....501-16
Bumpers....501-19
Safety Belt System....501-20A
Supplemental Restraint System....501-20B
Body Repairs - General Information....501-25
Body Repairs - Vehicle Specific Information and Tolerance Checks....501-26
Front End Sheet Metal Repairs....501-27
Roof Sheet Metal Repairs....501-28
Side Panel Sheet Metal Repairs....501-29
Rear End Sheet Metal Repairs....501-30
Paint - General Information....501-36

SECTION 501-00 Body System - General Information

VEHICLE APPLICATION: 2011.50 Ranger

CONTENTS PAGE

DESCRIPTION AND OPERATION

Body (Overview)..... 501-00-2
General..... 501-00-2
A- and B-pillar reinforcement 501-00-2
Bumpers and radiator grille..... 501-00-3
Trailer towbar..... 501-00-4

DESCRIPTION AND OPERATION

Body – Overview

General

At introduction the following vehicle variants are available:

- 2.5L petrol 4x2 low rider, 4x2 high rider, 4x4 with manual transmission
- 2.2L diesel 88kW & 92kW 4x2 low rider, 4x2 high rider, 4x4 with manual transmission
- 2.2L diesel 110kW 4x2 low rider, 4x2 high rider drive ratio 3.31, 4x2 high rider drive ratio 3.55 with manual transmission
- 2.2L diesel 110kW 4x2 high rider with auto transmission
- 2.2L diesel 110kW 4x4 manual and auto transmission
- 3.2L diesel 4x2 high rider and 4x4 drive ratio 3.31, 4x2 high rider and 4x4 drive ratio 3.55 with manual transmission

A- and B-pillar reinforcement

Single cab

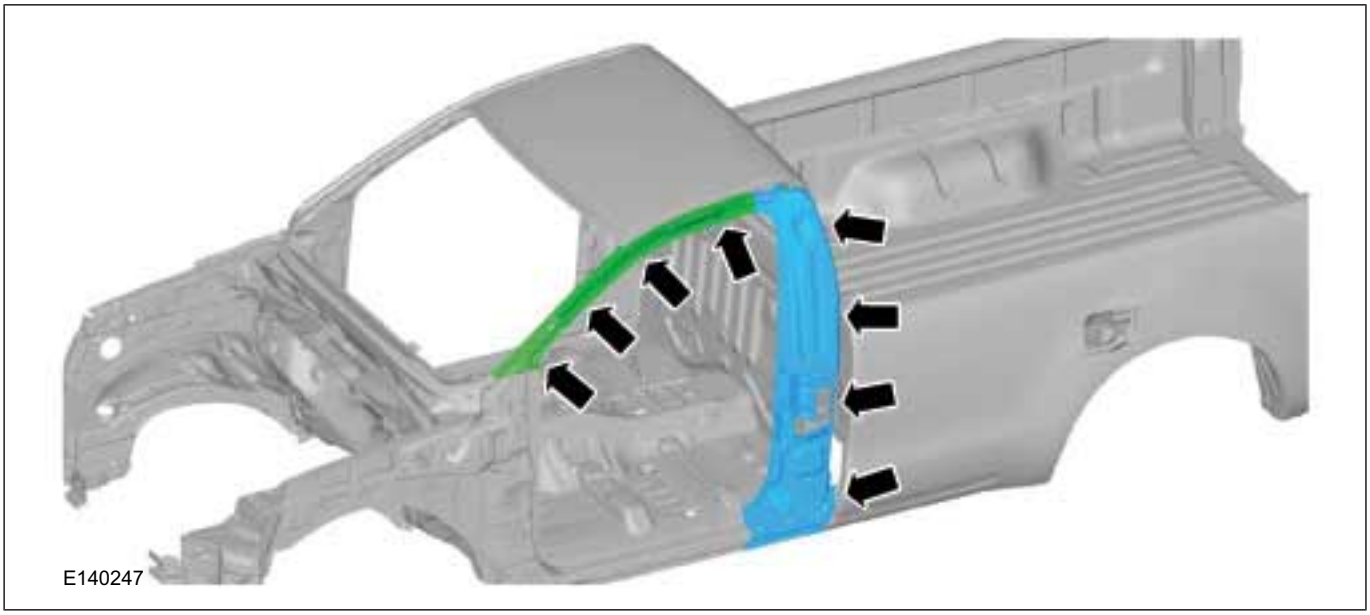

Double cab

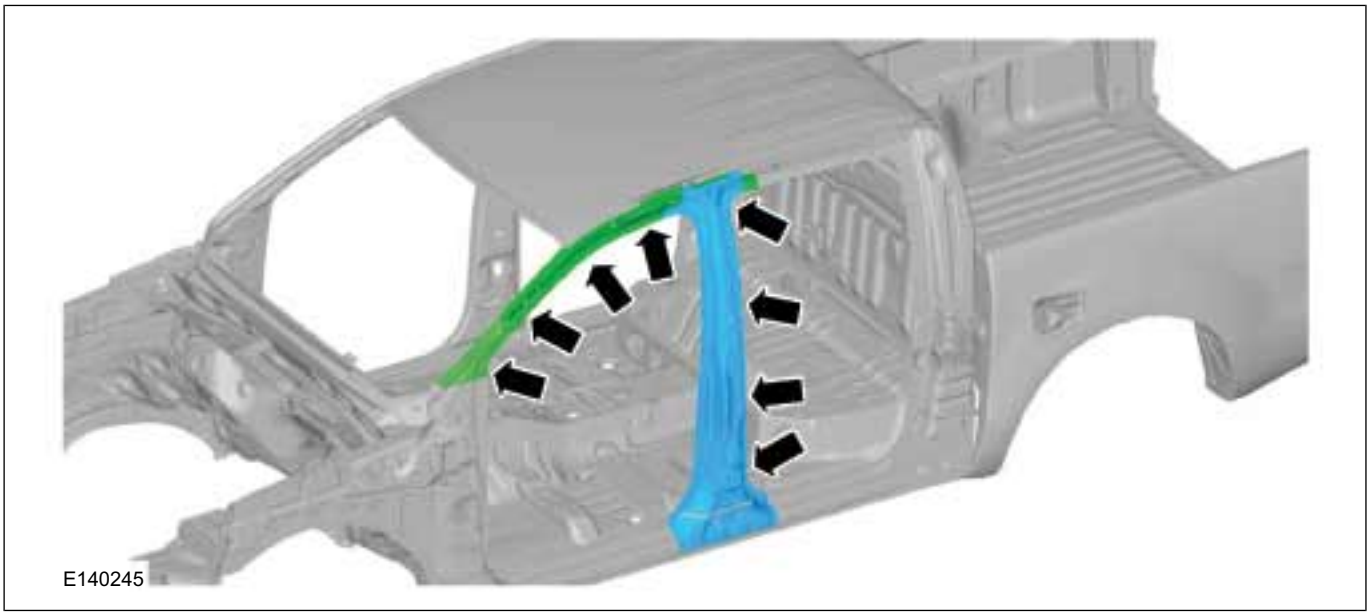

DESCRIPTION AND OPERATION

Super cab

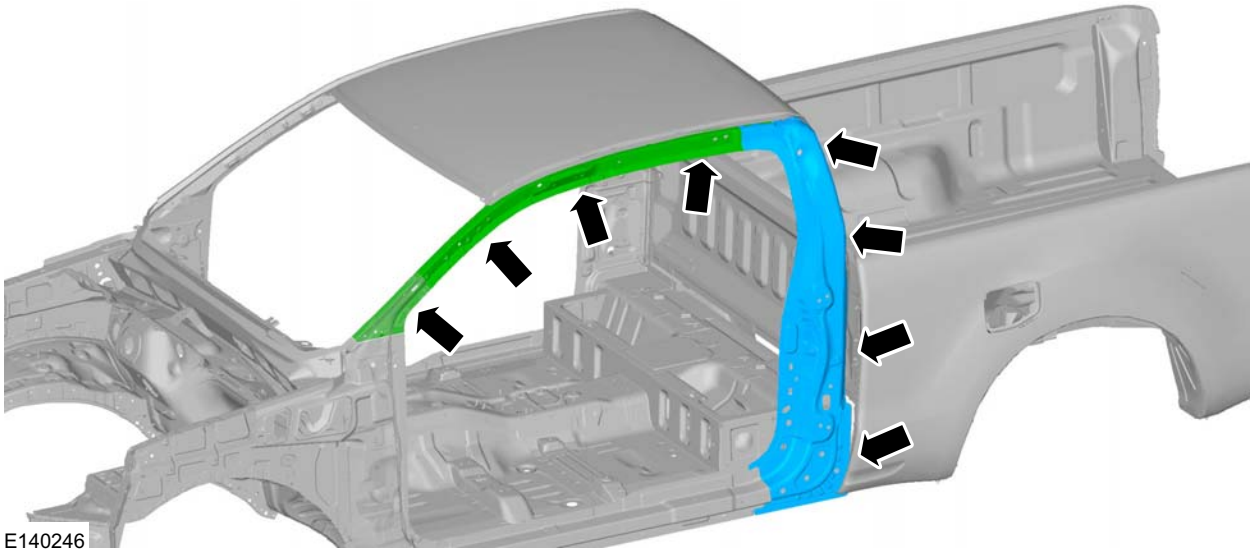

The A- and B-pillar reinforcement is made of the highest strength boron steel.

These sheet metal parts can only be replaced as a complete unit during repairs and that section repairs are not possible.

Special installation and removal requirements must be observed during repairs. Special tools are also required. Relevant instructions are available in the current service literature.

Bumpers and radiator grille

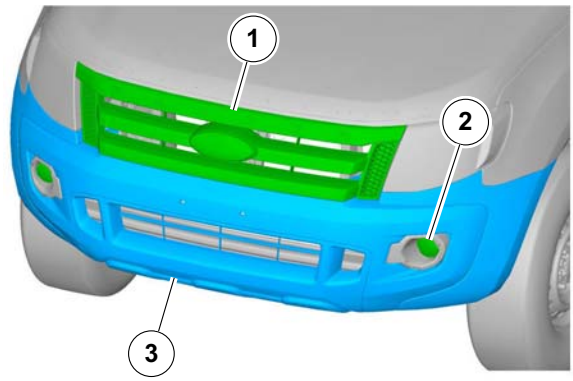

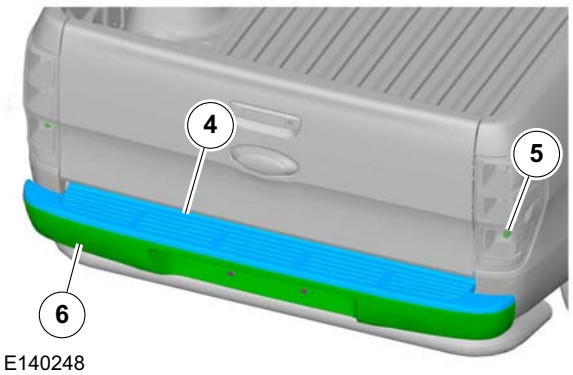

E140248

Item	Description
1	Radiator grille
2	Front fog lights
3	Front bumper and cover

DESCRIPTION AND OPERATION

Item	Description
4	Rear bumper
5	Rear fog lamp
6	Rear bumper cover

The bumpers are painted in the body color as standard for all vehicle variants.

The bumper cover is only available in grey.

Trailer towbar

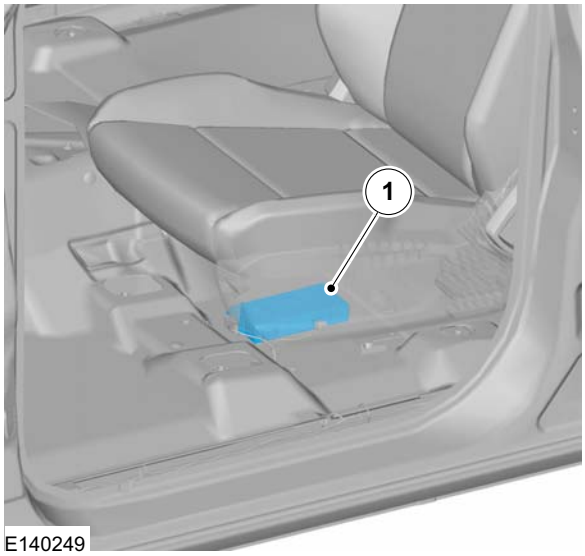

E140249

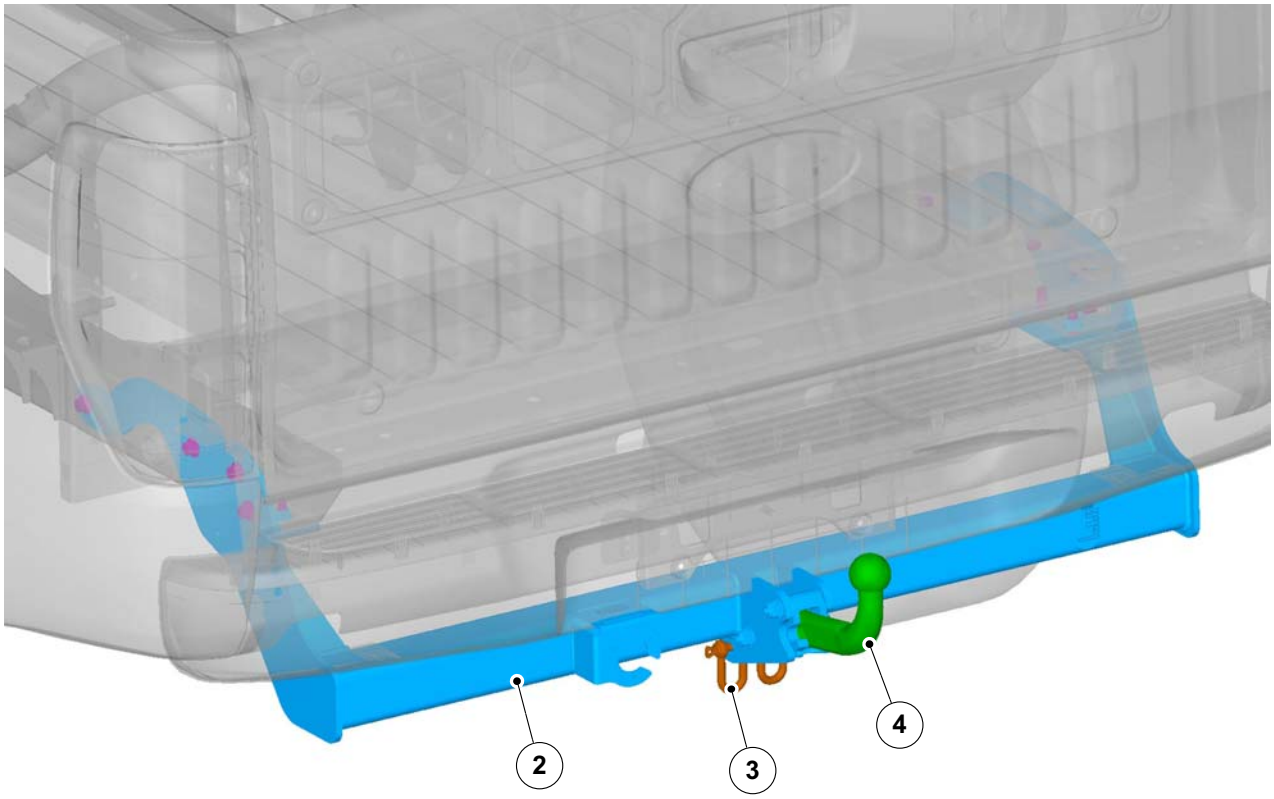

E140266

Item	Description
1	Module, trailer towbar
2	Trailer towbar

Item	Description
3	Shackles
4	Tow ball arm

At introduction, a removable towbar is made available for the vehicle.

If the vehicle is delivered from the factory with a towbar, then this is equipped with a 13-pin socket.

DESCRIPTION AND OPERATION

For aftermarket installation, both a variant with a 13-pin socket and also a variant with a 7 pin socket are available in service.

The fundamental difference between the two variants:

- The 7-pin version does not support deactivation of the parking aid (if it is installed in the vehicle).

The trailer towbar module is connected to constant positive at the passenger compartment fuse box (terminal 30, fuse 23).

For the 13-pin version, the trailer towbar module is connected with the parking aid module. As soon as a connector is inserted into the socket, the rear parking aid is deactivated.

SECTION 501-02 Front End Body Panels

VEHICLE APPLICATION: 2011.50 Ranger

CONTENTS PAGE

REMOVAL AND INSTALLATION

Cowl Panel Grille..... 501-02-2

REMOVAL AND INSTALLATION

Cowl Panel Grille

Removal

NOTE: Removal steps in this procedure may contain installation details.

1. Torque: 35 Nm

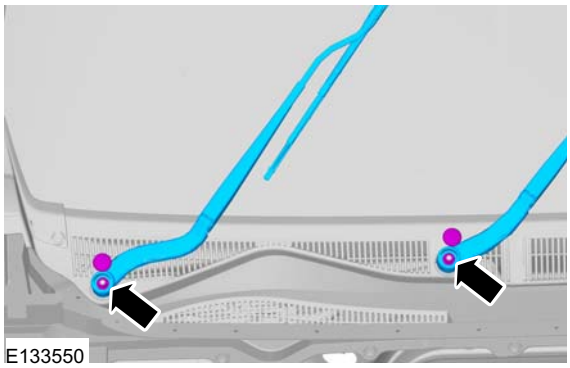

2.

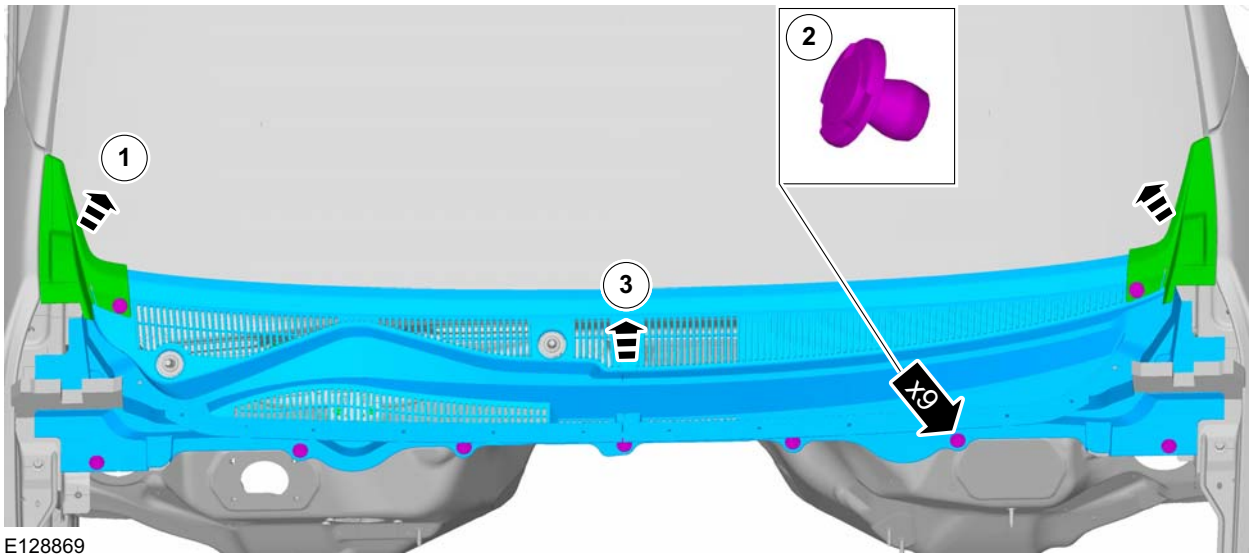

Installation

1. **CAUTION: Make sure that the motor is in the park position.**

To install, reverse the removal procedure.

2. Check the angle of the wiper arms to the windscreen.

Refer to: Windshield Wiper Blade and Pivot Arm Adjustment (501-16 Wipers and Washers, General Procedures).

SECTION 501-03 Body Closures

VEHICLE APPLICATION: 2011.50 Ranger

CONTENTS PAGE

GENERAL PROCEDURES

Door Alignment — Single Cab..... 501-03-2
Front Door Alignment — Double Cab..... 501-03-5
Front Door Alignment — Super Cab..... 501-03-8
Rear Door Alignment — Double Cab..... 501-03-11
Rear Door Alignment — Super Cab..... 501-03-14
Liftgate Alignment..... 501-03-18
Hood Alignment..... 501-03-19

REMOVAL AND INSTALLATION

Door — Single Cab..... 501-03-26
Front Door..... 501-03-27
Rear Door — Double Cab..... 501-03-29
Rear Door — Super Cab..... 501-03-30

GENERAL PROCEDURES

Door Alignment — Single Cab

Activation

1. **NOTE:** All the values are in mm.

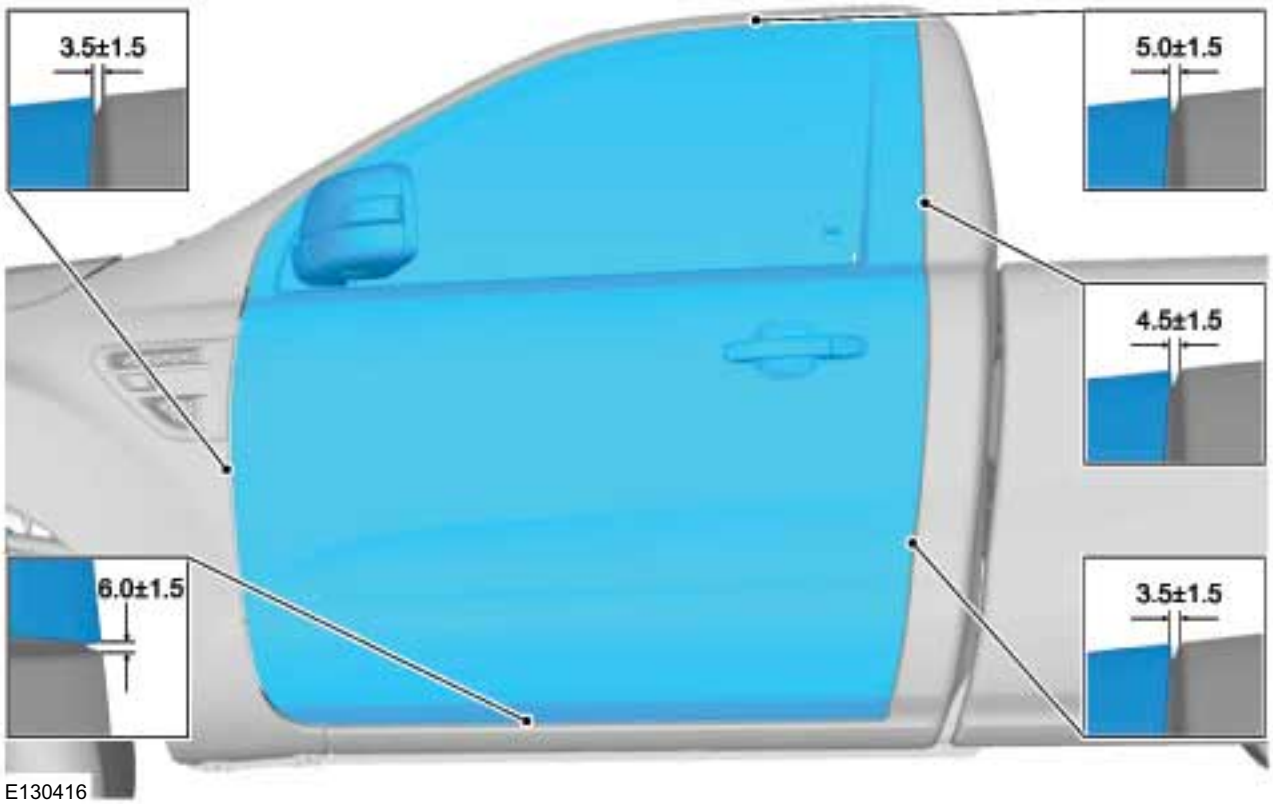

2. Loosen one complete turn.

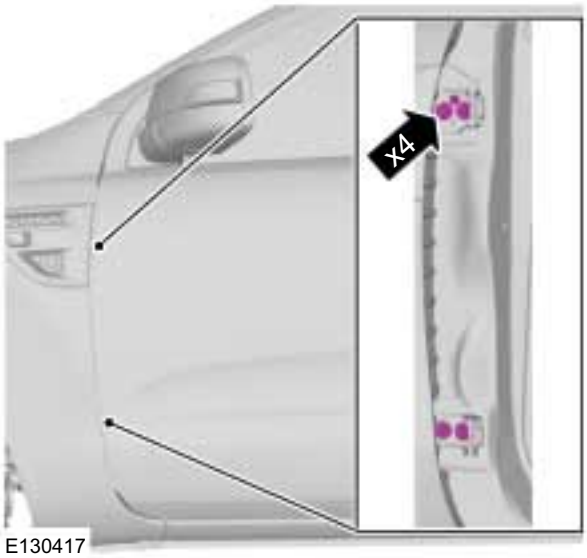

3.

GENERAL PROCEDURES

4. Torque: 25 Nm

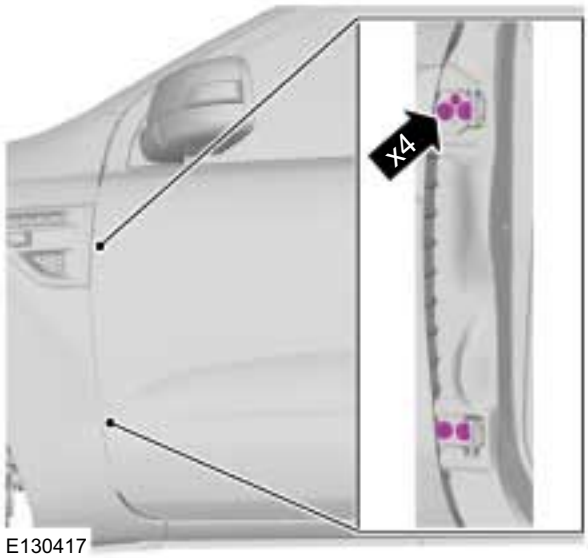

5. NOTE: All the values are in mm.

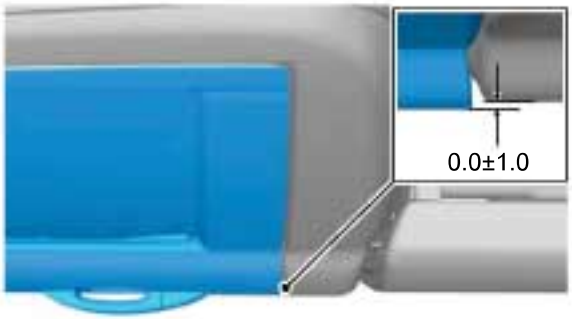

6. Loosen one complete turn.

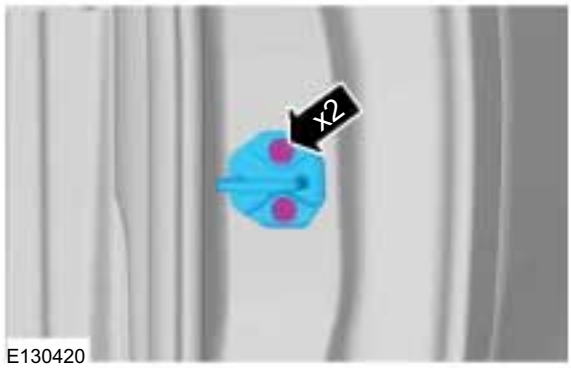

7.

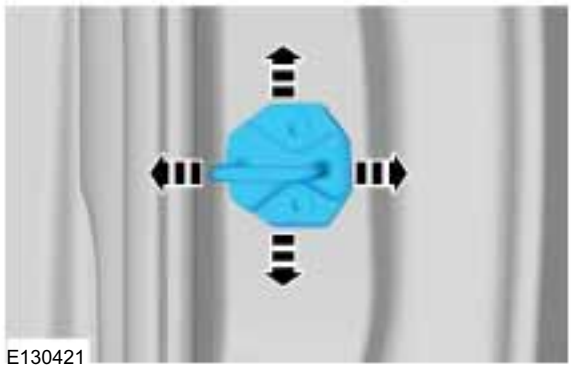

8. Torque: 20 Nm

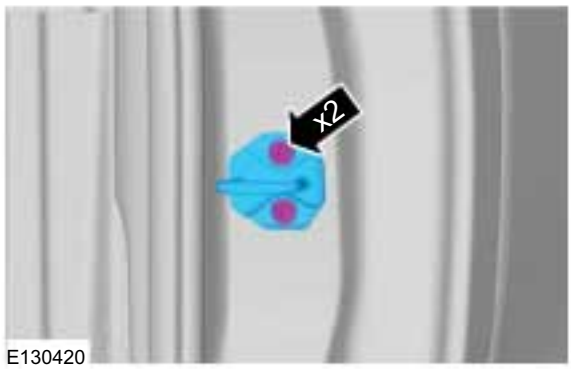

9. NOTE: All the values are in mm.

GENERAL PROCEDURES

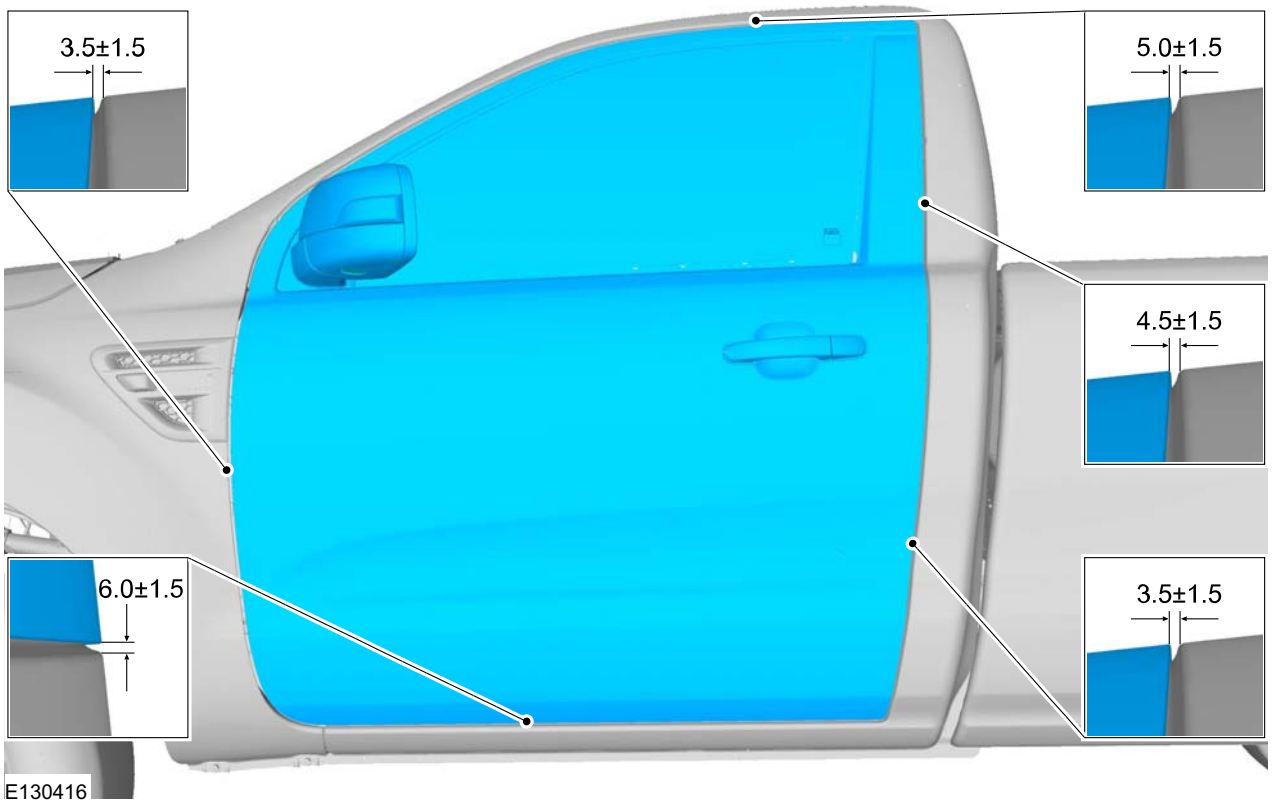

GENERAL PROCEDURES

Front Door Alignment — Double Cab

Activation

10. **NOTE:** All the values are in mm.

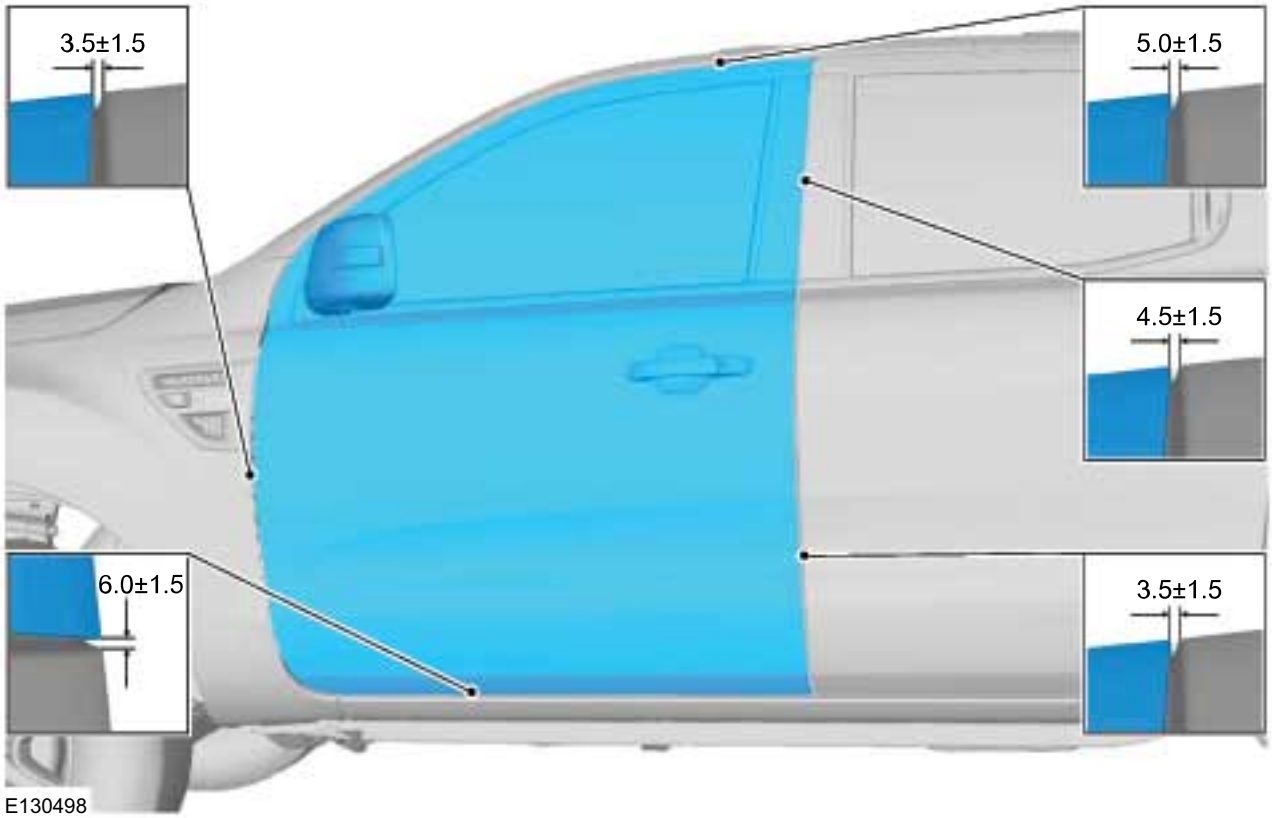

11. Loosen one complete turn.

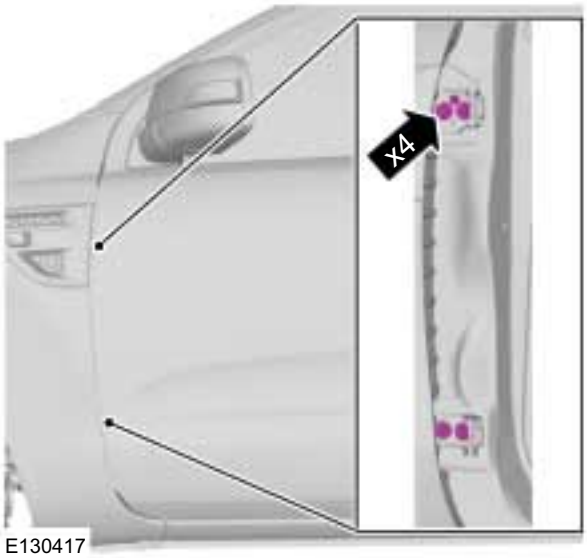

12.

GENERAL PROCEDURES

13. Torque: 25 Nm

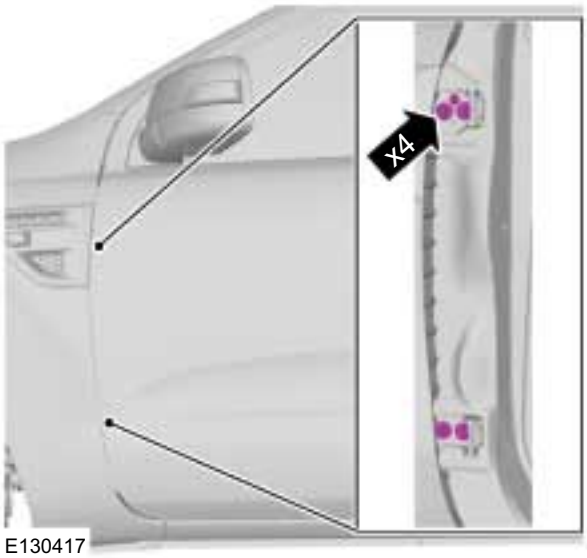

14. **NOTE:** All the values are in mm.

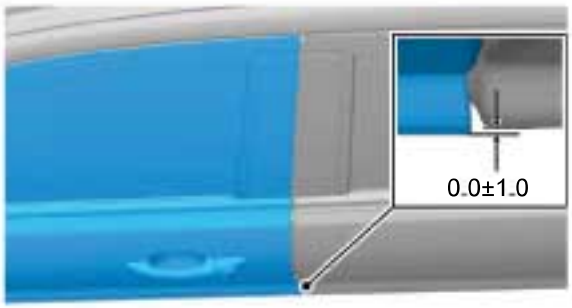

15. Loosen one complete turn.

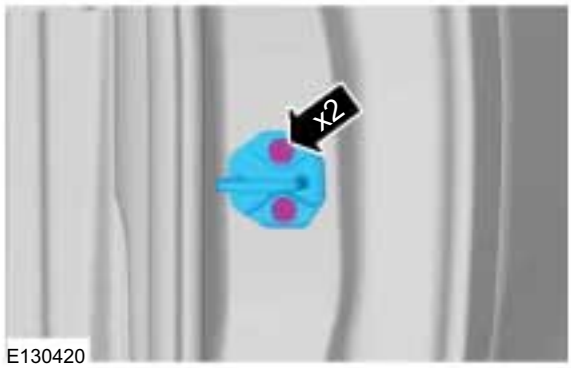

16.

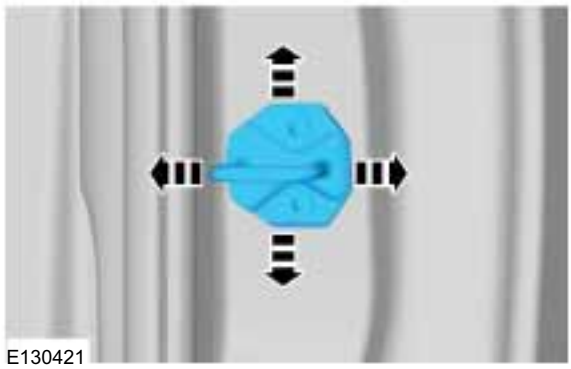

17. Torque: 20 Nm

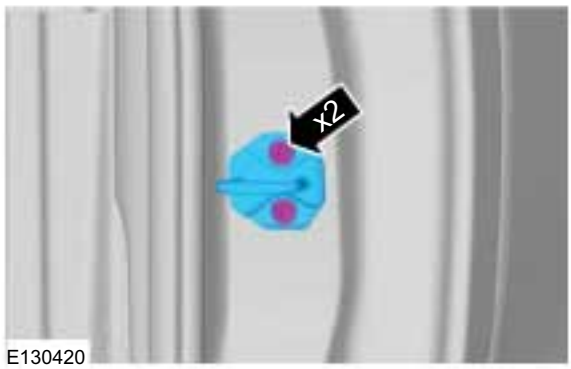

18. **NOTE:** All the values are in mm.

GENERAL PROCEDURES

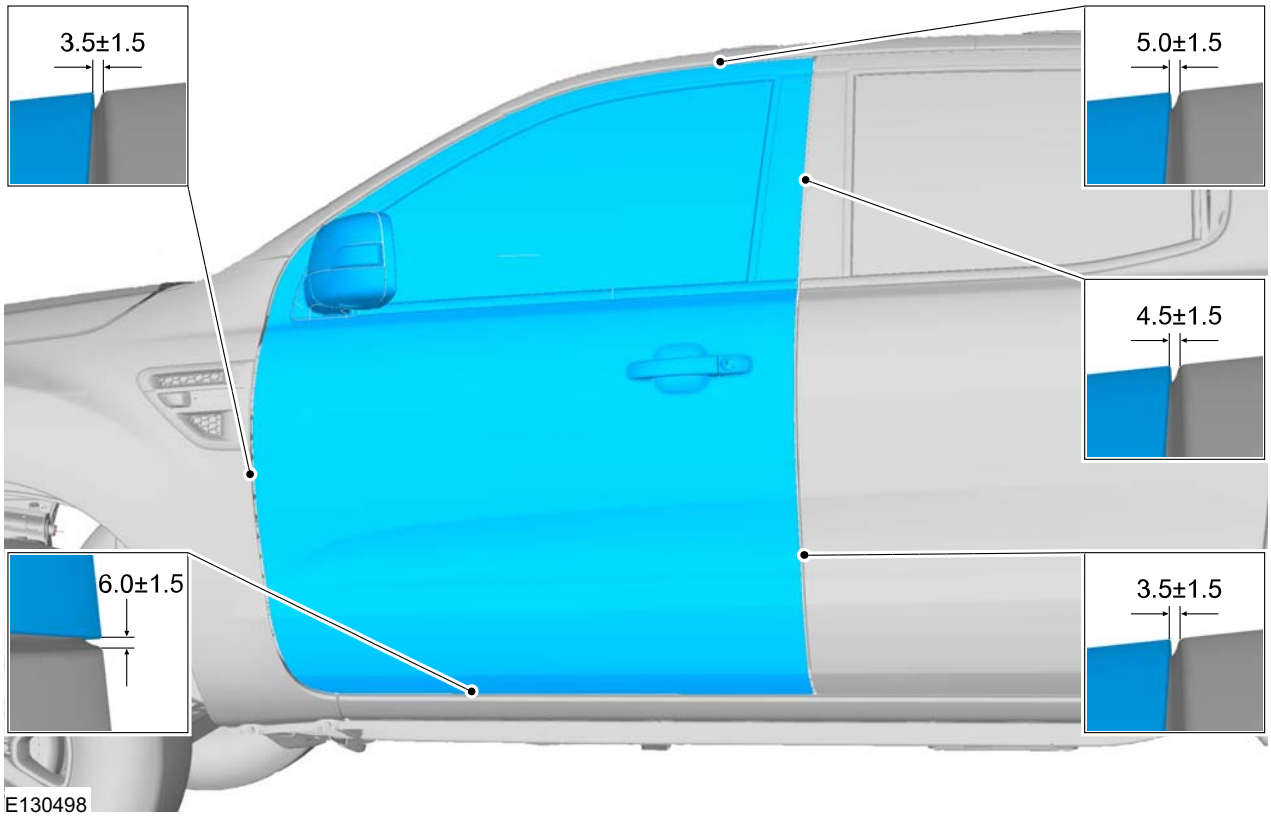

GENERAL PROCEDURES

Front Door Alignment — Super Cab

Activation

19. **NOTE:** All the values are in mm.

20. Loosen one complete turn.

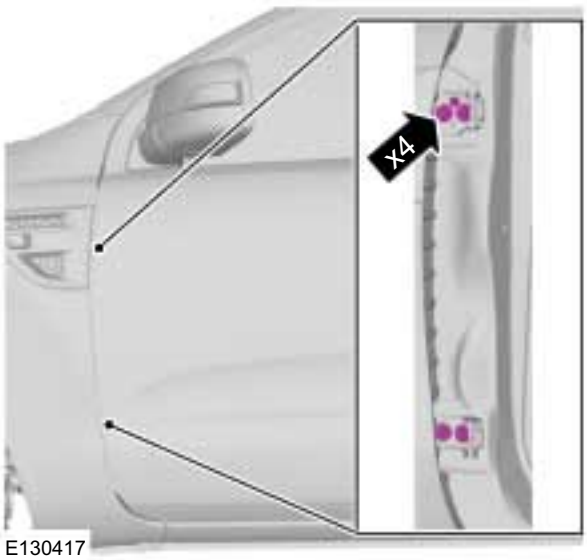

21.

GENERAL PROCEDURES

22. Torque: 25 Nm

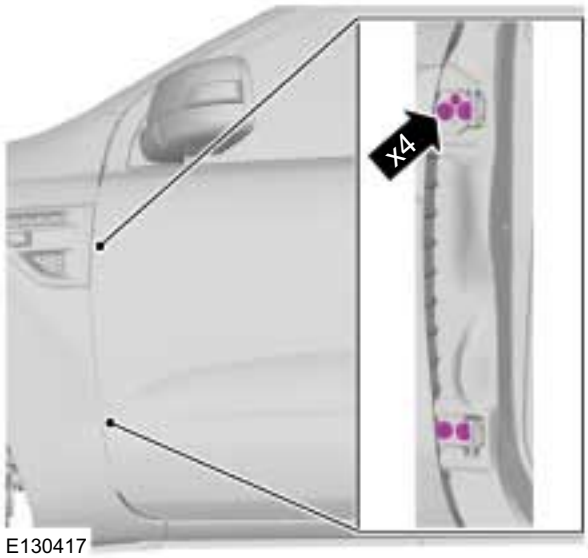

23. **NOTE:** All the values are in mm.

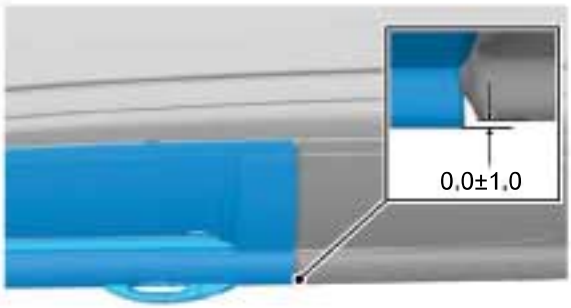

24. Loosen one complete turn.

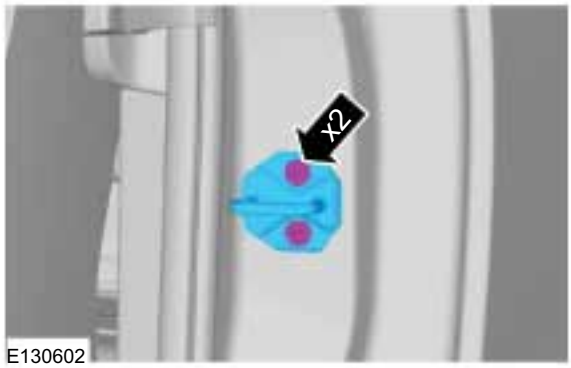

25.

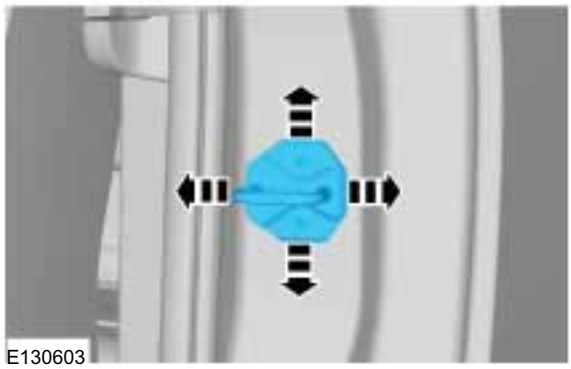

26. Torque: 20 Nm

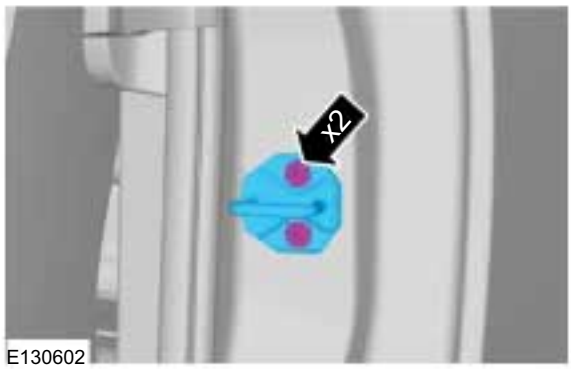

27. **NOTE:** All the values are in mm.

GENERAL PROCEDURES

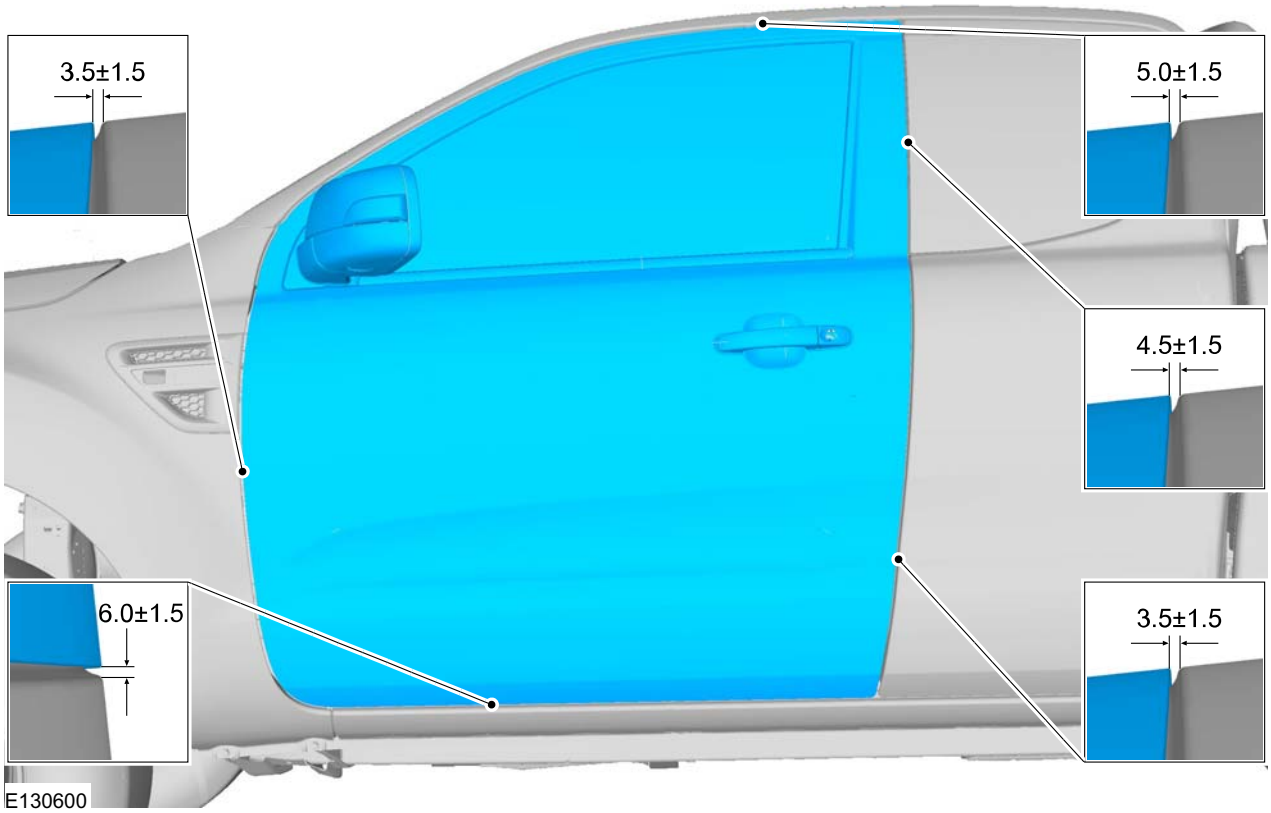

GENERAL PROCEDURES

Rear Door Alignment — Double Cab

Activation

28. **NOTE:** All the values are in mm.

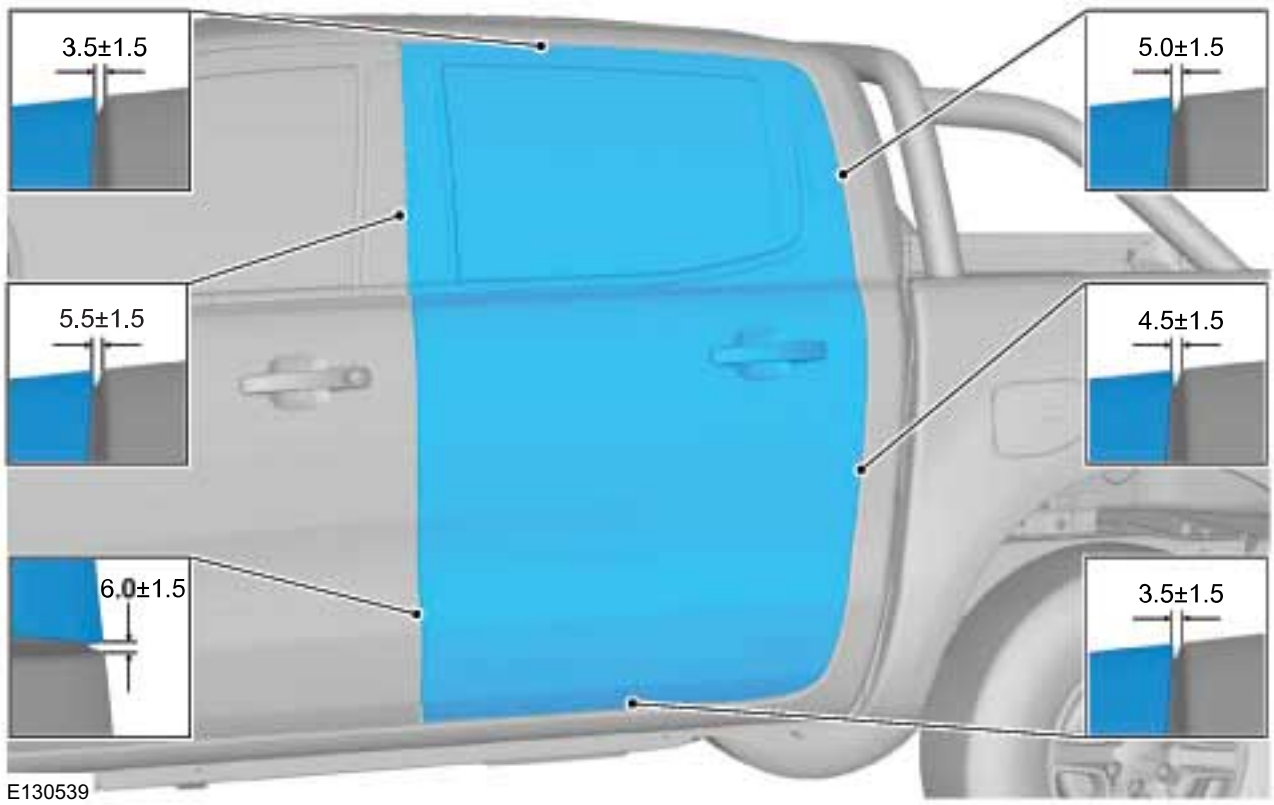

29. Loosen one complete turn.

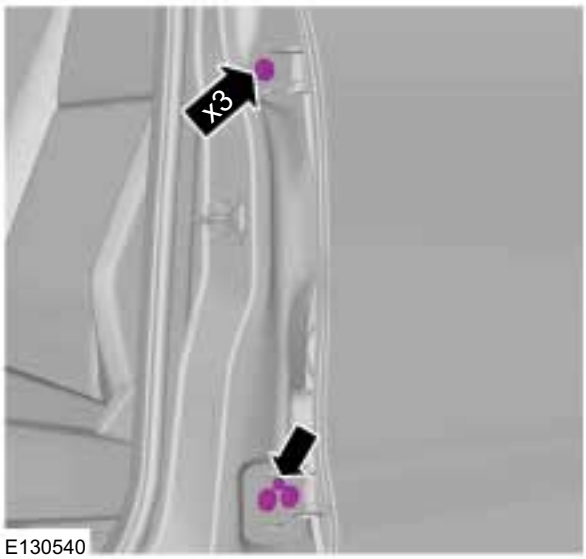

30. Refer to: B-Pillar Lower Trim Panel (501-05 Interior Trim and Ornamentation, Removal and Installation).

31. Loosen one complete turn.

GENERAL PROCEDURES

32.

E130541

33. Torque: 35 Nm

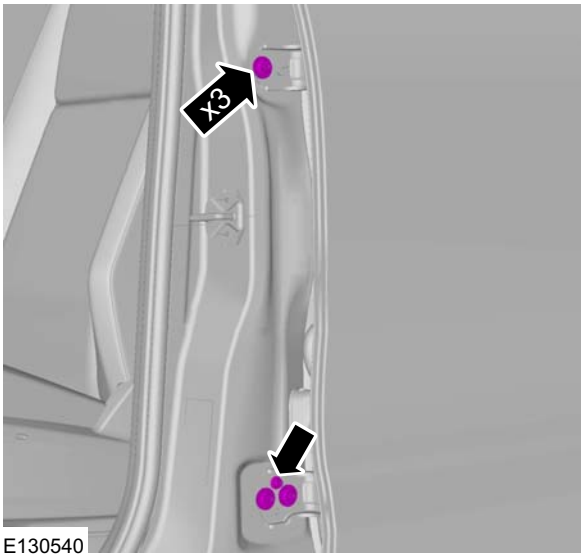

E130540

34. Torque: 35 Nm

E130553

35. **NOTE:** All the values are in mm.

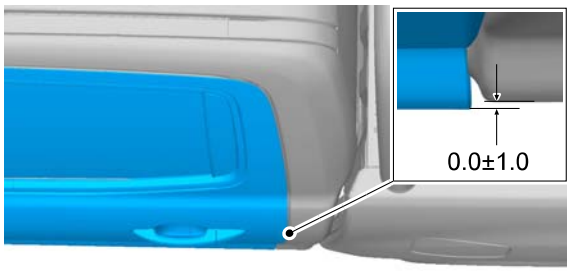

E130542

36. Loosen one complete turn.

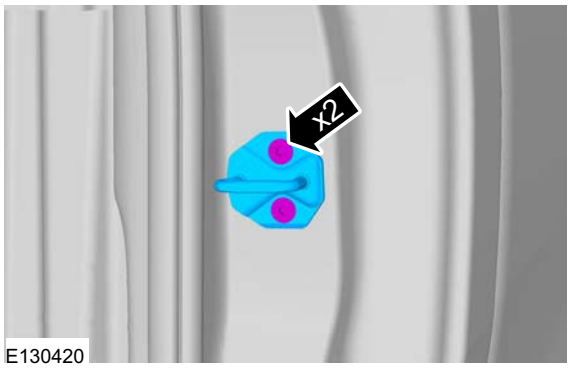

E130420

37.

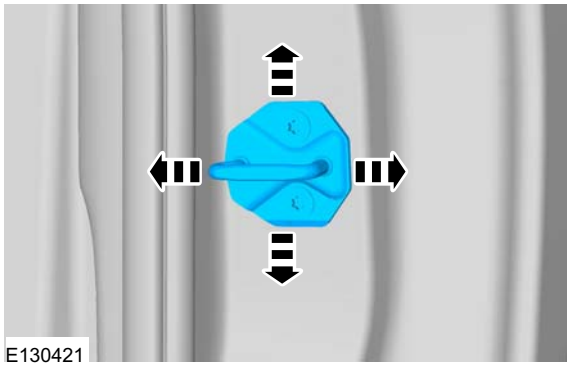
E130421

GENERAL PROCEDURES

38. Torque: 20 Nm

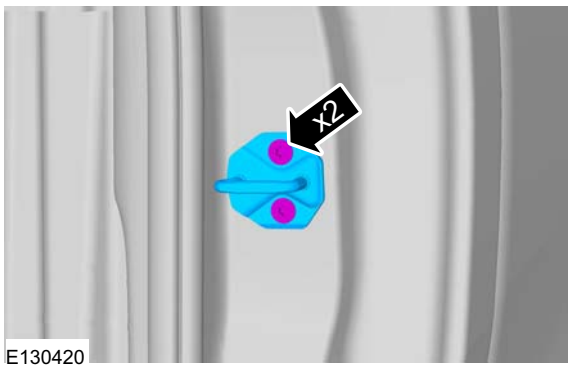

39. **NOTE:** All the values are in mm.

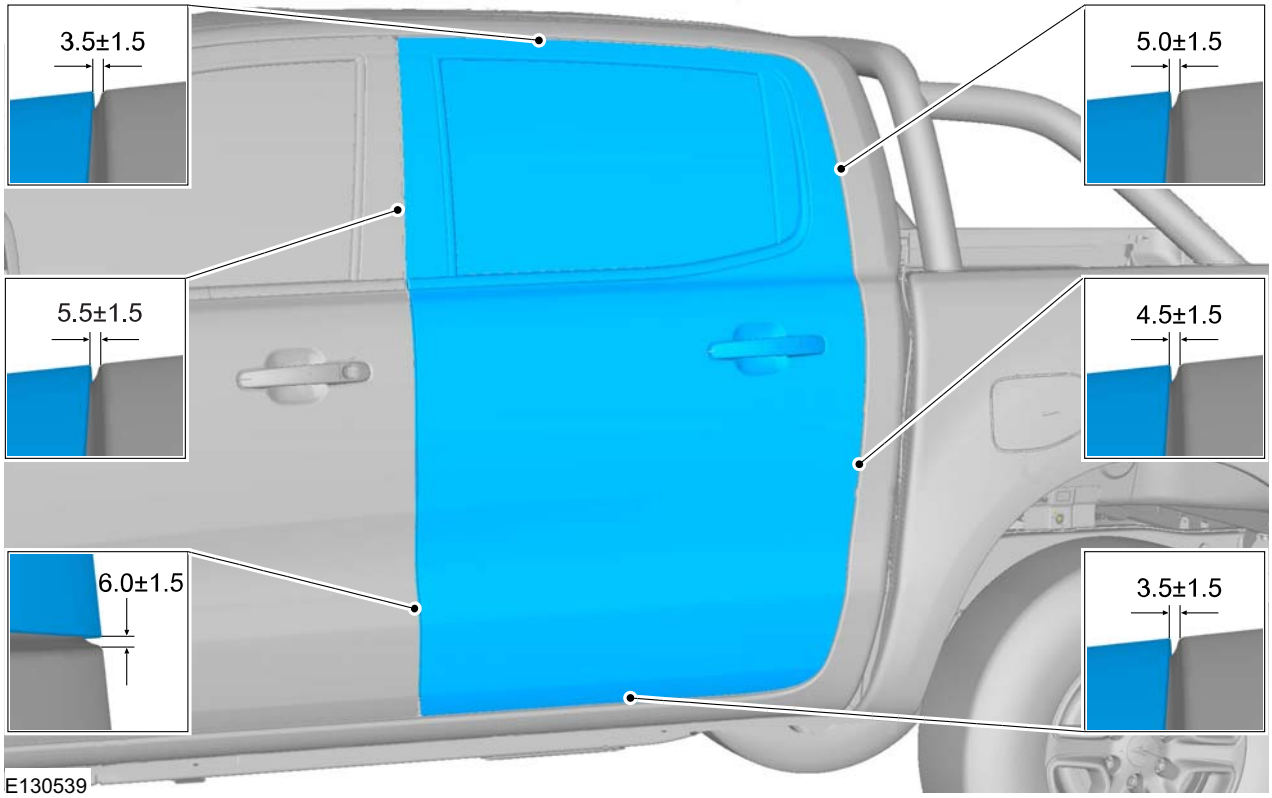

GENERAL PROCEDURES

Rear Door Alignment — Super Cab

Activation

40. **NOTE:** All the values are in mm.

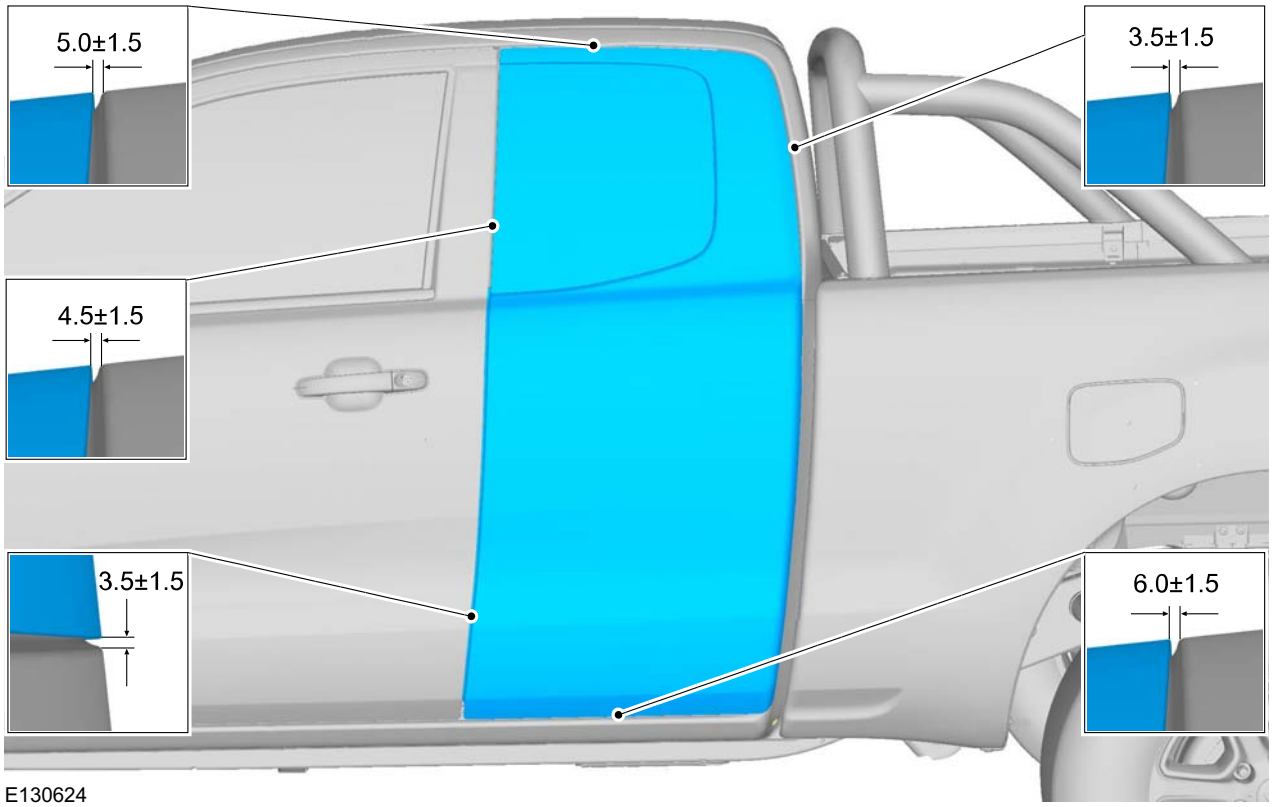

GENERAL PROCEDURES

41. Loosen one complete turn.

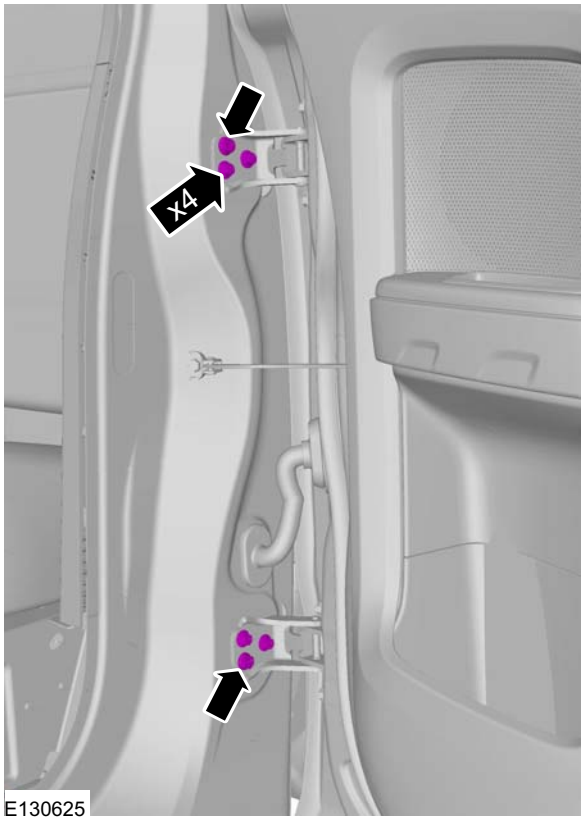

E130625

42.

E130626

43. Torque: 35 Nm

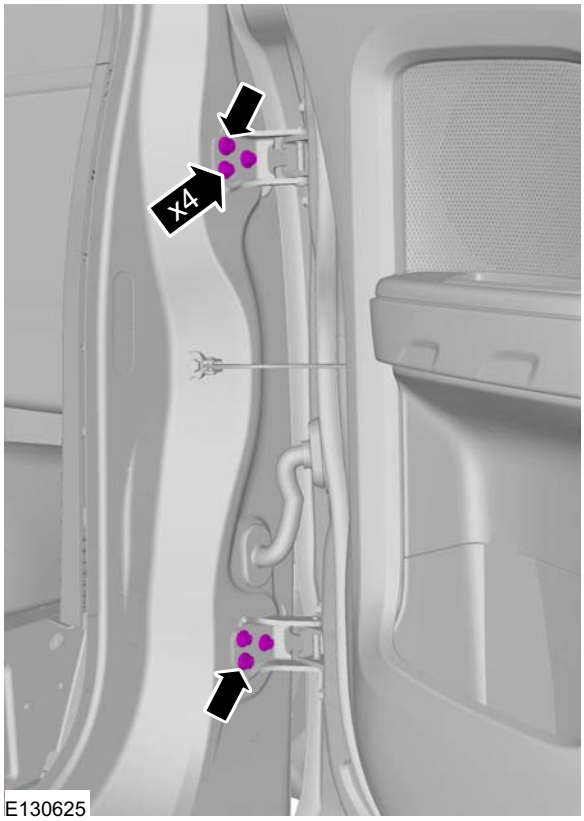

E130625

44. NOTE: All the values are in mm.

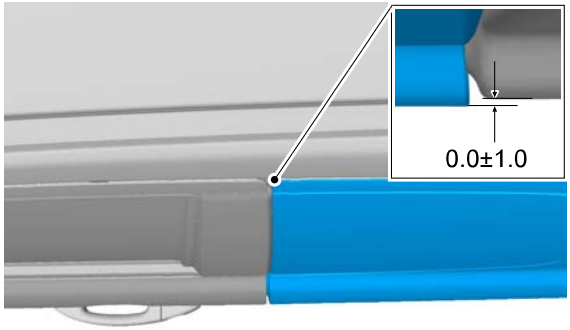

E130627

GENERAL PROCEDURES

45.

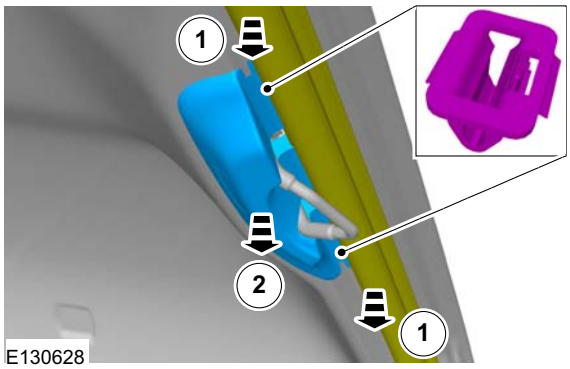

E130628

46. Loosen one complete turn.

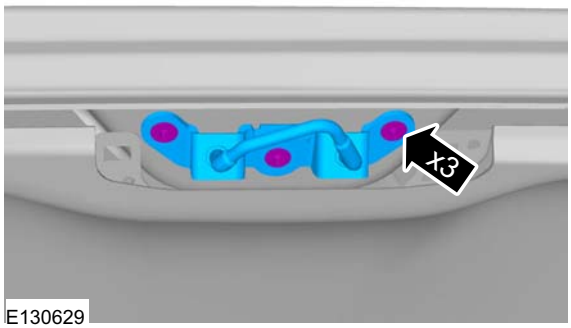

E130629

47.

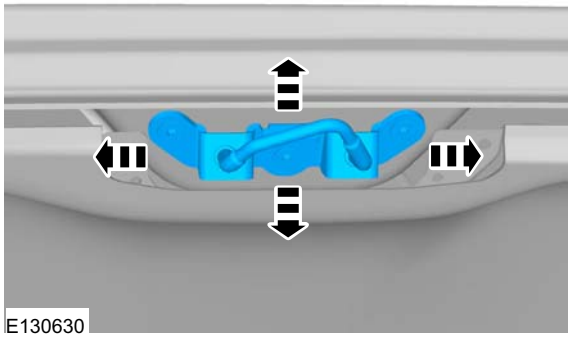
E130630

48. Torque: 10 Nm

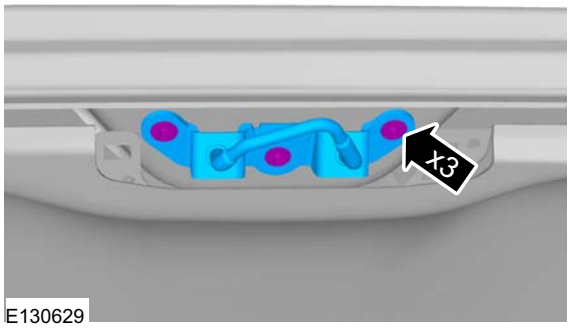

E130629

49.

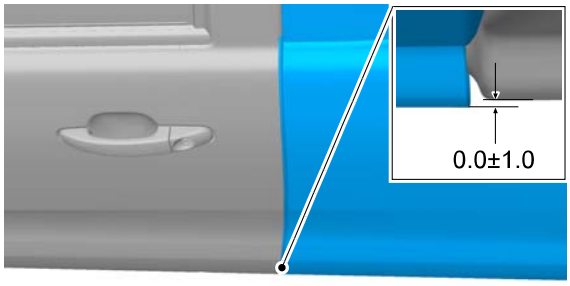

E130667

50. Loosen one complete turn.

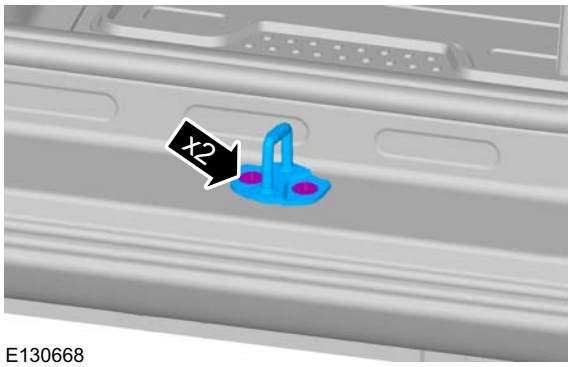

E130668

GENERAL PROCEDURES

51. Torque: 20 Nm

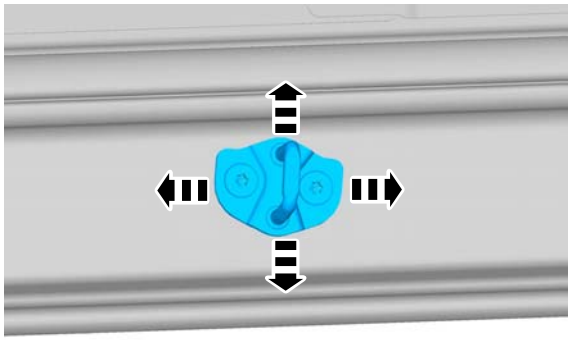

E130669

52. Torque: 10 Nm

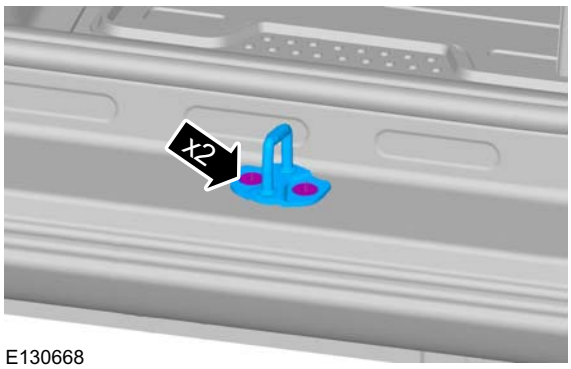

E130668

53. NOTE: All the values are in mm.

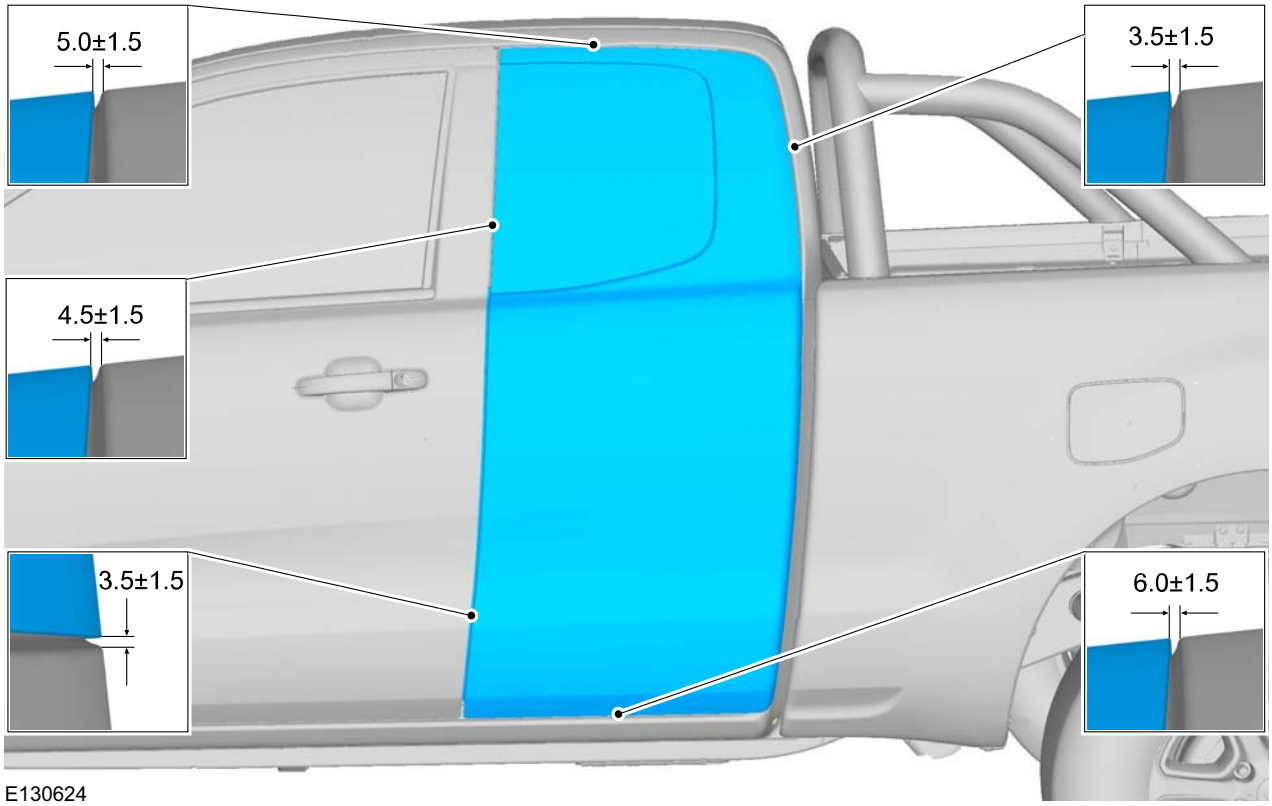

E130624

GENERAL PROCEDURES

Liftgate Alignment

Activation

54.

55. Loosen one complete turn.

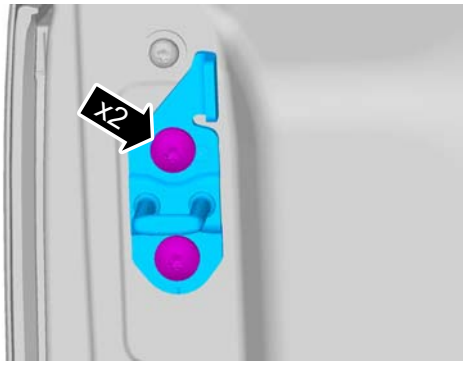

57. Torque: 10 Nm

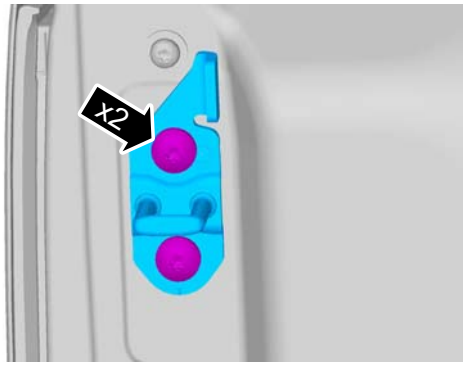

56.

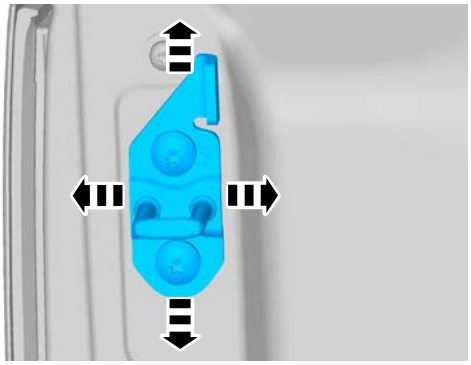

GENERAL PROCEDURES

Hood Alignment

Activation

58. **NOTE:** All the values are in mm.

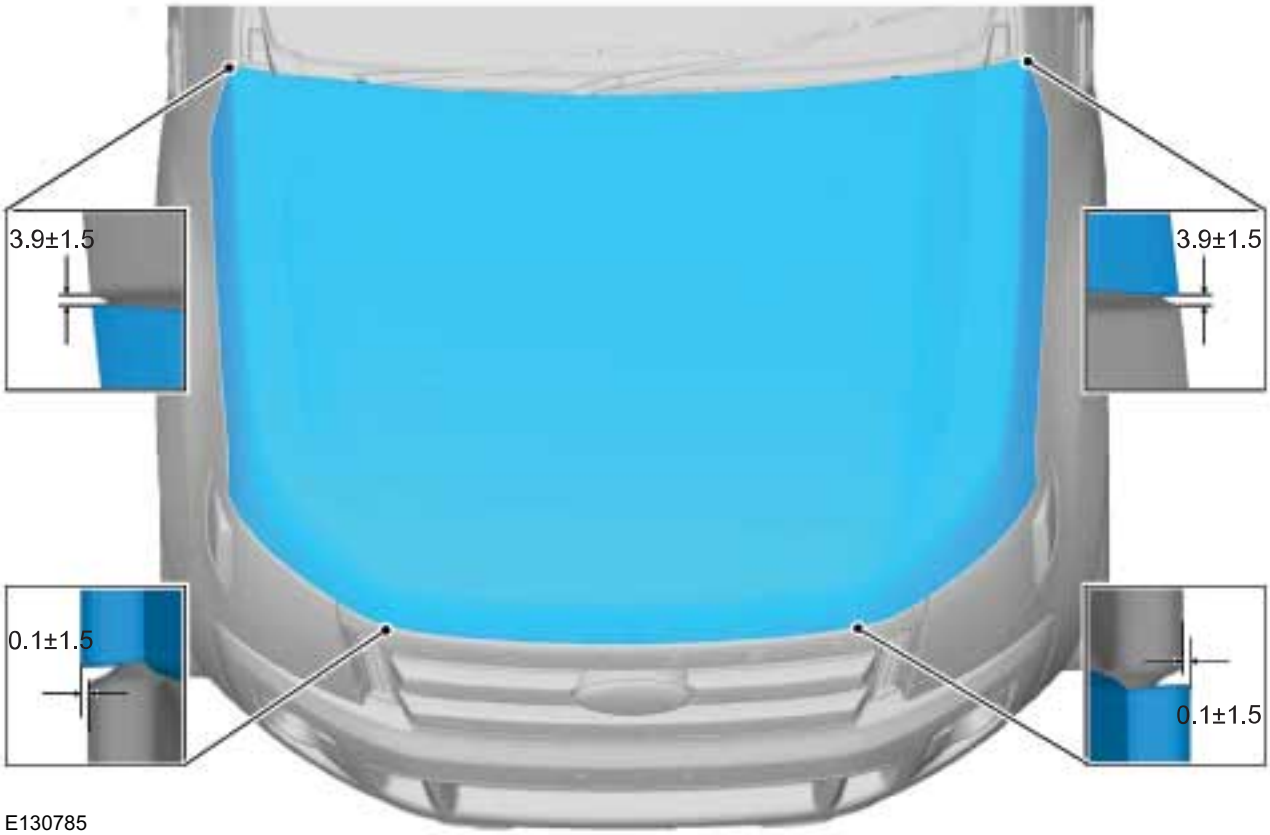

59. Loosen one complete turn.

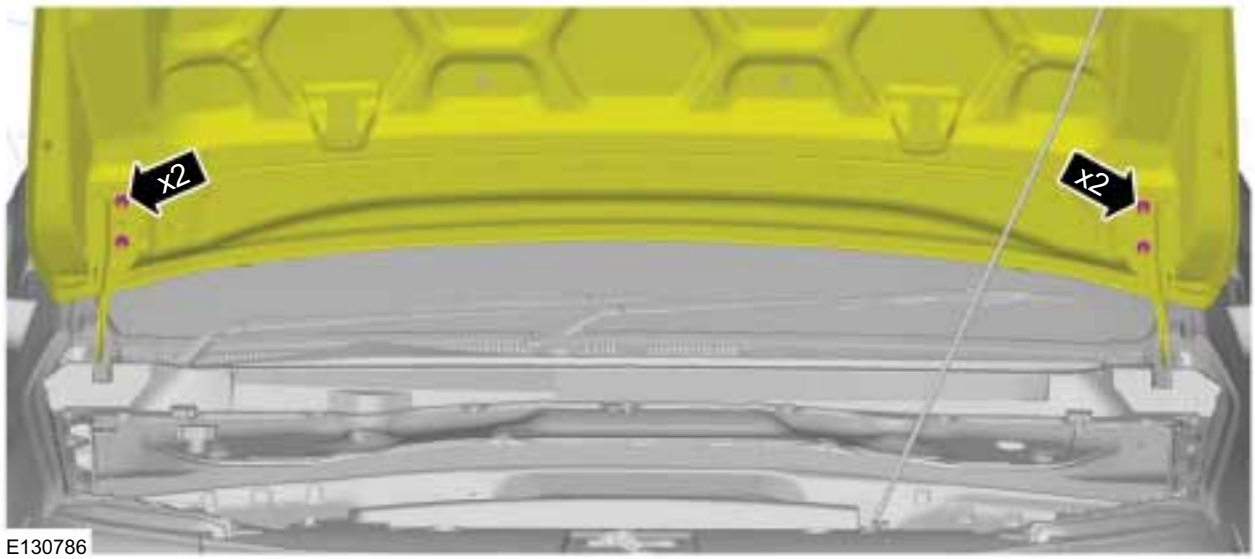

GENERAL PROCEDURES

60.

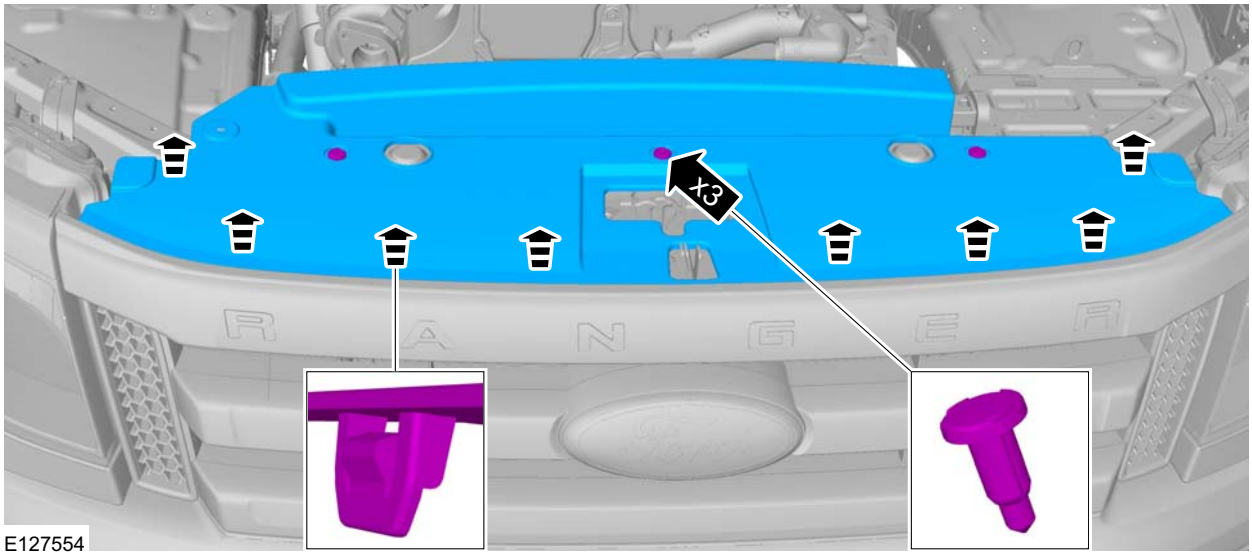

61. Loosen one complete turn.

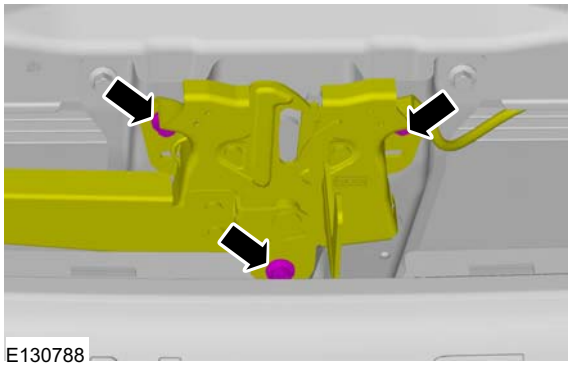

62.

GENERAL PROCEDURES

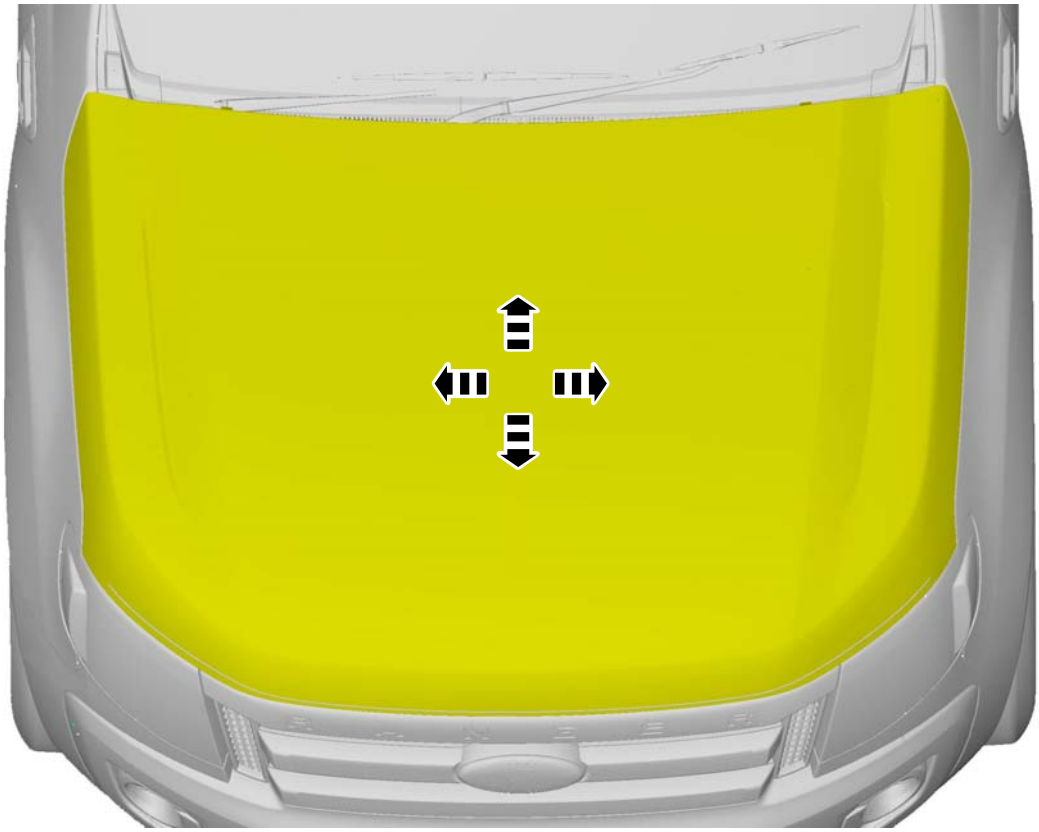

63.

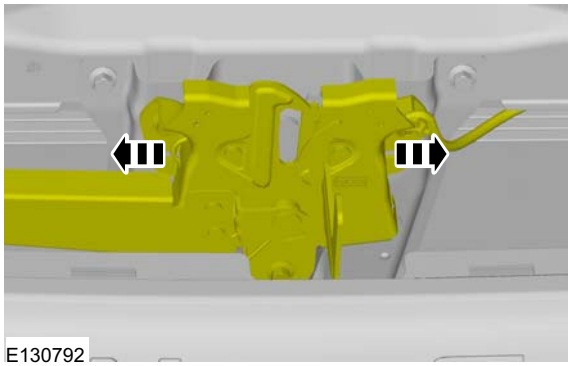

64. Check the area for paintwork damage and repair if necessary.
Torque: 25 Nm

GENERAL PROCEDURES

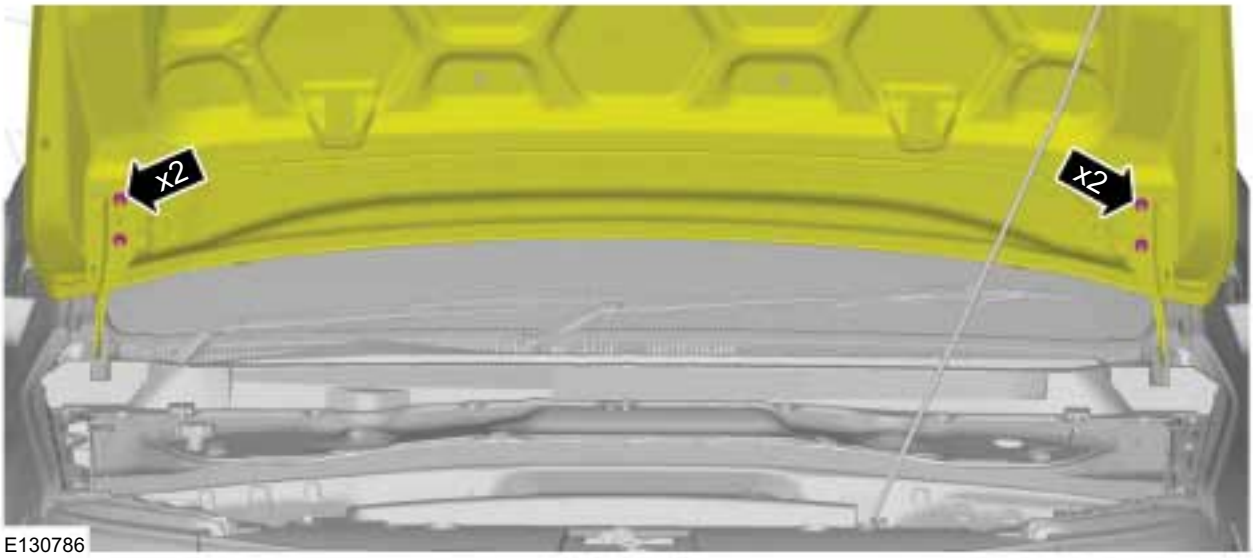

E130786

65. Torque: 10 Nm

E130788

66.

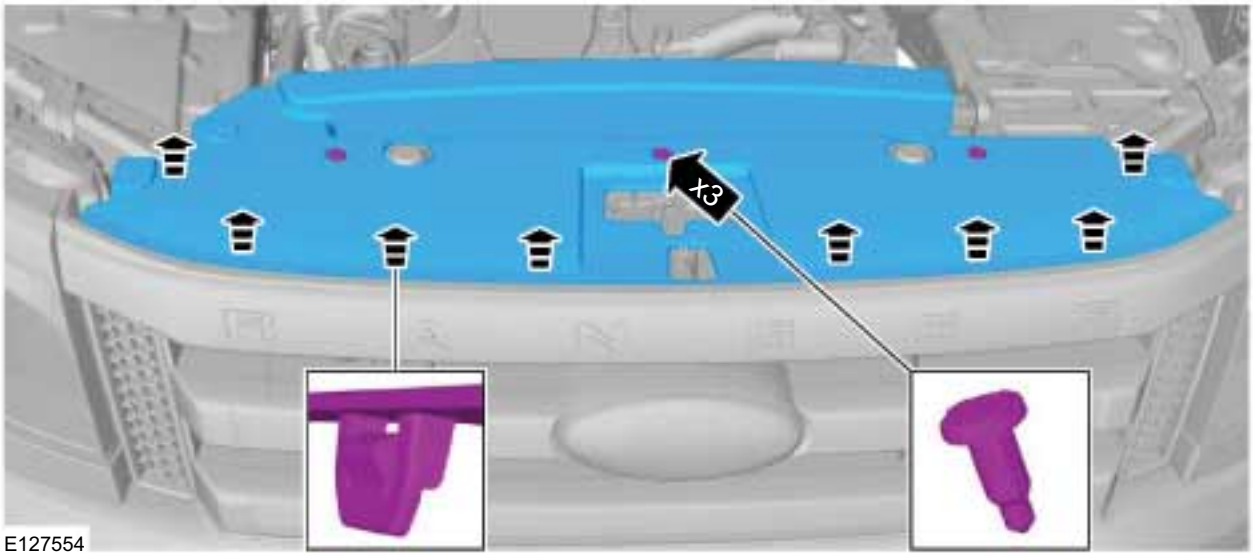

E127554

67. **NOTE:** All the values are in mm.

GENERAL PROCEDURES

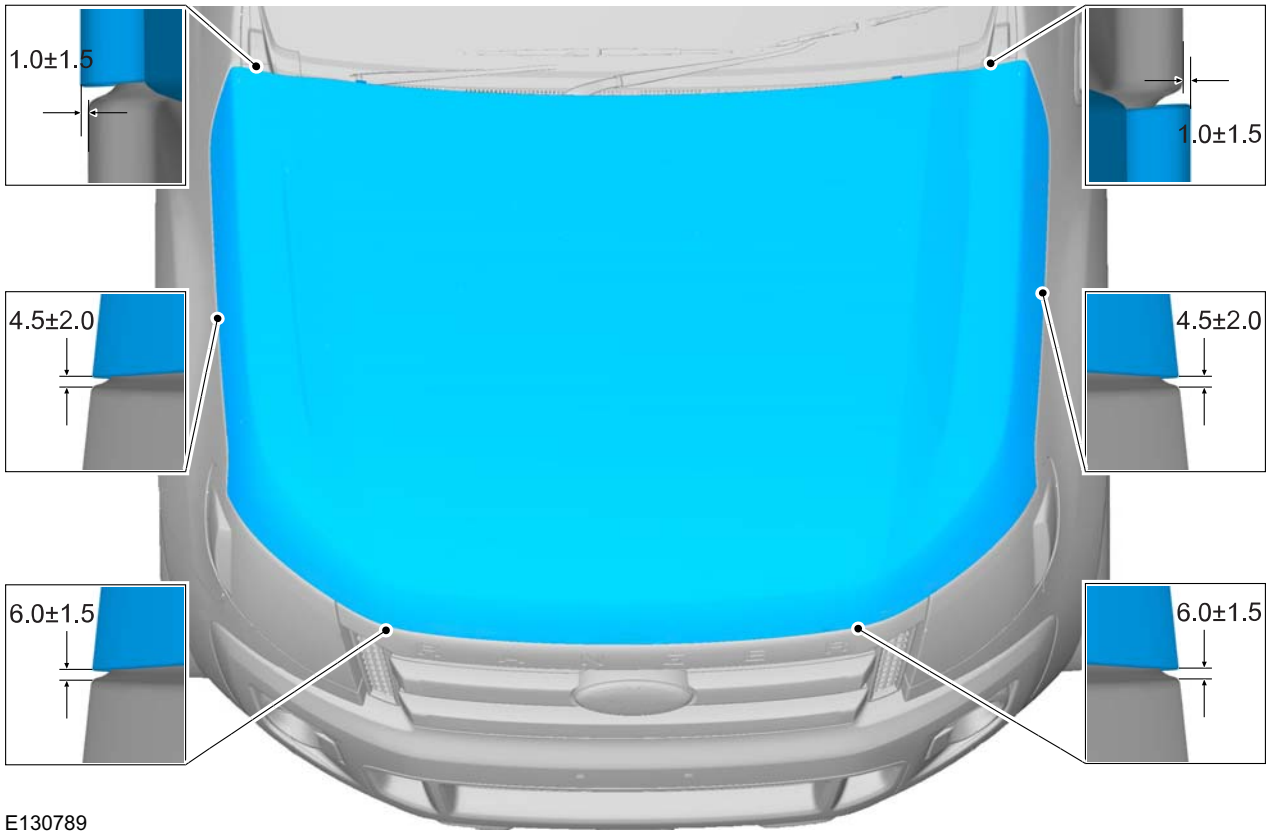

68. Loosen one complete turn.

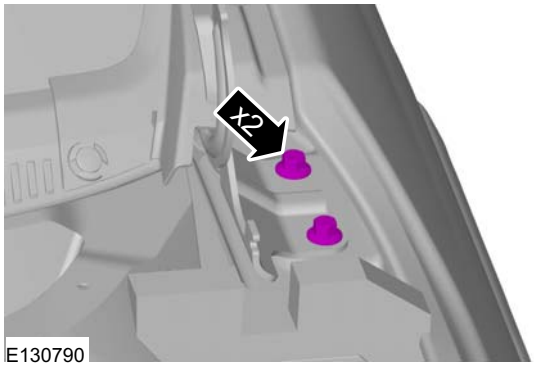

69.

GENERAL PROCEDURES

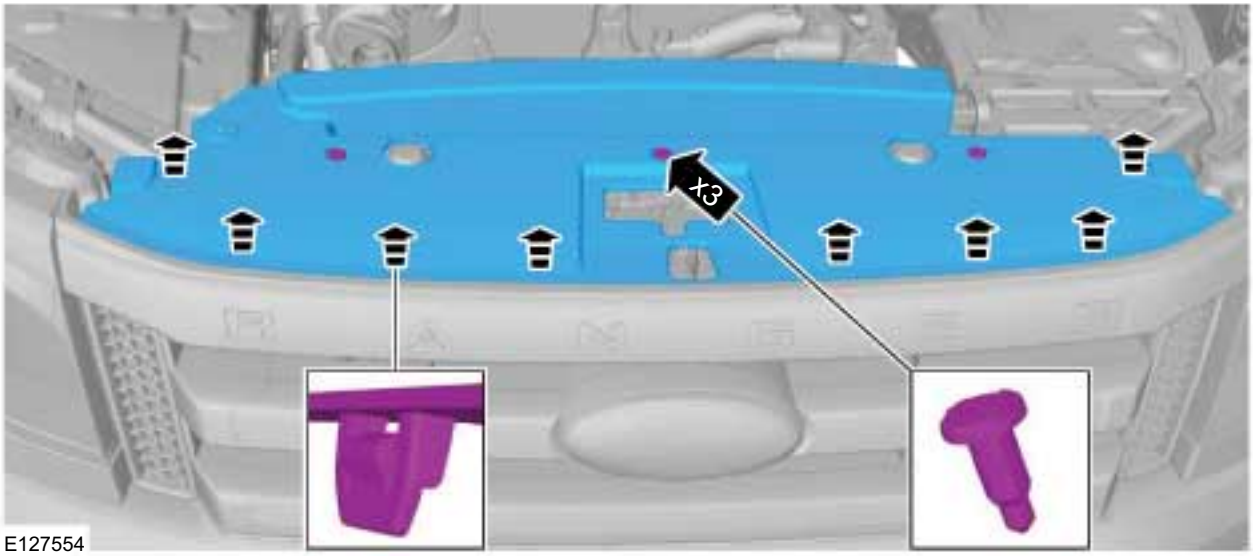

E127554

70. Loosen one complete turn.

E130788

71.

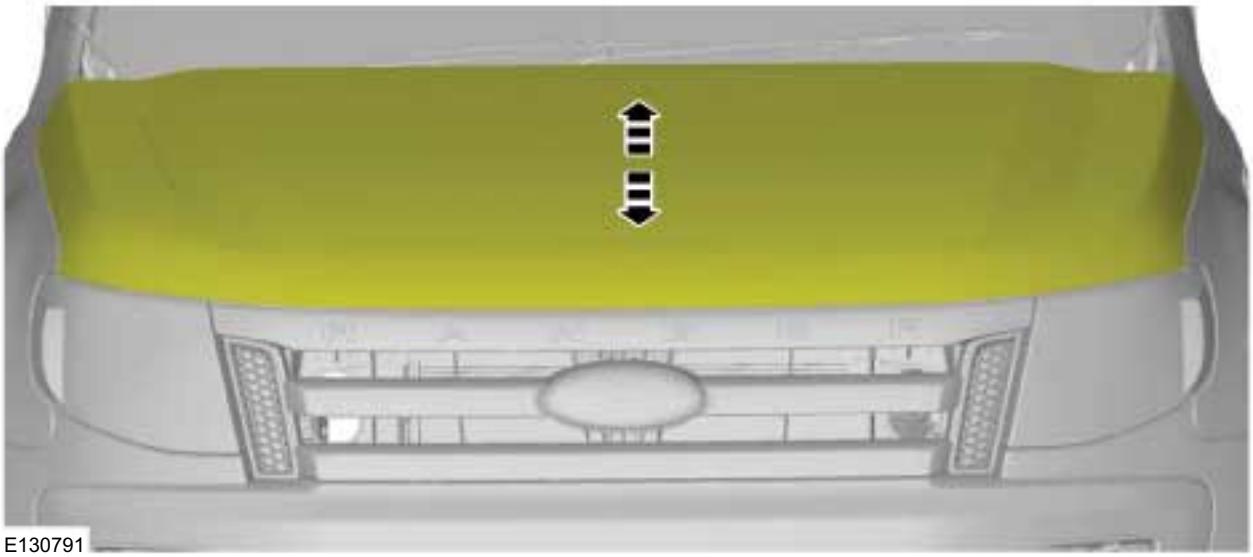
E130791

GENERAL PROCEDURES

72.

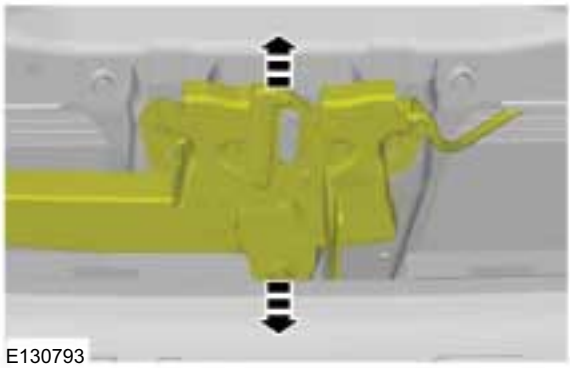

73. Check the area for paintwork damage and repair if necessary.
Torque: 25 Nm

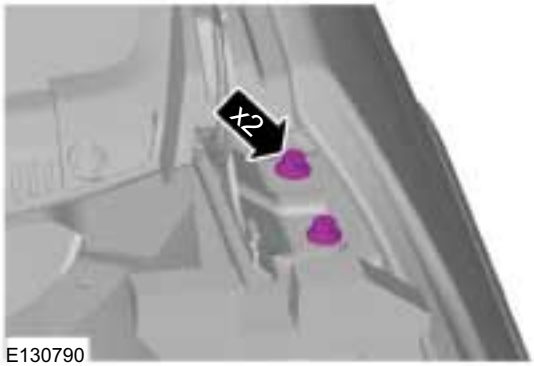

74. Torque: 10 Nm

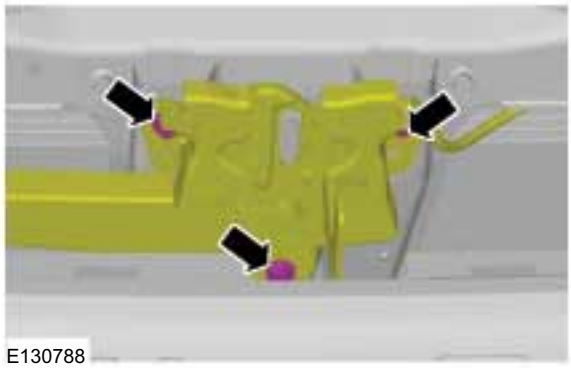

75.

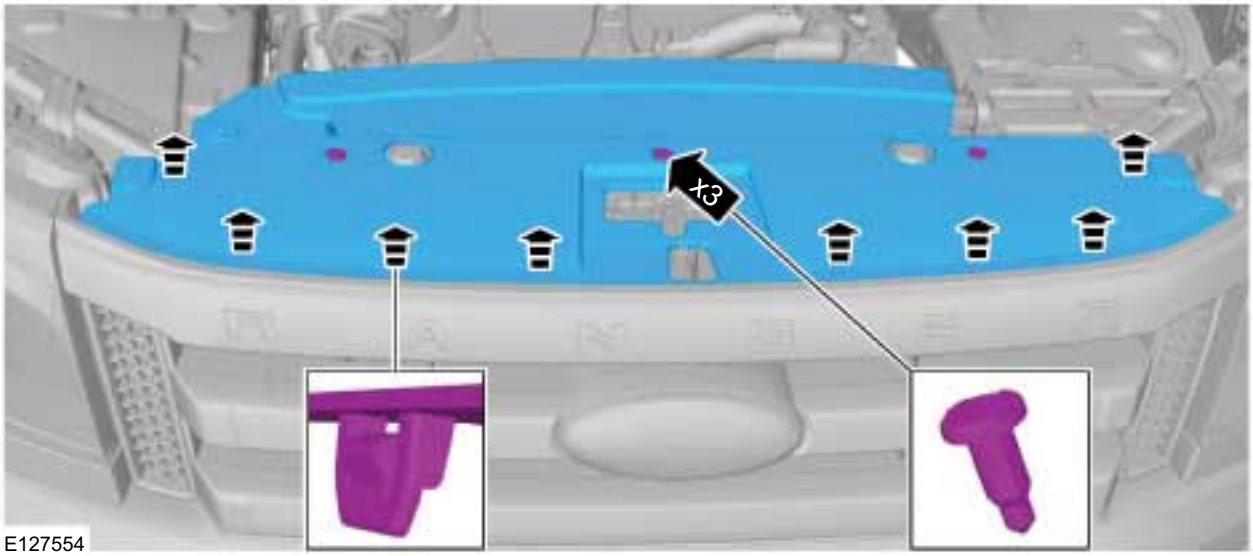

REMOVAL AND INSTALLATION

Door — Single Cab

Removal

NOTE: Removal steps in this procedure may contain installation details.

1. Refer to: Battery Disconnect and Connect (414-01 Battery, Mounting and Cables, General Procedures).
2. Refer to: Cowl Side Trim Panel (501-05 Interior Trim and Ornamentation, Removal and Installation).
3. Refer to: Front Fender (501-27 Front End Sheet Metal Repairs, Removal and Installation).
4.

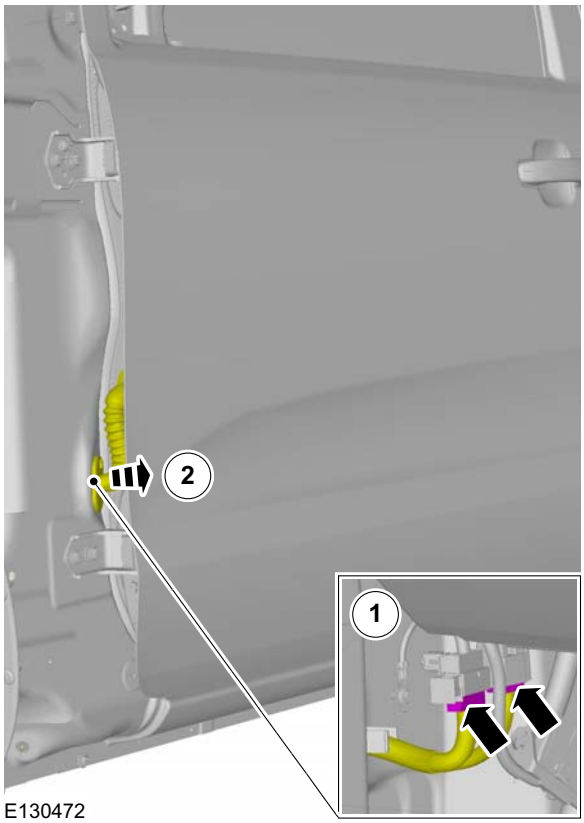

E130472

5. Torque: 25 Nm

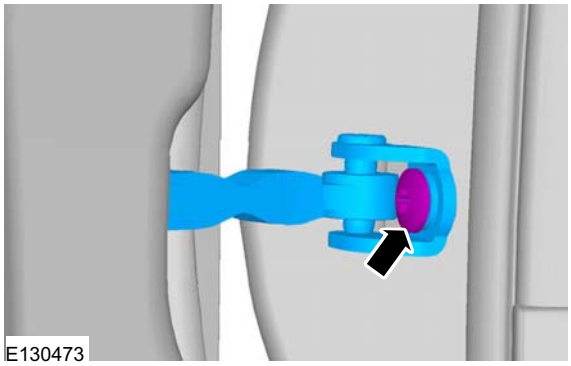
E130473

6. Torque: 25 Nm

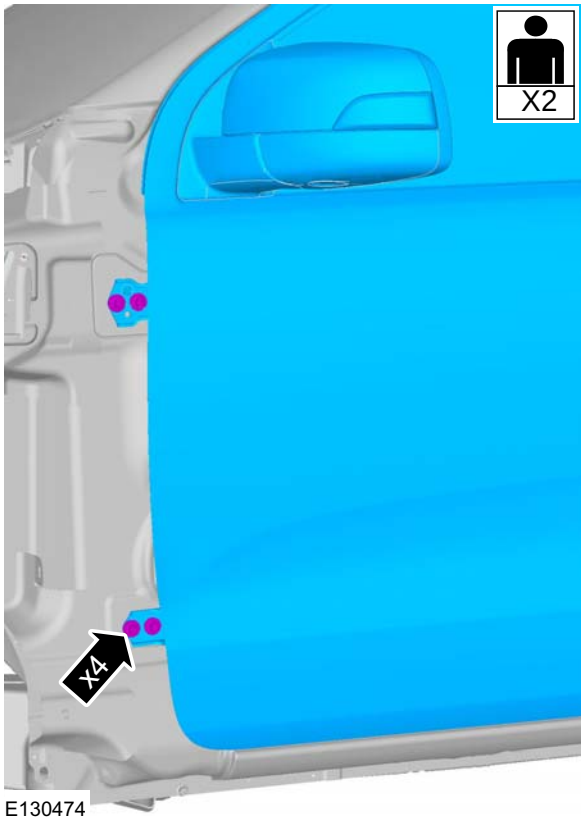

E130474

Installation

1. To install, reverse the removal procedure.
2. Refer to: Door Alignment - Single Cab (501-03 Body Closures, General Procedures).

REMOVAL AND INSTALLATION

Front Door

Removal

NOTE: Removal steps in this procedure may contain installation details.

1. Refer to: Battery Disconnect and Connect (414-01 Battery, Mounting and Cables, General Procedures).
2. Refer to: Cowl Side Trim Panel (501-05 Interior Trim and Ornamentation, Removal and Installation).
3. Refer to: Front Fender (501-27 Front End Sheet Metal Repairs, Removal and Installation).
4.

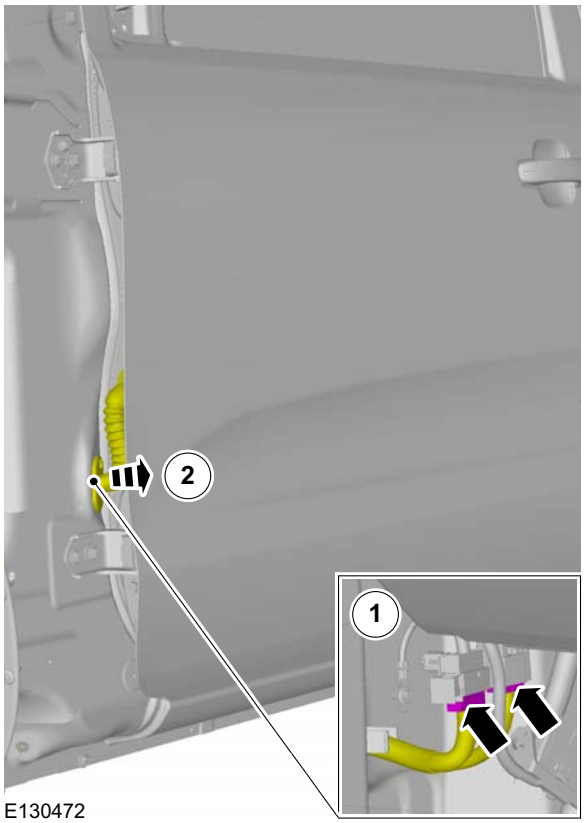

E130472

5. Torque: 25 Nm

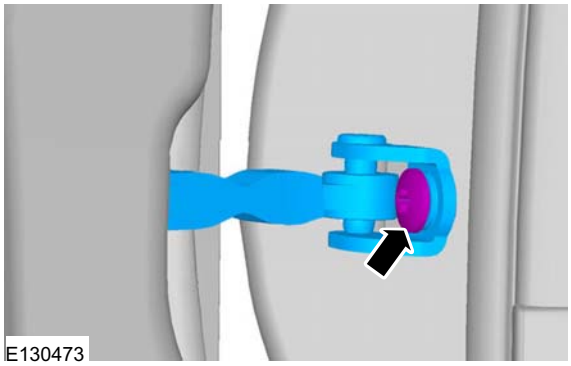
E130473

6. Torque: 25 Nm

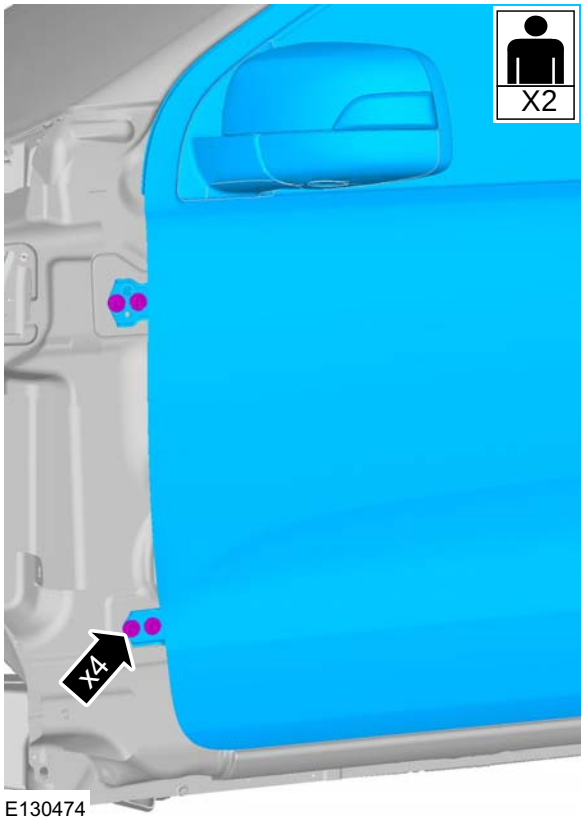

E130474

Installation

1. To install, reverse the removal procedure.

REMOVAL AND INSTALLATION

2. Refer to: Front Door Alignment - Double Cab (501-03 Body Closures, General Procedures).
   Refer to: Front Door Alignment - Super Cab (501-03 Body Closures, General Procedures).

REMOVAL AND INSTALLATION

Rear Door — Double Cab

Removal

NOTE: Removal steps in this procedure may contain installation details.

1. Refer to: Battery Disconnect and Connect (414-01 Battery, Mounting and Cables, General Procedures).
2. Refer to: B-Pillar Lower Trim Panel (501-05 Interior Trim and Ornamentation, Removal and Installation).
3.

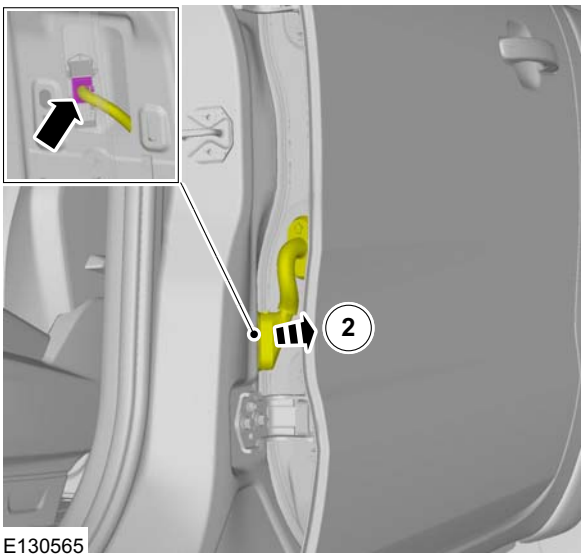

E130565

4. Torque: 25 Nm

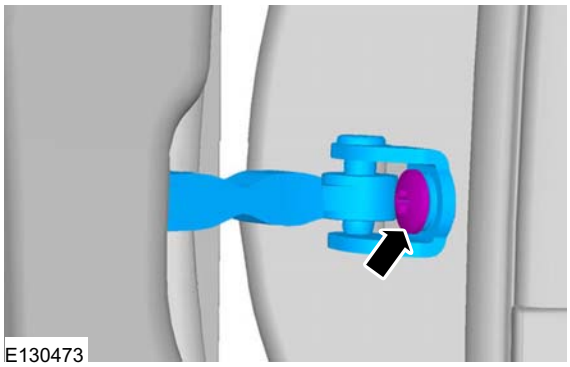
E130473

5. Torque: 25 Nm

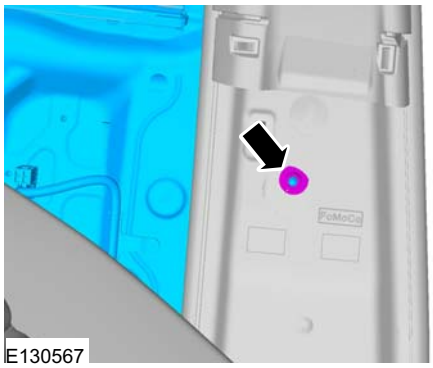
E130567

6. Torque: 25 Nm

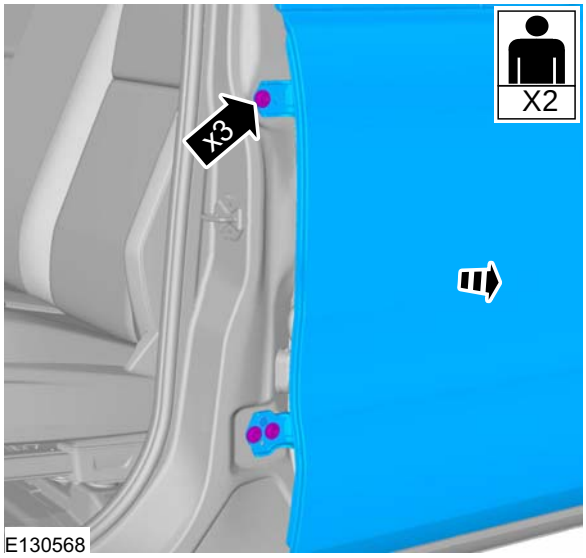

E130568

Installation

1. To install, reverse the removal procedure.
2. Refer to: Rear Door Alignment - Double Cab (501-03 Body Closures, General Procedures).

REMOVAL AND INSTALLATION

Rear Door — Super Cab

Removal

NOTE: Removal steps in this procedure may contain installation details.

1. Refer to: Battery Disconnect and Connect (414-01 Battery, Mounting and Cables, General Procedures).
2. Refer to: C-Pillar Lower Trim Panel (501-05 Interior Trim and Ornamentation, Removal and Installation).
3.

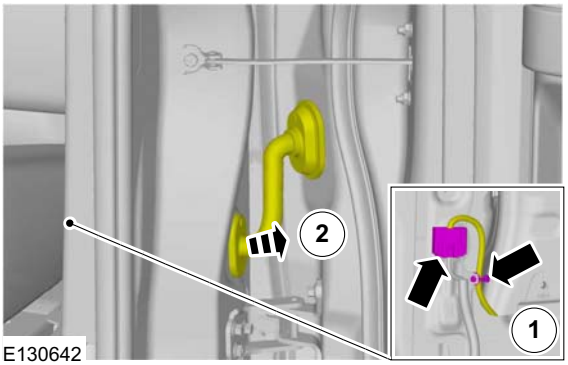

4. Torque: 10 Nm

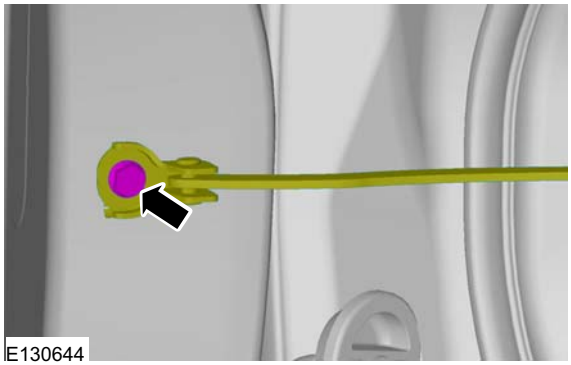

5. Torque: 25 Nm

Installation

1. To install, reverse the removal procedure.
2. Refer to: Rear Door Alignment - Super Cab (501-03 Body Closures, General Procedures).

SECTION 501-05 Interior Trim and Ornamentation

VEHICLE APPLICATION: 2011.50 Ranger

CONTENTS PAGE

REMOVAL AND INSTALLATION

A-Pillar Trim Panel..... 501-05-2
B-Pillar Upper Trim Panel..... 501-05-3
B-Pillar Lower Trim Panel..... 501-05-4
C-Pillar Upper Trim Panel..... 501-05-5
C-Pillar Lower Trim Panel..... 501-05-7
Cowl Side Trim Panel..... 501-05-9
Front Door Trim Panel..... 501-05-10
Rear Door Trim Panel — Double Cab..... 501-05-12
Rear Door Trim Panel — Super Cab..... 501-05-14
Front Scuff Plate Trim Panel..... 501-05-15
Rear Scuff Plate Trim Panel..... 501-05-16
Headliner..... 501-05-17

REMOVAL AND INSTALLATION

A-Pillar Trim Panel

Removal

NOTE: Removal steps in this procedure may contain installation details.

1. Torque: 10 Nm

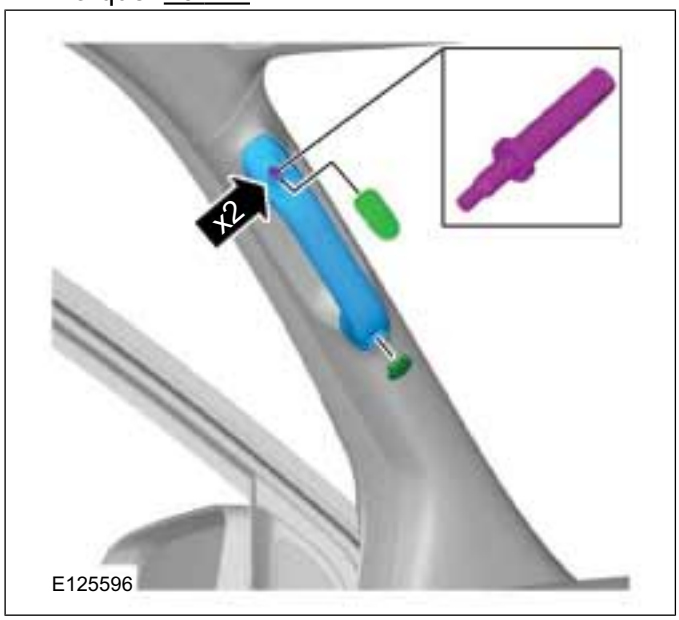

2.

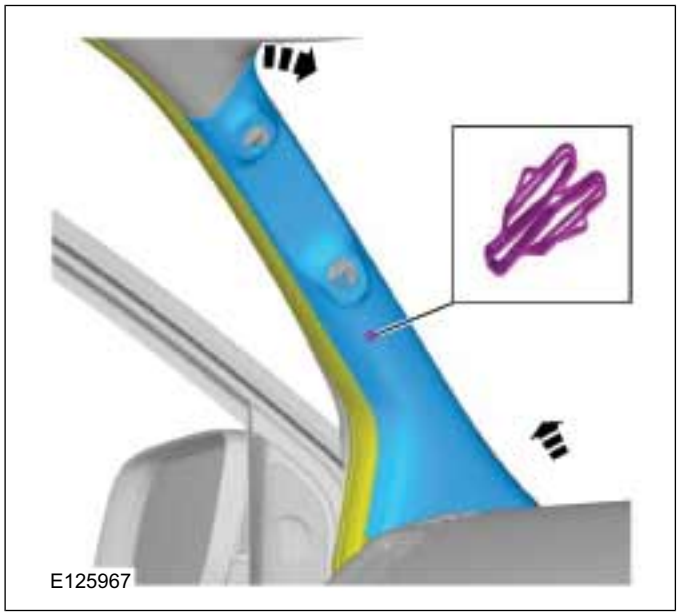

3.

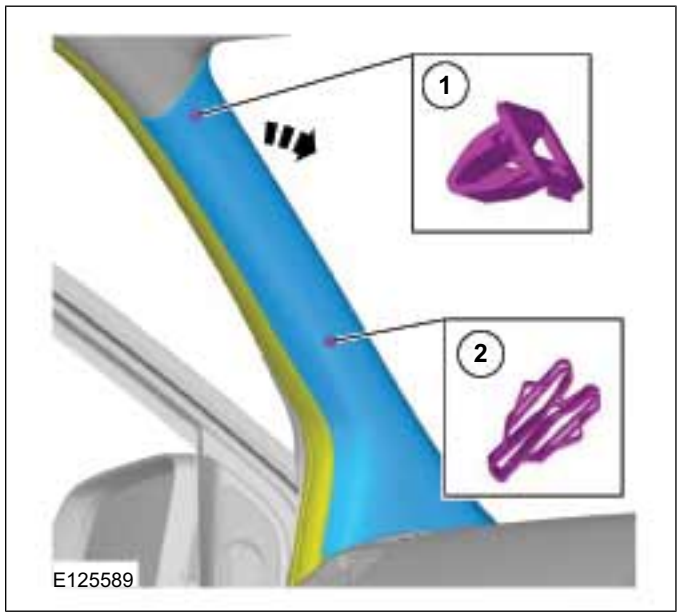

4.

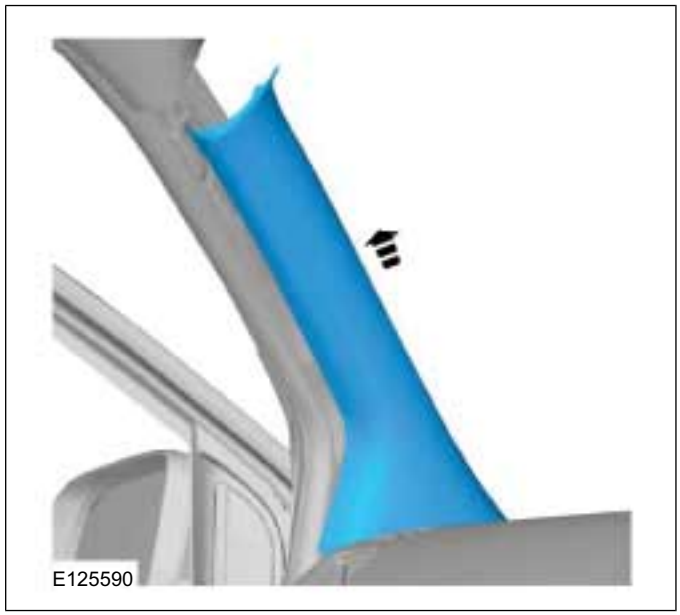

Installation

1. To install, reverse the removal procedure.

REMOVAL AND INSTALLATION

B-Pillar Upper Trim Panel

Removal

NOTE: Removal steps in this procedure may contain installation details.

1. Torque: 47 Nm

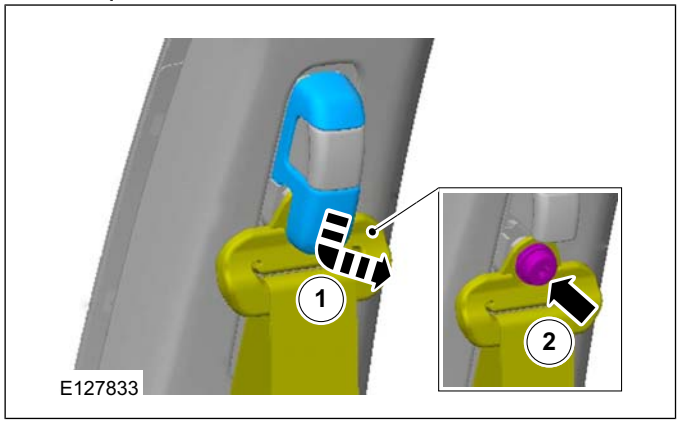

2. Refer to: B-Pillar Lower Trim Panel (501-05 Interior Trim and Ornamentation, Removal and Installation).

3.

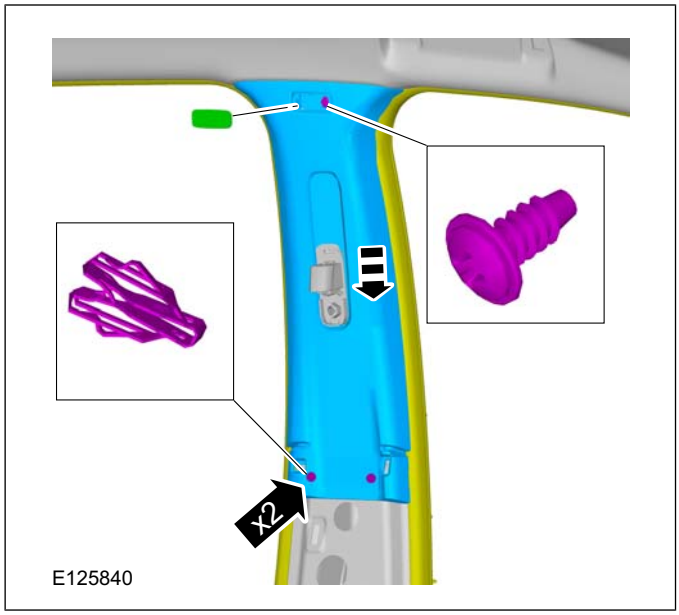

Installation

1. To install, reverse the removal procedure.

REMOVAL AND INSTALLATION

B-Pillar Lower Trim Panel

Removal

NOTE: Removal steps in this procedure may contain installation details.

1. Refer to: Front Scuff Plate Trim Panel (501-05 Interior Trim and Ornamentation, Removal and Installation).
2. Refer to: Rear Scuff Plate Trim Panel (501-05 Interior Trim and Ornamentation, Removal and Installation).
3.

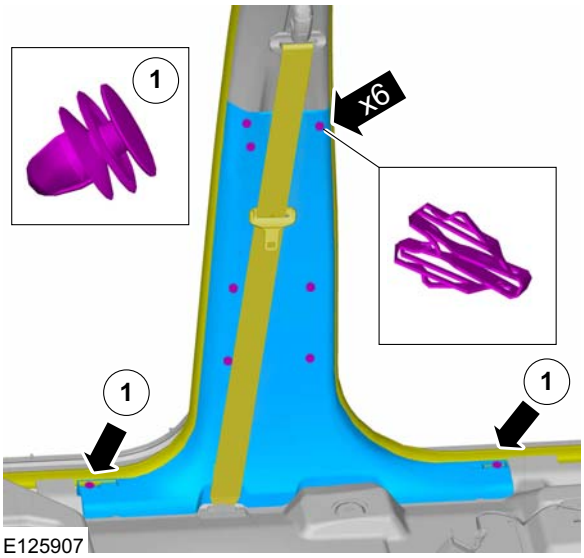

Installation

1. To install, reverse the removal procedure.

REMOVAL AND INSTALLATION

C-Pillar Upper Trim Panel

Removal

NOTE: Removal steps in this procedure may contain installation details.

1. Refer to: Rear Safety Belt Retractor (501-20 Safety Belt System, Removal and Installation).
2. Refer to: C-Pillar Lower Trim Panel (501-05 Interior Trim and Ornamentation, Removal and Installation).

Single cab

3.

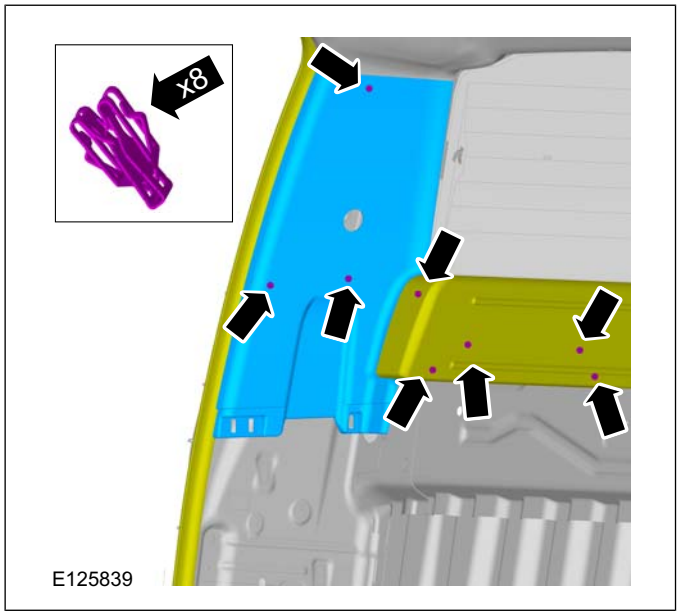

Stretch cab

4.

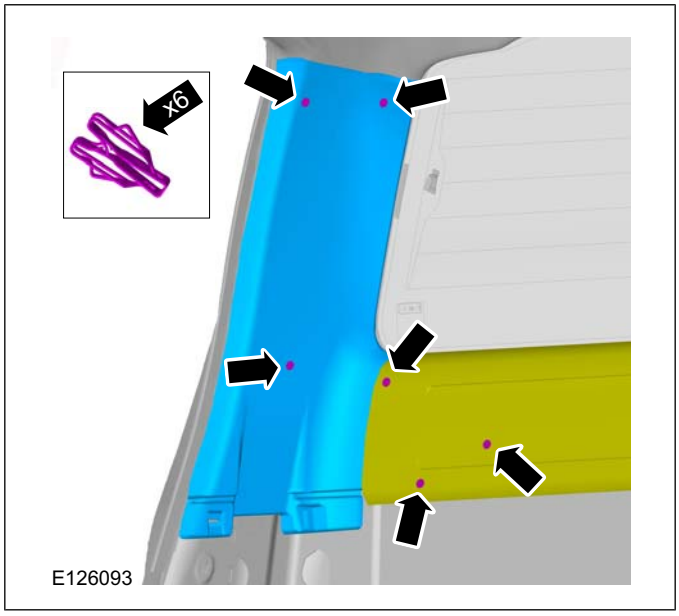

5.

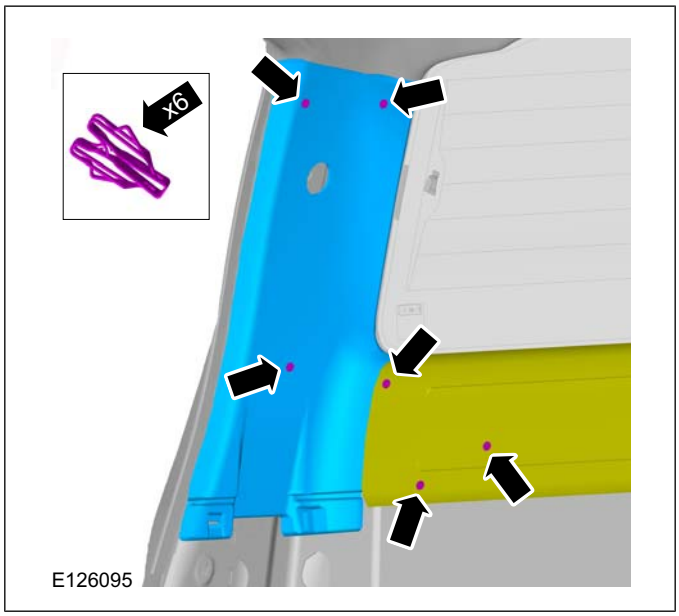

REMOVAL AND INSTALLATION

Double cab

6.

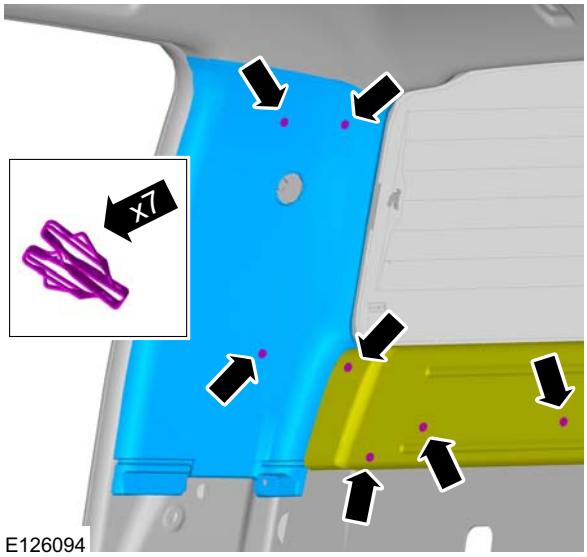

Installation

1. To install, reverse the removal procedure

REMOVAL AND INSTALLATION

C-Pillar Lower Trim Panel

Removal

NOTE: Removal steps in this procedure may contain installation details.

Single cab

1. Remove scuff plate

Refer to: Front Scuff Plate Trim Panel (501-05 Interior Trim and Ornamentation, Removal and Installation).

2.

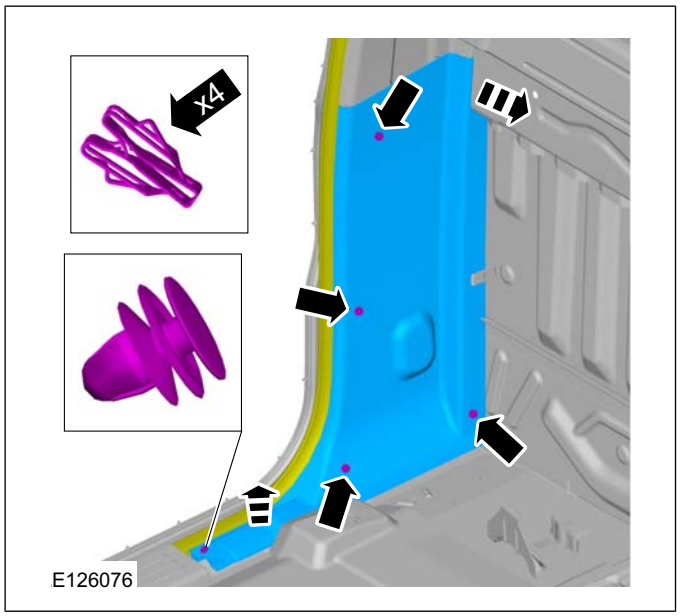

Stretch cab

3.

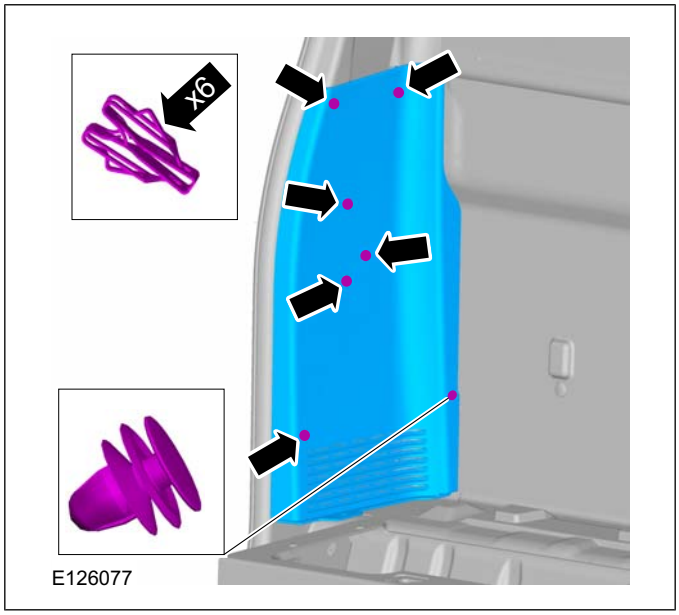

Double cab

4. Remove rear scuff plate

Refer to: Front Scuff Plate Trim Panel (501-05 Interior Trim and Ornamentation, Removal and Installation).

5.

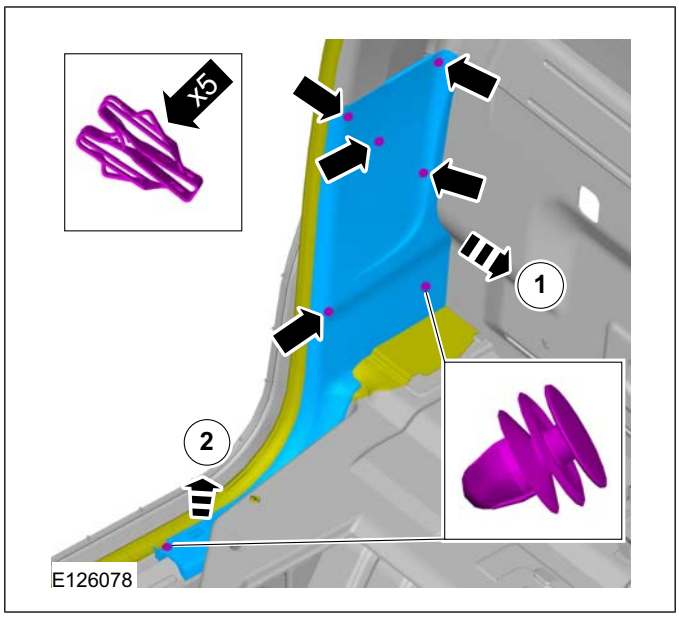

REMOVAL AND INSTALLATION

Installation

1. To install reverse the removal procedure

REMOVAL AND INSTALLATION

Cowl Side Trim Panel

Removal

NOTE: Removal steps in this procedure may contain installation details.

1. Refer to: Front Scuff Plate Trim Panel (501-05 Interior Trim and Ornamentation, Removal and Installation).

2.

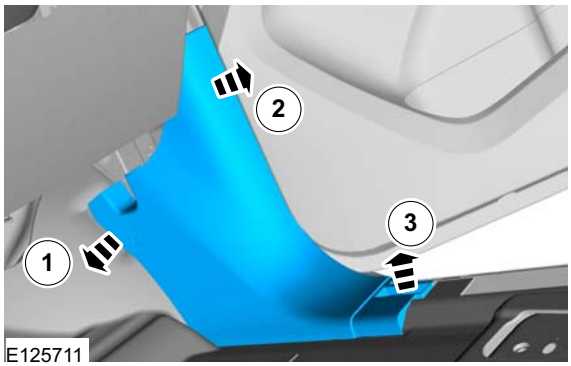

Installation

1. To install, reverse the removal procedure.

REMOVAL AND INSTALLATION

Front Door Trim Panel

Special Tool(s)

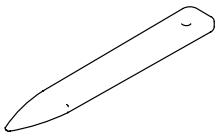 E84511	501-125 Remover, Grab Handle Cover

Removal

NOTE: Removal steps in this procedure may contain installation details.

1.

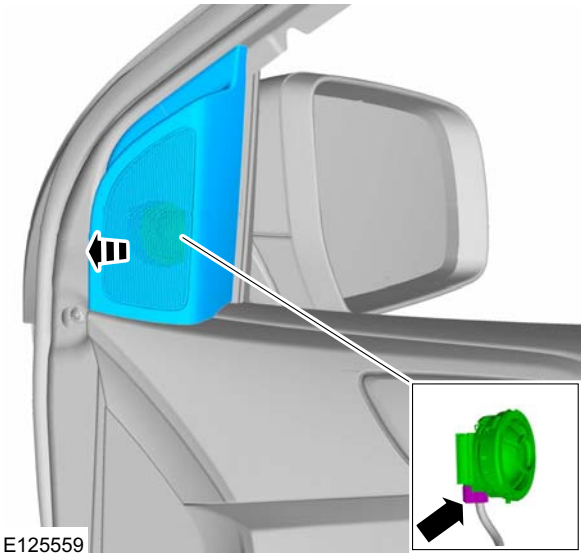

2.

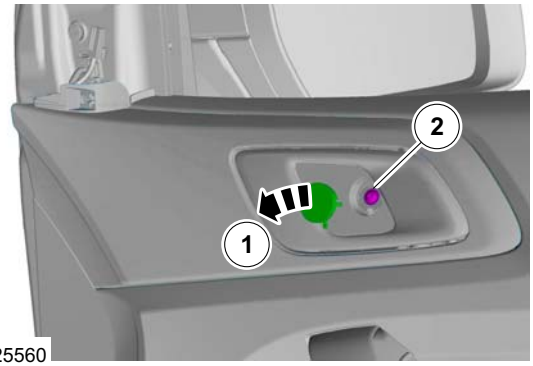

3. ⚠ **CAUTION: Take extra care not to damage the edges of the component.**

Special Tool(s): 501-125

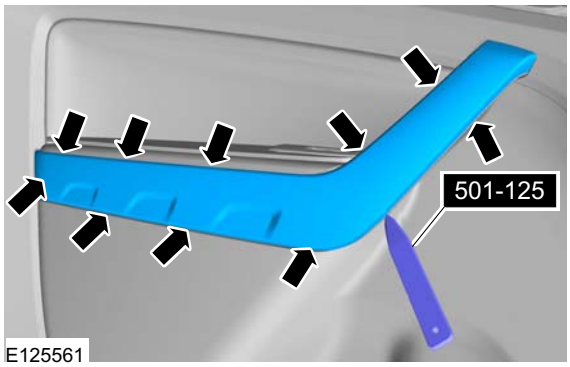

4.

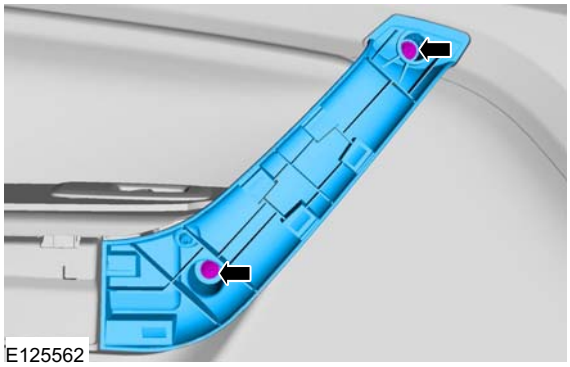

REMOVAL AND INSTALLATION

Vehicles with manual windows

5.

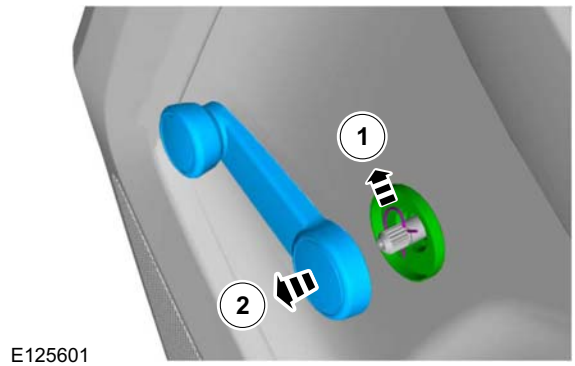

All vehicles

6.

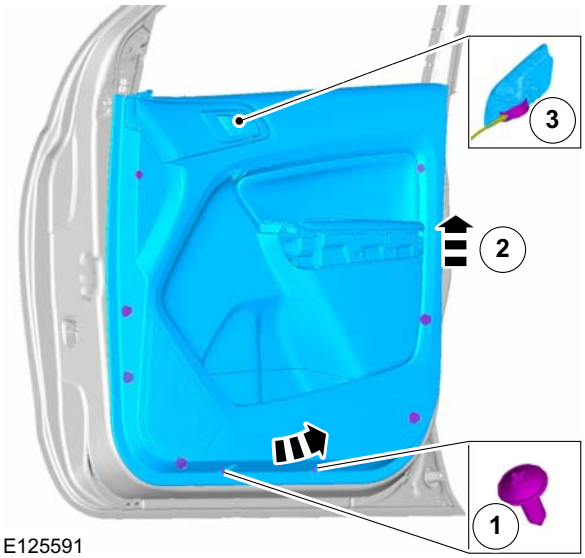

Vehicles with power windows

7.

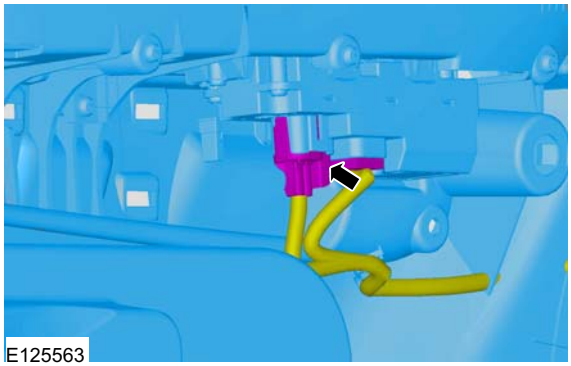

Installation

1. To install, reverse the removal procedure.

REMOVAL AND INSTALLATION

Rear Door Trim Panel — Double Cab

Removal

NOTE: Removal steps in this procedure may contain installation details.

1.

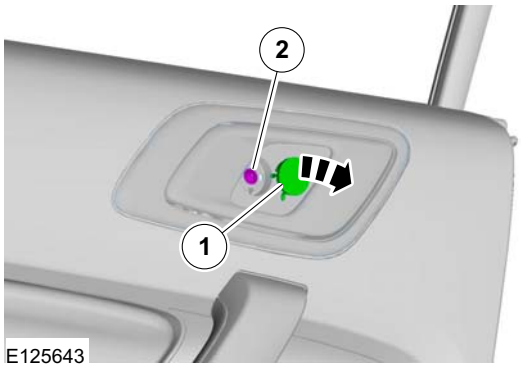

2. **CAUTION: Take extra care not to damage the edges of the component.**

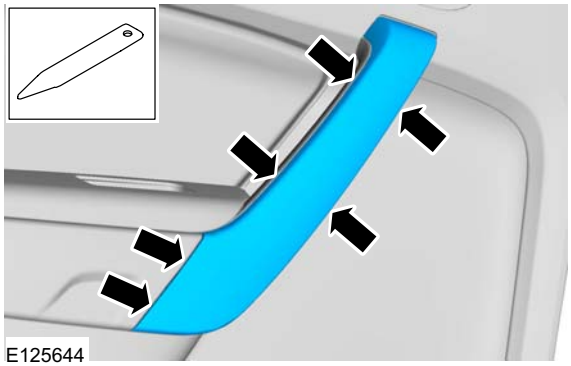

3.

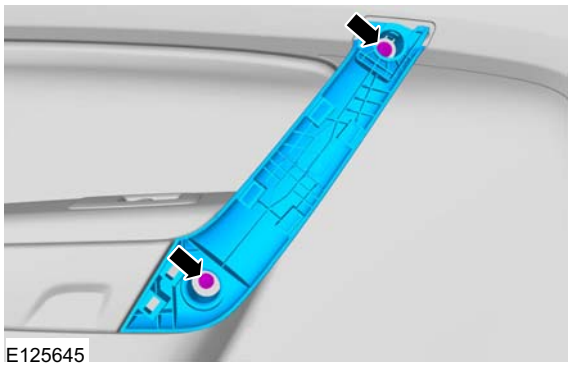

Vehicles with manual windows

4.

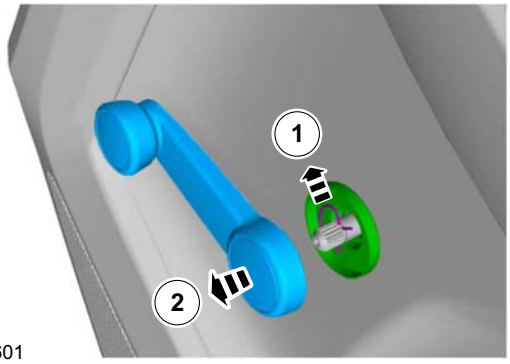

All vehicles

5.

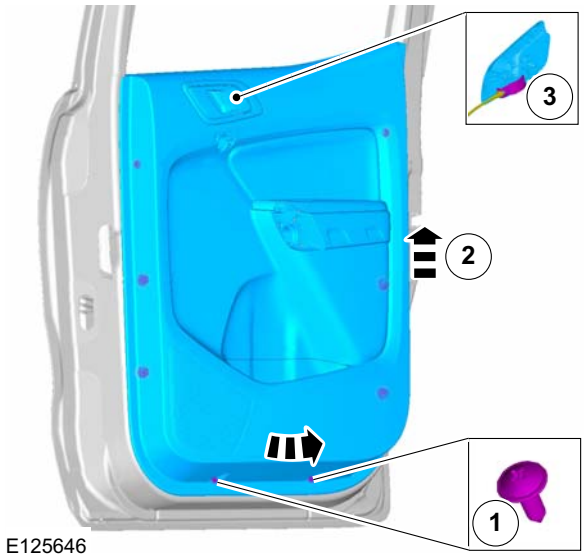

REMOVAL AND INSTALLATION

Vehicles with power windows

6.

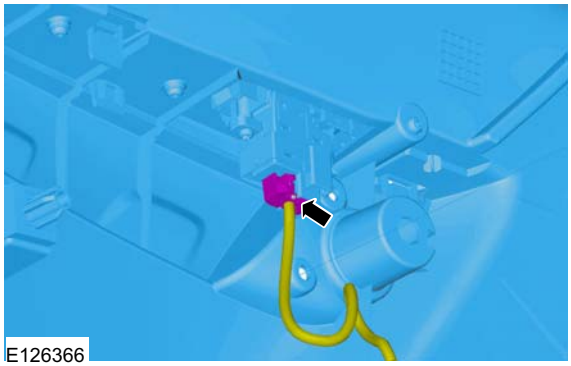

Installation

1. To install, reverse the removal procedure.

REMOVAL AND INSTALLATION

Rear Door Trim Panel — Super Cab

Removal

NOTE: Removal steps in this procedure may contain installation details.

1. Refer to: Front Safety Belt Retractor - Super Cab (501-20 Safety Belt System, Removal and Installation).

2.

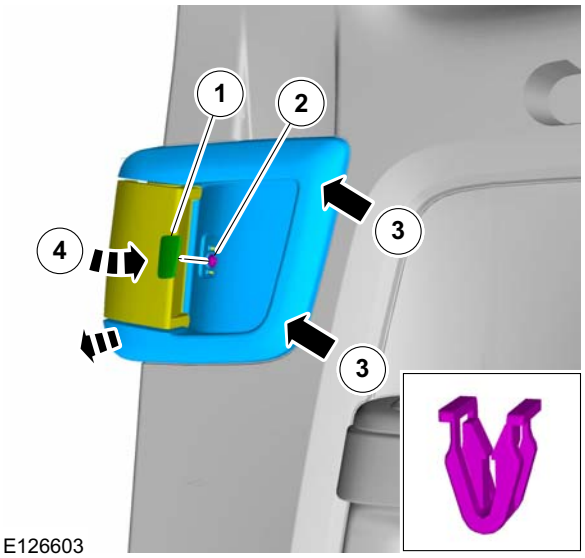

3.

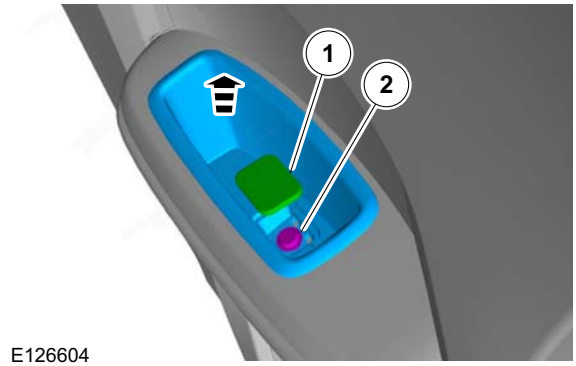

4.

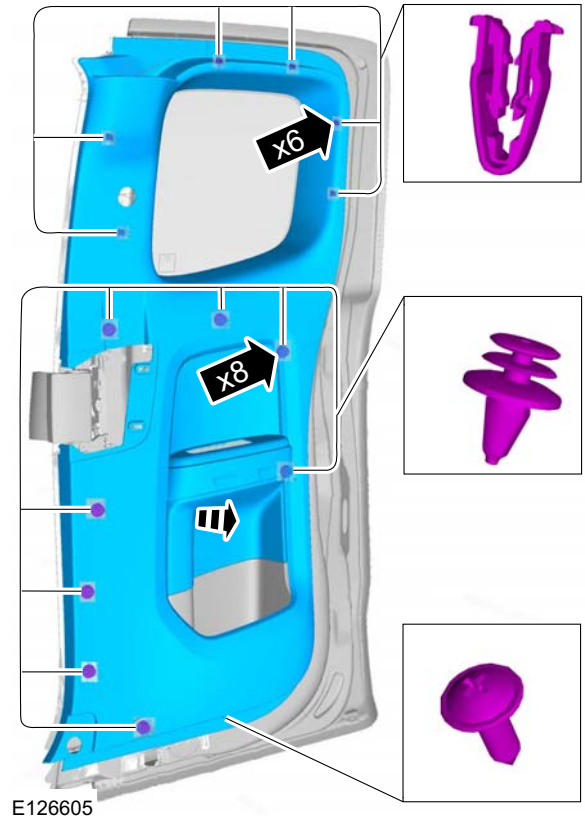

Installation

1. To install, reverse the removal procedure.

REMOVAL AND INSTALLATION

Front Scuff Plate Trim Panel

Removal

NOTE: Removal steps in this procedure may contain installation details.

1.

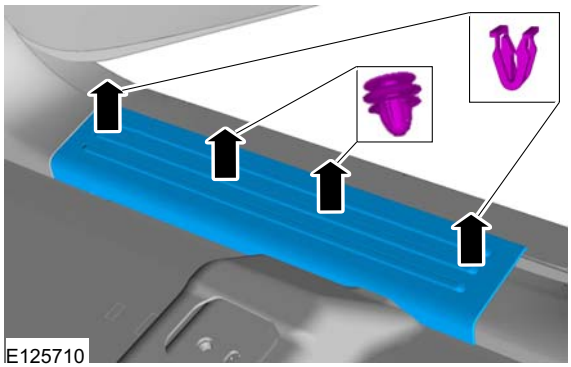

Installation

1. To install, reverse the removal procedure.

REMOVAL AND INSTALLATION

Rear Scuff Plate Trim Panel

Removal

NOTE: Removal steps in this procedure may contain installation details.

1. **NOTE:** Note the position of each fastener.

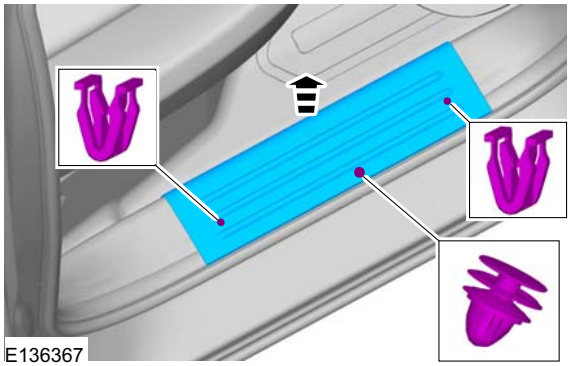

Installation

1. **NOTE:** Make sure that the fasteners are installed to the position noted before removal.

   To install, reverse the removal procedure.

REMOVAL AND INSTALLATION

Headliner

Removal

NOTE: Removal steps in this procedure may contain installation details.

1. On both the sides.

Refer to: A-Pillar Trim Panel (501-05 Interior Trim and Ornamentation, Removal and Installation).

2. On both the sides.

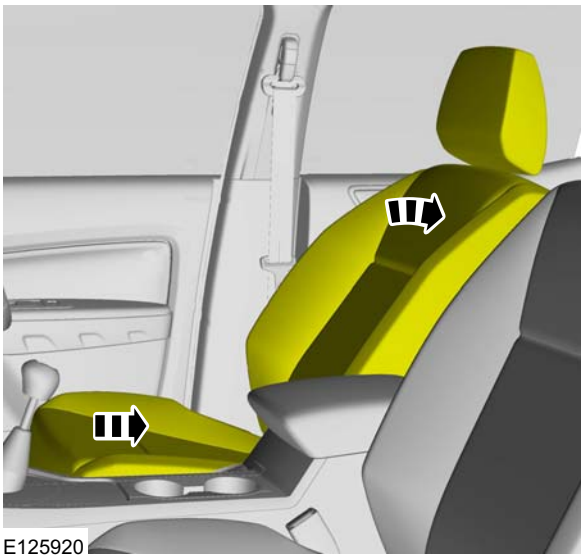
E125920

3.

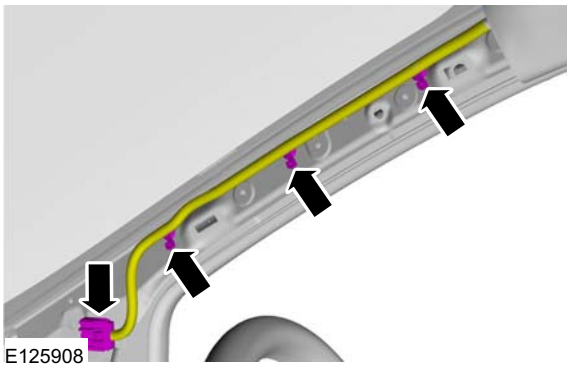
E125908

4. On both the sides.

Refer to: B-Pillar Upper Trim Panel (501-05 Interior Trim and Ornamentation, Removal and Installation).

5. On both the sides.

Refer to: C-Pillar Upper Trim Panel (501-05 Interior Trim and Ornamentation, Removal and Installation).
Refer to: C-Pillar Lower Trim Panel (501-05 Interior Trim and Ornamentation, Removal and Installation).

6.

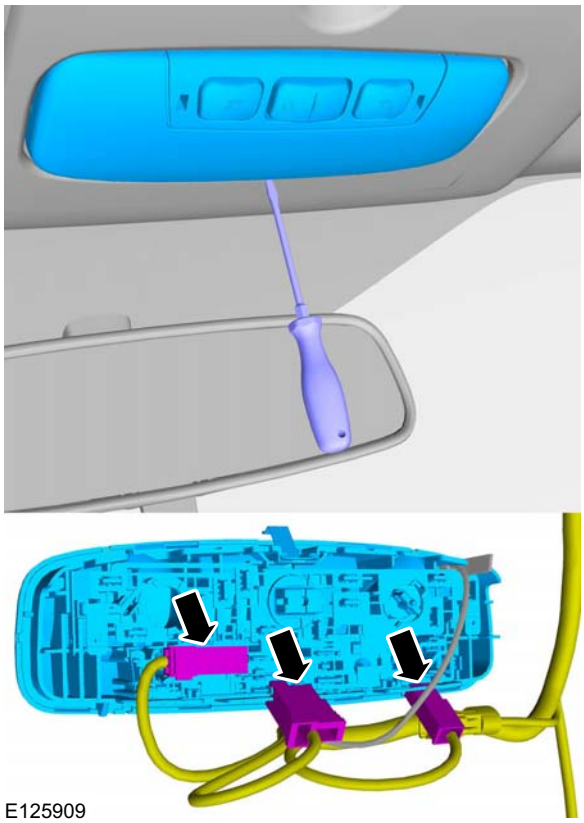
E125909

REMOVAL AND INSTALLATION

7. **NOTE:** This step is not necessary when installing a new component.

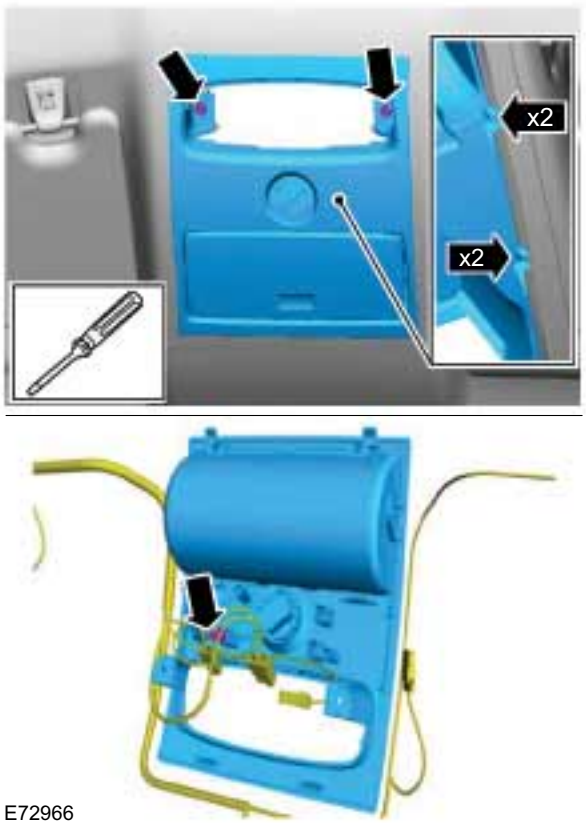

8. On both the sides.

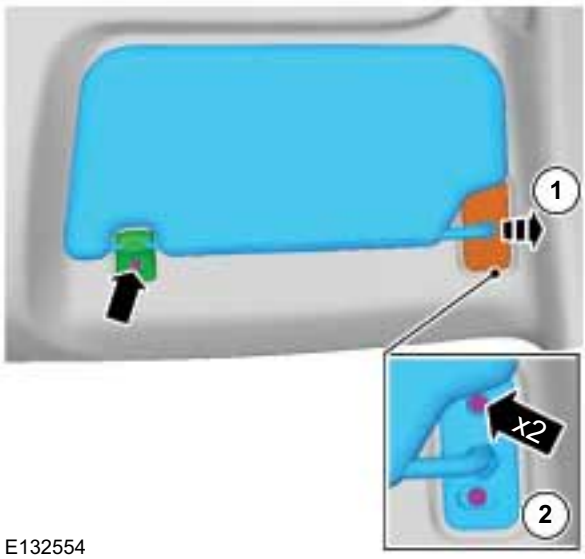

9.

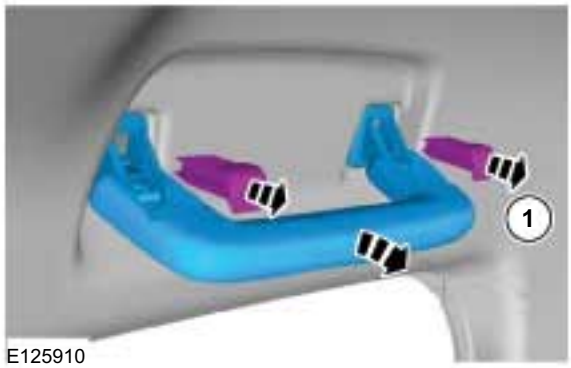

Stretch cab oder Double cab

10.

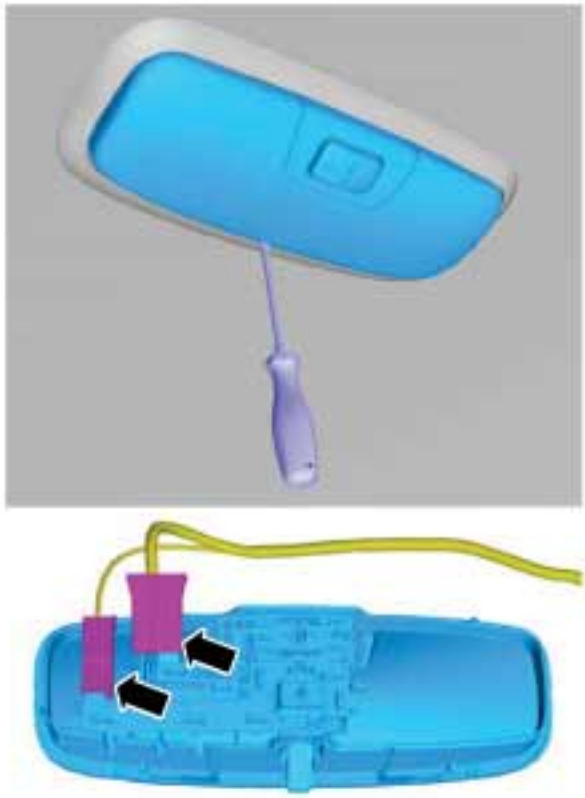

REMOVAL AND INSTALLATION

Vehicles with autolamps and rain sensor

11.

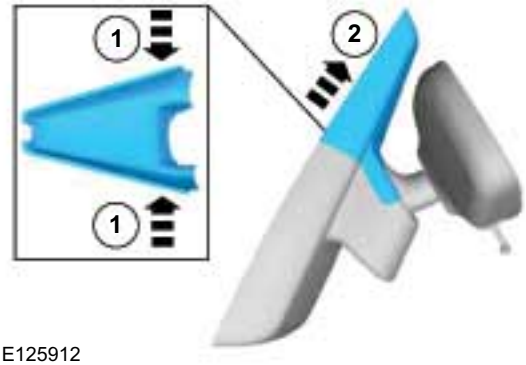

E125912

12.

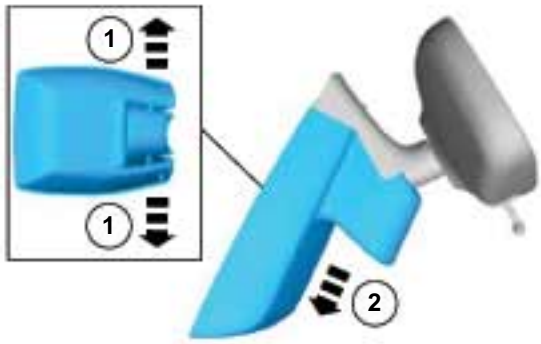

E125913

13.

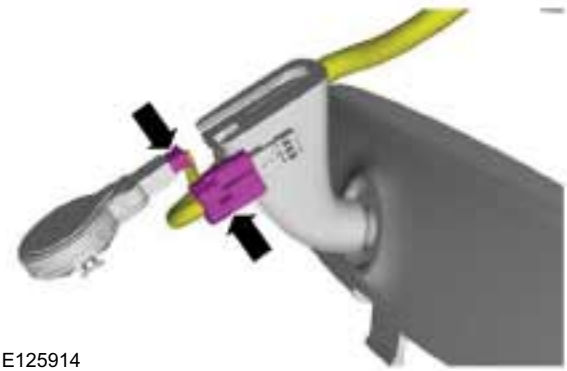
E125914

Stretch cab

14.

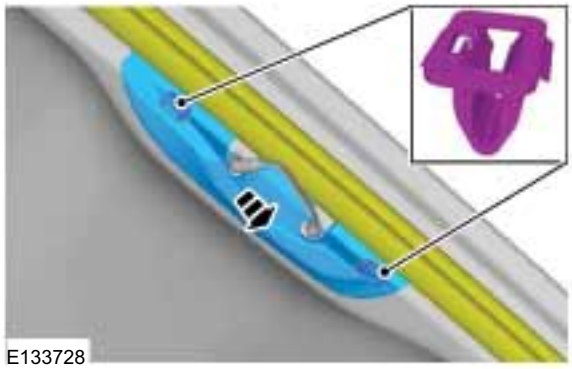
E133728

Double cab

15. Support the headliner.

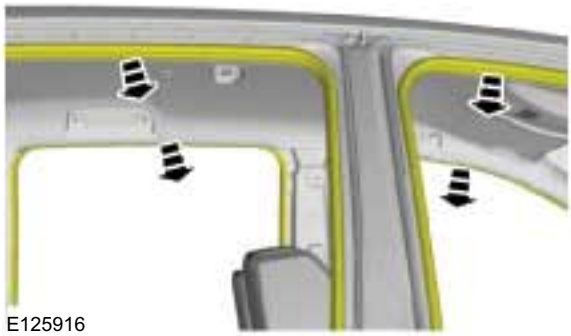
E125916

Stretch cab oder Double cab

16.

E125915

17. NOTE: Right-hand drive vehicles.

REMOVAL AND INSTALLATION

NOTE: Note the position of each component before removal.

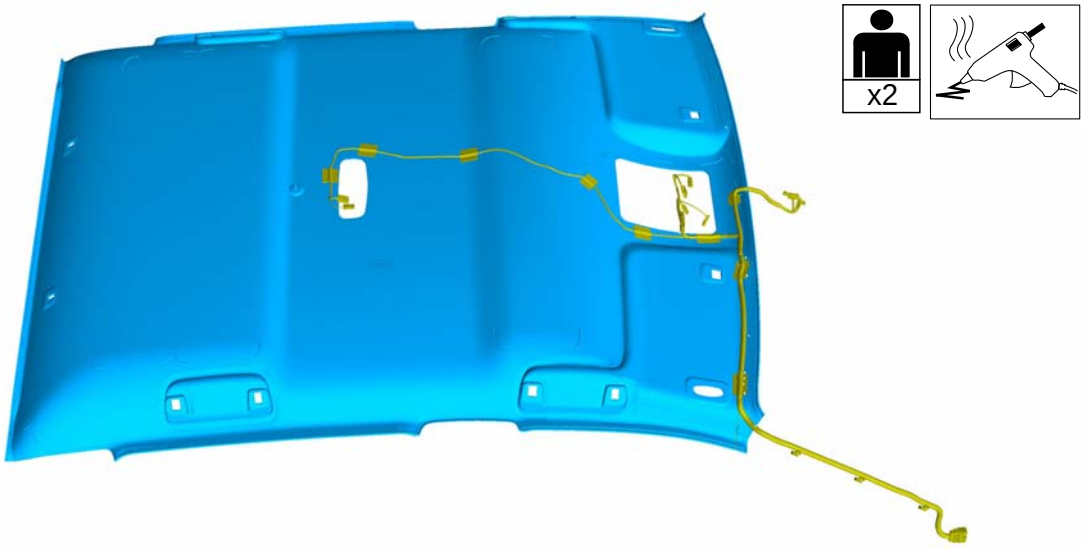

E125917

18. **NOTE:** Left-hand drive vehicles.

NOTE: Note the position of each component before removal.

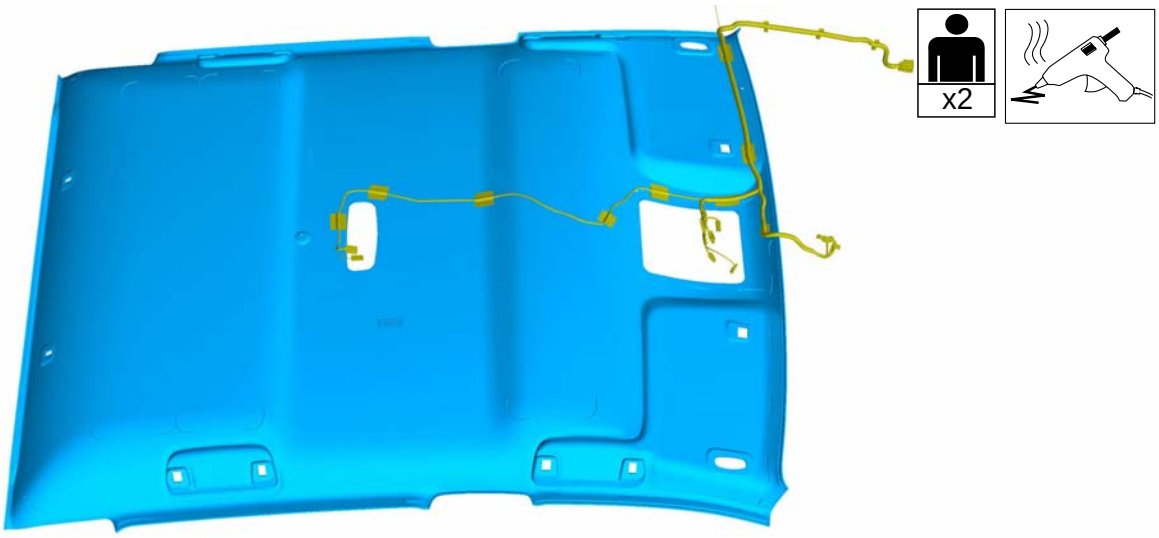

E125918

REMOVAL AND INSTALLATION

Single cab

19.

E125921

20. **NOTE:** Right-hand drive vehicles.

NOTE: Note the position of each component before removal.

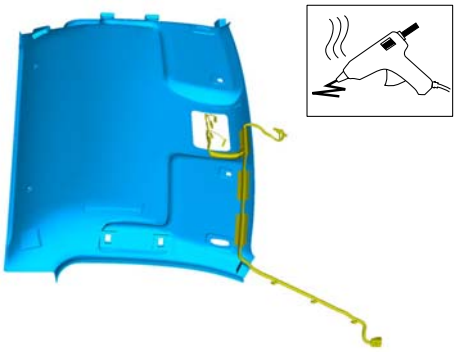
E125922

21. **NOTE:** Left-hand drive vehicles.

NOTE: Note the position of each component before removal.

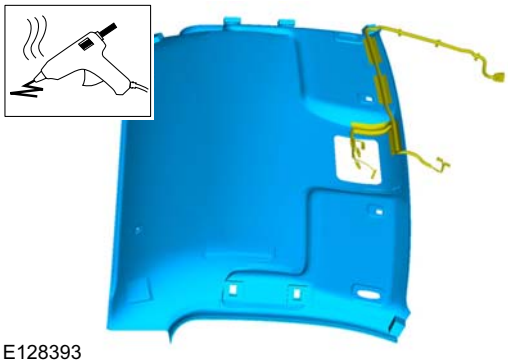
E128393

All vehicles

22. **CAUTION: Take extra care not to crease the headliner.**

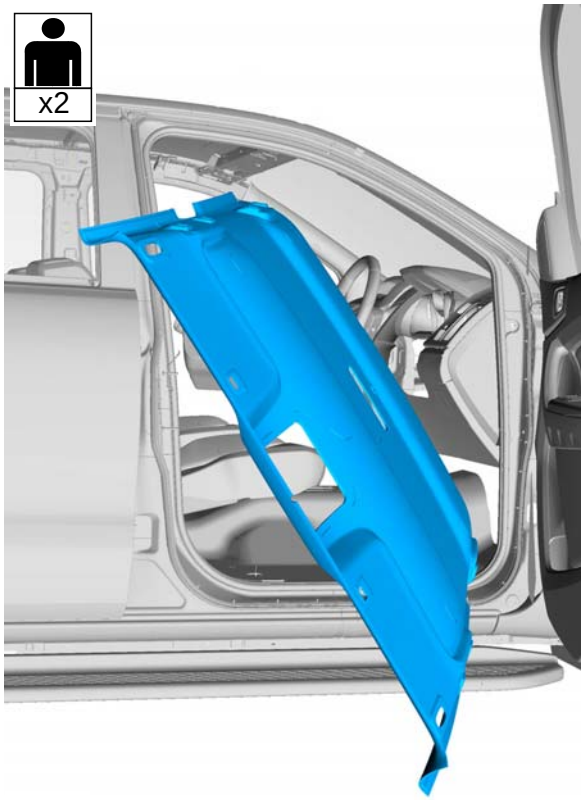

E125919

Installation

1. **NOTE:** Make sure that this component is installed to the noted removal position.

   Using a suitable adhesive, bond the roof wiring harness to the headliner.

2. To install, reverse the removal procedure.

SECTION 501-08 Exterior Trim and Ornamentation

VEHICLE APPLICATION: 2011.50 Ranger

CONTENTS PAGE

REMOVAL AND INSTALLATION

Radiator Grille..... 501-08-2

REMOVAL AND INSTALLATION

Radiator Grille

Removal

NOTE: Removal steps in this procedure may contain installation details.

1.

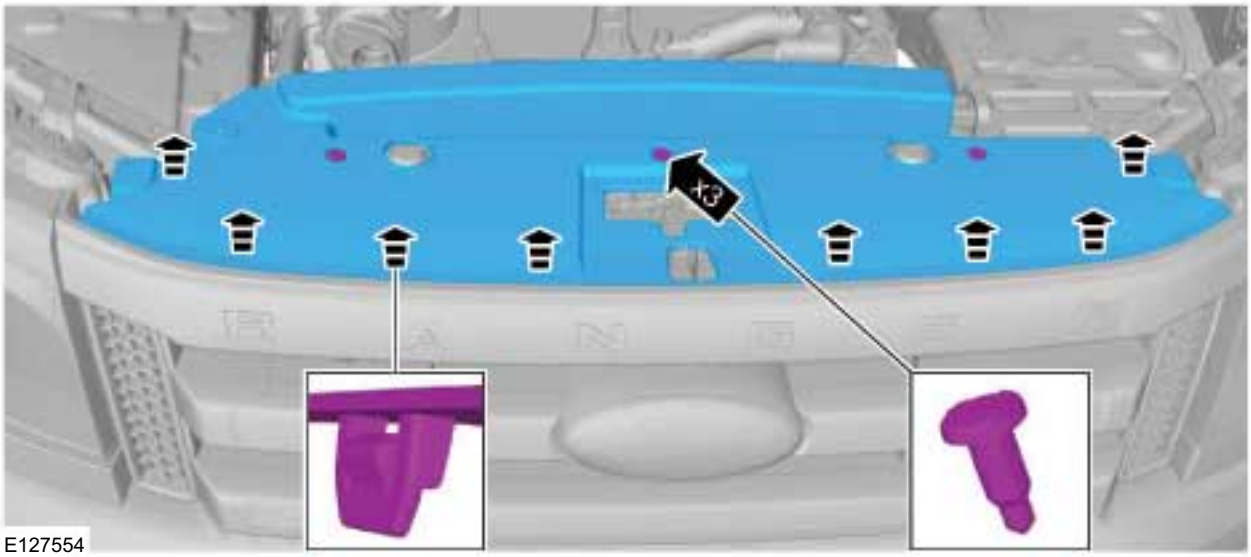

2.

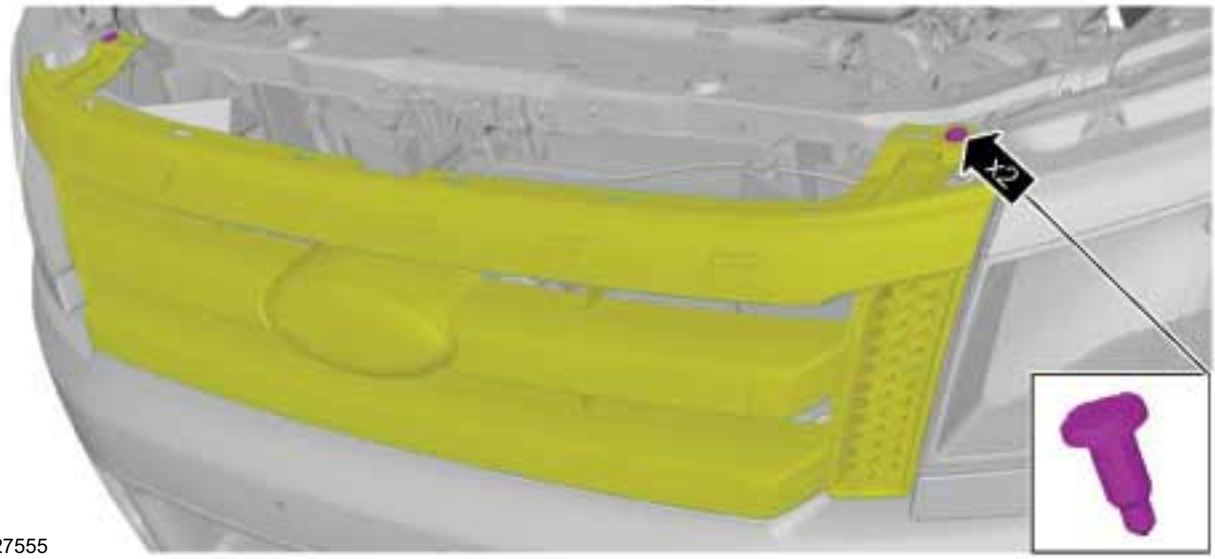

REMOVAL AND INSTALLATION

3. Refer to: Lifting (100-02 Jacking and Lifting, Description and Operation).

4. Torque: 30 Nm

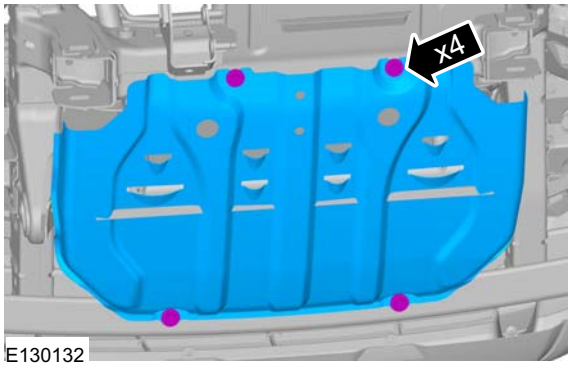

5.

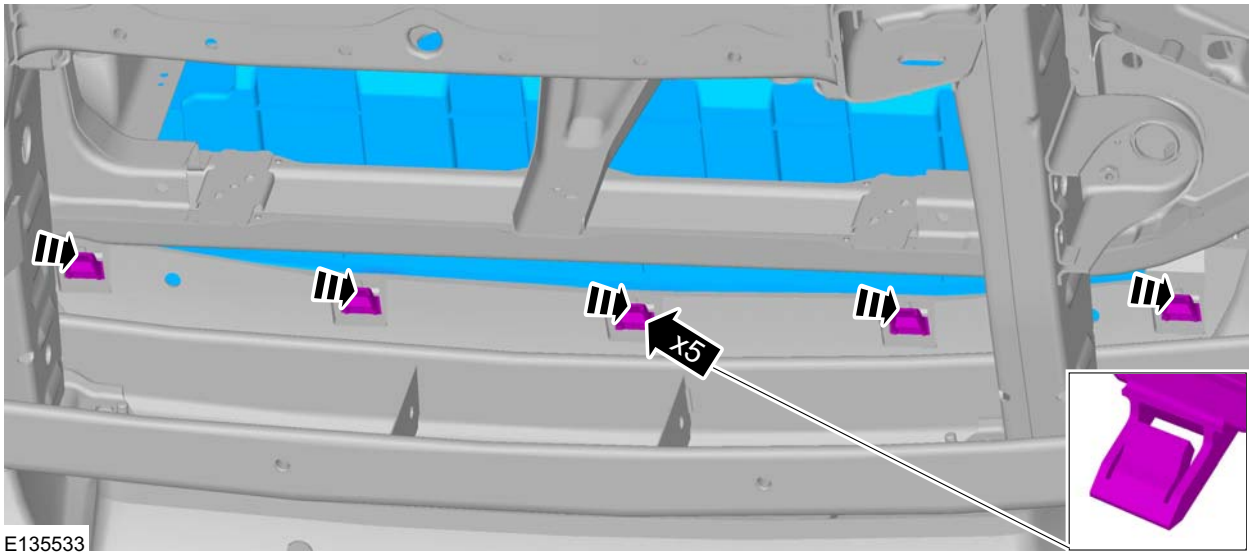

Installation

1. To install, reverse the removal procedure.

SECTION 501-09 Rear View Mirrors

VEHICLE APPLICATION: 2011.50 Ranger

CONTENTS PAGE

REMOVAL AND INSTALLATION

Exterior Mirror..... 501-09-2
Exterior Mirror Glass..... 501-09-3
Exterior Mirror Motor..... 501-09-4
Interior Rear View Mirror..... 501-09-5

REMOVAL AND INSTALLATION

Exterior Mirror

Removal

NOTE: Removal steps in this procedure may contain installation details.

Vehicles with power mirrors

1. Refer to: Battery Disconnect and Connect (414-01 Battery, Mounting and Cables, General Procedures).

All vehicles

2.

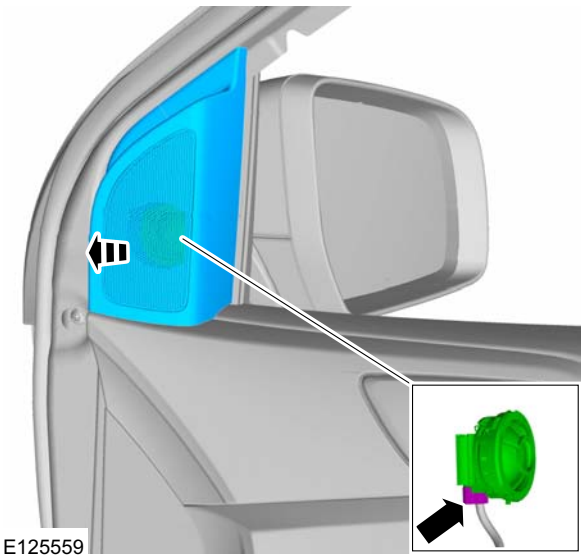

Vehicles with power mirrors

3. Torque: 8 Nm

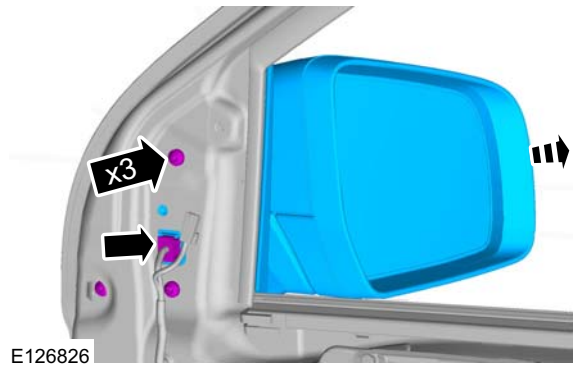

Vehicles with manual mirrors

4. Torque: 8 Nm

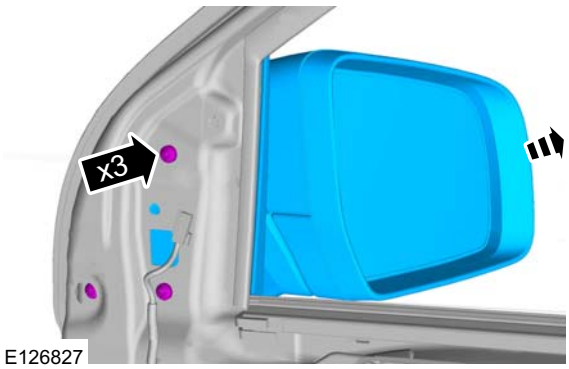

Installation

1. To install, reverse the removal procedure.

REMOVAL AND INSTALLATION

Exterior Mirror Glass

Removal

1.

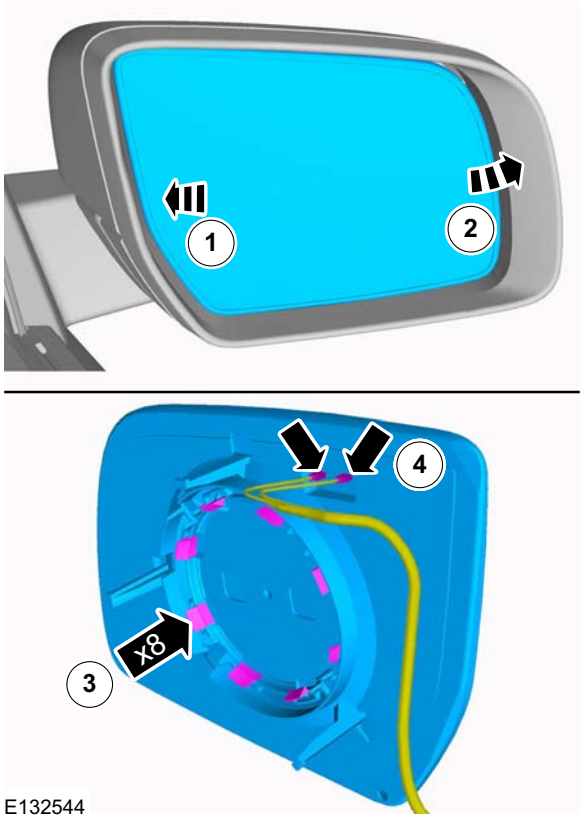

E132544

2. NOTE: Vehicles without heated mirror.

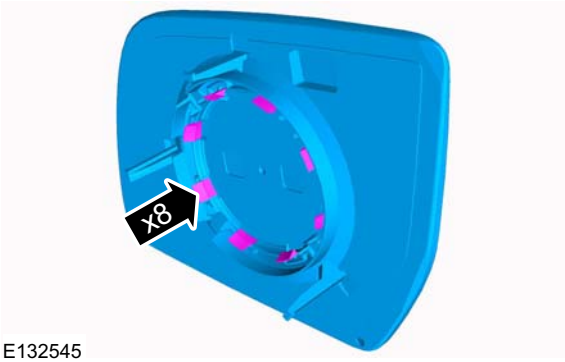

E132545

Installation

1. To install, reverse the removal procedure.

REMOVAL AND INSTALLATION

Exterior Mirror Motor

Removal

1. Refer to: Exterior Mirror Glass (501-09 Rear View Mirrors, Removal and Installation).

2.

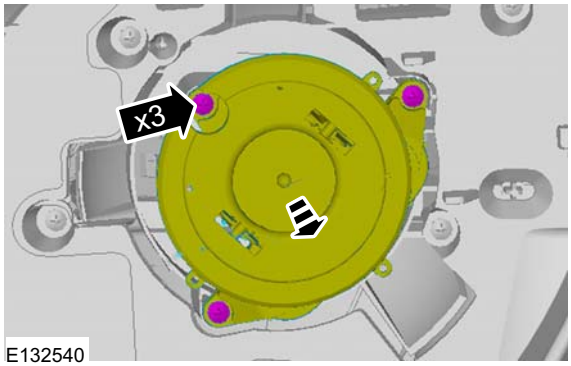

E132540

3.

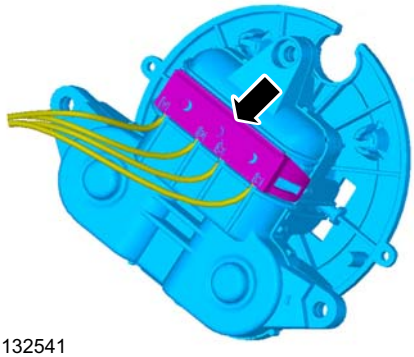
E132541

Installation

1. To install, reverse the removal procedure.

REMOVAL AND INSTALLATION

Interior Rear View Mirror

Removal

NOTE: Removal steps in this procedure may contain installation details.

1.

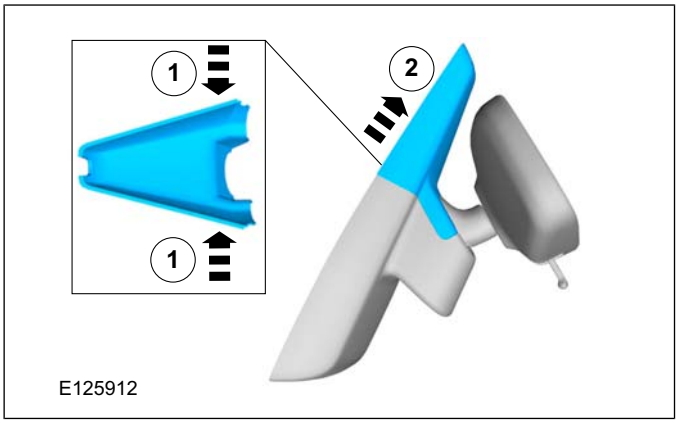

2.

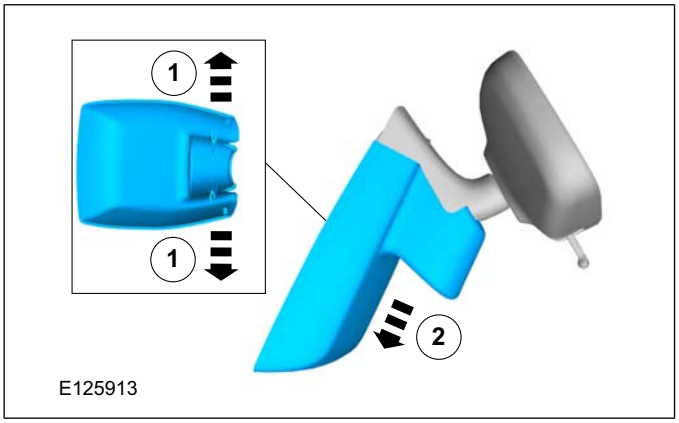

Vehicles with auto-dimming interior mirror

3.

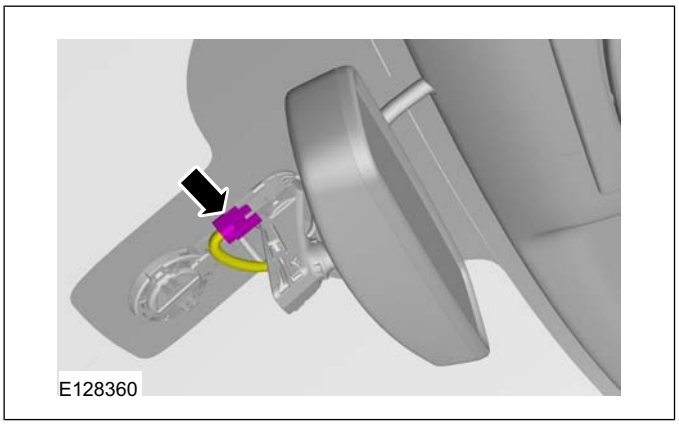

All vehicles

4.

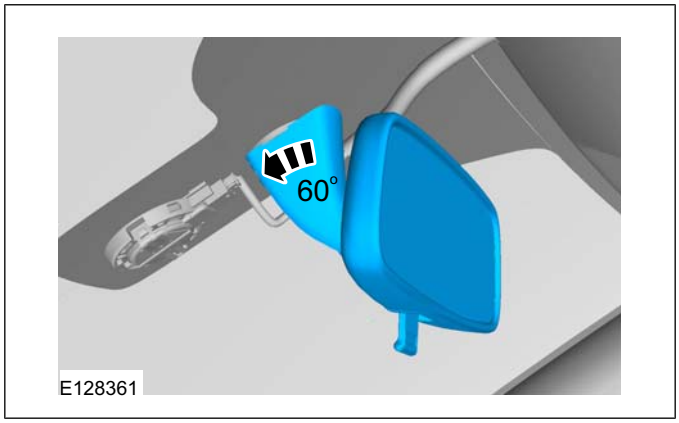

Installation

1. To install, reverse the removal procedure.

SECTION 501-10 Seating

VEHICLE APPLICATION: 2011.50 Ranger

CONTENTS PAGE

DESCRIPTION AND OPERATION

Seats..... 501-10-2

REMOVAL AND INSTALLATION

Front Bench Seat..... 501-10-9
Front Seat..... (40 100 0; 40 100 4; 40 101 0) 501-10-10
Front Seat Backrest..... 501-10-12
Rear Seat..... 501-10-14
Rear Seat Backrest..... 501-10-16

DISASSEMBLY AND ASSEMBLY

Front Bench Seat Backrest..... 501-10-17
Front Bench Seat Cushion..... 501-10-19
Front Seat Cushion..... 501-10-21
Front Seat Backrest..... 501-10-23
Rear Seat Backrest..... 501-10-26
Rear Seat Cushion..... 501-10-30

DESCRIPTION AND OPERATION

Seats

General

Side airbags and height adjustable head restraints are installed as standard equipment. Depending on the vehicle specification, either 2-way, 4-way or 8-way adjustable head restraints are installed as an option.

Depending on the vehicle specification, the front seats may be equipped with any one or combination of the following:

- Manual or power seat height adjustment
- Seat rails, forward and rearward motion
- Backrest recline
- Manually adjustable lumbar mat
- Heated cushion and backrest

Always move the head restraints to the raised position if the rear seat is occupied by a passenger or is used for a child restraint system. The rear head restraints must be lowered to allow the seat to be folded down.

Single cab front seat

DESCRIPTION AND OPERATION

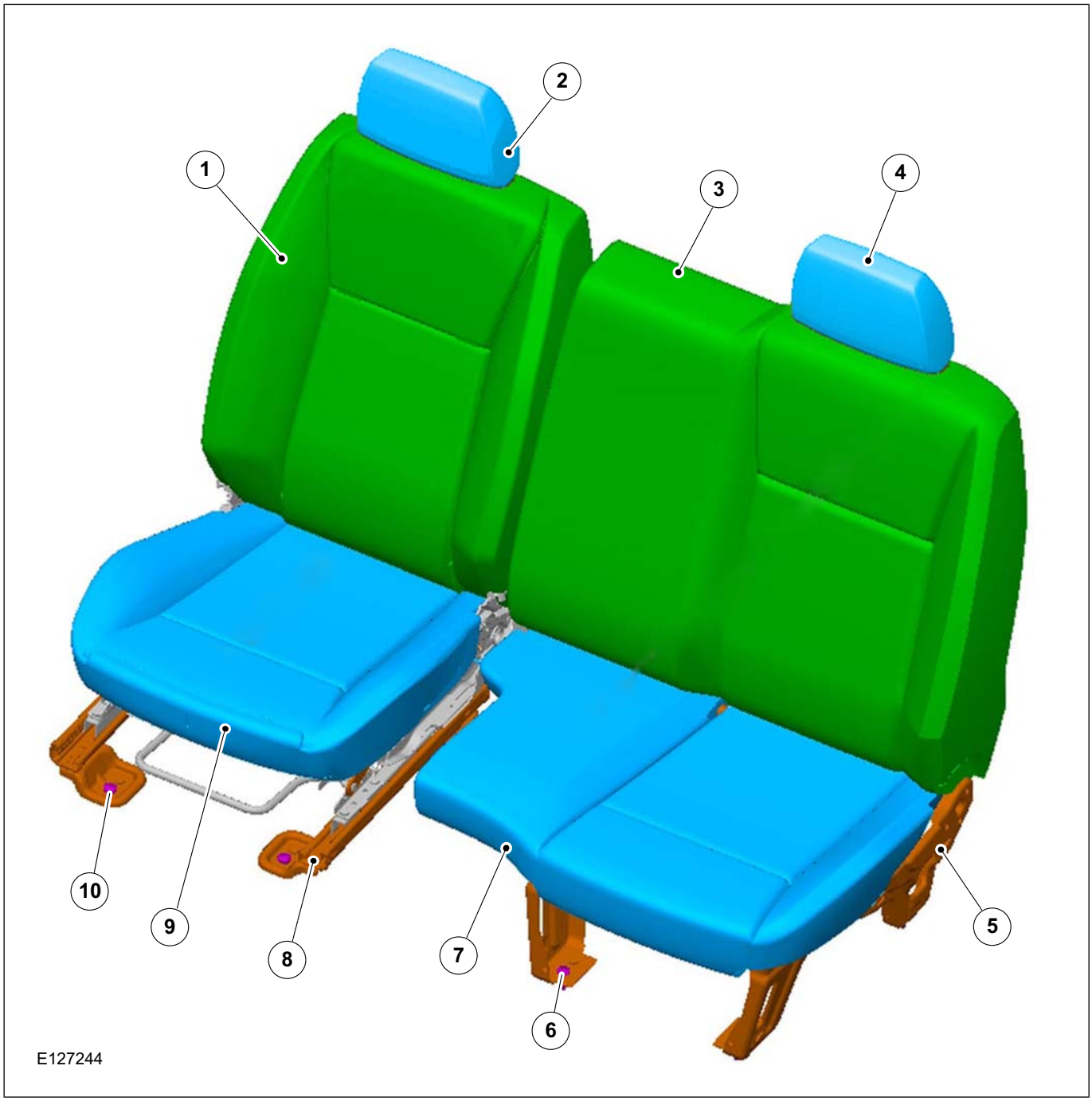

DESCRIPTION AND OPERATION

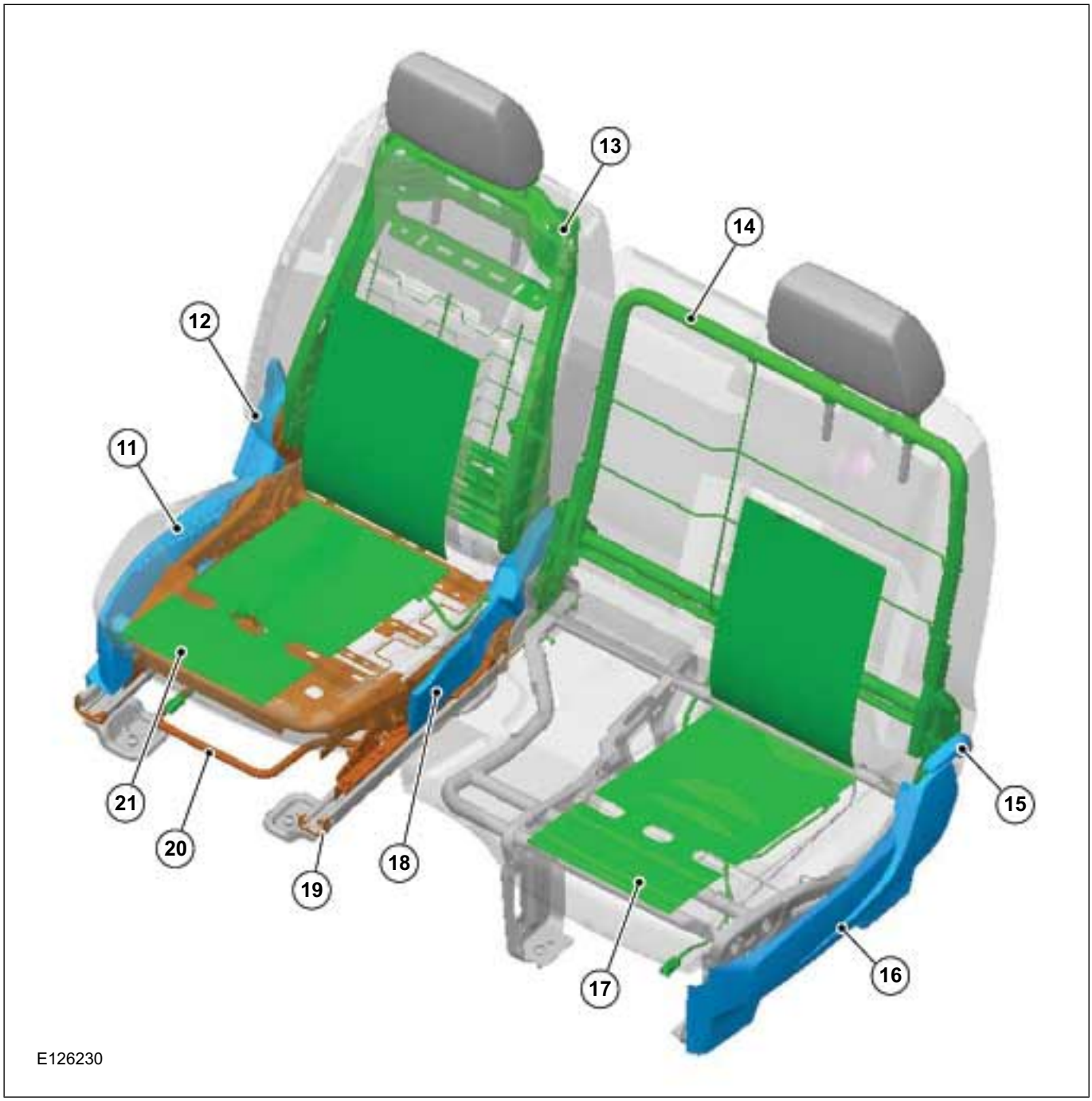

Double cab front power seat

DESCRIPTION AND OPERATION

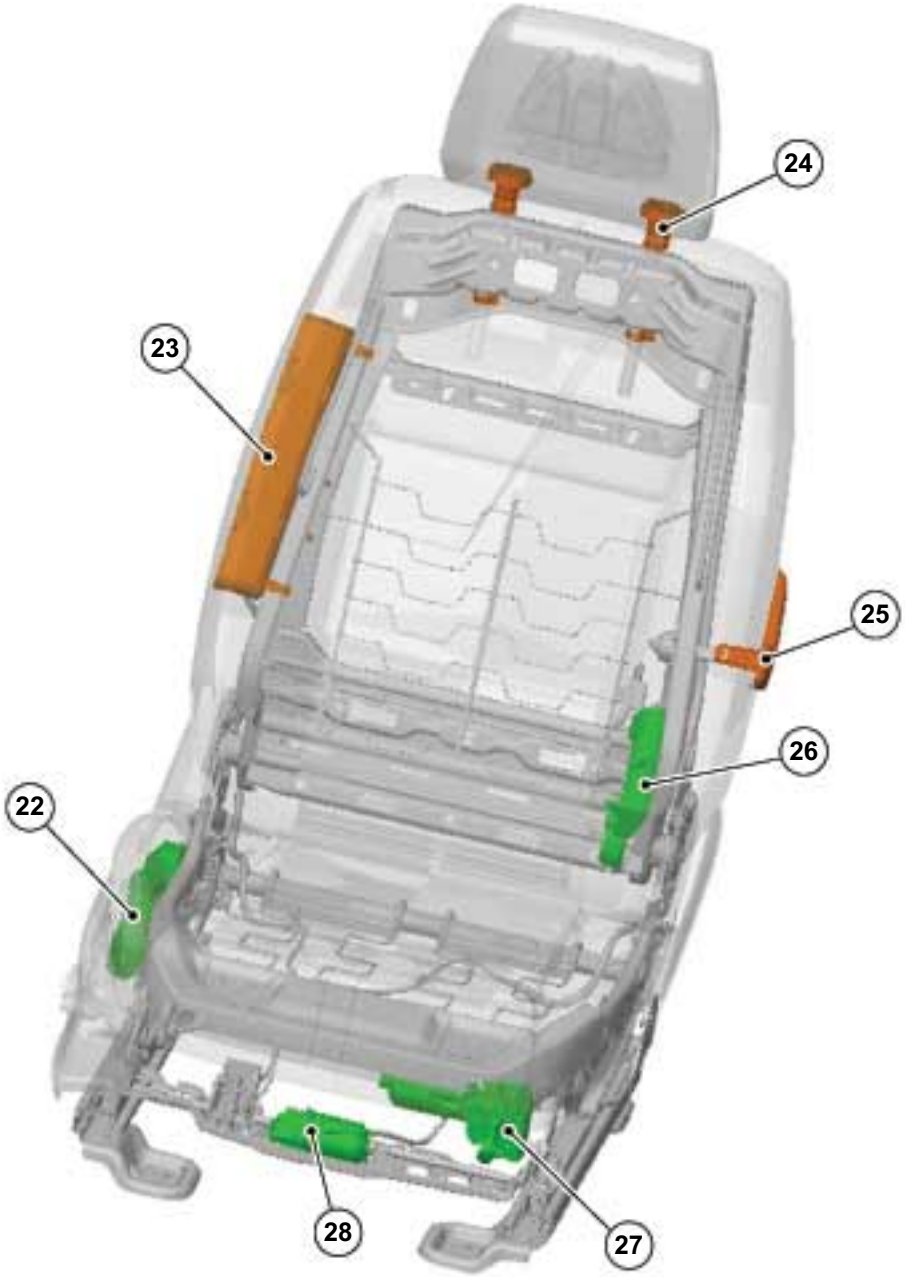

Item	Description
1	Backrest trim cover
2	Head restraint adjustment
3	Front seat bench backrest trim cover
4	Head restraint adjustment
5	Front seat bench cushion frame
6	Front seat retaining bolts
7	Front seat bench cushion
8	Seat frame upper track

Item	Description
9	Front seat cushion cover
10	Front seat cushion base retaining bolts
11	Cushion side shield
12	Seat adjustment lever
13	Front seat backrest frame and lumbar support
14	Backrest front seat bench frame
15	Latch lever

DESCRIPTION AND OPERATION

Item	Description
16	Front bench cushion side shield
17	Front seat cushion heating mat
18	Cushion side shield
19	Lower track end cap
20	Manual seat lower track
21	Front seat cushion and backrest heating mat
22	Switch group for electrically adjustable driver's seat

Item	Description
23	Side airbag
24	Head restraint guide
25	Manually adjustable lumbar lever
26	Servo motor, electrically adjustable backrest
27	Servo motors, seat height and seat angle electric adjustment
28	Servo motor, forward and rearward motion

Double cab rear seat

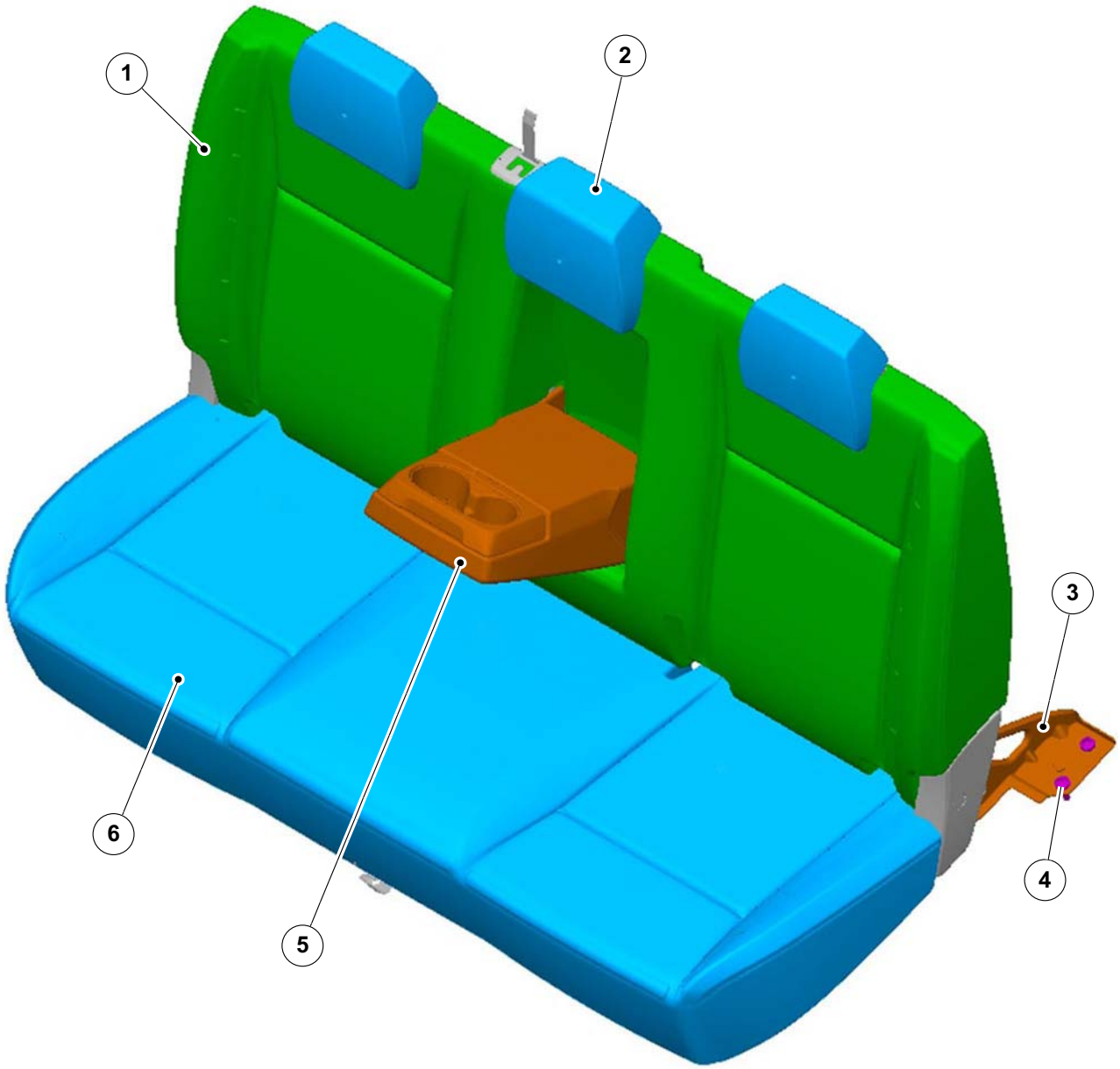

E126886

DESCRIPTION AND OPERATION

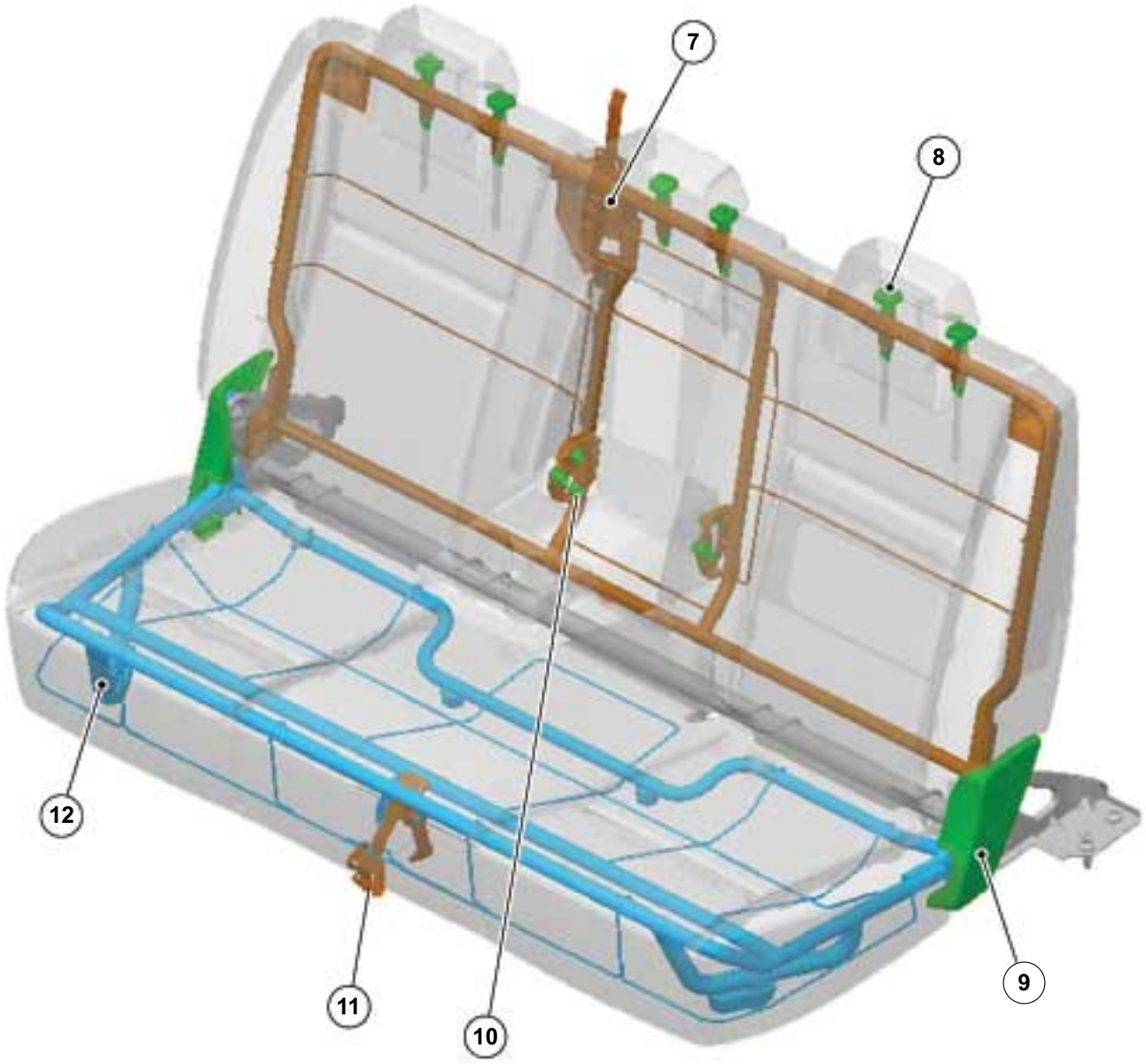

E126887

Item	Description
1	Rear seat backrest trim cover
2	Head restraint adjustment
3	Rear seat frame mounting bracket
4	Rear seat cushion retaining bolts
5	Armrest trim
6	Rear seat cushion trim cover
7	Rear seat backrest frame

Item	Description
8	Head restraint guide
9	Cushion cover
10	Bush
11	Rear seat cushion frame floor hook
12	Rear seat cushion frame

Rap cab rear seat

DESCRIPTION AND OPERATION

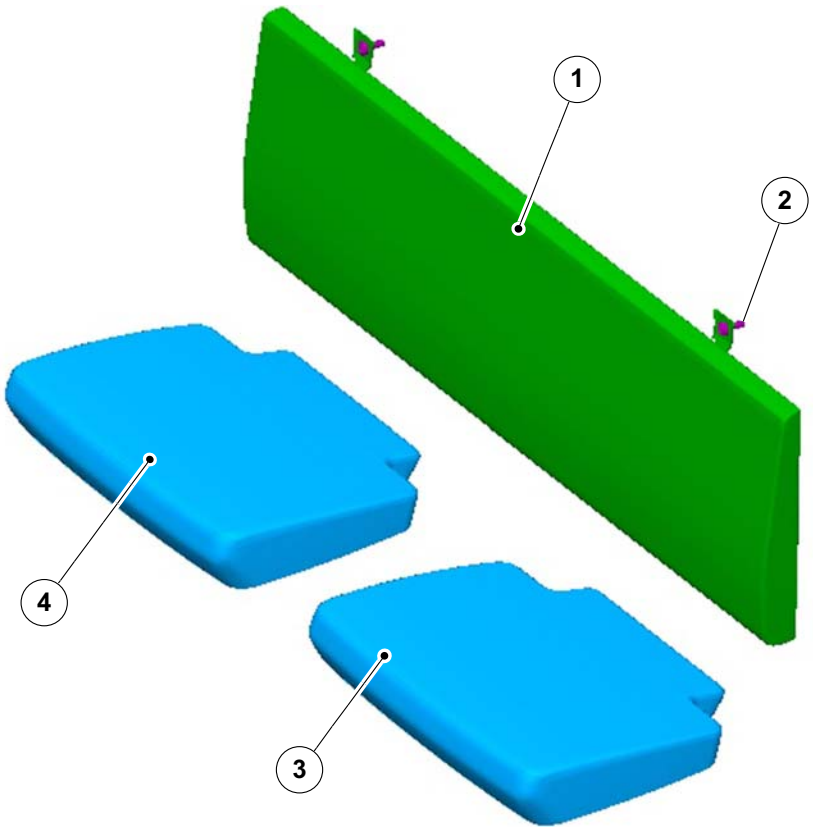

Item	Description
1	Rear seat backrest
2	Back rest upper bolts
3	Rear seat cushion trim
4	Rear seat cushion trim

REMOVAL AND INSTALLATION

Front Bench Seat

Removal

NOTE: Removal steps in this procedure may contain installation details.

1.

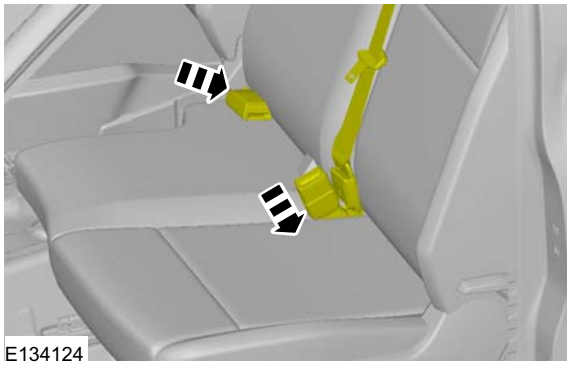

2. 1. Torque: 48 Nm
2. Torque: 30 Nm

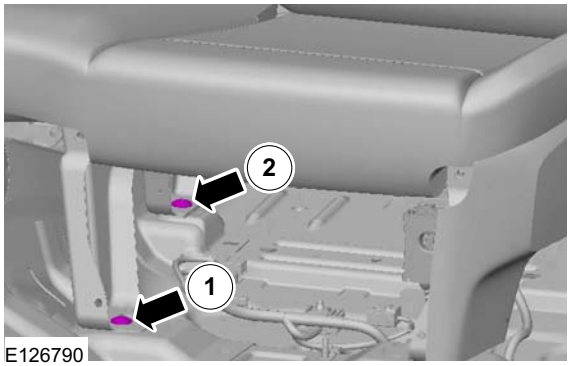

3. 1. Torque: 48 Nm
2. Torque: 30 Nm

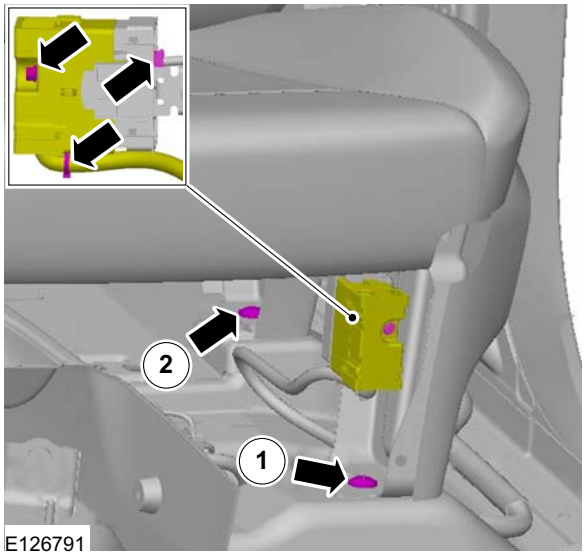

4.

Installation

1. To install, reverse the removal procedure.

REMOVAL AND INSTALLATION

Front Seat(40 100 0; 40 100 4; 40 101 0)

Removal

NOTE: Removal steps in this procedure may contain installation details.

All vehicles

1. **WARNINGS:**

   The supplemental restraint system (SRS) is active for a certain length of time after the power supply has been disconnected. Wait for a minimum of 3 minutes before disconnecting or removing any SRS components.

   Make sure that the vehicle electrical system is fully depowered and no other power source is connected.

   Refer to: Supplemental Restraint System (SRS) Health and Safety Precautions (100-00 General Information, Description and Operation).

2. Refer to: Battery Disconnect and Connect (414-01 Battery, Mounting and Cables, General Procedures).
3. 2. Torque: 48 Nm

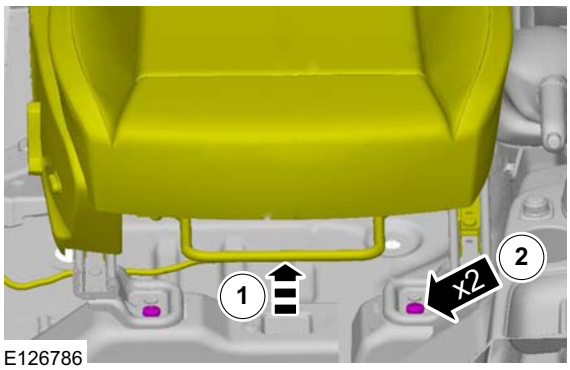

E126786

4. 2. Torque: 48 Nm

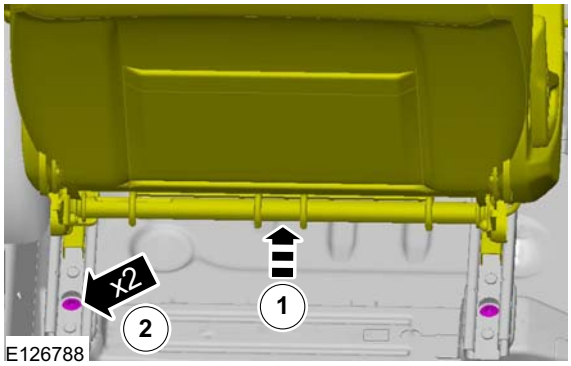

E126788

Single cab

5. 2. Torque: 30 Nm

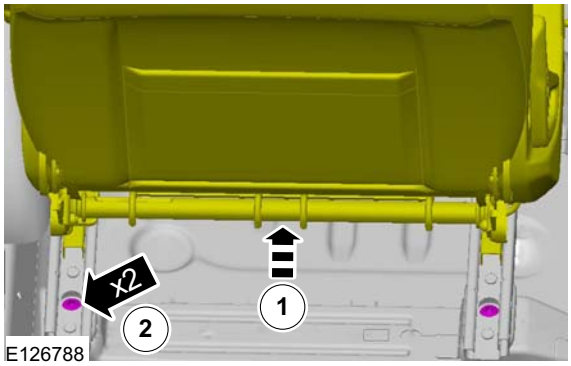

E126788

REMOVAL AND INSTALLATION

All vehicles

6. Disconnect the heated seat and side air bag module electrical connectors (if equipped).

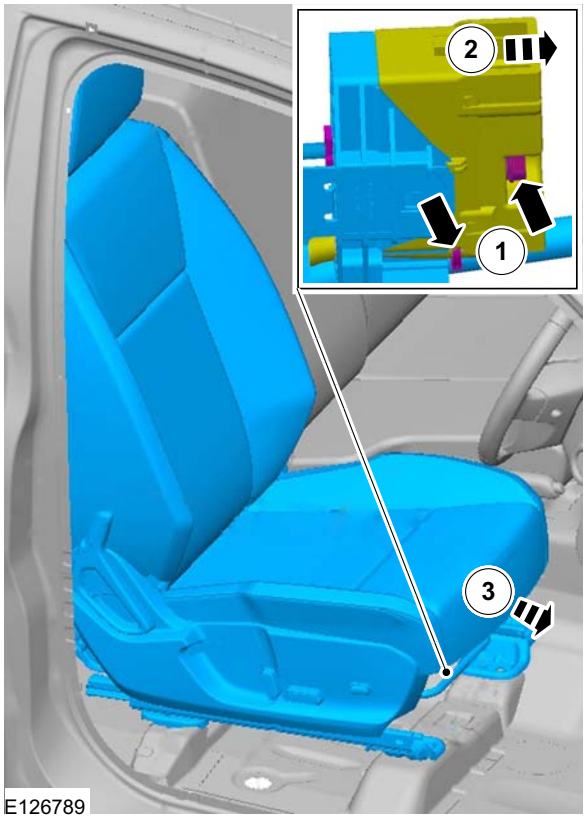

Installation

1. To install, reverse the removal procedure.

REMOVAL AND INSTALLATION

Front Seat Backrest

Removal

NOTE: Removal steps in this procedure may contain installation details.

1. Refer to: Front Seat (501-10 Seating, Removal and Installation).

2.

3.

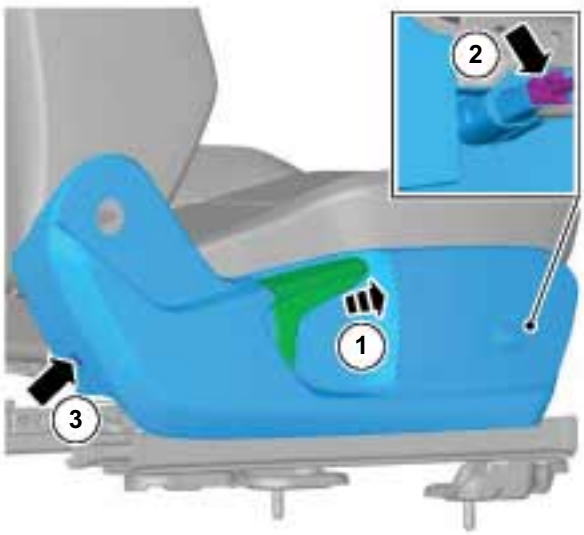

4. Torque: 38 Nm

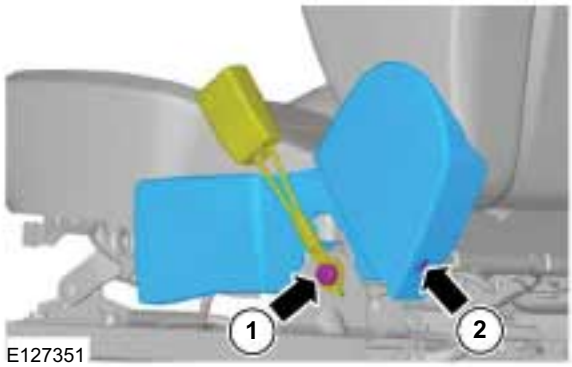

5.

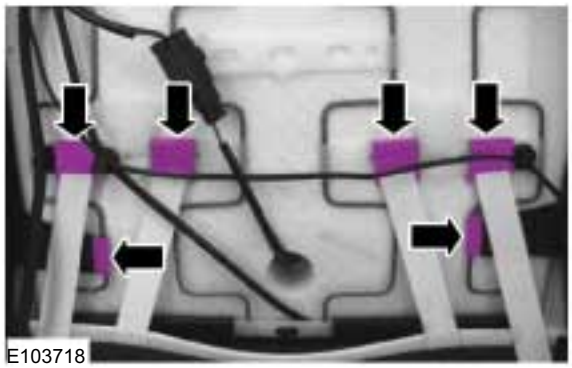

6.

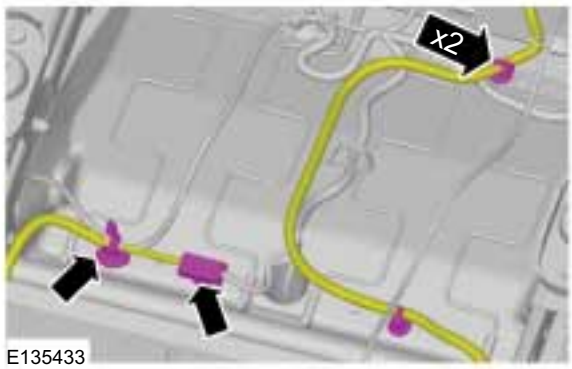

REMOVAL AND INSTALLATION

7.

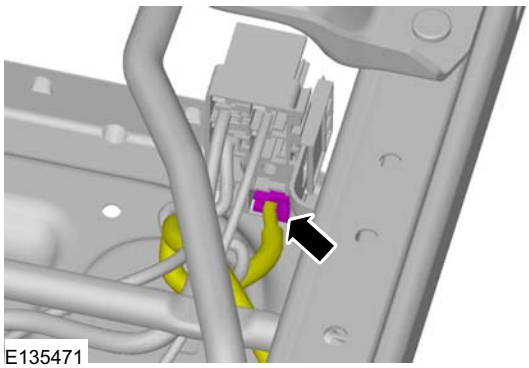

8. Torque: 45 Nm

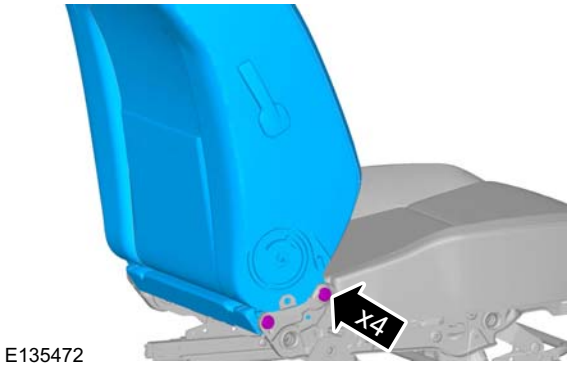

Installation

1. To install, reverse the removal procedure.

REMOVAL AND INSTALLATION

Rear Seat

Removal

NOTE: Removal steps in this procedure may contain installation details.

Double cab

WARNINGS:

The supplemental restraint system (SRS) is active for a certain length of time after the power supply has been disconnected. Wait for a minimum of 3 minutes before disconnecting or removing any SRS components.

Make sure that the vehicle electrical system is fully depowered and no other power source is connected.

1.

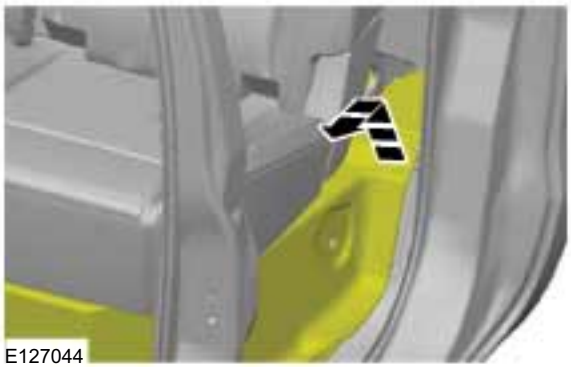

2. Torque: 48 Nm

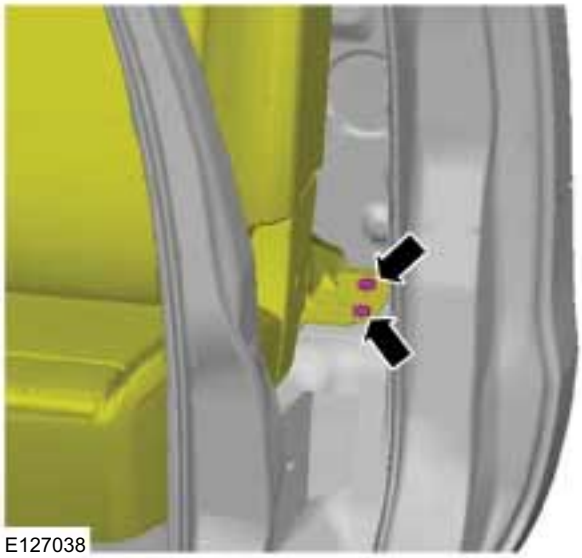

3. Torque: 48 Nm

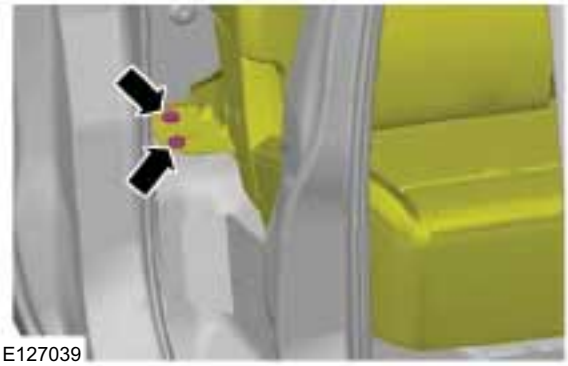

4.

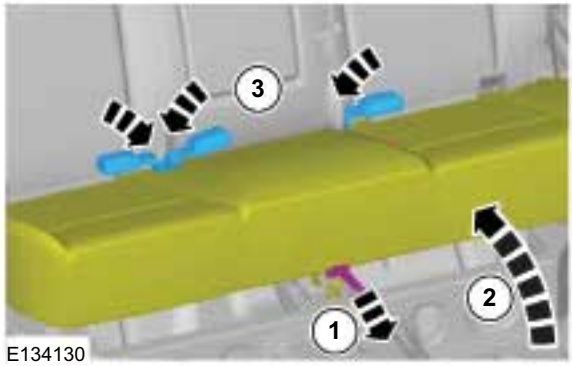

5.

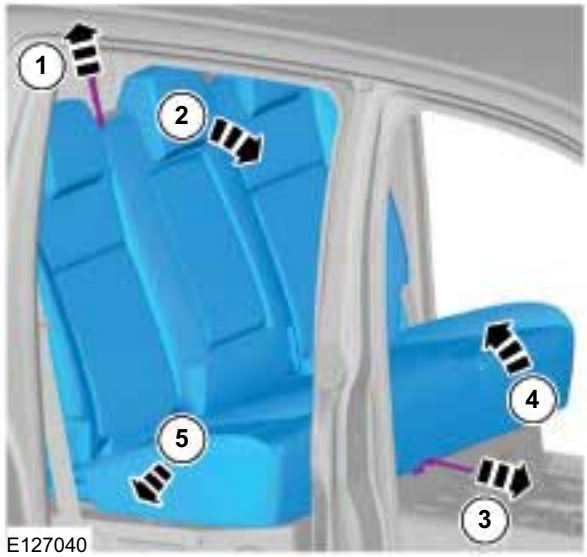

REMOVAL AND INSTALLATION

Stretch cab

6.

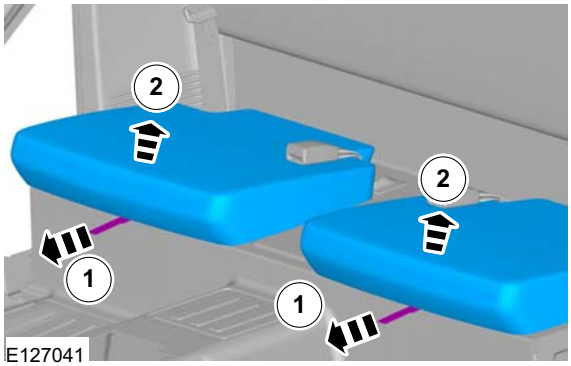

7.

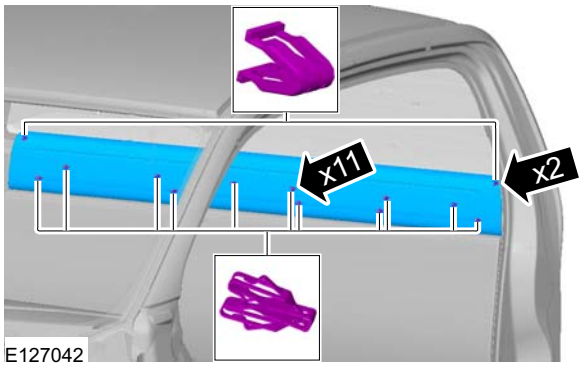

8. Torque: 48 Nm

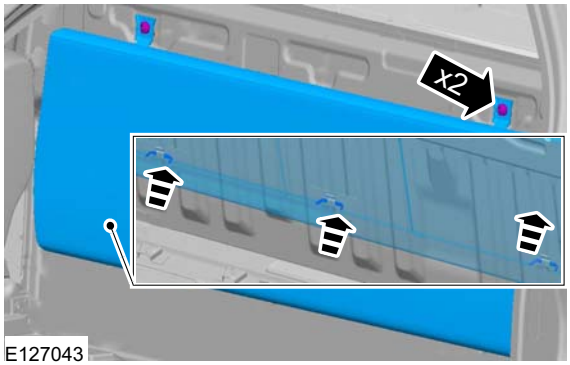

Installation

1. To install, reverse the removal procedure.

REMOVAL AND INSTALLATION

Rear Seat Backrest

Removal

NOTE: Removal steps in this procedure may contain installation details.

1. Refer to: Rear Seat (501-10 Seating, Removal and Installation).
2. On both sides.

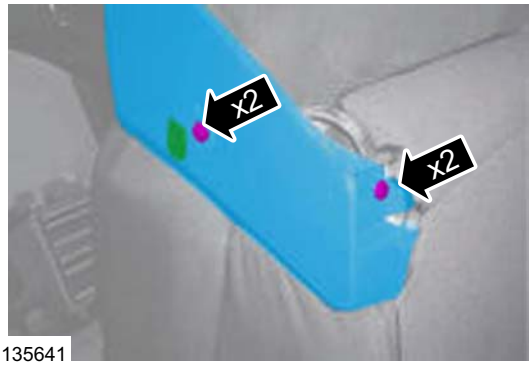

E135641

3. On both sides.
   Torque: 25 Nm

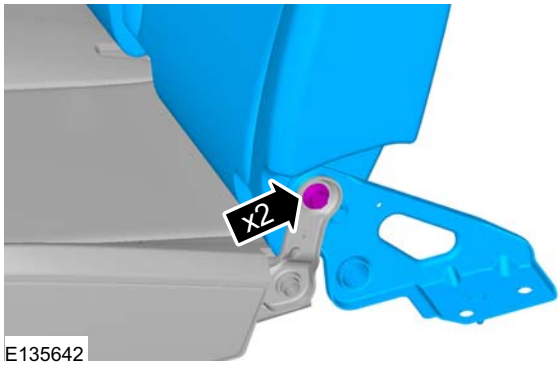

E135642

Installation

1. To install, reverse the removal procedure.

DISASSEMBLY AND ASSEMBLY

Front Bench Seat Backrest

Disassembly

NOTE: Disassembly steps in this procedure may contain assembly details.

1.

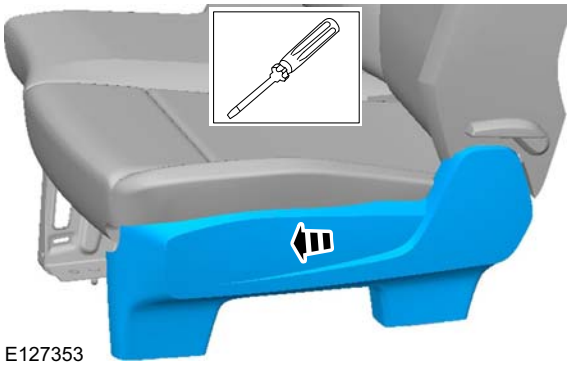

2.

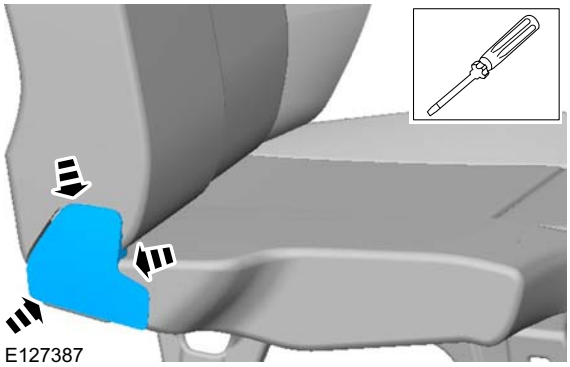

3. Torque: 35 Nm

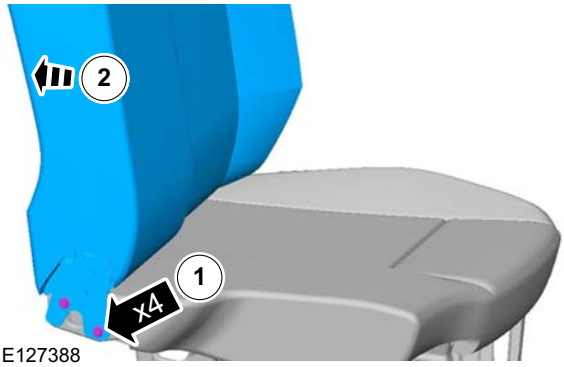

4.

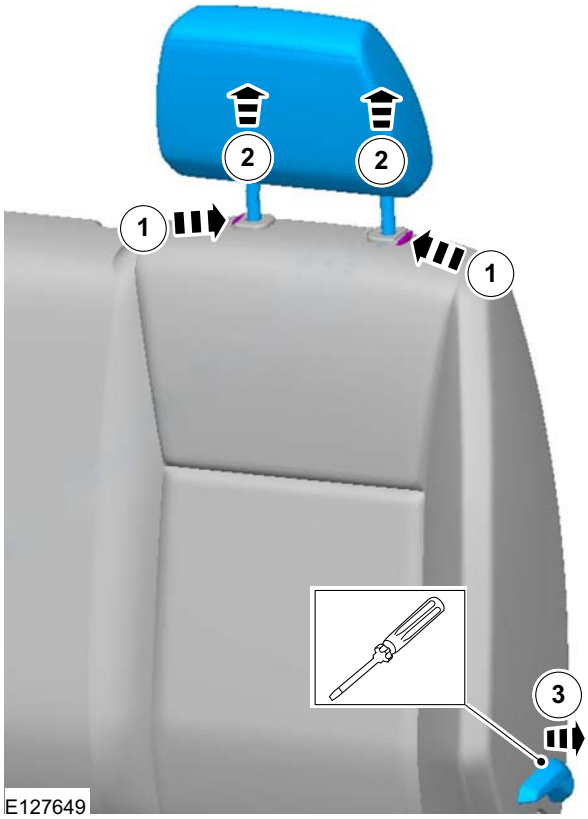

5.

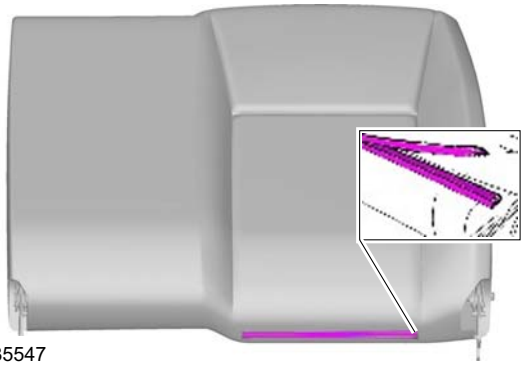

DISASSEMBLY AND ASSEMBLY

6.

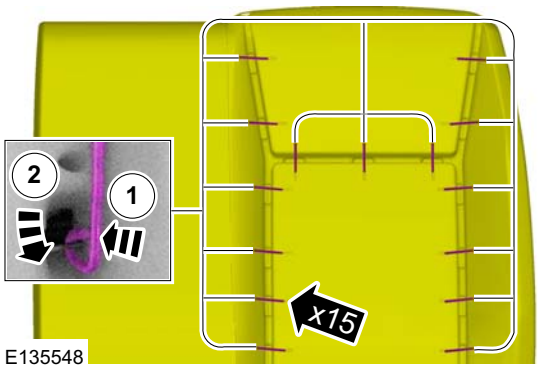

E135548

9.

E135550

7.

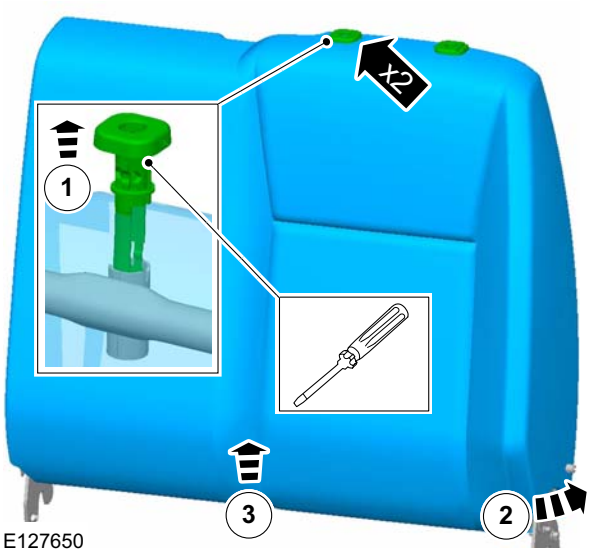

E127650

8.

E135549

Assembly

10. To assemble, reverse the disassembly procedure.

DISASSEMBLY AND ASSEMBLY

Front Bench Seat Cushion

Disassembly

NOTE: Disassembly steps in this procedure may contain assembly details.

1.

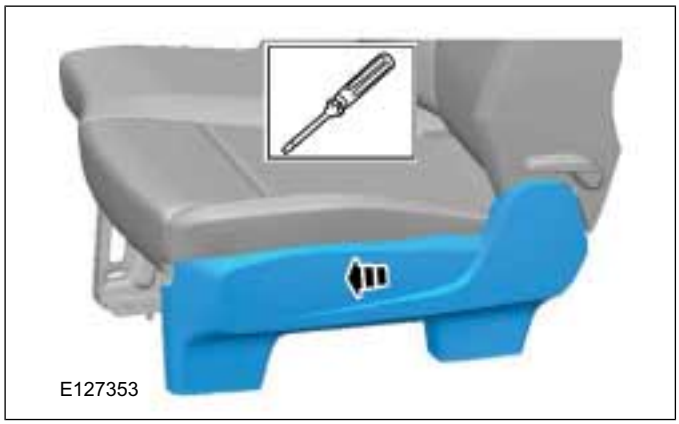

2.

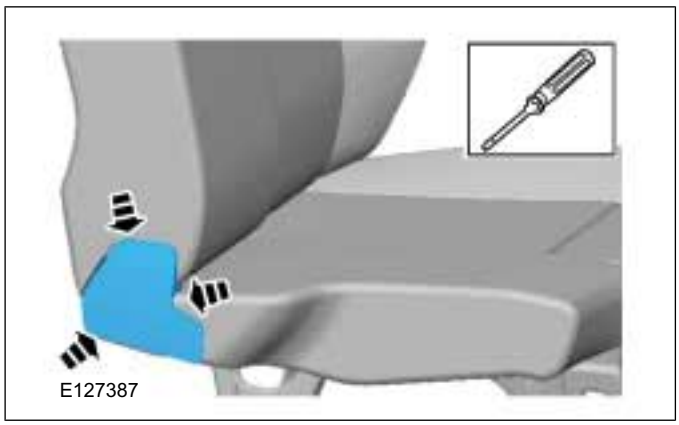

3. Torque: 35 Nm

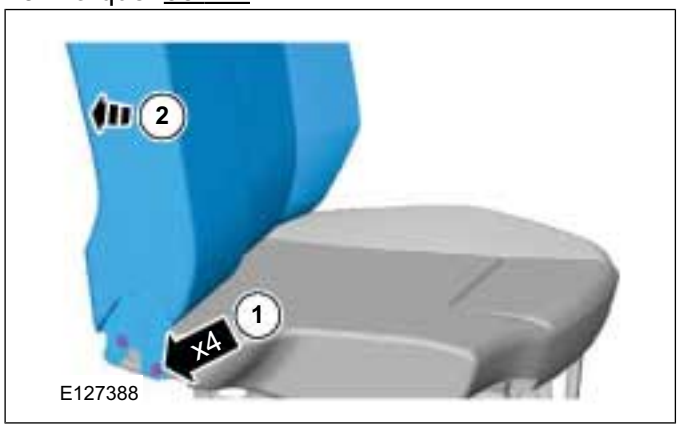

4.

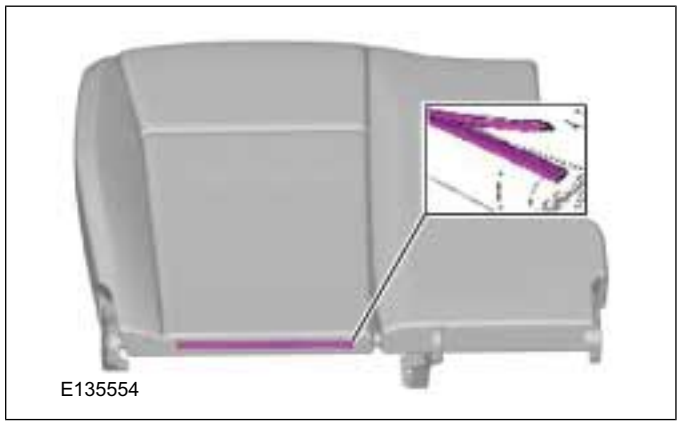

5.

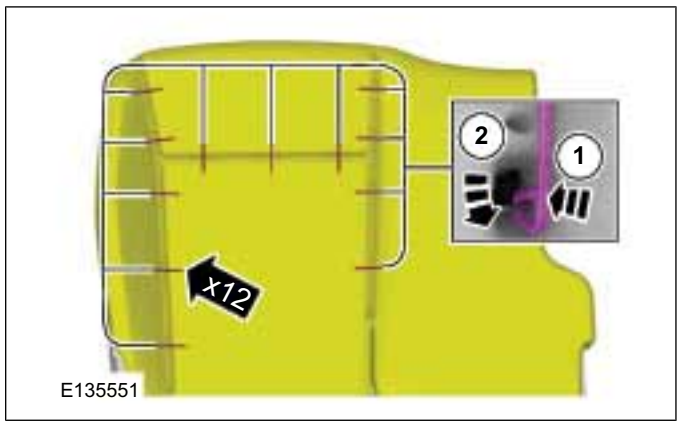

6.

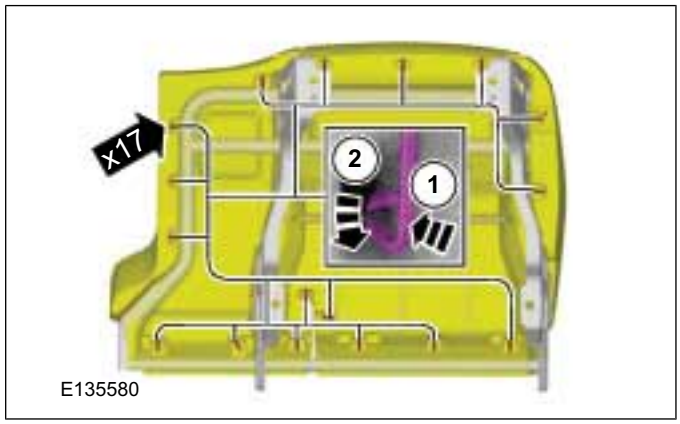

DISASSEMBLY AND ASSEMBLY

7.

8.

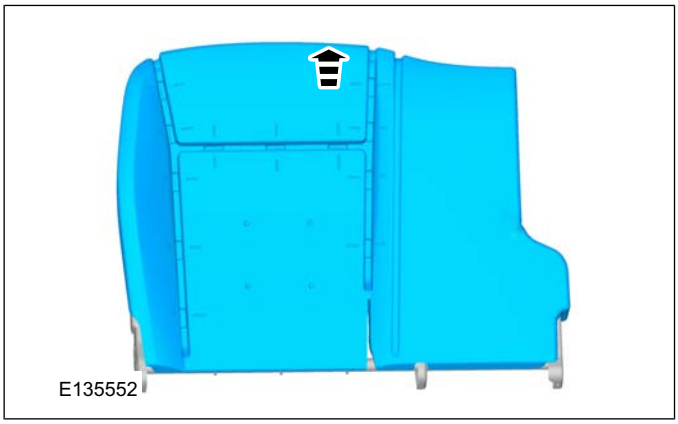

9.

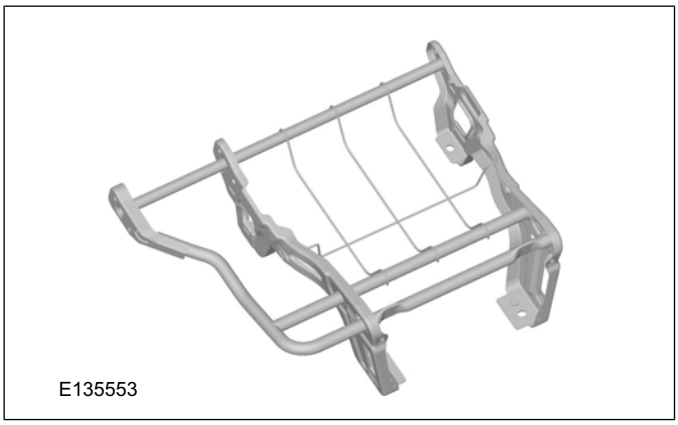

Assembly

10. To assemble, reverse the disassembly procedure.

DISASSEMBLY AND ASSEMBLY

Front Seat Cushion

Disassembly

NOTE: Disassembly steps in this procedure may contain assembly details.

1. Refer to: Front Seat Backrest (501-10 Seating, Removal and Installation).

2.

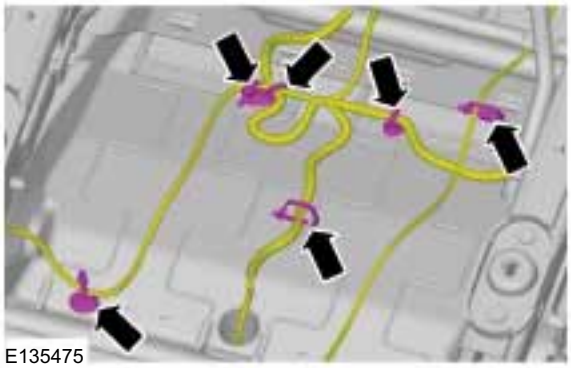

3.

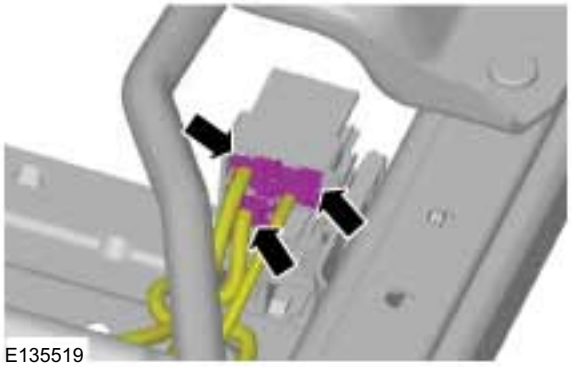

4.

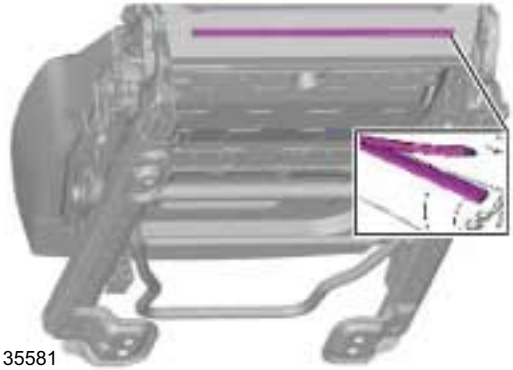

5.

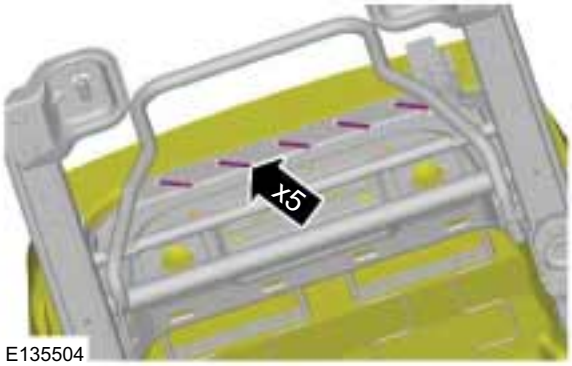

6.

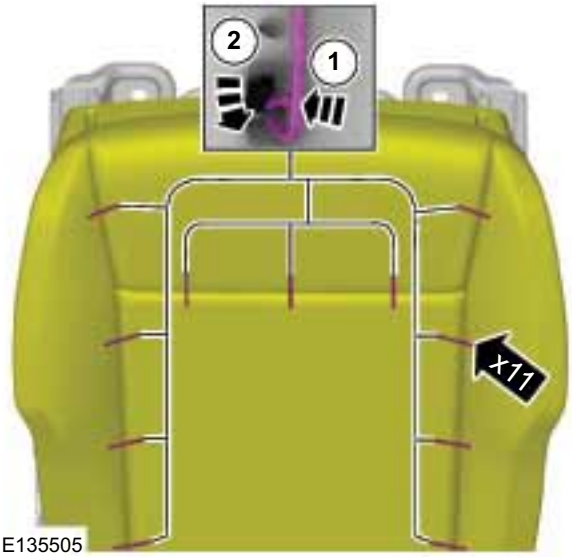

7.

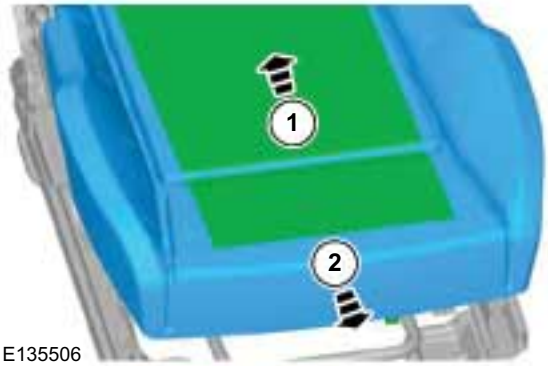

DISASSEMBLY AND ASSEMBLY

8.

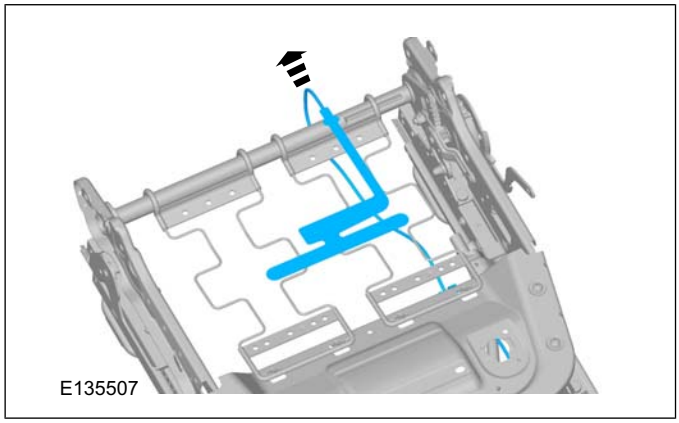

Assembly

9. To assemble, reverse the disassembly procedure.

DISASSEMBLY AND ASSEMBLY

Front Seat Backrest

Disassembly

NOTE: Disassembly steps in this procedure may contain assembly details.

1. Refer to: Front Seat Backrest (501-10 Seating, Removal and Installation).

2.

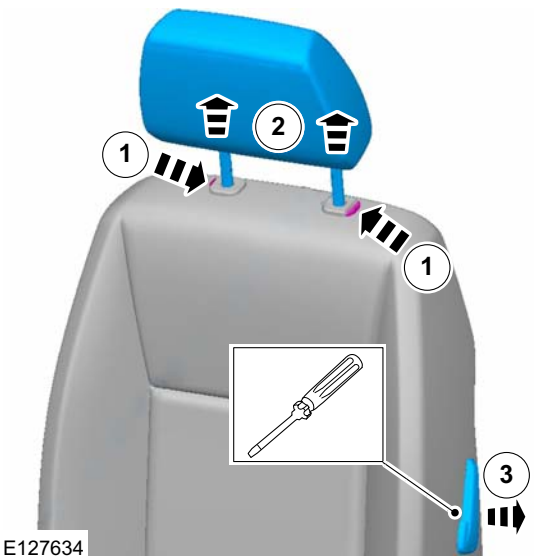

3.

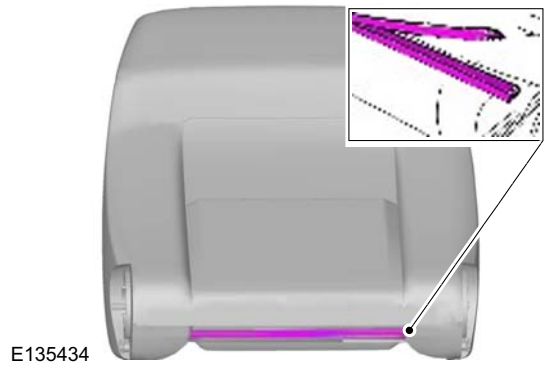

4.

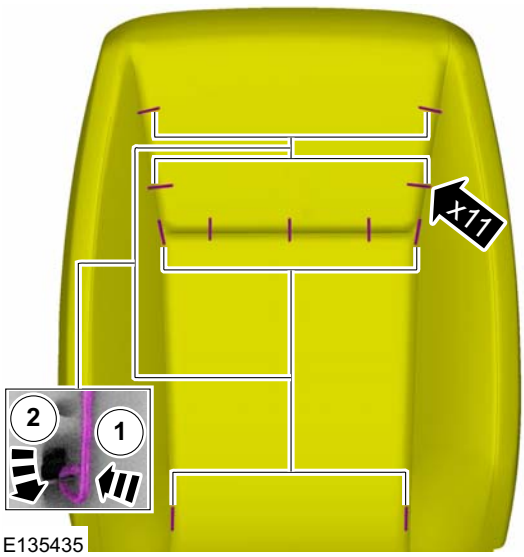

5.

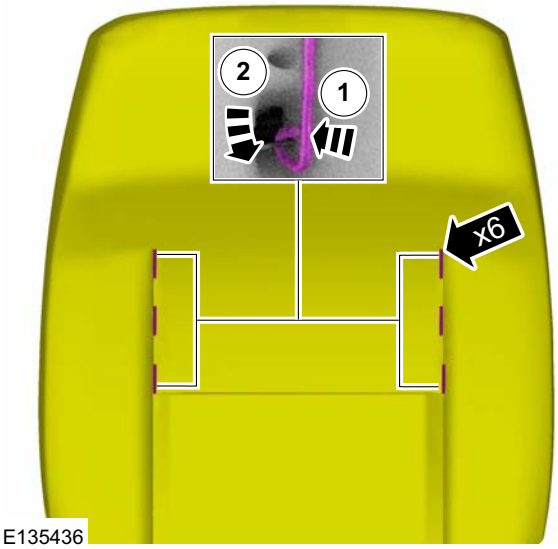

DISASSEMBLY AND ASSEMBLY

6.

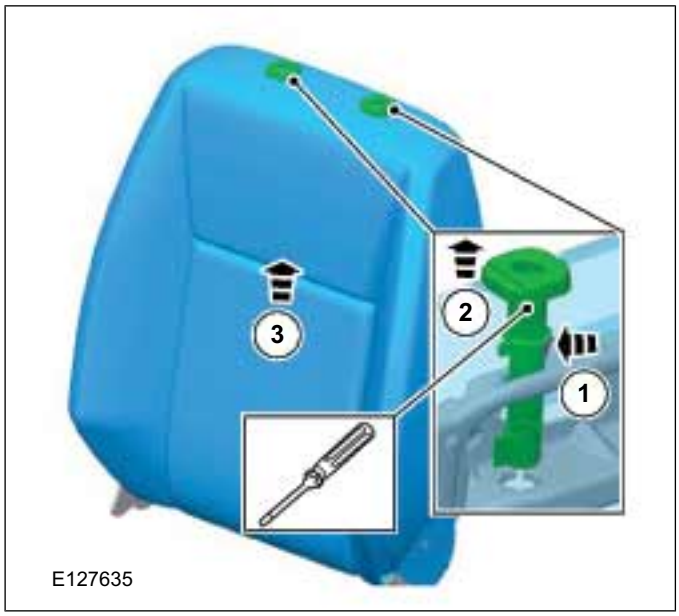

7.

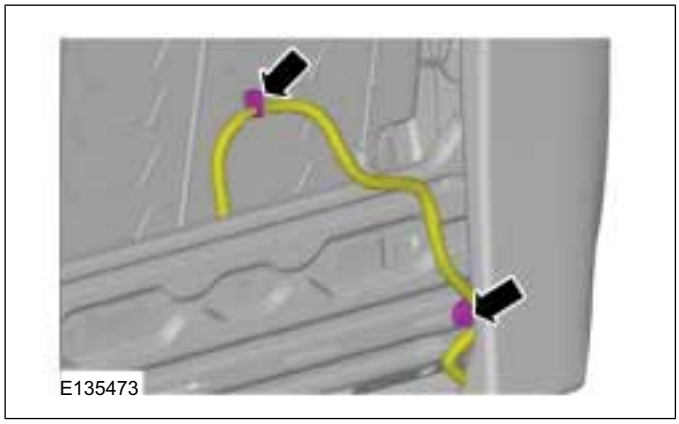

8.

9. Torque: 5 Nm

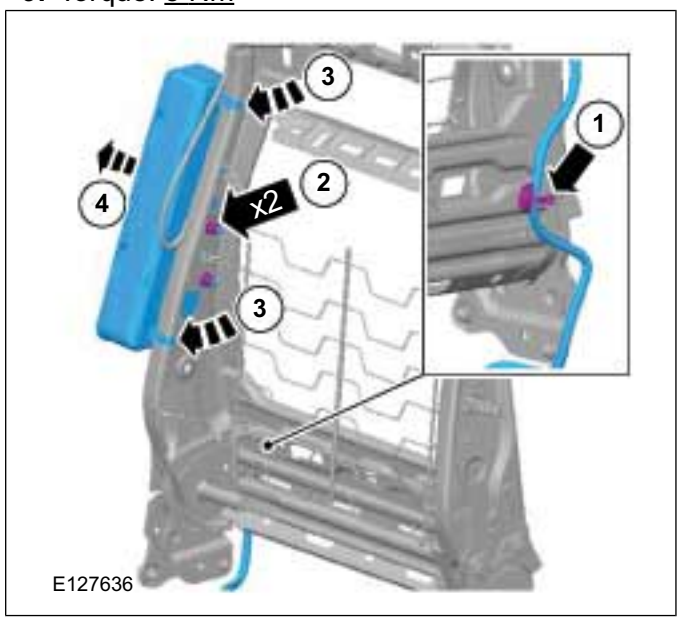

10. Torque: 3 Nm

DISASSEMBLY AND ASSEMBLY

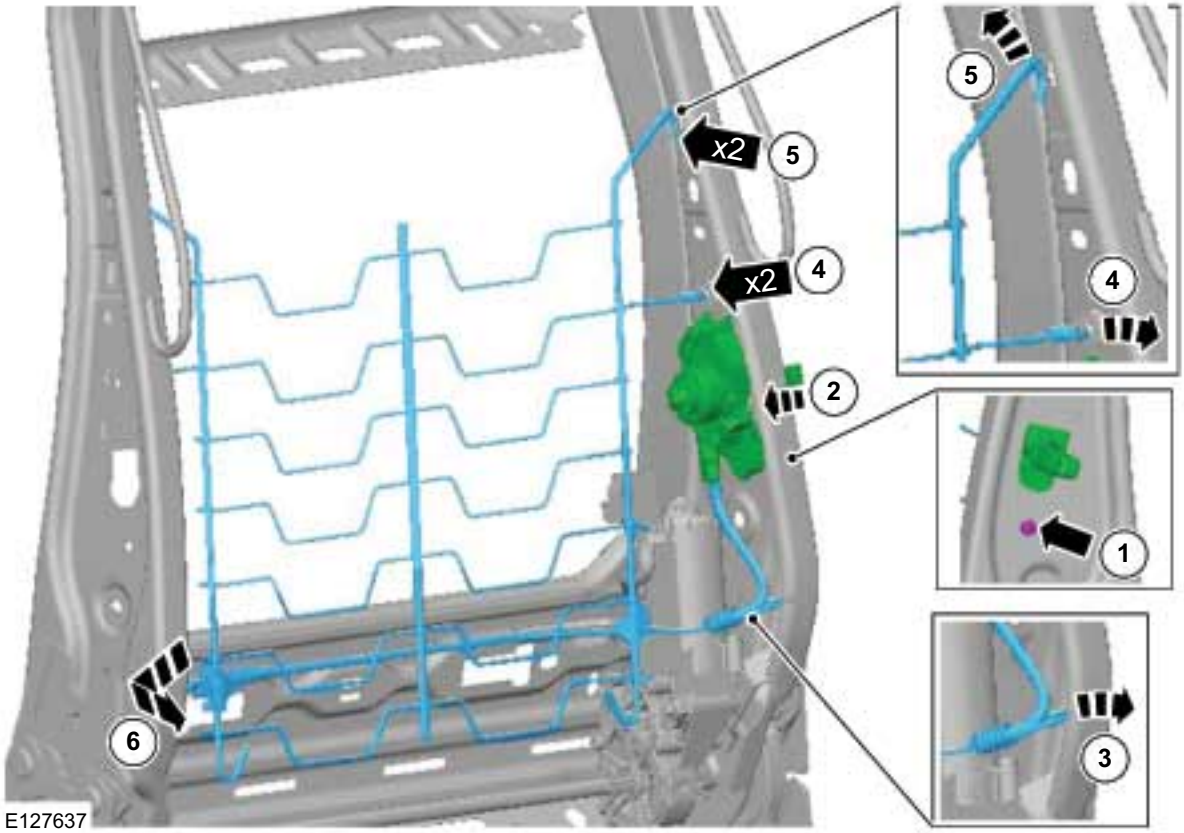

Assembly

11. To assemble, reverse the disassembly procedure.

DISASSEMBLY AND ASSEMBLY

Rear Seat Backrest

Disassembly

NOTE: Disassembly steps in this procedure may contain assembly details.

1. Refer to: Rear Seat Backrest (501-10 Seating, Removal and Installation).
2. Torque: 25 Nm

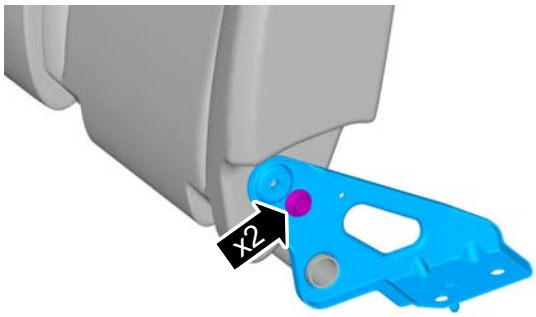

E135663

3.

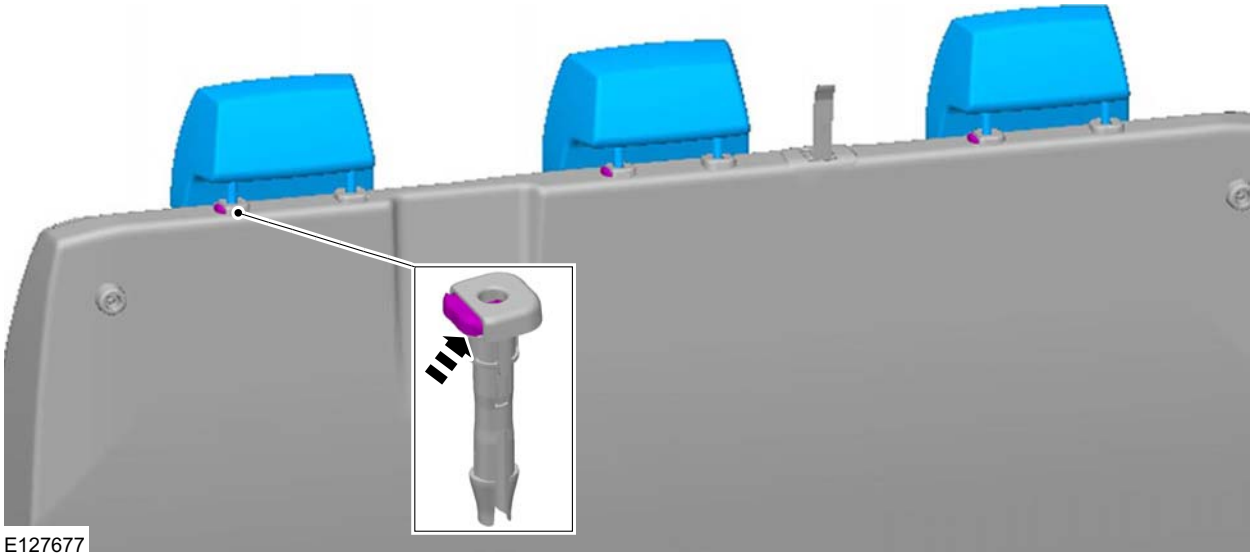
E127677

DISASSEMBLY AND ASSEMBLY

4. Torque: 10 Nm

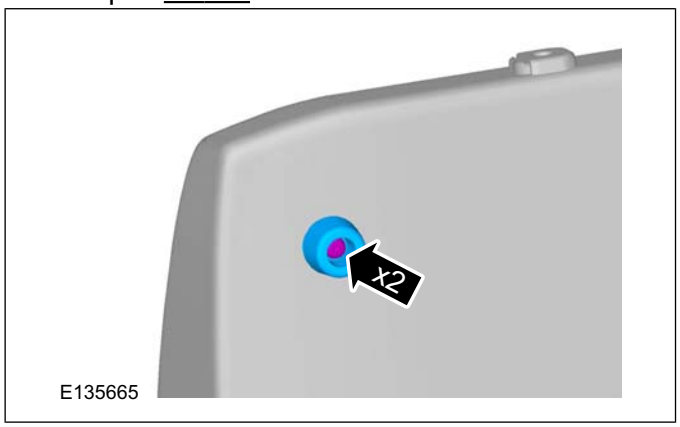

5. Release the armrest pivot pins on both sides.

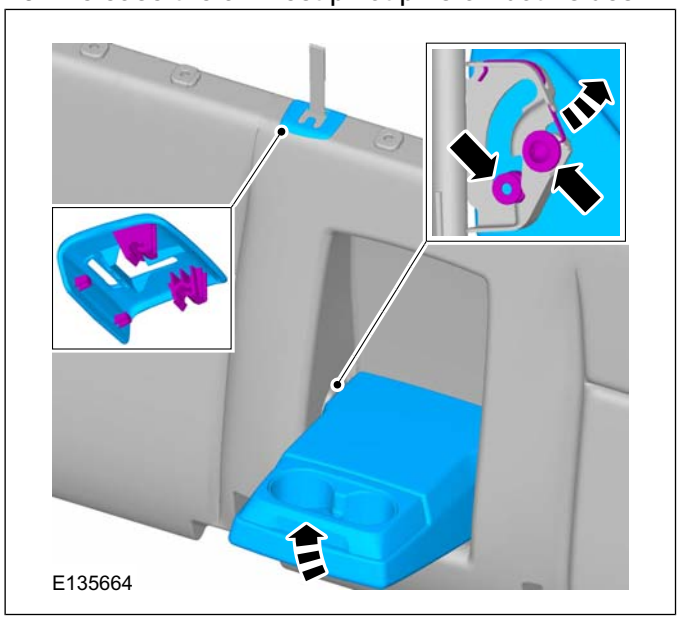

6.

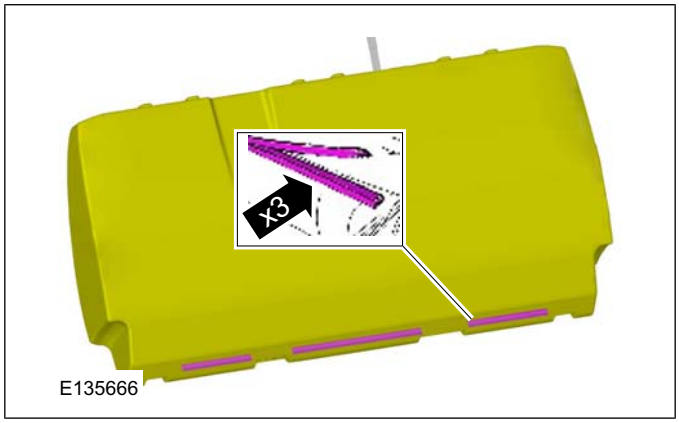

7.

DISASSEMBLY AND ASSEMBLY

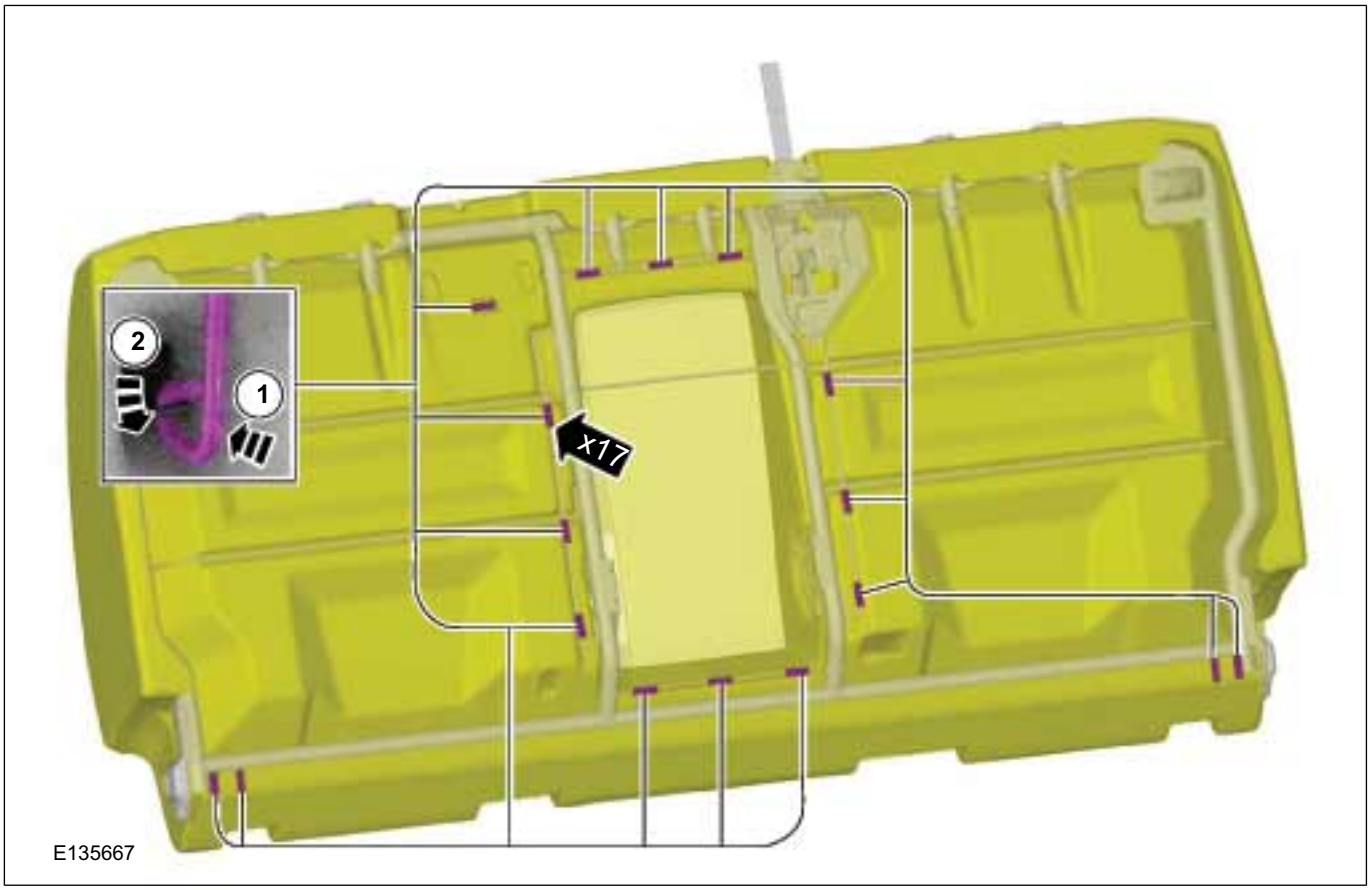

8.

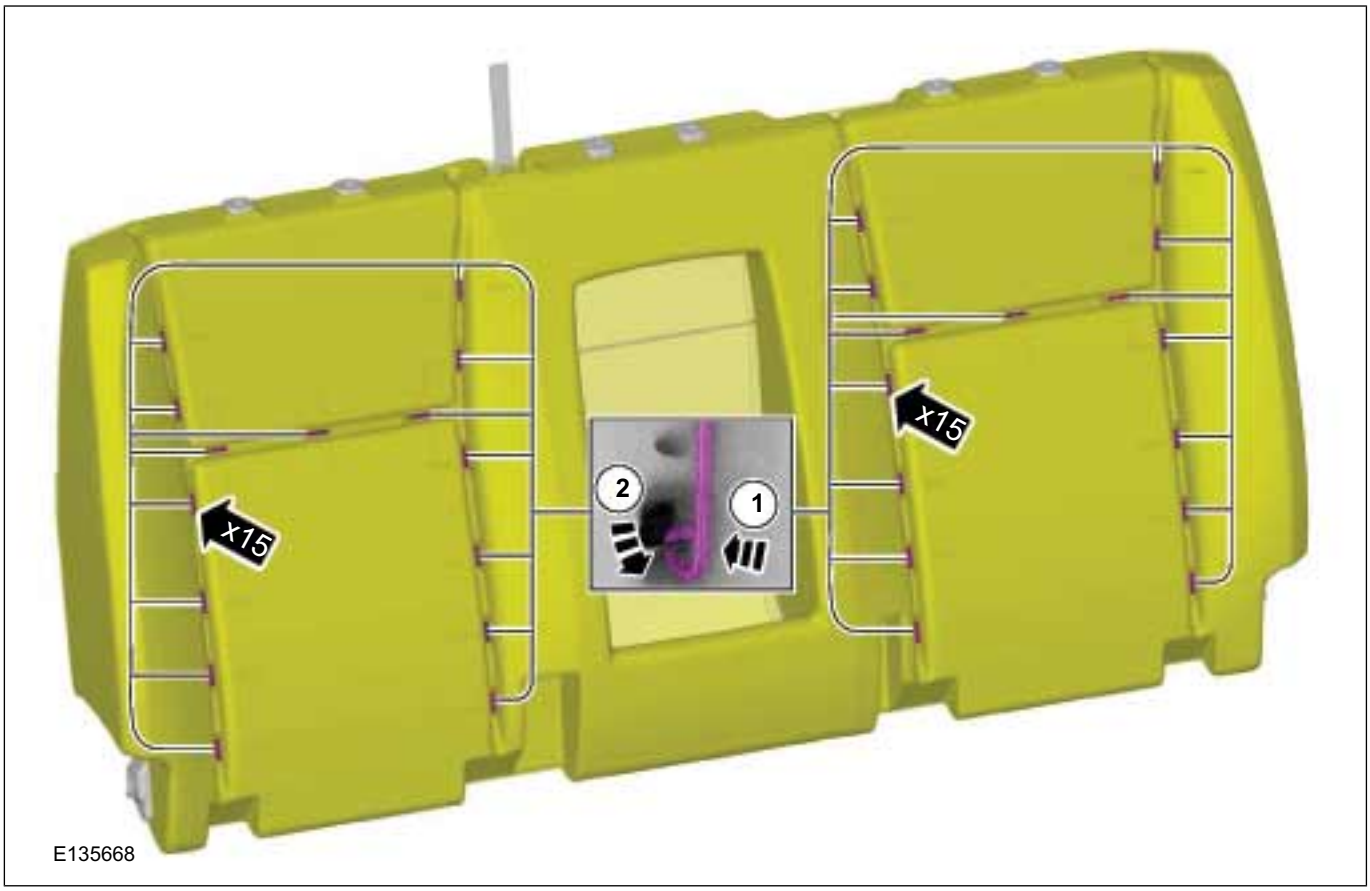

DISASSEMBLY AND ASSEMBLY

9.

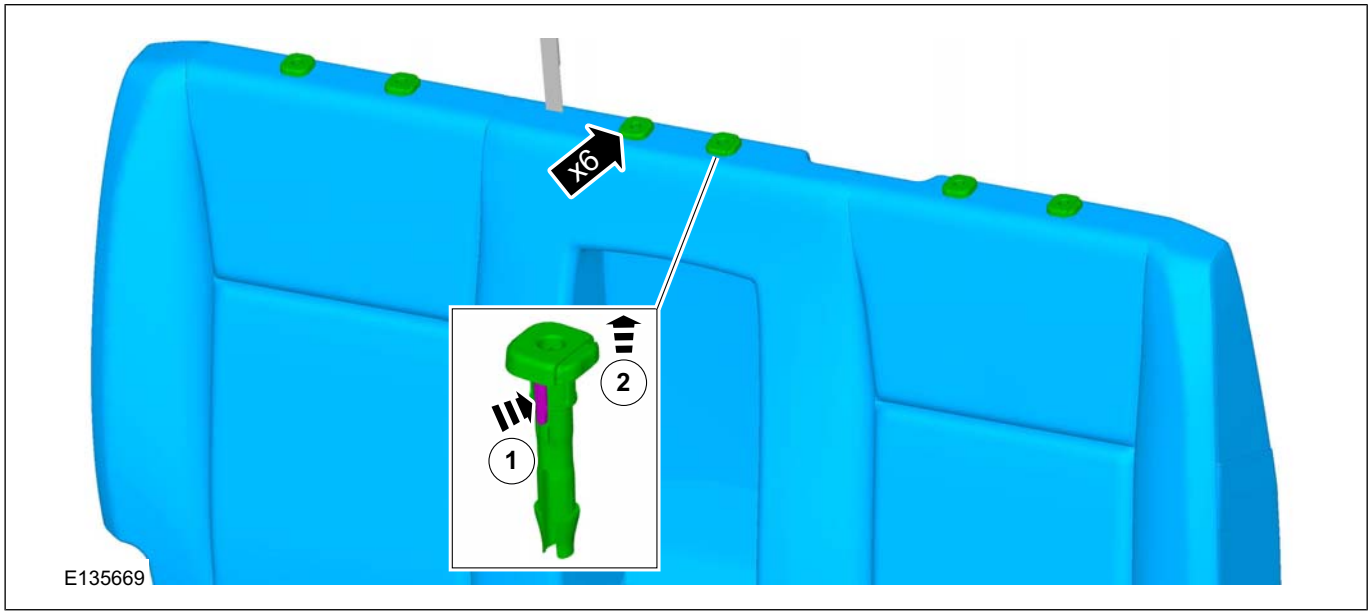

10.

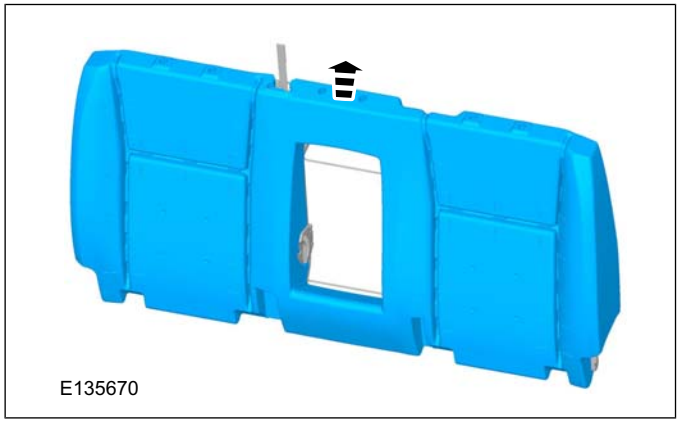

11.

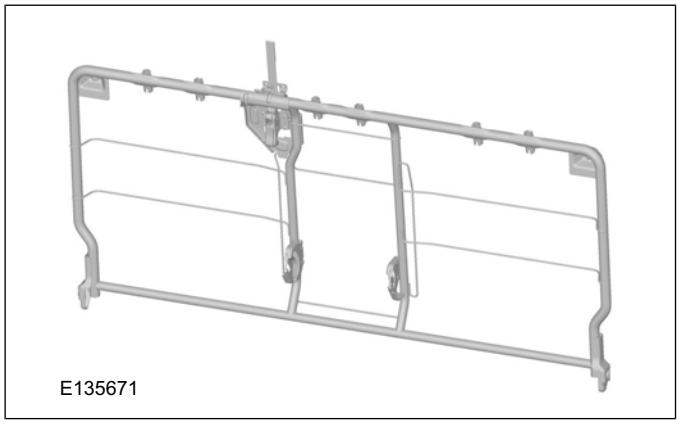

Assembly

12. To assemble, reverse the disassembly procedure.

DISASSEMBLY AND ASSEMBLY

Rear Seat Cushion

Disassembly

NOTE: Disassembly steps in this procedure may contain assembly details.

1. Torque: 25 Nm

2. 1. Torque: 10 Nm
2. Torque: 8 Nm

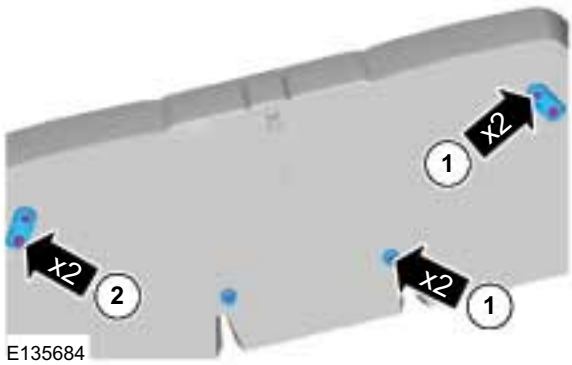

3.

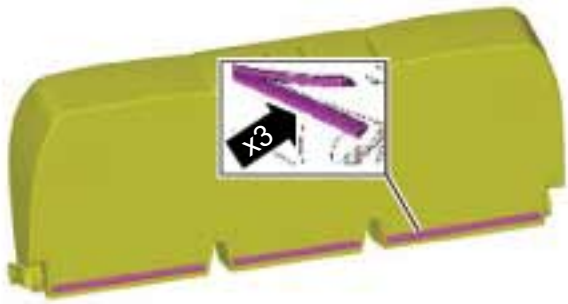

4.

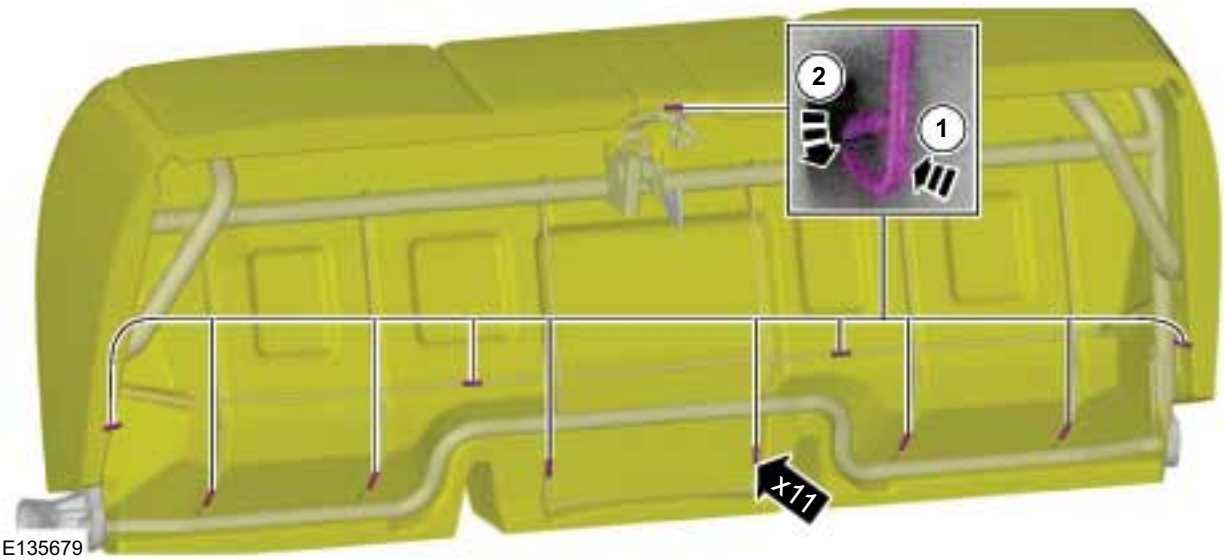

DISASSEMBLY AND ASSEMBLY

5.

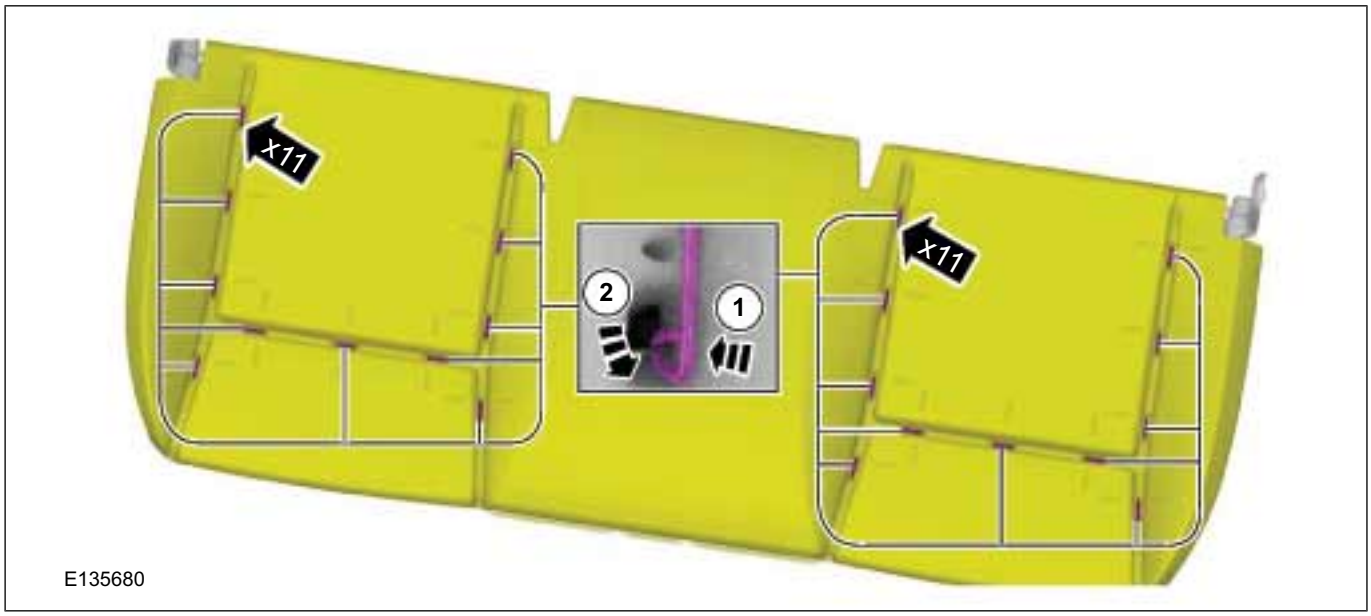

6.

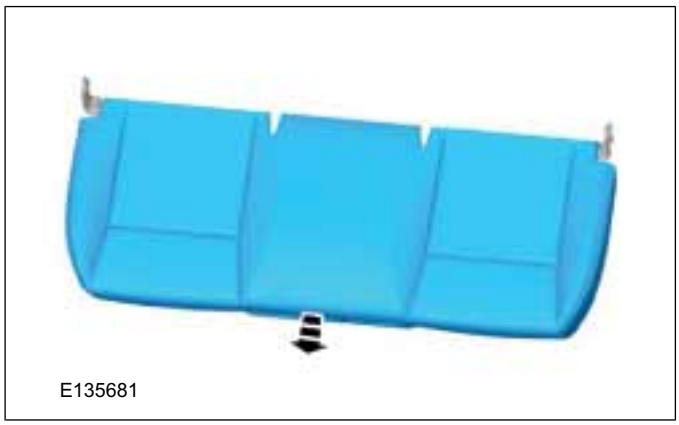

7.

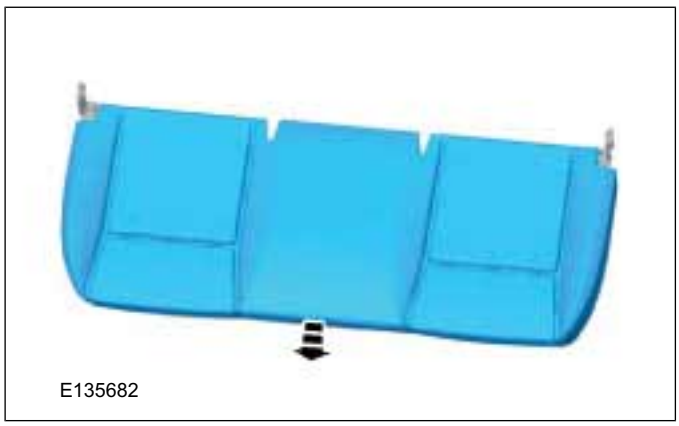

8.

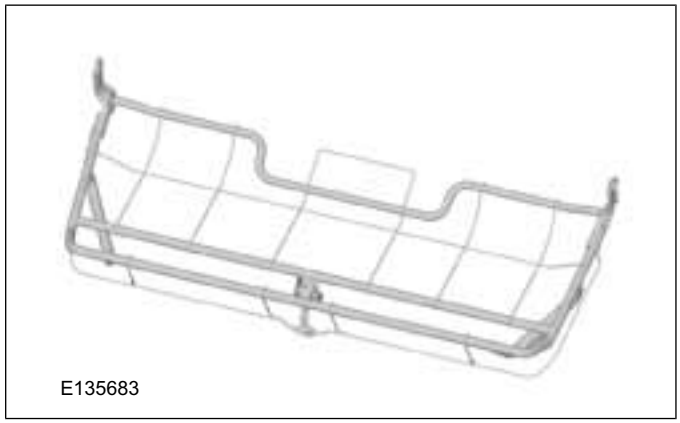

Assembly

9. To assemble, reverse the disassembly procedure.

SECTION 501-11 Glass, Frames and Mechanisms

VEHICLE APPLICATION: 2011.50 Ranger

CONTENTS PAGE

DESCRIPTION AND OPERATION

Glass, Frames and Mechanisms..... 501-11-2

GENERAL PROCEDURES

Door Window Motor Initialization..... 501-11-4
Heated Window Grid Wire Repair..... 501-11-5

REMOVAL AND INSTALLATION

Windshield Glass..... 501-11-6
Front Door Window Glass..... 501-11-11
Front Door Window Regulator..... 501-11-13
Front Door Window Regulator Motor..... 501-11-16
Rear Door Window Glass..... 501-11-17
Rear Door Window Regulator..... 501-11-19
Rear Door Window Regulator Motor..... 501-11-21
Rear Window Glass..... 501-11-22

DESCRIPTION AND OPERATION

Glass, Frames and Mechanisms

The switch for the driver's door window on the driver's door switch unit is designed as a two-stage switch.

In addition, the window regulator motor on the driver's door is provided with two Hall sensors. The hall sensors detect the speed of the window regulator motor and therefore recognize any obstruction as the window rises.

Driver's door switch unit

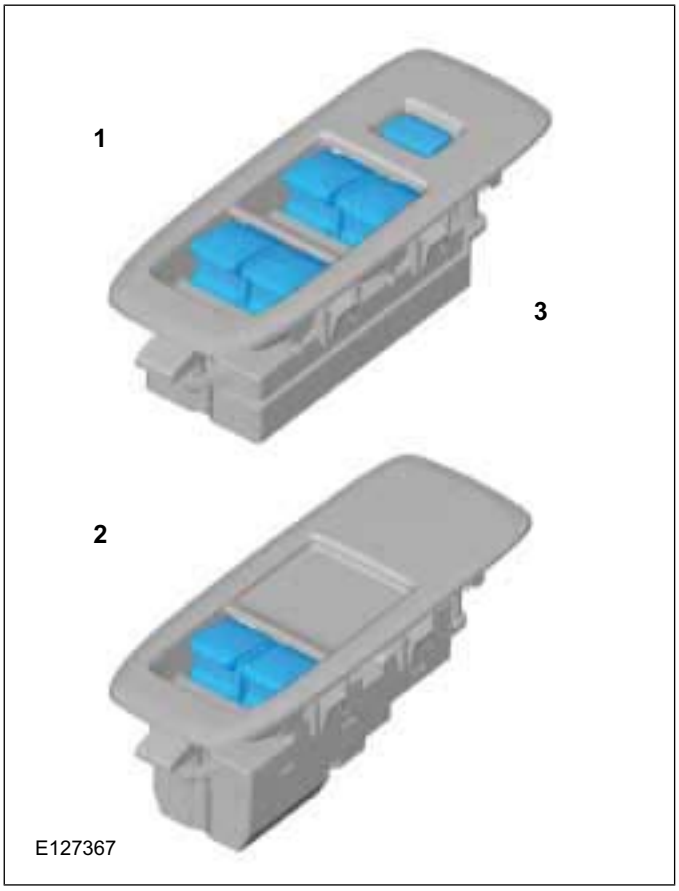

Item	Description
1	4-way switch unit
2	2-way switch unit
3	Rear window disable switch

Switches - passenger door and rear doors

These doors are equipped with a simple switch for the window regulator motors.

This switch only has a simple up and down function (no anti-trap protection).

NOTE: The window regulator motors in the rear doors can be deactivated using the disable switch in the driver's door switch unit.

Window regulator motors

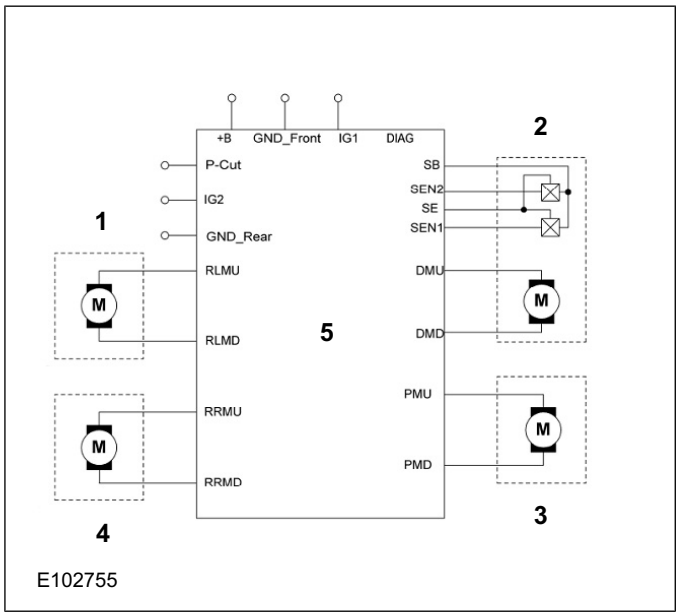

Item	Description
1	Rear left-hand door window regulator motor
2	Window regulator motor, driver's side
3	Window regulator motor, passenger's side

DESCRIPTION AND OPERATION

Item	Description
4	Rear right-hand door window regulator motor
5	Driver's door switch unit

NOTE: If a window regulator is operated at the same time from the driver's door switch unit and from the respective simple switch, the relevant window stops immediately.

Each window regulator motor can be controlled from the driver's door switch unit.

In addition, the motors for the passenger's door and the rear doors (when equipped) can be controlled using the corresponding simple switches on the doors.

Service Instructions

After the battery has been disconnected or the driver's door switch unit has been changed, the window regulator motor in the driver's door must be reprogrammed (see current service literature).

Diagnostic Information

The switch unit and the window regulator motors are not connected to the communication network. The system cannot therefore be diagnosed using the DLC (data link connector).

Instructions if there is a operating concern with the driver's door window regulator motor:

- After the window regulator motors have been deactivated, they continue to turn for a short time. During "Ignition ON" the switch unit detects the run-on phase via the Hall sensors.
- If however the ignition is switched off while the driver's door window regulator motor is operating, the power supply of the Hall sensors is immediately interrupted. The run-on phase of the window regulator motor then can no longer be detected.
- In order to maintain the power supply for this situation, the driver's door switch unit is protected by an additional fuse F26 (in the engine compartment fuse box).
- If the fuse fails the driver's door window regulator motor will no longer operate.

Instruction if there is a malfunction of both front window regulator motors:

- Both window regulator motors are protected in common by fuse F20 (passenger compartment fuse box).

Instruction if there is a malfunction of both rear window regulator motors:

- Both window regulator motors are protected in common by fuse F51 (passenger compartment fuse box).

GENERAL PROCEDURES

Door Window Motor Initialization

WARNING: The window anti-trap function will not operate during the window motor initialization procedure.

NOTE: Make sure that the window runs are correctly installed and free of foreign material.

NOTE: If the power to a window regulator motor has been disconnected, that window regulator motor must be initialized.

NOTE: Wait for a minimum of 1 minute before connecting the battery, fuse or electrical connector.

1. **Start the engine.**
2. **Press and hold the power window control switch close button until the door window is fully closed.**
3. **Release the power window control switch close button.**
4. **Press the power window control switch close button three times for one second.**
5. **Briefly press the power window control switch open button to the 2nd detent and release the button. The door window should open automatically.**
6. **Briefly press the power window control switch close button to the 2nd detent and release the button. If the door window does not close automatically, repeat the complete procedure.**
7. **Repeat the door window motor initialization for each door window motor.**
8. **Switch off the engine.**

GENERAL PROCEDURES

Heated Window Grid Wire Repair

1. **Clean the filament using isopropyl alcohol.**
2. **Attach tape to both sides of the filament.**

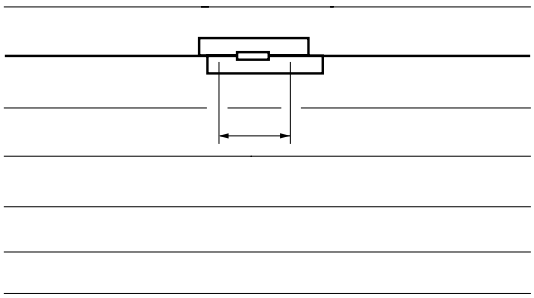

A6E7736W003

3. **Using a small brush or marking pen, apply silver paint.**
4. **CAUTION: Do not operate the rear window defroster until the paint is completely dry. It may cause other malfunctions if it is used before the paint is dry.**

   After 2—3 min, carefully remove the tape without damaging the applied area.
5. **Dry the repaired part according to the following procedure.**
   - When the room temperature is 25 °C {77 °F}, leave to dry for 24 h.
   - When a hot air blower is used, dry with air at a temperature of 150 °C {302 °F} or 30 min.

REMOVAL AND INSTALLATION

Windshield Glass

General Equipment

Adhesive Tape
Direct Glazing Removal/Replacement Equipment
Knife

Materials	
Name	**Specification**
Windscreen Adhesive Kit - 1 Component	WSK-M11P57-A3 / 7U7J-T03863-AA
Windshield Adhesive Kit	WSS-M11P57-A5

Removal

NOTE: Removal steps in this procedure may contain installation details.

1. Refer to: Health and Safety Precautions (100-00 General Information, Description and Operation).
2. • Material: Windshield Adhesive Kit (WSS-M11P57-A5) adhesive
   • Remove the polyurethane (PU) adhesive cap and heat the 2K-PU adhesive for a minimum of 30 minutes.

   General Equipment: Direct Glazing Removal/Replacement Equipment
   • Repairs under warranty:

   Material: Windscreen Adhesive Kit - 1 Component (WSK-M11P57-A3 / 7U7J-T03863-AA) adhesive

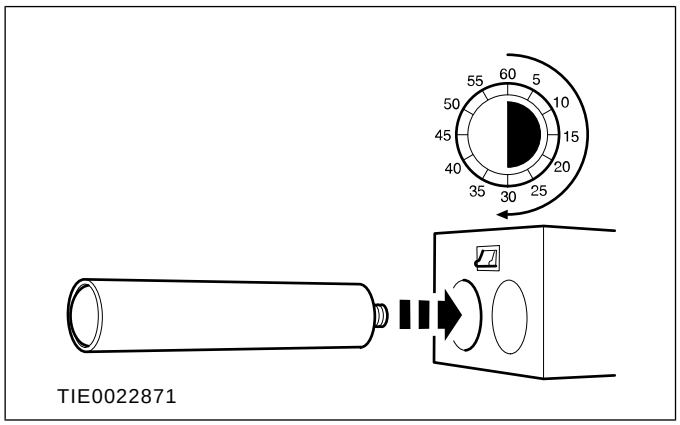

3. **CAUTION: Make sure that the motor is in the park position.**

   Refer to: Wiper Linkage Assembly (501-16 Wipers and Washers, Removal and Installation).
4. Refer to: Cowl Panel Grille (501-02 Front End Body Panels, Removal and Installation).
5.

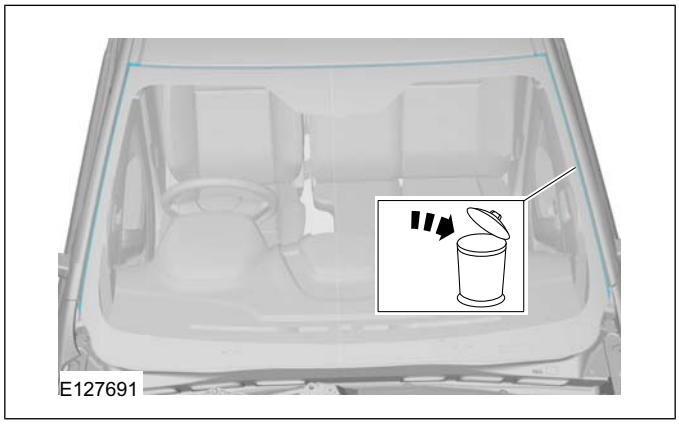

6. **NOTE:** Vehicles with heated windsheild only.

REMOVAL AND INSTALLATION

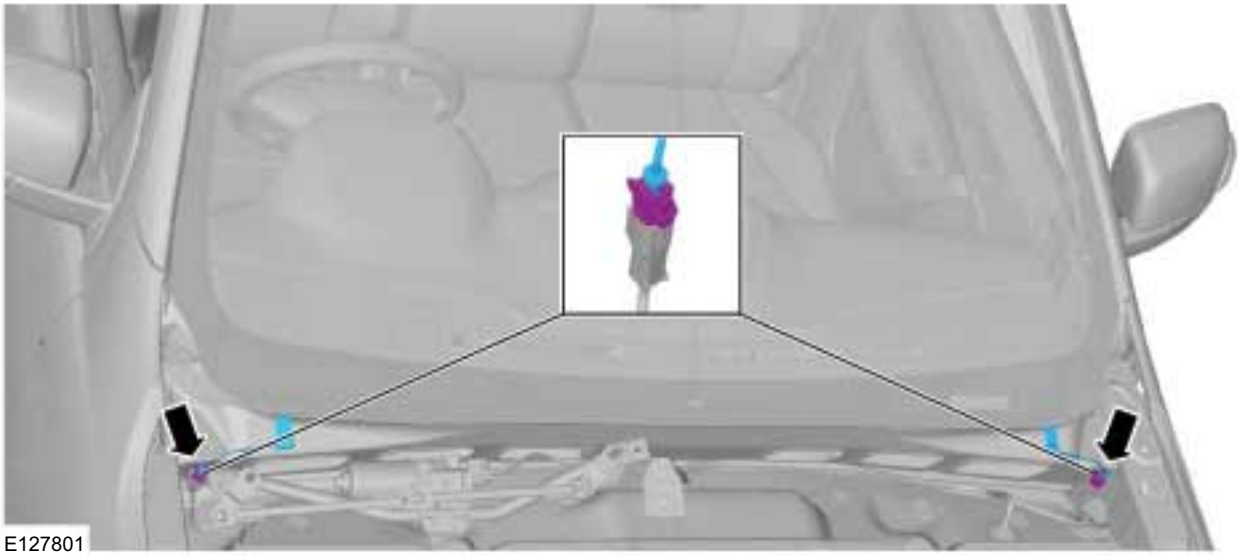
E127801

7. **NOTE:** Vehicles with heated windsheild only.

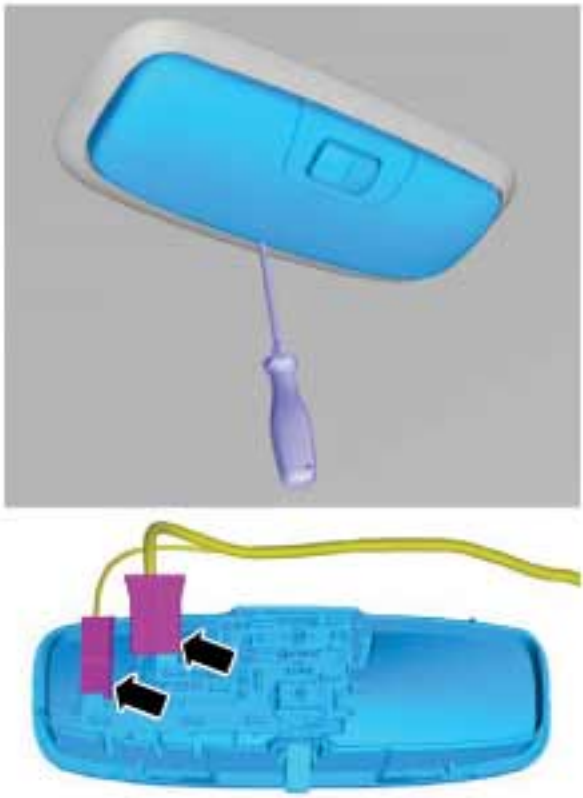
E125911

8. **NOTE:** Vehicles with heated windsheild only.

   Torque: 10 Nm

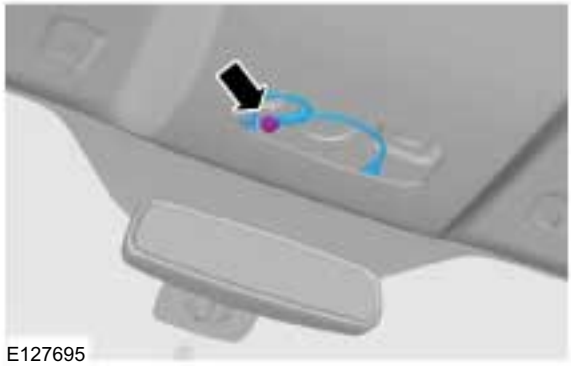
E127695

9. **NOTE:** Vehicles with auto-dimming interior mirror and rain sensor only.

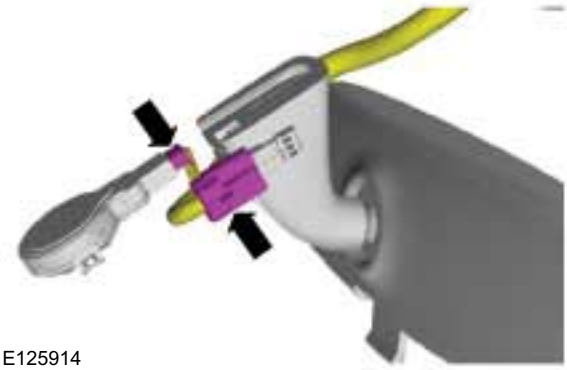
E125914

10. Refer to interior rear view mirror removal

11.

REMOVAL AND INSTALLATION

Use a suitable awl to thread the cutting wire.

General Equipment: Direct Glazing Removal/Replacement Equipment

12.

CAUTION: If the original window glass is to be installed, take care not to damage the electrical connectors and the weatherstrip (if equipped).

Use a suitable brace to prevent trim damages.

General Equipment: Direct Glazing Removal/Replacement Equipment

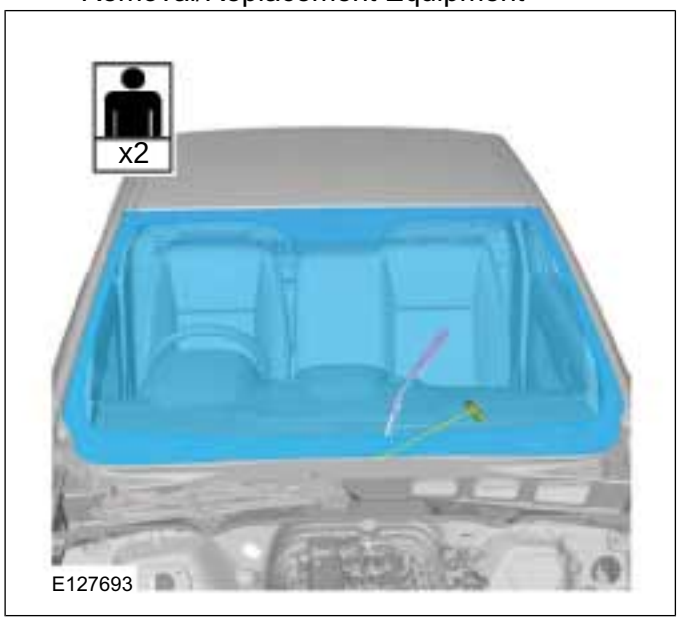

13.

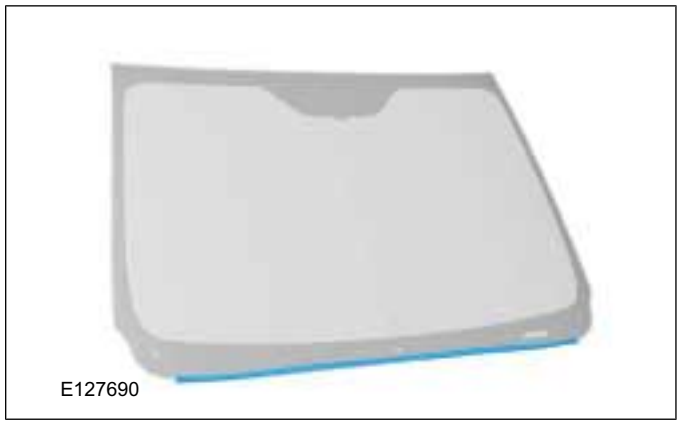

Installation

1. **NOTE:** Minimum 1 mm bead thickness.
   - General Equipment: Knife
   - **NOTE:** Make sure that the mating faces are clean and free of foreign material.
   - **NOTE:** Touching the adhesive surface will impair rebonding.
   - Prepare the windshield glass, windshield glass flange and trimmed PU adhesive in accordance with the instructions supplied with the glass adhesive kit.

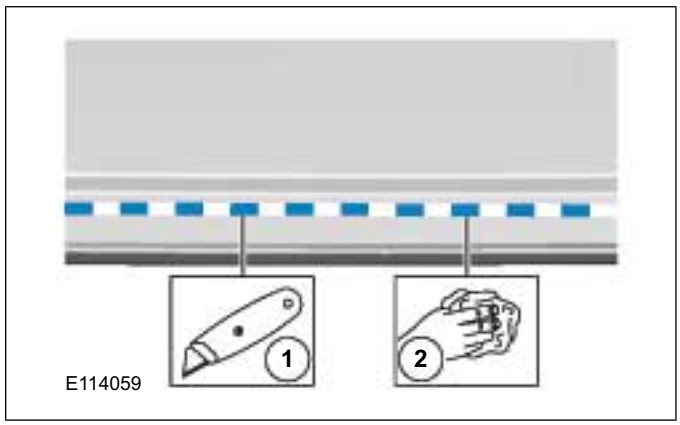

2. Apply the activator/primer in accordance with the instructions supplied with the glass adhesive kit.

REMOVAL AND INSTALLATION

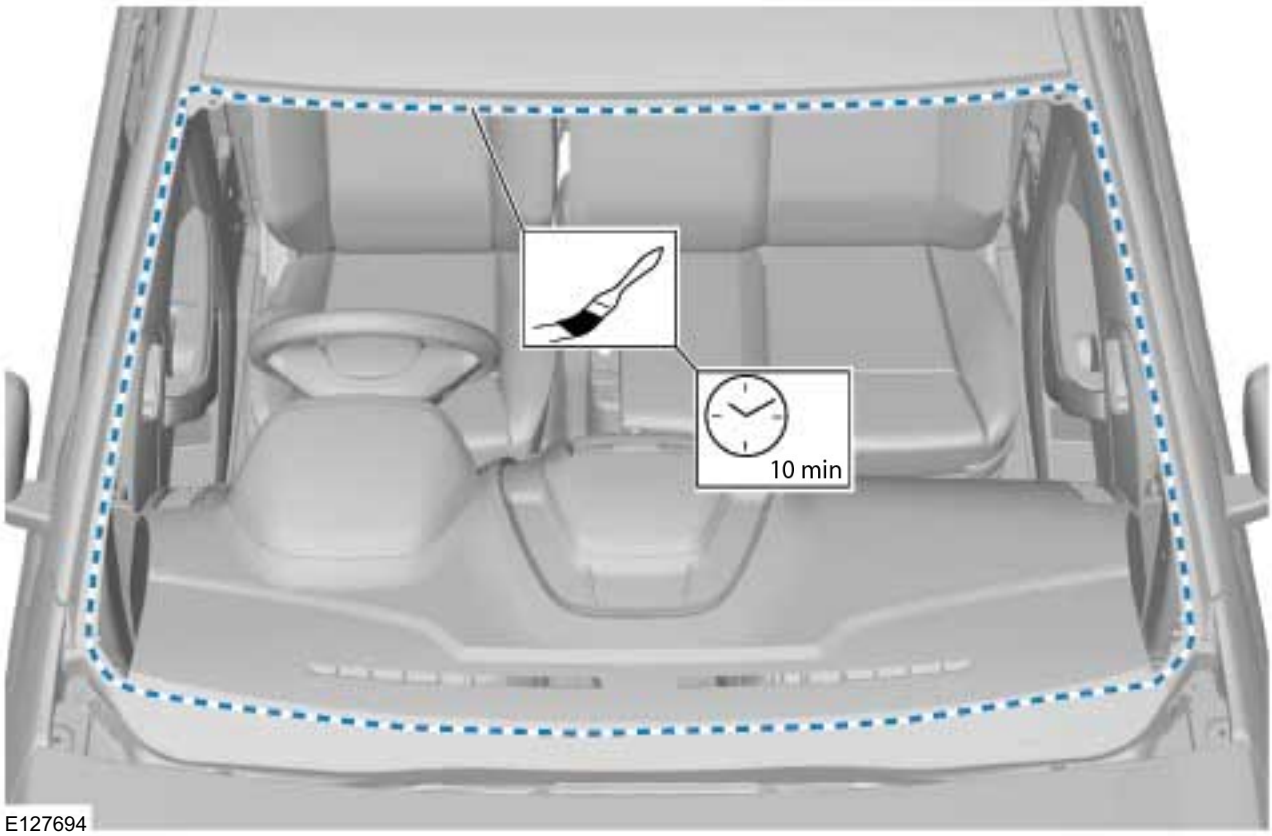

E127694

3. **NOTE:** Touching the adhesive surface will impair rebonding.

   NOTE: Make sure that the mating faces are clean and free of foreign material.

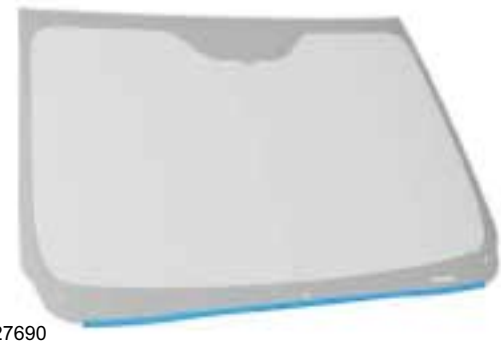
E127690

4. Apply the activator/primer in accordance with the instructions supplied with the glass adhesive kit.

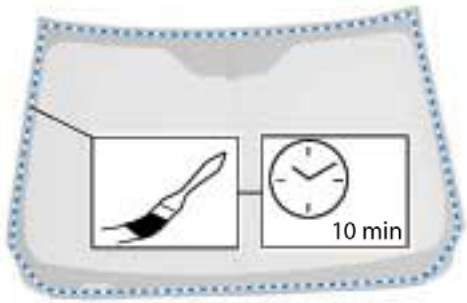

E127696

5. **NOTE:** Discard the first 100 mm of adhesive as this may have a reduced working time.

REMOVAL AND INSTALLATION

NOTE: Make sure that any breakage in the continuous bead of adhesive is overlapped by 20 mm.

General Equipment: Direct Glazing Removal/Replacement Equipment
Material: Windshield Adhesive Kit (WSS-M11P57-A5) adhesive
Material: Windscreen Adhesive Kit - 1 Component (WSK-M11P57-A3 / 7U7J-T03863-AA) adhesive

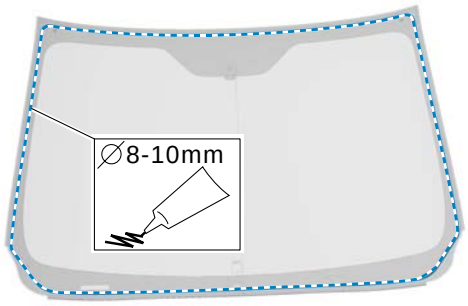

E127697

6. **CAUTIONS:**

Make sure that equal pressure is applied to the full length of the component.

During the curing time of the polyurethane (PU) adhesive, the door windows must be left open.

Using tape, secure the Windshield glass in the correct position until the PU adhesive has cured.

General Equipment: Adhesive Tape

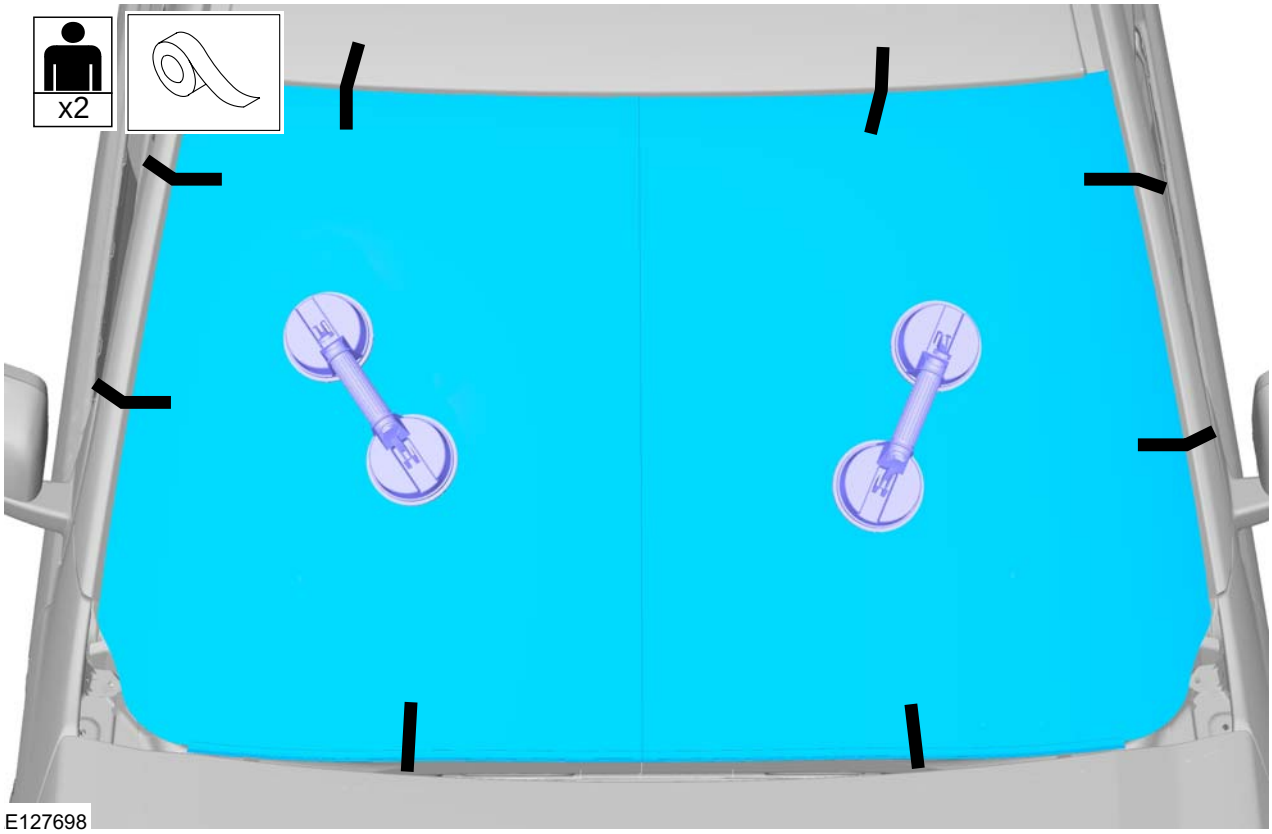

E127698

7. To install, reverse the removal procedure.

REMOVAL AND INSTALLATION

Front Door Window Glass

Special Tool(s)

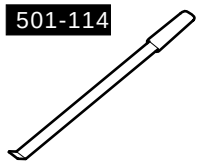 E54200	501-114 Release Lever, Door Glass

Removal

NOTE: Removal steps in this procedure may contain installation details.

1. **NOTE:** Ensure that the front door window glass is in the lowered position.

   Refer to: Front Door Trim Panel (501-05 Interior Trim and Ornamentation, Removal and Installation).

2.

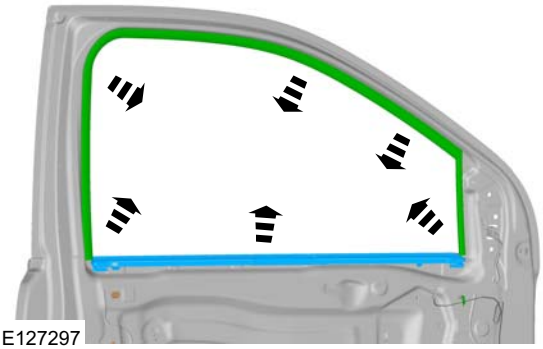
E127297

3.

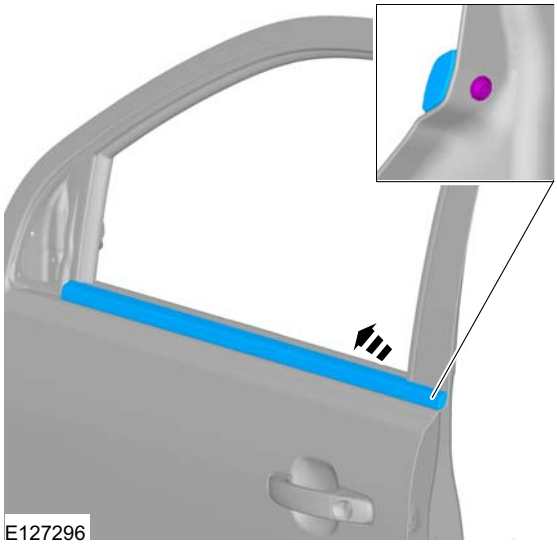
E127296

4. **CAUTION: Do not touch the adhesive surface as re-bonding will be impaired.**

E127299

REMOVAL AND INSTALLATION

5. Special Tool(s): 501-114

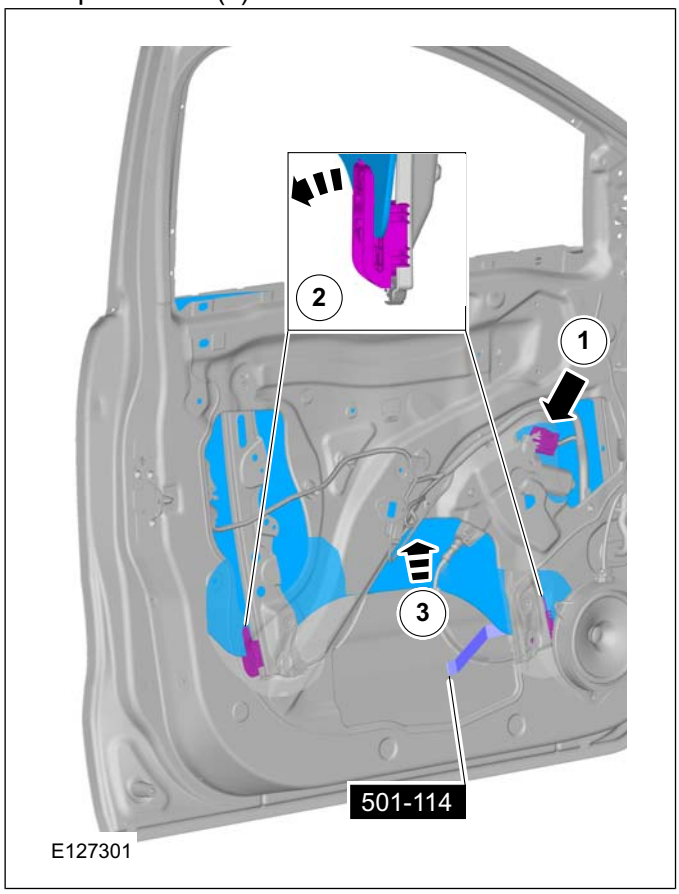

6.

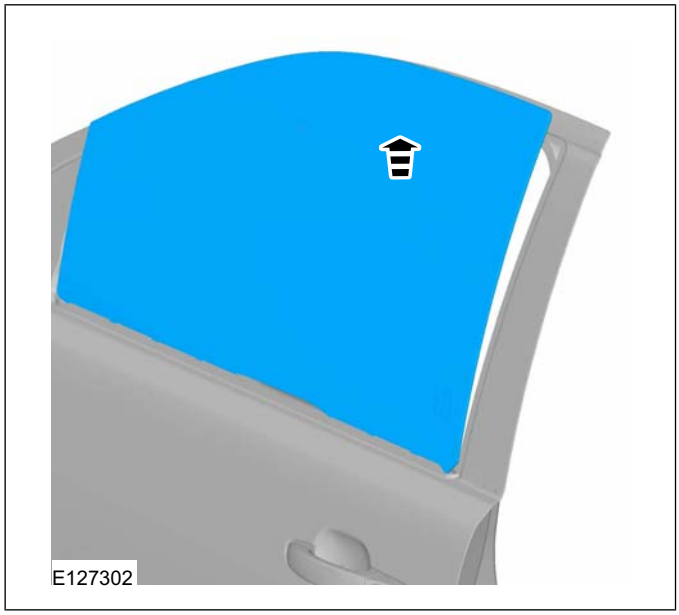

Installation

1. To install, reverse the removal procedure.

REMOVAL AND INSTALLATION

Front Door Window Regulator

General Equipment

Adhesive Tape

Removal

NOTE: Removal steps in this procedure may contain installation details.

1. Refer to: Front Door Trim Panel (501-05 Interior Trim and Ornamentation, Removal and Installation).

2.

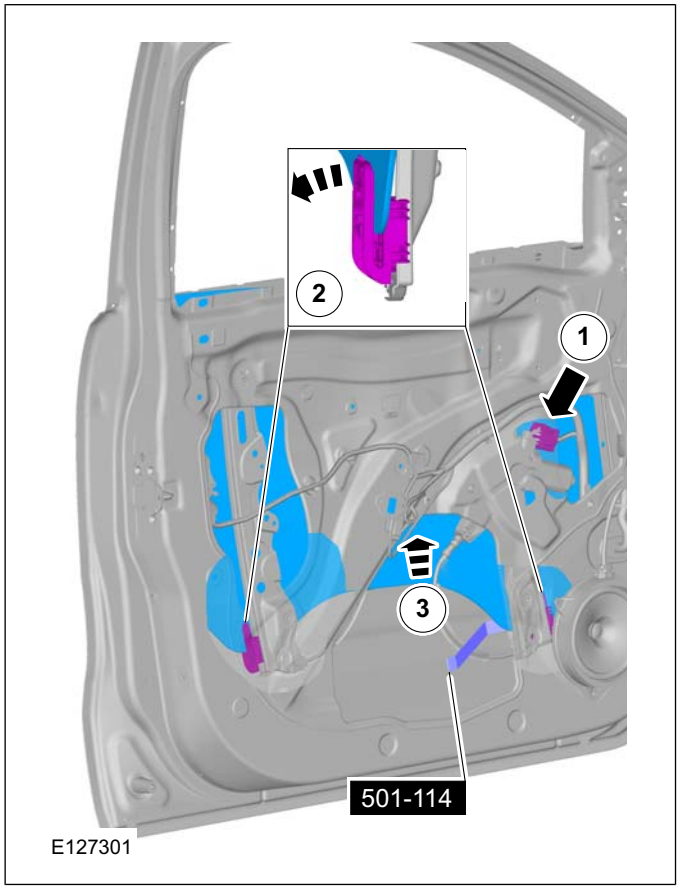

3. Using tape, secure the window glass.

   General Equipment: Adhesive Tape

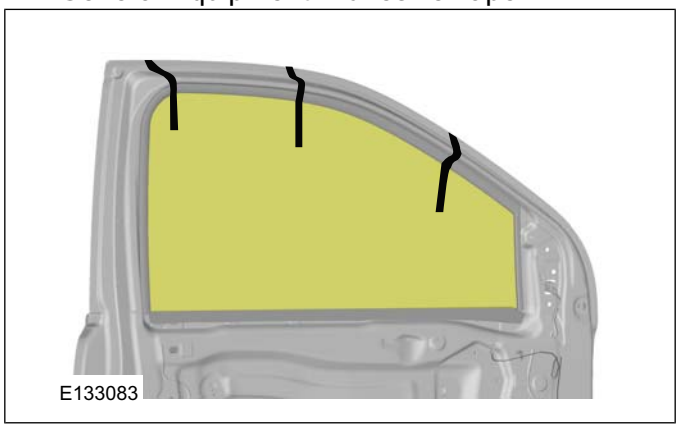

Vehicles with power windows

4.

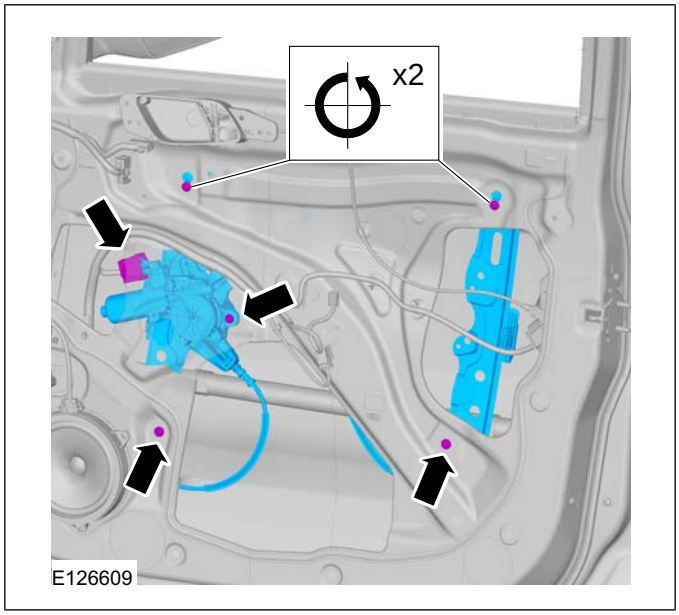

REMOVAL AND INSTALLATION

5.

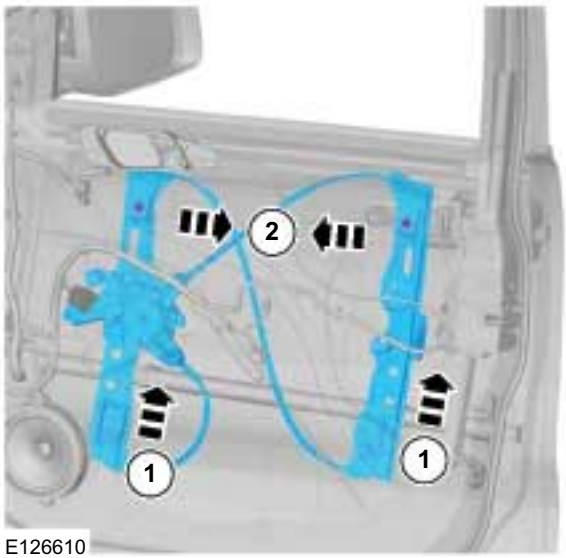

E126610

6.

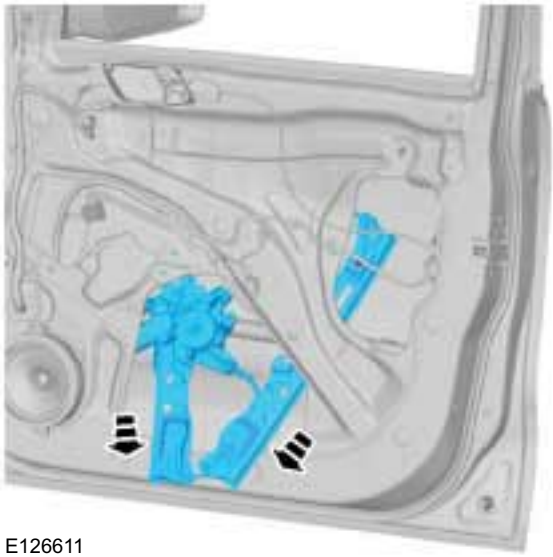
E126611

Vehicles with manual windows

7. Remove the 3 front door window regulator retaining bolts.

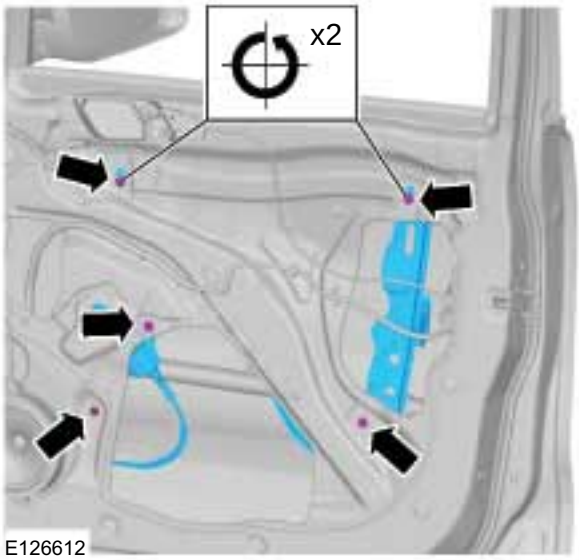

E126612

8.

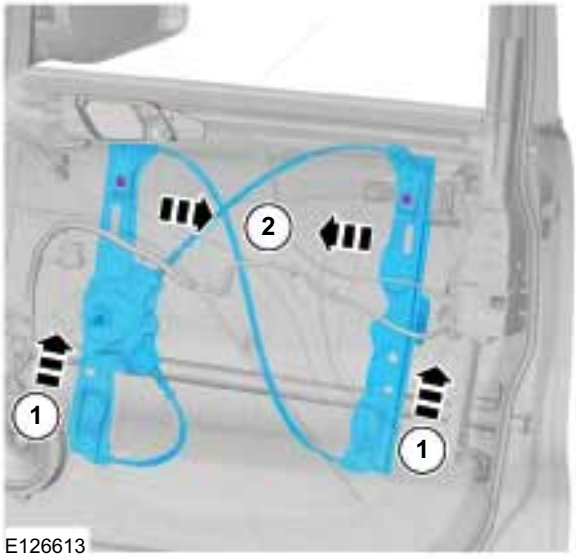

E126613

REMOVAL AND INSTALLATION

9.

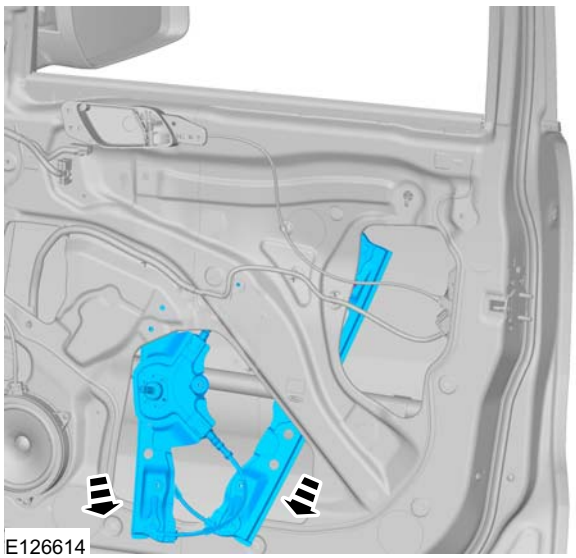

Installation

1. To install, reverse the removal procedure.

REMOVAL AND INSTALLATION

Front Door Window Regulator Motor

Removal

1. Refer to: Front Door Window Regulator (501-11 Glass, Frames and Mechanisms, Removal and Installation).

2.

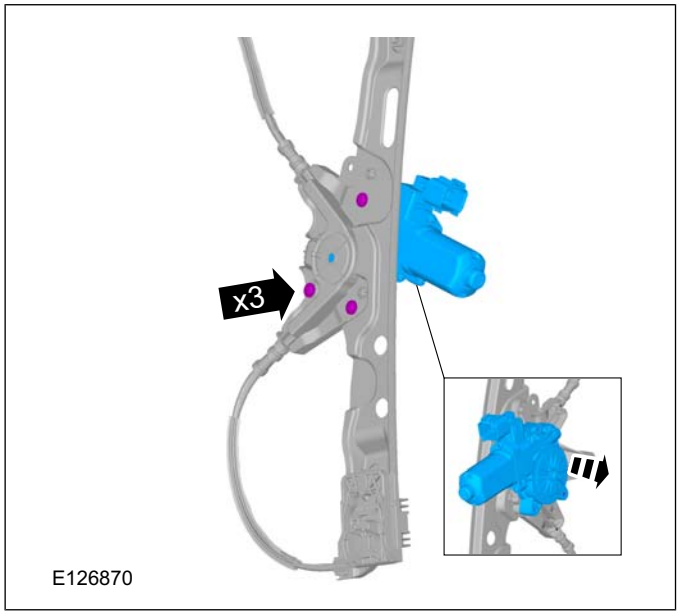

Installation

1. To install, reverse the removal procedure.

REMOVAL AND INSTALLATION

Rear Door Window Glass

Special Tool(s)

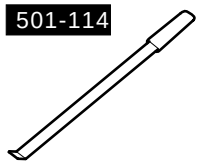 E54200	501-114 Release Lever, Door Glass

Removal

NOTE: Removal steps in this procedure may contain installation details.

1. **NOTE:** Ensure that the rear door window glass is in the lowered position.

   Refer to: Rear Door Trim Panel - Double Cab (501-05 Interior Trim and Ornamentation, Removal and Installation).

2. **CAUTION: Do not touch the adhesive surface as re-bonding will be impaired.**

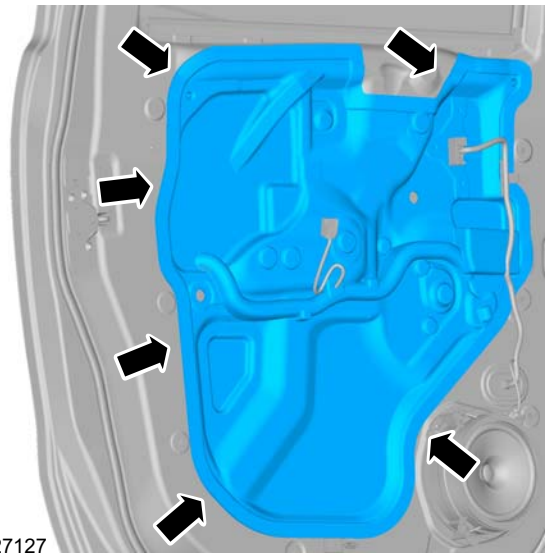
E127127

3.

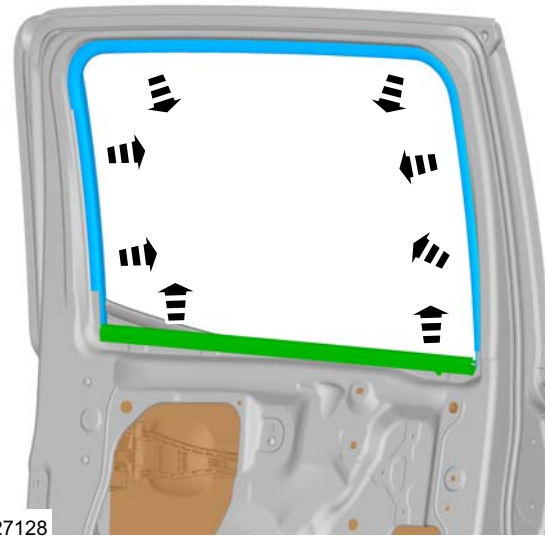
E127128

4.

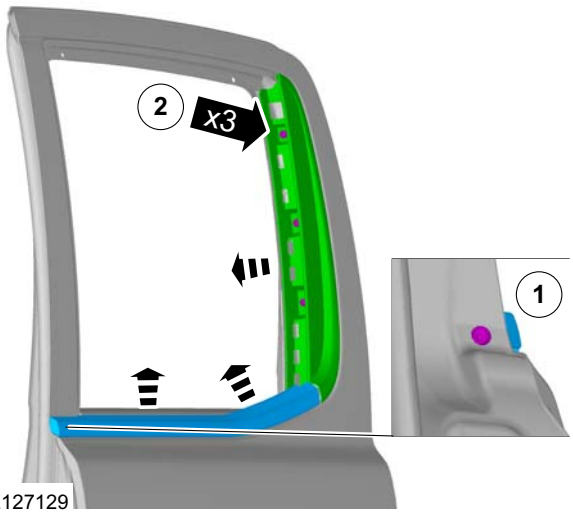

E127129

REMOVAL AND INSTALLATION

5. **NOTE:** Vehicle with power windows only
   - Connect the rear door window regulator motor switch.
   - Raise the rear door window glass upto the access hole
   - Disconnect the rear door window regulator motor switch.

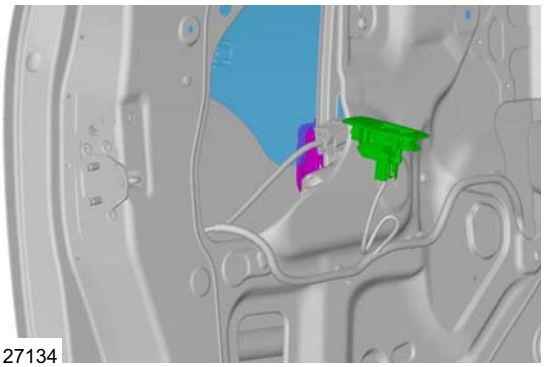
E127134

6. **NOTE:** Vehicle with manual windows only
   - Install the rear door window regulator crank handle.
   - Raise the rear door window glass upto the access hole
   - Remove the rear door window regulator crank handle.

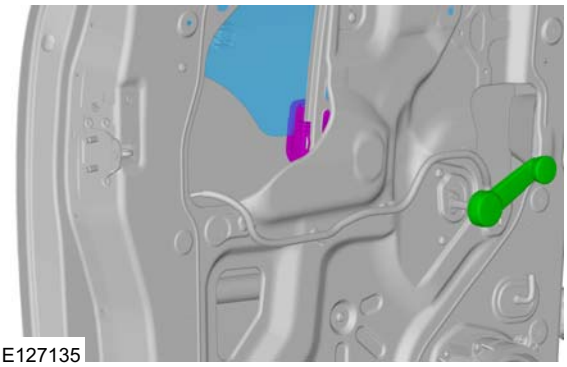
E127135

7. Special Tool(s): 501-114

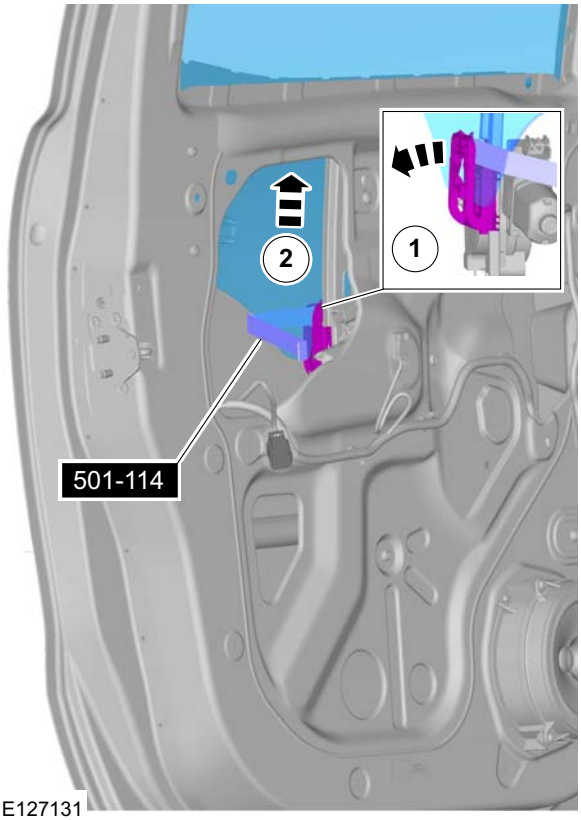

E127131

8.

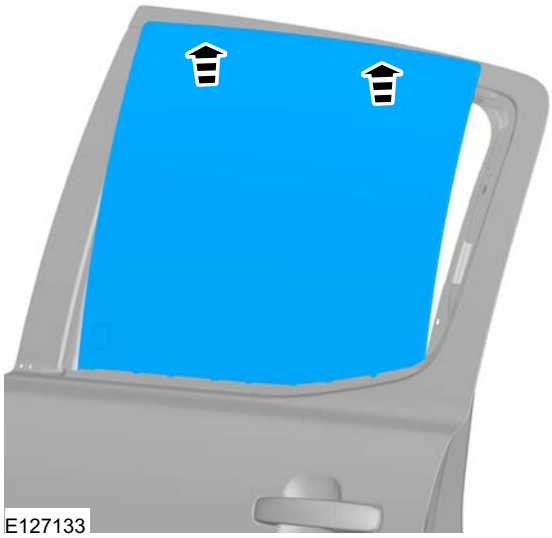
E127133

Installation

1. To install, reverse the removal procedure.

REMOVAL AND INSTALLATION

Rear Door Window Regulator

General Equipment

Adhesive Tape

Removal

1. Refer to: Rear Door Trim Panel - Double Cab (501-05 Interior Trim and Ornamentation, Removal and Installation).

2.

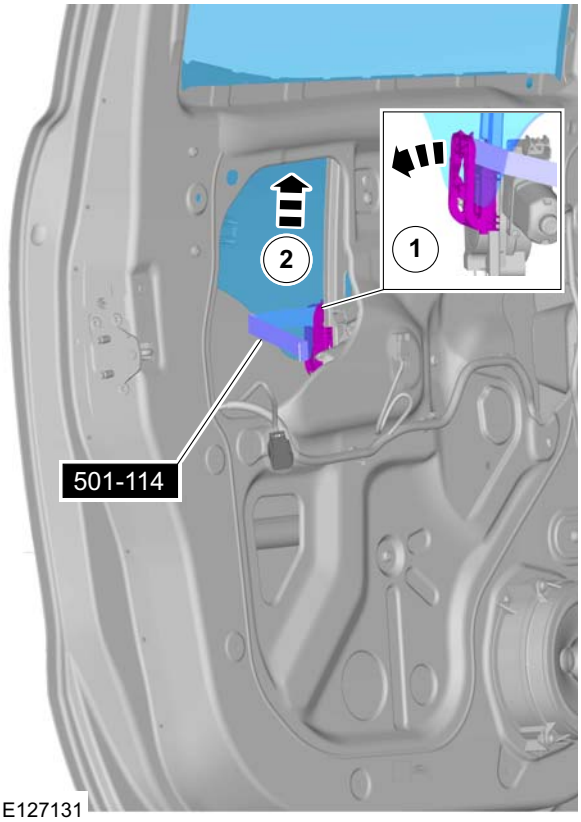

3. Using tape, secure the window glass.

   General Equipment: Adhesive Tape

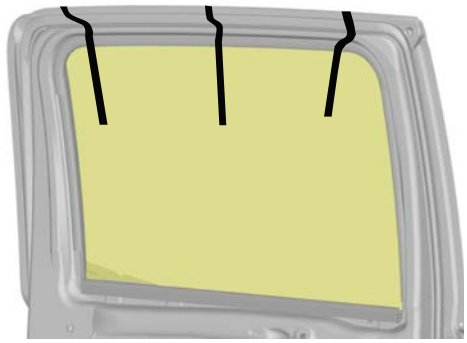

Vehicles with power windows

4. • Disconnect the front door window regulator motor electrical connector.
   • Remove the 2 rear door window regulator retaining bolts.

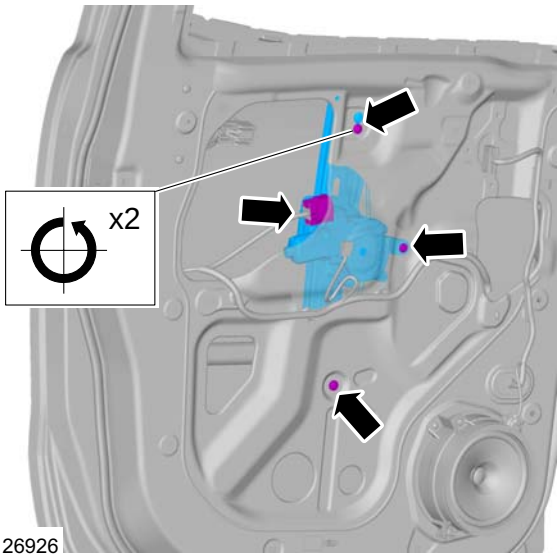

REMOVAL AND INSTALLATION

5.

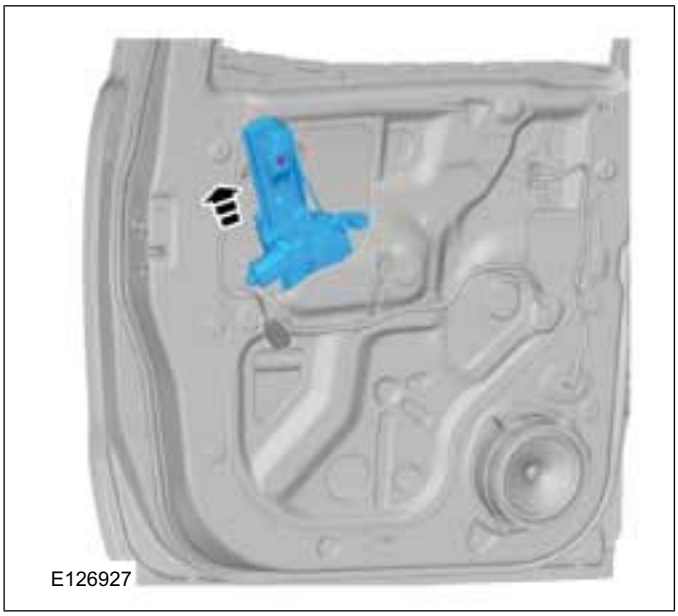

7.

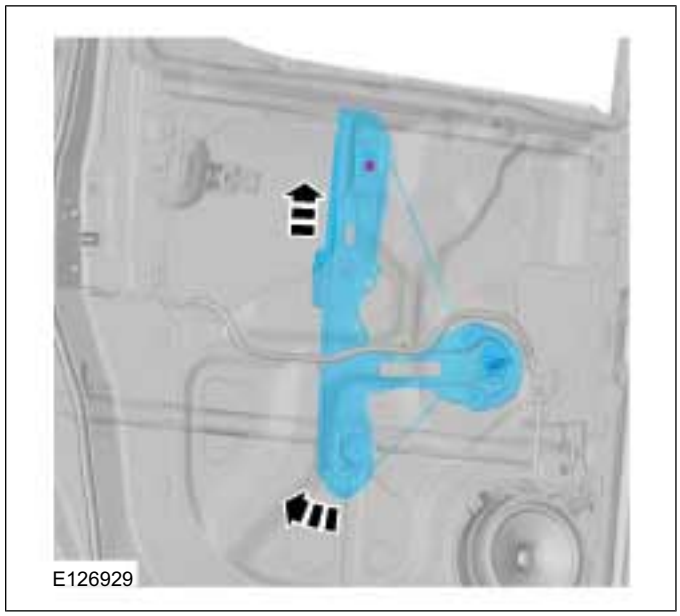

Vehicles with manual windows

6. Remove the 3 rear door window regulator retaining bolts.

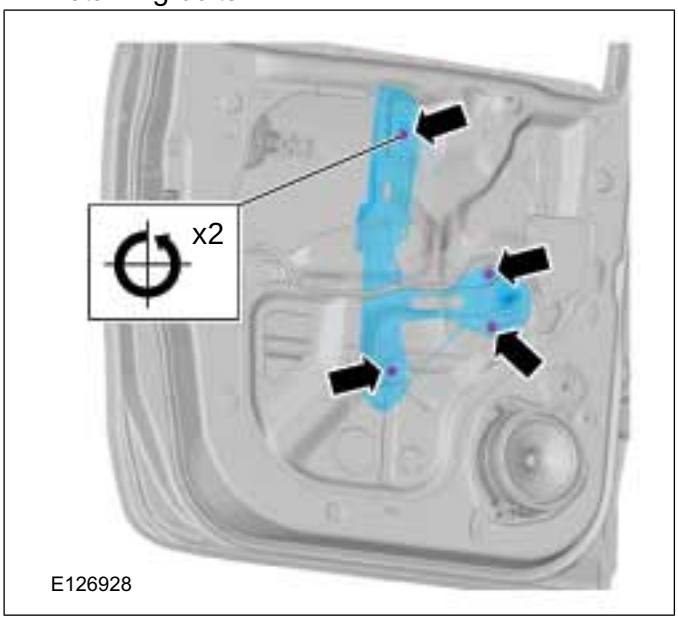

8.

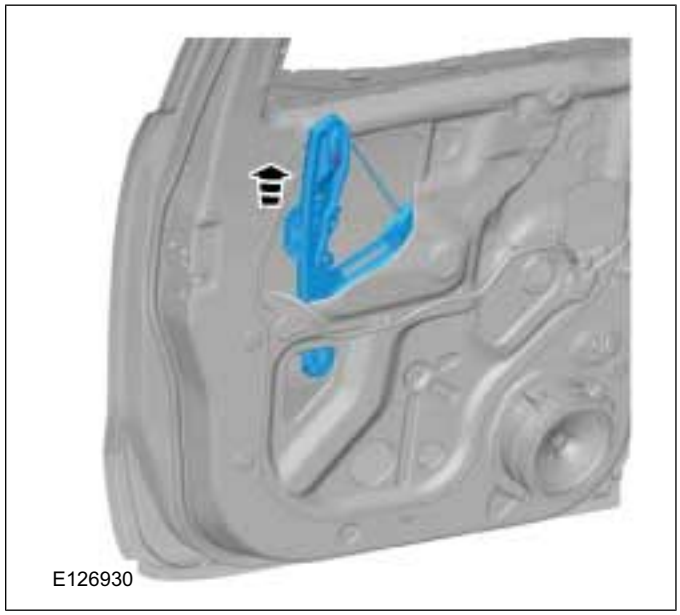

Installation

1. To install, reverse the removal procedure.

REMOVAL AND INSTALLATION

Rear Door Window Regulator Motor

Removal

1. Refer to: Rear Door Window Regulator (501-11 Glass, Frames and Mechanisms, Removal and Installation).

2.

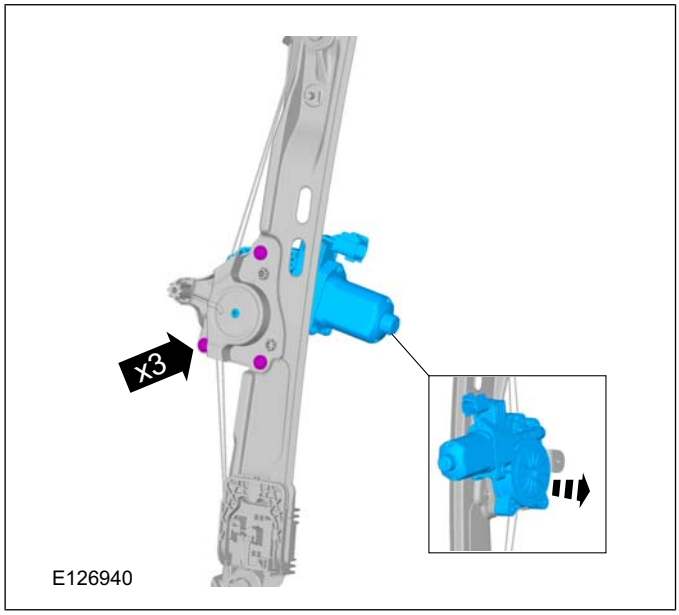

Installation

1. To install, reverse the removal procedure.

REMOVAL AND INSTALLATION

Rear Window Glass

General Equipment

Adhesive Tape
Direct Glazing Removal/Replacement Equipment
Knife

Materials	
Name	**Specification**
Windscreen Adhesive Kit - 1 Component	WSK-M11P57-A3 / 7U7J-T03863-AA
Windshield Adhesive Kit	WSS-M11P57-A5

Removal

1. Refer to: Health and Safety Precautions (100-00 General Information, Description and Operation).
2. Refer to: C-Pillar Upper Trim Panel (501-05 Interior Trim and Ornamentation, Removal and Installation).
3. Refer to: Headliner (501-05 Interior Trim and Ornamentation, Removal and Installation).
4. Refer to: Rear Seat (501-10 Seating, Removal and Installation).
5. • Material: Windshield Adhesive Kit (WSS-M11P57-A5) adhesive
   - Remove the polyurethane (PU) adhesive cap and heat the 2K-PU adhesive for a minimum of 30 minutes.

     General Equipment: Direct Glazing Removal/Replacement Equipment
   - Repairs under warranty:

     Material: Windscreen Adhesive Kit - 1 Component (WSK-M11P57-A3 / 7U7J-T03863-AA) adhesive

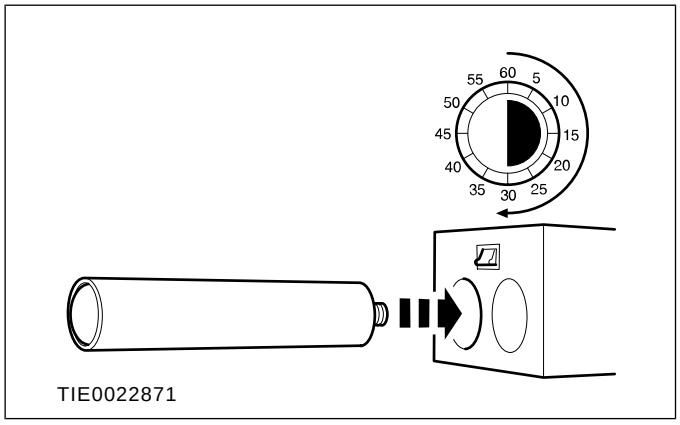

6.

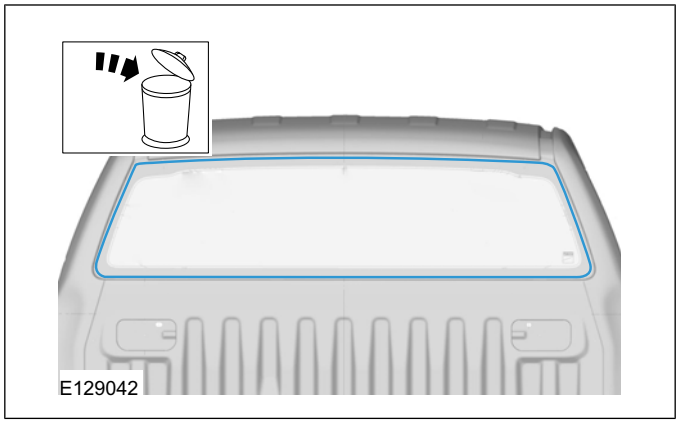

7. **NOTE:** Vehicles with heated windsheild only.

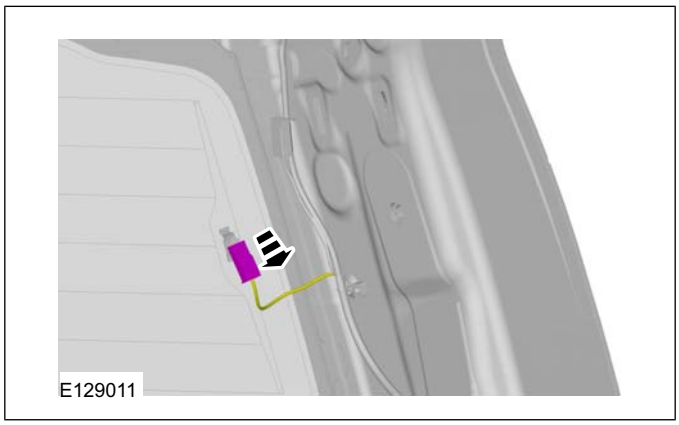

8.

   Use a suitable awl to thread the cutting wire.

   General Equipment: Direct Glazing Removal/Replacement Equipment

REMOVAL AND INSTALLATION

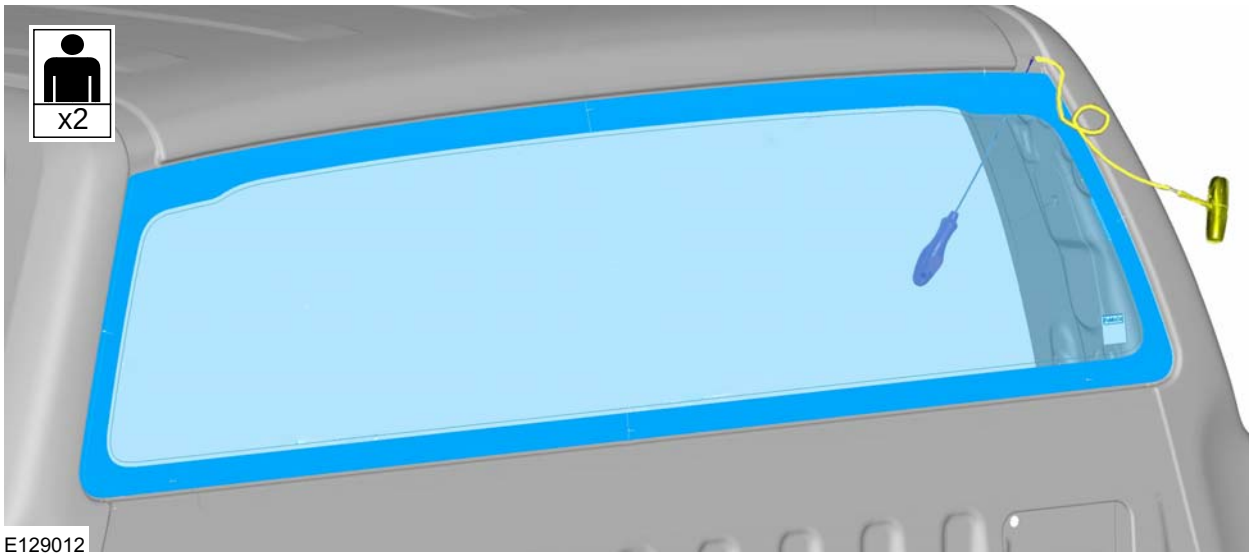

9.

CAUTION: If the original window glass is to be installed, take care not to damage the electrical connectors and the weatherstrip (if equipped).

Use a suitable brace to prevent trim damages.

General Equipment: Direct Glazing Removal/Replacement Equipment

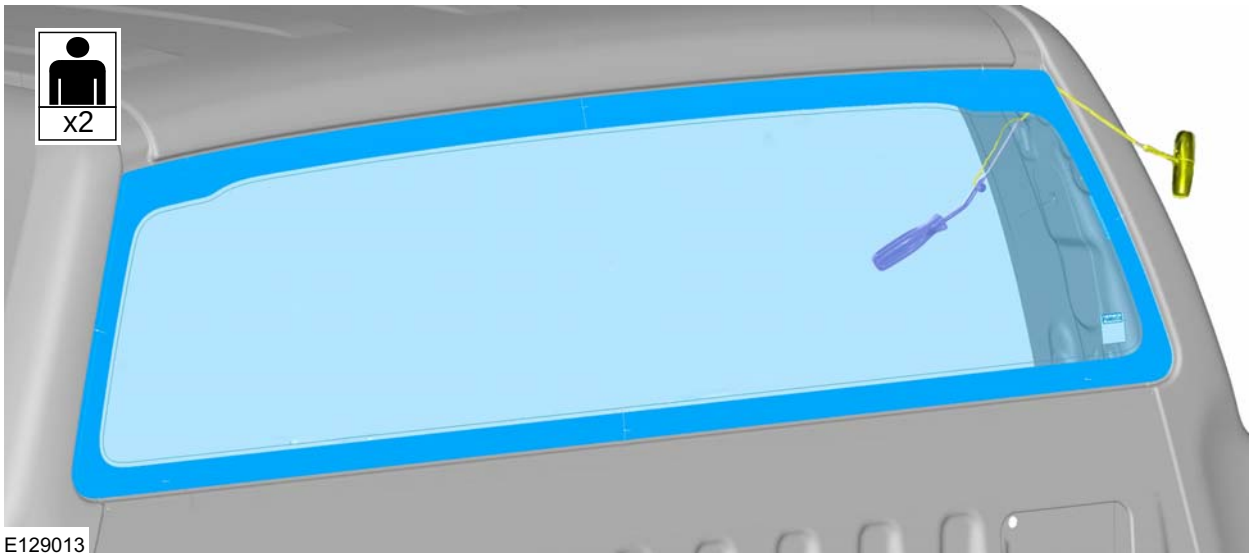

REMOVAL AND INSTALLATION

10.

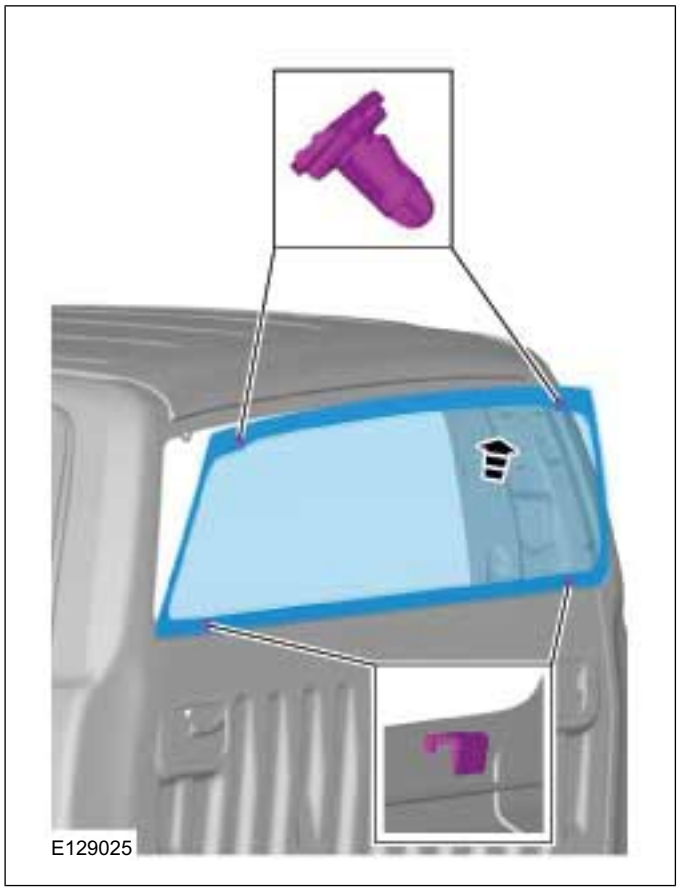

Installation

1. **NOTE:** Minimum 1 mm bead thickness.
   - General Equipment: Knife
   - **NOTE:** Make sure that the mating faces are clean and free of foreign material.
   - **NOTE:** Touching the adhesive surface will impair rebonding.
   - Prepare the windshield glass, windshield glass flange and trimmed PU adhesive in accordance with the instructions supplied with the glass adhesive kit.

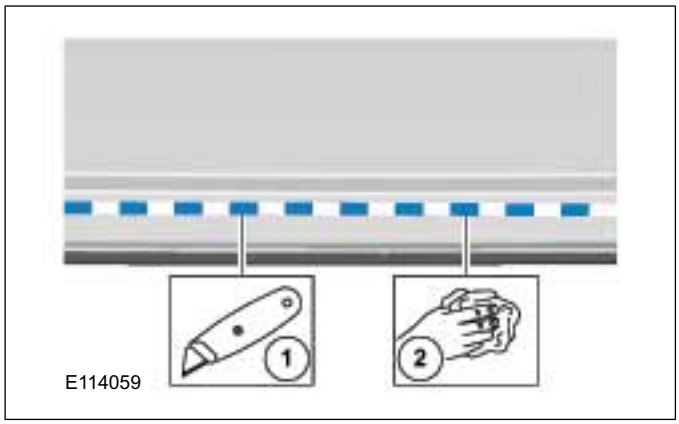

2. Apply the activator/primer in accordance with the instructions supplied with the glass adhesive kit.

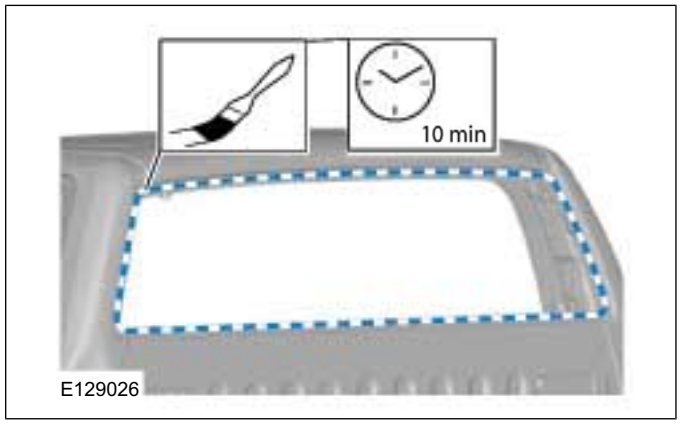

3. Apply the activator/primer in accordance with the instructions supplied with the glass adhesive kit.

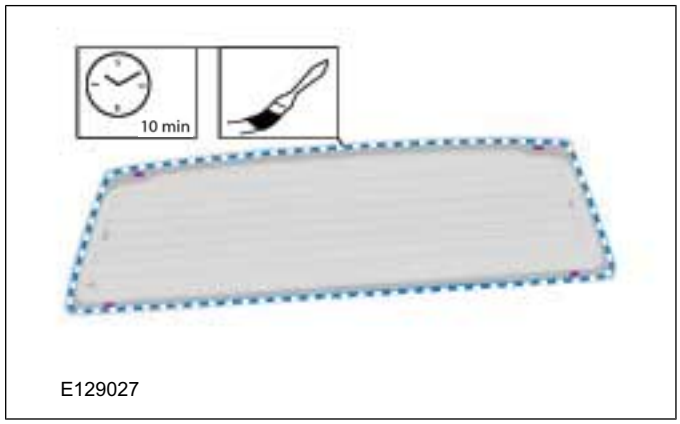

4. **NOTE:** Discard the first 100 mm of adhesive as this may have a reduced working time.

REMOVAL AND INSTALLATION

NOTE: Make sure that any breakage in the continuous bead of adhesive is overlapped by 20 mm.

General Equipment: Direct Glazing Removal/Replacement Equipment
Material: Windshield Adhesive Kit (WSS-M11P57-A5) adhesive
Material: Windscreen Adhesive Kit - 1 Component (WSK-M11P57-A3 / 7U7J-T03863-AA) adhesive

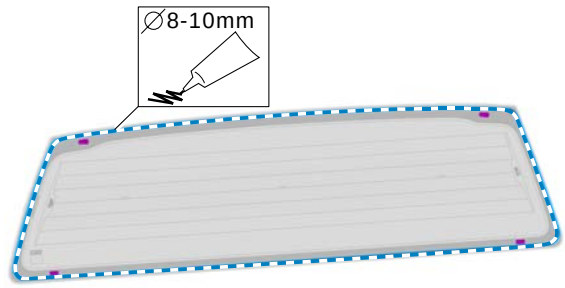

E129037

5. **CAUTIONS:**

Make sure that equal pressure is applied to the full length of the component.

During the curing time of the polyurethane (PU) adhesive, the door windows must be left open.

Using tape, secure the windshield glass in the correct position until the PU adhesive has cured.Adhesive tape

General Equipment: Adhesive Tape

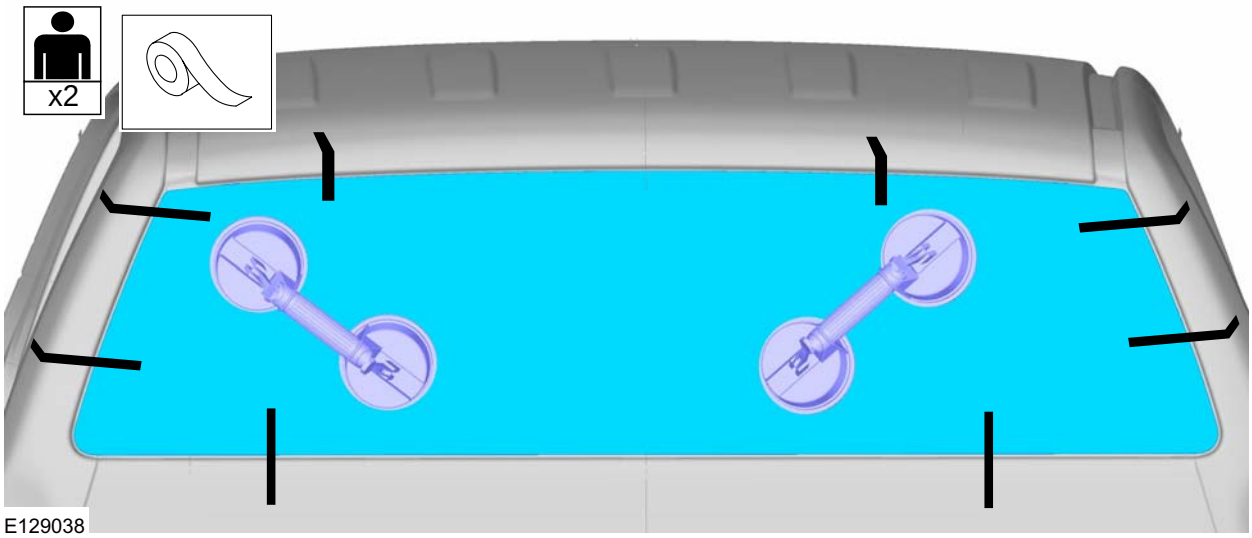

E129038

6. To install reverse the removal procedure.

SECTION 501-12 Instrument Panel and Console

VEHICLE APPLICATION: 2011.50 Ranger

CONTENTS PAGE

DESCRIPTION AND OPERATION

Instrument Panel..... 501-12-2

REMOVAL AND INSTALLATION

Instrument Panel — LHD 4WD/LHD RWD..... 501-12-3
Instrument Panel — RHD 4WD/RHD RWD..... 501-12-11
Floor Console — Single Cab..... 501-12-19
Floor Console — Double Cab..... 501-12-21
In-Vehicle Crossbeam..... 501-12-24
Glove Compartment..... 501-12-25
Overhead Console..... 501-12-26

DISASSEMBLY AND ASSEMBLY

Instrument Panel..... 501-12-28

DESCRIPTION AND OPERATION

Instrument Panel

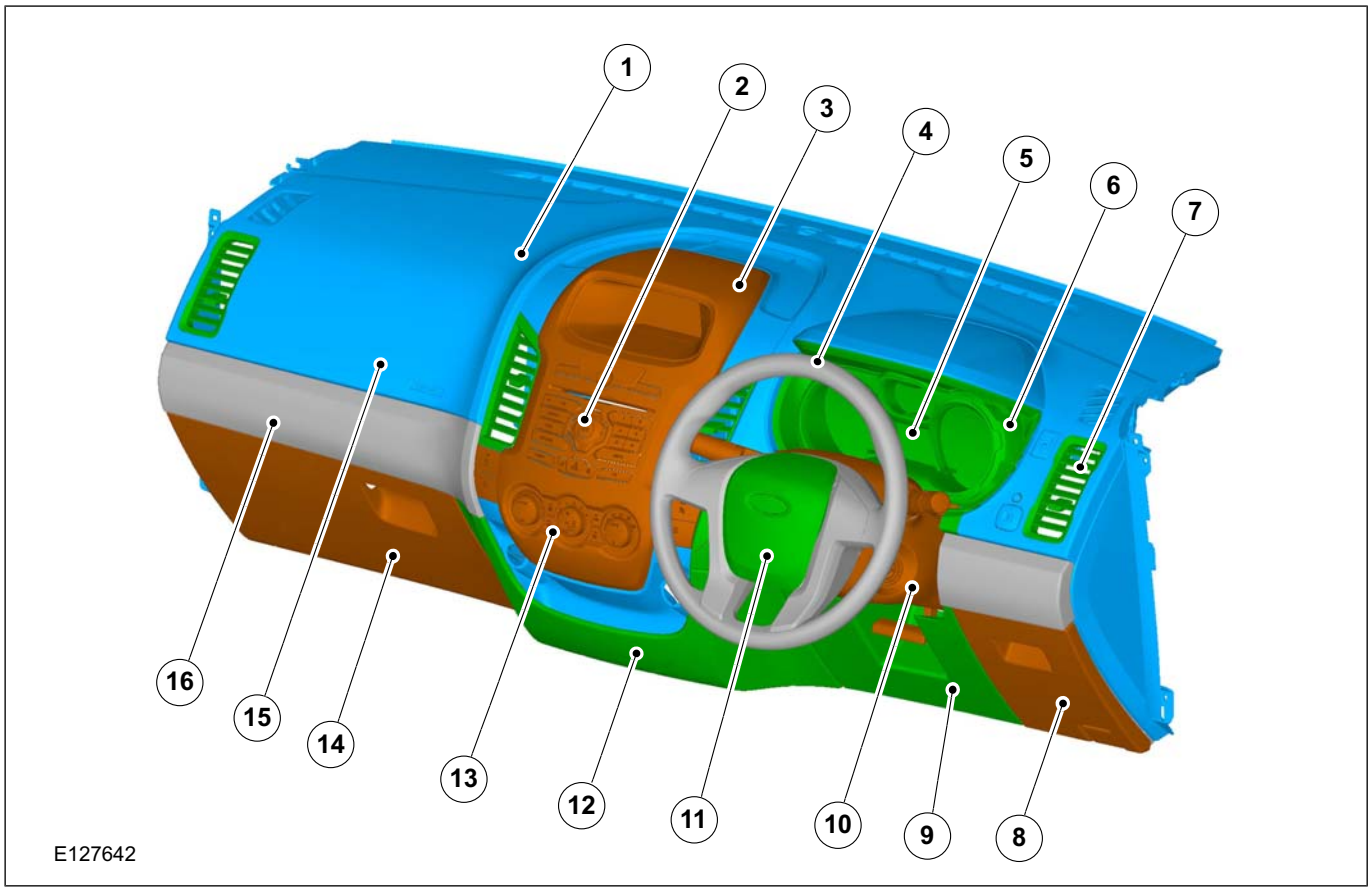

Item	Description
1	Instrument panel
2	Audio control
3	Center finishing panel
4	Steering wheel
5	Instrument cluster
6	Instrument cluster bezel
7	Ventilator grille
8	Driver glove compartment
9	Driver lower airbag module
10	Steering column cover
11	Driver air bag module
12	Lower finishing panel
13	Heater / AC control
14	Passenger glove compartment
15	Passenger air bag module
16	Side finishing panel

REMOVAL AND INSTALLATION

Instrument Panel — LHD 4WD/LHD RWD

General Equipment

Ford Diagnostic Equipment

Removal

WARNINGS:

The supplemental restraint system (SRS) is active for a certain length of time after the power supply has been disconnected. Wait for a minimum of 3 minutes before disconnecting or removing any SRS components.

Make sure that the vehicle electrical system is fully depowered and no other power source is connected.

NOTE: Removal steps in this procedure may contain installation details.

1. Refer to: Supplemental Restraint System (SRS) Health and Safety Precautions (100-00 General Information, Description and Operation).
   Refer to: Battery Disconnect and Connect (414-01 Battery, Mounting and Cables, General Procedures).

Single cab

2. Refer to: Floor Console - Single Cab (501-12 Instrument Panel and Console, Removal and Installation).

Double cab

3. Refer to: Floor Console - Double Cab (501-12 Instrument Panel and Console, Removal and Installation).

Vehicles with manual transmission

4.

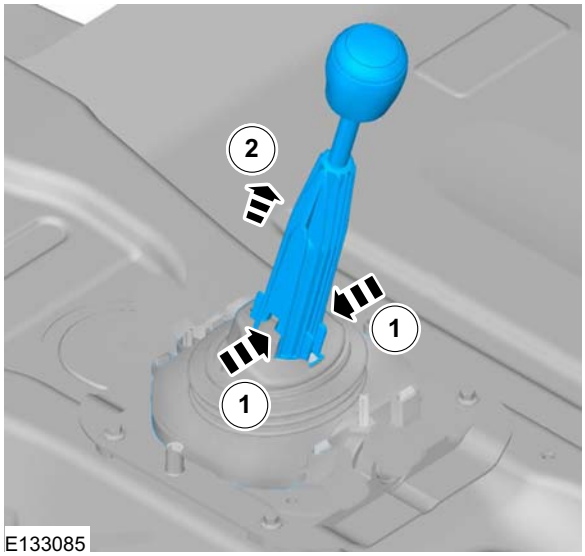

REMOVAL AND INSTALLATION

Vehicles with driver lower air bag

5. Refer to: Driver Lower Air Bag Module (501-20 Supplemental Restraint System, Removal and Installation).

Vehicles without driver lower air bag

6.

7.

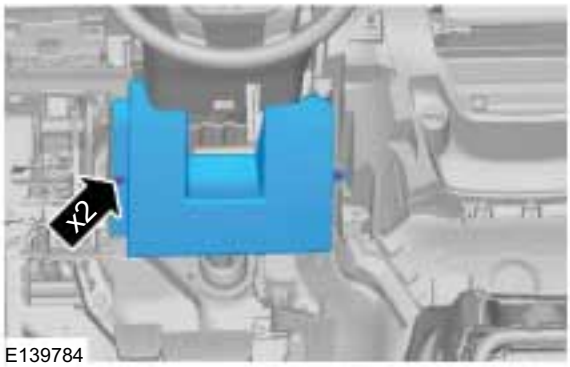

All vehicles

8. Refer to: Glove Compartment (501-12 Instrument Panel and Console, Removal and Installation).

9. Refer to: Cowl Side Trim Panel (501-05 Interior Trim and Ornamentation, Removal and Installation).

10.

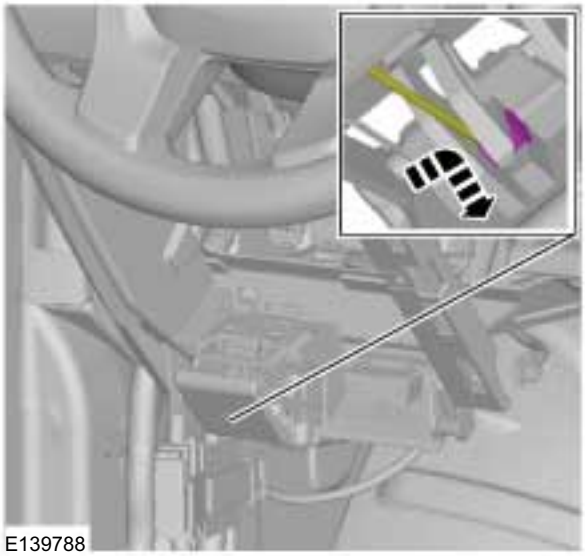

11.

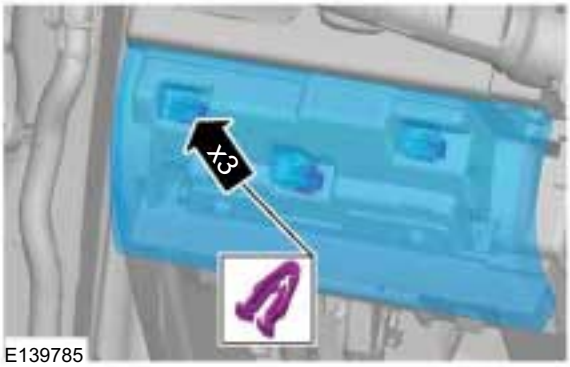

REMOVAL AND INSTALLATION

12.

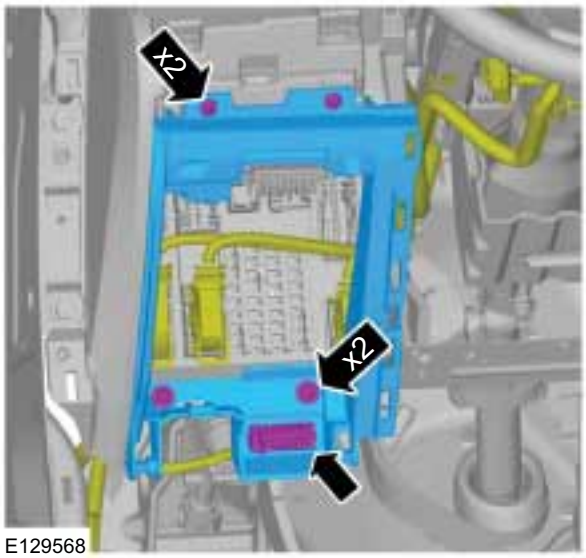

E129568

13. Torque: 10 Nm

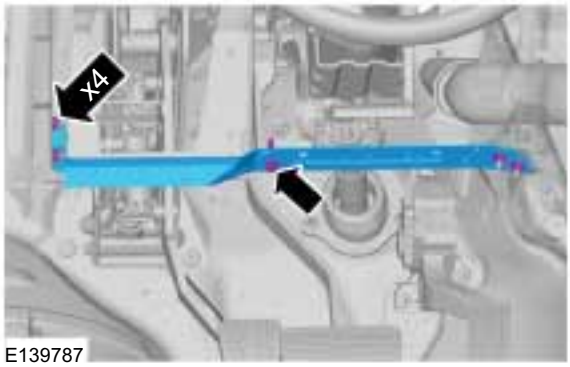

E139787

14. Refer to: Ignition Switch (211-05 Steering Column Switches, Removal and Installation).

15. Refer to: Steering Wheel (211-04 Steering Column, Removal and Installation).

16.

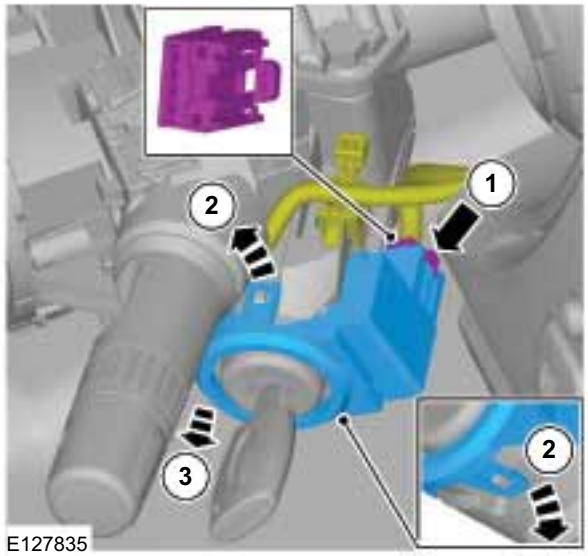

E127835

17. 1. Torque: 7 Nm

REMOVAL AND INSTALLATION

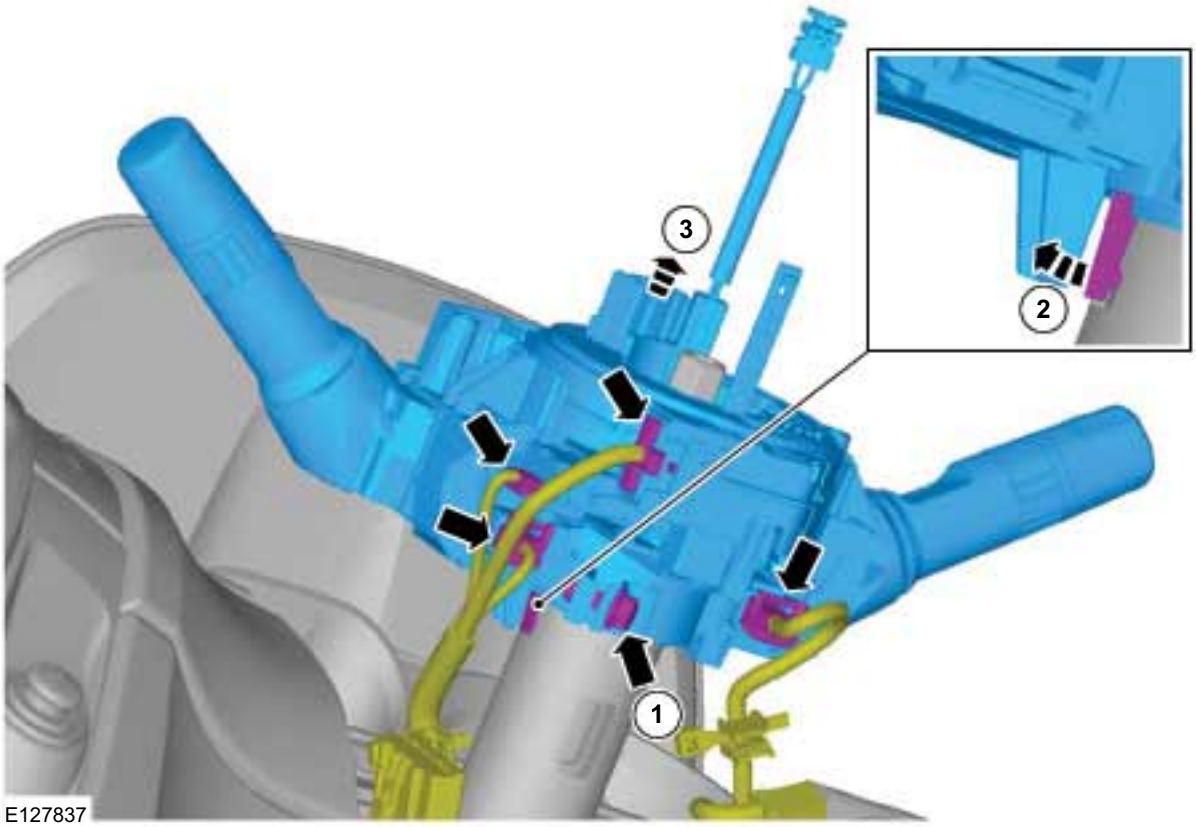

18. Torque: 15 Nm

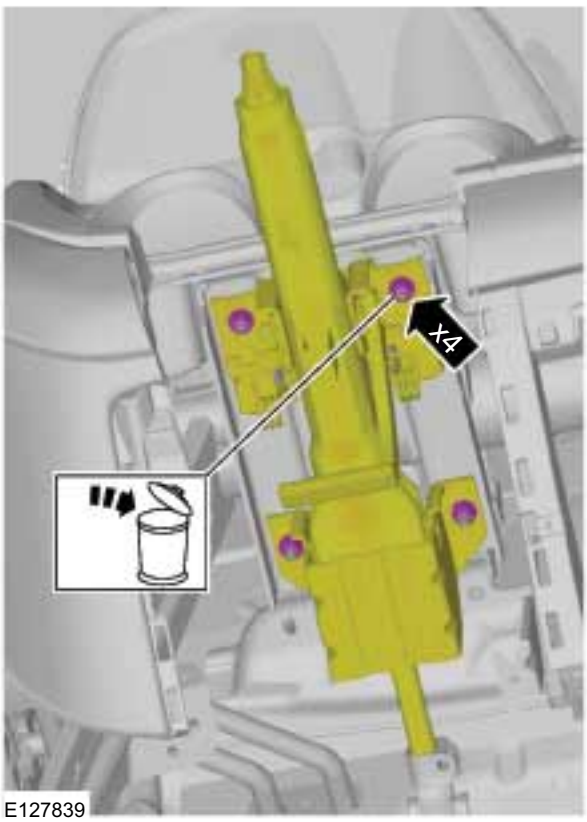

19. Refer to: A-Pillar Trim Panel (501-05 Interior Trim and Ornamentation, Removal and Installation).

20. Torque: 10 Nm

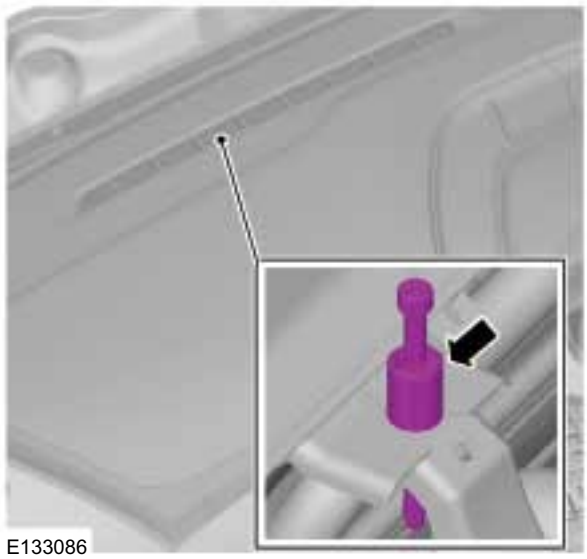

REMOVAL AND INSTALLATION

21.

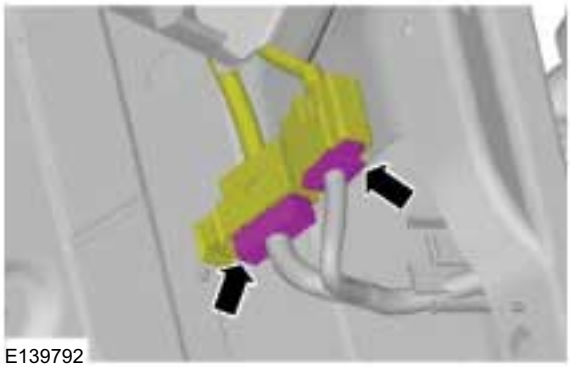
E139792

22.

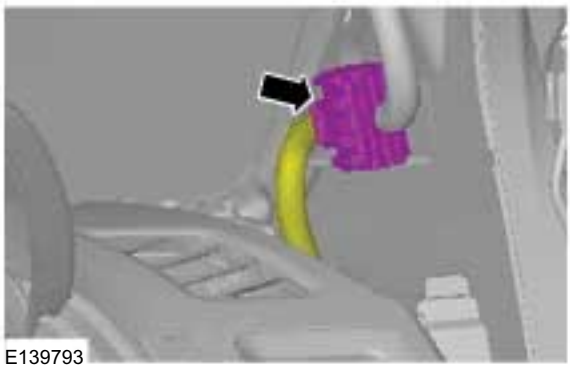
E139793

23.

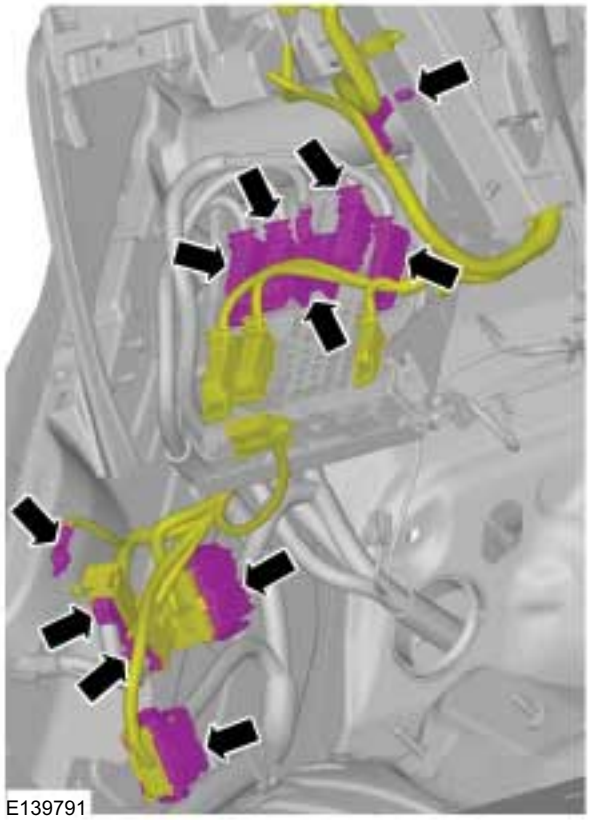
E139791

24.

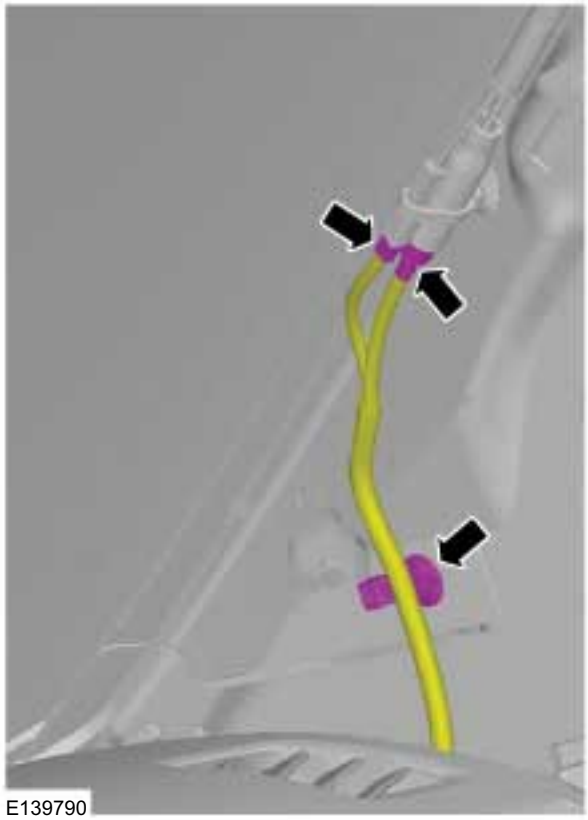
E139790

REMOVAL AND INSTALLATION

25. On both sides.

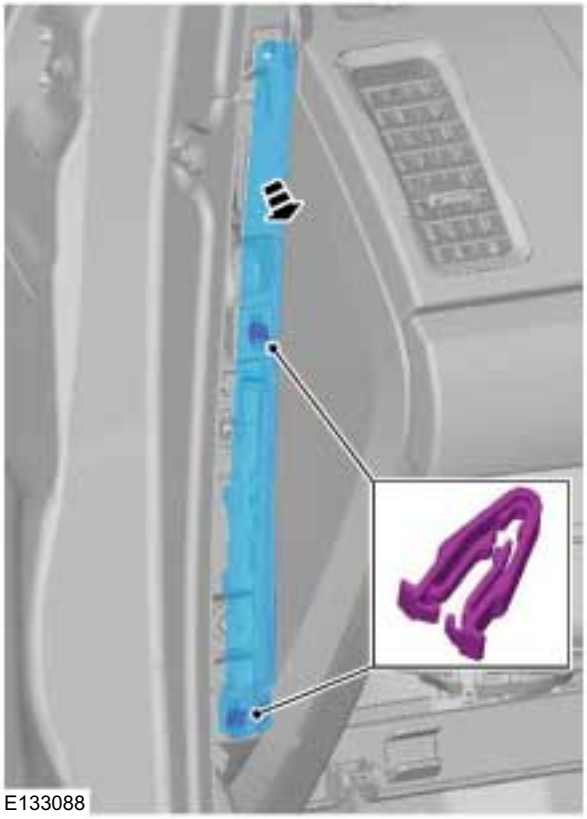
E133088

26. Torque: 25 Nm

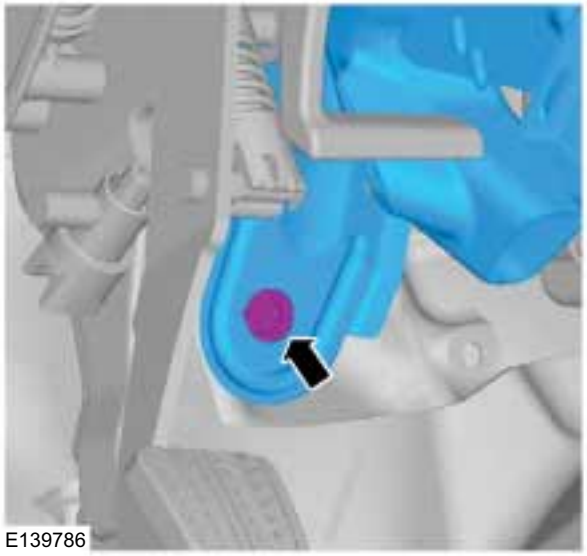
E139786

27. On both sides.
Torque: 25 Nm

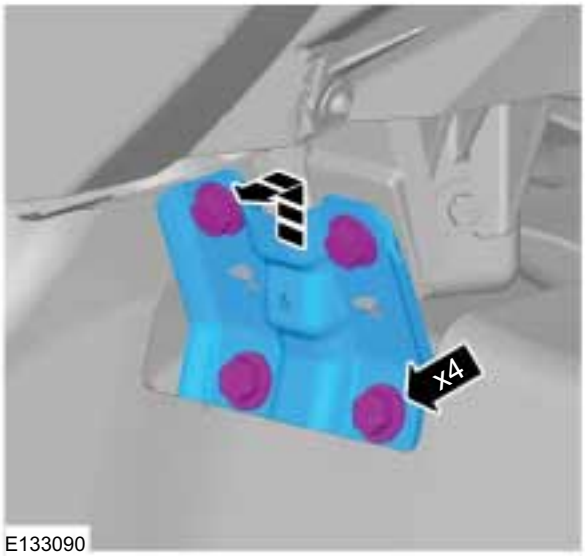

E133090

28. 1. On both sides.
Torque: 25 Nm
2. On both sides.
Torque: 25 Nm

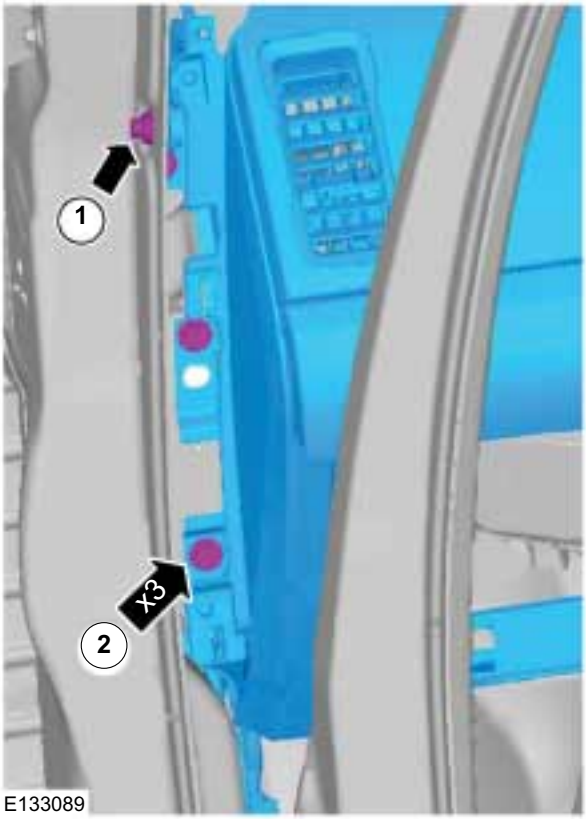

E133089

29. **NOTE:** Note the position of the component before removal.

REMOVAL AND INSTALLATION

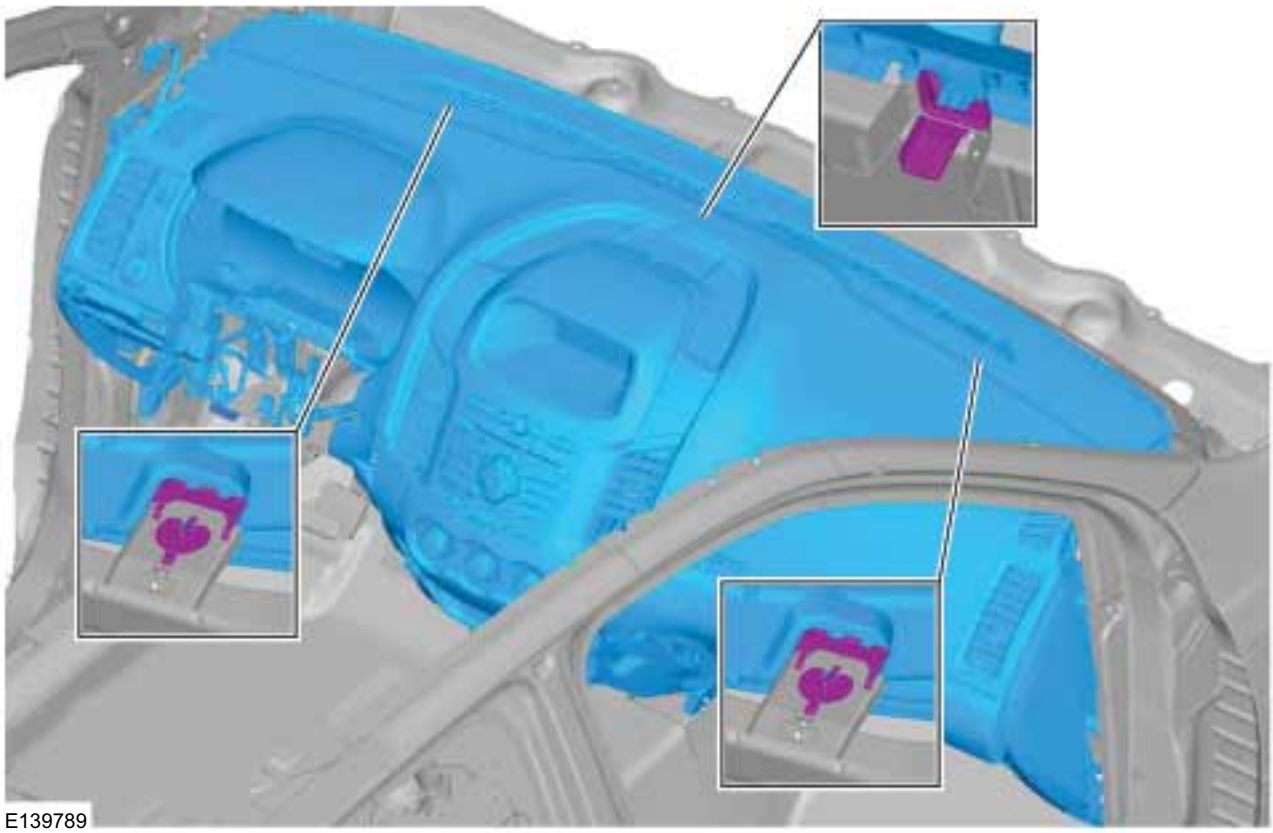

Installation

1. **CAUTION: Make sure that the three locking positions are locked correctely.**

NOTE: Make sure that the adjuster is correctely alighned.

REMOVAL AND INSTALLATION

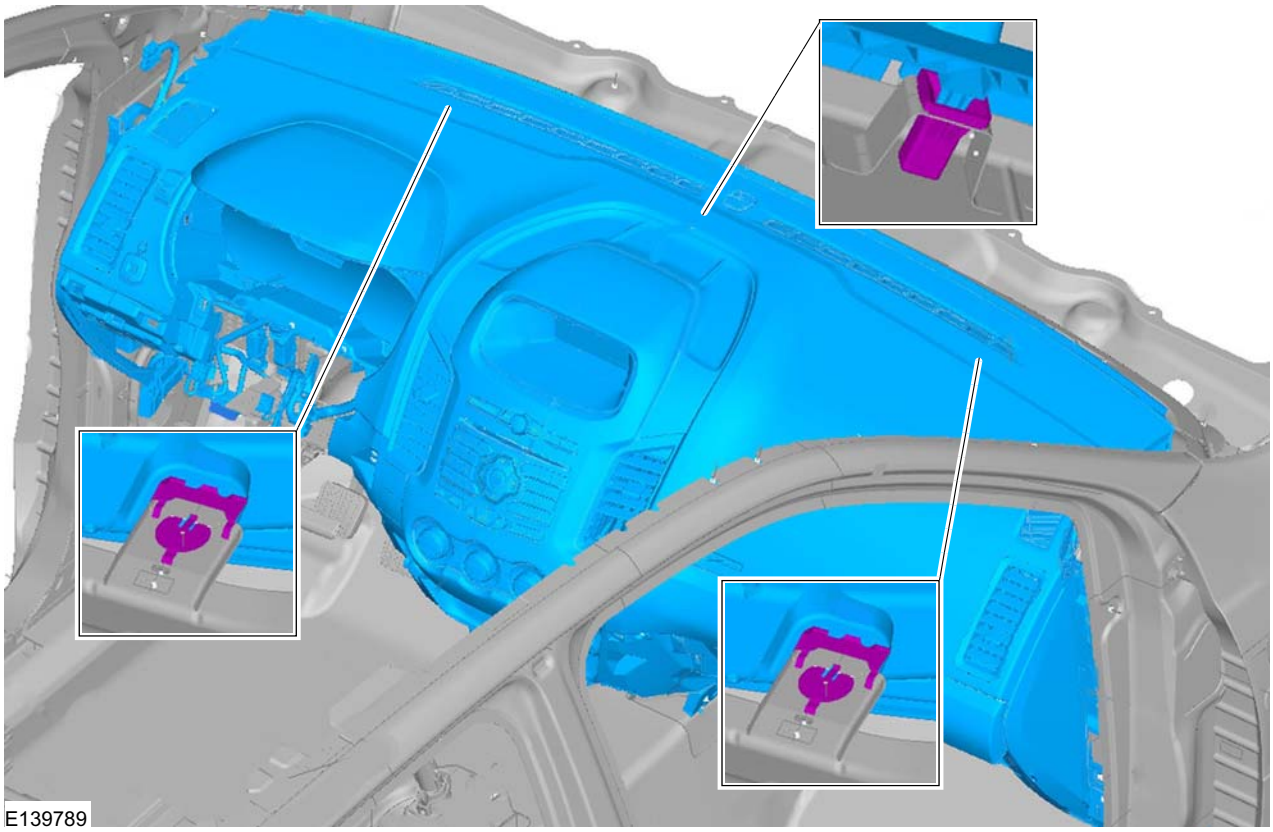

2. To install, reverse the removal procedure.
3. Configure the steering column module.
   General Equipment: Ford Diagnostic Equipment

REMOVAL AND INSTALLATION

Instrument Panel — RHD 4WD/RHD RWD

General Equipment

Ford Diagnostic Equipment

Removal

WARNINGS:

The supplemental restraint system (SRS) is active for a certain length of time after the power supply has been disconnected. Wait for a minimum of 3 minutes before disconnecting or removing any SRS components.

Make sure that the vehicle electrical system is fully depowered and no other power source is connected.

NOTE: Removal steps in this procedure may contain installation details.

1. Refer to: Supplemental Restraint System (SRS) Health and Safety Precautions (100-00 General Information, Description and Operation).
   Refer to: Battery Disconnect and Connect (414-01 Battery, Mounting and Cables, General Procedures).

Single cab

2. Refer to: Floor Console - Single Cab (501-12 Instrument Panel and Console, Removal and Installation).

Double cab

3. Refer to: Floor Console - Double Cab (501-12 Instrument Panel and Console, Removal and Installation).

Vehicles with manual transmission

4.

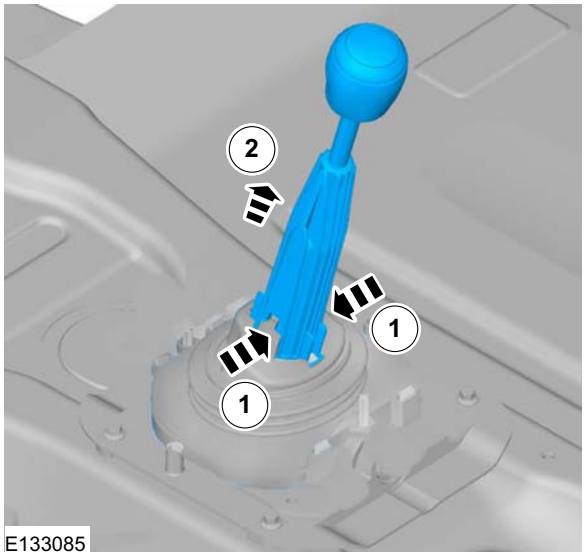

REMOVAL AND INSTALLATION

Vehicles with driver lower air bag

5. Refer to: Driver Lower Air Bag Module (501-20 Supplemental Restraint System, Removal and Installation).

Vehicles without driver lower air bag

6.

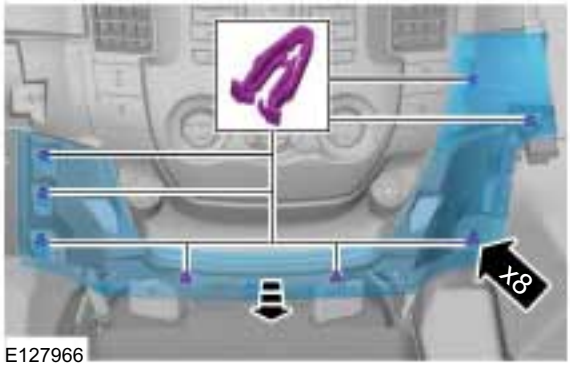

7. Torque: 2 Nm

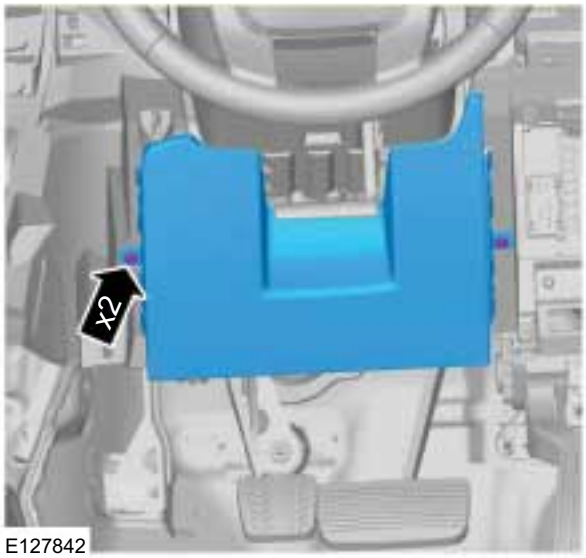

All vehicles

8. Refer to: Glove Compartment (501-12 Instrument Panel and Console, Removal and Installation).

9. Refer to: Cowl Side Trim Panel (501-05 Interior Trim and Ornamentation, Removal and Installation).

10.

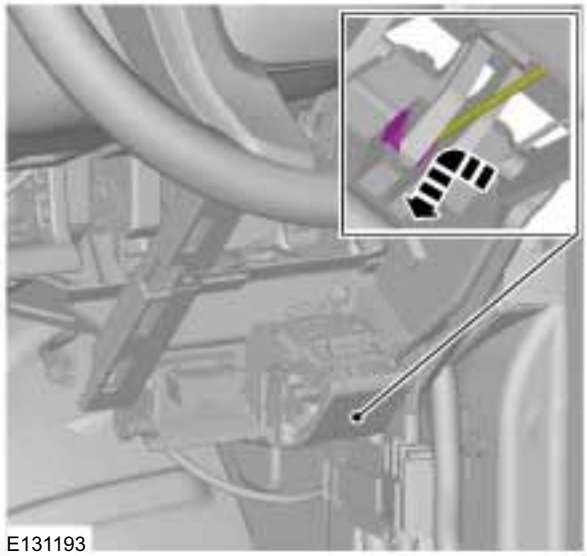

11.

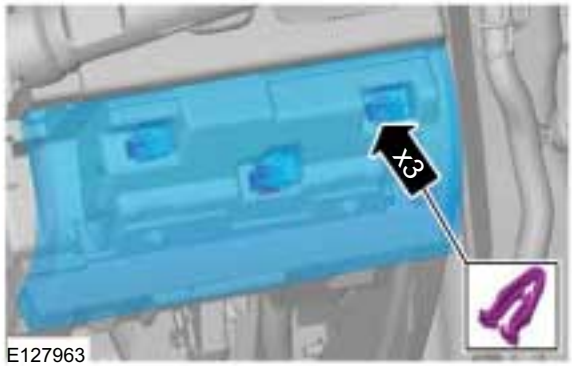

REMOVAL AND INSTALLATION

12. 1. Torque: 3 Nm
    2. Torque: 2 Nm

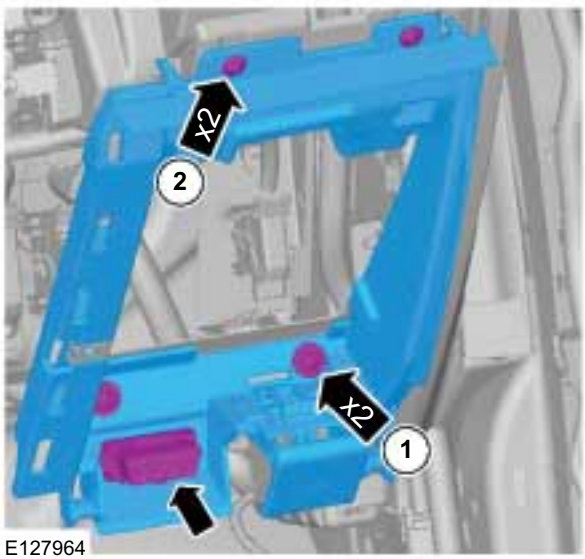

E127964

13. Torque: 10 Nm

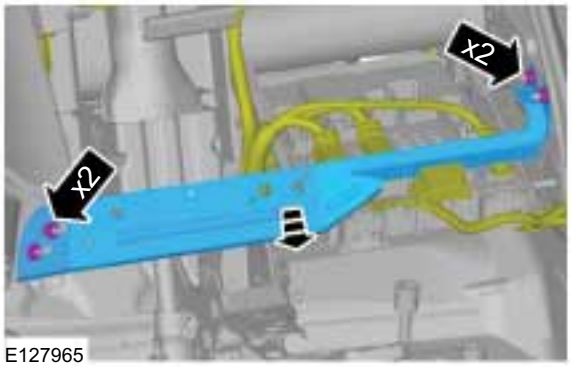

E127965

14. Refer to: Ignition Switch (211-05 Steering Column Switches, Removal and Installation).

15. Refer to: Steering Wheel (211-04 Steering Column, Removal and Installation).

16.

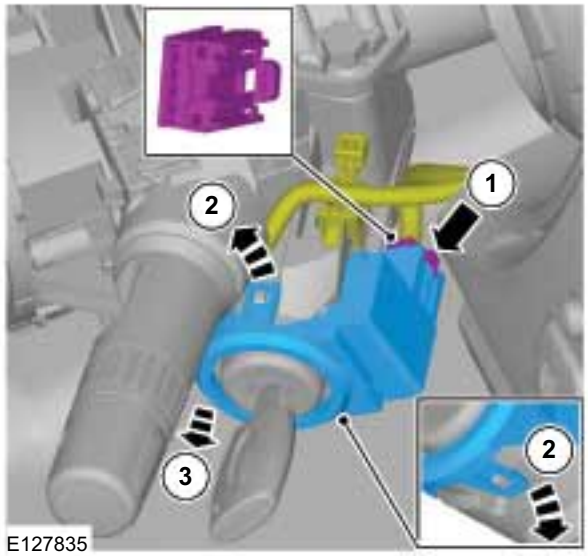

E127835

17. Torque: 7 Nm

REMOVAL AND INSTALLATION

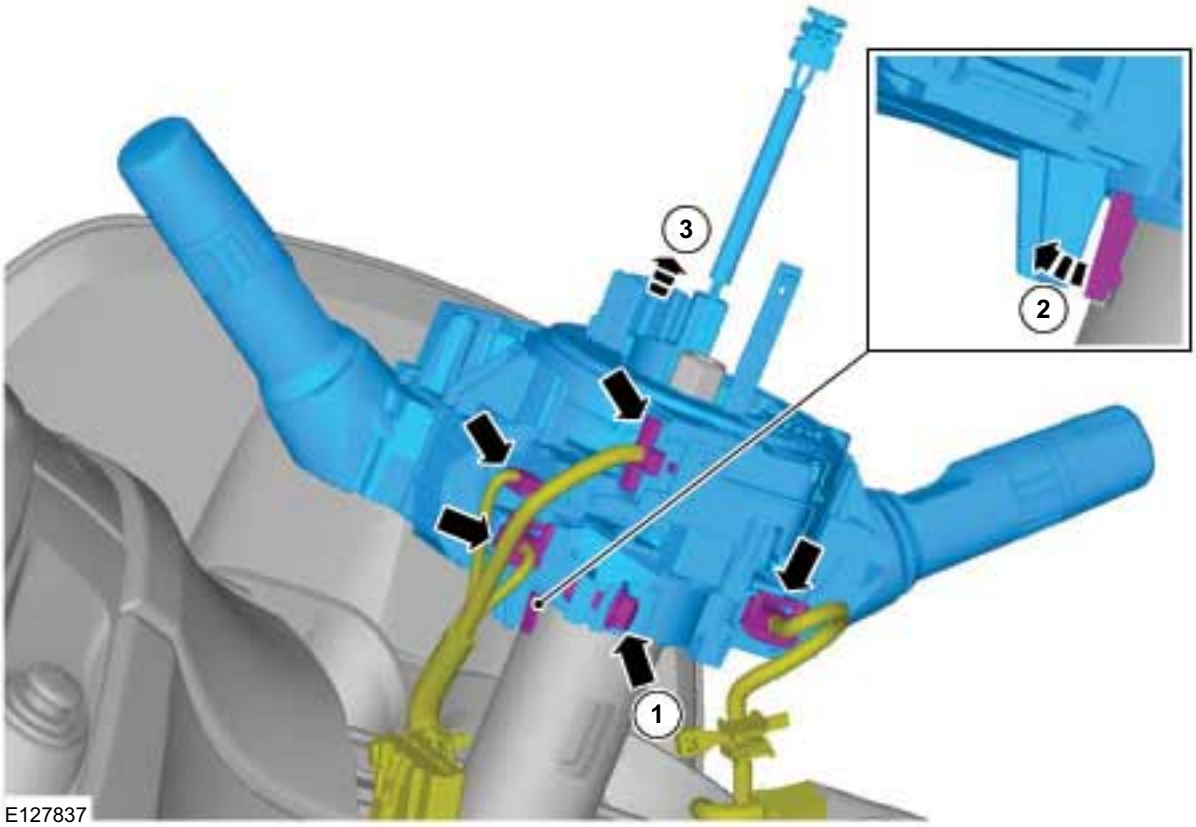

18. Torque: 15 Nm

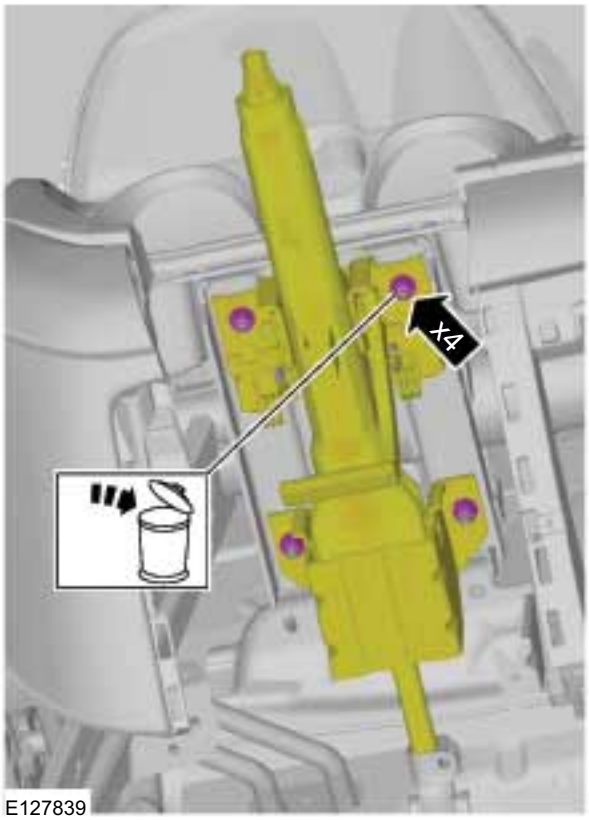

19. Refer to: A-Pillar Trim Panel (501-05 Interior Trim and Ornamentation, Removal and Installation).

20.

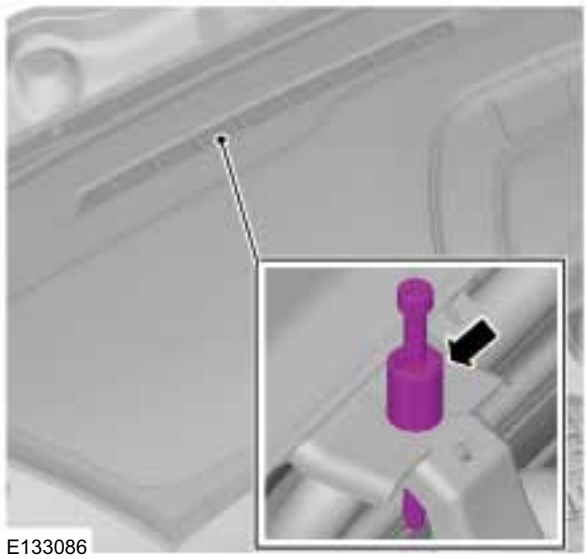

REMOVAL AND INSTALLATION

21.

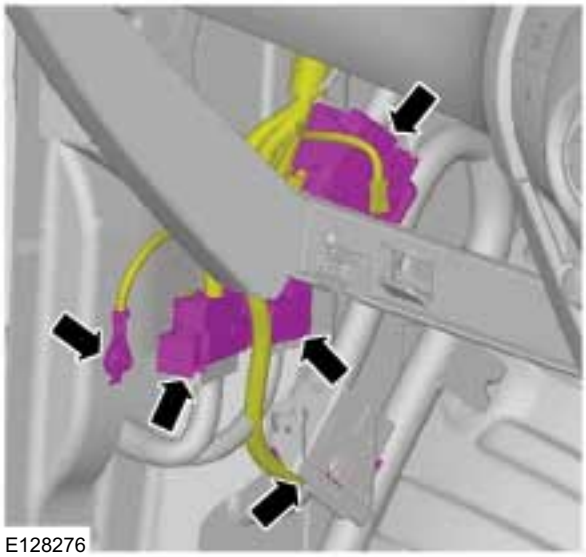
E128276

22.

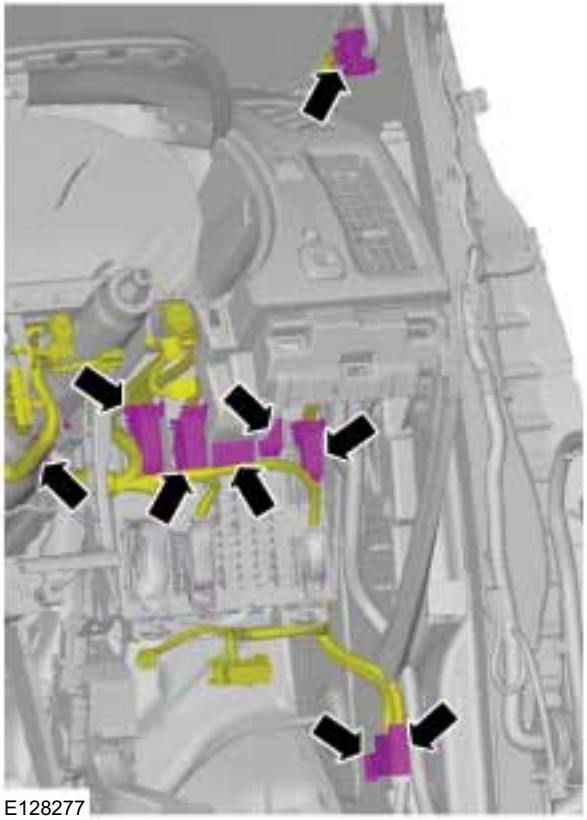
E128277

23.

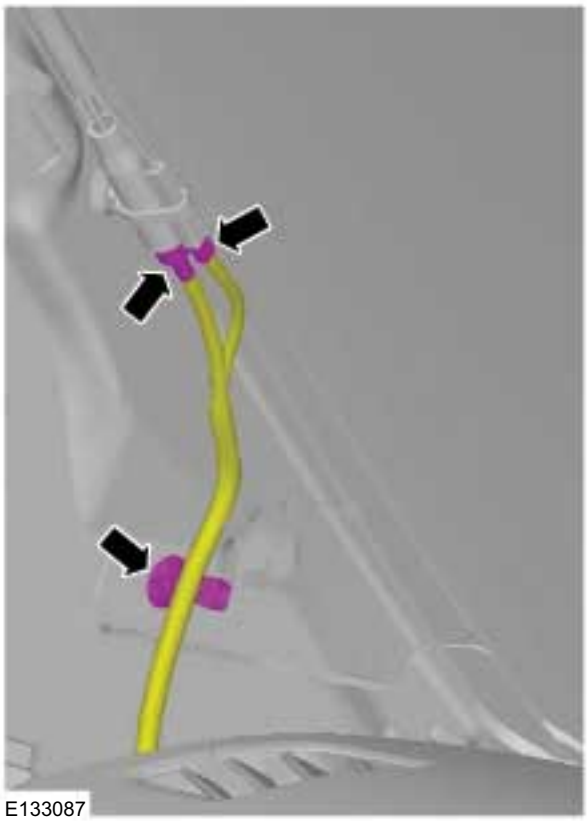
E133087

24. On both sides.

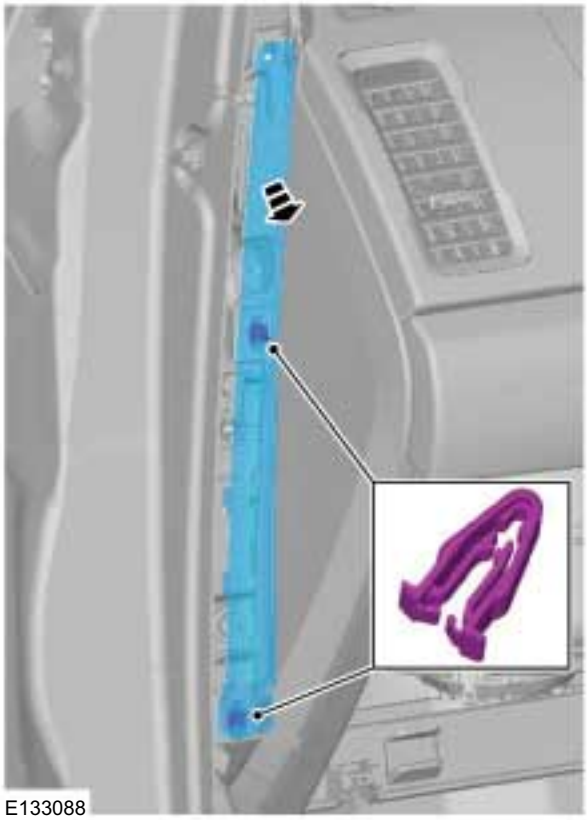
E133088

REMOVAL AND INSTALLATION

25. Torque: 25 Nm

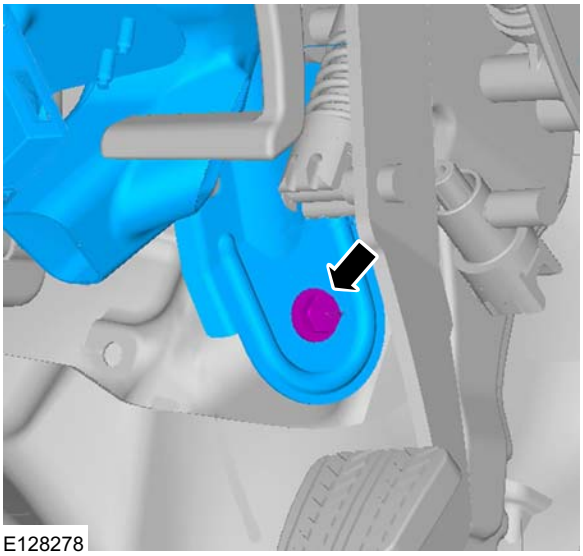
E128278

26. On both sides.
Torque: 25 Nm

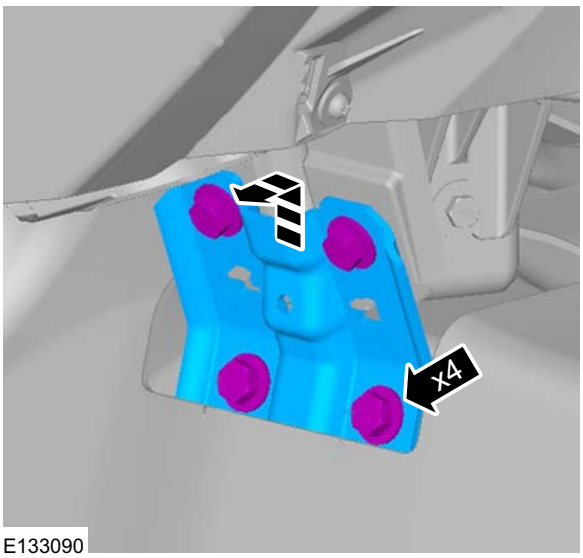

E133090

27. 1. On both sides.
Torque: 25 Nm
2. On both sides.
Torque: 25 Nm

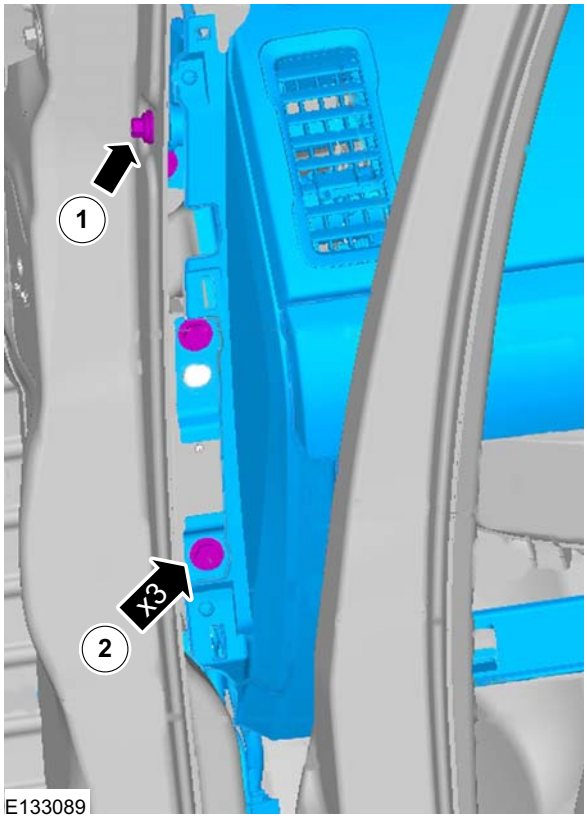

E133089

28. **NOTE:** Note the position of the component before removal.

REMOVAL AND INSTALLATION

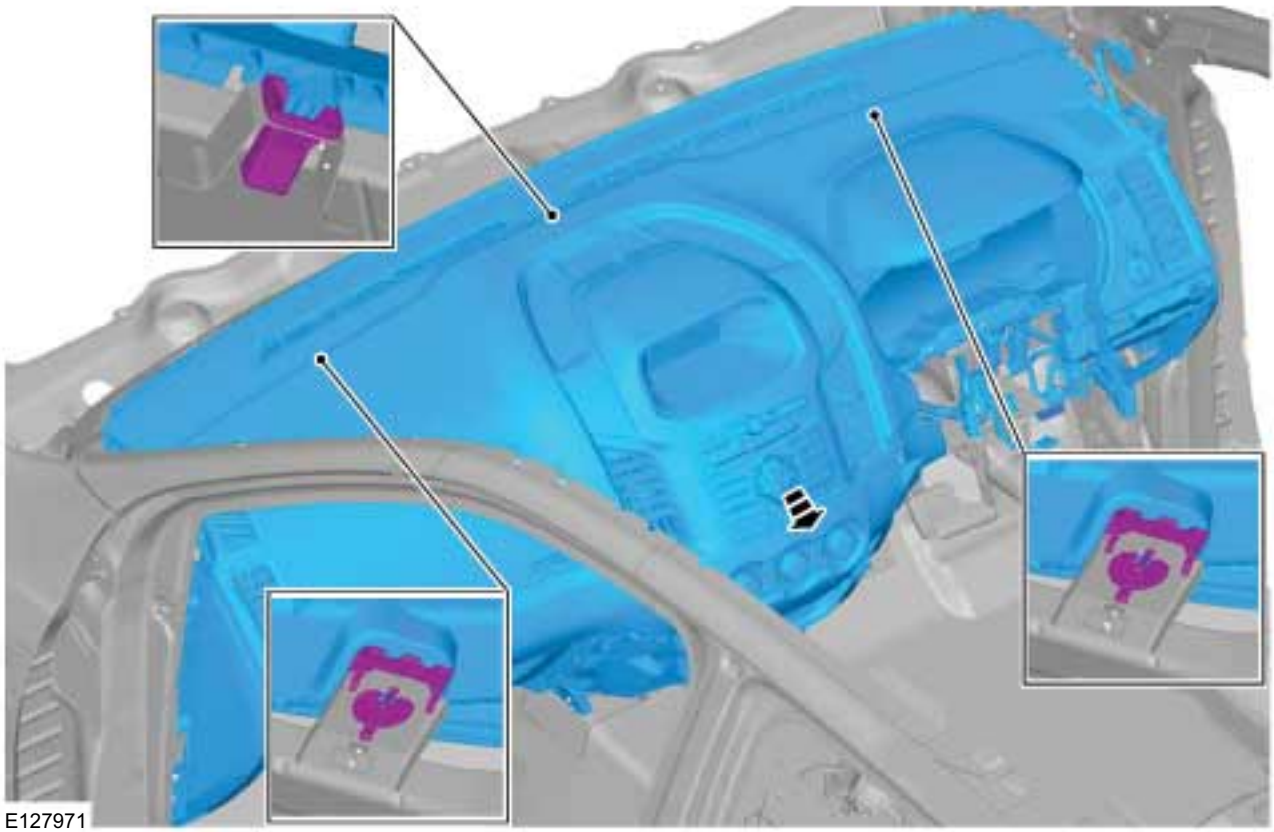

Installation

1. **CAUTION: Make sure that the three locking positions are locked correctely.**

NOTE: Make sure that the adjuster is correctely alighned.

REMOVAL AND INSTALLATION

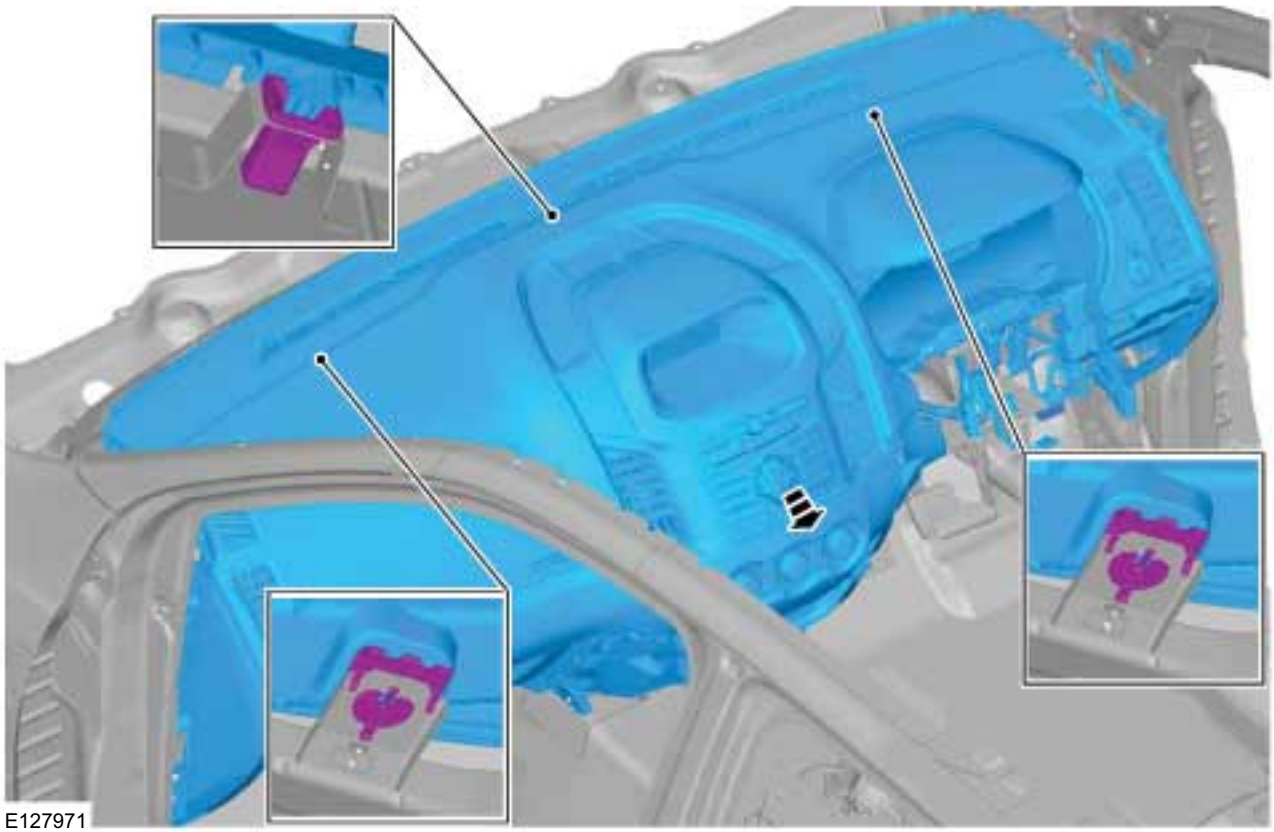

2. To install, reverse the removal procedure.
3. Configure the steering column module.
   General Equipment: Ford Diagnostic Equipment

REMOVAL AND INSTALLATION

Floor Console — Single Cab

Removal

NOTE: Removal steps in this procedure may contain installtion details.

1. Refer to: Health and Safety Precautions (100-00 General Information, Description and Operation).
2. Refer to: Battery Disconnect and Connect (414-01 Battery, Mounting and Cables, General Procedures).

Driver and passenger seat

3. Refer to: Floor Console - Double Cab (501-12 Instrument Panel and Console, Removal and Installation).

Vehicles with front bench seat

4. Torque: 50 Nm

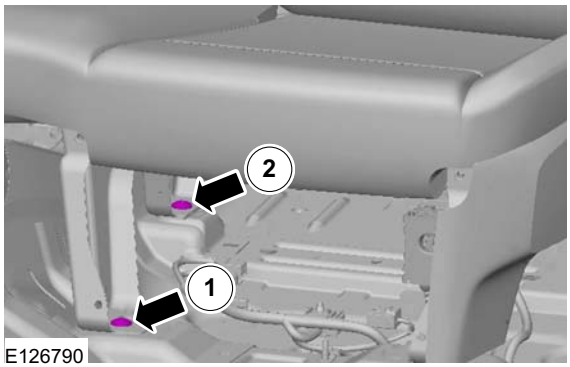

E126790

5. Torque: 50 Nm

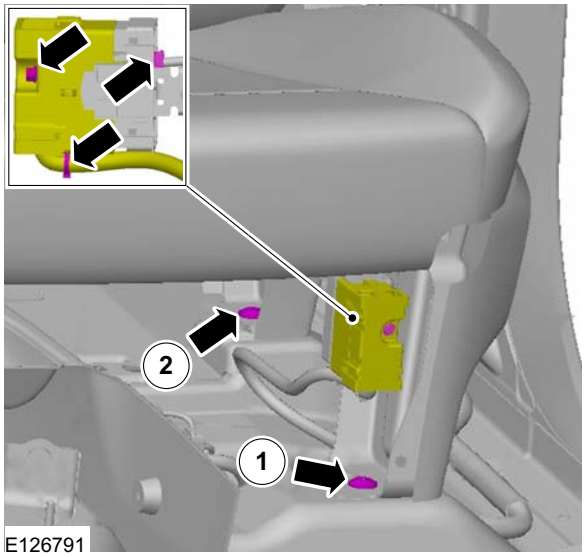

E126791

6.

E126792

REMOVAL AND INSTALLATION

7.

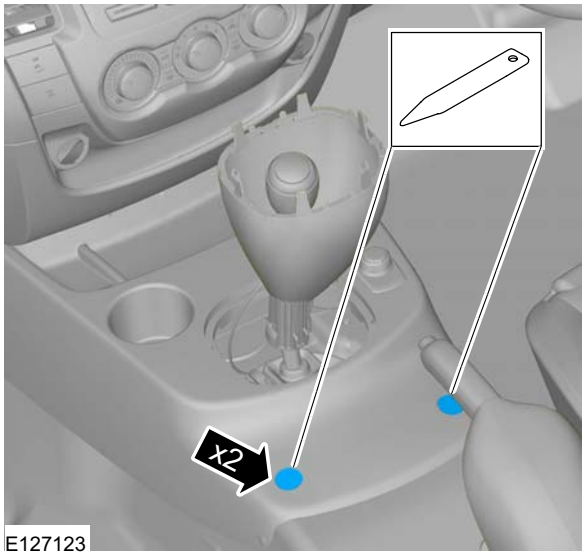

8. Torque: 6 Nm

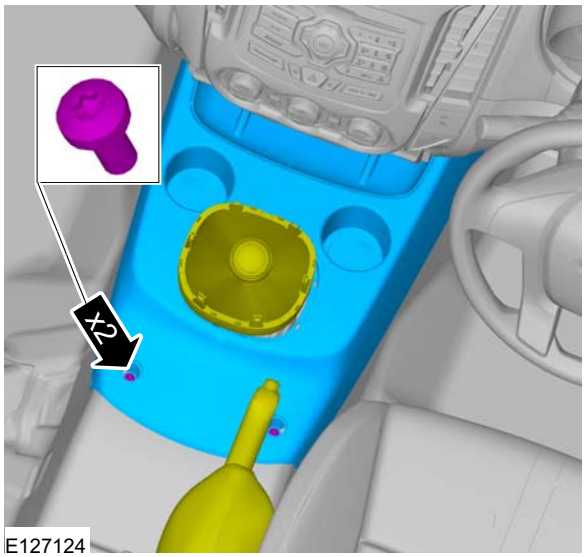

9.

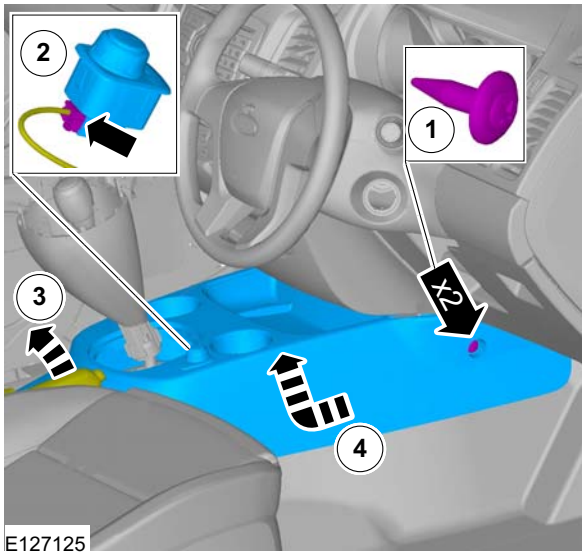

Installation

1. To install, reverse the removal procedure.

REMOVAL AND INSTALLATION

Floor Console — Double Cab

Removal

NOTE: Removal steps in this procedure may contain installation details.

1. Refer to: Health and Safety Precautions (100-00 General Information, Description and Operation).
2. Refer to: Battery Disconnect and Connect (414-01 Battery, Mounting and Cables, General Procedures).

Vehicles with manual transmission

3.

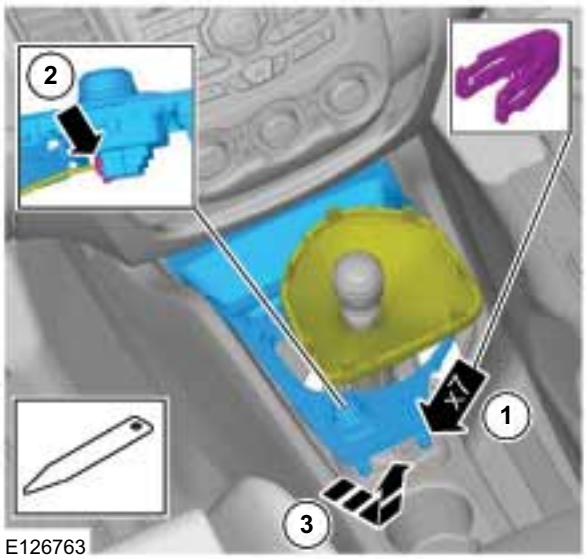

Vehicles with automatic transmission

4.

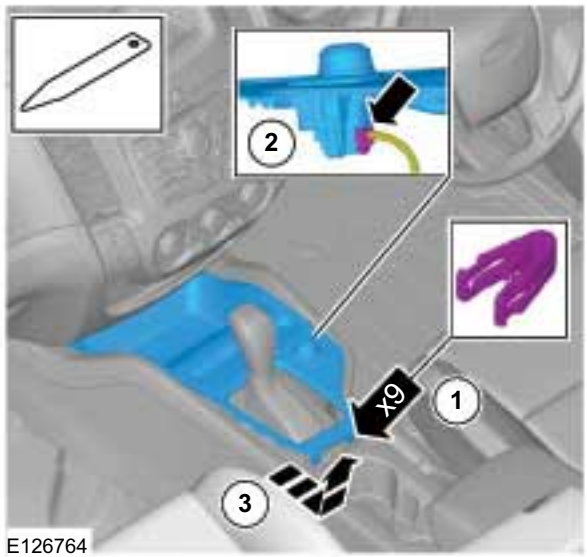

5. Torque: 2 Nm

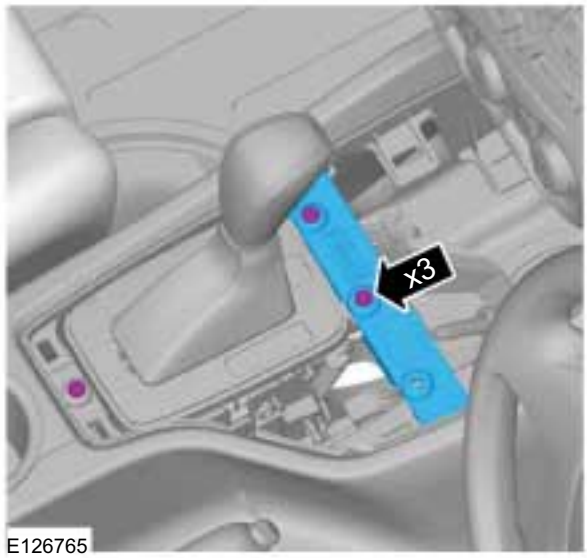

REMOVAL AND INSTALLATION

All vehicles

6.

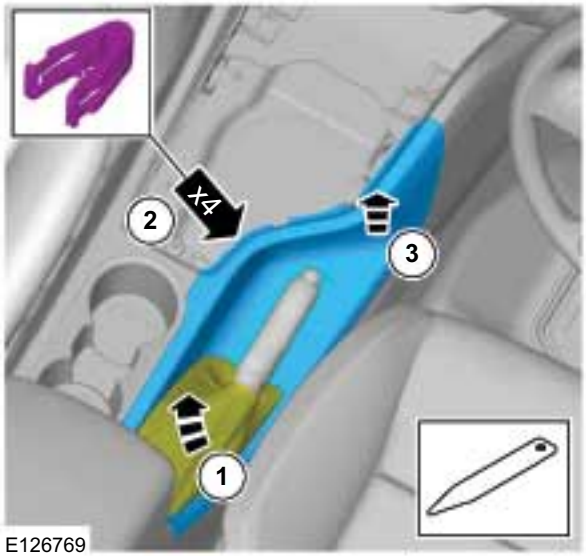

7. 2. Torque: 6 Nm

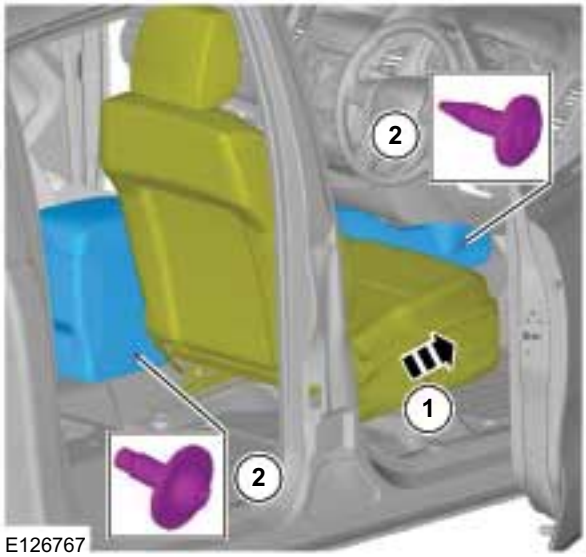

8. 2. Torque: 6 Nm

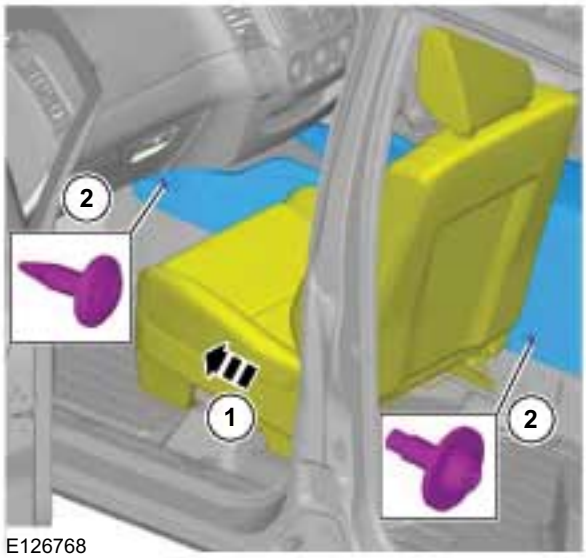

9.

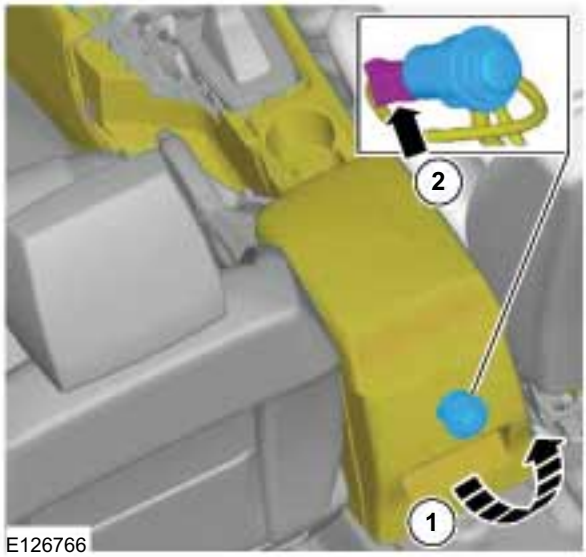

REMOVAL AND INSTALLATION

10.

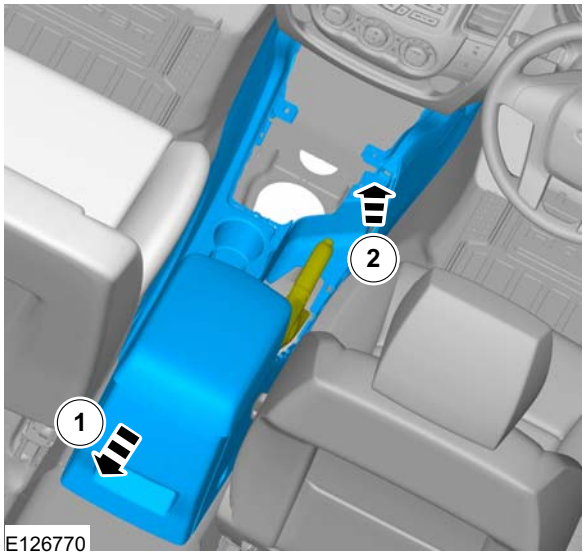

Installation

1. To install, reverse the removal procedure.

REMOVAL AND INSTALLATION

In-Vehicle Crossbeam

Removal

NOTE: Removal steps in this procedure may contain installation details.

1. Refer to: Instrument Panel Wiring Harness (418-02 Wiring Harnesses, Removal and Installation).

2.

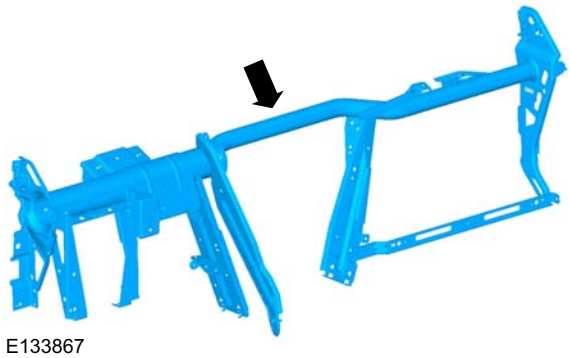

Installation

1. To install, reverse the removal procedure.

REMOVAL AND INSTALLATION

Glove Compartment

Removal

NOTE: Removal steps in this procedure may contain installtion details.

1. Refer to: Health and Safety Precautions (100-00 General Information, Description and Operation).
   Refer to: Battery Disconnect and Connect (414-01 Battery, Mounting and Cables, General Procedures).

2.

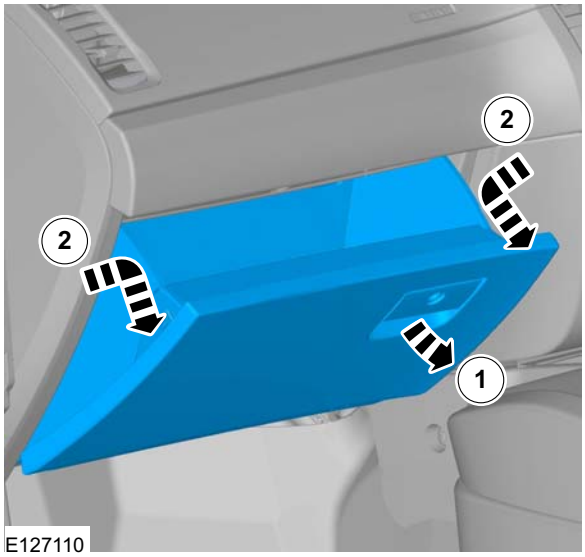

3.

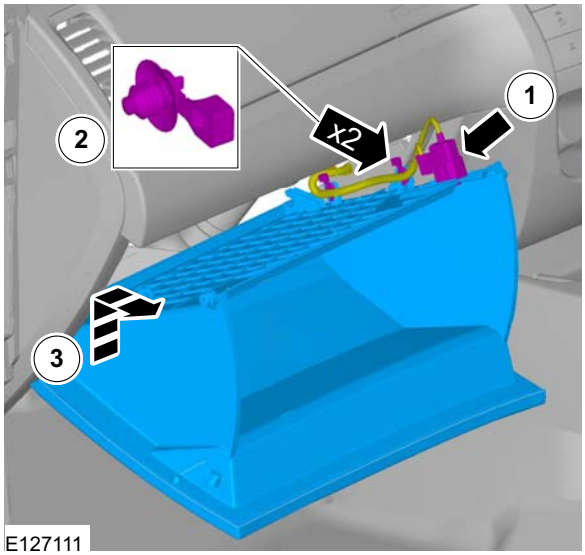

4.

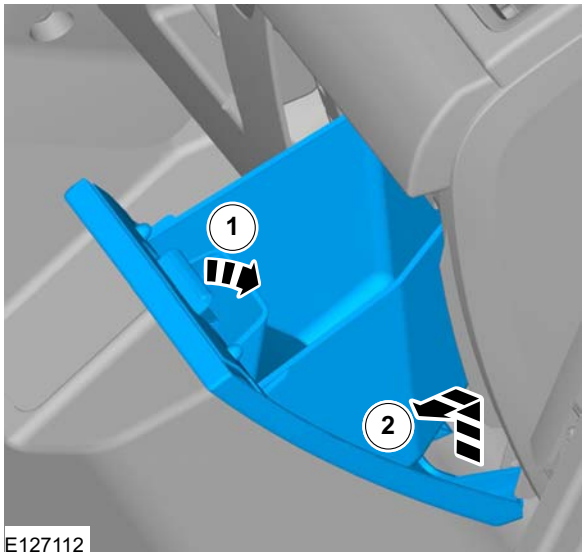

Installation

NOTE: Make sure that the passenger glove box lamp is correctly located.

1. To install, reverse the removal procedure.

REMOVAL AND INSTALLATION

Overhead Console

Removal

NOTE: Removal steps in this procedure may contain installation details.

1. Refer to: Health and Safety Precautions (100-00 General Information, Description and Operation).
2. Refer to: Battery Disconnect and Connect (414-01 Battery, Mounting and Cables, General Procedures).
3. Long over head console.

E127255

4. Short over head console.

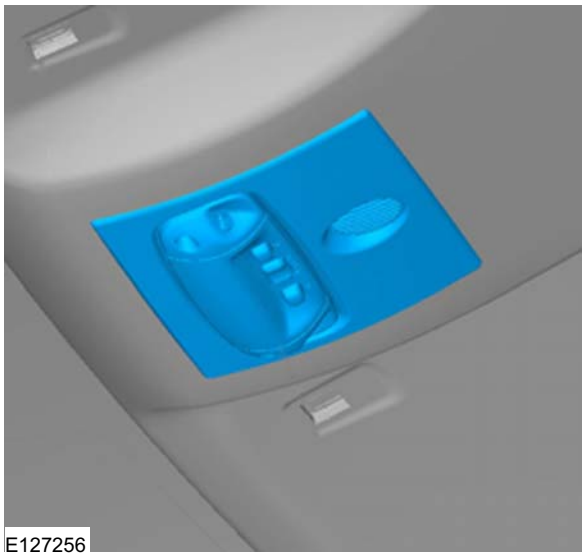
E127256

5.

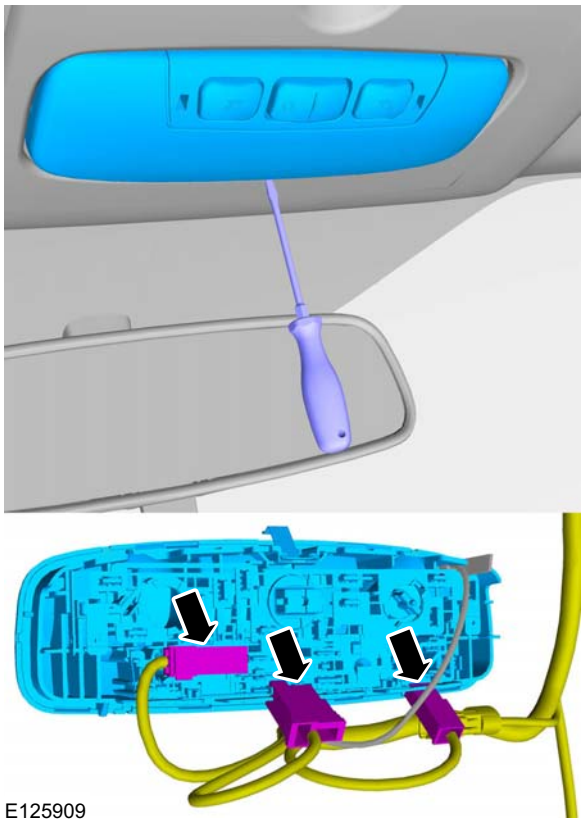
E125909

REMOVAL AND INSTALLATION

6. Torque: 4 Nm

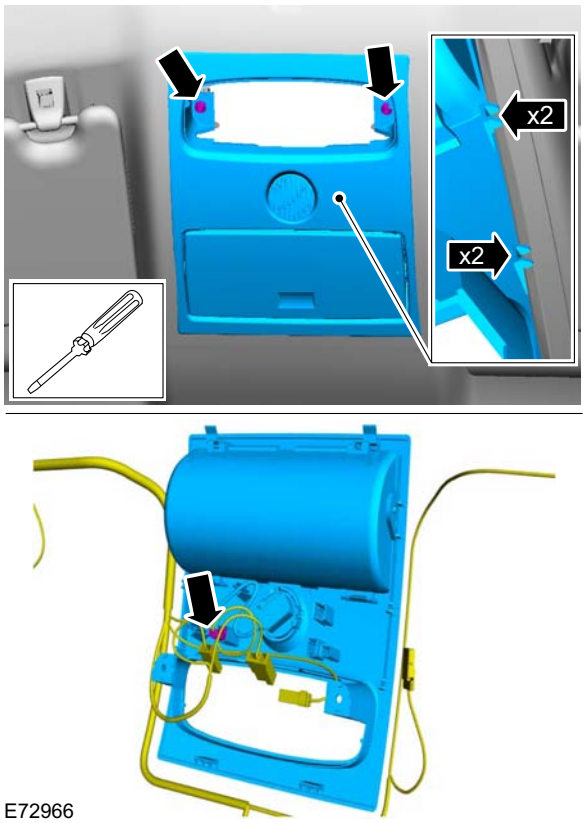

Installation

1. To install, reverse the removal procedure.

DISASSEMBLY AND ASSEMBLY

Instrument Panel

Disassembly

1. Refer to: Instrument Panel - RHD 4WD/RHD RWD (501-12 Instrument Panel and Console, Removal and Installation).
2. Refer to: Audio Unit (415-01 Information and Entertainment System, Removal and Installation).
3. If fitted.

   Refer to: Information and Entertainment Display Unit (415-01 Information and Entertainment System, Removal and Installation).
4. If fitted.

   Refer to: Bluetooth Module (415-01 Information and Entertainment System, Removal and Installation).
5. Refer to: Passenger Air Bag Module (501-20 Supplemental Restraint System, Removal and Installation).
6. Torque: 2 Nm

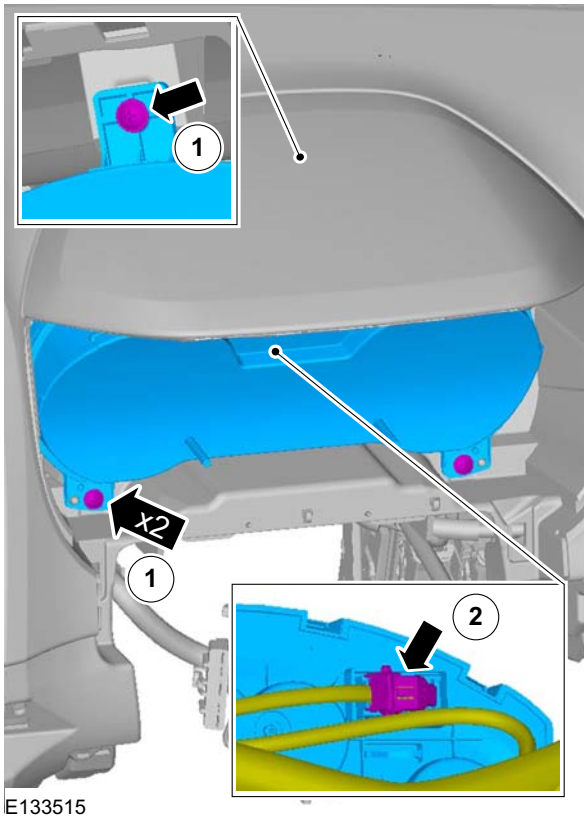

7. Note the position of the component before removal.

DISASSEMBLY AND ASSEMBLY

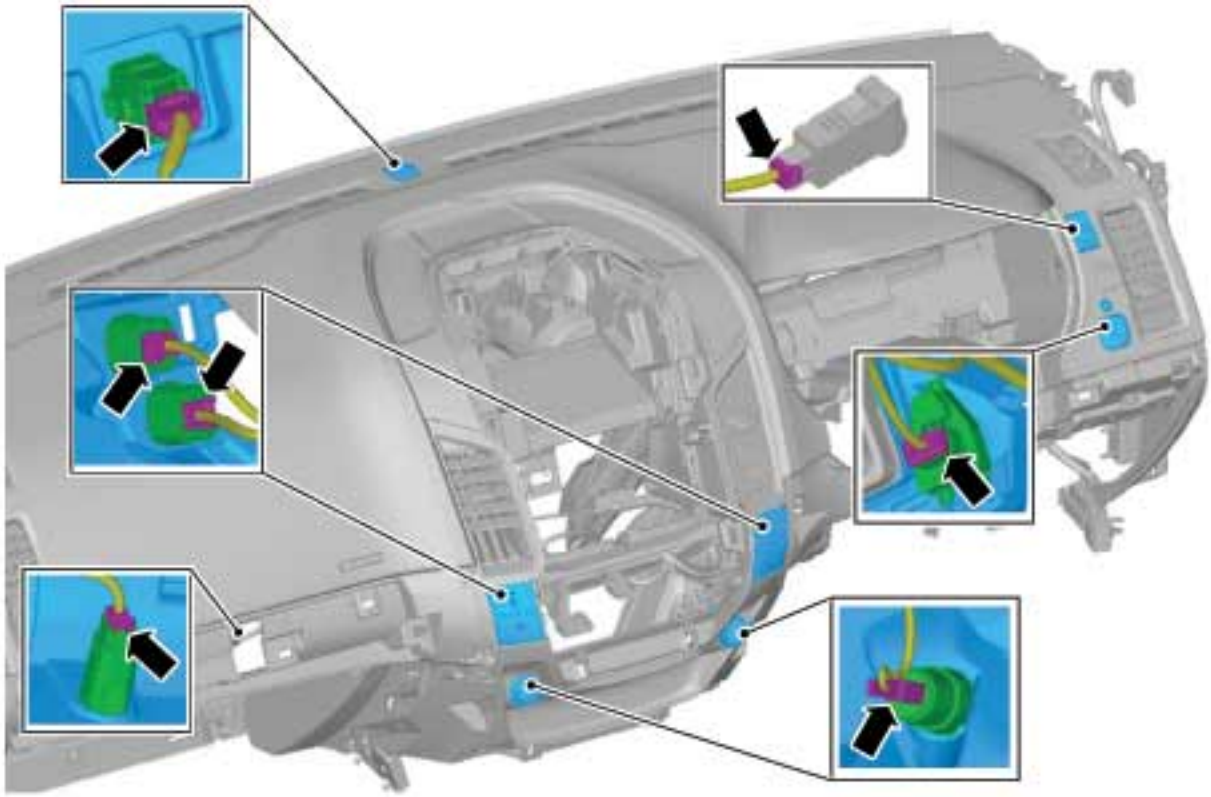

8.

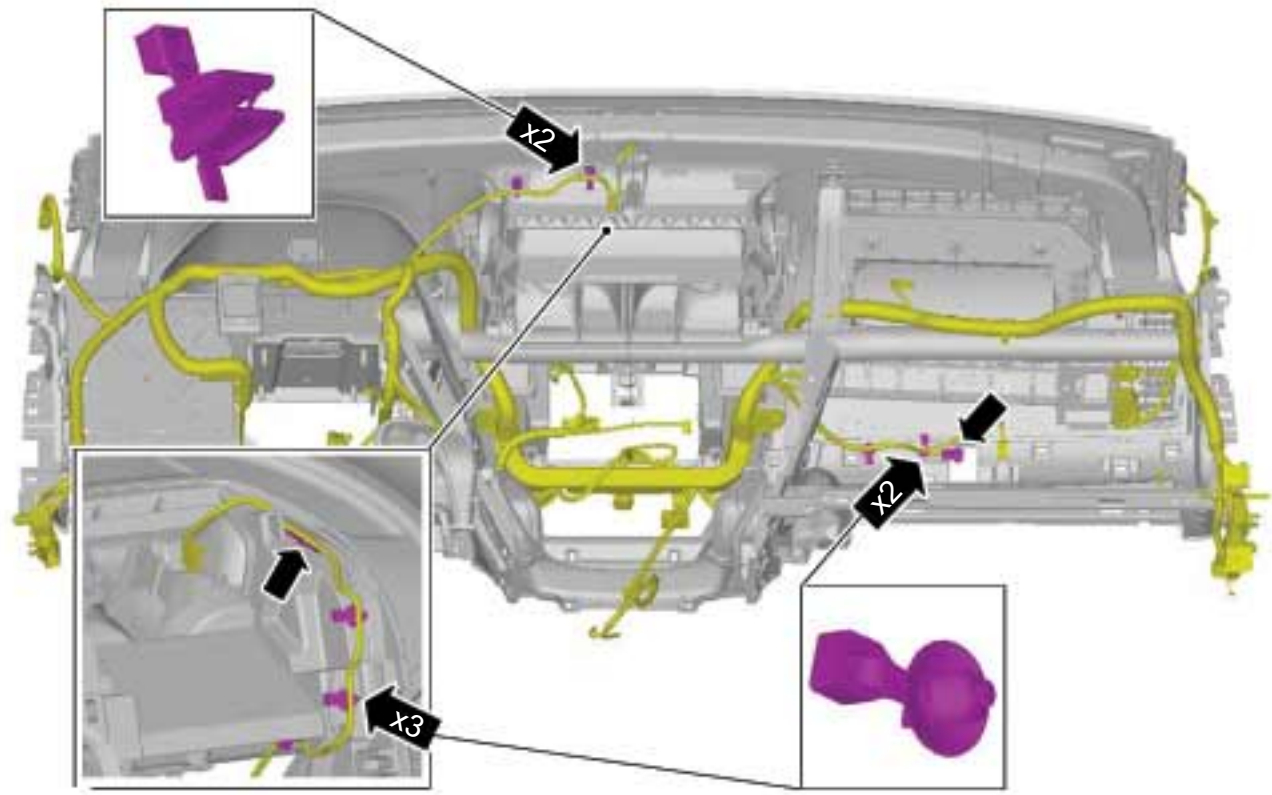

DISASSEMBLY AND ASSEMBLY

9.

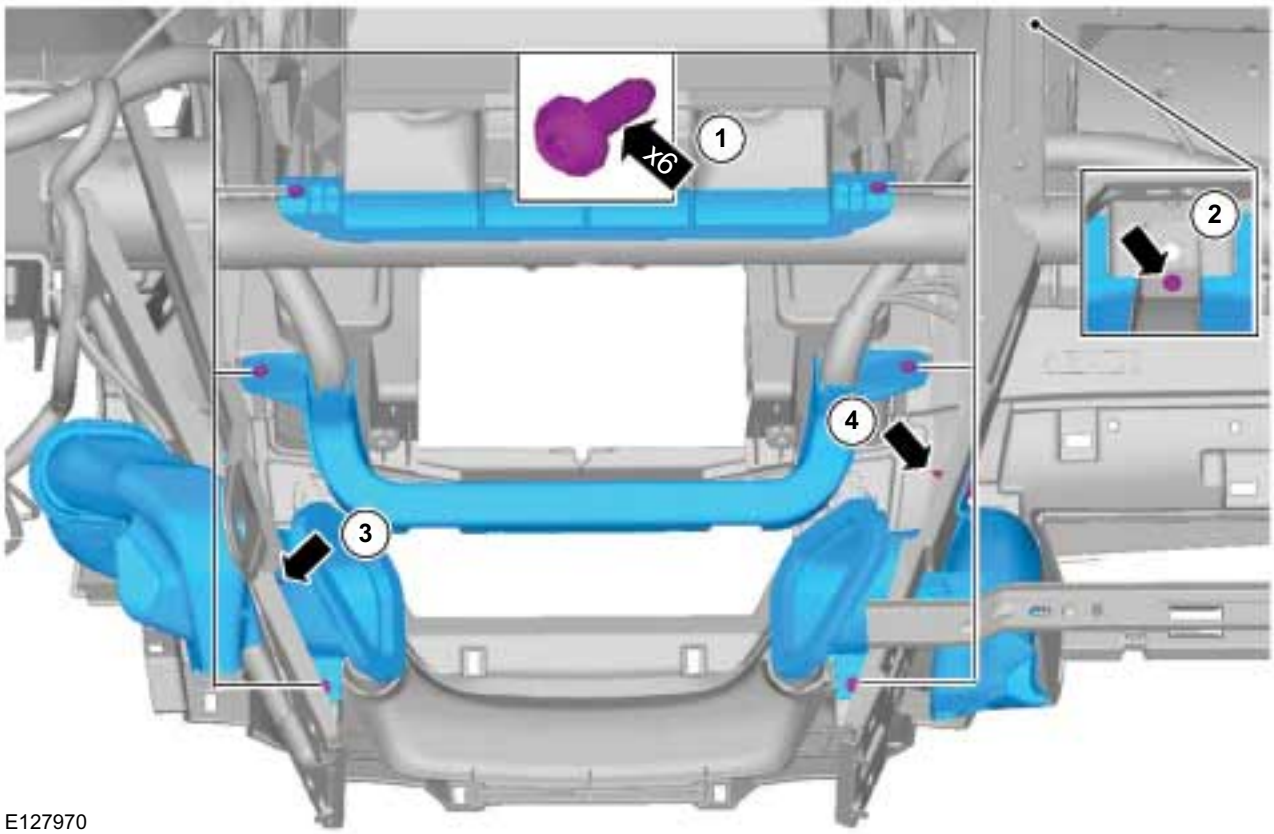

10. Torque: 3 Nm

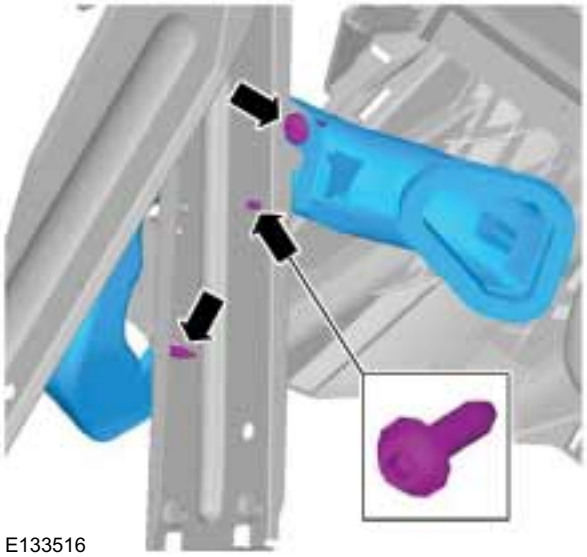

11. Torque: 3 Nm

DISASSEMBLY AND ASSEMBLY

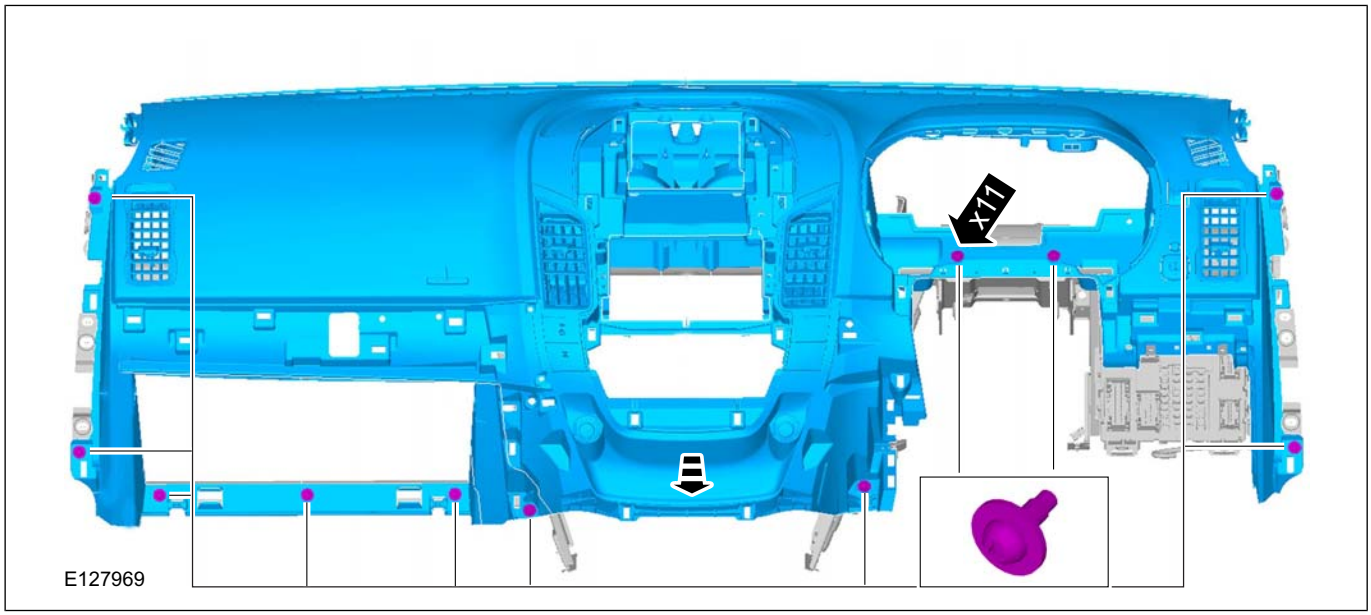

Assembly

12. To assemble, reverse the disassembly procedure.

SECTION 501-14 Handles, Locks, Latches and Entry Systems

VEHICLE APPLICATION: 2011.50 Ranger

CONTENTS PAGE

DESCRIPTION AND OPERATION

Handles, Locks, Latches and Entry Systems..... 501-14-2

GENERAL PROCEDURES

Remote Keyless Entry (RKE) Transmitter Programming..... 501-14-7

REMOVAL AND INSTALLATION

Ignition Lock Cylinder..... 501-14-8
Front Door Latch..... 501-14-9
Rear Door Latch — Double Cab..... 501-14-11
Rear Door Latch — Super Cab..... 501-14-13
Exterior Front Door Handle..... 501-14-15
Exterior Rear Door Handle..... 501-14-16
Hood Latch..... 501-14-17
Tailgate Release Handle..... 501-14-19
Tailgate Latch..... 501-14-20

DISASSEMBLY AND ASSEMBLY

Door Lock Cylinder..... 501-14-21

DESCRIPTION AND OPERATION

Handles, Locks, Latches and Entry Systems

Vehicles with RKE (remote keyless entry) single cab

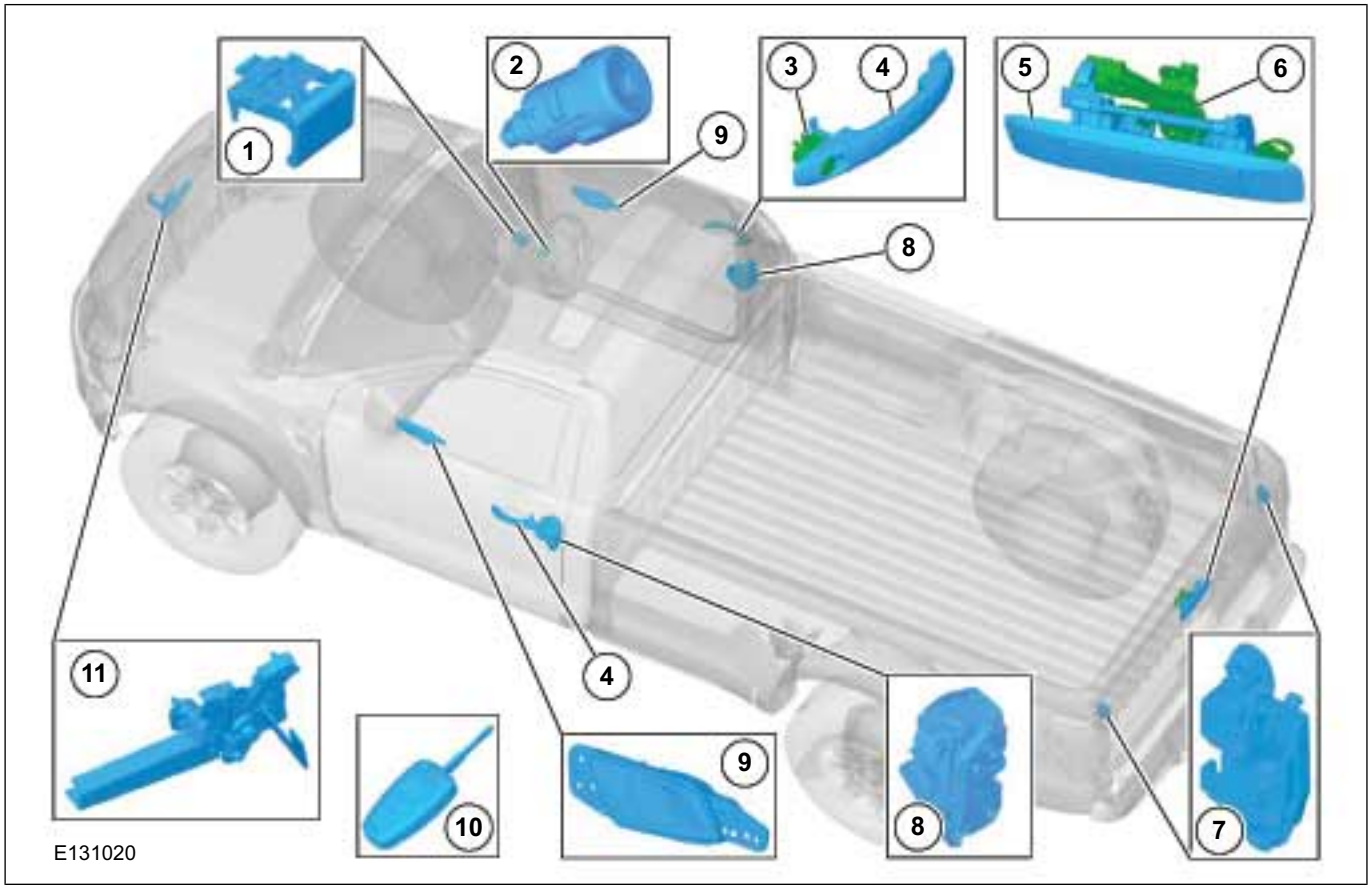

Item	Description
1	Hood latch release handle
2	Steering column ignition cylinder
3	Door lock cylinder
4	Exterior door handle
5	Tailgate handle
6	Tailgate release handle
7	Tailgate latch

Item	Description
8	Door latch
9	Interior door handle
10	Mechanical key with transmitter (radio frequency remote control)
11	Hood latch

Vehicles with RKE (remote keyless entry) double cab

DESCRIPTION AND OPERATION

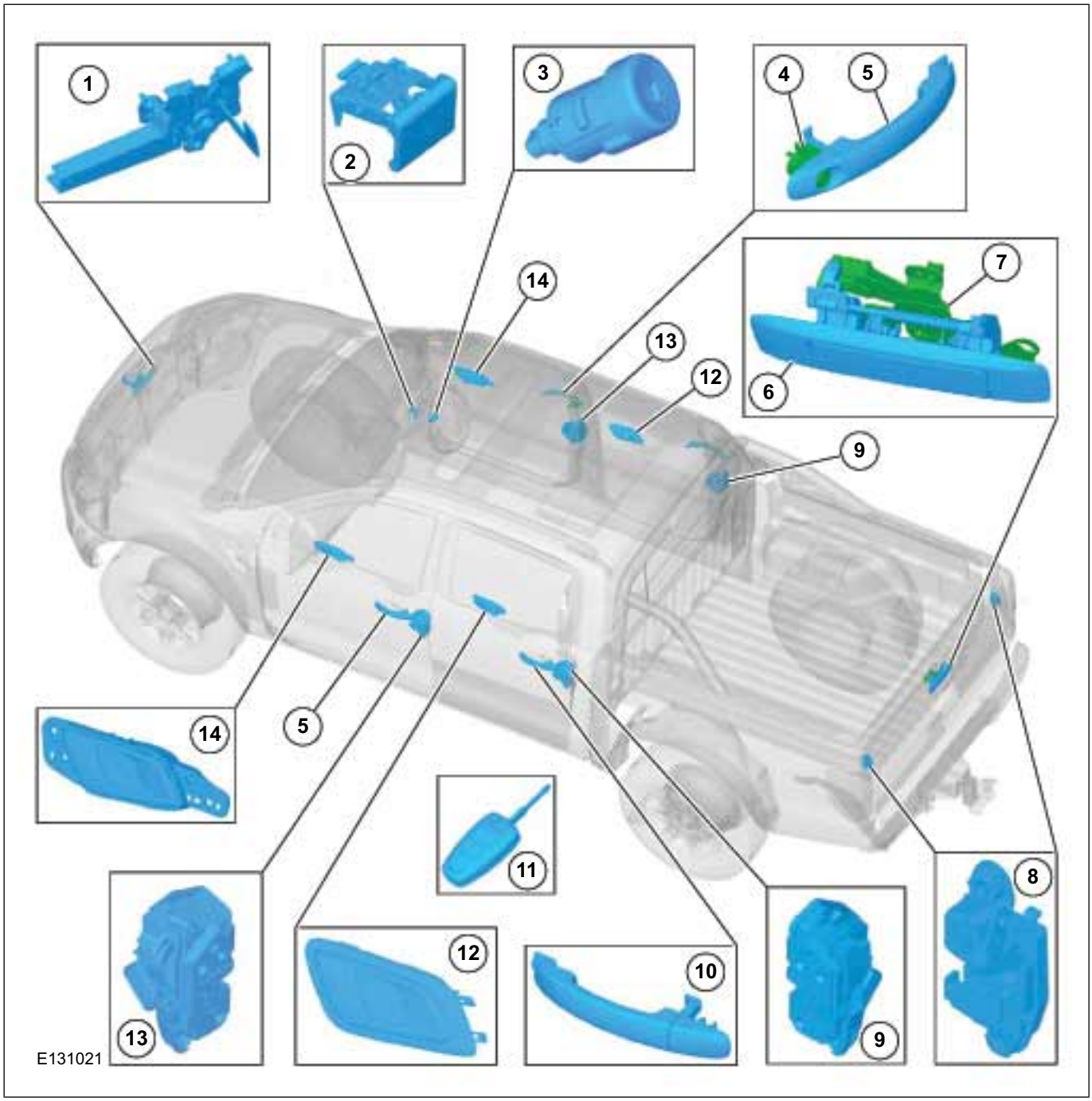

Item	Description
1	Hood latch
2	Hood latch release handle
3	Steering column ignition cylinder
4	Door lock cylinder
5	Front exterior door handle
6	Tailgate handle
7	Tailgate release handle
8	Tailgate latch

Item	Description
9	Rear door latch
10	Rear exterior door handle
11	Mechanical key with transmitter (radio frequency remote control)
12	Rear interior door handle
13	Front door latch
14	Front interior door handle

Vehicles with RKE (remote keyless entry) super cab

DESCRIPTION AND OPERATION

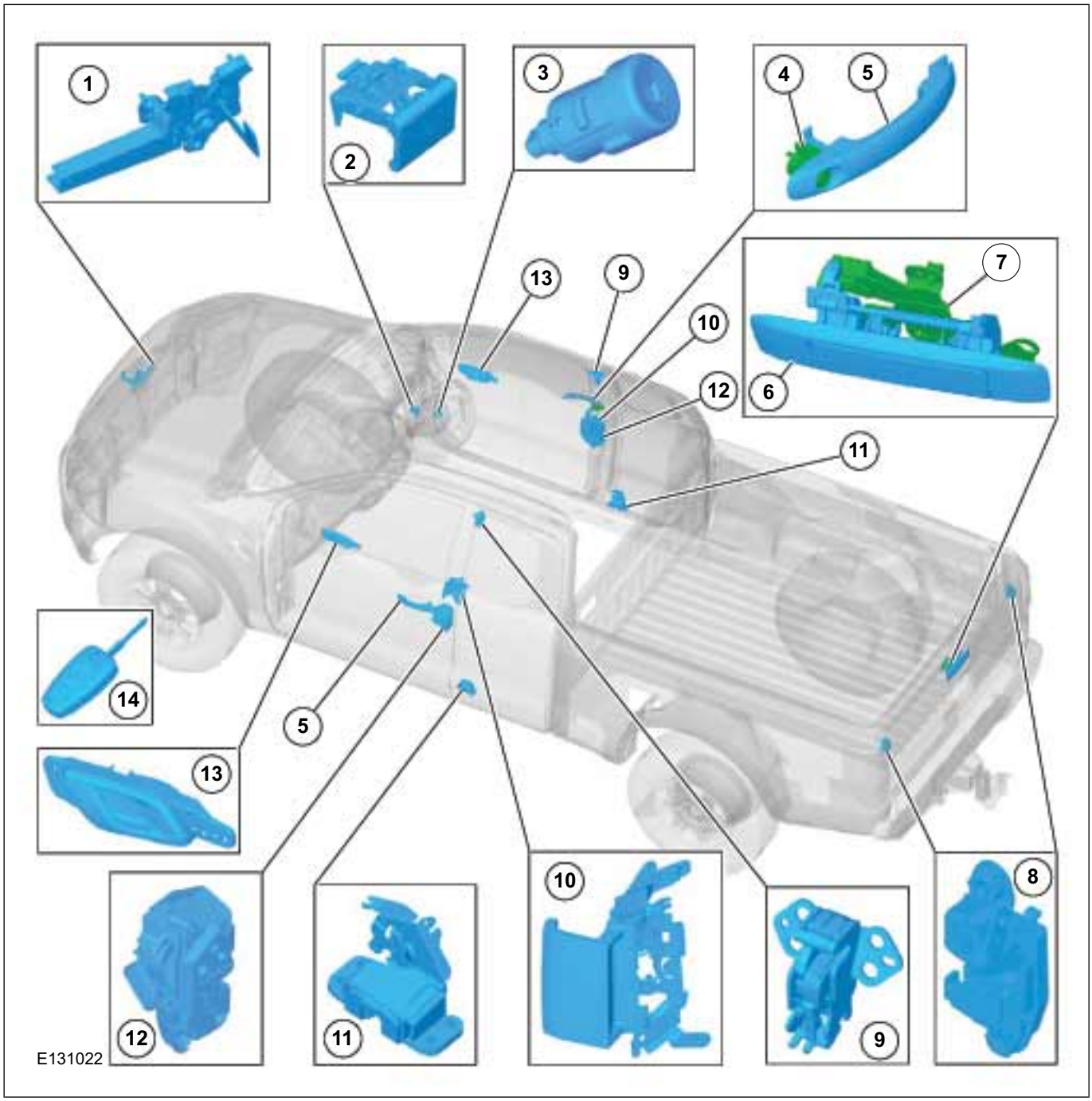

Item	Description
1	Hood latch
2	Hood latch release handle
3	Steering column ignition cylinder
4	Door lock cylinder
5	Front exterior door handle
6	Tailgate handle
7	Tailgate release handle
8	Tailgate latch

Item	Description
9	Rear door upper latch
10	Rear door interior handle
11	Rear door lower latch
12	Rear interior door handle
13	Front interior door latch
14	Mechanical key with transmitter (radio frequency remote control)

DESCRIPTION AND OPERATION

General

When one of the buttons on the remote control is pressed, a coded HF radio signal is sent from the transmitter in the mechanical key. This signal is received by the RF receiver located in the BCM (body control module), which decodes the signal. If the coded signal is valid, the BCM will operate the latches.

Unlocking is confirmed by one long flash of the turn signal lamps, when the unlocking is completed.

There are various circumstances in which remote unlocking is not possible:

- The radio transmitter or receiver is overloaded because of radio interference.
- The key (electronics) is damaged.
- The battery in the key is discharged.
- The overload protection of the door latches is active (after too many operations).

As well as remote keyless entry, the vehicle can be locked and unlocked using the lock cylinder in the driver's door. If RKE is not fitted, the vehicle can also been unlocked using the lock cylinder in the passenger's door. The lock cylinder is mechanically connected to a switch, which is linked to the BCM.

Double Locking

The double locking system has the same functionality of central locking but also prevents the doors from being opened from inside using the interior door handles.

The double locking function is actuated if one of the following conditions is satisfied:

- A key is inserted into a door cylinder lock and turned to the "locking" position twice within 3 seconds.
- The locking button on the remote transmitter is pressed twice within 3 seconds.

Confirmation that the vehicle is double locked is also given by two short flashes of the turn signal lamps, when the double locking process is completed. The ordinary central locking in this case will be signaled by a single short flash of the turn signal lamps.

Door latch for single cab

The front door entry system contains a latch that is fastened to the inside of the door frame and is controlled by the exterior and interior door handles. The latch contains the door ajar switch and door lock actuator. The front doors are locked/unlocked by the Remote Keyless Entry (RKE) transmitter, lock/unlock button inside the vehicle or the driver door lock cylinder.

The door latches have electric motors to operate the locking and double locking function. The electric motors are actuated directly by the BCM.

When the door latch is locked, the exterior door handle is disengaged from the door latch.

A control switch is incorporated in the door latch in the driver's door. This control switch monitors the position of the door latch and reports the information to the BCM. This information is sent to the BCM for use in warning systems, locking functions and anti-theft alarm systems.

Door latch for double cab

The front door entry system contains a latch that is fastened to the inside of the door frame and is controlled by the exterior and interior door handles. The latch contains the door ajar switch and door lock actuator. The front doors are locked/unlocked by the Remote Keyless Entry (RKE) transmitter, lock/unlock button inside the vehicle or the driver door lock cylinder.

The rear door entry system contains a latch that is fastened to the inside of the door frame and is controlled by the exterior and interior door handles. The latch contains the door ajar switch and door lock actuator. The rear doors can be locked/unlocked by the RKE transmitter, lock/unlock button inside the vehicle. The rear doors have a child safety lock feature, which is a manual lock on the inside of the rear door frame. When the child safety feature is on, the rear doors cannot be opened from the interior door handle.

The door latches have electric motors to operate the locking and double locking function. The electric motors are actuated directly by the BCM.

When the door latch is locked, the exterior door handle is disengaged from the door latch.

A control switch is incorporated in the driver's door latch. This control switch monitors the position of the door latch and reports the information to the BCM. This information is sent to the BCM for use in warning systems, locking functions and anti-theft alarm systems.

Door latch for super cab

The front door entry system contains a latch that is fastened to the inside of the door frame and is controlled by the exterior and interior door handles.

DESCRIPTION AND OPERATION

The latch contains the door ajar switch and door lock actuator. The front doors are locked/unlocked by the Remote Keyless Entry (RKE) transmitter, lock/unlock button inside the vehicle or the driver door lock cylinder.

The front door latches have electric motors to operate the locking and double locking function. The electric motors are actuated directly by the BCM.

When the front door latch is locked, the exterior door handle is disengaged from the door latch.

A control switch is incorporated in the driver's door latch. This control switch monitors the position of the door latch and reports the information to the BCM. This information is sent to the BCM for use in warning systems, locking functions and anti-theft alarm systems.

The rear door entry system contains a latch that is fastened to the inside of the door frame and is controlled by the exterior and interior door handles. The latch contains the door ajar switch . No lock actuators or mechanisms are fitted to the rear doors, as the front door must be open in order to access the rear door latch.

Tailgate latch

The lock cylinder is optional. If equipped, the tailgate release handle is integrated with a lock cylinder. The tailgate is not linked to the central locking system.

Hood Latch

The hood latch system contains a latch fastened to the body and a hood latch striker attached to the hood. The latch is controlled by the hood latch release handle and cable.

GENERAL PROCEDURES

Remote Keyless Entry (RKE) Transmitter Programming

Programming

1. To programme new remote controls turn the ignition key to position II four times within six seconds.
2. Turn the ignition to position 0. A tone sounds to indicate that it is now possible to programme the remote controls for ten seconds.
3. Press any button on a new remote control. A tone will sound as confirmation.
4. Repeat this last step for all your remote controls, including your original. Do not remove the key from the ignition when pressing the button on this remote control.
5. Switch the ignition back on (position II) or wait for ten seconds without programming another remote control to end the key programming. Only the remote controls which you have just programmed are now able to lock and unlock the vehicle.

REMOVAL AND INSTALLATION

Ignition Lock Cylinder

General Equipment

Punch

Removal

NOTE: Removal steps in this procedure may contain installation details.

1. Refer to: Passive Anti-Theft System (PATS) Transceiver (419-01 Anti-Theft - Passive, Removal and Installation).
2. 1. Turn the ignition key to position I.
   2. Using a suitable punch, release the locking tang.

   General Equipment: Punch

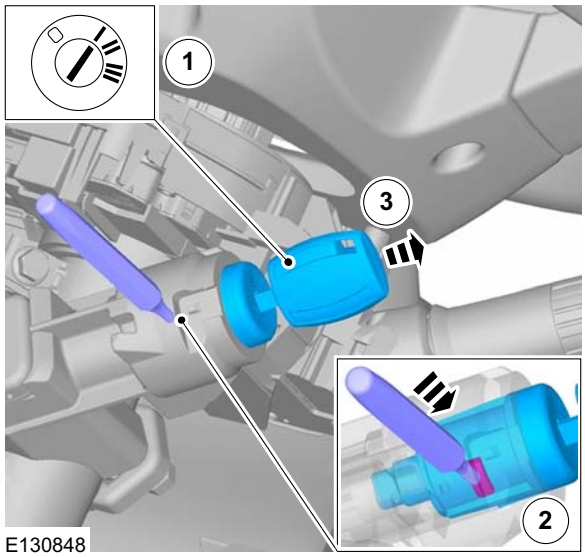

Installation

1. **CAUTION: Make sure that the ignition switch and the ignition lock cylinder are aligned before installation.**

   To install, reverse the removal procedure.

REMOVAL AND INSTALLATION

Front Door Latch

Removal

NOTE: Removal steps in this procedure may contain installation details.

NOTE: Make sure that door window glass remains in the close position.

1. Refer to: Exterior Front Door Handle (501-14 Handles, Locks, Latches and Entry Systems, Removal and Installation).
2. Refer to: Front Door Trim Panel (501-05 Interior Trim and Ornamentation, Removal and Installation).
3. **CAUTION: Do not touch the adhesive surface as re-bonding will be impaired.**

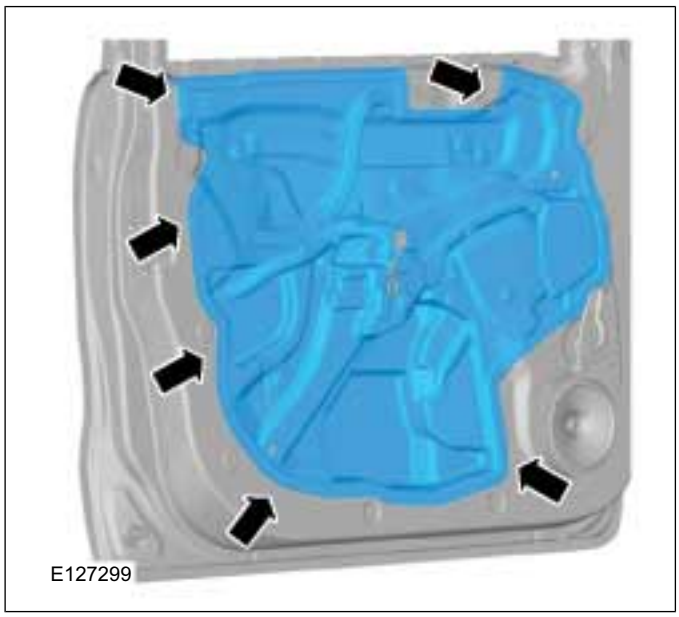

4.

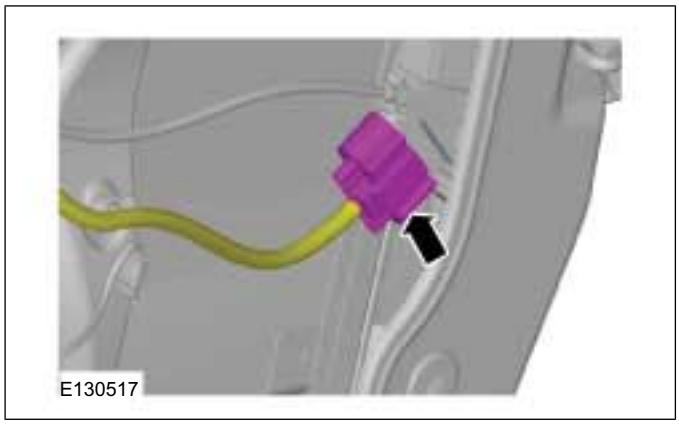

5. Torque: 10 Nm

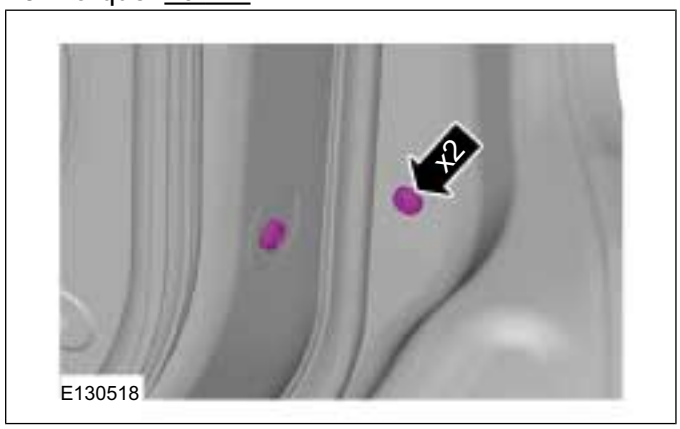

6.

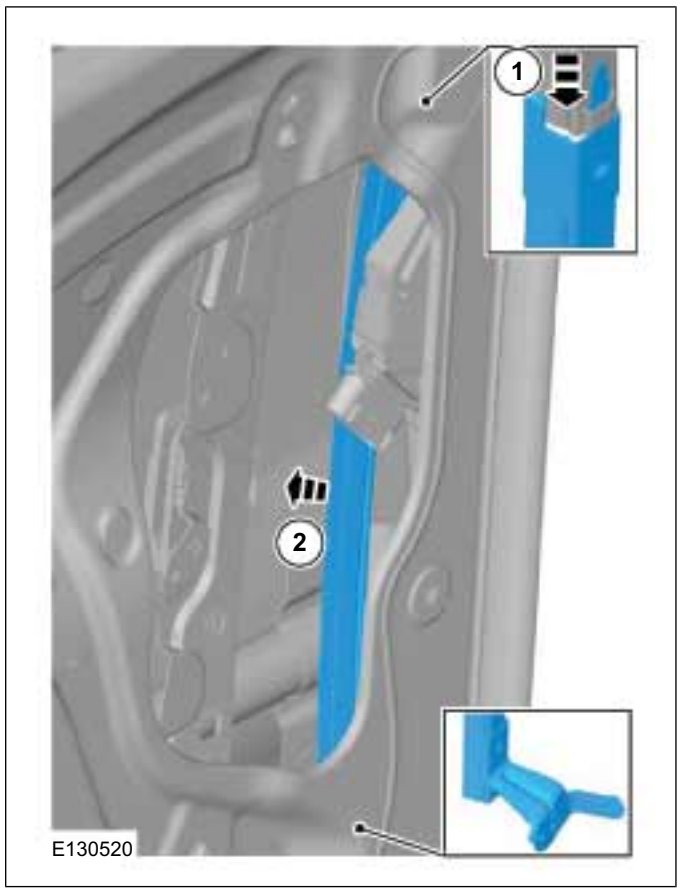

REMOVAL AND INSTALLATION

7.

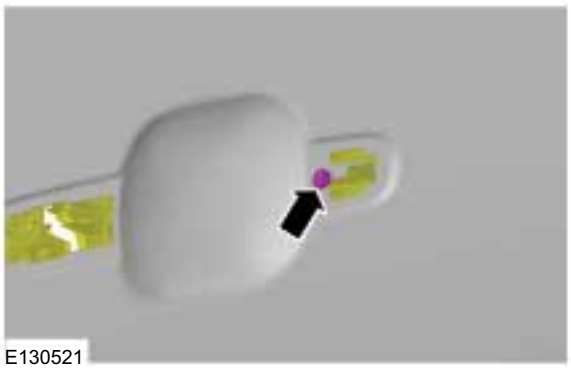

8. Torque: 12 Nm

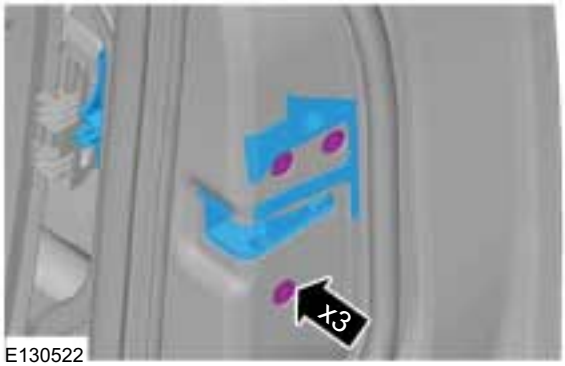

9.

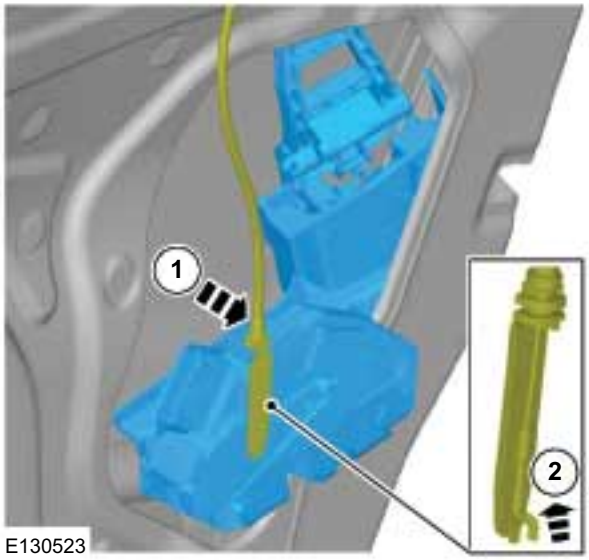

10.

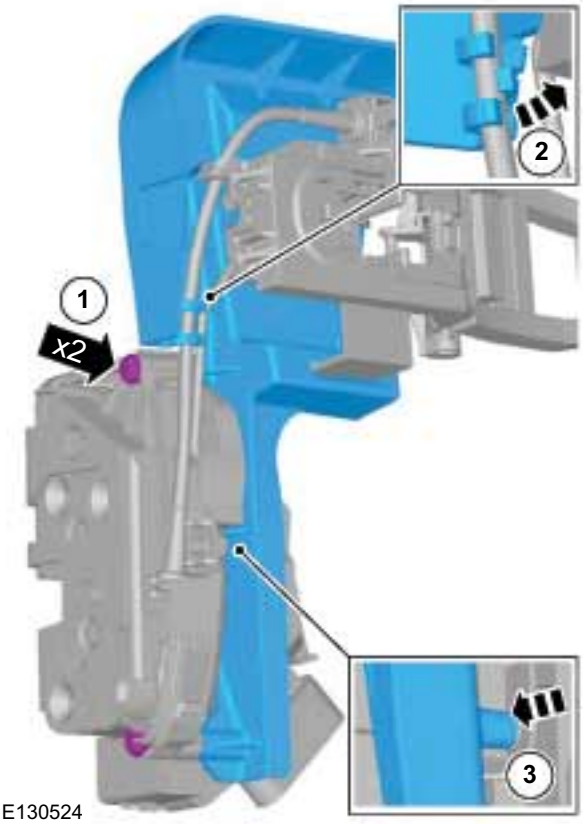

11.

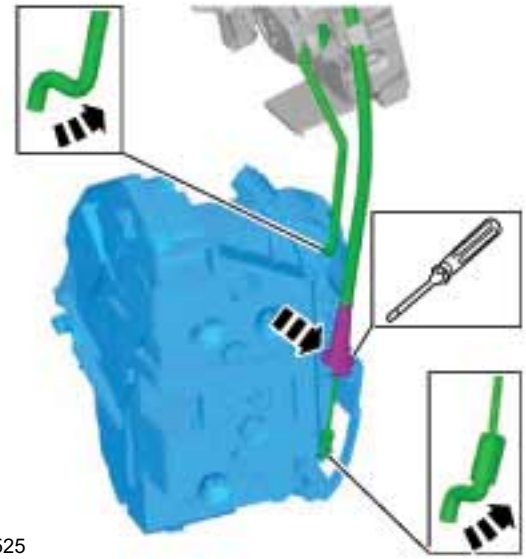

Installation

1. To install, reverse the removal procedure.

REMOVAL AND INSTALLATION

Rear Door Latch — Double Cab

Removal

NOTE: Removal steps in this procedure may contain installation details.

1. Refer to: Exterior Rear Door Handle (501-14 Handles, Locks, Latches and Entry Systems, Removal and Installation).
2. Refer to: Rear Door Trim Panel - Double Cab (501-05 Interior Trim and Ornamentation, Removal and Installation).
3.

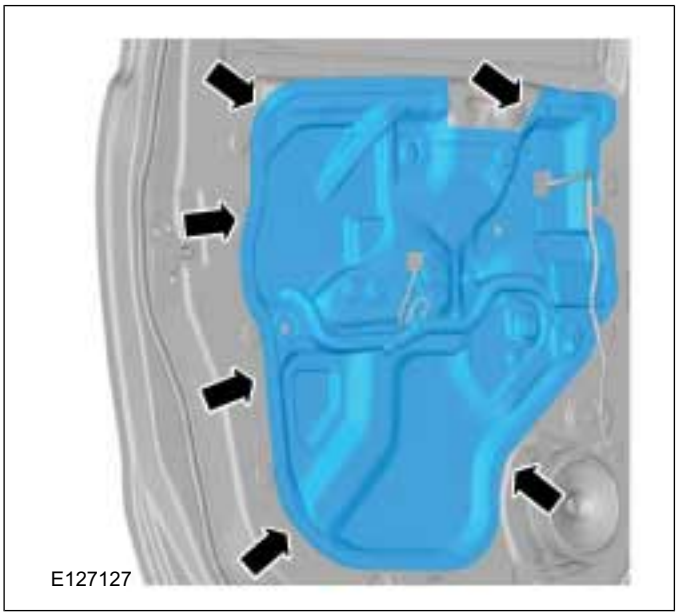
E127127

4.

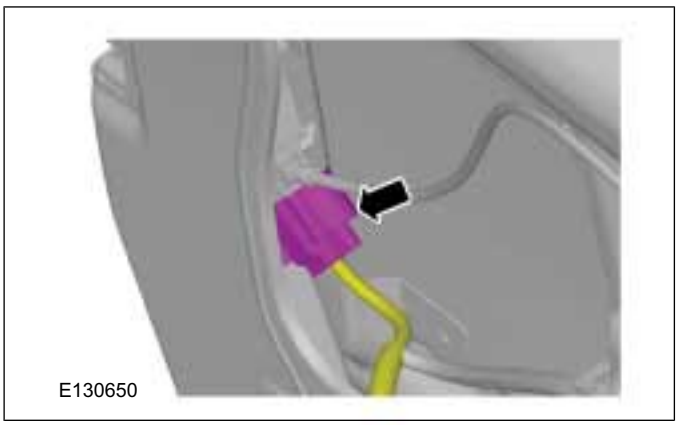
E130650

5.

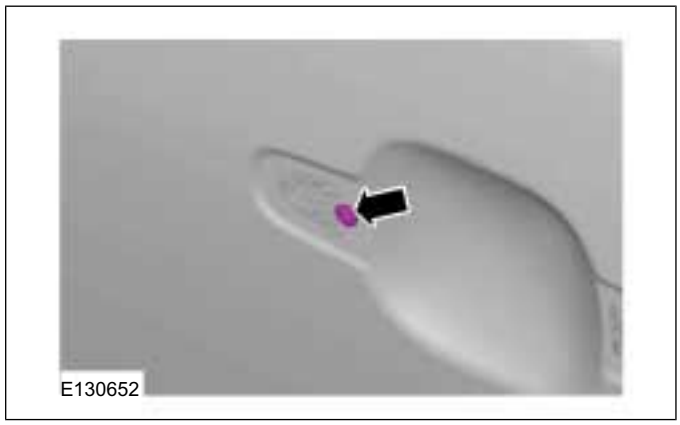
E130652

6. Torque: 12 Nm

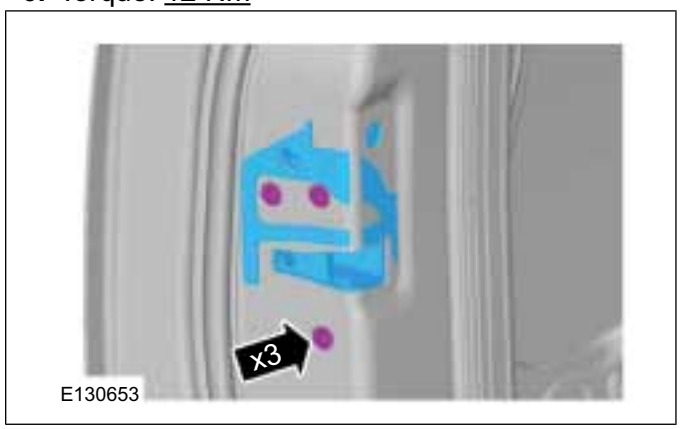

E130653

7.

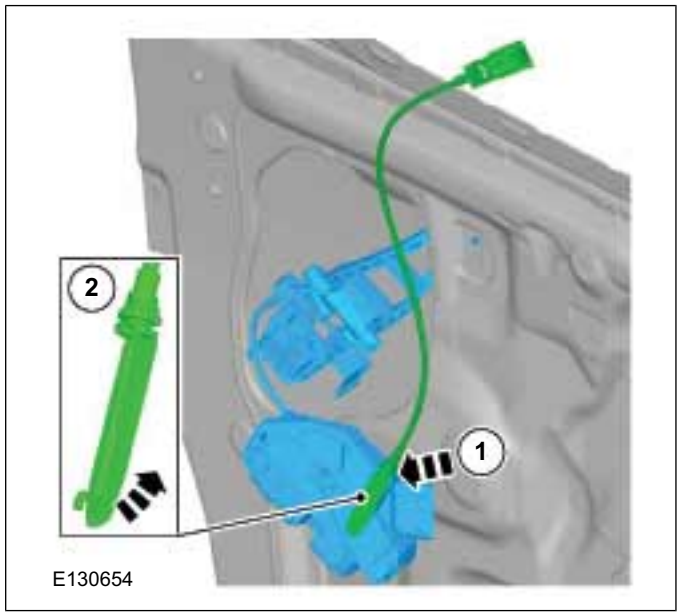

E130654

REMOVAL AND INSTALLATION

8.

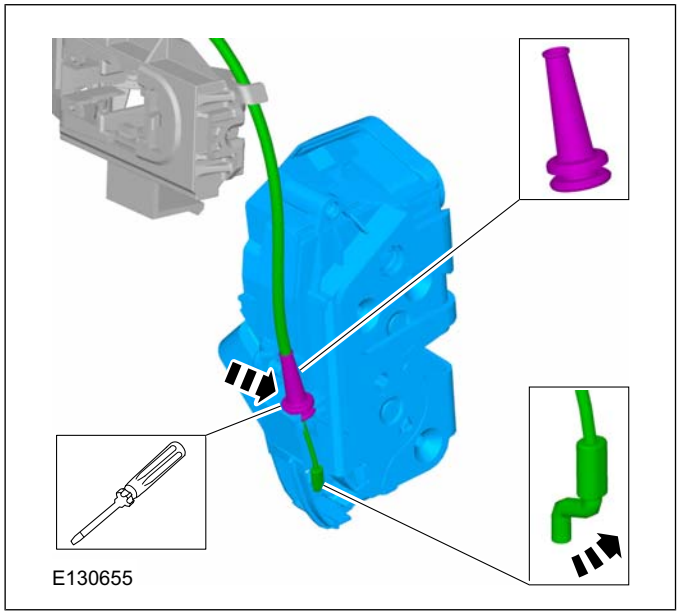

Installation

1. To install, reverse the removal procedure.

REMOVAL AND INSTALLATION

Rear Door Latch — Super Cab

Removal

NOTE: Removal steps in this procedure may contain installation details.

1. Refer to: Rear Door Trim Panel - Super Cab (501-05 Interior Trim and Ornamentation, Removal and Installation).

2.

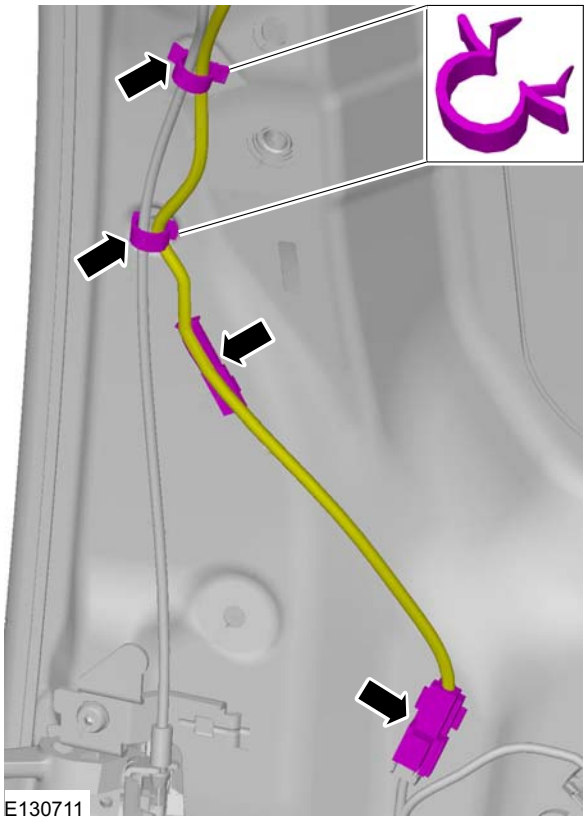

3. Torque: 10 Nm

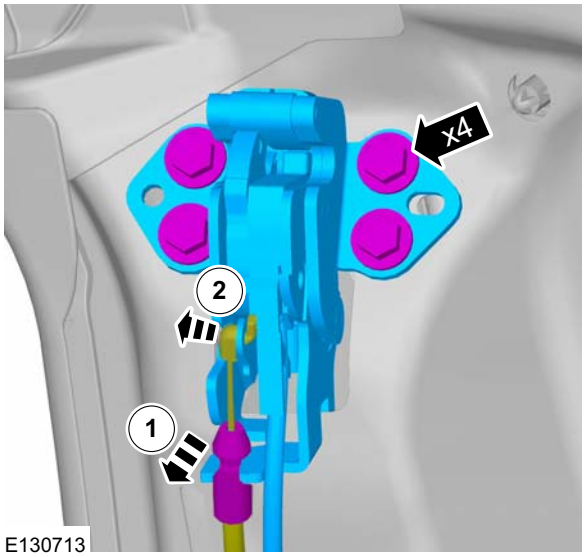

4.

REMOVAL AND INSTALLATION

5. Torque: 12 Nm

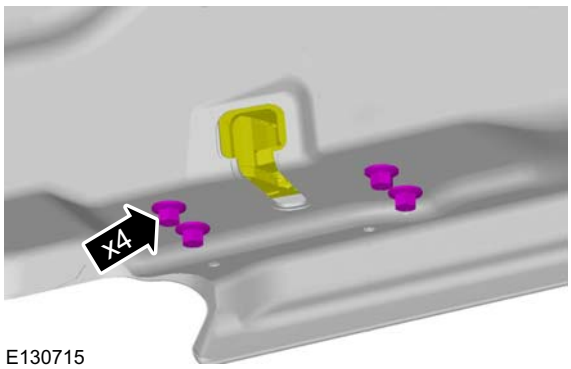

E130715

6.

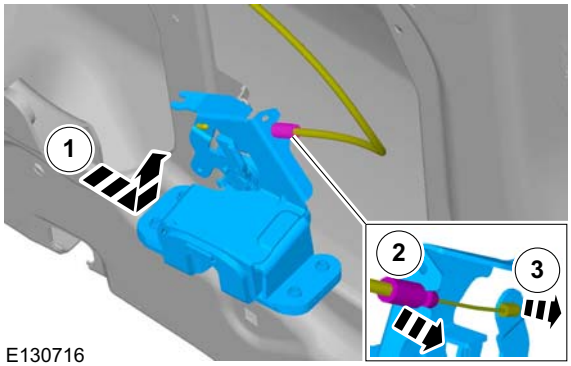

E130716

Installation

1. To install, reverse the removal procedure.

REMOVAL AND INSTALLATION

Exterior Front Door Handle

Removal

NOTE: Removal steps in this procedure may contain installation details.

1. **NOTE:** Use suitable tool to remove the cover.

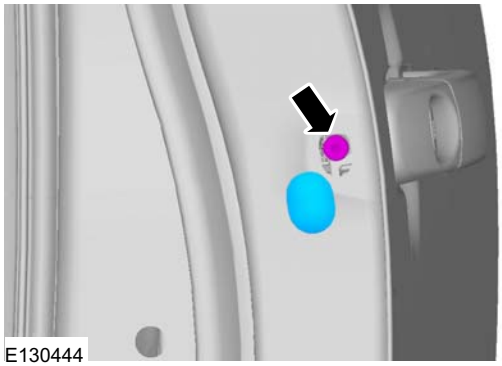

2.

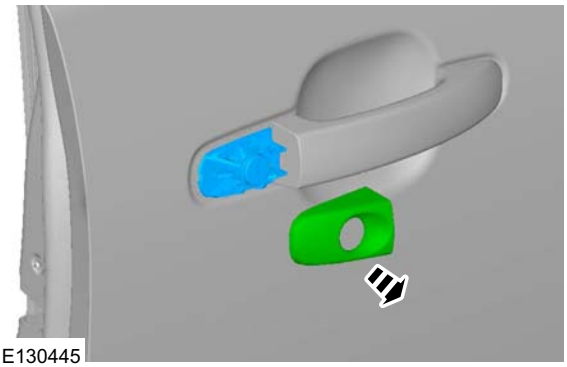

3.

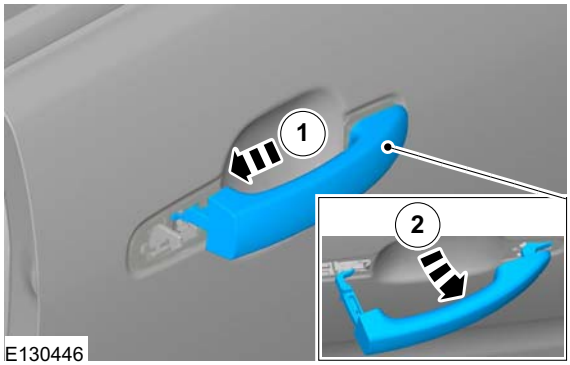

Installation

1. To install, reverse the removal procedure.

REMOVAL AND INSTALLATION

Exterior Rear Door Handle

Removal

NOTE: Removal steps in this procedure may contain installation details.

1. **NOTE:** Use suitable tool to remove the cover.

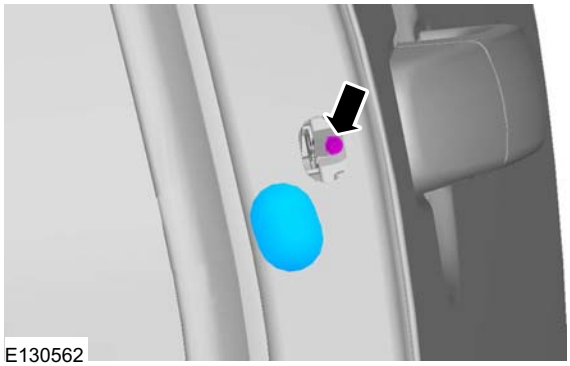

2.

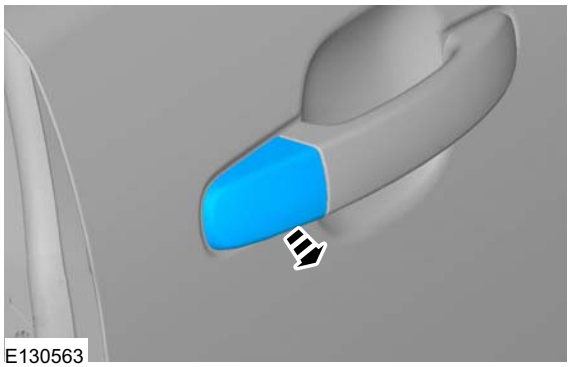

3.

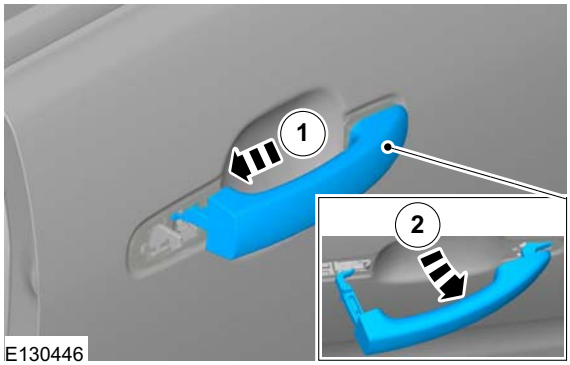

Installation

1. To install, reverse the removal procedure.

REMOVAL AND INSTALLATION

Hood Latch

Removal

NOTE: Removal steps in this procedure may contain installation details.

1.

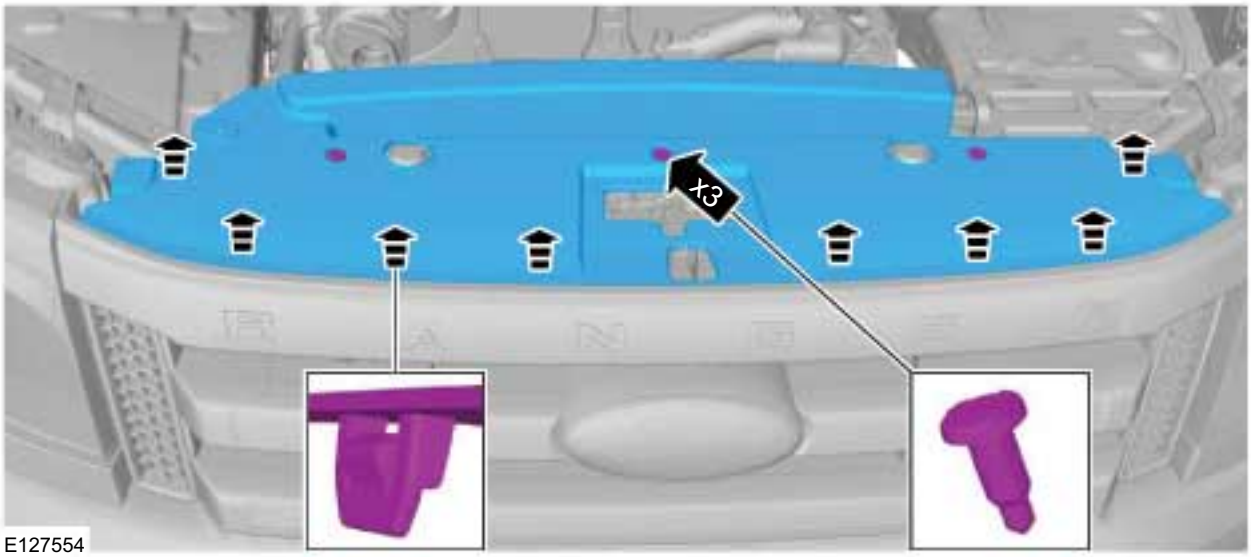

2. **NOTE:** Mark the position of the hood latch prior to removing the hood latch bolts to aid positioning during installation.

Torque: 11 Nm

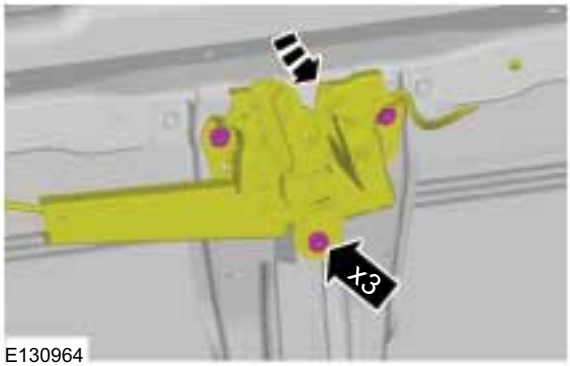

3. 3. If equipped.

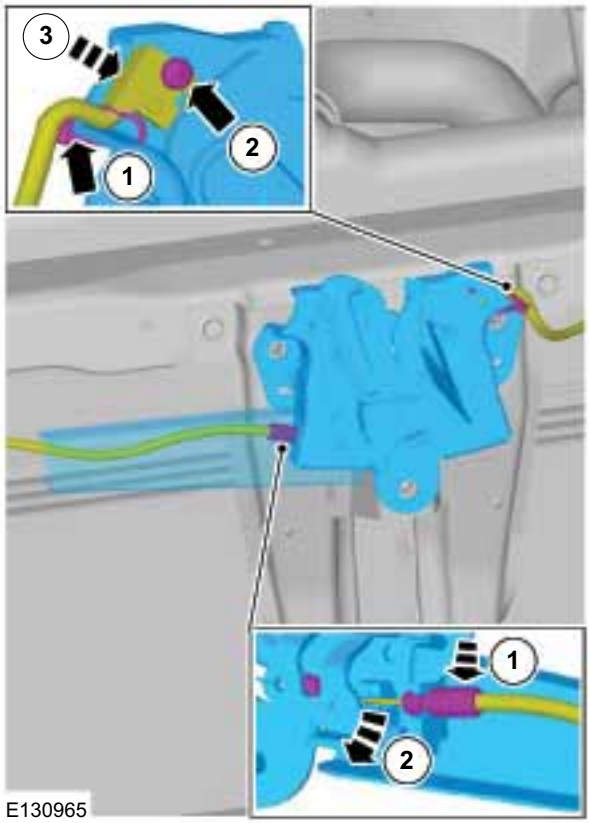

REMOVAL AND INSTALLATION

Installation

1. **CAUTION: Make sure that the clearance on either side of the hood is equal and no strain is placed on the hood latch.**

   NOTE: Check the latch adjustment to make sure the latch was installed and aligned correctly.

   To install, reverse the removal procedure.

REMOVAL AND INSTALLATION

Tailgate Release Handle

Removal

NOTE: Removal steps in this procedure may contain installation details.

1.

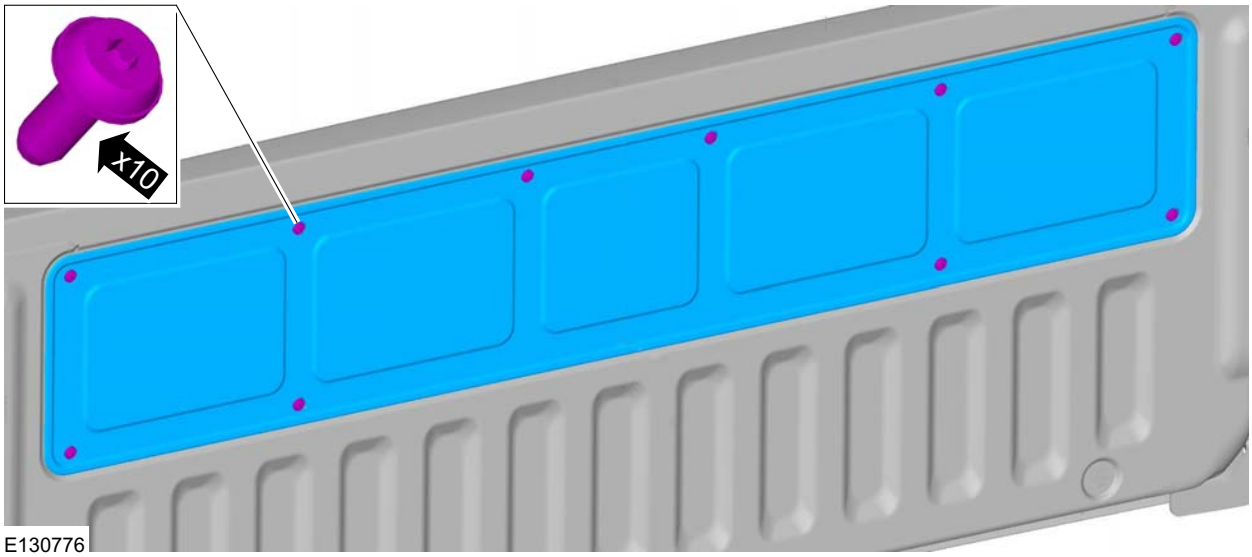

2. Torque: 8 Nm

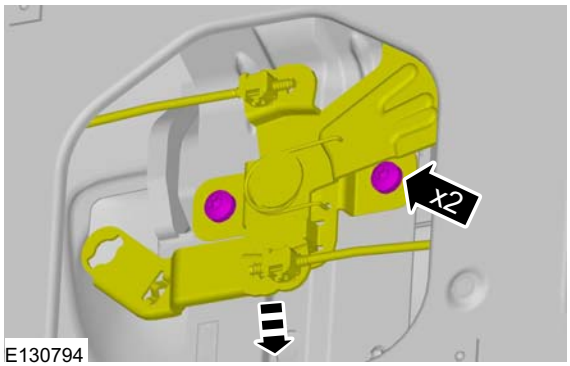

3.

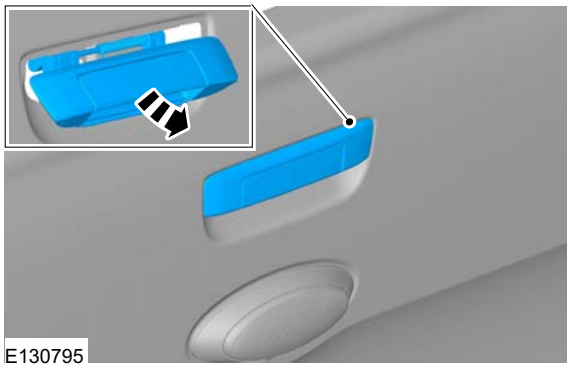

Installation

1. To install, reverse the removal procedure.

REMOVAL AND INSTALLATION

Tailgate Latch

Removal

NOTE: Removal steps in this procedure may contain installation details.

1.

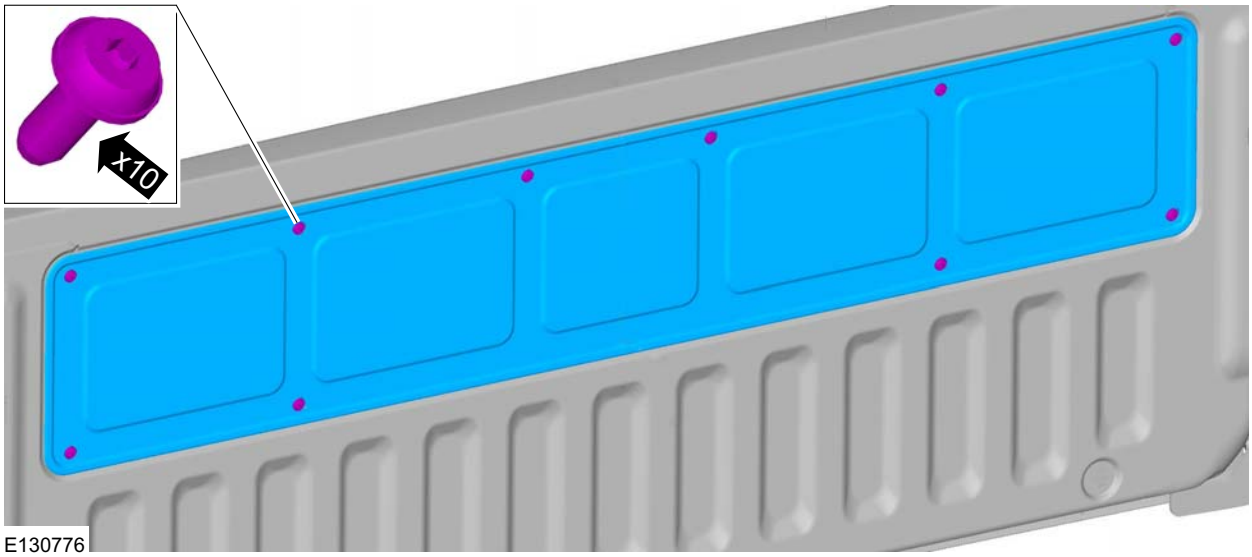

2.

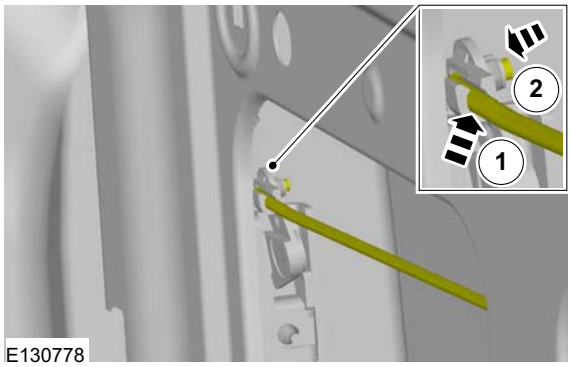

3. Torque: 25 Nm

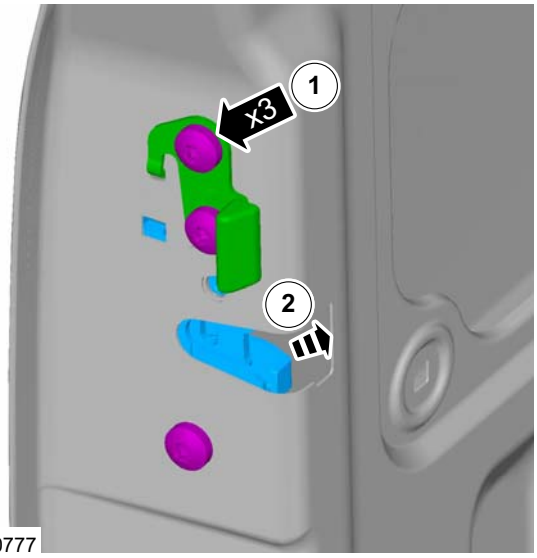

Installation

1. To install, reverse the removal procedure.

DISASSEMBLY AND ASSEMBLY

Door Lock Cylinder

General Equipment

2 mm Punch

Disassembly

NOTE: Removal steps in this procedure may contain installation details.

1. Refer to: Exterior Front Door Handle (501-14 Handles, Locks, Latches and Entry Systems, Removal and Installation).

2.

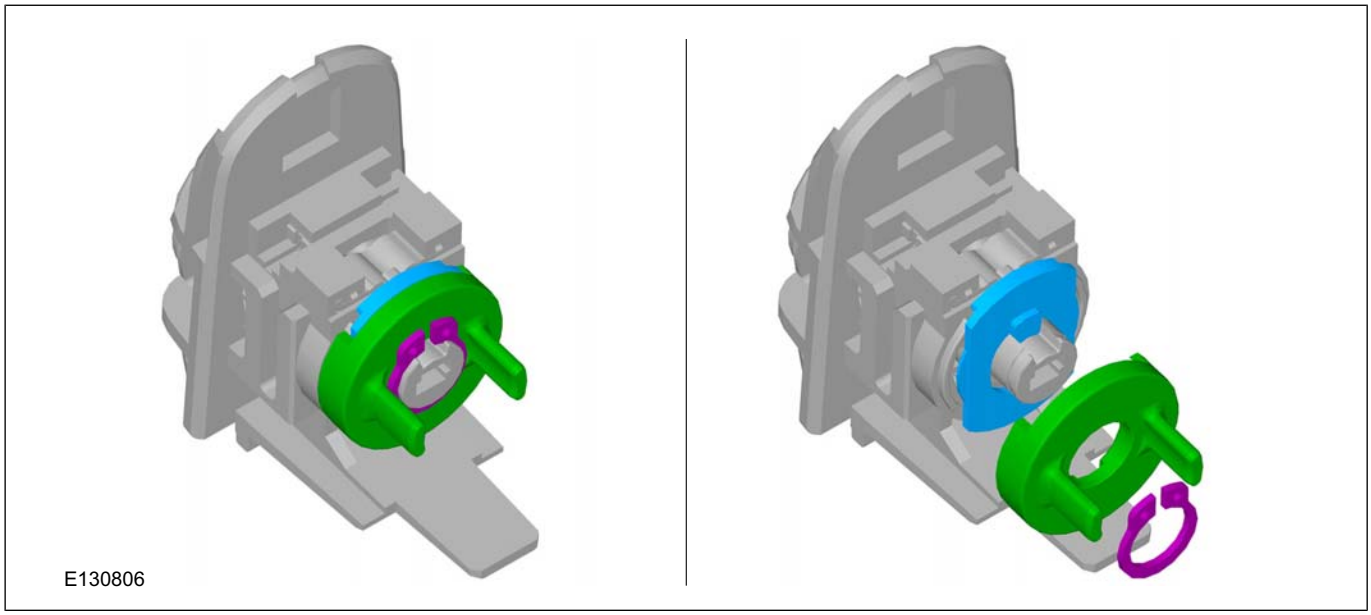

3.

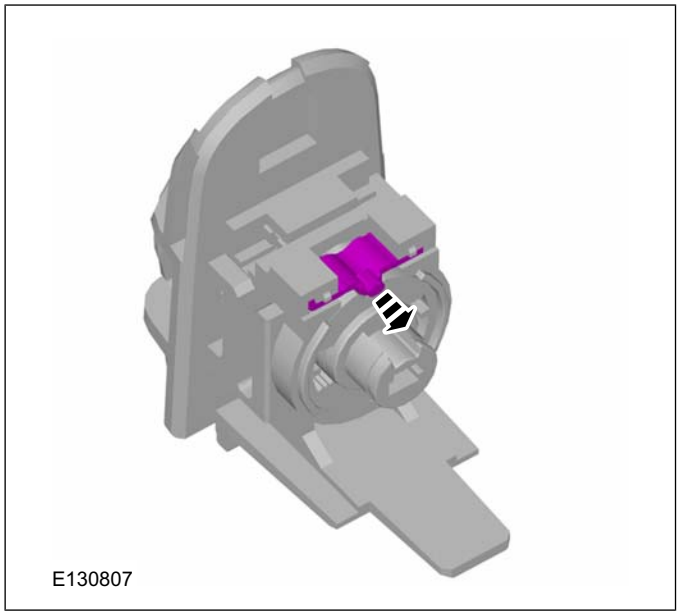

4.

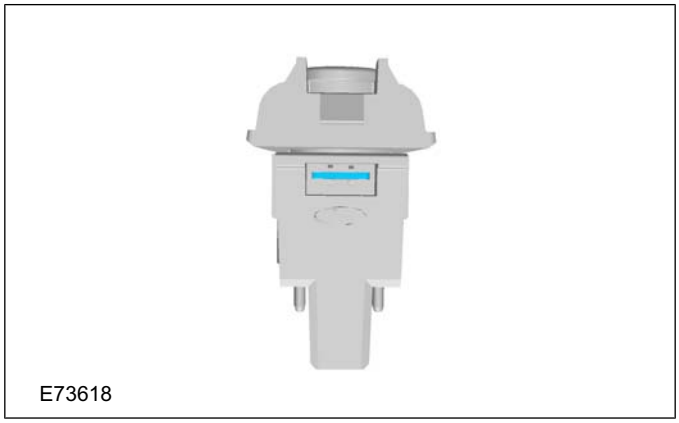

DISASSEMBLY AND ASSEMBLY

5. General Equipment: 2 mm Punch

E130809

7.

E130811

6.

E130810

8. ⚠ **CAUTION: Note the position of the components before removal.**

Make sure to read the key code from the key entry to the end of the lock barrel in sequence.

E130812

DISASSEMBLY AND ASSEMBLY

Assembly

NOTE: Make sure that new components are installed.

9. **CAUTION: Make sure that the components are installed to the position noted before removal.**

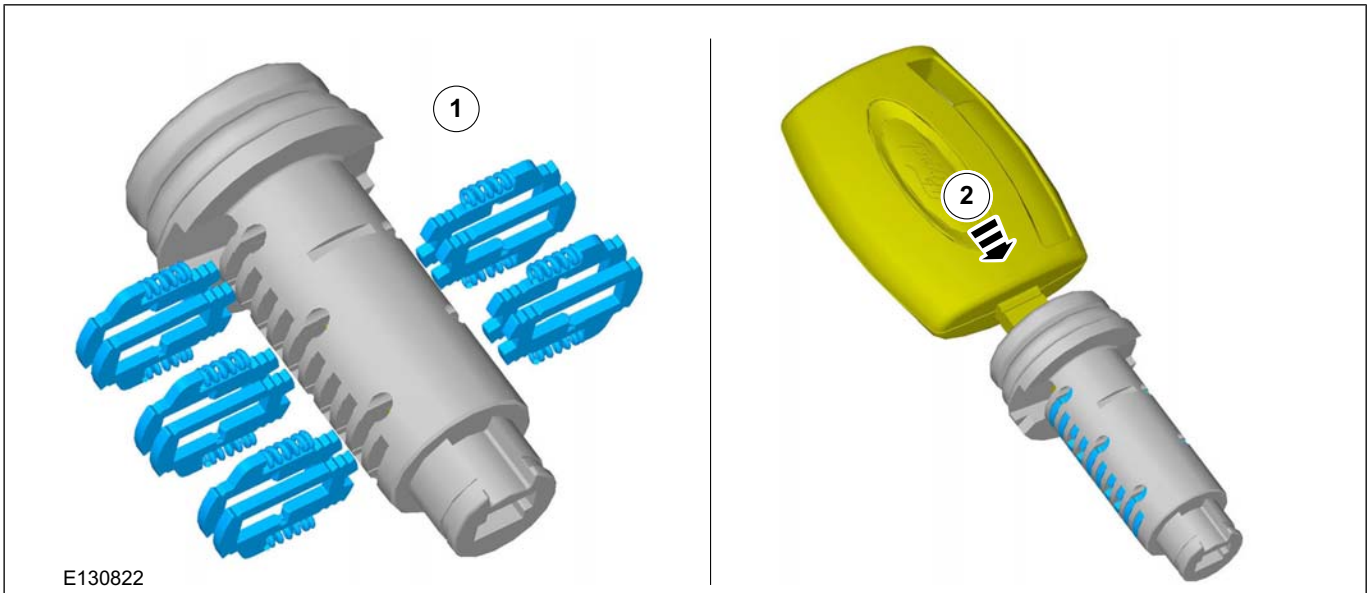

10.

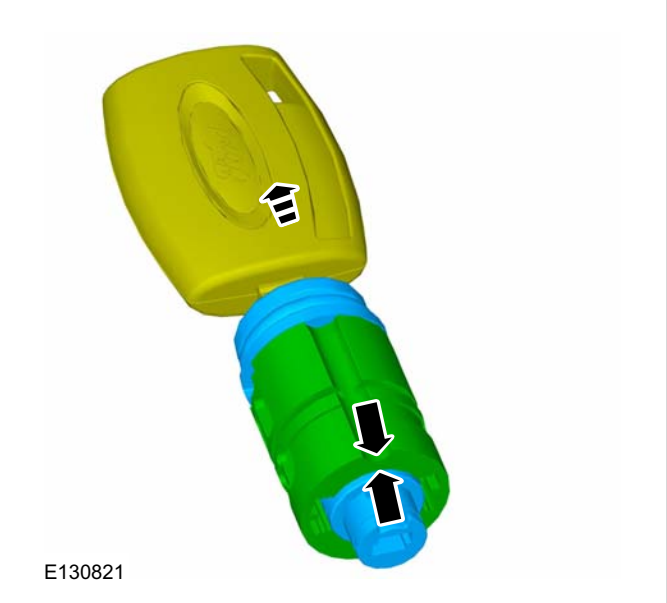

11.

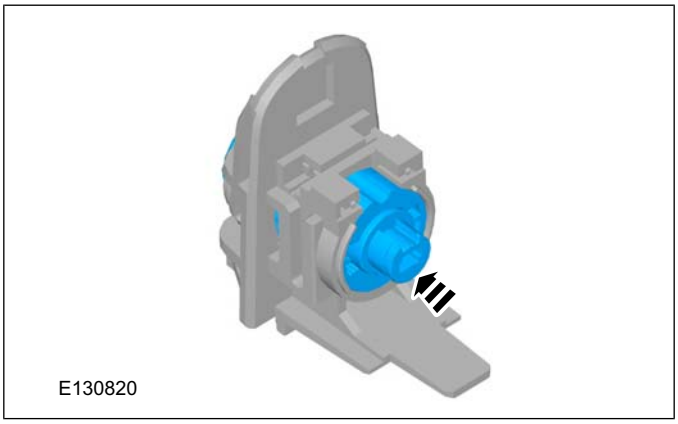

DISASSEMBLY AND ASSEMBLY

12. General Equipment: 2 mm Punch

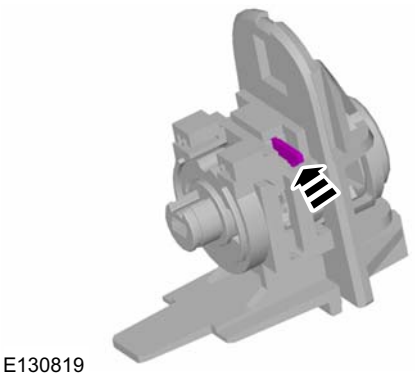

13.

14. **NOTE:** The component can only be installed in 1 position.

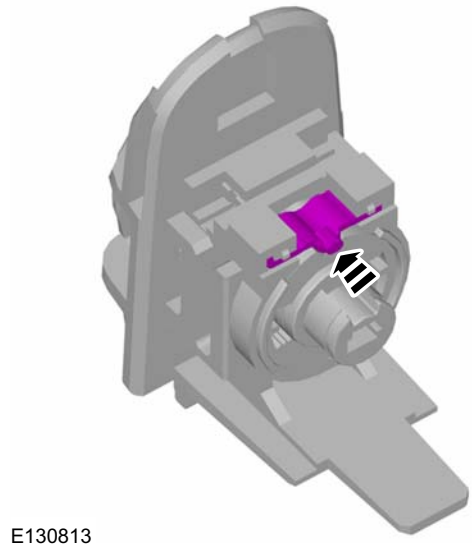

15.

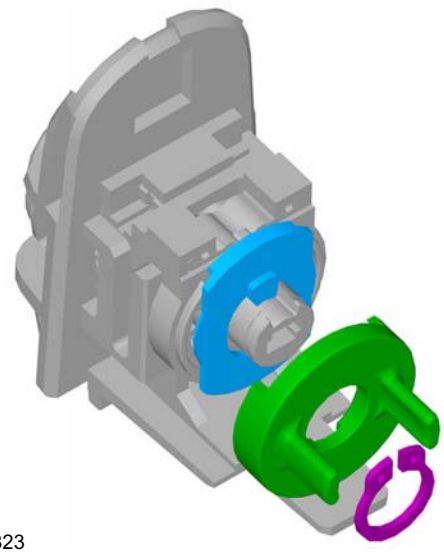

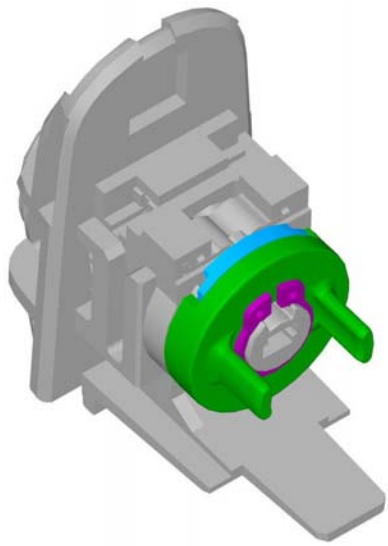

16. To assemble, reverse the disassembly procedure.

SECTION 501-16 Wipers and Washers

VEHICLE APPLICATION: 2011.50 Ranger

CONTENTS PAGE

DESCRIPTION AND OPERATION

Wipers and Washers..... 501-16-2

GENERAL PROCEDURES

Windshield Wiper Blade and Pivot Arm Adjustment..... 501-16-4

REMOVAL AND INSTALLATION

Windshield Wiper Motor..... 501-16-5
Wiper Linkage Assembly..... 501-16-6
Windshield Washer Reservoir..... 501-16-7

DESCRIPTION AND OPERATION

Wipers and Washers

CAUTION: The automatic windshield wipers must be switched off before the vehicle is driven into a car wash.

If the windshield is iced up, the wipers may only be activated by the rain sensor after the windshield has been completely defrosted.

NOTE: The rain sensor is an optical measuring instrument. Contamination such as oil, grease or dust impair its correct operation. Before switching on the automatic windshield wipers, the windshield must be clean in the area of the rain sensor.

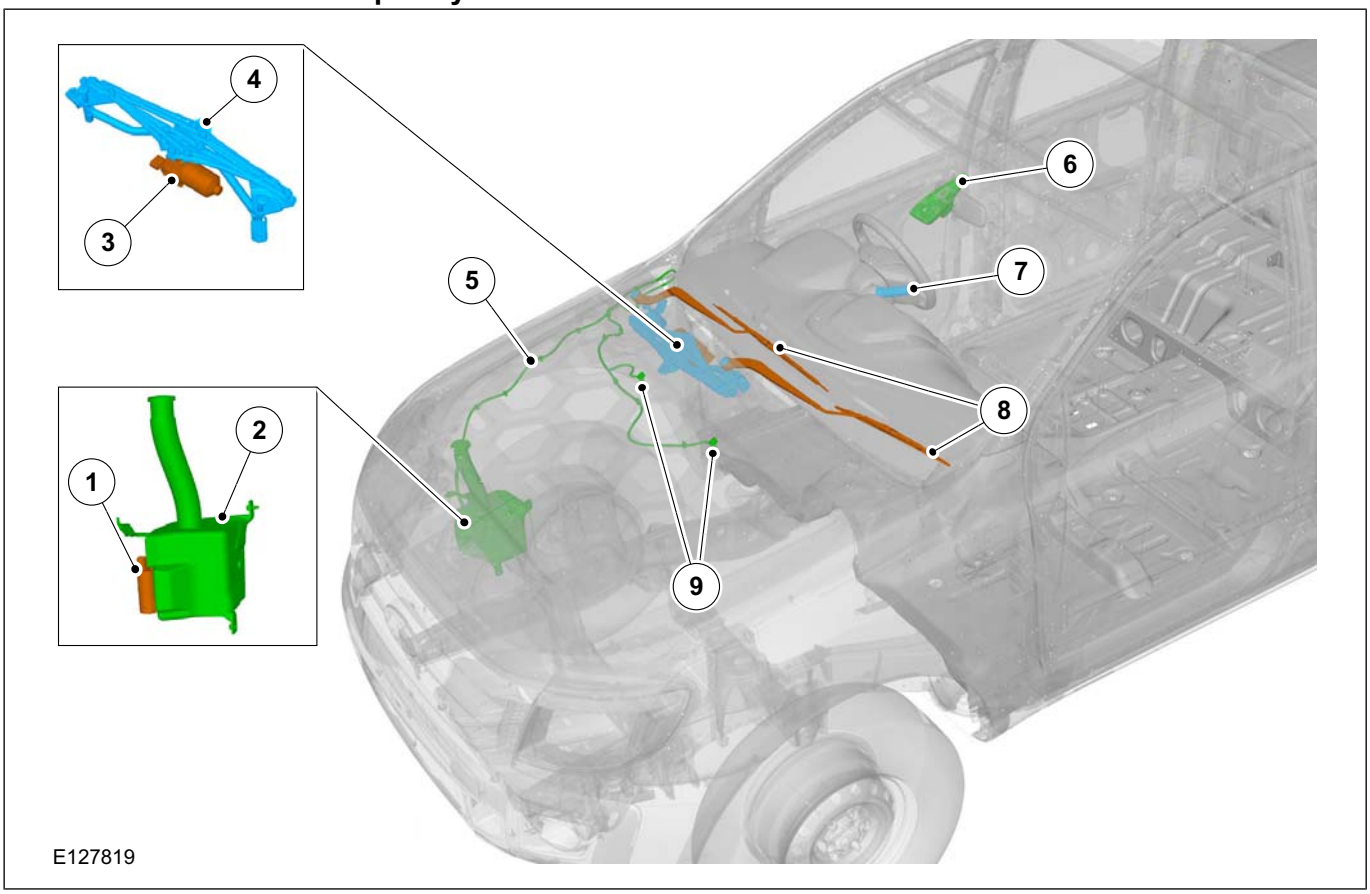

Item	Description
1	Windshield washer motor
2	Windshield washer tank
3	Windshield wiper motor
4	Windshield wiper linkage assembly
5	Windshield washer hose
6	Rain sensor
7	Windshield wiper and washer switch
8	Windshield wiper arm and blade
9	Windshield washer nozzle

The rain sensor (6) is integrated together with the light sensor in a housing which is mounted behind the rear view mirror on the windshield.

The rain sensor comprises an opto-electronic measuring and evaluation circuit. The sensor can calculate the amount of precipitation falling on the windshield and request that the windshield wipers are switched on.

On the basis of the information provided by the rain sensor, the windshield wipers are then set to the required wipe speed.

The windshield wash/wipe system will only operate if the ignition switch is in the position "I" or "II".

Five wash functions are available: "Off", "Flick-wipe", "Speed 1", "Speed 2" and "Intermittent" or "Automatic wipe" (depending on the vehicle specification).

In "Speed 1" or "Speed 2" mode, the wipers are operating continuously at either normal speed or fast speed.

DESCRIPTION AND OPERATION

When the intermittent wipe mode is switched on the windshield wipers operate at normal speed with the following wiper delays:

- Wiper delay 1: 1 second
- Wiper delay 2: 3.5 seconds
- Wiper delay 3: 6 seconds
- Wiper delay 4: 9,5 seconds
- Wiper delay 5: 15.5 seconds
- Wiper delay 6: 22 seconds

NOTE: In the event of a failure, or if the control resistor is not connected the default time for the wiper delay is 8 seconds.

When the windshield washer switch is operated washer fluid is sprayed onto the windshield. After a short delay designed to protect the wiper blades the wipers perform 2 or 3 wipes at low speed.

If when the windshield washer switch is activated the windshield wipers are switched off, then a single wipe is performed 4 seconds after the wipers have returned to the home position after performing the 2 or 3 wipes.

If when the windshield washer switch is activated the wipers are in intermittent mode, and if the selected wiper delay time is longer than 6 seconds, then a single wipe is performed 6 seconds after the wipers have returned to the home position after performing the 2 or 3 wipes. If the selected delay time is less than 6 seconds then no post wipe is required.

The post wipe function on the windshield ensures that any water remaining on the windshield after washing is wiped away. It is only required if the wipers are switched off or they are set to intermittent mode.

GENERAL PROCEDURES

Windshield Wiper Blade and Pivot Arm Adjustment

1. **Operate the windshield wipers, and then turn off the windshield wiper motor to set the wipers in the park position.**
2. **NOTE: If the hollowed mark in the ceramic coating cannot be located, measure the distance from the cowl grille end line, and adjust the windshield wiper arm and blade.**

   Slide the serrated connecting part and adjust the windshield wiper arm and blade so that its end is aligned with the hollowed mark in the ceramic coating.

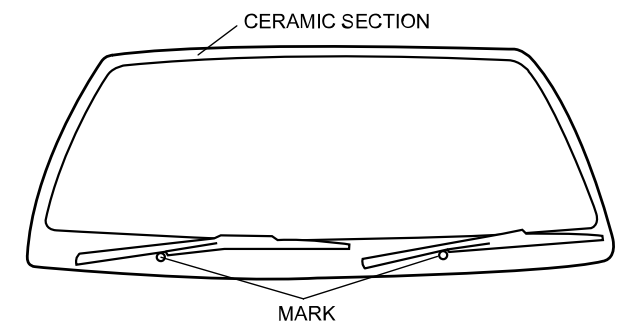

DCF919ZWB002

REMOVAL AND INSTALLATION

Windshield Wiper Motor

Removal

NOTE: Removal steps in this procedure may contain installation details.

1. Refer to: Wiper Linkage Assembly (501-16 Wipers and Washers, Removal and Installation).

2. Torque:
   - 1 21 Nm

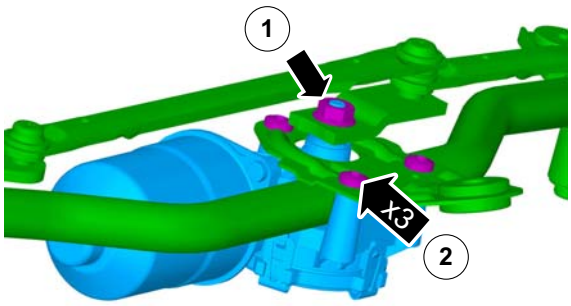

E134161

Installation

1. To install, reverse the removal procedure.

REMOVAL AND INSTALLATION

Wiper Linkage Assembly

Removal

NOTE: Removal steps in this procedure may contain installation details.

1. Refer to: Battery Disconnect and Connect (414-01 Battery, Mounting and Cables, General Procedures).
2. Refer to: Cowl Panel Grille (501-02 Front End Body Panels, Removal and Installation).
3. Torque: 10 Nm

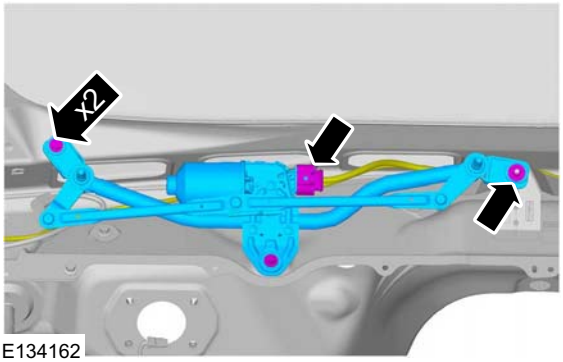

E134162

Installation

1. To install, reverse the removal procedure.

REMOVAL AND INSTALLATION

Windshield Washer Reservoir

Removal

CAUTIONS:

When servicing the windshield washer pump, be careful not to damage the windshield washer pump seal.

Do not operate the windshield washer pump before filling the windshield washer reservoir. Failure to do so could result in premature pump failure.

NOTE: Removal steps in this procedure may contain installation details.

1. Refer to: Battery Disconnect and Connect (414-01 Battery, Mounting and Cables, General Procedures).
2. Refer to: Lifting (100-02 Jacking and Lifting, Description and Operation).
3. Refer to: Wheel and Tire (204-04 Wheels and Tires, Removal and Installation).
4.

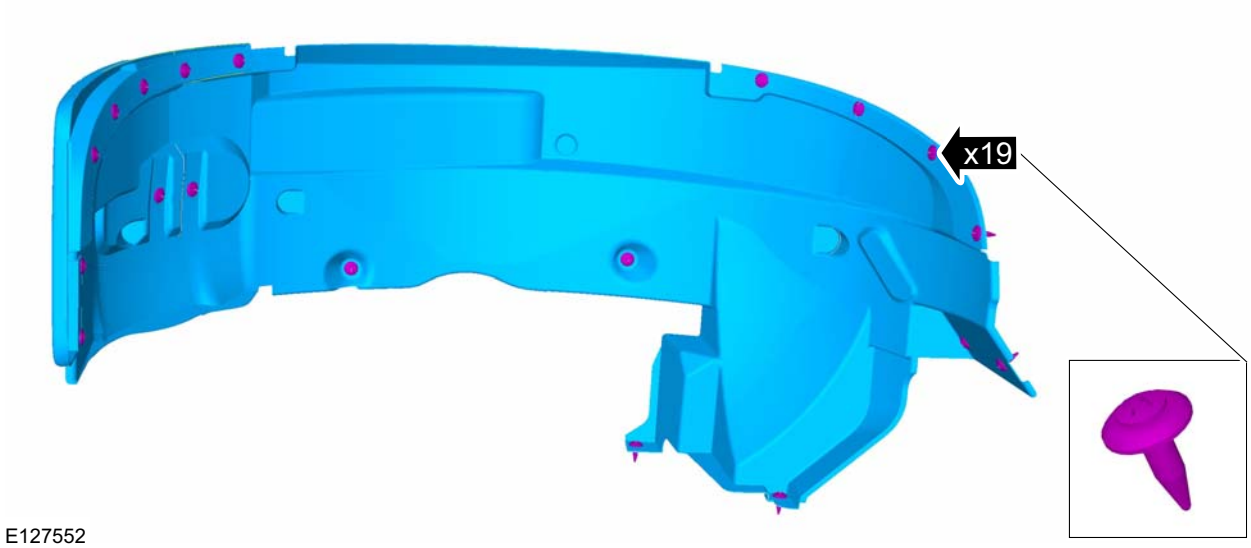

5. Torque:
   - 2 4 Nm
   - 3 8 Nm

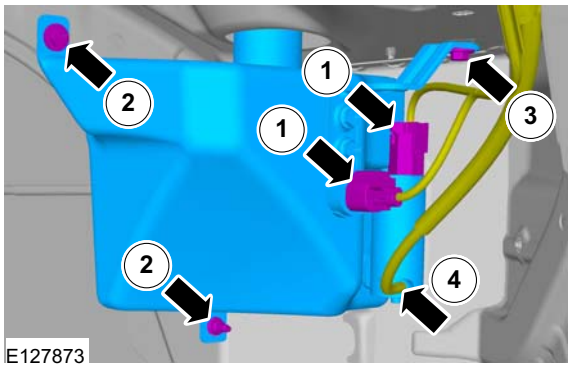

Installation

1. To install, reverse the removal procedure.

SECTION 501-19 Bumpers

VEHICLE APPLICATION: 2011.50 Ranger

CONTENTS PAGE

REMOVAL AND INSTALLATION

Front Bumper..... 501-19-2
Front Bumper Cover..... 501-19-4
Rear Bumper..... 501-19-9

REMOVAL AND INSTALLATION

Front Bumper

Removal

NOTE: Removal steps in this procedure may contain installation details.

1. Refer to: Front Bumper Cover (501-19 Bumpers, Removal and Installation).

2.

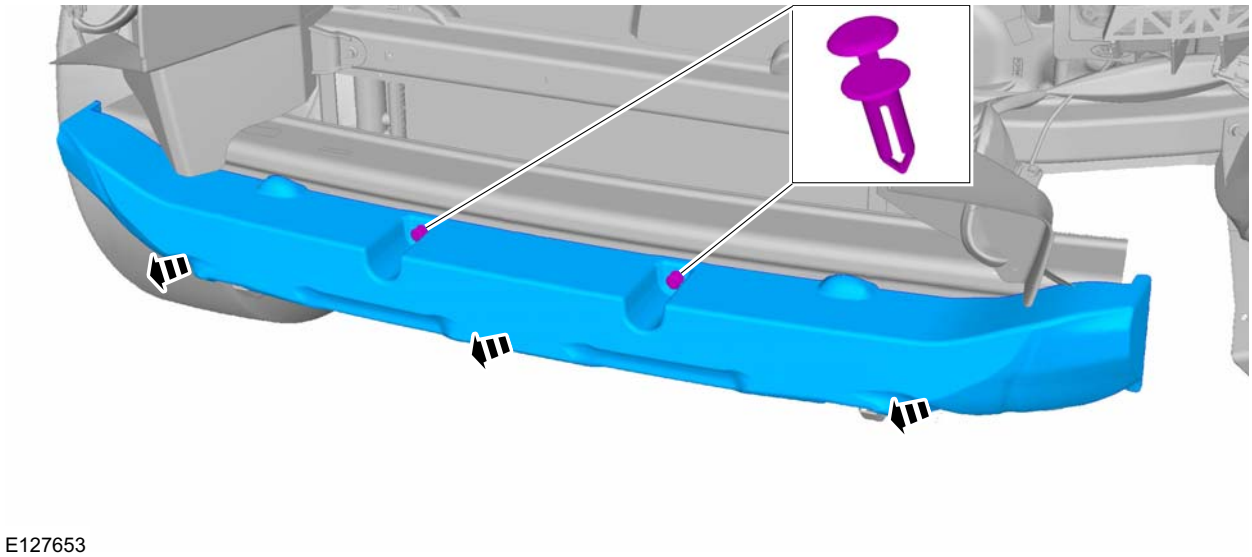

3. Torque: 30 Nm

4. Torque: 47 Nm

REMOVAL AND INSTALLATION

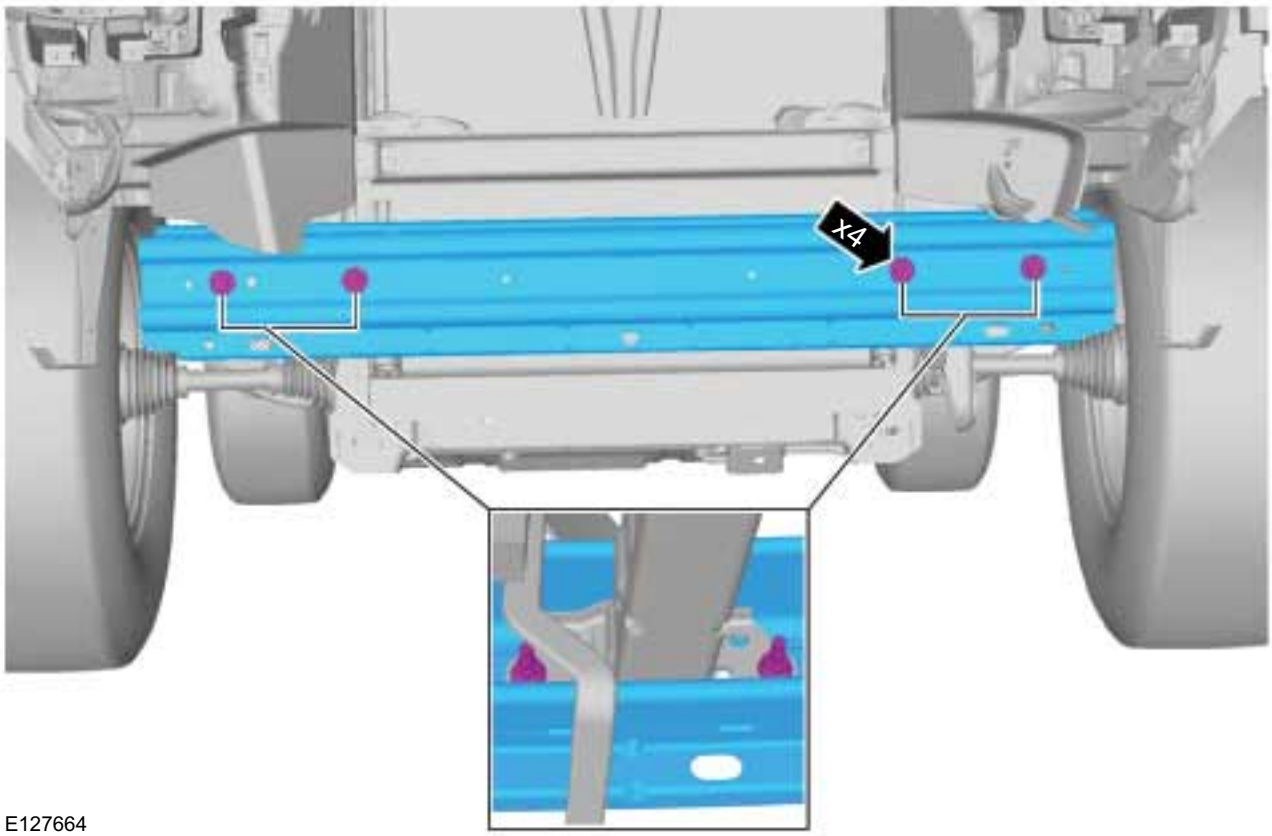

Installation

1. To install, reverse the removal procedure.

REMOVAL AND INSTALLATION

Front Bumper Cover

Removal

NOTE: Removal steps in this procedure may contain installation details.

1. Refer to: Battery Disconnect and Connect (414-01 Battery, Mounting and Cables, General Procedures).

2.

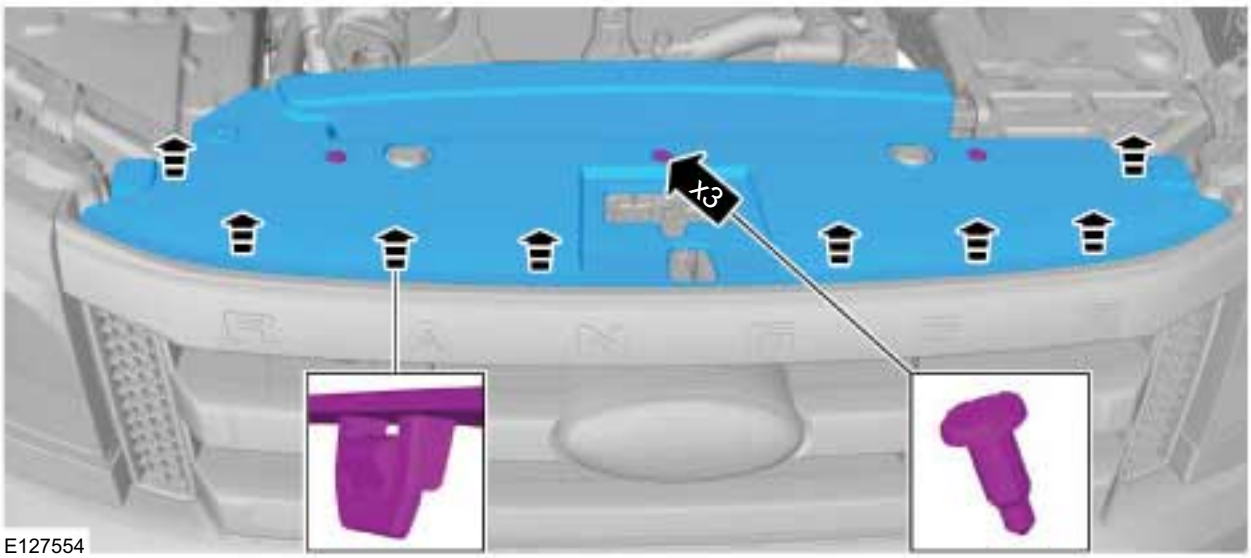

3.

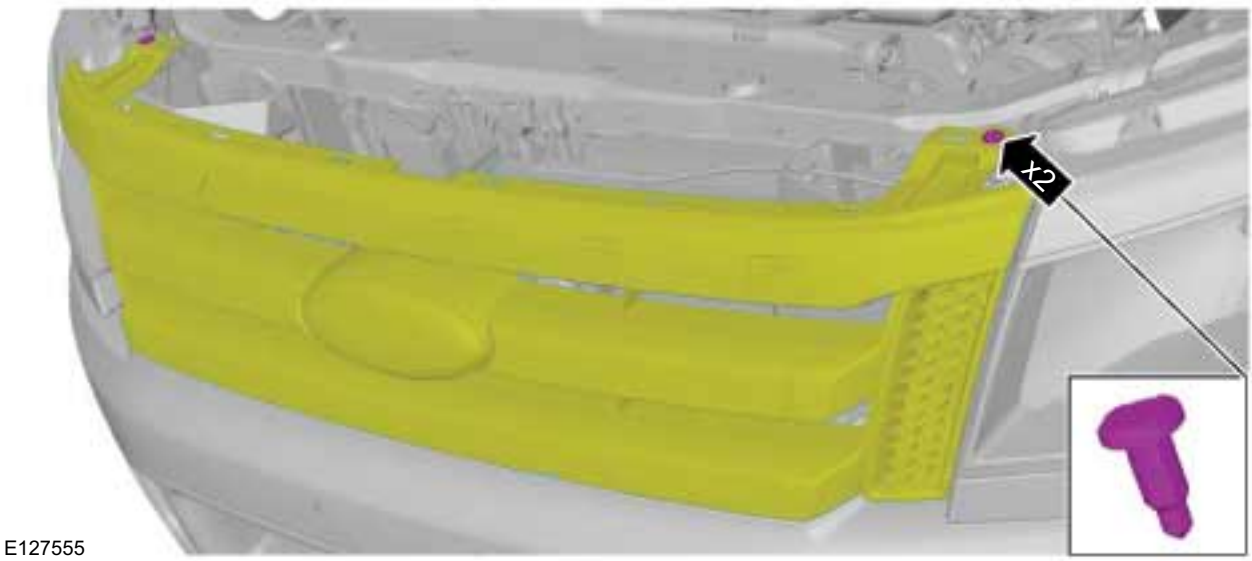

4. Refer to: Lifting (100-02 Jacking and Lifting, Description and Operation).

5.

REMOVAL AND INSTALLATION

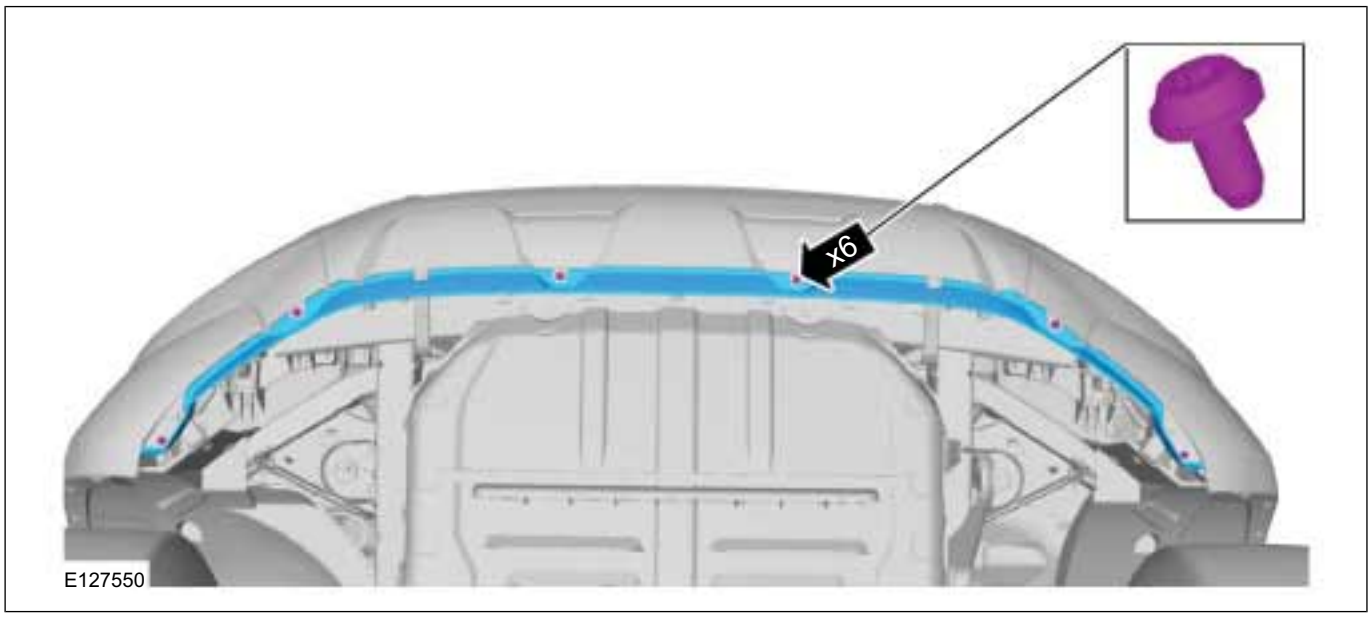

6.

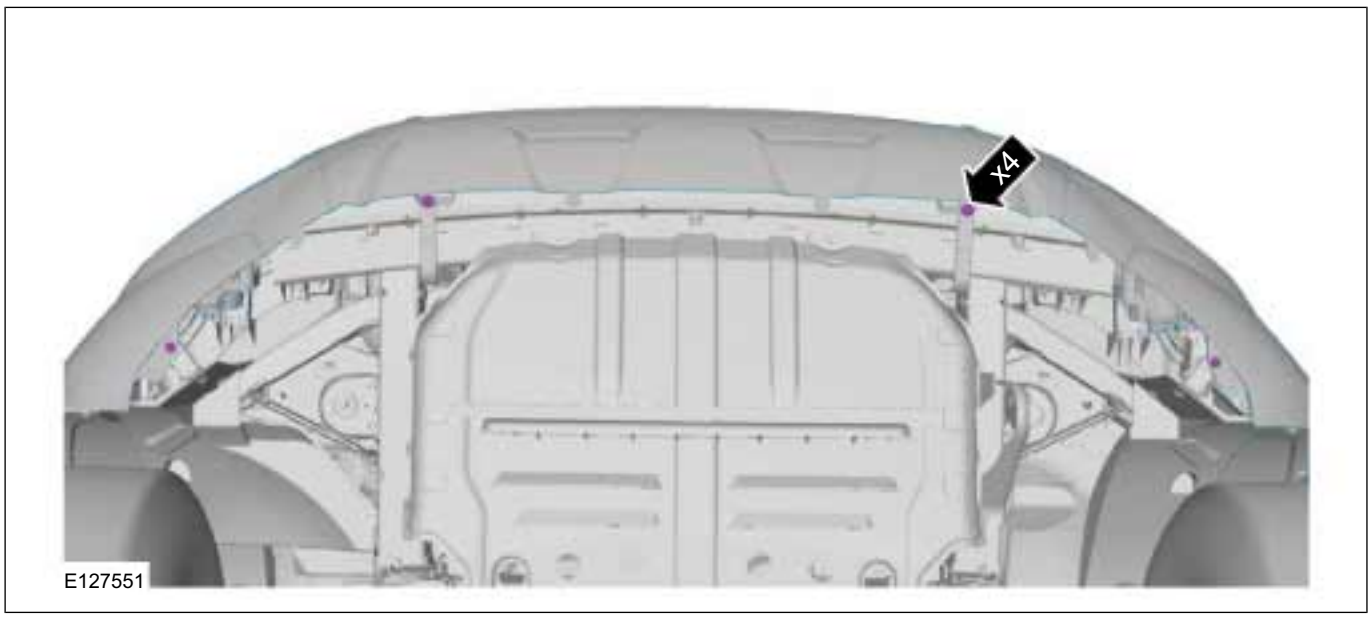

7. Torque: 30 Nm

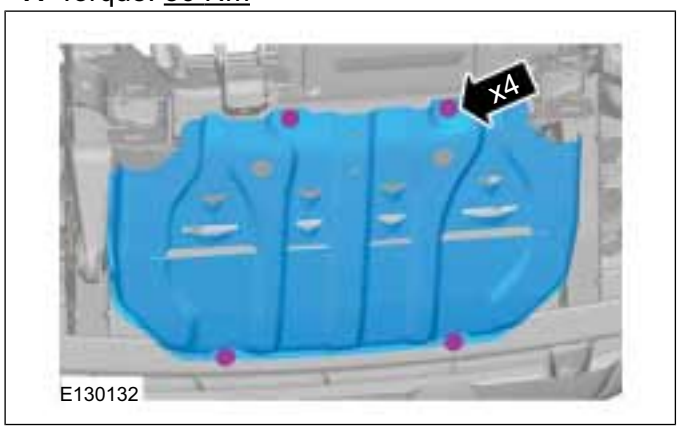

8.

REMOVAL AND INSTALLATION

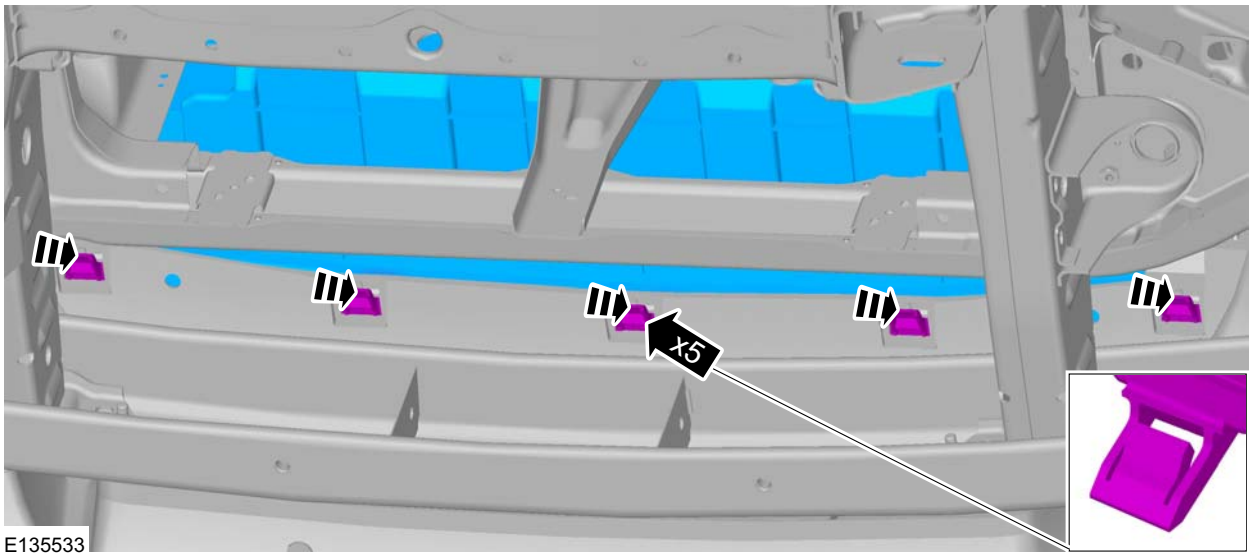

9. On both the sides.

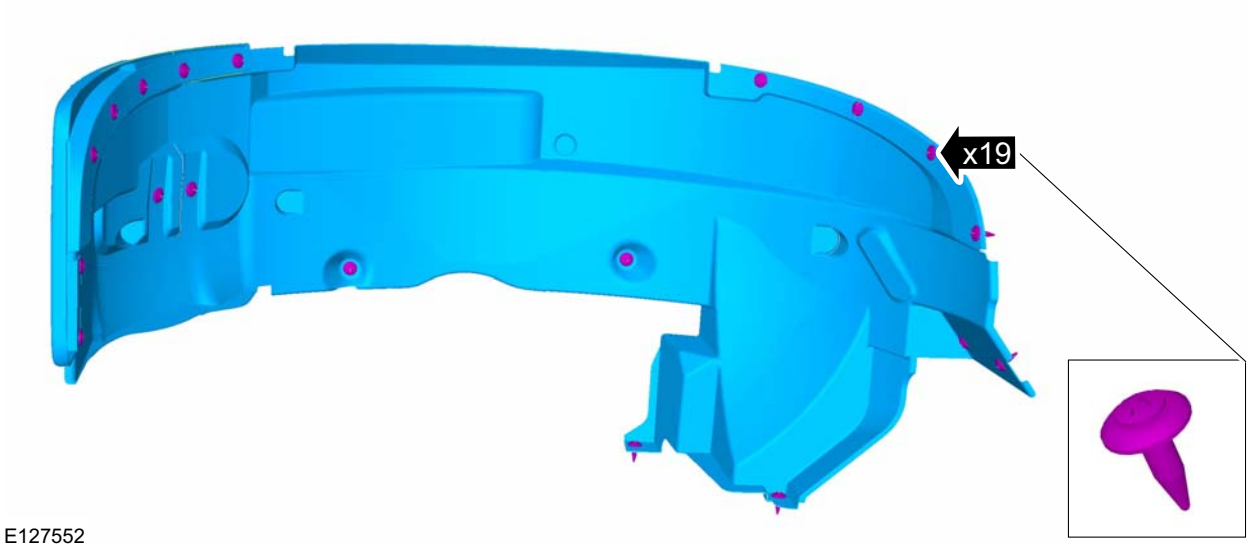

REMOVAL AND INSTALLATION

10. On both the sides.

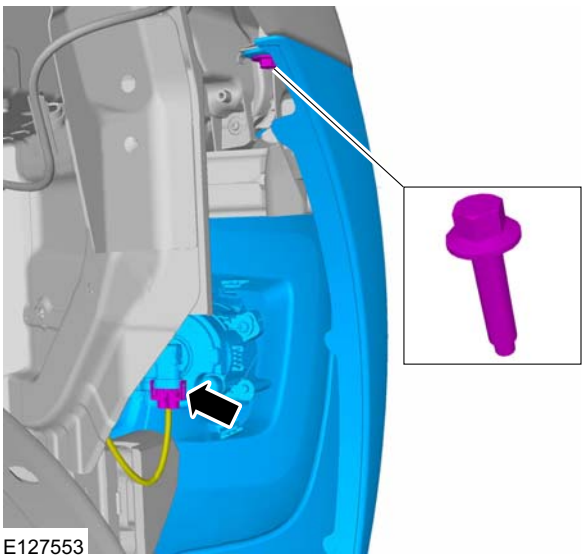
E127553

11. Torque: 10 Nm

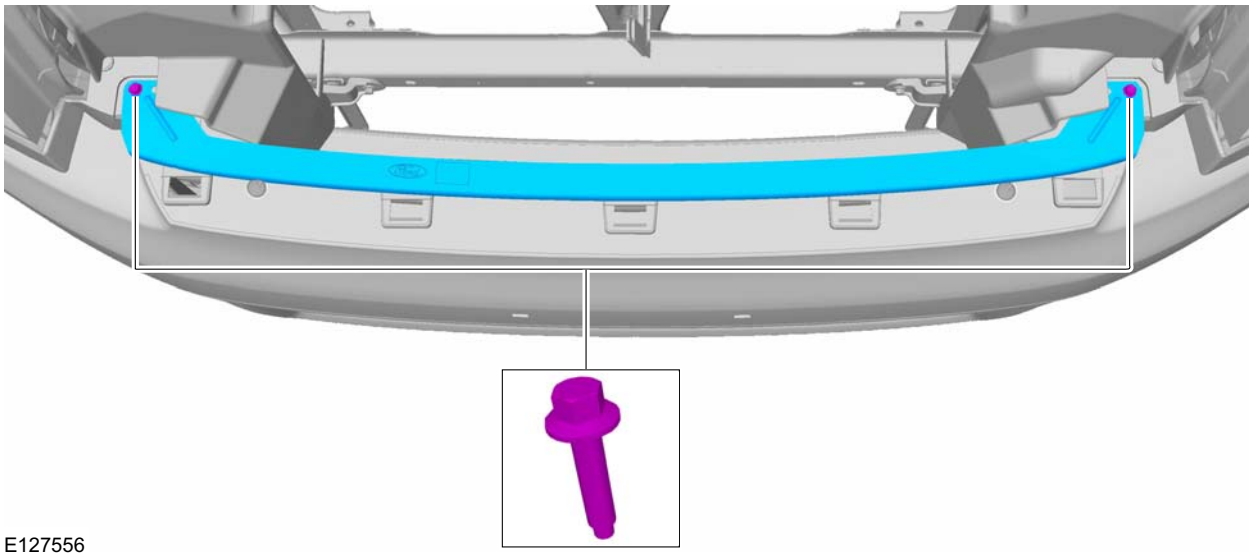
E127556

12.

REMOVAL AND INSTALLATION

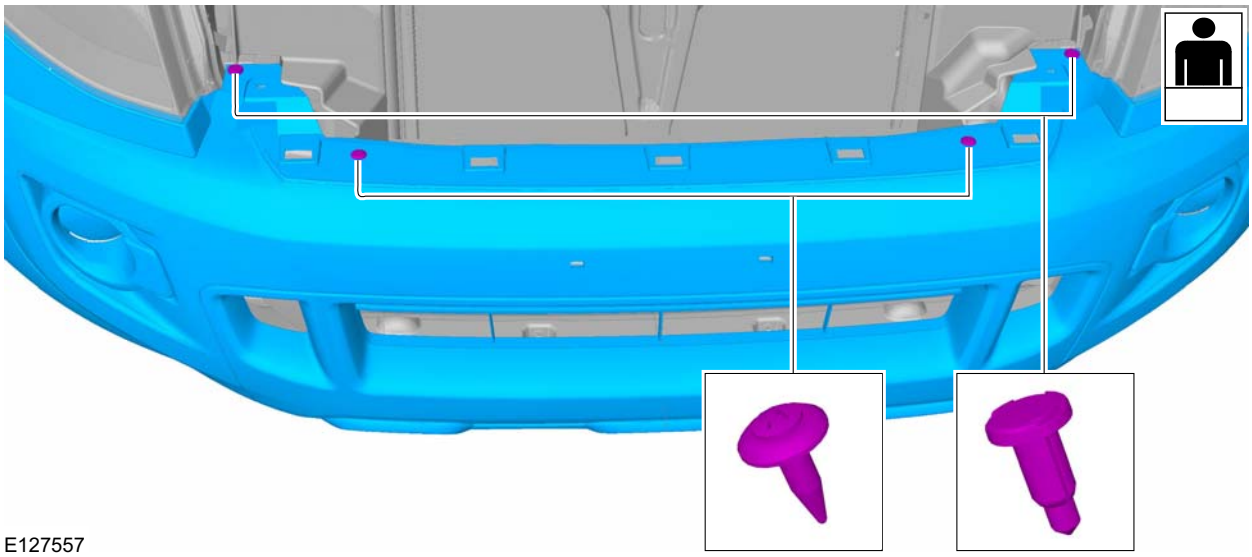

Installation

1. To install, reverse the removal procedure.

REMOVAL AND INSTALLATION

Rear Bumper

Removal

NOTE: Removal steps in this procedure may contain installation details.

1. Refer to: Battery Disconnect and Connect (414-01 Battery, Mounting and Cables, General Procedures).
2. Refer to: Lifting (100-02 Jacking and Lifting, Description and Operation).
3.

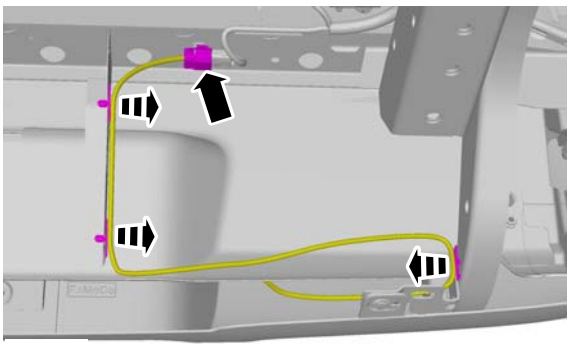

E127733

4. Torque: 105 Nm

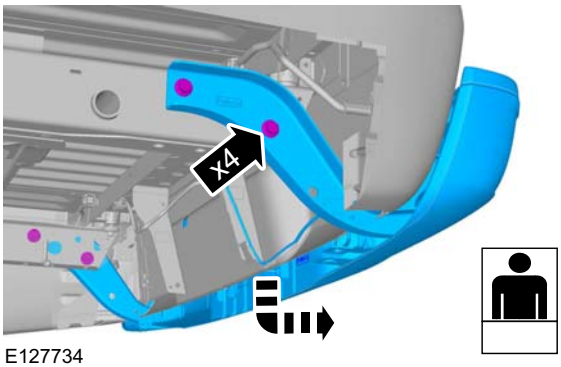

E127734

Installation

1. To install, reverse the removal procedure.

SECTION 501-20A Safety Belt System

VEHICLE APPLICATION: 2011.50 Ranger

CONTENTS PAGE

DESCRIPTION AND OPERATION

Safety Belt System..... 501-20A-2

REMOVAL AND INSTALLATION

Front Safety Belt Retractor — Single Cab..... 501-20A-8
Front Safety Belt Retractor — Single Cab, Vehicles With: Double Passenger Seat..... 501-20A-10
Front Safety Belt Retractor — Double Cab..... 501-20A-11
Front Safety Belt Retractor — Super Cab..... 501-20A-13
Front Safety Belt Buckle..... 501-20A-15
Safety Belt Shoulder Height Adjuster..... 501-20A-17
Rear Safety Belt Retractor..... 501-20A-18
Rear Center Safety Belt Retractor..... 501-20A-20
Rear Safety Belt Buckle..... 501-20A-21

DESCRIPTION AND OPERATION

Safety Belt System

System Overview

WARNINGS:

All safety belt assemblies (including retractors, buckles, shoulder belt height adjusters [if equipped], child safety seat tether attachments and attaching hardware) should be inspected after any collision. All new belt assemblies should be installed unless a qualified technician finds the assemblies show no damage and operate correctly. Belt assemblies not in use during a collision should also be inspected and new assemblies installed if either damage or incorrect operation is noted. Failure to install a new belt and retractor assembly could increase the risk of injury in collisions.

The safety belt retractor pretensioner is a pyrotechnic device. Always wear safety glasses when repairing an air bag equipped vehicle and when handling a safety belt buckle pretensioner or safety belt retractor pretensioner. Never probe a pretensioner electrical connector. Doing so could result in pretensioner or air bag deployment and could result in personal injury.

CAUTION: Do not attempt to repair or lubricate the retractor / buckle mechanisms or modify the belts.

The safety belt system utilizes three-point lap and diagonal safety belts in all outboard seat positions and two point lap or three-point safety belts in the centre positions.

The front safety belt retractors incorporate a load limiting device, which allows progressive payout of additional safety belt webbing when the force exerted exceeds a predetermined limit.

The front safety belt upper anchors are connected to safety belt shoulder height adjusters mounted in the B-pillar.

A beltminder function is fitted to some vehicles. If the driver's seatbelt is not fastened, the belt warning lamp will illuminate at key on for 6 seconds, or until the seatbelt is fastened, whichever is the first. The beltminder warning is triggered when the vehicle speed is at 25 km/h (15 mph), or greater, and the driver and/or passenger safety belt(s) are not fastened. The warning will continue for 5 minutes or until the safety belt(s) are fastened, whichever is the first.

The safety belt minder feature can be disabled.

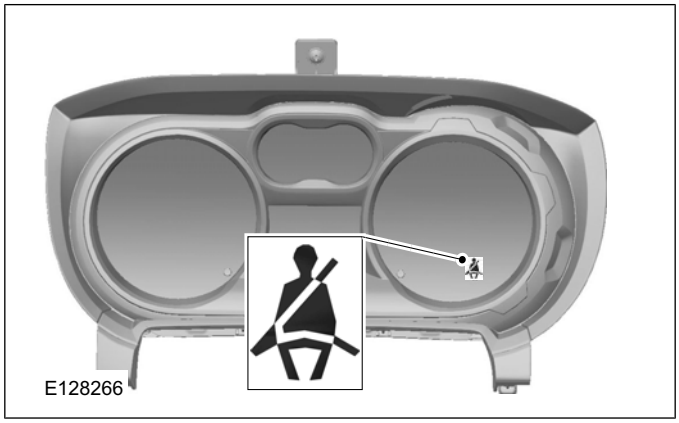

The safety belt retractor pretensioners have a lower deployment threshold than that required by the air bags. Hence it is possible that during a minor collision, which exceeds the deployment threshold, only the safety belt retractor pretensioners will deploy. The safety belt retractor pretensioners will also deploy when the side airbags are deployed but not deploy in a rear collision.

Rear seat safety belt retractors and buckles are of the conventional type.

Single cab

DESCRIPTION AND OPERATION

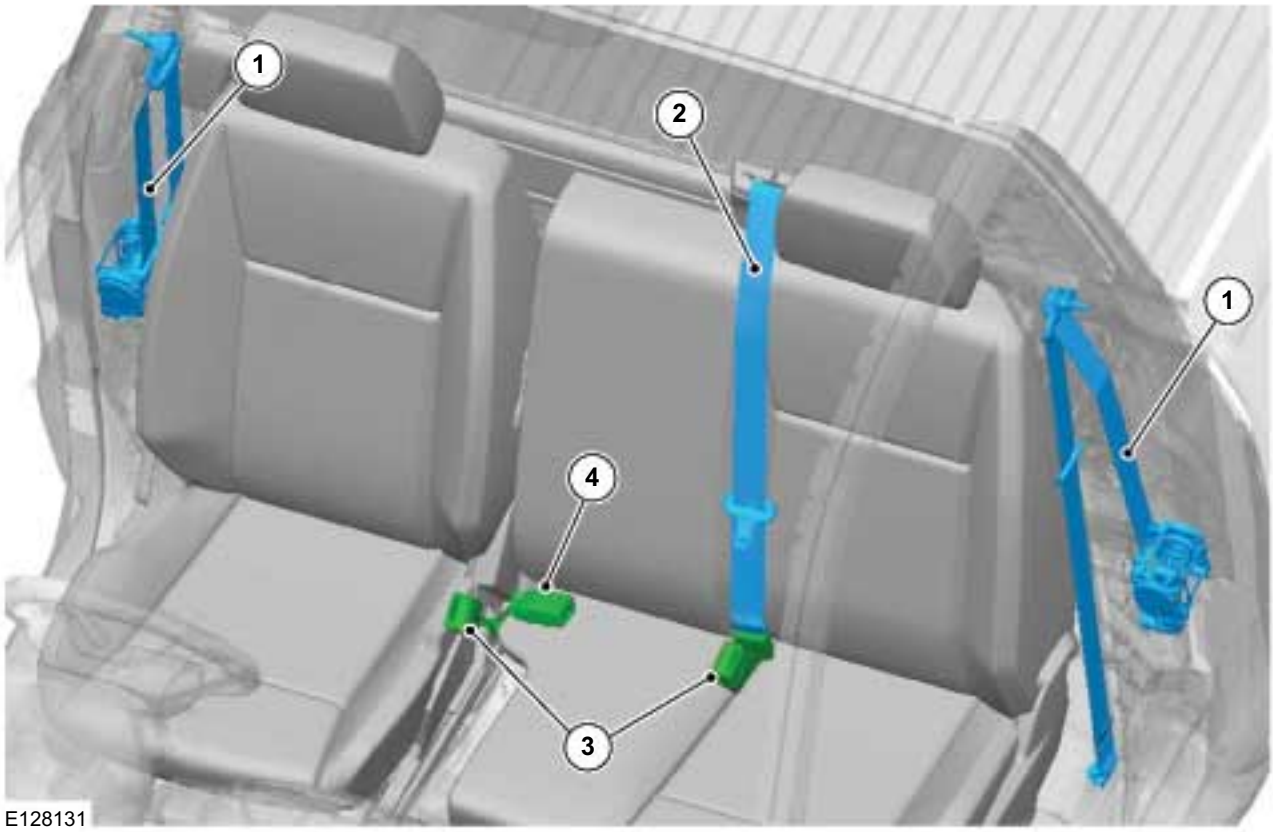

E128131

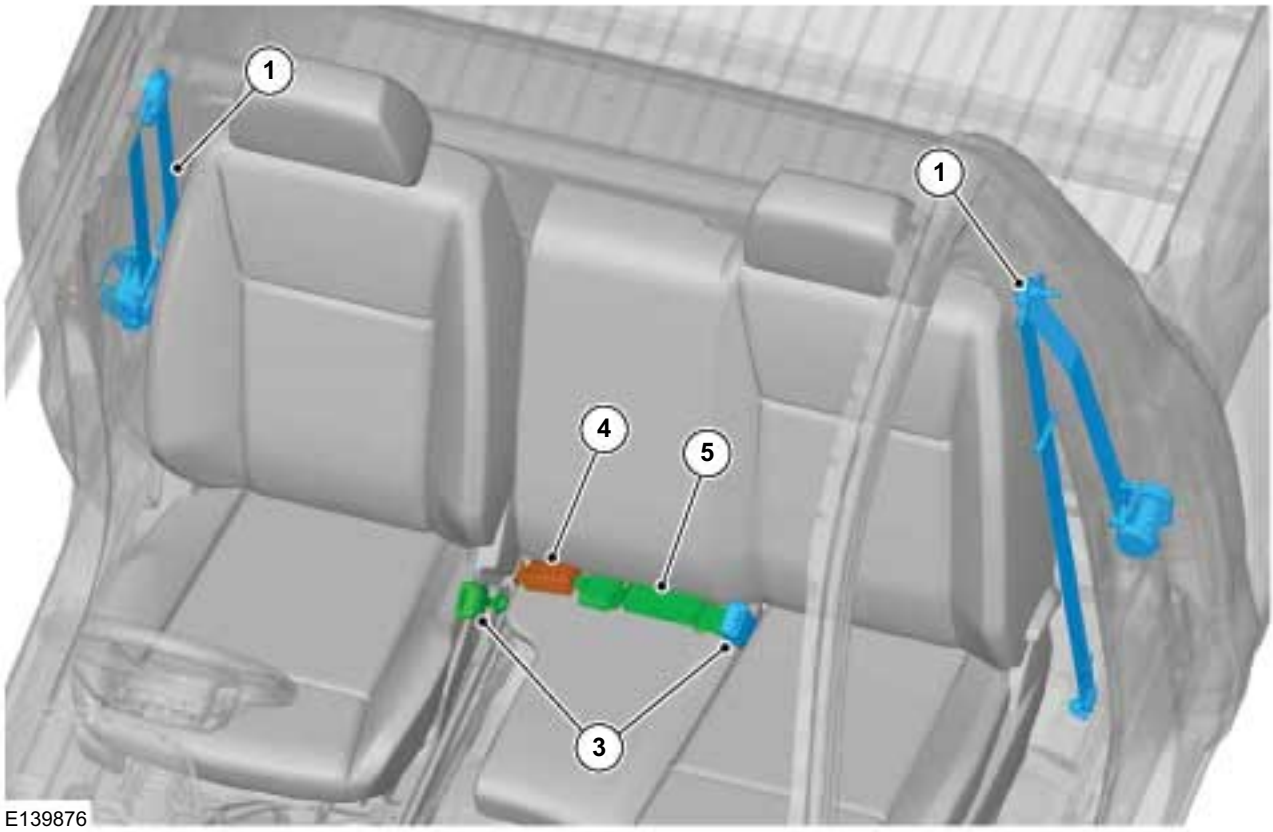

E139876

DESCRIPTION AND OPERATION

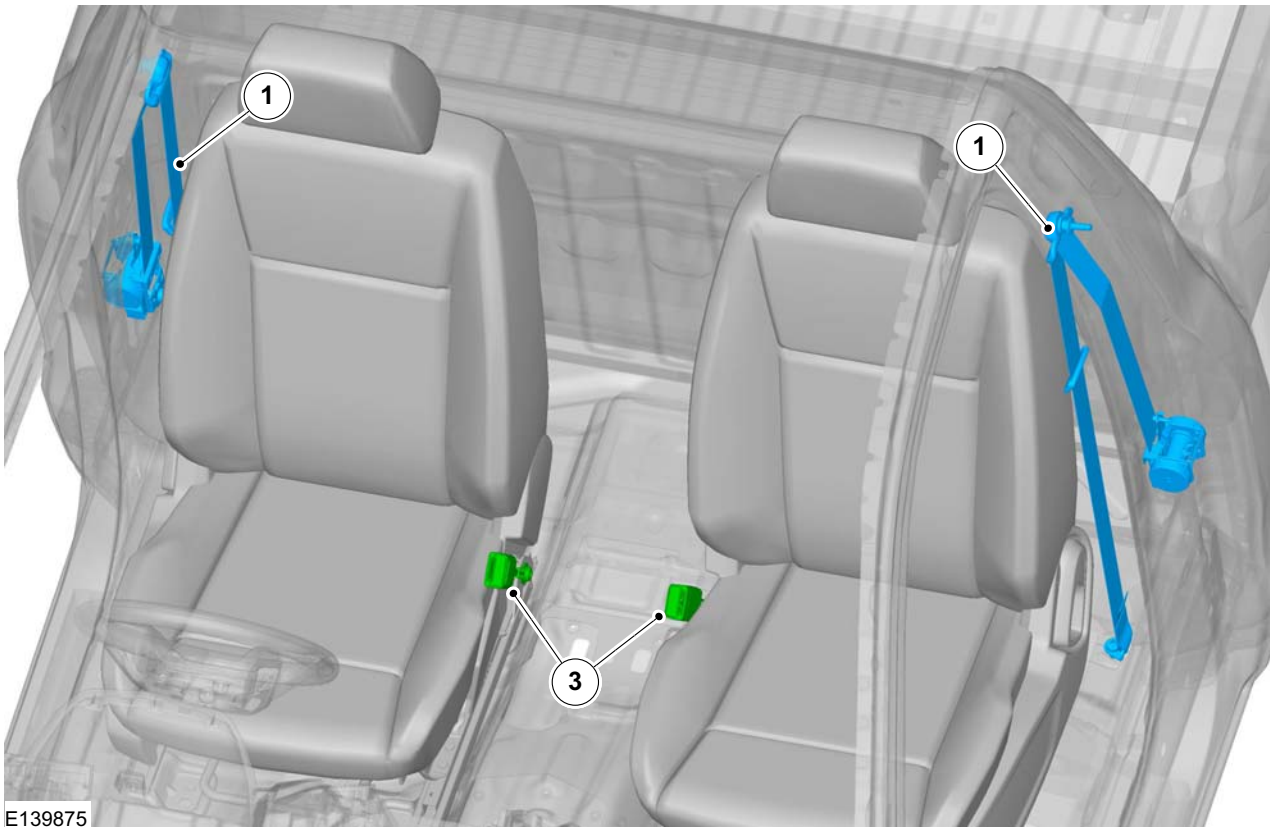

Item	Description
1	Front safety belt retractor
2	Front three point center safety belt retractor
3	Front safety belt buckle

Item	Description
4	Front center safety belt buckle
5	Front two point center safety belt

Double cab

DESCRIPTION AND OPERATION

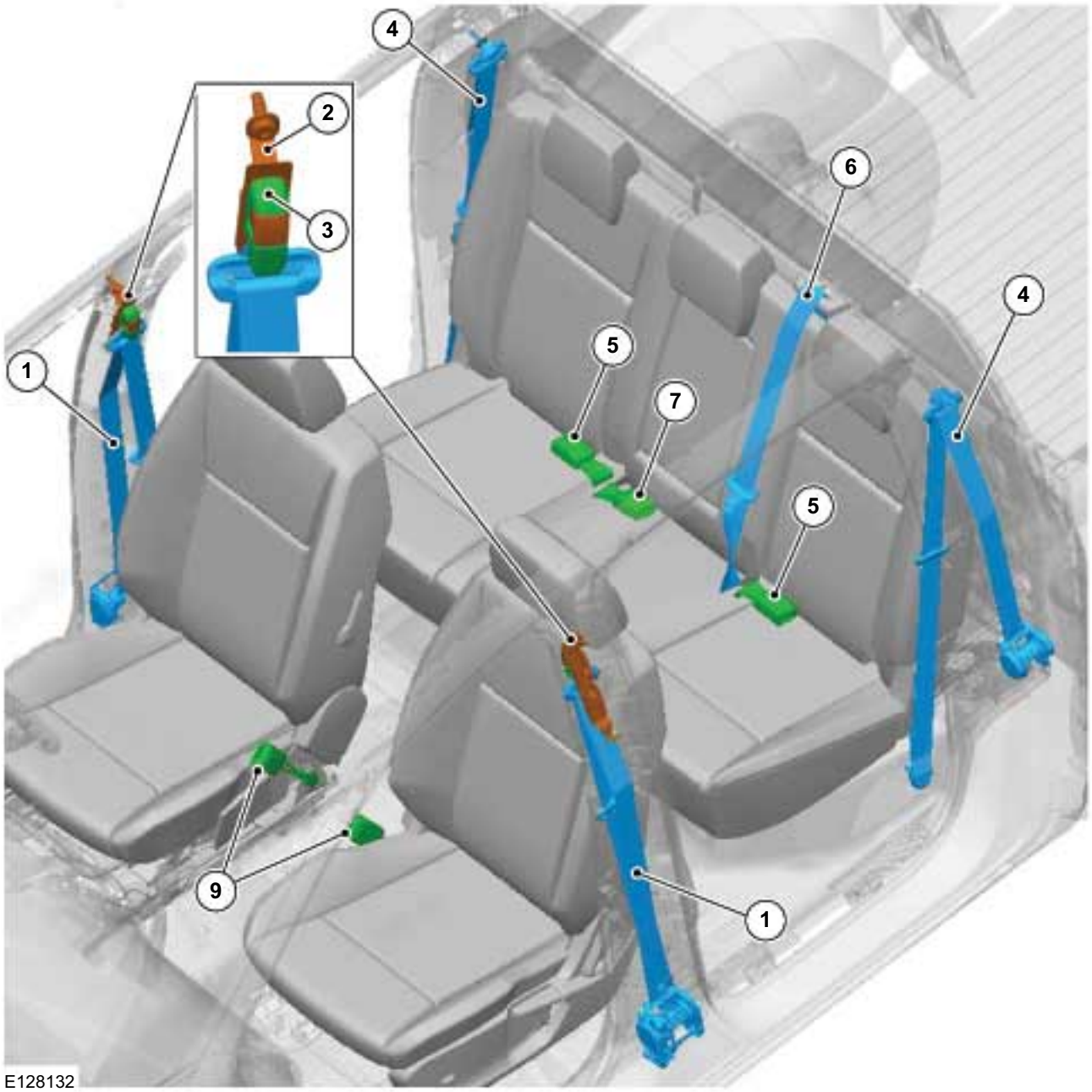

DESCRIPTION AND OPERATION

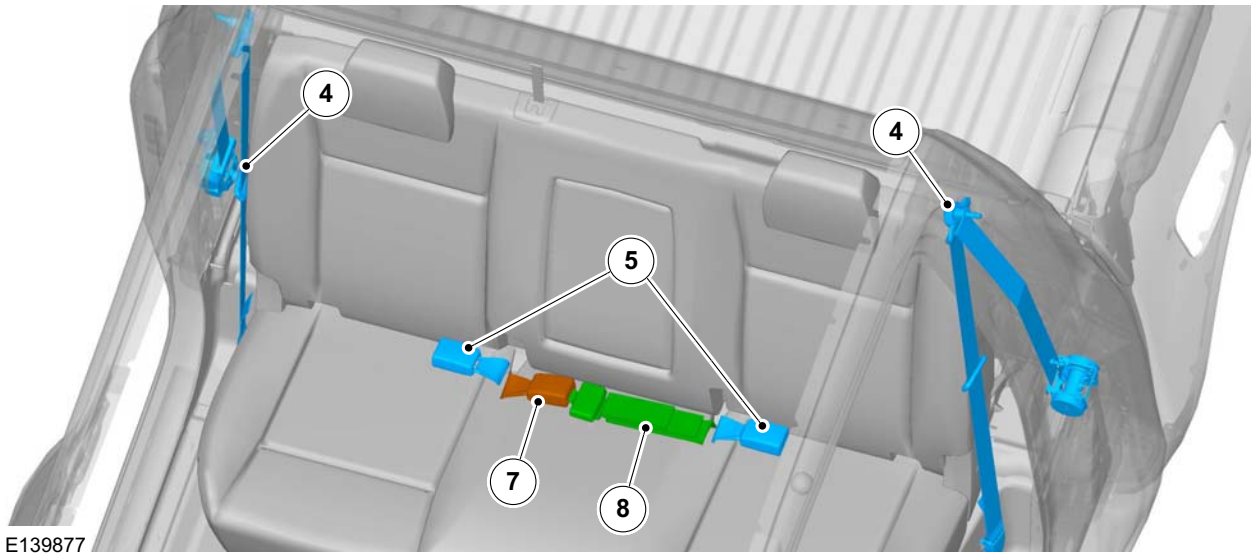

Item	Description
1	Front safety belt retractor
2	Safety belt shoulder height adjuster
3	Safety belt shoulder height adjusting cover
4	Rear safety belt retractor
5	Rear safety belt buckle

Item	Description
6	Rear three point center safety belt retractor
7	Rear center safety belt buckle
8	Rear two point center safety belt
9	Front safety belt buckle

Super cab

DESCRIPTION AND OPERATION

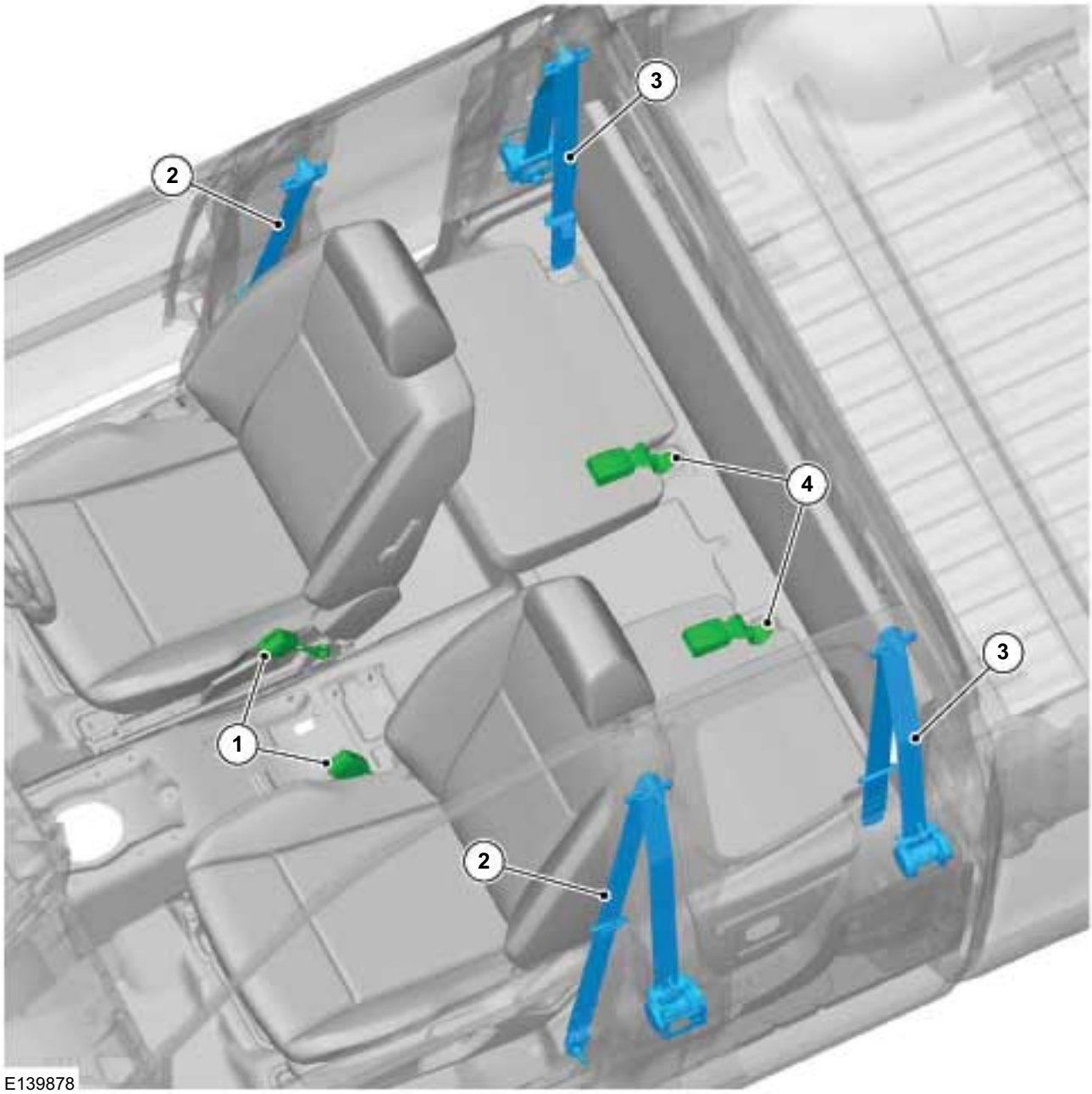

Item	Description
1	Front safety belt buckle
2	Front safety belt retractor
3	Rear safety belt retractor
4	Rear safety belt buckle

REMOVAL AND INSTALLATION

Front Safety Belt Retractor — Single Cab

Removal

NOTE: Removal steps in this procedure may contain installation details.

1. **WARNINGS:**

   The supplemental restraint system (SRS) is active for a certain length of time after the power supply has been disconnected. Wait for a minimum of 3 minutes before disconnecting or removing any SRS components.

   Handling the seat belt (pre-tensioner seat belt) improperly can accidentally deploy the pre-tensioner seat belt, which may seriously injure you. Read the service warnings and cautions before handling the seat belt (pre-tensioner seat belt).

   Make sure that the vehicle electrical system is fully depowered and no other power source is connected.

   CAUTION: The ELR (emergency locking retractor) has a spring that will unwind if the retractor cover is removed. The spring cannot be rewound by hand. If this occurs, the ELR will not work properly. Therefore, do not disassemble the retractor.

   Refer to: Supplemental Restraint System (SRS) Health and Safety Precautions (100-00 General Information, Description and Operation).

2. Refer to: Battery Disconnect and Connect (414-01 Battery, Mounting and Cables, General Procedures).

3. Torque: 48 Nm

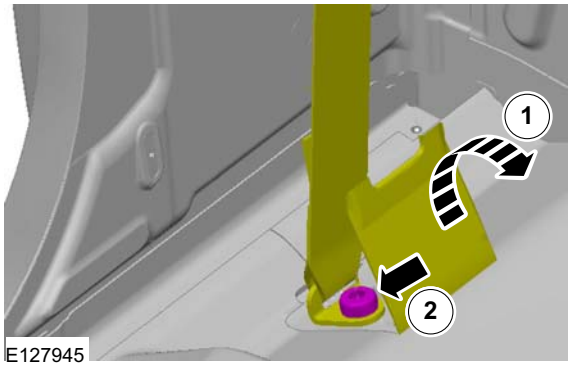

4. Refer to: B-Pillar Lower Trim Panel (501-05 Interior Trim and Ornamentation, Removal and Installation).

5. 2. Torque: 11 Nm
   3. Torque: 48 Nm

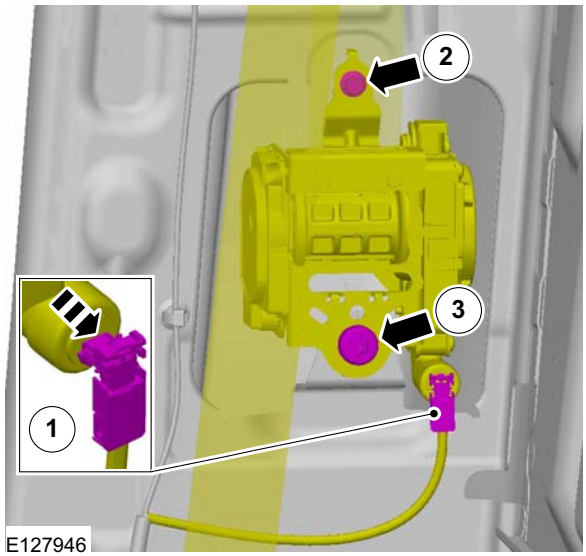

REMOVAL AND INSTALLATION

6. Torque: 48 Nm

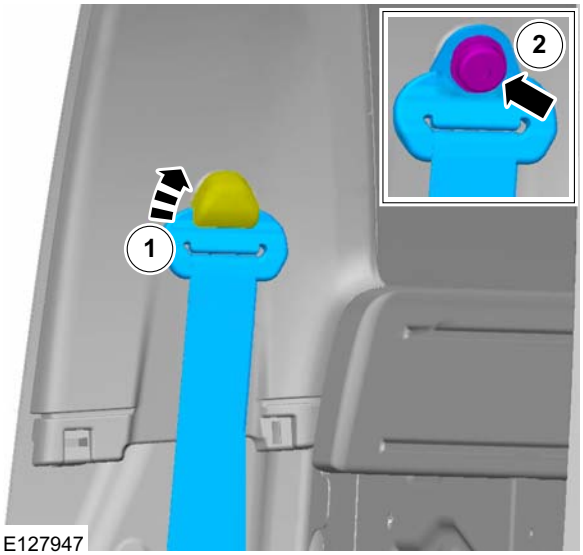

Installation

1. To install, reverse the removal procedure.

REMOVAL AND INSTALLATION

Front Safety Belt Retractor — Single Cab, Vehicles With: Double Passenger Seat

Removal

NOTE: Removal steps in this procedure may contain installation details.

1. **WARNINGS:**

   The supplemental restraint system (SRS) is active for a certain length of time after the power supply has been disconnected. Wait for a minimum of 3 minutes before disconnecting or removing any SRS components.

   Handling the seat belt (pre-tensioner seat belt) improperly can accidentally deploy the pre-tensioner seat belt, which may seriously injure you. Read the service warnings and cautions before handling the seat belt (pre-tensioner seat belt).

   Make sure that the vehicle electrical system is fully depowered and no other power source is connected.

   CAUTION: The ELR (emergency locking retractor) has a spring that will unwind if the retractor cover is removed. The spring cannot be rewound by hand. If this occurs, the ELR will not work properly. Therefore, do not disassemble the retractor.

   Refer to: Supplemental Restraint System (SRS) Health and Safety Precautions (100-00 General Information, Description and Operation).

2. Refer to: Battery Disconnect and Connect (414-01 Battery, Mounting and Cables, General Procedures).

3. **NOTE:** Note the position of the component before removal.

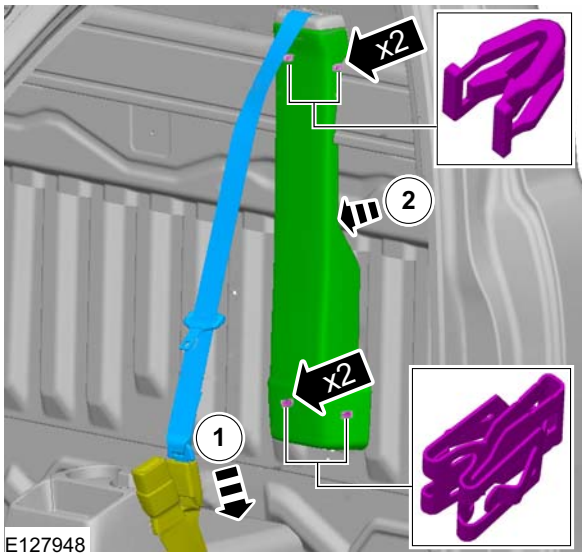

4. Torque: 48 Nm

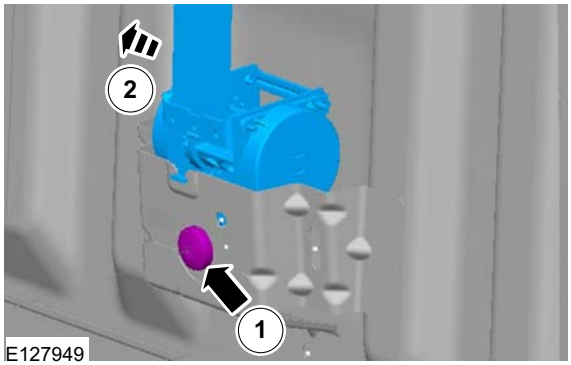

Installation

1. **NOTE:** Make sure that this component is installed to the noted removal position.

   To install, reverse the removal procedure.

REMOVAL AND INSTALLATION

Front Safety Belt Retractor — Double Cab

Removal

NOTE: Removal steps in this procedure may contain installation details.

1. **WARNINGS:**

   The supplemental restraint system (SRS) is active for a certain length of time after the power supply has been disconnected. Wait for a minimum of 3 minutes before disconnecting or removing any SRS components.

   Handling the seat belt (pre-tensioner seat belt) improperly can accidentally deploy the pre-tensioner seat belt, which may seriously injure you. Read the service warnings and cautions before handling the seat belt (pre-tensioner seat belt).

   Make sure that the vehicle electrical system is fully depowered and no other power source is connected.

   CAUTION: The ELR (emergency locking retractor) has a spring that will unwind if the retractor cover is removed. The spring cannot be rewound by hand. If this occurs, the ELR will not work properly. Therefore, do not disassemble the retractor.

   Refer to: Supplemental Restraint System (SRS) Health and Safety Precautions (100-00 General Information, Description and Operation).

2. Refer to: Battery Disconnect and Connect (414-01 Battery, Mounting and Cables, General Procedures).

3. Refer to: B-Pillar Lower Trim Panel (501-05 Interior Trim and Ornamentation, Removal and Installation).

4. **NOTE:** Note the position of the component before removal.

   3. Torque: 48 Nm
   4. Torque: 11 Nm
   5. Torque: 48 Nm

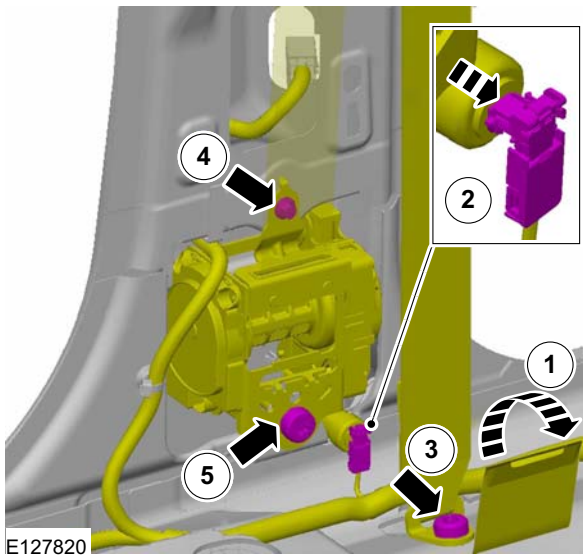

REMOVAL AND INSTALLATION

5. Torque: 48 Nm

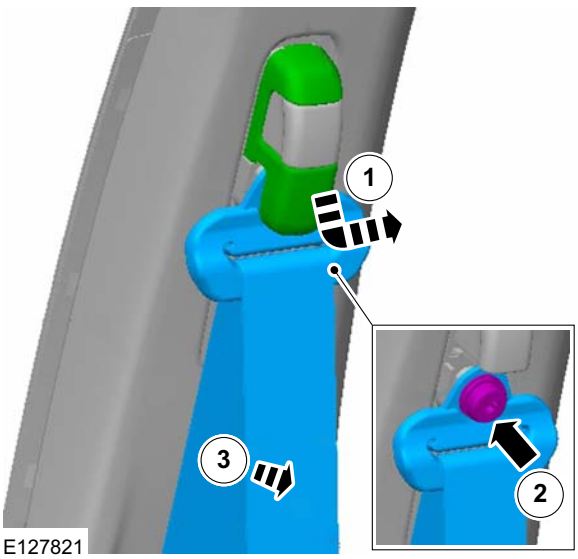

Installation

1. **NOTE:** Make sure that this component is installed to the noted removal position.

   To install, reverse the removal procedure.

REMOVAL AND INSTALLATION

Front Safety Belt Retractor — Super Cab

Removal

NOTE: Removal steps in this procedure may contain installation details.

1. **WARNINGS:**

   The supplemental restraint system (SRS) is active for a certain length of time after the power supply has been disconnected. Wait for a minimum of 3 minutes before disconnecting or removing any SRS components.

   Handling the seat belt (pre-tensioner seat belt) improperly can accidentally deploy the pre-tensioner seat belt, which may seriously injure you. Read the service warnings and cautions before handling the seat belt (pre-tensioner seat belt).

   Make sure that the vehicle electrical system is fully depowered and no other power source is connected.

   CAUTION: The ELR (emergency locking retractor) has a spring that will unwind if the retractor cover is removed. The spring cannot be rewound by hand. If this occurs, the ELR will not work properly. Therefore, do not disassemble the retractor.

   Refer to: Supplemental Restraint System (SRS) Health and Safety Precautions (100-00 General Information, Description and Operation).

2. Refer to: Battery Disconnect and Connect (414-01 Battery, Mounting and Cables, General Procedures).

3. **NOTE:** Note the position of the component before removal.

   Torque: 48 Nm

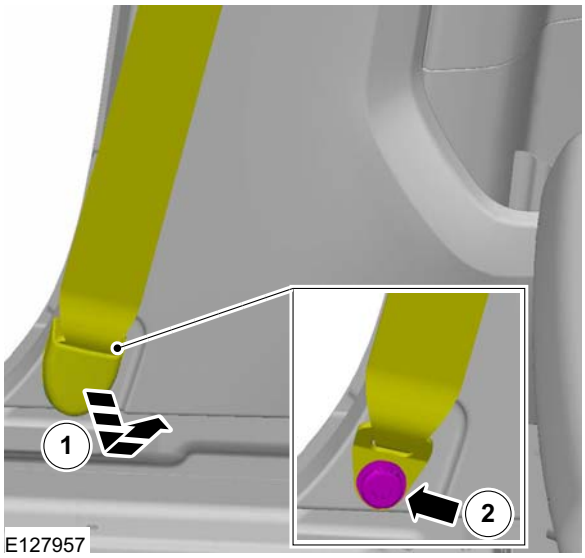

4. Torque: 48 Nm

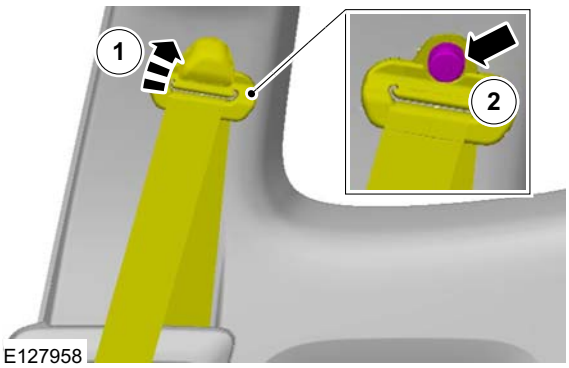

REMOVAL AND INSTALLATION

5. Refer to: Rear Door Trim Panel - Super Cab (501-05 Interior Trim and Ornamentation, Removal and Installation).

6.

7. 2. Torque: 11 Nm
   3. Torque: 48 Nm

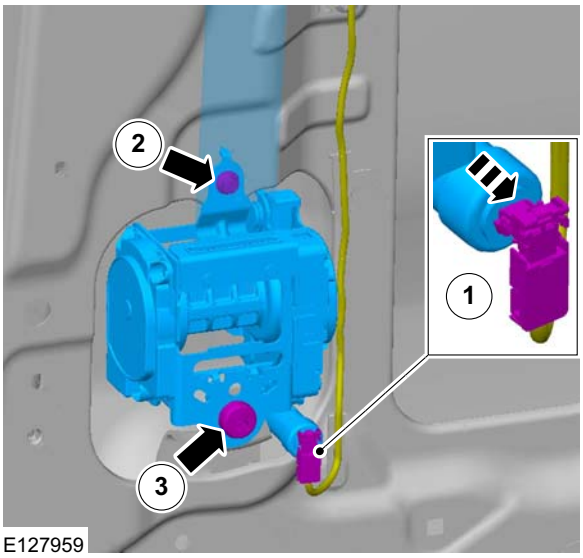

Installation

1. To install, reverse the removal procedure.

REMOVAL AND INSTALLATION

Front Safety Belt Buckle

Removal

NOTE: Removal steps in this procedure may contain installation details.

Double cab

1. Refer to: Front Seat (501-10 Seating, Removal and Installation).
2. **CAUTION: Note the position of the component before removal.**

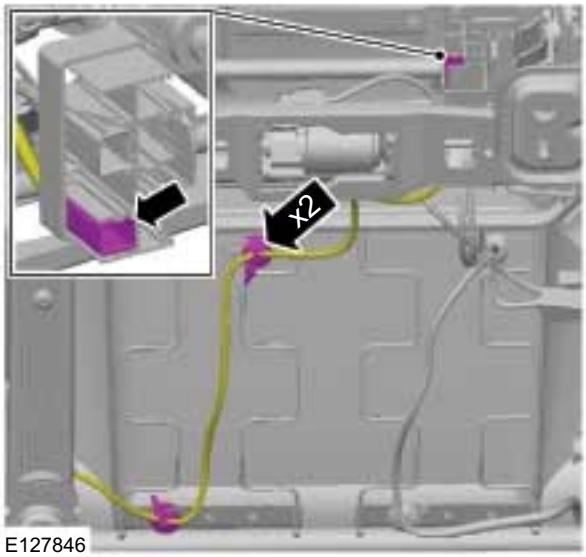

E127846

3. Torque: 50 Nm

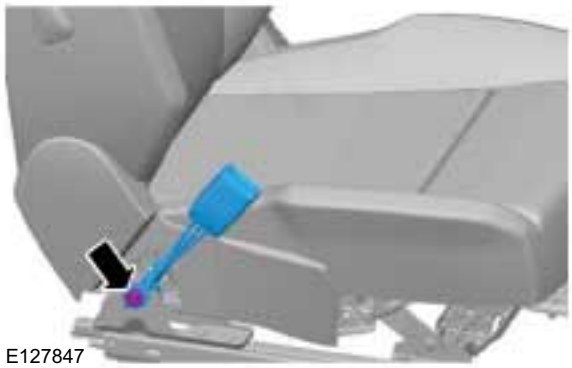
E127847

Single cab

4.

E134124

5. Torque: 48 Nm

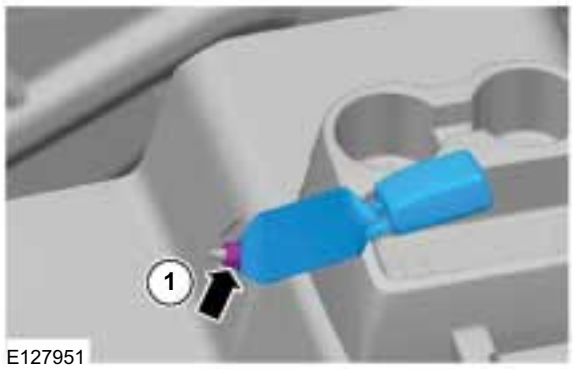

E127951

6. Torque: 48 Nm

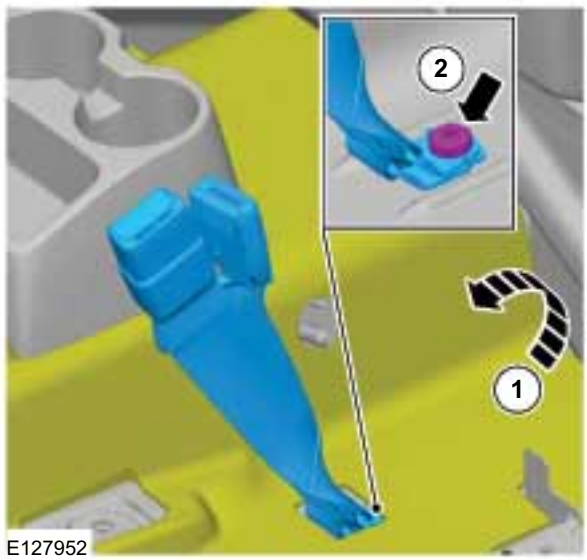

E127952

REMOVAL AND INSTALLATION

Installation

1. **NOTE:** Make sure the safety belt webbing is not twisted prior to repositioning the seat.

   NOTE: Make sure that the safety belt buckles are accessible after repositioning the seat.

   To install, reverse the removal procedure.

REMOVAL AND INSTALLATION

Safety Belt Shoulder Height Adjuster

Removal

NOTE: Removal steps in this procedure may contain installation details.

1. Torque: 48 Nm

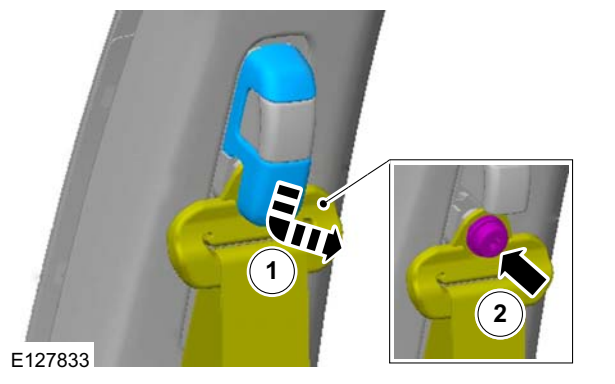

2. Refer to: B-Pillar Upper Trim Panel (501-05 Interior Trim and Ornamentation, Removal and Installation).

3. Torque: 48 Nm

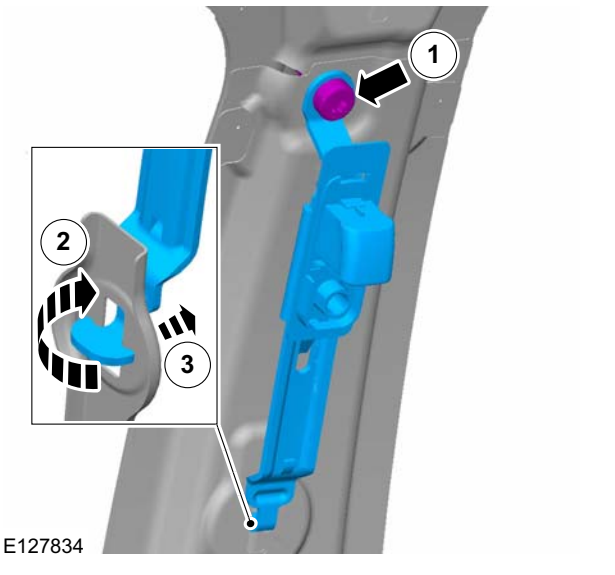

Installation

1. To install, reverse the removal procedure.

REMOVAL AND INSTALLATION

Rear Safety Belt Retractor

Removal

NOTE: Removal steps in this procedure may contain installation details.

1. Refer to: C-Pillar Lower Trim Panel (501-05 Interior Trim and Ornamentation, Removal and Installation).

Double cab

2. **NOTE:** Note the position of the component before removal.

   Torque: 48 Nm

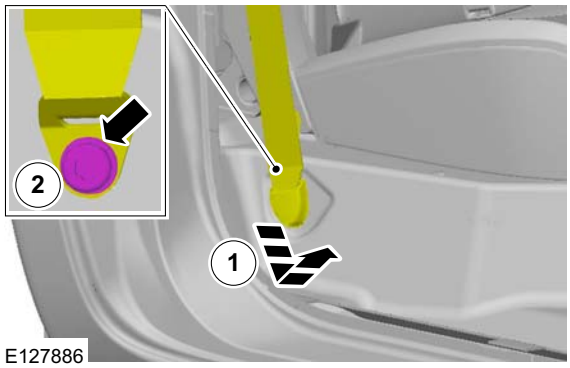

3. 1. Torque: 11 Nm
   2. Torque: 48 Nm

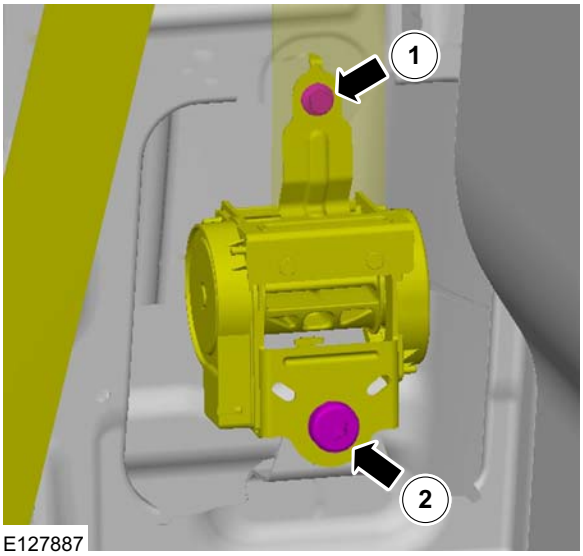

4. Torque: 48 Nm

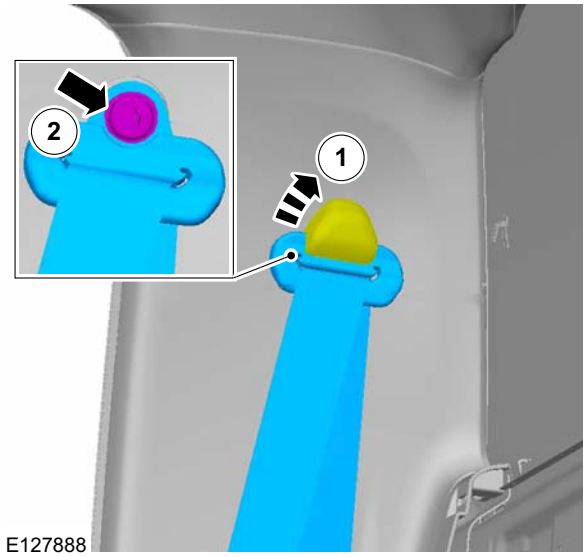

Stretch cab

5. 1. Torque: 48 Nm
   2. Torque: 11 Nm
   3. Torque: 48 Nm

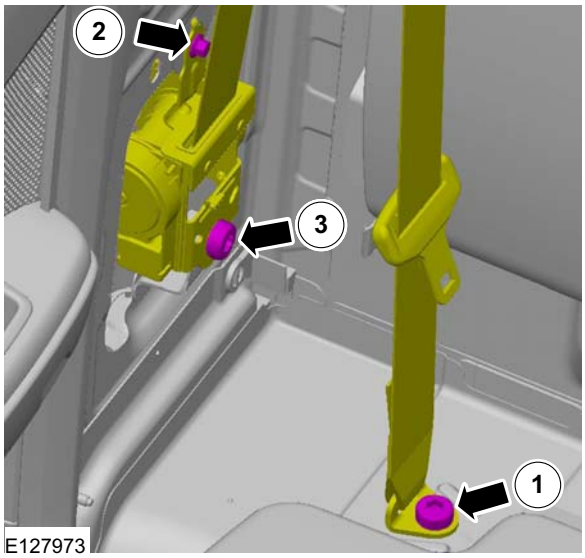

REMOVAL AND INSTALLATION

6. Torque: 48 Nm

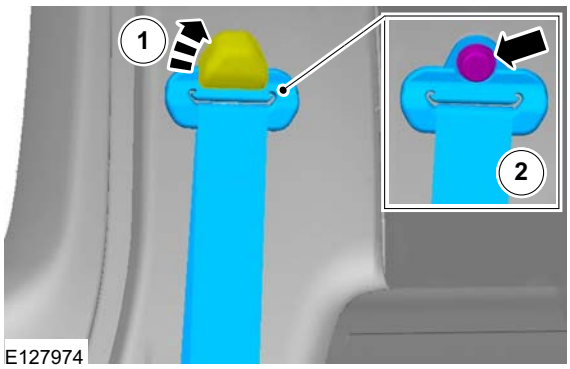

Installation

1. To install, reverse the removal procedure.

REMOVAL AND INSTALLATION

Rear Center Safety Belt Retractor

Removal

NOTE: Removal steps in this procedure may contain installation details.

1.

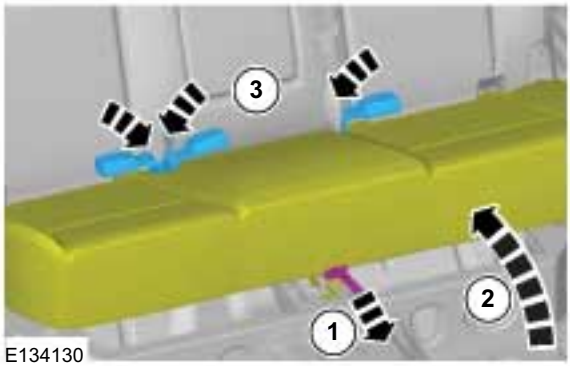

2. Torque: 48 Nm

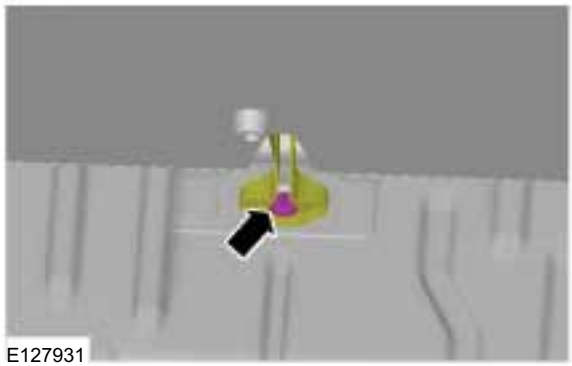

3. 4. Torque: 48 Nm

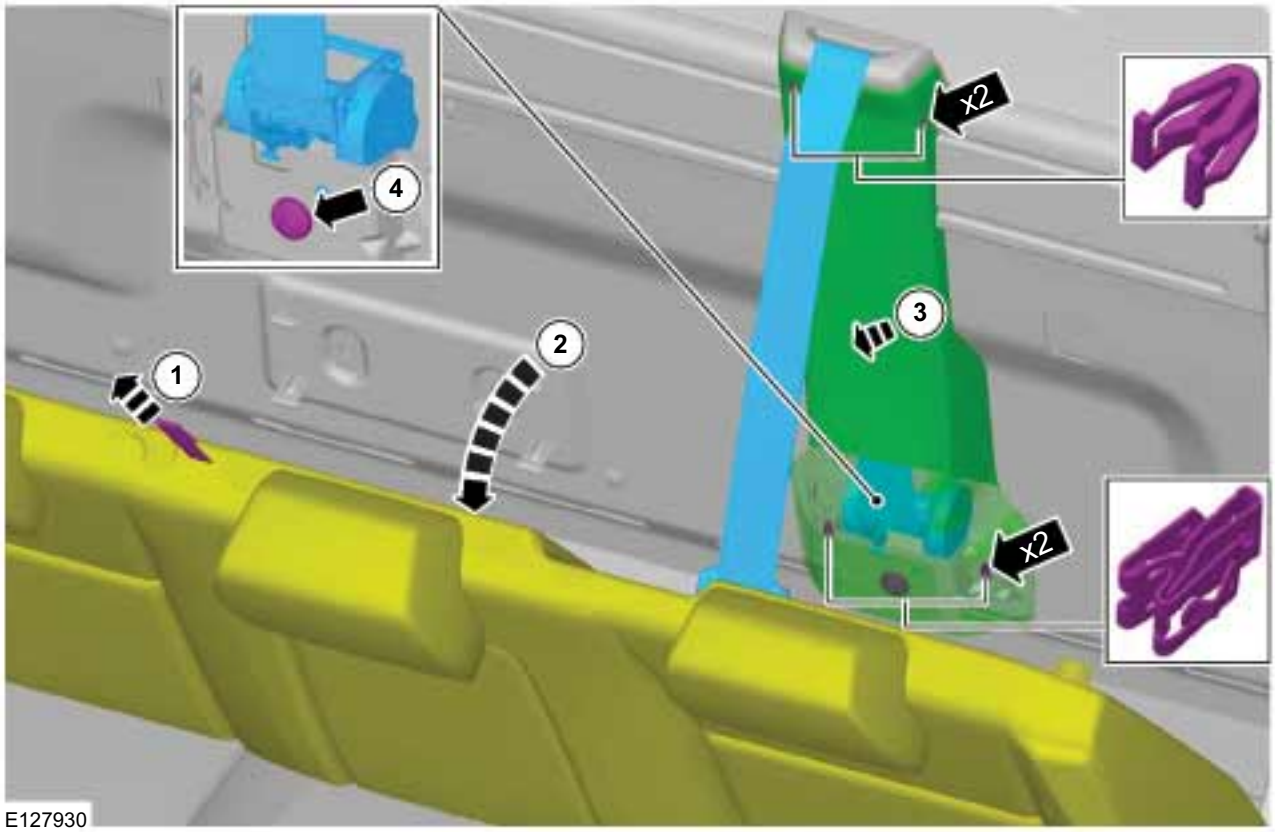

Installation

1. To install, reverse the removal procedure.

REMOVAL AND INSTALLATION

Rear Safety Belt Buckle

Removal

Double cab

NOTE: Removal steps in this procedure may contain installation details.

1.

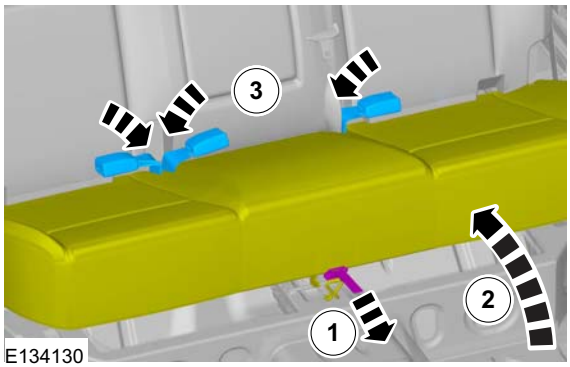

2. Torque: 48 Nm

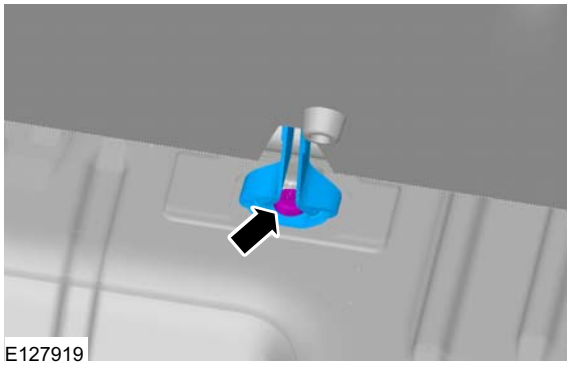

Stretch cab

3. Torque: 48 Nm

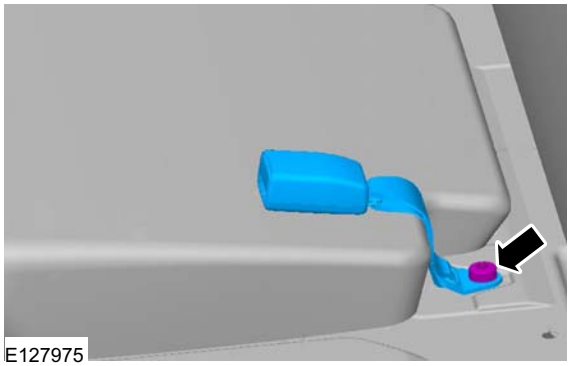

Installation

1. **NOTE:** Make sure the safety belt webbing is not twisted prior to repositioning the seat.

   NOTE: Make sure that the safety belt buckles are accessible after repositioning the seat.

   NOTE: Make sure to tighten the bolt to specification.

   To install, reverse the removal procedure.

SECTION 501-20B Supplemental Restraint System

VEHICLE APPLICATION: 2011.50 Ranger

CONTENTS PAGE

DESCRIPTION AND OPERATION

Air Bag and Safety Belt Pretensioner Supplemental Restraint System (SRS) (Component Location)..... 501-20B-2
Air Bag and Safety Belt Pretensioner Supplemental Restraint System (SRS)..... 501-20B-7
System overview..... 501-20B-7
RCM (Restraint Control Module)..... 501-20B-9
Passenger air bag deactivation switch..... 501-20B-9
Air bag warning indicator..... 501-20B-9
Driver air bag and driver lower air bag..... 501-20B-10
Side impact sensors..... 501-20B-10
Side air curtain..... 501-20B-10
Front impact severity sensor..... 501-20B-11
Safety belt retractor and pretensioners..... 501-20B-11
Side air bag..... 501-20B-11
Passenger air bag..... 501-20B-11

GENERAL PROCEDURES

Clockspring Adjustment..... 501-20B-12
Deployed Air Bag Disposal..... 501-20B-13
Scrapped Vehicle Air Bag and Safety Belt Pretensioner Disposal - In-Vehicle Disposal.... 501-20B-14
Unserviceable Air Bag Disposal..... 501-20B-24
Unserviceable Air Bag Disposal..... 501-20B-25

REMOVAL AND INSTALLATION

Driver Air Bag Module..... 501-20B-26
Passenger Air Bag Module..... 501-20B-28
Driver Lower Air Bag Module..... 501-20B-29
Side Air Bag Module..... 501-20B-31
Side Air Curtain Module..... 501-20B-33
Clockspring..... 501-20B-36
Restraints Control Module (RCM)..... 501-20B-38
Front Impact Severity Sensor..... 501-20B-40
Side Impact Sensor..... 501-20B-41

DESCRIPTION AND OPERATION

Air Bag and Safety Belt Pretensioner Supplemental Restraint System (SRS) – Component Location

Single cab

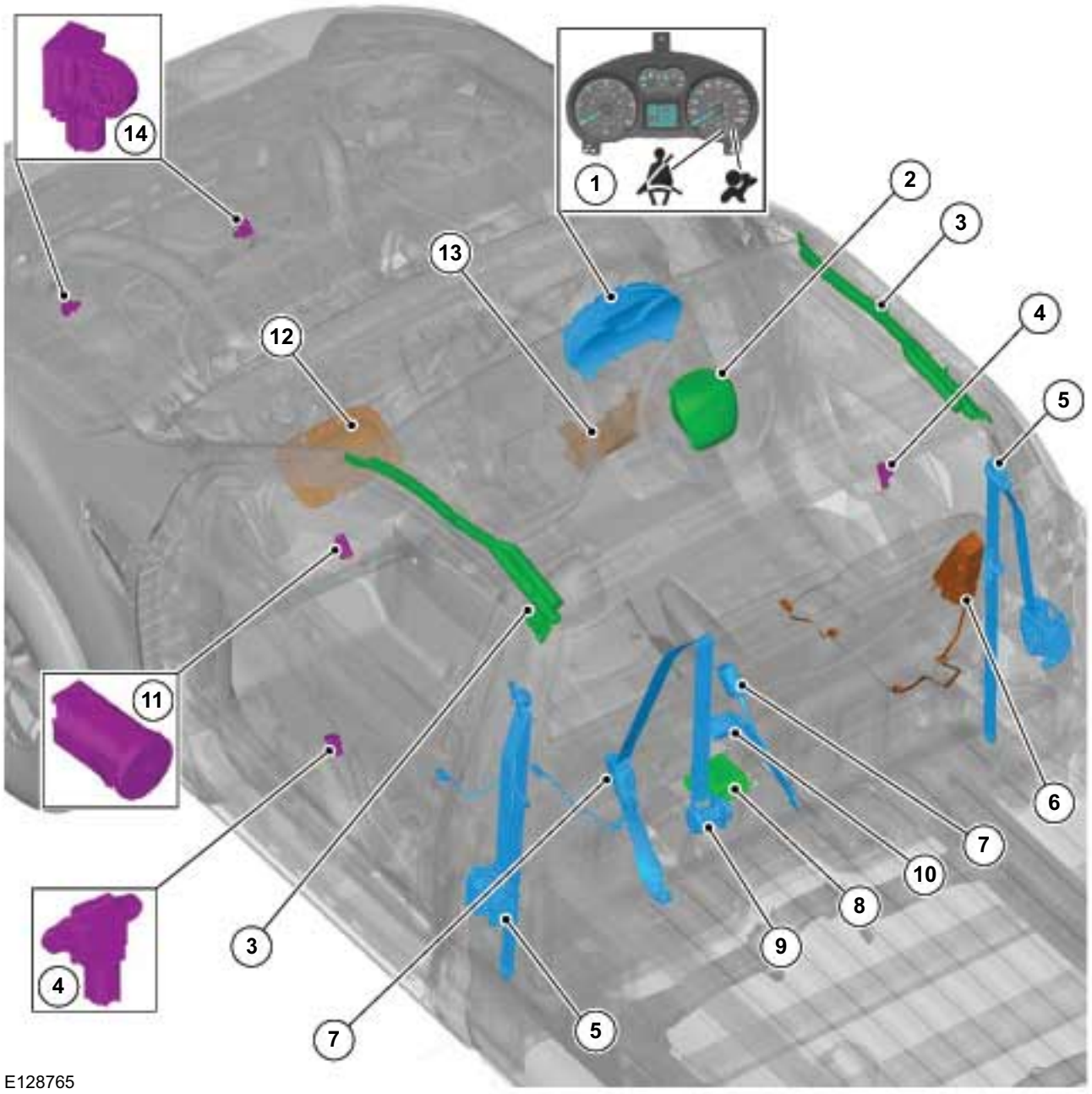

Item	Description
1	Instrument cluster with air bag indicator light and safety belt warning light
2	Driver air bag module
3	Side air curtain module
4	Side impact sensor

Item	Description
5	Front safety belt retractor
6	Side air bag module
7	Front safety belt buckle
8	Restraints control module (RCM)

DESCRIPTION AND OPERATION

Item	Description
9	Front center safety belt retractor
10	Front center safety belt buckle
11	Passenger airbag deactivation (PAD) switch

Item	Description
12	Passenger air bag module
13	Driver lower air bag module
14	Front impact severity sensor

Double cab

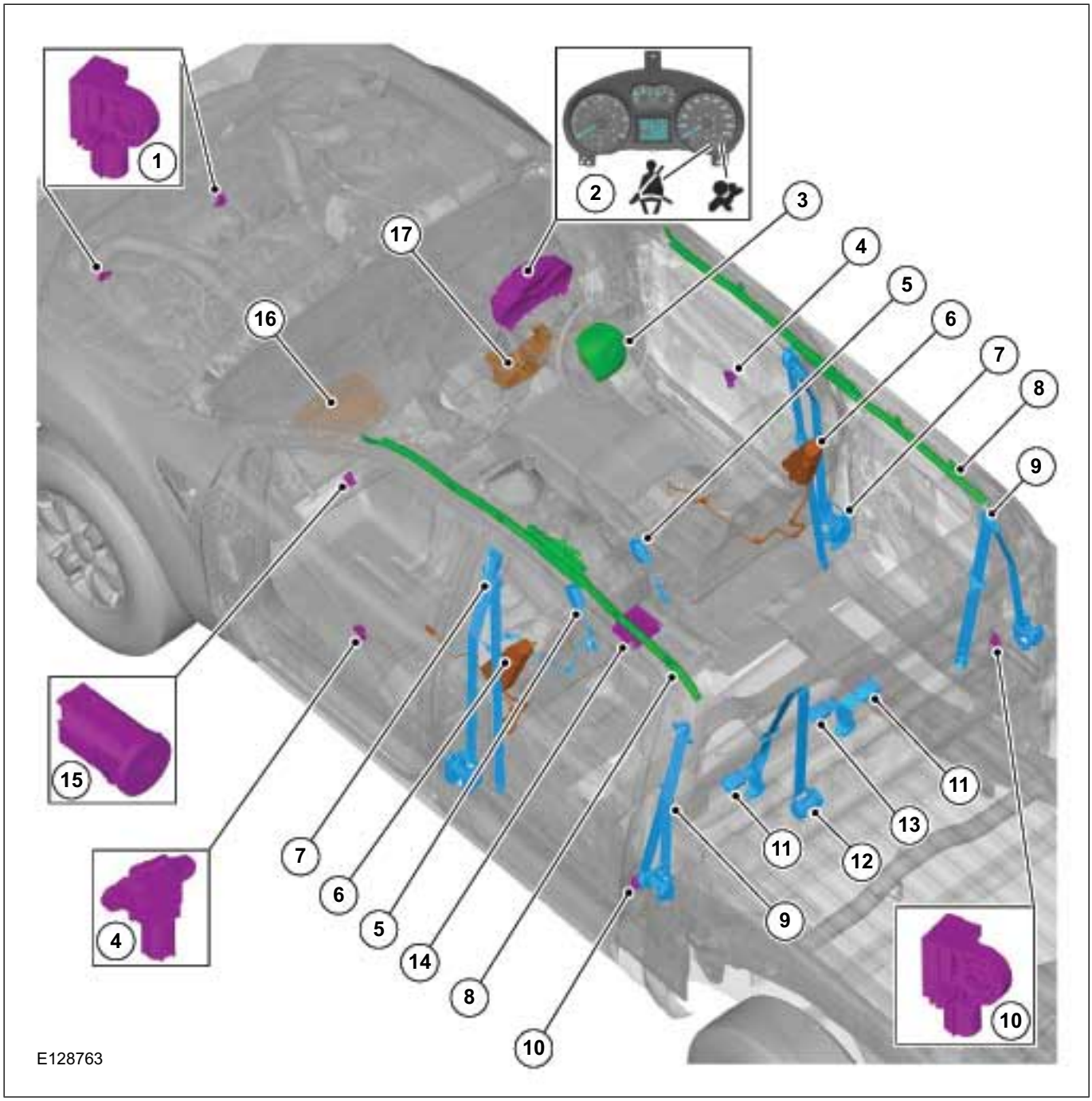

DESCRIPTION AND OPERATION

Item	Description
1	Front impact severity sensor
2	Instrument cluster with air bag indicator light and safety belt warning light
3	Driver air bag module
4	Side impact sensor
5	Front safety belt buckle
6	Side air bag module
7	Front safety belt retractor
8	Side air curtain module
9	Rear safety belt retractor

Item	Description
10	Side impact sensor (rear)
11	Rear safety belt buckle
12	Rear center safety belt retractor
13	Rear center safety belt buckle
14	Restraints control module (RCM)
15	Passenger airbag deactivation (PAD) switch
16	Passenger air bag module
17	Driver lower air bag module

DESCRIPTION AND OPERATION

Stretch cab

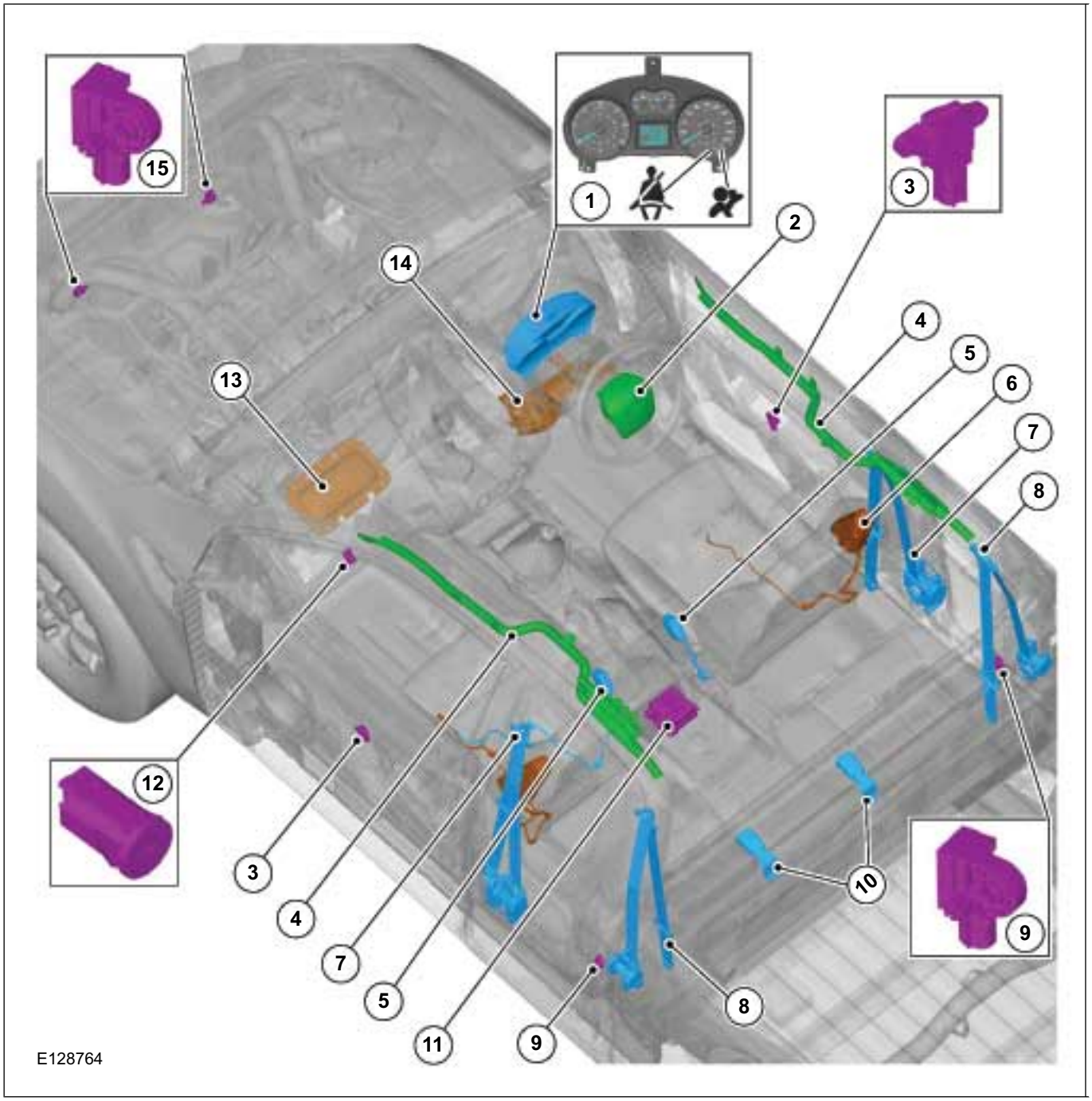

Item	Description
1	Instrument cluster with air bag indicator light and safety belt warning light
2	Driver air bag module
3	Side impact sensor
4	Side air curtain module
5	Front safety belt buckle
6	Side air bag module

Item	Description
7	Front safety belt retractor
8	Rear safety belt retractor
9	Side impact sensor (rear)
10	Rear safety belt buckle
11	Restraints control module (RCM)
12	Passenger airbag deactivation (PAD) switch

DESCRIPTION AND OPERATION

Item	Description
13	Passenger air bag module

Item	Description
14	Driver lower airbag module
15	Front impact severity sensor

DESCRIPTION AND OPERATION

Air Bag and Safety Belt Pretensioner Supplemental Restraint System (SRS)

System overview

Click here to view diagrams

DESCRIPTION AND OPERATION

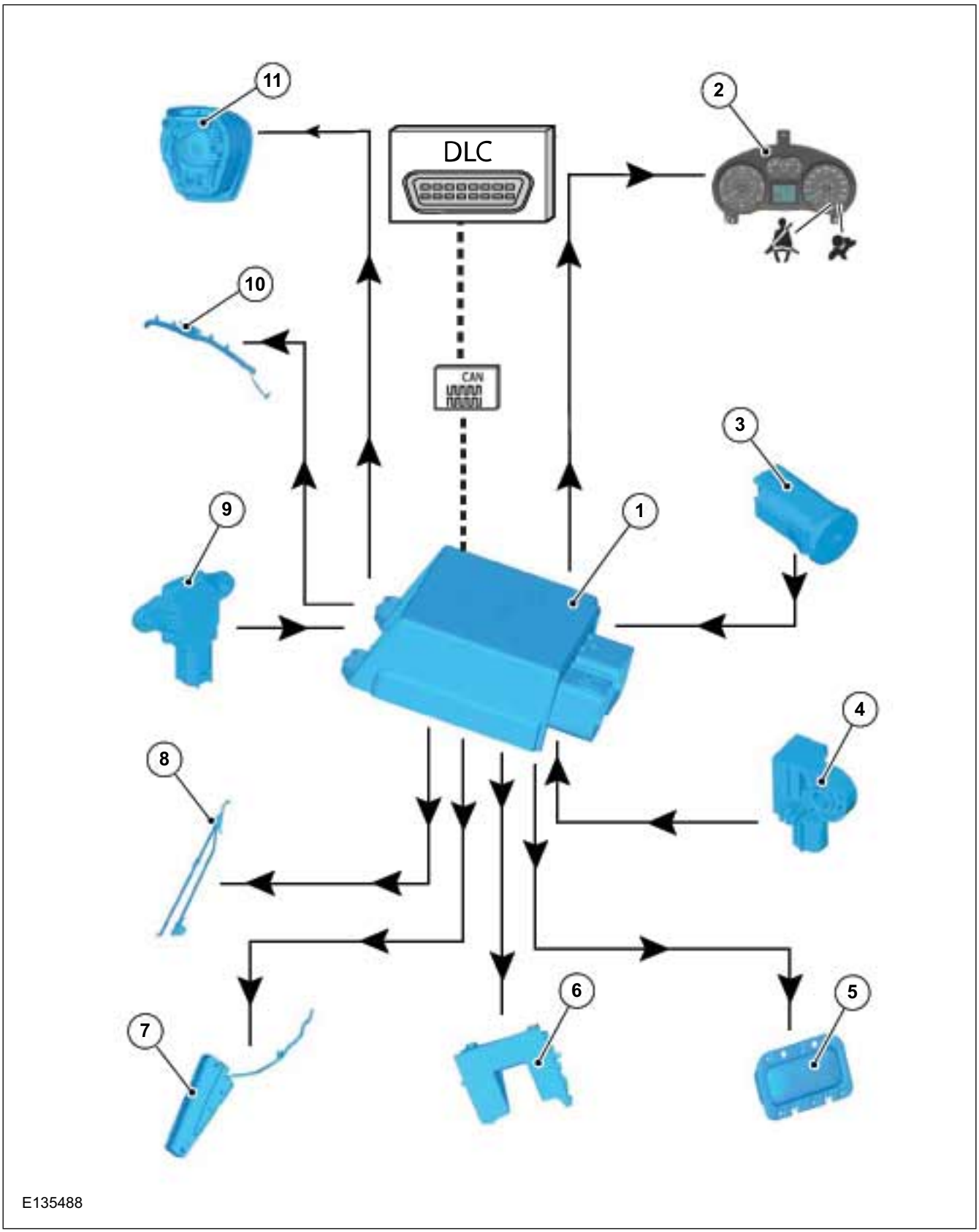

Item	Description
1	RCM (Restraint Control Module)
2	Air bag warning indicator

Item	Description
3	Passenger airbag deactivation (PAD) switch

DESCRIPTION AND OPERATION

Item	Description
4	Front impact severity sensor
5	Passenger air bag module
6	Driver lower airbag module
7	Side airbag module
8	Safety belt retractor and pretensioner
9	Side impact sensor
10	Side air curtain module
11	Driver airbag module

RCM (Restraint Control Module)

E135477

Electronic sensors are incorporated into the RCM; these measure the vehicle acceleration / deceleration in the event of a collision. The calculated value is evaluated by the RCM to determine the severity of the impact.

The RCM compares the values it receives from the crash sensor, side impact sensors and the internal electronic sensors. If the deceleration, due to a frontal or side impact, exceeds the stored value the RCM will trigger the air bag modules and the safety belt pretensioners as required. The RCM can be used again after a collision, provided the RCM is not physically damaged and it passes a self-test.

Passenger air bag deactivation switch

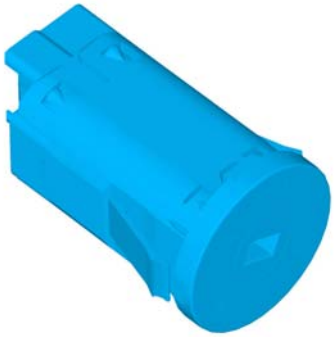

E135479

When the ignition is switched on, a warning lamp in the instrument panel indicates that the passenger air bag module has been deactivated.

Air bag warning indicator

E135478

The airbag warning indicator is active when an airbag system Fault has occurred or the airbag module is disconnected. The indicator will have a predetermined bulb prove- out following ignition being turned to 'Run' configurable with restraints system.

DESCRIPTION AND OPERATION

Driver air bag and driver lower air bag

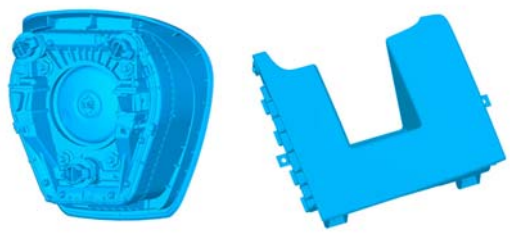

E135480

This vehicle line is available with a steering wheel mounted driver air bag and a driver lower air bag (knee air bag).

Side impact sensors

1. Side impact sensor (Front doors)

E135481

There are two side impact sensors located in the front driver and passenger doors. The sensors transmit digitally encoded pressure information to the RCM, where it is evaluated to assess the severity of a side impact. Power is supplied to the sensor by the RCM. If the sensor fails, the RCM stores a diagnostic trouble code (DTC).

2. Side impact sensor (Rear side)

E135483

There are two side impact sensors located at the bottom of the C-pillars in stretch cab and double cab variants. The sensors transmit digitally encoded acceleration information to the RCM, where it is evaluated to assess the severity of a side impact. Power is supplied to the side impact sensor by the RCM. If the senor fails, the RCM stores a diagnostic trouble code (DTC).

Side air curtain

E135482

In the event of a side impact, the side air curtains (curtain air bags) deploy from the headliner, protecting the first and second row outboard occupants during a side impact.

DESCRIPTION AND OPERATION

Front impact severity sensor

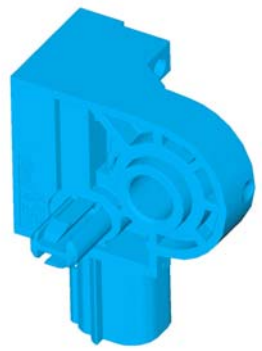
E135483

There are two front impact severity sensors located at the front of the vehicle, behind the radiator grille. The sensors transmit digitally encoded acceleration information to the RCM, where it is evaluated to assess the severity of a front impact. Power is supplied to the sensor by the RCM. If the sensor fails, the RCM stores a diagnostic trouble code (DTC).

Safety belt retractor and pretensioners

E135484

The front outboard seat belts are available equipped with a retractor pretensioner and load limiter. In the event of a collision, the safety belt pretensioner deploy in one of two ways:

- On their own.
- Simultaneously with the front air bag module(s).

Safety belt use is necessary to obtain the best occupant protection and to receive the full advantage of the SRS.

Side air bag

E135485

The side air bags are incorporated in the front seat backrests and side air bag modules deploy from the outboard of front seat backrest upon a side impact.

When a side air bag is deployed, the seam of the seat cover tears open enabling the side air bag to inflate unhindered from the front seat backrest.

Passenger air bag

E135487

The passenger air bag is designed to provide increased collision protection for front seat passengers.

GENERAL PROCEDURES

Clockspring Adjustment

General Equipment

Adhesive Tape

WARNINGS:

If there is a break between installing the clockspring and steering wheel rotation sensor assembly and installing the steering wheel, the centralizing of the clockspring must be repeated.

If the centralization of the clockspring is in doubt, the centralizing of the clockspring must be repeated.

NOTE: Make sure that the road wheels are in the straight ahead position.

1.
1. Turn the clockspring in a clockwise direction until a resistance is felt.
2. Turn the clockspring in a counterclockwise direction 2.5 revolutions, until the arrow marked on the rotor of the clockspring aligns with the raised 'V' section on the outer cover of the clockspring.

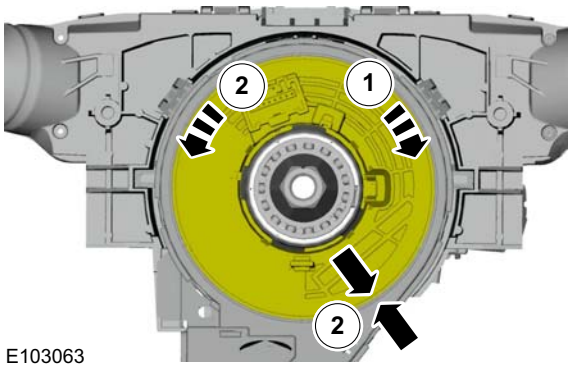

E103063

2. **CAUTION: Make sure that the clockspring rotor does not rotate.**

General Equipment: Adhesive Tape

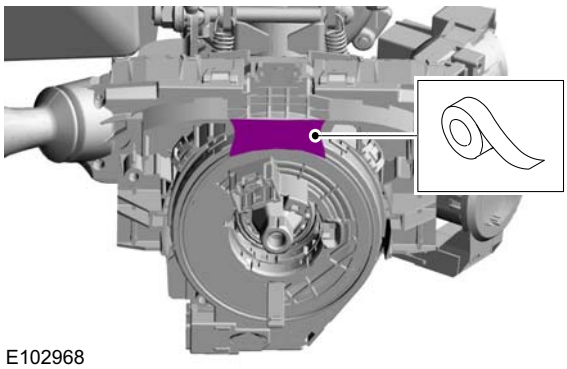
E102968

GENERAL PROCEDURES

Deployed Air Bag Disposal

WARNING: After deployment, the air bag module surface may contain deposits of sodium hydroxide, a product of the gas generate combustion, that is irritating to the skin. Use protective gloves when handling any deployed air bag module. Failure to follow this instruction may result in personal injury.

1. **Remove the deployed air bag module(s). For additional information, refer to the relevant procedure in this section.**
2. **Seal the deployed air bag module(s) in the packaging from the new air bag module(s) or a suitable polythene bag, and then dispose of in accordance with local contaminated waste regulations.**

GENERAL PROCEDURES

Scrapped Vehicle Air Bag and Safety Belt Pretensioner Disposal - In-Vehicle Disposal

Special Tool(s)

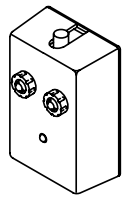	418-143 Adapter Box (AC)
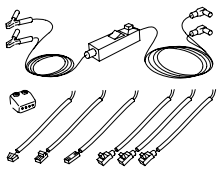	418-S055C Test and Deployment Lead, Air Bag/Pyrotechnic Safety Belt

Disposal

WARNINGS:

To avoid accidental deployment, the restraints control module (RCM) backup power supply must be depleted. Wait at least one minute after disconnecting the battery ground cable(s) before commencing any repair or adjustment to the supplemental restraint system (SRS), or any component(s) adjacent to the SRS sensors. Failure to follow these instructions may result in personal injury.

To minimize the possibility of premature deployment, do not use radio key code savers when working on the SRS. Failure to follow this instruction may result in personal injury.

Before deploying the air bag module or safety belt pretensioner pyrotechnic make sure that all personnel in the vicinity are aware that a loud noise (bang) is about to occur. Do not let anybody approach closer than 6 meters. Failure to follow this instruction may result in personal injury.

The air bag module or the safety belt pretensioner should not be handled immediately following deployment as the air bag module will be very hot. Failure to follow this instruction may result in personal injury.

After deployment, the inflator(s) becomes inert, direct contact to the skin or eyes of any free pyrotechnic residues should be avoided. Failure to follow this instruction may result in personal injury.

Always wear gloves and safety glasses when handling deployed air bag modules and safety belt pretensioners, Failure to follow this instruction may result in personal injury.

If the air bag module or safety belt pretensioner pyrotechnic residue should contact the eyes, wash the eyes with clean water and seek medical assistance. Failure to follow this instruction may result in personal injury.

If a large amount of air bag or safety belt pretensioner pyrotechnic residue is inhaled, seek medical assistance. Failure to follow this instruction may result in personal injury.

3. Refer to: Battery Disconnect and Connect (414-01 Battery, Mounting and Cables, General Procedures).

4. Refer to: Floor Console (501-12 Instrument Panel and Console, Removal and Installation).
Refer to: Floor Console Extension - Vehicles With: Center Armrest (501-12, Removal and Installation).

5.

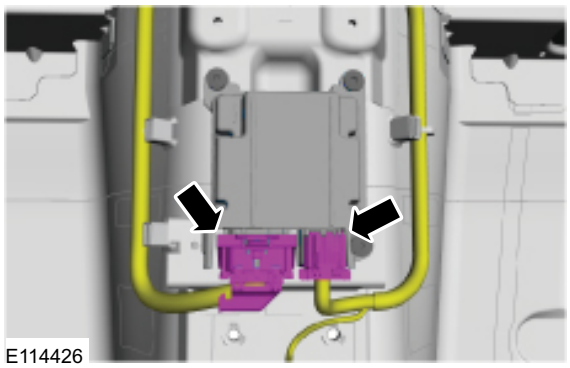

6. 1. 12 volt battery.

Special Tool(s): 418-143, 418-S055C

GENERAL PROCEDURES

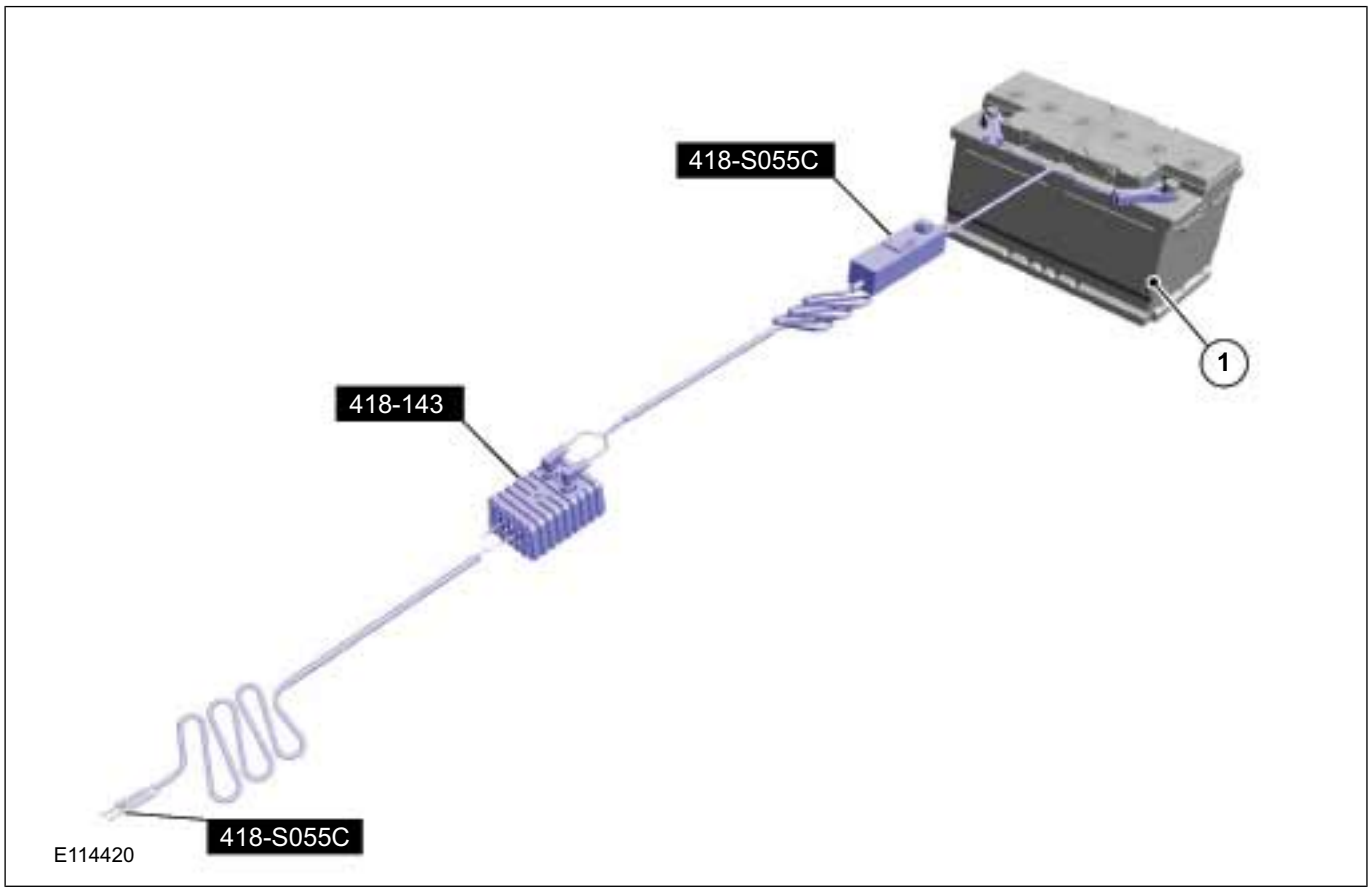

7.

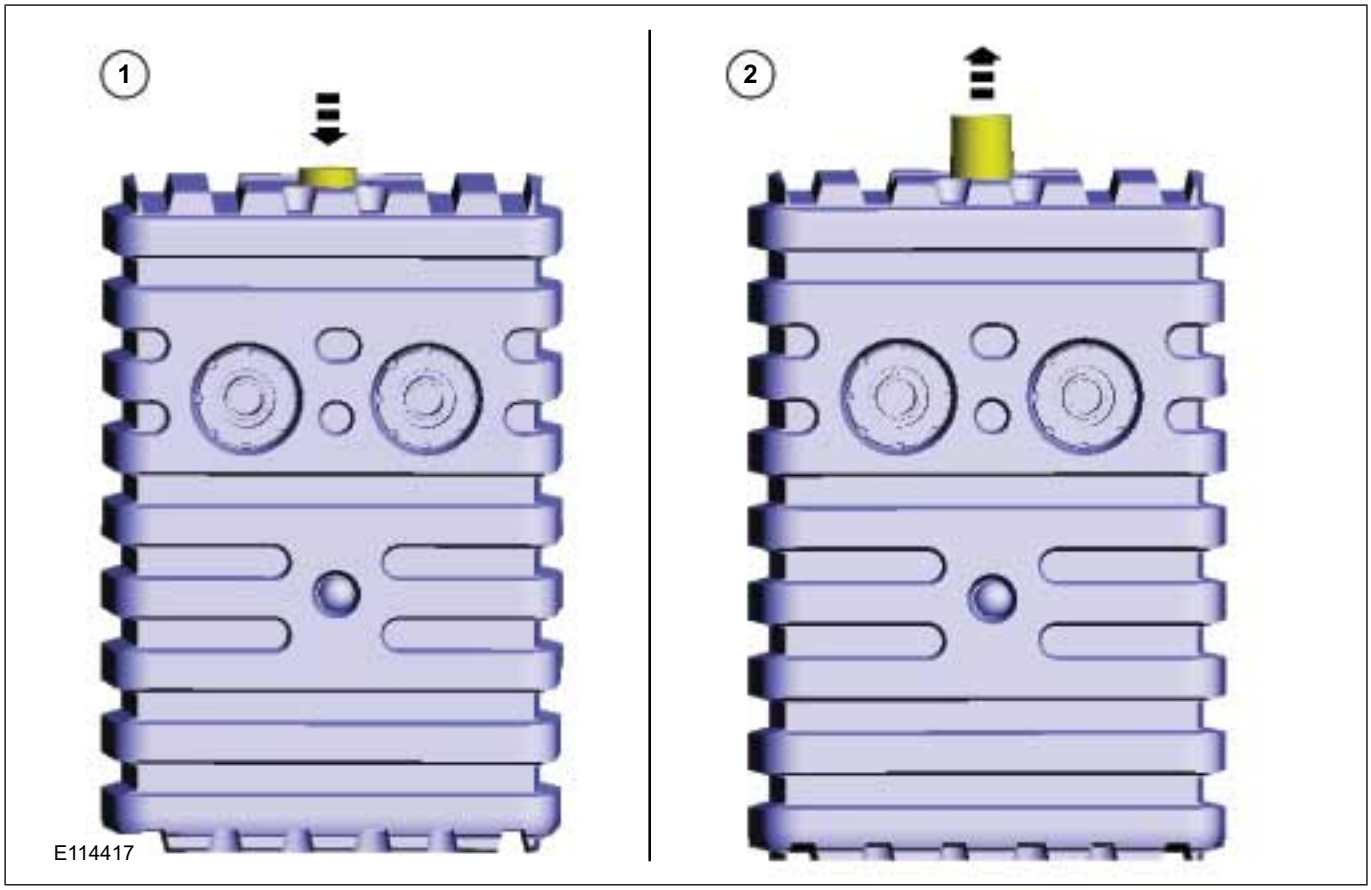

GENERAL PROCEDURES

8. 2. **WARNING: Make sure to be a minimum distance of 6 meters from pyrotechnic components during deployment. If possible stand behind a wall.**

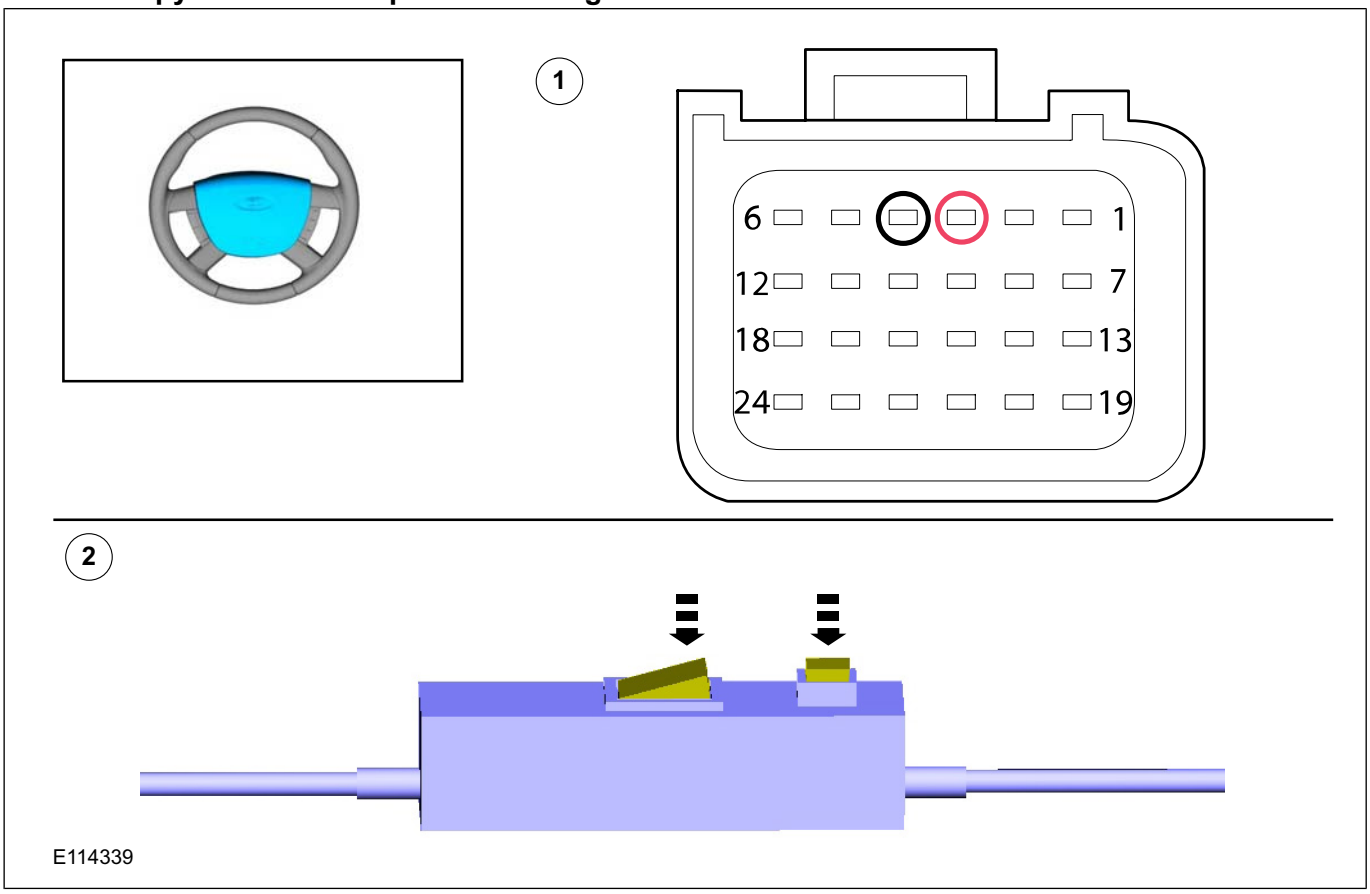

9. 2. **WARNING: Make sure to be a minimum distance of 6 meters from pyrotechnic components during deployment. If possible stand behind a wall.**

GENERAL PROCEDURES

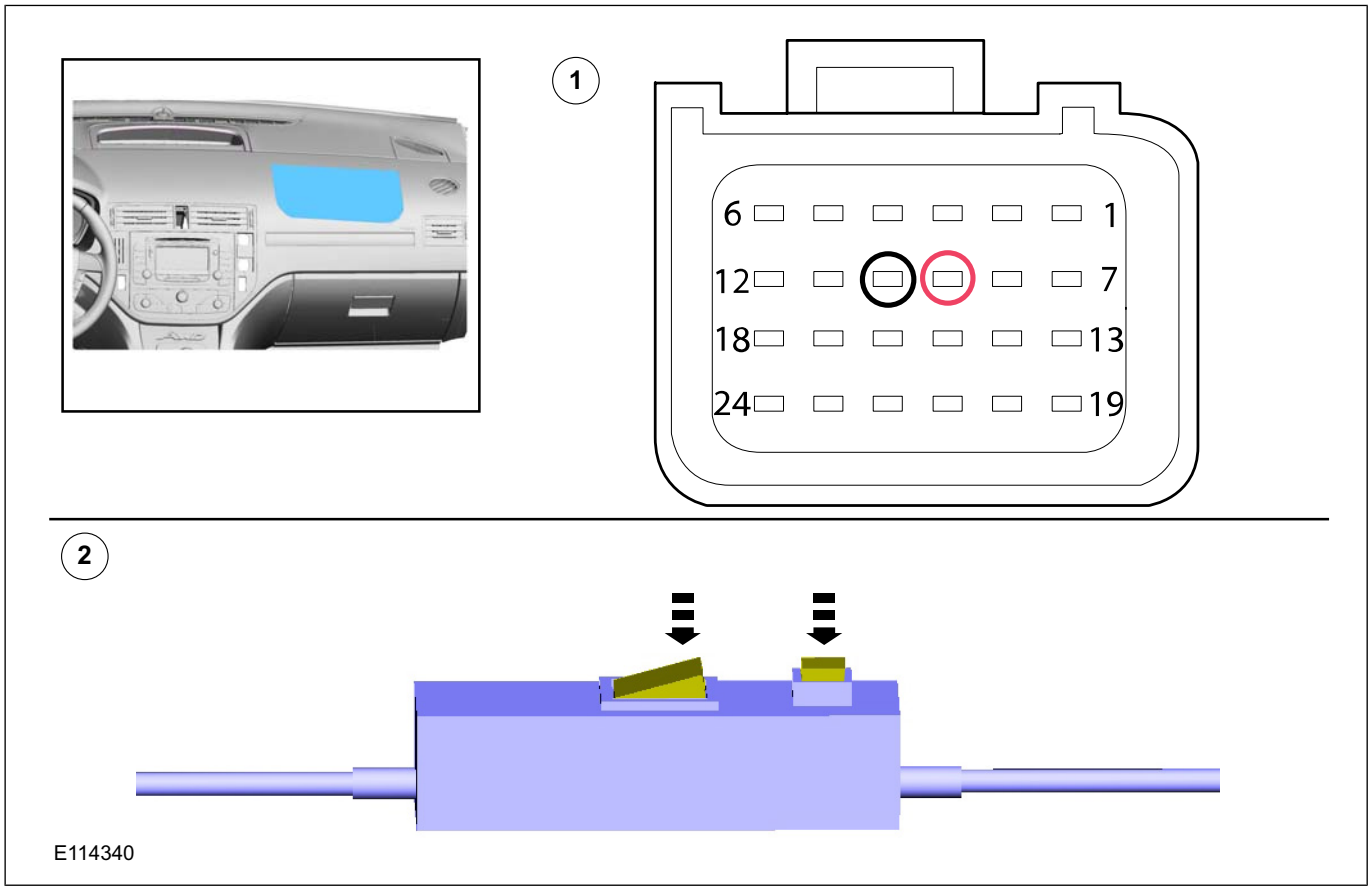

10. 2. **WARNING: Make sure to be a minimum distance of 6 meters from pyrotechnic components during deployment. If possible stand behind a wall.**

GENERAL PROCEDURES

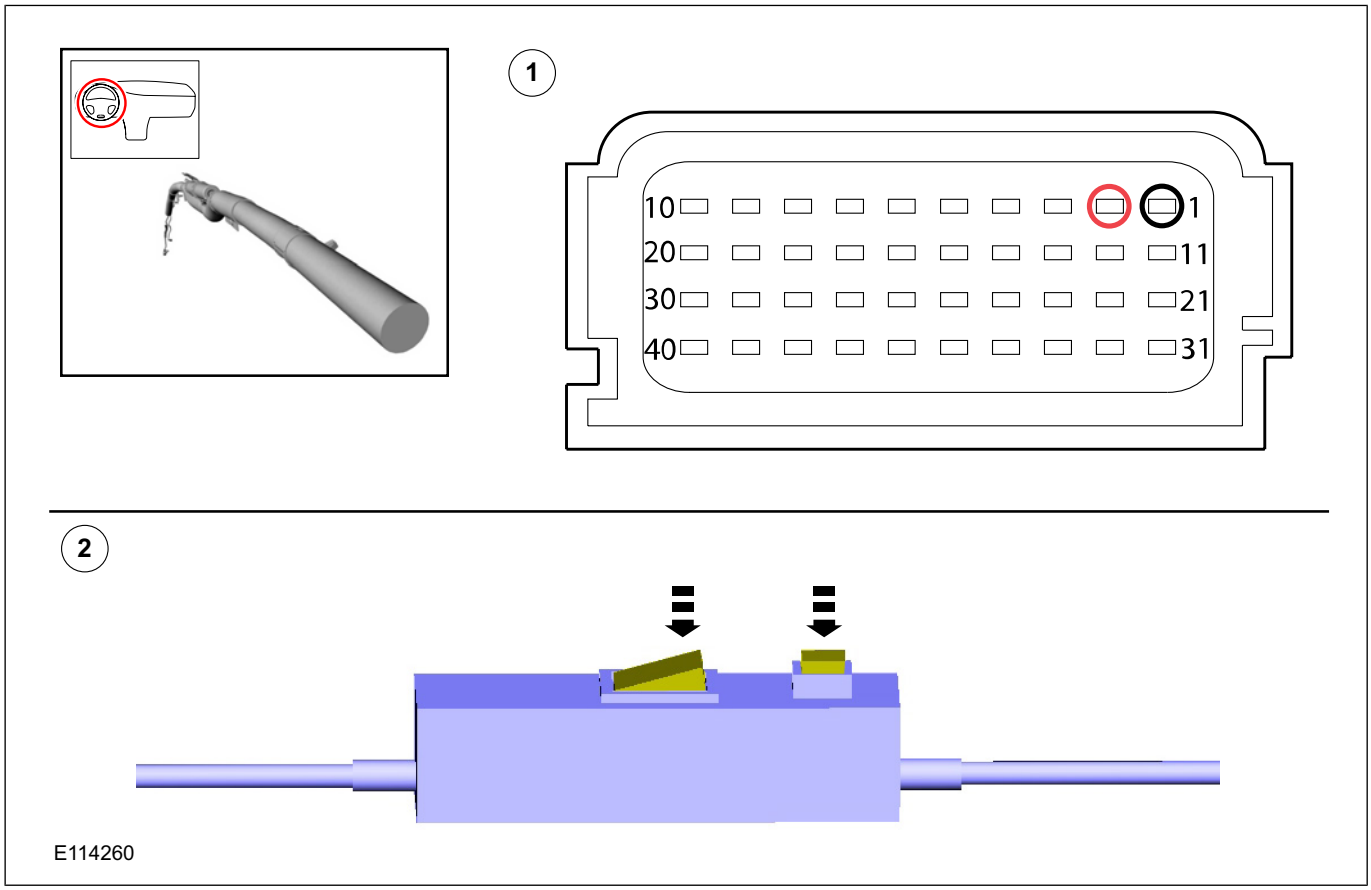

11. 2. **WARNING: Make sure to be a minimum distance of 6 meters from pyrotechnic components during deployment. If possible stand behind a wall.**

GENERAL PROCEDURES

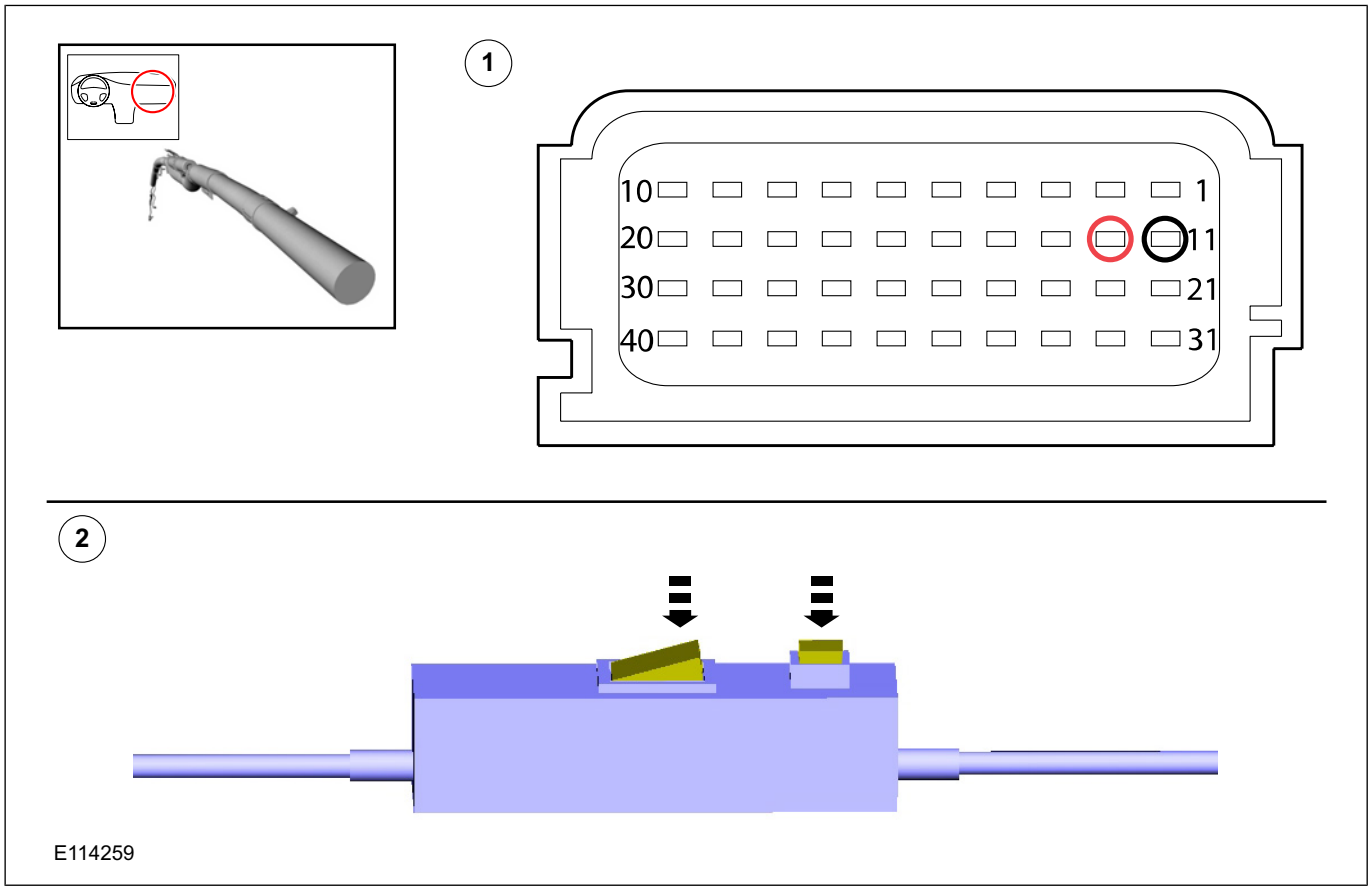

12. 2. **WARNING: Make sure to be a minimum distance of 6 meters from pyrotechnic components during deployment. If possible stand behind a wall.**

GENERAL PROCEDURES

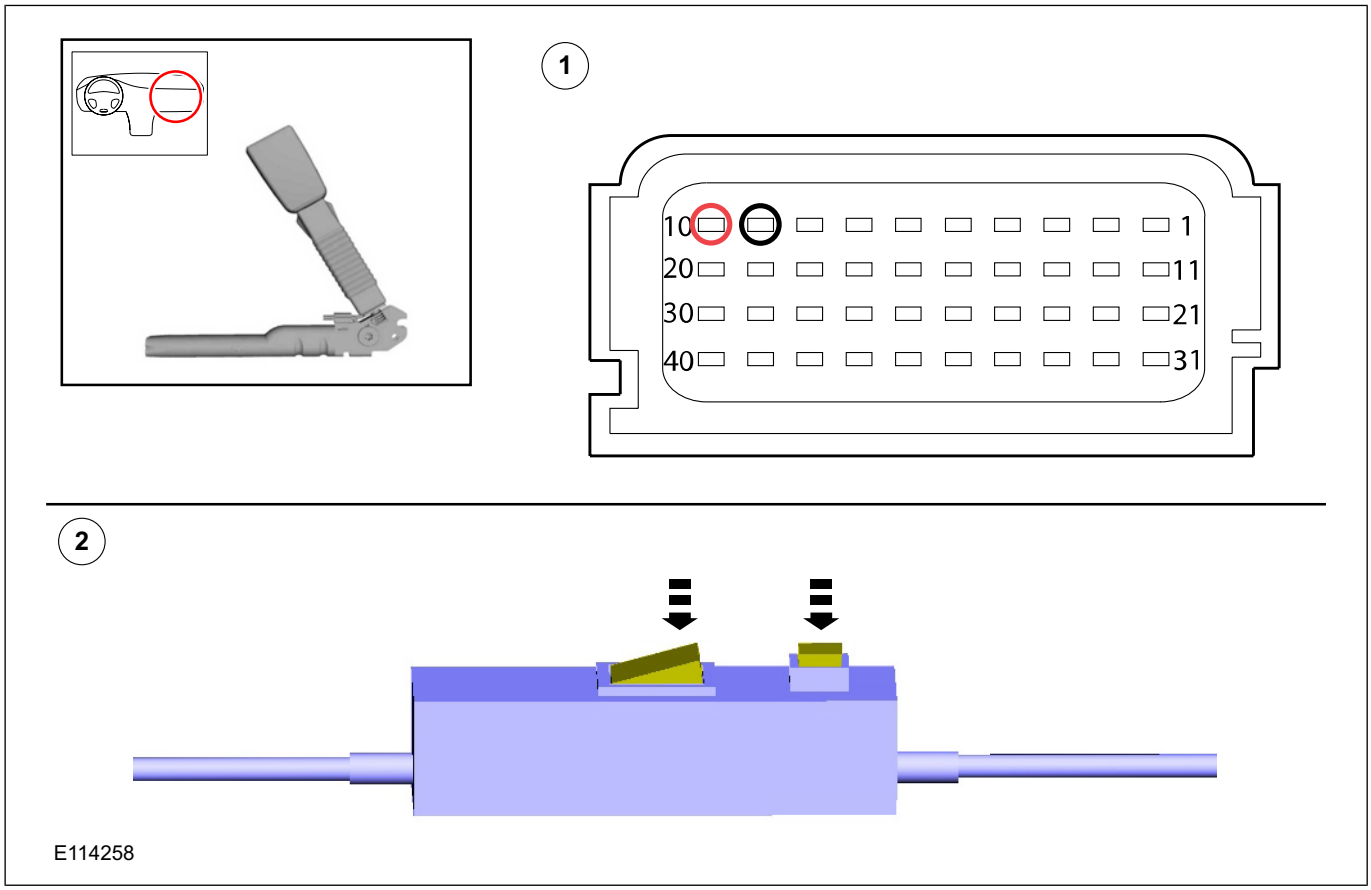

13. 2. **WARNING: Make sure to be a minimum distance of 6 meters from pyrotechnic components during deployment. If possible stand behind a wall.**

GENERAL PROCEDURES

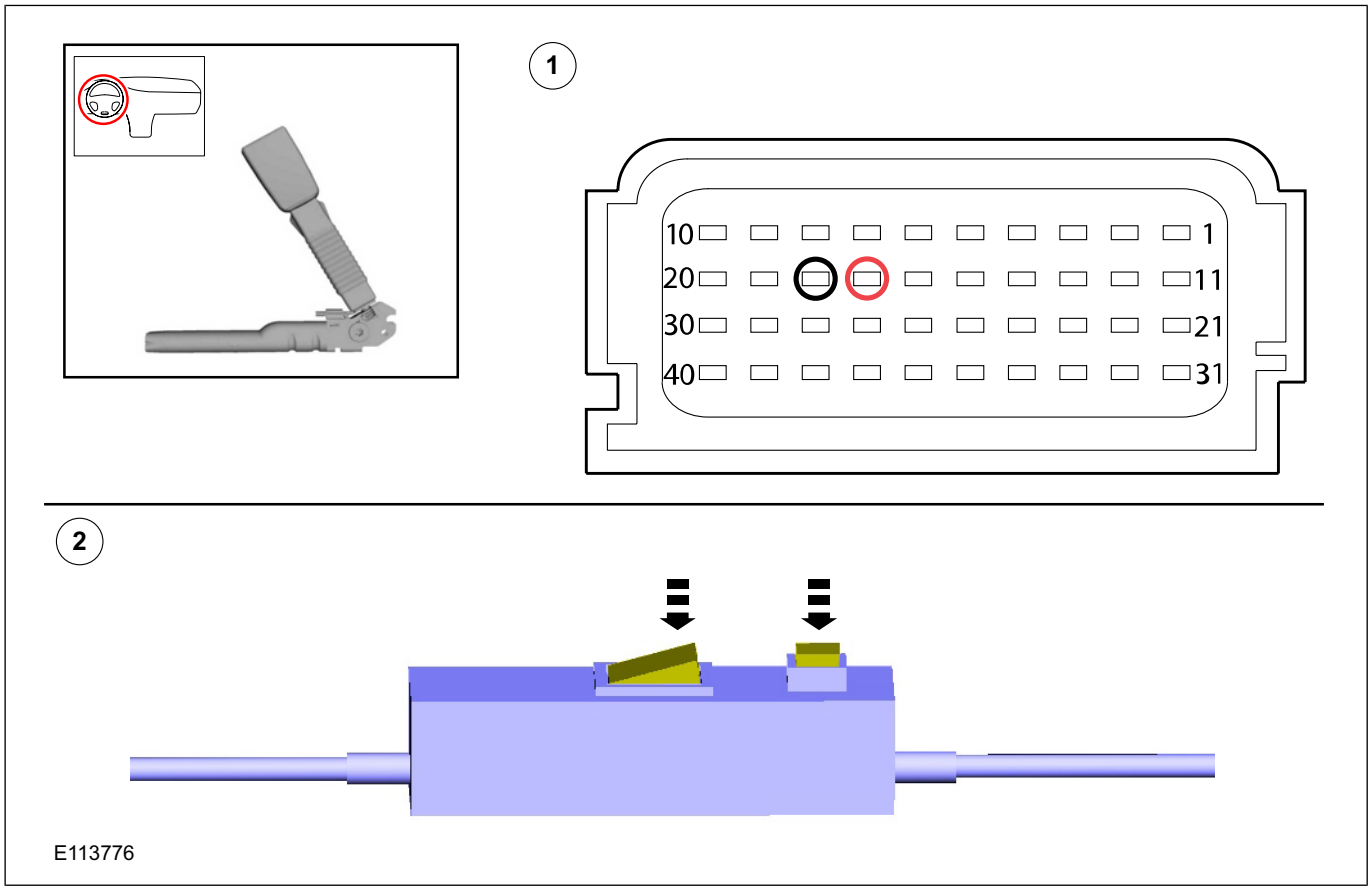

14. 2. **WARNING: Make sure to be a minimum distance of 6 meters from pyrotechnic components during deployment. If possible stand behind a wall.**

GENERAL PROCEDURES

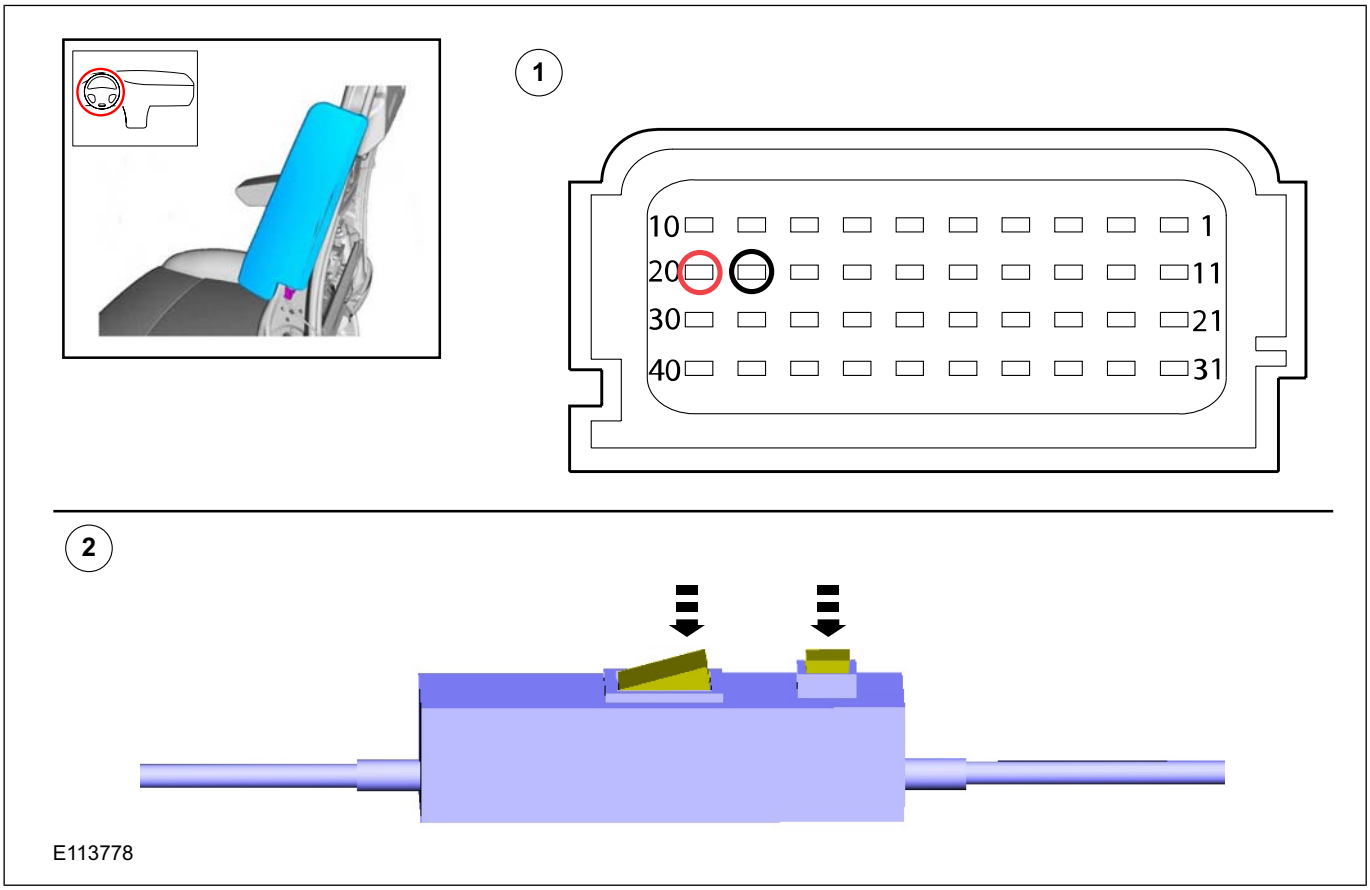

15. 2. **WARNING: Make sure to be a minimum distance of 6 meters from pyrotechnic components during deployment. If possible stand behind a wall.**

GENERAL PROCEDURES

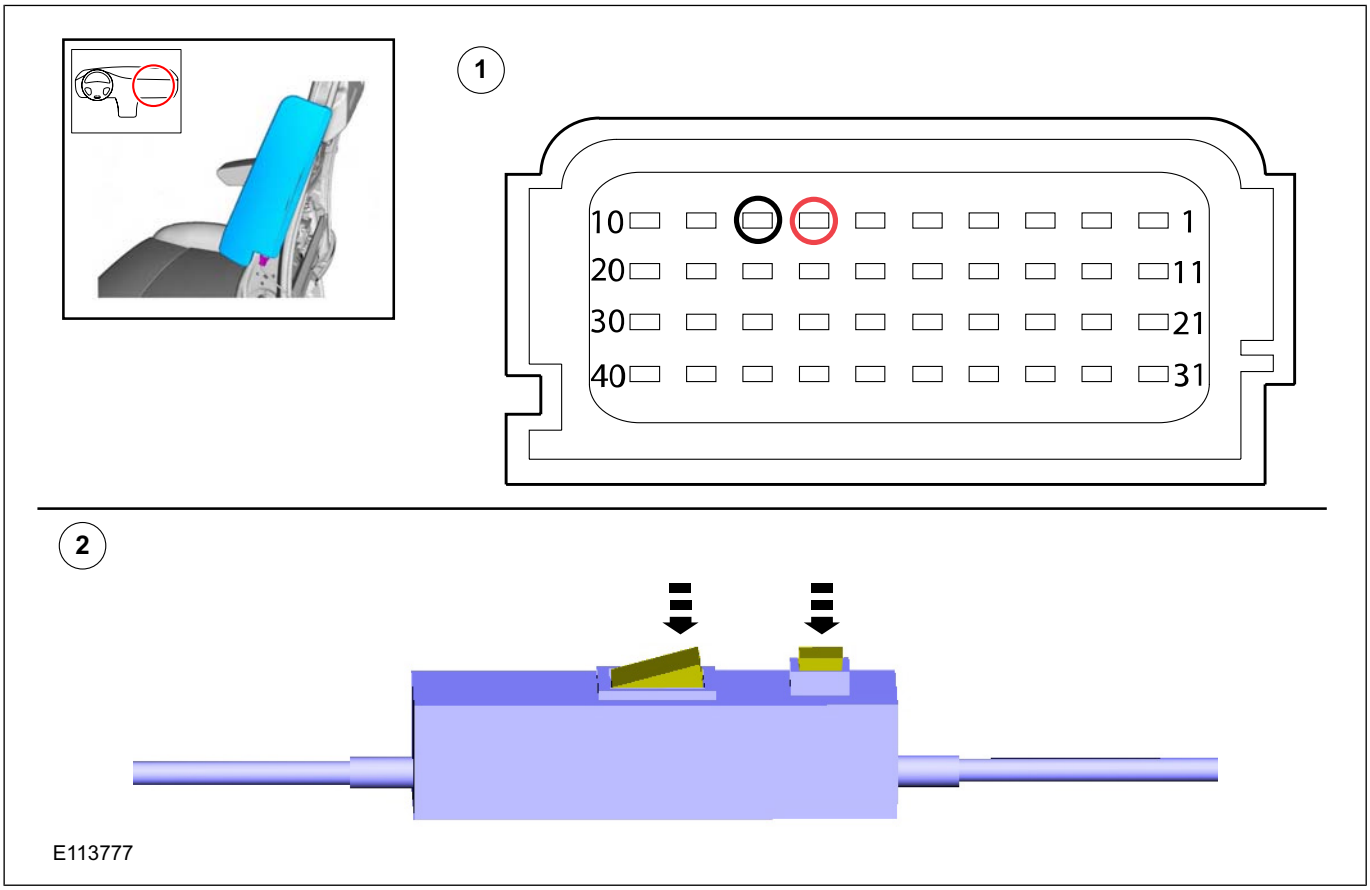

16. Deployed air bag module(s) and safety belt pretensioners should be sealed in suitable bags and then disposed of in accordance with local contaminated waste regulations.

17. **NOTE:** All unserviceable air bag modules have been placed on the Mandatory Return List. All discolored or damaged air bag modules should be treated the same as any unserviceable live air bag module being returned.

    Refer to: Front Safety Belt Retractor (501-20A, Removal and Installation).
    Refer to: Driver Air Bag Module (501-20B, Removal and Installation).
    Refer to: Passenger Air Bag Module (501-20B, Removal and Installation).
    Refer to: Side Air Bag Module (501-20B, Removal and Installation).
    Refer to: Side Air Curtain Module (501-20B, Removal and Installation).

18. **WARNING: Under no circumstances is an unserviceable air bag module or safety belt pretensioner to be returned through the local mailing system. Failure to follow this instruction may result in personal injury.**

    If an air bag module or safety belt pretensioner fails to deploy, seal the unserviceable air bag module or safety belt pretensioner in suitable packaging and return to the Exchange Plan Center, as appointed through the local National Sales Company

GENERAL PROCEDURES

Unserviceable Air Bag Disposal

1. **WARNINGS:**

   To minimize the possibility of injury in the event of premature deployment, always carry a live air bag module with the bag and trim cover pointed away from the body. Failure to follow this instruction may result in personal injury.

   To prevent premature deployment, live air bag modules must only be placed on work benches which have been ground bonded. Failure to follow this instruction may result in personal injury.

NOTE: All unserviceable air bag modules have been placed on the Mandatory Return List. All discolored or damaged air bag modules should be treated the same as any unserviceable live air bag module being returned.

   Remove the unserviceable air bag module. For additional information, refer to the relevant procedure in this section.

2. **WARNING: Under no circumstances is an unserviceable air bag module(s) to be returned through the local mailing system. Failure to follow this instruction may result in personal injury.**

   Seal the unserviceable air bag module(s) in the packaging from the new air bag module(s) and address to the appropriate manufacturer. The package should then be forwarded to the Exchange Plan Center (as appointed through the national sales company) who will arrange forwarding to the manufacturer.

3. **NOTE: Autoliv air bag modules and seat belt pretensioners.**

   Autoliv Gmbh, Theodor Heuss Strasse 2, 85221, Dachau, Germany.

4. **NOTE: TRW air bag modules.**

   TRW Occupant Restraint Systems, FAO Rene Getto, Industriestr 20, 73551, Aldorf, Germany.

5. **NOTE: TRW seat belt pretensioners.**

   TRW Occupant Restraint Systems, FAO Helmut Goss, Industriestr 20, 73551, Aldorf, Germany.

6. **NOTE: Takata Petri air bag modules.**

   Takata Petri AG, Grossostheimer Strasse 223, D-63741 Aschaffenburg, (Supplier Code P790M) Germany.

GENERAL PROCEDURES

Unserviceable Air Bag Disposal

1. **Information not available at this time.**

REMOVAL AND INSTALLATION

Driver Air Bag Module

General Equipment

Flat Headed Screw Driver

Removal

WARNING: The supplemental restraint system (SRS) is active for a certain length of time after the power supply has been disconnected. Wait for a minimum of 3 minutes before disconnecting or removing any SRS components.

NOTE: Removal steps in this procedure may contain installation details.

1. Refer to: Supplemental Restraint System (SRS) Health and Safety Precautions (100-00 General Information, Description and Operation).
2. Refer to: Battery Disconnect and Connect (414-01 Battery, Mounting and Cables, General Procedures).
3. **NOTE:** Make sure that the road wheels are in straight ahead position.

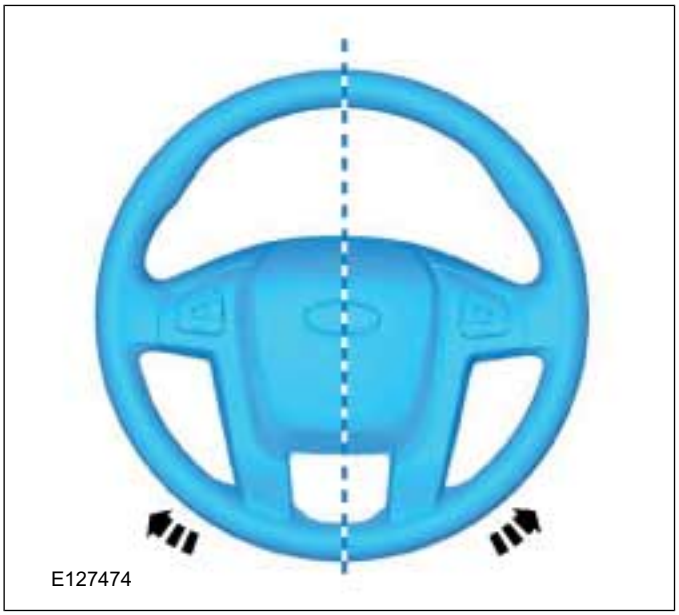

4. Depending on the vehicle variant, steering wheels with a different design for cut marks can be fitted.

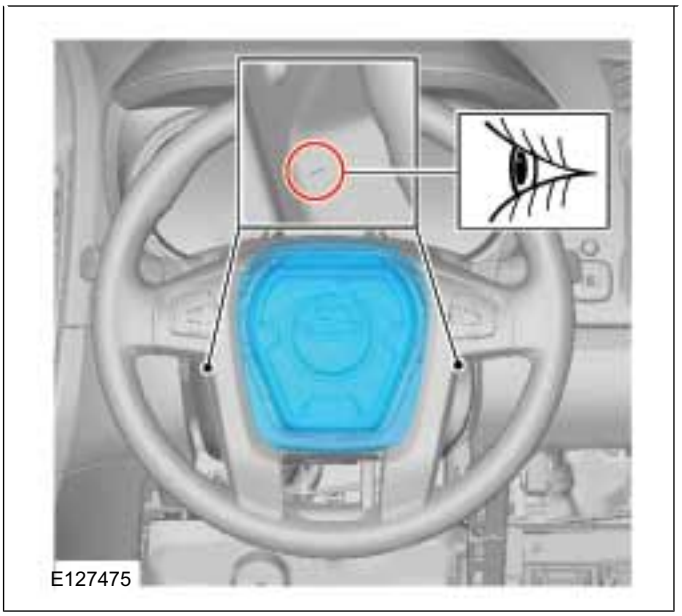

5. General Equipment: Flat Headed Screw Driver

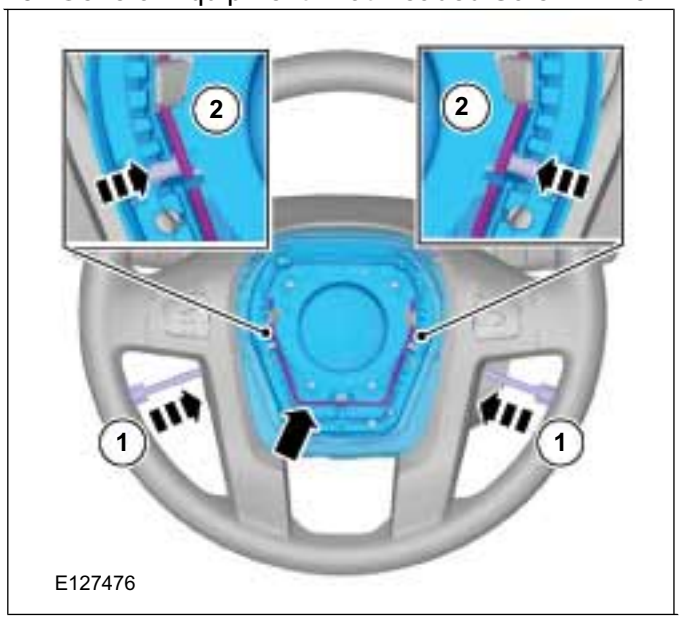

REMOVAL AND INSTALLATION

6.

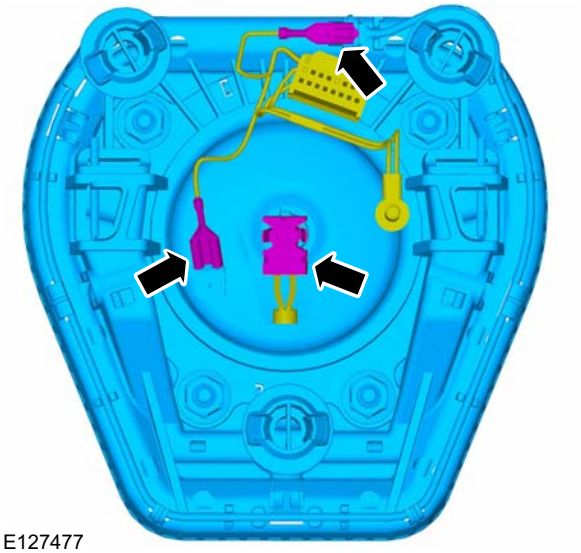

Installation

1. To install, reverse the removal procedure.

REMOVAL AND INSTALLATION

Passenger Air Bag Module

Removal

WARNING: The supplemental restraint system (SRS) is active for a certain length of time after the power supply has been disconnected. Wait for a minimum of 3 minutes before disconnecting or removing any SRS components.

NOTE: Removal steps in this procedure may contain installation details.

1. Refer to: Supplemental Restraint System (SRS) Health and Safety Precautions (100-00 General Information, Description and Operation).
   Refer to: Battery Disconnect and Connect (414-01 Battery, Mounting and Cables, General Procedures).
2. Refer to: Glove Compartment - Removal (501-12 Instrument Panel and Console, Removal and Installation).
3.

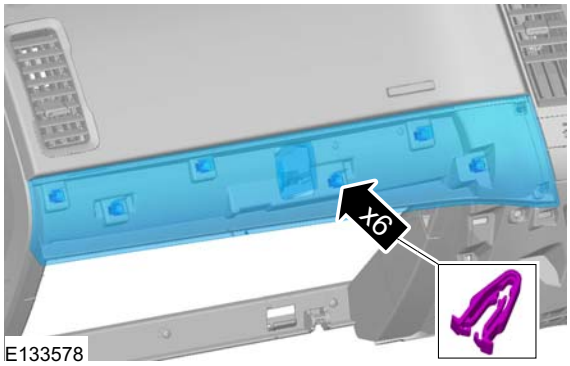

4. Torque: 7 Nm

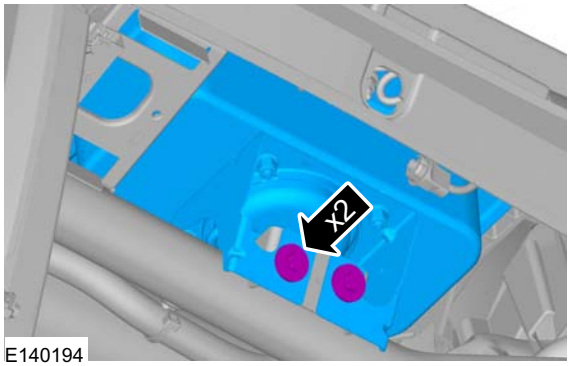

5. **NOTE:** Take extra care when handling the component.
   Torque: 6 Nm

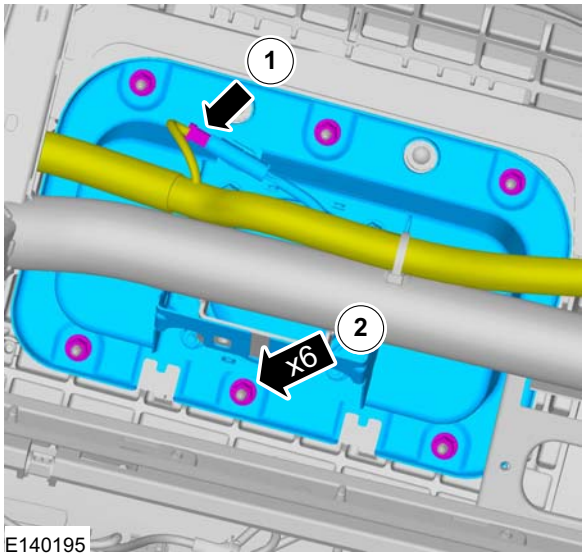

Installation

1. To install, reverse the removal procedure.

REMOVAL AND INSTALLATION

Driver Lower Air Bag Module

Removal

WARNINGS:

The supplemental restraint system (SRS) is active for a certain length of time after the power supply has been disconnected. Wait for a minimum of 3 minutes before disconnecting or removing any SRS components.

Make sure that the vehicle electrical system is fully depowered and no other power source is connected.

NOTE: Removal steps in this procedure may contain installation details.

1. Refer to: Supplemental Restraint System (SRS) Health and Safety Precautions (100-00 General Information, Description and Operation).

2. Refer to: Battery Disconnect and Connect (414-01 Battery, Mounting and Cables, General Procedures).

3.

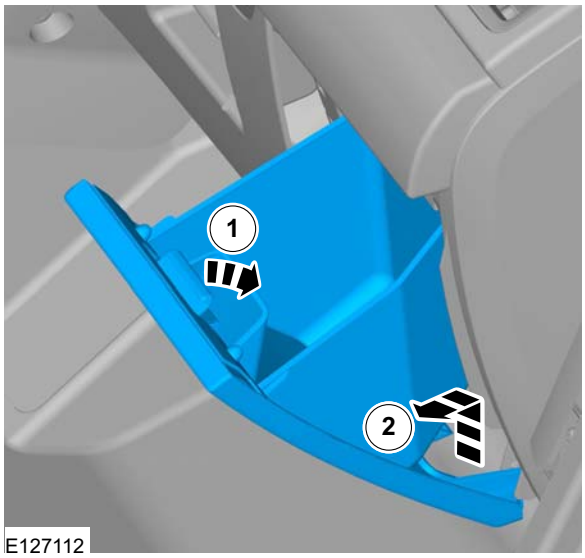

E127112

4.

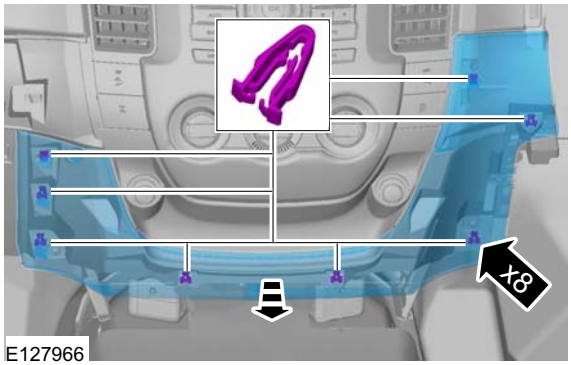

E127966

5. **NOTE:** Make sure that the steering column adjustment arm is in normal position.

   3. Torque: 9 Nm

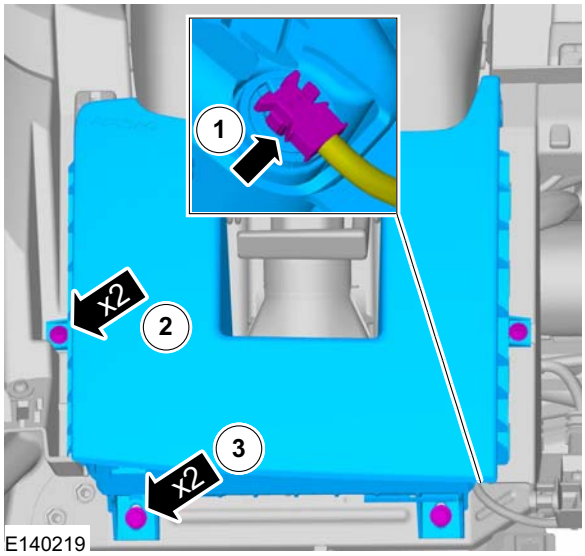

E140219

REMOVAL AND INSTALLATION

6. 1. On both sides.

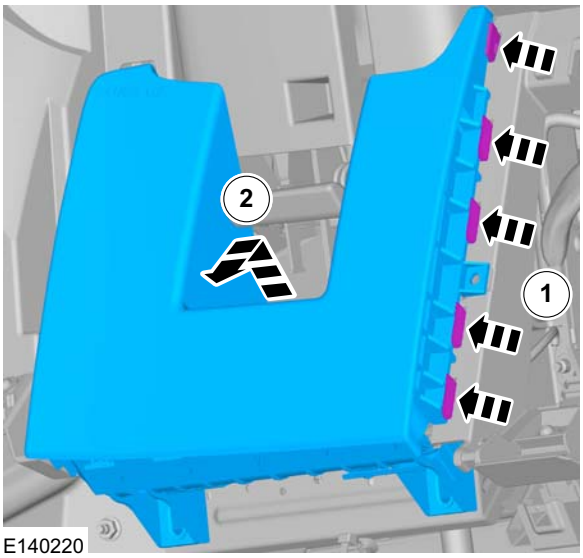

Installation

1. To install, reverse the removal procedure.

REMOVAL AND INSTALLATION

Side Air Bag Module

Removal

NOTE: Removal steps in this procedure may contain installation details.

1. Refer to: Front Seat Backrest (501-10 Seating, Removal and Installation).

2.

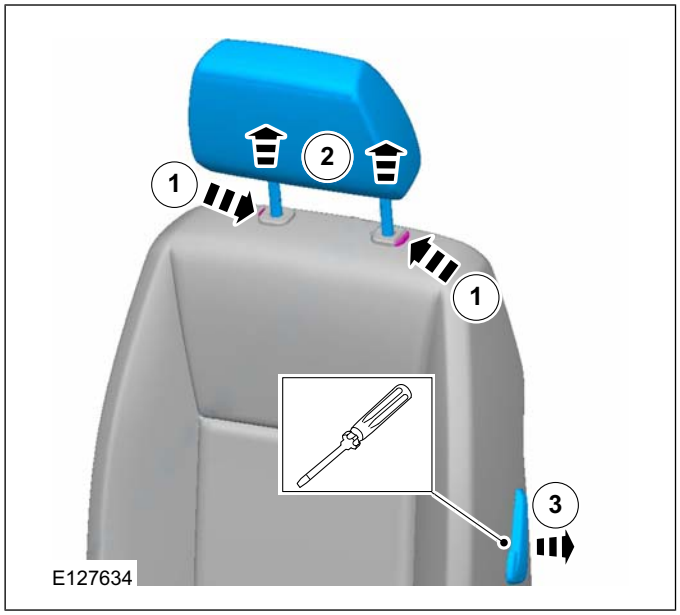

3.

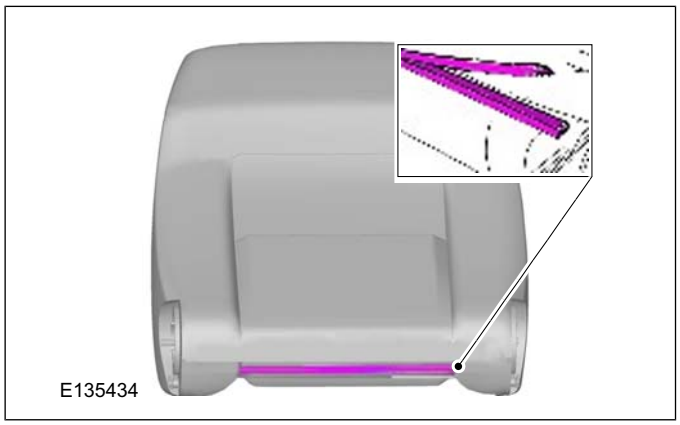

4.

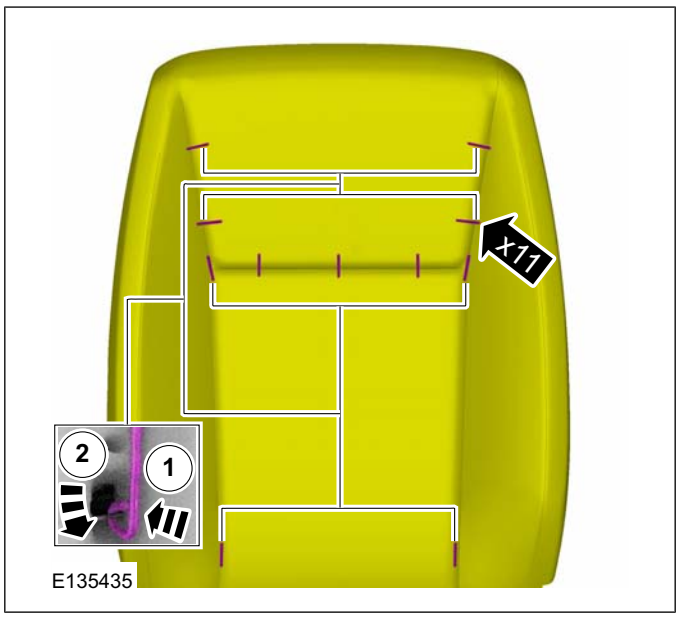

5.

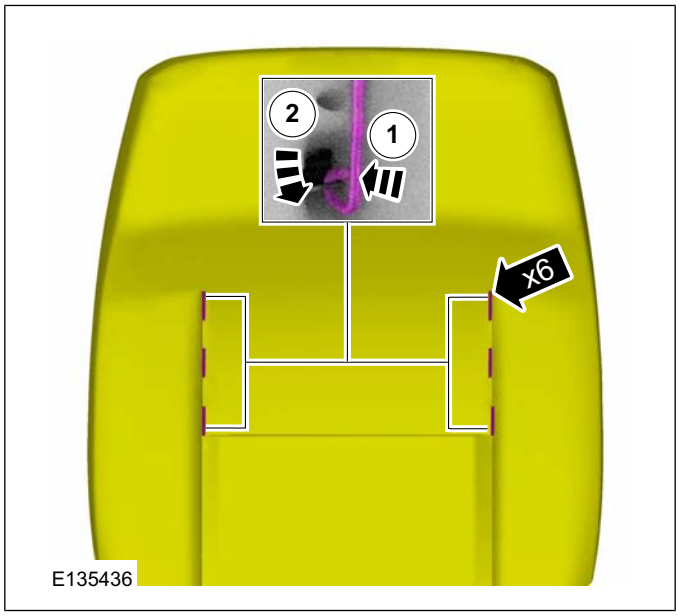

REMOVAL AND INSTALLATION

6.

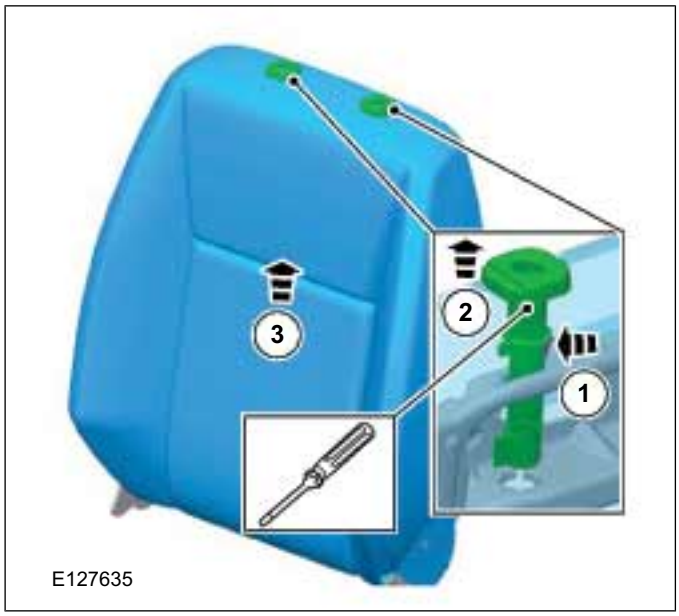

7.

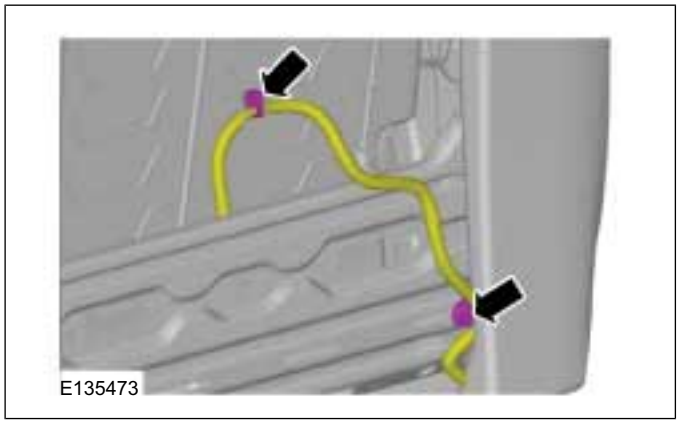

8.

9. Torque: 6 Nm

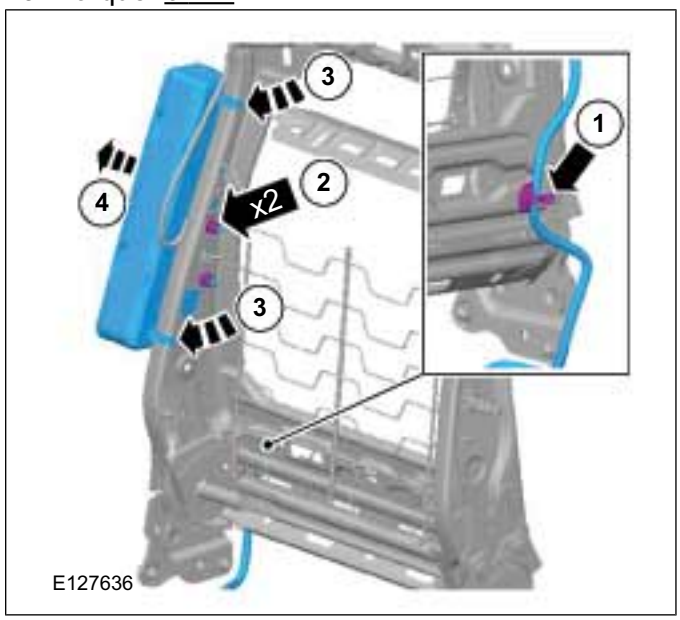

Installation

1. To install, reverse the removal procedure.

REMOVAL AND INSTALLATION

Side Air Curtain Module

General Equipment

Long Nose Pliers

Removal

WARNING: The supplemental restraint system (SRS) is active for a certain length of time after the power supply has been disconnected. Wait for a minimum of 3 minutes before disconnecting or removing any SRS components.

NOTE: Removal steps in this procedure may contain installation details.

1. Refer to: Supplemental Restraint System (SRS) Health and Safety Precautions (100-00 General Information, Description and Operation).
2. Refer to: Battery Disconnect and Connect (414-01 Battery, Mounting and Cables, General Procedures).
3. Refer to: Headliner (501-05 Interior Trim and Ornamentation, Removal and Installation).
4. Single cab
   1. Torque: 10 Nm
   2. General Equipment: Long Nose Pliers
   3. Torque: 10 Nm

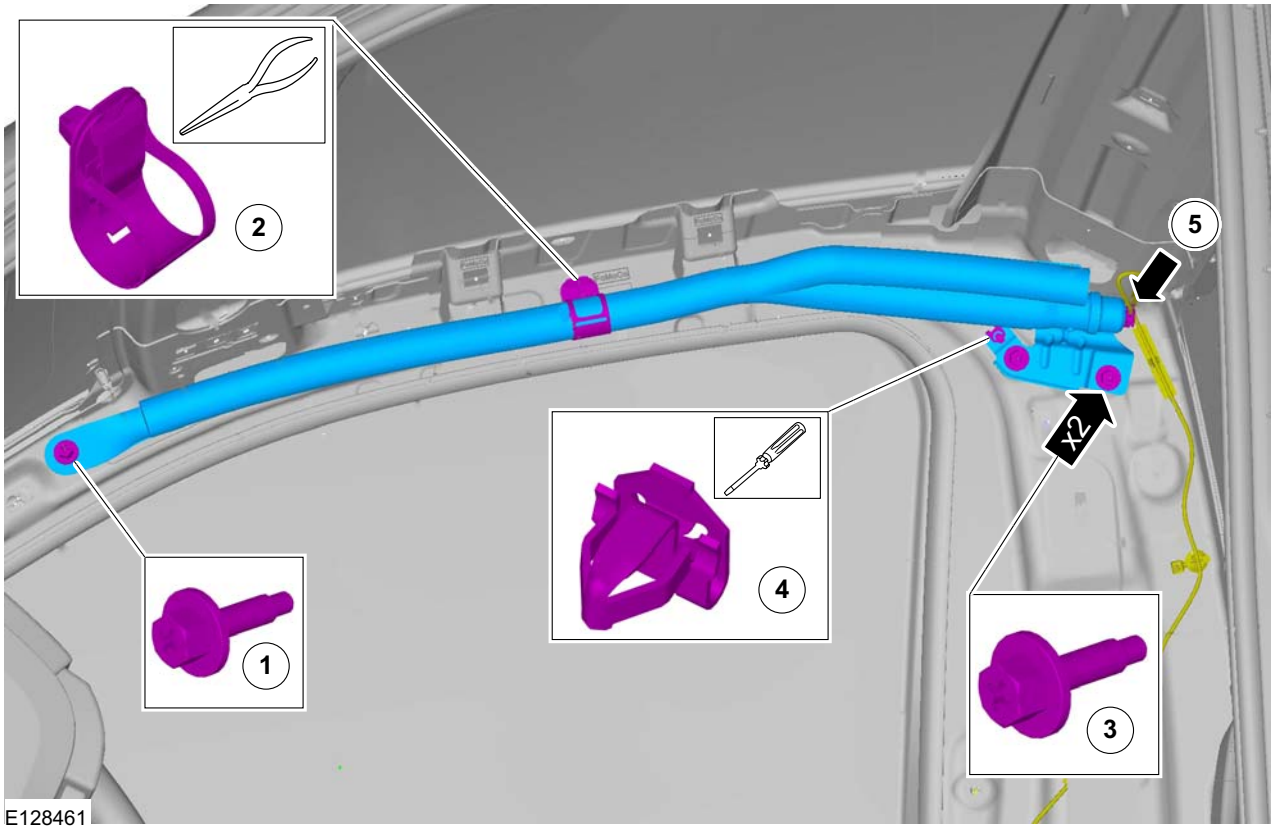

REMOVAL AND INSTALLATION

Double cab

5. On both sides.
Torque: 10 Nm

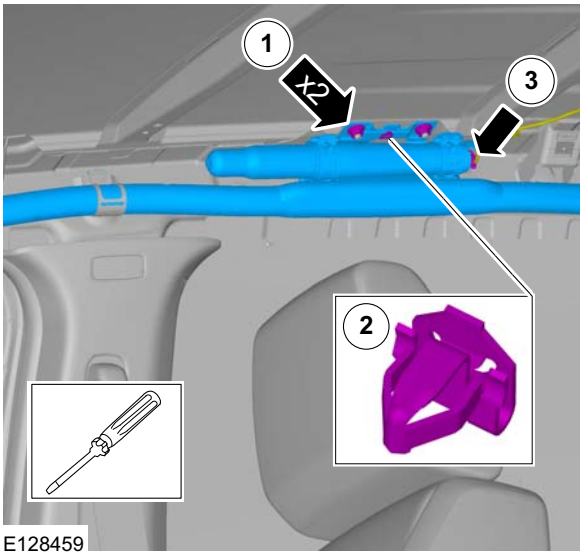

6. 1. On both sides.

General Equipment: Long Nose Pliers
Torque: 10 Nm

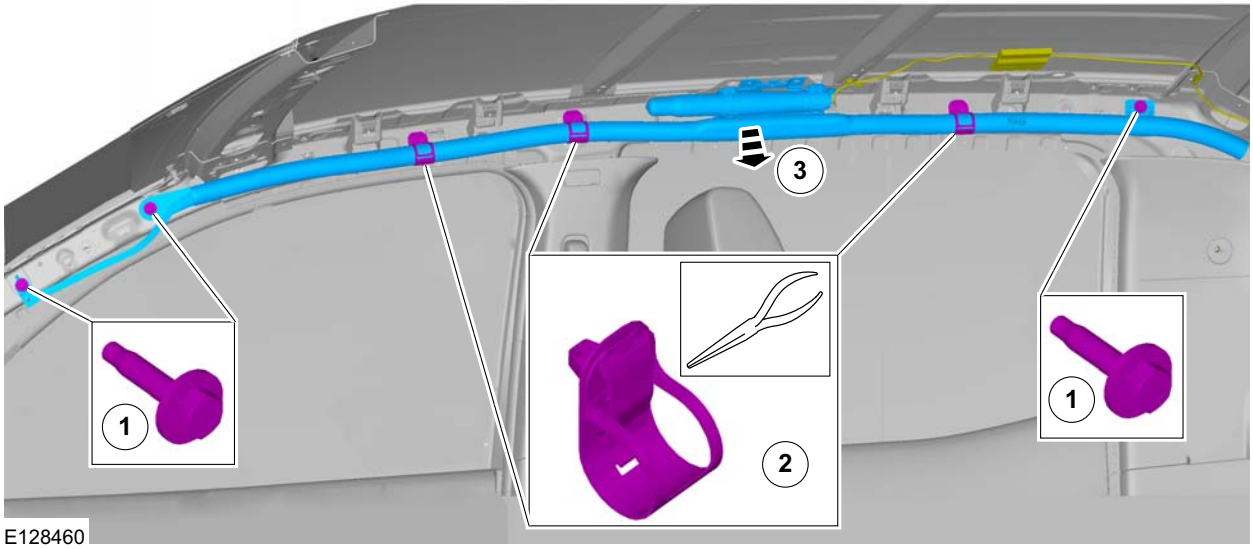

Stretch cab

7. 1. Torque: 10 Nm
2. Torque: 10 Nm
3. General Equipment: Long Nose Pliers
4. Torque: 10 Nm

REMOVAL AND INSTALLATION

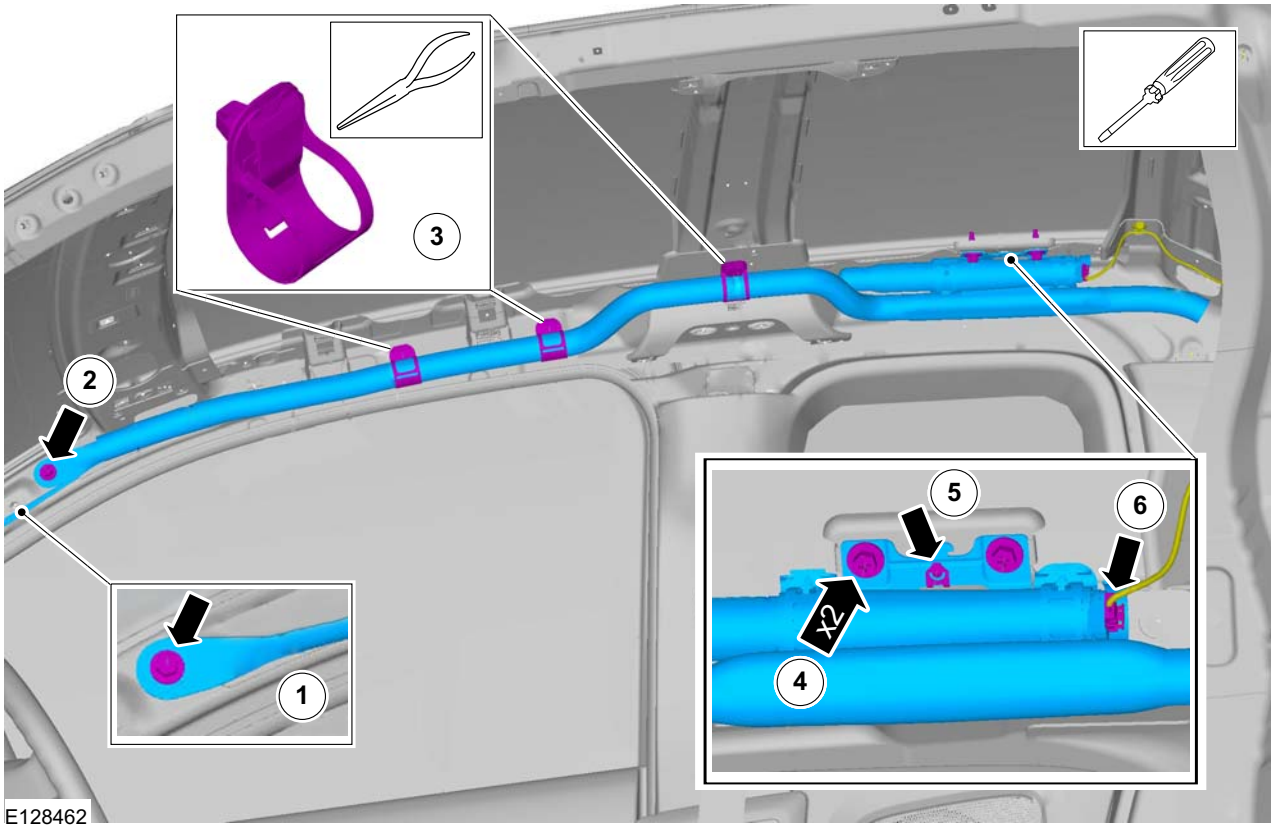

Installation

1. To install, reverse the removal procedure.

REMOVAL AND INSTALLATION

Clockspring

Removal

NOTE: Removal steps in this procedure may contain installation details.

1.

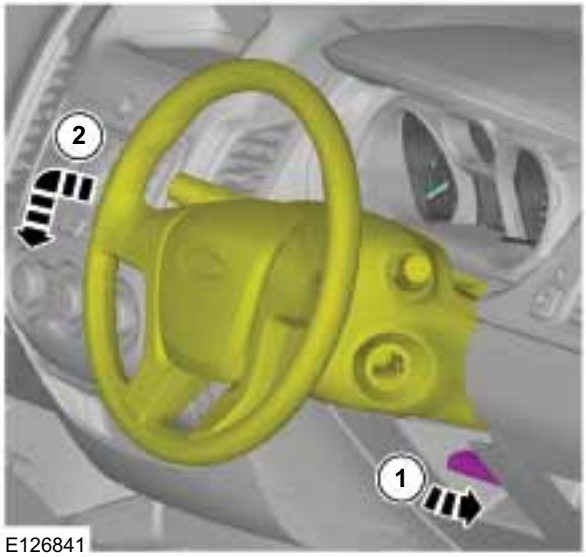

E126841

2.

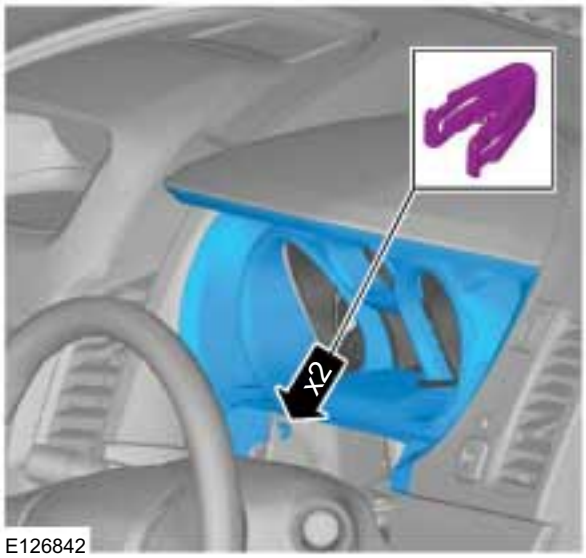

E126842

3.

E127542

4.

E128174

REMOVAL AND INSTALLATION

5.

6.

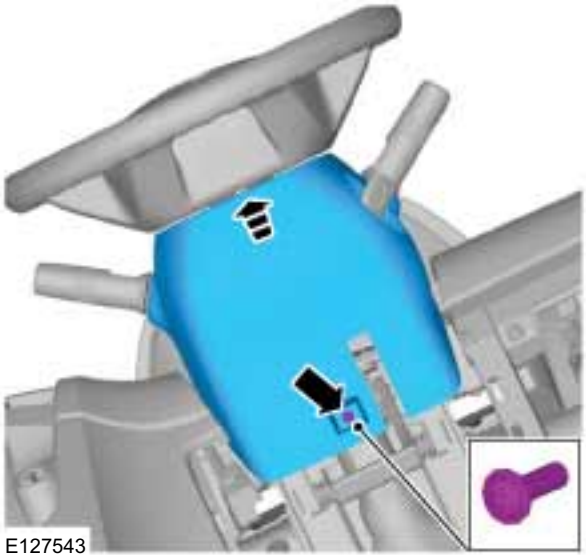

7. Refer to: Steering Wheel (211-04 Steering Column, Removal and Installation).

8.

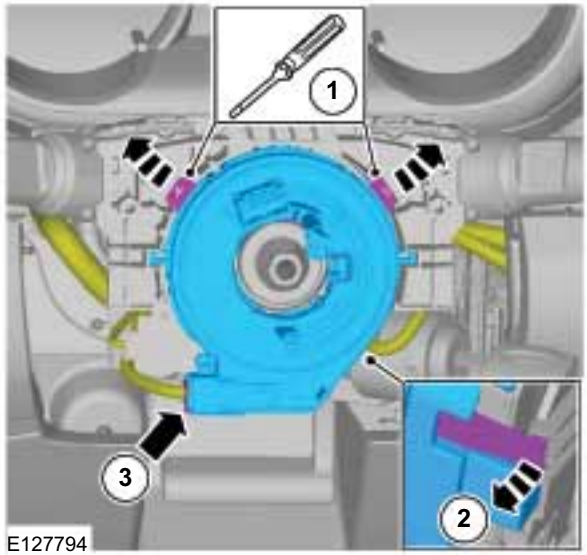

Installation

1. To install, reverse the removal procedure.

2. Refer to: Clockspring Adjustment (501-20 Supplemental Restraint System, General Procedures).

REMOVAL AND INSTALLATION

Restraints Control Module (RCM)

Removal

WARNING: The supplemental restraint system (SRS) is active for a certain length of time after the power supply has been disconnected. Wait for a minimum of 3 minutes before disconnecting or removing any SRS components.

NOTE: Removal steps in this procedure may contain installation details.

1. Refer to: Supplemental Restraint System (SRS) Health and Safety Precautions (100-00 General Information, Description and Operation).
   Refer to: Battery Disconnect and Connect (414-01 Battery, Mounting and Cables, General Procedures).

Double cab

2. Refer to: Floor Console - Double Cab (501-12 Instrument Panel and Console, Removal and Installation).

Stretch cab

3. Refer to: Floor Console - Double Cab (501-12 Instrument Panel and Console, Removal and Installation).

Single cab

4. Refer to: Floor Console - Single Cab (501-12 Instrument Panel and Console, Removal and Installation).

Vehicles with front bench seat

5. **NOTE:** Remove front bench seat only.
   Refer to: Front Seat (501-10 Seating, Removal and Installation).

All vehicles

6. **NOTE:** Both seats must be move forward before removing the RCM module.

On both sides.
Torque: 11 Nm

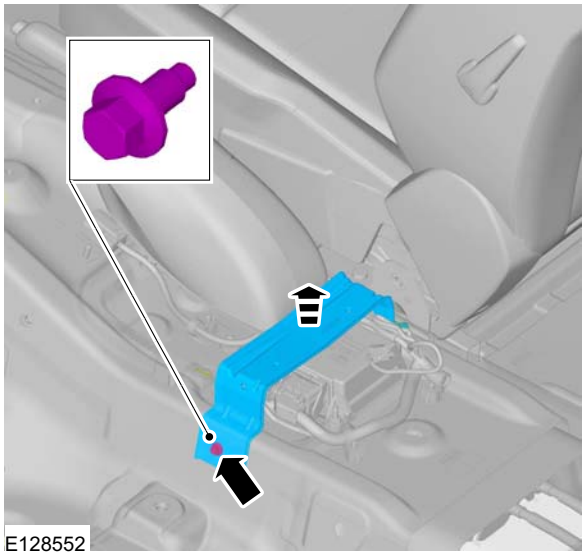

7.

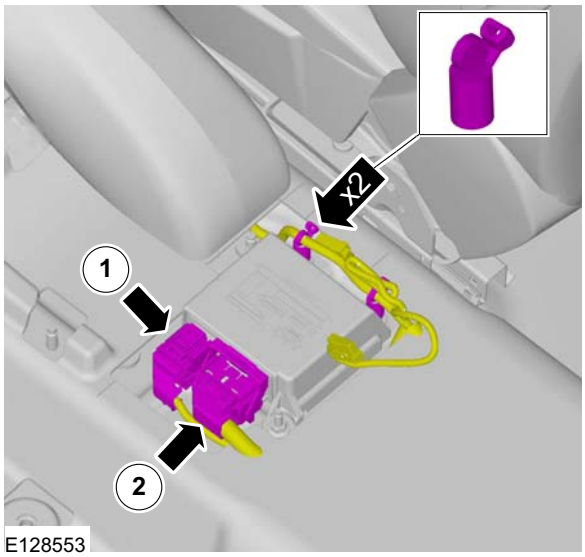

REMOVAL AND INSTALLATION

8. Torque: 11 Nm

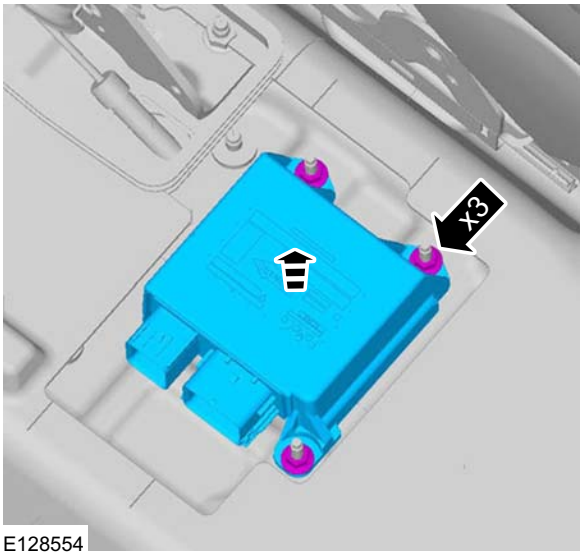

E128554

Installation

1. To install, reverse the removal procedure.

REMOVAL AND INSTALLATION

Front Impact Severity Sensor

Removal

WARNING: The supplemental restraint system (SRS) is active for a certain length of time after the power supply has been disconnected. Wait for a minimum of 3 minutes before disconnecting or removing any SRS components.

NOTE: Removal steps in this procedure may contain installation details.

1. Refer to: Supplemental Restraint System (SRS) Health and Safety Precautions (100-00 General Information, Description and Operation).
   Refer to: Battery Disconnect and Connect (414-01 Battery, Mounting and Cables, General Procedures).
2. Refer to: Lifting (100-02 Jacking and Lifting, Description and Operation).
3. Torque: 30 Nm

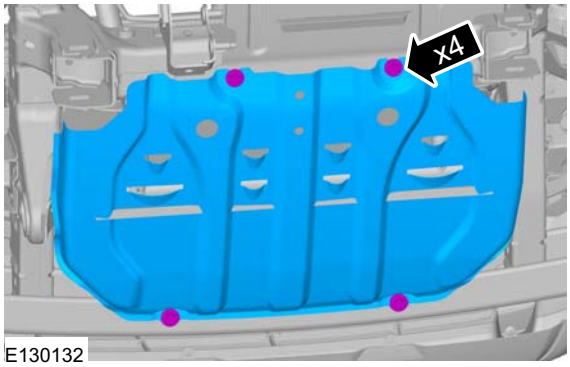

E130132

4. Torque: 10 Nm

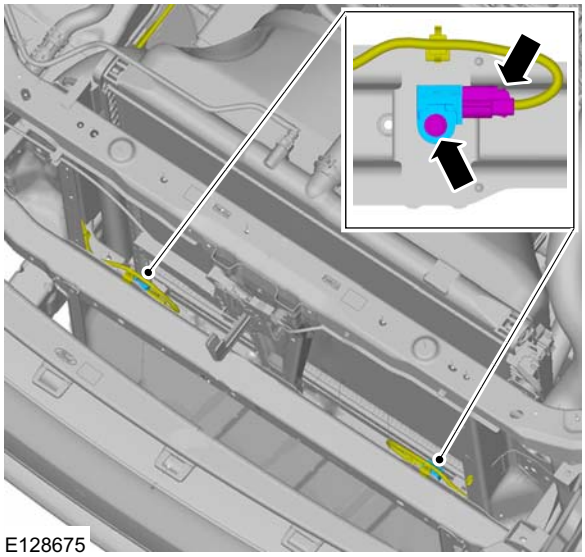
E128675

Installation

1. To install, reverse the removal procedure.

REMOVAL AND INSTALLATION

Side Impact Sensor

Removal

WARNING: The supplemental restraint system (SRS) is active for a certain length of time after the power supply has been disconnected. Wait for a minimum of 3 minutes before disconnecting or removing any SRS components.

NOTE: Removal steps in this procedure may contain installation details.

1. Refer to: Supplemental Restraint System (SRS) Health and Safety Precautions (100-00 General Information, Description and Operation).
   Refer to: Battery Disconnect and Connect (414-01 Battery, Mounting and Cables, General Procedures).

Double cab

2. Refer to: C-Pillar Lower Trim Panel (501-05 Interior Trim and Ornamentation, Removal and Installation).
3. On both sides.
   Torque: 10 Nm

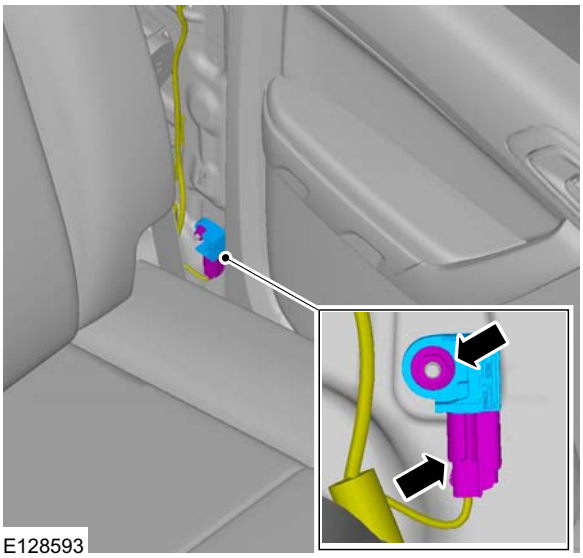
E128593

Stretch cab

4. Refer to: C-Pillar Lower Trim Panel (501-05 Interior Trim and Ornamentation, Removal and Installation).
5. On both sides.
   Torque: 10 Nm

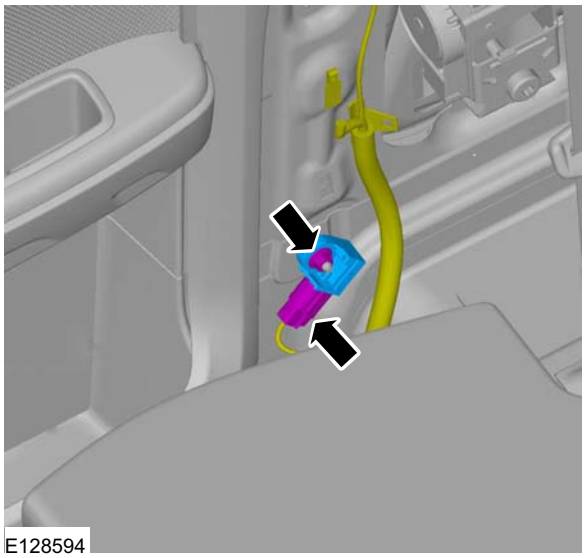
E128594

REMOVAL AND INSTALLATION

All vehicles

6. Refer to: Front Door Trim Panel (501-05 Interior Trim and Ornamentation, Removal and Installation).

7. On both sides.
   Torque: 2 Nm

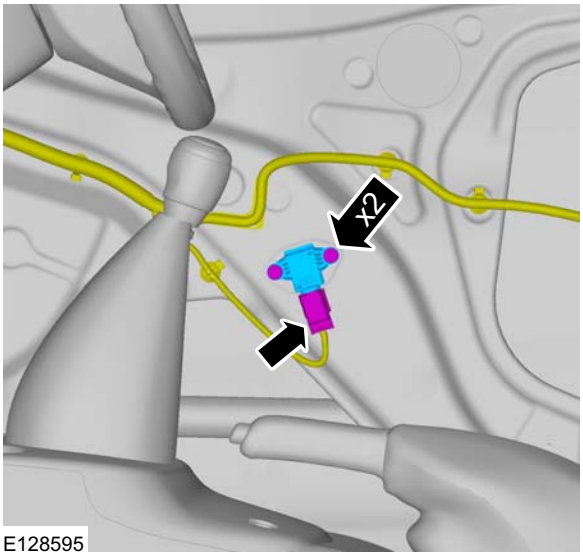

E128595

Installation

1. To install, reverse the removal procedure.

SECTION 501-25 Body Repairs - General Information

VEHICLE APPLICATION: 2011.50 Ranger

CONTENTS PAGE

PAGE 1 OF 2

SPECIFICATIONS

Specifications..... 501-25-3

DESCRIPTION AND OPERATION

Description and Usage of Body Repair Literature..... 501-25-4
Symbols..... 501-25-5
Health and Safety Precautions..... 501-25-7
General..... 501-25-7
Personal protection..... 501-25-7
Protection of the vehicle..... 501-25-7
Protective equipment..... 501-25-8
Electronic components..... 501-25-8
Liquefied gas vehicles..... 501-25-8
Refrigerated conversion vehicles..... 501-25-9
Environmental Regulations..... 501-25-10
Body Construction..... 501-25-11
General..... 501-25-11
Integral body-frame..... 501-25-11
Convertible..... 501-25-12
Non-monocoque bodywork..... 501-25-13
Special points:..... 501-25-14
Deformation behavior..... 501-25-15
Crash element:..... 501-25-15
Diagnosis and Damage Evaluation..... 501-25-16
Noticeable damage to the bodywork structure..... 501-25-16
No noticeable damage to the bodywork structure..... 501-25-16
Non-monocoque bodywork..... 501-25-17
Body Sheet Metal..... 501-25-18
Types of steel..... 501-25-18
Tools and Equipment for Body Repairs..... 501-25-21
Alignment systems..... 501-25-21
Measuring systems..... 501-25-22
Welding gear..... 501-25-24
Establish Repair Method..... 501-25-26
General..... 501-25-26
Planning..... 501-25-26
Chronological sequence of repair..... 501-25-26
Alignment Check..... 501-25-27
Straightening..... 501-25-30
General..... 501-25-30
Special features of non-monocoque bodywork..... 501-25-30
Complete Panel Replacement/Partial Replacement..... 501-25-31
Complete replacement..... 501-25-31
Corrosion Prevention..... 501-25-33
Panel coatings and corrosion protection..... 501-25-33

PAGE 2 OF 2

Corrosion protection measures during repair work..... 501-25-33
Corrosion protection for the floor pan (example)..... 501-25-37
Corrosion Damage/Corrosion Repair..... 501-25-38
Sealer, Underbody Protection Material and Adhesives..... 501-25-40
Cutting Technique..... 501-25-41
Spot weld milling tool..... 501-25-41
Rod sander..... 501-25-42
Short stroke saw..... 501-25-42
Orbital saw..... 501-25-42
Panel Beating Technique and Smart Repairs..... 501-25-43
General..... 501-25-43
Dent removal using special panel beating levers..... 501-25-43
Dynamic puller with counter bearing 501-25-44
Hollow leveling (removing dent without a dolly)..... 501-25-44
Dent removal using hammer and dolly..... 501-25-45
Heat-induced material shrinking..... 501-25-45
Lead loading..... 501-25-46
Paintless Dent Removal..... 501-25-48
Plastic Repairs..... 501-25-50
General..... 501-25-50
Plastic welding..... 501-25-52
Plastic adhesive bonding..... 501-25-53
GRP repairs..... 501-25-54
Special Repair Techniques..... 501-25-56
Cabriolet vehicles..... 501-25-56
Liquefied gas vehicles..... 501-25-57
Refrigerated conversion vehicles..... 501-25-57
Joining Techniques..... 501-25-59
Welding..... 501-25-59
MIG brazes..... 501-25-64
Soft soldering..... 501-25-67
Rivets..... 501-25-67
Bonding..... 501-25-68
Bonding and welding..... 501-25-69
Bonding and riveting..... 501-25-69
Impact of Insufficient Repair Quality..... 501-25-70
Water Leaks..... 501-25-72
General..... 501-25-72
Test method..... 501-25-72
Test with UV lamp..... 501-25-73
Chalk/powder test..... 501-25-73
Smoke test..... 501-25-74
Stethoscope test..... 501-25-74
Ultrasonic detection..... 501-25-75
Ultrasonic test device..... 501-25-75
Workflow for tracing water entry..... 501-25-75
Possible complaints and corrective actions..... 501-25-76
Wind Noise..... 501-25-81
General information..... 501-25-81
Diagnosis..... 501-25-84
Possible concerns with corrective measures..... 501-25-86
Noise, Vibration and Harshness..... 501-25-90

SPECIFICATIONS

Description	Finis Code	Specification
Underbody protection	5 030 492	-
Anti-corrosion wax	1 219 834	WSK-M7C89-A
Cavity wax	5 030 081	-
Profiled butyl seal	1 128 983	S-M3G4620-A
Clinched flange protection	1 136 479	WSK-M4G245-B
Seam sealing compound	1 205 817	WSS-M4G364-A
Body sealing compound	1 143 255	-
Metal adhesive kit	1 203 241	-
Windshield sealant	1 613 838	WSK-M4G329-A
Adhesive spoiler set	1 219 837	-

DESCRIPTION AND OPERATION

Description and Usage of Body Repair Literature

The purpose of this document is to give the vehicle body specialist a general overview of possible repair techniques for body repair on Ford vehicles. Likewise, information about materials and tools to be used is given.

No model-specific information is given. Such information is saved in the respective Ford Etis workshop manual. Supplementary or updated information can be found in the Technical Service Information.

Information on repair techniques, materials or tools, which are not necessary for body repair on Ford vehicles or which are not considered as conventionally in use, are not listed in this document.

Layout:

The general section is divided into the following subject areas:

- How to use the document, with information on the symbols used
- Health and safety information on using materials and tools
- Information on bodywork construction and materials used
- Workshop equipment and use of tools
- Damage Assessment and determining the extent of the repair area
- Explanation of possible repair techniques for body repair
- Possibilities of the repair or remedying leaks, noises

Training:

The Ford Service Organization offers basic and more in-depth training on much of the content of this document. You can obtain an overview of the entire training offering from the Ford Service Organisation or on the Internet at www.ford-training.de.

DESCRIPTION AND OPERATION

Symbols

Warnings and hazard notices

Warnings and hazard notices are shown in this literature by WARNING, CAUTION and NOTE indicators. These notices are always shown before a job step which can be associated with an immediate personal or material danger.

WARNING: This notice is used when failure to exactly follow the instructions given in this literature or failure to follow them at all may result in a hazard to persons and/or in persons being injured.

CAUTION: This notice is used when failure to exactly follow the instructions or test procedures given in this literature or failure to follow them at all may result in damage to the vehicle or to components.

NOTE: This notice is used when the operator should be made aware of special or extra information.

Symbols used

Symbols are used to graphically represent additional information about the operation, tool or materials. This information will not be shown separately again as text.

The symbols used in this and other body repair manuals may be used alone as well as in combination in a diagram.

All the symbols used in these documents can be found in the General Information section.

For additional information, refer to: Symbols Glossary (100-00 General Information, Description and Operation).

Color coding

Different colors or shading can be used to depict special areas and components.

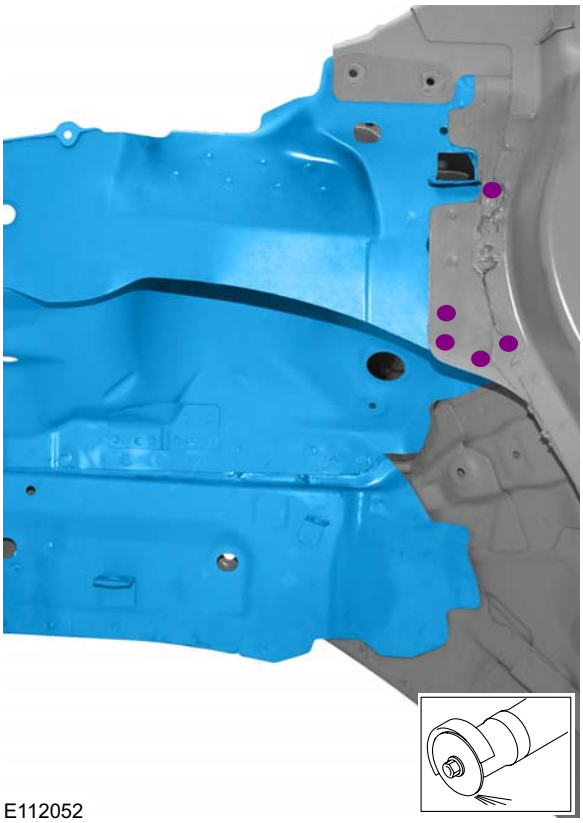

E112052

- Blue: Main component which will be removed or installed. Only actual movements will be shown in blue in the diagram.
- Magenta: Materials or fixings, e.g. bolts, clips, spot welds or adhesives.
- Yellow: Component which is being cleaned or loosened, moved or fastened, but remains in the vehicle.
- Light blue: Color for special tools and color for equipment.

In an assembly operation, the colors show the sequence of removal steps.

- Blue: Main component which is being installed, removed, taken away or added.
- Green: Component which, in addition to the main component (blue) is being installed, removed, taken away or added.
- Brown: Component which, in addition to the main component (blue) and the additional component (green) is being installed, removed, taken away or added.

DESCRIPTION AND OPERATION

Movement arrows

Necessary work such as clinching flanges or moving lugs etc. will be represented by broken arrows.

E113739

Magnified and detailed views

If a detail cannot be clearly seen in the illustration because of its size or location, it is shown enlarged in a separate window.

E113412

Position lines within a diagram

A position line is used to indicate a special position or a component. A spot weld which must be drilled out through two panel thicknesses is indicated here, different to all the others.

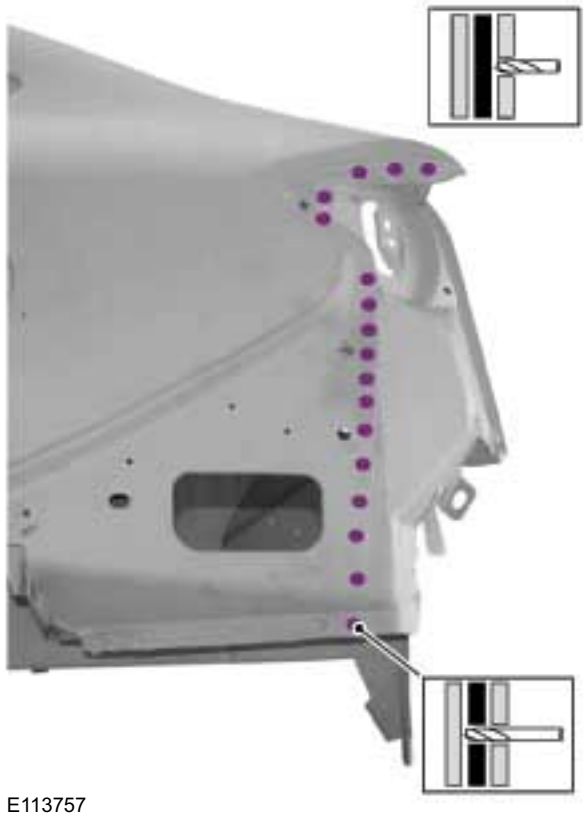

E113757

DESCRIPTION AND OPERATION

Health and Safety Precautions

General

Appropriate repair methods and their correct implementation are very important for both vehicle operating safety and personal safety.

WARNING: There is danger of injury through:

- High voltage when electrical welding.
  - Do not perform welding work in a damp environment or on a wet substrate. Use suitable insulation underneath.
- Flammable substances in the welding area.
  - Remove flammable substances from the danger area. Remove the fuel tank and, where required, those components which supply fuel.
  - Completely remove the battery before carrying out any welding in that area.
- Welding fumes, which are harmful to health.
  - Always ventilate the workplace well and use an extraction system.
- Welding spatter and UV radiation.
  - Wear protective clothing, gloves and welding mask or welding goggles.
- Pyrotechnic components.
  - Disconnect the battery negative clamp and cover the battery terminal. Remove any airbag components.

All the regulations governing Health and Safety at Work must be complied with during body repairs.

Personal protection

Welding gases and grinding dusts can be harmful to the health. For this reason, make sure that rooms are well ventilated and work using the welding fumes extraction system. Sealants, underbody protection and paint residues must not be burnt down with an unshielded flame, as this will produce gases which are damaging to health. A dedicated extraction system must always be used when welding or brazing.

When working with substances containing solvents, good ventilation must be provided, respiratory protection must be worn and an extraction system must be used.

Do not weld in damp areas, if necessary use an insulation mat. Welding and grinding work near the battery presents the danger of explosion. For this reason, it must be removed before the work is started.

Cutting, grinding and alignment work on metal panels can cause a noise level of 85 to 90 dB (A) or even more. For this reason, you must always wear ear defenders.

The various body areas are subject to very high forces during realignment work. Should any component suddenly become detached during this process, there is a very great danger of injury. For this reason, pulling chains and pulling shackles must be secured with arrester cables.

NOTE: Work on airbag systems may only be performed by persons who have a relevant certificate of competence.

Some special instructions must be followed when working on airbag systems:

- Always stand to the side of it when removing or installing an airbag.
- Always store an airbag or an airbag/steering wheel with the airbag side pointing upwards and in a safe place.
- Only install the airbag again when the vehicle is fully repaired and the complete electrical systems has been tested.
- Take into account the location of air curtains and shoulder airbags.

Protection of the vehicle

Protect affected areas from weld spatter and dust during all welding and grinding work on the vehicle. If metallic dust stays on the vehicle for some time, there is the likelihood of film rust formation. Grinding or sanding work produce tiny spots of damage to the paint surface, which may cause corrosion.

For this reason, make sure to:

- Use carbon fibre blankets to protect the vehicle body.
- Use covering film to protect the vehicle body from sanding dust and metal dust.
- Take appropriate measures to protect the interior equipment of the vehicle during any repair work.

DESCRIPTION AND OPERATION

In addition, take into account:

- Remove fuel supply components as necessary.
- Protect working areas which are in danger of catching fire with a fireproof blanket.
- The welding must not cause components of the air conditioning system to become heated.
- Removal of any attached components in the space adjoining the repair area.
- Use covering paper to protect the interior from grinding dust.
- Create a definite barrier between the work area and the interior by using a carbon fibre blanket.

Protective equipment

The following protective equipment must always be used:

- Protective helmet or welding mask.
- Ear defenders and breathing protection.
- Protective gloves and safety boots.
- Welding fume extraction.

Electronic components

Increased use of comfort and safety electronics in modern motor vehicles also requires the greatest attention to be paid during body work. Overvoltages produced during welding and in alignment work during bodyshell rectification may cause electronic systems to be damaged. In particular, the safety instructions for performing welding work on vehicles with airbag systems must be adhered to.

NOTE: After disconnecting the power supply and before performing further work, a wait time of up to 15 minutes must be maintained, depending on the vehicle. Work on airbag systems may only be performed by persons who have a relevant certificate of competence.

Pay attention to the following points:

- Disconnect the battery negative clamp and cover the battery terminal.
- Disconnect the electrical connector at the airbag control module.
- If welding is to be performed directly near a control module, it must be removed beforehand.
- Never connect the negative cable of the welder near an airbag or a control module.
- Connect the negative cable of the welder close to the location of the weld.

For additional information, refer to:

Side Air Curtain Module (501-20 Supplemental Restraint System, Removal and Installation),
Side Air Bag Module (501-20 Supplemental Restraint System, Removal and Installation),
Driver Air Bag Module (501-20 Supplemental Restraint System, Removal and Installation),
Driver Lower Air Bag Module (501-20 Supplemental Restraint System, Removal and Installation),
Passenger Air Bag Module (501-20 Supplemental Restraint System, Removal and Installation),

Liquefied gas vehicles

Alternative fuel vehicles often require special handling in the workshop area. Above all, assembly operations to some extent require particular knowledge when dealing with the special technology and the safety regulations.

NOTE: Only fully trained personnel are permitted to work on alternative fuel vehicles.

These special requirements must be understood and taken into account in the body shop as well.

CAUTION: Danger of fire and explosion. The safety instructions must always be followed when performing service work on fuel/gas systems. Failure to observe this instruction can lead to injury.

If the smell of liquefied petroleum gas (LPG) or compressed natural gas (CNG) is noticed in the workshop, instruct everyone present as follows:

- No smoking and extinguish all naked flames.
- Shut off all electrical and air powered equipment.
- Evacuate the area.
- Ventilate the area.
- Contact the fire control authorities.
- Move the vehicle to a dedicated, well ventilated area.

Alternative fuels require special handling:

- Handle them in a specially dedicated, well ventilated area, which is only accessible to authorized persons.
- Identify the designated area with new warning notices.
- If possible close the main shut-off valve and run the vehicle on alternative fuel until it switches automatically to petrol operation. Only then is it

DESCRIPTION AND OPERATION

allowed to drive the vehicle into the workshop or service area.

- If possible do not allow any liquefied gas (LPG) to escape.
- The ambient temperatures must not exceed 40°C. For this reason the LPG and CNG fuel tanks must be removed on vehicles with LPG or CNG operation before using a drying oven to dry the paint where the temperature exceeds 40°C.

Avoid situations in which fuel from an LPG or CNG fuel tank can escape. These situations include:

- Extremely hot ambient temperatures.
- Parking near a heating device.
- Raising the vehicle near a ceiling heater.

Refrigerated conversion vehicles

Apart from the special materials used in building the structure of the refrigerated compartment, such vehicles have special energy and refrigeration systems which require special handling during repair.

CAUTIONS:

Danger of injury. Work on the 230<SP>volt system of the refrigeration equipment must only be carried out by trained specialist personnel.

The refrigeration system is filled with refrigerant R134a. This can cause frostbite if it contacts the skin. Pay attention to the corresponding warning notices and instructions in the chapter Air Conditioning Systems.

NOTE: Work on the refrigerant circuit may only be performed by persons who have a relevant certificate of competence.

Vehicles with a refrigerated compartment are often used to transport foodstuffs. For this reason, additional hygiene regulations must be complied with during repair work.

Aluminum and plastic are used to construct the two different types of compartment found on refrigerated vehicles.

The aluminum conversion is a very stable and technically perfect variant. However, against this the relatively high production costs and a lower payload must be taken into account, because of the weight of the aluminum conversion itself.

NOTE: Basic and in-depth training is offered on the following topics. You will find an overview of the complete range listed in the Training brochure published by the Ford Service Organization.

The plastic conversion has developed into a light, clean and economical alternative because of constant further development of materials and working techniques.

NOTE: The material combinations, the workmanship and the working methods must comply with the current food hygiene regulations. For this reason, service and repair work on the refrigerated conversion may only be performed by authorized and specially trained technicians.

Refrigerated compartment constructions are often made using both materials. The floor pan is made of structured, slip-proof aluminum panels and the wall and ceiling cladding is made of smooth surfaced plastic elements.

CAUTION: PUR hard foam is flammable. If PUR hard foam is overheated, it will burn on its own with a brilliant yellowish flame. It produces unpleasant choking and toxic fumes. Special measures must be taken when welding the vehicle body.

Polyurethane wall and ceiling elements are manufactured using a sandwich principle. An insulating polyurethane core is coated with food grade ABS plastic on one side.

PUR hard foam does not decompose, is rot resistant and is odorless. These properties make it suitable for use as insulation.

Because of its closed cell structure, water uptake by PUR hard foam is for the most part only a problem at edges. Cut edges or other mechanically worked surfaces must however be sealed with the greatest care.

The conversion to a refrigerated vehicle is performed as made-to-order production. The large surfaces of the wall and ceiling cladding can be changed and are particularly easy to repair.

If access to the back of a body panel section is needed because of body straightening work, in some circumstances it is cheaper to perform a cut-out repair instead of removing an element.

The repair process is fully described in the Student Information booklet Refrigeration System Technology, Transit 2000.5 Freshline.

DESCRIPTION AND OPERATION

Environmental Regulations

Orderly and responsible waste management is not only very important for the protection of health and the environment, but it also has great importance where saving natural resources is concerned.

In body repair shops, since the introduction of the EU directives on the avoidance of vehicle waste and the promotion of return, re-use and recycling of vehicles and their components (2000/53/EU), more rigorous attention than before is also paid to avoidance and recycling of waste materials.

NOTE: The organization of disposal in the operation must comply with the country specific waste regulations:

In this respect, body repair shops must take into account and comply with the following requirements:

- Separate waste according to its recycling and disposal methods.
- Produce evidence for the correct transport and disposal of waste.

NOTE: The organization of disposal in the plant must comply with the requirements of the Waste Avoidance and Management Act.

The avoidance and recycling of waste must always take priority. However, despite all measures which may be taken, waste cannot be completely avoided.

NOTE: Useable waste which is not allowed in household rubbish, must be disposed of as special waste

All remaining waste must be treated as commercial waste and disposed of according to the local requirements.

Only applies to the EU:

The vehicle manufacturer is also under a legal obligation since the older vehicle legislation came into force throughout Europe in 2002.

This law covers the surrender, withdrawal and environmentally friendly disposal of older vehicles through the manufacturer.

The older vehicle legislation contains all the necessary information for the environmentally compatible disposal of older vehicles, starting with preliminary handling involving the removal of all operating fluids, deactivation of pyrotechnic components, elimination of pollutants and then further handling by dismantling components for re-use and recycling.

DESCRIPTION AND OPERATION

Body Construction

General

Under bodywork construction, a general distinction is made between monocoque and non-monocoque bodywork. The safety of the occupants is the main consideration for all types of bodywork construction. The front and rear sections are designed so that they absorb the energy of the impact via crumple zones. The use of modern design and manufacturing methods and the use of newly developed body panels (relating to their deformation and strength properties) mean that, despite the continuous weight-savings, all safety-related requirements made of the construction can be met.

Integral body-frame

In this method of construction, coverings, reinforcements, retaining panels and profiles are permanently joined together using a variety of joining techniques (gluing, spot welding, laser welding, soft soldering or brazing). The load-bearing function of the structure must always be achieved in each case.

There is no distinction made between components which are purely subject to bending/torsion or thrust loads and parts which perform sealing/covering functions (as in non-monocoque bodywork for example). In modern passenger vehicles, monocoque bodywork is very widespread and offers the advantages of a lightweight and low-cost construction.

TO BE UPDATED LATER

The rigidity of the bodywork is achieved by a panel skin and panel cross-section with the largest possible profile and therefore the largest resisting torque (such as for instance the rocker panel). Swage lines in the outer area of the bodywork increase the stiffness and the natural vibration frequency, to prevent possible drumming noises.

The mounting points for ancillary components such as doors and wings are permanently built into the monocoque bodywork.

High rigidity of the bodywork is vitally important to keep the elastic deformations low at the joins to the ancillary components and to prevent noise when driving. Small gap dimensions are therefore

DESCRIPTION AND OPERATION

only possible on vehicles with very stiff bodywork. With high bodywork stiffness, the construction can exert an influence on the handling of the vehicle (e.g. on poor road surfaces).

Advantages of monocoque bodywork:

- Weight reduction.
- Economical manufacturing technology.
- High torsional rigidity and high flexural strength.
- Defined deformation behavior at the front and rear.
- Maximum passive safety due to the strong passenger compartment

The protected passenger compartment with strong pillars, rocker panels and doors with integral side impact protection increase occupant protection. Opening of the doors is ensured, even if there is extreme deformation.

NOTE: Repair work must always be performed according to the established workshop literature. All the safety requirements must be guaranteed after any repair work has been performed !

Convertible

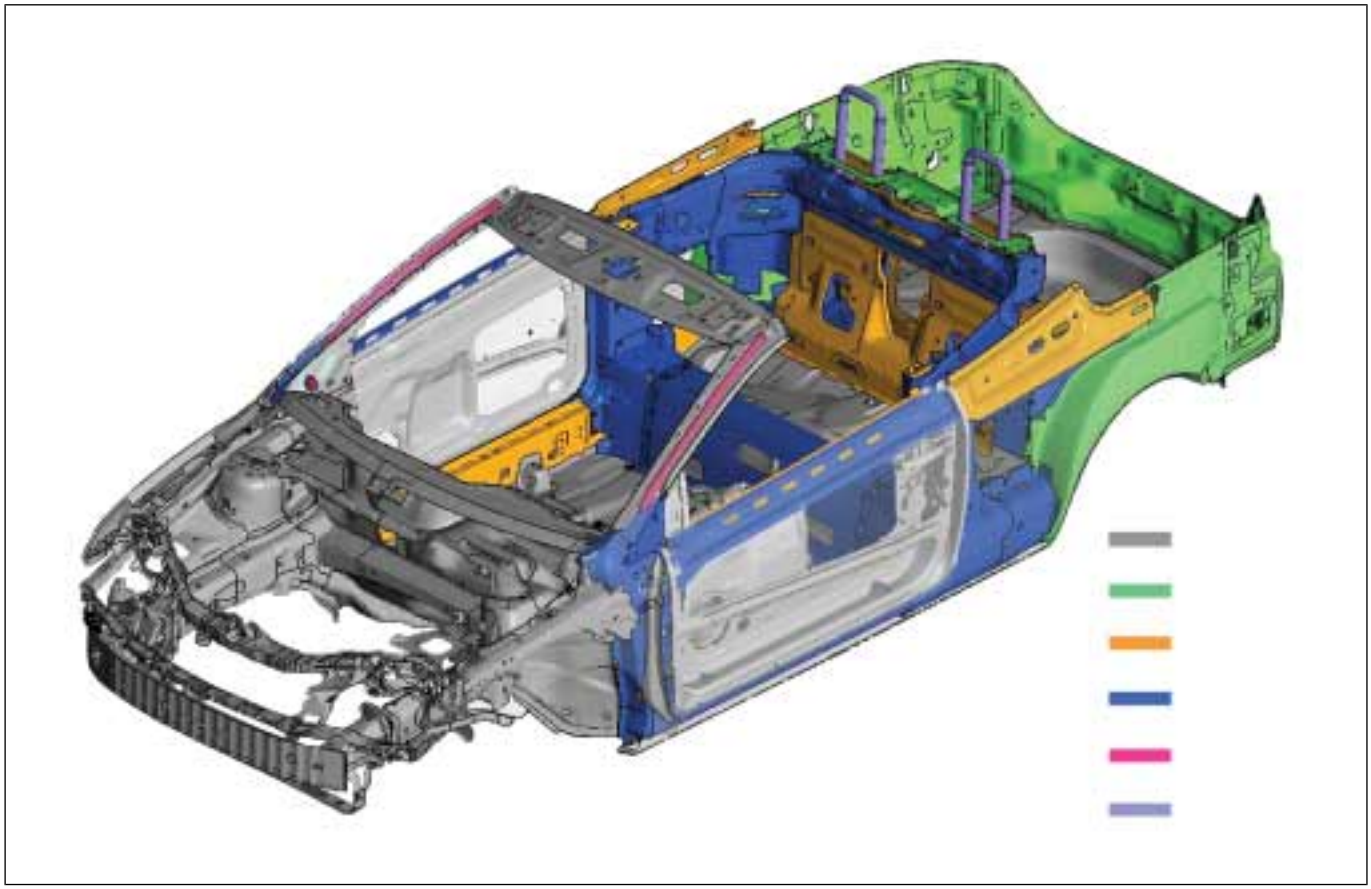

Description	Description
1	Body components adopted from the Focus 2004.75 (07/2004-)
2	Conventional bodywork construction steel
3	High-strength sheet steel
4	Super-high strength sheet steel

Description	Description
5	Maximum-strength sheet steel
6	Aluminium, can be subjected to high stresses

The body of a convertible differs from the principle of the integral body-frame of a saloon due to the lack of a roof construction. The body has a high

DESCRIPTION AND OPERATION

degree of torsional stiffness. This is achieved by using high, super-high and maximum-strength sheet steel and body reinforcements in specifically-targeted areas.

These reinforcements can be installed in the area of the doors (diagonal braces etc.) or on the underfloor. In contrast to the saloon (or other non-convertibles) with square-section side members (closed profile), these reinforcements have a profile which is open on the underside (U-section).

Special constructional changes within the bodywork structure:

- Reinforcing or increase in the thickness of the sheet steel in the pillar area.
- Reinforcing or increase in the thickness of the sheet steel in the floor pan structure (rocker panel area).
- Use of heavily structured reinforcing panels in the rocker panel and pillar area.
- In the area of the windshield frame and A-pillars, thick-walled reinforcing tubes are used (roll-over protection).
- Because there is no roof, the bridge construction principle cannot be used as it is on the saloon for example. Flexural and torsional rigidity must be ensured by other components.

Non-monocoque bodywork

Non-monocoque bodywork is built onto a frame or a chassis. Frames used for this have various construction forms, e.g. the ladder frame or tube frame. Non-monocoque bodywork is the original way of constructing vehicles.

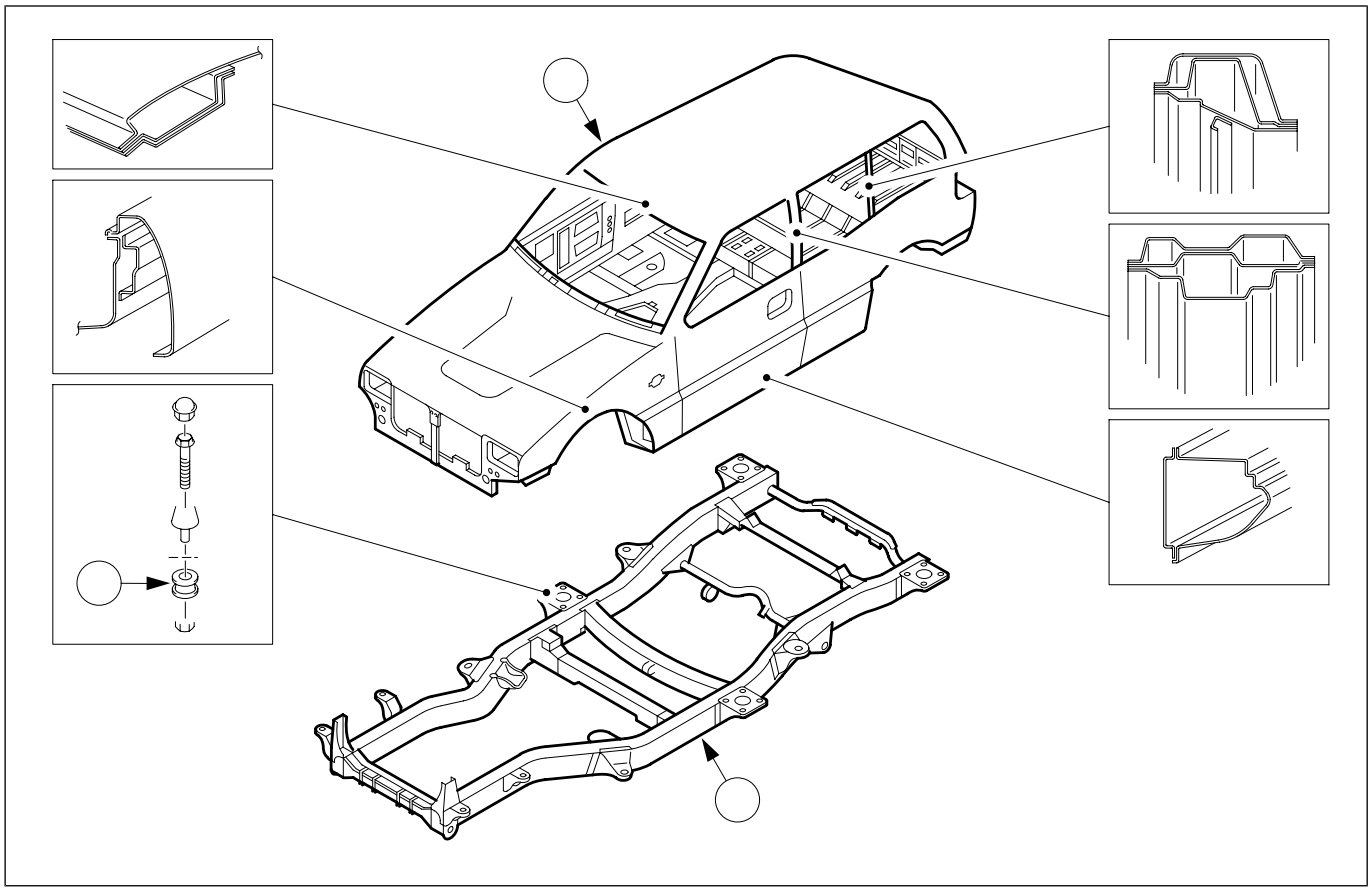

Des cript ion	Description
1	Vehicle body.
2	Frame Assembly
3	Bolted connection

The ladder frame is still commonly used today for truck and off-road vehicles. The bodywork is placed on the frame or chassis. The total load which occurs while driving is transferred to the chassis.

More sporting vehicles can be built with non-monocoque bodywork, mostly using a lattice tube frame. Limitations in the design are accepted for the benefit of low weight. The outer skin here

DESCRIPTION AND OPERATION

is usually made of plastic or alloy. This type of construction is also common in touring car racing for instance.

Special features of non-monocoque bodywork construction:

- Partly large surface panels and high volume shaped parts.
- Thicker materials and greater reinforcements in the frame area.
- Floor pan as frame structure with high torsional rigidity and flexural strength.
- Side panels only make a small contribution to the overall stability of the body.

Instructions for repair:

A different repair technique is necessary during repairs. A deformed frame structure requires high suction power during straightening repairs. Frequently, the body also has to be detached from the frame structure in order to carry out separate repair.

Due to the very stable frame structure, please note that the straightening behavior is completely different to that of a passenger vehicle. The frame and the attached body must be repaired independently of each other.

Further information can be found in the respective body repair manual.

Special points:

Tailored blanks

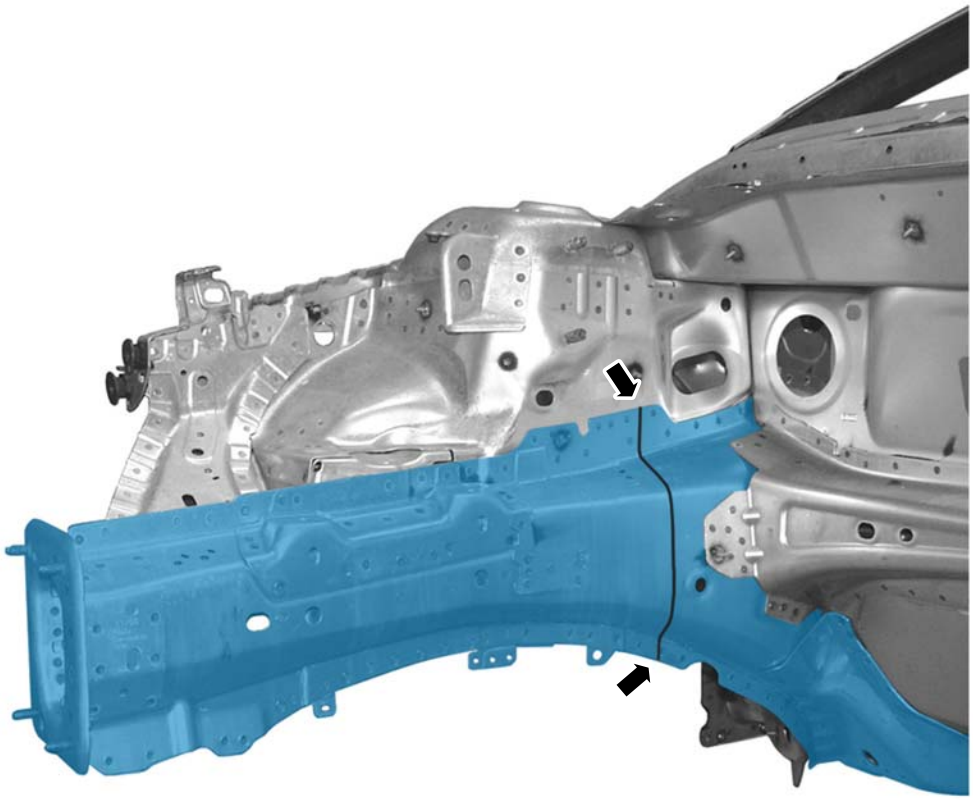

Blue: Tailored blank

Arrows: Laser weld seam

The term "tailored blanks" describes the connection of two different panel thicknesses and/or strengths in the bodywork carcass. This connection is done using laser weld seams. Cut locations exactly on the laser weld seams are not permitted, as at present no joining techniques are approved for use in repair procedures that would re-create joins of the same quality.

NOTE: No cutting, no welding and therefore no sectional repairs are permitted in the immediate area of the laser weld seams. The model specific requirements are documented in the respective Body Repair Manuals.

Typical application areas are:

DESCRIPTION AND OPERATION

- Side member
- Door inner reinforcement/door frames
- Wheelhouses
- Rocker panel inner reinforcement
- Roof rail inner reinforcement

Deformation behavior

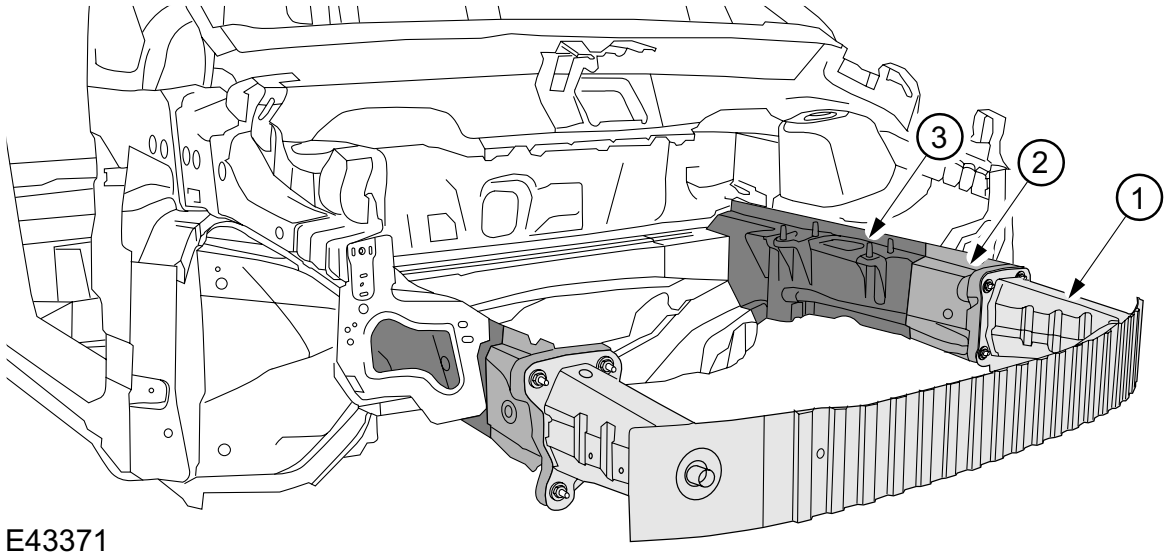

Des cript ion	Description
1	Bolted crash element
2	Front side member
3	Rear side member

Different materials and design features lead to staged deformation of the front and rear of the vehicle in an accident.

Crash element:

At the front of the vehicle there is a crash element which is connected to the side member by threaded connections. This crash element can absorb light impacts of up to about 15 km/hr. Because of the threaded connections, the crash element can be changed very quickly.

NOTE: Deformed crash elements must not be straightened or repaired.

Heavier impacts which can no longer be absorbed by the crash element must be absorbed by the side members or the floor pan structure. Depending on the extent of the damage, a part or complete replacement can be performed on the side member.

The rear of the vehicle, like the front of the vehicle, has structures which protect the passenger cell through staged deformation in the event of an accident. The design layouts, however, are adapted to the requirements of the rear area.

DESCRIPTION AND OPERATION

Diagnosis and Damage Evaluation

Assessment of the extent of the damage includes visual inspection and dimensional inspection of the vehicle. In order to correctly determine the extent of the damage caused by an accident, in-depth technical knowledge, practical experience with the technical equipment and the testing and measuring devices is required.

Noticeable damage to the bodywork structure

Positive accidental damage assessment can only be achieved if the service technician is able to reconstruct the effect of an impact on the body structure.

For example:

If the impact occurs on the front left-hand side member, the right-hand side member will usually also have been damaged. Often the length of this side member will not have changed, but because of the rigid body design, it may have become deformed. This damage can be detected through the size of the gap between the door and fender or by measuring the vehicle.

In the case of more severe impacts, in which the front part of the vehicle cannot absorb all of the impact energy, the passenger cell is also used to absorb the energy. Here, the energy is transferred via the A pillar and distributed there. This results in deformations in the roof and the door sill.

NOTE: Because of existing damage to the bodywork structure, damage diagnosis on a vehicle lift may give extra incorrect diagnosis results.

NOTE: Training courses are offered on this subject. For an overview, please refer to the Ford Service Organisation's training course brochure.

If for instance the Ford Focus Coupé/Cabriolet is raised on a vehicle lift, the dead weight of the vehicle will cause the front end to drop by approx. 2 to 3 mm.

The altered door position is clearly recognizable by stiffness of the lock; the door moves upwards. This causes the lock pin to contact the guide element of the door lock.

It is possible to draw conclusions about the extent of the damage through a visual inspection of the external damage. In general, the following areas are to be checked during the visual inspection:

- Outer panel including seam seals for cracks or flakes in the paint caused by the accident.
- Size of the gap on doors and hoods for evenness.
- Freedom of movement of door and hood/tailgate locks.
- The vehicle roof for folds (gap measurement on vehicles with sunroof)
- Dotted flange in door section for deformation and cracked weld spots.
- The side members and crash components for crumpling and folding.
- Trunk floor and floor pan from above and below for crumpling.

No noticeable damage to the bodywork structure

In addition to external indicators such as flaking paintwork or cracks in the underbody protection, it is vital to check for damage to the body structure that is not visible from the outside (hidden body damage) during a damage assessment. Unless ancillary components are removed, it is often impossible to achieve accurate diagnosis of the underlying body parts.

NOTE: In order to determine the damage as accurately as possible, it may be necessary to remove ancillary components in the area of the damage.

Particular attention must be paid to the following components:

- The A, B and C pillars in the roof area.
- Floor pan.
- Rear ancillary components, such as bumper, lights, etc.
- Trunk floor, spare wheel cavity.
- Rear coverings, such as interior trim, carpet, etc.
- Lower rubber seals, e.g. in door area (welded flange).
- Area under the rear seat.
- Attachment points of transmission system, steering, engine, drive shafts, front and rear axles.
- Electrical components, e.g. the radio (damage through shaking or through voltage peaks).

DESCRIPTION AND OPERATION

Non-monocoque bodywork

The chassis and bodywork must always be checked during damage diagnosis on vehicles with non-monocoque bodywork.

It is also important here to inspect closely for damage the impact area and the areas absorbing forces.

With these vehicles, simple inspections can already give an indication of possible deformations.

In addition, you must check for the following for vehicles with frame structures:

- Cracks in the paint on the frame welds.
- Traces of deformation on frame components.
- Check attachment points (silent blocks) for position changes and damage.
- Changed position of rubber seals.
- Fit and function of the ancillary components.

DESCRIPTION AND OPERATION

Body Sheet Metal

Types of steel

Steel body panels are still the most important materials used in the fabrication of stressed skin vehicle bodies. In addition to the familiar types of steel, reinforced high-strength and also ultra-high-strength special steels are used in vehicle body construction.

Types of steels are classified by their properties of strength and elasticity.

- Normal strength steel has a minimum yield strength of up to about 210 N/mm².
- High strength steels have a minimum yield strength of about 150 to 600 N/mm².
- Ultra-high-strength steels have a minimum yield strength of about 400 to 1200 N/mm².

High-strength and ultra-high-strength steels are mostly installed in safety relevant locations (structural components). Among others, these are side members, pillars, roof frames.

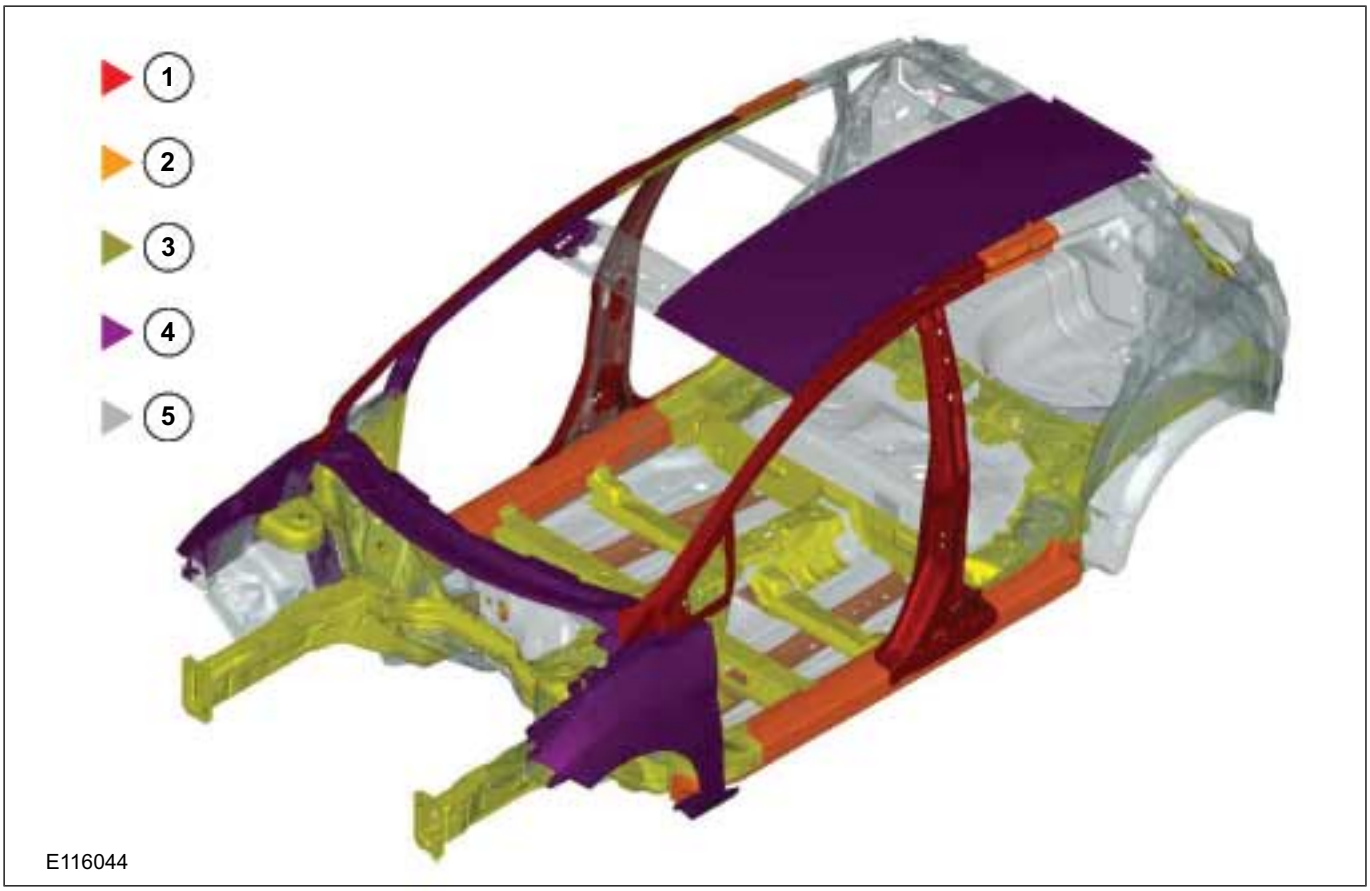

Pos.	Used type of steel	Application range (Examples)
1	Ultra High Strengh Steel (UHSS)	Impact Carriers, Bumper Carriers, A-B-Pillar Reinforce-ments
2	Extra High Strengh Steel (EHSS)	Frame Side Member; Rocker Reinforcements
3	Very High Strengh Steel (VHSS)	Wheel House; Structural Members
4	High Strengh Steel (HSS)	Roof Sticks, Fenders
5	Normal strength steels	Outer Panel

Normal strength steels

Normal strength steels are most often used in body construction. They are relatively soft and are therefore particularly suitable for the deep drawing

DESCRIPTION AND OPERATION

processes used in body manufacturing. As well as very good reshaping properties, the panels also have a relatively high rigidity.

High strength steels

The strength of the material and the nature of the surface can be changed as required by different engineering processes. In order to achieve suitable configuration and a good match between construction specifications and what is possible in production, a large range of high strength panels is available.

The range of the minimum yield strength is from 180 N/mm² to 460 N/mm². High strength thin steel panels usually have a surface finish. Electrolytic surface sealing is preferred. Within the group of high strength steels, various types of steel are used in body construction:

- **Micro-alloyed high strength steels** for very difficult drawn components such as fenders, the internal components of doors, hoods and luggage compartment lids or load bearing components such as sidemembers, crossmembers etc.
- **Bake-hardening steels** and **phosphorus alloyed steels** for external panel components with higher draw depth and subject to higher operational demands.
- **Isotropic materials** for flat shaped outer steel panels on doors, hoods, luggage compartment lids, roofs.

Ultra-high-strength steels

These steels are predominately used for body structural components which are relevant to safety. Despite the reduced thicknesses of the panels used, weight reduction is often achieved together with greater strength. As with high-strength steels, special types of steel are used in the ultra-high-strength steels group:

- **Complex phase steels** are used for door side impact carriers, bumper carriers and body components relevant to crashes. Besides high strength, they have good cold reshaping properties and are easily welded.
- **Dual phase steels** have the same properties as complex phase steels. Because of their high strengthening properties they are suitable for body reinforcements.
- **Residual austenite steels** and **martensite phase steels** have very high strength levels of up to 1200 N/mm² and are mostly used in body structures relevant to crashes.
- **Manganese-boron steels** have ultra high strength levels of up to 1600 N/mm² and are mostly used in body structures relevant to crashes.

Due to the use of Ultra-high-strength steels, some special points must be taken into account during body repair:

- Increased force required during straightening.
- Strong springback tendency during alignment work.
- Cutting tools have a shorter useful life.

CAUTION: High-strength and ultra-high-strength steel panels must not be heated during straightening work.

Work without applying heat when carrying out straightening work. Losses of strength will occur at temperatures as low as 250 °C. The basic working methods and the tools to be used are the same however.

Coated steel panels

In a similar way to high-strength steel panels, coated steel panels are finding more applications because of the better corrosion protection which they offer. There are basically two different process which are used to apply a zinc layer:

- Hot dip zinc coating.
- Electrolytic zinc plating.

The following points must be noted when welding:

NOTE: Welding fumes are harmful to health. Make certain that the workspace is well ventilated and use welding fume extraction.

- Zinc starts to melt at about 420 °C.
- The zinc vaporizes at a temperature of about 900 °C.
- The amount of heating determines the damage to the zinc coating, and therefore to the corrosion protection.

DESCRIPTION AND OPERATION

- **NOTE:** Coated panels have a higher electrical resistance, but this can be compensated for by increasing the welding current by 10 - 20% .

  Resistance spot welding is particularly suitable for welding zinc-coated panels, because no widespread warming occurs.
- With electrolytically zinc-plated panels there is no need for any special preparation because the zinc coating does not need to be removed.

DESCRIPTION AND OPERATION

Tools and Equipment for Body Repairs

Alignment systems

NOTE: All the equipment for body work and painting work can be ordered online via the Wielander & Schill service portal http://fo.oem.wielanderschill.com.

Straightening and alignment repairs are often required to restore a vehicle body to its original shape after accident damage.

Universal aligning and measuring systems and universal alignment angle systems are suitable for this work.

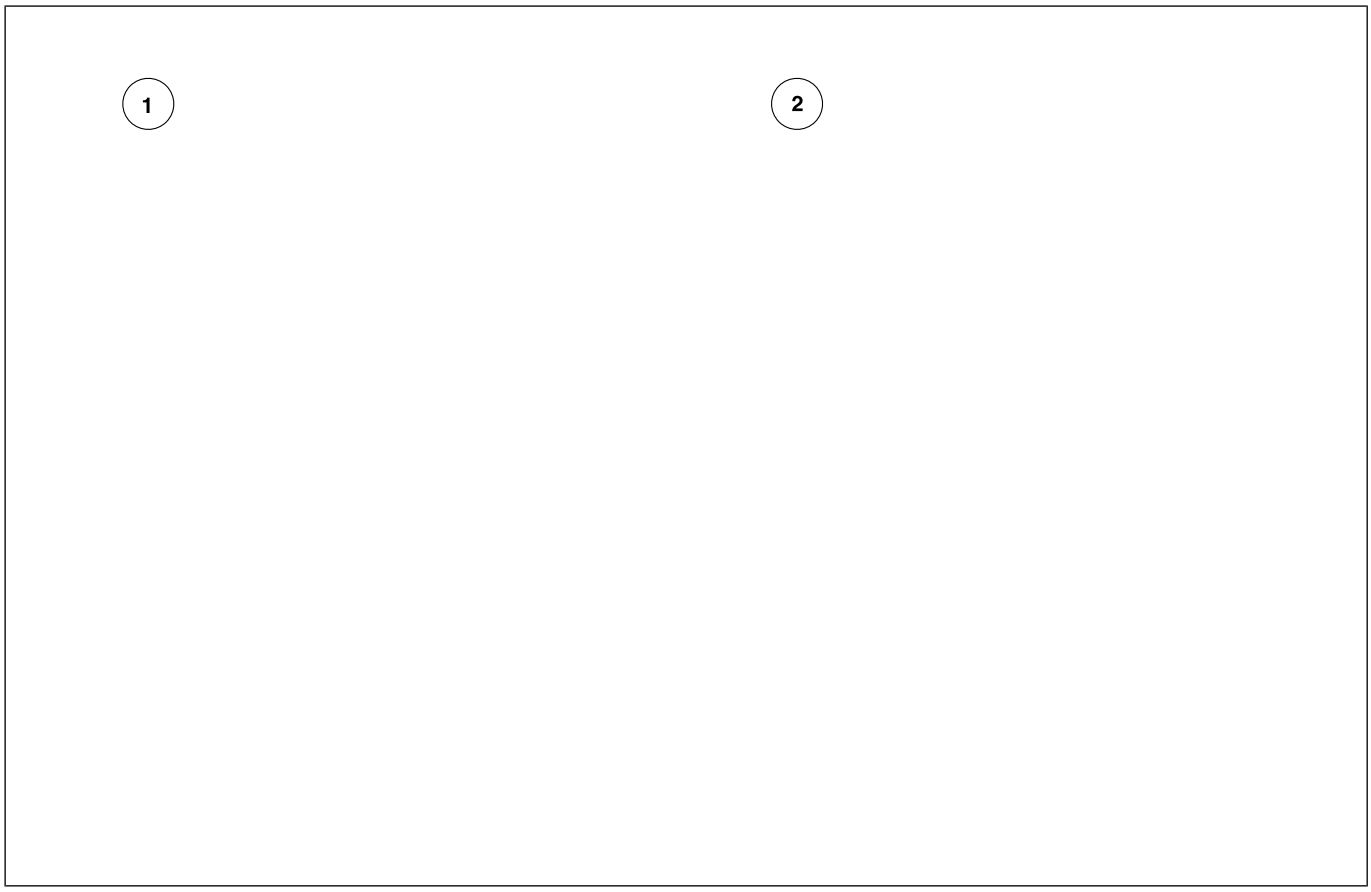

Description	Description
1	Universal aligning and measuring system
2	Universal alignment angle system

Basically, the aligning and measuring system must satisfy the following requirements:

- Universally applicable to all types of passenger car. Can also be used on light commercial and off-road vehicles.
- Accepts the forces involved during straightening.
- High stability and mobility.
- Can accept all or part of the weight of the vehicle.
- Quick to set up.
- Simple to use.
  - Stationary design with drive-on ramp.
  - Height-adjustable aligning platform.
  - Universal gauge extensions with fast anchoring ability around the whole circumference of the aligning platform.
- Facility to test individual body measurement points, with or without aggregates being removed.

Alignment angle devices survey the vehicle at several points on the body. These are usually points which are also used in production. In addition, a recording over the rocker panels is possible. A measuring system is not needed, because the necessary body points are specified with gauges. For this purpose, vehicle specific or universal gauges are available.

DESCRIPTION AND OPERATION

Universal alignment systems consist of a vehicle mounting (universal clamps at the rocker panels) and a pulling device. In addition, a measuring system is required.

NOTE: Because universal clamps are used, the rocker panel area must be reworked for optical and corrosion protection reasons after the repair is completed.

Pay attention to the following points:

- Clean the attachment areas.
- Anchor the vehicle free of stress on the relevant system.
- Support the aggregates to take strain off the body.

Measuring systems

In order to exactly diagnose a damaged vehicle body, measuring systems are required. Depending on the measuring method, the systems vary in having mechanical, optical, acoustic and electronic measuring devices. In some cases, hybrid versions of particular systems are found.

NOTE: When working with each measuring system, the manufacturer's instructions provided in the description of the measuring equipment must be followed.

Basically, the measuring systems must meet the following requirements:

- Universally applicable to all types of passenger car. Also can be used on light commercial and off-road vehicles.
- Suitable for all accident damage.
- Fast capture of body measurement points in the underfloor and external areas.
- Data catalog to record all measurement points (length, width and height) both with and without the aggregates being installed.

NOTE: Basic and in-depth training is offered on the following topics. You will find an overview of the complete range of training offered in the Ford Service Organization training brochure.

Beam compass

The beam compass is a very practical and straightforward aid for measuring bodywork and especially floor assemblies. The beam compass can be used to detect dimensional variations across the length and the width by means of comparison measurements and diagonal measurements.

As a basic principal, body reference points should be chosen which are shown in the body frame measurement data sheet.

NOTE: To be able to determine difference in measurements, the same reference points must always be chosen on both sides. For this purpose the beam compass must be positioned symmetrically.

Comparison measurements can also be made on the outside of the body. Depending on the damage, left/right measurements (symmetry measurements) and diagonal measurements can be made using the beam compass, telescopic rod or a measuring tape.

Laser measuring systems

These systems use laser beams which are projected in one or more planes.

TO BE UPDATED LATER

By the use of two parallel laser heads which can be turned, symmetrical points of a vehicle body can be tested and compared. Using the linear scales which are attached to the measuring points, the measurement data is read off with the aid of the projected laser beams.

The integral inclination gauge also allows differences in height to be quickly checked.

Mechanical measuring system

The use of mechanical measuring equipment is an easy and effective way to check a vehicle frame and chassis assembly quickly, exactly and reliably.

In many cases an assessment of the damage can be made with the help of this system, without the need for elaborate setting up.

DESCRIPTION AND OPERATION

TO BE UPDATED LATER

Because of its self-centering mount, measurement can be carried out by one person.

Further advantages:

- Fast deployment.
- Simple to use.
- Can be extended using adapters, measuring probes and measuring tubes.

Measuring systems which are firmly mounted on an aligning platform require more work in setting them up. They are used to constantly check measurements during alignment work.

This type of mechanical measuring system has measuring scales and measuring slides in three measuring axes. So that the body can be measured, the vehicle is secured on the aligning platform base frame using four universal chassis clamps. The exact fixing points are given in each respective data sheet.

Ultrasonic and mechanical-electronic measuring systems

These measuring systems can be combined with all current aligning platforms. In addition these measuring systems can be used independently of an aligning platform by using a vehicle lift or suitable support stands.

TO BE UPDATED LATER

Description	Description
1	Ultrasound measuring instrument
2	Mechanical-electronic measuring system

Acoustic or ultrasonic measuring systems use ultrasonic emitters and sensors to survey a body.

To do this, ultrasonic emitters are mounted on the vehicle using special attachments. During the measuring process the ultrasonic emitters constantly send out signals which are received by sensors (microphones) and then passed to a

DESCRIPTION AND OPERATION

computer. The measurements are displayed on the computer screen and are compared with the required values supplied by the vehicle manufacturer.

The ways in which mechanical-electronic measuring systems can be used are similar to those of the acoustic measuring systems. They can also be set up on a suitable understructure, without an alignment jig. After this system has been arranged under the vehicle floor and adjusted to three undamaged vehicle measuring points, the measuring arm is brought up to the required measuring points and the readings compared with the reference values. The data is transmitted to a computer where it is evaluated and the results displayed on a screen.

Welding gear

As in the past, the dominant process in body construction is **resistance welding**, in particular spot welding. Depending on body type, up to 5000 spot welds are applied, either by welding robots or in the multi-point welding machine.

Resistance spot welding permits very high energy to be concentrated on a relatively small area of the workpiece in the shortest possible time and when high pressure is applied, a permanent joint is formed. During repairs the resistance spot welds used in production must be re-created accordingly.

TO BE UPDATED LATER

Des cript ion	Description
1	MIG welding machine
2	Resistance spot welding machine

NOTE: If a suitably powerful welding machine is not available and multi-layer panel joints with a total thickness of over 3 mm need to be made, puddle welding must be used.

Although in principle, high and ultra-high-strength panels are adequately or well suited to resistance spot welding, considerable problems may arise because of low welding power, especially where thicker panels or triple or multi-layer panels have to be welded together in the workshop. In particular, older welding equipment does not have the latest welding technology nor welding power and therefore cannot reliably join panel thicknesses greater than 3 mm.

NOTE: When installing body components made of ultra-high strength steel (e.g. boron), only **inverter welding equipment** certified by Ford may be used.

Equipment with inverter technology allows better spot weld quality because of a constant high welding current. In addition the high welding current makes shorter welding times possible and the electrodes therefore have a longer working life. Inverter welding is a further development of electrode welding. In addition, a much higher electrode force (contact pressure of welding tongs) can be achieved with modern equipment.

Further advantages of the new inverter welding equipment are:

DESCRIPTION AND OPERATION

- good welding performance with constant quality, even with high switch-on times
- recognition of and compensation for disruptive factors: e.g. primer, adhesive, rust-prevention paint
- own and pre-set welding programs which can be saved and called up
- quality confirmation through logging of all important welding data
- fast changing of spot welding clamps or spot welding guns as required

The following functions can be controlled and monitored by programming the welding equipment:

- Control of the start conditions by resistance measurement (dirt, paint, bodywork adhesive, shunt circuit through the next spot weld).
- Ensuring the optimum welded connection.
- Checking the energy balance, resistance and quality.

In the case of resistance spot welded connections, faults in the weld are difficult to see from the outside. It is therefore absolutely vital to know the particular properties of the welding machine being used. A test weld with subsequent peeling test will provide information on the quality of the weld. The spot weld itself must not separate, it must tear away leaving a hole.

In the production of vehicle bodies, **MIG welding** plays a minor role as a joining technique. It is used for components subject to high demands, such as threaded plates for axle mountings, or at locations which cannot be spot welded for access reasons.

DESCRIPTION AND OPERATION

Establish Repair Method

General

Before starting accident repair work, make sure that the necessary spare parts and repair material are available.

Planning

NOTE: The body interconnection is to be maintained if possible. Repair is preferred to renewal of body components. Furthermore, check if it is possible to perform a partial repair.

During planning the following job steps must be observed and adhered to:

- Determine the repair method taking into account the information made available in ETIS.
- Work out which repair components will be needed and obtain them.
- Establish what disassembly work is needed.
- Check for specific features such as airbags, route of water drain hoses, electric cables and the location of NVH elements.
- Cut out the old parts (only when the new parts are waiting ready).
- Prepare the joint locations.
- Attach the new parts.
- Prepare the area of the repair for painting (grinding welded beads).
- Perform any solder work which is required at the repair location.

Chronological sequence of repair

NOTE: Refer to each vehicle specific chapter in the workshop literature for details on the individual points.

The actual sequence of repair can be divided into the following steps:

Job steps for the coachbuilder:

- Straightening
- Establish separating cuts and mark them.
  - Take into account the requirements given in the repair instructions.
  - Place the new part ready for use and include it in the repair plan.
- Separate and remove the old part.
  - Take into account the special features particular to the vehicle.
- Prepare the joint locations.
  - - Sand and align the weld flanges.
  - Apply corrosion protection measures.
  - Offer up the new part.
- Attach the new component.
- Rework the welded joints (grind welded seams).

DESCRIPTION AND OPERATION

Alignment Check

General

If there is concern that the body has been deformed, the body must be measured. Several measuring procedures and tools can be used for this purpose.

With simple measuring systems, it is possible in most cases to draw a conclusion about the extent of the damage through a quick measurement without time-consuming assembly work (straightening jig).

NOTE: For the floor pan and the exterior of the vehicle, measuring data is contained in the vehicle-specific repair instructions for each vehicle. Manufacturers of measuring and straightening jigs create data sheets for this purpose for each vehicle.

Data sheets with the body frame dimensions for body measurement are specified in the model-specific repair instructions in each case. Pay attention to the position of the measuring probes for each of the measurements given. A tolerance of ± 3 mm applies to all specified dimensions.

Measuring points that are specified in a curve are to be measured so that the greatest distance from the opposite measuring point is reflected. For exact determination of the measuring points, enlarged sections are shown.

Example of measuring the vehicle superstructure

DESCRIPTION AND OPERATION

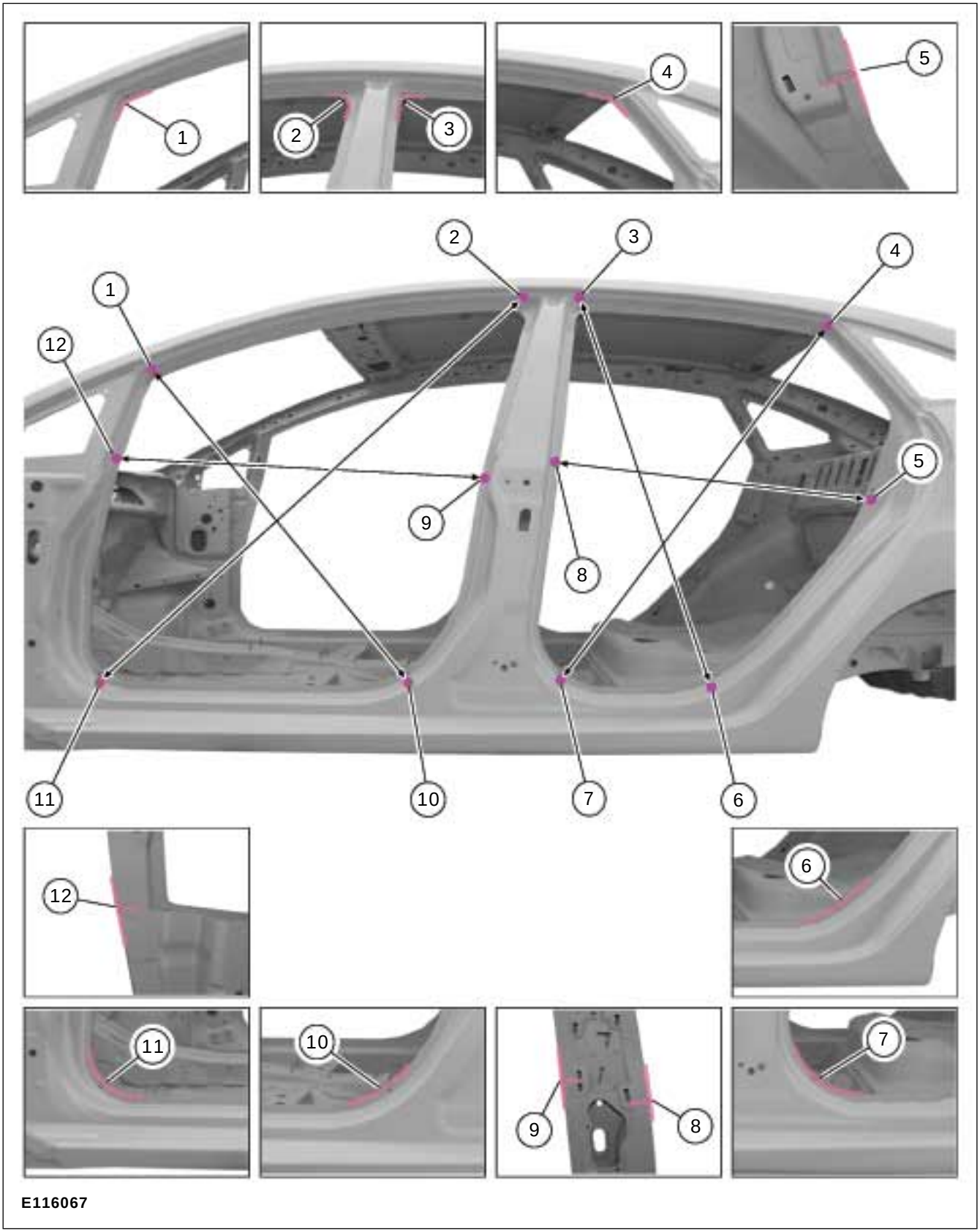

Example of measuring the floor pan

DESCRIPTION AND OPERATION

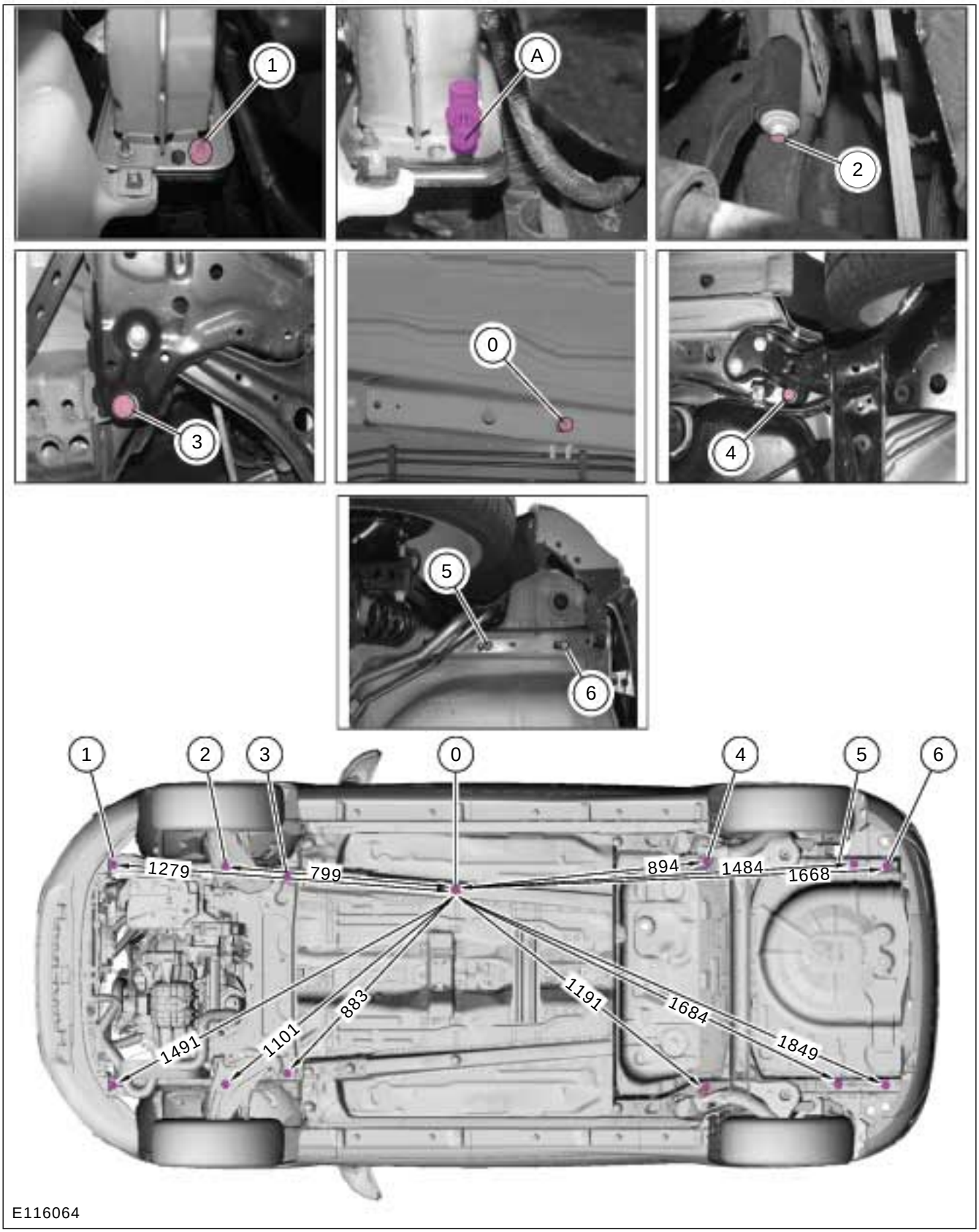

DESCRIPTION AND OPERATION

Straightening

General

Straightening repairs are often required to restore the original body shape. To do this, the vehicle must be placed on a straightening jig so that a pulling device can be used.

NOTE: Basic and advanced training courses are offered for the following contents. For an overview of all training courses offered, please refer to the Ford Service Organisation training course brochure.

Straightening is considered as the process of pulling out the deformed body parts, up to cutting out the parts that need replacing. If distorted components remain on the vehicle, then the term alignment work is used.

Body straightening requires practice and experience. Before starting body straightening, the exact direction of impact must be determined. The straightening force must be applied in the opposite direction to that of the impact. Only in this way can it be guaranteed that the original shape will be achieved again.

Note the following points during the process of body straightening:

- Secure the pulling unit with a safety cable.
- Do not remove bonded glass prior to straightening.
- Never apply heat during straightening.
- If necessary, open doors or hoods/lids/liftgates during straightening.
- Check dimensions and gaps continuously during straightening.
- High-strength steel panels have a stronger tendency to retain their deformed shape.
- During the straightening repairs, monitor the attachment of the pulling unit to the vehicle.
- Carry out the straightening work in several stages, never in one pulling process. This prevents the risk of overstretching and of joints tearing out.
- During individual straightening steps (under a pulling load), relieve tension by striking the deformed areas with an aluminum hammer while they are still under tension.

Special features of non-monocoque bodywork

Straightening is different to monocoque body construction because of separate straightening for bodywork and chassis.

If only the body is damaged in an accident, light straightening repairs can be carried out while still mounted on the chassis.

NOTE: With strong straightening forces, these bolted connections may be damaged (bodywork to chassis frame). Monitor the bolted connections continuously during the straightening work. Holding clamps or alignment angles must be attached directly to the chassis frame.

Straightening of chassis frames

NOTE: High-strength steels must not be heated.

If the body and chassis frame have to be straightened, they must first be separated from each other.

The following conditions must be met:

- The repair must be economically justified.
- The production quality and stability of a frame must be achieved again after carrying out the repair.
- In principle, the driving and operating safety of the vehicle is paramount.
- Cold straightening of deformed areas with sharp edged folds cannot be carried out.
- Straightening with the application of heat (welding torch) requires much experience and accurate knowledge of the behavior of steel panels when heated.
- The temperature and duration of application of the heat are to be considered in particular.
- Individual components of the frame, such as cross members, brackets, etc. can be replaced.

DESCRIPTION AND OPERATION

Complete Panel Replacement/Partial Replacement

NOTE: Basic and advanced training is offered for the following contents. For an overview of all training courses offered, please refer to the Ford Service Organisation's training course brochure.

Repairs always mean intervention in the body shell structure and thus also intervention in the vehicle's passive security system.

NOTE: From an economic perspective, the possibility of a partial replacement (sectional repair) must be considered when assessing an accident-damaged vehicle.

Partial Replacement

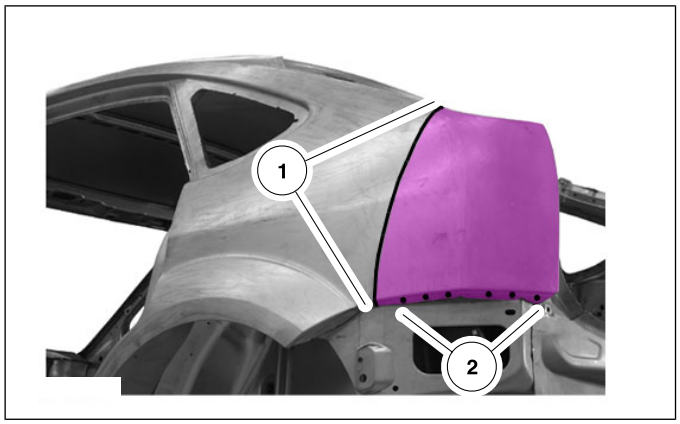

Item	Description
1	Join area
2	Original welding

Decision criteria

The following are always crucial for the decision:

- How economical the repair is.
- Retention of the original join.

In addition, Ford must have given its approval for a sectional replacement solution in the damaged area. For those partial replacements approved by the factory and described in the model-specific body workshop literature/technician's information, some spare parts (service parts) specially prepared for partial replacements are offered through the spare parts sales department.

Sectional replacement (sectional repair) means the replacement of a section of the body shell structure. Sectional repairs fulfill their purpose above all if the replacement of a complete part is too time-consuming and thus not economical. Approved sectional repairs are clearly defined in the model-specific body literature. These requirements must be complied with.

Depending on the damaged areas, further facts are to be taken into account when deciding for or against partial replacement:

- Severance cuts should be as short as possible.
- The effort for follow-on work on the connections must not be too great.
- It must be possible to reproduce the optical path of visible edges on door openings.
- Inner reinforcement panels must not limit the straightening work.
- Inner reinforcement profiles in the pillar areas must allow for separation.
- The Ford regulations for partial replacements on structural frame sections must be taken into account.
- The large surface welding seams at the connections must be restored.

Advantages of a partial replacement

A partial replacement repair offers many advantages for a professional repair of accident damage:

- Repairs can be made both in the outer panel area (e.g. side frame) and in the inner areas (e.g. structural member, trunk floor).
- The repair can be limited to the actual damaged area.
- Reduction of repair costs, as aggregates and other components can usually remain in the vehicle.

Complete replacement

In a complete replacement, the original connections are largely reused.

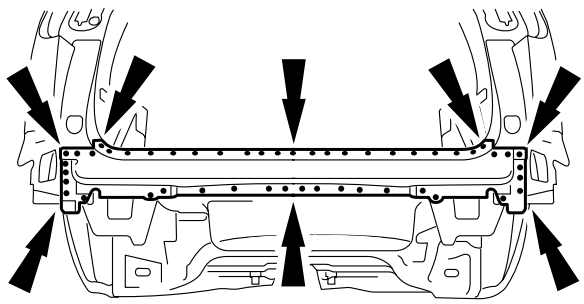

E46243

DESCRIPTION AND OPERATION

A complete replacement is advantageous if the damaged body part can be detached from its original connections and a completely new part can be fitted without creating additional joints (e.g. liftgate).

A complete replacement is necessary if there is no sectional replacement solution.

DESCRIPTION AND OPERATION

Corrosion Prevention

The corrosion protection provided in production must be carefully maintained and reproduced during body repair work, in order to ensure the long-term warranty for Ford vehicles.

NOTE: Please take the notes in the model-specific repair descriptions into account. Please also note the manufacturer's instructions when handling the different anti-corrosion agents.

Only Ford original bodywork components and Ford approved repair materials are to be used for body repairs. The Ford logo is stamped onto every Ford original spare part.

Panel coatings and corrosion protection

Body steel panels are provided with a coating for corrosion protection purposes. The coating material is predominantly zinc in a variety of composition forms. Aluminum is also used to some extent. Basically, all types of steel sheet can be coated.

A variety of coating processes are used:

- Hot dip zinc coating.
- Electrolytic zinc plating.
- Organic coating.
- Hot dip aluminum coating.

NOTE: Welding fumes are harmful to health. Make certain that the workspace is well ventilated and use welding fume extraction.

The following points must be noted when welding:

- Zinc starts to melt at about 420°C.
- The zinc vaporizes at a temperature of about 900°C.
- The amount of heating determines the damage to the zinc coating, and therefore to the corrosion protection.
- Resistance spot welding is particularly suitable for welding zinc-coated panels, because no widespread warming occurs.
- With electrolytically zinc-plated panels there is no need for any special preparation because the zinc coating does not need to be removed.

NOTE: Coated panels have a higher electrical resistance, but this can be compensated for by increasing the welding current by 10 - 20% .

Corrosion protection measures during repair work

CAUTION: Always be extremely careful when handling solvents, sealants and adhesives. Some products contain substances harmful to health or give off harmful or poisonous vapors. Always follow the manufacturer's instructions. If there is any doubt as to whether a particular solvent is suitable, it must NOT be used.

All Ford bodywork components have a cathodic primer. Moreover, most parts are zinc-plated on one or both sides. If possible, these protective layers must not be damaged.

Before welding

Interior surfaces of new bodywork components which will no longer be accessible after installation must be painted beforehand. The welding flanges are treated with a special welding primer. The joint areas are not always accessible from inside later. Therefore, prepare these areas so that no soot is produced by burning paint during welding.

NOTE: In order to ensure that the corrosion protection produced in production is not destroyed, the working area must be kept as small as possible.

NOTE: Do not touch cleaned bare metal any more with the bare hands. The dampness of your hands will corrode the metal.

Procedure:

- Remove the primer or paint/zinc layer in the welding area using a tress wire brush to prevent the formation of soot from the paint.
- Thoroughly clean the welding area with a metal cleaning agent and rub dry.
- Coat the welding flange with welding primer on all sides and allow to dry.

NOTE: The welding primer must only be applied thinly to the spot welding area, to minimize spattering when welding.

After welding

During repair work, body panels are often heated at very high temperatures, which results in the destruction of the corrosion protection.

DESCRIPTION AND OPERATION

Reworking of the affected areas is therefore vital:

- Grind the welded seams flat and clean thoroughly with silicone remover. Dry with a lint-free cloth.
- If the join area is accessible from the inside, the transition area to the paint must be abraded for all types of join so that good adhesion of the primer is achieved later.
- If the join area is not accessible from the inside, the cleaning and sanding work is not done. For this reason, ensure that there is as little contamination as possible in the area of the repair. This allows the cavity wax applied later to penetrate the join area without hindrance.

NOTE: Only apply a small amount of panel cleaner to the cleaning cloth when cleaning the repair area. Make sure that no cleaner reaches the connecting flange, so that the welding primer is not washed away again.

Priming after welding

Primer is applied to the welded flanges after cleaning. A check must also be made that the production corrosion protection is present in the area of the flanges. Any damage must also be re-primed.

Sealing work

- If MIG welding is carried out during a sectional repair on a connecting flange with sealant or adhesive material, the material must be applied at a distance of approx. 10 mm from the weld spot.
- These areas must be sealed very carefully after the work has been completed.

Depending on the type of repair, the clinched flanges on the hood, doors, tailgate and trunk lid must be sealed with clinched flange sealer.

Clinched flange protection with flat nozzle

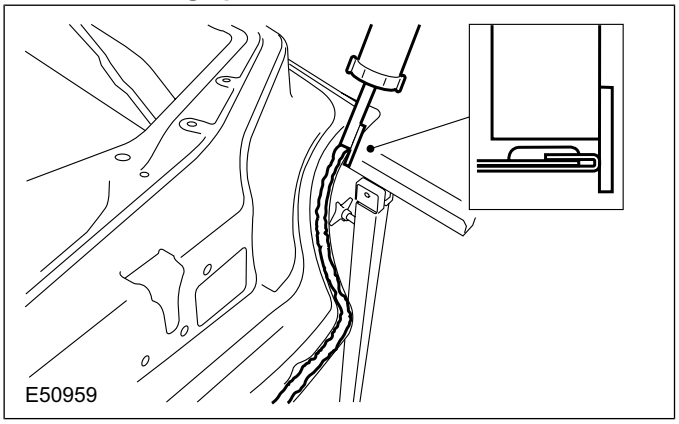

Clean the clinched flange area of the new component with silicone remover and dry with a lint-free cloth.

The sealant must be applied to the dry primed surface (i.e. dip priming as for delivery).

Apply clinched flange protection to the clinched flange using one of the flat nozzles supplied. The nozzle must be cut to the necessary width beforehand and the guide stop cut as required.

During application the clinched edge must be covered with an overlap of at least 3 mm. The beginnings, ends and edges or interruptions in the sealer bead need to be reworked by forming with a brush or a spatula, to ensure a 100% tight sealing of the flange.

The speed and angle of application are decisive for a good appearance and a bubble-free bead. Always apply the sealer with as few as possible interruptions to avoid sealer rework. Never use solvents or thinners as this will considerably slow down the hardening process of the sealer.

For an application thickness of 3 mm of the clinched flange sealer it is recommended to allow to dry over night at room temperature. A minimum hardening time of 5 hours is required anyhow before a 2-component primer can be applied.

Clinched flange protection applied to the correct width and thickness.

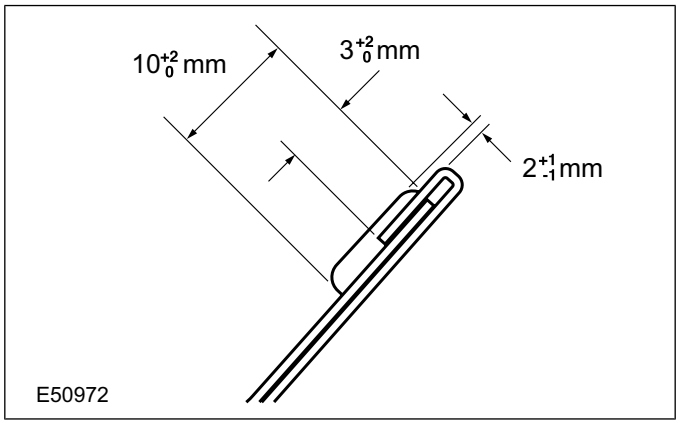

Underbody protection/stone chip protection

The underbody protection is used as corrosion protection and must also be applied such that it matches the original condition, from a visual perspective.

Two main application methods are used in production:

DESCRIPTION AND OPERATION

- The underbody protection is applied as a sprayable sealing compound.
- In the area around the structural members, the underbody protection is sprayed on and spread across a wide area.

Because of the coarse surface structure of the stone chip protection material, it is recommended to only perform a repair over the whole surface, if there is damage over visible areas. Otherwise there is the danger of serious irregularities on the surface.

The thickness and appearance of the underbody protection and stone chip protection must be matched to the original. Special spray guns are used to work the materials for this reason. A test spray must always be performed beforehand however, to determine the correct appearance and layer thickness.

Cavity protection

After painting work has been completed, a general check is made of the work that has been done. Before final reassembly of the vehicle, the cavity wax protection in the area of the repair must be renewed. Cavity wax protection must be performed carefully so that the quality of the repair conforms with Ford standards:

- Guide the cavity wax probe carefully in the area of the repair so that targeted corrosion protection is achieved.
- Pay special attention to edges and swage line on stepped joints, the wax must cover the inner edge areas.
- The cavity wax must flow along the stepped sheets so that the wax is drawn between them by capillary action.

A hole may be drilled in a suitable place for areas which are not accessible for the application of cavity wax. The diameter depends on the size of plugs available. When this is done it is vital to make sure that no drilling swarf remains in the cavity (rust will form if any remains). The edge of the hole must be treated with cavity wax. Finally close with a plug and seal with underseal.

Only on components with clinched flange edges:

After painting, the inner clinched flange edge must be sealed as far as is possible with cavity wax. For this, the repaired component should be positioned upright and corrosion protection wax sprayed into the water drainage holes and/or the thread holes for the hinges in both directions (50 ml corresponds to about 20 seconds spraying time).

For doors, tilt and turn the component to spread the corrosion protection wax over the whole edge of the flange.

Wax application

DESCRIPTION AND OPERATION

DESCRIPTION AND OPERATION

Corrosion protection for the floor pan (example)

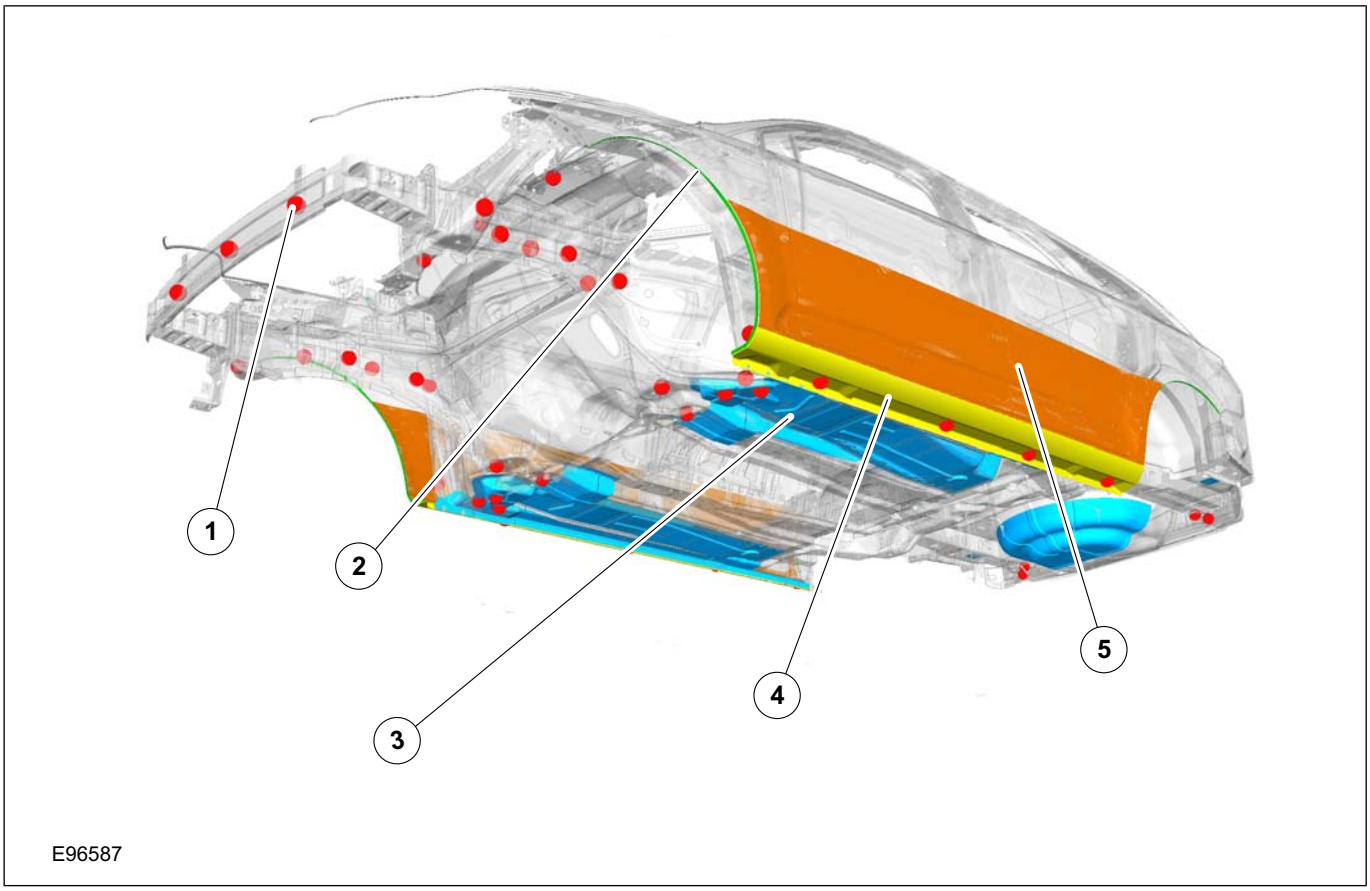

Item	Description
1	Injection points for cavity wax protection
2	PVC stone chip protection at the wheel arches
3	PVC underbody protection
4	PVC stone chip protection
5	PU primer

DESCRIPTION AND OPERATION

Corrosion Damage/Corrosion Repair

Modern vehicle bodies are protected from corrosion by elaborate measures. Multilayer coatings on the panel surface prevent direct contact between the metal and oxygen, and so protect it from corrosion.

In the long-term however, corrosion on a vehicle cannot be completely prevented.

NOTE: Basic and in-depth training is offered on the following topics. You will find an overview of the complete range of training in the Training Brochure issued by the Ford Service Organization.

What is corrosion?

Corrosion is destruction of a subsurface caused by chemical or electrochemical effects which operate from the outer surface.

If the protective layers become damaged, electrochemical conversion processes are initiated, which allow the metal to oxidize. This leads to the formation of corrosion.

The following factors lead to corrosion:

- Mechanical damage such as stone chips and scratches which penetrate through to the steel panel.
- Damp interiors.
- Unfavorable weather or environmental conditions, as may occur in areas with high humidity, high salt content in the air or serious air pollution due to aggressive gases and dusts.
- Insufficient corrosion protection after repairs.
- Lack of care by the vehicle owner of the painted and corrosion proofed surfaces or areas on the vehicle.

In order to maintain long-term corrosion protection, the vehicle must be checked at regular intervals.

In doing so, the follow areas must be inspected and any damage rectified:

- Damage to the paint surface cause by scratches or stone impact must be suitably rectified according to the specifications.
- Damage to the PVC underbody protection or the PU stone chip protection must be refinished.
- Damage to the PVC underbody protection or the PU stone chip protection must be refinished.
- Incomplete or damaged sealing at clinched flanges must be renewed.
- Check the cavity protection and renew it if incomplete.
- Poorly installed or damaged covers and stone chip protection fixtures must always be renewed.
- Check seals and seal carriers for wear and correct mounting. Any damaged seals must be renewed.
- All rubber grommets and blanking plugs must be present and correctly installed.
- A damp or wet floor inside the vehicle indicates that there are leaks in the bodywork. The interior must be dried out and the leaks must be completely rectified.

The corrosion formation can vary in extent.

With rust film or edge rust formation, the surface of the paint has small traces of corrosion present. The traces of corrosion can possibly be removed in such cases by polishing the paint surfaces. If this is not possible however, the traces of corrosion must be rectified by using a touch-up technique.

If the corrosion is just starting, with up to 1 mm rusting below (in the form of a dot or a line) the damage is rectified as follows:

- Clean the defective location.
- Mechanically remove the rusting which is starting below the surface.
- If the area is small, apply primer and allow it to dry, then use the paint pencil to touch up the area - if not, respray the damaged area.

If rust is already under the paint finish to the steel panel, then the whole paint finish in the affected area must be sanded away.

Furthermore, the existing traces of corrosion in the body panel must be carefully and completely removed.

Finally a new paint finish must be applied in this area. In the case of rusting through, the affected body panel is already completely destroyed. Such damage requires complete or at least partial replacement.

NOTE: : In the general section there are several chapters which present the techniques necessary for a professional corrosion repair.

The outcome of this is the following repair sequence:

- Remove the rusted-through part.
- Remove the remaining traces of corrosion.
- Offer up the new part.
- Prepare the joint areas.

DESCRIPTION AND OPERATION

- Weld the new part into place.
- Produce the corrosion protection.

For a professional repair it is essential to reproduce the corrosion protection during and after the repair.

DESCRIPTION AND OPERATION

Sealer, Underbody Protection Material and Adhesives

Sealants, adhesives, cavity wax and underbody protection materials are used during the various body repairs. In this area Ford offers a range of products which have been tested and matched to each other.

CAUTION: Always be extremely careful when handling solvents, sealants and adhesives. Some products contain substances harmful to health or give off harmful or poisonous vapors. Always follow the manufacturer's instructions. If there is any doubt as to whether a particular solvent is suitable, it must NOT be used.

Clinched flange protection

One-component adhesive/sealer which can be applied by brush or spraying, based on MS polymer, with a flat nozzle for application and with the following properties:

- Can be sanded
- Permanently elastic
- Non-corrosive
- Very good adhesion
- Rapid hardening and resistant to ageing
- Can be over-painted with almost all proprietary paints

Seam sealant T Anthracite

One-component sealer based on MS polymer, for sealing joints and seams, with the following properties:

- Silicon-free
- Solvent-free and low-odor
- suitable for gluing HVH elements into position in their respective body areas

Body sealant T beige

Sealer with the following properties:

- Stable
- Contains solvent
- Especially suitable for visible seams
- After hardening can be overpainted with two-pack paint

Underbody Coating

Underbody protection is necessary for permanently elastic corrosion protection of vehicle underbodies. It is very durable and has good resistance to abrasion,

Cavity wax

This touch-proof, transparent corrosion protection wax is used for the preservation of cavities and flange joints.

Anti-corrosion wax

Anti-corrosion wax is a coating material which can be applied in fine spray, forming a very thin and grease-like protective film, therefore offering very good corrosion protection.

2-component metal adhesive

For joining metal to metal and plastic to metal. The adhesive reduces droning noises and improves corrosion protection.

Windshield sealant

Solvent-containing, stable sealing material. The sealer is permanently elastic and does not form a skin on the surface.

1-component window glass adhesive kit

For direct glazing. The vehicle is ready to drive after 6 hours (passenger airbag). Prevents contact corrosion.

2-component window glass adhesive kit

For direct glazing. The vehicle is ready to drive after 1 hour (passenger airbag). The adhesive is not an electrical conductor and permits interference-free radio reception. Prevents contact corrosion. Using a 150ml additional cartridge, the adhesive can also be used for large windows or to produce a double seam of adhesive.

PU glass adhesive

150ml additional/replacement cartridge for direct glazing using 2-component window adhesive kit. Suitable for double beads or larger windows. Also suitable for sealing NVH elements.

DESCRIPTION AND OPERATION

Cutting Technique

NOTE: Without exception, before starting work you must read the safety and warning instructions in the chapter "Safety Instructions". In addition, pay attention to the warning instructions of the particular equipment manufacturer.

Possible cut lines (example)

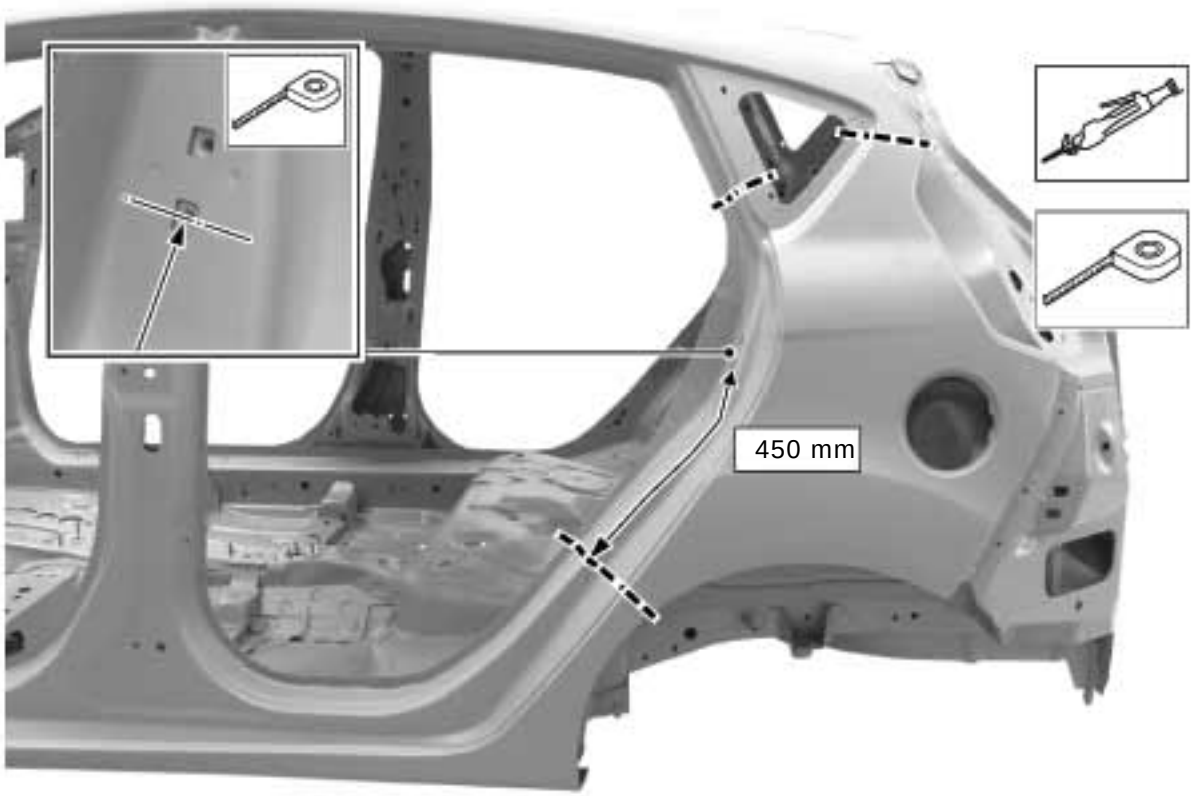

E112277

NOTE: After all separation work, make certain that the metal swarf is completely removed from the vehicle body.

Depending on the separating tools used, there are some fundamental points to bear in mind:

- Only start the cutting work once the new part is to hand.
- Compare the new part with the old part for shape and size.
- The straightening work must be completed before any body components to be replaced are cut out.
- Before separation work is started, all welded connections which cannot be seen must be freed of underbody protection, sealant etc.

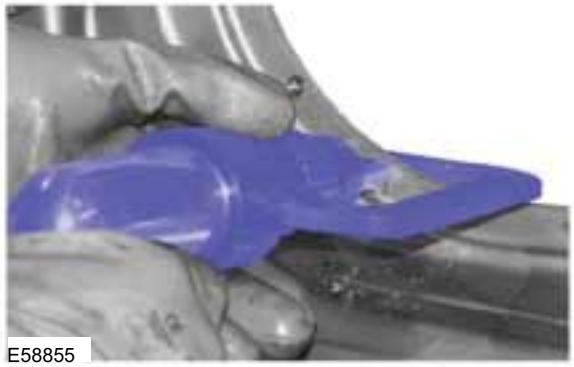

E58855

NOTE: Steplessly variable machines increase the working life of the cutting tool. Use of a suitable lubricant can increase this even further.

Spot weld milling tool

Resistance spot welds are separated using a spot weld drilling machine or a spot weld milling tool.

A spot weld milling tool usually has an adjustable depth stop and a safety fixing system. These prevent the machine from drilling too deep and the cutter from slipping while working.

DESCRIPTION AND OPERATION

Rod sander

Another option for separating resistance spot welds is to use the rod sander.

TO BE UPDATED LATER

If spot welds and MIG welds are difficult to reach, a rod sander may offer an alternative.

Short stroke saw

The short stroke saw is suitable for separating vehicle body components and for making a separating cut for partial repairs.

TO BE UPDATED LATER

NOTE: In order not to damage panels, wiring harnesses, hoses or similar components which lie behind, remove them beforehand as necessary.

The narrow design of the saw blade permits cutting in tight curves. Straight cuts require a relatively great deal of practice.

Orbital saw

Where use of the short stroke saw is difficult because of the body construction, the orbital saw can be used.

TO BE UPDATED LATER

The cutting depth of the orbital saw can be set. This allows separating cuts to be made, despite panels or other components lying in danger behind. Straight cut lines can be more easily made using the orbital saw.

DESCRIPTION AND OPERATION

Panel Beating Technique and Smart Repairs

General

Smaller scale body repairs, where damaged panels do not need to be replaced, can often be carried out by realignment work. Whether the repair is economical however, often depends on the accessibility of the affected body area.

NOTE: Basic and in-depth training courses are offered on the topics which follow. An overview of the complete range of training offered is provided by the Ford Service Organization Training brochure.

During damage assessment, the following technical points must be taken into account:

- Small mild dents (without damage to the paint), which are in areas that make access from the inside possible, can be rectified using undamaged paint panel beating.
- If the inner side of the damaged area (with paint damage) can be accessed, then conventional panel beating techniques can be used.
- If the damaged area has no access from inside, then it can only be rectified using outside panel beating techniques.

Dent removal using special panel beating levers

NOTE: In the Undamaged Paint Dent Removal section, you will find more information on pressure techniques.

TO BE UPDATED LATER

Description	Description
1	Deflection by a hook arrangement
2	Pressure tool

This panel beating technique with pressure is mainly used to rectify smaller dents as a result of hail impact, transportation or parking, without the paint being damaged.

Small dents are removed from the inside of the body panel by pushing them outwards in a mechanical process using panel beating levers.

Because of the great variety of shapes of these levers, it is possible to use this panel beating technique on almost all areas of the vehicle body.

DESCRIPTION AND OPERATION

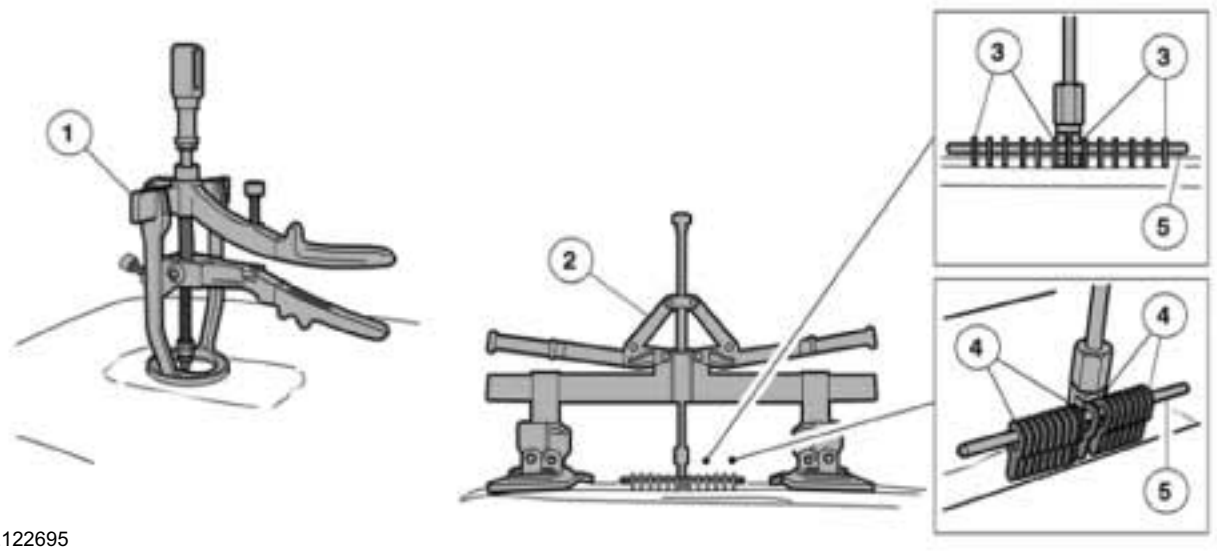

E122695

Description	Description
1	Puller device for minor damage, with integral copper electrode
2	Puller device for more extensive damage
3	U-washers spot-welded in place
4	Puller bits spot-welded in place
5	Attachment for U-washers or puller bits

This method can be used to reshape dents or more extensive damage from the outside.

For minor damage, the copper electrode in the tool is secured onto the panel surface by spot-welding and the puller device is used to pull out the damage without jolting.

For more extensive damage, puller bits or U-washers (depending on the application area) are spot-welded to the panel surface and the area pulled out using the puller device.

Because of the versatile puller and the variable counter bearing, a wide variety of damage can be worked and rectified using this repair method.

Because of the mechanical lever operation, the variable counter bearing and the optimum controlled application of power, this external dent removal system allows dents in almost all vehicle body areas to be pulled out.

Hollow leveling (removing dent without a dolly)

Hollow leveling can only be used on areas which are accessible from the rear.

TO BE UPDATED LATER

DESCRIPTION AND OPERATION

Description	Description
1	Center of dent
2	Spoon

During hollow leveling, the dent is removed from the inside a using suitable panel beating tool and applying knocking or pressing movements. High spots around the edge of the dent area are flattened with blows from the aluminum or wooden headed hammer.

The usual tools are for instance hammers of various designs, dollies, levering irons and various spoon irons. The correct choice of tool is made depending on the shape of the dent and the access which is possible.

Dent removal using hammer and dolly

Panel beating can only be performed using a hammer and dolly if access can be gained from the rear side.

TO BE UPDATED LATER

Description	Description
1	Aluminum hammer
2	Box file

The purpose of the dolly in this case is to transfer the force of the impacts from the hammer to the steel panel which is in between. As this is done, the deformed body panel is smoothed (dressed) and the tension fields in the body panel are removed.

The favored tool for this repair process is the aluminum hammer and as opposite support the universal hand dolly. To rectify minor panel damage, the box file should be used as opposite support. Because of its serrated surface, the box file prevents normal stretching of the body panel which would otherwise occur.

Heat-induced material shrinking

Material shrinking, also called settling in, can be performed in a variety of ways depending on the extent of the damage and the access to the repair area.

These repair processes differ depending on the type of heating and subsequent working of the heated surface. They sub-divide into two basic processes:

- Heating using a carbon electrode.
- Heating using the oxy-acetylene torch.

In the carbon electrode process the working is done exclusively by warming. In this case the access to the repair position is only from the outside.

TO BE UPDATED LATER

Description	Description
1	Carbon electrode

DESCRIPTION AND OPERATION

Des cript ion	Description
2	Spiral shaped heating pattern

If the damage is concentrated in a spot and is in the form of a more rigid raised area, then the carbon electrode must be replaced by a copper electrode. As heat is applied, slightly more pressure is applied to the raised area.

In the method using heating by the oxy-acetylene torch, material shrinking is achieved by a combination of heat and mechanical working of the damaged area.

TO BE UPDATED LATER

Des cript ion	Description
1	Overstretched area
2	Point heating using the oxy-acetylene torch
3	Spiral shaped knocking back with dolly

The repair area must always be accessible from both sides, so that the heated area can be properly worked mechanically.

The combination of heating and mechanical working is very effective.

As soon as the warm point is established, hammering is immediately started using the aluminum hammer together with a suitable dolly on the inside of the repair surface, working in spiral movements towards the warm point. This causes material to build up in the center of the warmed area.

Lead loading

Despite good external panel beating techniques, it is not always possible to rectify every surface unevenness. For this reason, application of lead loading is an important part of panel beating.

CAUTION: Poisonous gases and dust can be produced when working solder. Use an extraction unit and, if required, a protective mask.

NOTE: Since 07/2003, lead compounds have been ruled out for production. Appropriate lead-free tin solders and pastes must also be used in the workshop.

Typical application areas:

- Body components with limited or no access from the rear.
- Body components with very narrow cross-section.
- Body components which are particularly exposed or which can move.
- Weld seams of partial repairs.
- Rocker panel areas, wheel arch edges, side panel areas.
- Doors, hood, luggage compartment lid.
- Swage lines and joint areas.

Tin has the following advantages:

- Excellent bonding on bare metal surfaces.
- Good moulding properties.
- Good properties for the production of shapes and contours.
- Permanent shape.
- Heat expansion is the same as steel.

To create a basis for the actual lead loading process, a lead loading paste is first applied to the panel. The paste is then heated and wiped away with a cloth. Now the tin can be applied and moulded with a brazing block.

DESCRIPTION AND OPERATION

After the repair site has cooled down, it is worked using for example the body plane until the surface is smooth and has no transitions.

DESCRIPTION AND OPERATION

Paintless Dent Removal

NOTE: Basic and in-depth training is offered on the following topics. You will find an overview of the complete range listed in the Training brochure published by the Ford Service Organization.

General

Application is restricted to body surfaces which are accessible from both sides. This repair technique is seldom feasible on double-skinned body components or closed body profiles. The same applies to edge areas, swage lines and seams on body components, which are very dimensionally stable.

The following characteristics must be present for a dent to be removed:

- The diameter must be no more than 50 mm.
- No material stretching in the centre of the dent.
- Repair area must be accessible

Furthermore, sufficient experience in the use of special tools and knowledge of materials are also requirements for a successful repair.

TO BE UPDATED LATER

Item	Description
1	Deflection by a hook arrangement
2	Pressure tool

Mild dent

TO BE UPDATED LATER

Satisfactory repair results are only possible on mild dents with little depth and small deformation radii. Therefore this repair method is particularly suitable for hail, parking and transportation damage.

Dent with material stretching

DESCRIPTION AND OPERATION

TO BE UPDATED LATER

If strong and direct force during the damage process causes the material to stretch in the middle of a dent, then the result is a small and sharp edged dent. Such damage cannot be rectified without visible deformation.

Advantages of a planishing technique:

- Economical in time and materials
- The original paint is retained
- Environmentally friendly (no sanding or painting work)

While carrying out the repair, the following itemized repair route and process flow must be complied with:

1. Damage diagnosis
2. Repair preparations
3. Perform repair
4. Paint finishing, corrosion protection and quality control

In order to ensure corrosion protection, all inner areas of the repair must be treated afterwards. Where it is possible, the paint is repaired. In every case the inner area of the repair must be treated with cavity wax.

DESCRIPTION AND OPERATION

Plastic Repairs

General

The proportion of plastics used in vehicle construction continues to rise. Up to now damaged plastic components often had to be replaced. These days, plastic repairs are becoming more and more widely accepted because of the increasing cost of spare parts.

NOTE: Plastic adhesives are chemical products and are subject to the safety instructions of the manufacturer.

In repair work, the material properties of plastics are highly significant. There are two main groups:

- Thermoplastics.
- Thermosets.

NOTE: Elastomers make up a third group of plastics. These are not mentioned below because they have no plastics repair applications.

Thermoplastics

Heat causes thermoplastics (also called TP polymers) to transform from the solid state into the thermoelastic state and then into the thermoplastic state. When thermoplastics are cooled, they return to solid state.

Brief description	Plastic
ABS	Acrylonitrile butadiene styrene copolymer
PA	Polyamide
PC	Polycarbonate
PP	Polypropylene
PP/EPDM	Polypropylene/ethylene propylene diene copolymer
PC/PBT	Polycarbonate/polybutylene tereph-thalate
Hard PVC / soft PVC	Polyvinylchloride

Thermosets

Thermosets (also called TS polymers) are much harder and more brittle than thermoplastics. Their strength remains largely unchanged when they are heated. Thermosets are destroyed when heated above the critical temperature. Also, the original state will no longer be restored on cooling.

Brief description	Plastic
GRP	Glass reinforced plastic
PUR	Close-meshed cross-linked poly-urethane
PUR	Wide-meshed cross-linked poly-urethane

Plastic identification

Normally the appropriate identifier is marked on the plastic components used in vehicle construction.

The capital letter sequences used for this are standardized in DIN EN ISO 1043-1 and DIN ISO 1629 (for rubber) and can be looked up in the tables which they contain. In addition the string of characters provides information about the exact mixture ratio and the proportion of certain fillers.

Examples of the identification of plastics

E122806

DESCRIPTION AND OPERATION

E122807

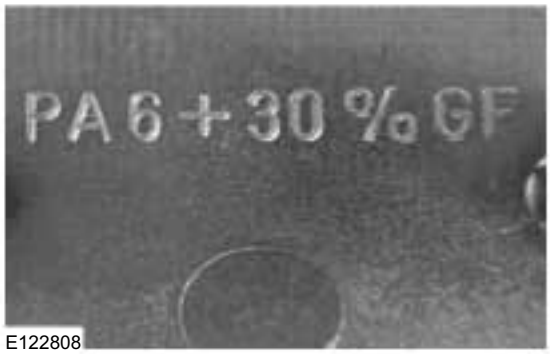

E122808

NOTE: The identification of the type of plastic is necessary for the plastic welding process in order to determine the correct welding rod (welding material) to use.

If an identifier is missing or cannot be made out, the following easy to perform tests will help:

Visual Inspection

Visual inspections mainly serve to identify PUR and GRP materials. Thermoplastic components are often painted and are therefore difficult to identify.

Identification characteristics:

- When PUR cracks or similar damage occurs, pores of foam can be seen.
- GRP can be recognized by the glass fiber structure on the inside.

Mechanical test:

The plastic group can be determined by a sound test:

- Degree of hardness - the higher-pitched the sound, the harder the plastic.
- Elasticity - the more muffled the sound, the higher the elasticity of the plastic.

Sanding test

In this a place is chosen which will not be visible later, and the finger belt sander is used to sand the plastic.

The plastic group can be determined using the pattern of the dust:

- Thermosets produce a white dust.
- Thermoplastics smear and do not produce dust.

Float test in water:

Take a small piece of plastic from the component to be repaired and test whether it floats on water (PP-EPDM, HD-PE, PP) or sinks (PVC/U, PVC/P, ABC, PC).

Nature of the surface

The surface of plastics can be categorized as rigid (PVC-U, PVC-P) and waxy (PP/EPDM, HD/PE, PP).

Adherence test using welding rod

Heat a welding rod that is identified with the type of material and the plastic component using the hot air gun. Press the welding rod onto the plastic component to be welded. When the welding rod cools down, if it remains stuck to the component or can only be removed with great difficulty, then it can be assumed that the two are made of the same plastic. When pulling away from PP/EPDM, HD/PE and PP, this can lead to strings.

CAUTION: Danger of poisoning! When burned, most plastics release vapors harmful to health. Ventilate the room well and use respiratory protection. Where possible work using an extraction system.

Burning test

Every plastic has a characteristic behavior and smell when burned. Using a knife, cut off a small piece from the component to be repaired, remove any dirt and paint residues and set light to the small chip. Now observe the burning behavior. Compare the color, type and smell of the smoke with the results from the following table.

Short descrip-tion	Plastic recognition using a burning test
ABS	Blackish smoke, the material drips like a candle when burning and smells like wax.
PA	No smoke, draws filaments, smells like burnt horn.

DESCRIPTION AND OPERATION

Short descrip-tion	Plastic recognition using a burning test
PC	Yellowish, sooty smoke. Smells sweetish.
PP	No smoke, the material drips like a candle when burning and smells like burnt oil.
PP/EDM	No smoke, the material drips like a candle when burning and smells like burnt oil.
PC/PBT	Hard and shiny, burns yellow, fluffy soot.
Hard PVC / soft PVC	Blackish smoke and acrid smell.

Safety instructions

In addition to the general safety instructions, the relevant regulations and accident prevention legislation must be observed.

NOTE: Without exception, before starting work you must read the safety and warning instructions in the chapter "Safety Instructions". In addition, pay attention to the warning instructions of the particular equipment manufacturer.

Information sheets, safety notices and guidelines for the processing of adhesives containing isocyanate, polyester resin, adhesives, solvent and thinners provide more details on their use.

The following instructions must always be followed:

- Polyester resin, adhesive, solvents and thinners are inflammable and must not be used near naked fire or flames.
- Sawing and grinding operations must only be carried out in rooms equipped with extraction systems.
- If no rooms with extraction systems are available, only use tools with extraction equipment.
- Protective equipment such as gloves, protective goggles, aprons and breathing masks are essential.

Because of the various compositions of plastics, repair work to plastic parts involves a variety of repair methods.

The following methods are used:

- Thermoplastic straightening.
- Plastic welding.
- Plastic adhesive bonding.
- Plastic lamination techniques.

Thermoplastic straightening

Damage to thermoplastics can be rectified by heating using the hot air gun (temperature about 100°C) while the deformation is pressed out until the shape is regained.

Plastic welding

Splits formed in plastic bumpers are typical possible plastic repairs.

NOTE: Do not carry out plastic welding in the area of fixed foam backing. The foam backing will usually be destroyed and the function of the component is then no longer guaranteed.

If repair using adhesive methods is not possible because of unfavorable conditions at the rear of the repair location, plastic welding is a possible repair process.

There are two methods of welding: hot air draw welding and hot air fanning welding.

Plastic welding set

TO BE UPDATED LATER

Item	Description
1	Various welding rods
2	Scraper (heart-shaped)
3	Hot air blower (approx. 1500 W)
4	Clamps
5	Welding nozzles

In addition to the components listed, plastic welding requires tools already found in the workshop such as scrapers, sanders, face cutters etc.

DESCRIPTION AND OPERATION

As with all other welding processes, only certain material combinations can be joined together using plastic welding.

NOTE: Basic and in-depth training is offered on the following topics. You will find an overview of the complete range listed in the Training brochure published by the Ford Service Organization.

NOTE: The manufacturer's data must be taken into account when choosing welding materials and the correct temperature setting of the hot air gun.

Repair sequence during plastic welding:

- To prepare the location for welding, remove paint residues and sand the weld area.
- If parts of the material have been pushed in by an impact, the damaged area can be brought back to shape by heating.
- Drill out the ends of the split to stop it spreading further. Machine the location of the weld into a 90° V-shaped groove, to accept the welding rod.
- Lay the welding rod in the groove.
- Perform the welding. Hot air draw welding or hot air fanning welding.
- Rework the weld seam. After cooling, sand the raised weld seam.
- Clean the sanded repair surface using plastic cleaner. Apply plastic primer thinly to the repair surface and paint it.

Despite good preparation and the correct choice of welding materials, weld faults may occur.

The following points must be noted when welding plastic:

- Weld together like with like:
  - With very few exceptions, only the same materials can be welded together, e.g. PP with PP.
- Correct temperature:
  - The correct choice of temperature is important for the success of the repair. The plastic must be warmed until it plasticizes (dough-like, soft).

Guideline values for welding temperature:

Brief description	Plastic	Temperature
ABS	Acrylonitrile butadiene styrene copolymer	360°
PA	Polyamide	400°
PC	Polycarbonate	370°
PP	Polypropylene	280°
PP/EPDM	Polypropylene/ethylene propylene diene copolymer	280°
PUR	Polyurethane	300°
Hard PVC	Polyvinylchloride	340°
Soft PVC	Polyvinylchloride	370°

- Even pressure:
  - When rod welding, the pressure is applied by pressing on the welding rod.
- Steady speed:
  - To achieve a good weld, care must be taken that the working speed is steady.

Possible causes of weld faults:

- Deformation caused by overheating of the repair area or tensions in the material while welding the component.
- Plastic material too thin.
- Poor weld joint because the weld temperature was too low or the welding speed was too fast.
- Welding different materials together.
- Weld seam dropped because the split gap was too wide or the welding temperature was too high.

A good weld is recognized by a slightly raised, smooth and even weld bead on the surface of the component.

The weld bead must only be worked once it has fully cooled down.

Plastic adhesive bonding

Adhesive bonding of plastics has some advantages over welding methods:

- Within the group of thermoelastic plastics, all semi-rigid ancillary components (such as bumpers, front grilles, etc.) can be repaired without identification.
- A two-component polyurethane based adhesive is used for all thermoplastic parts.
- Reinforcement strips can be attached behind splits (split length up to max. 100mm) and

DESCRIPTION AND OPERATION

openings to ensure the original strength properties.

Tools and equipment also familiar from paint repairs can be used in making adhesive repairs to thermoplastic components.

Angle grinders and belt sanders can be used to grind out scratches and splits. Orbital sanders with extractors are used for fine sanding.

The infrared heater is used to provide fast and certain drying throughout.

Plastic adhesive set

TO BE UPDATED LATER

Item	Description
1	2-component adhesive
2	Cartridge gun
3	Mixing tube

Apart from the components shown, other materials may be needed to bond plastics, depending on the repair position.

For large scale repairs, it may be necessary to insert reinforcement panel strips and reinforcement matting as fixing aids.

Repair sequence during plastic adhesive bonding:

NOTE: Follow the manufacturer's guidelines when using adhesives.

- Prepare the location of the bond. Remove paint residues and sand the area to be bonded. Drill out the ends of the split to stop it spreading further. Prepare the bond location into a V-shape and clean it with plastic cleaner.
- Apply the adhesive. The two-component adhesive is applied to the cleaned and primed repair location using a hand gun. Spread and smooth the adhesive using a flexible plastic spatula.
- Rework the bond location. After cooling, sand the raised adhesive. Clean the sanded repair surface using plastic cleaner. Apply plastic primer thinly to the repair surface. Apply paint.

GRP repairs

GRP material is hard and brittle in its strength properties. Because of these material properties, splits and openings often result in cases of serious damage.

The stability of GRP parts is impaired if the glass fiber reinforcement is cracked. The component must be replaced in cases of serious damage that affect the structure.

Minor damage (such as abrasion, splits up to 80mm, holes up to approx. 60mm diameter, etc.) can be repaired to a technically and visually perfect standard, provided that the damage does not occur in heavily used or hard-to-reach areas.

To ensure perfect repair results, observe the following points:

- The room temperature should be at least 15°C and the air should be as dry as possible.
- The repair location must be thoroughly dry and clean.
- Before the repair, the GRP part being repaired must be dried using an infrared heater or in a drying oven.
- In cases of large splits and fractures, the strength of the outer skin can be re-established by backing with a reinforcement material.

Tools and equipment from the paint shop can be used to carry out repairs to GRP parts. Angle grinders and belt sanders can be used to grind out scratches and splits. Orbital sanders with extractors are used for fine sanding.

GRP repair set

TO BE UPDATED LATER

DESCRIPTION AND OPERATION

Item	Description
1	Polyester resin
2	Glass fiber mats
3	Hardener

Scissors, paintbrush and cleaning materials are other materials which will be needed to perform a GRP repair.

NOTE: Follow the manufacturer's instructions when using the repair materials.

The repair process for a GRP repair is as follows:

- Prepare the repair location. Remove paint residues and sand the repair area.
- Drill out the ends of the split to stop it spreading further.
- The repair location must be sanded by hand. If machine working is attempted, the resin will be heated so much that the surface structure will be changed. The result is inadequate adhesion.
- Perform the GRP repair. Apply polyester resin thinly to the repair location. Lay the glass fiber mat in place and apply polyester resin over it again.
- Rework the location of the repair. Sand away any polyester resin which stands proud after it has hardened.
- Clean the sanded repair surface using plastic cleaner. Apply plastic primer thinly to the repair surface and after it has dried apply the paint finish.

DESCRIPTION AND OPERATION

Special Repair Techniques

Cabriolet vehicles

The body of a cabriolet vehicle is different to the self-supporting body of a saloon car because of the special roof construction (folding top). The stability requirements must therefore be ensured by construction changes within the body structure.

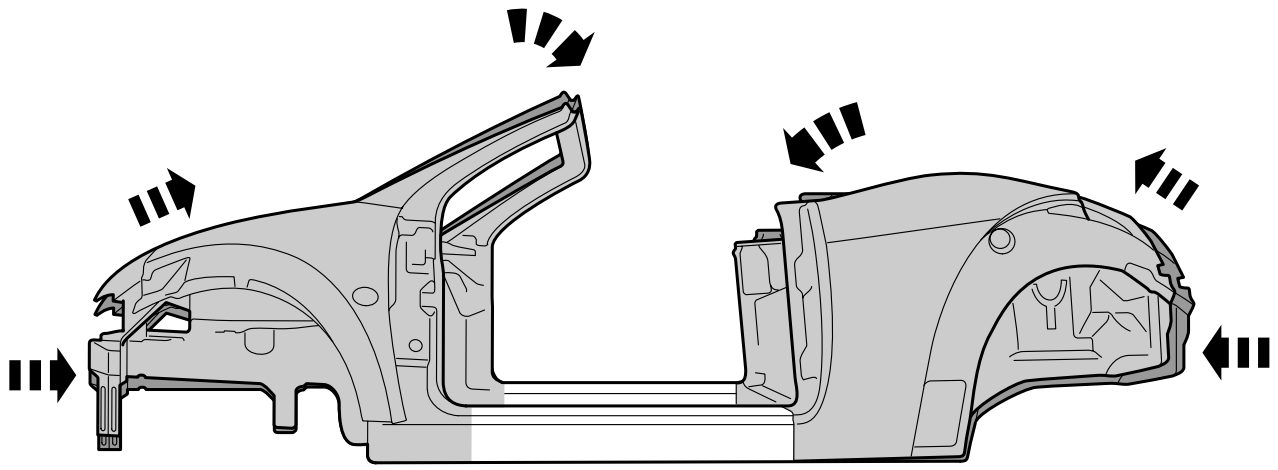

E50039

These are for instance:

- Longitudinal and torsional reinforcing components which compensate for the lack of the roof.
- Reinforcements to the floor assembly, particularly in the rocker panel area.
- Reinforcements in the pillar areas.
- High-strength and ultra-high-strength steel panels with single panel thicknesses of up to 2.5 mm, which in combination can become up to 6mm thick (e.g. reinforcements in the floor area, rocker panels).

If deformation to load carrying components occurs, the stability of the whole body shell can be adversely affected.

On a cabriolet, accident damage repair to the components mentioned above is considerably different in certain aspects compared with the usual repairs (closed body construction):

- A model specific alignment angle system must always be used during straightening and repair work, securing using clamps at the rocker panel area is not always adequate for the cabriolet.
- To avoid damage to the doors, they must always be open during straightening work. In the case of more severe damage, additional tension and compression spindles must be used to stabilize the door cut-outs (between the A- and B-pillars).
- In load bearing areas such as the rocker panels, side members and floor pan, increased straightening forces are necessary due to the additional reinforcements.

DESCRIPTION AND OPERATION

- **NOTE:** Additional information on welding can be found in the section Welding Equipment and Joining Techniques.

  High-power welding equipment for panel thicknesses in overall combination of up to 6 mm total material thickness.
- The fitting accuracy and longitudinal rigidity of the affected component is especially important to ensure that the doors, door windows and the roof fit and close correctly.

Liquefied gas vehicles

Alternative fuel vehicles often require special handling in the workshop area. Above all, assembly operations to some extent require particular knowledge when dealing with the special technology and the safety regulations.

NOTE: Only fully trained personnel are permitted to work on alternative fuel vehicles.

These special requirements must be understood and taken into account in the body shop as well.

CAUTION: Danger of fire and explosion. The safety instructions must always be followed when performing service work on fuel/gas systems. Failure to follow these instructions may result in personal injury.

NOTE: You will find further information about working on liquefied gas vehicles in the section Health and Safety Information.

Refrigerated conversion vehicles

Apart from the special materials used in building the structure of the refrigerated compartment, such vehicles have special energy and refrigeration systems which require special handling during repair.

CAUTION: Danger of injury. Work on the 230<SP>volt system of the refrigeration equipment must only be carried out by trained specialist personnel.

NOTE: Work on the refrigerant circuit may only be performed by persons who have a relevant certificate of competence.

Vehicles with a refrigerated compartment are often used to transport foodstuffs. For this reason, additional hygiene regulations must be complied with during repair work.

Aluminum and plastic are used to construct the two different types of compartment found on refrigerated vehicles.

The aluminum conversion is a very stable and technically perfect variant. However, against this the relatively high production costs and a lower payload must be taken into account, because of the weight of the aluminum conversion itself.

NOTE: Basic and in-depth training is offered on the following topics. You will find an overview of the complete range listed in the Training brochure published by the Ford Service Organization.

The plastic conversion has developed into a light, clean and economical alternative because of constant further development of materials and working techniques.

NOTE: The material combinations, the workmanship and the working methods must comply with the current food hygiene regulations. For this reason, service and repair work on the refrigerated conversion may only be performed by authorized and specially trained technicians.

Refrigerated compartment constructions are often made using both materials. The floor pan is made of structured, slip-proof aluminum panels and the wall and ceiling cladding is made of smooth surfaced plastic elements.

CAUTION: PUR hard foam is flammable. If PUR hard foam is overheated, it will burn on its own with a brilliant yellowish flame. It produces unpleasant choking and toxic fumes. Special measures must be taken when welding the vehicle body.

Polyurethane wall and ceiling elements are manufactured using a sandwich principle. An insulating polyurethane core is coated with food grade ABS plastic on one side.

PUR hard foam does not decompose, is rot resistant and is odorless. These properties make it suitable for use as insulation.

Because of its closed cell structure, water uptake by PUR hard foam is for the most part only a problem at edges. Cut edges or other mechanically worked surfaces must however be sealed with the greatest care.

The conversion to a refrigerated vehicle is performed as made-to-order production. The large surfaces of the wall and ceiling cladding can be changed and are particularly easy to repair.

If access to the back of a body panel section is needed because of body straightening work, in

DESCRIPTION AND OPERATION

some circumstances it is cheaper to perform a cut-out repair instead of removing an element.

The repair process is fully described in the Student Information booklet Refrigeration System Technology, Transit 2000.5 Freshline.

NOTE: You will find further information about working on vehicles with a refrigerated compartment in the section Health and Safety Information.

DESCRIPTION AND OPERATION

Joining Techniques

Welding

Before welding work is performed on a vehicle body, all safety measures for the protection of people, modules and electrical components must be observed.

NOTE: Before beginning the work, please refer to the safety instructions and warnings in the chapter Safety Instructions. Please also note the warnings of the respective equipment manufacturer.

Resistance spot welding and MIG welding are the most common techniques used in body construction. During repair work, the welded connection must be restored to be equivalent to the original.

Resistance spot welding.

NOTE: Before starting the work, please refer to the chapter on safety instructions.

In doing so, the repair welds must match the standard of those produced in production in number and diameter.

Preconditions for resistance spot welding:

- The panels to be welded overlap.
- The weld spot is accessible on both sides for the electrodes.
- The shape and alignment of the weld electrodes is correct.
- The resistance welding equipment is powerful enough to be able to reproduce the production spot weld diameter.

NOTE: The welding equipment settings and the adjustment of the individual parameters are to be made in accordance with the device manufacturer's specifications.

Well-prepared welding flanges are a prerequisite for a problem-free welded joint. This means:

- The welding flanges must lie perfectly flat to one another.
- The welding flanges must be clean and free of oil or grease on both sides.
- Welding primer (zinc-coated and conductive) must be applied as corrosion prevention.

DESCRIPTION AND OPERATION

Only in limited cases can welding errors in resistance spot weld joints be detected from the outside . Therefore, a test weld should be carried out before each repair weld. The peel test carried out after the welding gives information on the quality of the welding. The spot weld itself must never separate, it must tear away leaving a hole.

MIG welding

Basically, three methods of MIG welding are used:

- Puddle weld.
- Continuous bead welding
- Intermittent bead welding

Fields of application

- Any joins that are MIG welded in production must also be replaced by MIG welds.
- Puddle welding may be used in certain cases, if there is insufficient access.
- If the overall panel thickness is greater than 3 mm, without correspondingly powerful spot welding equipment, puddle welding should be used.
- When dealing with any MIG brazed joints which are present, follow the vehicle-specific repair instructions.

NOTE: The increased application of heat during MIG welding destroys the corrosion protection layers over a much larger area than during resistance spot welding. For this reason, greater care must be taken when applying the corrosion protection afterwards.

Welding repairs can only be carried out properly if the equipment is set up correctly and all welding-related preparations are complied with accurately.

- Please note the instructions of the respective welding equipment manufacturer.
- The hose assembly must be untwisted.
- The core must be free from particles of wire debris.
- The gas and current nozzles must be free of slag and scale residue.
- Pay attention to the quality of the welding wire and the gas flow rate.
- Ensure that the joint surface is perfect.
- Prepare a bare metal joint surface.
- Maintain the correct gaps (root formation).
- Produce a test weld.

Plug Weld

DESCRIPTION AND OPERATION

Special features to note when puddle welding:

- The panels to be joined must lie perfectly flat to one another.
- The panel flanges must be treated with corrosion protection. The position of the weld must be bare.
- Prepare the holes depending on the thickness and number of the panels. The hole size should be 6-10 mm, or match the original weld spot.
- Start the welding procedure on the panel at the bottom so that the hole is filled completely.

Continuous bead welding

A welded joint with a full seam is suitable for joining highly profiled body parts. Pillar and sill areas are typical application areas.

E115419

Special features to note during bead welding:

- Both parts of the panel must be bare on both sides over a width of 5 mm.
- Align the parts precisely with clamps.
- To prevent the panel from warping, tack longer joints before welding them.

Intermittent bead welding

Intermittent bead welding is used when the connecting flanges are stepped. This form of seam is mainly used on the external panel area for sectional repairs.

DESCRIPTION AND OPERATION

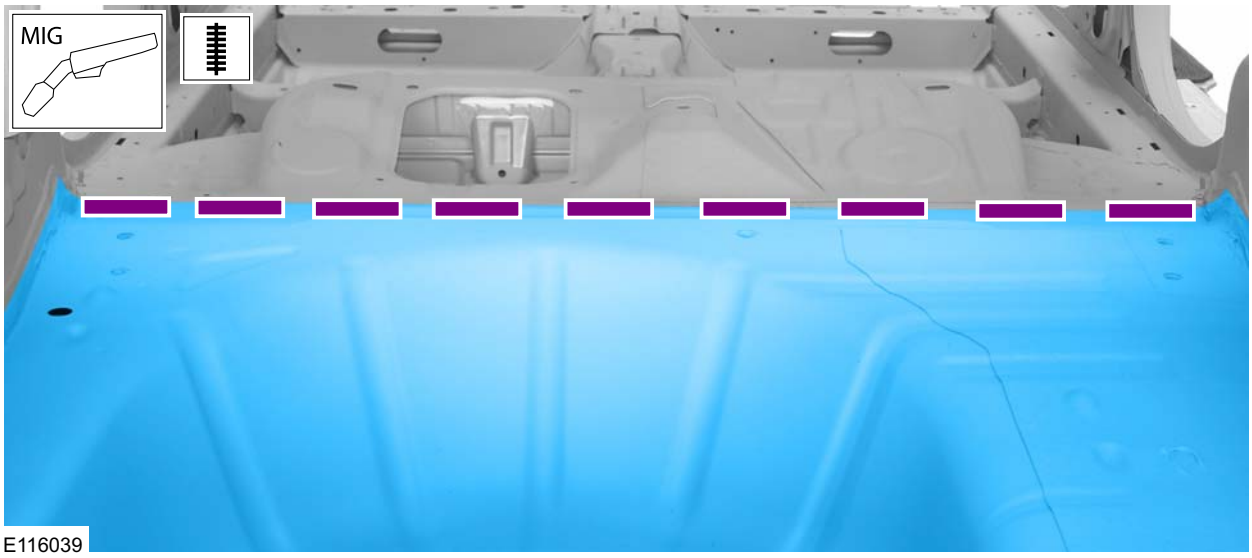

Special features to note when intermittent bead welding:

- Weld gap.
- Spot weld interval.
- Apply alternate tack welding across the entire length of the seam. This keeps warping to a minimum.

Joining techniques

Butt joints

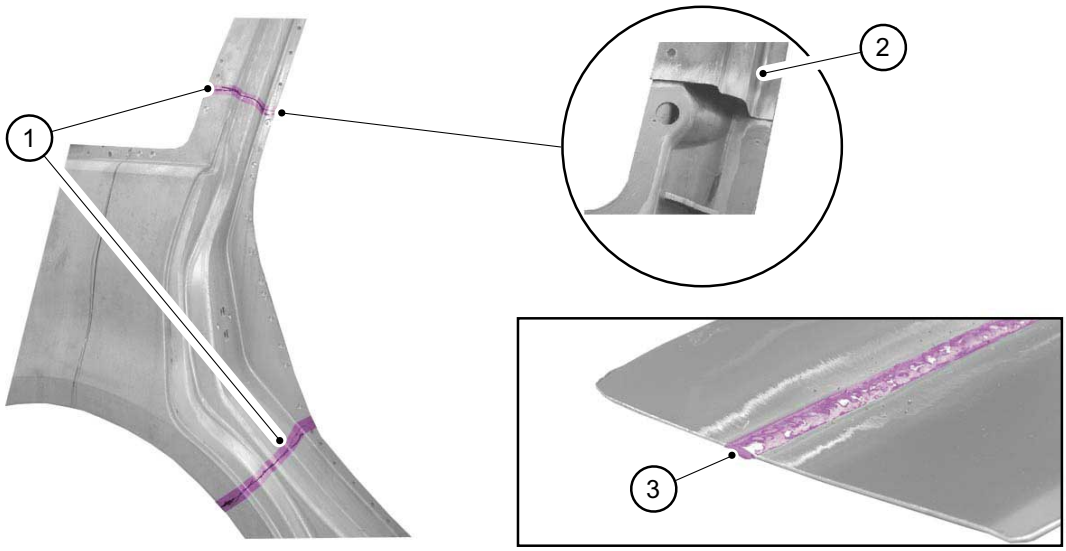

Description	Description
1	Join areas
2	Profile
3	Full seam

The butt joint is a joining technique frequently used in body repairs. The butt joint is typically used for repairs in the pillar and rocker panel area.

Areas that are suitable for the use of the butt joint:

- short seam lengths.
- highly profiled structures.

The edges of the panels to be joined are placed against each other and are joined with a full seam

DESCRIPTION AND OPERATION

in whilst maintaining a required welding gap (welding gap same as panel thickness).

NOTE: The butt joint requires a high degree of accuracy and care when trimming and cutting. For correct execution of the welding, an exact, even welding gap must be maintained.

Preparation of the joint areas includes:

- Sanding the connection areas bare on both sides.
- Removal of the zinc layer in the welding area.
- Carrying out welding tests on an equivalent sample panel before the actual welding, if necessary.
- Tack welding in the join area: From the edges to the centre, then check the shape.
- Joining new and old parts with a full seam weld.

Joggled joint

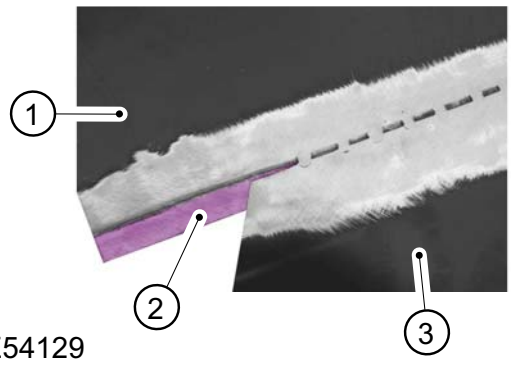

E54129

Description	Description
1	Body part
2	Joggled area
3	New panel

The joggled joint variant is restricted to body areas with a good surface condition without beads/swage lines or profiles. A sectional replacement with a joggled joint is welded using a continuous seam. This procedure is used, for example, at the transition from the side panel to the rocker panel (3-door vehicles).

When cutting the new part, slight measuring tolerances are permitted, as these are covered by the joggled area.

Preparation of the joint areas includes:

- Sanding the connection areas bare on both sides.
- Removal of the zinc layer in the welding area.
- Preparation of a joggled strip.
- Carrying out welding tests on an equivalent sample panel before the actual welding, if necessary.
- Joining the new and old panel with continuous seam welding.
- Lead loading the weld seam.

DESCRIPTION AND OPERATION

MIG brazes

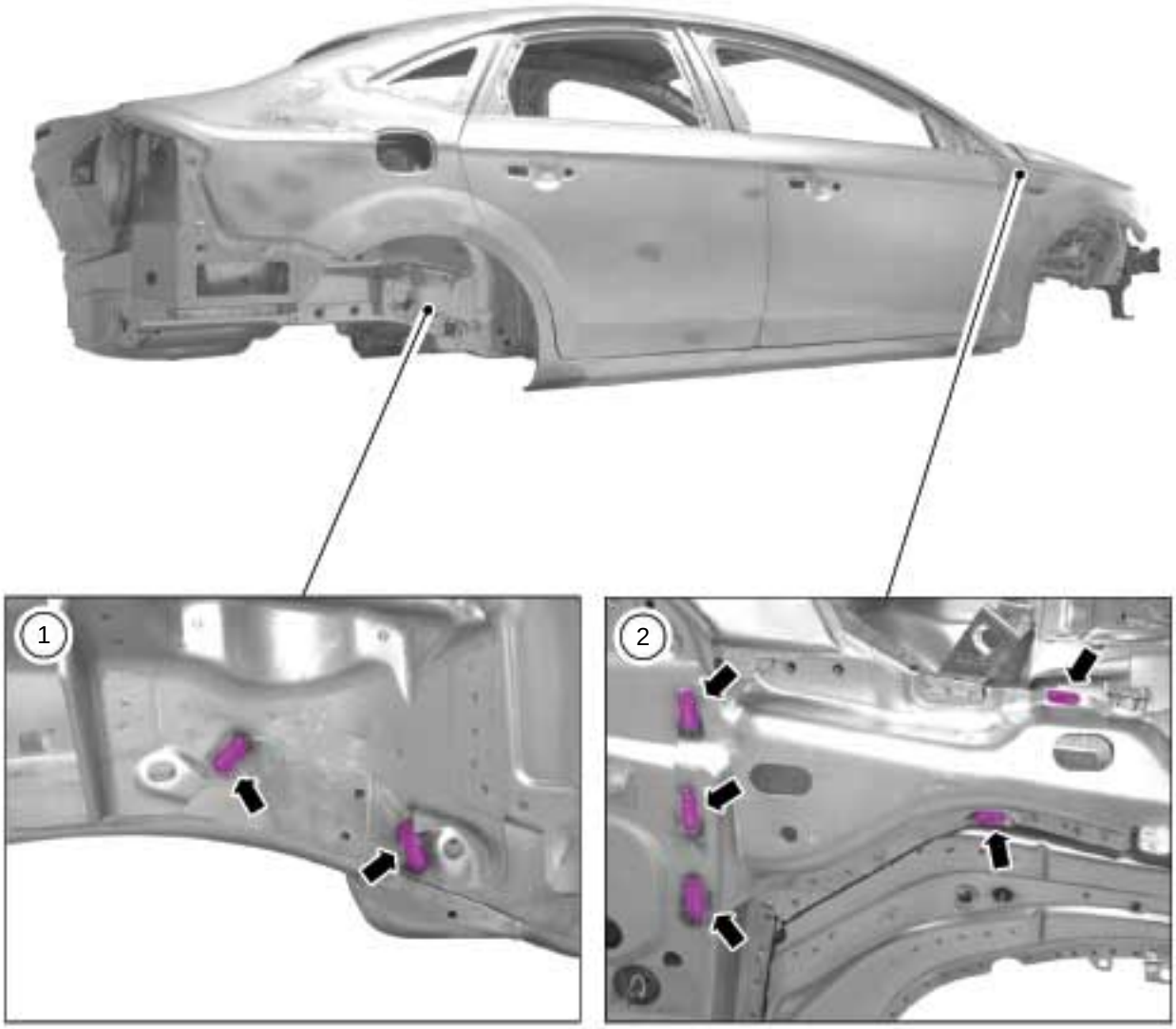

E96577

Des cript ion	Description
1	Rear side member / wheelhouse reinforce-ment
2	Apron panel reinforcement / A-pillar

Metal Inert Gas (MIG) brazing is increasingly used in production for certain body areas.

In areas where resistance spot welding is not possible due to limited space or higher strength requirements, MIG welding was previously used.

Increasingly, these MIG welded seams are being replaced by MIG brazes. The temperature range used during MIG brazing is significantly lower. This keeps the damage to the anti-corrosion zinc layer on zinc-coated panels to a minimum.

This results in the following advantages of the MIG brazed seam:

DESCRIPTION AND OPERATION

- No corrosion of the brazed seam.
- Low erosion of the zinc coating in the joining area.
- Low level of heating and thus little warping.
- Easy finishing of the brazed seam.
- Good for bridging gaps.

Technicians performing MIG brazing must use a **Ford-certified MIG brazing device** and must have been given appropriate**training** on the brazing techniques which are used.

Only use the Ford-approved brazing solder SG-CuSi3 (SG-CuSi3Mn1).

Unless specified otherwise, a minimum gap of 30 mm must be maintained between the MIG brazed seam and any adhesive bonds.

CAUTION: MIG welds must not be carried out on or near existing MIG brazed seams as even the smallest amount of brazing solder can result in a reduction in the strength of the weld seam.

If MIG brazing cannot be used then the factory-installed MIG brazed joints should be replaced with MIG welds in a different place during service repairs. These MIG welds must not be carried out on or in the immediate vicinity of existing MIG brazed seams as even the smallest amount of brazing solder can result in a reduction in the strength of the weld seam. Consequently, the corresponding graphics offer two alternative repair techniques (1: MIG brazing; 2: MIG welding).

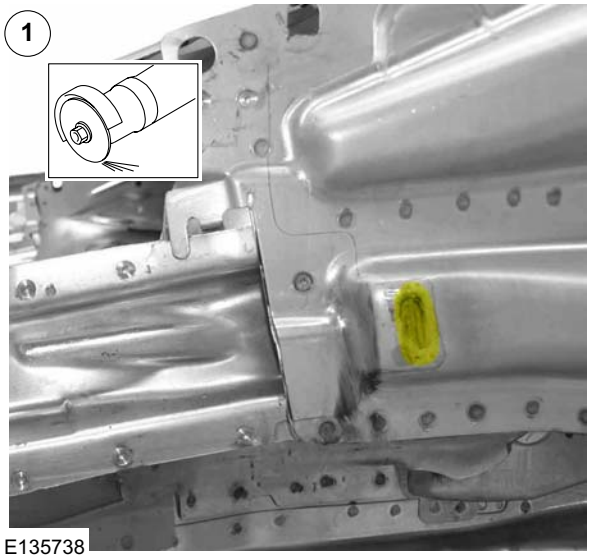

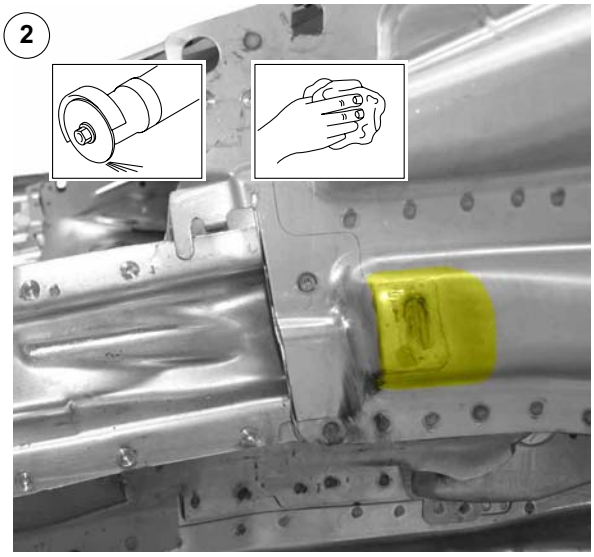

Description	Description
1	Preparation of the MIG brazing: Flatten the old brazed seam with a grinder.

Description	Description
2	Preparation of the MIG welding: Grind the old brazed sean and the surrounding area until they are clean, and remove any residue of the brazed seam.

DESCRIPTION AND OPERATION

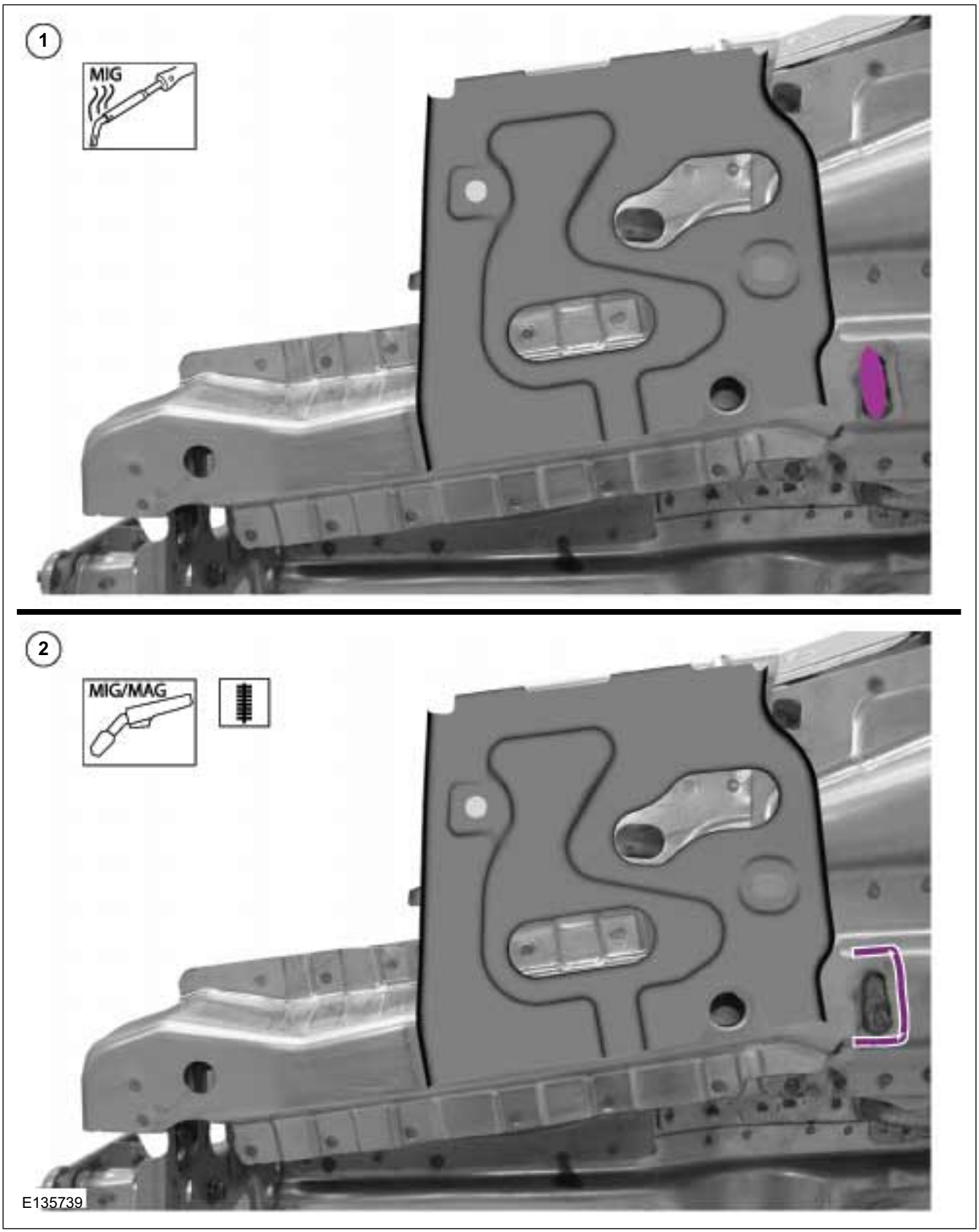

DESCRIPTION AND OPERATION

Des cript ion	Description
1	MIG brazing: Braze a new seam in the same place as the factory location for the seam.
2	MIG welding: Weld the seam **away** from the location of the factory-installed MIG brazed seam.

Apart from in the locations used in production, MIG brazing can also be performed on non load-bearing outer body skin panels and floor panels.

CAUTION: Without prior approval from Ford, MIG brazing must not be performed on structural parts of the chassis or body.

Soft soldering

WARNING: The roof repair may only be carried out in Ford-approved special workshops and only by specially trained personnel.

NOTE: The roof is secured to the side walls with laser soldered seams in production. When repairs are carried out, these laser-soldered seams must be replaced by soft-soldered seams.

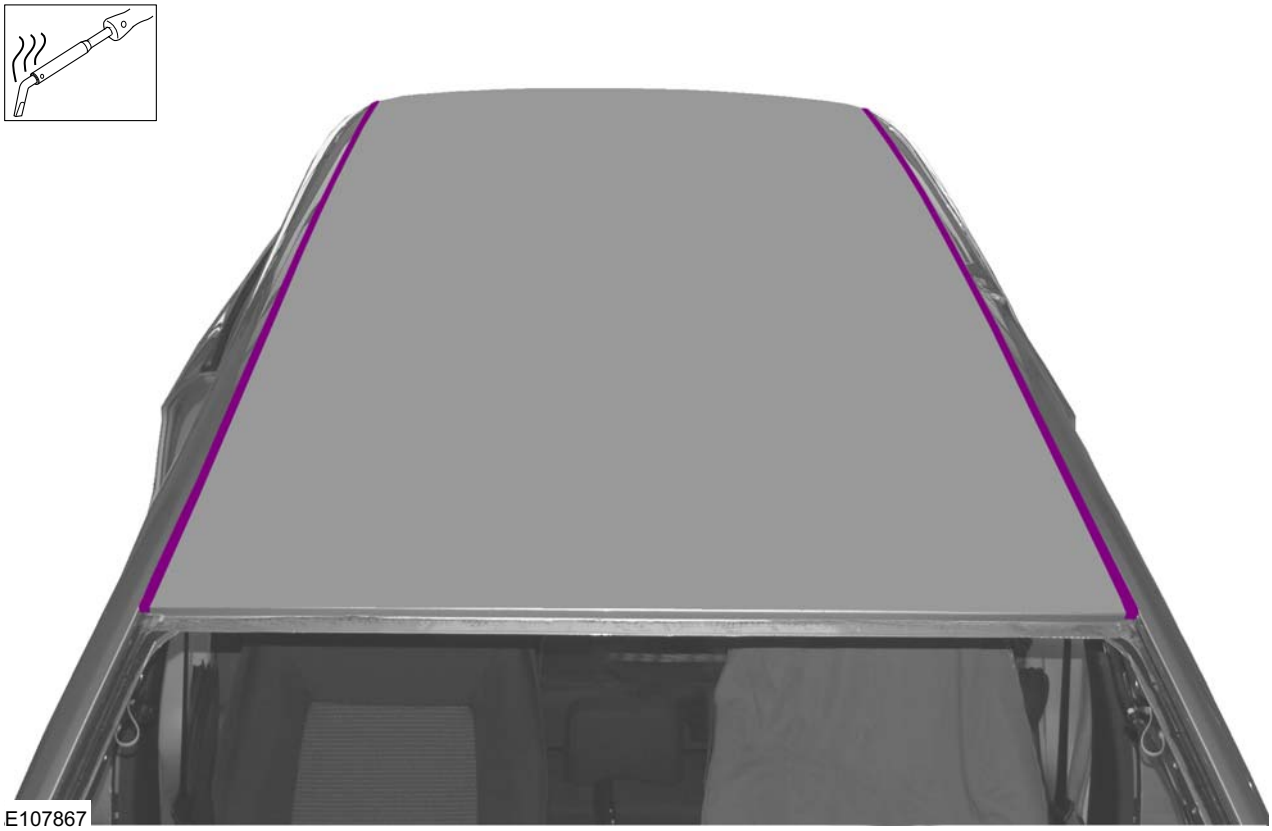

WARNING: Poisonous gases and dust can be produced when working solder. Use an extraction unit and, if required, a protective mask.

NOTE: Ford offers basic and in-depth training on the following topics.

NOTE: Areas for soft soldered joints require careful preparation. It is extremely important that the joint surfaces are exactly aligned and that a bare metal joint surface is prepared.

This means:

- Thorough cleaning of the surfaces to be brazed.
- Close contact of the panels at the brazing position.
- Use the soldering iron to warm the location of the seam to be joined.
- The liquid brazing material is drawn between the panels through capillary action.

Rivets

With riveting, two or more panels are joined together using a joining element (rivet). In body

DESCRIPTION AND OPERATION

construction, pop rivets and punched rivets are used.

Advantages of riveted connections:

- Metallic and non-metallic materials can be joined together.
- Different thicknesses of materials can be used.
- The material does not have to be heated, and therefore does not warp.
- Low level of preparation required.

NOTE: For detailed instructions on the procedure, please refer to the equipment manufacturer's operating manual.

Disadvantage:

- During dismantling procedures, swarf/rivet remains can fall into inaccessible cavities, which can lead to rattling and rusting.

TO BE UPDATED LATER

Des cript ion	Description
1	Panels
2	Pop rivet

Pop rivets are used if only one side of the panel is accessible. In this process, overlapping panels are drilled and connected with a pop rivet.

Pop rivets can be inserted pneumatically, hydraulically or manually with rivet guns.

Bonding

TO BE UPDATED LATER

Des cript ion	Description
1	Butt joints
2	Bonded connection

Bonded connections are used more and more in modern body designs. Here, a distinction is made between bonds for stabilization purposes and bonds for adhesive strength. Bonds for stabilization purposes are found on clinched flanges and on cross beams in doors or on the roof.

WARNING: Risk of poisoning! Adhesive can be harmful to health. Ventilate rooms well and use breathing protection. Where possible, work with an extraction unit.

NOTE: Adhesives are chemical products and are subject to the safety regulations of the manufacturer.

Please refer to the specifications in the general part of the particular manual for information on the repair adhesive which is to be used.

Advantages of glued joints:

DESCRIPTION AND OPERATION

- They are air and watertight.
- High corrosion protection
- Different materials can be connected.
- Bonding can be combined with resistance spot welding.

NOTE: The quality of the bonded connection is largely dependent on the care taken during preparatory work. When gluing bodywork parts, follow the work instructions from the adhesive manufacturer.

Bonding and welding

On some vehicle models, (such as the Ford Ka), bonding is combined with resistance spot welding. This connection technique has the following advantages:

- Tight, anti-corrosion connection seam.
- High strength due to additional resistance weld spots.

Please note the following points during the repair work:

- Only use adhesive suitable for welding (conductive).
- Carry out resistance spot welding on the connection flanges before the adhesive hardening process.
- Carry out test welding with the adhesive applied.
- If MIG welding is carried out during a sectional repair on a connecting flange with sealant or adhesive material, the material must be applied at a distance of approx. 10 mm from the weld spot.
- These areas must be sealed very carefully after the work has been completed.

Bonding and riveting

As with welding, bonding can also be combined with riveting. This connection technique has additional advantages. These are:

- Metallic and non-metallic materials can be joined together.
- Different thicknesses of materials can be used.
- The material does not have to be heated, and therefore does not warp.
- The rivet connection stabilizes the connected components during the adhesive hardening phase.

DESCRIPTION AND OPERATION

Impact of Insufficient Repair Quality

Body repairs usually require a significant level of intervention in the existing body shell structure. The corrosion protection, seals and NVH components are destroyed and must be replaced.

To prevent the vehicle quality from being reduced due to a poor quality repair, all repairs carried out in all repair sections must be inspected during and after the accident repair.

Simply checking the vehicle at the time of delivery is not sufficient to guarantee the repair quality. Rather, continuous checking of the work carried out is recommended.

NOTE: Logs of the acceptance of individual operations are a useful tool for quality assurance. A comprehensive final inspection can be carried out based on a final acceptance log.

In the process, the entire repair sequence must be split into meaningful sections, with the creation of check points to which particular attention must be paid.

The following are some possible sections:

- During and after body work.
- Final assembly, ancillary components, functional tests.
- Vehicle delivery.

NOTE: The following points offer an indication of possible test logs. They can be combined and supplemented differently, depending on the individual operating procedures.

During and after body work the following areas should be checked:

After completion of the body repairs, the following areas should be checked:

- Manufacturing inspection for functionality and originality in the accident area.
- Check snug fitting of metal panel parts (welding and screw connections).
- Check snug fitting of ancillary components (doors, hoods, glazing).
- Check surface condition of the welded seams.
- Check seals, blanking plugs, NVH components.
- Check corrosion prevention measures
- Check that the repair work is in the correct condition for painting.

Final assembly, ancillary components, functional tests

After final assembly, not only a visual inspection is required, but also the functionality of many components must be checked:

- Check repair area for originality.
- Check ancillary components for correct installation.
- Check precision fitting of all parts.
- Check that the doors and flaps are working correctly.
- Check that all mechanical parts, such as the window winder are working correctly.
- Check for leaks in the repair area.

Vehicle delivery

Vehicle delivery again offers the opportunity of checking the repair quality. In the process, the following points are to be checked again:

- Corrosion protection, sound damping matting and rubber seals.
- Check for traces of leftover paint.
- Check the cleanliness of the vehicle.
- Functional check of the mechanical and electrical components.
- Road test the vehicle.
- Check for noise, vibration and harshness (NVH).
- Check for wind noises.

After repair work on the body and vehicle, not only the visual restoration of the damaged vehicle, but also the functional restoration must be guaranteed.

Customers are making increasingly high demands of vehicles, particularly in terms of driving comfort. Customers find noise, vibrations and harshness (NVH) as well as squeaking and rattling annoying, particularly after repair work. It is therefore important that the condition of the vehicle at the time of production be restored after an accident repair.

After body repairs, the entire repair area must be checked for any water leaks. It is crucial that a leak test be carried out as part of the final inspection so that water leaks can be detected and eliminated even before delivery of the vehicle to the customer.

The requirements of the vehicle manufacturer are to be taken into consideration during all inspections. Only in this way can it be guaranteed

DESCRIPTION AND OPERATION

that the vehicle quality is not reduced through insufficient repair quality.

DESCRIPTION AND OPERATION

Water Leaks

Water leaks can occur after body repair work, but can also occur on new vehicles. The test methods described below allow the various causes to be identified. In all cases, a systematic and logical procedure is required to locate water leaks.

General

When searching for faults, it must be taken into account that water can enter the vehicle passenger compartment in various ways and circumstances. Therefore, it is sometimes not sufficient to perform a water test on a stationary vehicle.

Before beginning extensive checks, a thorough visual inspection must be carried out. The following points are to be taken into account in the process:

- Check the clearance and accurate fit of ancillary components such as the trunk lid and doors.
- Check for correct installation and possible damage to sealing elements such as blanking plugs, seals and rubber door seals.
- Check that the water runoff openings and pipes are free of obstructions

Test method

Water test

NOTE: Do not use a power washer. Use a normal garden hose with a spray nozzle or sprinkler head. Make certain that all windows and doors are completely closed.

Water leaks into the vehicle passenger compartment cannot usually be located immediately, as the water often spreads across a large area. For this reason, the passenger compartment must be dried before the leak tests. Any ancillary components that block the view must be removed. During the water test, the vehicle is sprayed or sprinkled with water at the suspected location of the leak. At the same time, a second person checks the passenger compartment for places where water enters the vehicle. Depending on the test and the vehicle, it may take some time before there is any sign of water entering the vehicle. We recommend laying blotting paper under the location being tested so that the water entry can be localized.

Example: Water test with sprinkler head (rain test)

DESCRIPTION AND OPERATION

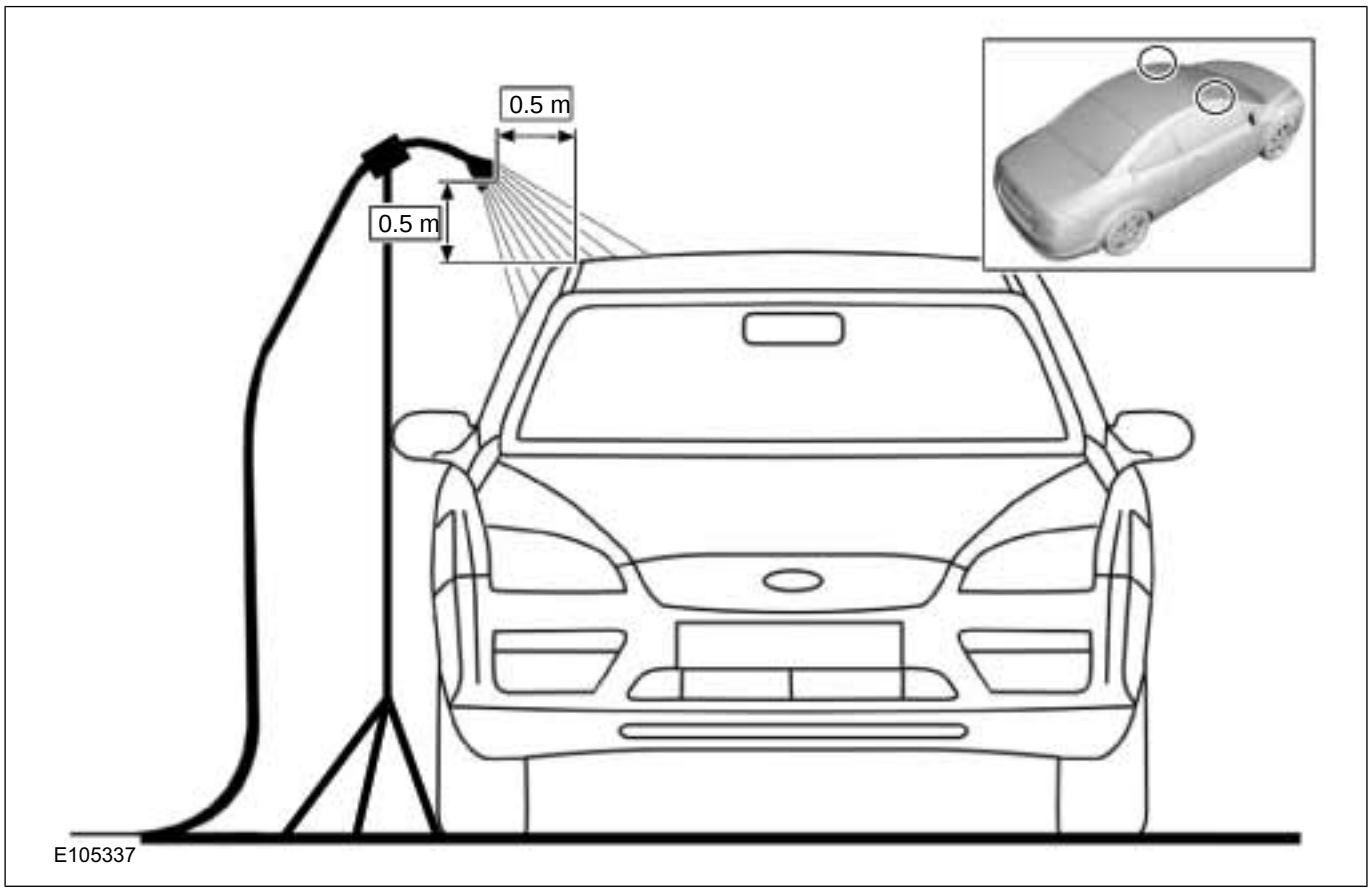

Car wash test

Certain leak problems only appear in a car wash or can only be simulated there. The concerned area of the passenger compartment should be inspected with a torch during the wash procedure.

Road Test

Some leaks only appear when the vehicle is moving. If no leaks are detected during the above-mentioned tests, road tests should be carried out on wet roads:

- At various speeds.
- On various road surfaces (asphalt to cobbles).
- With loaded or unloaded vehicle.
- Driving through puddles (splash water).

Test with UV lamp

A leak test can also be performed using a UV lamp and a special contrasting agent. The advantages of using contrast agent are:

- No need to dry out wet areas beforehand.
- The water entry and its subsequent path can be seen more clearly.
- No need to remove most ancillary components from the vehicle.

NOTE: The equipment manufacturer's instructions must be followed when using a UV lamp and contrast agent.

Procedure for using a UV lamp.

- Wet the test area with clear water from the outside.
- Prepare test liquid and apply it from the outside using a suitable water sprayer.
- Illuminate the relevant area from the inside using the UV lamp. The test liquid which enters will make the leak visible.

Chalk/powder test

This test checks the contact surfaces of seals on doors, hatches and lids.

Process using a door seal as an example:

To do this, the door seal is coated with powder or brushed with chalk. A thin layer of grease is applied to the contact area of the seal. The door must then be slowly closed and reopened. The width and continuity of the imprint can now be checked on the seal.

DESCRIPTION AND OPERATION

Smoke test

Flow checking device

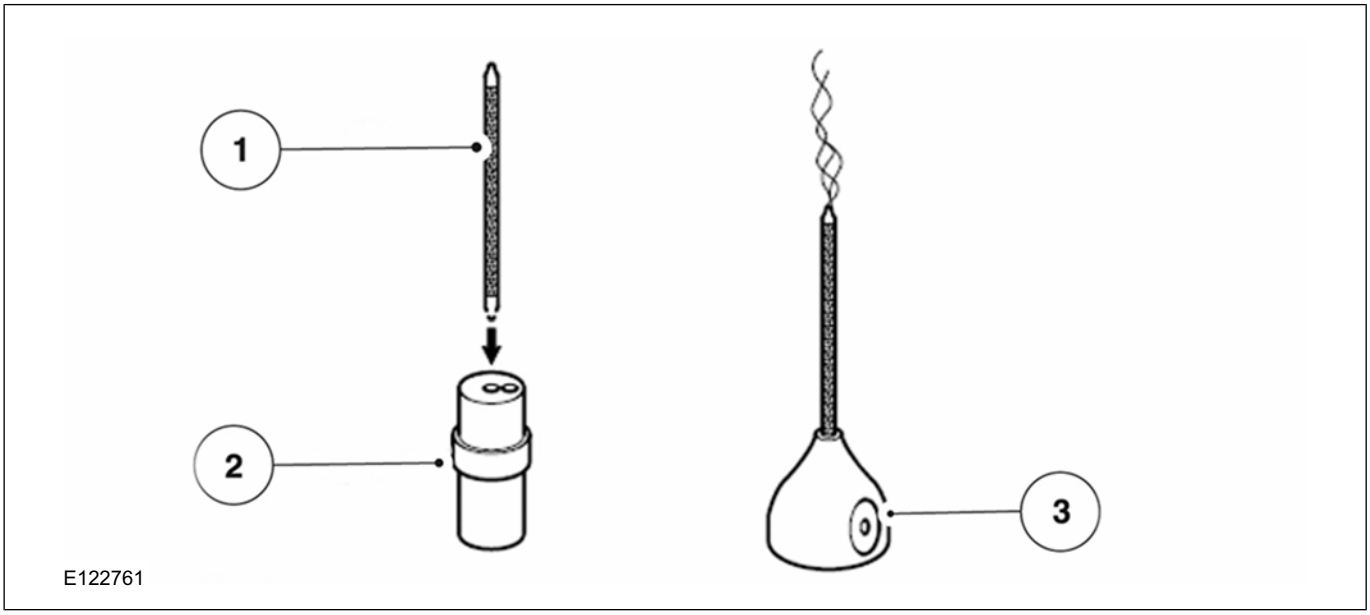

Des cript ion	Description
1	Test pipe
2	Test pipe opener
3	Puffer ball

Operating principle

The flow checking device is a set made up of a flow-testing pipe, a test pipe opener, puffer ball and closing-off caps for the pipe.

The test pipe contains a filling layer which is impregnated with fuming sulfuric acid. When air is blown through the pipe by the puffer ball, sulfuric acid is emitted as an aerosol in the form of a white smoke.

NOTE: Pay attention to the instructions for use and the safety directions issued by the manufacturer. The smoke test can only be performed in a draft-free environment.

This test can be used to detect leaks visually. Procedure:

- Break off both tips of the pipe in the pipe opener, in exceptional cases in the top of the packaging.
- Insert the pipe into the puffer ball so there are no leaks.
- Close the hole in the puffer ball with your thumb and press the air contained in the ball through the pipe.
- Set the ventilation blower in the passenger compartment to the highest setting.
- Close all doors so that a slight overpressure can build up in the passenger compartment.
- Move the smoke pipe along the outside of the body to the areas to be checked.
- Leaks can be detected through the irregular movement of the smoke.

Stethoscope test

This procedure is very similar to the smoke test. Instead of the smoke pipe, move a stethoscope past the areas of the body that are at risk. Leaks can now be detected acoustically.

Stethoscope

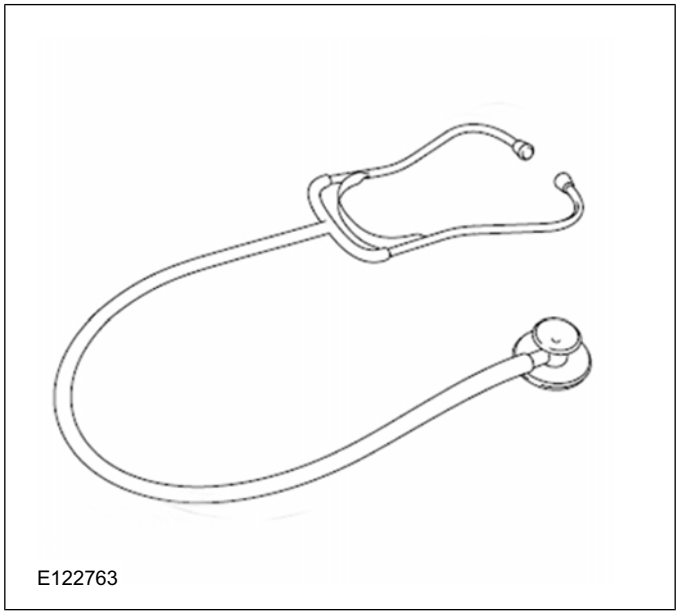

DESCRIPTION AND OPERATION

Ultrasonic detection

This test uses ultrasonic waves to locate the positions of leaks. When an ultrasonic transmitter is placed inside the vehicle, it sends out ultrasonic waves. A leak is located by running a detector along the suspected area. The position with the loudest reception of the escaping ultrasonic waves is the location of the leak.

Procedure:

- Place the ultrasonic transmitter in the vehicle.
- Completely close the vehicle.
- Search the exterior of the vehicle using the detector.
- The detector provides a simple indication of a leak.

Ultrasonic test device

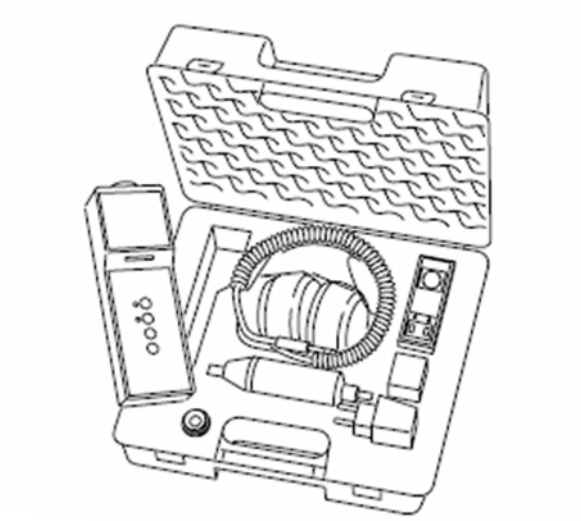

E122762

Workflow for tracing water entry

Stage	Testing	Result	Action
1st	Ask customer for a detailed list of possible reasons for the water entry. Does this information allow the cause of the leak to be identified?	Yes	Dry out the vehicle and repair the damage. Perform a water test as a check (see test method).
		No	Step 2.
2nd	Perform an initial visual inspection on the vehicle. Look for signs of water entry. Can the cause of the leak be identified immediately?	Yes	Dry out vehicle. Repair damage. Perform a water test as a check (see test method).
		No	Step 3.
3rd	Is it possible that water is getting into the vehicle through a seal (door seal, trunk lid seal)?		Check the seal for damage. Check the creation of the seal using the chalk test (see test methods). Step 4.
		No	Step 5.
4th	Is the contact area for the seal adequate?	Yes	Step 5.
		No	Perform work as described under Areas with possible water leaks - Door seals. Dry out vehicle. Repair damage. Perform a water test as a check (see test method).
5th	Before starting any further work, use the VIN to look for model-specific information in eTIS. Perform Oasis query and check TSIs. Does this information allow the cause of the leak to be identified?	Yes	Dry out vehicle. Repair the damage using the information found. Perform a water test as a check (see test method).
		No	Step 6.

DESCRIPTION AND OPERATION

Stage	Testing	Result	Action
6th	Establish the extent of the damage. To do this, expose wet areas. Remove parts. Investigate the suspected area for signs of water. Does an investigation of the suspected area allow the cause of the leak to be identified?	Yes	Dry out vehicle. Repair leak. Perform a water test as a check (see test method).
		No	Step 7.
7th	Check exterior areas (seals, seal welds). Check interior areas: Signs of water, plugs, seal welds. Can the cause of the leak be identified?	Yes	Dry out vehicle. Repair leak. Perform a water test as a check (see test method).
		No	Step 8.
8th	Perform water test or ultrasound test. Can the cause of the leak be found?	Yes	Dry out vehicle. Repair leak. Perform a water test as a check (see test method).
		No	The water entry may only occur under dynamic driving conditions. This requires intensive tests to be repeated with the corresponding climatic influences (rain).

Possible complaints and corrective actions

NOTE: Water leaks and changed vehicle acoustics can have similar causes. For this reason, information from the Wind noise or Noise, vibrations, roughness chapters may be useful in identifying the fault.

An outline of the possible complaints due to water leaks is provided below. The causes of water leaks and the possible remedies are presented using selected examples. They are intended to provide troubleshooting tips and suggestions for the user but do not represent an exhaustive faults list.

Glued windows

A broken pasted seam can cause water to enter around the window. A broken pasted seam can be located using a water test or by carefully blowing compressed air onto the inside of the window seal.

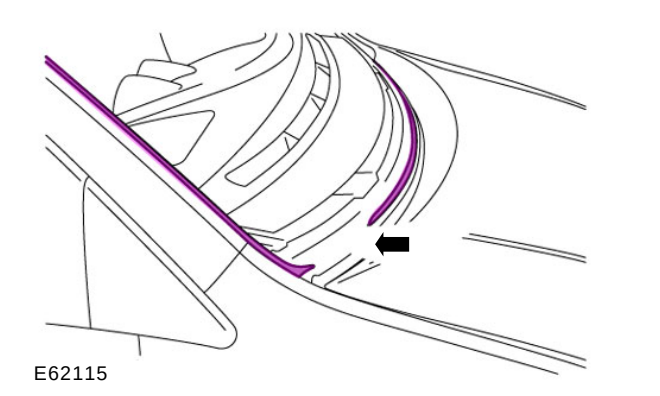

Corrective action

Broken adhesive seams **-Arrow-** can be sealed from inside using PU glass adhesive.

If this seal does not resolve the problem or the broken pasted seam is too extensive, it is necessary to remove the window and glue it back into place.

Door seals

If water appears at the bottom of the door, it is possible that the door seal behind the door trim is damaged. If the door is intact, water can enter through the window weatherstrip and flow out through gaps on the underside of the door. If the door seal adhesion is faulty or the door seal is damaged, water can get into the interior.

DESCRIPTION AND OPERATION

TO BE UPDATED LATER

Des cript ion	Description
1	Seal/adhesion
2	Clips
3	Door speaker

Fastening bolts could be loose or clips incorrectly positioned on door modules.

Corrective action

Depending on the door seals used, different sealing methods can be used.

NOTE: The drainage holes on the underside of the door may not be blocked - if they are, clean them. Defective films and foam seals must be replaced.

Once the adhesive surfaces have been cleaned, plastic films must be stuck with double-sided adhesive tape or replaced.

Leaky foam seals are sealed with Butyl tape or replaced.

Plastic door modules are fitted with a weatherstrip, which cannot be replaced. Seal the leaky point with Butyl tape or replace the part.

Door weatherstrip

TO BE UPDATED LATER

Leaks can be caused by badly fitted seals. In particular, areas with radii **-Arrow-** must be thoroughly checked.

Door seals can develop leaks due to:

- Damaged or expanded seals.
- Ageing.
- Insufficient contact pressure.
- Inadequate contact area for seal on body part.
- Uneven welded flange thickness because of several layers of body panels or production tolerances.
- Kinks.

The contact pressure of a seal can be determined using a strip of paper. If a strip of paper trapped in the closed door can be pulled out easily, the contact pressure is too low.

To resolve

DESCRIPTION AND OPERATION

- Replace damaged or aged seals. Prevent kinks.
- The contact pressure can be changed by adjusting the catch bolt or correcting the panel flange.
- Even out the uneven welded flange thicknesses. Properly repair any paint damage that occurs. If the bodywork flanges are very uneven, appropriate alignment work must be performed. Pay particular attention here to the new corrosion protection which needs to be applied afterwards.
- If water entry is caused by a spot weld (burr on the surface), this must be rectified and appropriate corrosion protection applied.

Tailgate sealing rubber

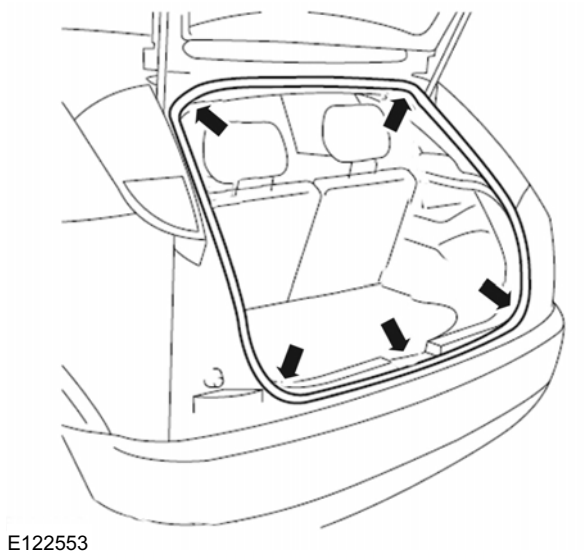
E122553

Leaks at the tailgate rubber seal have the same causes and remedial measures as for door rubber seals. Especially vulnerable areas -arrows- must be thoroughly checked.

Rubber grommets / plugs

Rubber grommets or plugs are fitted at numerous points on the body. They are frequently used as seals for cables, hoses or actuating links. Rubber plugs are frequently used for gaps caused during production.

Example: Possible problem locations in the tailgate area

TO BE UPDATED LATER

Des cript ion	Description
1	Hinge seal
2	Cable duct

Leaks can be caused by badly fitted or damaged rubber grommets and plugs.

Damaged cable insulation can also cause leaks.

Where components are bolted on, water can enter if there are inadequate seals at the connection point.

To resolve

- Correctly fit rubber grommets / plugs. During fitting, ensure that the sealing lips are not trapped and are applied properly.
- The contact area of the rubber grommets / plugs can also be sealed with PU sealing compound.
- Replace the damaged rubber grommets and repair the damaged cable insulation.
- Smooth the panel deformations in the contact area of the plugs.

Heater housing/ventilation

Loose butyl sealing strips, damaged sealing surfaces or a trapped carpet can cause leaks around the heater housing / ventilation **Arrow**. Badly positioned or badly fitted hoses can also be responsible for water entry. Water drains must not be blocked

DESCRIPTION AND OPERATION

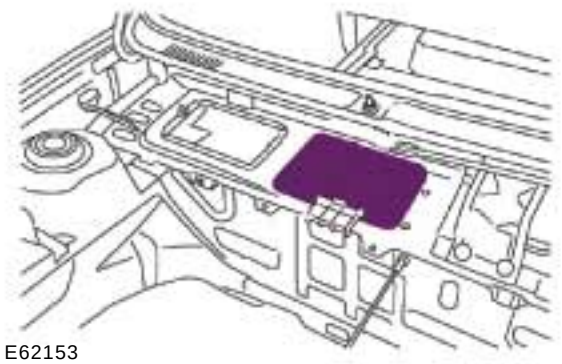
E62153

NOTE: A large quantity of water flows through the water tank. If there are leaks in this area, it is essential to ensure that the water drainage mechanisms function correctly. Drainage openings may not be blocked or stuck. Leaves and other dirt must be removed before troubleshooting.

Corrective action

Before the actual repair, make sure that the water drains are not blocked or stuck.

Remove the heater housing / ventilation and fit a new Butyl sealing strip. Damaged sealing surfaces must first be adjusted. A trapped carpet must be removed.

Seal welds

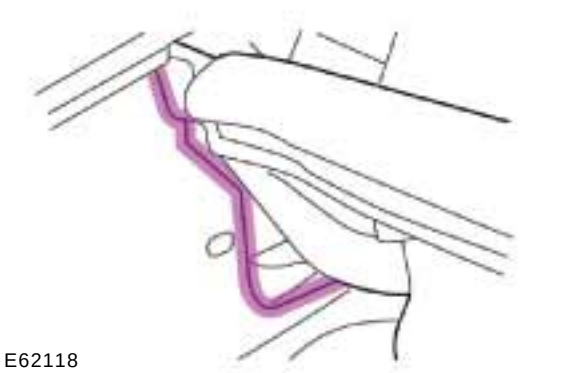
E62118

PU sealing beads are applied to welded or riveted connections **Arrows** to seal the interior of the vehicle. Incorrectly applied or damaged seal welds can allow moisture to penetrate into the interior of the vehicle. It is also possible that sealing beads whose shape and size appear to be intact actually have poor adhesion.

Corrective action

Incomplete seal welds must be supplemented with PU sealing compound. Damaged seal welds must be removed and re-applied properly. Make sure that any residual moisture is effectively removed before a new seal is applied.

Attached parts

The add-on parts include:

- Exterior mirros, handles, controls.
- Mouldings, roof mouldings, lettering.
- Roof aerial, roof rack or connections for roof rack systems.
- Bumper mountings.
- Injection nozzles, door contact switches, bump stop rubber.
- Control unit seals.
- Tail lamps.
- All kind of screwed connections (pedal block, door and tailgate hinges)

Example: Possible water entry points at the rear lamp

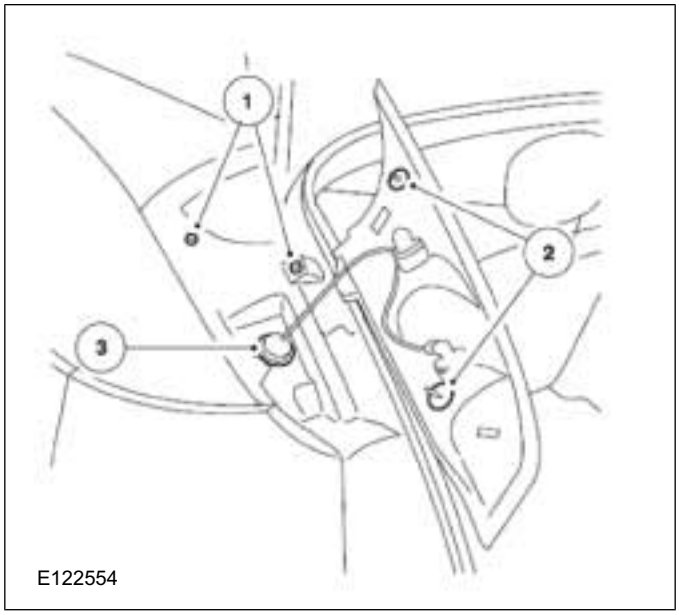

E122554

Des cript ion	Description
1	Clips
2	Gaskets.
3	Rubber grommet

Add-on body parts must be fitted with seals, grommets or sealing compound to prevent water entry. However, even when a sealing system is fitted, the screw thread may still cause leaks.

DESCRIPTION AND OPERATION

Corrective action

Seals must be tested and, if necessary, replaced. Check contact surface and adjust if necessary. Points sealed with sealing compound must be thoroughly cleaned and the seal replaced. Check grommets and replace if necessary. At all screwed connections, seal the thread with an appropriate sealing material.

DESCRIPTION AND OPERATION

Wind Noise

Wind noises as well as other general noises are dealt with under Noise, Vibration and Harshness (NVH).

NOTE: Basic and in-depth training is offered on the following topics. You will find an overview of the complete range of courses in the Training Brochure issued by the Ford Service Organization.

Due to the continuous reduction in drivetrain noises, wind noises have come to the fore in the vehicle and are perceived to a greater extent by the customer.

Potential areas of wind noises

There are various causes of wind noises. They can be due to the design of the vehicle, or they can occur after a repair. They are mostly caused by poorly mounted components, which must be located and installed in the correct position.

General information

In order to carry out targeted diagnosis, it is important to know the basics of noise formation and sound transmission.

TO BE UPDATED LATER

Item	Description
1	Wiper arms
2	Windscreen seal
3	Antenna/antenna base
4	Sun roof/roof rail
5	Tailgate
6	Door handles
7	Exterior Rear View Mirror

Item	Description
8	Door seals
9	Headlamps
10	Radiator grille.

Noises are categorized according to their type and formation as follows:

"Normal" air flow noises:

Normal air flow noises are caused by air blowing against even, flat vehicle surfaces, such as the

DESCRIPTION AND OPERATION

roof, doors and side windows. When the vehicle is moving fast, air layers (turbulence) form, which cause variations in air pressure. These variations in air pressure spread in the form of sound waves and are transferred to the vehicle interior via the side windows and seals.

Noises caused by deviations in air flow and circulation around separate components:

If air flows over an edge on a vehicle, the air flow cannot follow the shape of the surface, but separates at the edge. Eddies are formed, which collapse again after a certain time or distance. The associated fluctuations in air pressure create a corresponding sound wave which is noticeable by for instance a rushing noise at the A-pillar or the outside mirror.

Turbulence and the associated radiation of noise can also occur at the vehicle underbody. Air circulation around small components and also flow through small gaps (e.g. the radiator grille) cause the rushing noise to change to a whistling, which rises and becomes louder as the vehicle speed increases.

Noises caused by vibrating seals:

Seals which do not make firm contact at the door or window area can be made to vibrate by pressure variations outside the vehicle, which in turn mean noise radiating into the interior of the vehicle.

Noises caused by air flowing out:

Noises caused by air flowing out are created by leaks at the vehicle interior sealing system, when stationary air mixes with flowing air. As a result, the noise increases as the speed of the air flowing out increases. Example: Letting air out of a tire.

Cavity noises:

Cavity noises are those created when the air volumes found in bodywork cavities are caused to vibrate by an opening located in the airflow. The frequency of the tone does not vary with the vehicle speed but depends on the volume of the cavity and the size of the opening. Example: Blowing across the top of a bottle.

Wind noises overview:

Workshop diagnosis

Assessment	Type of wind noises	Place of origin
Normal	"Normal" wind noises	Roof, side windows
Normal	Noises caused partly by changes in the direction of air flow and by air flow around separate components	A-pillars, outside mirrors, antennas
Serious	Noises caused by vibrating seals	Door gaps too large, door/ window seals not making firm contact
Serious	Air escape and air passage noises	Leaks in the bodywork/ sealing system
Serious	Cavity noises	Unsealed body-work cavities

Those noises listed under "Serious" indicate a possible source of the fault.

Workshop diagnosis

There are two ways that the level of noise in the vehicle interior can be reduced and the character of the noise can be improved through assessment and diagnosis in the service department:

- Reducing the intensity of the noise sources.
- Reducing the noise transfer routes.

Before carrying out repair work, a visual inspection of the vehicle must be carried out. The gaps in the doors, the sunroof and at all other body parts must be checked in particular.

When the doors are adjusted to fit exactly, development of wind noises at high speeds can often be eliminated (lifting of doors off the seals). Furthermore, the following points should be noted:

- The windows and doors must be fully closed.
- The air guides and air grilles must be correctly seated.
- All of the trim strips and plastic components must be firmly fixed down without gaps.
- All blanking plugs present.

DESCRIPTION AND OPERATION

Test method

The test procedures given in the chapter Noise, Vibration and Harshness can also be used to diagnose wind noises.

Road tests

Wind noises can usually only be localized by road tests

NOTE: There should always be two people present during road tests to find noises. A driver who reconstructs the situation causing the noise, and a person to carry out the checks.

The following points should be taken into account for such road tests:

- Check that the tire pressure is correct.
- Remove non-standard ancillary components from the vehicle.
- Choose a dry, flat road with as little traffic as possible.
- Carry out the road test in all speed ranges. Use a high gear so that the engine noise is low.
- Do not perform a road test near any sound reflecting objects.

If it is difficult to detect the noise sources, the search can be made easier by masking potential areas.

Chalk/powder test

This test checks the contact surfaces of seals on doors, hatches and lids.

Process using a door seal as an example:

To do this, the door seal is coated with powder or brushed with chalk. A thin layer of grease is applied to the surface against which the seal makes contact. The door must then be slowly closed and reopened. The width and continuity of the imprint can now be checked on the seal.

Smoke test

Flow checking device

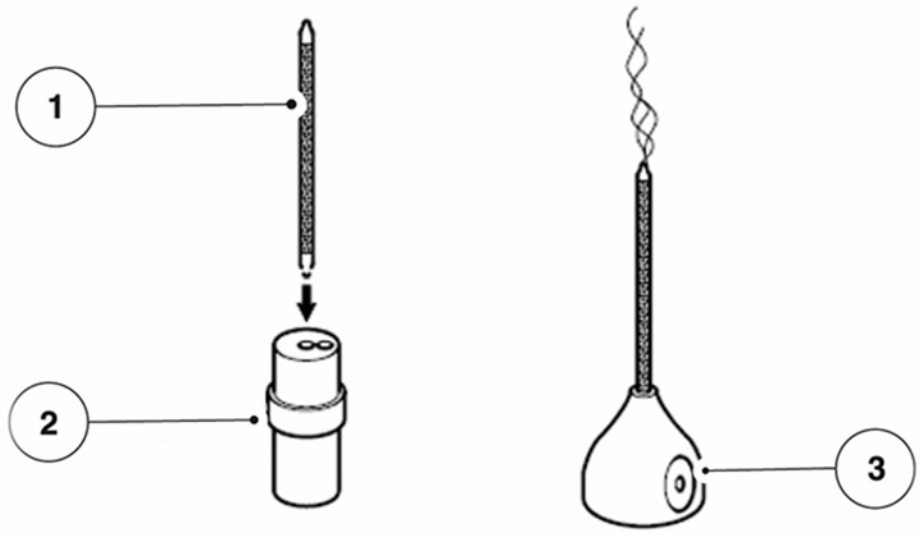

E122761

Item	Description
1	Test pipe
2	Test pipe opener
3	Puffer ball

Mode of operation:

The flow checking device is a set made up of a flow-testing pipe, a test pipe opener, puffer ball and closing-off caps for the pipe.

The test pipe contains a filling layer which is impregnated with fuming sulfuric acid. When air is blown through the pipe by the puffer ball, sulfuric acid aerosol is emitted in the form of a white smoke.

NOTE: Pay attention to the instructions for use and the safety directions issued by the manufacturer. The smoke test can only be performed in a draft-free environment.

This test can be used to detect leaks visually.

Procedure:

- Break off both tips of the pipe in the pipe opener, in exceptional cases in the top of the packaging.
- Insert the pipe into the puffer ball so there are no leaks.

DESCRIPTION AND OPERATION

- Close the hole in the puffer ball with your thumb and press the air contained in the ball through the pipe.
- Set the ventilation blower in the passenger compartment to the highest setting.
- Close all doors so that a slight overpressure can build up in the passenger compartment.
- Move the smoke pipe along the outside of the body to the areas to be checked. Leaks can be detected through the irregular movement of the smoke.

Ultrasonic test

This test searches for leaks in the system of seals or rather acoustic bridges. When an ultrasonic transmitter is placed inside the vehicle, it sends out ultrasonic waves. A leak is located by running a detector along the suspected area. The position with the loudest reception of the escaping ultrasonic waves indicates places where noises occur.

Ultrasonic test device

E122762

Procedure:

- Place the ultrasonic transmitter in the vehicle.
- Completely close the vehicle.
- Search the exterior of the vehicle using the detector.
- The detector provides a simple indication of a leak.

Stethoscope test

Stethoscope

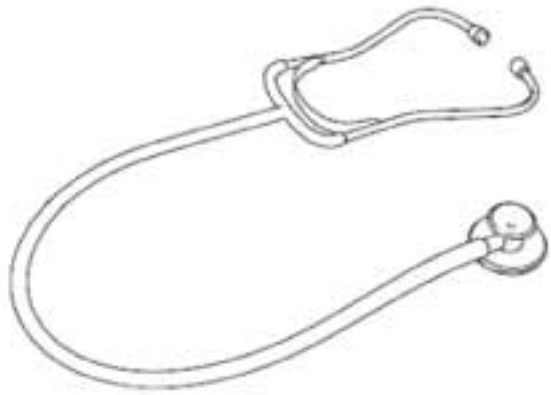

E122763

Diagnosis

Wind noises often have similar causes as the general NVH noises. For instance, a windshield which is incorrectly bonded in position can cause normal driving noises to become more noticeable.

Asking the customer detailed questions and a road test together with the customer are the requirements for a targeted diagnosis.

NOTE: Take the customer concern seriously. But do not confirm that a noise is a problem until you are sure that it is something which is not normal for the vehicle series.

Possible questions:

- How long has the noise been there?
- Has any work been done on the vehicle?
- Where does the noise come from?
- In which driving situation does the noise appear?
- Is there any special situation in which the noise appears?

Remember that a noise is often more or less noticeable depending on where you are sitting in the vehicle.

DESCRIPTION AND OPERATION

Stage	to test	Result	Reference or Action
1st	Road test the vehicle with the customer. First let the customer drive to demonstrate the noise, before you drive the vehicle yourself. Check that the concern is justified. Is this a noise which gives cause for concern?	Yes	Step 2.
		No	Explain the noise and tell the customer what is causing it. Possibly offer a comparable vehicle for a road test.
2nd	Visually inspect the vehicle. Look for loose, damaged or missing components. Check that the vehicle is to standard production series specification. In particular, check for any aftermarket components which may have been installed. Depending on the type of noise, check the suspected area. Could a cause of the noise be found?	Yes	Eliminate the noise or carry out a repair as the case may be. Check whether the measures have been successful.
		No	Step 3.
3rd	Before starting any further work, use the VIN to look for model-specific information in eTIS. Perform Oasis query and check TSBs. Can a cause for the noise be determined based on the information available?	Yes	Take the action specified in the Oasis or TSB information. Check whether the measures have been successful.
		No	Step 4.
4th	Localize the noise. In doing so, check whether it is an unusual noise or if it is a usual driving noise that is more noticeable because of inadequate sealing. Is it an unusual noise?	Yes	Step 5.
		No	Step 7.
5th	Determine the source of the noise. Can the cause be determined?	Yes	Eliminate the noise or carry out a repair as the case may be. Check whether the measures have been successful.
		No	Step 6.
6th	Determine the path of the noise using the stethoscope. By way of a trial, mask the suspected area or components or remove them. Can the cause be determined?	Yes	Eliminate the noise or carry out a repair as the case may be. Check whether the measures have been successful.
		No	Step 7.

DESCRIPTION AND OPERATION

Stage	to test	Result	Reference or Action
7th	Check the vehicle for inadequate or damaged seals. The sealing of a vehicle can be checked using the stethoscope, the powder test, the smoke test and the ultrasonic detector. (See under test method.) Could a leak be detected?	Yes	Renew the seal or perform the appropriate repair as necessary. Check whether the measures have been successful.
		No	Step 8.
8th	Under certain circumstances there may be a constructional problem which is not yet known about. Record the problem in an Express Service Report and send it on by the usual method.		

Possible concerns with corrective measures

NOTE: Instructions on general noise are summarized separately in the Noise, Vibration and Harshness section. These can be useful when searching for the causes of wind noises.

There follows an outline of the possible concerns relating to wind noises. Selected examples are given showing the causes of wind noises and the ways in which they can be eliminated. They are intended to provide troubleshooting tips and suggestions for the user but do not represent an exhaustive faults list. The topics are subdivided by the different groups of components.

The test procedures described in the Noise, Vibration and Harshness section can be used when troubleshooting.

Seals

In general, seals are very important when eliminating wind noises. Special attention should always be paid here to the possible causes of wind noises.

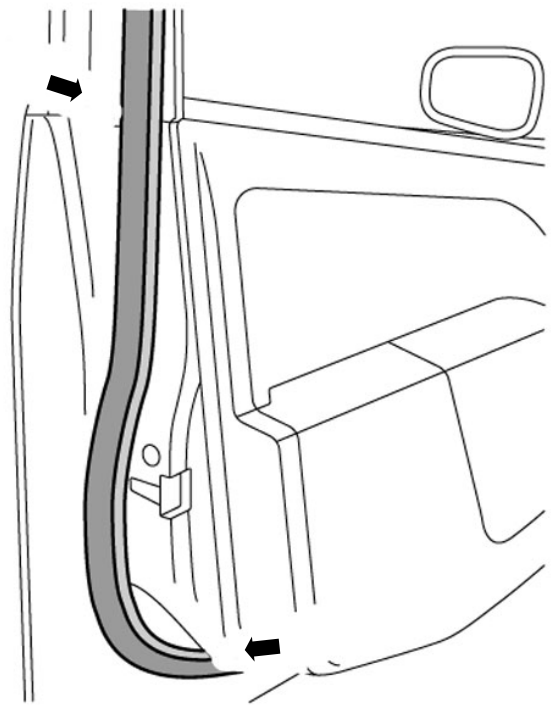

E62042

Take the following points into account:

- Seals age, i.e. they become porous and with time they lose their original elasticity. If the vehicle is relatively old and there are already visible signs of distortion or damage to a seal, then it should be replaced.
- At high speeds the doors or hatches may lift slightly from the seal surfaces because of variations in air pressure. Wind noises are caused when the preload on the sealing surface is not sufficient. The preload depends on the installation position of the components, the elasticity of the seal and the location of the sealing flange.
- The contact surface of the seal must be sufficient. This can be checked using the chalk test. If the specifed width of the contact surface is not known, you must determine it on another component of identical construction.
- A bulging seal carrier indicates that the sheet metal of the retaining flange is uneven.

DESCRIPTION AND OPERATION

- Seals must be correctly installed. Special attention must be paid at corners **-arrow-** that the installation follows the contours.
- The seal must not show any kinks or folds or any other damage.
- Seals must seal all around their circumference. Gaps in seals result in openings which lead to an increased incidence of noise. In this respect, it is especially important to pay attention to the seals in the area of the windows.

Remedial Action

Renew older seals which no longer have adequate preload. Deformed or widened retaining flanges must be reworked and provided with a new seal.

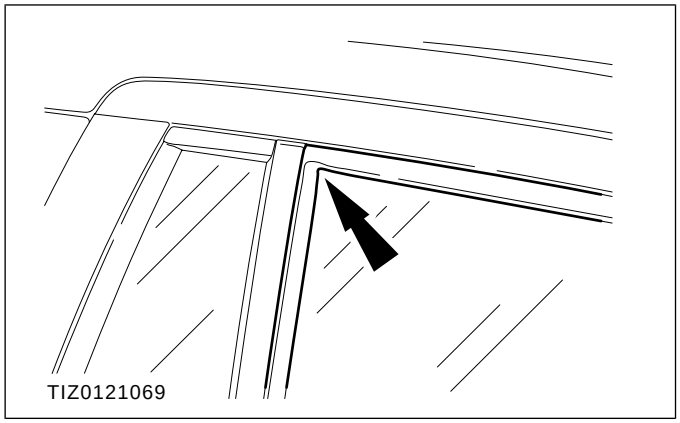

The corner areas **-arrow-** of a seal must be properly seated. In some circumstances, a butyl sealing strip must be affixed to support the sealing at a corner.

Bonded joints

Glass is usually installed today using a bonded joint. Gaps in the bonded joint can lead to noises in the vehicle interior. If there are noises which are believed to be associated with window glass, the following points should be checked:

Gap in window bonding

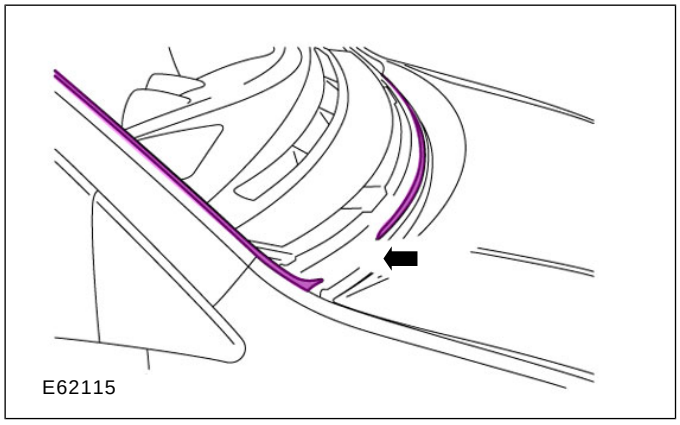

- The window must be bonded without any gaps **-arrow-**. Leaks can be found using the ultrasonic tester or compressed air carefully blown from inside onto the window glass bonding.
- The installed position of the window glass must be correct. It must not have been bonded into a position which is too low or offset to one side.
- The sealing or trim strips must fit tightly and the glass must be mounted so that it is fully enclosed. If a sealing or trim strip has not been applied with enough pressure, high air speeds can cause it to lift up. This can lead to wind noises at higher speeds. Apply masking tape to these areas for test purposes.

Corrective measures

Leaking areas of the window glass bonding material can be sealed using PU sealing compound. Pay special attention at the front windshield, that any breaks in the bonding are not too large. Otherwise the glass must be removed and bonded in place again.

The installed location of a window glass cannot be corrected. It must be removed and bonded into place again.

Replace the trim strips or secure the lip seal using PU adhesive.

Gaps, edges

Door gaps and edges are places where air turbulence can form. This causes noises which can be perceived as troublesome.

Gaps and edges - problem areas

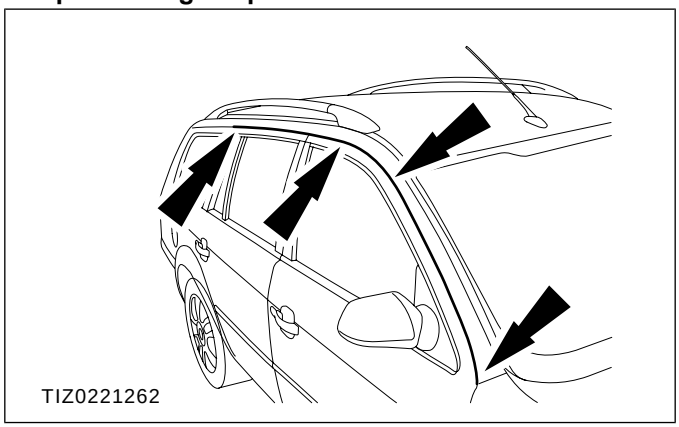

Doors, hood and tailgate can cause wind noises because of gaps **-arrow-** which are too large. If the components are not installed flush to the bodywork or the neighboring component, air break edges can arise, which in turn can create a wind noise.

DESCRIPTION AND OPERATION

The sun roof may be the cause of whistling noises in the roof area. The sun roof may be incorrectly adjusted or the seal on the sun roof may be damaged.

Noises from the door area could come from a window which does not fully close. Side guides (seals) can also be the cause of wind noises.

The covers of window frames can be incorrectly mounted or aligned. The quarter-lights in doors must also be checked for correct installation.

Corrective measures

Check the gaps and adjust them according to the specifications. If there are problems at the sun roof, correct the adjustment and if necessary replace the seals.

Problem area at side windows

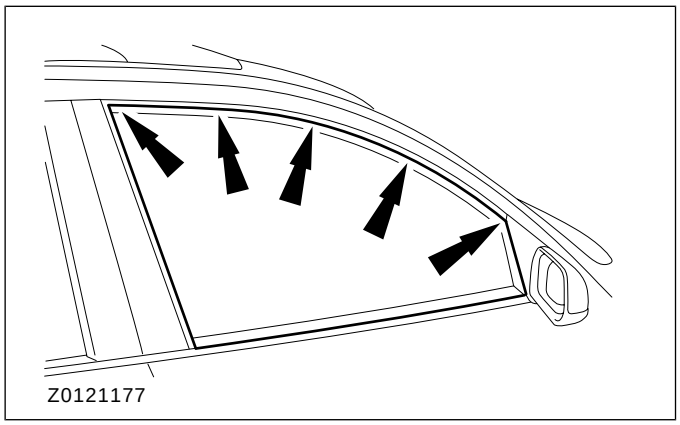

Side windows which do not fully shut **-arrows-** must be adjusted. If the vehicle is equipped with electric window regulators, the remedy may be to perform the window regulator learning process again. In all cases, make certain that the glass enters far enough into the seal.

Ancillary Components

Components installed on the bodywork may cause noises when they are not correctly mounted.

When troubleshooting it may be helpful to remove the suspected component or, when this is not possible, to mask it off with suitable covering tape.

Roof moldings, roof rail, roof antennas

Moldings and roof moldings must touch the bodywork along their whole length without any gap. Check the end sections in particular. These must neither have any splits nor stand away from the bodywork.

Noises may come from the roof rail if the seal between it and the roof is not correctly installed or is cracked. Gaps at the mounting grooves of the carrier can also create wind noises.

The roof antenna and antenna foot seal must be correctly secured. The seal must lie completely on the roof and must not be damaged.

Roof moldings mounting

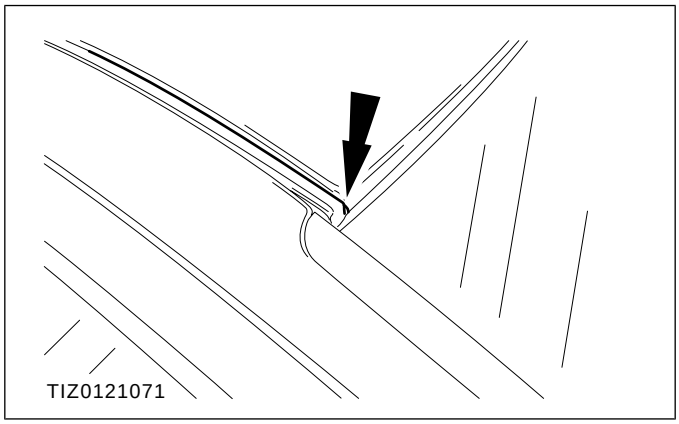

If the original mounting points of the roof moldings are in good condition, the fixing can be improved using silicone sealant -arrow- if necessary. Align or renew the seals of the roof rail. Reduce the clearances of the mounting grooves.

Corrective measures

If the original mounting points of the roof moldings are in good condition, the fixing can be improved if necessary using silicone sealant **-arrow-**.

Exterior mirrors

Exterior mirrors or covers of exterior mirrors which are not correctly mounted cause noises. The cover must lie evenly on the component and must not lift during driving. There are ducts present on the doors for the electrical or mechanical adjusters for the exterior mirrors. If there are leaks, wind noises will be caused. Holes can also be present at the transition to other components.

Exterior mirror seals

DESCRIPTION AND OPERATION

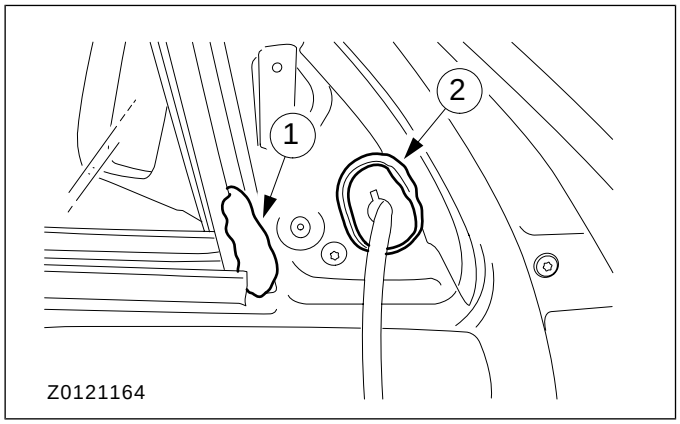

There are ducts present on the doors for the electrical or mechanical adjusters for the exterior mirrors. If there are leaks, wind noises will be caused. Holes can also be present at the transition to other components.

Remedial Action

If there is inadequate sealing of the foam seals **-2-** they must be replaced or supplemented with suitable material. Transitions to other components can be sealed with butyl sealing compound **-1-**.

Moldings, covers, door handles, windshield wiper arms

Moldings and covers especially tend to cause wind noises because of their location. These components interrupt smooth bodywork surfaces and air turbulence therefore arises at the edges. If there are noise concerns in the area of the doors, check especially for gaps and projections. Moldings must not stand away from the bodywork or the door. There must not be any gaps or discontinuities at the location of joints.

Incorrectly adjusted windshield wiper arms can cause wind noises. Especially if they are too far over the glass surface when in the rest position.

Wind noises in the transition area between the air cowl cover and the wing or the windshield can be caused by an incorrectly installed air cowl cover. At high air speeds the air cowl cover may lift and noises will then occur.

Because of their necessary mechanical features, door handles have a range of openings and edges which allow noise to be generated. The door handle can be masked off for testing purposes. If a reduction in wind noises is noticed, inadequate sealing may be the reason for the noises.

Remedial Action

Openings which are used to secure trim panels must be checked for leaks. Any leaks found can be rectified using butyl strips.

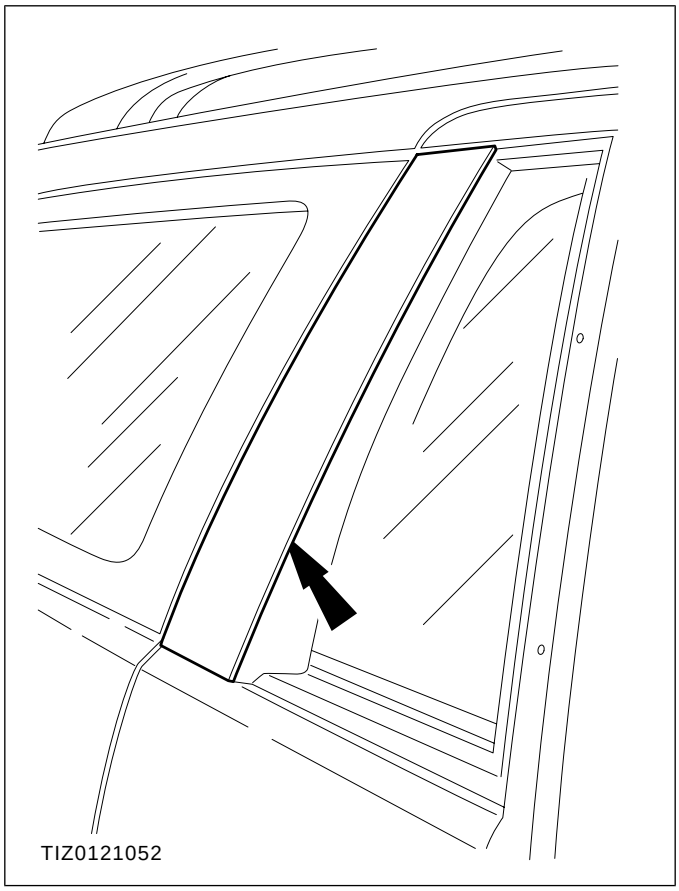

Loose or damaged outer trim on the pillars **-arrow-** must be secured or replaced.

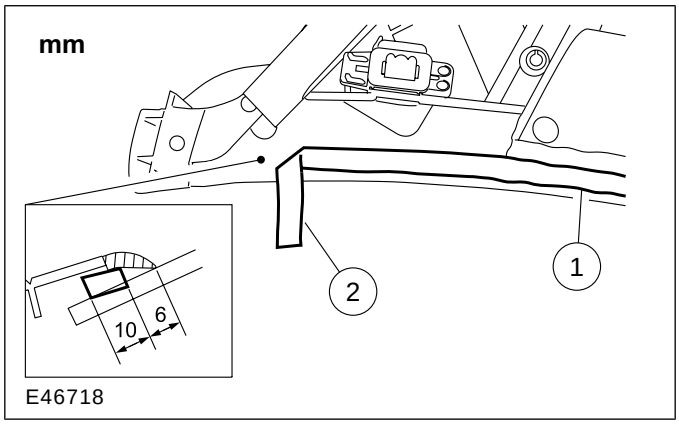

A butyl sealing strip **-1-** can be laid underneath the cover in the transition area between the air cowl cover and the wing or windshield.

The sealing of the door handles must be renewed when required. In addition, noise absorbing material can be applied to the back of the door handles.

DESCRIPTION AND OPERATION

Noise, Vibration and Harshness

Noise, coming from the vehicle and which can be heard inside and outside the vehicle.

Vibrations, oscillations that are felt and noticeable inside the vehicle.

Harshness, noises which come from the vehicle and which can be heard, felt and noticed inside and outside the vehicle.

These terms are grouped together under the title Noise, Vibration, Harshness, or NVH for short.

The task of vehicle development and production is to ensure that noises caused by the vehicle do not disturb the driver and passengers. Moreover, the the external noises emitted by the vehicle must not exceed the thresholds set by law.

NOTE: Basic and advanced training courses are offered for the following contents. For an overview of all courses offered, please refer to the Ford Service Organisation's training course brochure.

Noise types and causes

Noises in and around the vehicle are assigned specific descriptions:

- Humming and droning are perceived as low tones.
- Buzzing and whirring are middle tones.
- Howling, whistling, squeaking are assigned to the high tones.

Low to middle tones are considered to be unpleasant. They are palpable and noticeable as oscillations and vibrations throughout the body. Loud howling and whistling is painful to the ears.

A noise usually consists of a superimposition of different tones which spread as oscillations.

Each of these oscillations has a specific oscillating time and can be measured in frequencies. The frequency describes the number of oscillations per second. The frequency unit is specified in Hertz (Hz).

The human ear can perceive frequencies between 20 and 20000 Hz.

Where the different notes come from in a vehicle:

- Low notes are mostly produced by the engine.
- Low tones can also be produced by the roadbed, particularly on rough surfaces. This is a form of droning which can be felt by the vehicle occupants as vibration or roughness.
- High tones however, which are experienced as howling or whistling noises, are often air currents (wind noises) or come from ancillary components such as the generator, power steering pump or drivebelt.
- There are also clattering noises which can occur when driving over an uneven road. These jerking noises are produced by, for example, the shock absorbers, chassis components or loose articles inside the vehicle.

Noises can already be contained where they occur or, if this is not possible, can be confined with suitable measures.

The basic procedures here are the damping of oscillating parts, the insulation of components or the absorption of the noises through appropriate materials.

Damping

If a damper is installed next to an oscillating mass, the characteristic of the damper will reduce the movement of this mass accordingly (e.g. bumper on chassis).

Damping affects the resonance of an object or system.

Isolation

In oscillation technology, the term isolation means decoupling (separation) of components and systems. An engine is mounted in sprung elements, so that as little oscillation as possible is passed to the vehicle.

In automotive technology, the isolation technique used is nearly always rubber mounting. Rubber has a large internal damping capacity. The elasticity of the rubber acts like a spring.

Absorption

Sound waves are reflected from hard surfaces Through the use of absorption material, sound waves hit soft surfaces and are absorbed by them.

The composition and thickness of the material used plays an important role here. A soft surface, depending on its composition, absorbs the sound waves and reduces their energy.

NVH elements

NVH elements are installed to prevent airborne sound transfers to the passenger compartment in different body cavities.

DESCRIPTION AND OPERATION

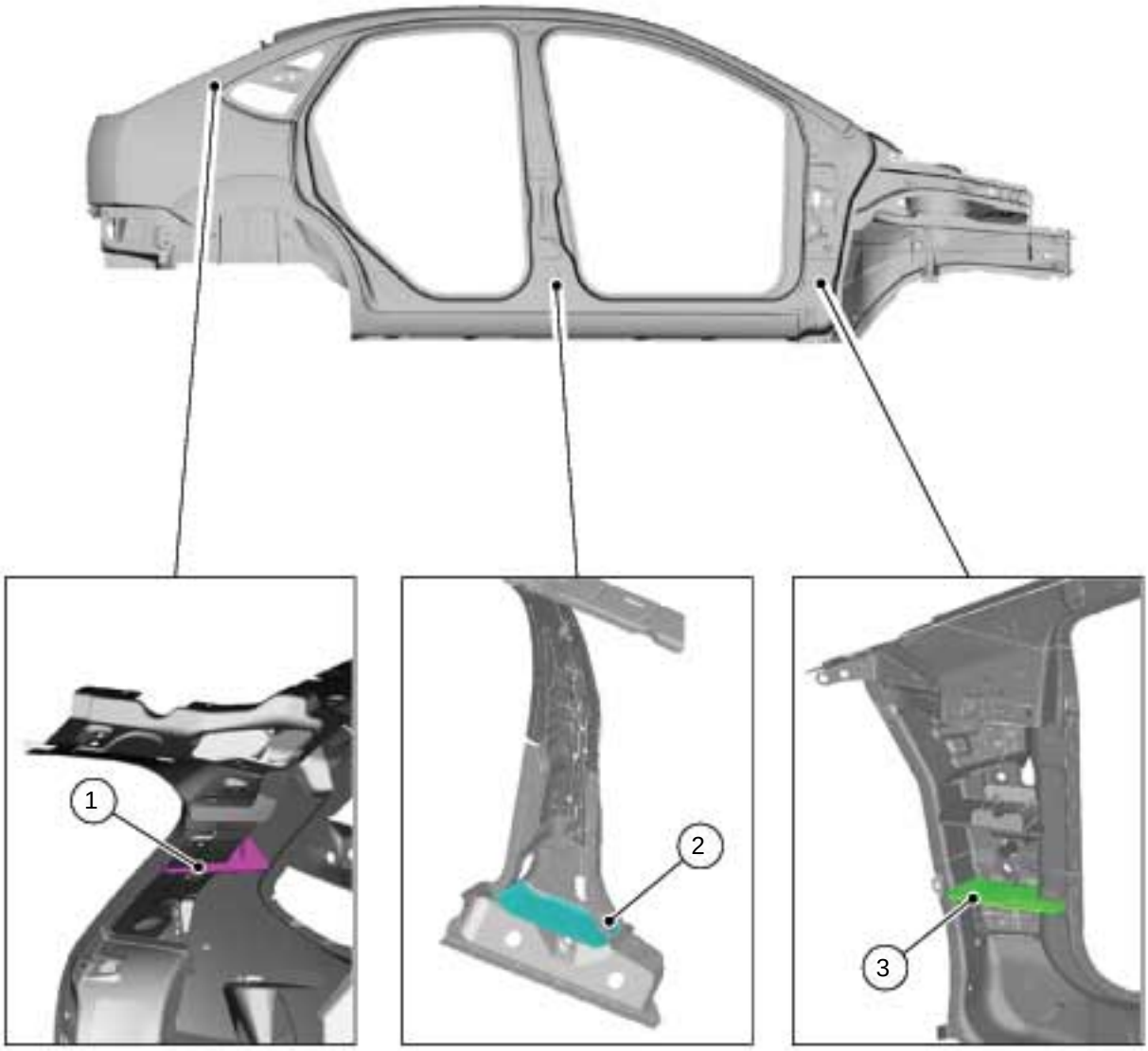

E54912

Item	Description
1	C-pillar area
2	B-pillar area
3	A-pillar area

On the Focus 2004.75 (07/2004-) these elements are located in the cavities of the A, B and C pillars. On the estate version, they are also located in the D pillars.

The NVH material consists of a carrier plate which has compressed isolation material at the edges. In the drying system of the painting equipment used in production, the body is heated to approx. 170° C. At this temperature the isolation material expands to seal the gap between the carrier plate and the bodywork.

NOTE: NVH elements must not be damaged during work on the vehicle body. NVH elements deformed through impact must always be replaced. PU adhesive must always be applied to the edges of new and reused NVH elements during repair work.

DESCRIPTION AND OPERATION

TO BE UPDATED LATER

Item	Description
1	NVH element
2	PU adhesive

For the exact installation position of an NVH element, please refer to the vehicle-specific repair instructions.

If an NVH element is to be reused, the bonding on the body panel must be detached. To do this, the body panel must be heated in the area around the NVH element. The bonding can be detached at approx. 170° C. The damaged panel part can now be carefully dismantled.

Before installing the new panel part, a PU adhesive must be applied to the contact areas between the panel and the NVH element.

Test techniques, measuring devices

The shortest route to an accurate diagnosis results from:

- general information on the problem vehicle and a comparison test with a vehicle of the same construction, without NVH problems.
- vehicle history, including repair history and usage patterns.
- condition history, especially any relationship to repairs or sudden change.
- knowledge of probable causes.
- application of diagnosis procedures in which the vehicle is split into corresponding areas.

The diagnosis and correction of noise, vibration and harshness concerns requires:

- general information on the problem vehicle and a comparison test with a vehicle of the same construction, without NVH problems.
- vehicle history, including repair history and usage patterns.
- condition history, especially any relationship to repairs or sudden change.
- knowledge of probable causes.
- application of diagnosis procedures in which the vehicle is split into corresponding areas.

NOTE: The diagnosis of droning problems is one of the most difficult tasks in the NVH area. With the exception of installed components under stress, a certain diagnosis of droning problems (or boom) on customer vehicles makes great demands on the automotive technician. The performance of measuring equipment and their practice-orientated application can only be obtained through suitable instruction (NVH training). The successful use of these devices requires a great deal of experience on the part of the user.

The diagnosis and correction of noise, vibration and harshness concerns requires:

- a road or system test to determine the exact nature of the concern.

Analysis of possible causes:

- checking of the cause and elimination of the faults found.
- a road test or system test to make sure the concern has been corrected or brought back to within an acceptable range.
- It is often very difficult to locate noises that are audible in the passenger compartment based on the problem description provided by the customer and the road tests performed. The direction of the noise can be detected subjectively, but the source of the noise cannot be found.

NOTE: For a selection of simple test tools, see the wind noises section.

Electronic NVH tester

DESCRIPTION AND OPERATION

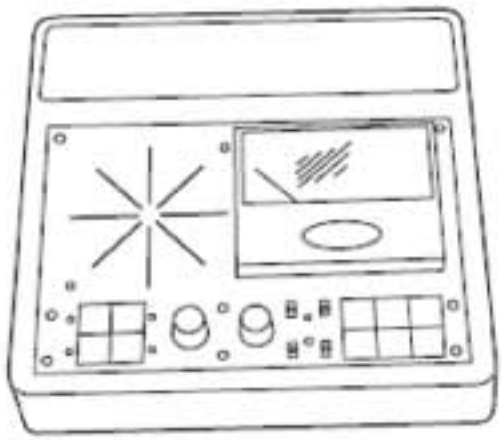

E122758

NOTE: Before using the NVH tester in the service, the service technician should take part in an NVH training course to ensure effective use of this device during the road test. A description of the function and application of the NVH tester is enclosed with the device.

The measuring device described below is used for diagnosis of the solid-borne sound and solid-borne sound transmission paths. The device is particularly suitable for medium and high frequency noise analyses. It principally enables noise diagnosis in the area of solid-borne sound and helps to identify solid-borne sound transmission routes.

In order to obtain a positive diagnosis of droning problems (low frequency noises) and their sources, you must have sufficient experience of how to use this measuring device.

The device works according to the following operating principle: Accelerometers (transmitters) are fitted on various vehicle components or body areas. The signals recorded here can be listened to one after the other on headphones or speakers via the different channels. Simultaneous illustration of several or all measuring channels (for comparison) is only possible visually on the display of the measuring device.

Layout and operation:

- The test device has six different channels for noise diagnosis.
- Each channel is marked in color on the terminal, cable and test device.
- The solid-borne sound recorded is transmitted to the test device or the headphones by the magnetic accelerometers (transmitters).
- There is an amplifier on the test device with which the signal strength and the corresponding channel can be set.
- Only the noises from a transmitter are transferred to the headphones.
- All connected cables can be visually illustrated individually or simultaneously on the display.
- The test device saves the recorded data.
- The recorded data can be imported to a PC and evaluated.

The NVH tester is equipped in addition with mobile magnetic sensors which are particularly suitable for the following noise tests:

- Internal noises at the dashboard
- Engine noise
- Electrical noises (sparking/voltage transmissions)
- Wind noises
- Vacuum - leaks

Chassis noise tester (chassis ear)

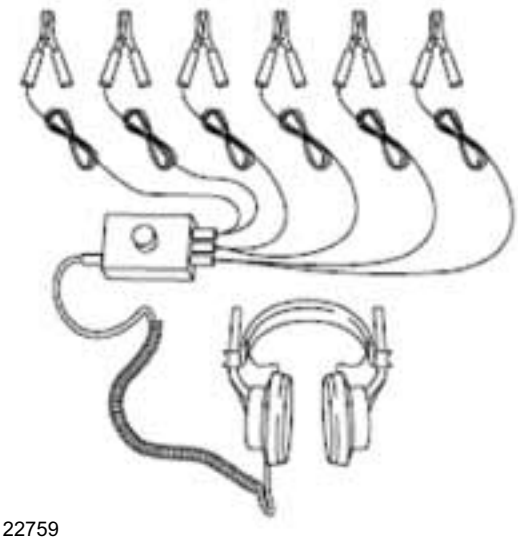

E122759

Used to diagnose solid-borne sound and its transmission routes. The device is particularly suitable for medium and high frequency noise analysis and principally enables noise diagnosis in the area of solid-borne sound and helps to identify solid-borne sound transmission routes.

In order to obtain a positive diagnosis of droning problems (low frequency noises) and their sources, you must have sufficient experience of how to use this measuring device.

Layout and operation:

DESCRIPTION AND OPERATION

The test device has six different channels for noise diagnosis. This means that six microphones equipped with clamps can be attached to different components on the vehicle. The emitted or transmitted solid-borne sound will be transferred from microphone to the headphones. There is an amplifier between the microphone and the headphones at which the signal strengths and the corresponding channel can be set.

Only the noises from one microphone are transferred to the headphones. Each channel is color-coded on the clamp, cable and amplifier.

NOTE: In order to be able to relate the positions of the different microphones during the test process, they are entered in a special test sheet according to their colors. Microphones, clamps and cables must be carefully routed and attached.

Test process (example for transmission noise):

- Attach microphones to various positions on the transmission or mountings. This first allows the source of the noise to be determined, and then the possible transfer routes.
- A road test can be performed after all the clamps have been attached to the vehicle and all the cables connected to the amplifier.
- Firstly, all the channels are switched through one after the other in neutral, to check the operation of the different channels as well as the noise level in neutral.
- During the road test, all channels are listened to in the different gears, engine speeds, vehicle speeds and loads. This procedural method permits unambiguous diagnosis of the cause of the noise and the route of the noise until it enters the bodywork structure.
- The characteristics of the noise which is the cause of the concern should match those of the noise which is heard. This means compare the sound.
- Depending on the input signal level, there may be a great deal of difference in the noise level in the individual channels.
- Always set the amplifier volume to zero before switching to another channel.
- In order to be able to make any comparisons, the volume settings of the different channels must be recorded on the test sheet.

SECTION 501-26 Body Repairs - Vehicle Specific Information and Tolerance Checks

VEHICLE APPLICATION: 2011.50 Ranger

CONTENTS PAGE

DESCRIPTION AND OPERATION

Body and Frame (Component Location)..... 501-26-2
Body and Frame (Overview)..... 501-26-11
Introduction..... 501-26-11
High-strength and super-high-strength steels 501-26-11
Usibor steel..... 501-26-11
Single cab 501-26-11
Double cab..... 501-26-12
Super cab..... 501-26-12
Sheet metal parts for quarter panel partial replacement 501-26-13
Single cab..... 501-26-13
Double cab..... 501-26-13
Super cab..... 501-26-14
Anti corrosion protection..... 501-26-14

GENERAL PROCEDURES

Underbody Tolerance Check..... 501-26-16
Frame Tolerance Check..... 501-26-18

DESCRIPTION AND OPERATION

Body and Frame – Component Location

Body, single cab

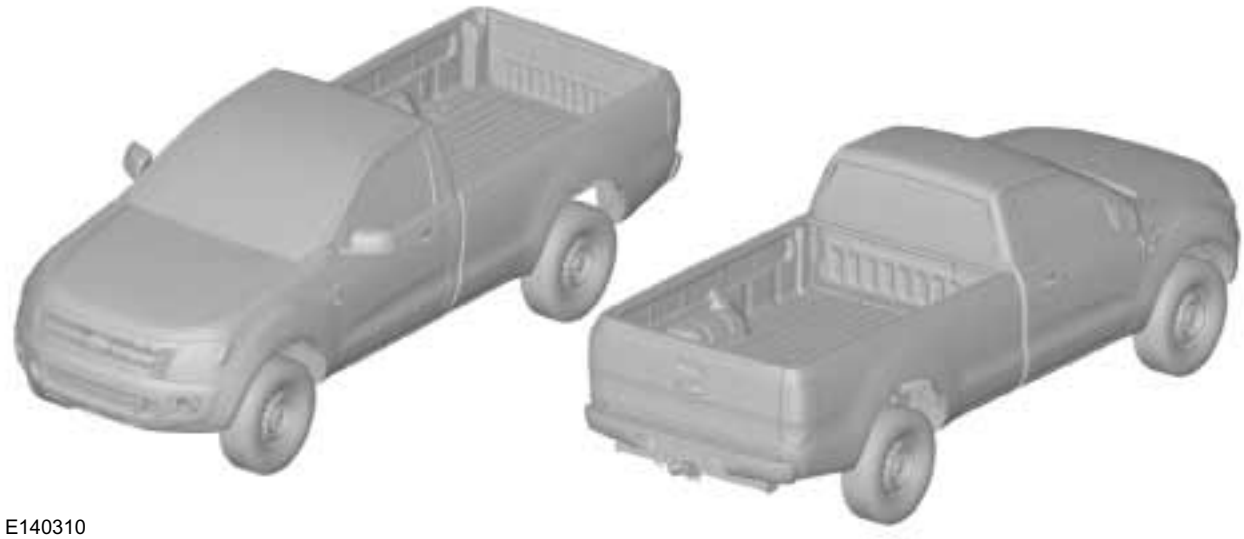

E140310

Body, double cab

E140311

DESCRIPTION AND OPERATION

Body, stretch cab

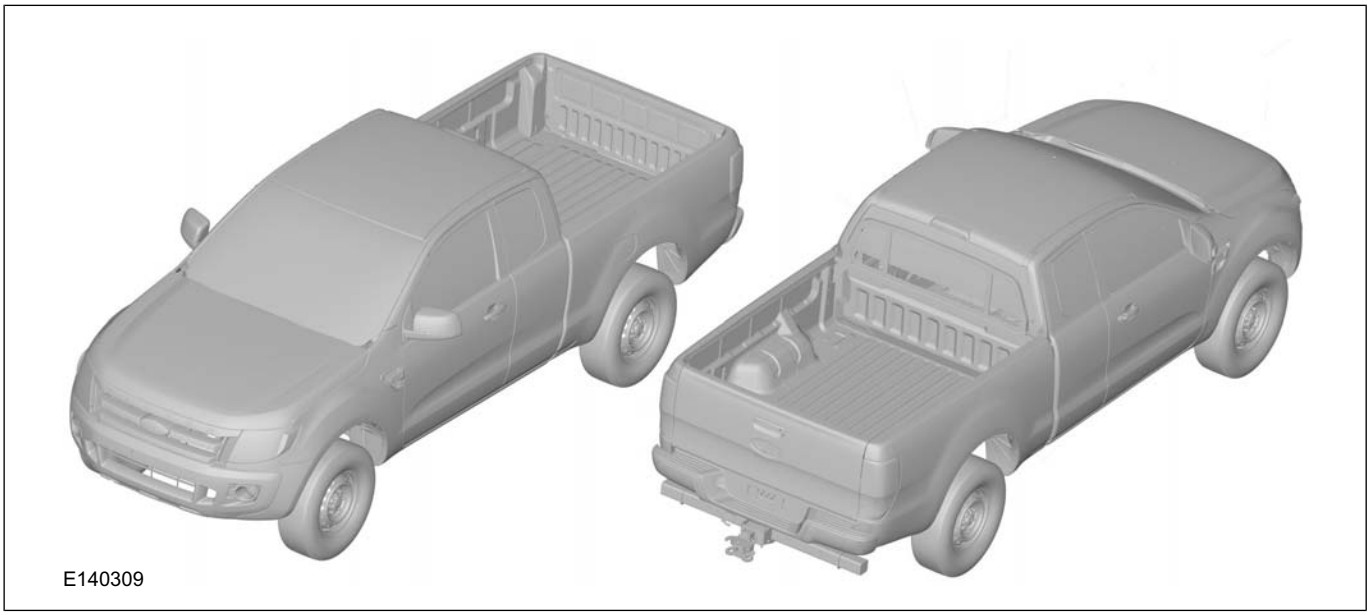

Location of the VIN plate

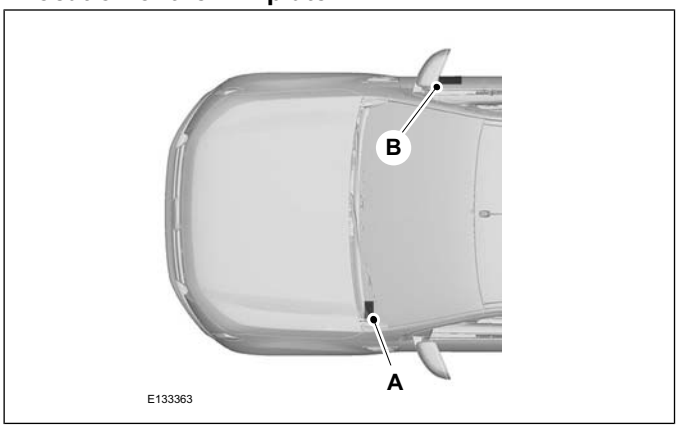

Item	Description
A	Left-hand side of the instrument panel.
B	Right-hand side beneath the front door on the chassis.

DESCRIPTION AND OPERATION

Lifting points

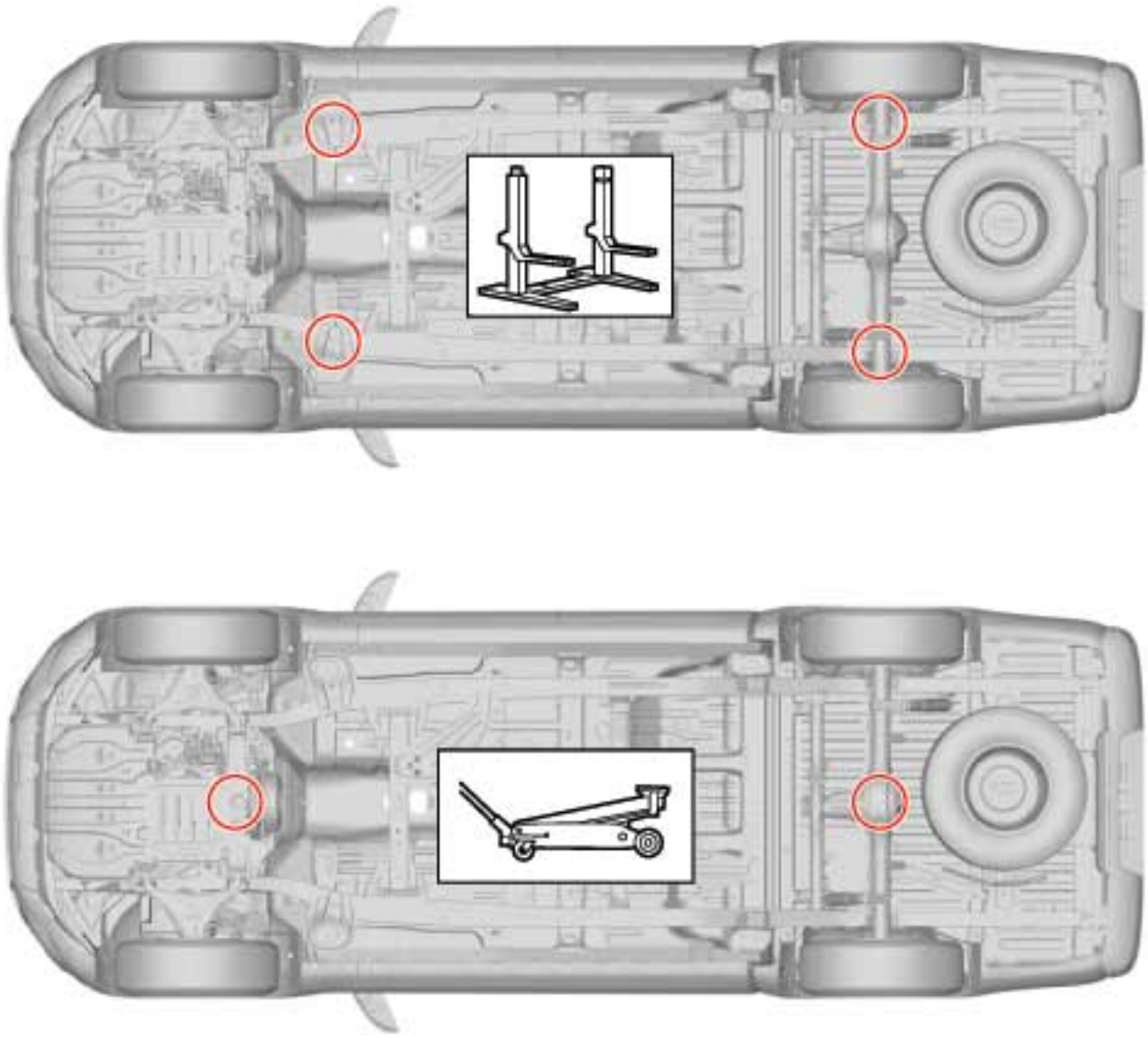

E140312

DESCRIPTION AND OPERATION

Air Bag and Safety Belt Pretensioner Supplemental Restraint System (SRS) for single cab

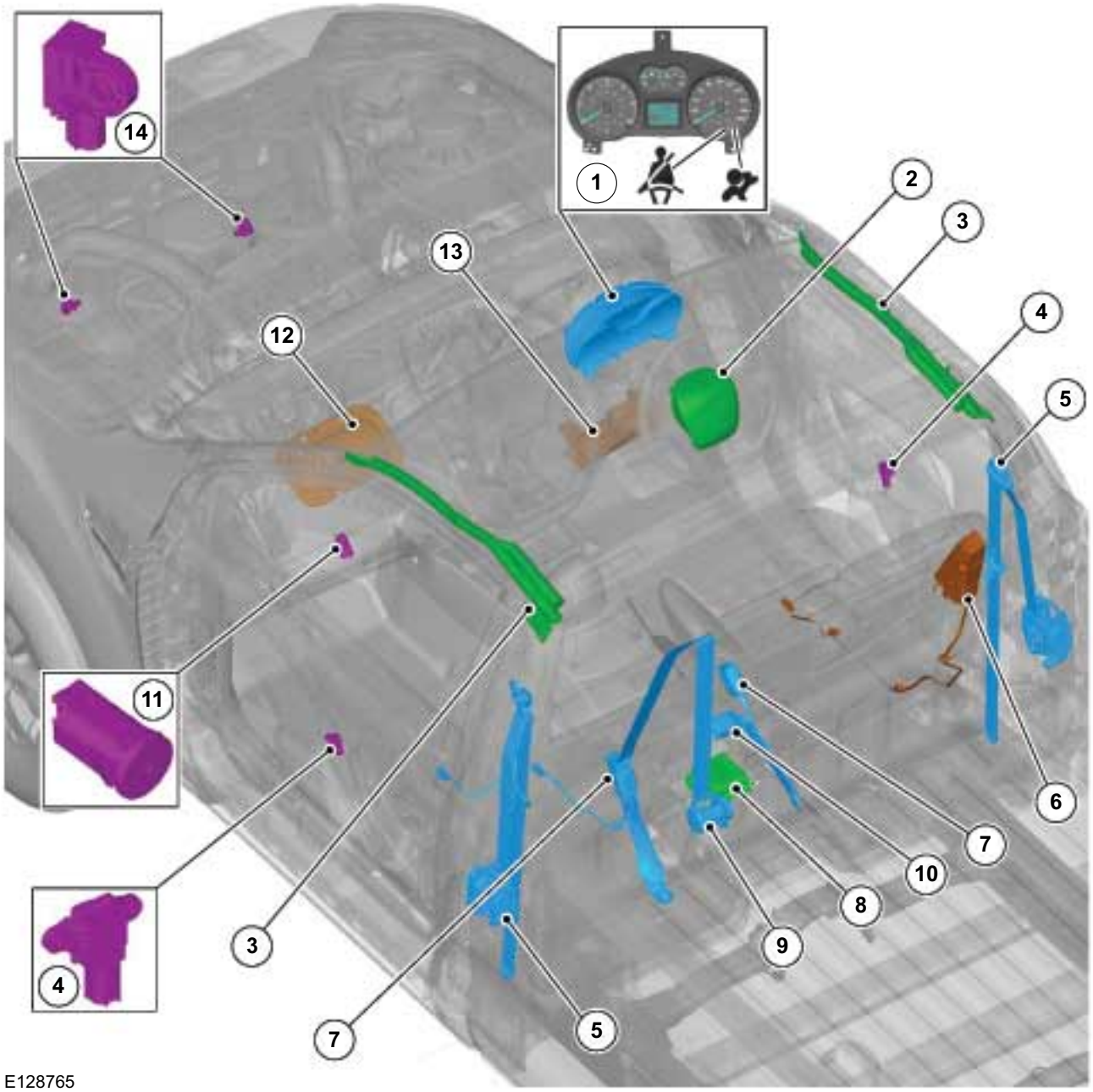

Item	Description
1	Instrument cluster with air bag indicator light and safety belt warning light.
2	Driver air bag
3	Curtain air bag
4	Side impact sensor
5	Front safety belt retractor
6	Side air bag

Item	Description
7	Front safety belt buckle
8	Restraints control module
9	Front center safety belt retractor
10	Front center safety belt buckle
11	Passenger airbag deactivation switch
12	Passenger air bag

DESCRIPTION AND OPERATION

Item	Description
13	Driver lower air bag

Item	Description
14	Front impact severity sensor

Air Bag and Safety Belt Pretensioner Supplemental Restraint System (SRS) for double cab

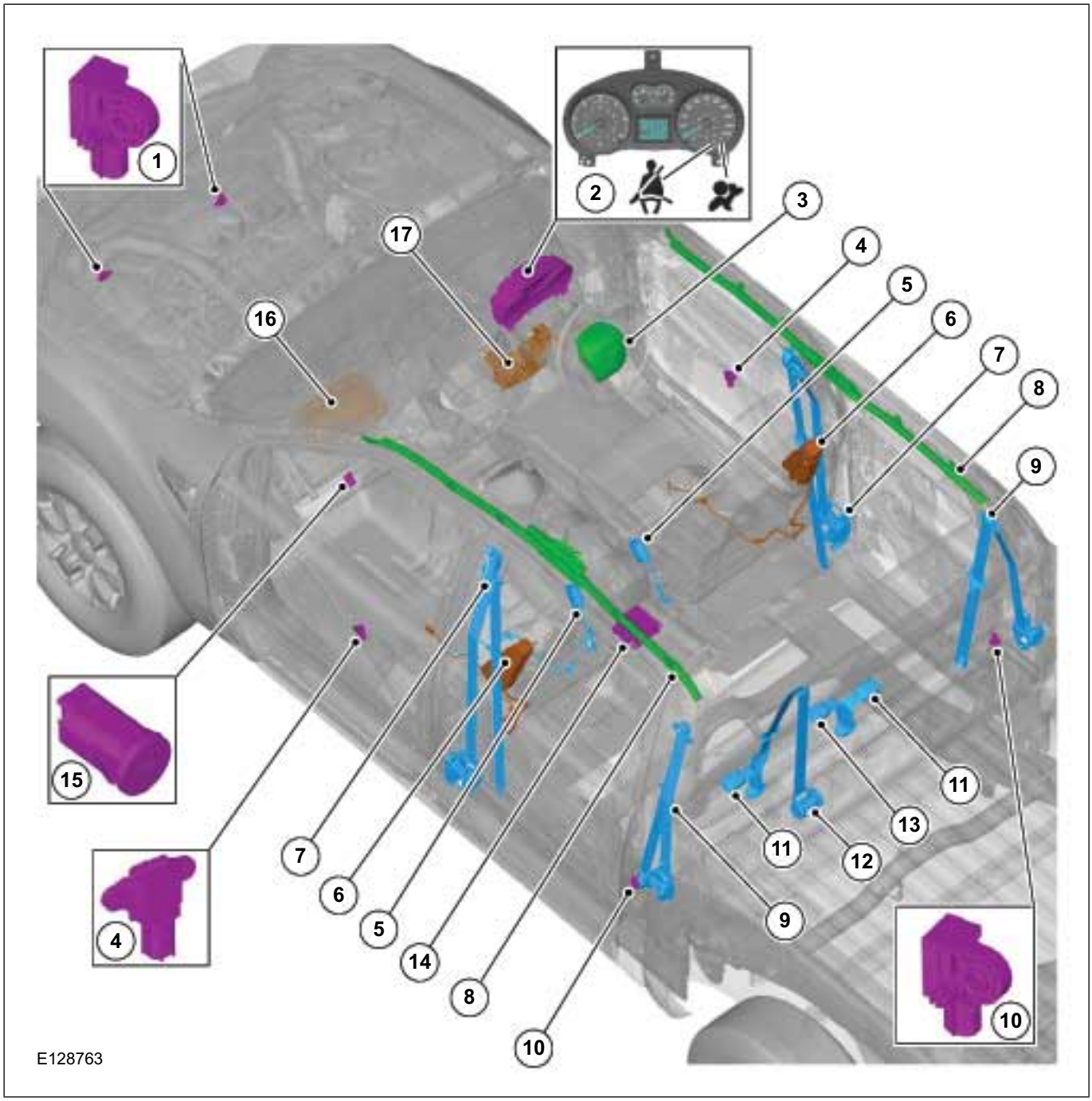

Item	Description
1	Front impact severity sensor
2	Instrument cluster with air bag indicator light and safety belt warning light
3	Driver air bag

Item	Description
4	Side impact sensor (Driver and passenger side)
5	Front safety belt buckle
6	Curtain air bag (Driver and passenger side)

DESCRIPTION AND OPERATION

Item	Description
7	Front safety belt retractor
8	Side air curtain
9	Rear safety belt retractor
10	Side impact sensor (Rear side)
11	Rear safety belt buckle
12	Rear center safety belt retractor

Item	Description
13	Rear center safety belt buckle
14	Restraints control module
15	Passenger airbag deactivation switch
16	Passenger air bag
17	Driver lower air bag

Air Bag and Safety Belt Pretensioner Supplemental Restraint System (SRS) for stretch cab

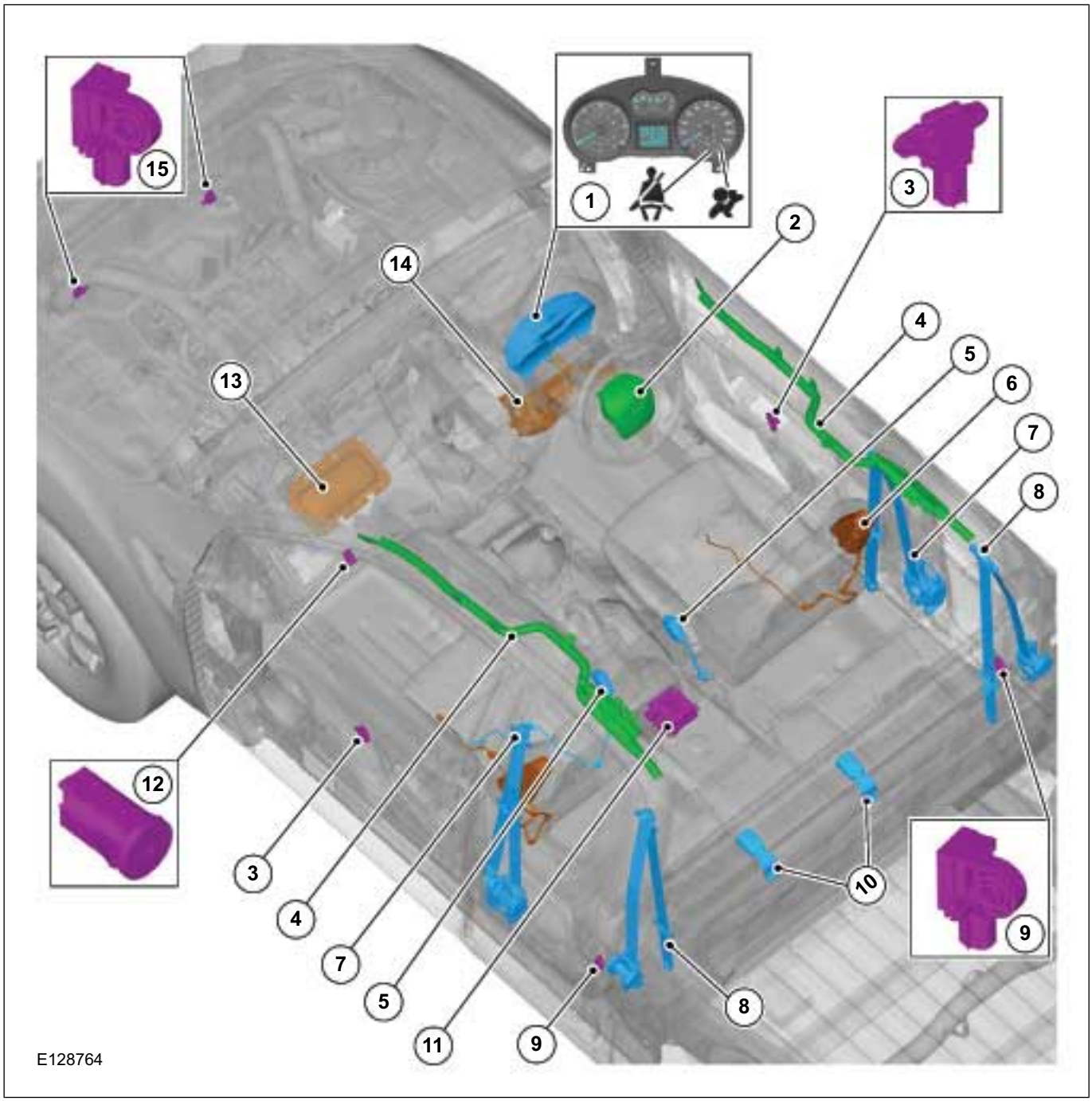

DESCRIPTION AND OPERATION

Item	Description
1	Instrument cluster with air bag indicator light and safety belt warning light
2	Driver air bag
3	Side impact sensor (Driver and passenger side)
4	Curtain air bag
5	Front safety belt buckle
6	Side air bag (Driver and passenger side)
7	Front safety belt retractor

Item	Description
8	Rear safety belt retractor
9	Side impact sensor (Rear side)
10	Rear safety belt buckle
11	Restraints control module
12	Passenger airbag deactivation switch
13	Passenger air bag
14	Driver lower air bag
15	Front impact severity sensor

NVH elements, single cab

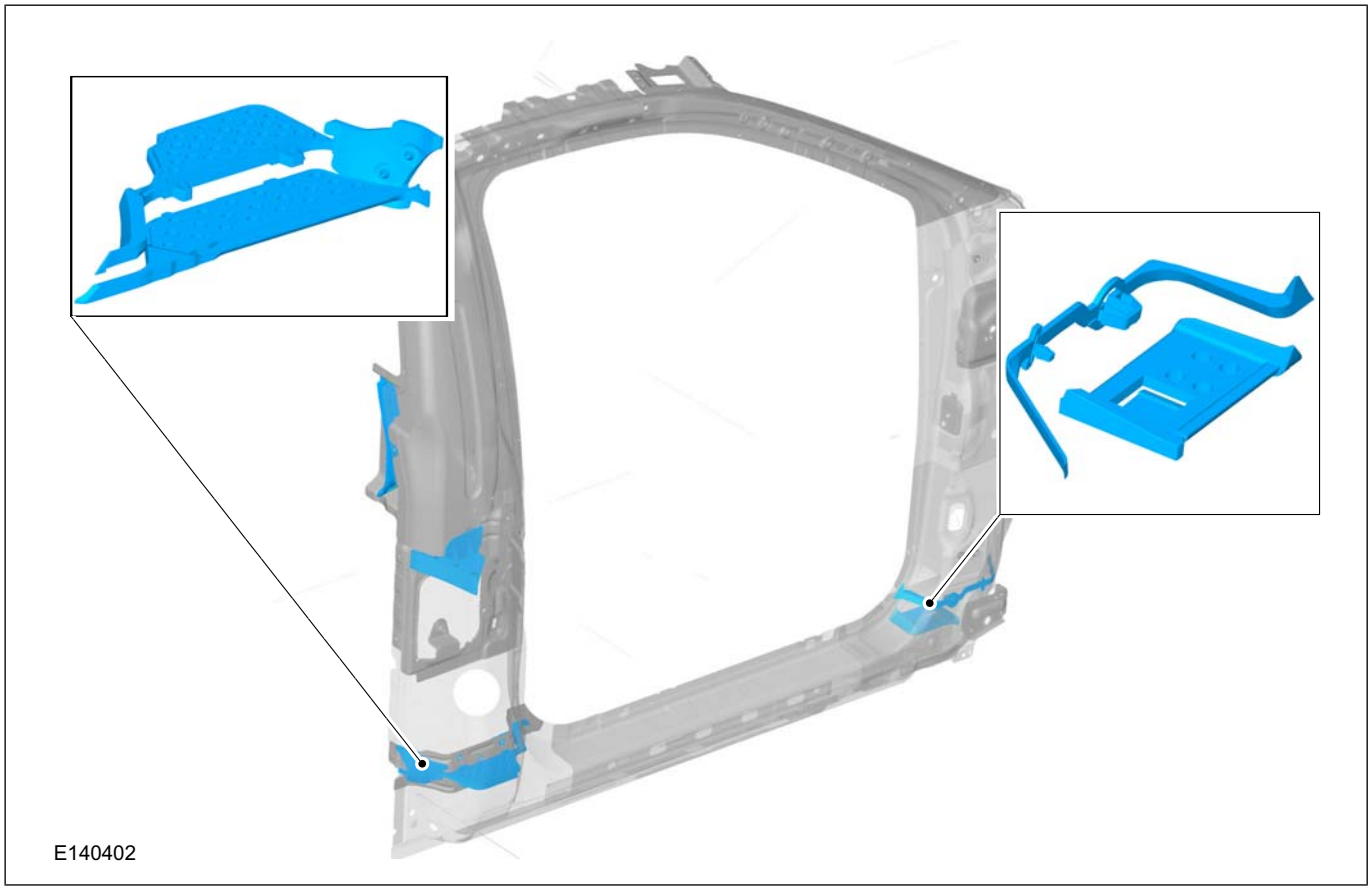

DESCRIPTION AND OPERATION

NVH elements, double cab

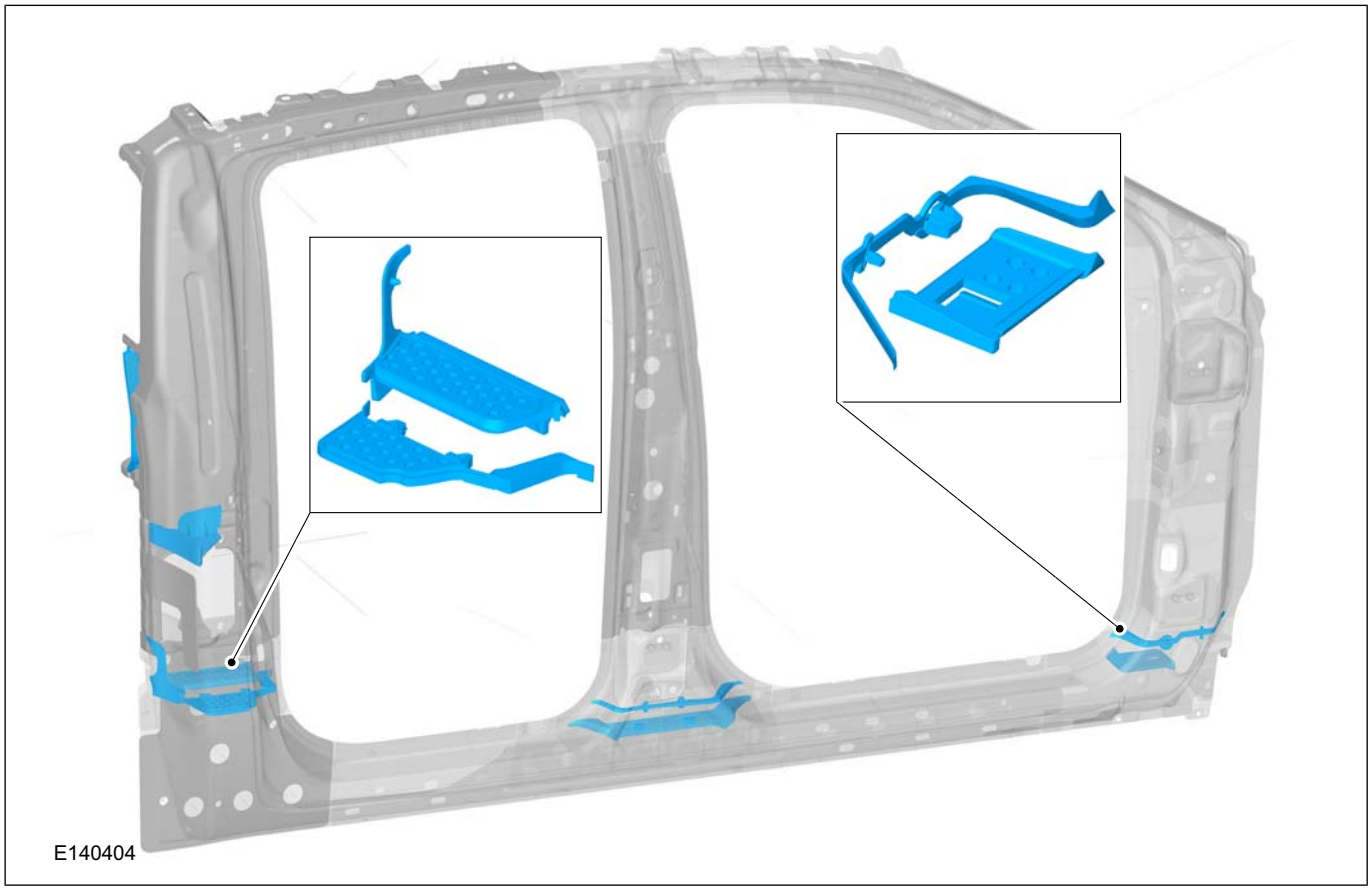

DESCRIPTION AND OPERATION

NVH elements, stretch cab

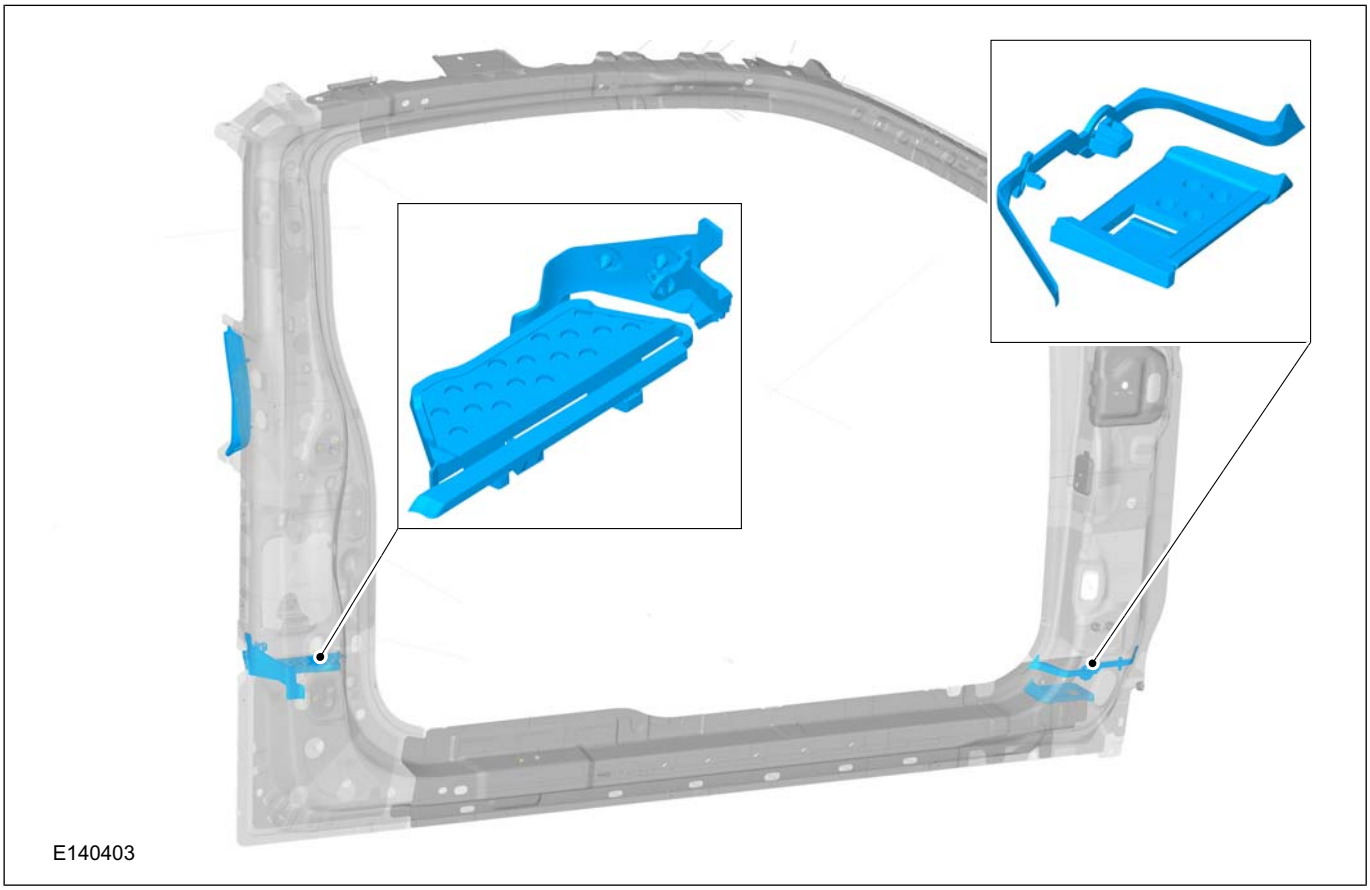

DESCRIPTION AND OPERATION

Body and Frame – Overview

Introduction

With the 2011.25 model year, the Ford Ranger is superseded by a completely new vehicle. The T6 is based on the U1 platform which has been developed in co-operation with Mazda. 2-door and 4-door body versions are offered. Within the company the model designation is P375. Overall the vehicle weighs less than its predecessor.

However, it offers increased occupant safety through the use of high-strength and super-high-strength steels. The high-strength and super-high-strength steels used make extra demands on the tools to be employed for some body repairs.

High-strength and super-high-strength steels

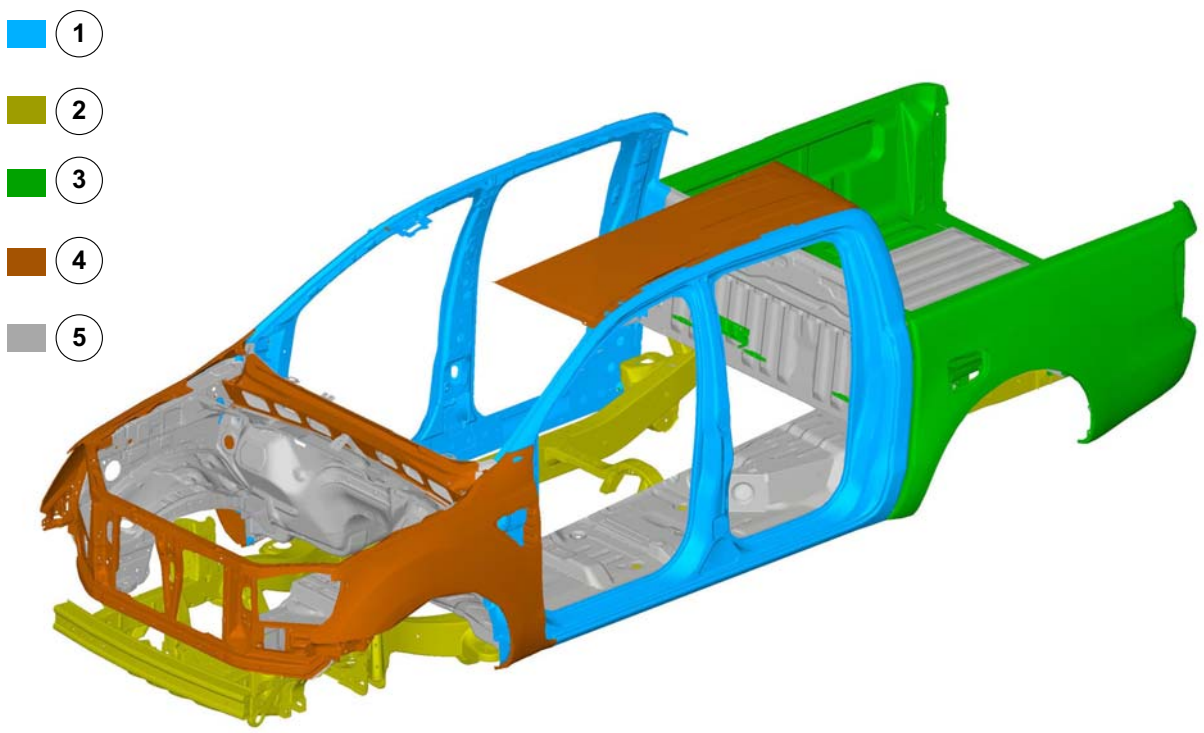

E140288

Item	Description
1 UHSS (> 800 MPa)	
2 EHSS (380 - 800 MPa)	
3 VHSS (280 - 380 MPa)	
4 HSS (180 - 280 MPa)	

Item	Description
5 MS (< 180 MPa)	

Usibor steel

Single cab

DESCRIPTION AND OPERATION

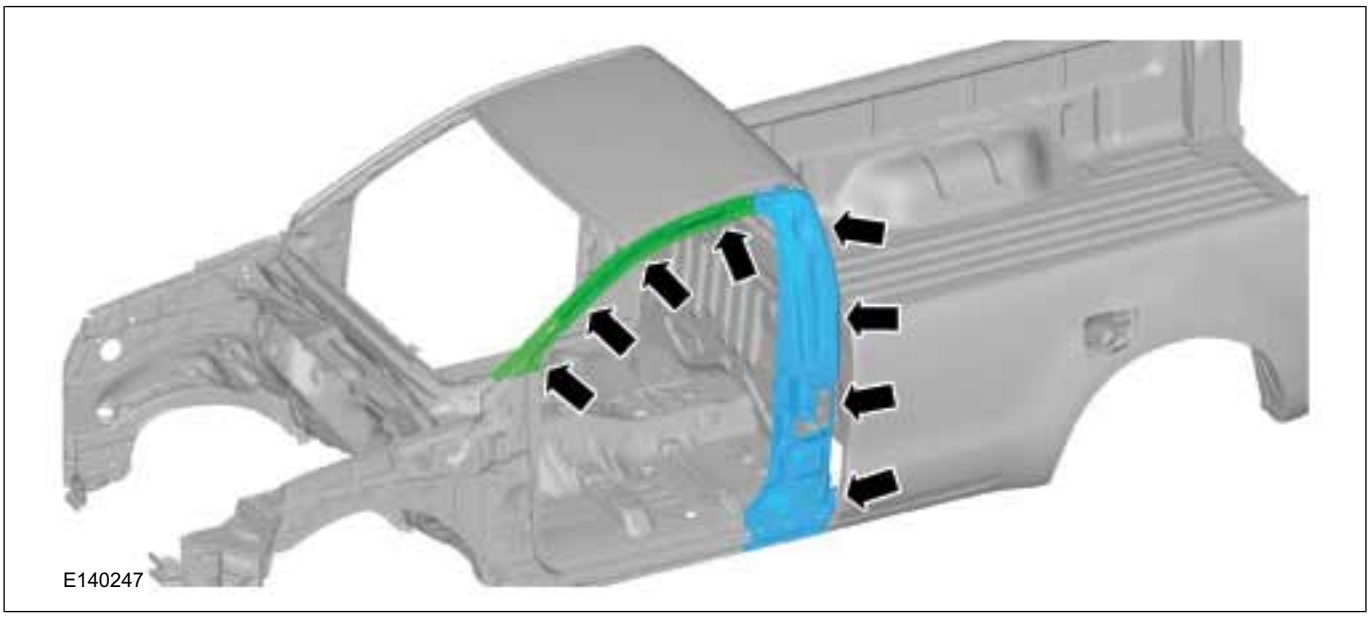

Double cab

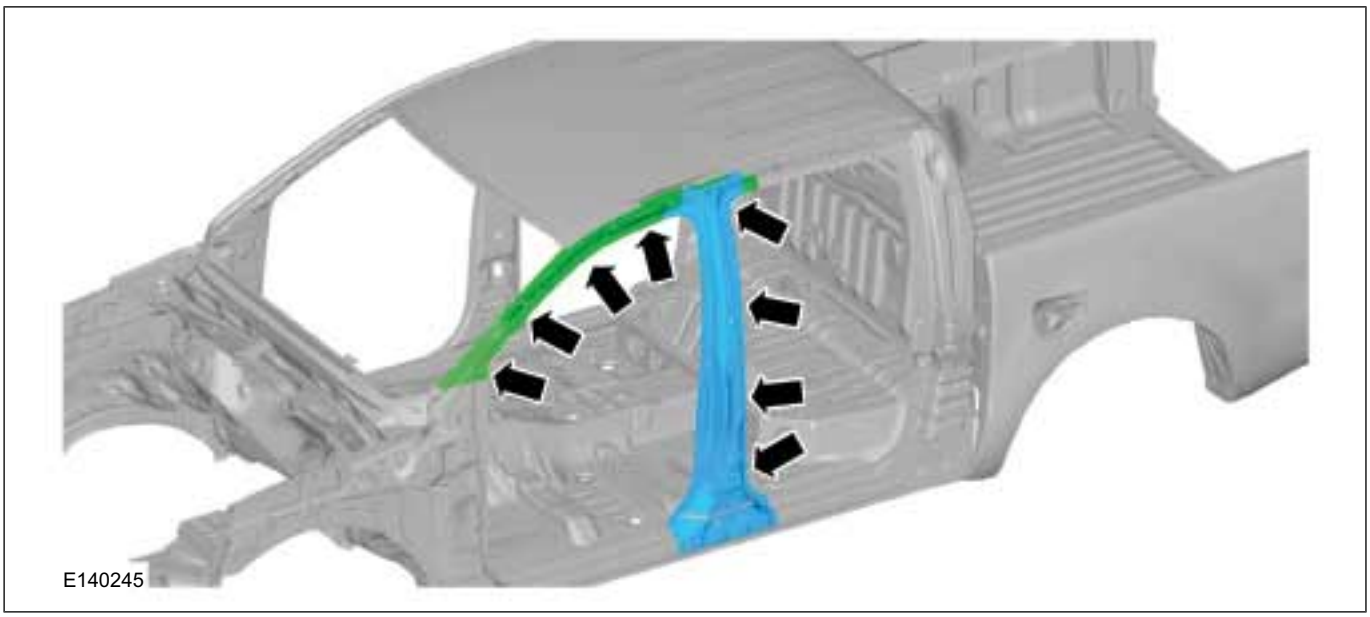

Super cab

DESCRIPTION AND OPERATION

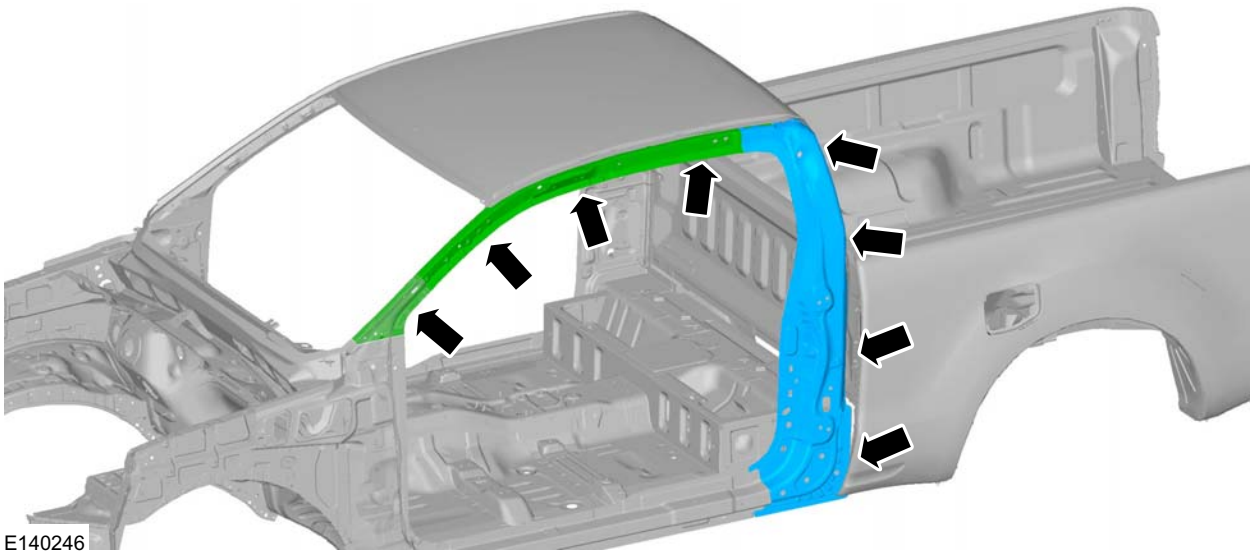

The reinforcements at the A- and B-pillars are made of Usibor steel. This material has a yield strength of 1300 MPa.

Sectional repairs must NOT be performed on components made of Usibor !

The required continuous MIG weld seam in the cut area would cause structural changes in the steel and lead to a significant loss in strength.

In the event of damage, the complete component must therefore always be renewed.

Also, because of the strength of these components, it is not always possible to work them with conventional body repair tools.

or welding work (resistance spot welding and inert gas puddle welding), additional preparation work and/or special welding equipment are required.

Sheet metal parts for quarter panel partial replacement

Single cab

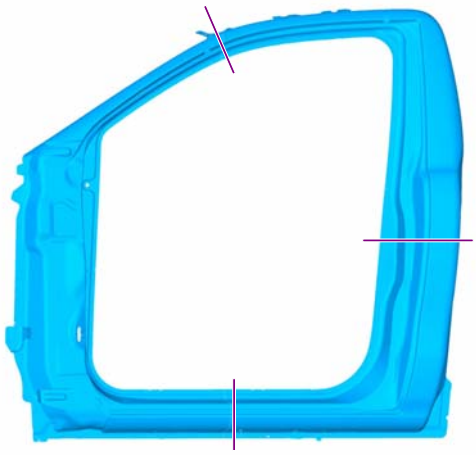

Double cab

DESCRIPTION AND OPERATION

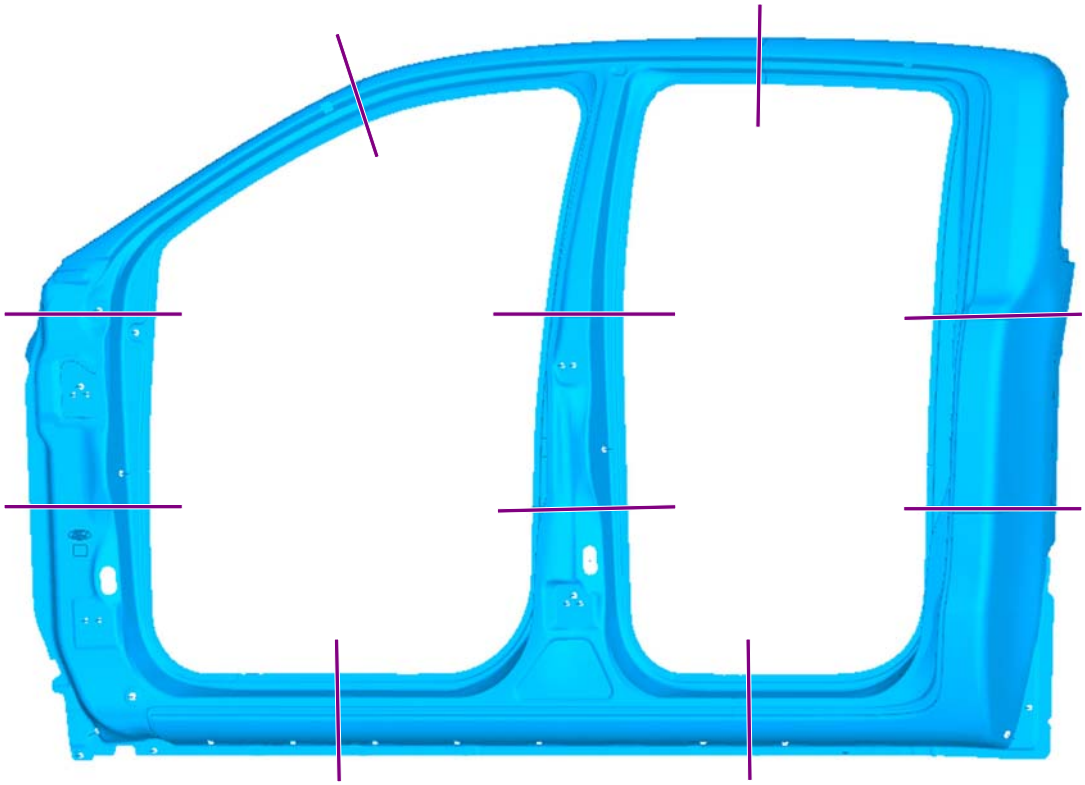

E140289

Super cab

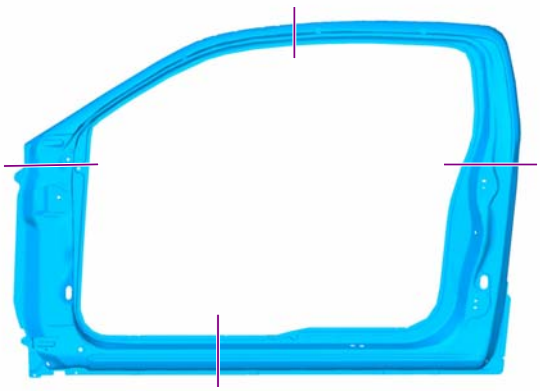

E140305

Anti corrosion protection

DESCRIPTION AND OPERATION

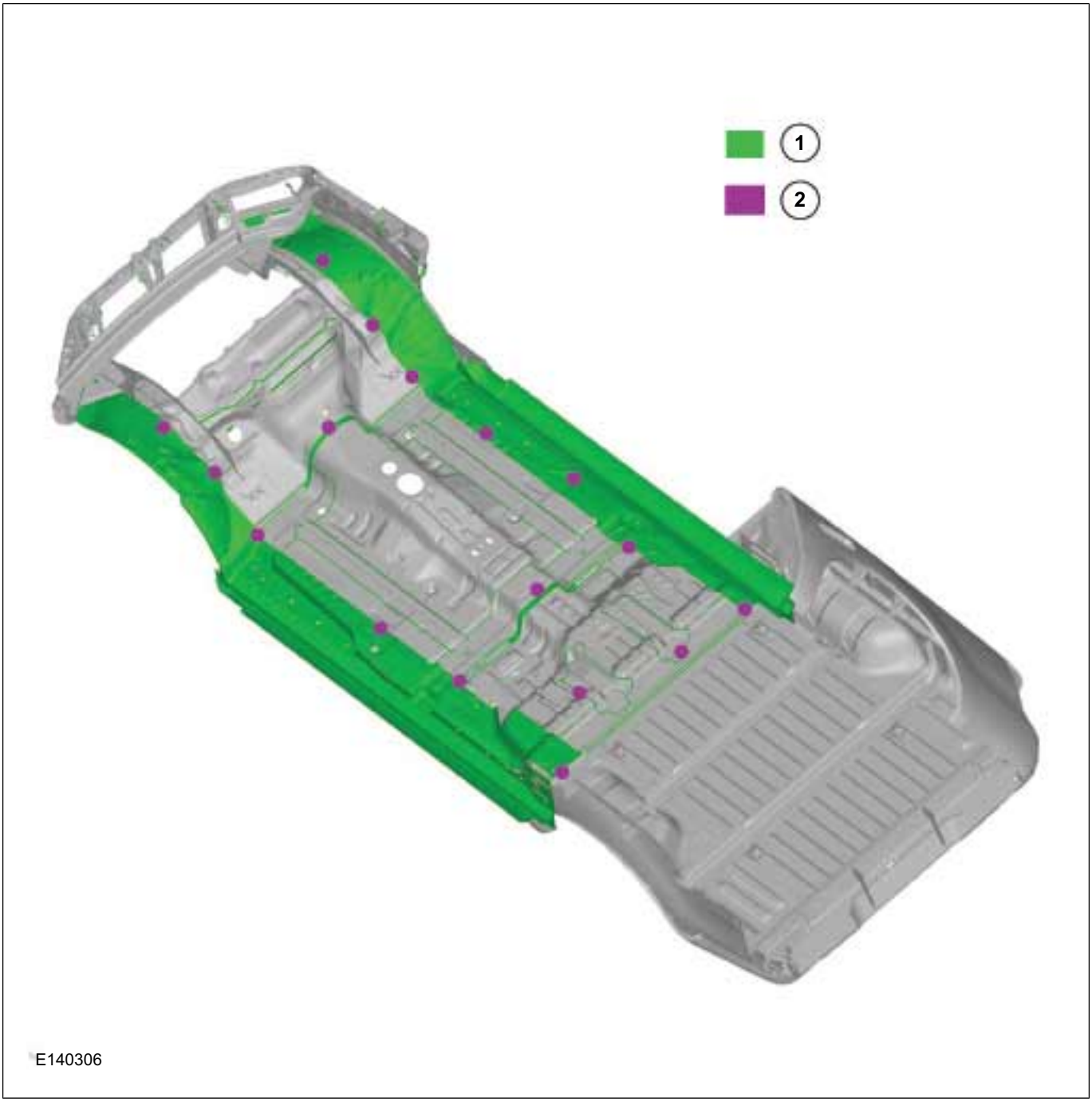

Item	Description
1 Underbody PVC stone chip protection	
2 Injection points for cavity wax protection	

GENERAL PROCEDURES

Underbody Tolerance Check

1. **Body dimensions, all versions (quick measurements using the Allvis system)**
   - All dimensions are measured from the middle of the hole or bolt head or from the edge of the panel, using the Allvis system, with component assemblies installed.
   - A tolerance of ± 3 mm applies to all measurements given. All detailed illustrations correspond to the left-hand side of the vehicle.

Allvis specifications

Point of measurement	Adapter	Height setting of the test probes
1	xx mm (Socket)	xxx mm
2	xx mm (Socket)	xxx mm
3	xx mm (Socket)	xxx mm
4	xx mm (Probe)	xxx mm

GENERAL PROCEDURES

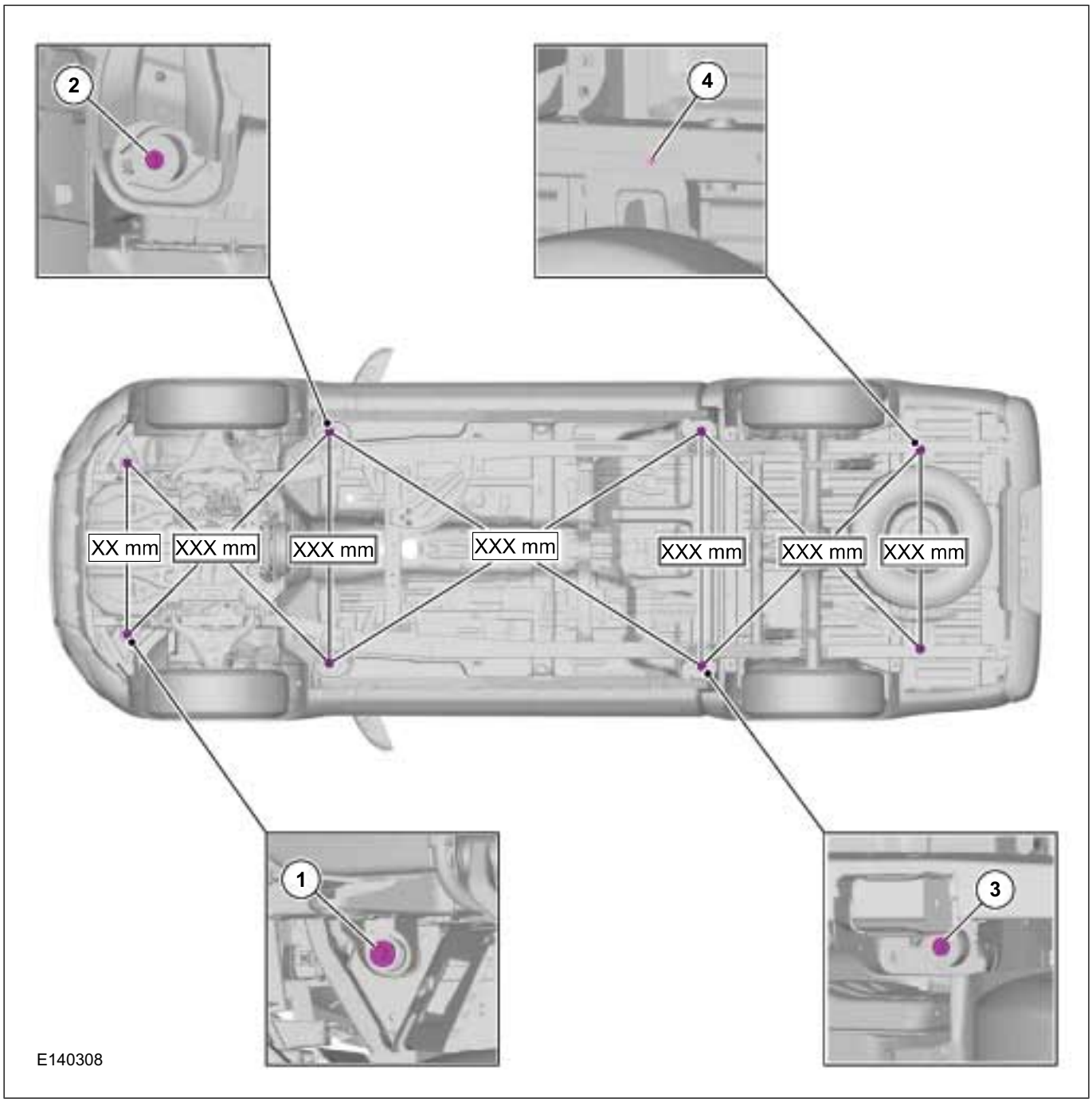

GENERAL PROCEDURES

Frame Tolerance Check

1. Front end body dimensions, all vehicles

- All dimensions with tolerance ± 3 mm. All dimensions were determined starting from the centre of each hole or panel edge using a symmetrically adjusted measuring gauge.

Measuring points and dimensions

1 - 5 = XX mm	4 - 6 = XX mm
1 - 9 = XX mm	5 - 8 = XX mm
2 - 5 = XX mm	5 - 9 = XX mm
2 - 7= XX mm	5 - 10 = XXmm
3 - 8 = XX mm	

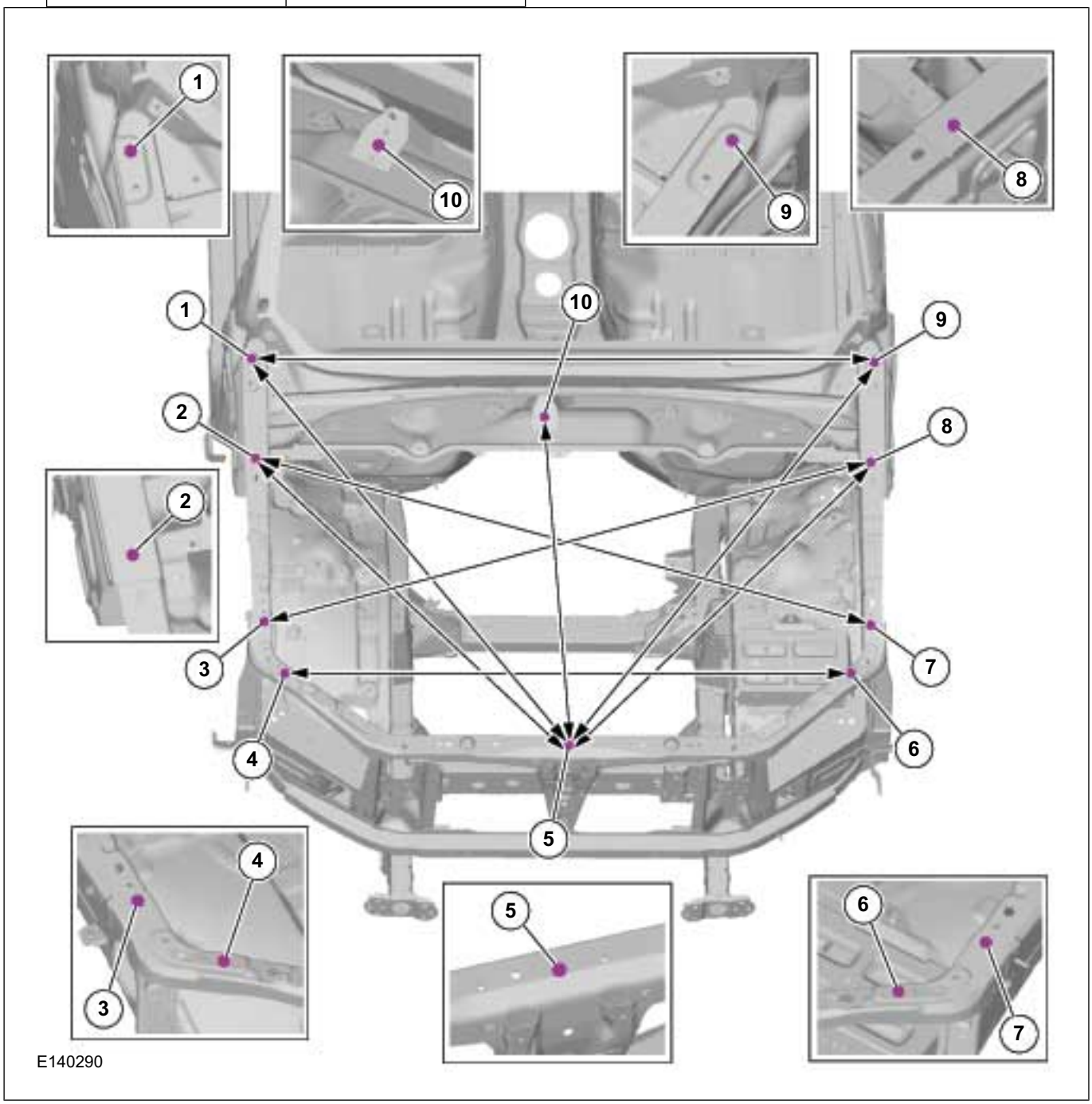

2. Body dimensions, side view double cab

- All dimensions with tolerance ± 3 mm. All dimensions were determined starting from

GENERAL PROCEDURES

the edge of the steel panel using a symmetrically adjusted measuring gauge.

- Measuring points 1, 2, 3, 4, 6, 7, 10 and 11 are measured in the curve and represent the greatest distance to the measuring point opposite.
- The detailed views of measuring points 8, 9 and 12 are shown looking from the vehicle interior outwards.
- The detailed view of measuring point 5 is measured in the hole and represent the greatest distance to the measuring point opposite.

Measuring points and dimensions

1 - 10 = XX mm	4 - 7 = XX mm
2 - 11 = XX mm	5 - 8 = XX mm
3 - 6 = XX mm	9 - 12 = XX mm

GENERAL PROCEDURES

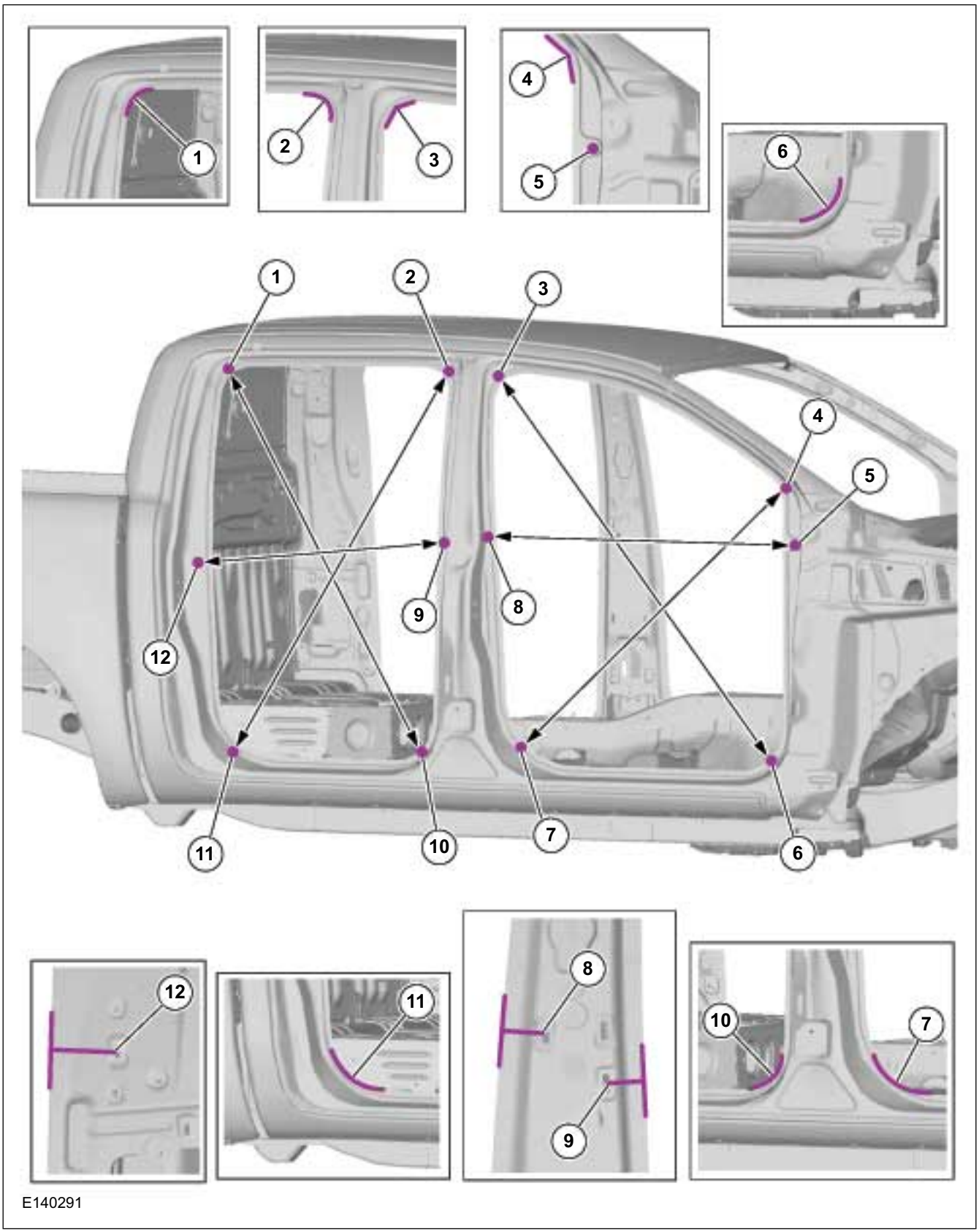

3. Body dimensions, side view single cab

- All dimensions with tolerance ± 3 mm. All dimensions were determined starting from the edge of the steel panel using a symmetrically adjusted measuring gauge.

GENERAL PROCEDURES

- Measuring points 1, 2, 4 and 5 are measured in the curve and represent the greatest distance to the measuring point opposite.
- The detailed view of measuring point 3 is measured in the hole and represent the greatest distance to the measuring point opposite.
- The detailed view of measuring point 6 is shown looking from the vehicle interior outwards.

Measuring points and dimensions

1 - 4 = XX mm	3 - 6 = XX mm
2 - 5 = XX mm	

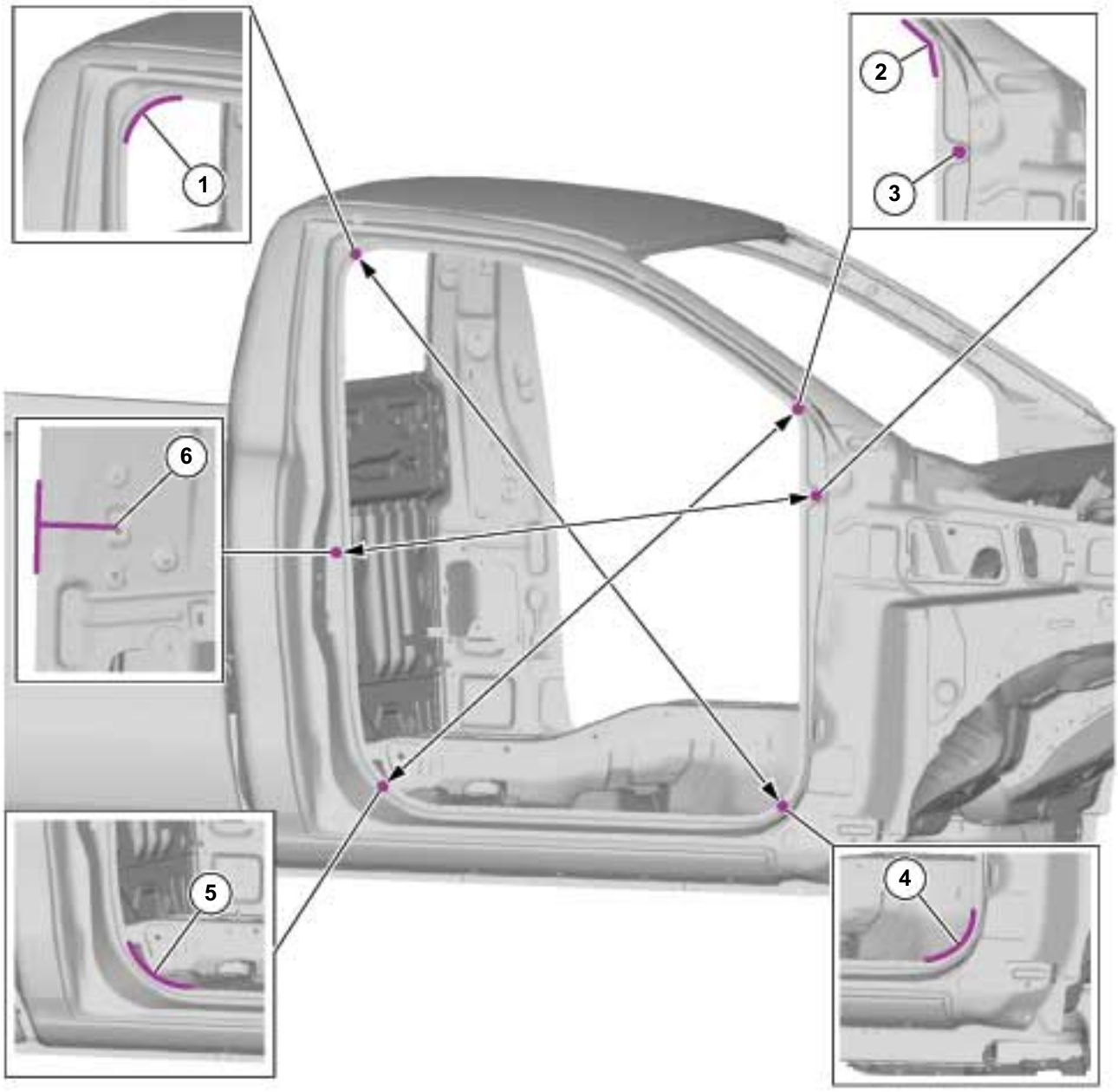

E140378

4. Body dimensions, side view stretch cab

- All dimensions with tolerance ± 3 mm. All dimensions were determined starting from the edge of the steel panel using a symmetrically adjusted measuring gauge.
- Measuring points 1, 2, 4 and 5 are measured in the curve and represent the greatest distance to the measuring point opposite.
- The detailed view of measuring point 3 is measured in the hole and represent the

GENERAL PROCEDURES

greatest distance to the measuring point opposite.

- The detailed view of measuring point 6 is shown looking from the vehicle interior outwards.

Measuring points and dimensions

1 - 4 = XX mm	3 - 6 = XX mm
2 - 5 = XX mm	

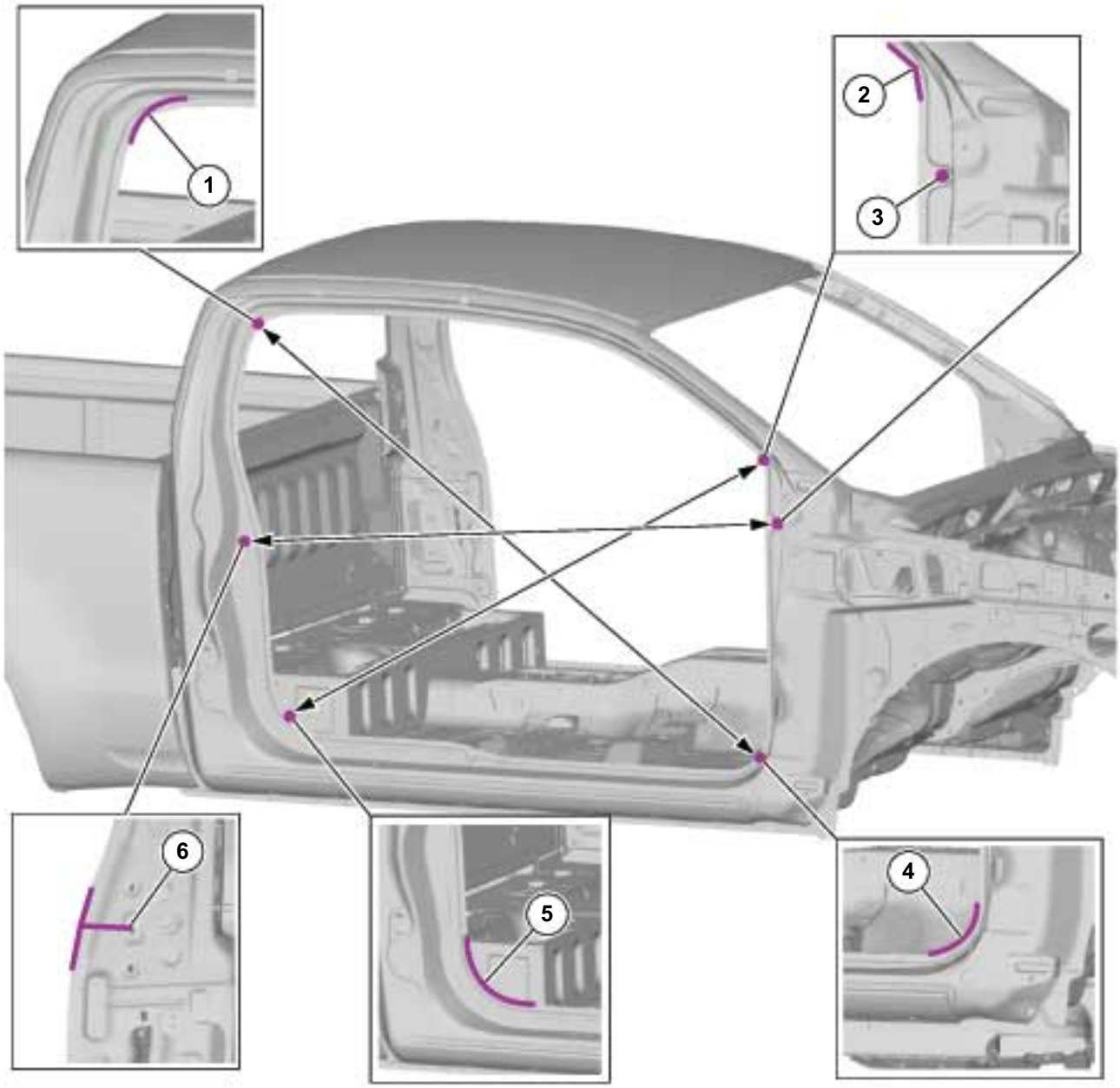

E140380

5. Body dimensions, interior double cab

- All dimensions with tolerance ± 3 mm. All dimensions were determined starting from the center of the welded flange using a symmetrically adjusted measuring gauge.
- Measuring points 3 and 4are measured in the hole and represent the greatest distance to the measuring point opposite.
- The detailed views of measuring points 1, 2, 5 and 6 are shown looking from the vehicle interior outwards.
-

GENERAL PROCEDURES

Measuring points and dimensions

1 - 6 = XX mm	3 - 4 = XX mm
2 - 5 = XX mm	

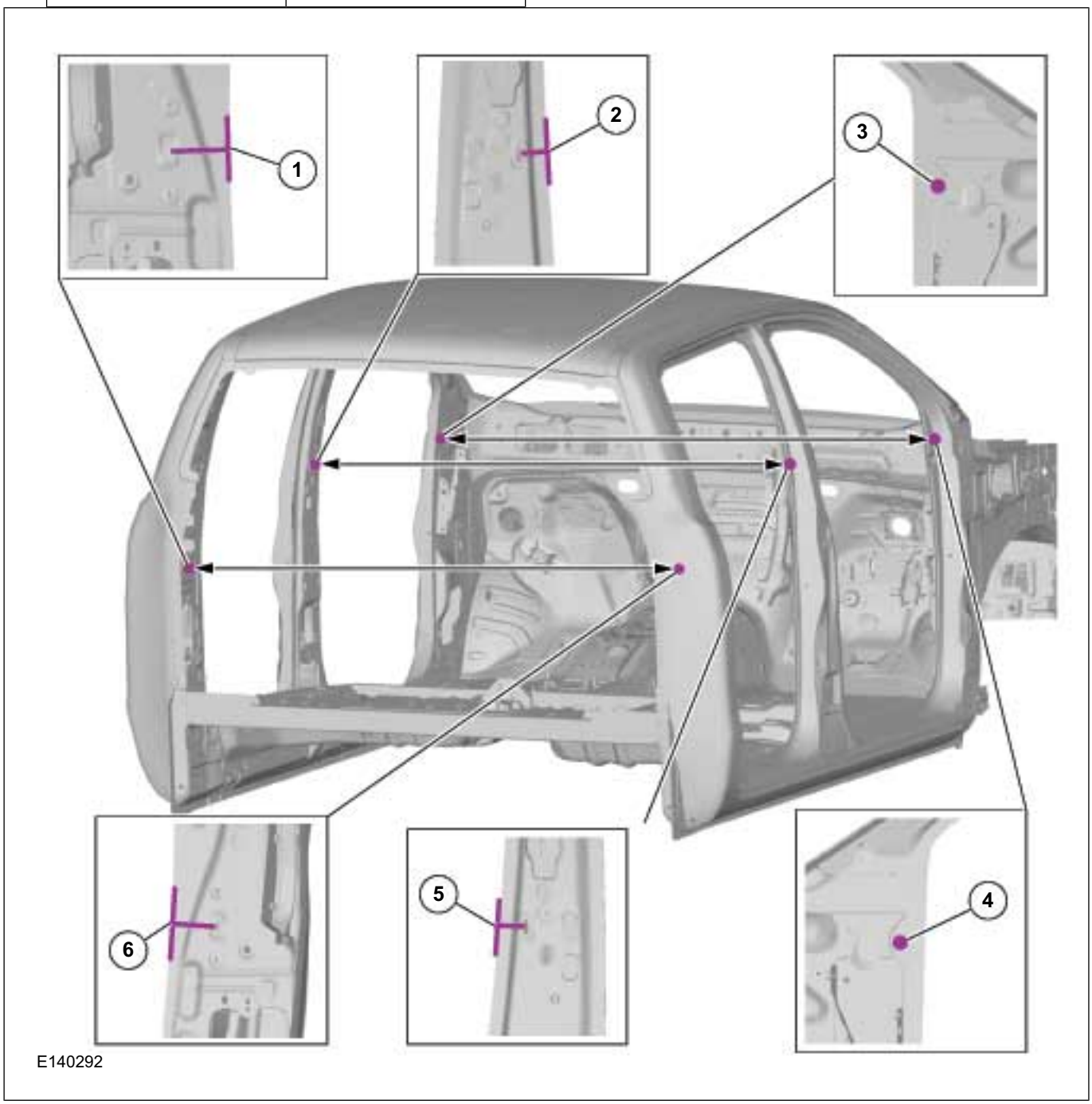

6. Body dimensions, interior single cab

- All dimensions with tolerance ± 3 mm. All dimensions were determined starting from the center of the welded flange using a symmetrically adjusted measuring gauge.
- Measuring points 1 and 2 are measured in the hole and represent the greatest distance to the measuring point opposite.
- The detailed views of measuring points 3 and 4 are shown looking from the vehicle interior outwards.

Measuring points and dimensions

1 - 2 = XX mm	3-4 = XX mm

GENERAL PROCEDURES

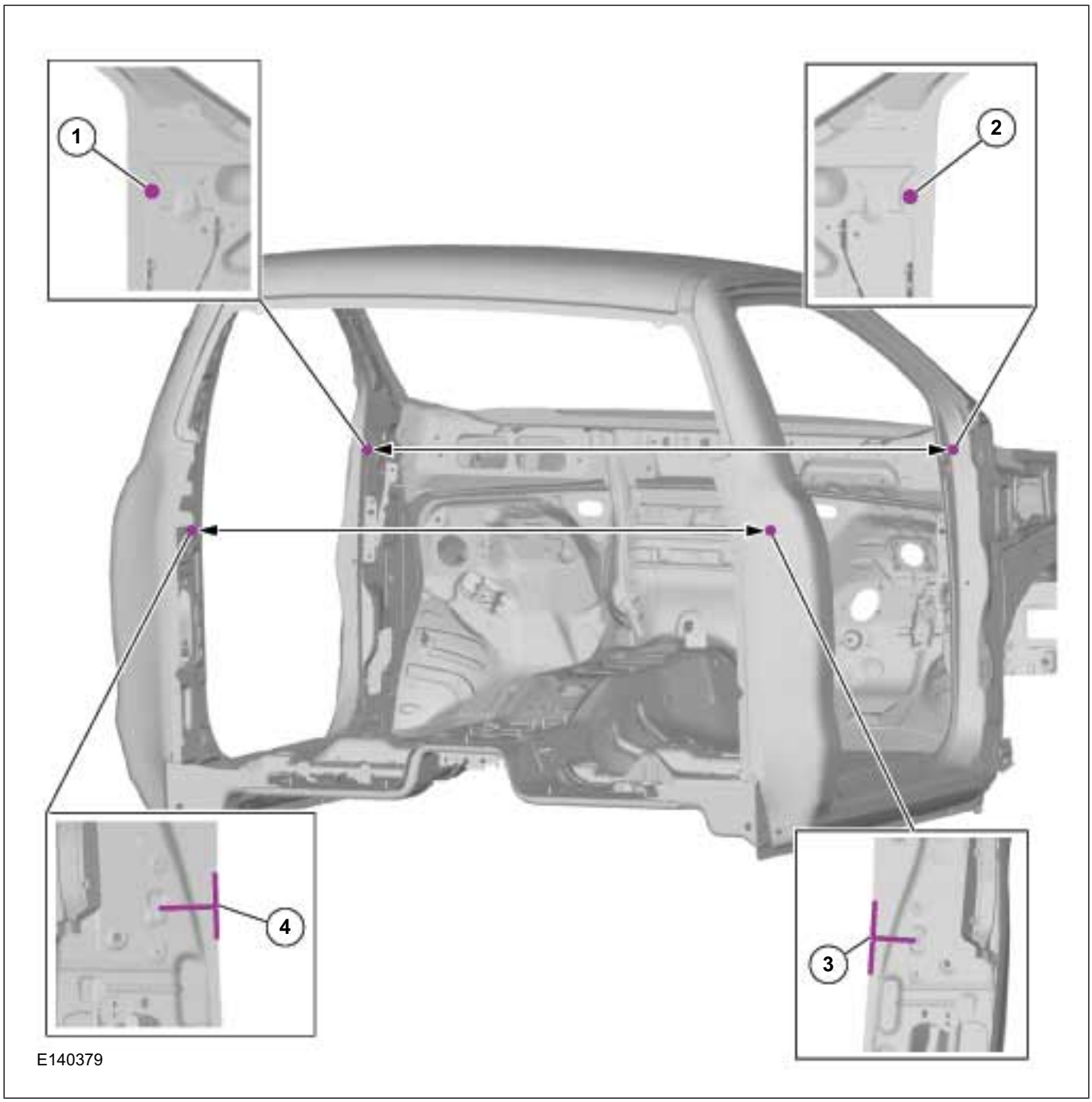

7. Body dimensions, interior strecth cab

- All dimensions with tolerance ± 3 mm. All dimensions were determined starting from the center of the welded flange using a symmetrically adjusted measuring gauge.
- Measuring points 1 and 2 are measured in the hole and represent the greatest distance to the measuring point opposite.
- The detailed views of measuring points 3 and 4 are shown looking from the vehicle interior outwards.

Measuring points and dimensions

1 - 2 = XX mm	3 - 4 = XX mm

GENERAL PROCEDURES

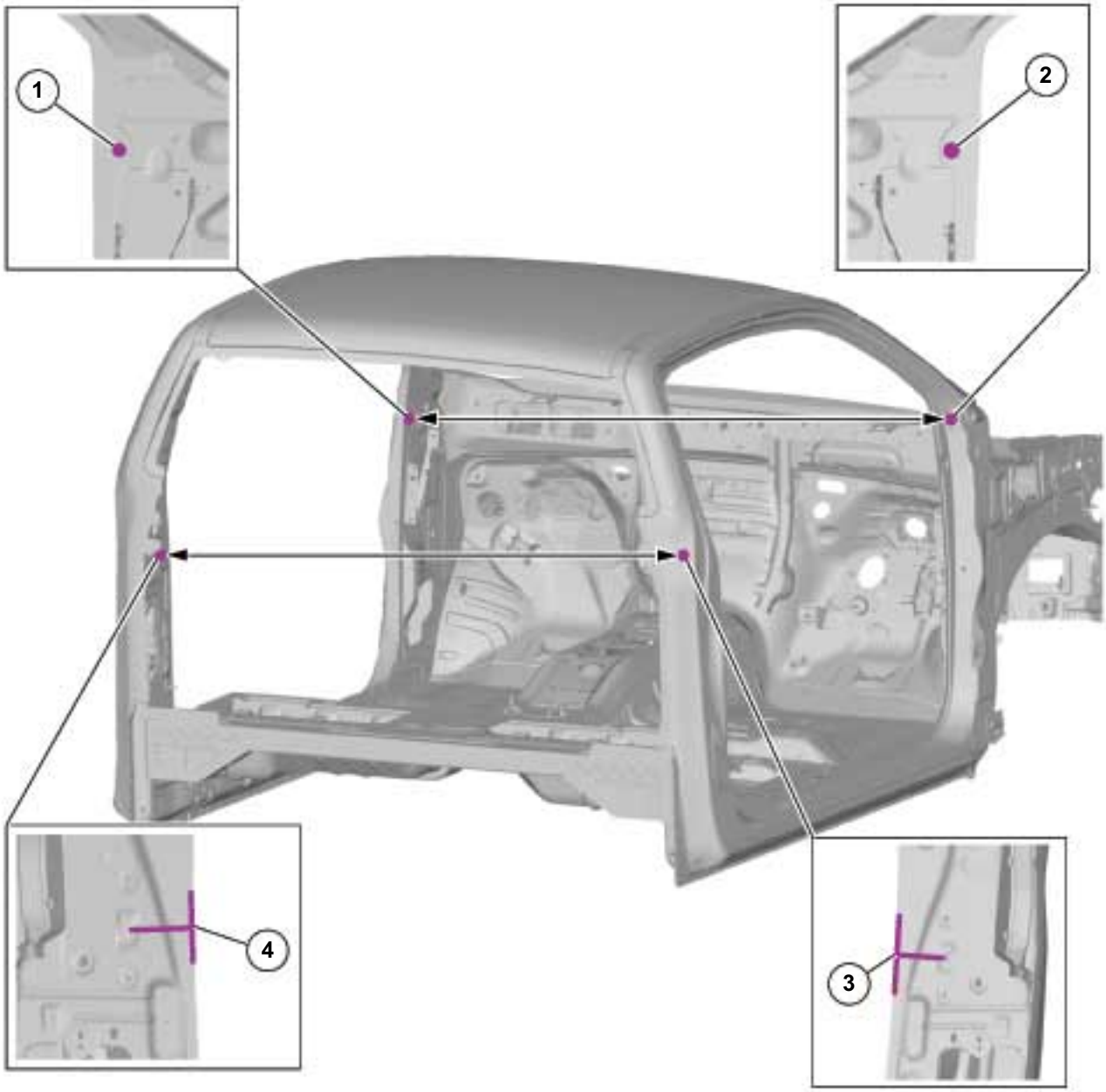

E140381

8. Body dimensions, rear all vechicles

- All dimensions with tolerance ± 3 mm. All dimensions were determined starting from the center of the welded flange using a symmetrically adjusted measuring gauge.
- Measuring points 1, 2, 3, 4, 6, 9, and 10 are measured in the curve and represent the greatest distance to the measuring point opposite.
- The detailed views of measuring points 5 and 8 are shown looking from the vehicle interior outwards.

Measuring points and dimensions

1 - 3 = XX mm	4 - 7 = XX mm
2 - 10 = XX mm	5 - 8 = XX mm
6 - 9 = XX mm	5 - 9 = XX mm

GENERAL PROCEDURES

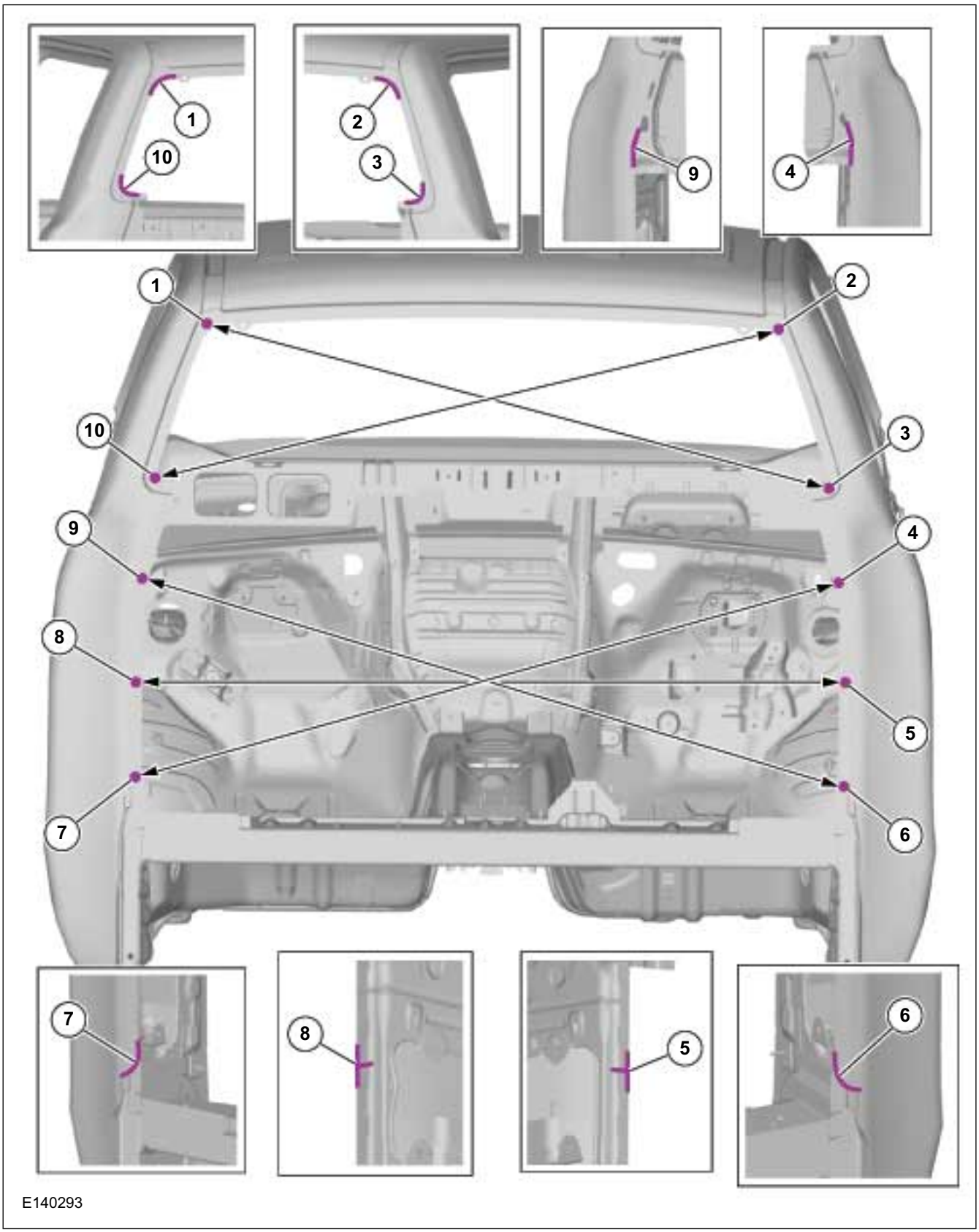

9. Tailgate opening dimensions, all vechicles

- All dimensions with tolerance ± 3 mm. All dimensions were determined starting from the center of the welded flange using a symmetrically adjusted measuring gauge.

GENERAL PROCEDURES

Measuring points and dimensions

1 - 3 = XX mm	4 - 7 = XX mm

2 - 10 = XX mm	5 - 8 = XX mm
6 - 9 = XX mm	5 - 9 = XX mm

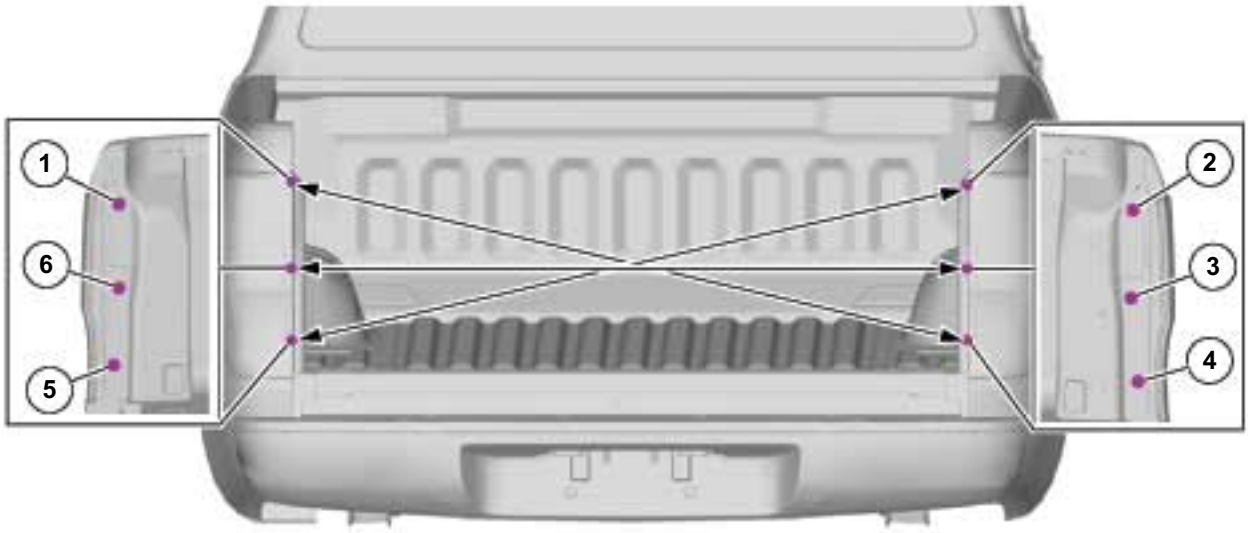

E140294

SECTION 501-27 Front End Sheet Metal Repairs

VEHICLE APPLICATION: 2011.50 Ranger

CONTENTS PAGE

REMOVAL AND INSTALLATION

Front Fender..... 501-27-2
Fender Apron Panel Reinforcement..... 501-27-4

REMOVAL AND INSTALLATION

Front Fender

Removal

NOTE: Removal steps in this procedure may contain installation details.

1. Refer to: Battery Disconnect and Connect (414-01 Battery, Mounting and Cables, General Procedures).
2. Refer to: Front Bumper Cover (501-19 Bumpers, Removal and Installation).
3. Refer to: Headlamp Assembly (417-01 Exterior Lighting, Removal and Installation).
4.

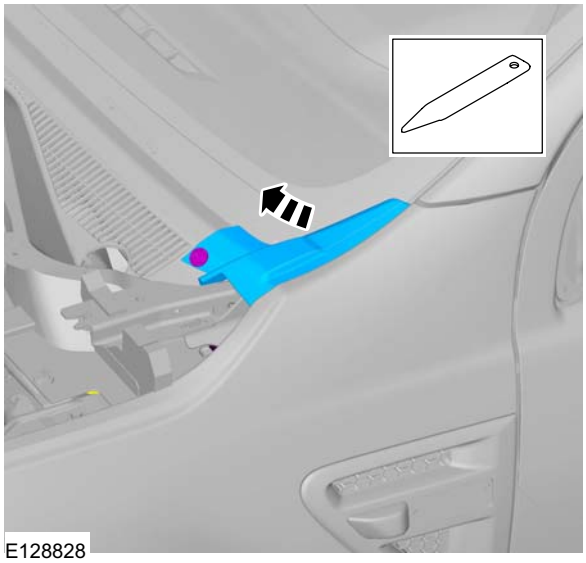
E128828

5.

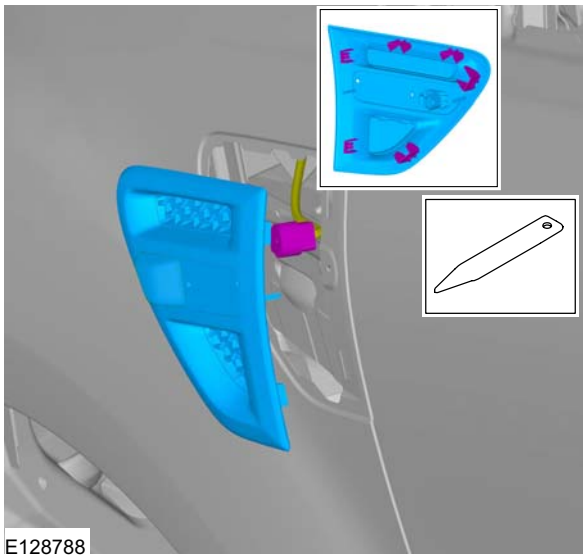
E128788

6. Torque: 9 Nm

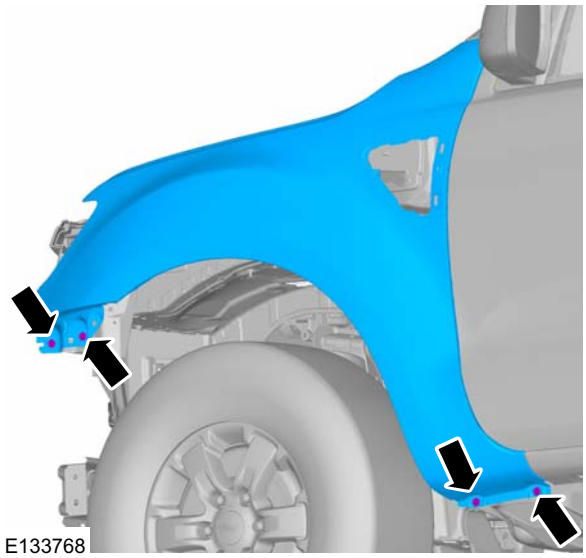
E133768

REMOVAL AND INSTALLATION

7. Torque: 9 Nm

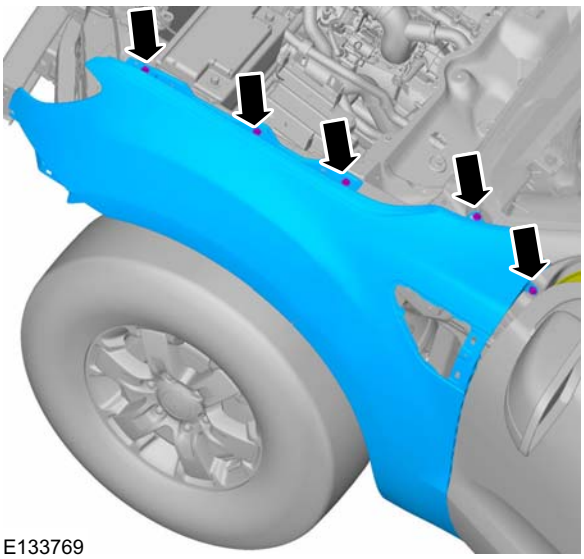

Installation

1. To install, reverse the removal procedure.

REMOVAL AND INSTALLATION

Fender Apron Panel Reinforcement

General Equipment

Air Body Saw

Removal

1. Refer to: Battery Disconnect and Connect (414-01 Battery, Mounting and Cables, General Procedures).
2. Refer to: Front Fender (501-27 Front End Sheet Metal Repairs, Removal and Installation).
3. • **Partial Replacement**
   • Possible cut line.

   General Equipment: Air Body Saw

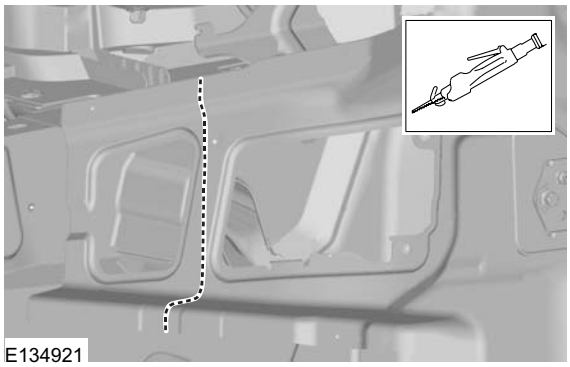
E134921

4. • Mill out the spot welds.

   General Equipment: Spot weld drill Bit

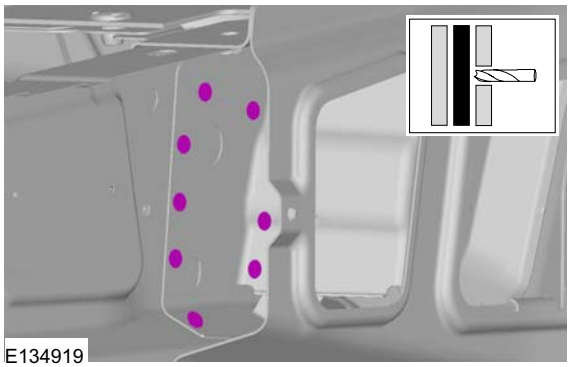
E134919

General Equipment

Spot weld drill Bit

5. • Mill out the spot welds.

   General Equipment: Spot weld drill Bit

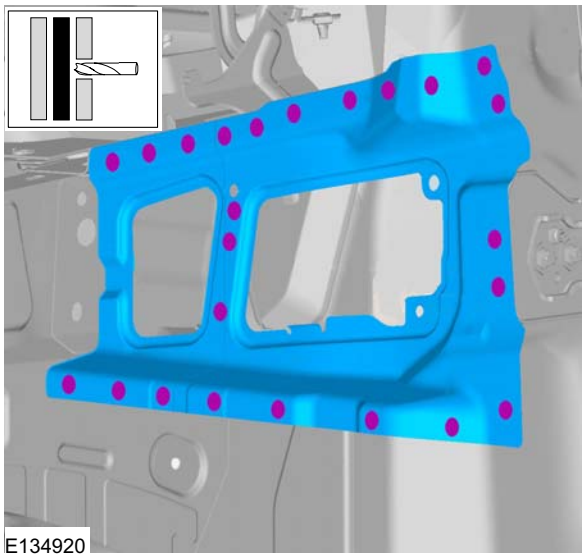
E134920

Installation

1. **NOTE:** Before resistance spot welding of body panels with a total panel thickness of 3 mm and greater, the manufacturer's welding equipment instructions and sub-section 501-25 must be followed.

   Refer to: Tools and Equipment for Body Repairs (501-25 Body Repairs - General Information, Description and Operation).

2. **NOTE:** Sealer or adhesive must not be applied in welding zones. Areas which were bonded or sealed needs to be thoroughly sealed afterwards.

   Refer to: Sealer, Underbody Protection Material and Adhesives (501-25 Body Repairs - General Information, Description and Operation).

REMOVAL AND INSTALLATION

3. • Resistance spot weld - Panel thickness 3 mm and greater.

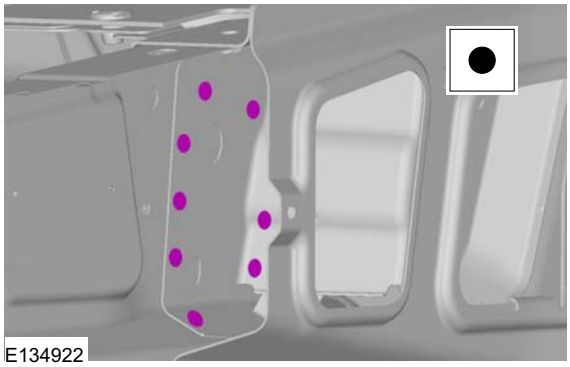

4. • Resistance spot weld - Panel thickness 3 mm and greater.

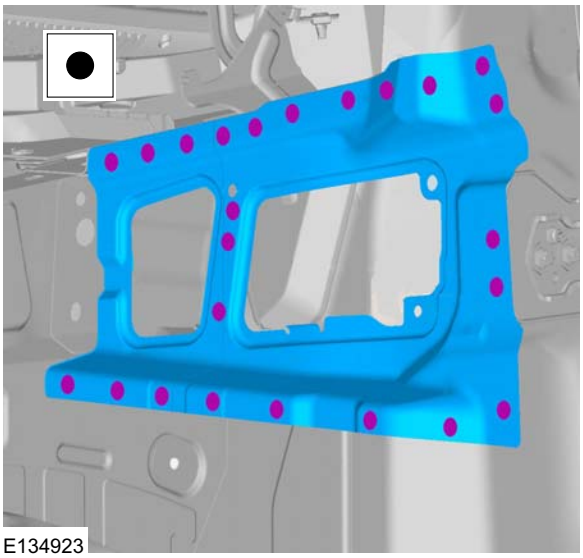

SECTION 501-28 Roof Sheet Metal Repairs

VEHICLE APPLICATION: 2011.50 Ranger

CONTENTS PAGE

REMOVAL AND INSTALLATION

Roof Panel — Single Cab..... 501-28-2
Roof Panel — Double Cab..... 501-28-7
Roof Panel — Stretch Cab..... 501-28-8

REMOVAL AND INSTALLATION

Roof Panel — Single Cab

General Equipment
Hot Air Gun
Spot weld drill Bit

Materials	
Name	**Specification**
Windshield Adhesive Kit	WSS-M11P57-A5

Removal

1. • Front and Rear Door
   - Refer to: Windshield Glass (501-11 Glass, Frames and Mechanisms, Removal and Installation).
   - Refer to: Headliner - 4-Door (501-05 Interior Trim and Ornamentation, Removal and Installation).
   - A- B- and C-Pillar Trim

     Refer to: A-Pillar Trim Panel (501-05, Removal and Installation).
     Refer to: B-Pillar Trim Panel (501-05, Removal and Installation).
     Refer to: C-Pillar Trim Panel - 4-Door (501-05, Removal and Installation).
   - Refer to: Rear Window Glass (501-11 Glass, Frames and Mechanisms, Removal and Installation).
2. • General Equipment: Spot weld drill Bit

REMOVAL AND INSTALLATION

3. • General Equipment: Spot weld drill Bit

4. • General Equipment: Hot Air Gun

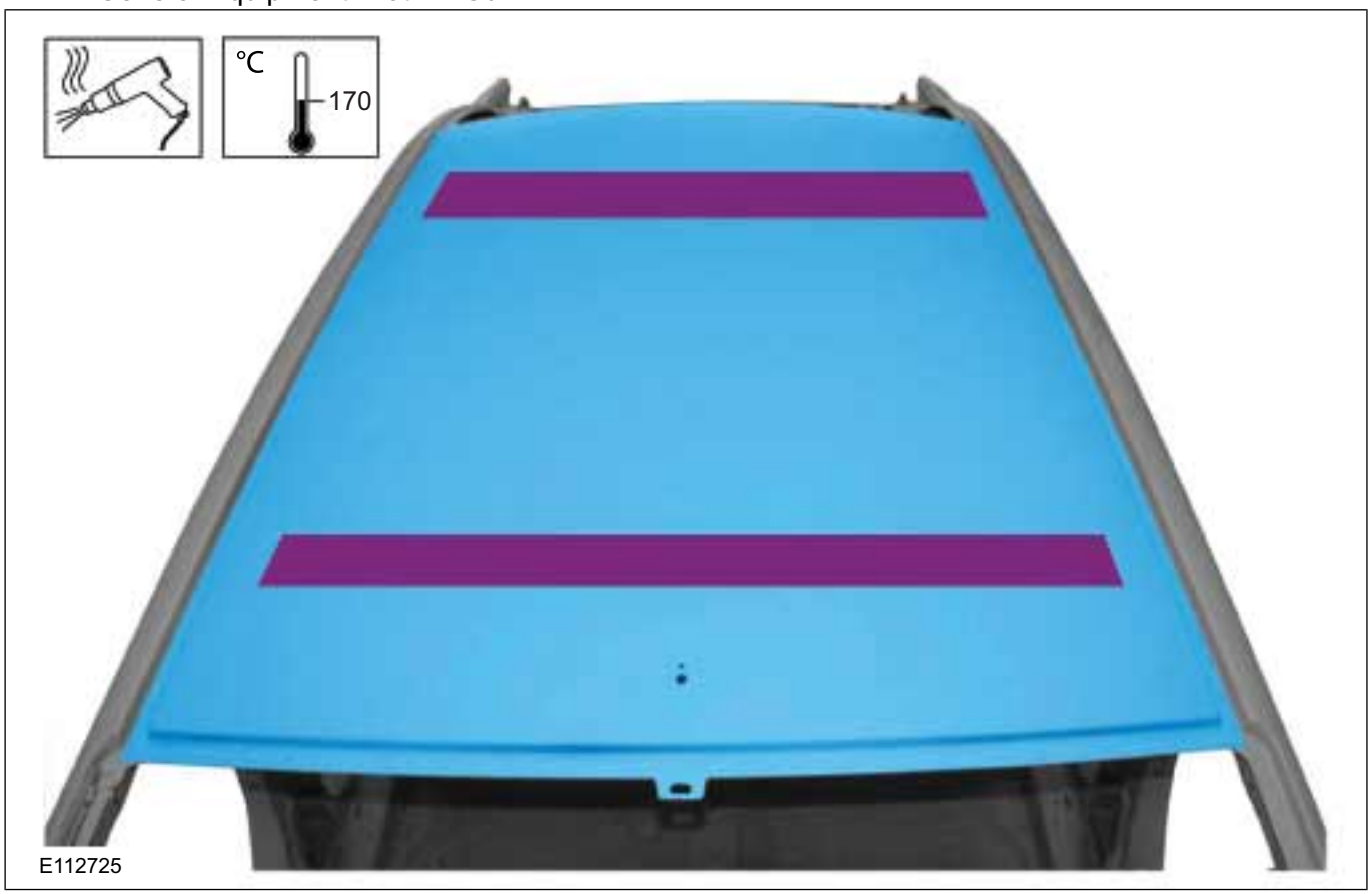

REMOVAL AND INSTALLATION

Installation

1. **NOTE:** Before resistance spot welding of body panels with a total panel thickness of 3 mm and greater, the manufacturer's welding equipment instructions and sub-section 501-25 must be followed.

   Authoring Template

   Refer to: Tools and Equipment for Body Repairs (501-25 Body Repairs - General Information, Description and Operation).

2. **NOTE:** Sealer or adhesive must be applied with a minimum height of 20 mm.

   Refer to: Sealer, Underbody Protection Material and Adhesives (501-25 Body Repairs - General Information, Description and Operation).

3. • Material: Windshield Adhesive Kit (WSS-M11P57-A5) adhesive

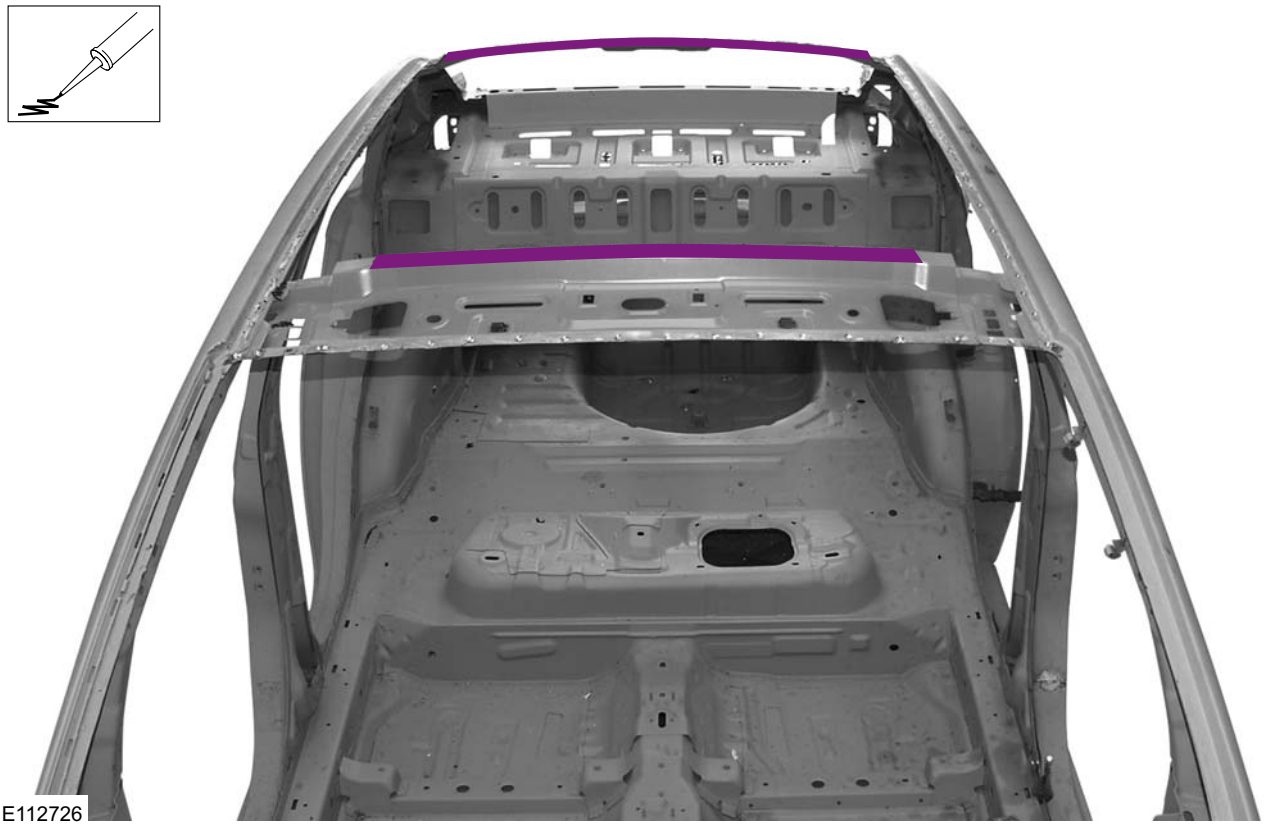

4. • Resistance spot weld - Panel thickness 3 mm and greater!

REMOVAL AND INSTALLATION

5. • Resistance spot weld - Panel thickness 3 mm and greater!

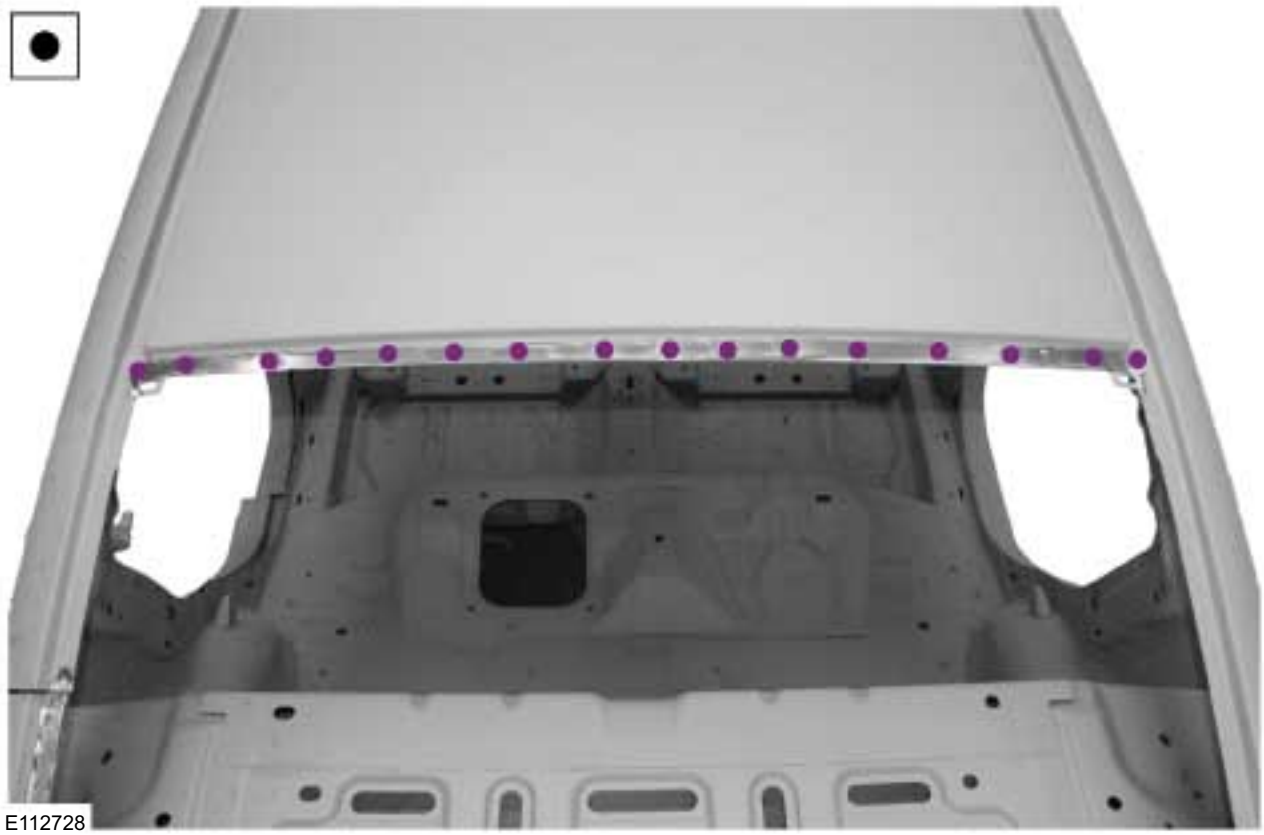

REMOVAL AND INSTALLATION

6.
- Front and Rear Door
- Refer to: Windshield Glass (501-11 Glass, Frames and Mechanisms, Removal and Installation).
- Refer to: Headliner - 4-Door (501-05 Interior Trim and Ornamentation, Removal and Installation).
- A- B- and C-Pillar Trim

  Refer to: A-Pillar Trim Panel (501-05, Removal and Installation).
  Refer to: B-Pillar Trim Panel (501-05, Removal and Installation).
  Refer to: C-Pillar Trim Panel - 4-Door (501-05, Removal and Installation).
- Refer to: Rear Window Glass (501-11 Glass, Frames and Mechanisms, Removal and Installation).

REMOVAL AND INSTALLATION

Roof Panel — Double Cab

1. **Information not available at this time.**

REMOVAL AND INSTALLATION

Roof Panel — Stretch Cab

2. Information not available at this time.

SECTION 501-29 Side Panel Sheet Metal Repairs

VEHICLE APPLICATION: 2011.50 Ranger

CONTENTS PAGE

REMOVAL AND INSTALLATION

A-Pillar Outer Panel..... 501-29-2
A-Pillar Assembly..... 501-29-11
Rocker Panel — Double Cab..... 501-29-15
Rocker Panel — Single Cab..... 501-29-20
Rocker Panel — Super Cab..... 501-29-26
Rocker Panel Inner Reinforcement — Double Cab..... 501-29-32
Rocker Panel Inner Reinforcement — Single Cab..... 501-29-36
Rocker Panel Inner Reinforcement — Super Cab..... 501-29-40
B-Pillar and Reinforcement — Double Cab..... 501-29-44
B-Pillar Outer Panel — Double Cab..... 501-29-56

REMOVAL AND INSTALLATION

A-Pillar Outer Panel

General Equipment

6 mm Drill Bit
Air Body Saw
Hot Air Gun
MIG/MAG Welding Equipment
Resistance Spotwelding Equipment

General Equipment

Spot weld drill Bit

Materials

Name	Specification
Windshield Adhesive Kit	WSS-M11P57-A5

Removal

1. Refer to: Tools and Equipment for Body Repairs (501-25 Body Repairs - General Information, Description and Operation).
2. • Windshield

   Refer to: Windshield Glass (501-11 Glass, Frames and Mechanisms, Removal and Installation).
   - Front Door

   Refer to: Front Door (501-03 Body Closures, Removal and Installation).
   - Door Hinges
   - Weatherstrip
   - A-pillar Trim

   Refer to: A-Pillar Trim Panel (501-05 Interior Trim and Ornamentation, Removal and Installation).
   - Rocker Panel Trim
   - Driver or passenger seat

   Refer to: Front Seat (501-10 Seating, Removal and Installation).
   - Refer to: Fender Apron Panel Reinforcement (501-27 Front End Sheet Metal Repairs, Removal and Installation).
   - Reposition the carpeting and the wiring harness away from the working area.
3. • General Equipment: Air Body Saw

REMOVAL AND INSTALLATION

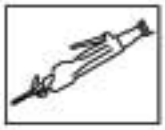

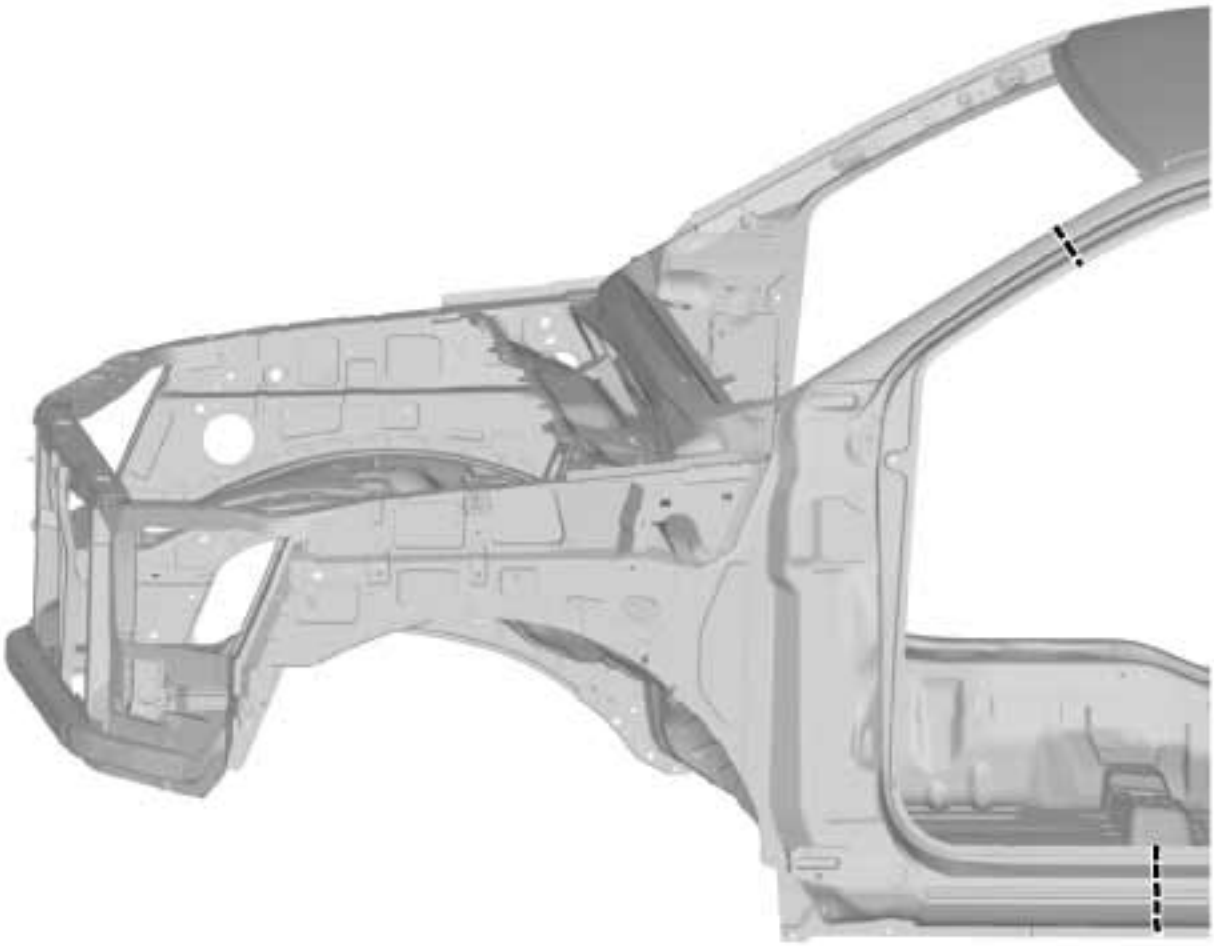

E140111

4. • General Equipment: Spot weld drill Bit

REMOVAL AND INSTALLATION

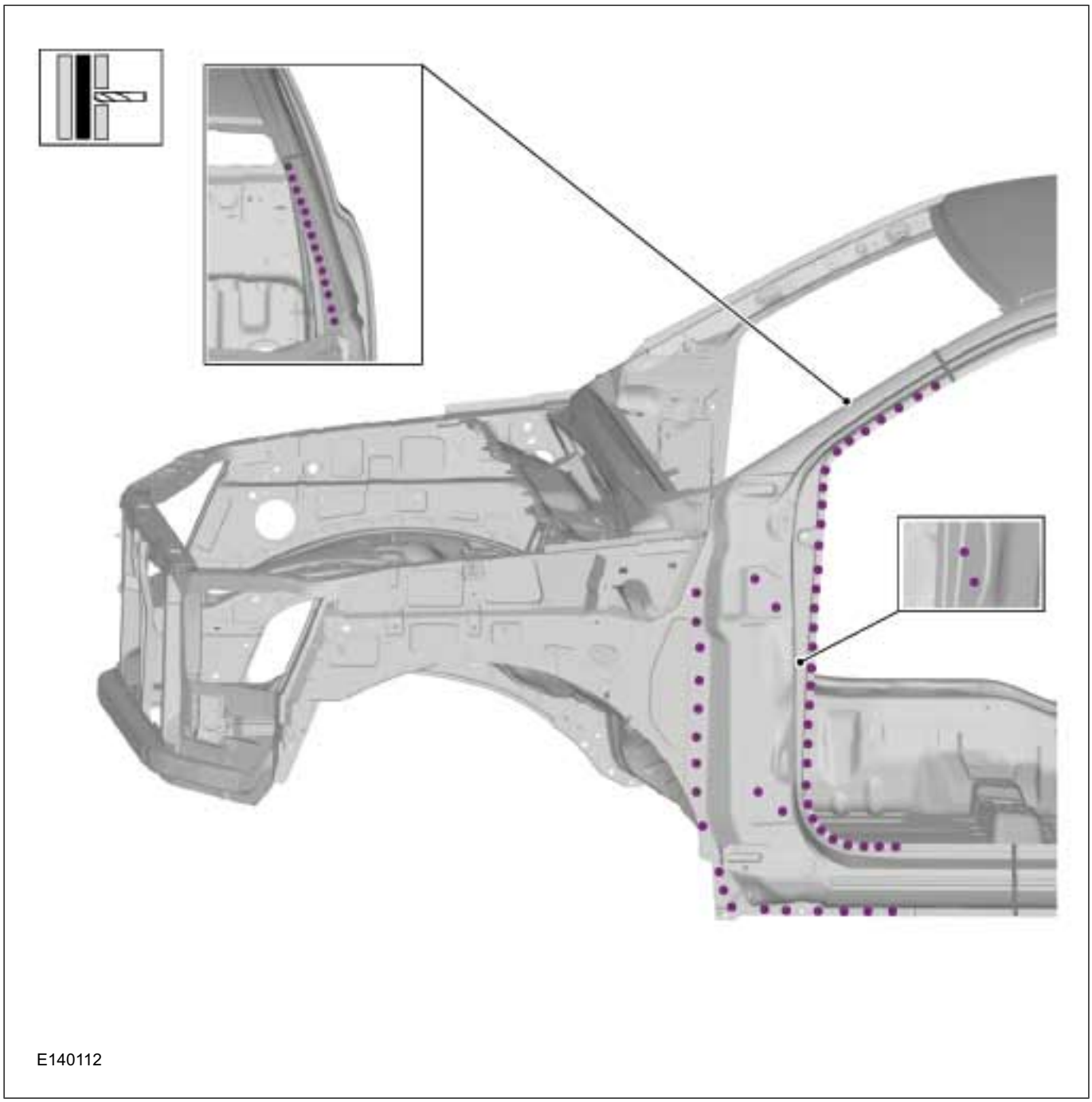

5. • General Equipment: Hot Air Gun

REMOVAL AND INSTALLATION

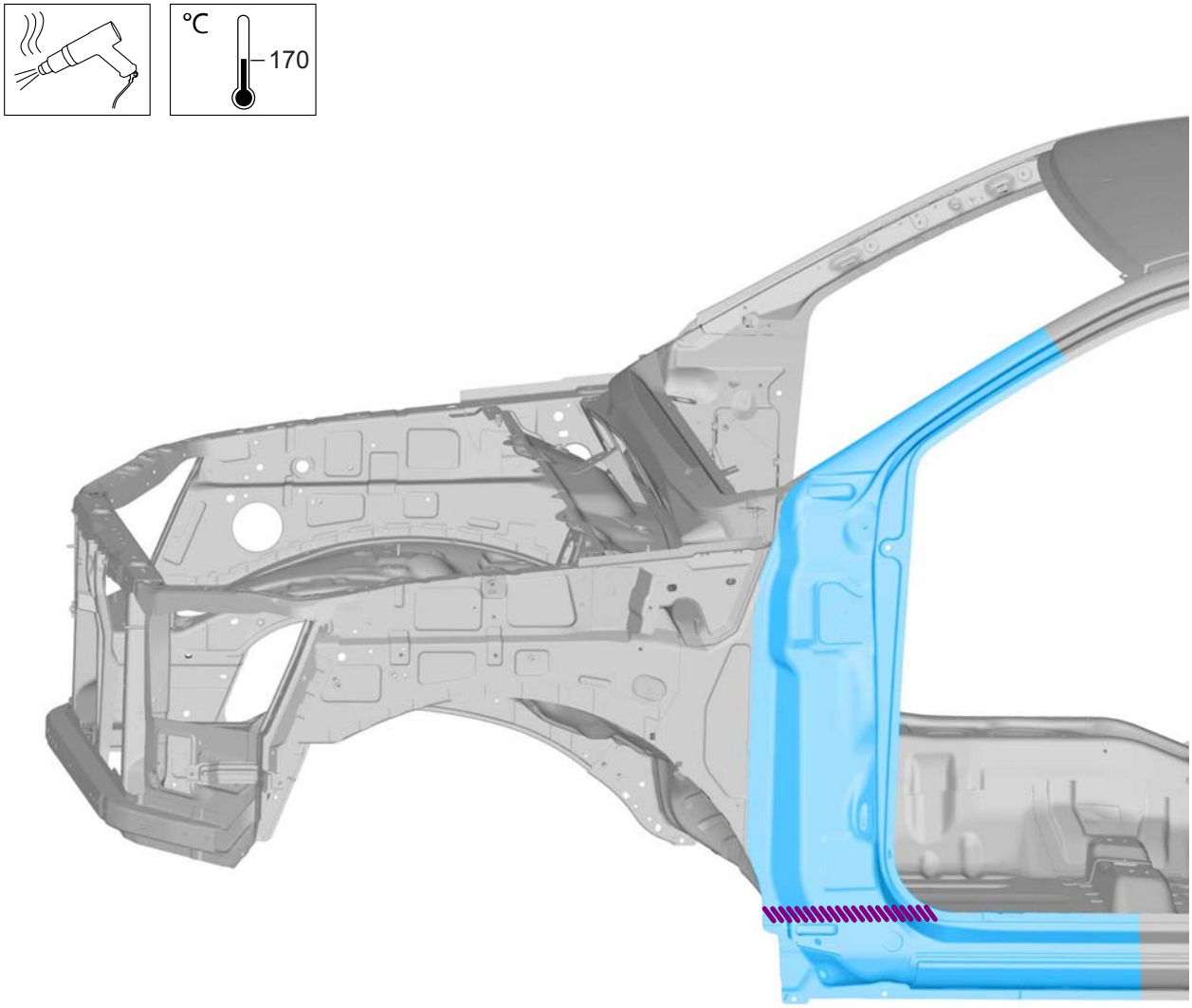

E140113

Installation

1. **NOTE:** Before resistance spot welding of body panels with a total panel thickness of 3 mm and greater, the manufacturer's welding equipment instructions and sub-section 501-25 must be followed.

   Refer to: Tools and Equipment for Body Repairs (501-25 Body Repairs - General Information, Description and Operation).

2. **NOTE:** Sealer or adhesive must not be applied in welding zones. Areas which were bonded or sealed needs to be thoroughly sealed afterwards.

   Refer to: Sealer, Underbody Protection Material and Adhesives (501-25 Body Repairs - General Information, Description and Operation).

REMOVAL AND INSTALLATION

3. • General Equipment: 6 mm Drill Bit

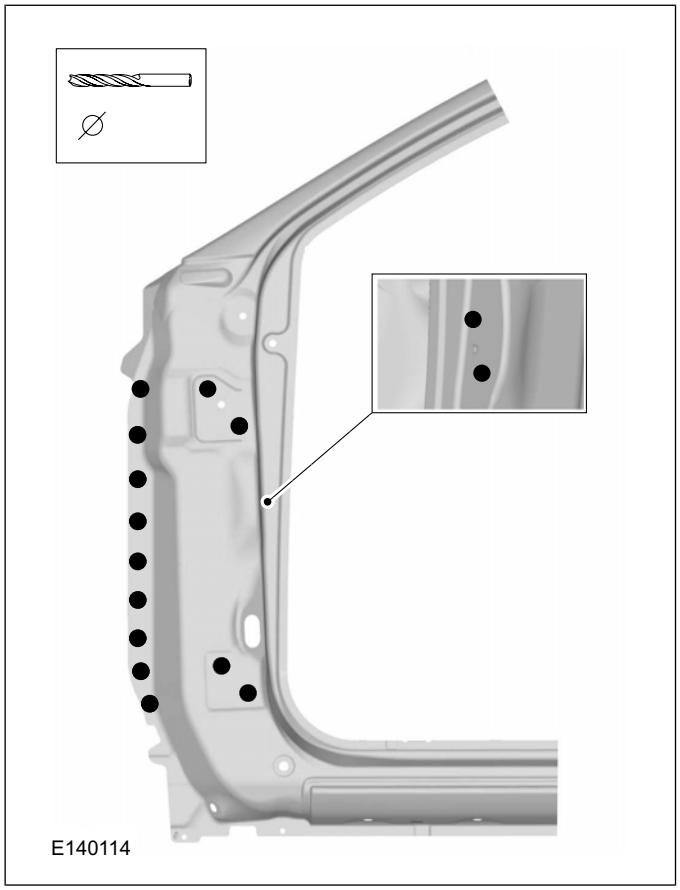

4. • Material: Windshield Adhesive Kit (WSS-M11P57-A5) adhesive

REMOVAL AND INSTALLATION

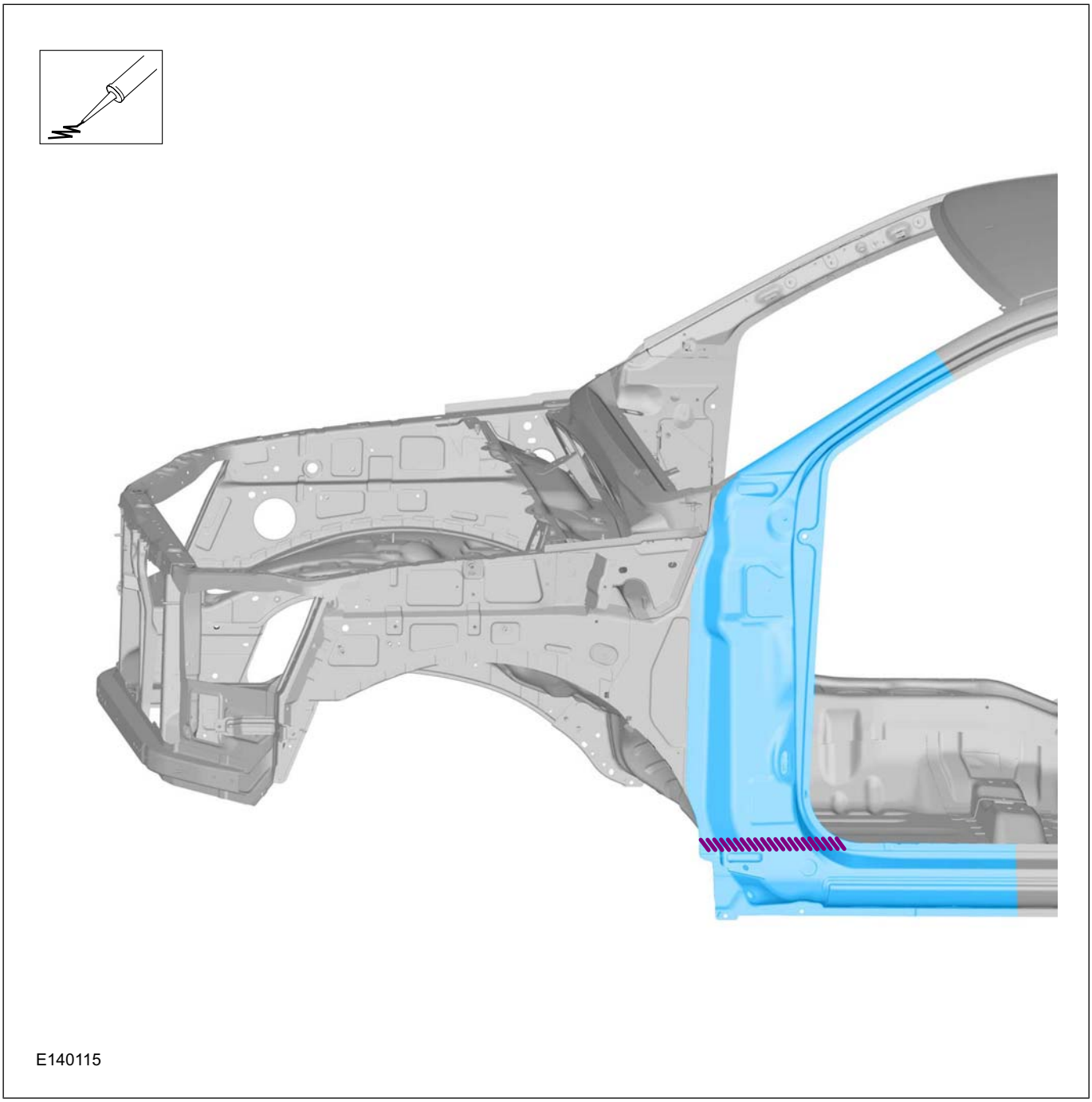

5. • General Equipment: Resistance Spotwelding Equipment

REMOVAL AND INSTALLATION

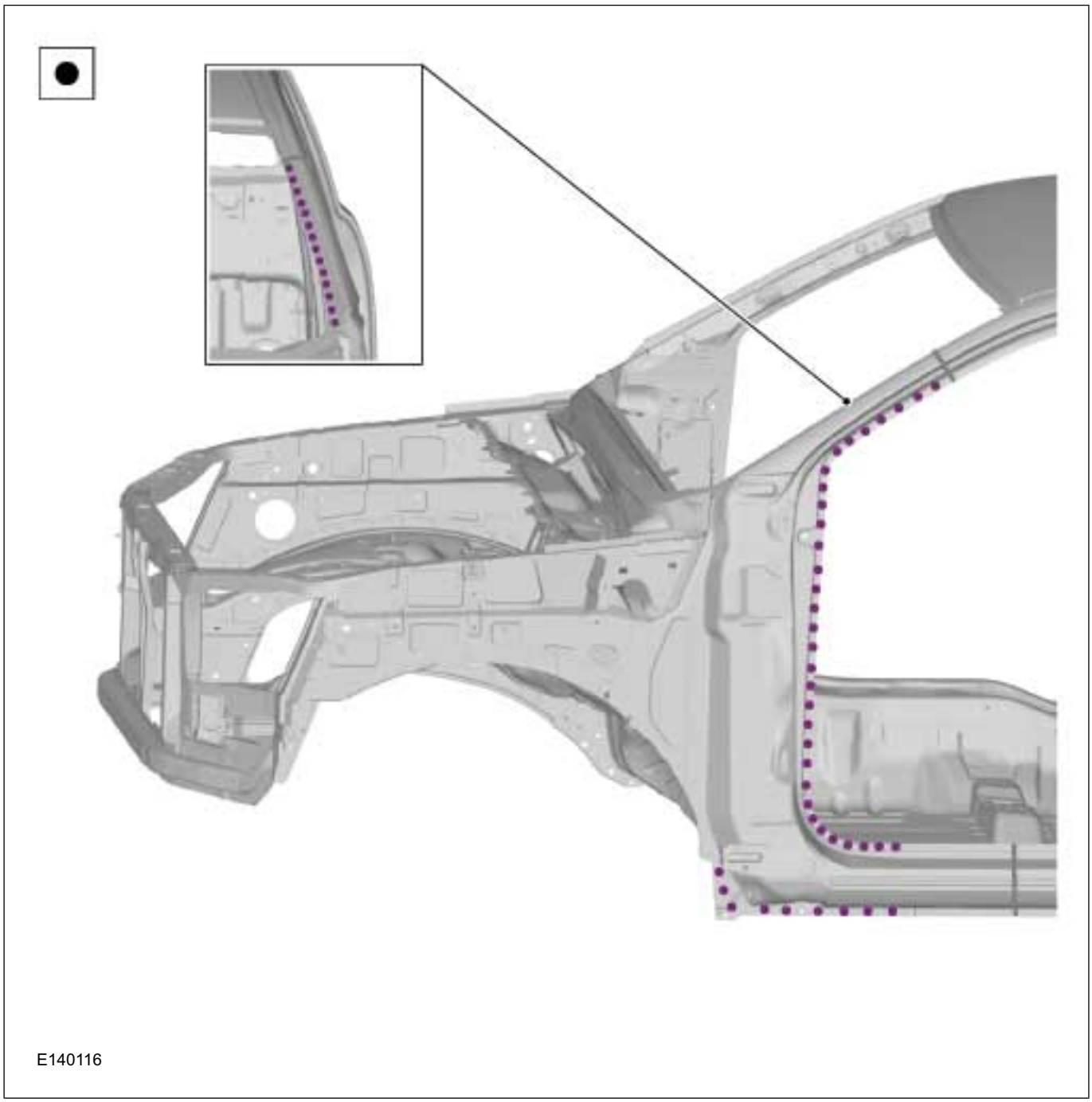

6. • General Equipment: MIG/MAG Welding Equipment

REMOVAL AND INSTALLATION

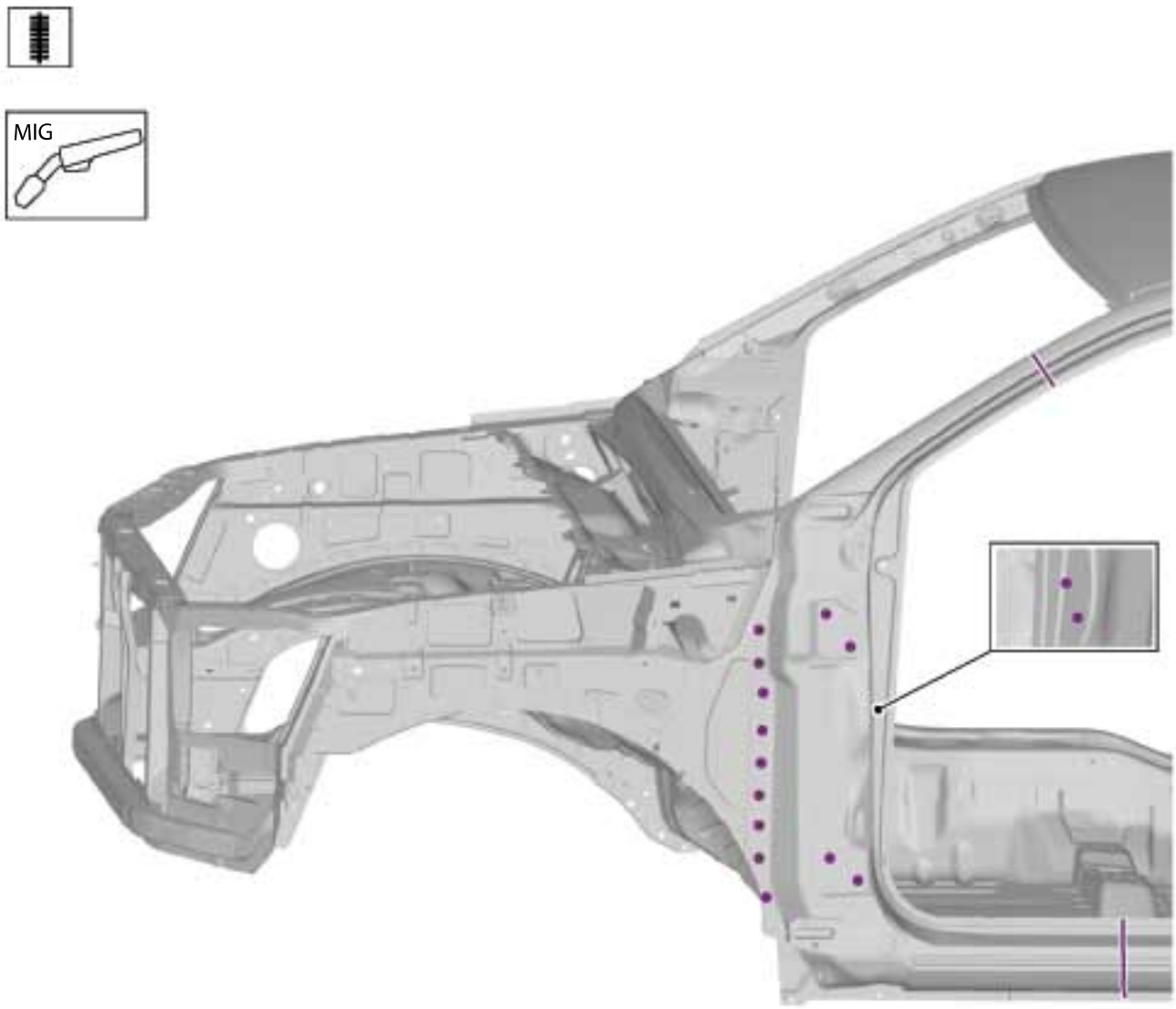

E140117

REMOVAL AND INSTALLATION

7. • Windshield

   Refer to: Windshield Glass (501-11 Glass, Frames and Mechanisms, Removal and Installation).
   - Front Door

   Refer to: Front Door (501-03 Body Closures, Removal and Installation).
   - Door Hinges
   - Weatherstrip
   - A-pillar Trim

   Refer to: A-Pillar Trim Panel (501-05 Interior Trim and Ornamentation, Removal and Installation).
   - Rocker Panel Trim
   - Driver or passenger seat

   Refer to: Front Seat (501-10 Seating, Removal and Installation).
   - Refer to: Fender Apron Panel Reinforcement (501-27 Front End Sheet Metal Repairs, Removal and Installation).

REMOVAL AND INSTALLATION

A-Pillar Assembly

General Equipment

6 mm Drill Bit
Hot Air Gun
MIG/MAG Welding Equipment
Resistance Spotwelding Equipment

General Equipment

Spot weld drill Bit

Materials

Name	Specification
Windshield Adhesive Kit	WSS-M11P57-A5

Removal

REMOVAL AND INSTALLATION

1. Refer to: Tools and Equipment for Body Repairs (501-25 Body Repairs - General Information, Description and Operation).
2. • Refer to: A-Pillar Outer Panel (501-29 Side Panel Sheet Metal Repairs, Removal and Installation).
   - Windshield

     Refer to: Windshield Glass (501-11 Glass, Frames and Mechanisms, Removal and Installation).
   - Front Door

     Refer to: Front Door (501-03 Body Closures, Removal and Installation).
   - Door Hinges
   - Weatherstrip
   - A-pillar Trim

     Refer to: A-Pillar Trim Panel (501-05 Interior Trim and Ornamentation, Removal and Installation).
   - Rocker Panel Trim
   - Driver or passenger seat

     Refer to: Front Seat (501-10 Seating, Removal and Installation).
   - Refer to: Fender Apron Panel Reinforcement (501-27 Front End Sheet Metal Repairs, Removal and Installation).
   - Reposition the carpeting and the wiring harness away from the working area.
3. • General Equipment: Spot weld drill Bit

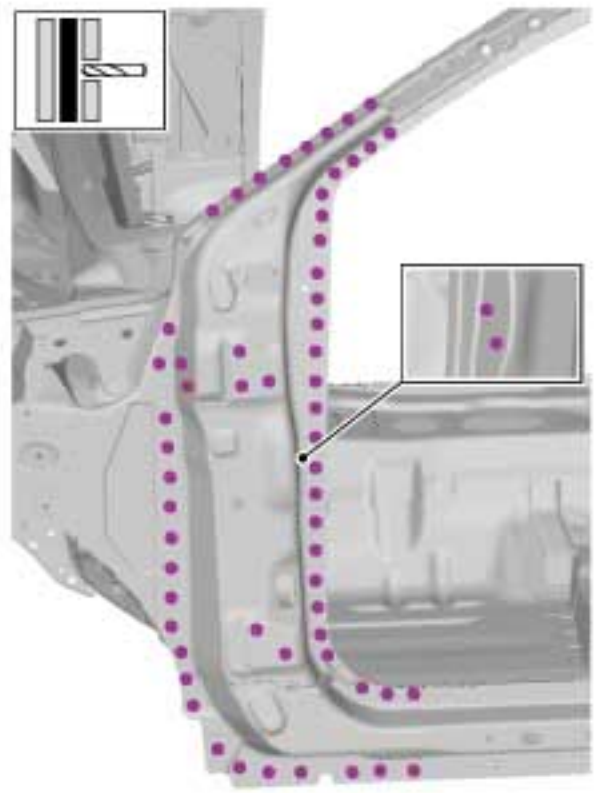

E140136

4. • General Equipment: Hot Air Gun

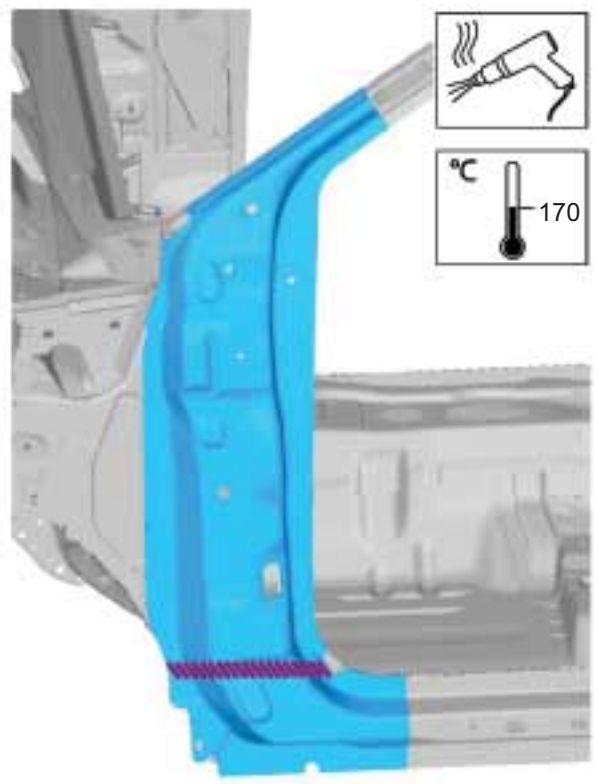

E140137

REMOVAL AND INSTALLATION

Installation

1. **NOTE:** Before resistance spot welding of body panels with a total panel thickness of 3 mm and greater, the manufacturer's welding equipment instructions and sub-section 501-25 must be followed.

   Refer to: Tools and Equipment for Body Repairs (501-25 Body Repairs - General Information, Description and Operation).

2. **NOTE:** Sealer or adhesive must not be applied in welding zones. Areas which were bonded or sealed needs to be thoroughly sealed afterwards.

   Refer to: Sealer, Underbody Protection Material and Adhesives (501-25 Body Repairs - General Information, Description and Operation).

3. • General Equipment: 6 mm Drill Bit

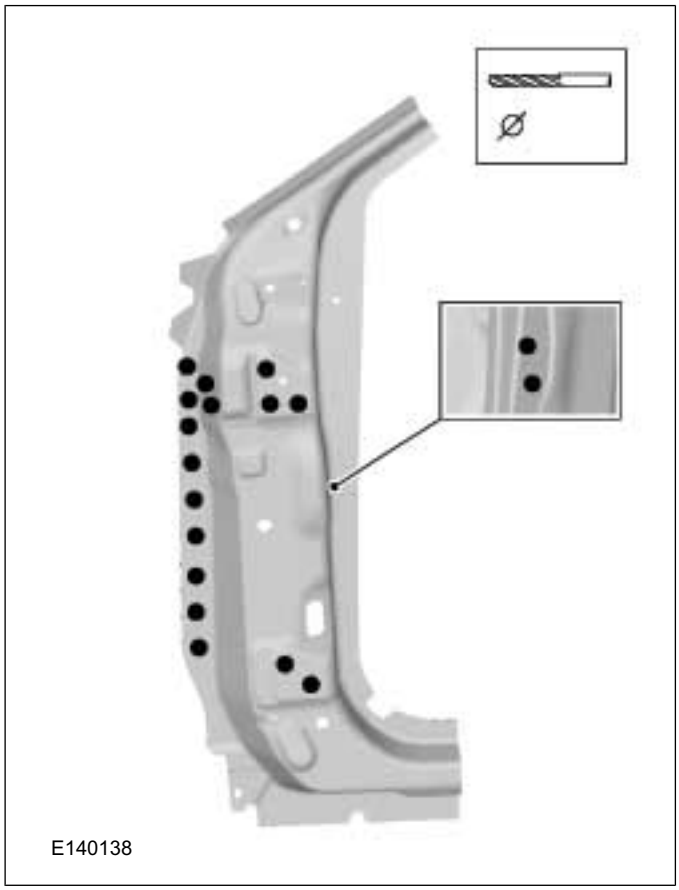

E140138

4. • Material: Windshield Adhesive Kit (WSS-M11P57-A5) adhesive

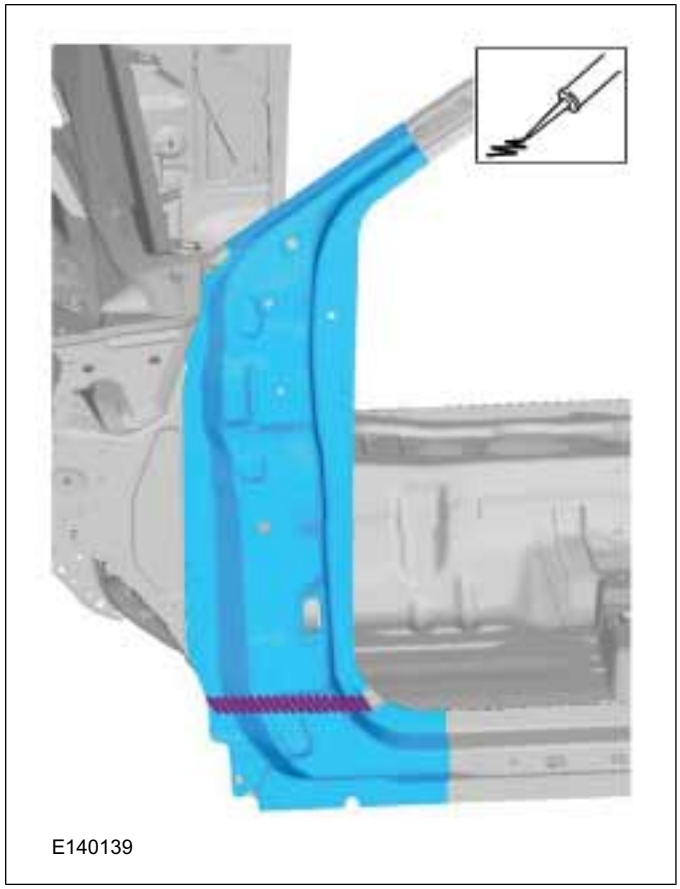

E140139

REMOVAL AND INSTALLATION

5. • General Equipment: Resistance Spotwelding Equipment

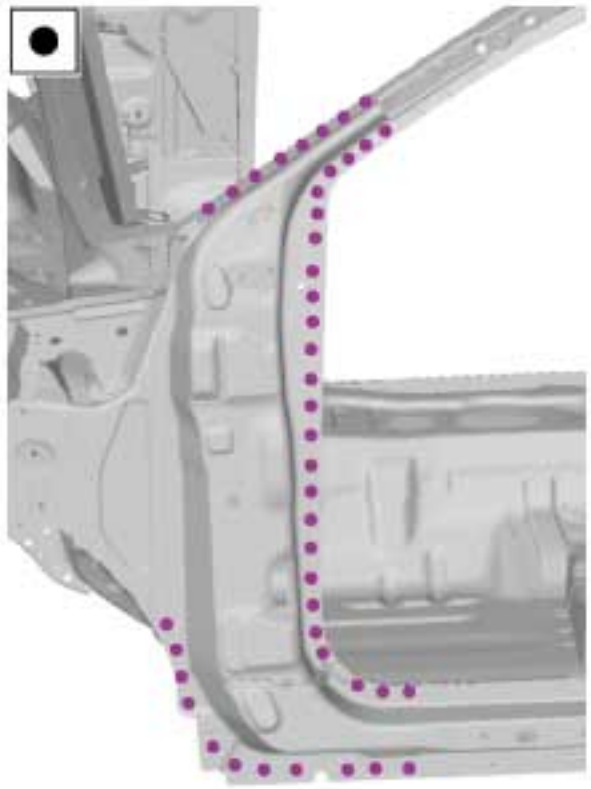
E140140

6. • General Equipment: MIG/MAG Welding Equipment

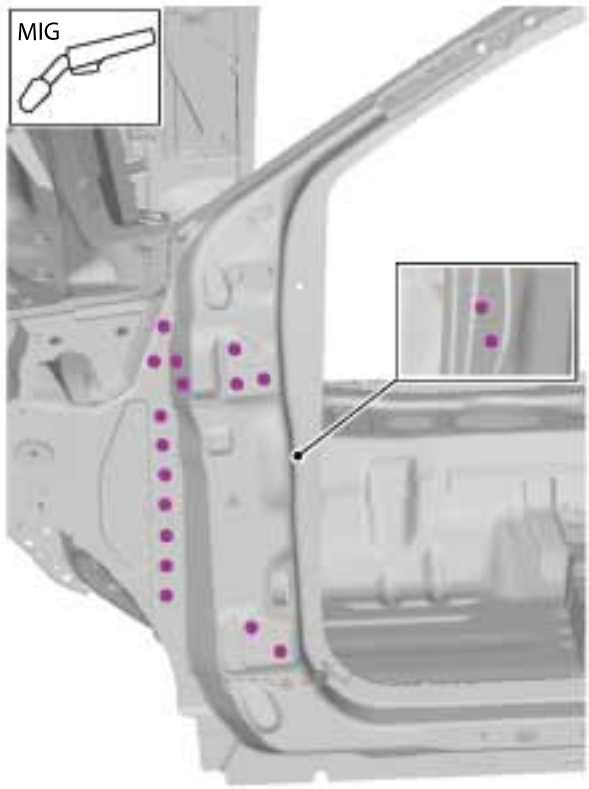

E140141

7. • Refer to: A-Pillar Outer Panel (501-29 Side Panel Sheet Metal Repairs, Removal and Installation).
   - Windshield

     Refer to: Windshield Glass (501-11 Glass, Frames and Mechanisms, Removal and Installation).
   - Front Door

     Refer to: Front Door (501-03 Body Closures, Removal and Installation).
   - Door Hinges
   - Weatherstrip
   - A-pillar Trim

     Refer to: A-Pillar Trim Panel (501-05 Interior Trim and Ornamentation, Removal and Installation).
   - Rocker Panel Trim
   - Driver or passenger seat

     Refer to: Front Seat (501-10 Seating, Removal and Installation).
   - Refer to: Fender Apron Panel Reinforcement (501-27 Front End Sheet Metal Repairs, Removal and Installation).

REMOVAL AND INSTALLATION

Rocker Panel — Double Cab

General Equipment

Air Body Saw
Hot Air Gun
MIG/MAG Welding Equipment
Resistance Spotwelding Equipment

General Equipment

Spot weld drill Bit

Materials

Name	Specification
Windshield Adhesive Kit	WSS-M11P57-A5

Removal

1. • Refer to: Front Door (501-03 Body Closures, Removal and Installation).
   Refer to: Rear Door - Double Cab (501-03 Body Closures, Removal and Installation).
   Refer to: A-Pillar Trim Panel (501-05 Interior Trim and Ornamentation, Removal and Installation).
   Refer to: B-Pillar Upper Trim Panel (501-05 Interior Trim and Ornamentation, Removal and Installation).
   Refer to: B-Pillar Lower Trim Panel (501-05 Interior Trim and Ornamentation, Removal and Installation).
   Refer to: C-Pillar Upper Trim Panel (501-05 Interior Trim and Ornamentation, Removal and Installation).
   Refer to: Cowl Side Trim Panel (501-05 Interior Trim and Ornamentation, Removal and Installation).
   Refer to: C-Pillar Lower Trim Panel (501-05 Interior Trim and Ornamentation, Removal and Installation).
   Refer to: Front Scuff Plate Trim Panel (501-05 Interior Trim and Ornamentation, Removal and Installation).
   Refer to: Rear Scuff Plate Trim Panel (501-05 Interior Trim and Ornamentation, Removal and Installation).
   Refer to: Front Seat (501-10 Seating, Removal and Installation).
   Refer to: Rear Seat (501-10 Seating, Removal and Installation).
   • Remove the load body from the vechicle.
   • Reposition the carpeting and the wiring harness away from the working area.
2. • General Equipment: Air Body Saw

REMOVAL AND INSTALLATION

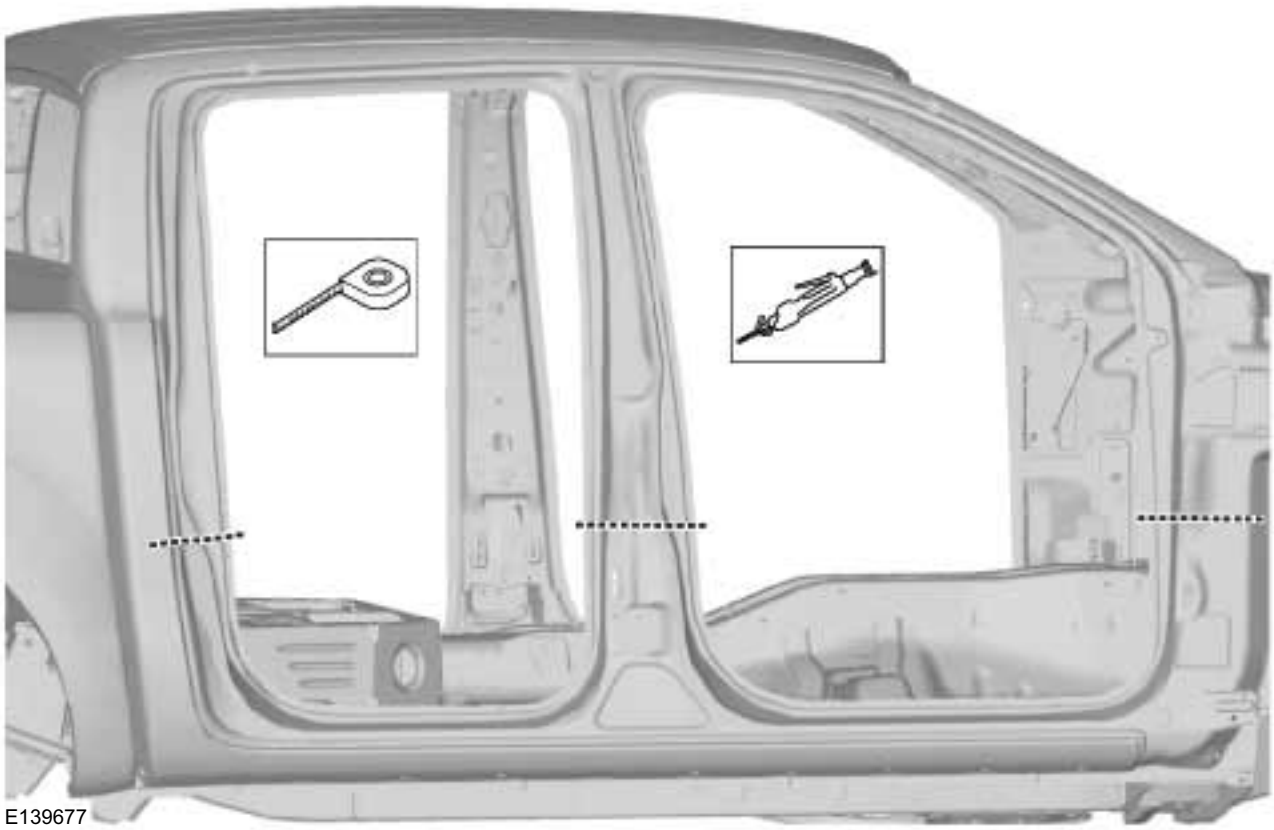

3. • General Equipment: Spot weld drill Bit

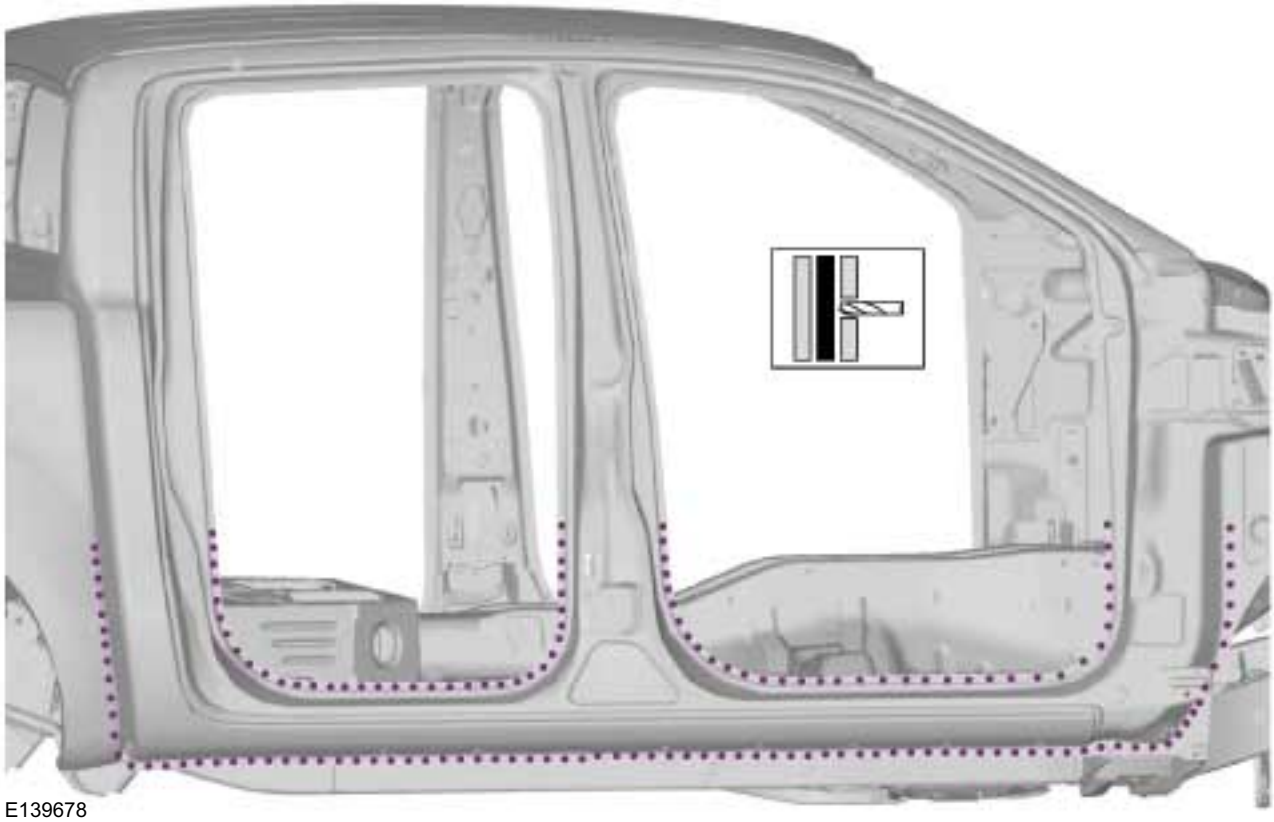

REMOVAL AND INSTALLATION

4. • General Equipment: Hot Air Gun

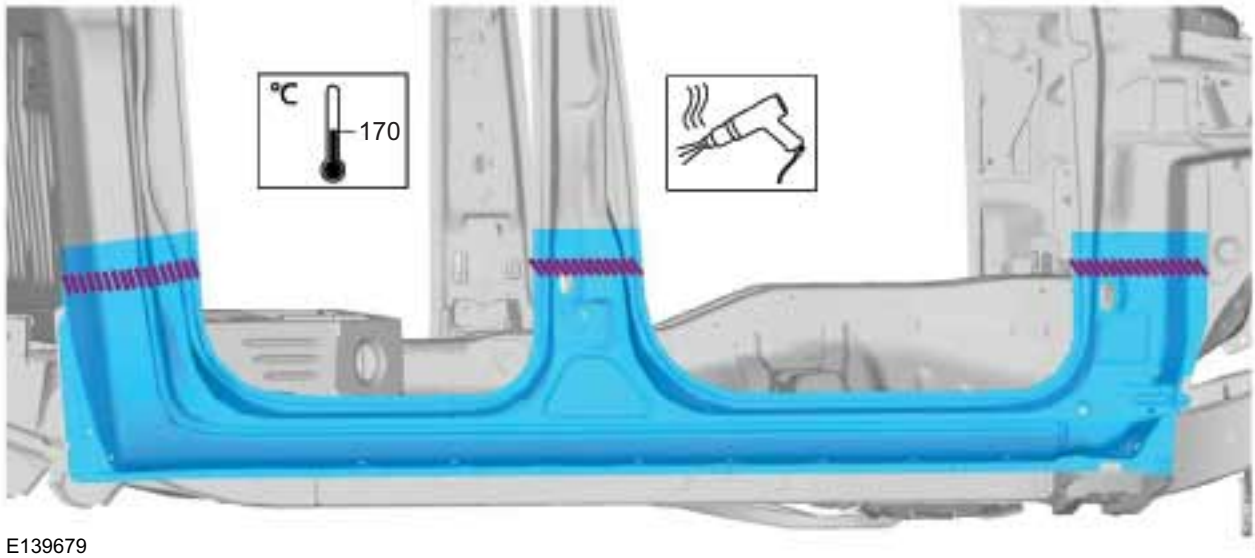

E139679

Installation

1. **NOTE:** Before resistance spot welding of body panels with a total panel thickness of 3 mm and greater, the manufacturer's welding equipment instructions and sub-section 501-25 must be followed.

   Refer to: Tools and Equipment for Body Repairs (501-25 Body Repairs - General Information, Description and Operation).

2. **NOTE:** Sealer or adhesive must not be applied in welding zones. Areas which were bonded or sealed needs to be thoroughly sealed afterwards.

   Refer to: Sealer, Underbody Protection Material and Adhesives (501-25 Body Repairs - General Information, Description and Operation).

3. • Material: Windshield Adhesive Kit (WSS-M11P57-A5) adhesive

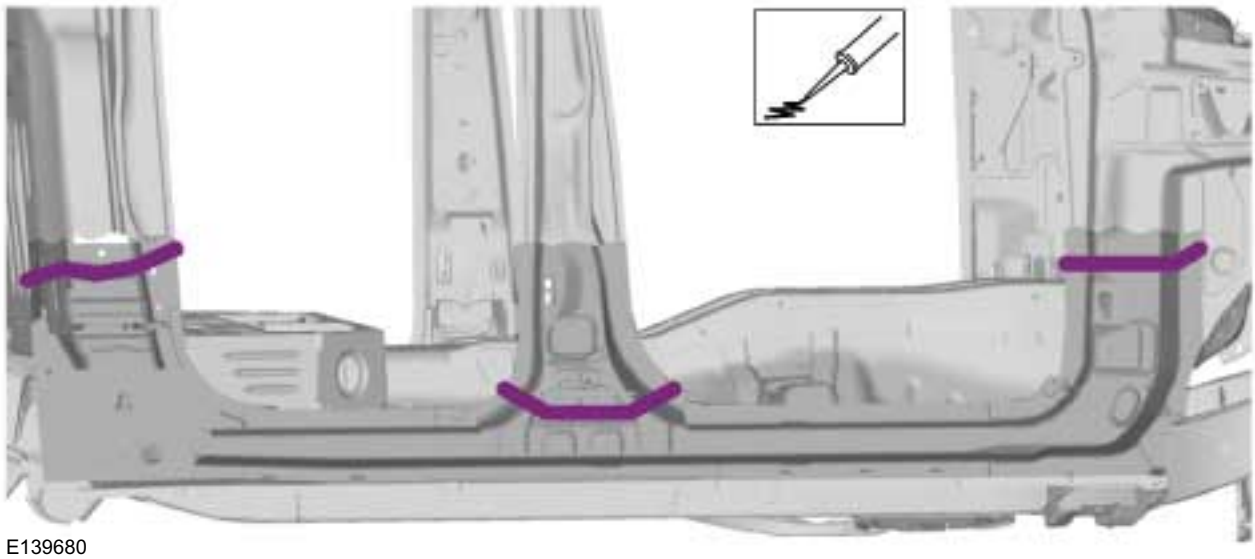
E139680

4. • General Equipment: MIG/MAG Welding Equipment

REMOVAL AND INSTALLATION

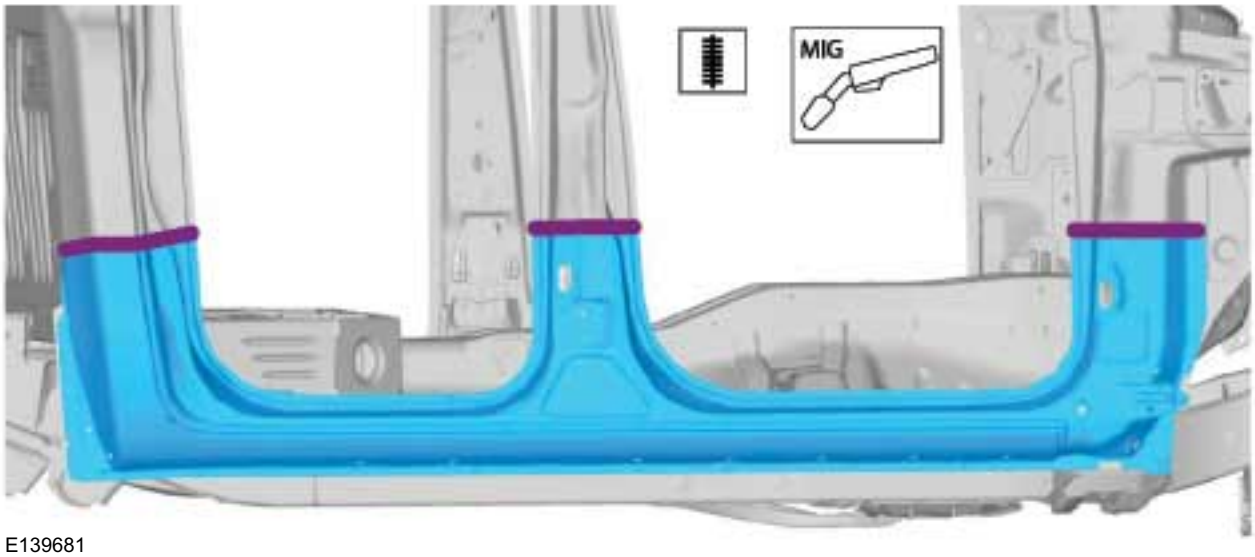

E139681

5. • General Equipment: Resistance Spotwelding Equipment

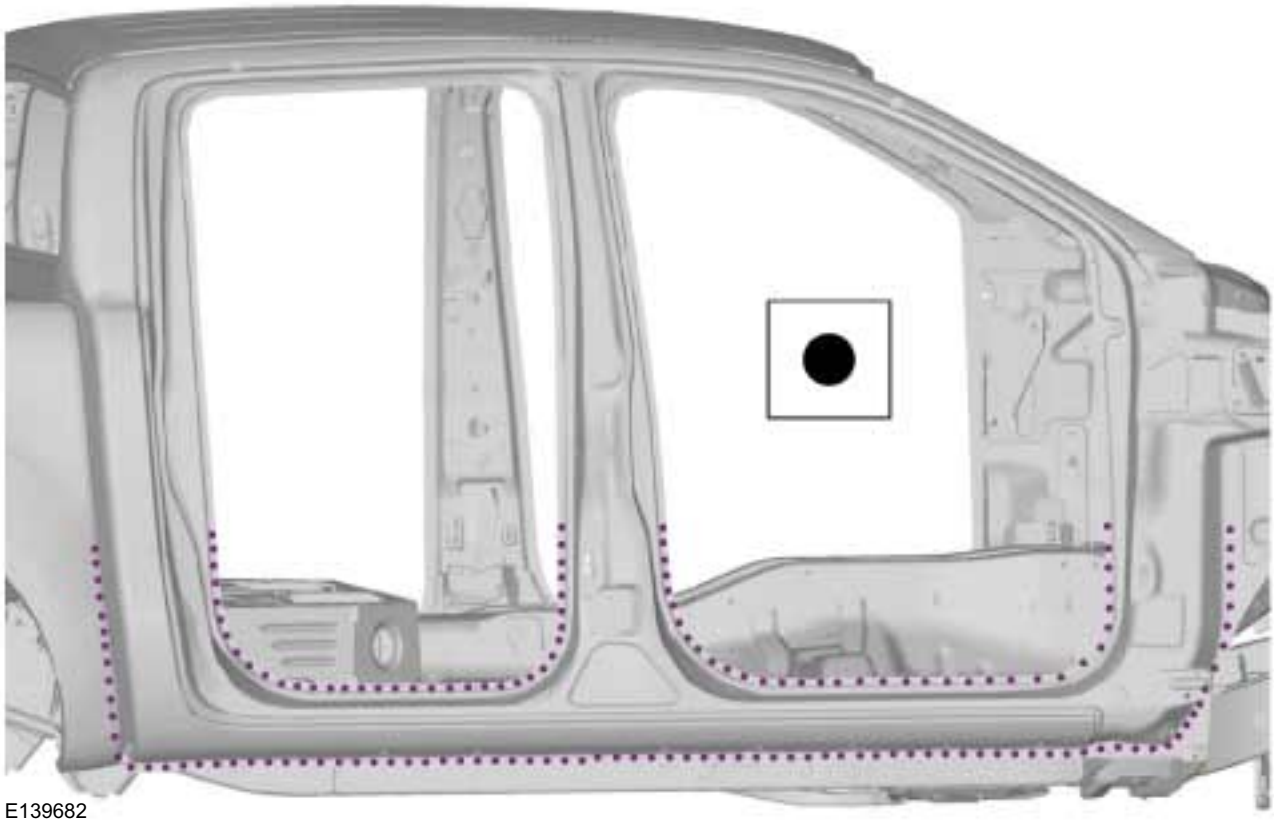

E139682

REMOVAL AND INSTALLATION

6. • Refer to: Front Door (501-03 Body Closures, Removal and Installation).
   Refer to: Rear Door - Double Cab (501-03 Body Closures, Removal and Installation).
   Refer to: A-Pillar Trim Panel (501-05 Interior Trim and Ornamentation, Removal and Installation).
   Refer to: B-Pillar Upper Trim Panel (501-05 Interior Trim and Ornamentation, Removal and Installation).
   Refer to: B-Pillar Lower Trim Panel (501-05 Interior Trim and Ornamentation, Removal and Installation).
   Refer to: C-Pillar Upper Trim Panel (501-05 Interior Trim and Ornamentation, Removal and Installation).
   Refer to: Cowl Side Trim Panel (501-05 Interior Trim and Ornamentation, Removal and Installation).
   Refer to: C-Pillar Lower Trim Panel (501-05 Interior Trim and Ornamentation, Removal and Installation).
   Refer to: Front Scuff Plate Trim Panel (501-05 Interior Trim and Ornamentation, Removal and Installation).
   Refer to: Rear Scuff Plate Trim Panel (501-05 Interior Trim and Ornamentation, Removal and Installation).
   Refer to: Front Seat (501-10 Seating, Removal and Installation).
   Refer to: Rear Seat (501-10 Seating, Removal and Installation).
   • Install the load body into the vechicle.

REMOVAL AND INSTALLATION

Rocker Panel — Single Cab

General Equipment

Air Body Saw
Hot Air Gun
MIG/MAG Welding Equipment
Resistance Spotwelding Equipment

General Equipment

Spot weld drill Bit

Materials	
Name	**Specification**
Windshield Adhesive Kit	WSS-M11P57-A5

Removal

1. • Door Hinges
   • Front and Rear Door
   • Front Wheel Arch Trim
   • Rear Wheel Arch Trim
   • A- B- and C-Pillar Trim

     Refer to: A-Pillar Trim Panel (501-05 Interior Trim and Ornamentation, Removal and Installation).
     Refer to: B-Pillar Trim Panel (501-05 Interior Trim and Ornamentation, Removal and Installation).
     Refer to: C-Pillar Trim Panel - 4-Door (501-05 Interior Trim and Ornamentation, Removal and Installation).
   • Rocker Panel Trim
   • Refer to: Front Seat (501-10, Removal and Installation).
     Refer to: Rear Seat Cushion (501-10, Removal and Installation).
     Refer to: Rear Seat Backrest (501-10, Removal and Installation).
   • Reposition the carpeting and the wiring harness away from the working area.
2. • General Equipment: Air Body Saw

REMOVAL AND INSTALLATION

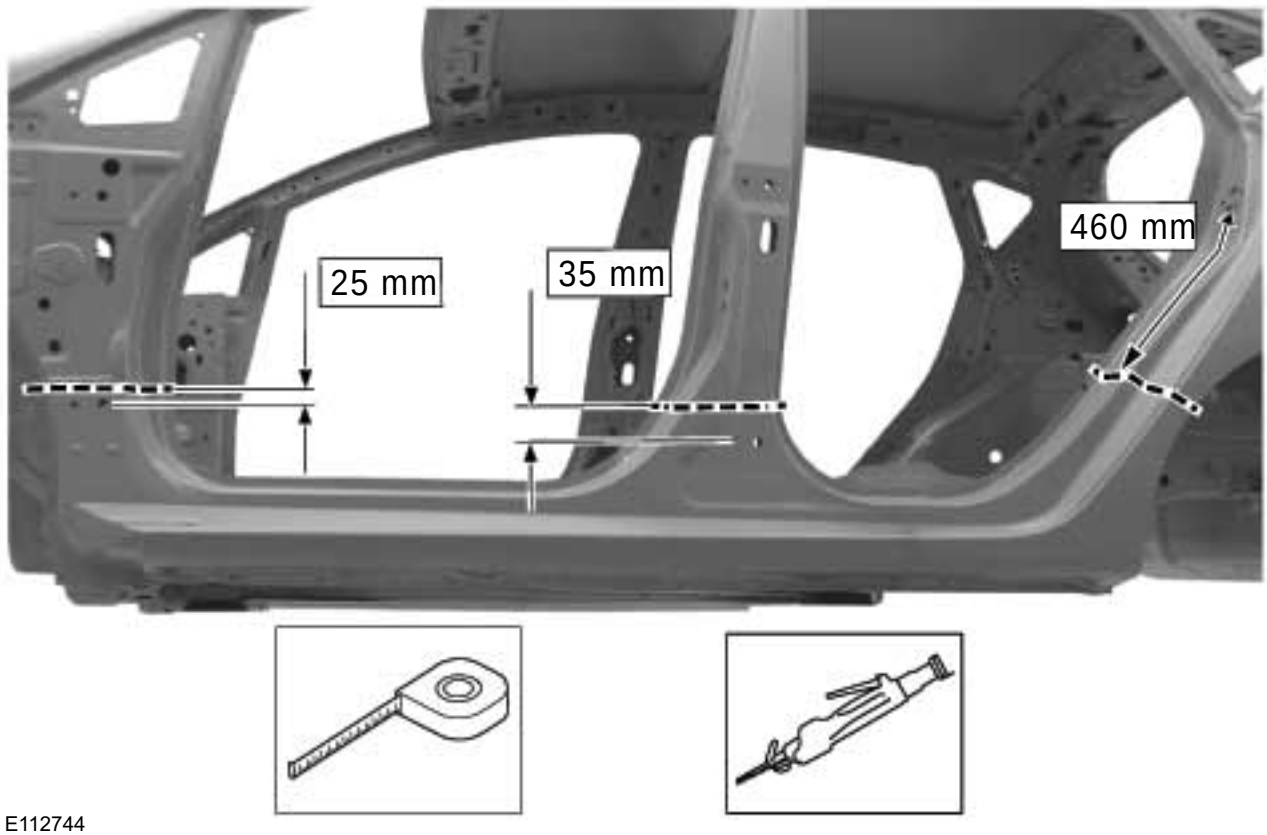

3. • General Equipment: Spot weld drill Bit

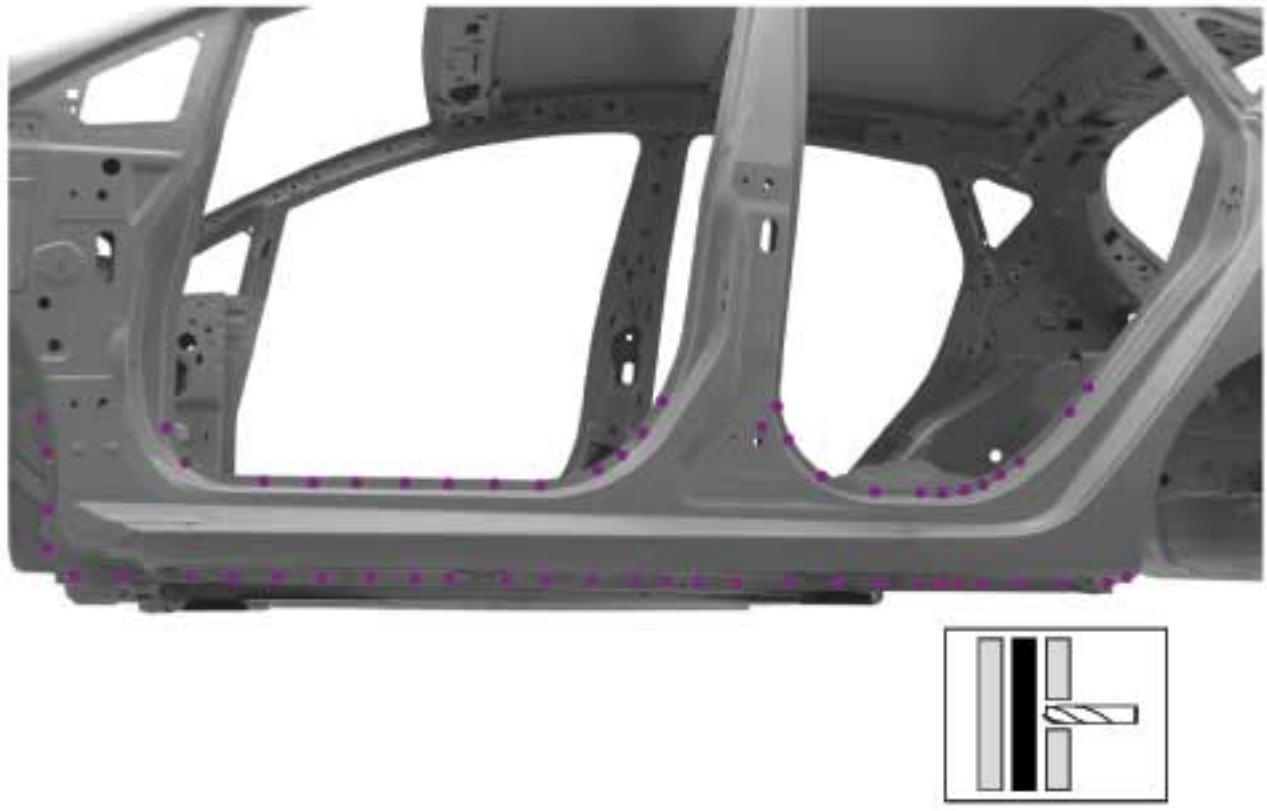

REMOVAL AND INSTALLATION

4. • General Equipment: Hot Air Gun

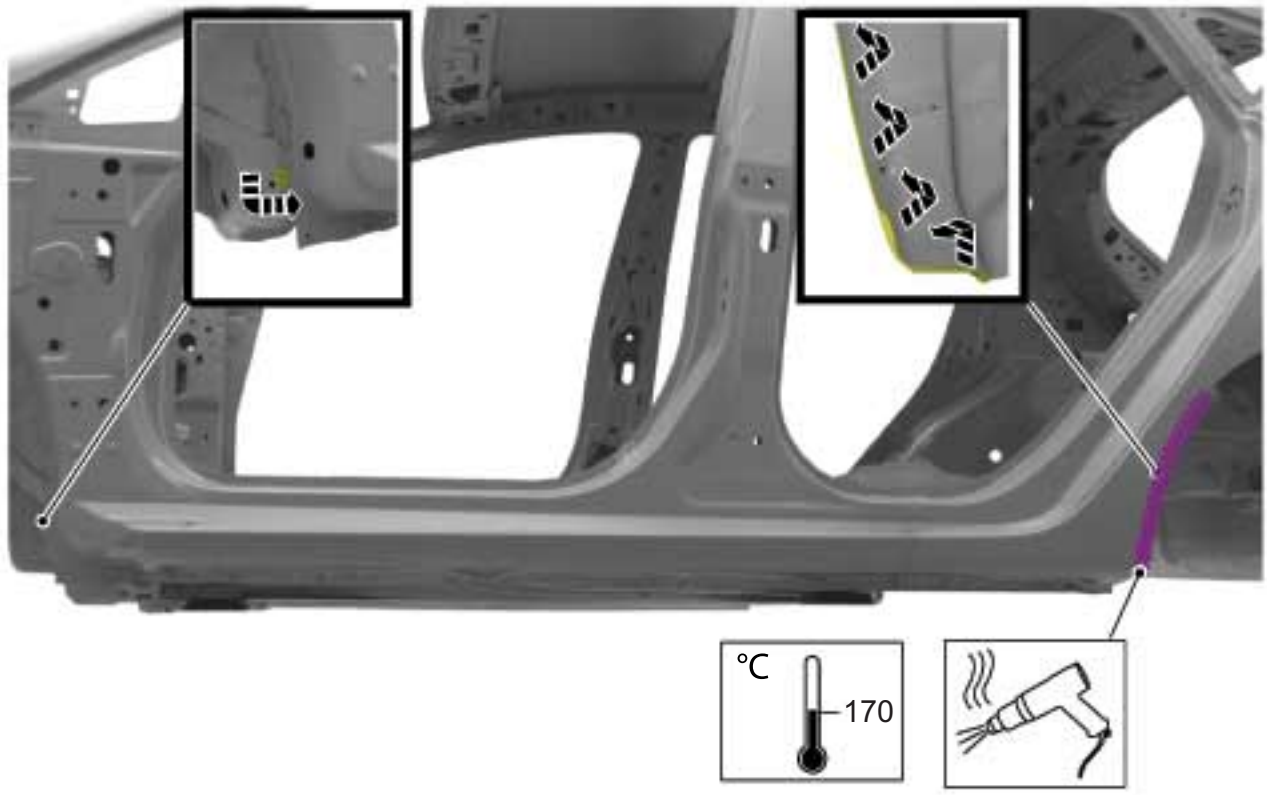

E112746

5. • General Equipment: Hot Air Gun

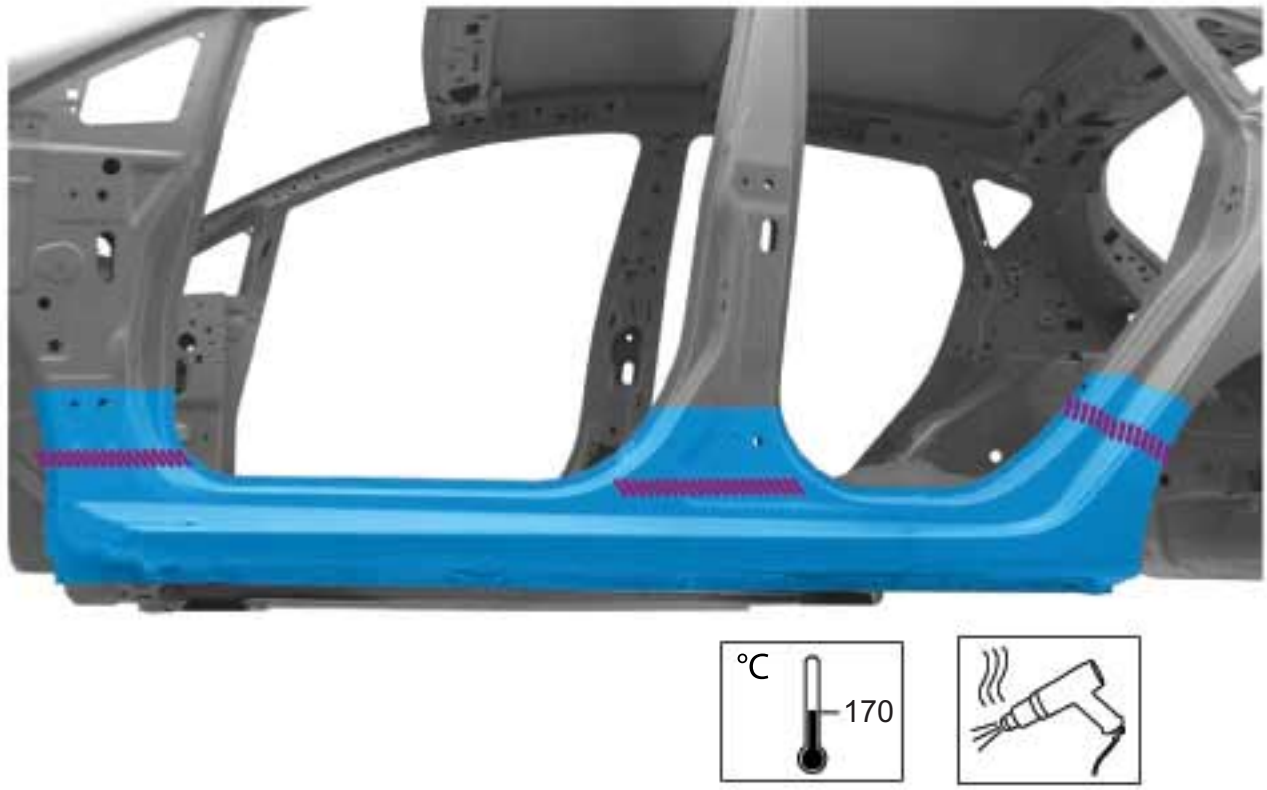

E112747

REMOVAL AND INSTALLATION

Installation

1. **NOTE:** Before resistance spot welding of body panels with a total panel thickness of 3 mm and greater, the manufacturer's welding equipment instructions and sub-section 501-25 must be followed.

   Refer to: Tools and Equipment for Body Repairs (501-25 Body Repairs - General Information, Description and Operation).

2. **NOTE:** Sealer or adhesive must not be applied in welding zones. Areas which were bonded or sealed needs to be thoroughly sealed afterwards.

   Refer to: Sealer, Underbody Protection Material and Adhesives (501-25 Body Repairs - General Information, Description and Operation).

3. • Material: Windshield Adhesive Kit (WSS-M11P57-A5) adhesive

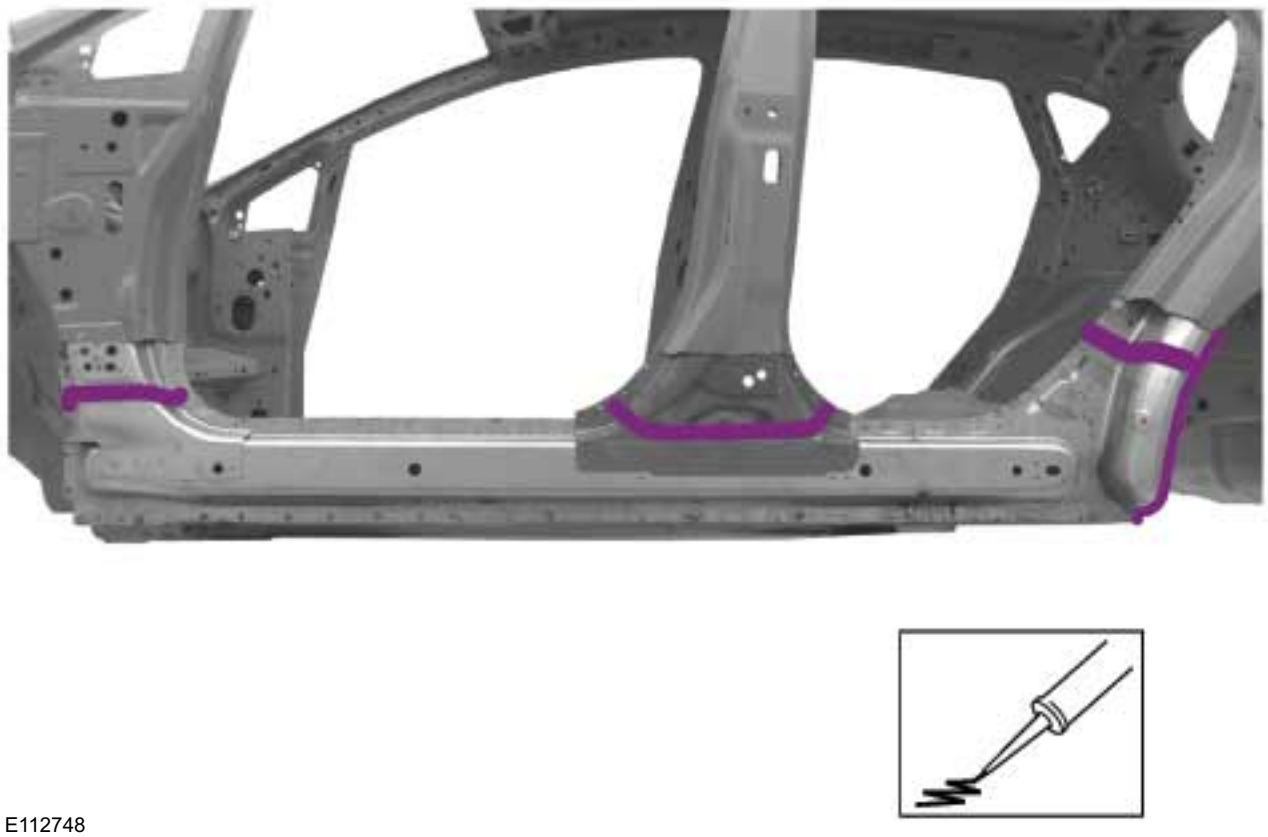

E112748

4. • General Equipment: MIG/MAG Welding Equipment

REMOVAL AND INSTALLATION

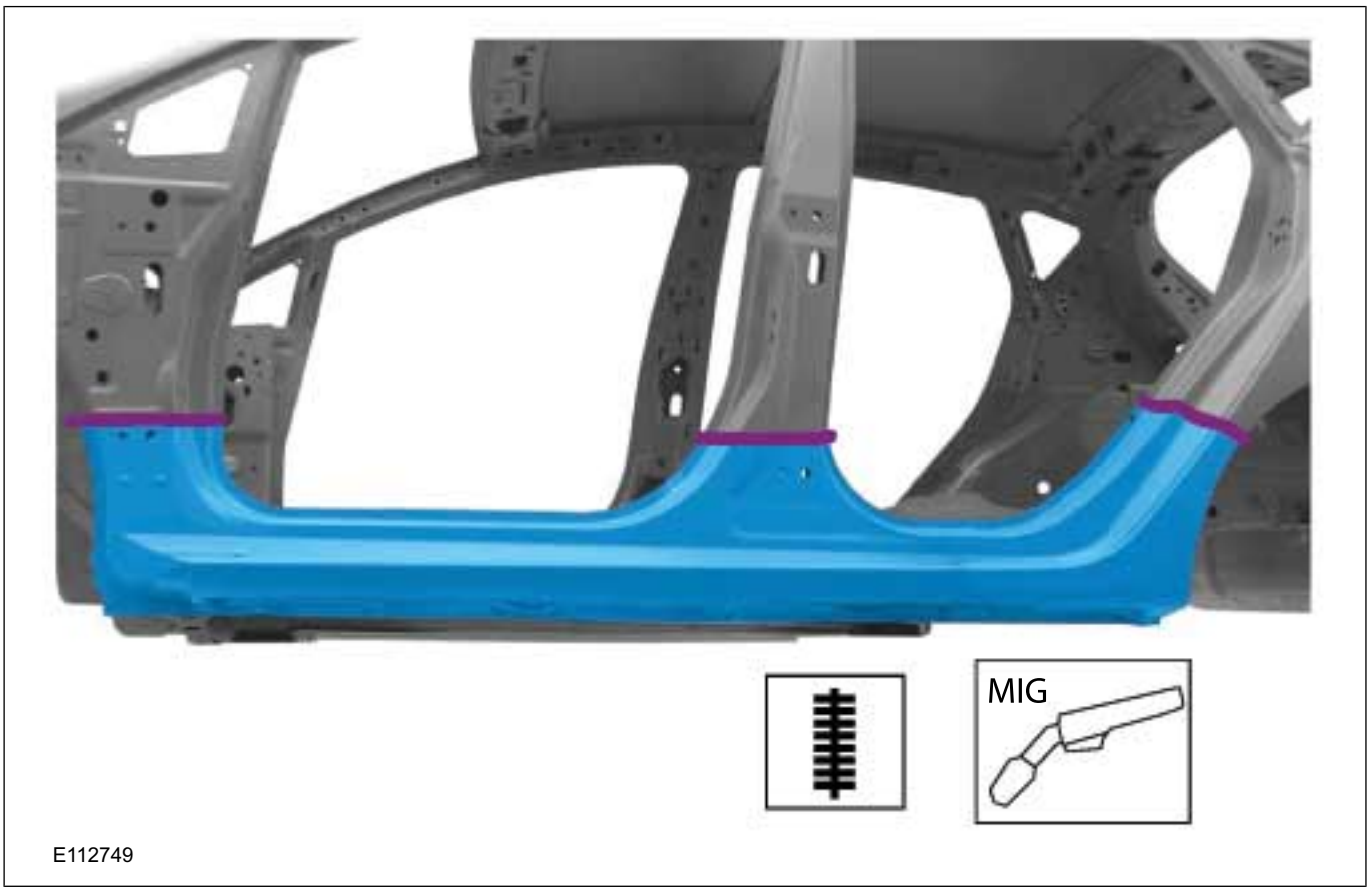

5. • General Equipment: Resistance Spotwelding Equipment

6.

REMOVAL AND INSTALLATION

7. • Door Hinges
   • Front and Rear Door
   • Front Wheel Arch Trim
   • Rear Wheel Arch Trim
   • A- B- and C-Pillar Trim

     Refer to: A-Pillar Trim Panel (501-05 Interior Trim and Ornamentation, Removal and Installation).
     Refer to: B-Pillar Trim Panel (501-05 Interior Trim and Ornamentation, Removal and Installation).
     Refer to: C-Pillar Trim Panel - 4-Door (501-05 Interior Trim and Ornamentation, Removal and Installation).
   • Rocker Panel Trim
   • Refer to: Front Seat (501-10, Removal and Installation).
     Refer to: Rear Seat Cushion (501-10, Removal and Installation).
     Refer to: Rear Seat Backrest (501-10, Removal and Installation).

REMOVAL AND INSTALLATION

Rocker Panel — Super Cab

General Equipment

Air Body Saw
Hot Air Gun
MIG/MAG Welding Equipment
Resistance Spotwelding Equipment

General Equipment

Spot weld drill Bit

Materials	
Name	**Specification**
Windshield Adhesive Kit	WSS-M11P57-A5

Removal

1. • Front and Rear Door
   • Door Hinges
   • Front Wheel Arch Trim
   • Rear Wheel Arch Trim
   • Refer to: A-Pillar Trim Panel (501-05, Removal and Installation).
     Refer to: B-Pillar Trim Panel - 5-Door (501-05 Interior Trim and Ornamentation, Removal and Installation).
     Refer to: C-Pillar Trim Panel - 5-Door (501-05 Interior Trim and Ornamentation, Removal and Installation).
   • Rocker Panel Trim
   • Refer to: Front Seat (501-10, Removal and Installation).
     Refer to: Rear Seat Cushion (501-10, Removal and Installation).
     Refer to: Rear Seat Backrest (501-10, Removal and Installation).
   • Reposition the carpeting and the wiring harness away from the working area.
2. • General Equipment: Air Body Saw

REMOVAL AND INSTALLATION

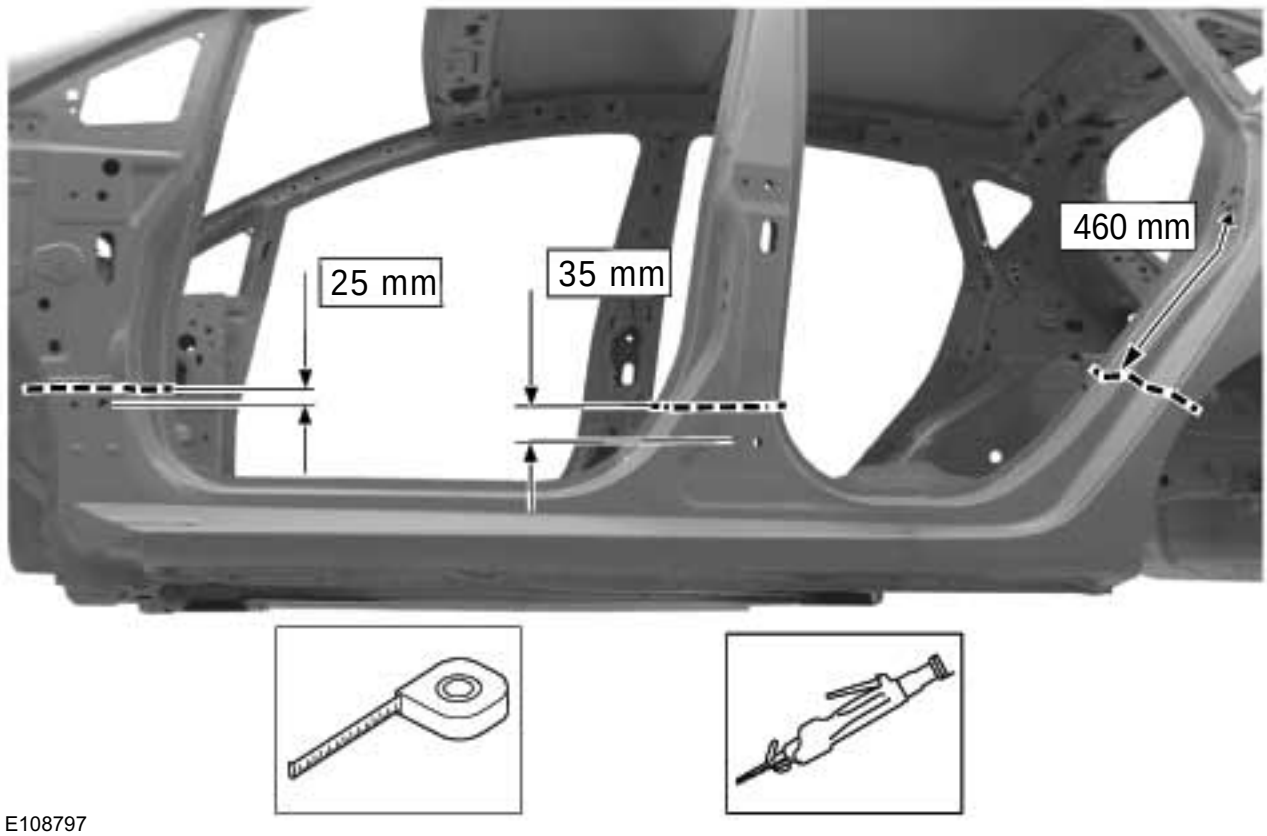

E108797

3. • General Equipment: Spot weld drill Bit

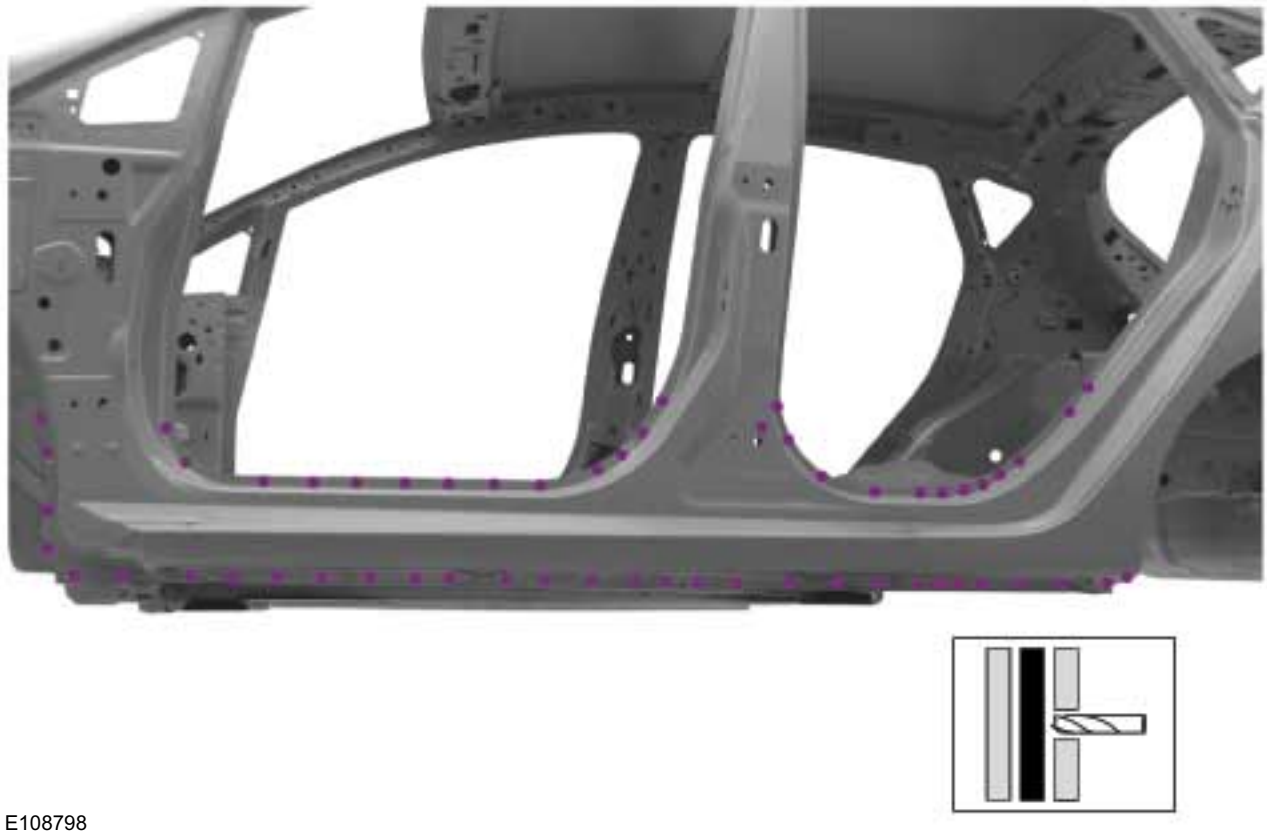

E108798

REMOVAL AND INSTALLATION

4. • General Equipment: Hot Air Gun

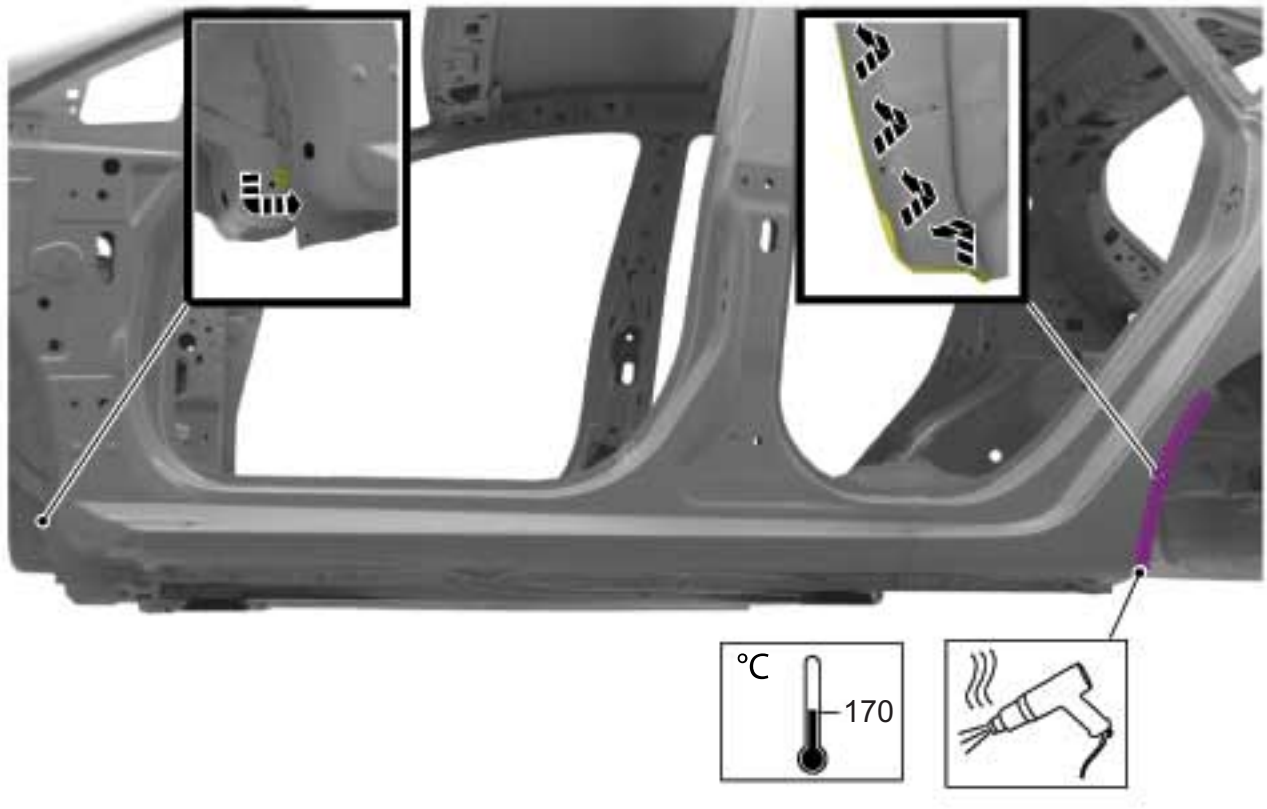

5. • General Equipment: Hot Air Gun

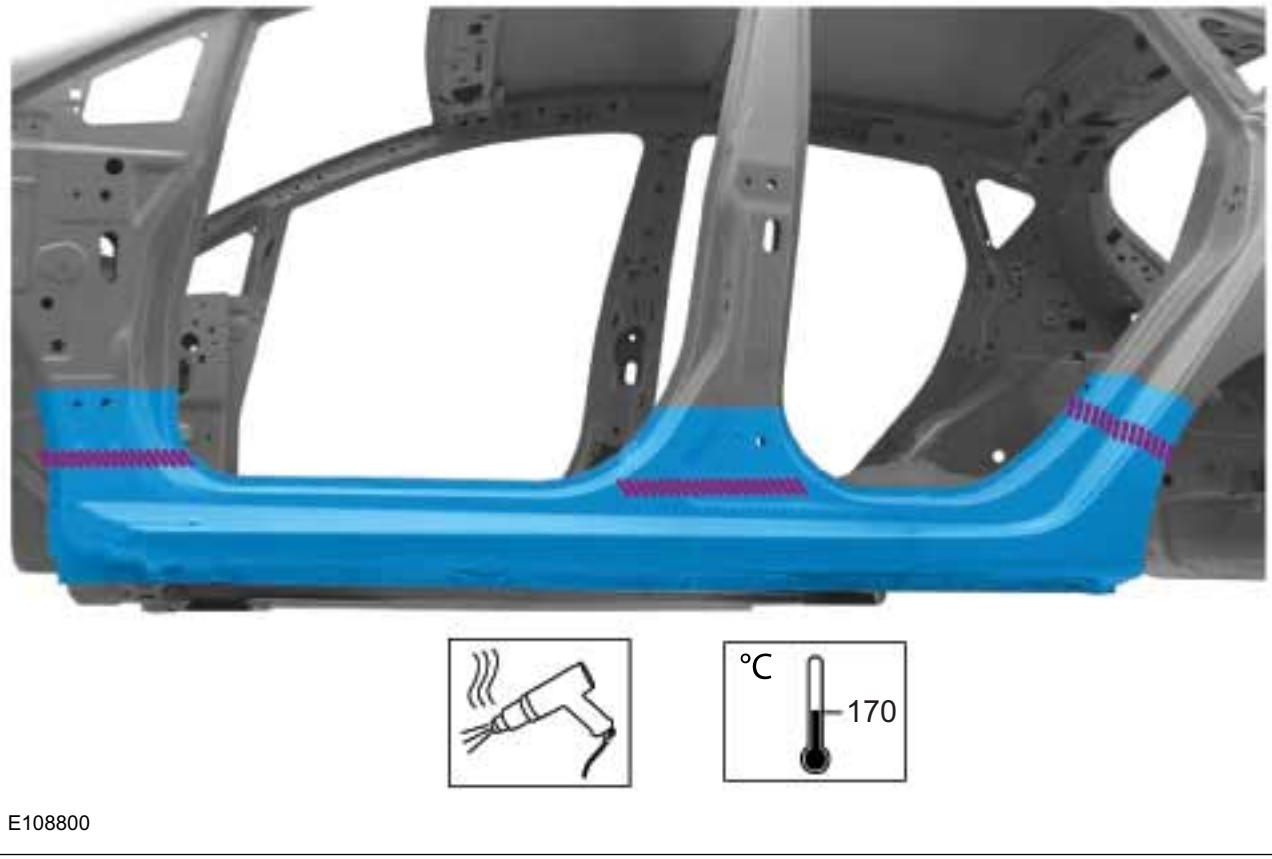

REMOVAL AND INSTALLATION

Installation

1. **NOTE:** Before resistance spot welding of body panels with a total panel thickness of 3 mm and greater, the manufacturer's welding equipment instructions and sub-section 501-25 must be followed.

   Refer to: Tools and Equipment for Body Repairs (501-25 Body Repairs - General Information, Description and Operation).

2. **NOTE:** Sealer or adhesive must not be applied in welding zones. Areas which were bonded or sealed needs to be thoroughly sealed afterwards.

   Refer to: Sealer, Underbody Protection Material and Adhesives (501-25 Body Repairs - General Information, Description and Operation).

3. • Material: Windshield Adhesive Kit (WSS-M11P57-A5) adhesive

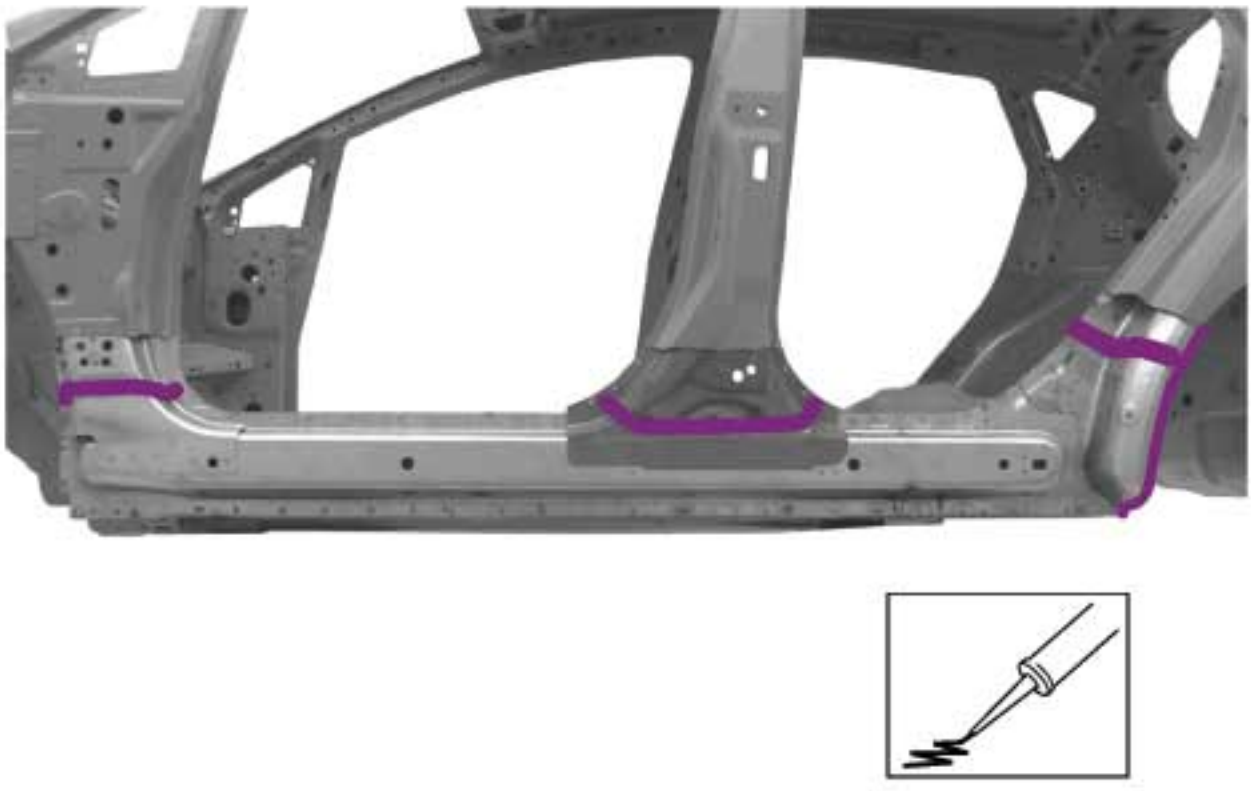

E108801

4. • General Equipment: MIG/MAG Welding Equipment

REMOVAL AND INSTALLATION

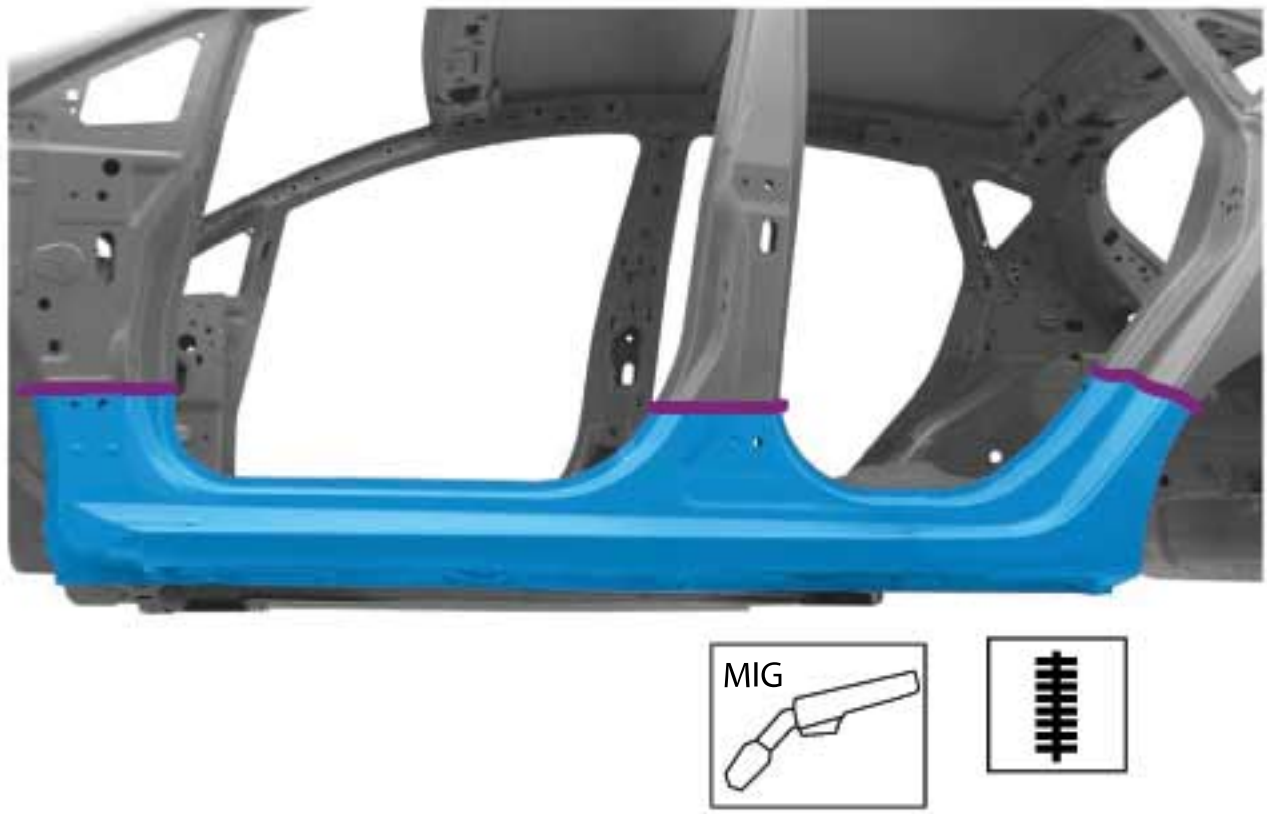

E108802

5. • General Equipment: Resistance Spotwelding Equipment

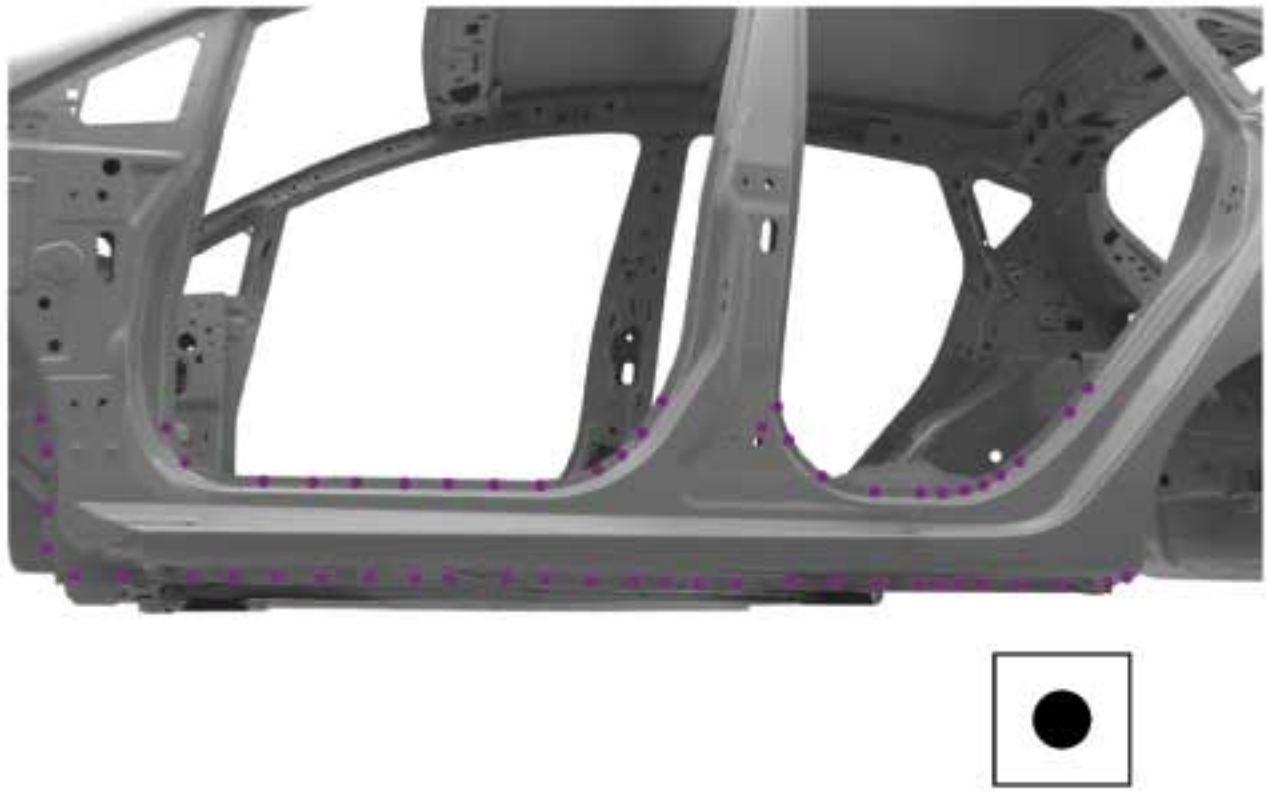

E108803

REMOVAL AND INSTALLATION

6.

E108804

7.
- Front and Rear Door
- Door Hinges
- Front Wheel Arch Trim
- Rear Wheel Arch Trim
- Refer to: A-Pillar Trim Panel (501-05, Removal and Installation).
  Refer to: B-Pillar Trim Panel - 5-Door (501-05 Interior Trim and Ornamentation, Removal and Installation).
  Refer to: C-Pillar Trim Panel - 5-Door (501-05 Interior Trim and Ornamentation, Removal and Installation).
- Rocker Panel Trim
- Refer to: Front Seat (501-10, Removal and Installation).
  Refer to: Rear Seat Cushion (501-10, Removal and Installation).
  Refer to: Rear Seat Backrest (501-10, Removal and Installation).

REMOVAL AND INSTALLATION

Rocker Panel Inner Reinforcement — Double Cab

General Equipment

Air Body Saw
MIG/MAG Welding Equipment

General Equipment

Resistance Spotwelding Equipment
Spot weld drill Bit

Removal

1. Refer to: Tools and Equipment for Body Repairs (501-25 Body Repairs - General Information, Description and Operation).
2. • Refer to: A-Pillar Assembly (501-29 Side Panel Sheet Metal Repairs, Removal and Installation).
   • Refer to: A-Pillar Outer Panel (501-29 Side Panel Sheet Metal Repairs, Removal and Installation).
   • Rocker Panel
   • Door Hinges
   • Front and Rear Door
   • Front Wheel Arch Trim
   • Rear Wheel Arch Trim
   • A- B- and C-Pillar Trim

     Refer to: A-Pillar Trim Panel (501-05 Interior Trim and Ornamentation, Removal and Installation).
     Refer to: B-Pillar Trim Panel - 5-Door (501-05 Interior Trim and Ornamentation, Removal and Installation).
     Refer to: C-Pillar Trim Panel - 5-Door (501-05 Interior Trim and Ornamentation, Removal and Installation).
   • Rocker Panel Trim
   • Refer to: Front Seat (501-10, Removal and Installation).
     Refer to: Rear Seat Cushion (501-10, Removal and Installation).
     Refer to: Rear Seat Backrest (501-10, Removal and Installation).
   • Reposition the carpeting and the wiring harness away from the working area.
3. • General Equipment: Air Body Saw

REMOVAL AND INSTALLATION

E115412

4. • General Equipment: Spot weld drill Bit

E115413

Installation

1. **NOTE:** Before resistance spot welding of body panels with a total panel thickness of 3 mm and greater, the manufacturer's welding equipment instructions and sub-section 501-25 must be followed.

   Refer to: Tools and Equipment for Body Repairs (501-25 Body Repairs - General Information, Description and Operation).

2. **NOTE:** Sealer or adhesive must not be applied in welding zones. Areas which were bonded or sealed needs to be thoroughly sealed afterwards.

   Refer to: Sealer, Underbody Protection Material and Adhesives (501-25 Body Repairs - General Information, Description and Operation).

3. • General Equipment: Resistance Spotwelding Equipment

REMOVAL AND INSTALLATION

E115414

4. • General Equipment: MIG/MAG Welding Equipment

E115415

REMOVAL AND INSTALLATION

5. • Refer to: A-Pillar Assembly (501-29 Side Panel Sheet Metal Repairs, Removal and Installation).
   • Refer to: A-Pillar Outer Panel (501-29 Side Panel Sheet Metal Repairs, Removal and Installation).
   • Rocker Panel
   • Door Hinges
   • Front and Rear Door
   • Front Wheel Arch Trim
   • Rear Wheel Arch Trim
   • A- B- and C-Pillar Trim

     Refer to: A-Pillar Trim Panel (501-05 Interior Trim and Ornamentation, Removal and Installation).
     Refer to: B-Pillar Trim Panel - 5-Door (501-05 Interior Trim and Ornamentation, Removal and Installation).
     Refer to: C-Pillar Trim Panel - 5-Door (501-05 Interior Trim and Ornamentation, Removal and Installation).
   • Rocker Panel Trim
   • Refer to: Front Seat (501-10, Removal and Installation).
     Refer to: Rear Seat Cushion (501-10, Removal and Installation).
     Refer to: Rear Seat Backrest (501-10, Removal and Installation).

REMOVAL AND INSTALLATION

Rocker Panel Inner Reinforcement — Single Cab

General Equipment

Air Body Saw
MIG/MAG Welding Equipment

General Equipment

Resistance Spotwelding Equipment
Spot weld drill Bit

Removal

1. Refer to: Tools and Equipment for Body Repairs (501-25 Body Repairs - General Information, Description and Operation).
2. • Refer to: A-Pillar Assembly (501-29 Side Panel Sheet Metal Repairs, Removal and Installation).
   • Refer to: A-Pillar Outer Panel (501-29 Side Panel Sheet Metal Repairs, Removal and Installation).
   • Rocker Panel
   • Door Hinges
   • Front and Rear Door
   • Front Wheel Arch Trim
   • Rear Wheel Arch Trim
   • A- B- and C-Pillar Trim

     Refer to: A-Pillar Trim Panel (501-05 Interior Trim and Ornamentation, Removal and Installation).
     Refer to: B-Pillar Trim Panel - 5-Door (501-05 Interior Trim and Ornamentation, Removal and Installation).
     Refer to: C-Pillar Trim Panel - 5-Door (501-05 Interior Trim and Ornamentation, Removal and Installation).
   • Rocker Panel Trim
   • Refer to: Front Seat (501-10, Removal and Installation).
     Refer to: Rear Seat Cushion (501-10, Removal and Installation).
     Refer to: Rear Seat Backrest (501-10, Removal and Installation).
   • Reposition the carpeting and the wiring harness away from the working area.
3. • General Equipment: Air Body Saw

REMOVAL AND INSTALLATION

E115412

4. • General Equipment: Spot weld drill Bit

E115413

Installation

1. **NOTE:** Before resistance spot welding of body panels with a total panel thickness of 3 mm and greater, the manufacturer's welding equipment instructions and sub-section 501-25 must be followed.

   Refer to: Tools and Equipment for Body Repairs (501-25 Body Repairs - General Information, Description and Operation).

2. **NOTE:** Sealer or adhesive must not be applied in welding zones. Areas which were bonded or sealed needs to be thoroughly sealed afterwards.

   Refer to: Sealer, Underbody Protection Material and Adhesives (501-25 Body Repairs - General Information, Description and Operation).

3. • General Equipment: Resistance Spotwelding Equipment

REMOVAL AND INSTALLATION

E115414

4. • General Equipment: MIG/MAG Welding Equipment

E115415

REMOVAL AND INSTALLATION

5. • Refer to: A-Pillar Assembly (501-29 Side Panel Sheet Metal Repairs, Removal and Installation).
   • Refer to: A-Pillar Outer Panel (501-29 Side Panel Sheet Metal Repairs, Removal and Installation).
   • Rocker Panel
   • Door Hinges
   • Front and Rear Door
   • Front Wheel Arch Trim
   • Rear Wheel Arch Trim
   • A- B- and C-Pillar Trim

     Refer to: A-Pillar Trim Panel (501-05 Interior Trim and Ornamentation, Removal and Installation).
     Refer to: B-Pillar Trim Panel - 5-Door (501-05 Interior Trim and Ornamentation, Removal and Installation).
     Refer to: C-Pillar Trim Panel - 5-Door (501-05 Interior Trim and Ornamentation, Removal and Installation).
   • Rocker Panel Trim
   • Refer to: Front Seat (501-10, Removal and Installation).
     Refer to: Rear Seat Cushion (501-10, Removal and Installation).
     Refer to: Rear Seat Backrest (501-10, Removal and Installation).

REMOVAL AND INSTALLATION

Rocker Panel Inner Reinforcement — Super Cab

General Equipment

Air Body Saw
MIG/MAG Welding Equipment

General Equipment

Resistance Spotwelding Equipment
Spot weld drill Bit

Removal

1. Refer to: Tools and Equipment for Body Repairs (501-25 Body Repairs - General Information, Description and Operation).
2. • Refer to: A-Pillar Assembly (501-29 Side Panel Sheet Metal Repairs, Removal and Installation).
   • Refer to: A-Pillar Outer Panel (501-29 Side Panel Sheet Metal Repairs, Removal and Installation).
   • Rocker Panel
   • Door Hinges
   • Front and Rear Door
   • Front Wheel Arch Trim
   • Rear Wheel Arch Trim
   • A- B- and C-Pillar Trim

     Refer to: A-Pillar Trim Panel (501-05 Interior Trim and Ornamentation, Removal and Installation).
     Refer to: B-Pillar Trim Panel - 5-Door (501-05 Interior Trim and Ornamentation, Removal and Installation).
     Refer to: C-Pillar Trim Panel - 5-Door (501-05 Interior Trim and Ornamentation, Removal and Installation).
   • Rocker Panel Trim
   • Refer to: Front Seat (501-10, Removal and Installation).
     Refer to: Rear Seat Cushion (501-10, Removal and Installation).
     Refer to: Rear Seat Backrest (501-10, Removal and Installation).
   • Reposition the carpeting and the wiring harness away from the working area.
3. • General Equipment: Air Body Saw

REMOVAL AND INSTALLATION

E115412

4. • General Equipment: Spot weld drill Bit

E115413

Installation

1. **NOTE:** Before resistance spot welding of body panels with a total panel thickness of 3 mm and greater, the manufacturer's welding equipment instructions and sub-section 501-25 must be followed.

   Refer to: Tools and Equipment for Body Repairs (501-25 Body Repairs - General Information, Description and Operation).

2. **NOTE:** Sealer or adhesive must not be applied in welding zones. Areas which were bonded or sealed needs to be thoroughly sealed afterwards.

   Refer to: Sealer, Underbody Protection Material and Adhesives (501-25 Body Repairs - General Information, Description and Operation).

3. • General Equipment: Resistance Spotwelding Equipment

REMOVAL AND INSTALLATION

E115414

4. • General Equipment: MIG/MAG Welding Equipment

E115415

REMOVAL AND INSTALLATION

5. • Refer to: A-Pillar Assembly (501-29 Side Panel Sheet Metal Repairs, Removal and Installation).
   • Refer to: A-Pillar Outer Panel (501-29 Side Panel Sheet Metal Repairs, Removal and Installation).
   • Rocker Panel
   • Door Hinges
   • Front and Rear Door
   • Front Wheel Arch Trim
   • Rear Wheel Arch Trim
   • A- B- and C-Pillar Trim

     Refer to: A-Pillar Trim Panel (501-05 Interior Trim and Ornamentation, Removal and Installation).
     Refer to: B-Pillar Trim Panel - 5-Door (501-05 Interior Trim and Ornamentation, Removal and Installation).
     Refer to: C-Pillar Trim Panel - 5-Door (501-05 Interior Trim and Ornamentation, Removal and Installation).
   • Rocker Panel Trim
   • Refer to: Front Seat (501-10, Removal and Installation).
     Refer to: Rear Seat Cushion (501-10, Removal and Installation).
     Refer to: Rear Seat Backrest (501-10, Removal and Installation).

REMOVAL AND INSTALLATION

B-Pillar and Reinforcement — Double Cab

General Equipment

Air Body Saw
Hot Air Gun
MIG/MAG Welding Equipment
Resistance Spotwelding Equipment

General Equipment

Spot weld drill Bit

Materials	
Name	**Specification**
Windshield Adhesive Kit	WSS-M11P57-A5

Removal

NOTE: Equipment:

Measurement and alignment angle system

1. **WARNING: High-strength steel (Usibor 1500)**
   - A suitably powerful resistance spot welding device with **inverter technology** must be used for this repair. Observe the manufacturer's welding equipment instructions and sub-section 501-25.
   - The B-pillar reinforcement is made of high-strength steel plate (Usibor 1500).
   - A partial replacement of the B-pillar reinforcement is not permissible. The required continuous MIG weld seam in the area of the cut causes structural changes which result in significant loss of strength in the B-pillar reinforcement.
   - Due to its strength, the B-pillar reinforcement can not always be worked on with conventional body tools.
   - Additional preparations are required for MIG puddle welding.

   Refer to: Tools and Equipment for Body Repairs (501-25 Body Repairs - General Information, Description and Operation).

2. • Rocker Panel Trim

   Refer to: Front Seat (501-10 Seating, Removal and Installation).
   Refer to: Rear Seat Cushion (501-10 Seating, Disassembly and Assembly).
   Refer to: Rear Seat Backrest (501-10 Seating, Disassembly and Assembly).
   Refer to: B-Pillar Upper Trim Panel (501-05 Interior Trim and Ornamentation, Removal and Installation).
   Refer to: B-Pillar Lower Trim Panel (501-05 Interior Trim and Ornamentation, Removal and Installation).
   Refer to: Headliner (501-05 Interior Trim and Ornamentation, Removal and Installation).
   - Front and Rear Door
   - Reposition the carpeting and the wiring harness away from the working area.

3. • General Equipment: Air Body Saw
   General Equipment: Spot weld drill Bit

REMOVAL AND INSTALLATION

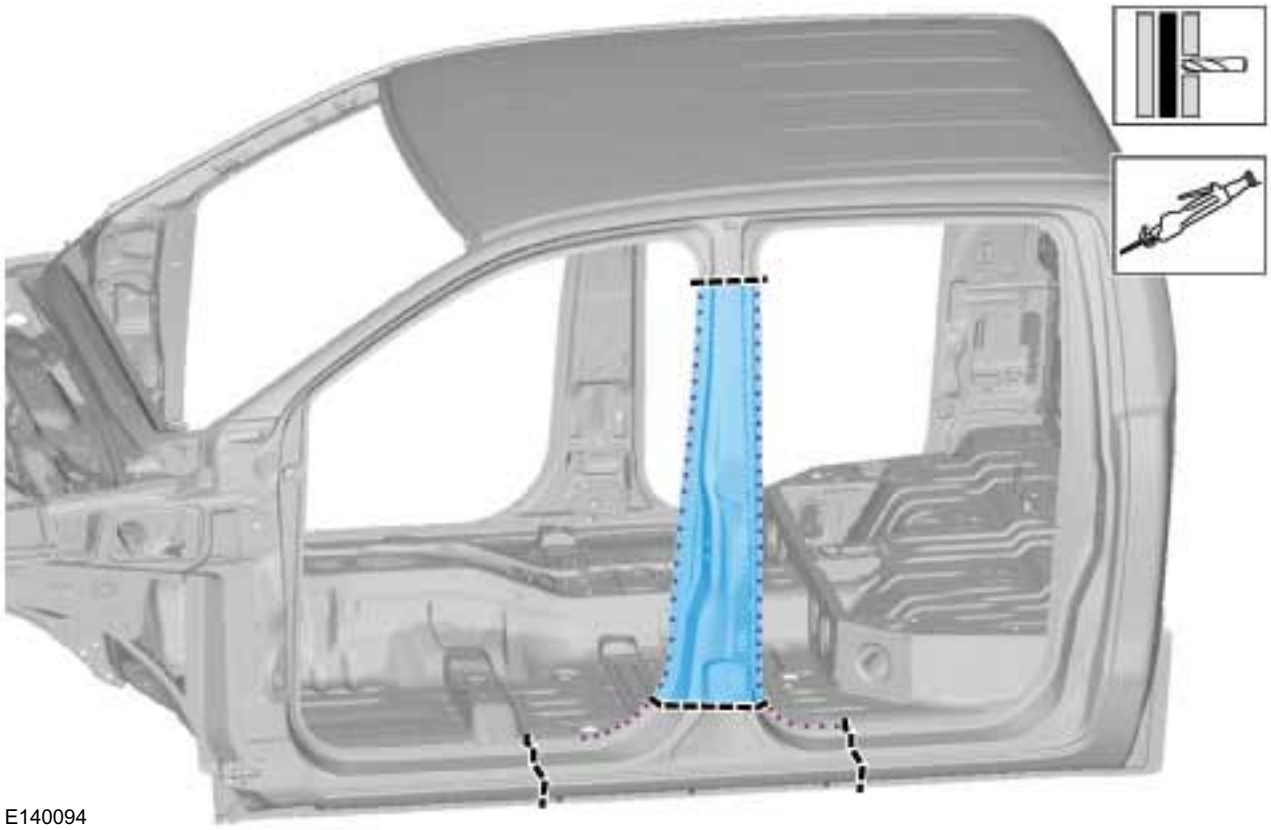

4. • General Equipment: Hot Air Gun

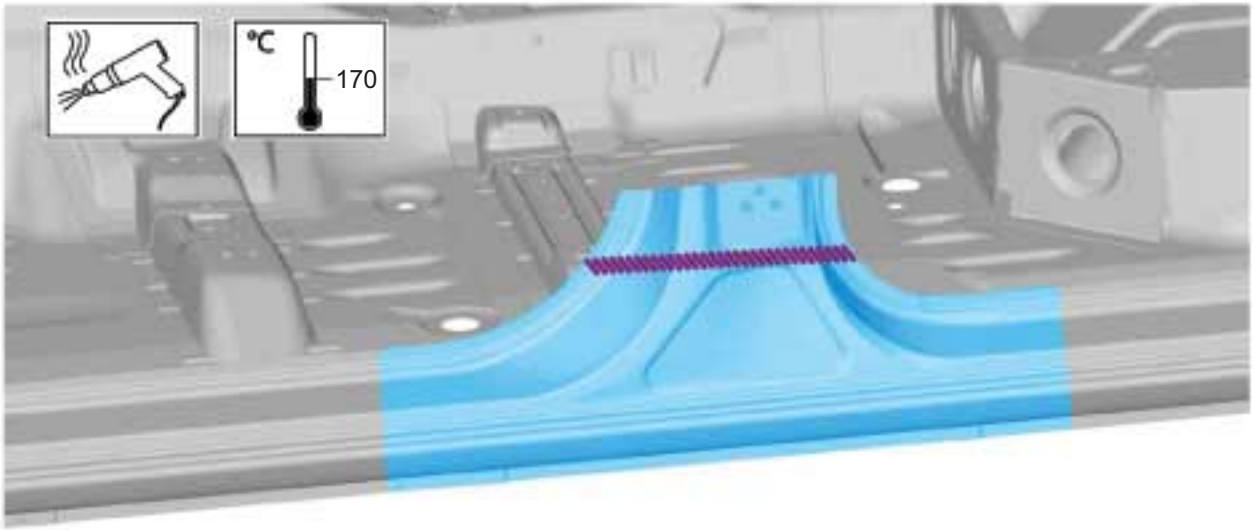

5. • General Equipment: Spot weld drill Bit

REMOVAL AND INSTALLATION

6. • General Equipment: Air Body Saw

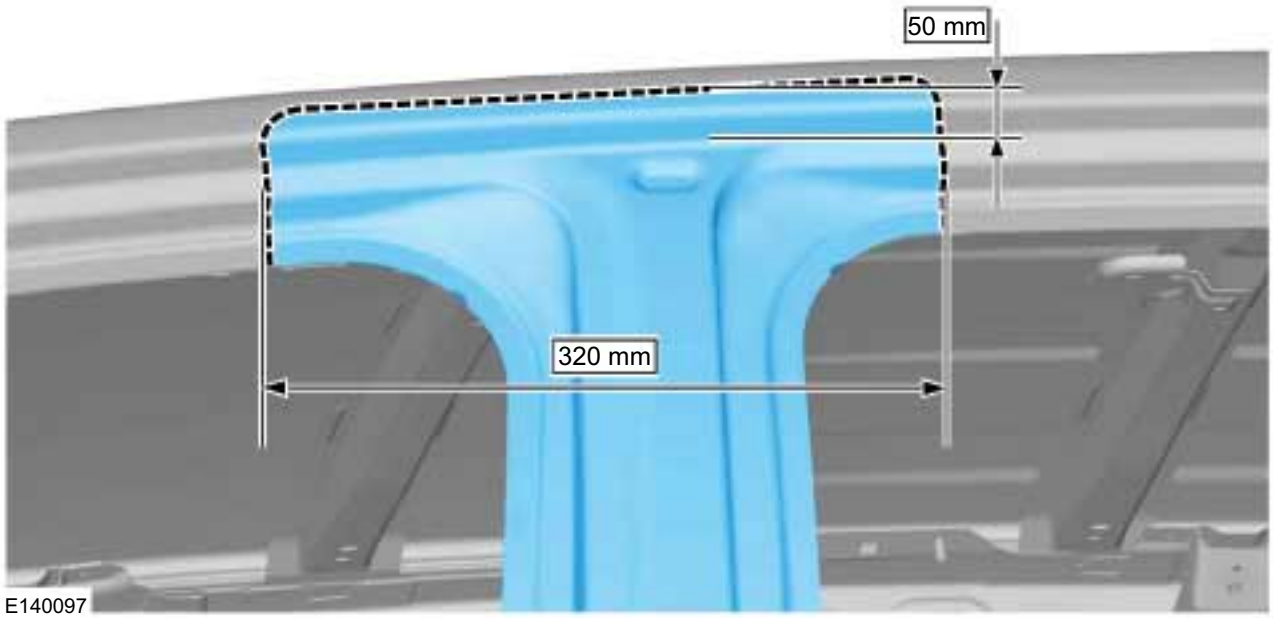

REMOVAL AND INSTALLATION

7. • General Equipment: Air Body Saw General Equipment: Spot weld drill Bit

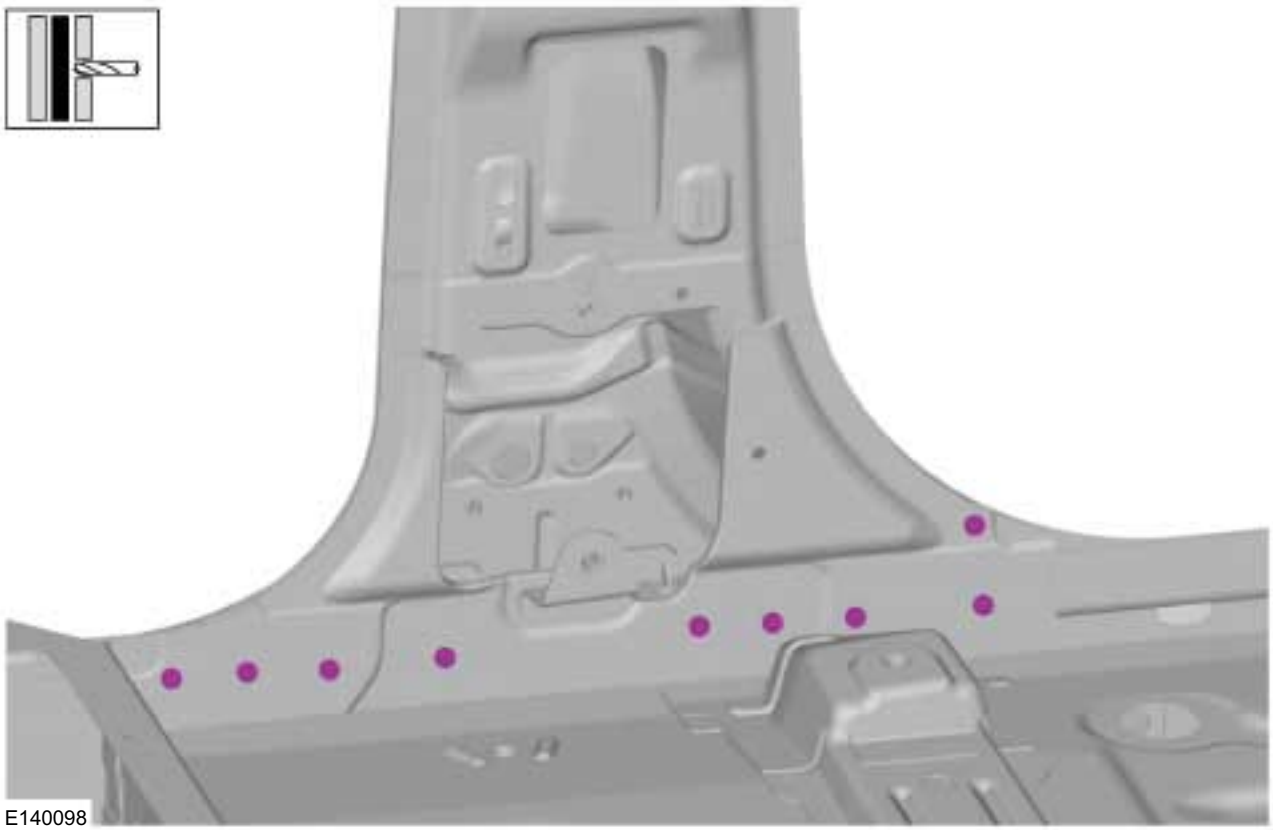

8. • General Equipment: Spot weld drill Bit

REMOVAL AND INSTALLATION

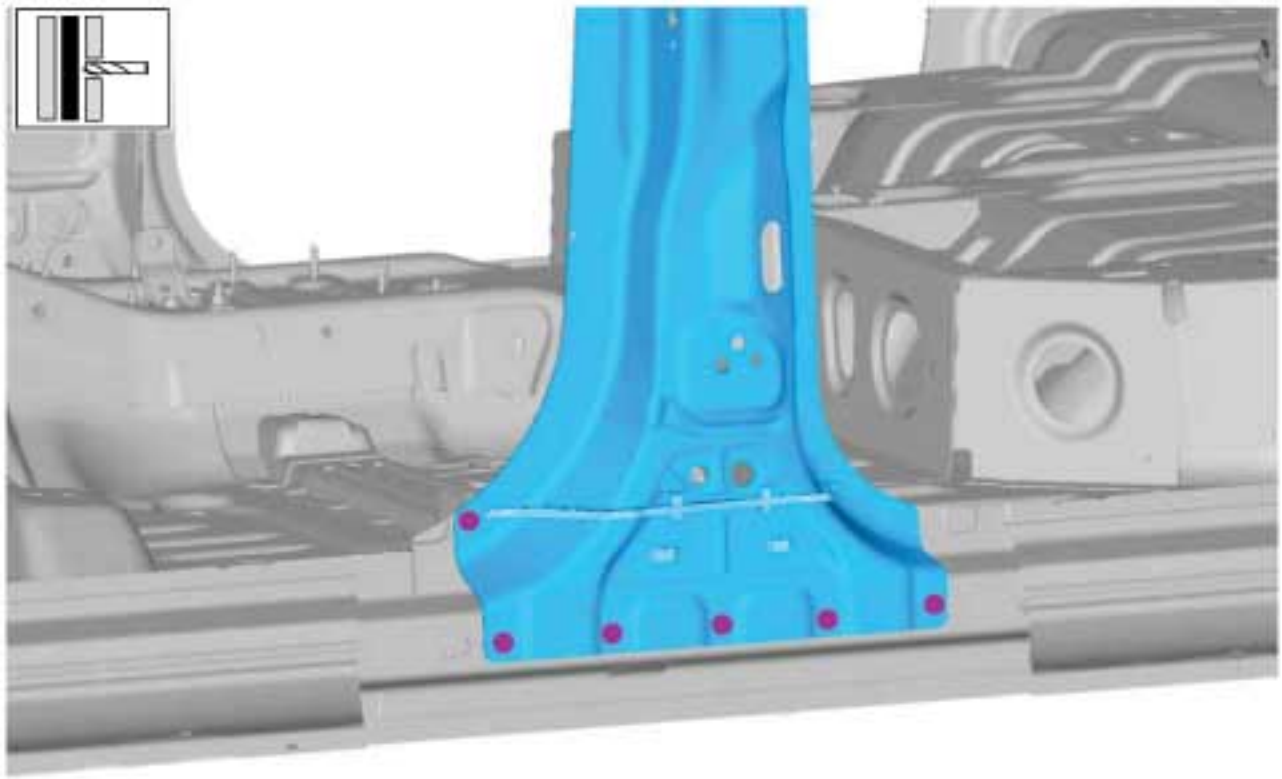

E140099

9. • General Equipment: Spot weld drill Bit

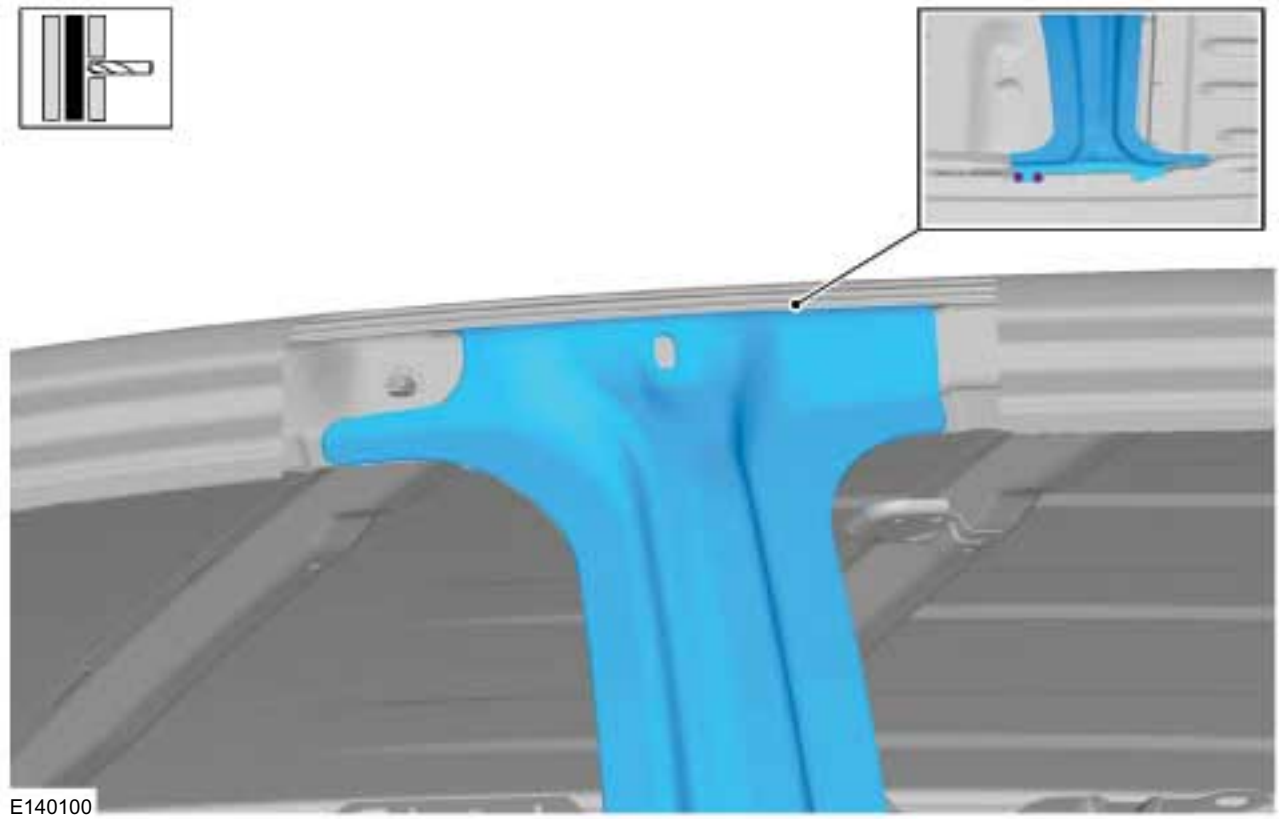

E140100

REMOVAL AND INSTALLATION

Installation

1. **NOTE:** Before resistance spot welding of body panels with a total panel thickness of 3 mm and greater, the manufacturer's welding equipment instructions and sub-section 501-25 must be followed.

   Refer to: Tools and Equipment for Body Repairs (501-25 Body Repairs - General Information, Description and Operation).

2. **NOTE:** Sealer or adhesive must not be applied in welding zones. Areas which were bonded or sealed needs to be thoroughly sealed afterwards.

   Refer to: Sealer, Underbody Protection Material and Adhesives (501-25 Body Repairs - General Information, Description and Operation).

3. • • The holes need to be pre-milled with a spherical cutter with a small diameter. Afterwards these holes are then milled out to the required diameter with a spindle milling cutter. This method is essential in order to ensure that the material in the edge area of the milled holes is not weakened.

   Equipment: Spherical cutter
   • Equipment: spindle milling cutter

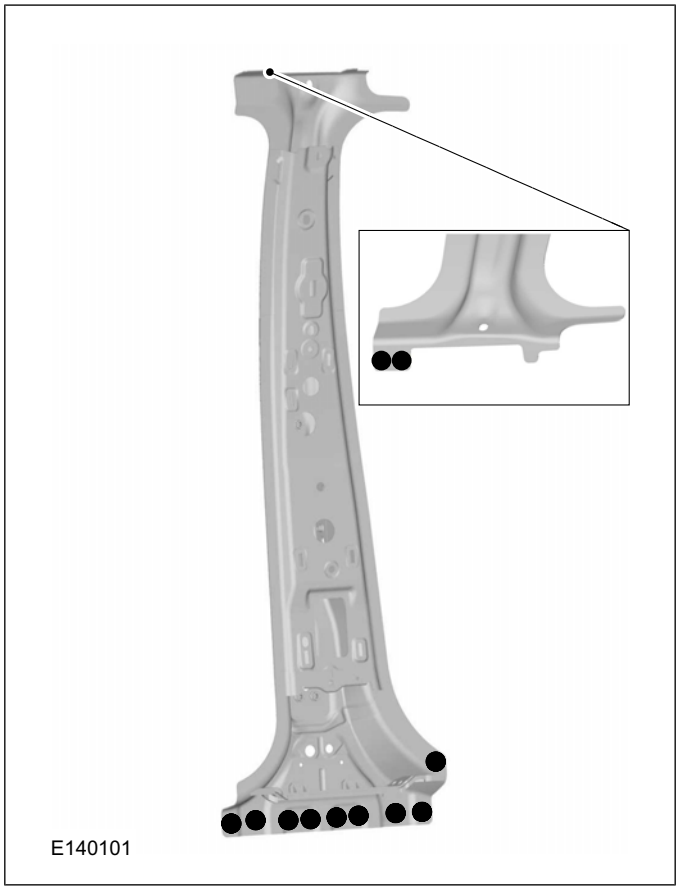

REMOVAL AND INSTALLATION

4. • **WARNING: The B-pillar reinforcement is covered with a hot-dip aluminized coating on its entire surface. This coating needs to be fully ground off on the welding flanges on the front and rear using a fibre grinding disc. Any contamination due to parts of the coating in the welding bath will weaken the welded joint.**

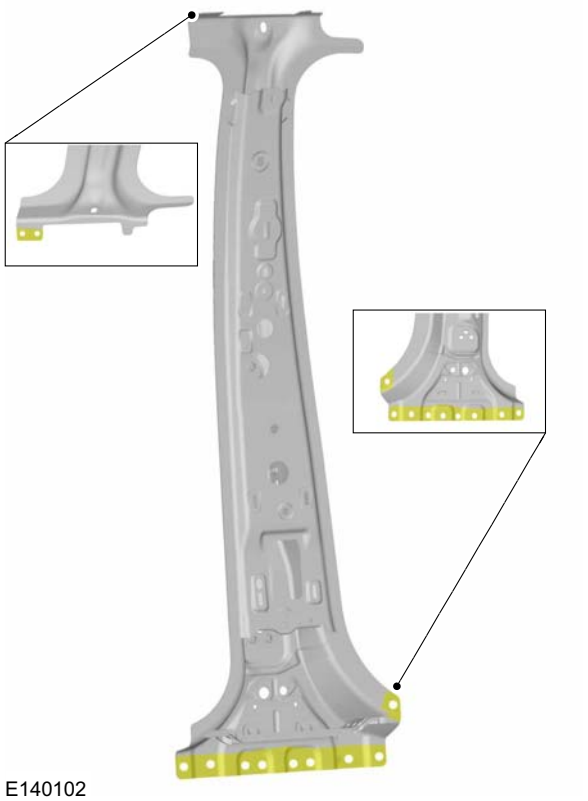
E140102

5. • **WARNING: The A-pillar reinforcement is covered with a hot-dip aluminized coating on its entire surface. This coating needs to be fully ground off on the welding flanges on the front using a fibre grinding disc. Any contamination due to parts of the coating in the welding bath will weaken the welded joint.**

E140103

6. • Resistance spot weld - Panel thickness 3 mm and greater!

General Equipment: Resistance Spotwelding Equipment

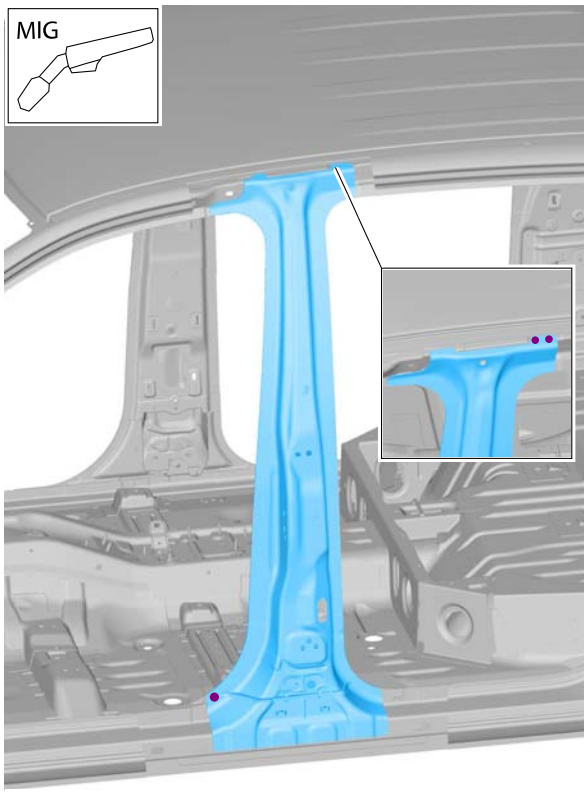

E140104

REMOVAL AND INSTALLATION

7. • General Equipment: MIG/MAG Welding Equipment

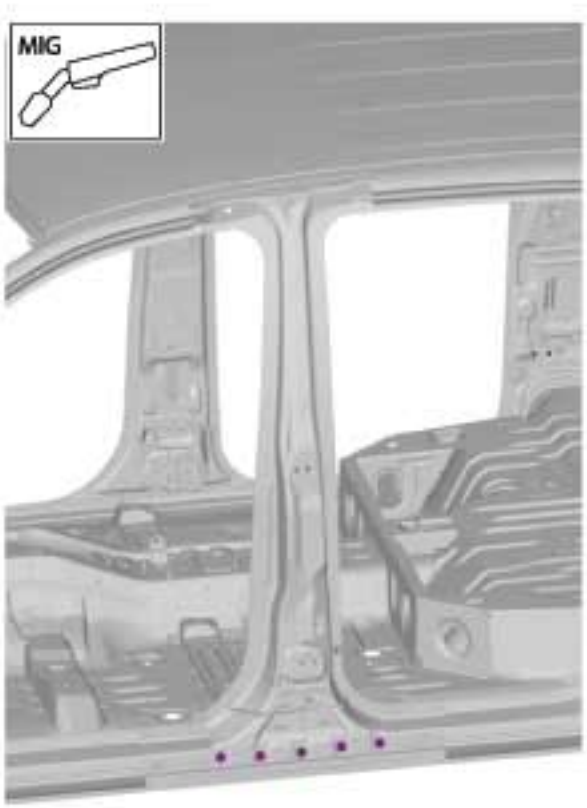

E140105

8. • Material: Windshield Adhesive Kit (WSS-M11P57-A5) adhesive

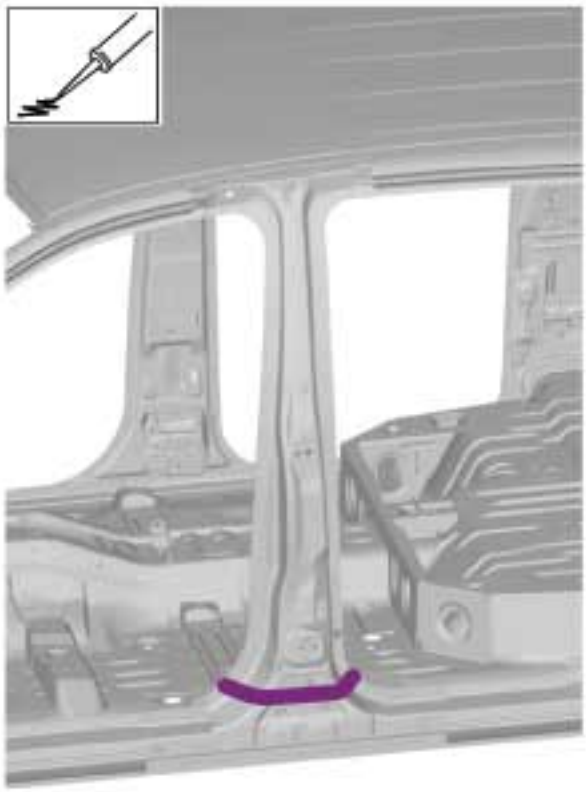

E140106

9. • Puddle weld **2** panel layer.

General Equipment: MIG/MAG Welding Equipment

REMOVAL AND INSTALLATION

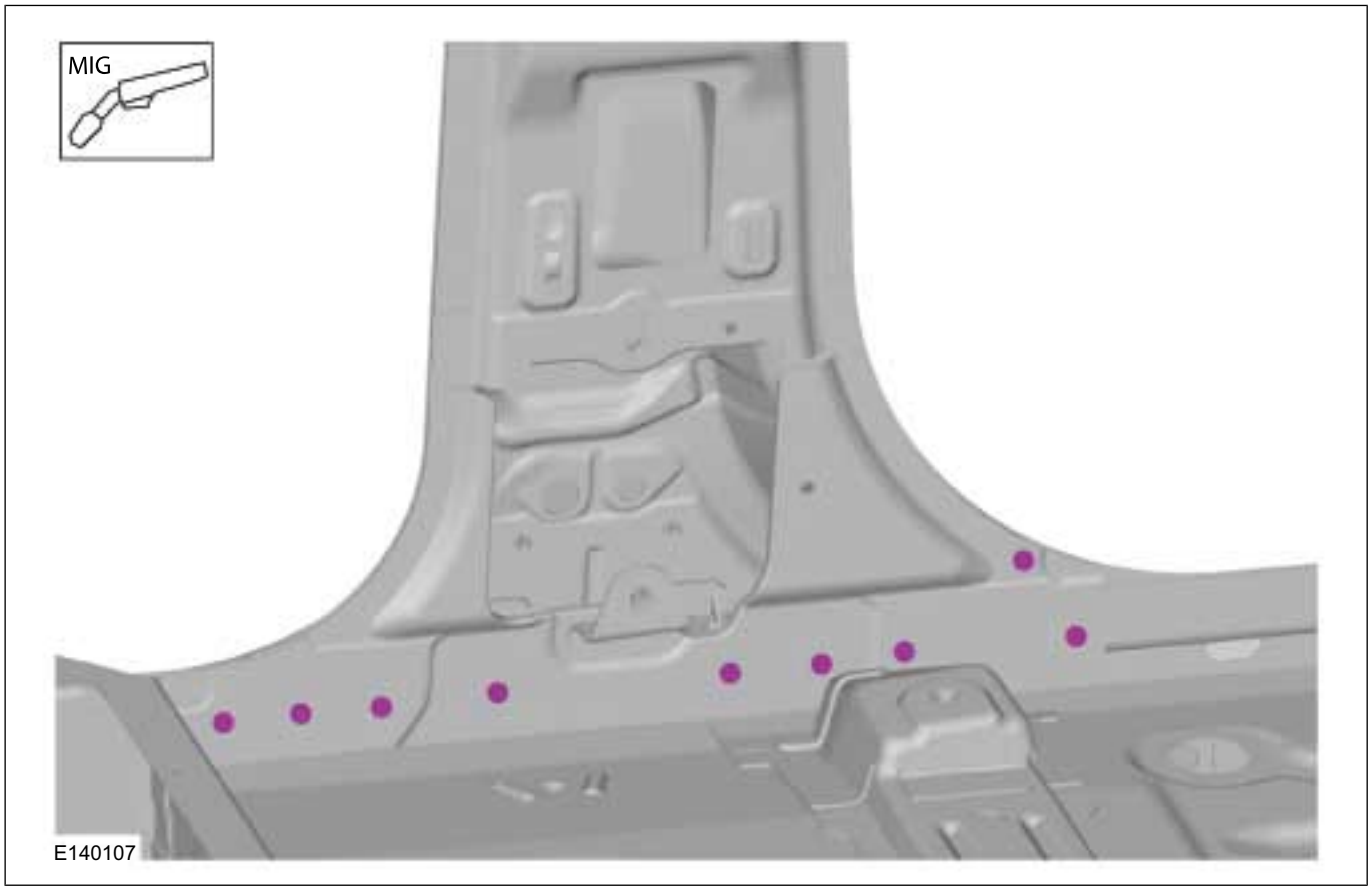

10. • Puddle weld **3** panel layer.

    General Equipment: MIG/MAG Welding Equipment

REMOVAL AND INSTALLATION

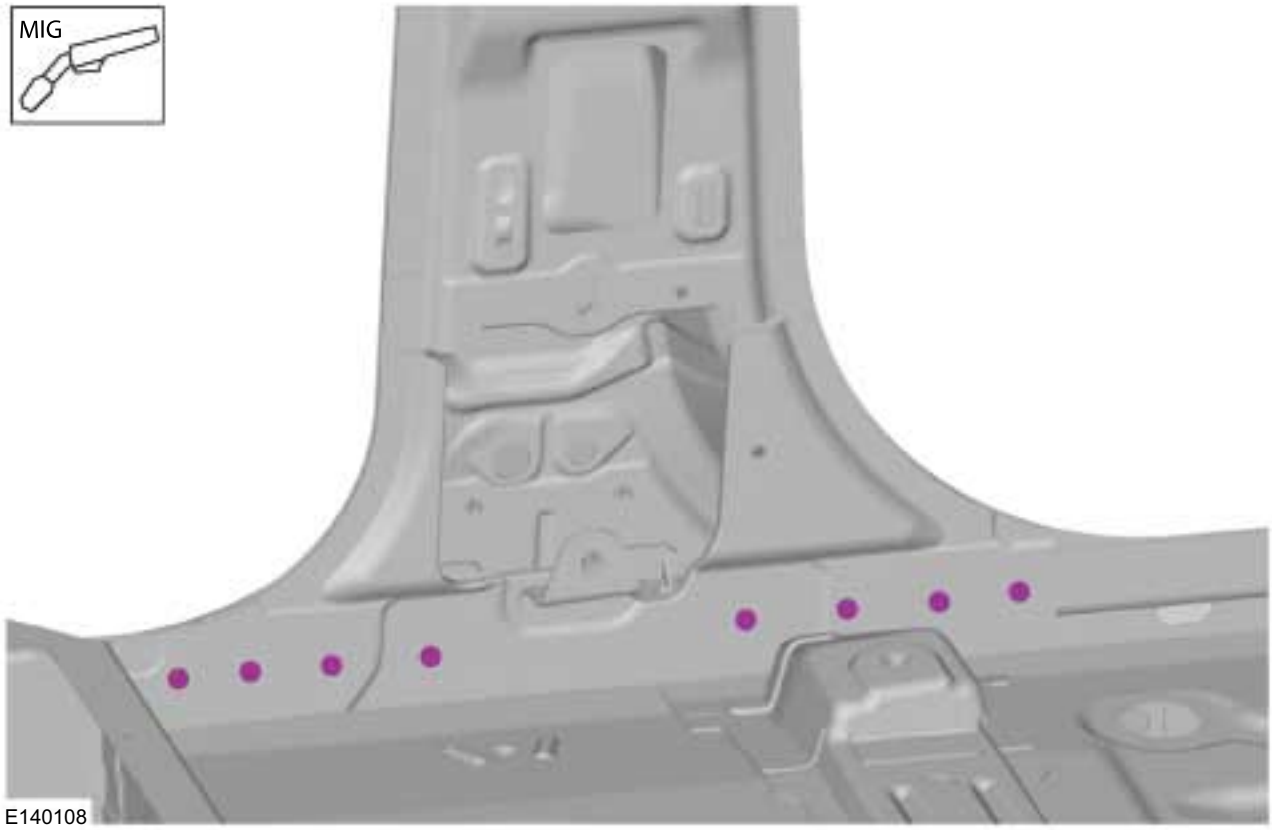

11. • Resistance spot weld - Panel thickness 3 mm and greater!

General Equipment: Resistance Spotwelding Equipment

REMOVAL AND INSTALLATION

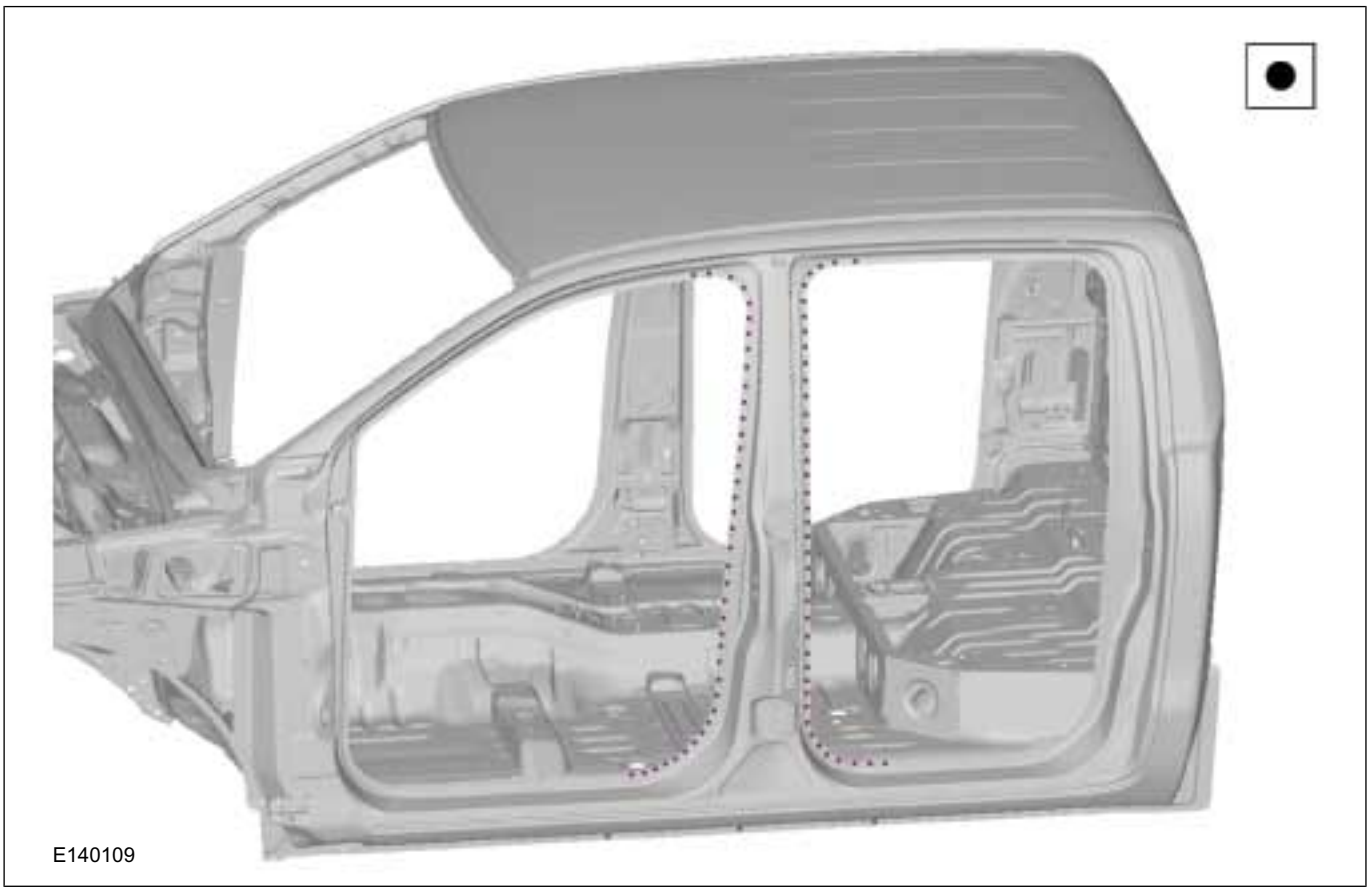

12. • General Equipment: MIG/MAG Welding Equipment

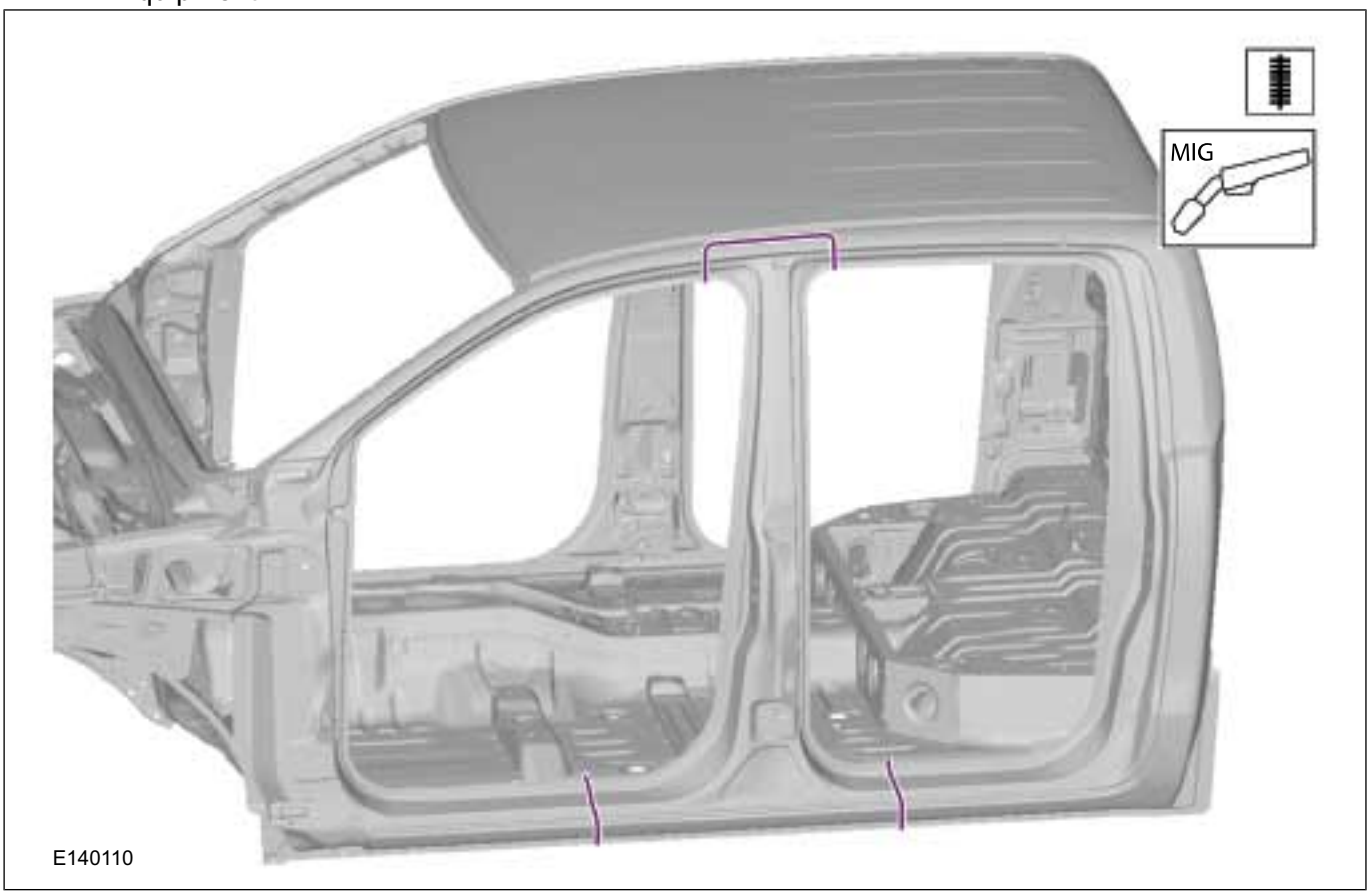

REMOVAL AND INSTALLATION

13. • Rocker Panel Trim

    Refer to: Front Seat (501-10 Seating, Removal and Installation).
    Refer to: Rear Seat Cushion (501-10 Seating, Disassembly and Assembly).
    Refer to: Rear Seat Backrest (501-10 Seating, Disassembly and Assembly).
    Refer to: B-Pillar Upper Trim Panel (501-05 Interior Trim and Ornamentation, Removal and Installation).
    Refer to: B-Pillar Lower Trim Panel (501-05 Interior Trim and Ornamentation, Removal and Installation).
    Refer to: Headliner (501-05 Interior Trim and Ornamentation, Removal and Installation).
    • Front and Rear Door

REMOVAL AND INSTALLATION

B-Pillar Outer Panel — Double Cab

General Equipment

Air Body Saw
Hot Air Gun
MIG/MAG Welding Equipment
Resistance Spotwelding Equipment

General Equipment

Spot weld drill Bit

Materials	
Name	**Specification**
Windshield Adhesive Kit	WSS-M11P57-A5

Removal

1. • Rocker Panel Trim

   Refer to: Front Seat (501-10 Seating, Removal and Installation).
   Refer to: B-Pillar Upper Trim Panel (501-05 Interior Trim and Ornamentation, Removal and Installation).
   Refer to: B-Pillar Lower Trim Panel (501-05 Interior Trim and Ornamentation, Removal and Installation).
   • Front and Rear Door
   • Reposition the carpeting and the wiring harness away from the working area.
2. • General Equipment: Air Body Saw
   General Equipment: Spot weld drill Bit

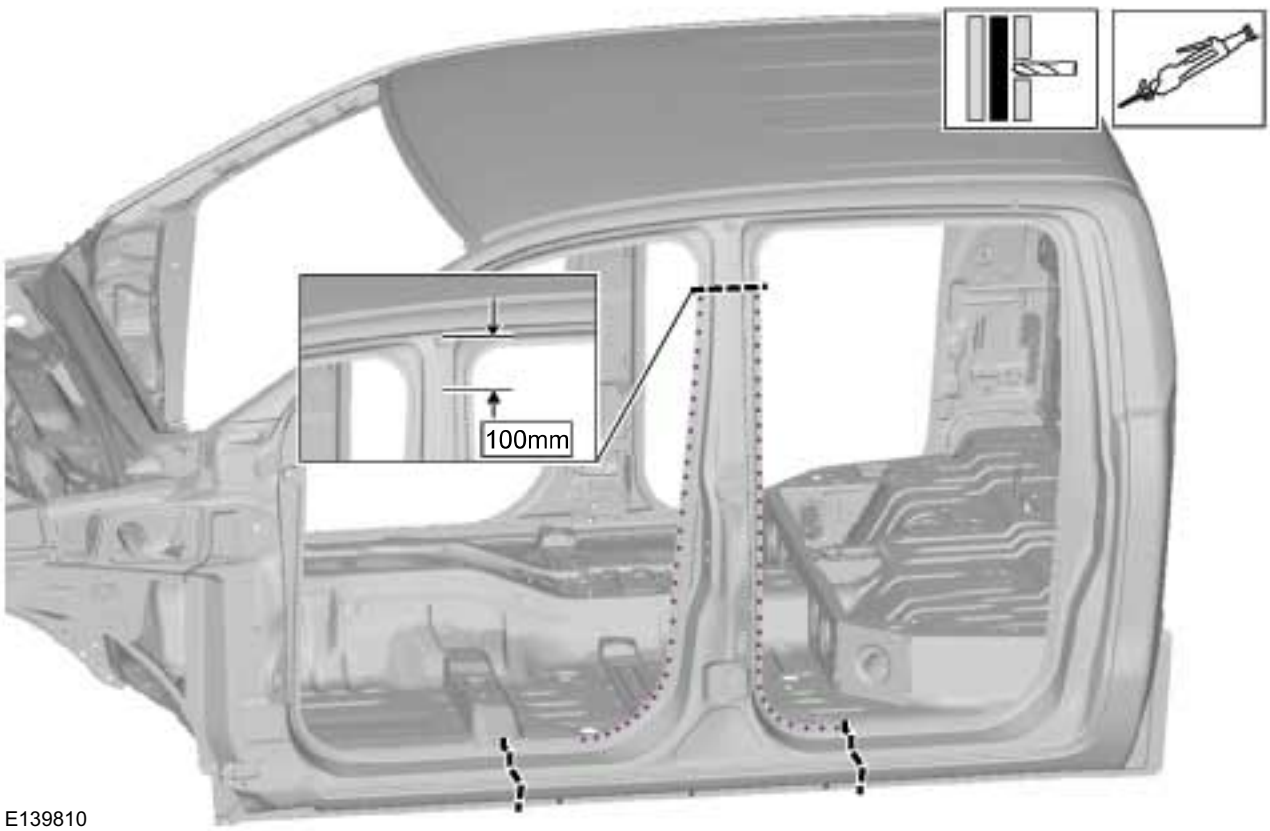

REMOVAL AND INSTALLATION

3. • General Equipment: Hot Air Gun

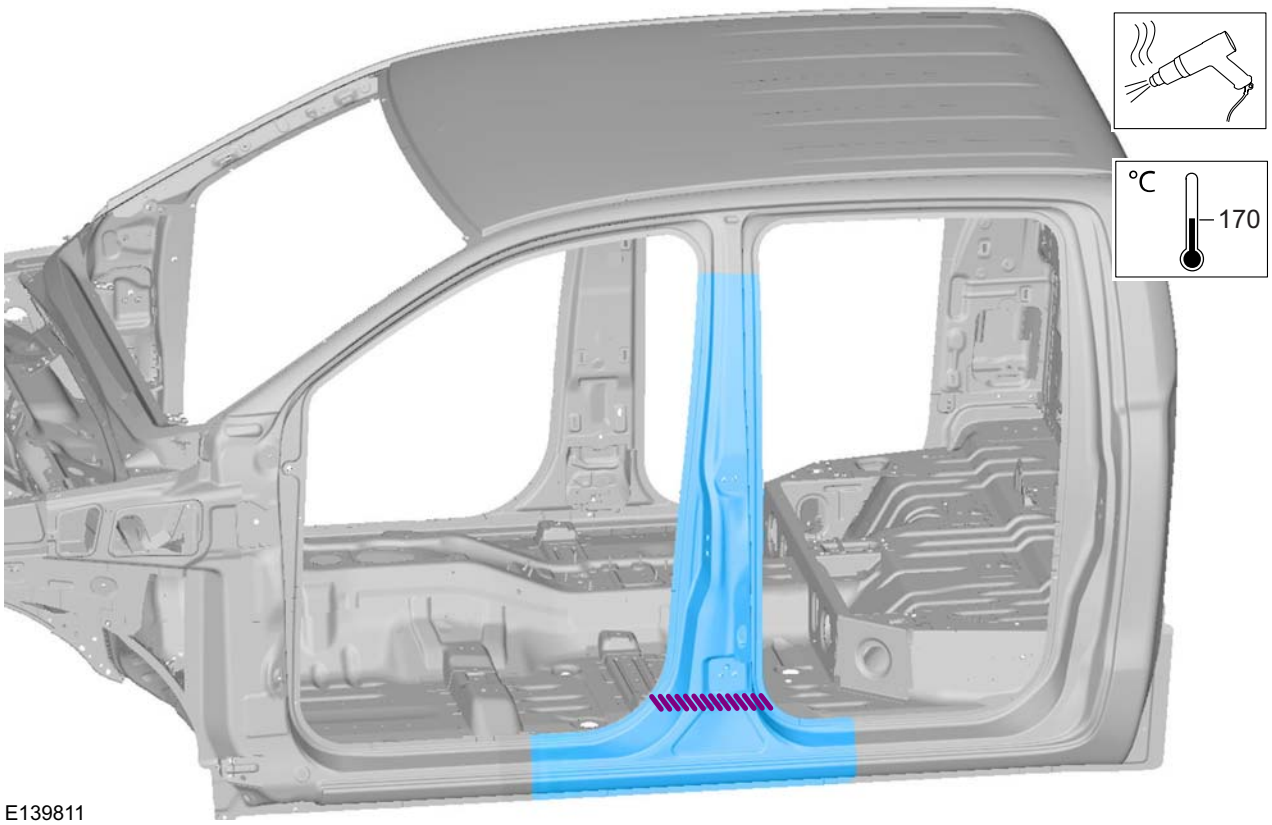

Installation

1. **NOTE:** Before resistance spot welding of body panels with a total panel thickness of 3 mm and greater, the manufacturer's welding equipment instructions and sub-section 501-25 must be followed.

   Refer to: Tools and Equipment for Body Repairs (501-25 Body Repairs - General Information, Description and Operation).

2. **NOTE:** Sealer or adhesive must not be applied in welding zones. Areas which were bonded or sealed needs to be thoroughly sealed afterwards.

   Refer to: Sealer, Underbody Protection Material and Adhesives (501-25 Body Repairs - General Information, Description and Operation).

3. • Material: Windshield Adhesive Kit (WSS-M11P57-A5) adhesive

REMOVAL AND INSTALLATION

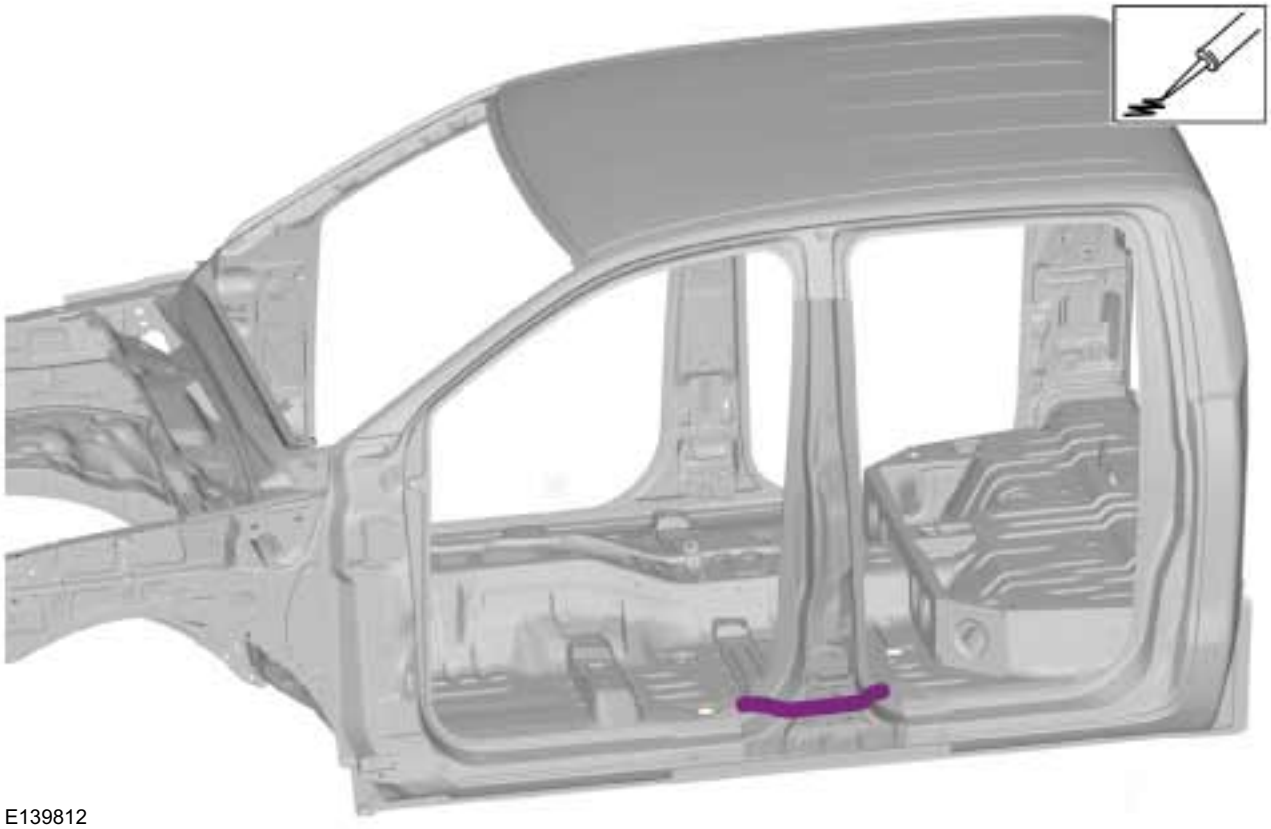

4. • Resistance spot weld - Panel thickness 3 mm and greater!

General Equipment: Resistance Spotwelding Equipment

REMOVAL AND INSTALLATION

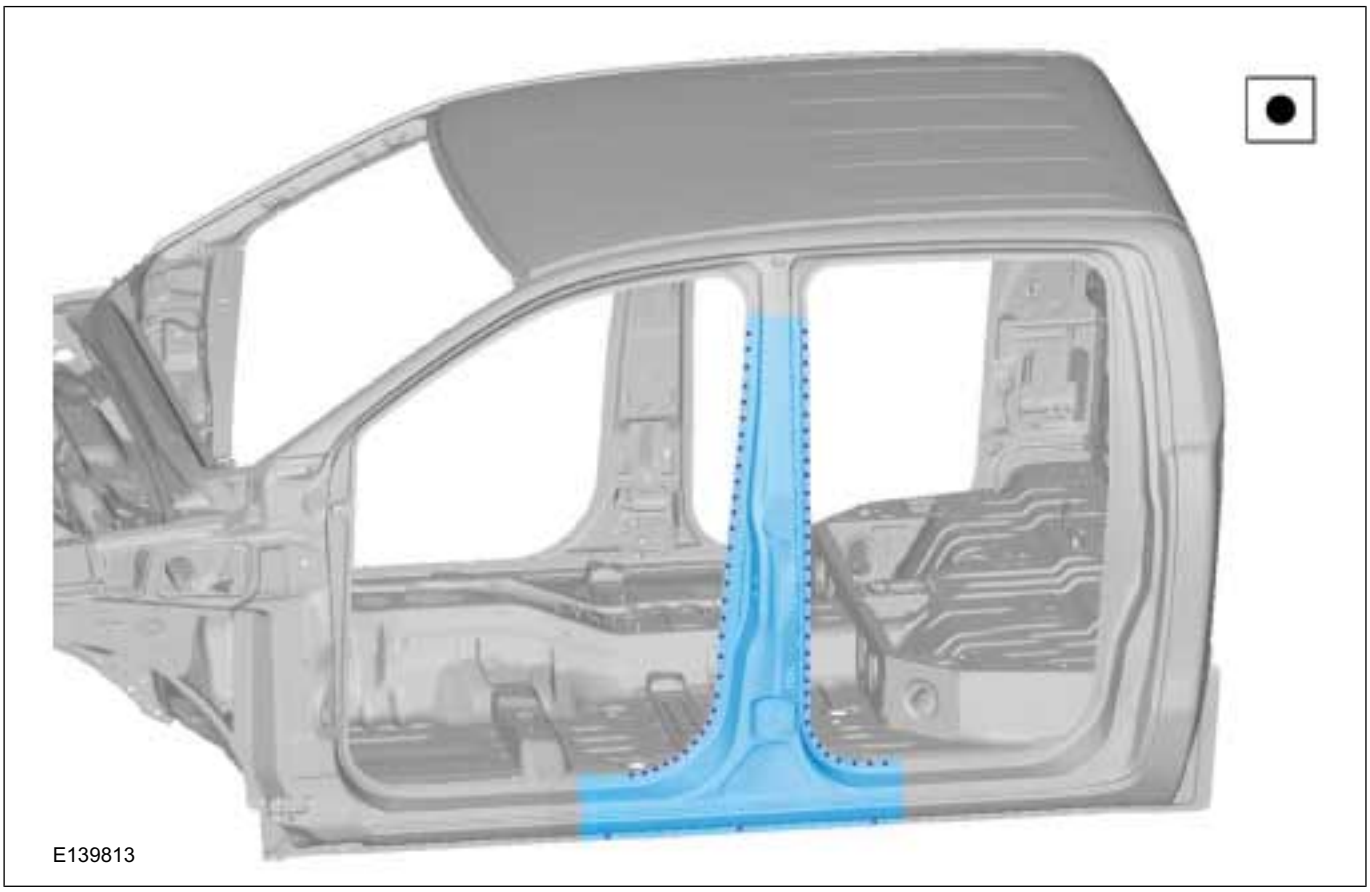

5. • General Equipment: MIG/MAG Welding Equipment

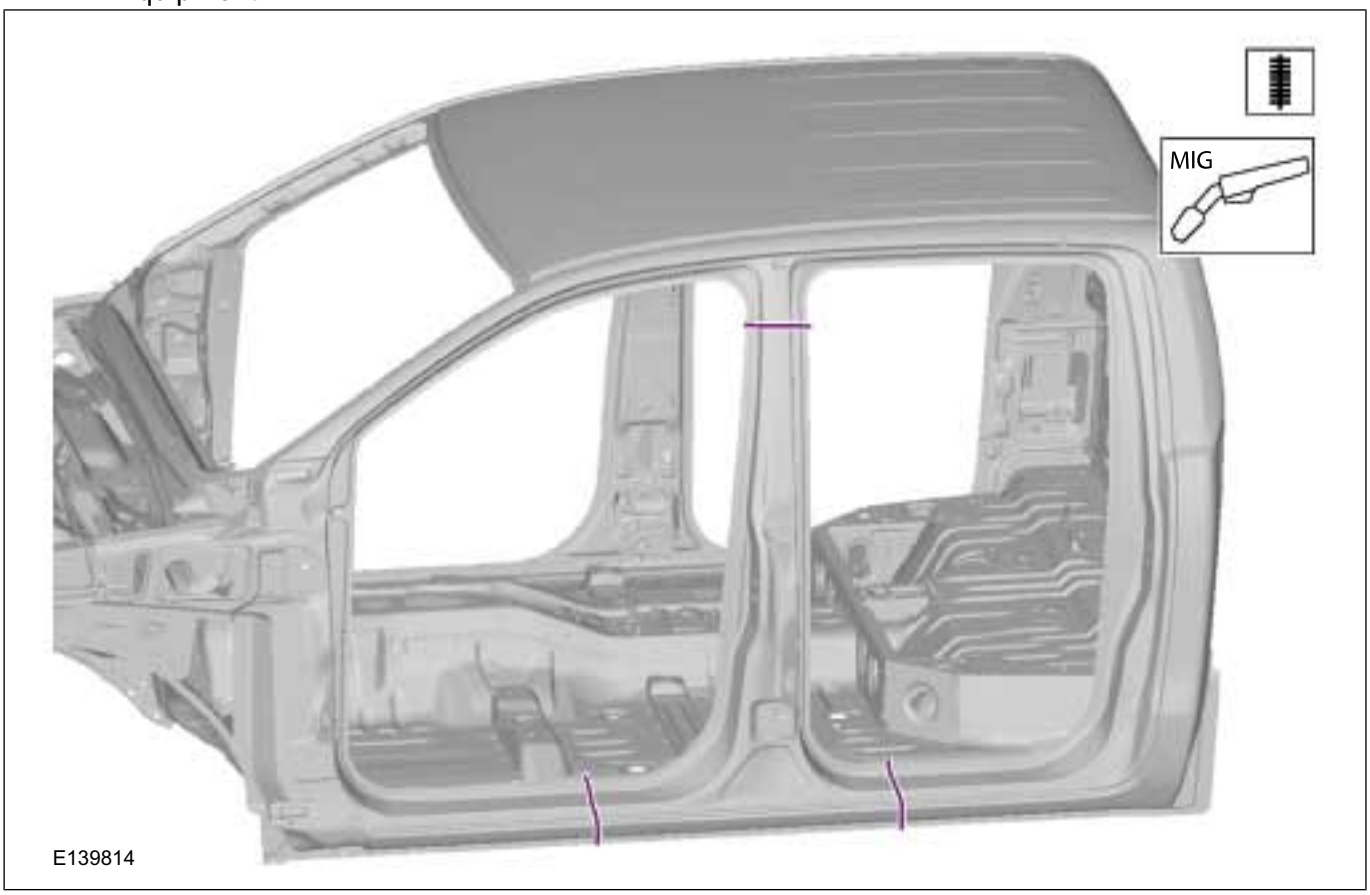

REMOVAL AND INSTALLATION

6. • Rocker Panel Trim

Refer to: Front Seat (501-10 Seating, Removal and Installation).
Refer to: B-Pillar Upper Trim Panel (501-05 Interior Trim and Ornamentation, Removal and Installation).
Refer to: B-Pillar Lower Trim Panel (501-05 Interior Trim and Ornamentation, Removal and Installation).

• Front and Rear Door

SECTION 501-30 Rear End Sheet Metal Repairs

VEHICLE APPLICATION: 2011.50 Ranger

CONTENTS PAGE

REMOVAL AND INSTALLATION

Back Panel — Single Cab..... 501-30-2
Back Panel — Double Cab..... 501-30-5
Back Panel — Super Cab..... 501-30-8

REMOVAL AND INSTALLATION

Back Panel — Single Cab

General Equipment

Spot weld drill Bit

Removal

1. Remove the load body.
2. Mill out the spot welds.
   General Equipment: Spot weld drill Bit

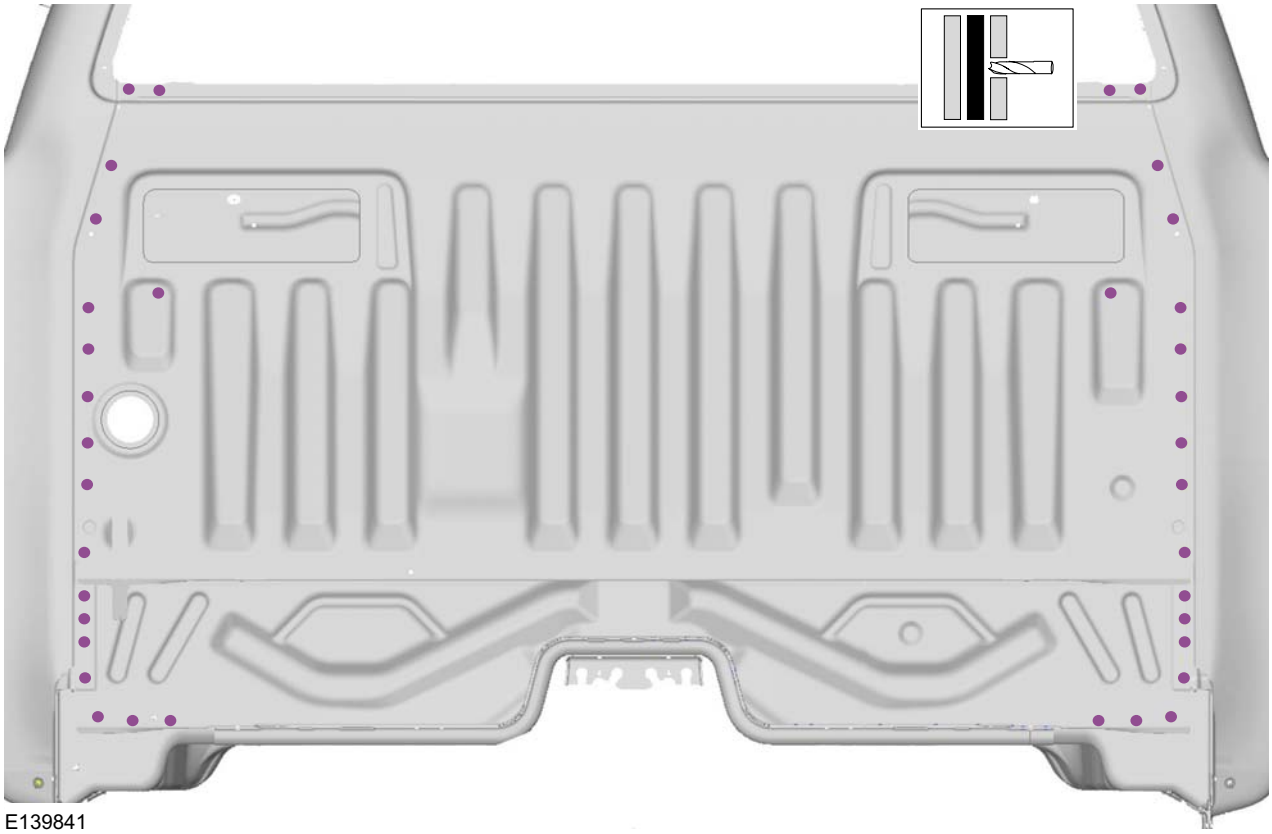

3. Mill out the spot welds.
   General Equipment: Spot weld drill Bit

REMOVAL AND INSTALLATION

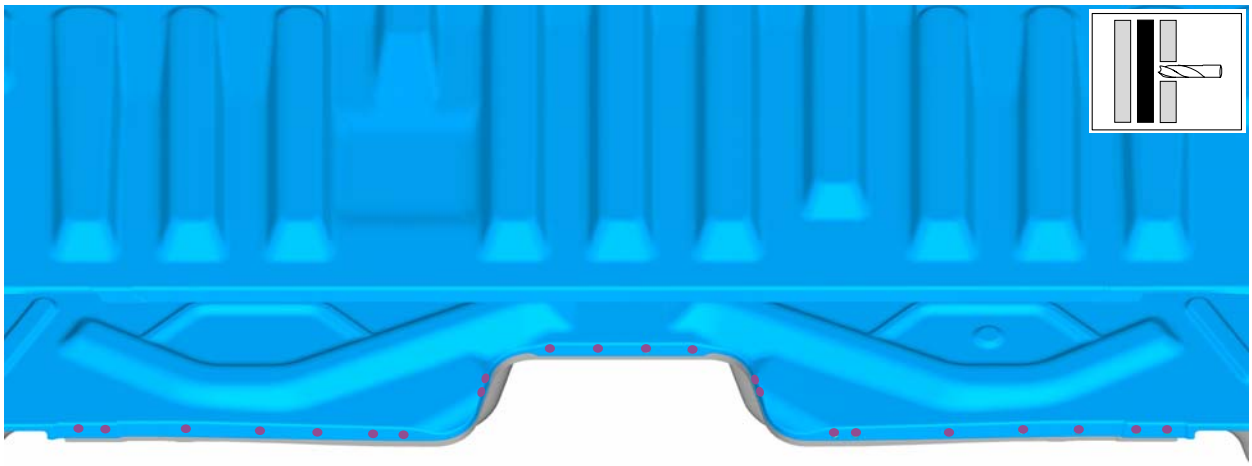

E139842

Installation

1. **NOTE:** Before resistance spot welding of body panels with a total panel thickness of 3 mm and greater, the manufacturer's welding equipment instructions and sub-section 501-25 must be followed.

   Refer to: Tools and Equipment for Body Repairs (501-25 Body Repairs - General Information, Description and Operation).

2. **NOTE:** Sealer or adhesive must not be applied in welding zones. Areas which were bonded or sealed needs to be thoroughly sealed afterwards.

   Refer to: Sealer, Underbody Protection Material and Adhesives (501-25 Body Repairs - General Information, Description and Operation).

3. • Resistance spot weld - Panel thickness 3 mm and greater.

REMOVAL AND INSTALLATION

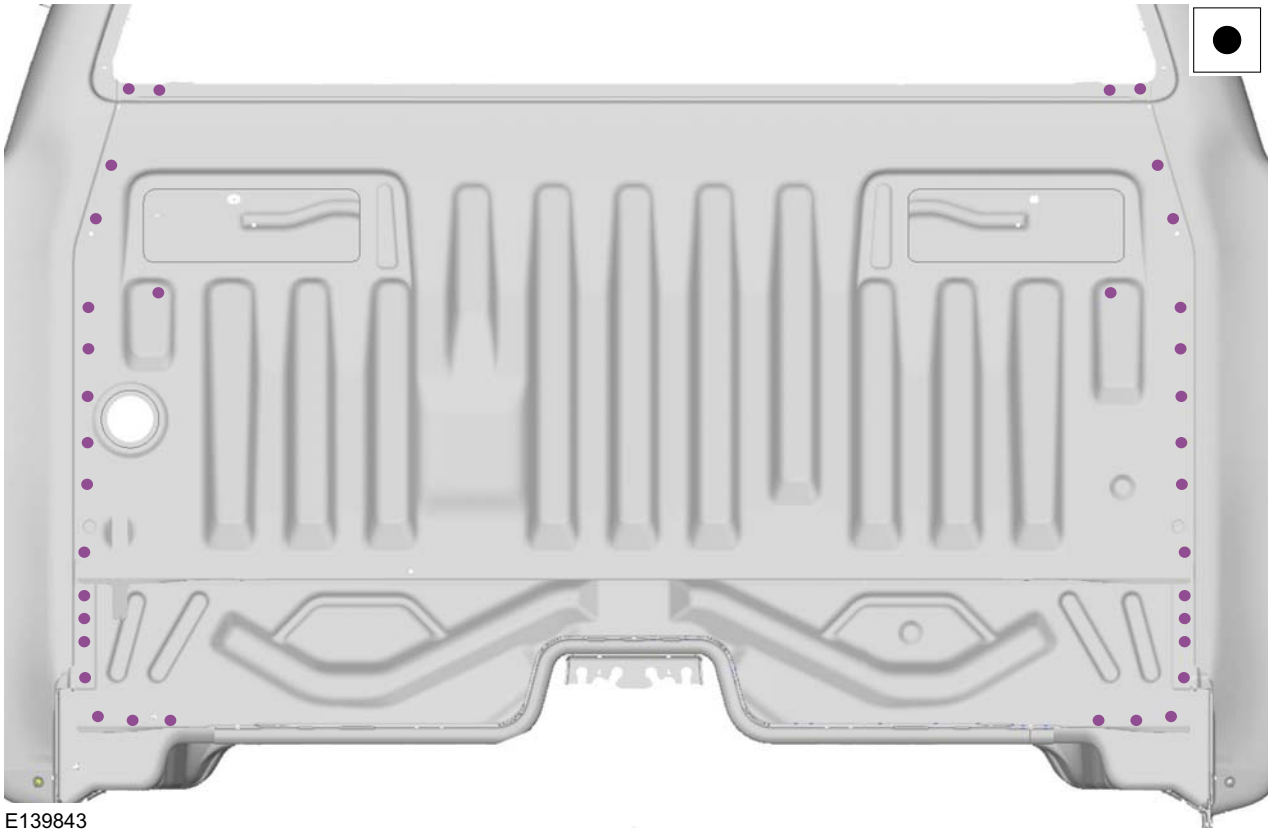

4. • Resistance spot weld - Panel thickness 3 mm and greater.

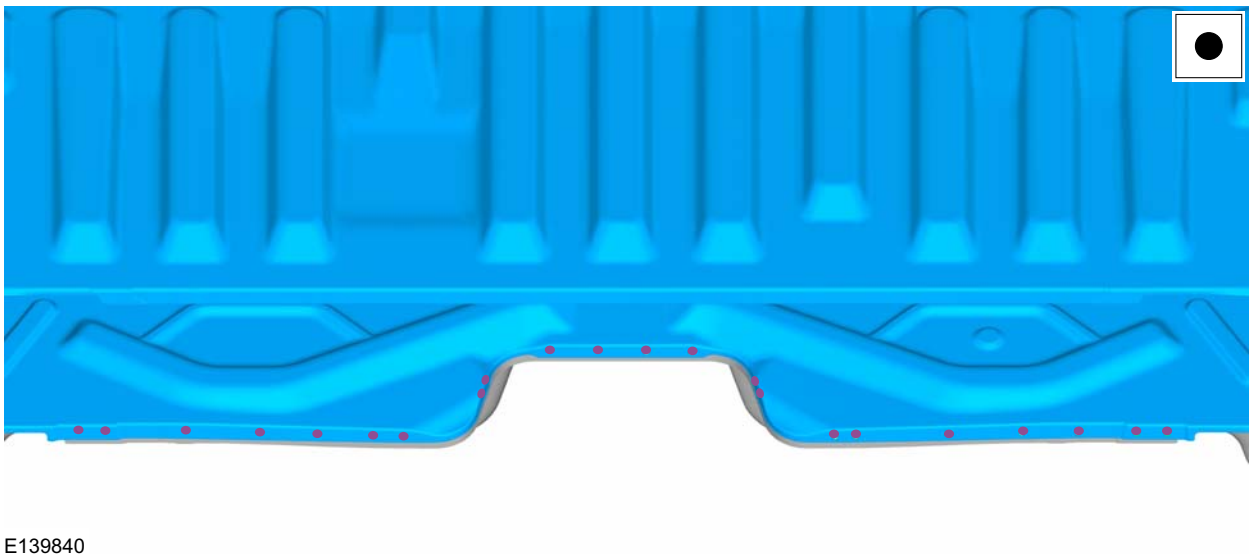

5. Install the load body.

REMOVAL AND INSTALLATION

Back Panel — Double Cab

General Equipment

Spot weld drill Bit

Removal

1. Remove the load body.
2. Mill out the spot welds.
   General Equipment: Spot weld drill Bit

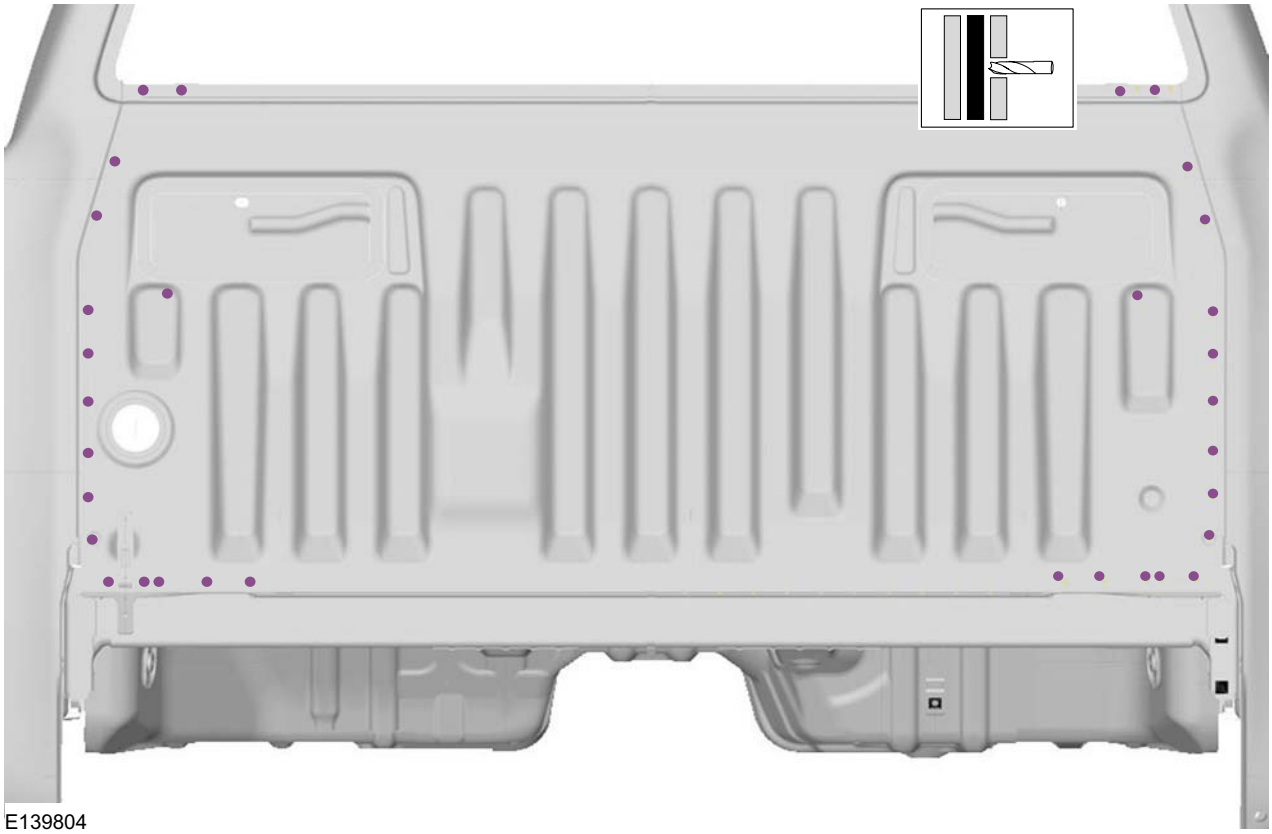

3. Mill out the spot welds.
   General Equipment: Spot weld drill Bit

REMOVAL AND INSTALLATION

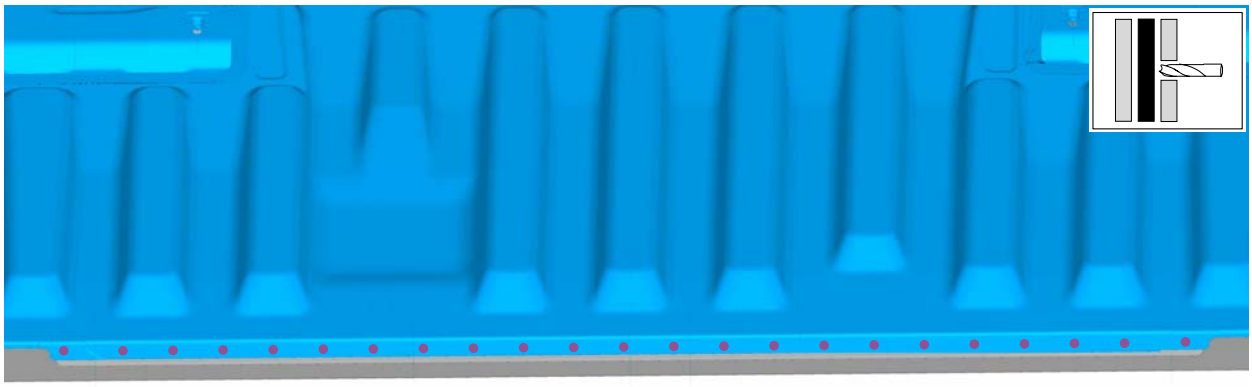

E139805

Installation

1. **NOTE:** Before resistance spot welding of body panels with a total panel thickness of 3 mm and greater, the manufacturer's welding equipment instructions and sub-section 501-25 must be followed.

   Refer to: Tools and Equipment for Body Repairs (501-25 Body Repairs - General Information, Description and Operation).

2. **NOTE:** Sealer or adhesive must not be applied in welding zones. Areas which were bonded or sealed needs to be thoroughly sealed afterwards.

   Refer to: Sealer, Underbody Protection Material and Adhesives (501-25 Body Repairs - General Information, Description and Operation).

3. • Resistance spot weld - Panel thickness 3 mm and greater.

REMOVAL AND INSTALLATION

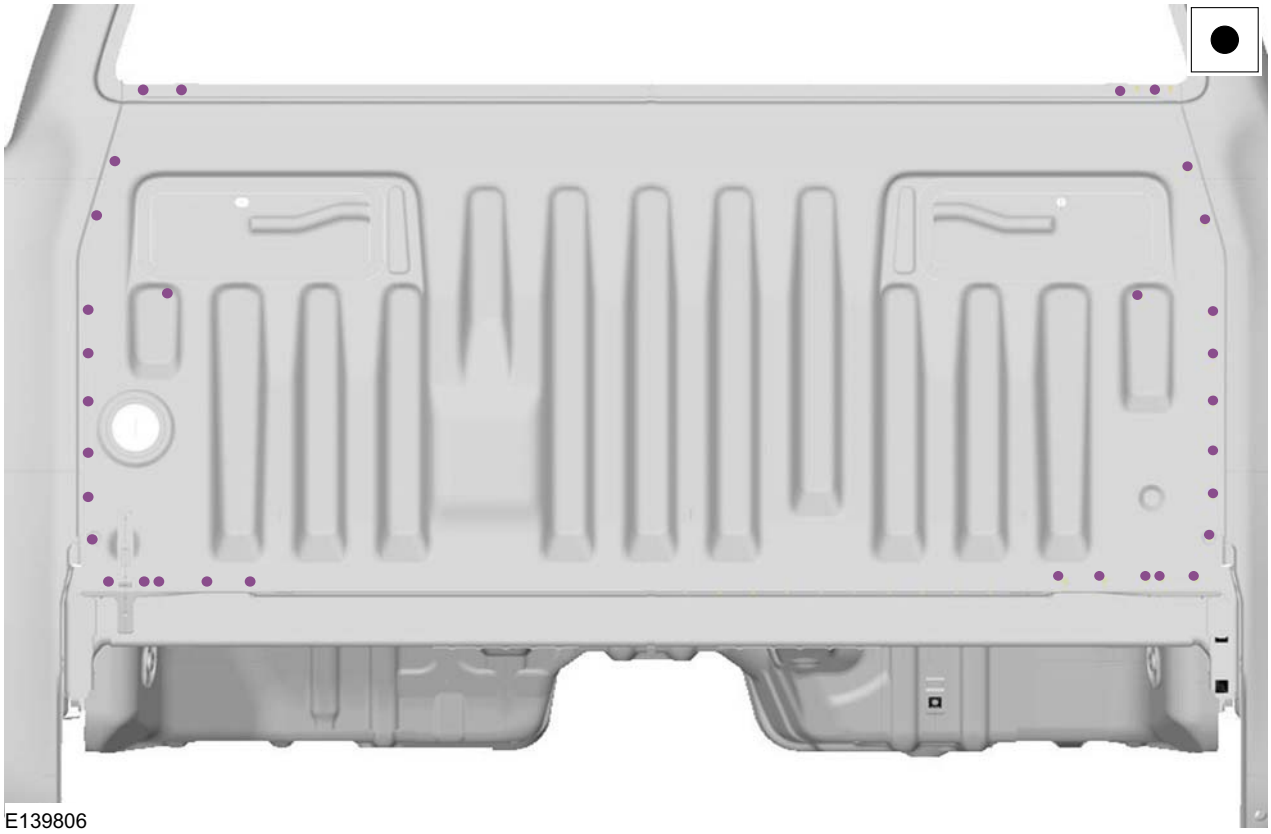

4. • Resistance spot weld - Panel thickness 3 mm and greater.

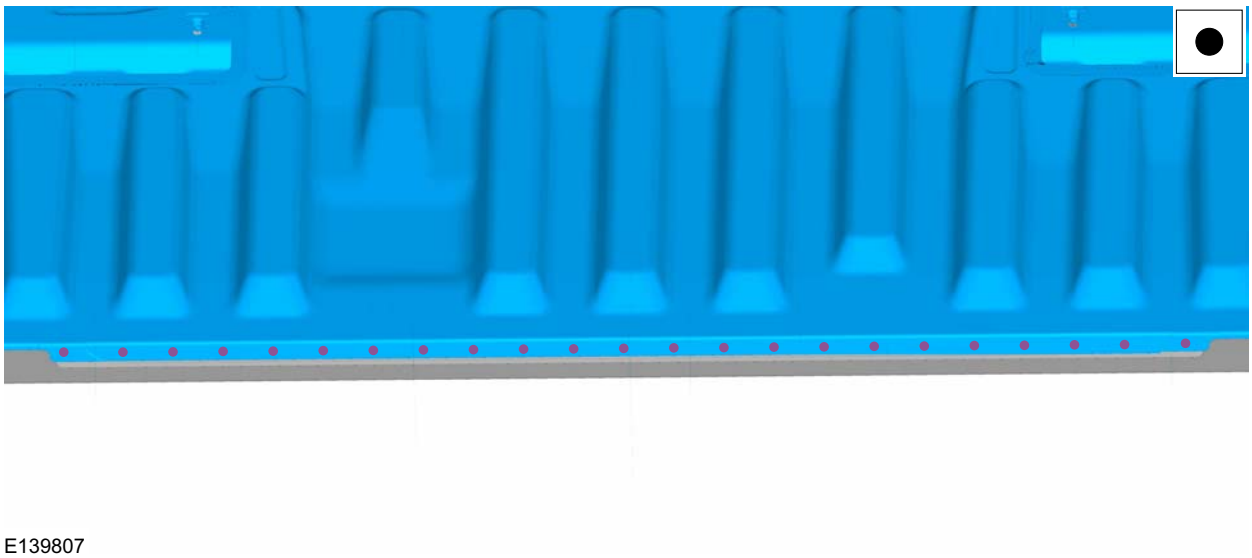

5. Install the load body.

REMOVAL AND INSTALLATION

Back Panel — Super Cab

General Equipment

Spot weld drill Bit

Removal

1. Remove the load body.
2. Mill out the spot welds.
   General Equipment: Spot weld drill Bit

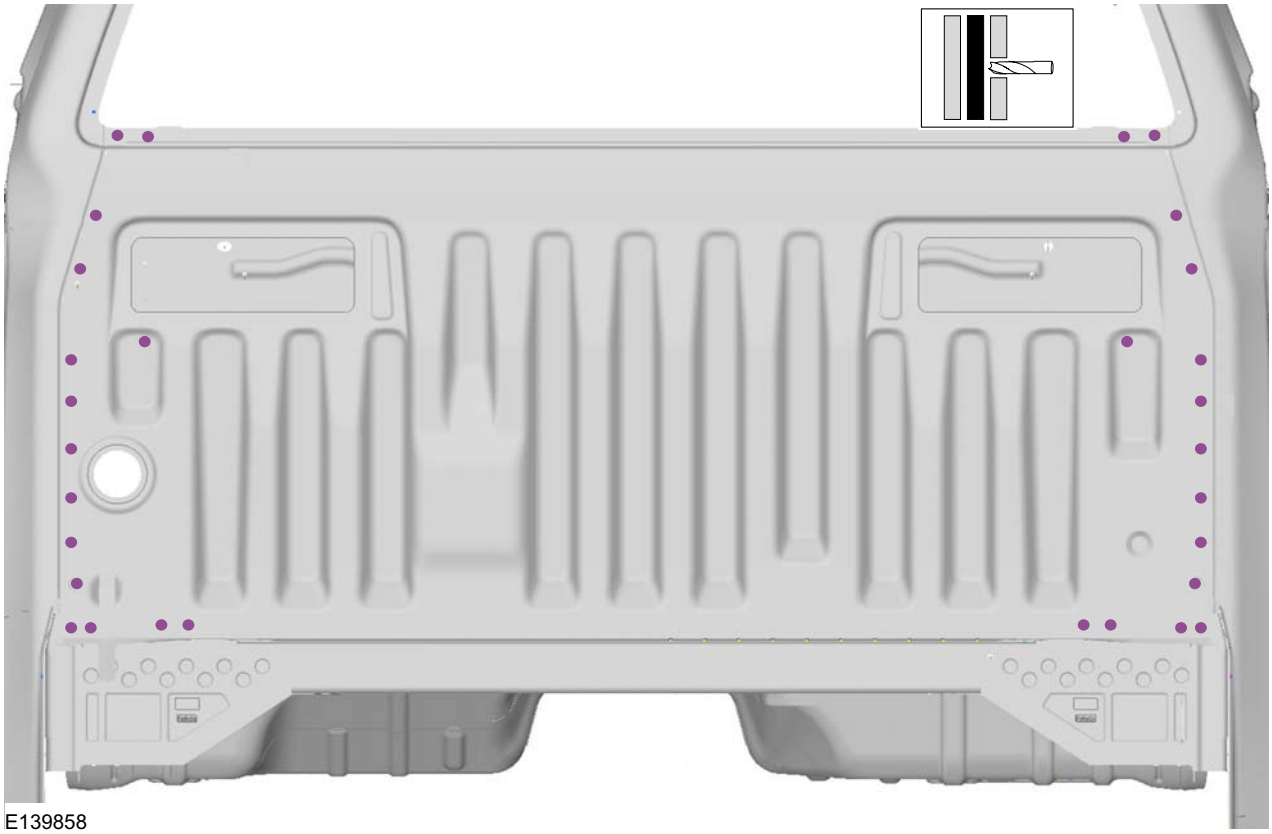

3. Mill out the spot welds.
   General Equipment: Spot weld drill Bit

REMOVAL AND INSTALLATION

E139859

Installation

1. **NOTE:** Before resistance spot welding of body panels with a total panel thickness of 3 mm and greater, the manufacturer's welding equipment instructions and sub-section 501-25 must be followed.

   Refer to: Tools and Equipment for Body Repairs (501-25 Body Repairs - General Information, Description and Operation).

2. **NOTE:** Sealer or adhesive must not be applied in welding zones. Areas which were bonded or sealed needs to be thoroughly sealed afterwards.

   Refer to: Sealer, Underbody Protection Material and Adhesives (501-25 Body Repairs - General Information, Description and Operation).

3. • Resistance spot weld - Panel thickness 3 mm and greater.

REMOVAL AND INSTALLATION

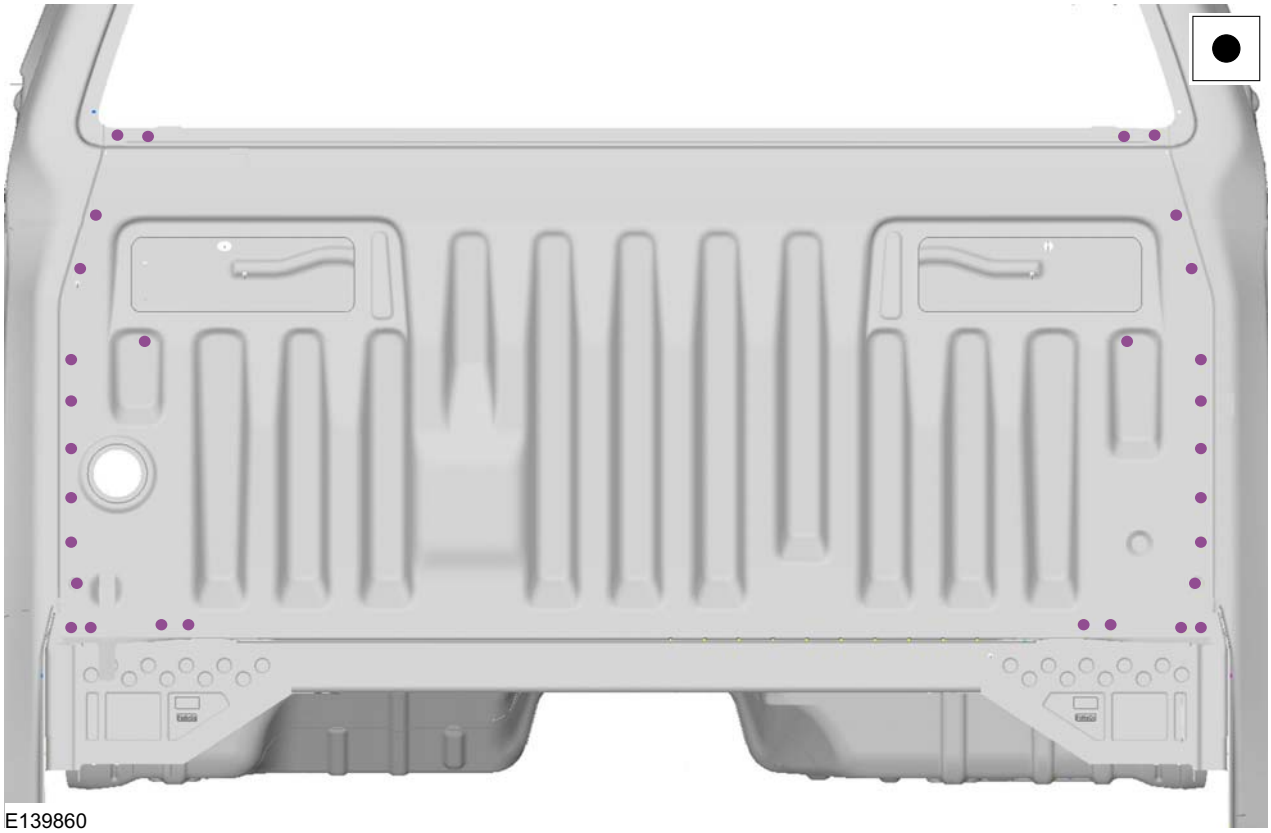
E139860

4. • Resistance spot weld - Panel thickness 3 mm and greater.

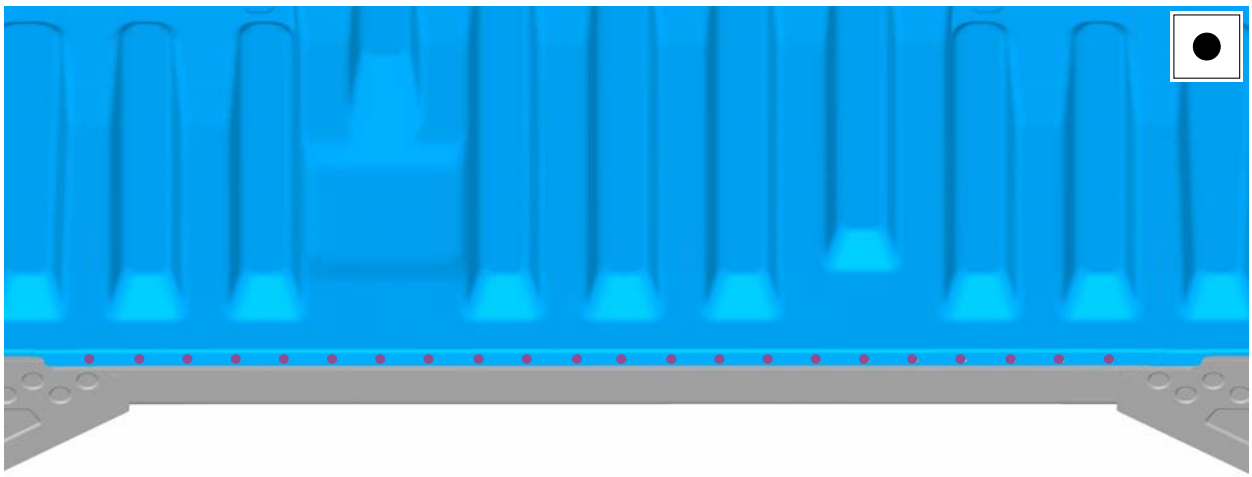
E139861

5. Install the load body.

SECTION 501-36 Paint - General Information

VEHICLE APPLICATION: 2011.50 Ranger

CONTENTS PAGE

PAGE 1 OF 2

DESCRIPTION AND OPERATION

Description and Usage of Paint Literature..... 501-36-3
Symbols..... 501-36-4
General..... 501-36-4
Hazardous materials designations..... 501-36-4
Instructions on measures to be taken for personal protection..... 501-36-6
Icons..... 501-36-6
Health and Safety Precautions..... 501-36-9
General instructions for the paint shop and handling paint materials..... 501-36-9
Personal protection..... 501-36-9
Environmental Regulations..... 501-36-11
Waste disposal in the repair paint shop..... 501-36-11
The new VOC (Volatile Organic Compounds) solvent regulation 501-36-11
Factory Paint Application..... 501-36-12
General fundamentals of paint technology..... 501-36-12
Painting process and corrosion protection..... 501-36-12
The structure of an original paint finish 501-36-13
Colored fillers applied in production..... 501-36-13
Paintwork Defects and Damage..... 501-36-14
Diagnosis and Damage Assessment..... 501-36-14
Paint damage guide..... 501-36-14
Paint damage caused by environmental factors..... 501-36-14
Mechanical damage..... 501-36-18
Damage due to corrosion..... 501-36-18
Damage caused by faults in treatment..... 501-36-18
Tools and Equipment for Paint Repairs..... 501-36-28
General work equipment..... 501-36-28
Filler and spray guns..... 501-36-28
Hand and machine sanding tools..... 501-36-30
Polishing and finishing tools..... 501-36-33
Infrared drying technology..... 501-36-33
Air dryers..... 501-36-33
Paint mixing system..... 501-36-34
Painting cabin..... 501-36-34
Refinishing Materials..... 501-36-35
Stopper materials..... 501-36-35
Primers..... 501-36-36
HS primer filler and HS tinted filler..... 501-36-37
Paint..... 501-36-37
Additional Materials..... 501-36-39
Adhesive sealants..... 501-36-39
Underbody protection..... 501-36-39
Paint additives 501-36-40
Additive materials..... 501-36-42
Paint Repairs..... 501-36-43

PAGE 2 OF 2

General information..... 501-36-43
Pre-treatment of the surface 501-36-43
Top coat application..... 501-36-45
Repair stages for repair painting..... 501-36-46
Polish..... 501-36-47
Aids..... 501-36-48
Painting Plastic Parts..... 501-36-49
General..... 501-36-49
Plastic groups..... 501-36-49
Painting new components..... 501-36-50
Unknown primer..... 501-36-50
Paint faults on plastic substrates..... 501-36-51
Spot Repairs..... 501-36-52
General..... 501-36-52
Repair process..... 501-36-53
Dirt inclusions..... 501-36-54
Corrosion Prevention..... 501-36-56
General..... 501-36-56
Operations after painting..... 501-36-56
Definition of the degree of rust..... 501-36-56
Color Identification and Chromatics..... 501-36-58
Basic color theory..... 501-36-58
Metallic and pearl pigments..... 501-36-59
Color codes and their determination on Ford vehicles 501-36-60
Matching tinted filler to the color code 501-36-63
Tips and Tricks..... 501-36-64
Comparing paint structures..... 501-36-64
Etching substrate..... 501-36-64
Masking the vehicle..... 501-36-64
Color shade problems..... 501-36-66
Isopropanol and water..... 501-36-66
Temperature reduction spray..... 501-36-66
Paint plane..... 501-36-66
Shading..... 501-36-66
Sanding marks..... 501-36-67
Improving touch-up work..... 501-36-67

DESCRIPTION AND OPERATION

Description and Usage of Paint Literature

Vehicle paints are subject to severe demands caused by external influences. Moisture, air-borne deposits in the form of various chemicals and UV light constantly affect a paint surface. Furthermore, mechanical damage occurs through grit, stones and sand. Bird droppings, insect residues, pollen and tree sap also attack the paint surface.

The present literature not only informs the specialist about current repair painting techniques, but also provides tips and instructions on modern and economical repair processes.

High quality bodywork paints require the use of the most modern technologies and regular updating of the technician's knowledge of painting techniques, because of the constantly new developments in paint technology.

Information about different materials is listed under Specification.

Furthermore, information on the fundamental principles of repair painting and paint materials is provided in several chapters. The safety instructions indicate the possible health hazards and other sources of danger. There are also notes about tools and materials as well as on basic painting methods.

In the model specific repair instructions, only the most important repair steps or special features are referred to. Detailed information on the generally applicable painting procedures is given in this paint manual.

Direct supply of repair paints by Ford has been discontinued. There is however an agreement with many paint manufacturers, which ensures fast and problem-free supply to the dealer undertakings.

Paint suppliers:

- DuPont
- Glasurit
- PPG
- Sikkens
- Spies Hecker
- Standox

When using painting materials, it should be taken into account that the manufacturers have exactly matched their products between each other. In order to avoid quality defects, difficulties in working and losses in corrosion protection, these may not be substituted with other products.

NOTE: The Ford Service Organization organizes basic and more in-depth training on much of the content of this paint manual. As well as the practical part of the training, a further component is the Student Information document, which offers supplementary information in the form of a brochure.

During all work it must always be ensured that personal safety and the operational capability of the vehicle are not threatened by the choice of methods, tools and components.

The information given in the diagrams in the chapter "Paint Damage" is provided by the repair paint manufacturer.

DESCRIPTION AND OPERATION

Symbols

General

Various symbols, signs, instructions and illustrations are used in this literature. Warnings and cautions have different meanings and require different ways of proceeding. Diagrammatic representations are provided with instructional signs for improved clarity. These are briefly explained below:

WARNING: This caption is used when failure to follow instructions exactly or failure to follow them at all may result in a hazard to persons or in persons being injured.

CAUTION: This caption is used when incorrectly following the test procedures or instructions or failure to follow them at all could lead to damage to the vehicle or components.

NOTE: This caption is used when attention needs to be drawn to special or extra information.

When reading this handbook, you will come across the points WARNING, CAUTION AND NOTE. These instructions are always given immediately before the corresponding job steps.

Hazardous materials designations

Many accidents occur because of ignorance. In the area of personal health protection, it is particularly important to clearly emphasize sources of danger and their effects on human organs.

Only with knowledge of hazardous material designations can it be certain that the necessary precautions are taken when handling substances which are harmful to health.

NOTE: Pay attention to the manufacturer's data on the containers and given in the Safety Data Sheet.

DESCRIPTION AND OPERATION

Hazardous material symbols

TO BE UPDATED LATER

Item	Description
1	Very poisonous, T+ (extremely toxic), small quantities can be fatal.
2	Poisonous, T (toxic), causes serious damage to health
3	Corrosive, C (corrosive), destroys living tissue.
4	Harmful to health, Xn (noxious).

Item	Description
5	Irritant, Xi (irritant), can cause inflammation.
6	Explosive
7	Highly flammable, F+ (extremely flammable), already flammable at temperatures below 0° C.

DESCRIPTION AND OPERATION

Item	Description
8	Flammable, F (flammable), forms a flammable mixture with air.
9	Oxidizing, O (oxidizing), reacts with combustible substances.

As well as the danger symbols, there is more comprehensive manufacturer's information to be found on the containers and in the Safety Data Sheets, and you must pay attention to this information.

Instructions on measures to be taken for personal protection.

As well as the information about sources of danger, there are mandatory instructions which draw your attention to the personal protection measures to be taken.

Mandatory symbol

TO BE UPDATED LATER

Item	Description
1	Breathing protection must be worn
2	Eye protection must be worn
3	Ear protection must be worn
4	Protective gloves must be worn
5	Protective footwear must be worn

Icons

So that the necessary information for optimal handling is clear, unambiguous and can be quickly understood, the leading paint manufacturers have agreed a standard symbolic language. Language independent representations in the form of icons provide handling instructions which are supplemented with quantity or time information.

Pretreatment

TO BE UPDATED LATER

Item	Description
1	Clean
2	Sand

DESCRIPTION AND OPERATION

Mix

TO BE UPDATED LATER

Item	Description
1	2 component mixture
2	3 component mixture
3	Use a measuring rod
4	Addition of hardener
5	Addition of additives

Process

TO BE UPDATED LATER

Item	Description
1	Flow-beaker spray gun
2	Suction-beaker spray gun
3	Spray passes
4	Filler
5	Coat
6	Underbody protection spray gun

DESCRIPTION AND OPERATION

Dry

TO BE UPDATED LATER

Item	Description
1	Ventilate
2	Drying time
3	Drying time with infra-red dryer

Further processing

TO BE UPDATED LATER

Item	Description
1	Hand abrade (wet)
2	Hand abrade (dry)
3	Eccentric sander (wet)
4	Eccentric sander (dry)
5	Oscillating sander (wet)
6	Oscillating sander (dry)

Store

TO BE UPDATED LATER

Item	Description
1	Protect from moisture
2	Store in a frost-free environment
3	Store in a cool place
4	Close the container

Other

TO BE UPDATED LATER

Item	Description
1	Stir by hand
2	Stir using a mixing machine
3	Polish
4	Roll

DESCRIPTION AND OPERATION

Health and Safety Precautions

General instructions for the paint shop and handling paint materials

Hazardous areas in repair paint shops:

- Danger from fires, explosions and hot surfaces.
- Dangers to health and safety from the effects of harmful substances because of their absorption through the skin and/or inhalation.
- Dangers caused by electricity, compressed air, power tools and noise.

WARNING: During painting work there is an increased danger of fire or explosion. Prevent any sparks being created. Fire, naked lights and smoking are forbidden.

Measures:

- Wear protective footwear made from anti-static material.
- Only use tools made of wood, brass or copper to clean stands and extraction ducts. Do not use tools made of steel.

Only fill or decant paint materials in a specially marked area.

As well as these general instructions on the dangers in repair paint shops, all national and international regulations must be observed:

- Health and Safety at Work Act
- Ordinance on Hazardous Substances
- Technical Rules for Hazardous Substances
- Regulations for the Prevention of Industrial Accidents
- EU Directive on Hazardous Substances, 98/24/EU
- EU Directive on Noise, 2003/10/EU
- EU Directive on Volatile Organic Compounds (VOC), 1999/13/EU, 2001/81/EU, 2004/42/EU
- Safety instructions of equipment and tool manufacturers

Personal protection

Besides the body and limbs, several organs vital to life are in very particular danger. Because damage is mostly irreparable, special attention and comprehensive protection are necessary.

WARNING: Solvents cause damage to the health through inhalation. Splashes in the eyes or on the skin can cause bodily harm. When working with solvents, always use suitable means of protection.

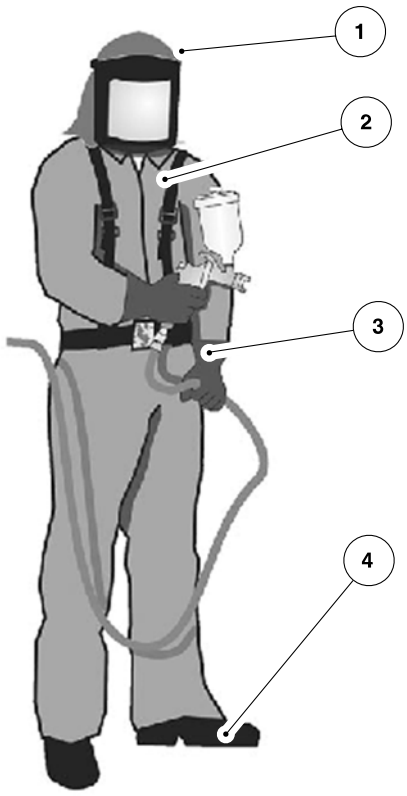

E59518

Item	Description
1	Protective hood with fresh air supply
2	Protective clothing
3	Protective gloves
4	Protective footwear

Breathing protection

During painting work and in the preparations for painting, gases, vapors, mists or dusts can appear in dangerous concentrations in the areas where fellow employees breath.

For short periods of work or minimal concentrations of hazardous substances, breathing protection devices with a combination filter are suitable as breathing protection equipment.

DESCRIPTION AND OPERATION

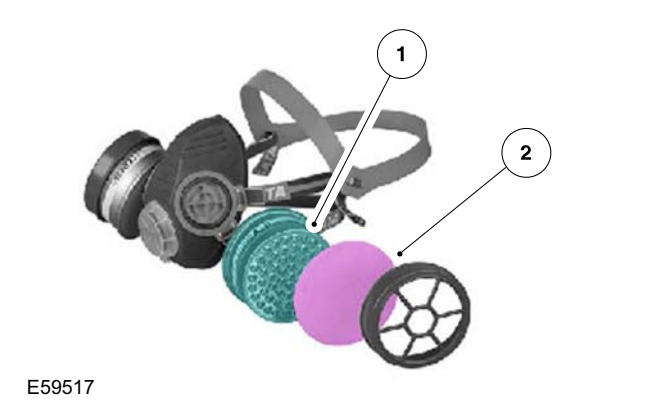

Item	Description
1	Activated charcoal filter
2	Coarse filter

For higher concentrations of harmful substances, breathing protection devices which are independent of the local atmosphere are suitable.

In these types of isolation systems, a compressed air hose carries natural air from the compressor line into the protective mask. During supply, the air undergoes pressure reduction, water removal, fine filtration and usually warming to natural breath temperature.

WARNING: Vapor or spray mist containing isocyanate as a paint base or hardener can cause toxic respiratory disease (conditions similar to asthma) leading to permanent damage, even when inhaled in the lowest concentrations.

Filter masks with wadding, sponge or colloid filters and also paper masks are all unsuitable for working with coating materials because they do not stop solvent vapors.

The instructions for use provided by the manufacturer must be observed when working with breathing protection equipment.

Skin protection

Spray painters who are subject to considerable exposure to coating materials must wear suitable protective work clothing (flame-proof and anti-static).

NOTE: Also, when working with water based materials, comprehensive skin protection must be worn, because these materials are very easily absorbed through the skin.

The protective clothing must be changed at the proper intervals. Items of clothing which are contaminated with coating materials can easily catch fire.

When selecting protective clothing, it must be taken into account that cloth containing a high proportion of easily melted plastic thread considerably increases the degree of burns injury (melted plastic on the skin!). This must also be taken into account in the choice of underwear.

For areas of skin which are not covered by protective clothing, suitable skin protection, skin cleaning and skin care agents must be used.

Eye protection

Working with portable hand sanding machines on which the tools move unguarded, at speed and with power is fundamentally dangerous.

Goggles must be worn not only when sanding, but also when working with paints and their additives. These contain substances which are harmful to the eyes. Damage ranging from irritation of the cornea to incurable illnesses are possible.

The protective goggles must be inert toward splashes of solvent, and fully enclose the areas at the side of the eyes on both sides. The best protection during spray painting is offered by full mask respirators or helmet respirators with a built-in visor.

Ear protection

Noise disturbance in repair paint shops caused by various sources is particularly high. Sanding and compressed air machines, paint cabin extractor fans (compressors) and extractor ducts in the work rooms are the causes of the high levels of noise.

WARNING: Avoid damage to your hearing! Wear ear protection.

Suitable ear protection is offered by ear plugs or ear defenders.

DESCRIPTION AND OPERATION

Environmental Regulations

Waste disposal in the repair paint shop

More than ever before, since the introduction of EU directives, rigorous attention is paid to the avoidance of waste materials and to recycling in repair paint shops. In this respect, repair paint shops must take into account and comply with the following requirements:

- Separate waste according to its recycling and disposal methods.
- Produce evidence for the correct transport and disposal of waste.

NOTE: The organization of disposal in the plant must comply with the requirements of the Waste Avoidance and Management Act: The avoidance and recycling of waste must always take priority.

However, despite all measures which may be taken, waste cannot be completely avoided.

NOTE: Waste which is not allowed in household rubbish, and which can no longer be utilized, must be disposed of as special waste.

Paint residues containing solvent, application residues, sanding dust, waste containing peroxides, solvents, soiled cleaning cloths and paint slurry all count as special waste. Each of these must be collected in a separate, sealed and suitably labeled metal container and properly disposed of using a specialist company.

Careful separation allows some waste to be usefully re-used.

- Empty metal containers can be sent for scrap instead of being disposed of as waste.
- Contaminated cleaning thinners can be separated by distillation.
- Packing material and masking paper can be added to the recycled paper collection.

Residues which cannot be used must be correctly disposed of.

All remaining waste must be treated as commercial waste and disposed of according to the local regulations.

The new VOC (Volatile Organic Compounds) solvent regulation

Keeping the air clean protects the environment and the population from the heath-damaging effects of air pollutants.

In certain atmospheric conditions, volatile organic compounds contribute to summer smog.

NOTE: For comprehensive information, please refer to the European VOC Directive, 1999/13/EU. Furthermore, the effective national regulations must be complied with.

The European VOC (Volatile Organic Compounds) Directive has controlled the limits for such compounds since August 2001. It applies to production coating companies and those which undertake repair painting of private and commercial vehicles.

Not least because of the VOC legislation, modern, low solvent and solvent-free lacquers and paints are finding greatly increased distribution across industry and the trade. Up to the year 2007, emissions from painting work will drop by at least 40%.

At the same time, the paint manufacturers guarantee for example that they will produce a ready-to-spray product consisting of base paint + hardener + thinners, with a permitted VOC level.

A company in business today can conform with the stipulated requirements by introducing water-based paints and using the other necessary products from the relevant paint manufacturers.

For more detailed information, please refer to the EU VOC Directive.

DESCRIPTION AND OPERATION

Factory Paint Application

General fundamentals of paint technology

Paint is a pigment-containing liquid which undergoes chemical and/or physical processes after it has been applied to a surface, so changing into a solid film covering.

Repair paint consists of binder, pigments, filler and solvent.

NOTE: Organic solvent is being replaced by solvent based on water.

Constituents of paint

- Binder
  - Mostly semi-fluid resins which bind together the other components of the paint when it dries.
  - Makes the paint durable.
  - Ensures good surface coverage.
- Pigments
  - Fine, colored powders, which give color to the paint.
  - Cover the components below (covering power).
- Additives
  - Additives give the paint special properties.
  - e.g. flow improver, softener, drying accelerator, thickener.
- Solvent
  - Thins the paint and allows it to flow more freely.
  - Evaporates during drying.

Painting process and corrosion protection.

In production, painting consists of individual steps which are optimally matched to each other.

Bodywork consists almost entirely of steel panels which have been pre-coated with zinc. The zinc layer is between 5-10 µm thick and acts as the first corrosion protection layer of the steel panel.

Production sequence:

- Clean and de-grease
  - In the first step, the bare bodywork is initially dipped in a cleaning bath and cleaned with a degreasing solution.
- Phosphatising
  - The cleaned bodywork is dipped in a bath containing various phosphate salt solutions. This creates a crystalline metal-phosphate layer which offers the optimal prepared surface and also corrosion protection.
- CDP base
  - The cataphoretic dip paint (CDP) base acts as a further corrosion protection layer.
  - In this process the bodywork is completely immersed in a bath consisting of a paint and electrolyte solution.
  - By application of an electric voltage, an electric field is created.
  - Positively charged paint particles settle on the negatively charged bodywork and form a protective layer up to 20 µm thick.
  - Next the bodywork is placed in a dryer, where the CDP base is hardened at 180°C.
- Sealing, stone-chip protection
  - Edges, seams and but joints are sealer with a sealing compound.
  - Vulnerable areas are coated with stone-chip protection.
- Filler
  - Filler protects the body panels from stone impacts. Furthermore, any unevenness of the metal surface is flattened out, in order to create the most homogenous and fault-free undersurface possible.
  - Once the filler is dry, it serves as the base on which paint is applied.
- Top coat
  - The top coat is applied as a single layer or two layers of paint.
  - When working with two layer paint, in the first job step the initial colored base paint is applied. In the second job step, a clear lacquer is applied, giving the base paint shine and hardness.

DESCRIPTION AND OPERATION

The structure of an original paint finish

During construction of the original paint, a total surface thickness of between 120 and 130 µm is achieved. The thicknesses of the layers may vary however, because they are greater for horizontal surfaces than vertical ones.

Paint layers

TO BE UPDATED LATER

Item	Description
1	Steel panel
2	Phosphate layer 2.9 g/m², corresponding to 2 µm.
3	Cathodic dip paint 30-35 µm
4	Filler 30-35 µm
5	Base paint 15-20 µm
6	Clear varnish 55 µm

Colored fillers applied in production

Filler which gives color is used in production. Its use makes the base paint and clear varnish unnecessary on certain vehicle interior surfaces (engine, doors).

Not every exterior paint has its own matching filler. It is more that the tones of the filler are color compatible, i.e. they have similar intensity to the top coat.

During repair painting the filler color tones must be used according to the manufacturer's instructions.

DESCRIPTION AND OPERATION

Paintwork Defects and Damage

Diagnosis and Damage Assessment

Paint concerns, regardless of their causes, are part of the everyday work in the paint shop. Correct damage assessment and determination of the cause are preconditions for a professional resolution of a paint concern.

Paint concerns can still occur through a variety of causes, despite improved paint materials and new spray methods.

NOTE: A first appraisal of the paint damage should be done before cleaning. External factors such as rust, droppings, incorrect or insufficient paint care can then be more easily detected.

Diagnosis is best done in daylight but not in direct sunlight. Exact evaluation can also be done under artificial light from special luminescent lamps.

Paint damage guide

The most important paint damage concerns which make a paint repair necessary are:

- Damage from biological paint contamination such as bird or insect droppings, tree resin and aphids.
- Chemical paint damage caused by industrial contaminants such as smoke, fuel, acids, oils.
- Mechanical damage caused by stone impact during operation, scratches in the car wash and parking.
- Damage caused by faults in treatment. Application defects such as paint runs or orange peel.
- Dirt inclusions in the paint layer, e.g. caused by dust in top coat or textile lint.
- Damage due to corrosion.

Before repair of such paint concerns, exact diagnosis must be performed to determine the cause exactly. On the spot diagnoses using simple aids and processes are often enough.

Diagnosis without disturbing the paint is done by:

- Optical inspection without visual aids, under suitable light conditions from a suitable angle and correct distance.
- Optical inspection with the help of a magnifying glass.
- pH paper.
- Measurement of the thickness using FE / NFE coating thickness meters for ferrous (FE) and non-ferrous metals and non-magnetic steel (NFE) - magnetic process on steel panels, eddy current process on non-metals.

A test method where the traces of testing can be easily removed again is the finger nail test. With suitable experience the existing hardness of the paint can be determined.

Test methods where the paint is partially destroyed are:

- Pencil hardness test.
- Adhesion test using adhesive tape.
- Lattice cut test process to check the strength of adhesion.

Under certain circumstances these test methods are not enough for a certain diagnosis. In this case, paint diagnosis under laboratory conditions must be performed.

Measuring and testing equipment for painted surfaces

Coating thickness measuring devices

Magnifying glass

pH paper (together with water)

Suitable photographic equipment with macro lens

Shine measuring equipment

Paint damage caused by environmental factors

- Bee droppings
- Bird droppings
- Insects
- Tree resin and sap
- Aphid secretions
- Tar spots
- Cement, plaster and slaked lime
- Rust film/deposits from industrial fallout
- Battery acid
- Brake fluid

DESCRIPTION AND OPERATION

In all the cases of paint damage described below, if the damage is irreversible a new paint finish must be applied.

Paint damage cause by bee droppings

Bee droppings can be recognized on a paint surface through its yellow or brown color and sausage or drop-like shape with a diameter of 3-4 mm.

Cause/damage pattern:

- In combination with heat and high air humidity, bee droppings leave discolorations and cause paint decomposition.
- The paint can be destroyed down to the filler.

TO BE UPDATED LATER

Repair of damage:

- If the damage is light, perform a polishing repair.

Paint damage caused by bird droppings

Bird dropping damage appears most often as matt, etched topcoat areas of various sizes. If left on the vehicle for a long time, crack formation and etching down to the filler will occur.

Cause/damage pattern:

- Bird droppings are particularly harmful in combination with heat and moisture. The urea (white part) has a very high salt content and is very aggressive.
- The intensity of the damage varies depending on the type, quantity, contact time and extent.
- Cracks, etching, marks up to dissolution of the top coat are the results.

TO BE UPDATED LATER

Repair of damage:

- If the damage is light, perform a polishing repair.

Paint damage caused by insects

At insect impact locations on the hood, roof and bumper, small etched or etched through paint marks with partially visible spots of filler.

Cause/damage pattern:

- The top coat layer is destroyed in a short time by surface swelling and etching.
- Colliding insects stick to the paint surface. In combination with moisture and heat, because of the resulting acids the insect bodies sink into the paint top coat.
- The corrosion is G, C, U or O shaped and is only a few millimeters thick.

TO BE UPDATED LATER

Repair of damage:

- Wash the vehicle, treat the affected area with insect remover. Clean the paint surface several times.
- Protect with hard wax.

DESCRIPTION AND OPERATION

Paint damage caused by tree resin or sap

Small yellow-brown marks or drops on the horizontal parts of the vehicle. The drops melt in sunlight. Resin damage only occurs in the warm summer months.

Cause/damage pattern:

- Because of their chemical composition, tree resins combine with or adhere very well to paint top coats and cause them to swell. The higher the temperature, the more intensive is the chemical bonding between the resin and the paint topcoat surface.

TO BE UPDATED LATER

Repair of damage:

- Soak several times using a cloth saturated with a petrol & paraffin mixture.

NOTE: After successful cleaning the top coat must be preserved.

- Swellings can be removed by warming.

Paint damage from aphid secretions

Small, round, matt marks about 1 mm diameter and etching with small islands down to the filler. Fresh aphid excrement looks like small drops of honey.

Cause/damage pattern:

- Aphids produce a mixture of starch, leaf acid and sugar from sap in leaves. Under the effects of warming and moisture this can turn into alcohol.
- The round shape of the damage and the island of intact paint are typical.

TO BE UPDATED LATER

Repair of damage:

- Remove the excrement as soon as possible.
- Small single matt locations without etching can be repaired using a polishing repair.

Paint damage caused by tar spots

Yellow or dark marks.

Cause/damage pattern:

- Firmly stuck spots of tar which lead to discoloration of the surface. In some cases penetration through the clear lacquer into the top coat.

TO BE UPDATED LATER

Repair of damage:

- Clean the paint surface with tar remover and polish.

Paint damage caused by cement, plaster and slaked lime

Damage appears as whitish matt marks on the top coat.

Cause/damage pattern:

- Corrosive alkaline compounds interacting with moisture.

DESCRIPTION AND OPERATION

TO BE UPDATED LATER

Repair of damage:

- Wash immediately if the contamination is fresh.
- If the contamination has dried on, dissolve and neutralise it with vinegar, then thoroughly wash off with water and rinse.
- Rectify mild damage using a polishing repair.

Rust film/deposits from industrial fallout

Small round marks, about 1 mm in size, in all shades from black, grey, blue to reddish, on the horizontal surfaces of the vehicle.

Cause/damage pattern:

- Deposits from oil fired systems and industrial plant, especially at high humidities and inversion weather conditions, cause damage to the paint top coat.
- As the activity time increases so called rust halos form. They spread as long as the deposits corrode.
- Industrial fallout containing iron will no longer be removable after a few days!

TO BE UPDATED LATER

Repair of damage:

- Remove the dust using an industrial fallout remover and thoroughly wash.
- Polish the paint surface.

NOTE: Never try to remove the particles of industrial fallout by polishing or rubbing!

- Use cleaning dough.

Damage caused by battery acid.

Splashes of battery acid caused by carelessly topping up the battery.

WARNING: Batteries contain sulphuric acid. When working near the battery, or where there is battery acid on the vehicle body, protect the skin and eyes from contact with the acid. If battery acid contacts the skin or enters the eyes, flush the affected area immediately with water (flush for at least 15 minutes) and call a doctor without delay. If acid is swallowed, call a doctor immediately. Failure to follow these instructions may result in personal injury.

NOTE: High temperatures accelerate the attack on the top coat. At 50°C the top coat layer breaks down after about 15 minutes!

Cause/damage pattern:

- Etching of the paint layer to decomposition of the paint finish.

TO BE UPDATED LATER

Repair of damage:

- Flush the acid splashes with plenty of water and neutralize with car washing liquid.
- If the contact time of the acid was short, perform a polishing repair.

Paint damage caused by brake fluid.

Careless handling of brake fluid. The glycols contained in the fluid cause swellings.

DESCRIPTION AND OPERATION

Cause/damage pattern:

- The temperature and contact time are critical. Splashes lead to loss of shine and lightening of color.

TO BE UPDATED LATER

Repair of damage:

- Flush immediately with plenty of water.
- The swellings can often be made to recede completely by treatment with the radiant heater or in the paint drying oven at max. 60°C for about 1 hour.

Mechanical damage

Stone impact damage or mechanical damage

Mechanical damage caused by impact of stones or other hard objects and extending down to the metal panel lead very quickly to corrosion and rusting under the paint on the adjoining surface.

Cause/damage pattern:

- Paint damage caused from the outside, down to filler, primer or metal panel.

TO BE UPDATED LATER

Repair of damage:

- Sand or blast out.
- Use anti-corrosion primer.
- Apply top coat.

Damage due to corrosion

Blistering/rusting below

Air or water filled blister-shaped raised areas in the paint film.

Cause/damage pattern:

- Overpainting corroded steel panel.
- Condensation in the spray air.
- Sanding water not dried out or salt crystal residues.
- Road chippings and road winter grit containing salt.

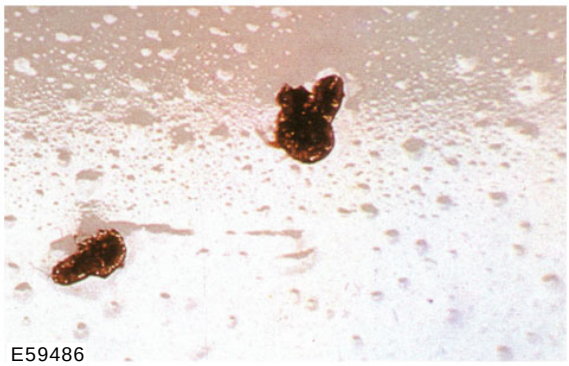

E59486

Repair of damage:

- Sand the affected area of damage or the body component and re-create the paint finish.
- More severe and larger areas of rusting below must be repaired using the corresponding repair painting, Repair Level III or IV.

Damage caused by faults in treatment

- Craters
- Paint boils
- Adhesion defects
- Adhesion defects - clear lacquer
- Sanding scores
- Formation of stripes
- Peeling/blistering on plastic parts
- Blistering on polyester material
- Peroxide marks in metallic paints

DESCRIPTION AND OPERATION

- Crack formation
- Shrinking back/zone edge marks
- Blistering
- Etching
- Paint wrinkles/puckering
- Cloud formation
- Spots/metallics
- Metamerism/color deviations
- Washing out
- Loss of gloss
- Covering ability/areas of thin paint
- Flow problems/orange peel
- Dirt embedded in metallic base paint
- Dirt embedded in top coat
- Water marks
- Paint runs
- Swirl marks

Craters

Crater-like single or extensively occurring depressions with raised edges, in top coat or the intermediate layers.

Cause/damage pattern:

- Substrate not adequately cleaned with silicone remover.
- Spray air contaminated by oil residues and water accumulations.
- Filter ceiling not adequate for requirements.
- Use of polishes, cleaning agents or sprays (e.g. interior sprays) containing silicone.
- Oil, wax, grease, silicone containing residues.
- Working clothes contaminated by materials containing silicone.

TO BE UPDATED LATER

Repair of damage:

- Sand paint surface, clean with silicone remover and apply one thin spray pass. Let it begin to dry well, then apply several thin and dry sprayed passes.

Paint boils

Small, hard, closed or burst blisters in the paint top coat. They appear locally in groups or spread individually across the whole surface. Sanding opens up a larger cavity, under which the primer can often be seen.

Cause/damage pattern:

- Paint applied in layers which were too thick.
- Specified flash-off and drying times between coats were not adhered to.
- Specified working viscosity and spray pressure were not adhered to.
- Use of unsuitable hardener and thinner materials. (Solvent combinations in paint system not optimally matched).
- Poor booth conditions.

TO BE UPDATED LATER

Repair of damage:

- Single boil blisters can be removed using polishing.
- After thorough drying, sand the top coat at the affected areas, clean with silicone remover and re-paint. Fill any fine pores still present with 2-component acrylic filler.
- On larger areas of damaged topcoat, sand completely away and apply new paint finish.

Adhesion defects

Whole coating detached from substrate or individual layers one from another. Sometimes

DESCRIPTION AND OPERATION

adhesion defects can only be noticed after an external influence such as stone impact.

Cause/damage pattern:

- Substrate not adequately prepared (rust, grease, moisture, sanding, cleaning).
- Unsuitable material used.
- Drying times, flash-off times too short.
- Base paint not sprayed wet-in-wet, instead the intermediate drying times were too long.
- Failure to intermediate sand.
- Condensation formed because of temperature fluctuations.
- Unprofessional preparation (especially on plastics).
- Overheated CDP/intermediate filler.

TO BE UPDATED LATER

Repair of damage:

- Sand out the damage and recreate the paint finish. Create the paint finish strictly in accordance with the general technical information.

Adhesion defects in clear lacquer.

Clear lacquer detched from base paint.

Cause/damage pattern:

- Base paint layer too thick.
- Intermediate and final flash-off times of base paint too long.
- Incorrect mixture ratio clear lacquer/hardner.

TO BE UPDATED LATER

Repair of damage:

- Refinish sanding and recreate the paint finish.

Sanding scores

Single or wide area clusters of scoring or sanding marks, often with raised edges. Noticeable on metallic paints as light-dark stripes.

Cause/damage pattern:

- Stopper sanded too coarsely.
- Filler sanded too coarsely.
- Filler not thoroughly dried bfore sanding.
- Old paint sanded too coarsely.
- Soft elastic substrates, e.g. TPA base, treated with thinners which was too aggressive and therefore etched.
- Top coat applied too thinly.

TO BE UPDATED LATER

Repair of damage:

- If the damage pattern is minimal, after the top coat has dried fine sand the paint surface and refurbish by polishing.
- If the damage is great or on metallic paints, sand the paint surface or substrates and if necessary remove them, then cover the bare metal and re-paint.

DESCRIPTION AND OPERATION

Formation of stripes

Differing, stripe shaped color/effect formations in dark/light areas of a metallic paint finish.

Cause/damage pattern:

- Spray gun (nozzle) not perfect.
- Incorrect spray pressure.
- Thinners not suitable.
- Incorrect spray viscosity.
- Flash-off time too short.
- Unsuitable working temperature.

TO BE UPDATED LATER

Repair of damage:

- Apply base paint evenly.
- Repair spray gun.
- After clear lacquer has thoroughly dried, sand surface and paint again.

Peeling/blistering on plastic parts

Paint adhesion insufficient between top coat and filler and/or primer layer. It often happens that the whole of the paint finish detaches from the plastic.

Cause/damage pattern:

- Plastic item not cleaned sufficiently, not or inadequately tempered.
- Unsuitable cleaning agent used.
- Unsuitable materials used.
- Moisture.
- Paint finish underbaked or overbaked.
- Poor or lack of intermediate sanding.

TO BE UPDATED LATER

Repair of damage:

- Sand away faulty paint coats and re-apply paint finish.
- In extreme cases use a new part.

Blistering on polyester material

Color shade differences or marks in paintwork subsequently applied to previously unpainted plastic material.

Cause/damage pattern:

- Plastic material is not suitable for painting.
- Incorrect bonding agent.
- Paint used not solvent resistant.

Repair of damage:

- Repaint using suitable materials.
- Install unpainted new part (after consulting customer).

Peroxide marks in metallic paints

After longer period of drying, abnormal marks where the color shade varies.

Cause/damage pattern:

- Too much hardener added to polyester stopper (over 3% can cause this damage pattern).
- Polyester stopper not well enough mixed.

DESCRIPTION AND OPERATION

TO BE UPDATED LATER

Repair of damage:

- Sand, fill with polyester or epoxide filler and re-paint.

Crack formation

Cracks of different lengths and depths running in all directions.

Cause/damage pattern:

- Layers too thick.
- Painted several times.
- Temperature fluctuations.
- Mechanical effects e.g. distortions.
- Substrate not thoroughly hardened.
- Old paint not completely dried out.
- No or insufficient hardener added.
- 2-component materials used on nitro or TPA.

TO BE UPDATED LATER

Repair of damage:

- Sand away layers until sound substrate is reached and create new paint finish (prime, fill, apply topcoat).

Shrinking back/zone edge marks

Lifting or dropping in of edge zones (edges which accentuate themselves in the top coat), flow problems and loss of shine in top coat.

Cause/damage pattern:

- Old paintwork not rubbed down to a seamless transition.
- Stopper and filler on a viscoplastic base primer.
- Filler sanded and overpainted when not thoroughly hard.
- Previous materials overworked too early, substrate not sufficiently hardened.
- Primer applied in layers which were too thick, and not dried for long enough.
- Sanding paper too coarse.
- Top coat thinned too much.

TO BE UPDATED LATER

Repair of damage:

- After hardening off the top coat, fine sand the surface and polish up, apply filler if necessary and paint once more.

Blistering

Small, spot-like, air-filled or water-filled blister shaped high-spots in the paint construction. Their dimensions can range from pin-head to pin-point size in a closed paint film. Arrangement and accumulation very variable. In the advanced stages, circular flaking of the paint from the substrate. These are neither boils nor corrosion.

Cause/damage pattern:

- Moisture absorption by substrate.
- Insufficient drying of the substrate after wet sanding (especially on polyester material).
- Humidity too high before painting; condensation formation because of temperature fluctuations.
- Pores/sink holes in substrate not sanded out.

DESCRIPTION AND OPERATION

- Polyester material not covered.
- Sweat from hands.
- Salts and minerals in sanding water.
- Spray air contaminated.

TO BE UPDATED LATER

Repair of damage:

- Sand away damage, matt sand remainder of surface, clean with silicone remover, fill and re-paint.

Etching

The base paint is etched by the clear lacquer. This causes the aluminum pigments to change their alignments. The color of the etched base paint seems more grey than that of normal base paint. Result is that the surface structure of the clear lacquer becomes increasingly more matt.

Cause/damage pattern:

- Base painted too wet.
- No intermediate flash-off time.
- Layers too thick.

TO BE UPDATED LATER

Repair of damage:

- Sand and re-paint.

Paint wrinkles/puckering

Lifting/puckering of the paint surface.

Cause/damage pattern:

- First paint not hardened through or can be etched.
- Areas of clear lacquer which were sanded through to base paint have not been not isolated with filler, or with unsuitable filler.
- Unsuitable substrate (e.g. spray can painting with TPA or nitro).
- Use of unsuitable primer, paint and thinner materials.
- Paint systems not matched to each other.
- In wet-in-wet process, specified flash-off times not adhered to.
- Synthetic resin top coat (alkyd resin) worked over too soon.

TO BE UPDATED LATER

Repair of damage:

- After thorough drying, completely remove the top coat together with the attacked substrate at the affected areas and re-create a new paint finish.
- Before applying top coat, rub down the complete surface.

Cloud formation

Differing, blotchy color/effect formations in dark/light areas of a metallic paint finish.

Cause/damage pattern:

- Spray gun, spray nozzle, spray pressure not perfect.
- Varying spray viscosity, spraying method, flash-off times, spray booth temperature.
- Thinners not suitable.

DESCRIPTION AND OPERATION

TO BE UPDATED LATER

Repair of damage:

- Droplet method before clear lacquer application.
- After clear lacquer has thoroughly dried, sand surface and re-paint.

Spots

Points rising up from the paint film.

Cause/damage pattern:

- Metallic base paint sprayed too dry, so that the metal particles could not incorporate into the paint. The clear lacquer could not cover these vertical standing particles because the spray air was too hot or the booth temperature was too high.

TO BE UPDATED LATER

Repair of damage:

- After the paint surface has dried, lightly sand it with grade P800 sanding paper, clean with silicone remover and re-apply clear lacquer.

Metamerism/color deviations

Noticeable when identical color shades undergo a change of hue as the light source changes (daylight/artificial light). Different pigment composition between original and repair paint.

Cause/damage pattern:

- Use of paints with pigmentation which was not compatible with the standard, e.g. a green can be formulated from yellow and blue, or directly from green.
- Use of an unsuitable mixed or ready made paint to re-tone.

TO BE UPDATED LATER

Repair of damage:

- Repaint using the correct paint.

Washing out

On paint which has been newly applied but not yet dried, the interaction of surface tension and very different specific gravities of the different pigments can lead to swirl-like turbulence which results in separation of the pigments.

Cause/damage pattern:

- Layer too thick, paint not stirred enough.

TO BE UPDATED LATER

Repair of damage:

- Sand and re-paint.

Loss of gloss

Milky, dreary tarnishing of the paint with more or less even loss of gloss.

DESCRIPTION AND OPERATION

Cause/damage pattern:

- Cold with low air humidity.
- Heat with high air humidity.
- Substrate can be etched.
- Hardener fault or wrong hardener used.
- Paint thinned too much.
- Proportion of pigment too high because of poor stirring.
- Not optimum drying.

TO BE UPDATED LATER

Repair of damage:

- After drying, remove the matt effect by polishing. If unsuccessful, rub down complete area and paint again.

Covering ability/areas of thin paint

Different color shades in the surface. The minimum layer thickness is not achieved here. The effects range from local minor shade variations through mottled spray zones to completely missing top coat.

Cause/damage pattern:

- No correct, uniform substrate (effect paint).
- On three-layer systems, wrong filler.
- Insufficient top coat application.

TO BE UPDATED LATER

Repair of damage:

- Sand surface and recreate the paint finish.

Flow problems/orange peel

Surface structure bumpy, grained. The surface is similar to the peel of an orange.

Cause/damage pattern:

- Paint viscosity too high.
- Use of fast evaporating, highly volatile thinners.
- Booth temperature too high.
- Spray gun distance too great, too little material applied.
- Nozzle too large.
- Incorrect spray pressure.

TO BE UPDATED LATER

Repair of damage:

- Small surfaces: fine sand and polish.
- Sand out the surface and recreate the paint finish.

Dirt embedded in metallic base paint.

Inclusions of contamination in metallic base paint, of different sizes and shapes (grains or lint).

Cause/damage pattern:

- Dust was not properly removed from the surface to be painted.
- Paint material not sieved.
- Function of the painting facilities not optimum.
- Filter contaminated.
- Wearing unsuitable clothing.

Repair of damage:

- Sand and repaint.

DESCRIPTION AND OPERATION

Dirt embedded in top coat

Inclusions of contamination in top coat or under paint layers, of different sizes and shapes (grains or lint). Optical adverse effect.

Cause/damage pattern:

- Dust was not properly removed from the surface to be painted.
- Paint material not sieved.
- Function of the painting facilities not optimum.
- Filter contaminated.
- Wearing unsuitable clothing.

TO BE UPDATED LATER

Repair of damage:

- Single inclusions: after thorough hardening, sand out using 1200 - 1500 grade paper and repolish using a suitable silicone-free sanding or painting paste.
- Large area contamination: sand and repaint.

Water marks

Ring shaped marks appearing on the paint surface.

Cause/damage pattern:

- Evaporation of water droplets on freshly painted and not yet fully hardened paint finishes (mostly only found on horizontal surfaces).
- Layer too thick.
- Drying time too short.
- Hardening faults or hardener no longer useable.
- Use of unsuitable thinners.

TO BE UPDATED LATER

Repair of damage:

- Rub down only slight marks with sanding paper grade P1000 - P1200 and then polish.
- For heavy marking, sand the surface matt, clean with silicone remover and repaint.

Paint runs

Wave-like paint run tracks in top coat or in an intermediate layer on vertical surfaces. Mostly in the area of swage lines, seams or openings (there they are paint runs, otherwise curtains).

Cause/damage pattern:

- Uneven paint application.
- The specified viscosity was not complied with.
- Use of unsuitable thinner materials.
- Air, material or room temperature too low.
- Layers too thick.
- Spray gun (nozzle) not perfect.

TO BE UPDATED LATER

Repair of damage:

- After thorough drying, sand unevenness flat, if necessary leave to dry afterwards.
- Small areas of damage can be equalised using the paint plane, then sand, polish or repaint.

DESCRIPTION AND OPERATION

Swirl marks

Three dimensional appearance in the paint surface in the form of smears or blotches. This effect is intensified in direct sunlight.

Cause/damage pattern:

- Polishing using polishing machine on paint which has not yet hardened throughout.
- Polishing intervals too long or none at all.
- Pressure too high while polishing.
- Incorrect polishing material or polishing tool.

TO BE UPDATED LATER

Repair of damage:

- Allow the paint to harden completely and then polish.
- If the damage is irreversible, rub down and apply new clear lacquer.

DESCRIPTION AND OPERATION

Tools and Equipment for Paint Repairs

General work equipment

In the repair paint shop there is a range of painting tools which make the work of the painter easier and improve the quality of the repair paintwork.

Among these are small tools which are used for the following work:

- **Measuring beakers** to measure and mix various paint materials.
- **Measuring rods** with which the required combination amounts of paint and primer filler are gauged and mixed.
- **Viscosity measuring beaker** with a calibrated opening of 4mm, used to set the correct paint viscosity.
- **Paint filter/paint sieve** for filtering foreign bodies out of mixed paint or primer. Care must be taken that the correct filter is used for each paint.
- **Color sample plates** onto which the mixed paint is applied, and the shade is then compared to that of the vehicle. Other aids which should help the painter to find the correct shade are **color sample cards** and **color panels**, which are offered by many paint manufacturers.
- **Dust bonding cloths** which are impregnated with a tacky resin and which pick up dust particles particularly well. A surface to be painted must be cleaned with a dust binding cloth immediately before paint is applied.
- **Compressed air guns** are used to remove sanding residues and to dry sanded surfaces.

Filler and spray guns

NOTE: Regular maintenance, cleaning after use and careful handling of all individual parts of the spray gun are essential for a high-quality paint finish.

The spray gun is the most important implement in the paint shop. Application of paint using the spray gun can produce a layer with absolutely constant thickness and a smooth paint surface.

Principle of operation

TO BE UPDATED LATER

Item	Description
1	Air supply
2	Paint supply
3	Nozzle needle

Because of the construction design and with the aid of compressed air, a spray-ready paint mixture is dragged out of the container to the nozzle by the venturi effect, and is applied to the surface being worked.

When the trigger of the spray gun is pressed to the first pressure point, only the compressed air passage opens. If the trigger is pressed further, the nozzle needle displaces and the air stream drags paint with it at high speed. This produces a spray mist consisting of micro-droplets of paint.

DESCRIPTION AND OPERATION

Types of spray gun

TO BE UPDATED LATER

Item	Description
1	Suction-beaker spray gun
2	Flow-beaker spray gun

In the flow-beaker spray gun, the paint container is mounted above the spray gun. On the suction-beaker spray gun, it is below.

Furthermore, spray guns are categorized by their air pressure requirement into high and low pressure guns.

High pressure guns have the disadvantage that they exhibit high consumption of energy and materials. The spray pressure they require is between 1 - 6 bar.

Because of the high air pressure and the large amount of air needed, the result is a powerful paint mist formation (paint transfer rate approx. 35%).

Current practice is mainly to work with reduced mist spray systems (RP and HVLP systems).

Reduced pressure (RP) guns are optimized high pressure guns which have an input pressure at the gun of approx. 2.5 bar and an atomization pressure at the air cap of 1 - 2 bar. In practice this spray technology is preferred for spraying clear lacquer because of the finer atomization.

Low pressure guns have the advantage that they exhibit minimal paint mist formation and because of this the paint transfer rate rises to approx. 65%. The spray pressure required in this case is between 1 - 5 bar. Nozzle sizes from 1 - 2.2 mm can be used.

HVLP spray guns

TO BE UPDATED LATER

Item	Description
1	Quantity control
2	Working pressure control
3	Spray pattern control

The high volume low pressure (HVLP) spray gun is a high performance spray gun which forms a soft, fine and homogenous spray pattern. The atomization pressure at the air cap is 0.7 bar when the input pressure at the gun is 2.0 bar.

The low atomization pressure of 0.7 bar together with greatly reduced spray mist provide high material ejection. The low nozzle internal pressure minimizes rebound of the paint droplets from the object and thus the proportion of overspray.

This spray technology has a very high application efficiency. By matching the size of the nozzle, the HVLP spray gun can be used for all repair painting materials.

HVLP spray guns are often used in practice for the application of water based paints.

Mini spray guns are often used for small, localized touching-up work. Use of HVLP spray technology and nozzle sizes of 0.3 - 1.2 mm permits very fine

DESCRIPTION AND OPERATION

work, so that the area of the repair can be kept as small as possible.

In order to ensure that a spray gun operates efficiently for a long time, careful cleaning is absolutely vital after use.

NOTE: During cleaning you must distinguish between water based and solvent based materials.

Cleaning by hand:

- Empty the paint beaker immediately after use.
- Flush the gun with cleaner.
- Clean it inside and outside with a brush.
- Dismantle the gun to clean it thoroughly.
- Clean the air cap using a suitable brush.
- Use nozzle cleaning needles to clean bores and nozzles.

A spray gun washing machine is recommended if the painting work is highly intensive.

New types of paint processing systems are replacing the conventional mixing beaker, filter and spray gun flow beaker. This reduces the amount of solvent required for cleaning and the amount of routine waste which remains.

Paint preparation system (PPS)

TO BE UPDATED LATER

Item	Description
1	Beaker
2	Color bag

With this system, which is suitable for both suction and flow beaker spray guns, only one beaker is required for mixing and painting.

A bag is inserted in the beaker, in which paint can be mixed, processed and stored after use or completely disposed of.

The small quantity of paint remaining in the gun is removed using a minimum quantity of solvent from the pipette bottle.

The amount of cleaner used is reduced because only the spray gun needs to be cleaned.

Hand and machine sanding tools

Sanding is used to prepare a surface for application of a paint layer, enabling it to adhere well. Sanding materials have a great influence on the quality of a repair paint finish. The correct sanding medium must therefore be chosen for every material.

DESCRIPTION AND OPERATION

During sanding, material is mechanically removed from a surface.

In the paint shop, carborundum or silicon carbide abrasive on a substrate of paper or cloth are the most common sanding materials used.

Carborundum is a very hard mineral consisting mostly of aluminum oxide. During use carborundum becomes blunt and wears away.

Silicon carbide has a very high degree of hardness, but is more brittle than carborundum. When silicon carbide is used, the mineral grains break. New long and pointed profiles are formed.

Use of the correct sanding paper depends on the application, the substrates and the tools used. The following table can be used as a guideline, but the recommendations of the supplier of the auxiliary materials and additive materials must be followed.

Application	Working area	Grade	Sanding system
Body work, corrosion damage	Equalizing paint system transition	to P150	Orbital sander, dry
			Hand sanding, dry
Stopper	Rough sand	P80 - P150	Orbital sander, dry
	Fine sand	P240 - P320	Orbital sander, dry
			Hand sanding, dry
Spray stopper	Rough sand	P120 - P180	Orbital sander, dry
	Fine sand	P240 - P320	Orbital sander, dry
			Hand sanding, dry
Filler sanding work	Filler fine sand	P400 - P500	Orbital sander, dry
		P800 - P1200	Hand sand, wet
Top coat	Old paint	P400 - P500	Orbital sand, dry
		P800 - P1200	Hand sand, wet
	Touch-up paint surfaces	P1000 - P2000	Hand sand, wet
Paint damage	Sanding out faults	P2000 - P3000	Hand sand, wet

Soft Pads are recommended for manual refinishing of contours, curves and difficult to reach areas. On a Soft Pad the abrasive is found on a coarse structured fleece. Because of this, it is very flexible, does not kink and does not slip in the hand. This enables a fine and even finish to be achieved.

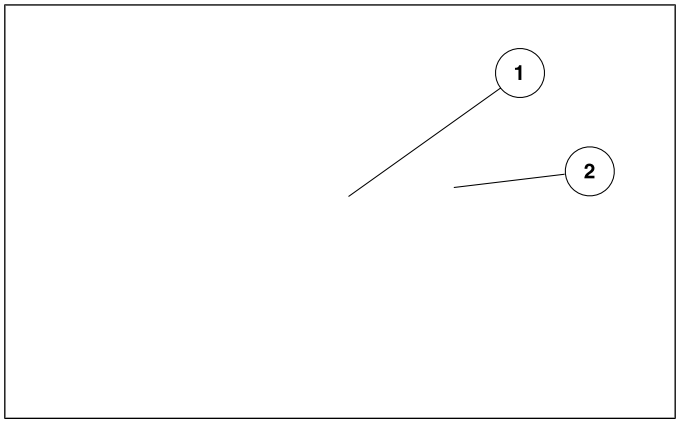

Item	Description
1	Extraction bores
2	Connection for extraction equipment

Notes on working with sanding tools:

DESCRIPTION AND OPERATION

- Tools with a rigid backing pad do not adjust to fit the surface. They are used for flat surfaces.
- Tools with a flexible backing pad are used for fine sanding of a surface because they adjust to the shape of the surface.
- Build up an even working pressure over the sanding surface.
- Keep the sanding paper tight on the tool (use self-gripping systems).
- Align the extraction holes in the sanding paper with the holes in the tool.
- Guide the tool flat over the surface to be worked. Do not tilt it.

Hand sanding can be carried out dry but also wet. Wet and dry paper with particle size P 80 to P 1200 is used for this in the paint field.

Ways of sanding

Sanding tools are driven either by electricity or compressed air.

TO BE UPDATED LATER

Item	Description
1	Sanding machine
2	Polishing machine
3	Orbital sander

The disadvantage of electrically driven machines is that their own weight is high compared with pneumatic systems. They also become warm during work. They do not however need any special operating equipment for their energy supply.

Sanding machines are categorized by their type of sanding movement.

Rotational sanders

On these machines the sanding paper turns.

- Advantage:
  - Ideal for heavy sanding work.
  - Fast and aggressive sanding possible.
- Disadvantage:
  - Large amount of heat developed.
  - Difficulty sanding flat surfaces.
- Application:
  - Removal of old paint layers.
  - Preparation of panel for stopper.
  - Removal of rust.

Oscillating sander

On these machines the sanding paper oscillates. The backing pad is rectangular.

- Advantage:
  - Large sanding surface.
  - Ideal for large and flat surfaces.
- Disadvantage:
  - Hardly useable on rounded surfaces.
  - Flexible backing pad not possible.
  - Vibrations because of the poor support of the backing pad.
- Application:
  - Sanding of polyester stopper.
  - Sanding processes on flat surfaces.

Orbital sander

On these machines the sanding paper turns and oscillates.

- Advantage:
  - Easy to handle and good sanding power.
  - Minimal heat development.
- Disadvantage:
  - Not suitable for sanding stopper on flat surfaces.
  - Smooth guidance important, otherwise sanding marks will occur.
- Application:
  - Sanding of paint layers.
  - Well suited for final preparation of a primer.

NOTE: Comply with the manufacturer's recommendations when setting the orbital sander.

DESCRIPTION AND OPERATION

On the orbital sander, stroke settings of approx. 3 mm for fine sanding work and approx. 5 - 7 mm for coarse sanding work have been established.

Polishing and finishing tools

The term polishing in the context of paint repairs means the elimination of paint flaws and high shine polishing of neighboring parts.

During polishing the fine sanded surface is returned to a high shine using a special abrasive polish.

Before the actual polishing, all flaws in the paint surface must be removed and the following working procedures must be adhered to:

- Thoroughly clean the vehicle.
- Remove spray mist from all surfaces.
- Sand out and polish particle inclusions.
- Sand down paint runs and polish them out.
- Examine the exactness of the color match in daylight.
- Remove masking edges.
- Remove sanding water, sanding dust and polish residues.

After the polishing process the results must be tested using a special test spray.

Infrared drying technology

The drying process in a painting/drying cabin occurs through heat conductance (convection). When an infrared dryer is used, the drying process is through heat radiation.

TO BE UPDATED LATER

The infrared rays penetrate the air and the paint layer without warming them. Because the infrared rays are reflected from the steel panel, the paint coat is warmed from the inside outwards.

Advantages of infrared drying:

- The drying process occurs from the inside to the outside.
- The drying time is shorter than for warm air systems.
- Because the infrared dryer consists of several cassettes which can be switched on independently, the drying area can be optimally controlled.

Independent of the manufacturer's instructions, pay attention to the following:

- Flash-off time of the paint before switching on the infrared dryer.
- Distance between the infrared dryer and the surface.
- Duration of the irradiation.

The most common use of the infrared dryer is to dry stopper and primers. The wait time between the job steps is shortened without having to use the painting/drying cabin.

The painting/drying cabin can then be used exclusively for application and drying of topcoat.

There are two types of infrared dryer:

- Infrared dryer with short wavelength radiation.
- Infrared dryer with medium wavelength radiation.

As an indication, the following drying times are listed for some materials (at 80 cm distance):

NOTE: Observe the material manufacturer's and supplier's specifications.

- Polyester stopper 2 minutes.
- Spray stopper 2 to 7 minutes.
- Water based primer-filler 7 to 9 minutes.
- Primer 3 to 8 minutes.
- Top coat 7 to 10 minutes.

Air dryers

The air dryer is suitable in places where drying needs to be done, but without great outlay (painting/drying cabin or infrared dryer).

DESCRIPTION AND OPERATION

TO BE UPDATED LATER

NOTE: Air from the compressor is often too cold for effective drying.

Air dryers use the venturi effect to blow the warm ambient air over the paint surface in a gentle air flow.

Paint mixing system

Because of the many different color variants, it is now seldom possible to store all color shades as ready-made mixtures.

For this reason, vehicle manufacturers make the mixture proportions of their paints available as color codes. The required color shade can be obtained from the paint mixing system using this color code.

All the color components are combined according to their proportions by weight using a precise computer scales to produce a finished color shade.

Painting cabin

The air requirement in a painting cabin is large. The outside air which is drawn in must be passed through filtering and warming equipment. This particularly applies during colder times of the year and especially for combined types of building where the painting cabin is also used as a drying cabin.

It is primarily used to keep the air free of dust. At the same time, explosive solvent-air mixture concentrations are prevented

NOTE: Vacuum will lead to contamination of the newly applied paint. The outside air flows through door gaps, wall joints and other openings and as it does so, brings dust deposits with it.

The air supply quantity depends on the size of the painting space and the quantity of extracted air. Enough air must be supplied to cause positive pressure in the painting space. An air extraction : air supply ratio of about 1 : 1.05 is sufficient.

The filters should have a dust-removal grade of not less than 99.8% and must always be kept clean.

It is especially important that the air supply does not cause strong air currents in the painting cabin. If not, the following problems could occur:

- Paint contamination cause by paint mist, which persists in air eddies and gradually falls on the fresh paintwork.
- Flow problems in the paint because of the high speed of the air, causing the paint to thicken very quickly on the surface.
- Loss of gloss and wrinkle formation because the surface dries too fast.
- Painter disturbance while working.

In modern paint cabins the air supply is provided from the complete surface of the ceiling. The air speed should be 0.3 m/sec (measured in the unrestricted cross-section of the spray cabin). At the same time, the air in the cabin should change about 350 times per hour.

Air extraction is best achieved through extraction channels in the floor of the painting cabin.

NOTE: Refer to the manufacturer's specifications for the operating instructions, safety instructions and notes on the maintenance of a paint cabin.

Smooth walls in the paint cabin should prevent dust deposits. Regular cleaning is necessary however.

Special easily washed adhesive-bonding paint can be applied to the walls to protect the cabin from paint mist.

DESCRIPTION AND OPERATION

Refinishing Materials

The manufacturer's instructions must always be followed when dealing with all materials! The information given in the following text is data which is independent of the manufacturer, and it should only be used as an indication.

Stopper materials

- 1-component nitro-combination stopper
- 2-component polyester stopper
- 2-component plastic stopper

Use suitable primer to protect from corrosion areas which have been sanded bare before applying stopper.

1-component nitro-combination stopper

Nitro-combination stopper has mostly been superseded by 2-component polyester stopper.

Fast drying fine stopper for the smoothing of irregularities.

The working properties of 1-component nitro-combination stopper can be improved by the addition of nitro thinners.

Drying time increases with thickness of the layer.

Application	1-component nitro-combination stopper
Layer thickness	Max. 80 µm
Drying time	up to 2 hours at 20°C
Sand	P240 - P400

2-component polyester general stopper

CAUTIONS:

Do not exceed the quantity of hardener specified by the manufacturer, excess peroxide can cause staining of the paint top coat.

Mix the stopper base and the hardener well to avoid a marble-like effect.

Check that the manufacturer permits use on the substrate to which it will be applied.

2-component polyester stopper is available in coarse and fine grades. The coarse stopper can be used for very uneven areas and surfaces and fine stopper or spray stopper should be applied afterwards.

Application	2-component polyester coarse stopper
Use	Rough equalization of unevenness
Hardener quantity	approx. 3 - 5%
Working time	approx. 4 - 6 minutes
Drying	20°C approx. 12 minutes
	Short wavelength infrared approx. 4 minutes
	Medium wavelength infrared approx. 5 - 10 minutes
Sanding tool	Eccentric, sanding disk by hand
Grade	P80 - P150

Application	2-component polyester fine stopper
Use	Equalization of unevenness
Hardener quantity	approx. 3 - 5%
Working time	approx. 4 - 6 minutes
Drying	20°C approx. 12 minutes
	Short wavelength infrared approx. 4 minutes
	Medium wavelength infrared approx. 5 - 10 minutes
Sanding tool	Eccentric, sanding disk by hand
Grade	P80 - P240

Application	2-component polyester glass fiber stopper
Use	Equalization of unevenness; blending in of vehicle extensions; repair of GRP components
Hardener quantity	approx. 3 - 5%

DESCRIPTION AND OPERATION

Application	2-component polyester glass fiber stopper
Working time	approx. 4 - 6 minutes
Drying	20°C approx. 12 minutes
	Short wavelength infrared approx. 4 minutes
	Medium wavelength infrared approx. 5 - 10 minutes
Sanding tool	Eccentric, sanding disk by hand
Grade	P80 - P150

2-component polyester fine stopper should always be applied after 2-component polyester glass fiber stopper.

Application	2-component polyester spray stopper
Use	Equalization of unevenness
Hardener quantity	approx. 3 - 5%
Working time	approx. 25 - 30 minutes
Layer thickness	200 µm or 4 - 8 spray passes
Drying	20°C approx. 3 hours
	Short wavelength infrared approx. 10 minutes
	Medium wavelength infrared approx. 15 - 20 minutes
Sanding tool	Eccentric, sanding disk by hand
Grade	P80 - P150; fine sand - P280

Application	2-component plastic stopper for flexible thermoplastic
Use	Equalization of scratches or unevenness
Hardener quantity	approx. 3 - 5%
Working time	approx. 25 - 30 minutes
Drying	20°C approx. 15 - 30 minutes

Application	2-component plastic stopper for flexible thermoplastic
	60°C approx. 15 min
	(Short wavelength infrared approx. 8 minutes)*
	(Medium wavelength infrared approx. 8-10 minutes)*
Sanding tool	Eccentric, sanding disk by hand
Grade	P80 - P150; fine sand - P280

***Infrared drying may adversely affect adhesion, therefore check the manufacturer's instructions.**

Plastic stopper has a very great tendency to shrink back, so that the edge of the stopper repair becomes visible.

Plastic stoppers are flexible and universally applicable on all types of plastic (except for pure PE and PP, these are plastics which cannot be painted). The manufacturer's instructions must be very exactly followed in order that no adhesion problems occur. A special plastic etch primer is specified for some materials.

Primers

Application	1-component primer
Use	Isolation of bare sanded areas.
Spray gun	HVLP 1.3 mm
Spray pressure	2.0 bar
Drying	20°C approx. 15 - 20 minutes
	60°C approx. 10 min
Coat application	Wet on wet, no intermediate sanding

Application	2-component primer
Use	Corrosion protection and bonding agent (steel sheet, zinc coated steel sheet, aluminum)

DESCRIPTION AND OPERATION

Application	2-component primer
Spray gun	HVLP 1.3 mm
Spray pressure	2.0 bar
Drying	20°C approx. 15 - 20 minutes
	60°C approx. 10 min
Coat application	Wet on wet, no interme-diate sanding

HS primer filler and HS tinted filler

Note:

- Primer filler is available as 1-component and 2-component water based and solvent based forms.
- 1-component products are only suitable for isolation of sanded through bare areas and new painting.
- Water based products are also used for the skinning of thermoplastics and substrates which are sensitive to solvents.
- Tinted fillers can be individually matched to the top coat color and therefore find uses in effect paints and paints with poor covering power.
- Use dry sand or wet sand filler according to application in order to avoid unnecessary sanding work.
- On critical substrates the use of epoxy resin base filler is recommended in order to avoid adhesion problems.

Application	HS primer filler and HS tinted filler
Use	Equalization of uneven-ness, edge zones, sanding scores
Spray gun	HVLP 1.6 - 1.9 mm
Spray pressure	2.0 bar
Layer thickness	50 - 70 µm to 150 µm possible
Drying	20°C approx. 2.5 hours
	(60°C approx. 25 min)*
	(Short wavelength infrared approx. 8 minutes)*

Application	HS primer filler and HS tinted filler
	(Medium wavelength infrared approx. 10-15 minutes)*
Coat application	Wet on wet, no interme-diate sanding

***In order to avoid boiling out, drying should be performed slowly.**

Paint

The base and the clear lacquer must be matched to one another.

Application	Water based paint
Use	Two layer metallic effect paint and Uni-paint finishes
Spray viscosity	At 20°C 18 - 20 s
Spray gun	HVLP 1.2 - 1.3 mm
Spray pressure	2.0 bar
Layer thickness	15 - 20 µm
Drying	20°C approx. 2.5 hours
	60°C approx. 25 min
	Short wavelength infrared approx. 8 minutes
	Medium wavelength infrared approx. 10 - 15 minutes
Coat application	Wet on wet
Ventilation time	approx. 5 minutes

The base paint must be dried matt before the clear lacquer is applied.

Application	2-component HS clear lacquer
Use	Gloss providing protective coat for base coat substrate
Spray viscosity	At 20°C 18 - 20 s
Spray gun	HVLP 1.2 - 1.3 mm
Spray pressure	2.0 bar
Layer thickness	50 - 70 µm

DESCRIPTION AND OPERATION

Application	2-component HS clear lacquer
Drying	20°C approx. 10 hours
	60°C approx. 30 min
	Short wavelength infrared approx. 8 minutes
	Medium wavelength infrared approx. 10 - 15 minutes

Application	2K HS Uni top coat
Use	Color and gloss providing paint layer
Spray viscosity	At 20°C 20 - 22 s
Spray gun	HVLP 1.2 - 1.3 mm
Spray pressure	2.0 bar - 3.0 bar
Layer thickness	50 - 70 µm
Drying	20°C approx. 8 hours
	60°C approx. 30 min
	Short wavelength infrared approx. 8 minutes
	Medium wavelength infrared approx. 10 -15 minutes

DESCRIPTION AND OPERATION

Additional Materials

The manufacturer's instructions must always be followed when dealing with any materials! The information given in the following text is data which is independent of the manufacturer, and it should only used as an indication.

Adhesive sealants

Adhesive sealants are permanently elastic, long-lived, can be painted and accept filler.

Application: Sealing of visible and normal seams.

Can be over-painted with 2-component paint, primer and fillers after having dried throughout.

Contamination can be removed using cleaner and thinner.

1-component PUR adhesive sealant

Note:

- Hardens using oxygen from the air. For that reason, it must only be stripped after it has completely dried through.

2-component MS polymer adhesive sealant

2-component MS polymer adhesive sealant is free of isocyanate, solvent and silicones and can be spot-welded.

MS polymer adhesive sealant

Can be over painted with water-based paints.

Suitable for spraying and brushing to obtain a composition true to the original.

MS polymer adhesive sealant is free of isocyanate, solvent and silicones and can be spot-welded.

Underbody protection

Underbody protection products are immune to abrasion, permanently elastic, adhere well and are suitable for a true to original texture.

Underbody protection based on solvent

Application:

- Underbody protection for visible areas.

Properties:

- Can be over-painted, also with 2-component paint.
- Can be colored with a proportion of up to 40% paint.

Note:

- Contamination can be removed using cleaner and thinner.

Water based underbody protection

Can be over-painted with water based paint.

Can be colored with water based paint.

Contamination can be removed using water.

Application	Water based underbody protection
Use	**Underbody protection** for visible areas
Spray viscosity	ready to use
Spray gun	Suction beaker HVLP gun 3 - 4 mm
Spray pressure	4 - 6 bar
Layer thickness	500 - 1000 µm
Drying	approx. 6 hours at 20°C
	approx. 45 - 60 minutes at 60°C
	Short wavelength infrared approx. 8 minutes
	Medium wavelength infrared approx. 10 - 15 minutes

Application	Water based underbody protection
Use	**Isolation primer** for peroxide marks, bloomed old paintwork and thermo-plastics.

DESCRIPTION AND OPERATION

Application	Water based underbody protection
Spray viscosity	Thin as necessary with distilled water
Spray gun	HVLP gun 1.9 mm
Spray pressure	2.0 - 3.0 bar
Layer thickness	40 - 50 µm
Drying	approx. 2 hours at 20°C
	approx. 30 minutes at 60°C
	Short wavelength infrared approx. 8 minutes
	Medium wavelength infrared approx. 10 - 15 minutes

Paint additives

Application	Sanding test color
Use	To test sanding results
Spray gun	HVLP 1.7 - 1.9 mm
Spray pressure	2.0 bar
Layer thickness	Spray drifted

Application	Fixer additive
Use	Converts solid top coat into two layer solid; multi-color painting
Spray viscosity	18 - 20 secs at 20°C
Spray gun	HVLP 1.2 - 1.3 mm
Spray pressure	2.0 - 3.0 bar
Layer thickness	max. 30 µm
Coat application	Wet on wet
Ventilation time	approx. 15 - 30 minutes

Maintain maximum layer thickness without fail.

Must always next be overpainted with clear lacquer.

Application	Drying accelerator
Use	Accelerates drying with only minimal reduction in working life
Working life	approx. 5 hours at 20°C

Application	Drying accelerator
Spray gun	HVLP 1.2 - 1.3 mm
Spray pressure	2.0 bar
Layer thickness	50 - 70 µm
Drying	approx. 6 hours at 20°C
	approx. 25 minutes at 60°C
	Short wavelength infrared approx. 8 minutes
	Medium wavelength infrared approx. 10 - 15 minutes

Cannot be used in all paints, read the manufacturer's instructions.

Particularly suitable for partial painting.

Application	Elastifier additive in primer material
Use	Elastifies the complete paint structure on plastics.
Addition	Up to 25%
Spray gun	HVLP 1.7 - 1.9 mm
Spray pressure	2.0 - 3.0 bar
Layer thickness	50 µm
Drying	approx. 4 hours at 20°C
	approx. 40 minutes at 60°C
	Short wavelength infrared approx. 8 minutes
	Medium wavelength infrared approx. 10 - 15 minutes

Application	Elastifier additive in top coat
Use	Elastifies the complete paint structure on plastics.
Addition	Up to 25%
Spray gun	HVLP 1.7 - 1.9 mm
Spray pressure	2.0 - 3.0 bar
Layer thickness	50 - 60 µm

DESCRIPTION AND OPERATION

Application	Elastifier additive in top coat
Drying	approx. 16 hours at 20°C
	approx. 45 minutes at 60°C
	Short wavelength infrared approx. 8 minutes
	Medium wavelength infrared approx. 10 - 15 minutes

Application	Matting additive in solid paint
Use	Elastifies the complete paint structure on plastics.
Semi-gloss addition	Up to 25% in the paint without hardener and thinner
Silk gloss addition	Up to 35% in the paint without hardener and thinner
Silk matt addition	Up to 45% in the paint without hardener and thinner
Spray gun	HVLP 1.2 - 1.3 mm
Spray pressure	2.0 - 3.0 bar
Layer thickness	50 - 70 µm
Drying	approx. 8 hours at 20°C
	approx. 30 minutes at 60°C
	Short wavelength infrared approx. 8 minutes
	Medium wavelength infrared approx. 10 - 15 minutes

CAUTION: Do not dry using infrared.

Application	Matting additive in clear lacquer
Use	Elastifies the complete paint structure on plastics.

Application	Matting additive in clear lacquer
Semi-gloss addition	Up to 25% in the paint without hardener and thinner
Silk gloss addition	Up to 35% in the paint without hardener and thinner
Silk matt addition	Up to 45% in the paint without hardener and thinner
Spray gun	HVLP 1.2 - 1.3 mm
Spray pressure	2.0 - 3.0 bar
Layer thickness	50 - 70 µm
Drying	approx. 8 hours at 20°C
	approx. 30 minutes at 60°C

Note:

- When mixing, first put in the matting additive, then the hardener and thinners.
- Stir immediately after adding the matting additive.
- Do not store after addition of the matting additive, storage will change the degree of gloss.
- Also suitable for use on plastics without addition of elastifier additive.

Application	Matting paste
Use	Matts, elasticizes and gives structure to solid paint and clear lacquer during painting of bumpers or hard plastic.
Addition	1:1 or 2:1 depending on manufacturer in solid paint without hardener or thinners.
Spray gun	HVLP 1.2 - 1.3 mm
Spray pressure	2.0 - 3.0 bar
Layer thickness	50 - 70 µm
Drying	approx. 6 - 10 hours at 20°C
	approx. 30 minutes at 60°C

DESCRIPTION AND OPERATION

Application	Matting paste
	Short wavelength infrared approx. 8 minutes
	Medium wavelength infrared approx. 10 - 15 minutes

Note:

- **The paint must not be filtered.**

Application	Anti-silicone additive
Use	Prevents silicone craters
Addition	2% to maximum 5%

Note:

- Only add away from the paint cabin and immediately remove contaminated cloths.
- If anti-silicone additive is used in the first coat, then it must be used in the following coats, and in at least the same proportions.

Additive materials

Variety of adhesive tapes

For profile, fine and large area masking work.

Properties:

- Withstands heat.
- Withstands water-based paint.
- Accepts paint.
- Easily removed without leaving adhesive residues.

Masking film.

For masking of large areas on vehicles.

Properties:

- Accepts 2-component and water-based paints.
- Withstands heat.
- Withstands water spray and condensation.
- Withstands solvent.
- Easily cut.
- Environmentally friendly and can be recycled.

Polishing materials.

Polishing means microfine sanding. For this reason, polishes must only contain abrasives, and no silicones.

During polishing repair, a good shine is achieved through the step-by-step use of polishes, starting with a highly abrasive polish and ending with a polish having very slight abrasive action.

Polishes are available in graduations from coarse to fine.

Abrasives

Please refer to the "Tools" chapter for information on abrasives.

DESCRIPTION AND OPERATION

Paint Repairs

General information

There is a great difference between painting in production and repair painting.

In production, only the bodyshell is painted, it has no trim, upholstery or assemblies. Because of this, other paints, tools and processing techniques can be used.

In contrast to that used in production, paint used in the workshop must dry at low temperatures. Plastics and the vehicle electronics must not be subjected to temperatures greater than 70°C.

The painting process in the case of repair work consists of two phases:

- Pre-treatment of the surface for corrosion protection and the smoothing of irregularities.
- Top coat application.

The precondition for a professional paint finish on a vehicle is the permanently maintained cleanliness of work spaces, tools and equipment,

Original materials must be worked according to the manufacturer's instructions, so that no problems arise in the processing nor during drying.

The room temperature must be 20 - 25°C and the humidity must be low. Temperatures which are too low or too high can lead to porosity, poor flow and boiling. High humidity leads to paint damage such as tarnishing of the paint film (matt film), adhesion problems and craters.

Pre-treatment of the surface

Perfect preparation of the subsurface is the precondition for a brilliant paintwork result. Faults in the preliminary stages delay completion and cause unnecessary extra work. The working steps described here demonstrate how important it is to follow these instructions step by step.

NOTE: Thorough cleaning of the vehicle and especially of the area being repaired is particularly important because of the danger of contamination of the paint.

Clean the area of the damage

TO BE UPDATED LATER

Clean the damaged surface thoroughly, to allow the extent of the damage to be seen. Use silicone remover to produce a grease-free surface.

NOTE: The treated surface must be rubbed with a clean dry cloth before the solvent evaporates, otherwise there will be no cleaning effect.

Effective de-greasing is important not only before the application of paint, but also before all sanding stages, for two reasons:

- During sanding of grease contaminated surfaces, globules may form with the sanding dust. Sanding marks will occur and the sanding medium quickly becomes unuseable.
- Oil and grease are embedded by the action of the abrasive particles, and are then very difficult to remove.

Establish the area of damage and the repair stages. In doing so, establish how much disassembly work must be undertaken. Perform a color test at this stage.

Mask off the area of the repair ready for preparatory work.

Sand out the damage location

TO BE UPDATED LATER

DESCRIPTION AND OPERATION

When sanding, produce smooth transitions from the painted area to the bare metal.

Use an eccentric sander and P80 or P120 abrasive sheets. Finish off sanding with P150 or P180. The remaining adhering sanding dust must be completely removed.

Cleaning, de-greasing

TO BE UPDATED LATER

Use silicone remover to thoroughly clean the surface in order to remove grease residues, sweat from the hands and other contamination.

NOTE: Use a solvent test to establish whether the old paint can be etched. Apply 2-component thinners to the damaged area using a clean cloth and rub lightly for about 1 minute. If the subsurfaces can be etched away, special pre-treatment is necessary. See "Tips and Tricks"

Apply primer filler

TO BE UPDATED LATER

Before applying stopper, apply primer to the sanded and bare surface.

Allow the primer to dry and then lightly sand by hand using P220 - P400 dry.

NOTE: Most stopper can be applied directly to bare metal. But application of a primer filler provides better corrosion protection.

NOTE: Avoid sanding through to the bare metal. Points which are sanded through must be retreated with primer filler.

Stopper application

TO BE UPDATED LATER

Pre-sand the hardened stopper using an eccentric sander and P80 dry, then final-sand using P120 - P140 dry. Clean the sanded surface using silicone remover.

Apply 2-component stopper to the filled surface. The stopper compound must only be applied thinly.

NOTE: Use of a testing powder is recommended so that the sanding process can be more easily checked.

Apply filler

TO BE UPDATED LATER

Filler can now be applied to the dried repair area. Choose the correctly toned filler according to the manufacturer's instructions.

NOTE: Alternatively, filler with the correct tone can be mixed with the aid of colour matching cards.

DESCRIPTION AND OPERATION

Sand the filler.

TO BE UPDATED LATER

The working area is expanded by applying new masking. This makes it possible to even out the transition from the damage area to the vehicle paintwork.

NOTE: The primer filler must be carefully sanded. Faults in the primer filler layer will be visible in the top coat.

The sanding process consists of two stages. Coarse sanding levels out the surface of the filler primer. Fine sanding ensures the necessary surface structure which allows the top coat to adhere well and cover sanding marks.

Sand the filler using the eccentric sander and P400 - P500 used dry. Clean the sanded filler finished surface using silicone remover.

The painted area is matted using a fine matting sponge, and then thoroughly cleaned.

Surface ready for paint

TO BE UPDATED LATER

The surface which has been repaired and then prepared according to the manufacturer's instructions is now ready for basic paint application.

Top coat application

It is important for a good paint result that the recommended process data is adhered to, i.e. mixture proportions, layer thickness, viscosity, drying time etc.

First of all the work area is carefully masked ready for paint application. The correct adhesive materials and techniques must be used so that no hard transitions and edges are created during painting.

NOTE: The chapter "Tips and Tricks" gives in-depth information on masking work.

Thoroughly check the surface once more and rub-off with a dust-bonding cloth.

NOTE: Once more check the paint material and that the spray gun is correctly adjusted before applying the paint.

Paint application

TO BE UPDATED LATER

The base paint is applied in two or three steps. First of all only the repair area is painted with the first paint application.

Flash off

TO BE UPDATED LATER

Allow the paint application to flash off until the surface has a matt appearance. So that the transition to the original paint is optimally created, the next paint application is applied to a wider area.

After the base paint has dried for the specified time, the clear lacquer is applied. Next the transitions to the original paintwork are treated with fade-out

DESCRIPTION AND OPERATION

remover. This removes the spray mist and forms an ideal paint surface.

Repair stages for repair painting

The required time and material data is divided into four painting levels for calculations concerning repair painting. Proceed according to these divisions for every calculation.

Level 1 - Painting of new components

On new components, all inner surfaces, seams and edges which will no longer be seen after assembly must be primed and pre-painted.

NOTE: The cathodic dip primer must not be sanded away. Cleaning with silicone remover or light sanding of the primer is all that is required.

Job steps:

- Wash off, prime and pre-paint inner surfaces, seams and edges which cannot be reached at all or only partly after the component is installed.
- Sand new component with P280 - P320 or a fine sanding pad.
- Clean subsurface with silicone remover.
- Carry out masking work (when painting an installed component).
- Apply one spray run of filler, dry.
- Sand the filler. P1200 wet or P500 dry.
- Clean filler application with silicone remover.

Then the prepared surface can be painted with solid or 2-component paint.

If the new part has mild transport damage, this must be rectified beforehand.

To do so, add the following steps:

- Grind out the scratch.
- Finely sand the surrounding surfaces.
- Use a steel cleaning agent to thoroughly clean and then rub dry.
- Apply corrosion protection primer to the bare areas.

Level II - Top surface painting (color tone matching)

Complete bodywork surfaces which are to be painted without the need to apply stopper belong to this group. In addition, surfaces with faults in the top coat surface which cannot be removed by polishing.

The following faults are included:

- Loss of gloss.
- Sanding scores.
- Heavy paint runs.
- Large dust and dirt inclusions.

The scope of the work is as follows:

- Sand the surface.
- Sand out paint damage and faults.
- Treatment of small areas which have been sanded through.
- Masking work (when painting an installed component).
- Apply top coat according to the painting process (one or several coat process).
- Dry the top coat and perform finishing work.

Level III - Repair painting with stopper applied to up to 50% of the surface.

If in addition to painting, work with stopper application must be performed, then the repair levels III or IV must be used.

In repair level III, apart from painting the complete bodywork surface, partial stopper work is carried out on up to 50% of the surface to be painted. The necessary primer and filler work are also included.

The following damage must be rectified in this level:

- Slight panel unevenness.
- Damage due to corrosion.
- Dented body surfaces.
- Weld locations.
- Deep scores or scratches.

The scope of the work is as follows:

- Fine sand pre-treated bodywork surfaces (e.g. lead-loaded areas).
- Sand out existing damage.
- Perform all necessary masking operations on the vehicle.
- Apply primer.
- Partial stopper application on up to 50% of the surface to be painted (two to a maximum of three stopper applications).
- Fill the repair area.
- Apply stone chip protection (when present in production).
- Apply top coat according to the painting process (one or several coat process).
- Dry the top coat and perform finishing work.

DESCRIPTION AND OPERATION

Level IV - Repair painting with stopper applied to more than 50% of the surface.

In repair level IV, apart from painting the complete bodywork surface, partial stopper work is carried out on more than 50% of the surface to be painted. The necessary primer and filler work are also included.

The following damage must be rectified in this level:

- Damage due to hail.
- More extensive stone chip damage.
- Extensively dented body panels.
- Sectional repairs with large weld seams.
- Surfaces with severe corrosion damage.

The scope of the work is different to level III because of the partial application of stopper to more than 50% of the area to be painted. In addition, more extensive sanding work is usually required.

Polish

In order to achieve faultless quality, it is sometimes necessary afterwards to polish a newly painted surface.

Even after the most careful painting, it sometimes happens that dirt inclusions and paint runs occur in work with top coat or clear lacquer. Before polishing, such paint faults must be removed with the sanding cylinder ("Finiball") and hand sanding or eccentric sander in a wet sanding process.

Sanding cylinder

TO BE UPDATED LATER

The special sanding compound **-1-** (sanding bloom) for the sanding cylinder is self-adhering and available in grades from P1000 to P2500.

- P1000 - P1500 for pre-sanding of runs and large imperfections in the paint.
- P1500 - P3000 for subsequent sanding of runs and sanding out of dust inclusions.

A small eccentric sander can be used for more extensive working areas. When doing so, first of all put the eccentric sander in place and then switch it on, so that the danger of sanding through on edge is reduced.

Finally polish the sanded area to a high gloss with suitable polish. To this end the various manufacturers recommend materials and process techniques which are specially suited to their products.

NOTE: The polishing is to be done in the same way as that used to remove swirl marks.

Polish

TO BE UPDATED LATER

NOTE: Before using the nap sponge for the first time and after any long pauses in working, dampen the nap sponge with polish.

Job steps:

- Clean and degrease the area to be polished using silicone remover.
- Apply the polish to the polishing disc and spread it.
- Place the polishing machine down flat on the area to be polished and before switching it on, gently distribute the polish over the underlying surface.
- Polish out the location for 10 - 15 seconds with the edge, working with a criss-cross motion.
- Subsequently polish the location for about 10 seconds with the machine laid down flat.
- Wash off and clean the polished location using the professional polishing cloth and then clean the polished surface.
- It is absolutely vital to carry out a visual check after finishing the polishing procedure. If any swirl marks are not completely removed by the first polishing procedure, then process must be repeated.

DESCRIPTION AND OPERATION

Aids

Cleaning putty

Cleaning putty allows deposits on the paint surface to be removed easily and gently. The following paint faults can be removed using cleaning putty:

- Metal deposits and iron dust.
- Paint or color mist.
- Tree resin and tar.
- Insect residues.

The surface to be worked must be thoroughly cleaned before the cleaning putty can be applied. Then the surface is sprayed with soapy water. Now the cleaning putty can be slid over the surface until all unevenness is removed.

DESCRIPTION AND OPERATION

Painting Plastic Parts

General

Although these days plastics can be produced in all colors and with a matt or gloss surface, painting is often necessary.

NOTE: Manufacturer's limitations concerning the feasibility of painting certain components must always be observed.

Reasons in favor of applying paint to plastic are:

- Individual coloring, matching the body paint.
- More gloss and color brilliance through painting.
- Removal of production imperfections.
- Protection from atmospheric exposure.

Nowadays painting plastic presents no problems because the materials are known and matched to the paint. In order that the painter can use the correct painting materials, the type of plastic must first be correctly determined.

To allow this, plastics are marked on the rear in accordance with the recommendations of the Association of Vehicle Manufacturers.

Once the type of plastic is determined it is an easy matter to assign special paint recommendations, matched to that particular plastic. Unmarked plastics require knowledge of materials so that a correct choice of paint materials can be made and the component can be reliably painted.

Plastic groups

Thermoplastics

When warmed these undergo a reversible transformation into a plastic deformable state and once cooled they maintain their shape. They consist of string-like (linear) or only slightly branched molecular chains.

Thermosets

Thermosets are hard and have the form of a close-meshed network in all directions. They do not undergo plastic deformation, are especially resistant to chemicals, are difficult to swell and are insoluble. At normal temperatures they are hard to brittle. At first the material does not undergo any change when heated, but when it reaches a critical point, the thermoset is totally destroyed.

Elastomers

Elastomers are characterized by high elasticity over a wide temperature range. They have properties like rubber or a sponge and after compression or distension they return to their original state.

Types of plastic

The plastics used in the automotive area:

- ABS - Acrylonitrile butadiene styrene (polymer)
- PA - Polyamide
- PC - Polycarbonate
- PE - Polyethylene
- PP - Polypropylene
- PP/EPDM - Polypropylene/ethylene propylene diene copolymer
- PC/PBT - Polycarbonate/Polybutylene terephthalate
- PBT/PC - Polybutylene terephthalate/Polycarbonate
- PUR - Polyurethane
- GRP - Glass reinforced plastic

NOTE: PE and PP are plastics which cannot be painted, or can only be painted using special techniques.

As well as the pure plastics, so-called 'blends' are also used. This means combinations of different plastics. If we were dealing with metals they would be called alloys.

Plastic identification

Normally the identifier is marked on the plastic components used in vehicle construction.

One method to determine the plastic group is the sanding test. In this a place is chosen which will not be visible later, and the finger belt sander is used to sand the plastic.

The plastic group can be determined using the pattern left by the sanding and the dust:

- Thermosets produce a white dust.
- Thermoplastics smear and do not produce dust.

The plastic group can be determined by a sound test:

DESCRIPTION AND OPERATION

- Degree of hardness - the higher-pitched the sound, the harder the plastic.
- Elasticity - the more muffled the sound, the higher the elasticity of the plastic.

Cleaning plastic

Plastic components are manufactured using complicated moulds and presses or other highly engineered tools, mostly using an injection moulding process or reactive injection moulding process.

In order to be able to remove the component from a particular tool, a separating agent is used, which in some cases adheres very strongly to the plastic.

This separating agent on the plastic components must be completely removed before any surface coating is applied.

Warm storage (tempering) before actual cleaning brings the following advantages:

- The separating agent sweats out of the plastic.
- Tensions in the plastic are released.
- Air inclusions can be recognized and removed.

Intensively clean the item several times using a pad and fresh cleaning agent.

NOTE: A single wipe, even with cleaning agent, is not usually sufficient in most cases. Clean textured components with the aid of a soft brush.

After cleaning, it is absolutely vital that cleaning agent absorbed by the plastic should be expelled by tempering again. If the ventilation is good and the room temperature is about 20°C the solvent can be evaporated away by overnight storage.

Painting new components

It is absolutely vital that the substrate of an unpainted new component is free of separating agent. Paint can only be applied directly to very few plastics. The plastic must first be identified exactly and then worked with a repair system which is matched to the type of plastic. In most cases a plastic etch primer must be applied as adhesion base to all plastics which can be painted.

NOTE: Plastics have a tendency to become electrostatically charged. This can easily cause contamination during painting. Special antistatic cleaning cloths prevent electrostatic charging.

Work process for thermoplastics:

- Thoroughly clean the surface.
- Temper the plastic.
- Afterwards clean with antistatic cleaner or antistatic cloths.
- Apply the bonding agent.
- Apply elastic filler. After it has dried, sand and clean.
- Apply one coat Uni-paint with elasticizer additive. For two layer painting the elasticizer additive is in the clear lacquer.

NOTE: Follow the paint manufacturer's guidelines during all work.

Work process for thermosets:

- As a rule, thermosets can be handled in the same way as normal body components.

Work process for PUR soft foam:

- The work process is the same as for thermoplastic.
- Instead of using bonding agent, a filler wash is applied to close the pores of the PUR soft foam.

The primer which has been applied to a primed new component can vary greatly. If no manufacturer's data is available, the composition and suitability for further working must be tested.

Painted components with an already ascertained and intact paint coat present no problems for possible repainting. After sanding and careful cleaning with plastic cleaner or thinners, painting can be done directly.

Unknown primer

When dealing with unknown substrates it is important to carry out an adhesion test on the existing paint before any repainting is attempted. First of all a mechanical test must be carried out, for instance using a lattice cut and tear-off band. If the adhesion of the old paint is not acceptable, it must be mechanically removed and new paint finish applied.

If the adhesion is acceptable, then an etch test is performed using 2-component thinners. If no etching can be detected in this test, application of the the paint finish can be started directly. Otherwise the old paint must be removed and a new paint finish created.

With the help of universal or special plastic primers and with only a few materials complementary to those previously present anyway, the painter can now apply a long-lasting paint finish to all popular vehicle attachments made of plastic.

DESCRIPTION AND OPERATION

Paint faults on plastic substrates

NOTE: Paint faults are fully described in the chapter Paint Defects and Damage.

The most common paint faults which can occur when painting plastic components and the methods of repair are briefly described.

Discoloration

Cause/damage pattern:
- Plastic material is not suitable for painting.
- Incorrect bonding agent.
- Paint used not solvent resistant.

Repair of damage:
- Repaint using suitable materials.
- Install a new unpainted component.

Softening

Cause/damage pattern:
- Substrate not carefully cleaned.
- Air humidity too high or working temperature too low.
- Drying time incorrect (too short).
- Materials for substrate not correctly matched to each other or not mixed correctly.

Repair of damage:
- Dry out, sand, re-isolate and paint.
- Sand away faulty paint coats and re-apply paint finish.

Paint damage caused by detachment, poor adhesion

Cause/damage pattern:
- Insufficient paint adhesion between top coat and filler. The whole of the paint finish detaches from the plastic.
- Plastic not cleaned sufficiently, not or inadequately tempered.
- Unsuitable cleaning agent or materials used.
- Poor or lack of intermediate sanding.
- Paint finish underbaked or overbaked.

Repair of damage:
- Sand away faulty paint coats and re-apply paint finish.

Paint damage caused by blisters, craters, sink holes

Cause/damage pattern:
- Painting on PUR plastic which was not painted in production.
- Surface of the plastic material too porous.
- Flash-off time not adhered to.
- Drying temperature too high.
- Moisture in plastic material.
- Layers too thick.

Repair of damage:
- Clean the damaged area, sand, re-isolate and paint.
- Remove the paint layers and re-paint.

Crack formation

Cause/damage pattern:
- Overexpansion of painted PUR plastic components.
- Use of unsuitable paint materials.
- Paint materials not suited to each other or incorrect mixture ratio.

Repair of damage:
- It is not possible to repair overexpanded PUR plastic components.
- On other plastics, sand away damaged layers, isolate and repaint.

DESCRIPTION AND OPERATION

Spot Repairs

General

In general, partial surface painting at a point is called a spot repair. Using this technique, minor paint damage can be resolved economically and to time.

Advantage of this method

Because this application remains confined to the area of the damage, it is often unnecessary to remove components or color match against neighboring components. The material used is very much reduced because only a part of the repair area is coated.

Practical application areas

Only occasionally can satisfactory results be achieved in the centre of larger surfaces and/or on difficult colors. In addition, unprofessional application may cause tear-off edges to appear in clear lacquer. Only certain application areas are recommended.

NOTE: The final decision on whether to spot repair or paint the component must be made by an expert.

Application areas:

- 2-layer paint.
- Depending on the damage zone, paint damage up to a diameter of 3.5 cm or a length of 10 cm.
- Scratches.
- Clear lacquer application up to an area of DIN A4 max.
- Smaller areas which are optically broken up by other components such as trim strip, tail lights, swage lines and edges.
- Boundary zones and edge areas of larger components.

The best application areas have proven to be optical break lines such as corners, narrow surfaces, fenders and wheel arches.

TO BE UPDATED LATER

Because of their locations, the violet colored areas are the most suitable for spot repair painting. The turquoise areas are only marginally suitable and the rest of the areas are not suitable for spot repairs.

DESCRIPTION AND OPERATION

Repair process

Perfect preparation of the subsurface is the precondition for a brilliant paintwork result. Faults in the preliminary stages delay completion and cause unnecessary extra work. The working steps described here demonstrate how important it is to follow these instructions step by step.

Illustration of damage

TO BE UPDATED LATER

A typical case for spot repair is a small stone chip on the fender.

Cleaning

TO BE UPDATED LATER

First of all the component is thoroughly cleaned using silicone remover and refurbished using abrading and polishing paste. This re-creates the original degree of shine and ensures exact color matching on the touch-up surface.

Sand out

TO BE UPDATED LATER

Sand out the damaged location using P180 - P320. Only small sanding blocks and small sanding machines must be used, so that the area of the repair remains as small as possible.

Sanding is completed by rubbing down the surrounding surface with a fine sanding pad or P1000 paper. Remove sanding residues and clean the repair area with silicone remover. The peripheral zone must then be masked for application of the filler.

NOTE: The size of the repair area must be kept as small as possible (maximum size DIN A4).

Filling

TO BE UPDATED LATER

The filler layer is applied in stages. First of all, filler is only applied to the location which has been sanded away. After a wait time for flashing off, the second coat is applied so that it spreads over onto the existing paintwork.

The filler must be dried according to the instructions of the material supplier.

DESCRIPTION AND OPERATION

Rubbing down

TO BE UPDATED LATER

The repair location is now rubbed down with P400 - P500 and the bordering surface with P2000 - P4000. Remove sanding residues and clean the repair area with silicone remover.

Paint

TO BE UPDATED LATER

Before painting, clean the area for the final time using a dust-bonding cloth. Then apply the basic paint in thin layers using a spray gun until enough coverage is achieved.

After drying, apply clear lacquer in 1 or 2 coats (depending on product). In doing so, spray so that only the newly applied basic paint is completely covered. Finally a touch-up thinners is sprayed over the edge of the clear lacquer to dissolve the clear lacquer spray mist.

Dry

TO BE UPDATED LATER

Now dry the clear lacquer according to the manufacturer's instructions using an infrared gun.

Polish

TO BE UPDATED LATER

Polish the component using a polisher and polish and check the polished area for any swirl marks which may be present. Polish away any swirl marks which are present.

Dirt inclusions

Sand out

TO BE UPDATED LATER

Minor damage can be removed with a small sanding machine or preferably with an eccentric sander with P1500 - P2000. Very fine spray mist

DESCRIPTION AND OPERATION

can be removed using P2000 - P4000 paper and
a larger eccentric sander.

DESCRIPTION AND OPERATION

Corrosion Prevention

General

Although corrosion protection measures and painting processes in production have reached a very high technical standard and will be continuously developed further, in the long term corrosion on a vehicle cannot be totally avoided. Further demands are therefore made of the paint specialist besides his knowledge of normal repainting of vehicles which have been repaired after an accident, in addition specialist knowledge is required for assessing and rectifying damage due to corrosion.

During repair painting, take care over the maintenance and re-creation of the corrosion protection applied in production, in view of the long-term warranty on Ford vehicles. Only those repair materials which are approved by Ford may be used for body repair work and repair painting.

For detailed information on corrosion protection measures during body repairs, please refer to chapter 501-25.

Furthermore, information on corrosion protection measures is repeated in individual chapters of the paint manual.

In particular, pay attention that the layer thicknesses specified in production are maintained. The complete system of solid one-layer on galvanized steel panels must equal at least 90 µm and the total system of two-layer on galvanized steel panels must equal at least 105 µm.

It is important that sealing operations, as far as they are necessary, should be undertaken after the application of the paint to specification, in order to ensure the best corrosion protection. All components which form hollow cavities such as pillars, rails, side components etc. must be provided with a coating of cavity protection wax.

Causes of corrosion

Corrosion of steel is an electrochemical process during which the steel combines with oxygen. The following factors lead to corrosion:

- Acidic compounds contained in the air, such as carbonic acid and sulphur dioxide, combined with oxygen from the air and/or water. Salts such as sodium chloride used as road salt accelerate the corrosion process.
- Mechanical damage such as stone chips and scratches which penetrate through to the steel panel.
- Lack of care by the vehicle owner of the painted and corrosion proofed surfaces or areas on the vehicle.
- Unfavorable weather or environmental conditions, as may occur in areas with high humidity, high salt content in the air or serious air pollution due to aggressive gases and dusts.

In the case of mechanical damage, formation of rust can often be seen, beginning to spread into the painted surface from a point (stone chip) or from a line (scratch). If these faults are not professionally rectified in good time, the result is rusting through from the outside to the inside. Rusting penetration from the inside to the outside occurs when for instance the cavity protection was inadequate.

Operations after painting

NOTE: The manufacturer's instructions must be followed when working with the various corrosion protection materials.

- After painting, treat all cavities in the repair area with cavity protection wax. In doing so, pay particular attention to the weld seams. In dead-end applications with a panel insert, the cavity protection wax must be applied so that it also reaches the area of the panel insert.
- Seals which were applied in production and not over painted must be reapplied. Seals protect vulnerable parts of the bodywork, keep moisture away, reduce wind and road noise and dampen vibrations.
- Apply transparent wax.

Definition of the degree of rust

In workshop practice, in order to be able to carry out a consistent and objective evaluation of the scope of the damage, a degree of rust on the scale of 1 to 5 is determined by the DIN 53 210 standard. The main criterion here is the extent to which rust exists under the paint structure. It is determined in millimeters (mm).

DESCRIPTION AND OPERATION

Underlying rust grade: R1 < 1 mm

Corrosion starting with up to 1 mm of rust underlying (in the form of a spot or a line).

The damage can be rectified by cleaning the defective location and mechanically removing the underlying rust. For a small extent, apply a primer using a brush and allow it to dry. Touch-up the location with a paint pen or provide a new paint coating.

Underlying rust grade R2 < 1 - 2 mm

Advanced corrosion with up to 2 mm underlying rust.

Rectifying the damage:

- Clean the defective location.
- Remove the underlying rust mechanically down to the paintwork carrier.
- Apply 1-component filler and then 2-component "Vario" filler.
- Provide the damage location with new paint coat on visible outer surfaces. Only locally touch-up areas which are not optically conspicuous.

Underlying rust grade R3 < 2 - 4 mm

More advanced corrosion with up to 4 mm underlying rust. The damage must be rectified in the same way as for R2. A permanent cure of this type of damage pattern is still just possible

Underlying rust grade R4 < 4 - 5 mm

Notably advanced corrosion with up to 5 mm underlying rust. The damage must be rectified in the same way as for R2. If it is found that for whole areas this is only possible with a great deal of work, or is not possible at all, then a new component must be used.

Underlying rust grade R5 > 5 mm

Extreme corrosion, with more than 5mm underlying rust (panels, flanges or load-bearing components partially rusted or rusted through).

Such damage can no longer be repaired because in many cases the constructional strength of the component can no longer be produced. The risk in making a repair is too great. Install a new component and paint it.

DESCRIPTION AND OPERATION

Color Identification and Chromatics

Basic color theory

In order to achieve optically perfect painting results it is vital to understand the physical principles of the origin of color impression.

Color

Color itself is a sensory perception.

This perception arises through the combined effect of the following components:

- Light (sunlight or artificial light irradiates the object).
- Surface of the object (reflection from the object of certain constituent parts of the light).
- Eye (perception of the reflections from the object).

TO BE UPDATED LATER

Because the sensory impression of color is produced by all three of these components, it is dependent on the type, quality and function of the individual components. Practical examples make this clear:

- If a particular article is subjected to artificial light, then it gives a different impression of color to that which it gives in sunlight.
- An object with uniform color but different surface textures appears to have different colors (grained or ungrained dashboard).
- A person with perception disorder (colorblindness) cannot recognize certain colors or distinguish between them e.g. red-green weakness).

In turn the type of color is determined by the light absorption ability of an object. Light shines with all color components (spectral colors) onto an object, certain components of the light are absorbed (taken in) and other components are reflected (sent on). The components which are reflected produce the specific color impression.

TO BE UPDATED LATER

The colors as we see them are the result of a combination of reflected colors from the spectrum. Physically speaking, these are electromagnetic waves with different wavelengths (and frequencies). The healthy human eye can recognize wavelengths between 0.36 µm (violet) and 0.78 µm (red).

If all the perceptible wavelengths of the spectrum impinge on the human eye at the same time, the impression of white light is produced.

Additive and subtractive color mixing

TO BE UPDATED LATER

Additive color mixing is the combination of light from different sources to give white. Different intensities of the additive primary colors red, green and blue allow millions of different colors to be represented (RGB colors).

Additive color mixing is always therefore used when light should enter the eye directly (without reflection off an object). Such as in the case of computer monitors or overhead beamers.

DESCRIPTION AND OPERATION

TO BE UPDATED LATER

Subtractive color mixing means mixing the primary colors cyan, magenta and yellow to form a desired color (CMY colors).

Subtractive color mixing is used when light should enter the eye of an observer after reflection from an object. Such as happens with painting or in printing.

Oswald color circle

TO BE UPDATED LATER

The Oswald color circle is based on subtractive color mixing, and enables the behavior of paints when they are mixed together to be represented.

Colors lying opposite each other are complementary colors and should not be mixed together as this will produce a dull (i.e. grey) shade. If green is added to red, the red becomes greyer, not greener.

Color shades which are side by side are partner colors and produce a mixed color shade. For instance, mixing red and blue produces a pure violet.

In addition, black and/or white may be necessary to produce a particular color shade.

- White makes the color shade lighter.
- Black makes the color shade darker.
- With black and white the color shade becomes more dreary or greyer.

Metamerism

Metamerism is the name of the effect which occurs when two colors appear identical in a particular light (e.g. artificial light), but the colors appear different under another light source (e.g. daylight).

The cause is the fact that the human brain, aided by the eyes, does not evaluate the wavelength, instead it evaluates the spectral intensity of the reflected light.

It is for this reason that color matching in practice must only ever be performed in daylight, or under special artificial light which is based on daylight.

Metallic and pearl pigments

Colored paints achieve their color effect by the addition of pigments. Pigments are colored, solid, very fine organic and inorganic particles which are insoluble in the binding material.

Metallic pigments

Aluminum platelets are added as pigment to form metallic paint.

DESCRIPTION AND OPERATION

TO BE UPDATED LATER

Depending on the size and shape of the aluminum platelets, different metallic effects can be achieved:

- Cornflake aluminum (1) causes very strong dispersion because of rough edges, low brilliance, very low flop and produces grey-silver shades.
- Dollar aluminum (2) causes hardly any dispersion because of the smooth surface, high brilliance, produces very light, almost white silver shades.

With metallic paints however, only a light-dark light reflection effect occurs.

Colored metallic paints are produced by the extra addition of color pigments to the metallic paint.

Pearl pigments

TO BE UPDATED LATER

The basis of pearl pigments is formed by mica, which is metallized with a silver or gold layer.

Depending on the angles of light and observation, the mica platelets reflect different proportions of light. Because of this, the color of the paint appears to the observer to change.

Pearl pigments produce a colored and light-dark reflected light effect.

Color codes and their determination on Ford vehicles

It is necessary to determine the correct color shade of the original paintwork in order to perform a professional and perfect paint repair.

The original paint color shade can be found by:

- Inspection of the vehicle type plate with the color code stamped on it.
  - Later design
  - Earlier design
- Color shade catalog or color shade system of the manufacturer.
- The bare bodyshell plate with color designation.

Type plate

Type plate - location on Ford vehicles:

- Right-hand B-pillar - door rebate
- Left-hand B-pillar - door rebate
- Hood lock panel
- Left-hand vertical edge of inner front wing
- Right-hand vertical edge of inner front wing
- Right-hand engine compartment side member
- Left-hand bulkhead
- Right-hand bulkhead

DESCRIPTION AND OPERATION

- Luggage compartment interior
- Inner rear panel - luggage compartment

TO BE UPDATED LATER

The type plate gives the color code in the last row.

TO BE UPDATED LATER

On the newer type plates, the color code is given in the left-hand column, at the penultimate position.

TO BE UPDATED LATER

Color shade catalog or color shade system of the repair paint manufacturer.

The repair paint manufacturers offer a variety of possible systems for the determining the production color shade of motor vehicles. There are electronic systems, color card systems and manuals for the determination of color shades.

DESCRIPTION AND OPERATION

Most repair paint manufacturers use the following systems:

- A tabular system based on the following parameters:
  - Color code
  - Make
  - Model
  - Build year
  - Color or color name
  - Ancillary codes
- A system with color cards based on the following parameters:
  - Make
  - Color shade
  - Build year

TO BE UPDATED LATER

Because of the many parameters used, in a tabular system the color shade can also be determined by the lack of a parameter.

When using the color cards, emphasis is placed on matching of the original color shade with the color shade samples. For this reason this method is very helpful when the other parameters are not available.

Comparison of the results of both methods increases the certainty of using the correct original color shade and its formulation.

Additional certainty can be achieved during color shade determination by making a color sample plate. Here it is however important to apply the complete paint structure with base paint and clear lacquer onto a sample plate (1) in order to carry out a color shade and color coverage test.

TO BE UPDATED LATER

The color shade comparison is done by comparing the vehicle paintwork with the sample plate (1). The color coverage test is possible by using the black test stripe (2): If the test stripe (2) is still visible after test painting of the sample plate (1), the coverage is not good enough.

By using this determination of the original color shade, the formulation and information on any very slight fine adjustments which may be necessary can be established.

Bare bodyshell plate

The bare bodyshell plate is located:

- On the hood lock panel.
- Near the type plate.

The color name is stamped on in the last row.

TO BE UPDATED LATER

DESCRIPTION AND OPERATION

Matching tinted filler to the color code

NOTE: Color samples must always be made from the same materials as the subsequent repair painting. Perform color shade matching in the fully hardened state, in natural light or under suitable artificial light.

Various tinted fillers are used during factory painting. In order to achieve the exact color shade of the factory applied paint, attention should be paid that the correctly matched fillers are used.

TO BE UPDATED LATER

The repair paint manufacturers offer suitable precolored primers. The use of filler color cards allows the matching color shade to be determined.

DESCRIPTION AND OPERATION

Tips and Tricks

Comparing paint structures

It may happen that an area remains visible, especially when the area of the repair is small. The reason for this is the structural variation in the paint surface at the repair location compared with the original paint finish. The original paint finish has a slight orange peel effect while the repair areas is extremely smooth.

This effect can be reduced by fine sanding using P3000 of the area around the repair location and then polishing.

Etching substrate

If the substrate can be etched during the solvent test, suitable preparation must be done.

Job steps:

NOTE: Follow the manufacturer specific instructions.

- Sand the damaged area extensively using an eccentric sander and P80 or P120 abrasive sheets. Finish off sanding with P150 or P180.
- Remove the sanding dust and clean the area of the damage using silicone remover.
- Apply polyester stopper to the bare panel and to the damaged area.
- Sand the dried polyester stopper to an even surface using P80 - P150. Finish sanding using P180 - P240. If required apply more stopper, again only on the bare panel.
- Wet sand the residual old paint finish using P600 - P800. Transitions with P400 - P600. Clean with silicone remover.
- Prime bare metal areas with acid primer.
- After the acid primer has been left exposed to the air for the correct evaporation time, apply 2-component primer filler in thin layers over the complete repair area, leaving enough air exposure time in between coats.
- After the filler has dried, sand wet with P800 or sand dry with P400. Sanded through areas must be covered again with 2-component Nonstop filler primer.

Another possible method of preventing etching of the substrate is to use waterbased primer and filler materials.

Masking the vehicle

Masking and covering work are among the most important preparations required to achieve a high quality paint finish. Paint application onto neighboring components, paint mist and sharp paint transitions are quality faults. For this reason it is extremely important to take special care and to use suitable masking materials.

NOTE: When water based paints are used, all materials must be stable towards water.

Plan the masking work:

- Determine the sequence of masking work. Sometimes after masking film has been applied, it is difficult or impossible to reach certain areas.
- Prepare the masking material.
- Start with small difficult areas.

Pay special attention to the areas of profiled seals, edges, openings and paint transitions.

Masking tape

Masking tape is available in various widths for special application areas. In practice however, a wide tape has proved best for almost all areas, also taking into account the time required for masking work.

NOTE: Use of differing masking materials is often much more time-consuming.

Advantages

- Good coverage. Narrower tapes must often be applied in several layers.
- More resistant to tearing.
- Wide tapes can be applied deep into joints and therefore protect from paint mist and contamination.
- Removal is often easier.

Masking film

Transparent plastic film has become accepted as a practical method to mask large areas of a whole vehicle. It can quickly and easily be applied to the vehicle from the roll.

DESCRIPTION AND OPERATION

NOTE: Only mask the vehicle when it is dry. Moisture under the film can lead to matt paint in the drying process.

Using masking film

- Clean the vehicle before masking it.
- Pull the film over the vehicle. Because of the static charge, the film lies on the vehicle like a second skin.
- Cut out the repair area using the film knife and then mask it.

Other ways of masking a vehicle are:

- Masking using masking paper.
- Painting cloth (mostly used during filling work).

Profiled seals

If it is not possible to remove a profiled seal, then it must be masked in such a way that no edges can form due to paint accumulation.

To do this, the seal is lifted slightly and masked. The following techniques are possible:

TO BE UPDATED LATER

Item	Description
1	Masking tape with plastic strips
2	Sealing lip
3	Sandpaper with masking tape

- Laying a string or cord under the seal. Suitable for soft and elastic seal lips.
- Special masking tape with plastic strips for hard seal lips.
- Instead of using plastic strips, fine sandpaper cut into strips can be inserted and secured using normal masking tape.
- If the seal can be easily displaced, normal masking tape can also be used.

Edges/openings

Smooth paint transitions can be produced by positioning adhesive tapes.

NOTE: Pull the adhesive tapes away immediately after the paint has been applied and check the paint transitions.

TO BE UPDATED LATER

Item	Description
1	Vehicle edge
2	Adhesive surface
3	Masking paper

Possible variations

- At edges apply one strip of masking tape half on the area not to be painted and mask using a second strip.
- On surfaces, two masking strips can be attached, each affixed by half their adhesive surface. The adhesive strip which arises is then applied with one half on the edge of the area to be painted. The other half is aligned and fixed in addition in the curves.
- Affix masking paper on one side over the area to be painted. Double back the masking paper and secure it.
- Affix round profiled foam at the edge of the area to be painted using masking tape.

Foam strips are suitable for affixing to openings such as door gaps.

DESCRIPTION AND OPERATION

TO BE UPDATED LATER

NOTE: Choose a suitable profile diameter. A profile which is too thick will protrude from the opening, one which is too thin will leave a gap.

Clean the door opening well and affix the matching shape.

Color shade problems

If a vehicle color shade is taken from a vehicle on a hot summer day and the mixed color applied, this may cause color shade problems. Some colors change so much at higher temperatures that it can lead to an incorrect result. Red color shades are particularly prone to this shade behavior.

This means that color determination should always be done on the bodywork when it is at about the same temperature as the later working temperature will be. The best temperature of the item is between 15° and 25° C.

Isopropanol and water

Painted surfaces are very easily cleaned using a mixture of 70% water and 30% isopropanol (can be obtained through a laboratory supplies specialist or a pharmacist).

Temperature reduction spray

If finishing work must be performed on touched-up surfaces and newly painted plastic parts, problems may arise. The paint and the transitions are not yet fully hardened.

NOTE: When working with the polishing machine, make certain that each operating run lasts no longer than about 5 - 10 seconds, in order to prevent the paint becoming warm.

Even so, in order to be able to polish over transitions, temperature reduction spray must be applied to the surface. The transition area is then alternately sprayed and polished until a perfect transition surface is achieved.

Paint faults on soft plastic components where elasticizer additive has been used in painting must be wet sanded using grade P2000 - P2500 paper.

In doing this the sanding location and the surroundings are sprayed with temperature reduction spray and the paint faults sanded out by hand. Afterwards the location is polished as described above.

Paint plane

Dirt inclusions and paint runs can be removed with the sanding cylinder ("Finiball") and hand sanding or eccentric sander in a wet sanding process.

Another practical tool for removal of paint faults which lie proud of the surface is the paint plane.

NOTE: Guide the tool carefully with the minimum of force. It must not tilt, otherwise more serious damage may easily be caused.

TO BE UPDATED LATER

This tool allows paint faults to be carefully removed in shavings. Afterwards the surface must be polished using suitable materials.

Shading

Even when all the rules, steps and corresponding instructions have been followed concerning possible shades, it may happen that the mixed color shade does not exactly match the vehicle color.

In these cases, shading must be done. Because there is no fixed formula for this, experience and a trained eye are important. Some rules must be followed for shading.

NOTE: Self-made color sample plates of the current colors are very helpful for determining the

DESCRIPTION AND OPERATION

color shade. Refer to the chapter Color Determination and Color Theory.

- When shading, if possible only use the paint mixture that is also allotted in the color shade formula.
- Observe the rules concerning contrary colors (complementary colors) and partner colors according to the Oswald color circle.
- Complementary colors are not recommended during shading because they mutually inhibit and lead to muddy mixtures.

Sanding marks

In certain circumstances, the recommended sanding methods up to now are no longer suitable for light metallic color shades. Wet sanding with grade P1200 paper or a grey sanding pad can cause sanding scratches which can become very visible under certain lights.

In order to achieve an excellent paint result on difficult color shades, follow these working rules:

- Sand filler as before, rub down area to be painted with 3M ultra fine matting sponge and 3M matting gel.
- Sand filler as before, rub down area to be painted with soaked 3M wet sand paper P1500 - P2000.
- Sand filler as before, rub down area to be painted with 3M 260 L P1000 eccentric (Interface Pad).

Improving touch-up work

During application of special effect base paints, the effect particles align themselves exactly parallel to the surface in the paint layer while it is still liquid. This means a particular thickness of the paint layer is required.

Because during painting the layer thickness in the transition zones reduces from normal to zero, the effect particles can no longer align themselves. This leads to lighter, darker or cloudy zones.

If 1-component clear lacquer is sprayed before the base coat, this effect is prevented. An optically perfect transition will result.

DESCRIPTION AND OPERATION

Symbols Glossary

Symbols are used inside the graphics and in the text area to enhance the information display.

Movement Symbols

Movement symbols provide detailed information to a required component movement. These component movements can be rotational or 1-3 dimensional movements.

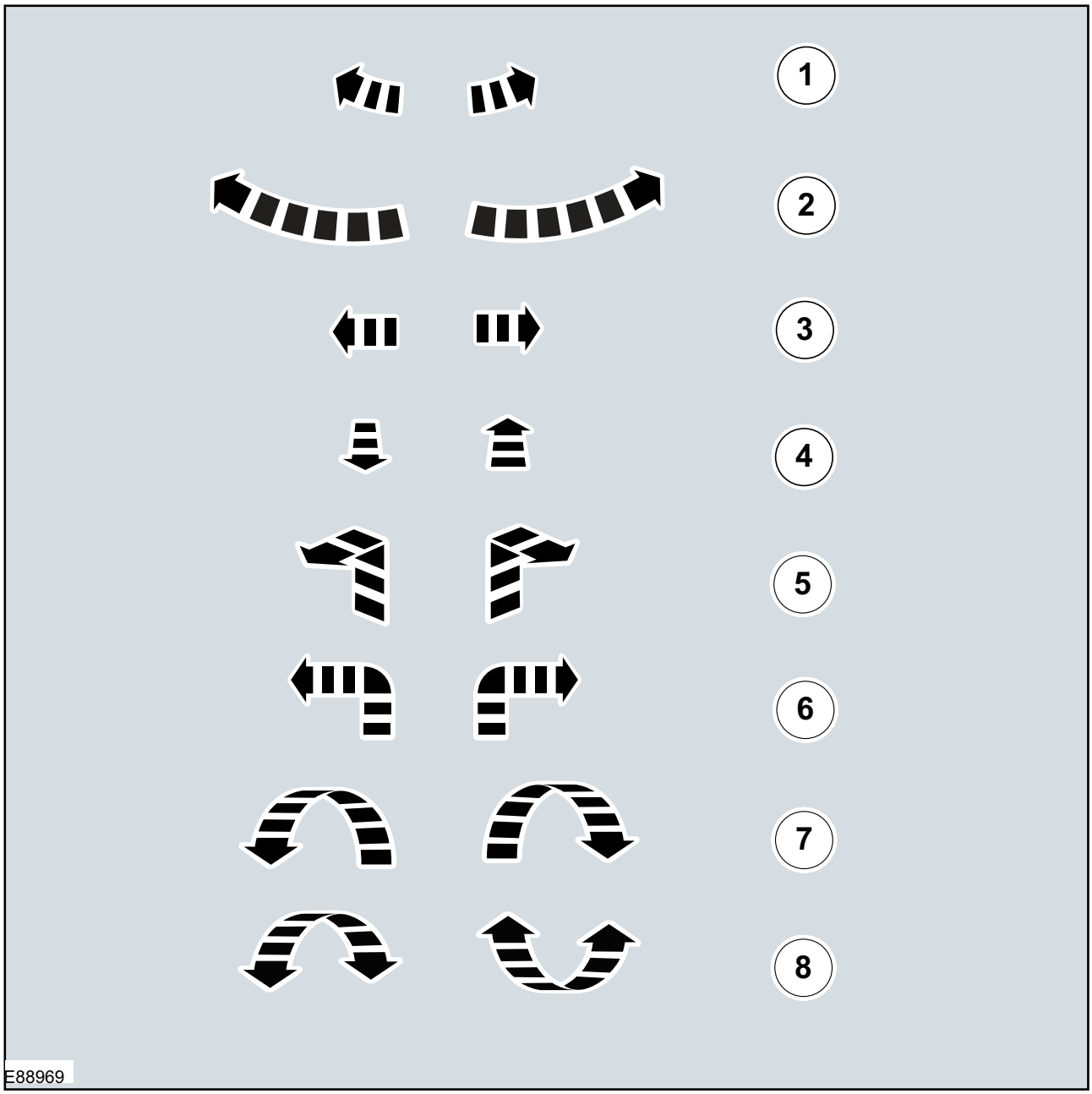

DESCRIPTION AND OPERATION

Item	Description
1	Minor component movement clockwise/counterclockwise
2	Major component movement clockwise/counterclockwise
3	Component movement to the left/right/up/down
4	Component movement towards/away
5	3 dimensional component movement

Item	Description
6	2 dimensional component movement
7	3 dimensional component rotation
8	3 dimensional component cycling

Turn Symbols

Turn symbols are used to provide further information on the direction or angle of component turns.

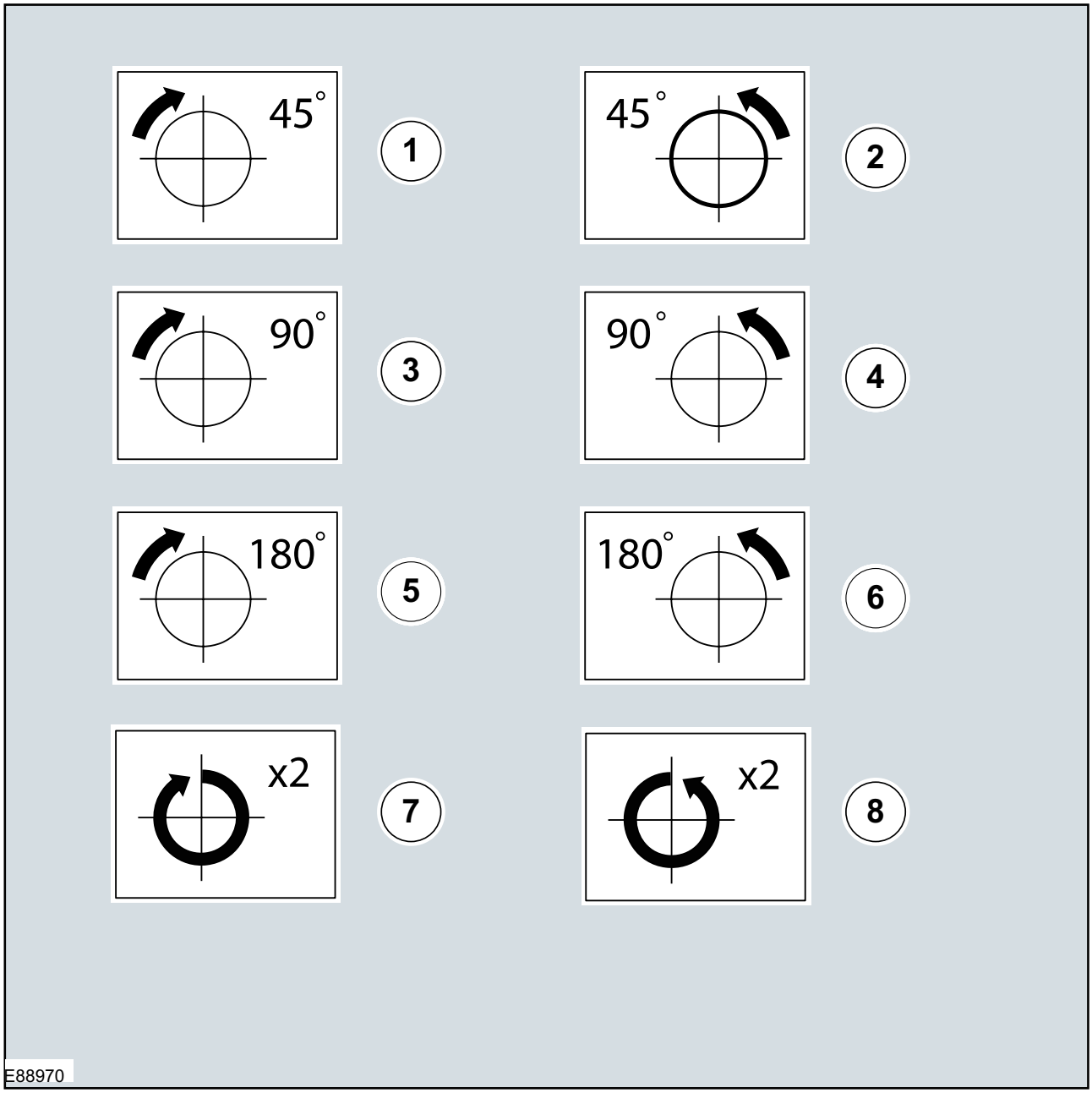

DESCRIPTION AND OPERATION

Item	Description
1	Turn the component clockwise through 45°
2	Turn the component counterclockwise through 45°
3	Turn the component clockwise through 90°
4	Turn the component counterclockwise through 90°
5	Turn the component clockwise through 180°

Item	Description
6	Turn the component counterclockwise through 180°
7	Turn the component clockwise through 2 complete turns
8	Turn the component counterclockwise through 2 complete turns

Steering Wheel Symbols

Steering wheel symbols are used to provide further information to a required steering wheel position or steering column lock status.

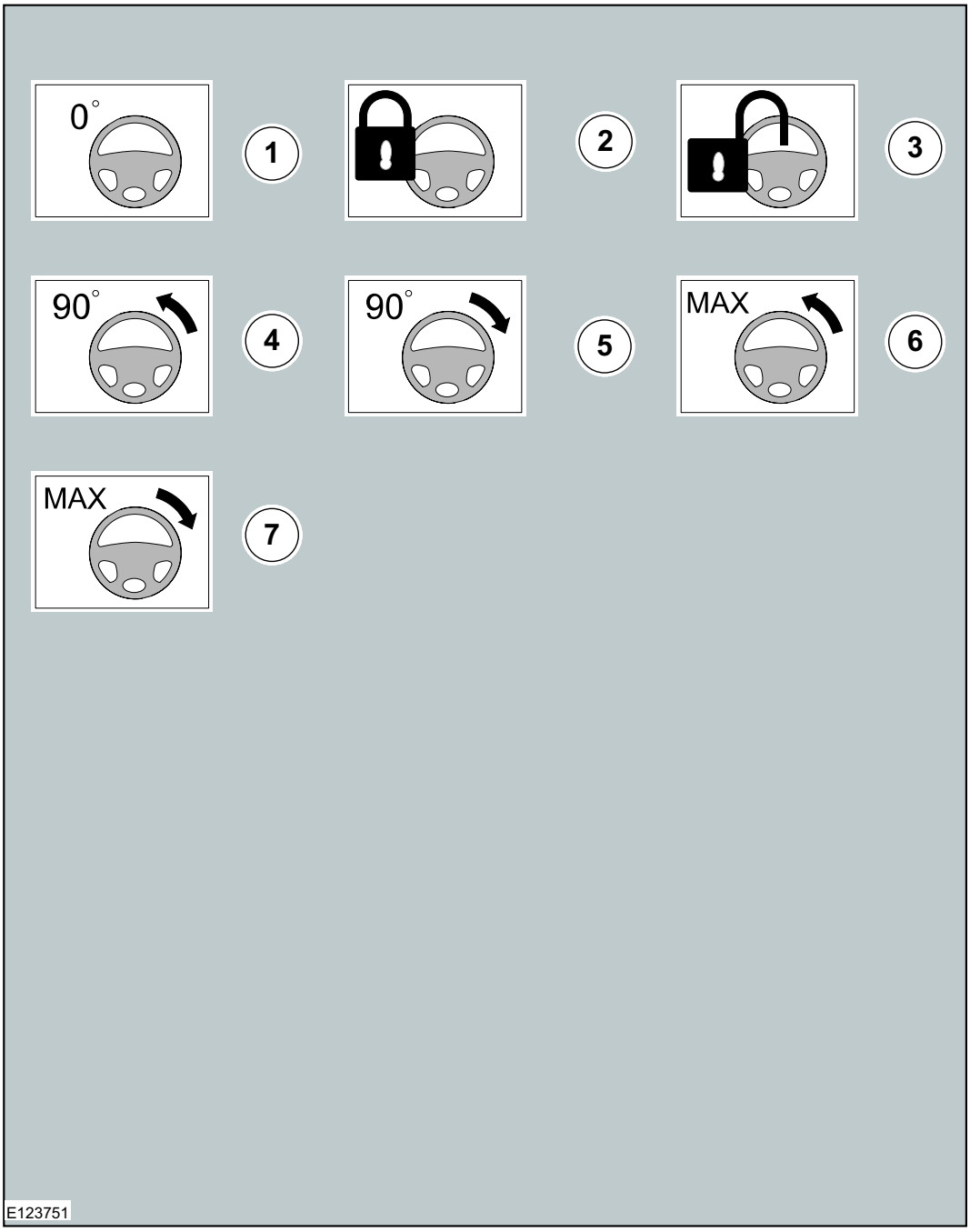

DESCRIPTION AND OPERATION

Item	Description
1	Steering wheel in straight ahead position
2	Steering column lock locked
3	Steering column lock unlocked
4	Turn the steering wheel to the 90° left position

Item	Description
5	Turn the steering wheel to the 90° right position
6	Turn the steering wheel to the left-hand end position
7	Turn the steering wheel to the right-hand end position

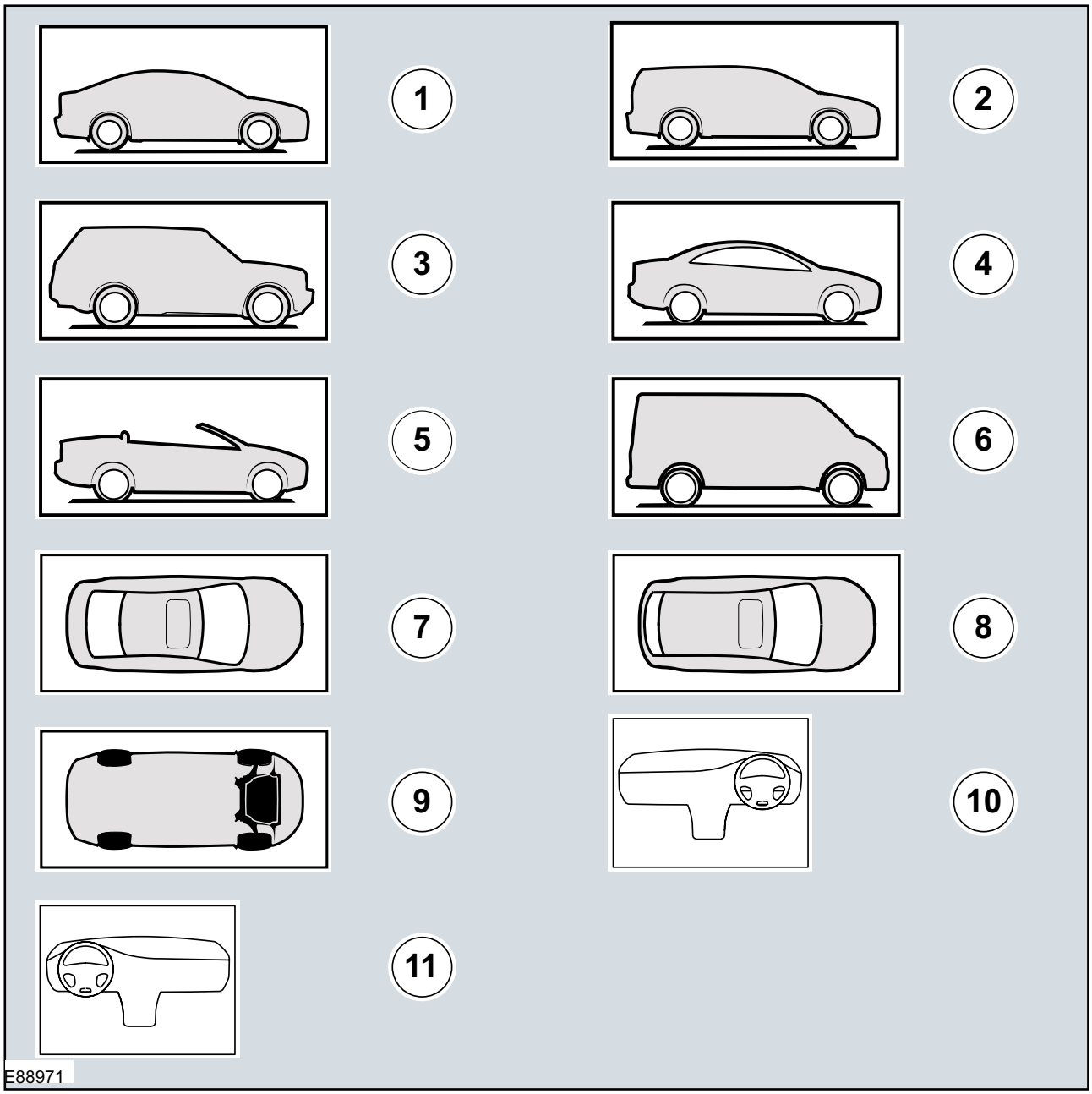

Item	Description
1	3, 4, 5-door body style
2	Wagon body style

Item	Description
3	Sports utility vehicle body style
4	Coupe body style

DESCRIPTION AND OPERATION

Item	Description
5	Convertible body style
6	Van body style
7	3, 4, 5-door body style - Top View
8	Wagon body style - Top View
9	Underview

Item	Description
10	Right-hand drive (RHD) vehicle
11	Left-hand drive (LHD) vehicle

Gearshift lever and selector lever position symbols

Gearshift lever and selector lever position symbols are used to show the lever position that is required to be selected to carry out a procedure step.

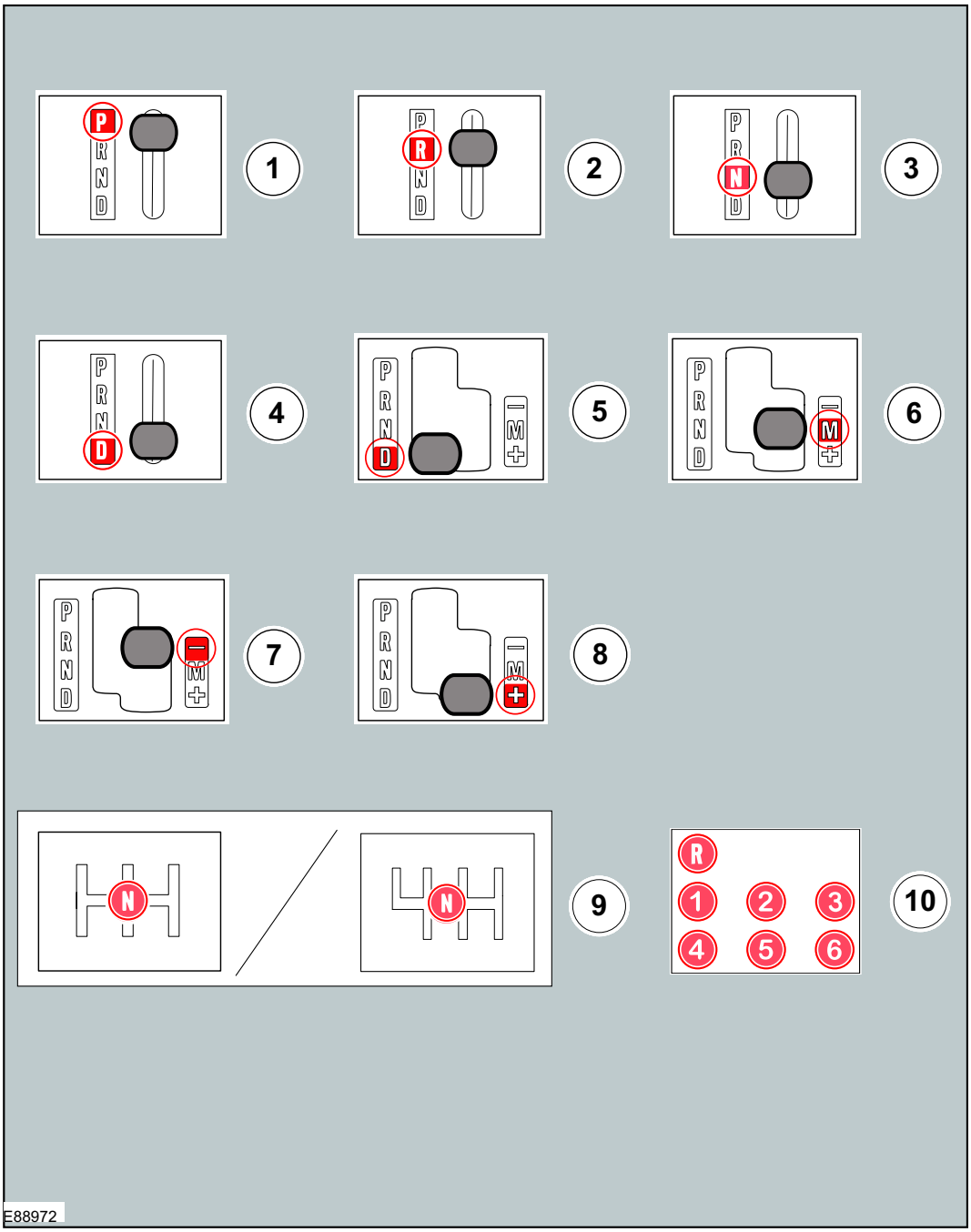

DESCRIPTION AND OPERATION

Item	Description
1	Set the selector lever to the park (P) position
2	Set the selector lever to the reverse (R) position
3	Set the selector lever to the neutral (N) position
4	Set the selector lever to the drive (D) position
5	Set the selector lever with manual shift pattern to the park (D) position
6	Set the selector lever with manual shift pattern to the manual (M) position

Item	Description
7	Set the selector lever with manual shift pattern to the shift down (-) position
8	Set the selector lever with manual shift pattern to the shift up (+) position
9	Set the gearshift lever to the neutral (N) position
10	Further gearshift lever positions that may appear in illustrations

Screwdriver symbols

The screwdriver symbols are used to show which screwdriver bit is recommended to carry out a procedure step.

DESCRIPTION AND OPERATION

Health and Safety Precautions

Introduction

Many of the procedures associated with vehicle maintenance and repair involve physical hazards or other risks to health. This subsection lists, alphabetically, some of these hazardous operations and the materials and equipment associated with them. Precautions necessary to avoid these hazards are identified.

The list is not exhaustive and all operations and procedures, and the handling of materials, should be carried out with health and safety in mind.

Before using any product the Materials Safety Data Sheet supplied by the manufacturer or supplier should be consulted.

Acids and Alkalis

See also Battery Acids.

For example caustic soda, sulphuric acid.

Used in batteries and cleaning materials.

Irritant and corrosive to the skin, eyes, nose and throat. Cause burns. Can destroy ordinary protective clothing.

Avoid splashes to the skin, eyes and clothing. Wear suitable protective impervious apron, gloves and goggles. Do not breath mists.

Make sure access to eye wash bottles, shower and soap are readily available for splashing accidents.

Display Eye Hazard sign.

Air Bags

See also Fire, Chemical Materials.

Highly flammable, explosive – observe No Smoking policy.

Used as a safety restraint system mounted in the steering wheel and passenger side of the instrument panel.

The inflator contains a high-energetic propellant which, when ignited, produces a VERY HOT GAS (2500°C).

The gas generant used in air bags is Sodium Azide. This material is hermetically sealed in the module and is completely consumed during deployment. No attempt should be made to open an air bag inflator as this will lead to the risk of exposure to Sodium Azide. If a gas generator is ruptured, full protective clothing should be worn when dealing with the spillage.

After normal deployment, gloves and safety goggles must be worn during the handling process.

Deployed air bags should be disposed of in a plastic bag in accordance with local regulations at an approved chemical waste site.

Following any direct contact with gas generant.

- wash affected areas thoroughly with water.
- seek medical assistance if necessary.

Air Bags - Do's

- Do store modules in an upright position.
- Do keep modules dry.
- Do carry modules with the cover side pointing away from the body.
- Do place modules with their cover side upwards.
- Do carefully inspect modules for damage.
- Do stand to one side when connecting modules.
- Do make sure all test equipment is properly calibrated and maintained.
- Do wash hands after handling deployed air bags.

Air Bags - Do Nots

- Do not store highly flammable material together with modules or gas generators.
- Do not store gas generators at temperatures exceeding 80°C.
- Do not store modules upside down.
- Do not attempt to open a gas generator housing.
- Do not expose gas generators to open flame or sources of heat.
- Do not place anything on top of a module cover.
- Do not use damaged modules.
- Do not touch a fired module or gas generator for at least 10 minutes.
- Do not use any electrical probes on the wiring circuit.

Air Conditioning Refrigerant

See also Chlorofluorocarbon, Chemical Materials

Highly flammable, combustible – observe No Smoking policy.

DESCRIPTION AND OPERATION

Skin contact may result in frostbite.

Instructions given by the manufacturer must be followed. Avoid naked lights, wear suitable protective gloves and goggles.

If refrigerant comes into contact with the skin or eyes, immediately rinse the affected areas with water. Eyes should also be rinsed with an appropriate irrigation solution and should not be rubbed. SEEK MEDICAL ASSISTANCE IF NECESSARY.

Air Conditioning Refrigerant - Do Nots

- Do not expose refrigerant bottles to sunlight or heat.
- Do not stand refrigerant bottles upright; when filling, hold them with the valve downwards.
- Do not expose refrigerant bottles to frost.
- Do not drop refrigerant bottles.
- Do not vent refrigerant to atmosphere under any circumstance.
- Do not mix refrigerants, for example R12 (Freon) and R134a.

Adhesives and Sealers

See also Fire, Chemical Materials.

Highly flammable, flammable, combustible – observe No Smoking policy.

Generally should be stored in No Smoking areas. Cleanliness and tidiness in use should be observed, for example disposable paper covering benches; should be dispensed from applicators where possible; containers, including secondary containers, should be labeled appropriately.

Solvent-based Adhesives/Sealers - See Solvents

Follow manufacturers instructions.

Water-based Adhesives/Sealers

Those based on polymer emulsions and rubber latexes may contain small amounts of volatile toxic and harmful chemicals. Skin and eye contact should be avoided and adequate ventilation provided during use.

Hot Melt Adhesives

In the solid state, they are safe. In the molten state they may cause burns and health hazards may arise from the inhalation of toxic fumes.

Use appropriate protective clothing and a thermostatically controlled heater with a thermal cut-out and adequate extraction.

Resin-based Adhesives/Sealers, for example Epoxide and Formaldehyde Resin-based

Mixing should be carried out in well ventilated areas, as harmful or toxic volatile chemicals may be released.

Skin contact with uncured resins and hardeners can result in irritation, dermatitis, and absorption of toxic or harmful chemicals through the skin. Splashes can damage the eyes.

Provide adequate ventilation and avoid skin and eye contact.

Anaerobic, Cyanoacrylate (super-glues) and other Acrylic Adhesives

Many are irritant, sensitizing or harmful to the skin and respiratory tract. Some are eye irritants.

Skin and eye contact should be avoided and the manufacturers instructions followed.

Cyanoacrylate adhesives (super-glues) MUST NOT contact the skin or eyes. If skin or eye tissue is bonded, cover with a clean moist pad and SEEK IMMEDIATE MEDICAL ATTENTION. Do not attempt to pull tissue apart. Use in well ventilated areas as vapors can cause irritation to the nose and eyes.

For two-pack systems see Resin-based and Isocyanate Adhesives/Sealers.

Isocyanate (Polyurethane) Adhesives/Sealers

See also Resin-based Adhesives.

Individuals suffering from asthma or respiratory allergies should not work with or near these materials as sensitivity reactions can occur.

Over exposure is irritating to the eyes and respiratory system. Excessive concentrations may produce effects on the nervous system including

DESCRIPTION AND OPERATION

drowsiness. In extreme cases, loss of consciousness may result. Long term exposure to vapor concentrations may result in adverse health effects.

Prolonged contact with the skin may have a defatting effect which may lead to skin irritation and in some cases, dermatitis.

Splashes entering the eye will cause discomfort and possible damage.

Any spraying should preferably be carried out in exhaust ventilated booths, removing vapors and spray droplets from the breathing zone.

Wear appropriate gloves, eye and respiratory protection.

Antifreeze

See also Fire, Solvents.

For example isopropanol, ethylene glycol, methanol.

Highly flammable, flammable, combustible.

Used in vehicle coolant systems, brake air pressure systems, screenwash solutions.

Vapors may be given off from coolant antifreeze (glycol) when heated. Avoid breathing these vapors.

Antifreeze may be absorbed through the skin in toxic or harmful quantities. Antifreeze, if swallowed, can be fatal and MEDICAL ATTENTION SHOULD BE SOUGHT IMMEDIATELY.

These products must not be used in any cooling or industrial water system that is connected or linked to general, food preparation or drinking water supplies.

Asbestos

See also Warning Symbols on Vehicles at the end of this subsection.

Breathing asbestos dust may cause lung damage or, in some cases, cancer.

Used in brake and clutch linings, transmission brake bands and gaskets.

The use of drum cleaning units, vacuum cleaning or damp wiping is preferred.

Asbestos dust waste should be dampened, placed in a sealed container and marked for safe disposal. If any cutting or drilling is attempted on materials containing asbestos the item should be dampened and only hand tools or low speed power tools used.

Battery Acids

See also Acids and Alkalis.

Gases released during charging are explosive. Never use naked flames or allow sparks near charging or recently charged batteries.

Make sure there is adequate ventilation.

Brake and Clutch Linings and Pads

See Asbestos.

Brake Fluids (Polyalkylene Glycols)

See also Fire.

Splashes to the skin and eyes are slightly irritating. Avoid skin and eye contact as far as possible. Inhalation vapor hazards do not arise at ambient temperatures because of the very low vapor pressure.

Brazing

See Welding.

Chemical Materials

See also Legal Aspects.

Chemical materials such as solvents, sealers, adhesives, paints, resin foams, battery acids, antifreeze, brake fluids, fuels, oils and grease should always be used with caution and stored and handled with care. They may be toxic, harmful, corrosive, irritant or highly flammable and give rise to hazardous fumes and dusts.

The effects of excessive exposure to chemicals may be immediate or delayed; briefly experienced or permanent; cumulative; superficial; life threatening; or may reduce life expectancy.

Chemical Materials - Do's

– Do carefully read and observe hazard and precaution warnings given on material containers (labels) and in any accompanying leaflets, posters or other instructions. Material

DESCRIPTION AND OPERATION

health and safety data sheets can be obtained from manufacturers.

- Do remove chemical materials from the skin and clothing as soon as practicable after soiling. Change heavily soiled clothing and have it cleaned.
- Do organize work practices and protective clothing to avoid soiling of the skin and eyes; breathing vapors, aerosols, dusts or fumes; inadequate container labeling; fire and explosion hazards.
- Do wash before job breaks, before eating, smoking, drinking or using toilet facilities when handling chemical materials.
- Do keep work areas clean, uncluttered and free of spills.
- Do store chemical materials according to national and local regulations.
- Do keep chemical materials out of the reach of children.

Chemical Materials - Do Nots

- Do not mix chemical materials except under the manufacturers instructions; some chemicals can form other toxic or harmful chemicals, give off toxic or harmful fumes or become explosive when mixed together.
- Do not spray chemical materials, particularly those based on solvents, in confined spaces, for example when people are inside a vehicle.
- Do not apply heat or flame to chemical materials except under the manufacturers instructions. Some are highly flammable and some may release toxic or harmful fumes.
- Do not leave containers open. Fumes given off can build up to toxic, harmful or explosive concentrations. Some fumes are heavier than air and will accumulate in confined areas such as pits.
- Do not transfer chemical materials to unlabelled containers.
- Do not clean hands or clothing with chemicals. Chemicals, particularly solvents and fuels, will dry the skin and may cause irritation leading to dermatitis or be absorbed through the skin in toxic or harmful quantities.
- Do not use emptied containers for other materials except when they have been cleaned under supervised conditions.
- Do not sniff or smell chemical materials. Brief exposure to high concentrations of fumes can be toxic or harmful.

Chlorofluorocarbons (CFC)

There is concern in the scientific community that CFCs and Halons are depleting the upper ozone layer which filters out harmful ultraviolet radiation. Decreased filtration of ultraviolet radiation may result in increases in skin cancer, cataracts and immune system suppression in humans, as well as decreased productivity of crops and aquatic systems.

CFCs are used primarily as refrigerants in vehicle air conditioning systems and as aerosol propellants. Halons are used as fire extinguishants.

Clutch Fluids

See Brake fluids.

Clutch Linings and Pads

See Asbestos.

Corrosion Protection Materials

See also Solvents, Fire.

Highly flammable, flammable – observe No Smoking policy.

These materials are varied and the manufacturers instructions must be followed. They may contain solvents, resins or petroleum products. Skin and eye contact should be avoided. They should only be sprayed in conditions of adequate ventilation and not in confined spaces.

Cutting

See Welding.

Dewaxing

See Solvents and Fuels (Kerosene).

DESCRIPTION AND OPERATION

Dusts

Powder, dusts or clouds may be irritant, harmful or toxic. Avoid breathing dusts from powdery chemical materials or those arising from dry abrasion operations. Wear respiratory protection if ventilation is inadequate.

Fine dusts of combustible material can present an explosion hazard. Avoid explosive limits and sources of ignition.

Electric Shock

Electric shock can result from the use of faulty electrical equipment or from the misuse of equipment in good condition.

Make sure that electrical equipment is maintained in good condition and frequently tested. Faulty equipment should be labeled and preferably removed from the workstation.

Make sure that flexes, cables, plugs and sockets are not frayed, kinked, cut, cracked or otherwise damaged.

Make sure that electrical equipment and flexes do not come into contact with water.

Make sure that electrical equipment is protected by the correct rated fuse.

Never misuse electrical equipment and never use equipment that is in any way faulty. The results could be fatal.

Make sure that the cables of mobile electrical equipment cannot get trapped and damaged, such as in a vehicle hoist.

Make sure that the designated electrical workers are trained in basic First Aid.

In cases of electrocution:

- switch off the power supply before approaching the victim.
- if this is not possible push or drag the victim from the source of electricity using dry non-conductive material.
- commence resuscitation if trained to do so.
- SUMMON MEDICAL ASSISTANCE.

Engine Oils

See Lubricants and Grease.

Exhaust Fumes

These contain asphyxiating, harmful and toxic chemicals and particles such as carbon oxides, nitrogen oxides, aldehydes, lead and aromatic hydrocarbons. Engines should be run only under conditions of adequate exhaust extraction or general ventilation and not in confined spaces.

Gasoline (petrol) engine

There may not be adequate warning of odor or of irritation before toxic or harmful effects arise. These may be immediate or delayed.

Diesel engine

Soot, discomfort and irritation usually give adequate warning of hazardous fume concentrations.

Fibre Insulation

See also Dusts.

Used in noise and sound insulation.

The fibrous nature of surfaces and cut edges can cause skin irritation. This is usually a physical and not a chemical effect.

Precautions should be taken to avoid excessive skin contact through careful organization of work practices and the use of gloves.

Fire

See also Welding, Foams, Legal Aspects.

Many of the materials found on or associated with the repair of vehicles are highly flammable. Some give off toxic or harmful fumes if burnt.

Observe strict fire safety when storing and handling flammable materials or solvents, particularly near electrical equipment or welding processes.

Make sure, before using electrical or welding equipment, that there is no fire hazard present.

Have a suitable fire extinguisher available when using welding or heating equipment.

DESCRIPTION AND OPERATION

First Aid

Apart from meeting any legal requirements it is desirable for someone in the workshop to be trained in First Aid procedures.

Splashes in the eye should be flushed carefully with clean water for at least ten minutes.

Soiled skin should be washed with soap and water.

In case of cold burns, from alternative fuels, place affected area in cool to cold water.

Individuals affected by inhalation of gases and fumes should be removed to fresh air immediately. If effects persist, consult a doctor.

If liquids are swallowed inadvertently, consult a doctor giving him the information on the container or label. Do not induce vomiting unless this action is indicated on the label.

Fluoroelastomer

See Viton.

Foams - Polyurethane

See also Fire.

Used in sound and noise insulation. Cured foams used in seat and trim cushioning.

Follow manufacturers instructions.

Unreacted components are irritating and may be harmful to the skin and eyes. Wear gloves and goggles.

Individuals with chronic respiratory diseases, asthma, bronchial medical problems, or histories of allergic diseases should not work in or near uncured materials.

The components, vapors or spray mists can cause direct irritation, sensitivity reactions and may be toxic or harmful.

Vapors and spray mists must not be inhaled. These materials must be applied with adequate ventilation and respiratory protection. Do not remove the respirator immediately after spraying; wait until the vapors/mists have cleared.

Burning of the uncured components and the cured foams can generate toxic and harmful fumes. Smoking, naked flames or the use of electrical equipment during foaming operations and until vapors/mists have cleared should not be allowed. Any heat cutting of cured foams or partially cured foams should be conducted with extraction ventilation. See also the vehicle Body Repair Manual.

Freon

See Air Conditioning Refrigerant.

Fuels

See also, Fire, Legal Aspects, Chemicals and Solvents.

Avoid skin contact with fuel where possible. Should contact occur, wash the affected skin with soap and water.

Gasoline (Petrol)

Highly flammable - observe No Smoking policy.

Swallowing can result in mouth and throat irritation and absorption from the stomach can result in drowsiness and unconsciousness. Small amounts can be fatal to children. Aspiration of liquid into the lungs, through vomiting, is a very serious hazard.

Gasoline dries the skin and can cause irritation and dermatitis on prolonged or repeated contact. Liquid in the eye causes severe smarting.

Motor gasoline may contain appreciable quantities of benzene, which is toxic upon inhalation, and the concentration of gasoline vapors must be kept very low. High concentrations will cause eye, nose and throat irritation, nausea, headache, depression and symptoms of drunkenness. Very high concentrations will result in rapid loss of consciousness.

Make sure there is adequate ventilation when handling and using gasoline. Great care must be taken to avoid the serious consequences of inhalation in the event of vapor build up arising from spillages in confined spaces.

Special precautions apply to cleaning and maintenance operations on gasoline storage tanks.

Gasoline should not be used as a cleaning agent. It must not be siphoned by mouth. See First Aid.

Gas-oil (Diesel Fuel)

Combustible.

DESCRIPTION AND OPERATION

Gross or prolonged skin contact with high boiling point gas oils may also cause serious skin disorders including skin cancer.

Kerosene (Paraffin)

Used also as heating fuel, solvent and cleaning agent.

Flammable - observe No Smoking policy.

Irritation of the mouth and throat may result from swallowing. The main hazard from swallowing arises if liquid aspiration into the lungs occurs.

Liquid contact dries the skin and can cause irritation or dermatitis. Splashes in the eye may be slightly irritating.

In normal circumstances the low volatility does not give rise to harmful vapors. Exposure to mists and vapors from kerosene at elevated temperature should be avoided (mists may arise in dewaxing). Avoid skin and eye contact and make sure there is adequate ventilation.

Alternative Fuel

Highly flammable. Observe ``NO SMOKING'' signs.

Make sure there is adequate ventilation when working on alternative fuelled vehicles. Great care must be taken to avoid the serious consequences of inhalation in the event of vapor build up in confined spaces.

Inhalation in high concentrations may cause dizziness, headache, nausea and loss of co-ordination. Very high concentrations may result in loss of consciousness.

Contact with liquefied petroleum gas (LPG) or compressed natural gas (CNG) to the skin may cause cold burns and frost bite.

Long sleeved cotton overalls, steel toe capped safety boots and rubber neoprene gloves should be worn during removal and installation of LPG/CNG fuel system components.

LPG/CNG fuel leaks could cause a fire and be a hazard to health that can lead to personal injury, illness or even death.

If a leak is detected, under no circumstances attempt to seal the leak by tightening the union/connection until the fuel in the system or component is depressurized. Once tightened the system should be checked for integrity following the specified procedures.

If the fuel tank is to be removed for service or repair the fuel must be evacuated using dedicated equipment and following the specified procedures.

Gas Cylinders

See also Fire.

Gases such as oxygen, acetylene, argon and propane are normally stored in cylinders at pressures of up to 138 bar (2000 psi) and great care should be taken in handling these cylinders to avoid mechanical damage to them or to the valve gear attached. The contents of each cylinder should be clearly identified by appropriate markings.

Cylinders should be stored in well-ventilated enclosures, and protected from ice and snow, or direct sunlight. Fuel gases, for example acetylene and propane, should not be stored in close proximity to oxygen cylinders.

Care should be exercised to prevent leaks from gas cylinders and lines, and to avoid sources of ignition.

Only trained personnel should undertake work involving gas cylinders.

Gases

See Gas Cylinders.

Gaskets (Fluoroelastomer)

See Viton.

General Workshop Tools and Equipment

It is essential that all tools and equipment are maintained in good condition and that the correct safety equipment is used where required.

Never use tools or equipment for any purpose other than that for which they were designed. Never overload equipment such as hoists, jacks, axle and chassis stands or lifting slings. Damage caused by overloading is not always immediately apparent and may result in a fatal failure the next time that the equipment is used.

Do not use damaged or defective tools or equipment, particularly high-speed equipment such as grinding wheels. A damaged grinding wheel can

disintegrate without warning and cause serious injury.

Wear suitable eye protection when using grinding, chiseling or sand blasting equipment.

Wear a suitable breathing mask when using abrasive blasting equipment, working with asbestos-based materials or using spraying equipment.

Make sure there is adequate ventilation to control dusts, mists and fumes.

High Pressure Air, Lubrication and Oil Test Equipment

See also Lubricants and Greases.

Always keep high-pressure equipment in good condition, and regularly maintained, particularly at joints and unions.

Never direct a high-pressure nozzle, for example diesel injector, at the skin as the fluid may penetrate to the underlying tissue, and cause serious injury.

Halon

See CFCs.

Legal Aspects

There are many laws and regulations relating to health and safety in the use and disposal of materials and equipment in a workshop.

For a safe working environment and to avoid environmental pollution, workshops should be familiar, in detail, with the many health and safety laws and regulations within their country, published by both national and local authorities.

Lubricants and Greases

Avoid all prolonged and repeated contact with mineral oils. All lubricants and greases may be irritating to the eyes and skin.

Transmission Fluids

Safety instructions

Certain Transmission and Power Steering fluids supplied to Ford may contain additives which have the potential to cause skin disease (dermatitis) to exposed persons. The dermatitis may be irritant or allergic in nature. Risks are higher where prolonged or repeated skin contact with a fluid may occur. These fluids are used for vehicle initial fill and service purposes. This sub-section is to:

- Inform Service personnel who may come into contact with these vehicle fluids (hazard communication).
- Summarise appropriate workplace control measures and personal protective equipment requirements.
- Draw attention to the existence of Material Safety Datasheets (MSDS's) for the fluids (available from Ford Customer Service Division). These MSDS's contain detailed information on hazards and appropriate controls.

Control measures

Workplace risk assessments made under national chemical control regulations should identify operations involving the fluids as potentially hazardous and specify workplace control and worker awareness measures. In such circumstances, the relevant Material Safety Datasheet (see the details specified below) which specifies hazards and control measures in detail should be made available for guidance.

Avoid unprotected skin contact with the fluids, and in particular, avoid prolonged or repeated skin contact. Work practices should be organised so as to minimise the potential for skin contact. This may include the use of drip trays, absorbents, correct fluid handling equipment (funnels etc), and workplace housekeeping measures such as the cleaning of contaminated surfaces.

Personnel engaged in operations where skin contact could occur (such as fluid draining or filling) should wear impervious gloves made from nitrile rubber, certified to a chemical protection standard, e.g. Europe Standard EN374. This glove type is widely available from reputable suppliers of gloves for chemical protection [including the manufacturers Ansell-Admont (Solvex Range), North Safety products (North Nitrile Latex Gloves range), and

DESCRIPTION AND OPERATION

Supplemental Restraint System (SRS) Health and Safety Precautions

WARNINGS:

- **Only qualified technicians are allowed to work on pyrotechnic components.**
- **INHALED: Exposure to pyrotechnic residue may cause low blood pressure, severe headache, irritation of mucous membranes, fainting, shortness of breath or rapid pulse. Move a victim to fresh air. Seek immediate medical attention.**
- **EYE CONTACT: Exposure to unburned pyrotechnic residue may cause irritation, burning and etching of the eyes. Flush immediately with plenty of cold running water for at least 15 minutes. Seek immediate medical attention.**
- **EYE CONTACT: Exposure to burned pyrotechnic residue may cause irritation, burning and etching of the eyes. Flush immediately with diluted boric acid solution. Seek immediate medical attention.**
- **SKIN CONTACT: Unburned pyrotechnic residue may be rapidly absorbed through the skin in toxic quantities. Wash immediately with plenty of soap and water. Seek medical attention.**
- **SKIN CONTACT: Burned pyrotechnic residue may be rapidly absorbed through the skin in toxic quantities. Wash with plenty of water. Do not use soap. Seek medical attention.**
- **SWALLOWED: Unburned pyrotechnic residue is extremely toxic. If conscious drink plenty of water then induce vomiting. Seek immediate medical attention. If unconscious, or in convulsions do not attempt to induce vomiting or give anything by mouth. Seek immediate medical attention.**
- **SWALLOWED: Burned pyrotechnic residue is extremely toxic. Drink plenty of water and seek immediate medical attention.**
- **The deployment key must only be accessible to authorized personnel.**
- **Make sure that the deployment key remains removed from the deployment equipment except during deployment.**
- **If permenantly disabling or enabling the passenger air bag a new seat belt for vehicles without or with a passenger air bag must be installed.**
- **Undeployed pyrotechnic components must not be deployed in the vehicle.**
- **Pyrotechnic components must be deployed following local regulations.**
- **Check thoroughly that no loose objects can be spread during the deployment of pyrotechnic components.**
- **Pyrotechnic components must be transported following local regulations.**
- **Never carry out any electrical measurement on disconnected, undeployed pyrotechnic components.**
- **Pyrotechnic components must not be disassembled.**
- **Pyrotechnic components are not interchangeable between vehicles.**
- **Always carry a live air bag module away from the body with the air bag or trim cover pointing upwards.**
- **Live air bag modules must be placed in a suitable cage when removed from the vehicle. The air bag or trim cover must be facing upwards.**
- **Do not install a rearward facing child safety seat to the passenger seat with an activated passenger air bag.**

CAUTIONS:

- **Pyrotechnic components must not be subjected to temperatures higher than 110°C.**
- **Never install aftermarket accessories to the vehicle on or adjacent to the supplemental restraint system module.**

DESCRIPTION AND OPERATION

Lifting

Vehicle Lift Positions

WARNING: Lifting a vehicle that is not stabilized is dangerous. The vehicle can slip off the lift and cause serious injury and/or vehicle damage. Make sure that the vehicle is on the lift horizontally by adjusting the height of the support at the end of the arm of the lift.

Use safety stands to support the vehicle after it has been lifted.

Front

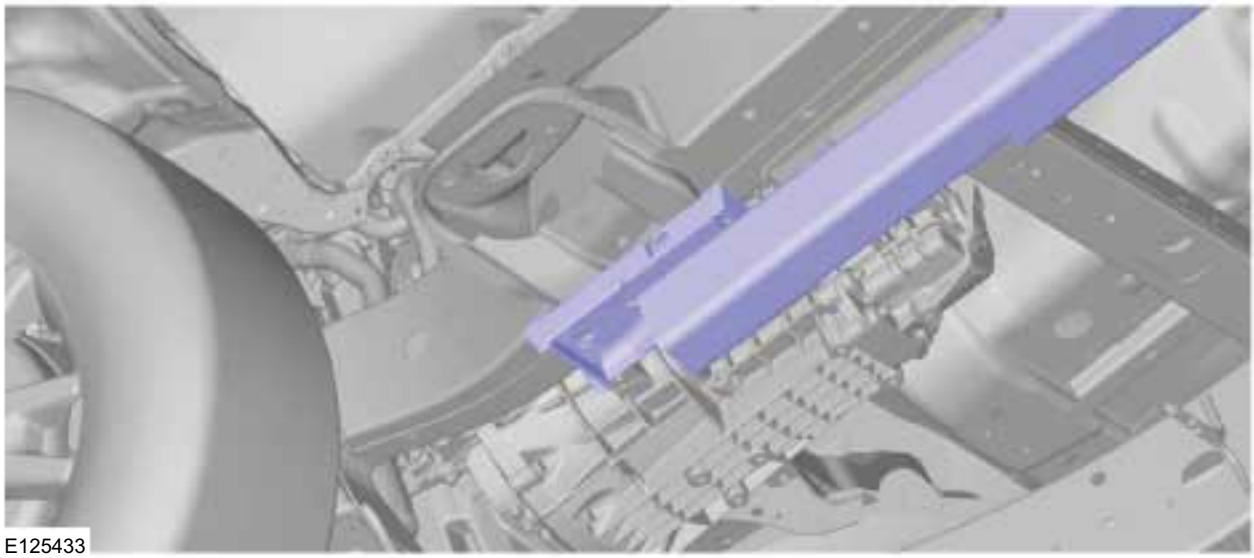

E125433

Rear

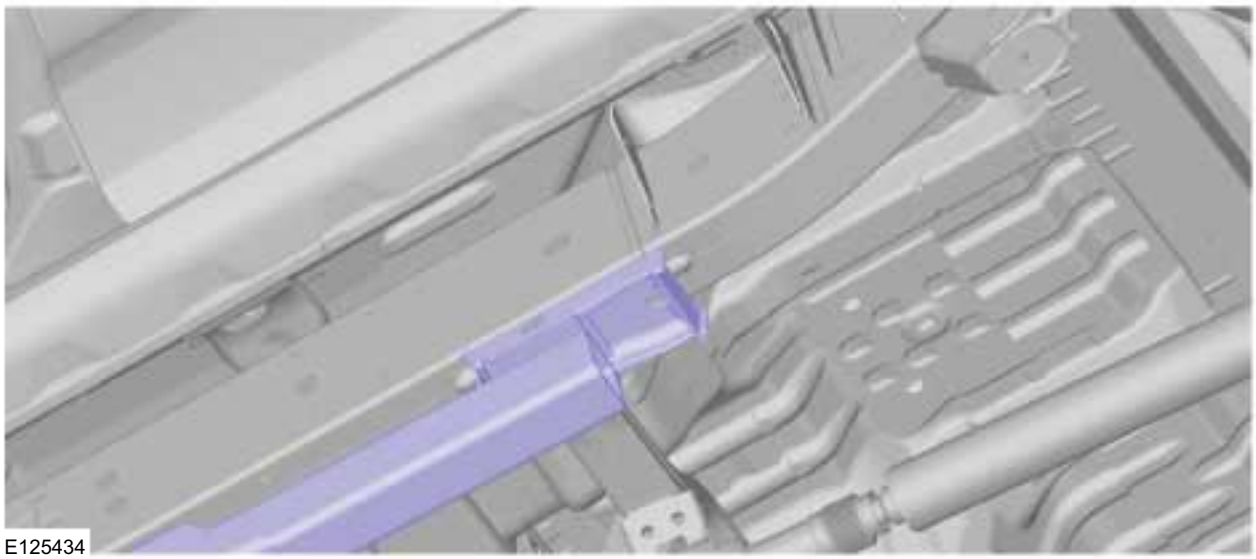

E125434

DESCRIPTION AND OPERATION

Safety Stand Positions

Front

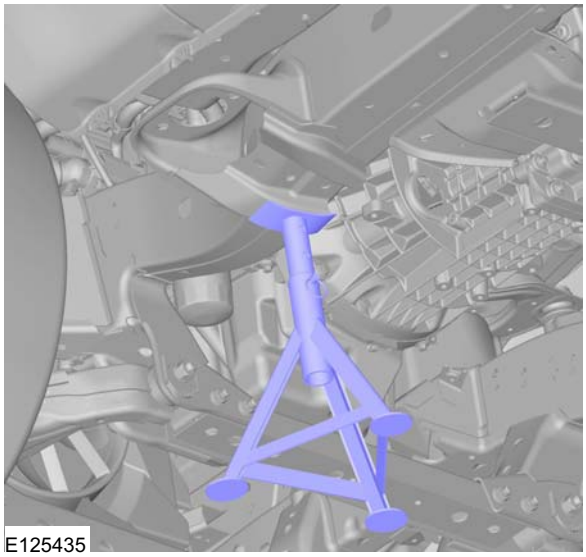
E125435

Rear

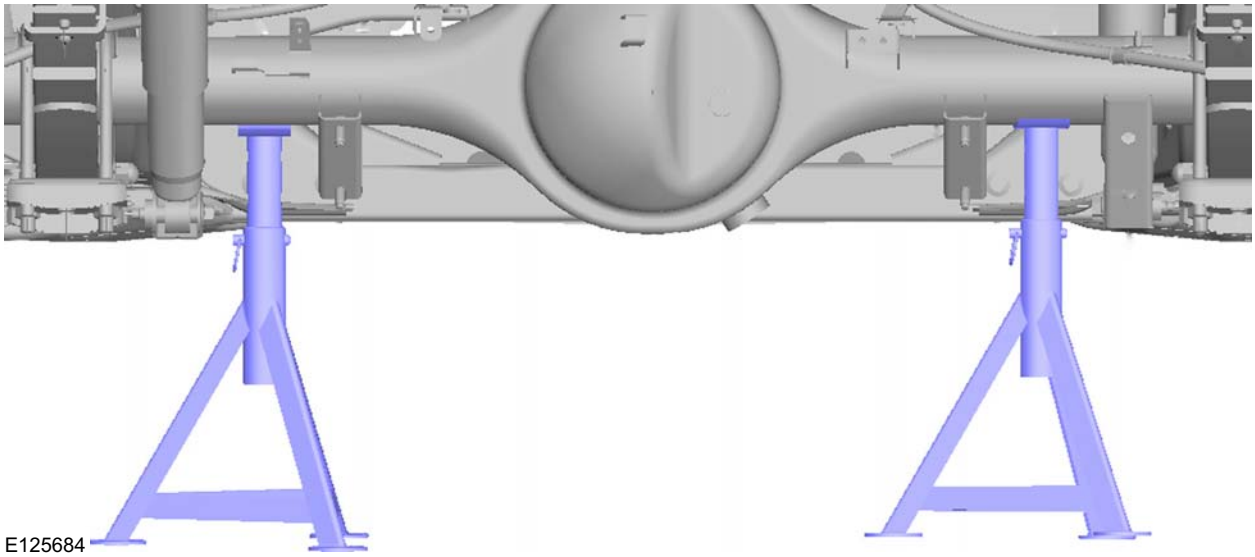
E125684

REMOVAL AND INSTALLATION

Wheel and Tire

Removal

CAUTIONS:

Do not use heat to loosen a seized wheel nut.

Do not use power tools on locking wheel nuts.

1. Loosen

1.

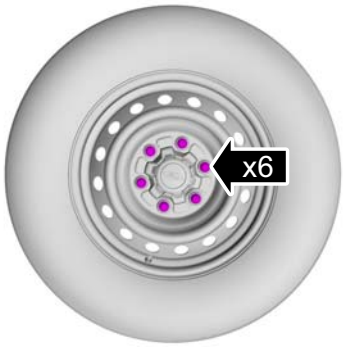

E126033

2. For additional information, refer to: Jacking (100-02 Jacking and Lifting, Description and Operation) / Lifting (100-02 Jacking and Lifting, Description and Operation).

3.

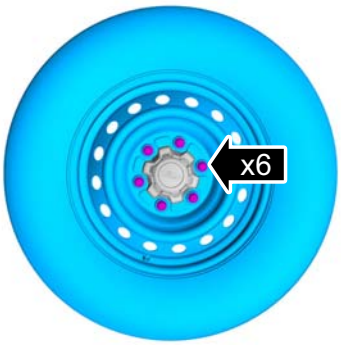

E126034

Installation

1. WARNING: Make sure that the mating faces are clean and free of corrosion and foreign material

NOTE: Only tighten the nuts finger tight at this stage.

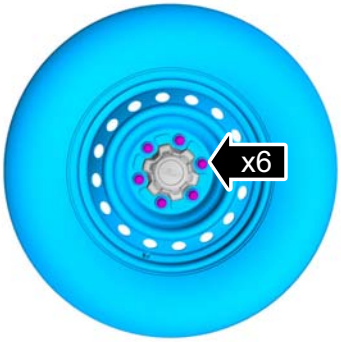

E126034

2. Lower the vehicle.

3. When installing the wheels and tires, tighten the wheel nuts in a criss-cross pattern to the following tightening torque.

- Tightening torque 88.2—117.6 Nm {9.00—11.99 Kgf·m, 65.06—86.73 ft·lbf}.

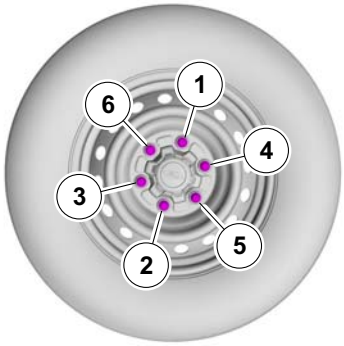

E126035

REMOVAL AND INSTALLATION

Steering Wheel(13 524 0)

General Equipment

Adhesive Tape

Removal

CAUTION: Make sure that the steering wheel lock is engaged.

NOTE: Removal steps in this procedure may contain installation details.

1.

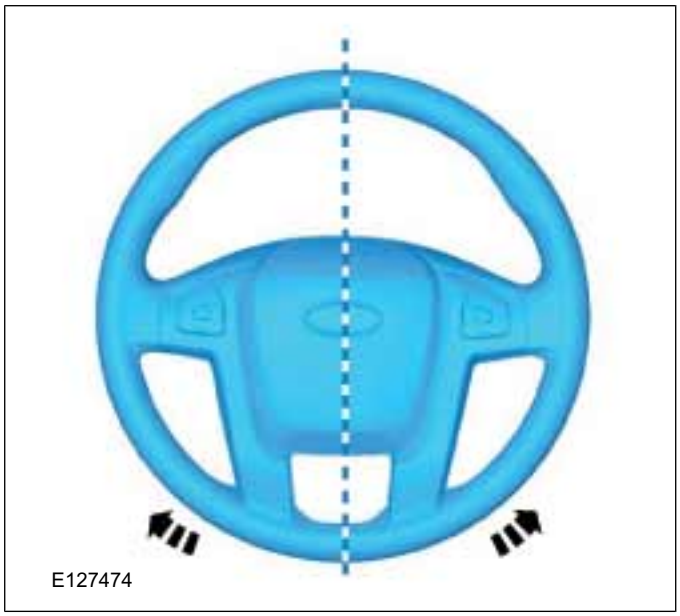

2. Refer to: Driver Air Bag Module (501-20 Supplemental Restraint System, Removal and Installation).

3. Torque: 40 Nm

CAUTION: Make sure that the clockspring rotor does not rotate.

4. General Equipment: Adhesive Tape

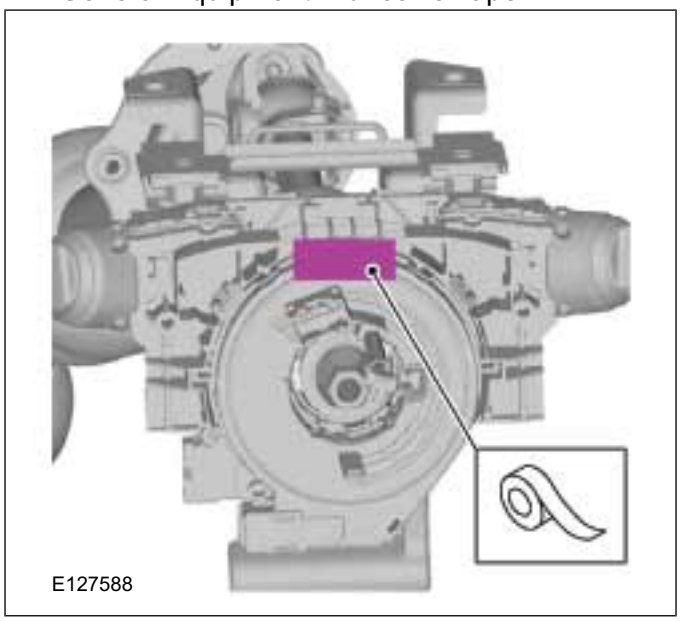

Installation

1. To install, reverse the removal procedure.

REMOVAL AND INSTALLATION

Ignition Switch(33 616 0)

Removal

NOTE: Removal steps in this procedure may contain installation details.

1. Refer to: Battery Disconnect and Connect (414-01 Battery, Mounting and Cables, General Procedures).

2.

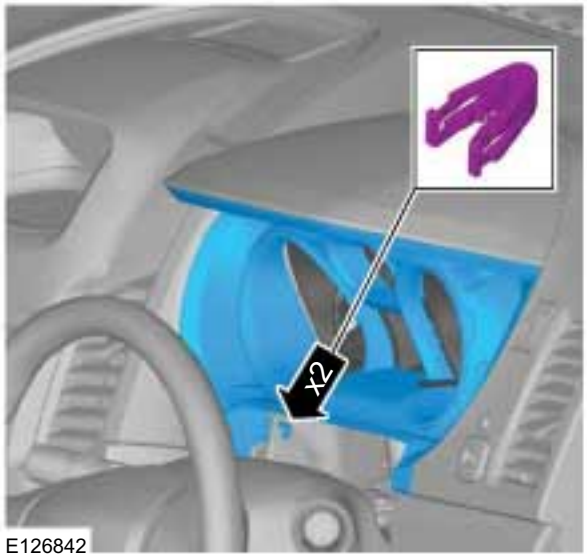

E126842

3.

E127542

4.

E128174

5.

E128175

GENERAL PROCEDURES

Battery Disconnect and Connect

Activation

1. Obtain and record the audio unit keycode and preset radio frequencies.

2.

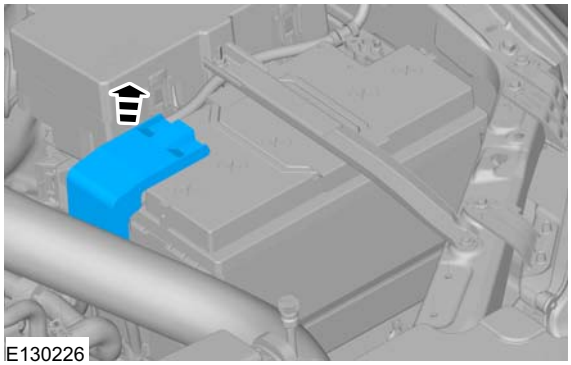

3. Torque: 27 Nm

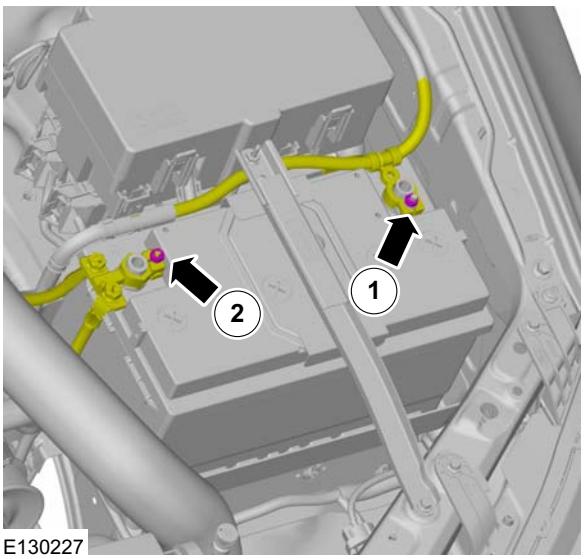

REMOVAL AND INSTALLATION

Bluetooth Module(33 635 0)

Removal

NOTE: Removal steps in this procedure may contain installation details.

1. Refer to: Glove Compartment (501-12 Instrument Panel and Console, Removal and Installation).
2. Torque: 2 Nm

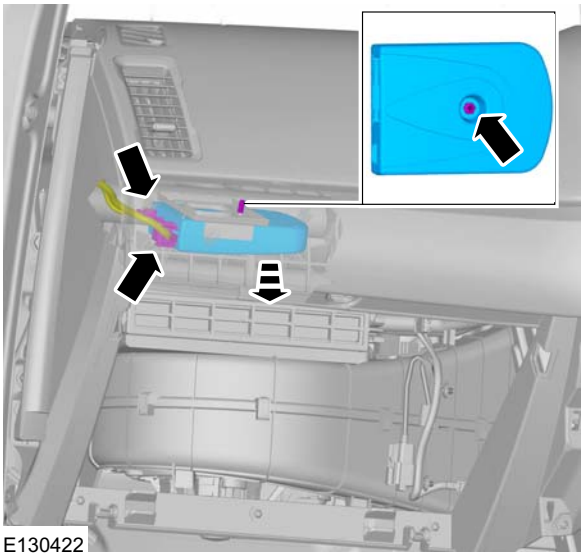

Installation

1. To install, reverse the removal procedure.

REMOVAL AND INSTALLATION

Passive Anti-Theft System (PATS) Transceiver

Removal

NOTE: Removal steps in this procedure may contain installation details.

1. Refer to: Battery Disconnect and Connect (414-01 Battery, Mounting and Cables, General Procedures).

2.

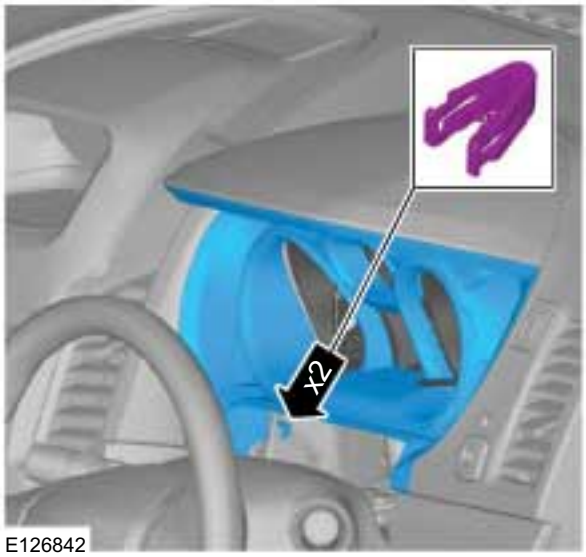

E126842

3.

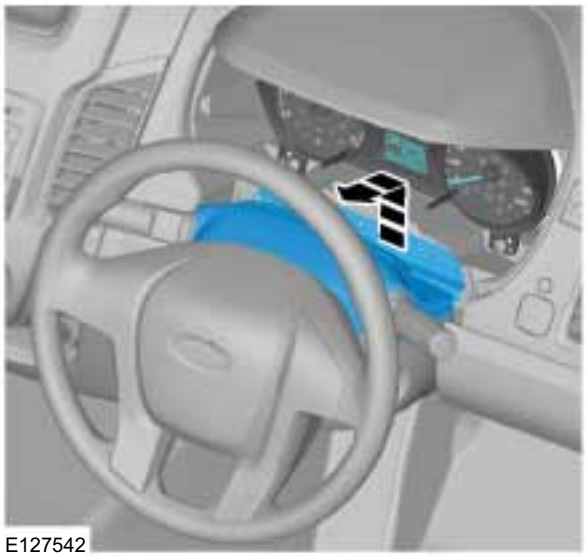
E127542

4.

E128174

5.

E128175

REMOVAL AND INSTALLATION

6.

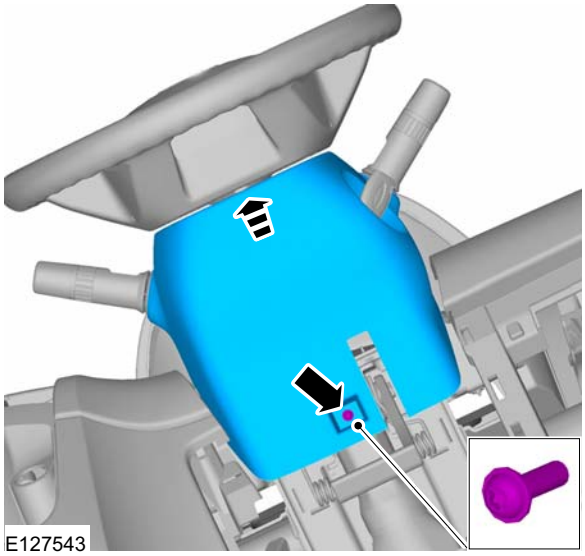

7.

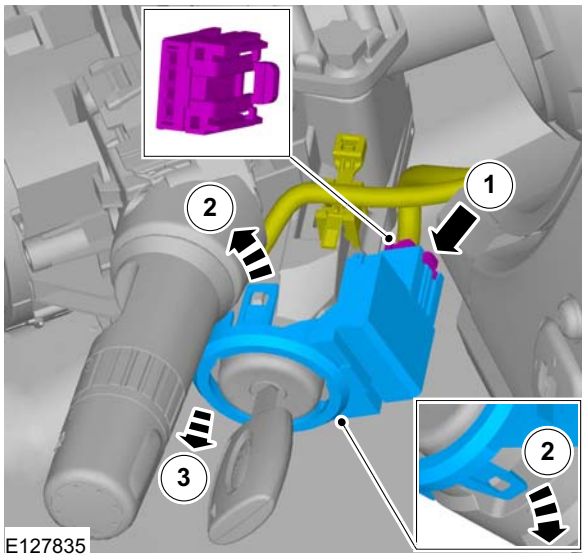

Installation

1. To install, reverse the removal procedure.

REMOVAL AND INSTALLATION

Audio Unit

Removal

WARNING: The supplemental restraint system (SRS) is active for a certain length of time after the power supply has been disconnected. Wait for a minimum of 3 minutes before disconnecting or removing any SRS components.

NOTE: Removal steps in this procedure may contain installation details.

1. Refer to: Supplemental Restraint System (SRS) Health and Safety Precautions (100-00 General Information, Description and Operation).
   Refer to: Battery Disconnect and Connect (414-01 Battery, Mounting and Cables, General Procedures).

Vehicles with single DIN Standard audio unit

2.

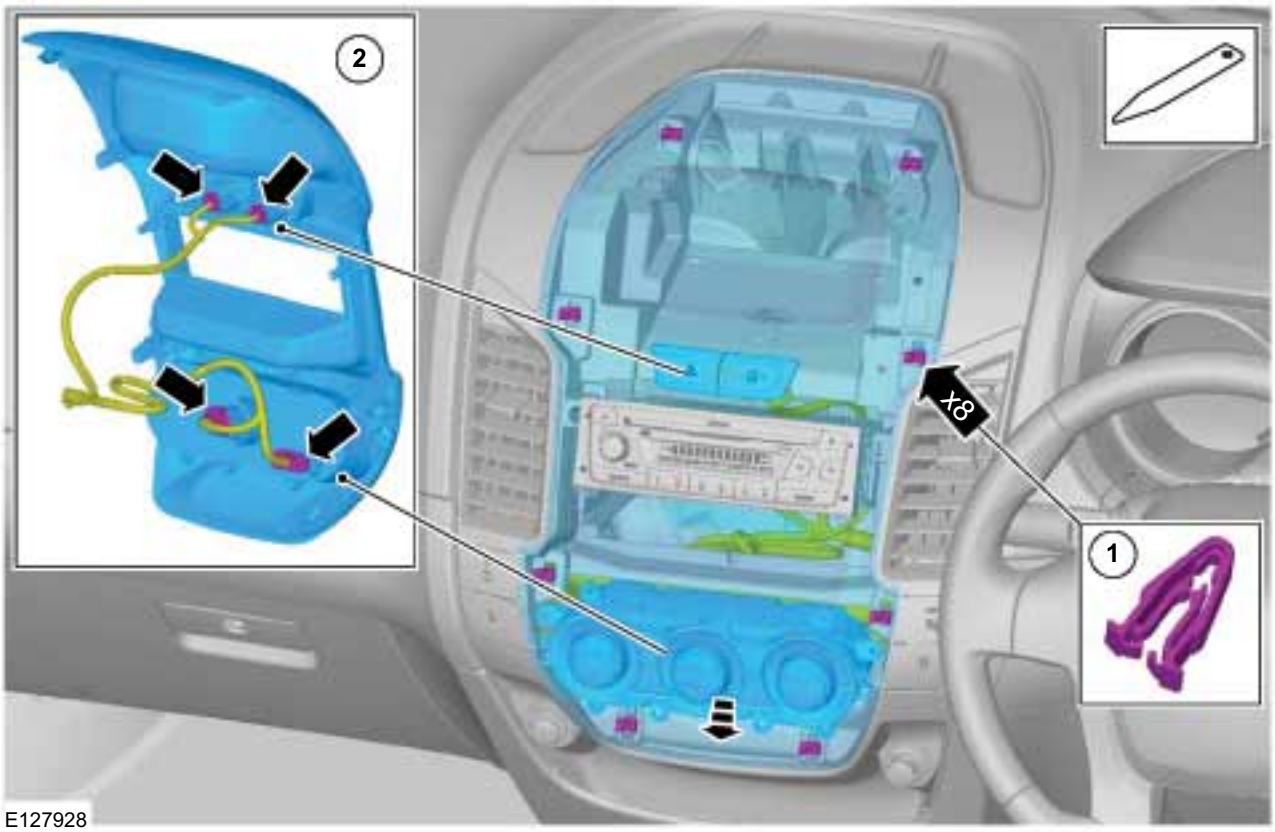

REMOVAL AND INSTALLATION

3. Torque: 3 Nm

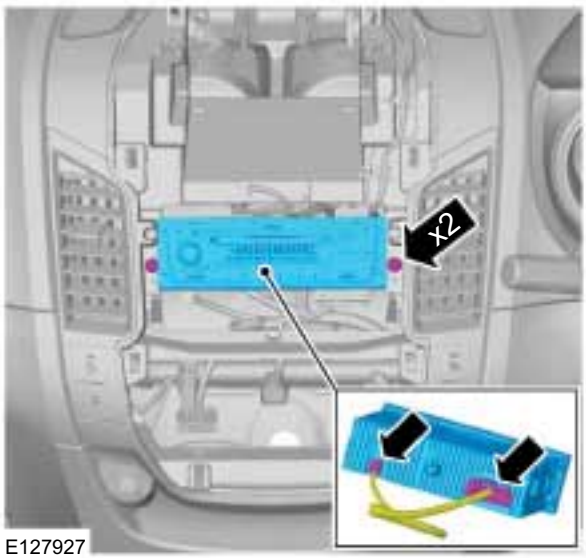

Vehicles with double DIN Standard audio unit

4.

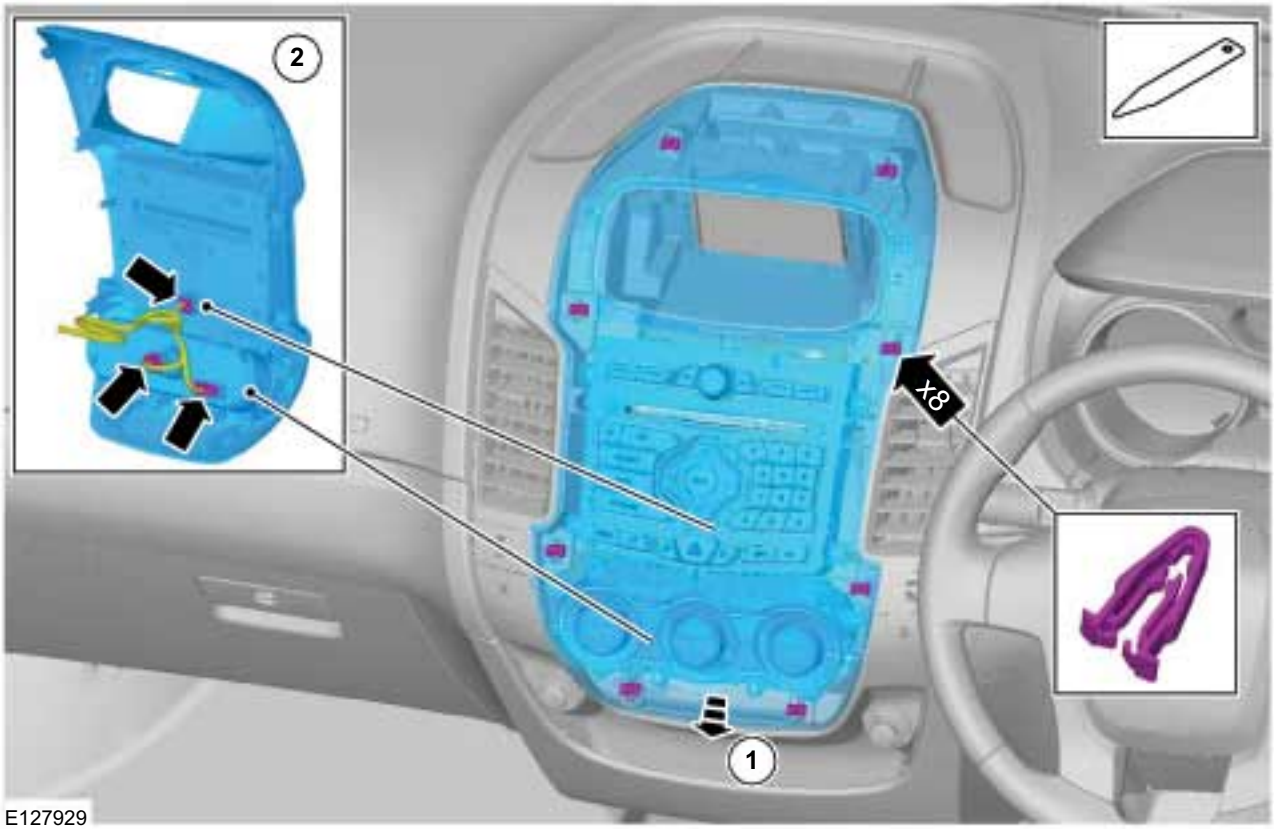

REMOVAL AND INSTALLATION

5. Torque: 2 Nm

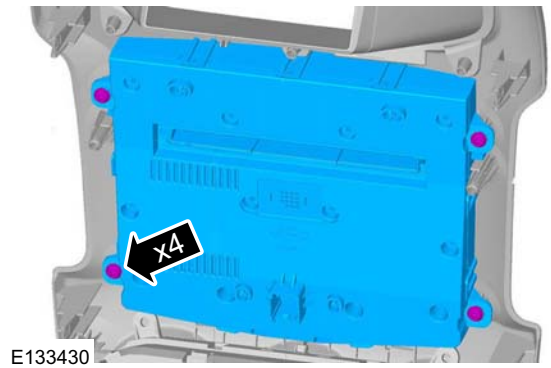

6. Torque: 3 Nm

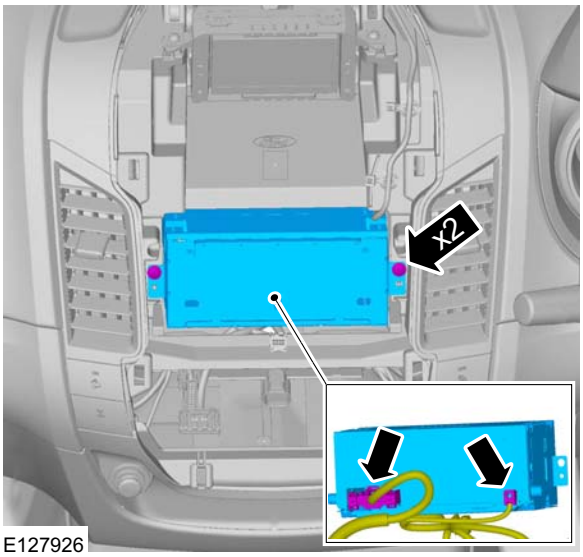

Installation

1. To install, reverse the removal procedure.

REMOVAL AND INSTALLATION

Information and Entertainment Display Unit

Removal

NOTE: Removal steps in this procedure may contain installation details.

1. Refer to: Health and Safety Precautions (100-00 General Information, Description and Operation).
2. Refer to: Battery Disconnect and Connect (414-01 Battery, Mounting and Cables, General Procedures).
3.

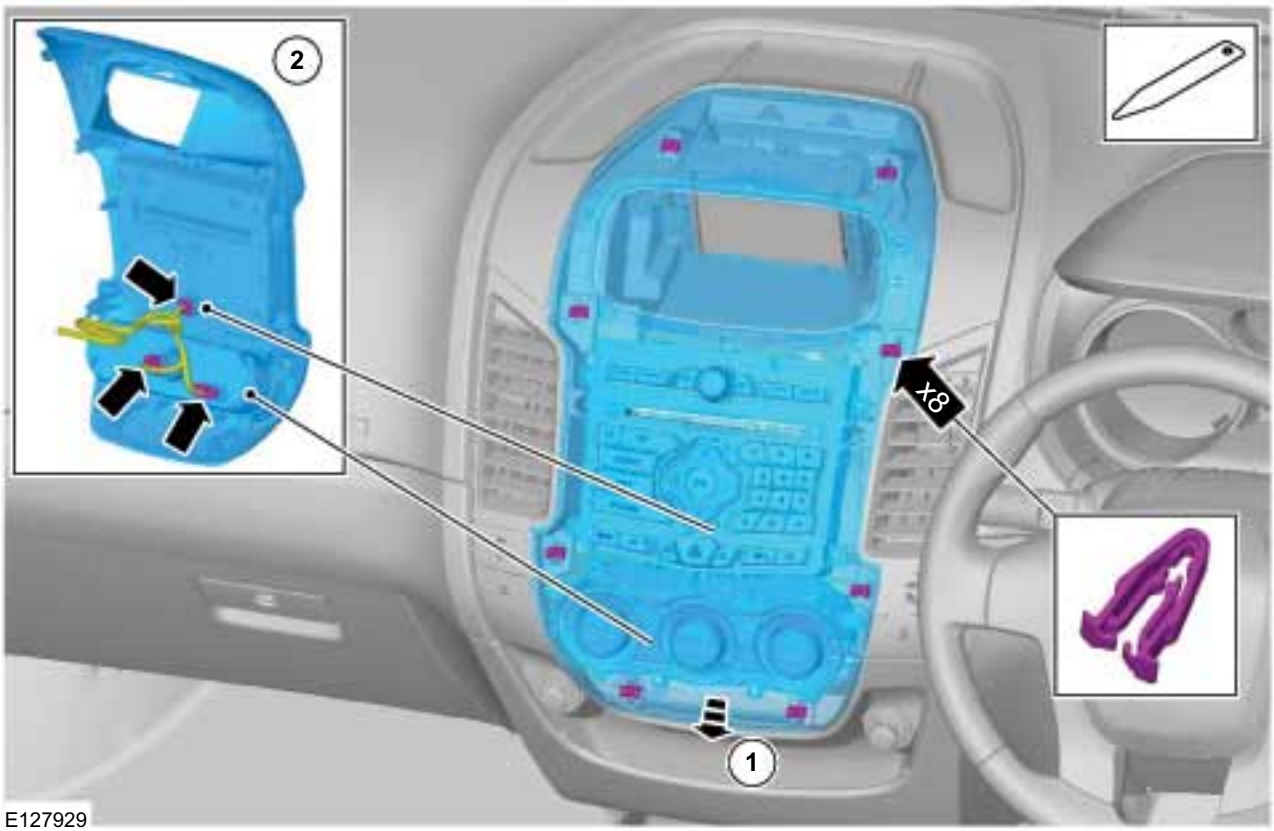

REMOVAL AND INSTALLATION

4.

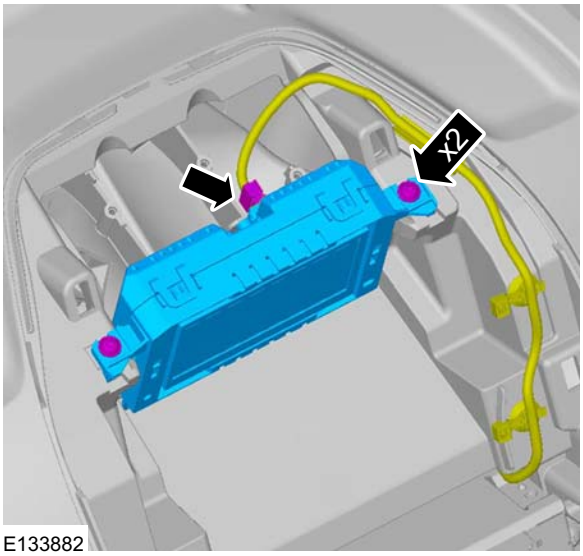

Installation

1. To install, reverse the removal procedure.

REMOVAL AND INSTALLATION

Headlamp Assembly

Removal

NOTE: Removal steps in this procedure may contain installation details.

1. Refer to: Battery Disconnect and Connect (414-01 Battery, Mounting and Cables, General Procedures).
2. Refer to: Front Bumper Cover (501-19 Bumpers, Removal and Installation).
3.

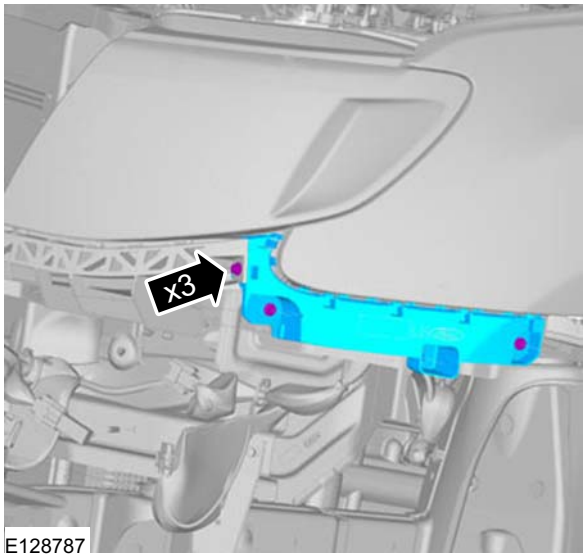

4.

REMOVAL AND INSTALLATION

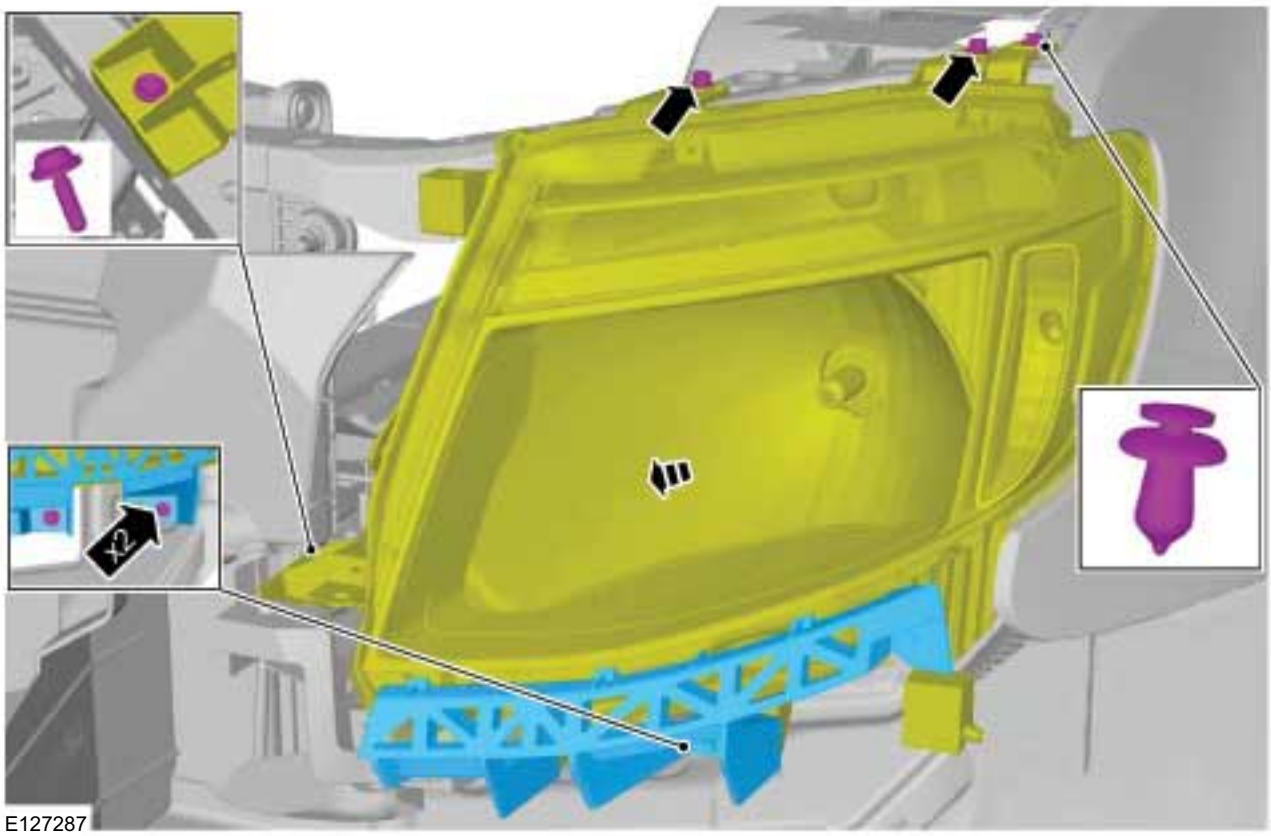

5.

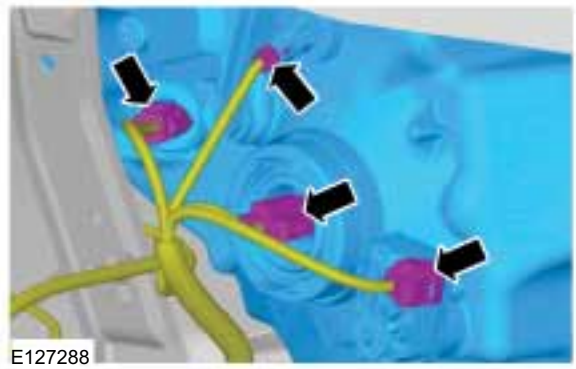

Installation

1. To install, reverse the removal procedure.
2. Refer to: Headlamp Adjustment (417-01 Exterior Lighting, General Procedures).

GENERAL PROCEDURES

Headlamp Adjustment

General Equipment

Headlamp Beam Setter

Activation

1. Adjust the tire pressure to the specification.
2. Position the unloaded vehicle on a flat, level surface.
3. Seat one person in the driver's seat.
4. Position the vehicle straight ahead and perpendicular to the white screen.
5. Repeatedly operate the headlamp leveling switch and then set it to "0".
6. Set the measuring screen of the beam setting equipment to the correct headlamp adjustment setting.

   General Equipment: Headlamp Beam Setter
7. **X:** 3 m [9.8 ft], **Y:** 1.2°, **Z:** 36 mm [1.4 inch].

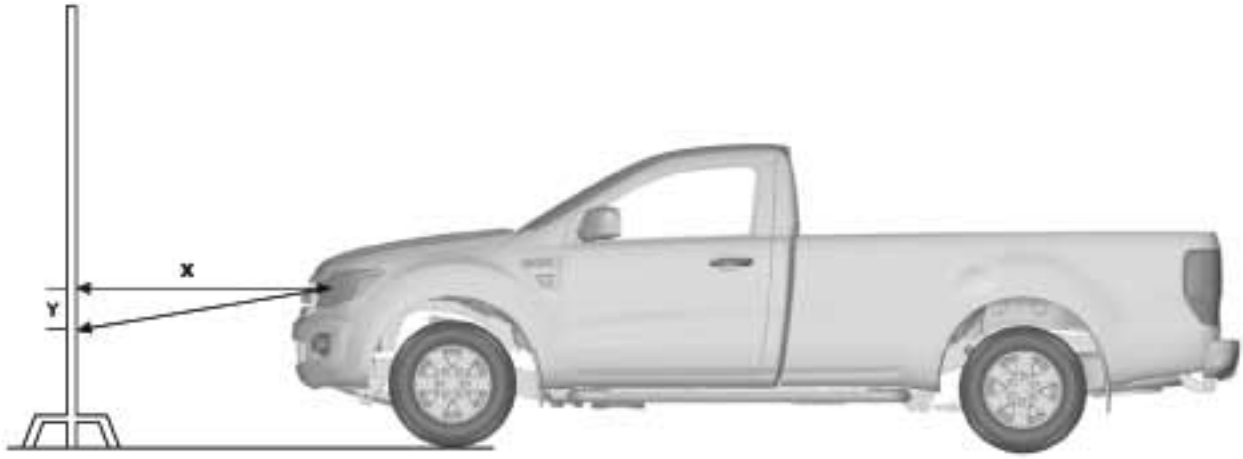

E136737

8. Place an object in front of the headlight not being adjusted to block its light beam.
9. Start the engine so that the battery remains charged.
10. Turn on the headlamp.
11. Adjust the headlight by loosening the adjusting screw as shown in the figure.

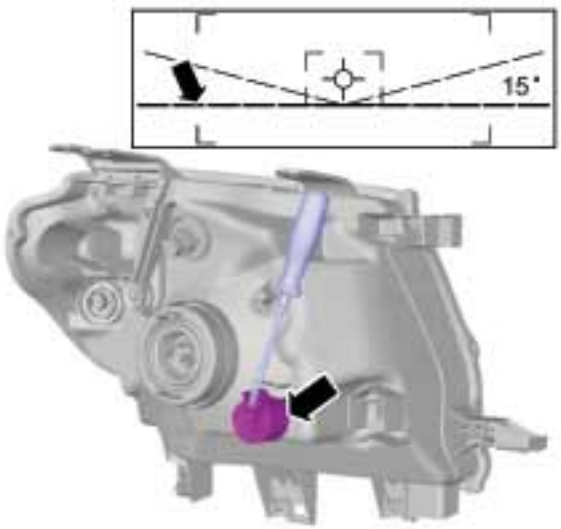

E129040

GENERAL PROCEDURES

12. Adjust the headlight by loosening the adjusting screw as shown in the figure.

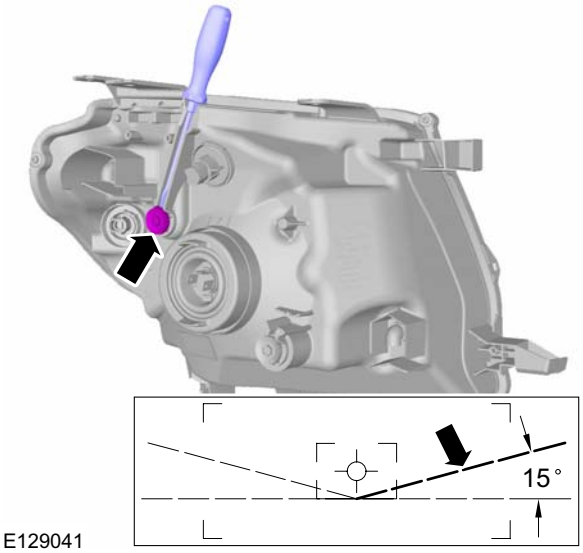

REMOVAL AND INSTALLATION

Instrument Panel Wiring Harness

Removal

WARNING: Make sure that the vehicle electrical system is fully depowered and no other power source is connected.

NOTE: Removal steps in this procedure may contain installation details.

1. Refer to: Supplemental Restraint System (SRS) Health and Safety Precautions (100-00 General Information, Description and Operation).
2. Refer to: Instrument Panel - RHD 4WD/RHD RWD (501-12 Instrument Panel and Console, Removal and Installation).
3. Refer to: Instrument Panel (501-12 Instrument Panel and Console, Disassembly and Assembly).
4. 1. Torque: 11 Nm
   2. Torque: 11 Nm

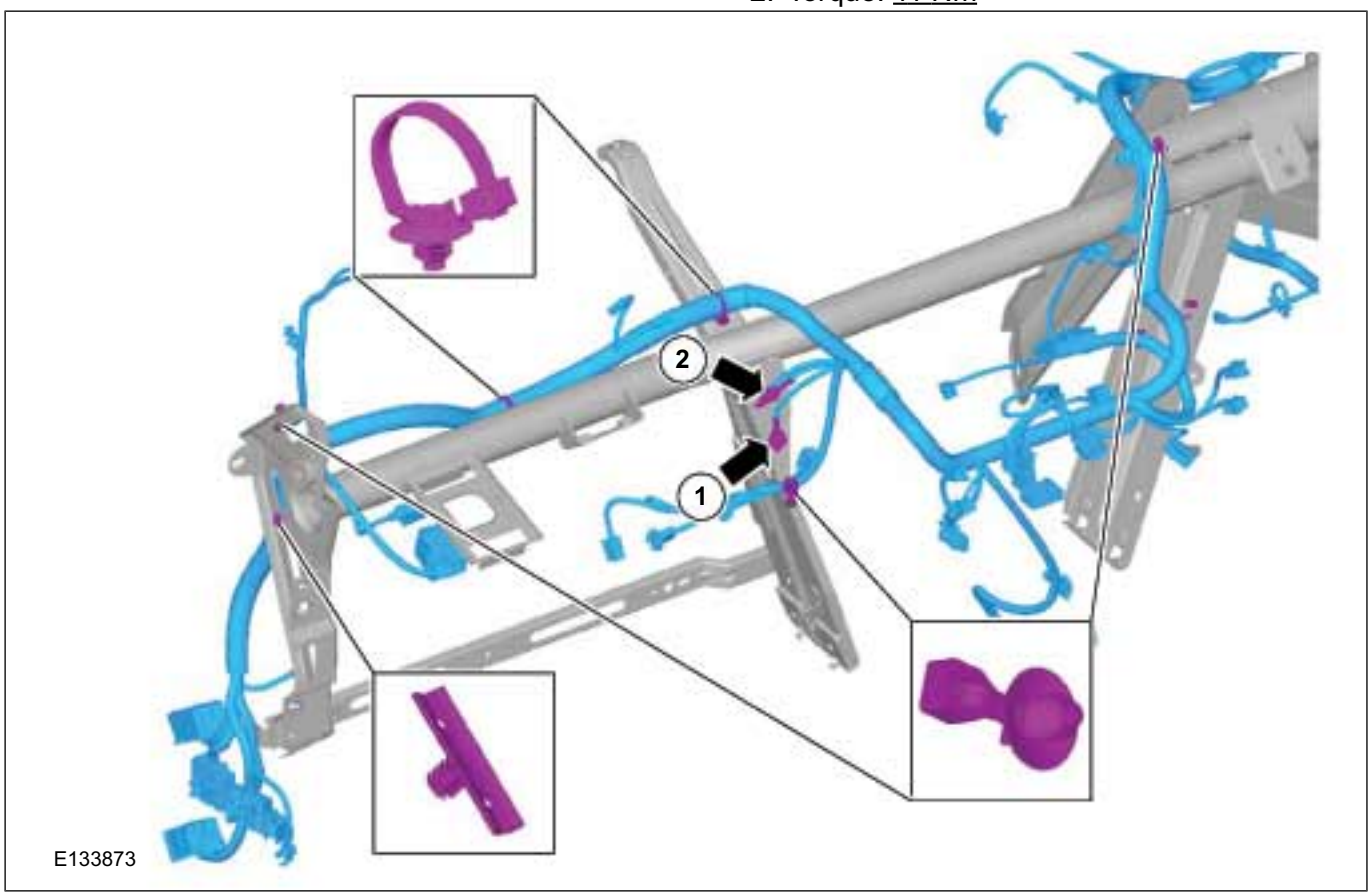

5. 1. Torque: 11 Nm

REMOVAL AND INSTALLATION

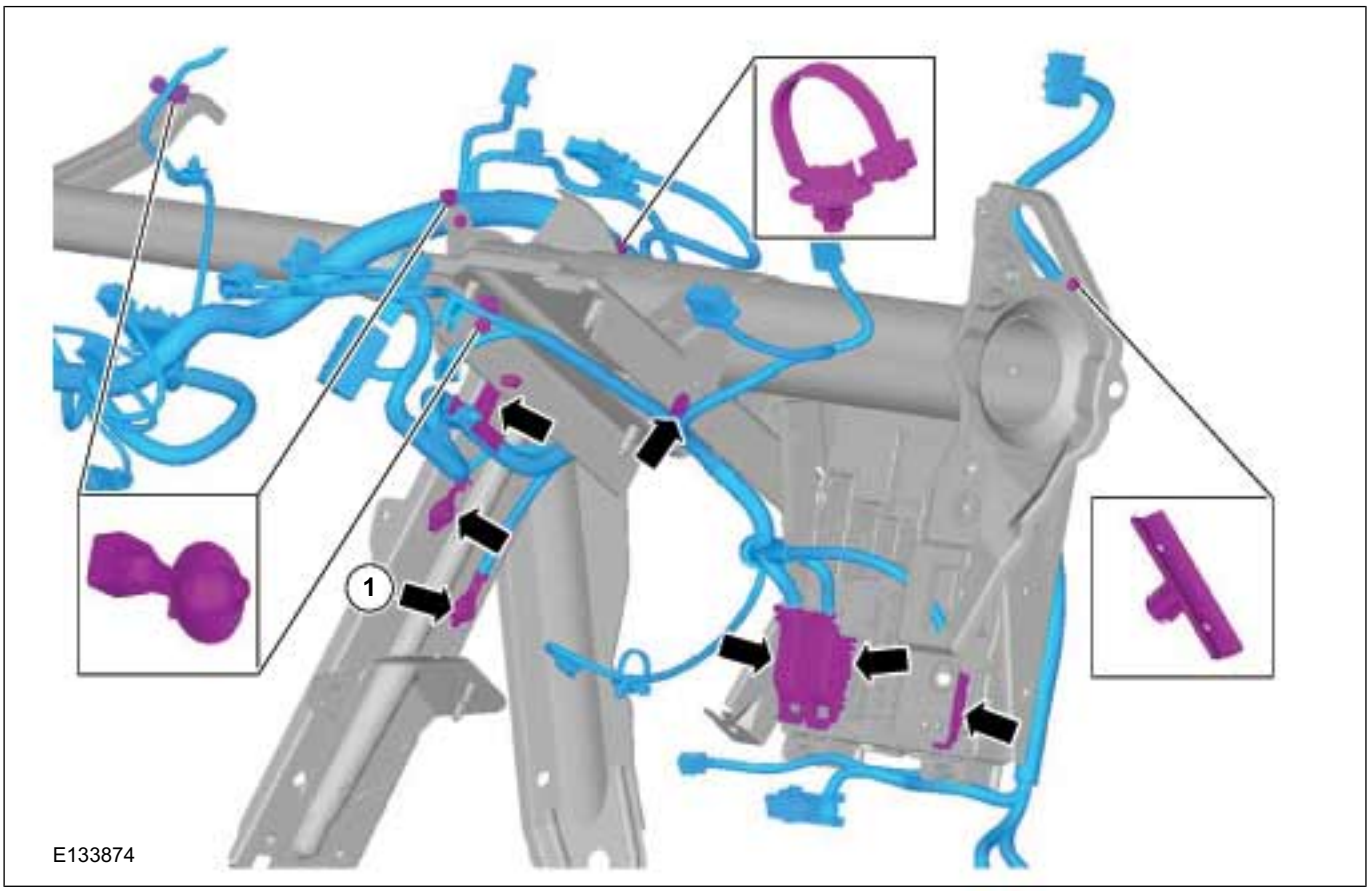

Installation

1. To install, reverse the removal procedure.

REMOVAL AND INSTALLATION

Passive Anti-Theft System (PATS) Transceiver

Removal

NOTE: Removal steps in this procedure may contain installation details.

1. Refer to: Battery Disconnect and Connect (414-01 Battery, Mounting and Cables, General Procedures).

2.

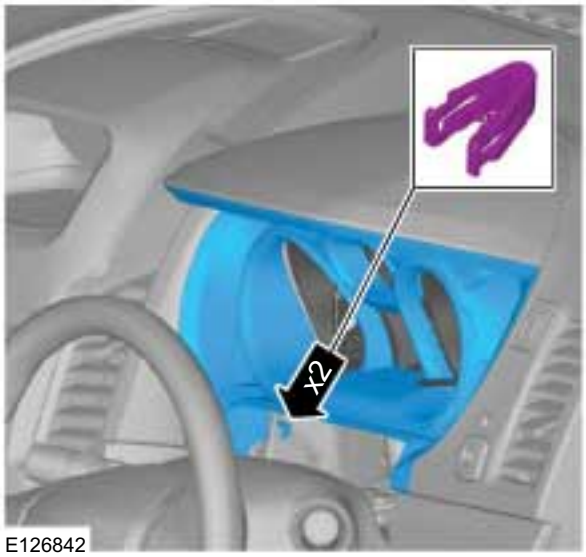

E126842

3.

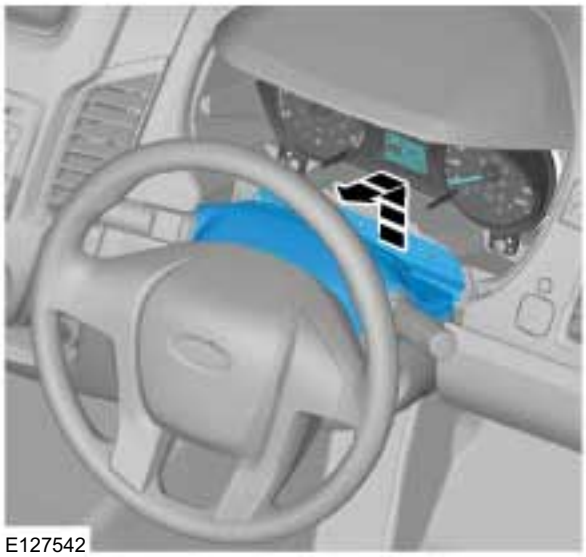
E127542

4.

E128174

5.

E128175

REMOVAL AND INSTALLATION

6.

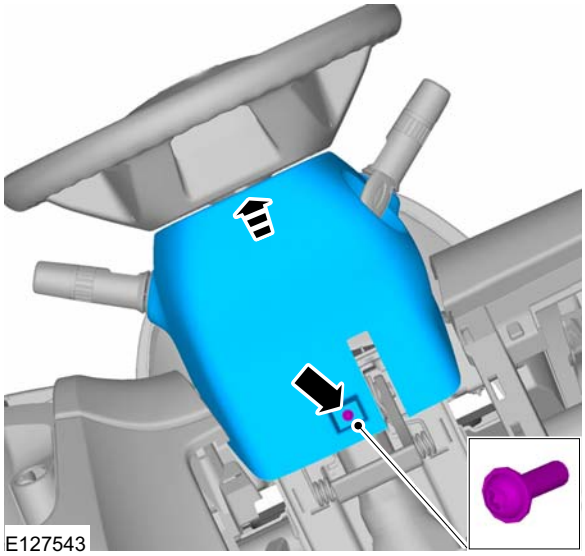

7.

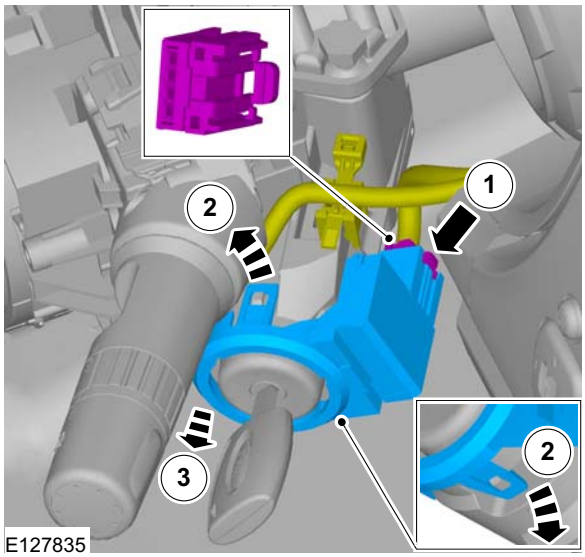

Installation

1. To install, reverse the removal procedure.

FOREWORD

To the best of our knowledge, the illustrations, technical information, data and descriptions in this issue were correct at the time of going to print. The right to change prices, specifications, equipment and maintenance instructions at any time without notice is reserved as part of FORD policy of continuous development and improvement for the benefit of our customers.

No part of this publication may be reproduced, stored in a data processing system or transmitted in any form, electronic, mechanical, photocopy, recording, translation or by any other means without prior permission of Ford-Werke Aktiengesellschaft. No liability can be accepted for any inaccuracies in this publication, although every possible care has been taken to make it as complete and accurate as possible.

Copyright ©

2011.50 Ranger

Wiring Diagrams

Table of Contents

PAGE 1 OF 2

GROUP 1 General Information

Service Information
General Information 100-00

GROUP 2 Chassis

Driveline
Rear Drive Axle/Differential 205-02

Brake System
Parking Brake and Actuation 206-05
Hydraulic Brake Actuation 206-06
Anti-Lock Control 206-09A
Anti-Lock Control - Stability Assist 206-09B
Anti-Lock Brake System (ABS) and Stability Control 206-09C

Steering System
Steering Column Switches 211-05

GROUP 3 Powertrain

Engine
Engine Cooling 303-03
Fuel Charging and Controls - 2.5L Duratec-HE (122kW/165PS) - MI4 303-04A
Fuel Charging and Controls - 2.2L Duratorq-TDCi (88kW/120PS) - Puma/2.2L Duratorq-TDCi (96kW/130PS) - Puma/2.2L Duratorq-TDCi (110kW/150PS) - Puma 303-04B
Fuel Charging and Controls - 3.2L Duratorq-TDCi (148kW/200PS) - Puma 303-04C
Fuel Charging and Controls - Turbocharger 303-04D
Starting System - 2.5L Duratec-HE (122kW/165PS) - MI4 303-06A
Starting System - 2.2L Duratorq-TDCi (88kW/120PS) - Puma/2.2L Duratorq-TDCi (96kW/130PS) - Puma/2.2L Duratorq-TDCi (110kW/150PS) - Puma/3.2L Duratorq-TDCi (148kW/200PS) - Puma 303-06B
Engine Ignition - 2.5L Duratec-HE (122kW/165PS) - MI4 303-07A
Glow Plug System - 2.2L Duratorq-TDCi (88kW/120PS) - Puma/2.2L Duratorq-TDCi (96kW/130PS) - Puma/2.2L Duratorq-TDCi (110kW/150PS) - Puma 303-07B
Glow Plug System - 3.2L Duratorq-TDCi (148kW/200PS) - Puma 303-07C
Engine Emission Control - 2.2L Duratorq-TDCi (88kW/120PS) - Puma/2.2L Duratorq-TDCi (96kW/130PS) - Puma/2.2L Duratorq-TDCi (110kW/150PS) - Puma/3.2L Duratorq-TDCi (148kW/200PS) - Puma 303-08
Evaporative Emissions 303-13
Electronic Engine Controls - 2.5L Duratec-HE (122kW/165PS) - MI4 303-14A
Electronic Engine Controls - 2.2L Duratorq-TDCi (88kW/120PS) - Puma/2.2L Duratorq-TDCi (96kW/130PS) - Puma/2.2L Duratorq-TDCi (110kW/150PS) - Puma/3.2L Duratorq-TDCi (148kW/200PS) - Puma 303-14B

Automatic Transmission/Transaxle
Automatic Transmission/Transaxle - Vehicles With: 6-Speed Automatic Transaxle - 6R80 307-01
Automatic Transmission/Transaxle External Controls 307-05

Manual Transmission/Transaxle, Clutch and Transfer Case
Four-Wheel Drive Systems 308-07

Exhaust System
Exhaust System - 2.2L Duratorq-TDCi (88kW/120PS) - Puma/2.2L Duratorq-TDCi (96kW/130PS) - Puma/2.2L Duratorq-TDCi (110kW/150PS) - Puma/3.2L Duratorq-TDCi (148kW/200PS) - Puma 309-00

Fuel System - General Information
Fuel System - General Information - 2.5L Duratec-HE (122kW/165PS) - MI4 310-00A
Fuel System - General Information - 2.2L Duratorq-TDCi (88kW/120PS) - Puma/2.2L Duratorq-TDCi (96kW/130PS) - Puma/2.2L Duratorq-TDCi (110kW/150PS) - Puma/3.2L Duratorq-TDCi (148kW/200PS) - Puma 310-00B
Fuel Tank and Lines 310-01A
Fuel Tank and Lines - 2.2L Duratorq-TDCi (88kW/120PS) - Puma/2.2L Duratorq-TDCi (96kW/130PS) - Puma/2.2L Duratorq-TDCi (110kW/150PS) - Puma/3.2L Duratorq-TDCi (148kW/200PS) - Puma 310-01B
Speed Control 310-03

GROUP 4 Electrical

Climate Control System
Climate Control 412-01

Instrumentation and Warning Systems
Instrument Cluster 413-01
Horn 413-06
Information and Message Center 413-08
Warning Devices 413-09
Parking Aid 413-13
Tachograph 413-17

Battery and Charging System
Battery, Mounting and Cables 414-01
Generator and Regulator 414-02

Information and Entertainment Systems
Information and Entertainment System 415-01

Lighting
Exterior Lighting 417-01
Interior Lighting 417-02
Daytime Running Lamps (DRL) 417-04

Electrical Distribution
Module Communications Network 418-00

Electronic Feature Group
Anti-Theft - Active 419-01A
Anti-Theft - Passive 419-01B
Cruise Control 419-03
Multifunction Electronic Modules 419-10

GROUP 5 Body and Paint

Body and Paint
Rear View Mirrors 501-09
Seating 501-10
Glass, Frames and Mechanisms 501-11
Instrument Panel and Console 501-12
Handles, Locks, Latches and Entry Systems 501-14
Wipers and Washers 501-16
Safety Belt System 501-20A
Supplemental Restraint System 501-20B

GROUP 7 General Wiring Information

Wiring Information
General Information 700-00
Fuse and Relay Information 700-01
Power Distribution 700-02
Grounding Strategy 700-03
Electrical Connectors 700-04

Index

GROUP

1

General Information

SECTION TITLE PAGE

Service Information
General Information.....100-00

SECTION 100-00 General Information

VEHICLE APPLICATION: 2012.0Ranger

CONTENTS PAGE

DESCRIPTION AND OPERATION

About This Manual..... 100-00-2
How to Use This Manual..... 100-00-2
Circuit Code..... 100-00-2
Wire Insulation Specification (Temperature)..... 100-00-6
Connector Code - Component, GND and Splice..... 100-00-6
Connector Code - Harness Connectors..... 100-00-7
Wire Color Code..... 100-00-7
Symbols Glossary..... 100-00-8

DESCRIPTION AND OPERATION

About This Manual

How to Use This Manual

This manual is structured into Systems, Groups and Sections. A System covers a specific portion of the vehicle. The manual is divided into six Systems: General Information, Chassis, Powertrain, Electrical, Body and Paint and General Wiring Information. Each System contains a number of Groups that contain a number of Sections relating to specific vehicle systems. Each Section contains a wiring diagram containing all of the information relating to the specific vehicle system. Some Sections contain a number of wiring diagrams that cover a number of different vehicle variants. Connector location information and connector face views are provided through links within the wiring diagram for each vehicle system.

Example: Chassis > Brake System > Anti-Lock Control (System > Group > Section)

Wiring Diagram Format

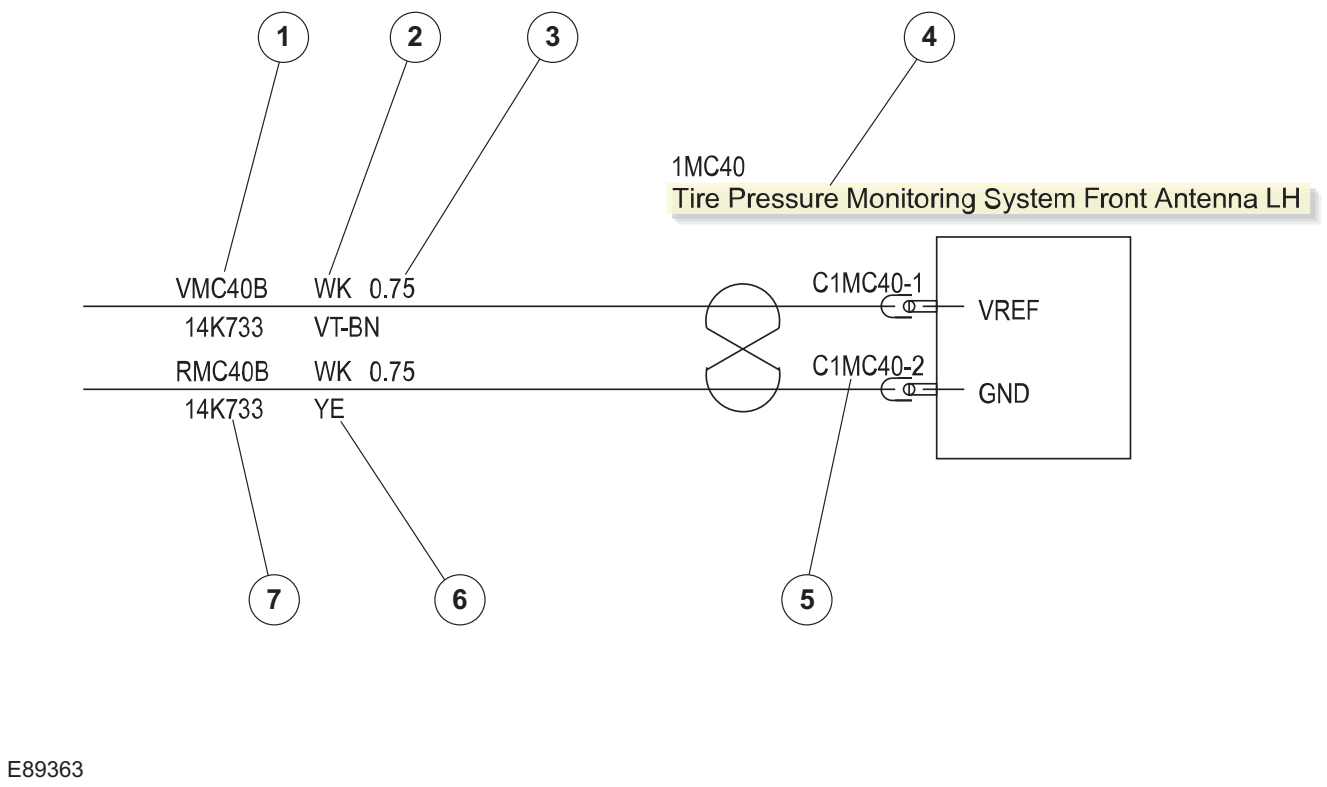

Item	Description
1	Circuit code
2	Wire insulation specification (temperature)
3	Wire diameter (mm²)

Item	Description
4	Component name
5	Connector code
6	Wire color code
7	Wiring harness code

Circuit Code

DESCRIPTION AND OPERATION

Position	Description
1	Electrical potential
2	System
3	Sub-system
4 and 5	Function
Some circuit codes also have a suffix. Suffices are used when parts of a circuit are separated with a connector.	

Position 1: Potential

Code	Description
G	GND (ground)
S	Standard voltage
H	Higher than standard voltage
C	Changing or switched
V	Variable signal
L	Lower than standard voltage
R	Return or reference
D	Drain wire
Z	Any of the above with a temporary function

Position 2: System

Code	Description
A	Special vehicle
B	Circuit protection
C	Chassis
D	Electrical distribution
E	Engine and transmission
H	Heating
L	Lighting
M	Multimedia (Information and entertainment)
P	Power convenience
R	Supplemental restraints
Y	Hybrid electric powertrain

DESCRIPTION AND OPERATION

Position 3: Sub-system

System Code	Sub-system Code	Description
A	1	Temporary functions for any sub-system
A	2	Temporary functions for any sub-system
A	3	Temporary functions for any sub-system
A	A	Ambulance
A	C	Customer access
A	P	Police
A	T	Trailer tow
A	X	Taxi
B	1	AJB (auxiliary junction box)
B	B	BJB (battery junction box), EJB (engine junction box)
B	F	Pre-fuse box
B	K	Power pack circuit protection
B	P	CJB (central junction box)
B	R	RJB (rear junction box)
B	X	Special power circuits
C	A	Anti-lock control, traction control, stability assist
C	B	Brake system
C	D	Adaptive damping
C	F	Four-wheel drive
C	L	Suspension
C	S	Power steering
D	1	GND points
D	9	Special GND and return circuits
D	B	Diagnostic bus
D	C	Charging, starting, cigar lighter, power outlet socket
D	F	Fuse link wires, mega fuse
E	1	PCM (powertrain control module)
E	2	PCM
E	3	PCM
E	4	PCM
E	5	Powertrain controller, diode, driver, monitor, pump
E	6	Powertrain relay, resistor, runner

DESCRIPTION AND OPERATION

System Code	Sub-system Code	Description
E	7	Powertrain sensor
E	8	Powertrain sensor
E	9	Powertrain switch, transducer, valve
E	C	Engine cooling
E	S	Speed control
E	T	Transmission/transaxle, differential, axle
H	1	Climate control module
H	2	Climate control module
H	3	Climate controls
H	4	Climate control relay, resistor, sensor, switch, transducer
H	A	Auxiliary climate control
H	C	Engine block heater
H	F	Fuel fired booster heater
H	P	Electric booster heater
H	S	Heated seats
L	F	Front lamps
L	N	Interior lamps, courtesy lamps, instrument panel illumination
L	S	Rear lamps, turn signal lamps
M	C	Instrument cluster, information and message center, tachograph
M	E	Information and entertainment
M	F	Forward collision avoidance
M	M	Communication, cellular phone, voice control
M	N	Navigation
M	P	Parking aid
M	R	Rear passenger entertainment
M	T	Telematics
P	K	Keyless vehicle
P	L	Locks
P	M	Rear view mirrors
P	P	Adjustable pedals, steering column
P	R	Power roof, doors, side steps
P	S	Power seats

DESCRIPTION AND OPERATION

System Code	Sub-system Code	Description
P	W	Power windows
R	1	RCM (restraints control module), air bag module, side air curtain module
R	2	Impact sensor, PAD (passenger air bag deactivation) switch
R	B	Blind spot monitoring
R	D	Heated windshield, rear window, mirrors, washer jets
R	H	Horn
R	P	Pedestrian protection
R	T	Anti-theft
R	W	Windshield wipers and washers, rear window wiper and washer, headlamp washers
Y	A	DC (direct current)/AC (alternating current) inverter
Y	B	Traction battery
Y	D	DC/AC converter
Y	T	Hybrid power split transmission/transaxle

Wire Insulation Specification (Temperature)

Code	Temperature
WA	100°C
WK	125°C
WE	150°C

Connector Code - Component, GND and Splice

Code Position	Description
1	C = connector, G = GNDand S = splice
2	Connector location
3	System
4	Sub-system
5	Function
6	Function
7	Suffix (only used if multiple connectors exist)
Connector locations are shown graphically and displayed by selecting the appropriate link on the wiring diagram.	

DESCRIPTION AND OPERATION

Connector Code - Harness Connectors

Code Position	Description
1	C = connector
2	Connector location
3	Location of the connected system
4	Suffix (only used if multiple connectors exist)
Connector locations are shown graphically and displayed by selecting the appropriate link on the wiring diagram.	

Wire Color Code

Code	Color
BK	Black
BN	Brown
BU	Blue
GN	Green
GY	Gray
LG	Light green
NA	Natural
OG	Orange
PK	Pink
RD	Red
SR	Silver
VT	Purple
WH	White
YE	Yellow

DESCRIPTION AND OPERATION

Symbols Glossary

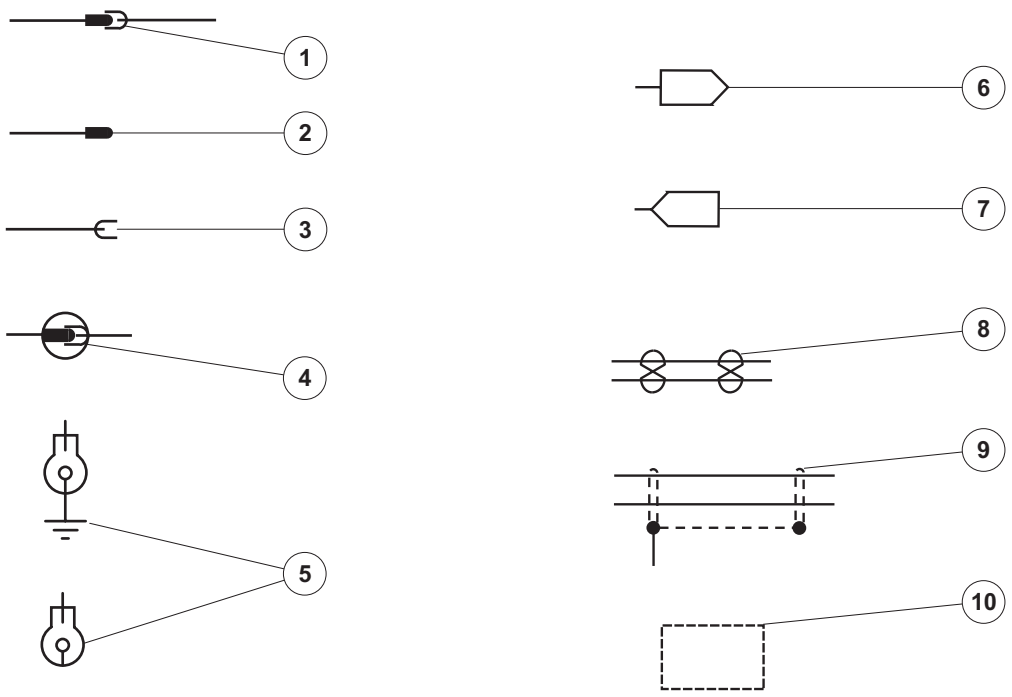

Item	Description
1	In-line connector
2	Male connector
3	Female connector
4	Pins with special coating (e.g. gold)
5	Ground
6	Off-page reference (to)
7	Off-page reference (from)
8	Twisted pair
9	Screened cables
10	Part of a component

GROUP

2

Chassis

SECTION TITLE PAGE

Driveline
Rear Drive Axle/Differential.....205-02
Brake System
Parking Brake and Actuation.....206-05
Hydraulic Brake Actuation.....206-06
Anti-Lock Control.....206-09A
Anti-Lock Control - Stability Assist.....206-09B
Anti-Lock Brake System (ABS) and Stability Control.....206-09C
Steering System
Steering Column Switches.....211-05

SECTION 205-02 Rear Drive Axle/Differential

VEHICLE APPLICATION: 2012.0 Ranger

CONTENTS PAGE

ELECTRICAL CONNECTORS

Electronic Locking Differential (ELD) Solenoid..... 205-02-2

Electronic Locking Differential (ELD) Solenoid (G1438393)

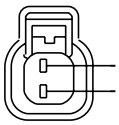

1	CBB23B	BN-YE	2TCD	0.75	+	CBB23D	BN-YE	2TCD	0.75
2	GD476L	BK-WH	2TCD	0.75					

XR3T-14A464-AA

C4CF31
TO DIFF LOCK SOLENOID

HARNESS 14A333

SECTION 206-05 Parking Brake and Actuation

VEHICLE APPLICATION: 2012.0 Ranger

CONTENTS PAGE

ELECTRICAL CONNECTORS

Parking Brake Warning Indicator Switch..... 206-05-2

Parking Brake Warning Indicator Switch (G1403890)

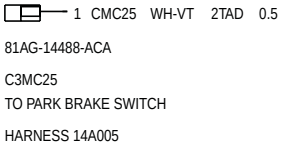

SECTION 206-06 Hydraulic Brake Actuation

VEHICLE APPLICATION: 2012.0 Ranger

CONTENTS PAGE

ELECTRICAL CONNECTORS

Low Brake Fluid Warning Indicator Switch..... 206-06-2
Low Brake Fluid Warning Indicator Switch — A..... 206-06-2

Low Brake Fluid Warning Indicator Switch (G1403892)

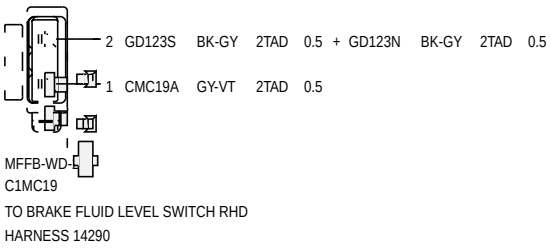

Low Brake Fluid Warning Indicator Switch—A (G1403894)

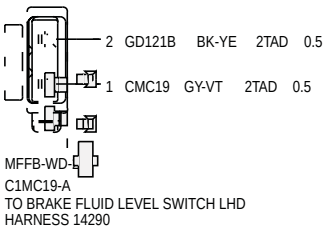

SECTION 206-09A Anti-Lock Control

VEHICLE APPLICATION: 2012.0 Ranger

CONTENTS PAGE

ELECTRICAL SCHEMATICS

Anti-Lock Control..... 206-09A-2

ELECTRICAL CONNECTORS

Anti-Lock Brake System (ABS) Module..... 206-09A-4
Front Wheel Speed Sensor LH..... 206-09A-4
Front Wheel Speed Sensor RH..... 206-09A-5
Rear Wheel Speed Sensor LH..... 206-09A-5
Rear Wheel Speed Sensor RH..... 206-09A-5

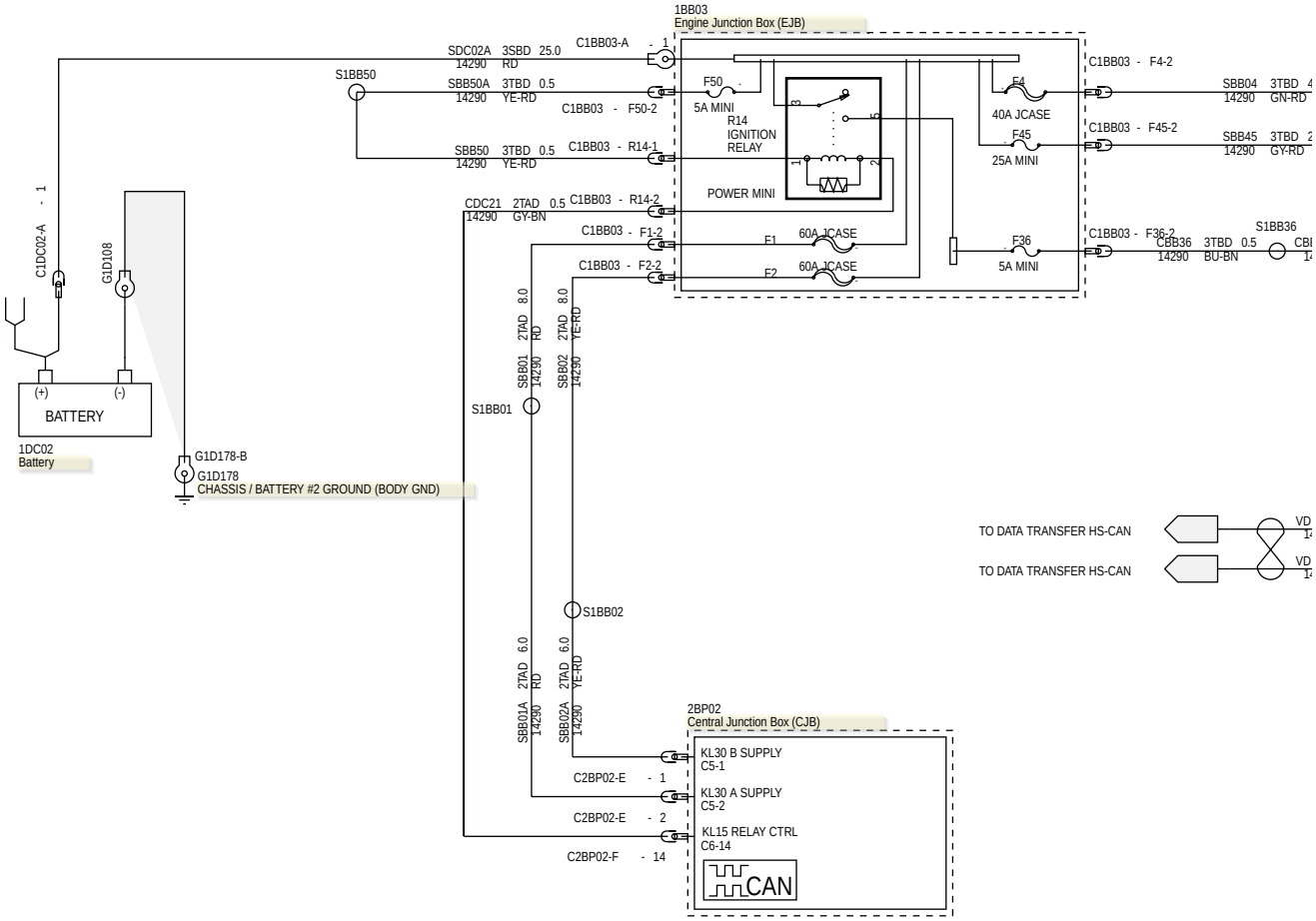
1BB03
Engine Junction Box (EJB)
SDC02A 3SBD 25.0 RD
14290
C1BB03-A - 1
S1BB50
SBB50A 3TBD 0.5 YE-RD
14290
C1BB03 - F50-2
F50
5A MINI
R14
IGNITION
RELAY
SBB50 3TBD 0.5 YE-RD
14290
C1BB03 - R14-1
POWER MINI
CDC21 2TAD 0.5 GY-BN
14290
C1BB03 - R14-2
C1BB03 - F1-2
F1
60A JCASE
C1BB03 - F2-2
F2
60A JCASE
F4
40A JCASE
F45
25A MINI
F36
5A MINI
C1BB03 - F4-2
SBB04 3TBD 4 GN-RD
14290
C1BB03 - F45-2
SBB45 3TBD 2 GY-RD
14290
C1BB03 - F36-2
CBB36 3TBD 0.5 BU-BN
14290
S1BB36
C1DC02-A - 1
G1D108
(+)
(-)
BATTERY
1DC02
Battery
G1D178-B
G1D178
CHASSIS / BATTERY #2 GROUND (BODY GND)
SBB01 2TAD 8.0 RD
14290
SBB02 2TAD 8.0 YE-RD
14290
S1BB01
S1BB02
SBB01A 2TAD 6.0 RD
14290
SBB02A 2TAD 6.0 YE-RD
14290
2BP02
Central Junction Box (CJB)
KL30 B SUPPLY
C5-1
C2BP02-E - 1
KL30 A SUPPLY
C5-2
C2BP02-E - 2
KL15 RELAY CTRL
C6-14
C2BP02-F - 14
CAN
TO DATA TRANSFER HS-CAN
TO DATA TRANSFER HS-CAN

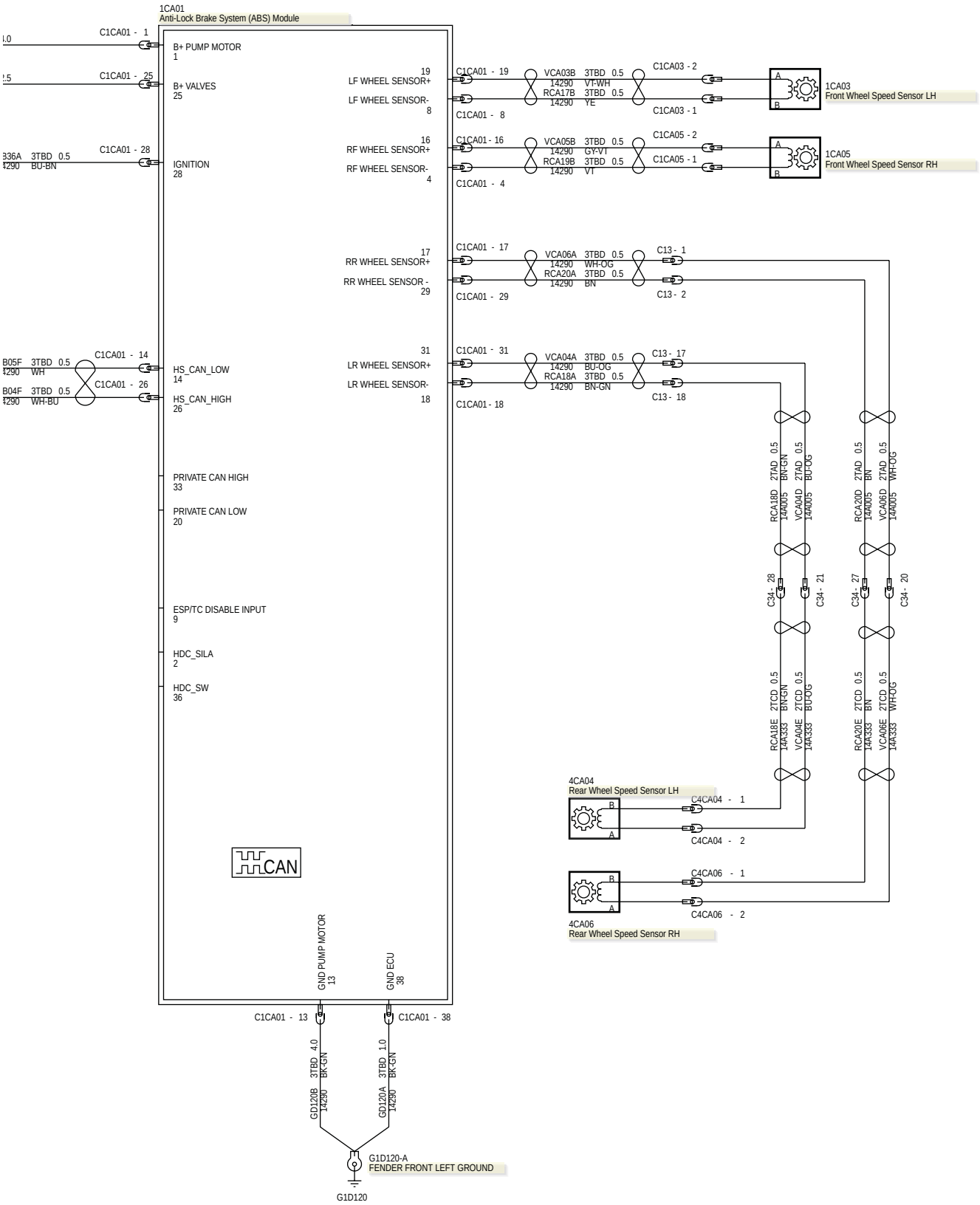
1CA01
Anti-Lock Brake System (ABS) Module
C1CA01 - 1
B+ PUMP MOTOR
1
C1CA01 - 25
B+ VALVES
25
C1CA01 - 28
IGNITION
28
C1CA01 - 14
HS_CAN_LOW
14
C1CA01 - 26
HS_CAN_HIGH
26
PRIVATE CAN HIGH
33
PRIVATE CAN LOW
20
ESP/TC DISABLE INPUT
9
HDC_SILA
2
HDC_SW
36
CAN
19
LF WHEEL SENSOR+
8
LF WHEEL SENSOR-
16
RF WHEEL SENSOR+
4
RF WHEEL SENSOR-
17
RR WHEEL SENSOR+
29
RR WHEEL SENSOR -
31
LR WHEEL SENSOR+
18
LR WHEEL SENSOR-
C1CA01 - 19
C1CA01 - 8
C1CA01 - 16
C1CA01 - 4
C1CA01 - 17
C1CA01 - 29
C1CA01 - 31
C1CA01 - 18
VCA03B 3TBD 0.5 14290 VT-WH
RCA17B 3TBD 0.5 14290 YE
VCA05B 3TBD 0.5 14290 GY-VT
RCA19B 3TBD 0.5 14290 VT
VCA06A 3TBD 0.5 14290 WH-OG
RCA20A 3TBD 0.5 14290 BN
VCA04A 3TBD 0.5 14290 BU-OG
RCA18A 3TBD 0.5 14290 BN-GN
C1CA03 - 2
C1CA03 - 1
C1CA05 - 2
C1CA05 - 1
C13 - 1
C13 - 2
C13 - 17
C13 - 18
1CA03
Front Wheel Speed Sensor LH
1CA05
Front Wheel Speed Sensor RH
RCA18D 2TAD 0.5 14A005 BN-GN
VCA04D 2TAD 0.5 14A005 BU-OG
RCA20D 2TAD 0.5 14A005 BN
VCA06D 2TAD 0.5 14A005 WH-OG
C34 - 28
C34 - 21
C34 - 27
C34 - 20
RCA18E 2TCD 0.5 14A333 BN-GN
VCA04E 2TCD 0.5 14A333 BU-OG
RCA20E 2TCD 0.5 14A333 BN
VCA06E 2TCD 0.5 14A333 WH-OG
4CA04
Rear Wheel Speed Sensor LH
C4CA04 - 1
C4CA04 - 2
C4CA06 - 1
C4CA06 - 2
4CA06
Rear Wheel Speed Sensor RH
GND PUMP MOTOR
13
GND ECU
38
C1CA01 - 13
C1CA01 - 38
GD120B 3TBD 4.0 14290 BK-GN
GD120A 3TBD 1.0 14290 BK-GN
G1D120-A
FENDER FRONT LEFT GROUND
G1D120

Anti-Lock Brake System (ABS) Module (G1403900)

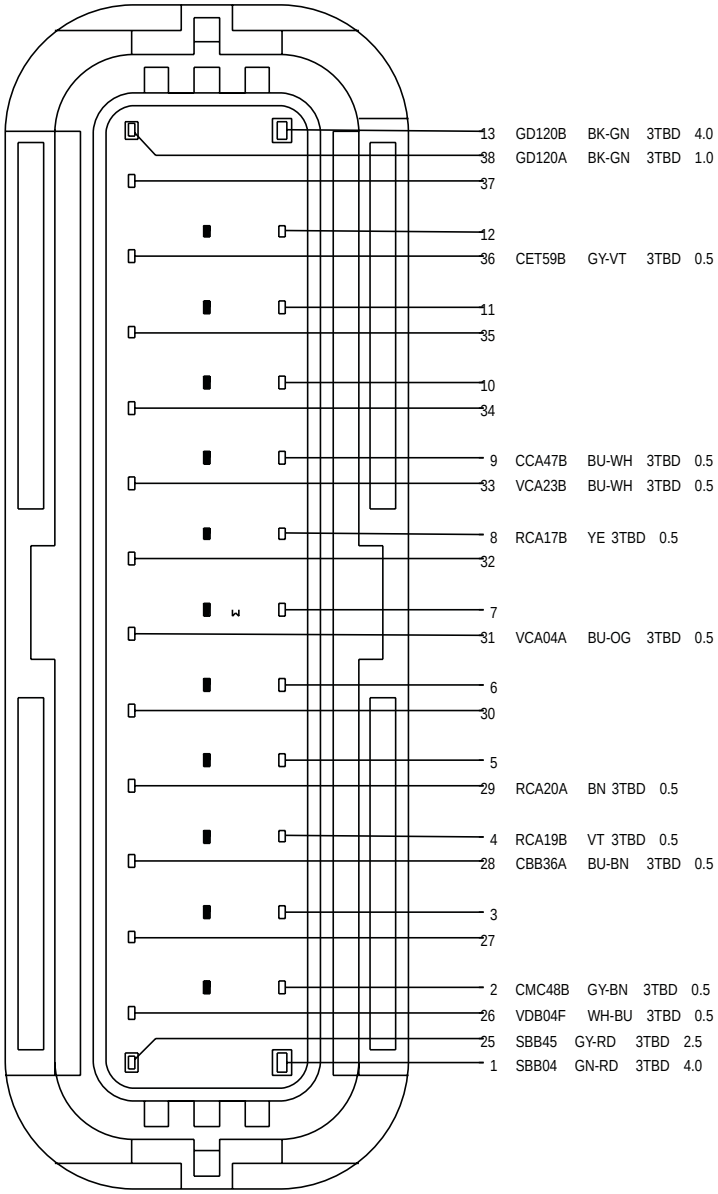

6G9T-14A464-VZA(000)

C1CA01
TO ABS MODULE

HARNESS 14290

Front Wheel Speed Sensor LH (G1403901)

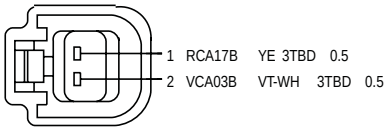

6E5T-14A464-NA

C1CA03
TO FLYLEAD ABS WHEEL SENSOR LF

HARNESS 14290

Front Wheel Speed Sensor RH (G1403902)

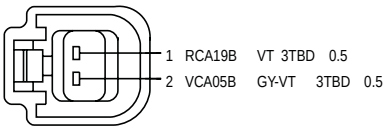

6E5T-14A464-NA
C1CA05
TO FLYLEAD ABS WHEEL SENSOR RF
HARNESS 14290

Rear Wheel Speed Sensor LH (G1403903)

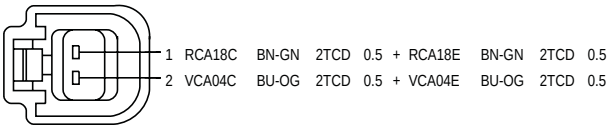

6E5T-14A464-NA
C4CA04
TO FLYLEAD ABS WHEEL SENSOR LR
HARNESS 14A333

Rear Wheel Speed Sensor RH (G1403904)

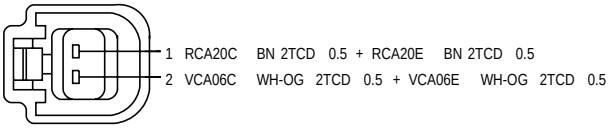

6E5T-14A464-NA
C4CA06
TO FLYLEAD ABS WHEEL SENSOR RR
HARNESS 14A333

SECTION 206-09B Anti-Lock Control - Stability Assist

VEHICLE APPLICATION: 2012.0 Ranger

CONTENTS PAGE

ELECTRICAL SCHEMATICS

Anti-Lock Control - Stability Assist..... 206-09B-2

ELECTRICAL CONNECTORS

Steering Wheel Rotation Sensor..... 206-09B-4
Stability Assist/Traction Control Switch..... 206-09B-4

206-09B-2 Anti-Lock Control - Stability Assist

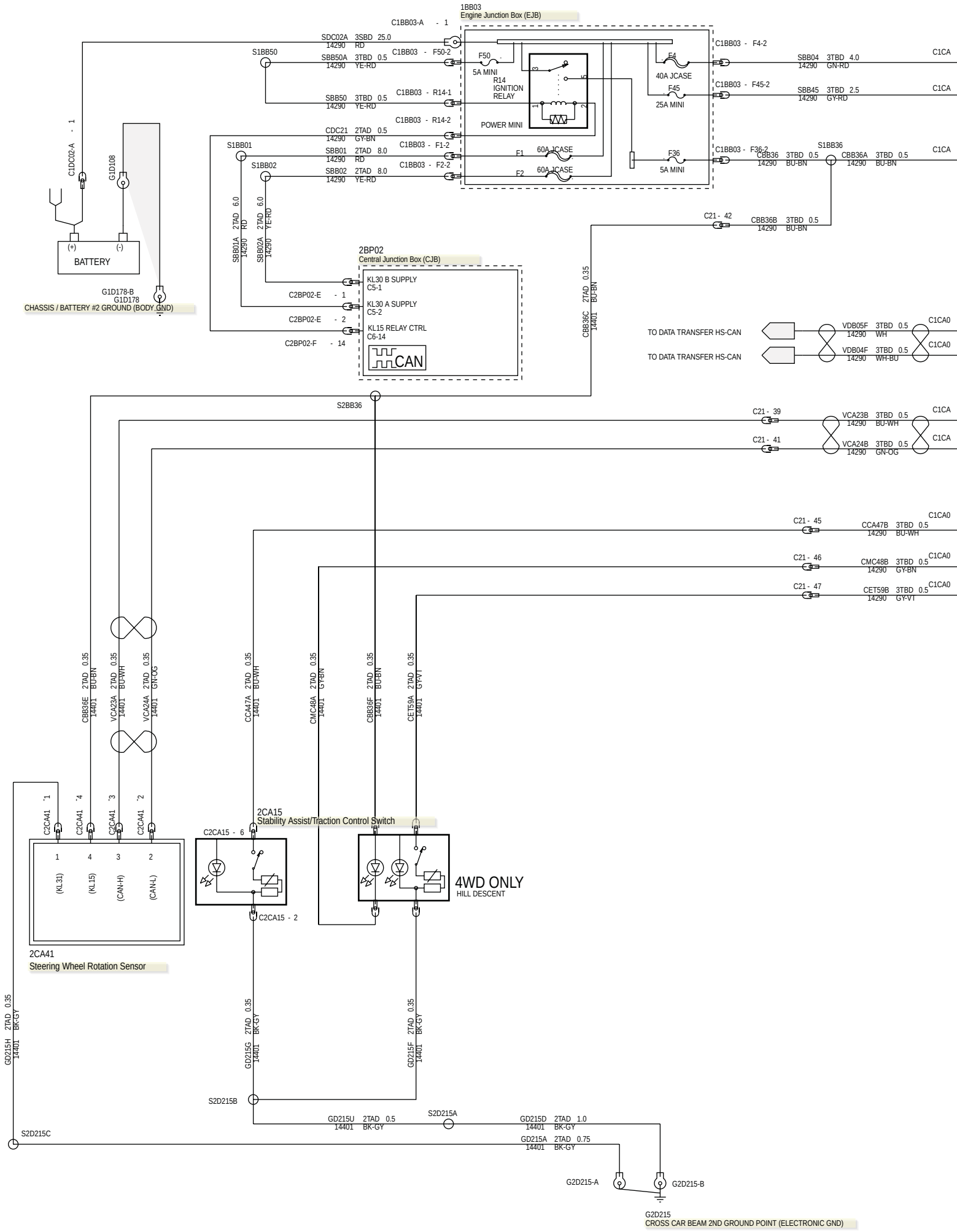

206-09B-3 Anti-Lock Control - Stability Assist

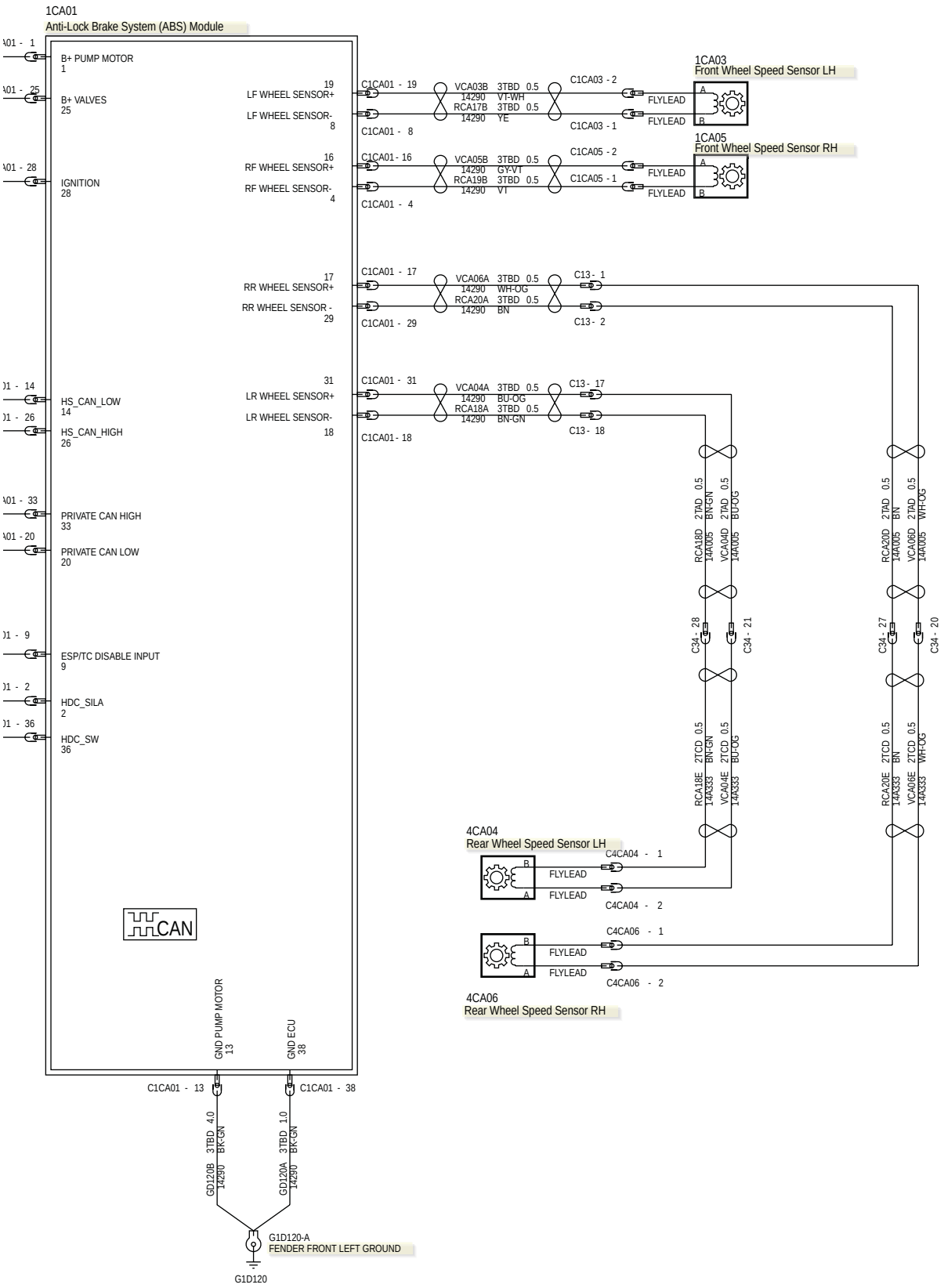

Steering Wheel Rotation Sensor (G1405431)

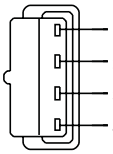

1	GD215H	BK-GY	2TAD	0.35
2	VCA24A	GN-OG	2TAD	0.35
3	VCA23A	BU-WH	2TAD	0.35
4	CBB36E	BU-BN	2TAD	0.35

2R8T-14489-DA

C2CA41
TO STEERING WHEEL ANGLE SENSOR

HARNESS 14401

Stability Assist/Traction Control Switch (G1414539)

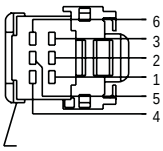

6	CCA47A	BU-WH	2TAD	0.35
3	CLN17G	BN	2TAD	0.35
2	GD215G	BK-GY	2TAD	0.35
1				
5				
4				

4S7T-14489-CA

C2CA15
TO ESP SWITCH

HARNESS 14401

SECTION 206-09C Anti-Lock Brake System (ABS) and Stability Control

VEHICLE APPLICATION: 2012.0 Ranger

CONTENTS PAGE

ELECTRICAL CONNECTORS

Anti-Lock Brake System (ABS) Module..... 206-09C-2
Front Wheel Speed Sensor LH..... 206-09C-2
Front Wheel Speed Sensor RH..... 206-09C-3
Rear Wheel Speed Sensor LH..... 206-09C-3
Rear Wheel Speed Sensor RH..... 206-09C-3
Steering Wheel Rotation Sensor..... 206-09C-3
Stability Assist/Traction Control Switch..... 206-09C-3

Anti-Lock Brake System (ABS) Module (G1425334)

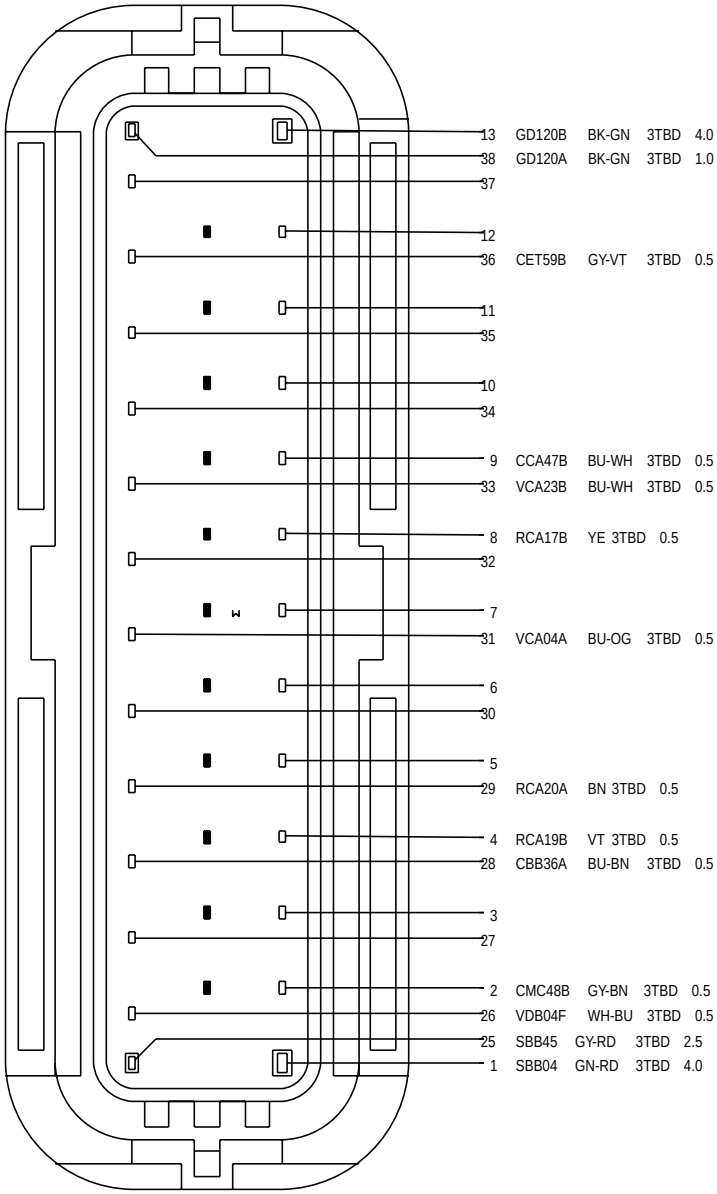

6G9T-14A464-VZA(000)

C1CA01
TO ABS MODULE

HARNESS 14290

Front Wheel Speed Sensor LH (G1425371)

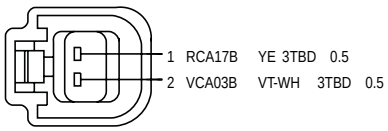

6E5T-14A464-NA

C1CA03
TO FLYLEAD ABS WHEEL SENSOR LF

HARNESS 14290

Front Wheel Speed Sensor RH (G1425372)

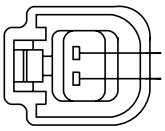

1 RCA19B VT 3TBD 0.5
2 VCA05B GY-VT 3TBD 0.5

6E5T-14A464-NA
C1CA05
TO FLYLEAD ABS WHEEL SENSOR RF
HARNESS 14290

Rear Wheel Speed Sensor LH (G1425373)

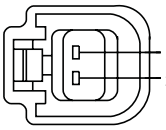

1 RCA18C BN-GN 2TCD 0.5 + RCA18E BN-GN 2TCD 0.5
2 VCA04C BU-OG 2TCD 0.5 + VCA04E BU-OG 2TCD 0.5

6E5T-14A464-NA
C4CA04
TO FLYLEAD ABS WHEEL SENSOR LR
HARNESS 14A333

Rear Wheel Speed Sensor RH (G1425374)

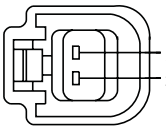

1 RCA20C BN 2TCD 0.5 + RCA20E BN 2TCD 0.5
2 VCA06C WH-OG 2TCD 0.5 + VCA06E WH-OG 2TCD 0.5

6E5T-14A464-NA
C4CA06
TO FLYLEAD ABS WHEEL SENSOR RR
HARNESS 14A333

Steering Wheel Rotation Sensor (G1425375)

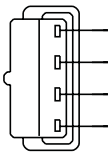

1 GD215H BK-GY 2TAD 0.35
2 VCA24A GN-OG 2TAD 0.35
3 VCA23A BU-WH 2TAD 0.35
4 CBB36E BU-BN 2TAD 0.35

2R8T-14489-DA
C2CA41
TO STEERING WHEEL ANGLE SENSOR
HARNESS 14401

Stability Assist/Traction Control Switch (G1425376)

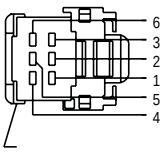

6 CCA47A BU-WH 2TAD 0.35
3 CLN17G BN 2TAD 0.35
2 GD215G BK-GY 2TAD 0.35
1
5
4

4S7T-14489-CA
C2CA15
TO ESP SWITCH
HARNESS 14401

SECTION 211-05 Steering Column Switches

VEHICLE APPLICATION: 2012.0 Ranger

CONTENTS PAGE

ELECTRICAL CONNECTORS

Hazard Flasher Switch..... 211-05-2
Ignition Switch..... 211-05-2
Steering Column Multifunction Switch..... 211-05-2
Steering Column Multifunction Switch — A..... 211-05-2

Hazard Flasher Switch (G1403909)

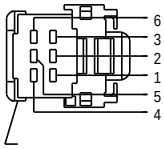

6 CLS32A BN-YE 2TAD 0.35
3 CLN17V BN 2TAD 0.35
2 GD214E BK-BU 2TAD 0.35
1
5 GD214W BK-BU 2TAD 0.35
4

4S7T-14489-CA
C2LS32
TO HAZARD SWITCH
HARNESS 14401

Ignition Switch (G1403910)

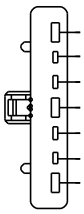

1 CDC33 VT-GN 2TAD 0.5
2
3 CBP78 GY-BU 2TAD 0.35
4 SBP78 BN-RD 2TAD 0.5
5 CDC30 BU-GY 2TAD 0.35
6 CDC32C BN-YE 2TAD 0.35 + CDC32 BN-YE 2TAD 0.35
7 CDC35 BU-WH 2TAD 0.5

98AG-14489-ZGB

C2DC32

TO IGNITION SWITCH

HARNESS 14401

Steering Column Multifunction Switch (G1403911)

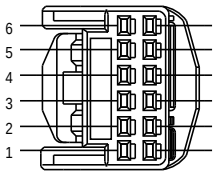

CLF27 GN-BN 2TAD 0.35
GD215AM BK-GY 2TAD 0.35
CLS49 BN-GN 2TAD 0.35
CLS46 GN-BU 2TAD 0.35
CLF57 BN-YE 2TAD 0.35
CLF21 GY-VT 2TAD 0.35

6 5 4 3 2 1

12 11 10 9 8 7

CLF17 WH-OG 2TAD 0.35
CLF18 BU-WH 2TAD 0.35
CLS34A GY 2TAD 0.35
GD215Y BK-GY 2TAD 0.35

C2LS34

MQTZ-DL-12F

TO STALK SWITCHES LAMPS

HARNESS 14401

Steering Column Multifunction Switch—A (G1403913)

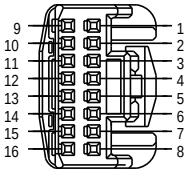

CLF17A WH-OG 2TAD 0.35
CLF18A BU-WH 2TAD 0.35
CLS34 GY 2TAD 0.35
GD215AK BK-GY 2TAD 0.35

9 10 11 12 13 14 15 16

1
2 CLF27A GN-BN 2TAD 0.35
3 GD215AL BK-GY 2TAD 0.35
4 CLS49A BN-GN 2TAD 0.35
5 CLS46A GN-BU 2TAD 0.35
6
7 CLF21A GY-VT 2TAD 0.35
8

C2LS34-A

MQTZ-DL-16F

TO STALK SWITCHES LAMPS (RHD W/O RFOG)

HARNESS 14401

GROUP

3

Powertrain

SECTION TITLE PAGE

Engine
Engine Cooling....303-03
Fuel Charging and Controls2.5L Duratec-HE (122kW/165PS) - MI4....303-04A
Fuel Charging and Controls2.2L Duratorq-TDCi (88kW/120PS) - Puma/2.2L Duratorq-TDCi (96kW/130PS) - Puma/2.2L Duratorq-TDCi (110kW/150PS) - Puma....303-04B
Fuel Charging and Controls3.2L Duratorq-TDCi (148kW/200PS) - Puma....303-04C
Fuel Charging and Controls - Turbocharger....303-04D
Starting System2.5L Duratec-HE (122kW/165PS) - MI4....303-06A
Starting System2.2L Duratorq-TDCi (88kW/120PS) - Puma/2.2L Duratorq-TDCi (96kW/130PS) - Puma/2.2L Duratorq-TDCi (110kW/150PS) - Puma/3.2L Duratorq-TDCi (148kW/200PS) - Puma....303-06B
Engine Ignition2.5L Duratec-HE (122kW/165PS) - MI4....303-07A
Glow Plug System2.2L Duratorq-TDCi (88kW/120PS) - Puma/2.2L Duratorq-TDCi (96kW/130PS) - Puma/2.2L Duratorq-TDCi (110kW/150PS) - Puma....303-07B
Glow Plug System3.2L Duratorq-TDCi (148kW/200PS) - Puma....303-07C
Engine Emission Control2.2L Duratorq-TDCi (88kW/120PS) - Puma/2.2L Duratorq-TDCi (96kW/130PS) - Puma/2.2L Duratorq-TDCi (110kW/150PS) - Puma/3.2L Duratorq-TDCi (148kW/200PS) - Puma....303-08
Evaporative Emissions....303-13
Electronic Engine Controls2.5L Duratec-HE (122kW/165PS) - MI4....303-14A
Electronic Engine Controls2.2L Duratorq-TDCi (88kW/120PS) - Puma/2.2L Duratorq-TDCi (96kW/130PS) - Puma/2.2L Duratorq-TDCi (110kW/150PS) - Puma/3.2L Duratorq-TDCi (148kW/200PS) - Puma....303-14B

Automatic Transmission/Transaxle
Automatic Transmission/TransaxleVehicles With: 6-Speed Automatic Transaxle - 6R80....307-01
Automatic Transmission/Transaxle External Controls....307-05

Manual Transmission/Transaxle, Clutch and Transfer Case
Four-Wheel Drive Systems....308-07

Exhaust System
Exhaust System2.2L Duratorq-TDCi (88kW/120PS) - Puma/2.2L Duratorq-TDCi (96kW/130PS) - Puma/2.2L Duratorq-TDCi (110kW/150PS) - Puma/3.2L Duratorq-TDCi (148kW/200PS) - Puma....309-00

Fuel System - General Information
Fuel System - General Information2.5L Duratec-HE (122kW/165PS) - MI4....310-00A
Fuel System - General Information2.2L Duratorq-TDCi (88kW/120PS) - Puma/2.2L Duratorq-TDCi (96kW/130PS) - Puma/2.2L Duratorq-TDCi (110kW/150PS) - Puma/3.2L Duratorq-TDCi (148kW/200PS) - Puma....310-00B

Fuel Tank and Lines.....310-01A
Fuel Tank and Lines2.2L Duratorq-TDCi (88kW/120PS) - Puma/2.2L Duratorq-TDCi (96kW/130PS) - Puma/2.2L Duratorq-TDCi (110kW/150PS) - Puma/3.2L Duratorq-TDCi (148kW/200PS) - Puma.....310-01B
Speed Control.....310-03

SECTION 303-03 Engine Cooling — 2.5L Duratec-HE (122kW/165PS) - MI4

VEHICLE APPLICATION: 2012.0 Ranger

CONTENTS PAGE

ELECTRICAL CONNECTORS

Cooling Fan Motor..... 303-03-2

Cooling Fan Motor (G1403923)

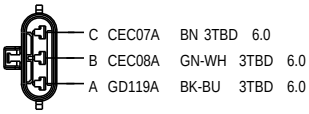

1212-4685

C1EC01
TO FLYLEAD ELECTRIC COOLING FAN ASSY

HARNESS 14290

SECTION 303-04A Fuel Charging and Controls — 2.5L

Duratec-HE (122kW/165PS) - MI4

VEHICLE APPLICATION: 2012.0 Ranger

CONTENTS PAGE

ELECTRICAL CONNECTORS

Fuel Injector 1 — A..... 303-04A-2
Fuel Injector 2 — A..... 303-04A-2
Fuel Injector 3 — A..... 303-04A-2
Fuel Injector 4 — A..... 303-04A-2

Fuel Injector 1—A (G1403958)

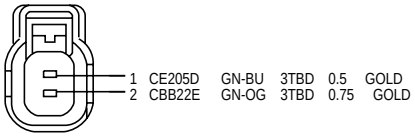

4W7T-14A464-BB

C1E205-A
TO FUEL INJECTOR1 PETROL

HARNESS 12B637

Fuel Injector 2—A (G1403959)

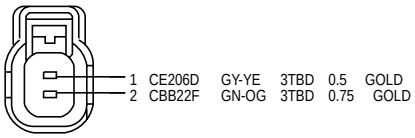

4W7T-14A464-BB

C1E206-A
TO FUEL INJECTOR2 PETROL

HARNESS 12B637

Fuel Injector 3—A (G1403960)

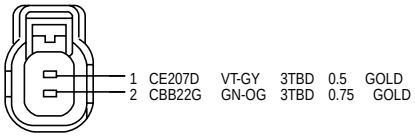

4W7T-14A464-BB

C1E207-A
TO FUEL INJECTOR3 PETROL

HARNESS 12B637

Fuel Injector 4—A (G1403961)

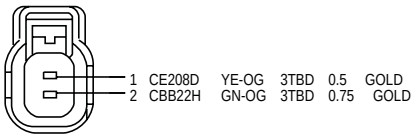

4W7T-14A464-BB

C1E208-A
TO FUEL INJECTOR4 PETROL

HARNESS 12B637

SECTION 303-04B Fuel Charging and Controls — 2.2L

Duratorq-TDCi (Puma) Diesel

VEHICLE APPLICATION: 2012.0 Ranger

CONTENTS PAGE

ELECTRICAL CONNECTORS

Fuel Injector 1 ..... 303-04B-2
Fuel Injector 2 ..... 303-04B-2
Fuel Injector 3 ..... 303-04B-2
Fuel Injector 4 ..... 303-04B-2
Fuel Metering Valve 303-04B-3

Fuel Injector 1 (G1403932)

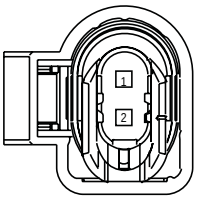

1 CE205A GN-BU 3TBD 1.0 SILVER

2 RE205A YE-BU 3TBD 1.0 SILVER

BU5T-14A464-BBA

C1E205
TO FUEL INJECTOR1 DIESEL

HARNESS 12B637

Fuel Injector 2 (G1403933)

PIN 1 => CE206A GY-YE 1.0 3TBD
PIN 2 => RE206A BU-OG 1.0 3TBD

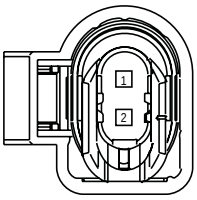

1 CE206AA GY-YE 3TBD 1.0 SILVER

2 RE206AA BU-OG 3TBD 1.0 SILVER

BU5T-14A464-BBA

C1E206
TO FUEL INJECTOR2 DIESEL

HARNESS 12B637

Fuel Injector 3 (G1403934)

PIN 1 => CE207A VT-GY 1.0 3TBD
PIN 2 => RE207 GN-VT 1.0 3TBD

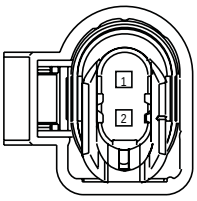

1 CE207AA VT-GY 3TBD 1.0 SILVER

2 RE207A GN-VT 3TBD 1.0 SILVER

BU5T-14A464-BBA

C1E207
TO FUEL INJECTOR3 DIESEL

HARNESS 12B637

Fuel Injector 4 (G1403935)

PIN 1 => CE208A YE-OG 1.0 3TBD
PIN 2 => RE208A BU 1.0 3TBD

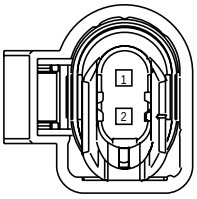

1 CE208AA YE-OG 3TBD 1.0 SILVER

2 RE208AA BU 3TBD 1.0 SILVER

BU5T-14A464-BBA

C1E208
TO FUEL INJECTOR4 DIESEL

HARNESS 12B637

Fuel Metering Valve (G1403936)

PIN 1 => CBB25T WH-OG 0.75 3TBD

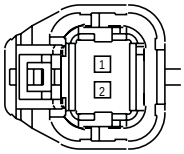

1 CBB25R WH-OG 3TBD 0.75 + CBB25T WH-OG 3TBD 0.75 GOLD
2 VE350A GY 3TBD 0.75 GOLD

AU5T-14A464-BBA

C1E518
TO VOLUMETRIC CTRL VALVE

HARNESS 12B637

SECTION 303-04C Fuel Charging and Controls — 3.2L

Duratorq-TDCi (Puma) Diesel

VEHICLE APPLICATION: 2012.0 Ranger

CONTENTS PAGE

ELECTRICAL CONNECTORS

Fuel Injector 1 ..... 303-04C-2
Fuel Injector 2 ..... 303-04C-2
Fuel Injector 3 ..... 303-04C-2
Fuel Injector 4 ..... 303-04C-2
Fuel Injector 5 ..... 303-04C-3
Fuel Metering Valve 303-04C-3

Fuel Injector 1 (G1403932)

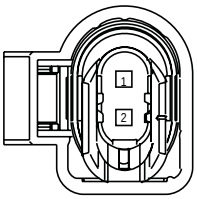

1 CE205A GN-BU 3TBD 1.0 SILVER

2 RE205A YE-BU 3TBD 1.0 SILVER

BU5T-14A464-BBA

C1E205
TO FUEL INJECTOR1 DIESEL
HARNESS 12B637

Fuel Injector 2 (G1403933)

PIN 1 => CE206A GY-YE 1.0 3TBD
PIN 2 => RE206A BU-OG 1.0 3TBD

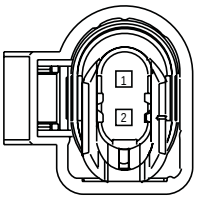

1 CE206AA GY-YE 3TBD 1.0 SILVER

2 RE206AA BU-OG 3TBD 1.0 SILVER

BU5T-14A464-BBA

C1E206
TO FUEL INJECTOR2 DIESEL
HARNESS 12B637

Fuel Injector 3 (G1403934)

PIN 1 => CE207A VT-GY 1.0 3TBD
PIN 2 => RE207 GN-VT 1.0 3TBD

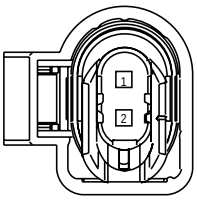

1 CE207AA VT-GY 3TBD 1.0 SILVER

2 RE207A GN-VT 3TBD 1.0 SILVER

BU5T-14A464-BBA

C1E207
TO FUEL INJECTOR3 DIESEL
HARNESS 12B637

Fuel Injector 4 (G1403935)

PIN 1 => CE208A YE-OG 1.0 3TBD
PIN 2 => RE208A BU 1.0 3TBD

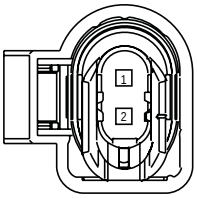

1 CE208AA YE-OG 3TBD 1.0 SILVER

2 RE208AA BU 3TBD 1.0 SILVER

BU5T-14A464-BBA

C1E208
TO FUEL INJECTOR4 DIESEL
HARNESS 12B637

Fuel Injector 5 (G1403947)

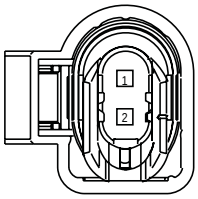

1 CE209A BN 3TBD 1.0 SILVER

2 RE209A WH-GN 3TBD 1.0 SILVER

BU5T-14A464-BBA

C1E209
TO FUEL INJECTOR5 DIESEL

HARNESS 12B637

Fuel Metering Valve (G1403936)

PIN 1 => CBB25T WH-OG 0.75 3TBD

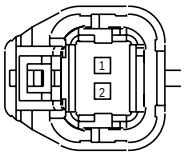

1 CBB25R WH-OG 3TBD 0.75 + CBB25T WH-OG 3TBD 0.75 GOLD
2 VE350A GY 3TBD 0.75 GOLD

AU5T-14A464-BBA

C1E518
TO VOLUMETRIC CTRL VALVE

HARNESS 12B637

SECTION 303-04D Fuel Charging and Controls - Turbocharger

VEHICLE APPLICATION: 2012.0 Ranger

CONTENTS PAGE

ELECTRICAL CONNECTORS

Turbocharger Variable Vane Actuator..... 303-04D-2
Wastegate Position Sensor..... 303-04D-2

Turbocharger Variable Vane Actuator (G1408840)

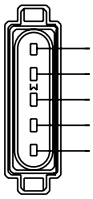

1	CE431B	WH	3SCD	0.75
2	CE432A	BU	3SCD	0.75
3	RE437A	GY	3SCD	0.75
4	VE837A	WH	3SCD	0.75
5	LE437A	YE	3SCD	0.75

6R8Q-14A464-AA

C1E432
TO VNT ACTUATOR & FEEDBACK SENSOR

HARNESS 12B637

Wastegate Position Sensor (G1425325)

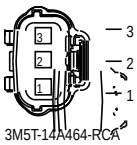

3	LE437AA	YE	3SCD	0.75
2	RE437AA	GY	3SCD	0.75
1	VE836A	VT-GN	3SCD	0.75

3M5T-14A464-RCA

C1E836
TO FIXED GEOMETRY TURBO

HARNESS 12B637

SECTION 303-06A Starting System — 2.5L Duratec-HE (122kW/165PS) - MI4

VEHICLE APPLICATION: 2012.0 Ranger

CONTENTS PAGE

ELECTRICAL SCHEMATICS

Starting System — Vehicles With: 5-Speed Manual Transmission - MT75..... 303-06A-2

ELECTRICAL CONNECTORS

Starter Motor — A..... 303-06A-4
Starter Motor — B..... 303-06A-4

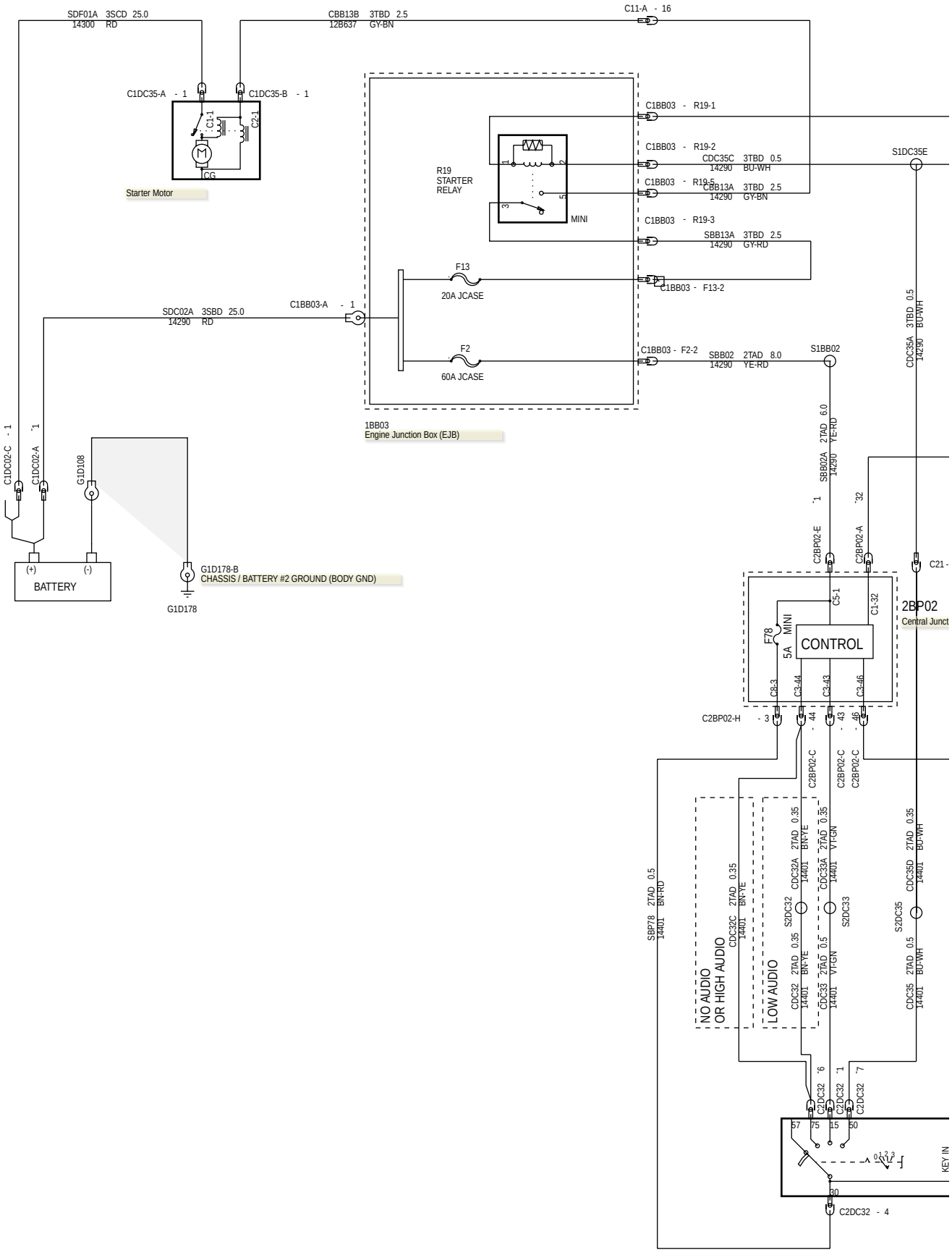
SDF01A 3SCD 25.0
14300 RD
CBB13B 3TBD 2.5
12B637 GY-BN
C11-A - 16
C1DC35-A - 1
C1DC35-B - 1
C1-1
C2-1
CG
Starter Motor
R19
STARTER
RELAY
MINI
C1BB03 - R19-1
C1BB03 - R19-2
CDC35C 3TBD 0.5
14290 BU-WH
S1DC35E
C1BB03 - R19-5
CBB13A 3TBD 2.5
14290 GY-BN
C1BB03 - R19-3
SBB13A 3TBD 2.5
14290 GY-RD
F13
20A JCASE
C1BB03 - F13-2
SDC02A 3SBD 25.0
14290 RD
C1BB03-A - 1
F2
60A JCASE
C1BB03 - F2-2
SBB02 2TAD 8.0
14290 YE-RD
S1BB02
CDC35A 3TBD 0.5
14290 BU-WH
1BB03
Engine Junction Box (EJB)
C1DC02-C - 1
C1DC02-A - 1
G1D108
BATTERY
(+)
(-)
G1D178-B
CHASSIS / BATTERY #2 GROUND (BODY GND)
G1D178
SBB02A 2TAD 6.0
14290 YE-RD
C2BP02-E - 1
C2BP02-A - 32
C21 -
2BP02
Central Junct
F78
5A MINI
CONTROL
C5-1
C1-32
C8-3
C3-44
C3-43
C3-46
C2BP02-H - 3
C2BP02-C - 44
C2BP02-C - 43
C2BP02-C - 46
SBP78 2TAD 0.5
14401 BN-RD
NO AUDIO
OR HIGH AUDIO
CDC32C 2TAD 0.35
14401 BN-YE
LOW AUDIO
CDC32A 2TAD 0.35
14401 BN-YE
CDC33A 2TAD 0.35
14401 VT-GN
S2DC32
S2DC33
CDC32 2TAD 0.35
14401 BN-YE
CDC33 2TAD 0.5
14401 VT-GN
CDC35D 2TAD 0.35
14401 BU-WH
S2DC35
CDC35 2TAD 0.5
14401 BU-WH
C2DC32 - 6
C2DC32 - 1
C2DC32 - 7
57
75
15
50
30
C2DC32 - 4
KEY IN

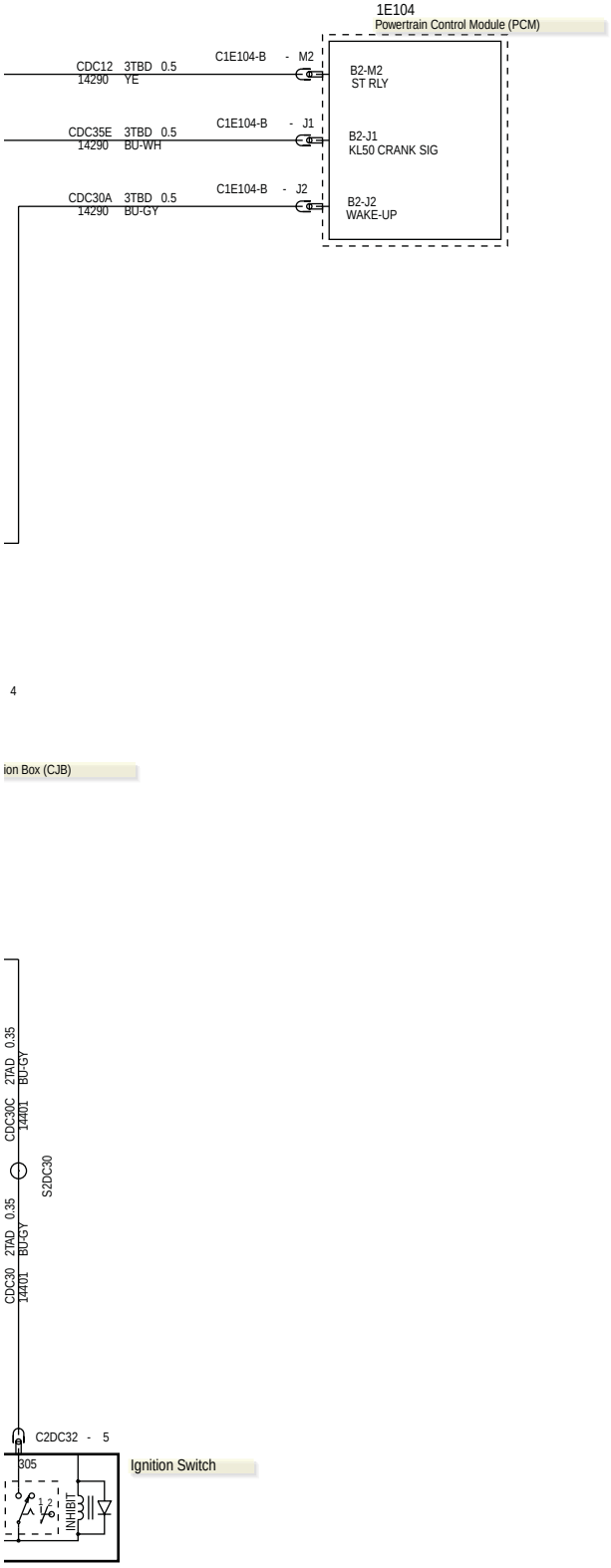
1E104
Powertrain Control Module (PCM)
CDC12 3TBD 0.5
14290 YE
C1E104-B - M2
B2-M2
ST RLY
CDC35E 3TBD 0.5
14290 BU-WH
C1E104-B - J1
B2-J1
KL50 CRANK SIG
CDC30A 3TBD 0.5
14290 BU-GY
C1E104-B - J2
B2-J2
WAKE-UP
4
ion Box (CJB)
CDC30C 27AD 0.35
14401 BU-GY
S2DC30
CDC30 27AD 0.35
14401 BU-GY
C2DC32 - 5
305
Ignition Switch
1 2
INHIBIT

Starter Motor—A (G1403964)

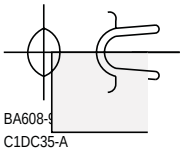

1 SDF01A RD 3SCD 25.0 + SDF01B RD 3SCD 35.0

BA608-9
C1DC35-A
TO STARTER MOTOR
HARNESS 14300

Starter Motor—B (G1403965)

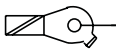

1 CBB13C GY-BN 3TBD 2.5 + CBB13B GY-BN 3TBD 2.5

XW4T-14463-MC

C1DC35-B
TO STARTER MOTOR

HARNESS 12B637

SECTION 303-06B Starting System — 2.2L Duratorq-TDCi (Puma) Diesel/3.2L Duratorq-TDCi (Puma) Diesel

VEHICLE APPLICATION: 2012.0 Ranger

CONTENTS PAGE

ELECTRICAL SCHEMATICS

Starting System — Vehicles With: 5-Speed Manual Transmission - MT75/6-Speed Manual Transmission - MT82 ..... 303-06B-2
Starting System — Vehicles With: 6-Speed Automatic Transaxle - 6R80, LHD 4WD/LHD RWD 303-06B-4
Starting System — Vehicles With: 6-Speed Automatic Transaxle - 6R80, RHD 4WD/RHD RWD 303-06B-6

ELECTRICAL CONNECTORS

Starter Motor — A 303-06B-8
Starter Motor — B 303-06B-8

303-06B-2 Starting System—Vehicles With: 5-Speed Manual Transmission - MT75/6-Speed Manual Transmission - MT82

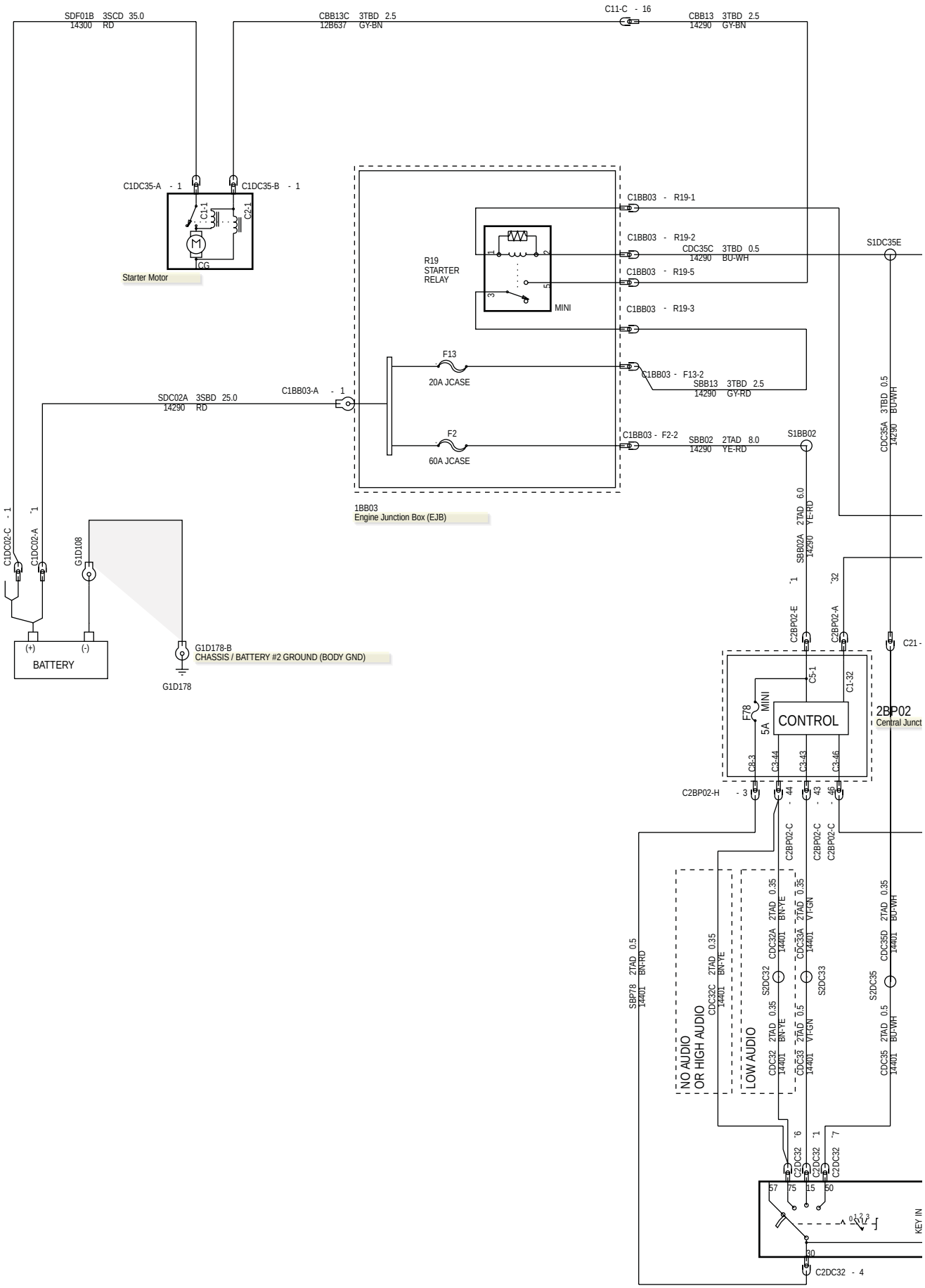

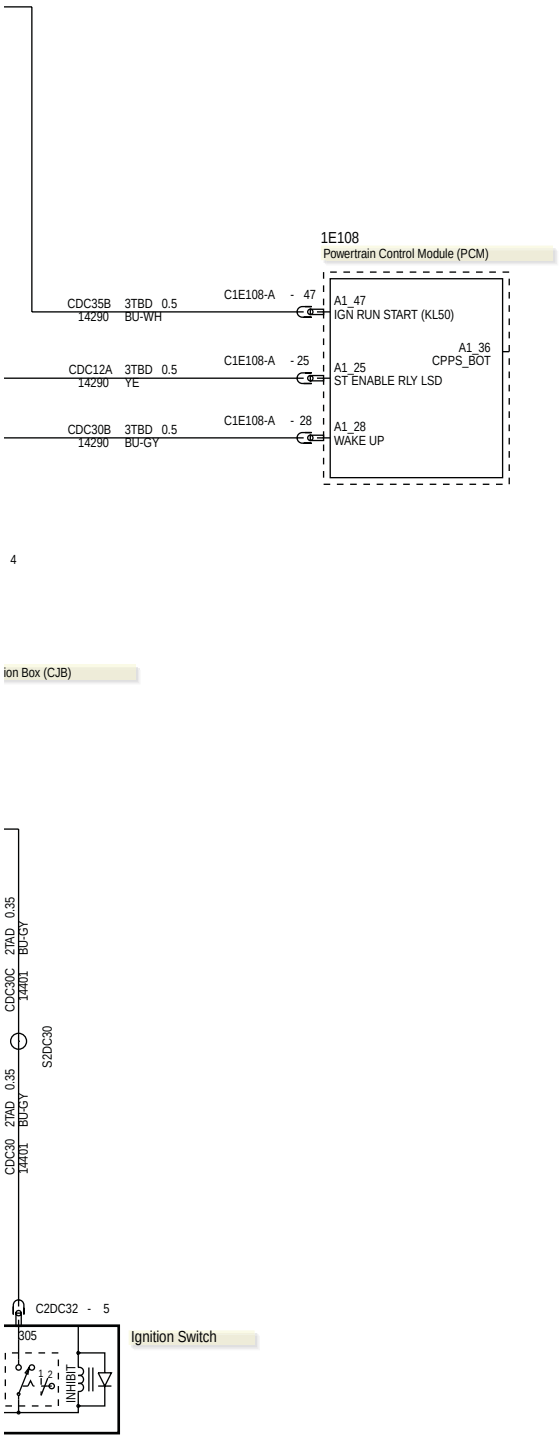
1E108
Powertrain Control Module (PCM)
CDC35B 3TBD 0.5
14290 BU-WH
C1E108-A - 47
A1_47
IGN RUN START (KL50)
A1_36
CPPS_BOT
CDC12A 3TBD 0.5
14290 YE
C1E108-A - 25
A1_25
ST ENABLE RLY LSD
CDC30B 3TBD 0.5
14290 BU-GY
C1E108-A - 28
A1_28
WAKE UP
4
ion Box (CJB)
CDC30C 27AD 0.35
14401 BU-GY
S2DC30
CDC30 27AD 0.35
14401 BU-GY
C2DC32 - 5
305
Ignition Switch
1 2
INHIBIT

303-06B-4 Starting System—Vehicles With: 6-Speed Automatic Transaxle - 6R80, LHD 4WD/LHD RWD

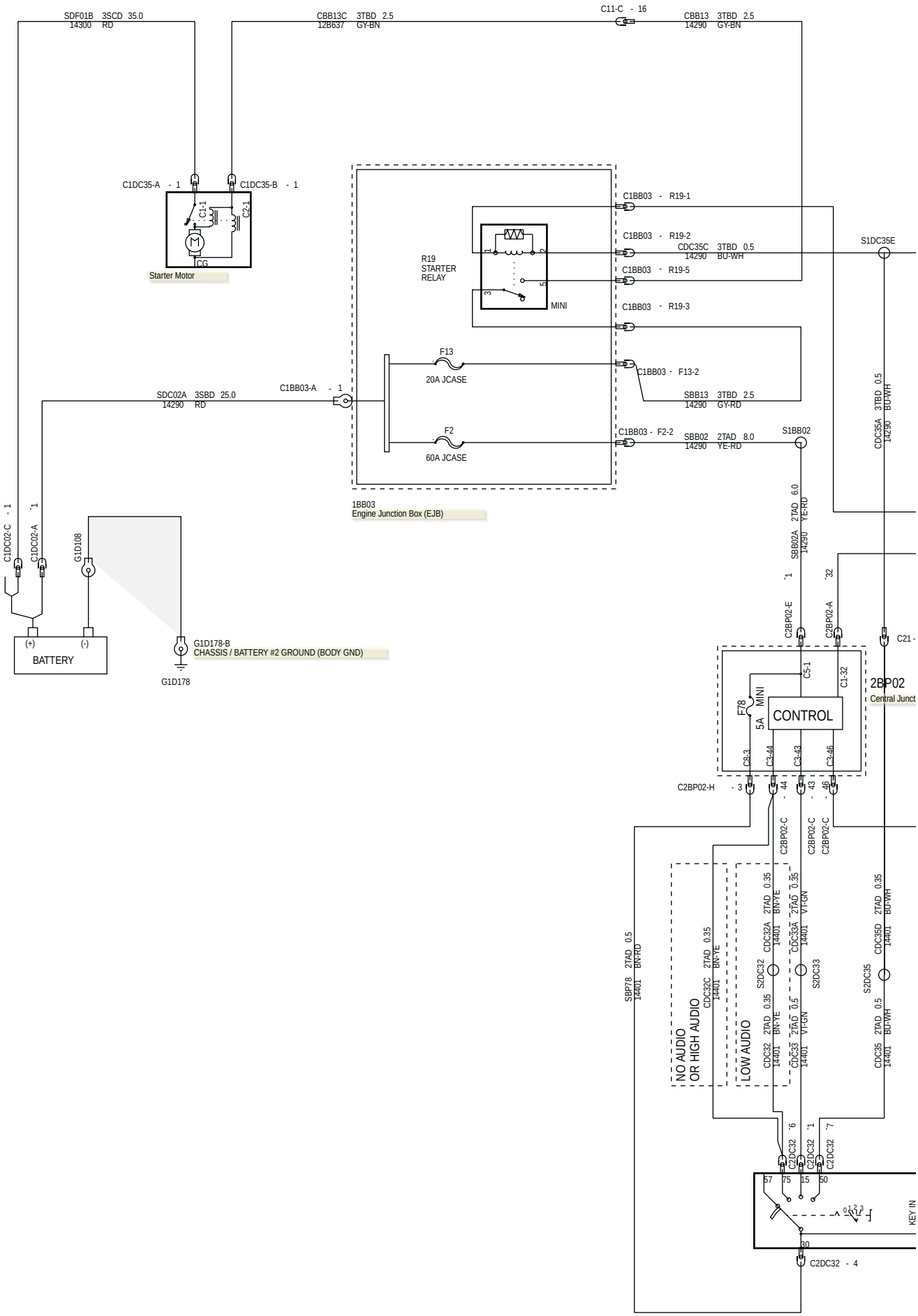

303-06B-5 Starting System—Vehicles With: 6-Speed Automatic Transaxle - 6R80, LHD 4WD/LHD RWD

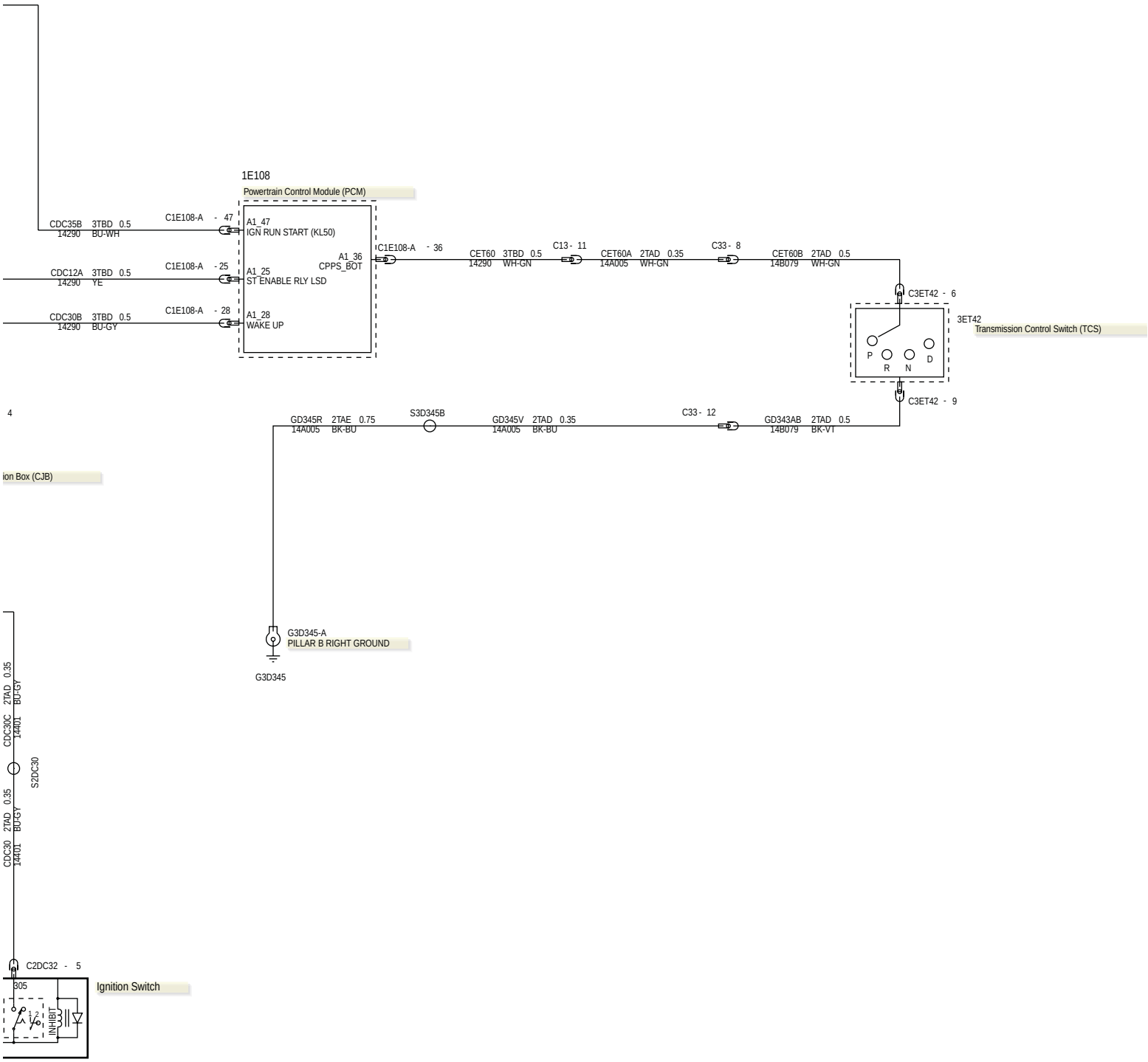

303-06B-6 Starting System—Vehicles With: 6-Speed Automatic Transaxle - 6R80, RHD 4WD/RHD RWD

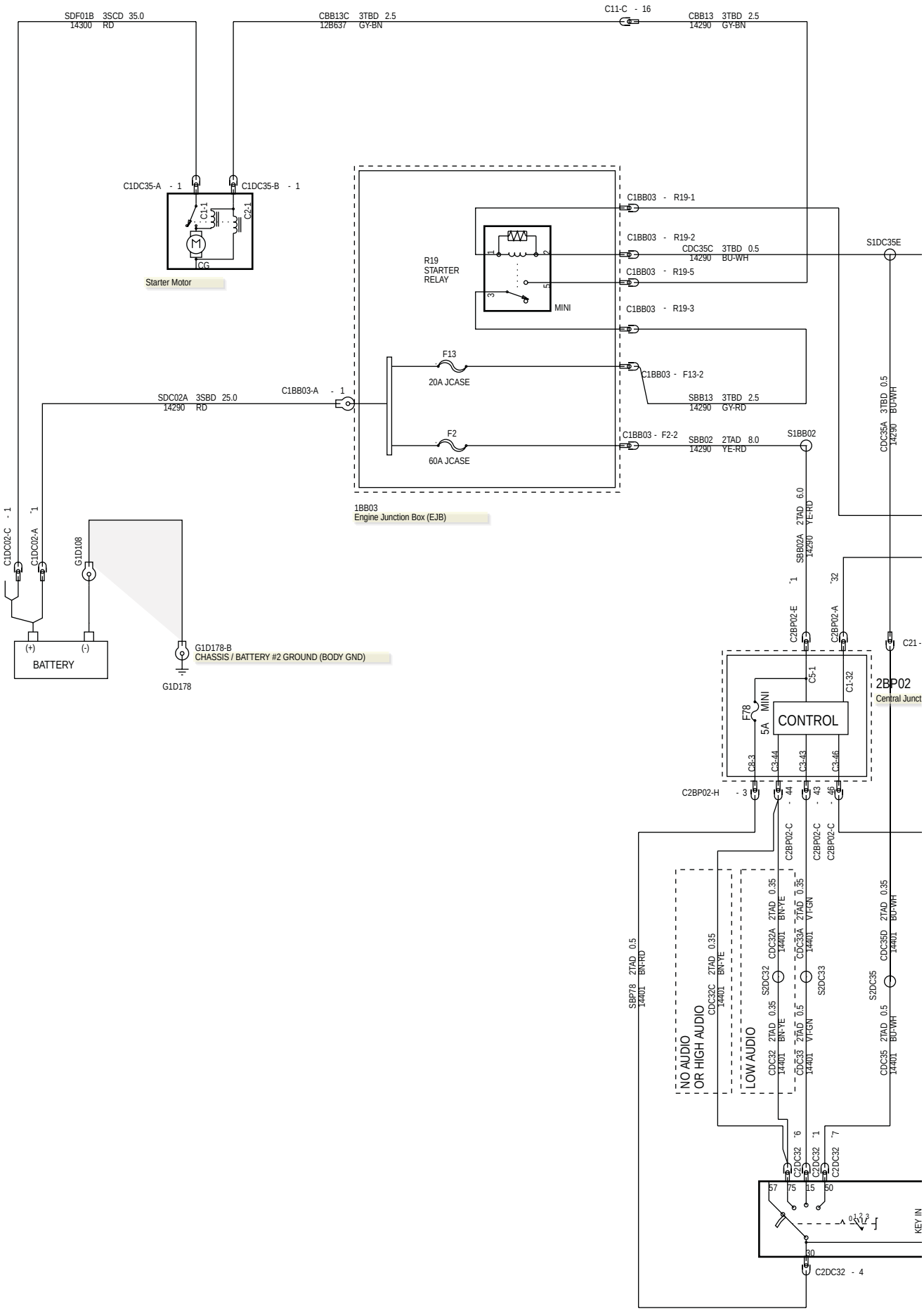

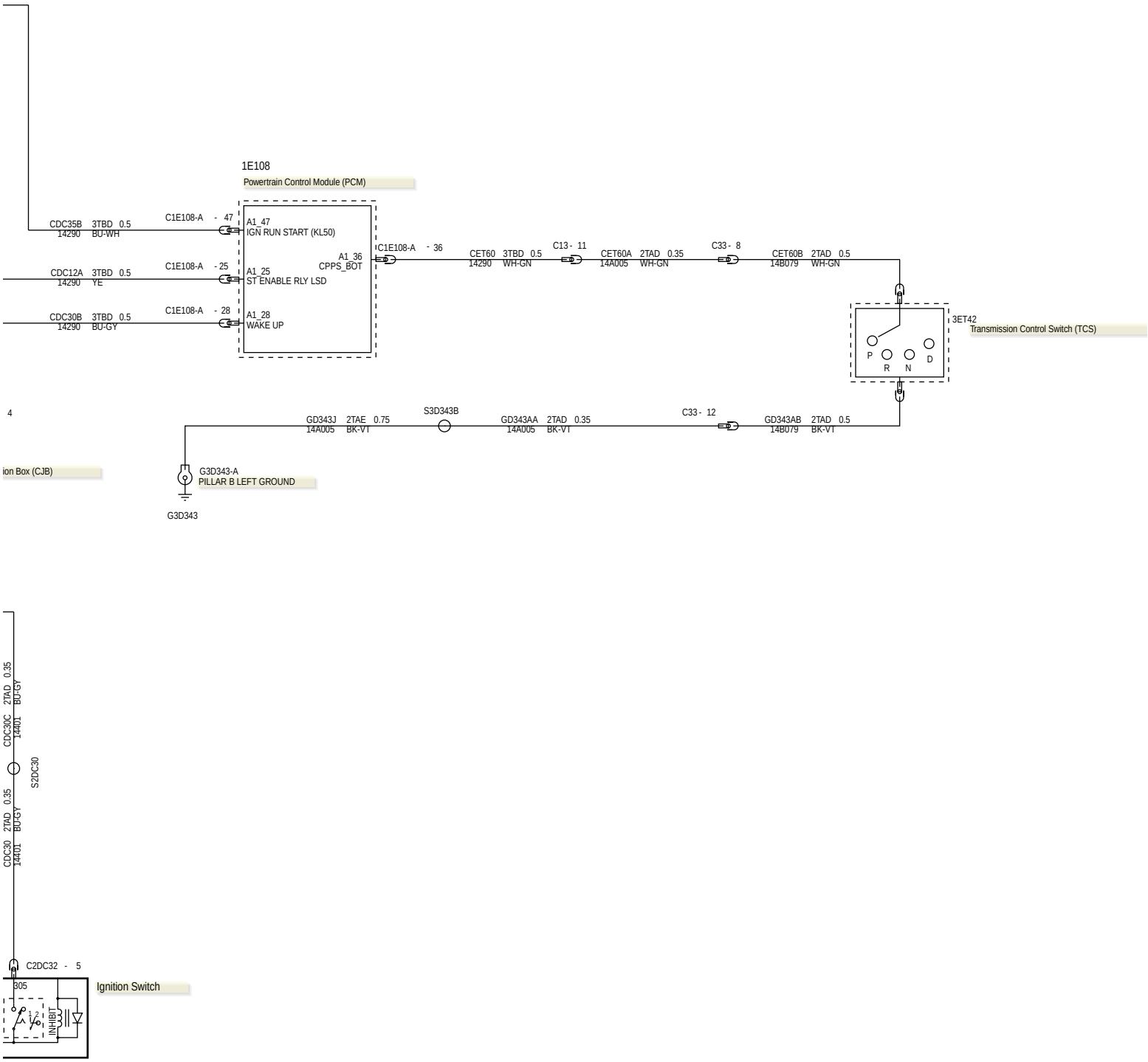
1E108
Powertrain Control Module (PCM)
CDC35B 3TBD 0.5
14290 BU-WH
C1E108-A - 47
A1_47
IGN RUN START (KL50)
CDC12A 3TBD 0.5
14290 YE
C1E108-A - 25
A1_25
ST ENABLE RLY LSD
A1_36
CPPS_BOT
CDC30B 3TBD 0.5
14290 BU-GY
C1E108-A - 28
A1_28
WAKE UP
C1E108-A - 36
CET60 3TBD 0.5
14290 WH-GN
C13 - 11
CET60A 2TAD 0.35
14A005 WH-GN
C33 - 8
CET60B 2TAD 0.5
14B079 WH-GN
3ET42
Transmission Control Switch (TCS)
P
R
N
D
4
GD343J 2TAE 0.75
14A005 BK-VT
S3D343B
GD343AA 2TAD 0.35
14A005 BK-VT
C33 - 12
GD343AB 2TAD 0.5
14B079 BK-VT
ion Box (CJB)
G3D343-A
PILLAR B LEFT GROUND
G3D343
CDC30C 2TAD 0.35
14401 BU-GY
S2DC30
CDC30 2TAD 0.35
14401 BU-GY
C2DC32 - 5
305
Ignition Switch
INHIBIT

Starter Motor—A (G1403964)

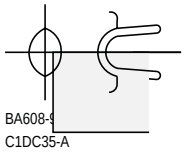

1 SDF01A RD 3SCD 25.0 + SDF01B RD 3SCD 35.0

BA608-9
C1DC35-A
TO STARTER MOTOR
HARNESS 14300

Starter Motor—B (G1403965)

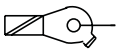

1 CBB13C GY-BN 3TBD 2.5 + CBB13B GY-BN 3TBD 2.5

XW4T-14463-MC
C1DC35-B
TO STARTER MOTOR
HARNESS 12B637

SECTION 303-07A Engine Ignition — 2.5L Duratec-HE (122kW/165PS) - MI4

VEHICLE APPLICATION: 2012.0 Ranger

CONTENTS PAGE

ELECTRICAL CONNECTORS

Ignition Coil-On-Plug 1 ..... 303-07A-2
Ignition Coil-On-Plug 2 ..... 303-07A-2
Ignition Coil-On-Plug 3 ..... 303-07A-2
Ignition Coil-On-Plug 4 ..... 303-07A-2

Ignition Coil-On-Plug 1 (G1403973)

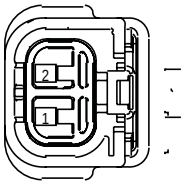

2	CBB25B	WH-OG	3TBD	1.0	GOLD
1	CE303A	WH-VT	3TBD	1.5	GOLD

AU5T-14A464-SCB
C1E303
TO IGNITION COIL1
HARNESS 12B637

Ignition Coil-On-Plug 2 (G1403974)

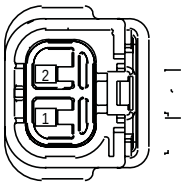

2	CBB25C	WH-OG	3TBD	1.0	GOLD
1	CE304A	YE-BU	3TBD	1.5	GOLD

AU5T-14A464-SCB
C1E304
TO IGNITION COIL2
HARNESS 12B637

Ignition Coil-On-Plug 3 (G1403975)

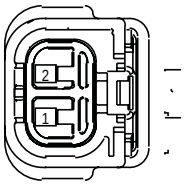

2	CBB25D	WH-OG	3TBD	1.0	GOLD
1	CE305A	BU-OG	3TBD	1.5	GOLD

AU5T-14A464-SCB
C1E305
TO IGNITION COIL3
HARNESS 12B637

Ignition Coil-On-Plug 4 (G1403976)

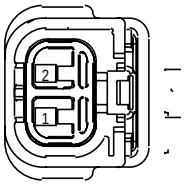

2	CBB25E	WH-OG	3TBD	1.0	GOLD
1	CE306A	GN-VT	3TBD	1.5	GOLD

AU5T-14A464-SCB
C1E306
TO IGNITION COIL4
HARNESS 12B637

SECTION 303-07B Glow Plug System — 2.2L Duratorq-TDCi (Puma) Diesel

VEHICLE APPLICATION: 2012.0 Ranger

CONTENTS PAGE

ELECTRICAL CONNECTORS

Glow Plug 1 ..... 303-07B-2
Glow Plug 2 ..... 303-07B-2
Glow Plug 3 ..... 303-07B-2
Glow Plug 4 ..... 303-07B-2
Glow Plug Module 303-07B-3
Glow Plug Module — B 303-07B-3

Glow Plug 1 (G1403983)

PIN 1 => CE243 GY-VT 2.5 3TBD

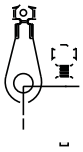

1 CE243A GY-VT 3TBD 2.5

3201515F6
C1E243
TO PRE GLOW HEATER1
HARNESS 6M091

Glow Plug 2 (G1403984)

PIN 1 => CE244 BU-BN 2.5 3TBD

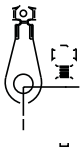

1 CE244A BU-BN 3TBD 2.5

3201515F6
C1E244
TO PRE GLOW HEATER2
HARNESS 6M091

Glow Plug 3 (G1403985)

PIN 1 => CE245 VT-WH 2.5 3TBD

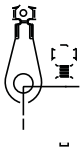

1 CE245A VT-WH 3TBD 2.5

3201515F6
C1E245
TO PRE GLOW HEATER3
HARNESS 6M091

Glow Plug 4 (G1403986)

PIN 1 => CE246 YE-BU 2.5 3TBD

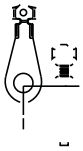

1 CE246A YE-BU 3TBD 2.5

3201515F6
C1E246
TO PRE GLOW HEATER4
HARNESS 6M091

Glow Plug Module (G1403987)

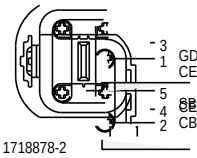

3				
1	GD122X	BK	3TBD	0.5
	CE513B	VT-GN	3TBD	0.5
5	CBB26C	BU-RD	3TBD	0.5
4	CE513B	BN-VT	3TBD	0.5
2	CBB25L	WH-OG	3TBD	0.5

1718878-2

C1E513

TO GLOW PLUG CONTROL MODULE I4

HARNESS 70G239

Glow Plug Module—B (G1403988)

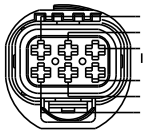

1	CE244	BU-BN	3TBD	2.5
2	(CLOSED)			
3	CE243	GY-VT	3TBD	2.5
6	CE246	YE-BU	3TBD	2.5
5	(CLOSED)			
4	CE245	VT-WH	3TBD	2.5

1452327-2

C1E513-B

TO GLOW PLUG CONTROL MODULE I4(GP)

HARNESS 6M091

SECTION 303-07C Glow Plug System — 3.2L Duratorq-TDCi (Puma) Diesel

VEHICLE APPLICATION: 2012.0 Ranger

CONTENTS PAGE

ELECTRICAL CONNECTORS

Glow Plug 1..... 303-07C-2
Glow Plug 2..... 303-07C-2
Glow Plug 3..... 303-07C-2
Glow Plug 4..... 303-07C-2
Glow Plug 5..... 303-07C-3
Glow Plug Module — A..... 303-07C-3
Glow Plug Module — C..... 303-07C-3

Glow Plug 1 (G1403983)

PIN 1 => CE243 GY-VT 2.5 3TBD

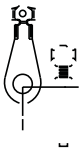

1 CE243A GY-VT 3TBD 2.5

3201515F6
C1E243
TO PRE GLOW HEATER1
HARNESS 6M091

Glow Plug 2 (G1403984)

PIN 1 => CE244 BU-BN 2.5 3TBD

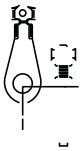

1 CE244A BU-BN 3TBD 2.5

3201515F6
C1E244
TO PRE GLOW HEATER2
HARNESS 6M091

Glow Plug 3 (G1403985)

PIN 1 => CE245 VT-WH 2.5 3TBD

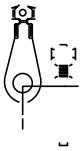

1 CE245A VT-WH 3TBD 2.5

3201515F6
C1E245
TO PRE GLOW HEATER3
HARNESS 6M091

Glow Plug 4 (G1403986)

PIN 1 => CE246 YE-BU 2.5 3TBD

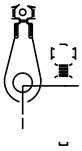

1 CE246A YE-BU 3TBD 2.5

3201515F6
C1E246
TO PRE GLOW HEATER4
HARNESS 6M091

Glow Plug 5 (G1406832)

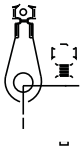

1 CE247 GN-WH 3TBD 2.5

3201515F6
C1E247
TO PRE GLOW HEATER5
HARNESS 6M091

Glow Plug Module—A (G1403995)

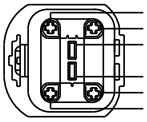

4 CBB25G WH-OG 3TBD 0.5
2 CE151A BN-VT 3TBD 0.5
5 SBB03E BU-RD 3TBD 6.0
6 SBB03F BU-RD 3TBD 6.0
1 CE513A VT-GN 3TBD 0.5
3 GD122U BK 3TBD 0.5

1703661-1
C1E513-A
TO GLOW PLUG CONTROL MODULE I5
HARNESS 70G239

Glow Plug Module—C (G1403996)

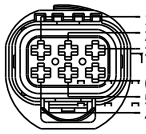

1 CE244A BU-BN 3TBD 2.5
2 CE247 GN-WH 3TBD 2.5
3 CE243A GY-VT 3TBD 2.5
6 CE246A YE-BU 3TBD 2.5
5
4 CE245A VT-WH 3TBD 2.5

AW9T-14A464-AA
C1E513-C
TO GLOW PLUG CONTROL MODULE I5(GP)
HARNESS 6M091

SECTION 303-08 Engine Emission Control — 2.2L Duratorq-TDCi (Puma) Diesel/3.2L Duratorq-TDCi (Puma) Diesel

VEHICLE APPLICATION: 2012.0 Ranger

CONTENTS PAGE

ELECTRICAL CONNECTORS

Exhaust Gas Recirculation (EGR) Valve..... 303-08-2

Exhaust Gas Recirculation (EGR) Valve (G1403998)

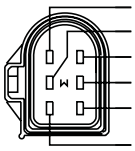

6	LE139AA	BN-WH	3TBD	0.5	GOLD
4	RE139AA	GY-OG	3TBD	0.5	GOLD
5	CE102A	YE-BU	3TBD	0.75	GOLD
3					
1	CE101A	WH-VT	3TBD	0.75	GOLD
2	VE721A	WH-OG	3TBD	0.5	GOLD

3M5T-14A464-DZA
C1E139
TO EGR VALVE-DC MOTOR POSITION FEEDBACK
HARNESS 12B637

SECTION 303-13 Evaporative Emissions

VEHICLE APPLICATION: 2012.0 Ranger

CONTENTS PAGE

ELECTRICAL CONNECTORS

Evaporative Emission Canister Purge Valve..... 303-13-2

Evaporative Emission Canister Purge Valve (G1404000)

2	CBB22L	GN-OG	3TBD	0.75
1	CE408A	GY-BN	3TBD	0.75

3S7T-14A464-MA

C1E135
TO CANISTER PURGE SOLENOID

HARNESS 12B637

SECTION 303-14A Electronic Engine Controls — 2.5L

Duratec-HE (122kW/165PS) - MI4

VEHICLE APPLICATION: 2012.0 Ranger

CONTENTS PAGE

ELECTRICAL SCHEMATICS

Engine Control..... 303-14A-2

ELECTRICAL CONNECTORS

Accelerator Pedal Position (APP) Sensor..... 303-14A-6
Brake Pedal Position (BPP) Switch..... 303-14A-6
Clutch Pedal Position (CPP) Switch..... 303-14A-6
Clutch Pedal Position (CPP) Switch..... 303-14A-6
Vehicle Speed Sensor 1 (VSS1)..... 303-14A-6
Catalyst Monitor Sensor..... 303-14A-7
Crankshaft Position (CKP) Sensor..... 303-14A-7
Engine Coolant Temperature (ECT) Sensor — A..... 303-14A-7
Engine Oil Pressure (EOP) Switch..... 303-14A-7
Heated Oxygen Sensor (HO2S)..... 303-14A-7
Intake Camshaft Position (CMP) Sensor..... 303-14A-8
Intake Variable Valve Timing (VVT) Oil Control Solenoid..... 303-14A-8
Knock Sensor (KS)..... 303-14A-8
Manifold Absolute Pressure and Temperature (MAPT) Sensor..... 303-14A-8
Powertrain Control Module (PCM) — A..... 303-14A-9
Powertrain Control Module (PCM) — B..... 303-14A-9
Powertrain Control Module (PCM) — C..... 303-14A-10
Power Steering Pressure (PSP) Switch..... 303-14A-10
Throttle Control Unit..... 303-14A-10

303-14A-2 Engine Control

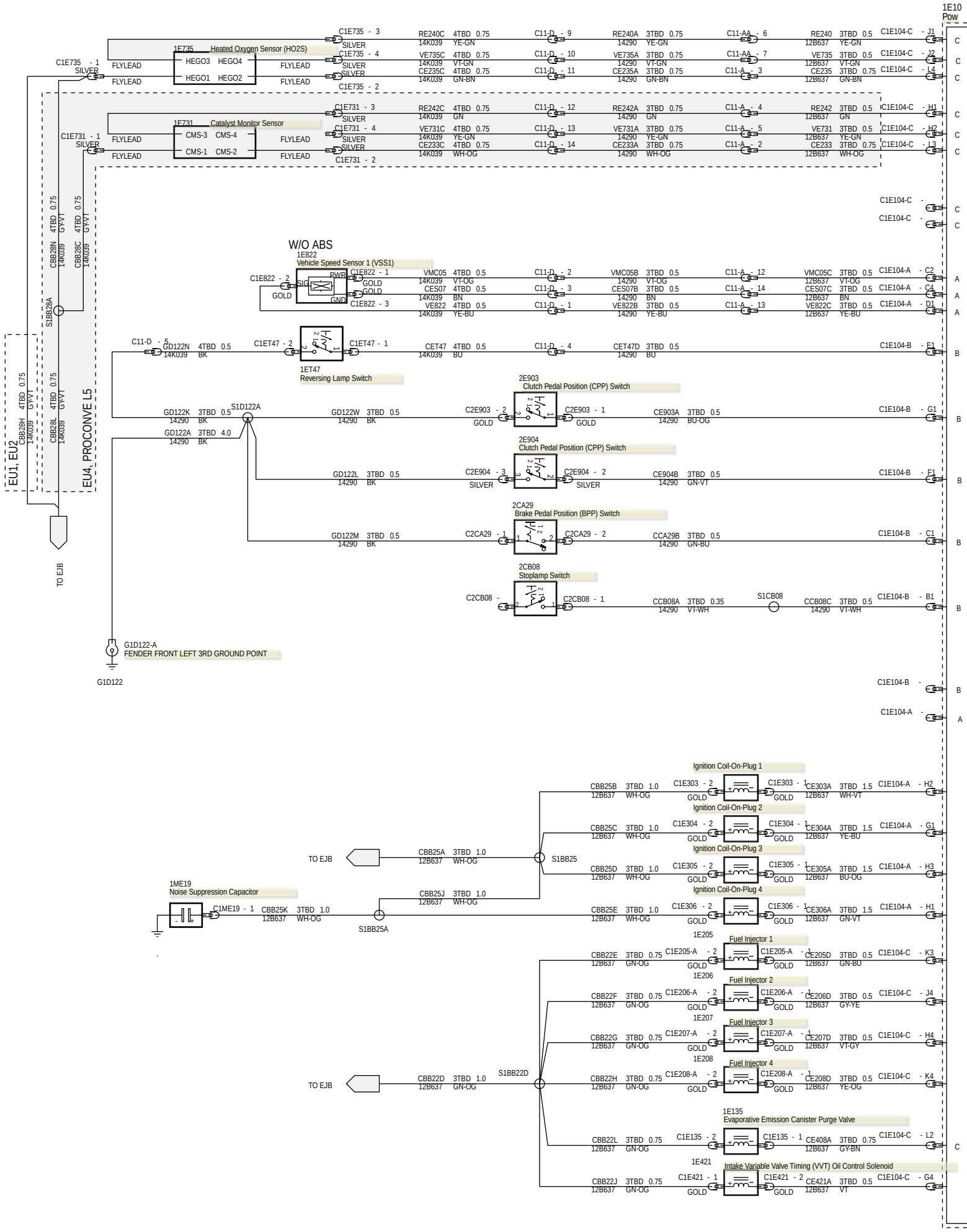

04
ertrain Control Module (PCM)

C3-J1	GND		
C3-J2	SIG		
C3-L4	HEGO HEATER	PSPS	B2-B3
C3-H1	GND		
C3-H2	CMS SIG	OPS	C3-A3
C3-L3	CMS HEATER		
		LIN ALT	C3-C4
C3-E1	GND		
C3-E2	FF MONITOR		
		KS-	A1-A4
		KS+	A1-A3
A1-C2	5V	KS SHIELD	A1-B4
A1-C4	GND	CPS_SHIELD	A1-F4
A1-D1	VSS SIG	CPS+	A1-F1
		CPS-	A1-F2
B2-E1	REVERSE SW	5V VREF	C3-F3
		MAP	C3-F2
B2-G1	CLUTCH BOT SW	AIR CHARGE TEMP	C3-G3
		GND	C3-F1
	CAN	MOT+	C3-M4
B2-F1	CLUTCH TOP SW	MOT-	C3-M3
		5V VREF	C3-D3
	LIN	TP2-PS	C3-D2
		TP1-NS	C3-C3
B2-C1	BRAKE PEDAL SW	GND	C3-D1
		AMBIENT TEMP	B2-J3
B2-B1	BRAKE LIGHT SW	GND	B2-J4
		CAM-IN	A1-E3
		GROUND	A1-E4
B2-H3	DIFF LOCK SW	5V VREF	A1-E2
A1-A1	AC PRESSURE SW	ACCEL PEDAL 2	B2-E3
		5V VREF 2	B2-E2
		GND 2	B2-E4
		ACCEL PEDAL 1	B2-F3
A1-H2	IG COIL A	5V VREF 1	B2-F2
		GND 1	B2-F4
A1-G1	IG COIL D		
		ENGINE COOLANT TEMP	C3-C2
A1-H3	IG COIL B	GND	C3-C1
A1-H1	IG COIL C		
C3-K3	INJECTOR A	4WD MODE SW	B2-K3
		GROUND	B2-K4
C3-J4	INJECTOR D		
C3-H4	INJECTOR B	5V VREF	B2-C2
		ANALOG IN	B2-C3
C3-K4	INJECTOR C		
		GND	B2-C4
C3-L2	PURGE VALVE		
C3-G4	VT SOL INTAKE		

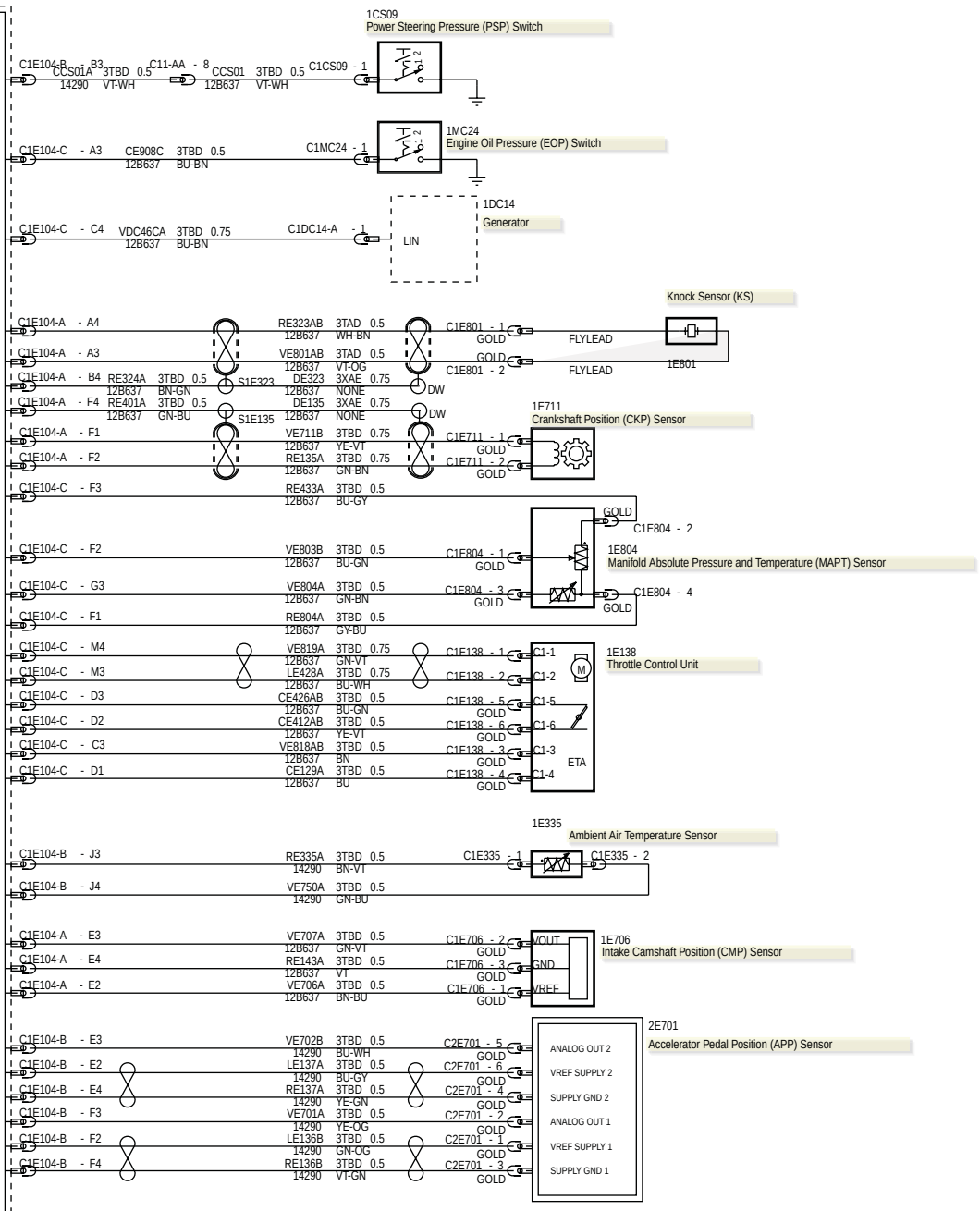

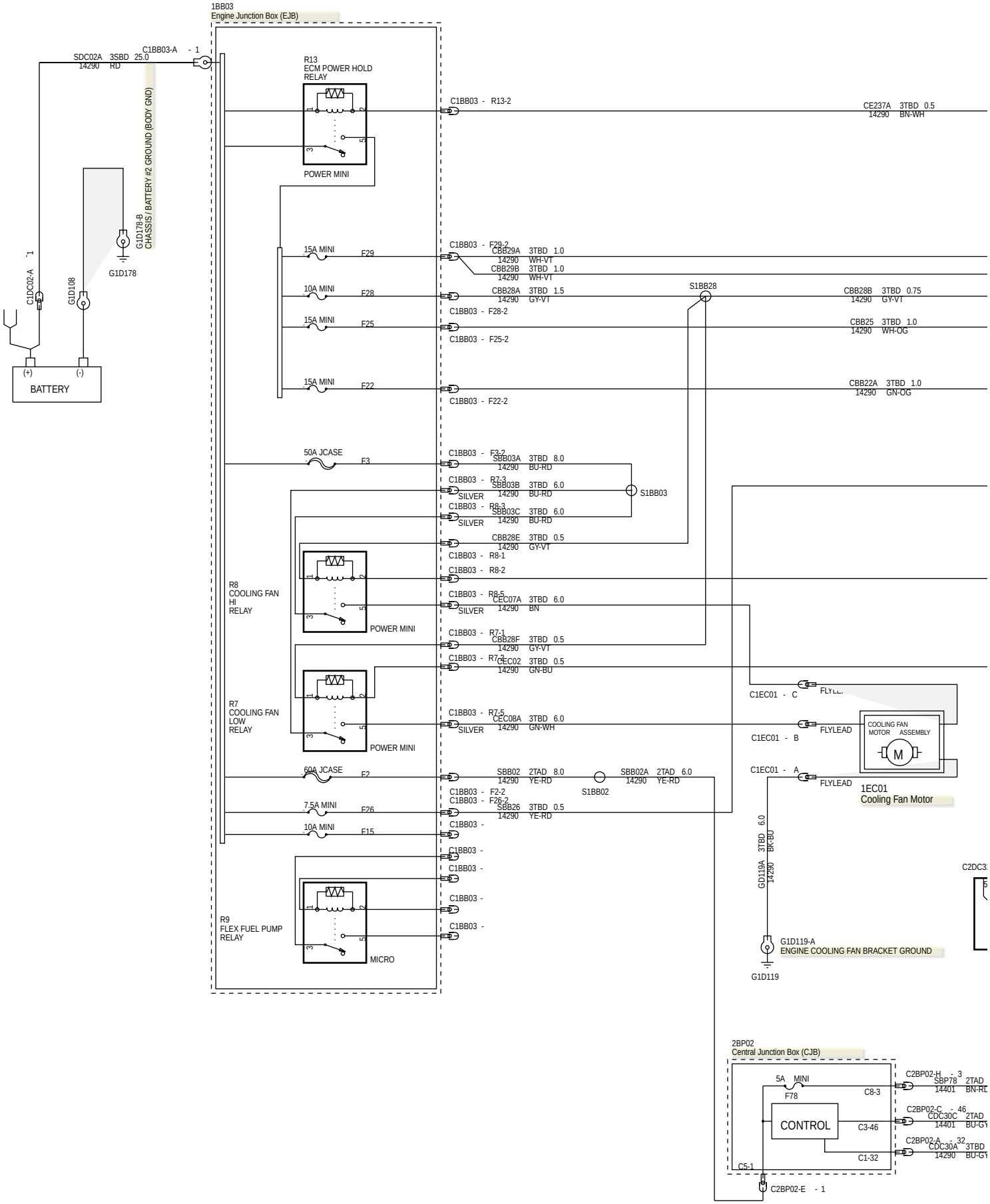
1BB03
Engine Junction Box (EJB)
SDC02A 3SBD 25.0
14290 RD
C1BB03-A - 1
R13
ECM POWER HOLD
RELAY
POWER MINI
C1BB03 - R13-2
CE237A 3TBD 0.5
14290 BN-WH
G1D178-B
CHASSIS / BATTERY #2 GROUND (BODY GND)
G1D178
C1DC02-A - 1
G1D108
BATTERY
(+)
(-)
15A MINI F29
C1BB03 - F29-2
CBB29A 3TBD 1.0
14290 WH-VT
CBB29B 3TBD 1.0
14290 WH-VT
10A MINI F28
CBB28A 3TBD 1.5
14290 GY-VT
C1BB03 - F28-2
S1BB28
CBB28B 3TBD 0.75
14290 GY-VT
15A MINI F25
C1BB03 - F25-2
CBB25 3TBD 1.0
14290 WH-OG
15A MINI F22
C1BB03 - F22-2
CBB22A 3TBD 1.0
14290 GN-OG
50A JCASE F3
C1BB03 - F3-2
SBB03A 3TBD 8.0
14290 BU-RD
C1BB03 - R7-3
SBB03B 3TBD 6.0
14290 BU-RD
SILVER
C1BB03 - R8-3
SBB03C 3TBD 6.0
14290 BU-RD
SILVER
S1BB03
CBB28E 3TBD 0.5
14290 GY-VT
C1BB03 - R8-1
C1BB03 - R8-2
R8
COOLING FAN
HI
RELAY
POWER MINI
C1BB03 - R8-5
CEC07A 3TBD 6.0
14290 BN
SILVER
C1BB03 - R7-1
CBB28F 3TBD 0.5
14290 GY-VT
C1BB03 - R7-2
CEC02 3TBD 0.5
14290 GN-BU
R7
COOLING FAN
LOW
RELAY
POWER MINI
C1BB03 - R7-5
CEC08A 3TBD 6.0
14290 GN-WH
SILVER
C1EC01 - C
FLYLEAD
C1EC01 - B
FLYLEAD
COOLING FAN
MOTOR ASSEMBLY
M
C1EC01 - A
FLYLEAD
1EC01
Cooling Fan Motor
60A JCASE F2
SBB02 2TAD 8.0
14290 YE-RD
SBB02A 2TAD 6.0
14290 YE-RD
S1BB02
C1BB03 - F2-2
7.5A MINI F26
C1BB03 - F26-2
SBB26 3TBD 0.5
14290 YE-RD
10A MINI F15
C1BB03 -
C1BB03 -
C1BB03 -
C1BB03 -
C1BB03 -
R9
FLEX FUEL PUMP
RELAY
MICRO
GD119A 3TBD 6.0
14290 BK-BU
G1D119-A
ENGINE COOLING FAN BRACKET GROUND
G1D119
2BP02
Central Junction Box (CJB)
5A MINI
F78
C8-3
CONTROL
C3-46
C1-32
C5-1
C2BP02-H - 3
SBP78 2TAD
14401 BN-RD
C2BP02-C - 46
CDC30C 2TAD
14401 BU-GY
C2BP02-A - 32
CDC30A 3TBD
14290 BU-GY
C2BP02-E - 1

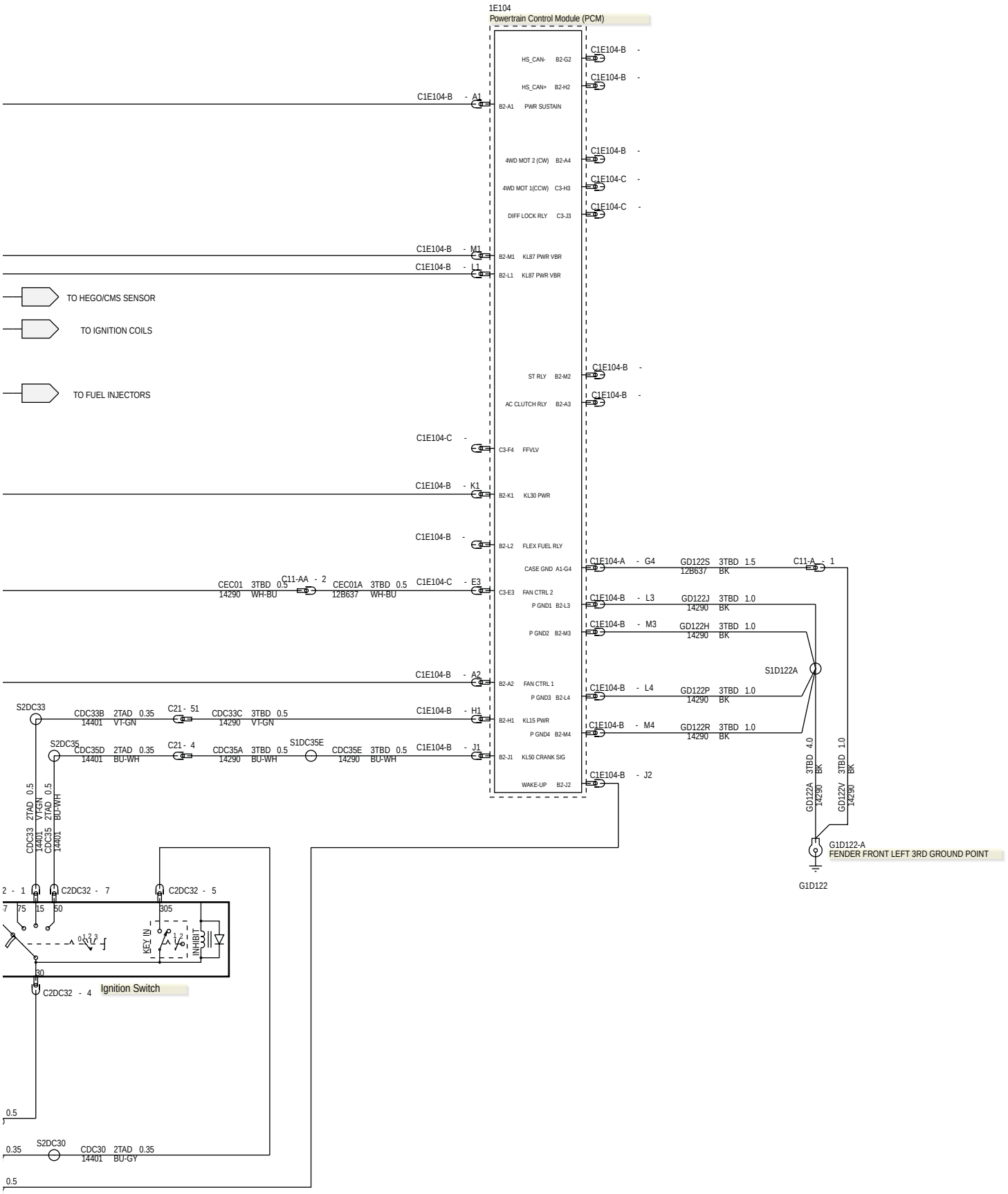
1E104
Powertrain Control Module (PCM)
HS_CAN- B2-G2
HS_CAN+ B2-H2
B2-A1 PWR SUSTAIN
4WD MOT 2 (CW) B2-A4
4WD MOT 1(CCW) C3-H3
DIFF LOCK RLY C3-J3
B2-M1 KL87 PWR VBR
B2-L1 KL87 PWR VBR
TO HEGO/CMS SENSOR
TO IGNITION COILS
TO FUEL INJECTORS
ST RLY B2-M2
AC CLUTCH RLY B2-A3
C3-F4 FFVLV
B2-K1 KL30 PWR
B2-L2 FLEX FUEL RLY
CASE GND A1-G4
C3-E3 FAN CTRL 2
P GND1 B2-L3
P GND2 B2-M3
B2-A2 FAN CTRL 1
P GND3 B2-L4
B2-H1 KL15 PWR
P GND4 B2-M4
B2-J1 KL50 CRANK SIG
WAKE-UP B2-J2
C1E104-B - A1
C1E104-B - M1
C1E104-B - L1
C1E104-C -
C1E104-B - K1
C1E104-B -
C1E104-C - E3
C1E104-B - A2
C1E104-B - H1
C1E104-B - J1
C1E104-A - G4
C1E104-B - L3
C1E104-B - M3
C1E104-B - L4
C1E104-B - M4
C1E104-B - J2
CEC01 3TBD 0.5 14290 WH-BU
C11-AA - 2
CEC01A 3TBD 0.5 12B637 WH-BU
GD122S 3TBD 1.5 12B637 BK
C11-A - 1
GD122J 3TBD 1.0 14290 BK
GD122H 3TBD 1.0 14290 BK
S1D122A
GD122P 3TBD 1.0 14290 BK
GD122R 3TBD 1.0 14290 BK
GD122A 3TBD 4.0 14290 BK
GD122V 3TBD 1.0 14290 BK
G1D122-A
FENDER FRONT LEFT 3RD GROUND POINT
G1D122
S2DC33
CDC33B 2TAD 0.35 14401 VT-GN
C21 - 51
CDC33C 3TBD 0.5 14290 VT-GN
S2DC35
CDC35D 2TAD 0.35 14401 BU-WH
C21 - 4
CDC35A 3TBD 0.5 14290 BU-WH
S1DC35E
CDC35E 3TBD 0.5 14290 BU-WH
CDC33 2TAD 0.5 14401 VT-GN
CDC35 2TAD 0.5 14401 BU-WH
C2DC32 - 7
C2DC32 - 5
C2DC32 - 4
KEY IN
INHIBIT
Ignition Switch
S2DC30
CDC30 2TAD 0.35 14401 BU-GY

Accelerator Pedal Position (APP) Sensor (G1404002)

PIN 1 => LE136A GN-OG 0.5 3TBD
PIN 2 => VE701B YE-OG 0.5 3TBD
PIN 3 => RE136A VT-GN 0.5 3TBD
PIN 4 => RE137B YE-GN 0.5 3TBD
PIN 5 => VE702A BU-WH 0.5 3TBD
PIN 6 => LE137B BU-GY 0.5 3TBD

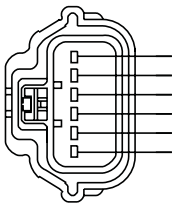

1	LE136B	GN-OG	3TBD	0.5	GOLD
2	VE701A	YE-OG	3TBD	0.5	GOLD
3	RE136B	VT-GN	3TBD	0.5	GOLD
4	RE137A	YE-GN	3TBD	0.5	GOLD
5	VE702B	BU-WH	3TBD	0.5	GOLD
6	LE137A	BU-GY	3TBD	0.5	GOLD

8U5T-14A464-JAA(000)

C2E701
TO ACCELERATOR PEDAL
HARNESS 14290

Brake Pedal Position (BPP) Switch (G1404158)

PIN 2 => CCA29A GN-BU 0.5 3TBD

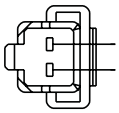

1	GD122M	BK	3TBD	0.5
2	CCA29B	GN-BU	3TBD	0.5

F5LB-14489-BA

C2CA29
TO SPEED CONTROL INHIBIT SWITCH

HARNESS 14290

Clutch Pedal Position (CPP) Switch (G1404159)

PIN 1 => CE903B BU-OG 0.5 3TBD

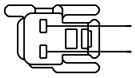

2	GD122W	BK	3TBD	0.5	GOLD
1	CE903A	BU-OG	3TBD	0.5	GOLD

97BG-14489-YBB

C2E903
TO CPP-BT

HARNESS 14290

Clutch Pedal Position (CPP) Switch (G1404160)

PIN 2 => CE904A GN-VT 0.5 3TBD

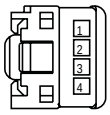

1					
2	CE904B	GN-VT	3TBD	0.5	SILVER
3	GD122L	BK	3TBD	0.5	SILVER
4					

1L2T-14489-GC
C2E904
TO CPP-TT
HARNESS 14290

Vehicle Speed Sensor 1 (VSS1) (G1404208)

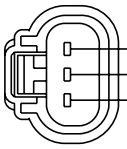

1	VMC05	VT-OG	4TBD	0.5	GOLD
2	VE822	YE-BU	4TBD	0.5	GOLD
3	CES07	BN	4TBD	0.5	GOLD

2L1T-14A464-ZA

C1E822
TO VEHICLE SPEED SENSOR

HARNESS 14K039

Catalyst Monitor Sensor (G1404226)

VE731C	YE-GN	4TBD	0.75	SILVER	4
CE233C	WH-OG	4TBD	0.75	SILVER	2
CBB28C	GY-VT	4TBD	0.75	SILVER	1
RE242C	GN	4TBD	0.75	SILVER	3

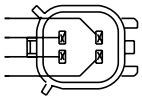

7U5T-14A624-BA(000)

C1E731
TO FLYLEAD CMS

HARNESS 14K039

Crankshaft Position (CKP) Sensor (G1404227)

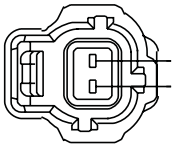

2	RE135A	GN-BN	3TBD	0.75	GOLD
1	VE711B	YE-VT	3TBD	0.75	GOLD

F7RB-14A464-AA

C1E711
TO CRANKSHAFT POSITION SENSOR PETROL

HARNESS 12B637

Engine Coolant Temperature (ECT) Sensor—A (G1404228)

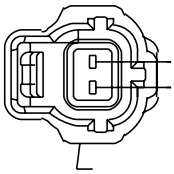

2	RE141B	BN-GN	3TBD	0.5	GOLD
1	VE716B	YE	3TBD	0.5	GOLD

F5AB-14A464-BB

C1E716-A
TO ENGINE COOLANT TEMP SENSOR

HARNESS 12B637

Engine Oil Pressure (EOP) Switch (G1404229)

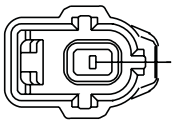

1	CE908C	BU-BN	3TBD	0.5

F65B-14A464-CA

C1MC24
TO OIL PRESSURE SWITCH PETROL

HARNESS 12B637

Heated Oxygen Sensor (HO2S) (G1404252)

					VE735C	VT-GN	4TBD	0.75	SILVER	4
					CE235C	GN-BN	4TBD	0.75	SILVER	2
CBB28H	GY-VT	4TBD	0.75	+	CBB28N	GY-VT	4TBD	0.75	SILVER	1
					RE240C	YE-GN	4TBD	0.75	SILVER	3

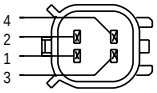

7U5T-14A624-CA(000)

C1E735
TO FLYLEAD HEGO

HARNESS 14K039

Intake Camshaft Position (CMP) Sensor (G1404253)

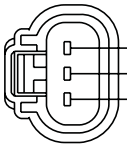

1	VE706A	BN-BU	3TBD	0.5	GOLD
2	VE707A	GN-VT	3TBD	0.5	GOLD
3	RE143A	VT	3TBD	0.5	GOLD

2L1T-14A464-ZA

C1E706
TO CAMSHAFT POSITION SENSOR PETROL

HARNESS 12B637

Intake Variable Valve Timing (VVT) Oil Control Solenoid (G1404254)

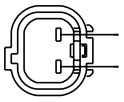

2	CE421A	VT	3TBD	0.5	GOLD
1	CBB22J	GN-OG	3TBD	0.75	GOLD

XF2T-14A464-YC

C1E421
TO IVCT CONTROL VALVE

HARNESS 12B637

Knock Sensor (KS) (G1404255)

VE801AB	VT-OG	3TAD	0.5	GOLD	2
RE323AB	WH-BN	3TAD	0.5	GOLD	1

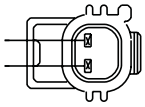

98AG-14A624-ABB

C1E801
TO FLYLEAD KNOCK SENSOR

HARNESS 12B637

Manifold Absolute Pressure and Temperature (MAPT) Sensor (G1404256)

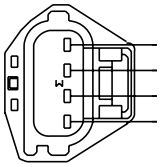

4	RE804A	GY-BU	3TBD	0.5	GOLD
3	VE804A	GN-BN	3TBD	0.5	GOLD
2	RE433A	BU-GY	3TBD	0.5	GOLD
1	VE803B	BU-GN	3TBD	0.5	GOLD

4M5T-14A464-YDA

C1E804
TO TEMP MANIFOLD ABSOLUTE PRESSURE SENSOR

HARNESS 12B637

Powertrain Control Module (PCM)—A (G1404272)

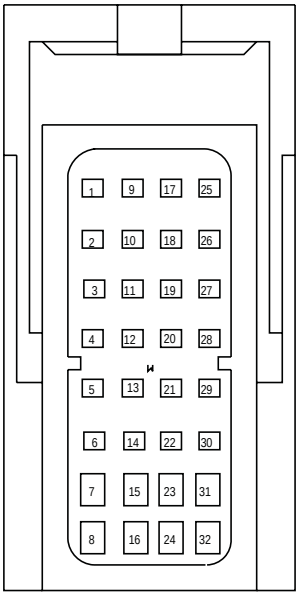

1 CH423A YE 3TBD 0.5
2
3
4 VE822C YE-BU 3TBD 0.5
5
6 VE711B YE-VT 3TBD 0.75
7 CE304A YE-BU 3TBD 1.5
8 CE306A GN-VT 3TBD 1.5
9
10
11 VMC05C VT-OG 3TBD 0.5
12
13 VE706A BN-BU 3TBD 0.5
14 RE135A GN-BN 3TBD 0.75
15
16 CE303A WH-VT 3TBD 1.5
17 VE801AB VT-OG 3TAD 0.5
18
19
20
21 VE707A GN-VT 3TBD 0.5
22
23
24 CE305A BU-OG 3TBD 1.5
25 RE323AB WH-BN 3TAD 0.5
26 RE324A BN-GN 3TBD 0.5
27 CES07C BN 3TBD 0.5
28
29 RE143A VT 3TBD 0.5
30 RE401A GN-BU 3TBD 0.5
31 GD122S BK 3TBD 1.5
32

7V6N-14A464-RA(099)
C1E104-A
TO ECM1 PETROL
HARNESS 12B637

Powertrain Control Module (PCM)—B (G1404273)

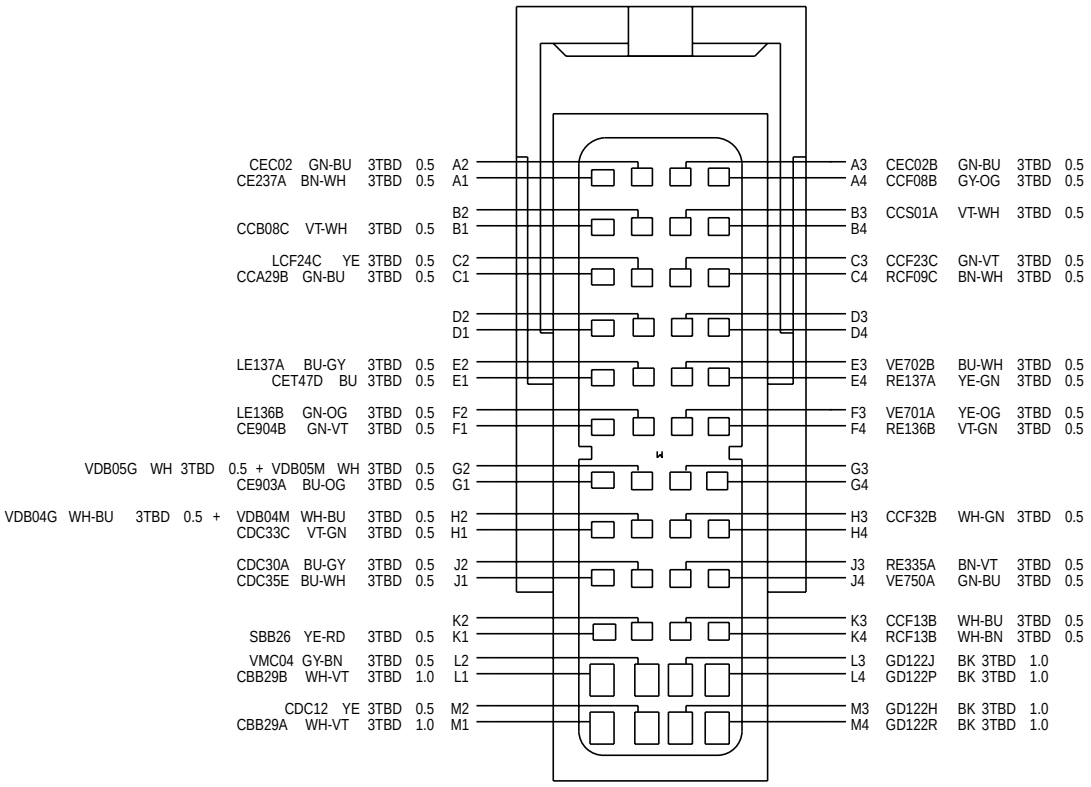

7V6N-14A464-VA(099)
C1E104-B
TO ECM2 PETROL
HARNESS 14290

Powertrain Control Module (PCM)—C (G1404274)

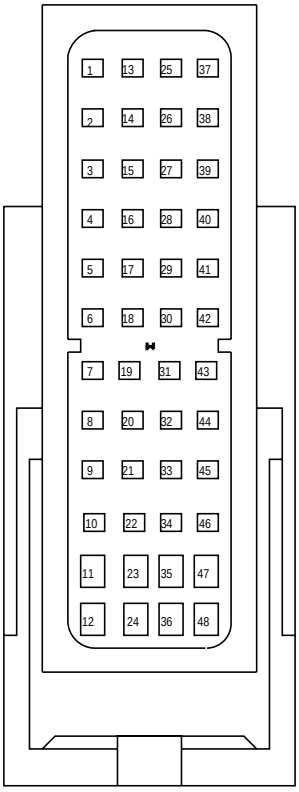

1	
2	
3	VDC46CA BU-BN 3TBD 0.75
4	
5	
6	CE930B WH-GN 3TBD 0.5
7	CE421A VT 3TBD 0.5
8	CE207D VT-GY 3TBD 0.5
9	CE206D GY-YE 3TBD 0.5
10	CE208D YE-OG 3TBD 0.75
11	CE235 GN-BN 3TBD 0.5
12	VE819A GN-VT 3TBD 0.75
13	CE908C BU-BN 3TBD 0.5
14	
15	VE818AB BN 3TBD 0.5
16	CE426AB BU-GN 3TBD 0.5
17	CEC01A WH-BU 3TBD 0.5
18	RE433A BU-GY 3TBD 0.5
19	VE804A GN-BN 3TBD 0.5
20	CCF07C BN-GN 3TBD 0.5
21	VET68A VT-OG 3TBD 0.5
22	CE205D GN-BU 3TBD 0.5
23	CE233 WH-OG 3TBD 0.75
24	LE428A BU-WH 3TBD 0.75
25	
26	
27	VE716B YE 3TBD 0.5
28	CE412AB YE-VT 3TBD 0.5
29	VE724A GY 3TBD 0.5
30	VE803B BU-GN 3TBD 0.5
31	
32	VE731 YE-GN 3TBD 0.5
33	VE735 VT-GN 3TBD 0.5
34	
35	CE408A GY-BN 3TBD 0.75
36	
37	
38	
39	RE141B BN-GN 3TBD 0.5
40	CE129A BU 3TBD 0.5
41	VMC04A GY-BN 3TBD 0.5
42	RE804A GY-BU 3TBD 0.5
43	
44	RE242 GN 3TBD 0.5
45	RE240 YE-GN 3TBD 0.5
46	
47	
48	

7V6N-14A464-TA(099)

C1E104-C
TO ECM3 PETROL

HARNESS 12B637

Power Steering Pressure (PSP) Switch (G1404275)

1 CCS01 VT-WH 3TBD 0.5

6E5T-14489-UA

C1CS09

TO POWER STEERING PRESSURE SWITCH

HARNESS 12B637

Throttle Control Unit (G1405433)

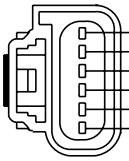

1	VE819A	GN-VT	3TBD	0.75	
2	LE428A	BU-WH	3TBD	0.75	
3	VE818AB	BN	3TBD	0.5	GOLD
4	CE129A	BU	3TBD	0.5	GOLD
5	CE426AB	BU-GN	3TBD	0.5	GOLD
6	CE412AB	YE-VT	3TBD	0.5	GOLD

3L2T-14A464-BA(000)

C1E138

TO ELECTRONIC THROTTLE BODY PETROL

HARNESS 12B637

SECTION 303-14B Electronic Engine Controls — 2.2L

Duratorq-TDCi (Puma) Diesel/3.2L Duratorq-TDCi (Puma) Diesel

VEHICLE APPLICATION: 2012.0 Ranger

CONTENTS PAGE

ELECTRICAL SCHEMATICS

Engine Control — 2.2L Duratorq-TDCi (88kW/120PS) - Puma..... 303-14B-2
Engine Control — 2.2L Duratorq-TDCi (110kW/150PS) - Puma, Vehicles With: 6-Speed Automatic Transaxle - 6R80, Emission Requirements: DGA Emissions..... 303-14B-6
Engine Control — 2.2L Duratorq-TDCi (88kW/120PS) - Puma/2.2L Duratorq-TDCi (96kW/130PS) - Puma/2.2L Duratorq-TDCi (110kW/150PS) - Puma, Vehicles With: 5-Speed Manual Transmission - MT75/6-Speed Manual Transmission - MT82..... 303-14B-10
Engine Control — 2.2L Duratorq-TDCi (88kW/120PS) - Puma/2.2L Duratorq-TDCi (96kW/130PS) - Puma/2.2L Duratorq-TDCi (110kW/150PS) - Puma, Vehicles With: 6-Speed Automatic Transaxle - 6R80..... 303-14B-14
Engine Control — 3.2L Duratorq-TDCi (148kW/200PS) - Puma, Vehicles With: 6-Speed Manual Transmission - MT82..... 303-14B-18
Engine Control — 3.2L Duratorq-TDCi (148kW/200PS) - Puma, Vehicles With: 6-Speed Automatic Transaxle - 6R80..... 303-14B-22

ELECTRICAL CONNECTORS

Accelerator Pedal Position (APP) Sensor..... 303-14B-26
Brake Pedal Position (BPP) Switch..... 303-14B-26
Clutch Pedal Position (CPP) Switch..... 303-14B-26
Clutch Pedal Position (CPP) Switch..... 303-14B-26
Crankshaft Position (CKP) Sensor — A..... 303-14B-26
Diesel Particulate Filter (DPF) Differential Pressure Sensor..... 303-14B-27
Engine Coolant Temperature (ECT) Sensor..... 303-14B-27
Engine Oil Pressure (EOP) Switch — A..... 303-14B-27
Exhaust Gas Temperature Sensor..... 303-14B-27
Fuel Rail Temperature Sensor..... 303-14B-27
Fuel Temperature Sensor..... 303-14B-28
Heated Oxygen Sensor (HO2S)..... 303-14B-28
Intake Air Temperature (IAT) Sensor..... 303-14B-28
Intake Camshaft Position (CMP) Sensor — A..... 303-14B-28
Manifold Absolute Pressure (MAP) Sensor..... 303-14B-28
Mass Air Flow and Temperature (MAFT) Sensor..... 303-14B-29
Post DPF Exhaust Gas Temperature Sensor..... 303-14B-29
Powertrain Control Module (PCM) — A..... 303-14B-29
Powertrain Control Module (PCM) — B..... 303-14B-30
Powertrain Control Module (PCM) — C..... 303-14B-30
Pre DPF Exhaust Gas Temperature Sensor..... 303-14B-31
Throttle Control Unit — A..... 303-14B-31
Vehicle Speed Sensor 1 (VSS1)..... 303-14B-31
Wastegate Control Solenoid..... 303-14B-31

303-14B-2 Engine Control—2.2L Duratorq-TDCi (88kW/120PS) - Puma

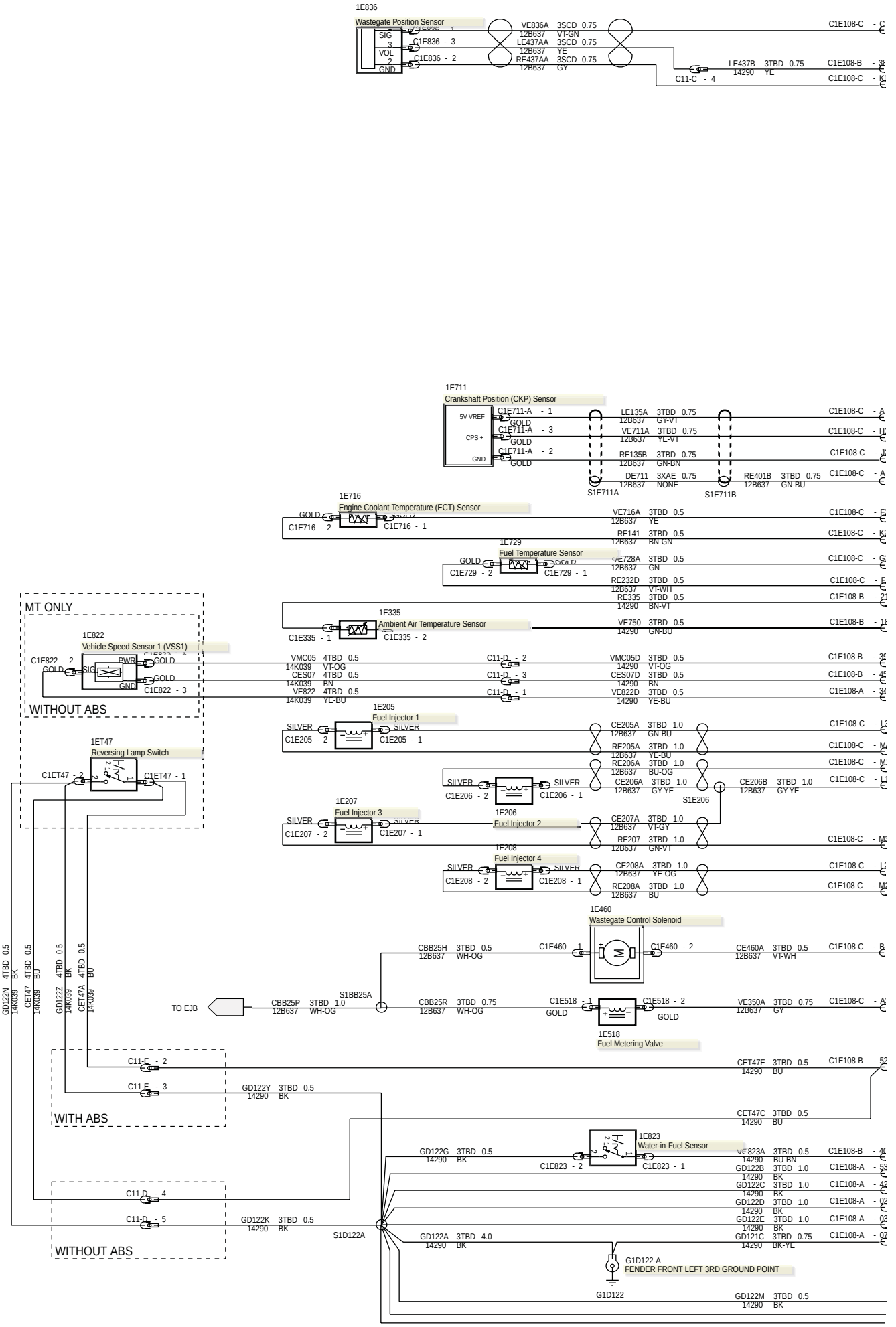

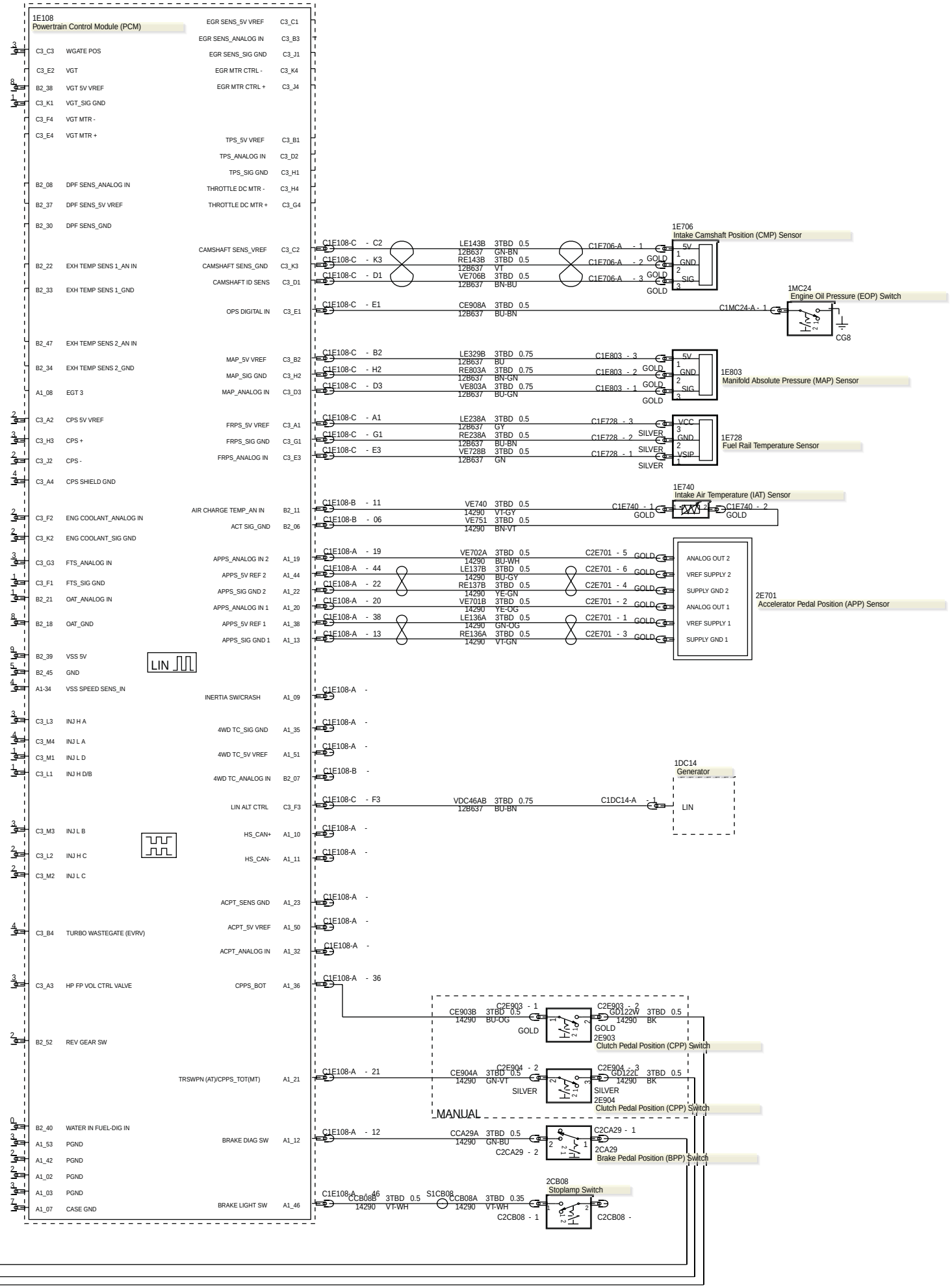
1E108
Powertrain Control Module (PCM)
C3_C3 WGATE POS
C3_E2 VGT
B2_38 VGT 5V VREF
C3_K1 VGT_SIG GND
C3_F4 VGT MTR -
C3_E4 VGT MTR +
B2_08 DPF SENS_ANALOG IN
B2_37 DPF SENS_5V VREF
B2_30 DPF SENS_GND
B2_22 EXH TEMP SENS 1_AN IN
B2_33 EXH TEMP SENS 1_GND
B2_47 EXH TEMP SENS 2_AN IN
B2_34 EXH TEMP SENS 2_GND
A1_08 EGT 3
C3_A2 CPS 5V VREF
C3_H3 CPS +
C3_J2 CPS -
C3_A4 CPS SHIELD GND
C3_F2 ENG COOLANT_ANALOG IN
C3_K2 ENG COOLANT_SIG GND
C3_G3 FTS_ANALOG IN
C3_F1 FTS_SIG GND
B2_21 OAT_ANALOG IN
B2_18 OAT_GND
B2_39 VSS 5V
B2_45 GND
A1-34 VSS SPEED SENS_IN
C3_L3 INJ H A
C3_M4 INJ L A
C3_M1 INJ L D
C3_L1 INJ H D/B
C3_M3 INJ L B
C3_L2 INJ H C
C3_M2 INJ L C
C3_B4 TURBO WASTEGATE (EVRV)
C3_A3 HP FP VOL CTRL VALVE
B2_52 REV GEAR SW
B2_40 WATER IN FUEL-DIG IN
A1_53 PGND
A1_42 PGND
A1_02 PGND
A1_03 PGND
A1_07 CASE GND
EGR SENS_5V VREF C3_C1
EGR SENS_ANALOG IN C3_B3
EGR SENS_SIG GND C3_J1
EGR MTR CTRL - C3_K4
EGR MTR CTRL + C3_J4
TPS_5V VREF C3_B1
TPS_ANALOG IN C3_D2
TPS_SIG GND C3_H1
THROTTLE DC MTR - C3_H4
THROTTLE DC MTR + C3_G4
CAMSHAFT SENS_VREF C3_C2
CAMSHAFT SENS_GND C3_K3
CAMSHAFT ID SENS C3_D1
OPS DIGITAL IN C3_E1
MAP_5V VREF C3_B2
MAP_SIG GND C3_H2
MAP_ANALOG IN C3_D3
FRPS_5V VREF C3_A1
FRPS_SIG GND C3_G1
FRPS_ANALOG IN C3_E3
AIR CHARGE TEMP_AN IN B2_11
ACT SIG_GND B2_06
APPS_ANALOG IN 2 A1_19
APPS_5V REF 2 A1_44
APPS_SIG GND 2 A1_22
APPS_ANALOG IN 1 A1_20
APPS_5V REF 1 A1_38
APPS_SIG GND 1 A1_13
LIN
INERTIA SW/CRASH A1_09
4WD TC_SIG GND A1_35
4WD TC_5V VREF A1_51
4WD TC_ANALOG IN B2_07
LIN ALT CTRL C3_F3
HS_CAN+ A1_10
HS_CAN- A1_11
ACPT_SENS GND A1_23
ACPT_5V VREF A1_50
ACPT_ANALOG IN A1_32
CPPS_BOT A1_36
TRSWPN (AT)/CPPS_TOT(MT) A1_21
BRAKE DIAG SW A1_12
BRAKE LIGHT SW A1_46
1E706
Intake Camshaft Position (CMP) Sensor
5V
GND
SIG
1MC24
Engine Oil Pressure (EOP) Switch
CG8
1E803
Manifold Absolute Pressure (MAP) Sensor
1E728
Fuel Rail Temperature Sensor
VCC
GND
VSIP
1E740
Intake Air Temperature (IAT) Sensor
2E701
Accelerator Pedal Position (APP) Sensor
ANALOG OUT 2
VREF SUPPLY 2
SUPPLY GND 2
ANALOG OUT 1
VREF SUPPLY 1
SUPPLY GND 1
1DC14
Generator
LIN
2E903
Clutch Pedal Position (CPP) Switch
2E904
Clutch Pedal Position (CPP) Switch
MANUAL
2CA29
Brake Pedal Position (BPP) Switch
2CB08
Stoplamp Switch
S1CB08

303-14B-4 Engine Control—2.2L Duratorq-TDCi (88kW/120PS) - Puma

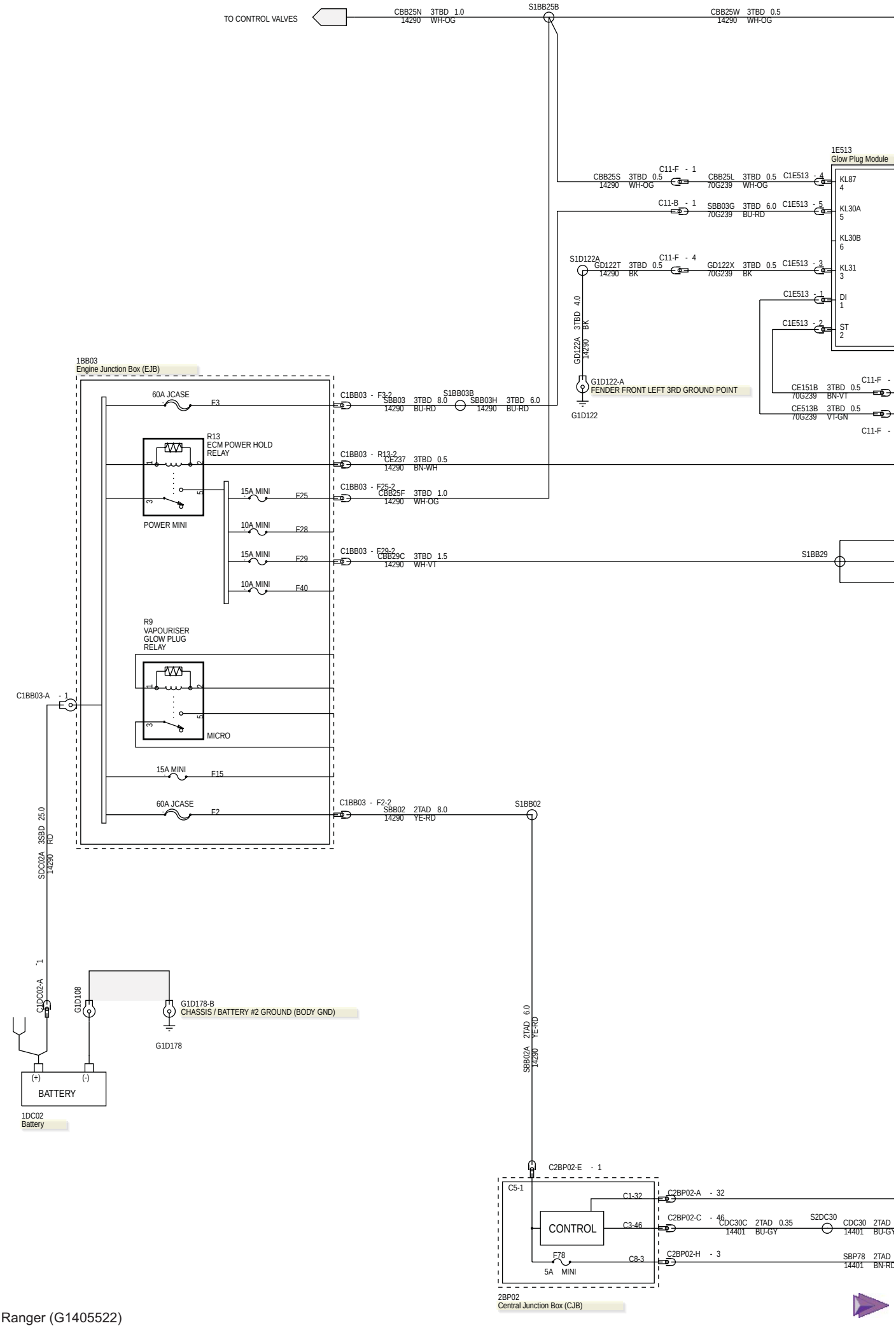

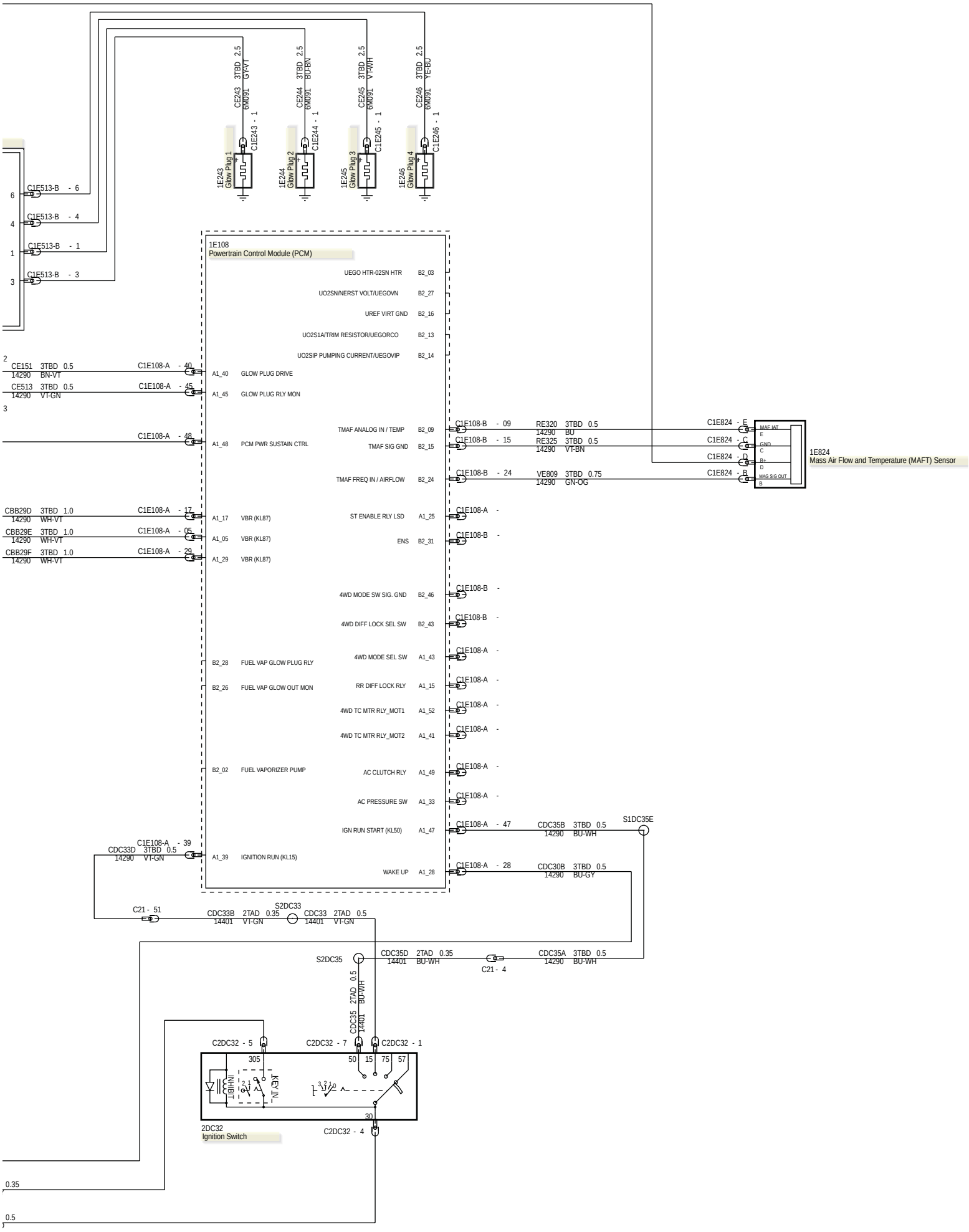
1E243 Glow Plug 1
1E244 Glow Plug 2
1E245 Glow Plug 3
1E246 Glow Plug 4
CE243 3TBD 2.5 6M091 GY-VT
CE244 3TBD 2.5 6M091 BU-BN
CE245 3TBD 2.5 6M091 VT-WH
CE246 3TBD 2.5 6M091 YE-BU
C1E243 - 1
C1E244 - 1
C1E245 - 1
C1E246 - 1
C1E513-B - 6
C1E513-B - 4
C1E513-B - 1
C1E513-B - 3
1E108
Powertrain Control Module (PCM)
UEGO HTR-02SN HTR B2_03
UO2SN/NERST VOLT/UEGOVN B2_27
UREF VIRT GND B2_16
UO2S1A/TRIM RESISTOR/UEGORCO B2_13
UO2SIP PUMPING CURRENT/UEGOVIP B2_14
CE151 3TBD 0.5 14290 BN-VT
CE513 3TBD 0.5 14290 VT-GN
C1E108-A - 40
C1E108-A - 45
A1_40 GLOW PLUG DRIVE
A1_45 GLOW PLUG RLY MON
C1E108-A - 48
A1_48 PCM PWR SUSTAIN CTRL
TMAF ANALOG IN / TEMP B2_09
TMAF SIG GND B2_15
TMAF FREQ IN / AIRFLOW B2_24
C1E108-B - 09
C1E108-B - 15
C1E108-B - 24
RE320 3TBD 0.5 14290 BU
RE325 3TBD 0.5 14290 VT-BN
VE809 3TBD 0.75 14290 GN-OG
C1E824 - E
C1E824 - C
C1E824 - D
C1E824 - B
MAF IAT
E
GND
C
B+
D
MAG SIG OUT
B
1E824
Mass Air Flow and Temperature (MAFT) Sensor
CBB29D 3TBD 1.0 14290 WH-VT
CBB29E 3TBD 1.0 14290 WH-VT
CBB29F 3TBD 1.0 14290 WH-VT
C1E108-A - 17
C1E108-A - 05
C1E108-A - 29
A1_17 VBR (KL87)
A1_05 VBR (KL87)
A1_29 VBR (KL87)
ST ENABLE RLY LSD A1_25
ENS B2_31
C1E108-A -
C1E108-B -
4WD MODE SW SIG. GND B2_46
4WD DIFF LOCK SEL SW B2_43
4WD MODE SEL SW A1_43
RR DIFF LOCK RLY A1_15
4WD TC MTR RLY_MOT1 A1_52
4WD TC MTR RLY_MOT2 A1_41
B2_28 FUEL VAP GLOW PLUG RLY
B2_26 FUEL VAP GLOW OUT MON
B2_02 FUEL VAPORIZER PUMP
AC CLUTCH RLY A1_49
AC PRESSURE SW A1_33
IGN RUN START (KL50) A1_47
WAKE UP A1_28
C1E108-A - 47
C1E108-A - 28
CDC35B 3TBD 0.5 14290 BU-WH
CDC30B 3TBD 0.5 14290 BU-GY
S1DC35E
CDC33D 3TBD 0.5 14290 VT-GN
C1E108-A - 39
A1_39 IGNITION RUN (KL15)
C21 - 51
CDC33B 2TAD 0.35 14401 VT-GN
S2DC33
CDC33 2TAD 0.5 14401 VT-GN
S2DC35
CDC35D 2TAD 0.35 14401 BU-WH
C21 - 4
CDC35A 3TBD 0.5 14290 BU-WH
CDC35 2TAD 0.5 14401 BU-WH
C2DC32 - 5
C2DC32 - 7
C2DC32 - 1
305
50
15
75
57
30
INHIBIT
KEY_IN
2DC32
Ignition Switch
C2DC32 - 4
0.35
0.5

303-14B-6 Engine Control—2.2L Duratorq-TDCi (110kW/150PS) - Puma, Vehicles With: 6-Speed Automatic Transaxle - 6R80, Emission Requirements:

DGA Emissions

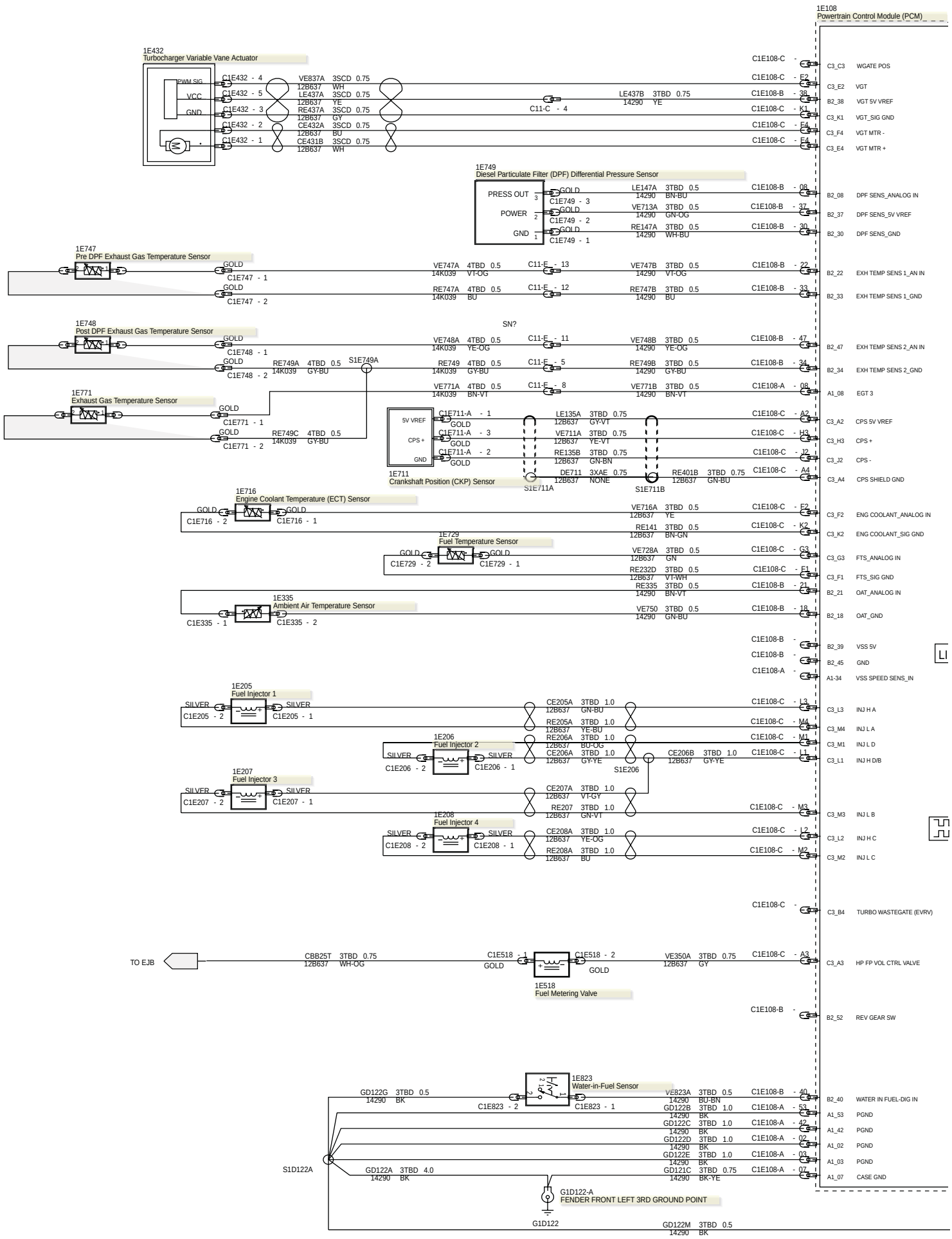

303-14B-7 Engine Control—2.2L Duratorq-TDCi (110kW/150PS) - Puma, Vehicles With: 6-Speed Automatic Transaxle - 6R80, Emission Requirements: DGA Emissions

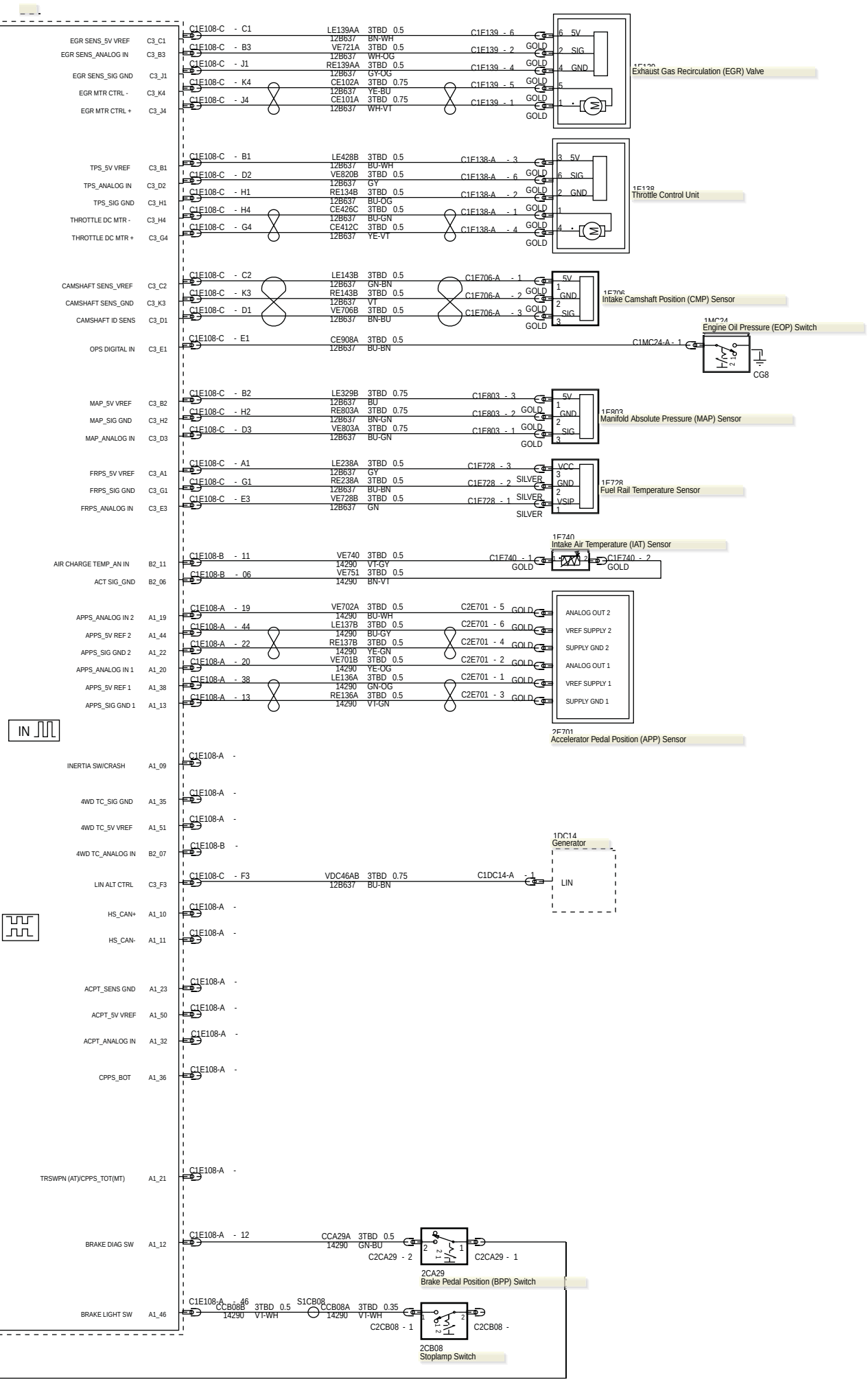

303-14B-8 Engine Control—2.2L Duratorq-TDCi (110kW/150PS) - Puma, Vehicles With: 6-Speed Automatic Transaxle - 6R80, Emission Requirements:

DGA Emissions

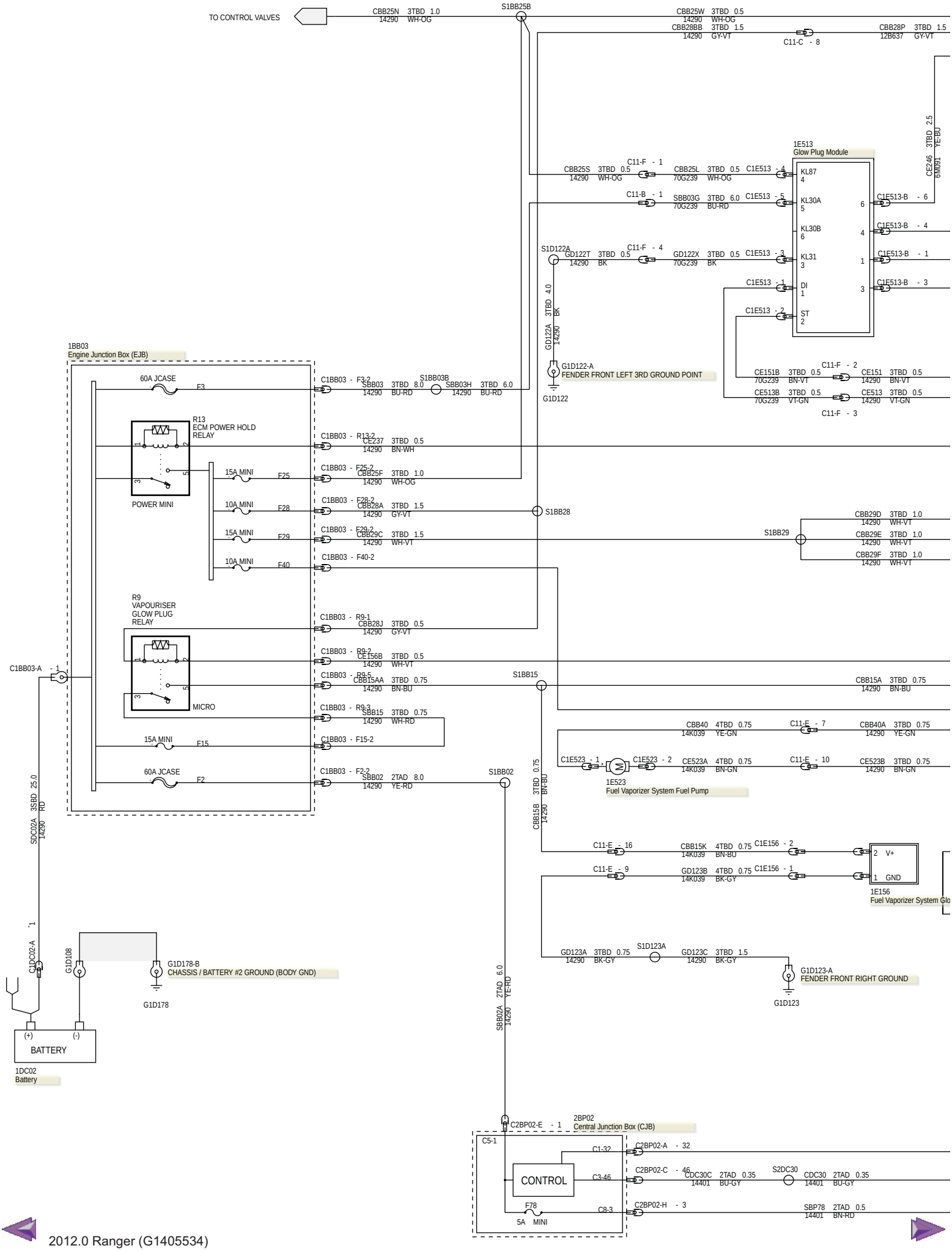

303-14B-9 Engine Control—2.2L Duratorq-TDCi (110kW/150PS) - Puma, Vehicles With: 6-Speed Automatic Transaxle - 6R80, Emission Requirements:

DGA Emissions

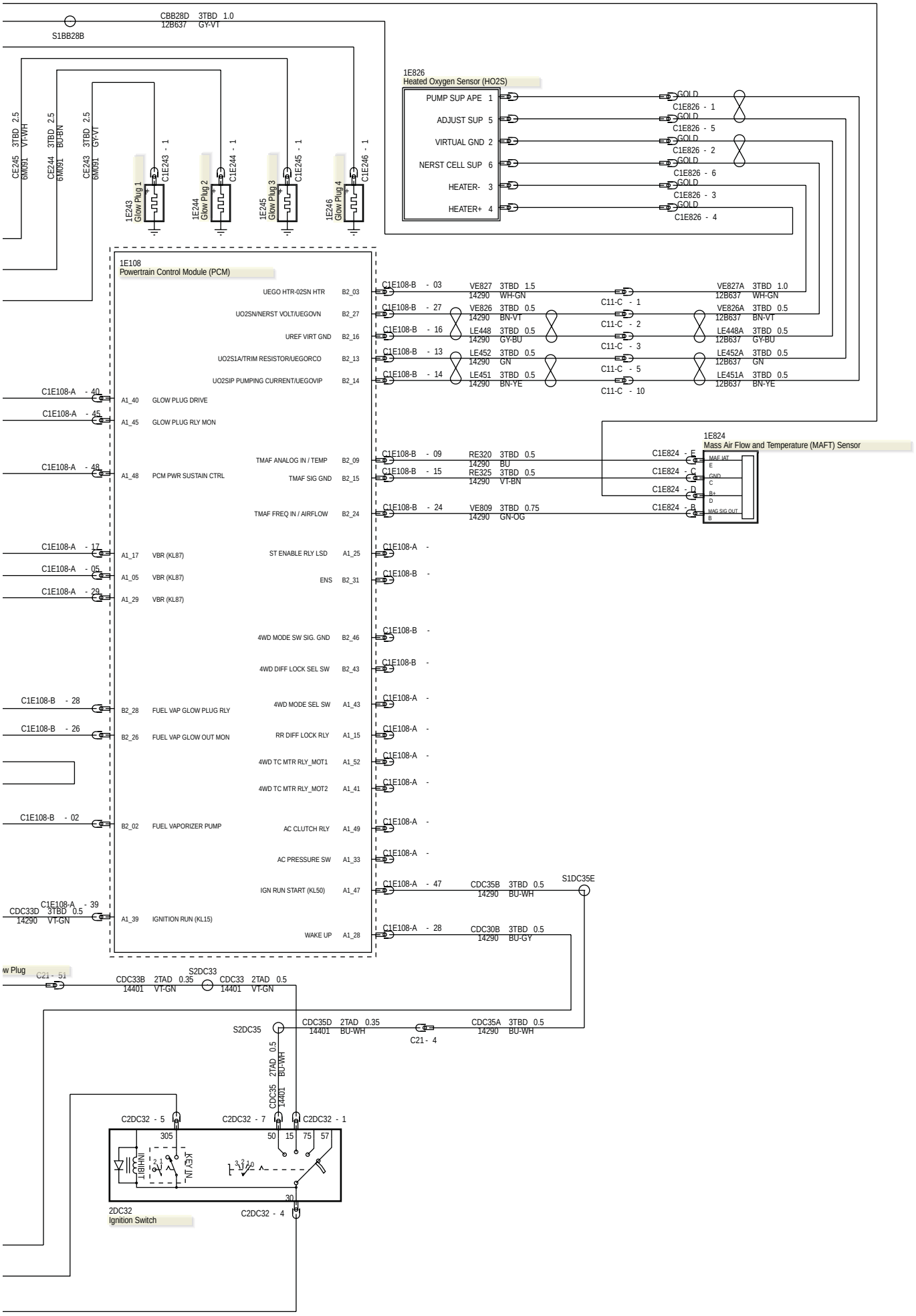

303-14B-10 Engine Control—2.2L Duratorq-TDCi (88kW/120PS) - Puma/2.2L Duratorq-TDCi (96kW/130PS) - Puma/2.2L Duratorq-TDCi (110kW/150PS) - Puma, Vehicles With: 5-Speed Manual Transmission - MT75/6-Speed Manual Transmission - MT82

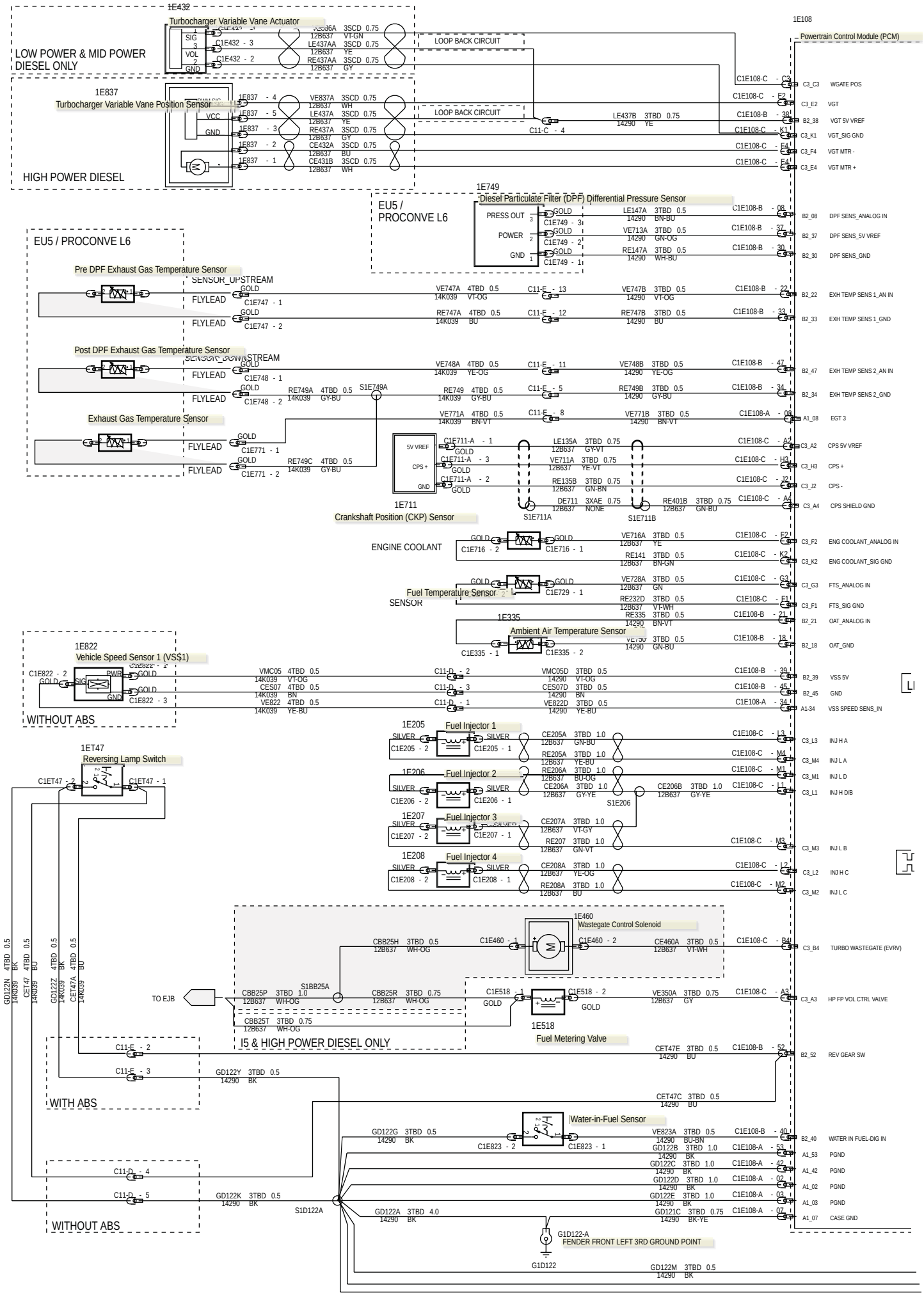

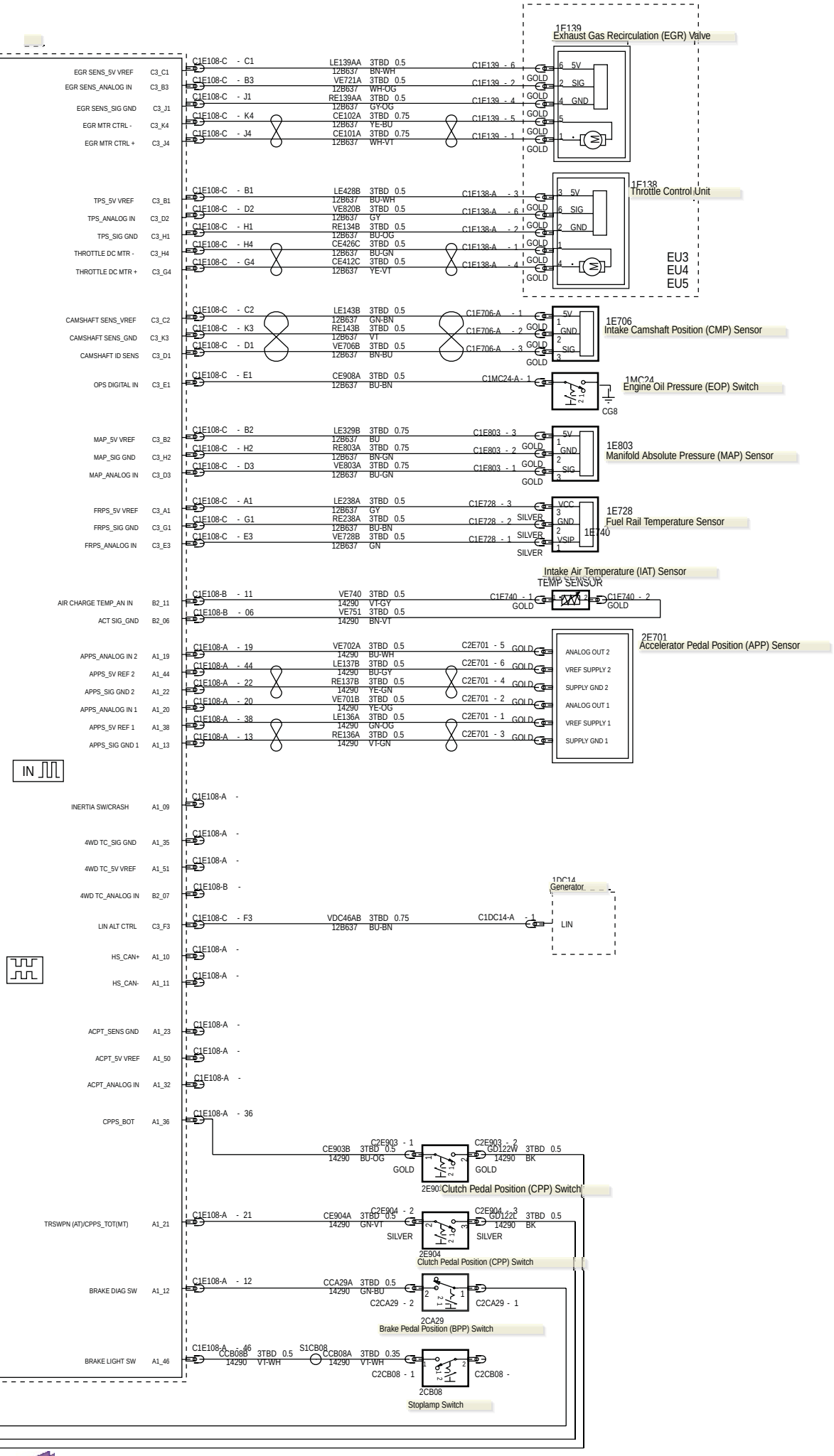
1F139
Exhaust Gas Recirculation (EGR) Valve
EGR SENS_5V VREF C3_C1
EGR SENS_ANALOG IN C3_B3
EGR SENS_SIG GND C3_J1
EGR MTR CTRL - C3_K4
EGR MTR CTRL + C3_J4
1F138
Throttle Control Unit
TPS_5V VREF C3_B1
TPS_ANALOG IN C3_D2
TPS_SIG GND C3_H1
THROTTLE DC MTR - C3_H4
THROTTLE DC MTR + C3_G4
EU3
EU4
EU5
1E706
Intake Camshaft Position (CMP) Sensor
CAMSHAFT SENS_VREF C3_C2
CAMSHAFT SENS_GND C3_K3
CAMSHAFT ID SENS C3_D1
1MC24
Engine Oil Pressure (EOP) Switch
OPS DIGITAL IN C3_E1
CG8
1E803
Manifold Absolute Pressure (MAP) Sensor
MAP_5V VREF C3_B2
MAP_SIG GND C3_H2
MAP_ANALOG IN C3_D3
1E728
Fuel Rail Temperature Sensor
FRPS_5V VREF C3_A1
FRPS_SIG GND C3_G1
FRPS_ANALOG IN C3_E3
1E740
Intake Air Temperature (IAT) Sensor
TEMP SENSOR
AIR CHARGE TEMP_AN IN B2_11
ACT SIG_GND B2_06
2E701
Accelerator Pedal Position (APP) Sensor
APPS_ANALOG IN 2 A1_19
APPS_5V REF 2 A1_44
APPS_SIG GND 2 A1_22
APPS_ANALOG IN 1 A1_20
APPS_5V REF 1 A1_38
APPS_SIG GND 1 A1_13
ANALOG OUT 2
VREF SUPPLY 2
SUPPLY GND 2
ANALOG OUT 1
VREF SUPPLY 1
SUPPLY GND 1
IN
INERTIA SW/CRASH A1_09
4WD TC_SIG GND A1_35
4WD TC_5V VREF A1_51
4WD TC_ANALOG IN B2_07
1DC14
Generator
LIN ALT CTRL C3_F3
LIN
HS_CAN+ A1_10
HS_CAN- A1_11
ACPT_SENS GND A1_23
ACPT_5V VREF A1_50
ACPT_ANALOG IN A1_32
CPPS_BOT A1_36
2E903
Clutch Pedal Position (CPP) Switch
TRSWPN (AT)/CPPS_TOT(MT) A1_21
2E904
Clutch Pedal Position (CPP) Switch
BRAKE DIAG SW A1_12
2CA29
Brake Pedal Position (BPP) Switch
BRAKE LIGHT SW A1_46
S1CB08
2CB08
Stoplamp Switch

303-14B-12 Engine Control—2.2L Duratorq-TDCi (88kW/120PS) - Puma/2.2L Duratorq-TDCi (96kW/130PS) - Puma/2.2L **Duratorq-TDCi (110kw/150PS)** - Puma, Vehicles With: 5-Speed Manual Transmission - MT75/6-Speed Manual Transmission - MT82

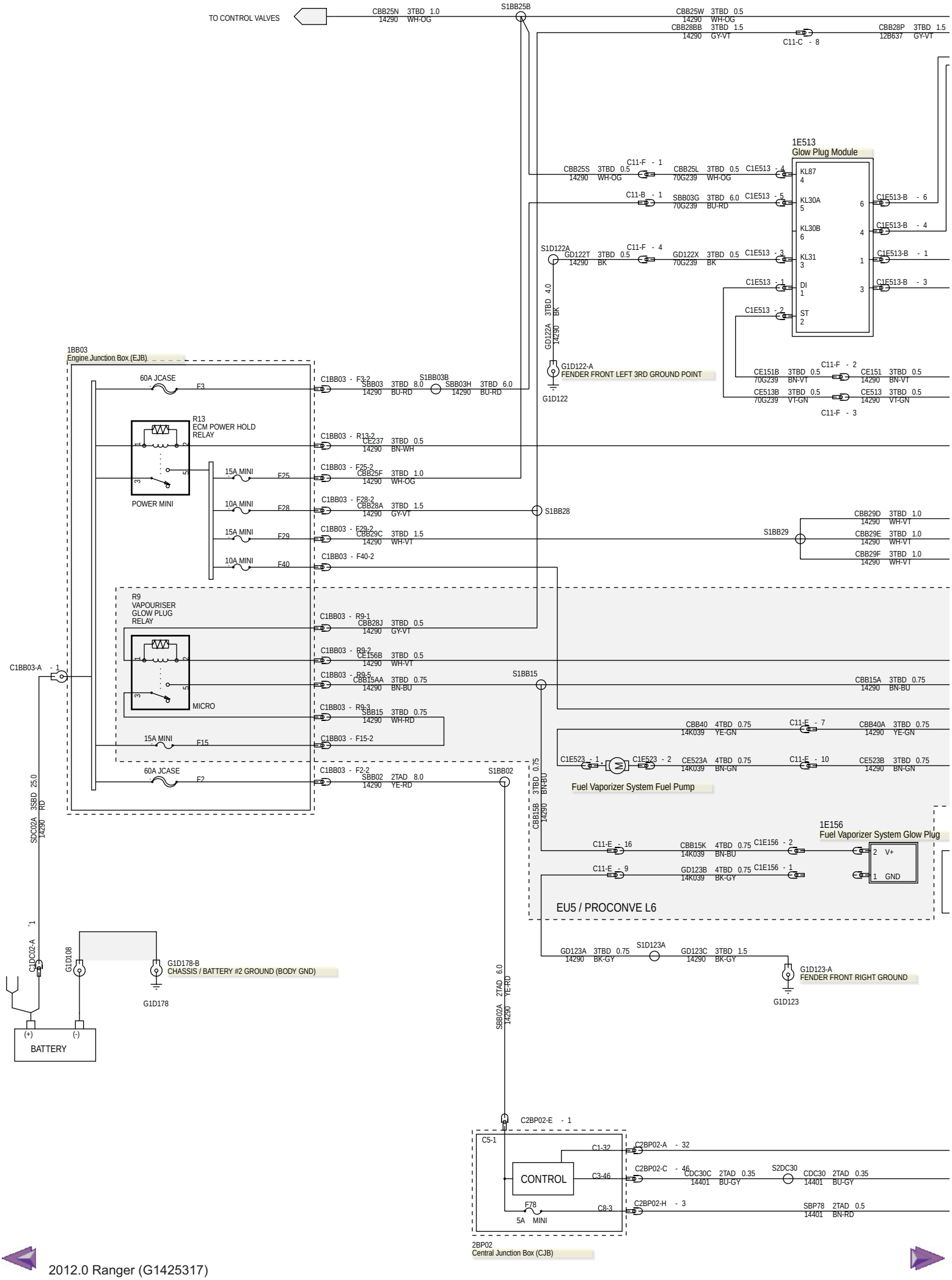

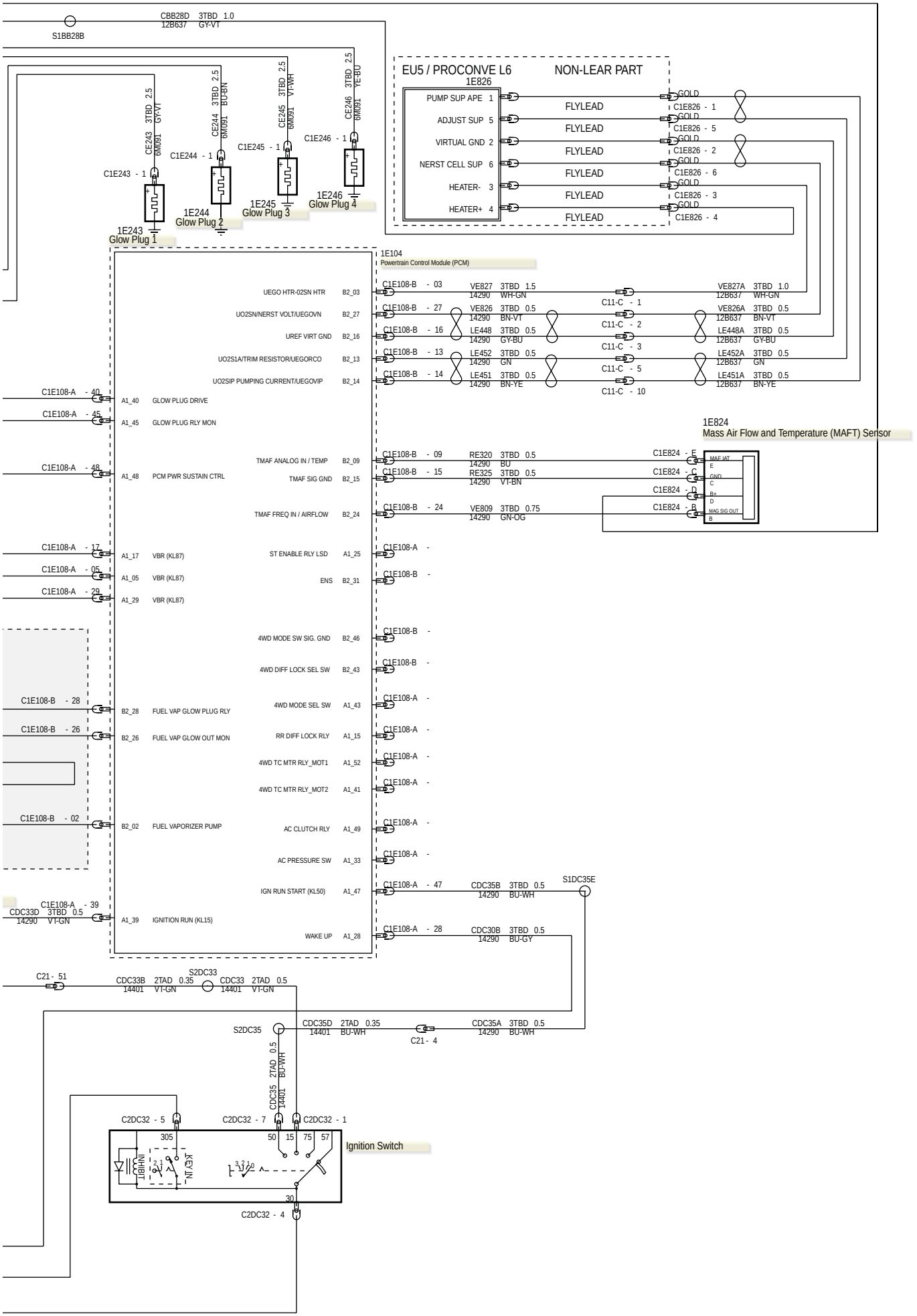
S1BB28B
CBB28D 3TBD 1.0
12B637 GY-VT
EU5 / PROCONVE L6
1E826
NON-LEAR PART
PUMP SUP APE 1
ADJUST SUP 5
VIRTUAL GND 2
NERST CELL SUP 6
HEATER- 3
HEATER+ 4
FLYLEAD
GOLD
C1E826 - 1
C1E826 - 5
C1E826 - 2
C1E826 - 6
C1E826 - 3
C1E826 - 4
C1E243 - 1
C1E244 - 1
C1E245 - 1
C1E246 - 1
1E243
Glow Plug 1
1E244
Glow Plug 2
1E245
Glow Plug 3
1E246
Glow Plug 4
1E104
Powertrain Control Module (PCM)
UEGO HTR-02SN HTR B2_03
UO2SN/NERST VOLT/UEGOVN B2_27
UREF VIRT GND B2_16
UO2S1A/TRIM RESISTOR/UEGORCO B2_13
UO2SIP PUMPING CURRENT/UEGOVIP B2_14
C1E108-B - 03
C1E108-B - 27
C1E108-B - 16
C1E108-B - 13
C1E108-B - 14
VE827 3TBD 1.5
14290 WH-GN
VE826 3TBD 0.5
14290 BN-VT
LE448 3TBD 0.5
14290 GY-BU
LE452 3TBD 0.5
14290 GN
LE451 3TBD 0.5
14290 BN-YE
C11-C - 1
C11-C - 2
C11-C - 3
C11-C - 5
C11-C - 10
VE827A 3TBD 1.0
12B637 WH-GN
VE826A 3TBD 0.5
12B637 BN-VT
LE448A 3TBD 0.5
12B637 GY-BU
LE452A 3TBD 0.5
12B637 GN
LE451A 3TBD 0.5
12B637 BN-YE
C1E108-A - 40
C1E108-A - 45
C1E108-A - 48
C1E108-A - 17
C1E108-A - 05
C1E108-A - 29
A1_40 GLOW PLUG DRIVE
A1_45 GLOW PLUG RLY MON
A1_48 PCM PWR SUSTAIN CTRL
A1_17 VBR (KL87)
A1_05 VBR (KL87)
A1_29 VBR (KL87)
1E824
Mass Air Flow and Temperature (MAFT) Sensor
TMAF ANALOG IN / TEMP B2_09
TMAF SIG GND B2_15
TMAF FREQ IN / AIRFLOW B2_24
C1E108-B - 09
C1E108-B - 15
C1E108-B - 24
RE320 3TBD 0.5
14290 BU
RE325 3TBD 0.5
14290 VT-BN
VE809 3TBD 0.75
14290 GN-OG
C1E824 - E
C1E824 - C
C1E824 - D
C1E824 - B
MAF IAT
E
GND
C
B+
D
MAG SIG OUT
B
ST ENABLE RLY LSD A1_25
ENS B2_31
C1E108-A -
C1E108-B -
4WD MODE SW SIG. GND B2_46
4WD DIFF LOCK SEL SW B2_43
4WD MODE SEL SW A1_43
RR DIFF LOCK RLY A1_15
4WD TC MTR RLY_MOT1 A1_52
4WD TC MTR RLY_MOT2 A1_41
AC CLUTCH RLY A1_49
AC PRESSURE SW A1_33
IGN RUN START (KL50) A1_47
WAKE UP A1_28
C1E108-B - 28
C1E108-B - 26
C1E108-B - 02
B2_28 FUEL VAP GLOW PLUG RLY
B2_26 FUEL VAP GLOW OUT MON
B2_02 FUEL VAPORIZER PUMP
C1E108-A - 47
CDC35B 3TBD 0.5
14290 BU-WH
S1DC35E
C1E108-A - 39
CDC33D 3TBD 0.5
14290 VT-GN
A1_39 IGNITION RUN (KL15)
C1E108-A - 28
CDC30B 3TBD 0.5
14290 BU-GY
C21 - 51
CDC33B 2TAD 0.35
14401 VT-GN
S2DC33
CDC33 2TAD 0.5
14401 VT-GN
S2DC35
CDC35D 2TAD 0.35
14401 BU-WH
C21 - 4
CDC35A 3TBD 0.5
14290 BU-WH
CDC35 2TAD 0.5
14401 BU-WH
C2DC32 - 5
C2DC32 - 7
C2DC32 - 1
305
50
15
75
57
30
INHIBIT
KEY IN
Ignition Switch
C2DC32 - 4

- Puma, Vehicles With: 6-Speed Automatic Transaxle - 6R80

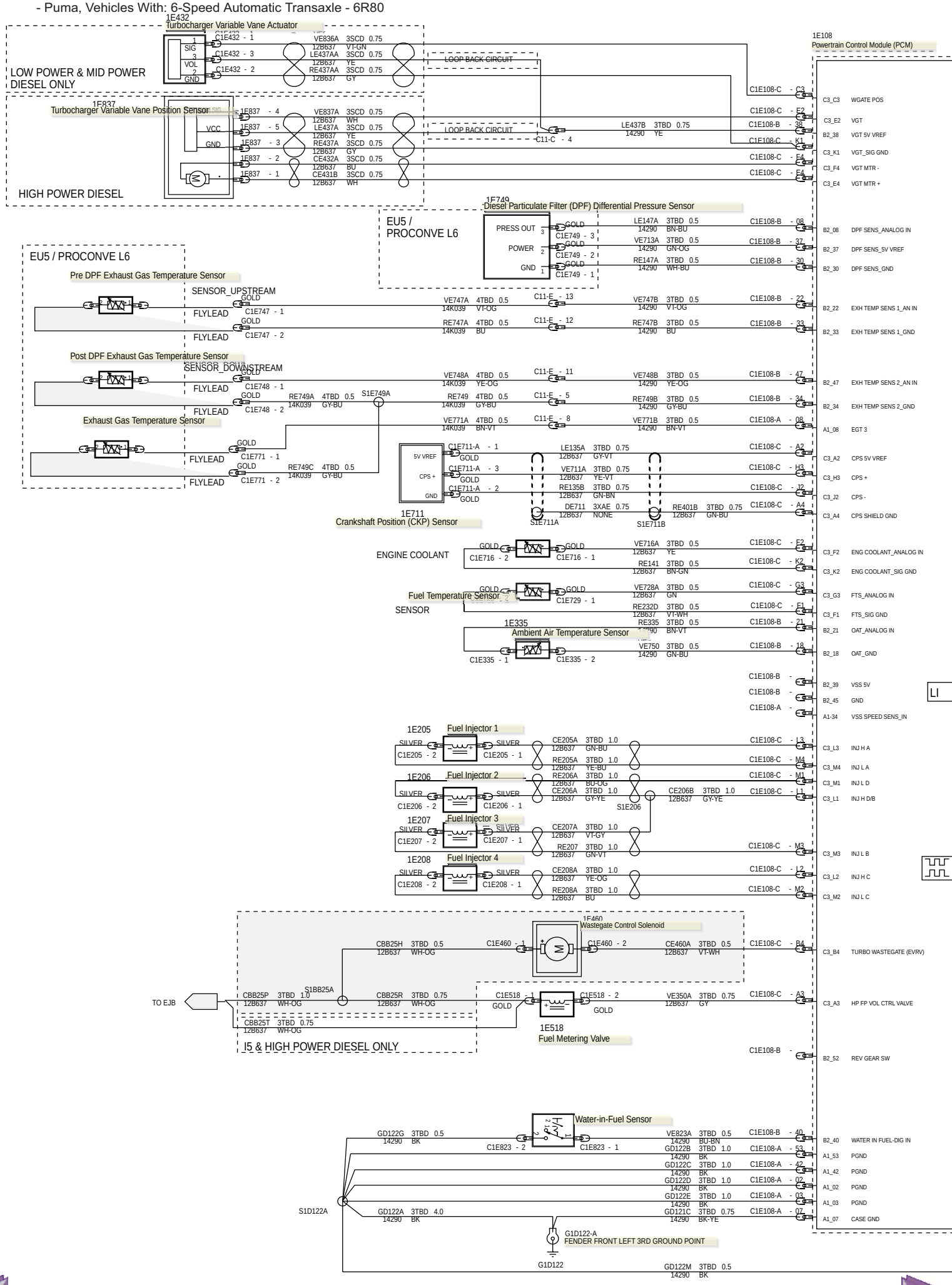

- Puma, Vehicles With: 6-Speed Automatic Transaxle - 6R80

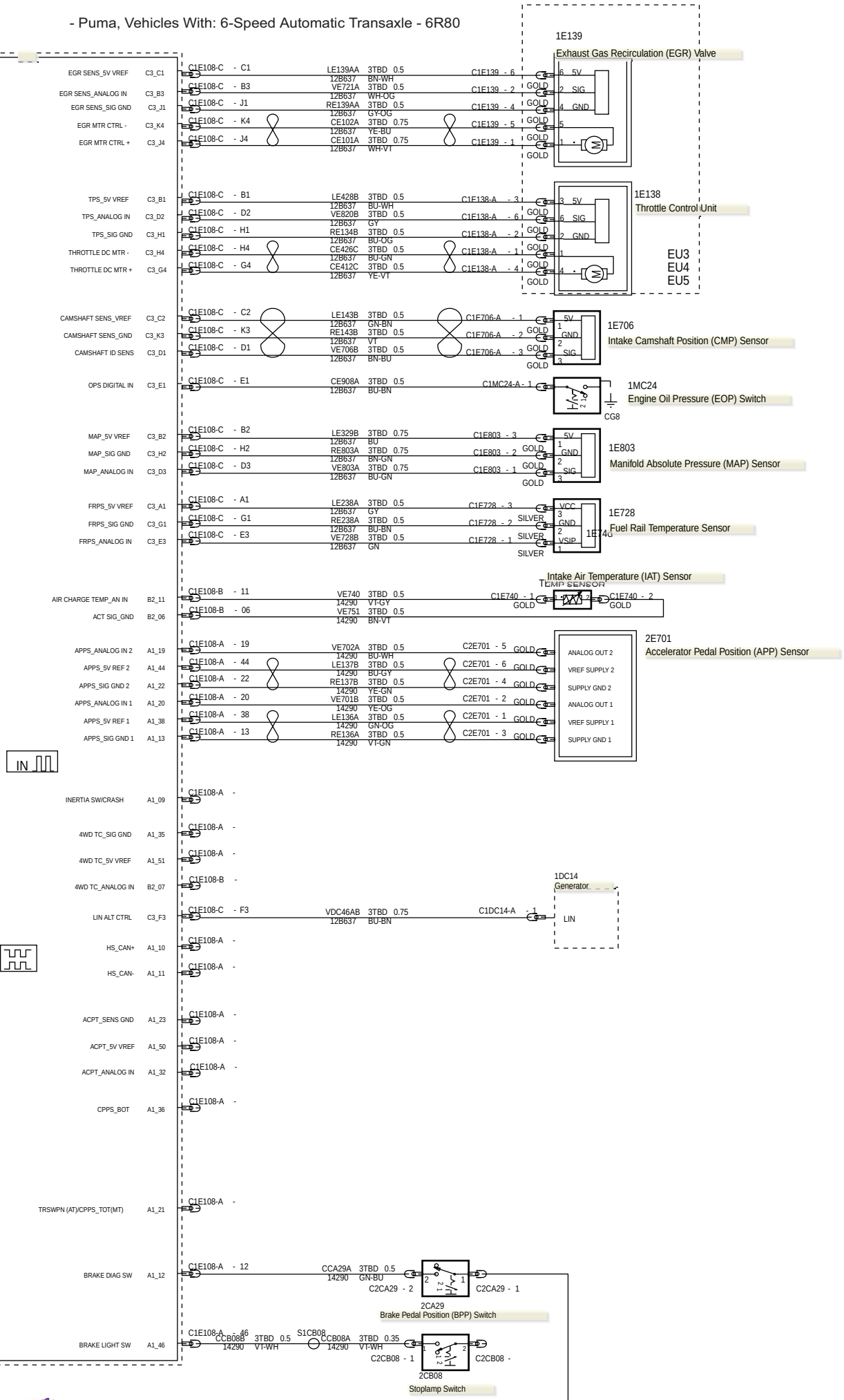

303-14B-16 Engine Control—2.2L Duratorq-TDCi (88kW/120PS) - Puma/2.2L Duratorq-TDCi (96kW/130PS) - Puma/2.2L
Duratorq-TDCi (110kw/150PS) - Puma, Vehicles With: 6-Speed Automatic Transaxle - 6R80

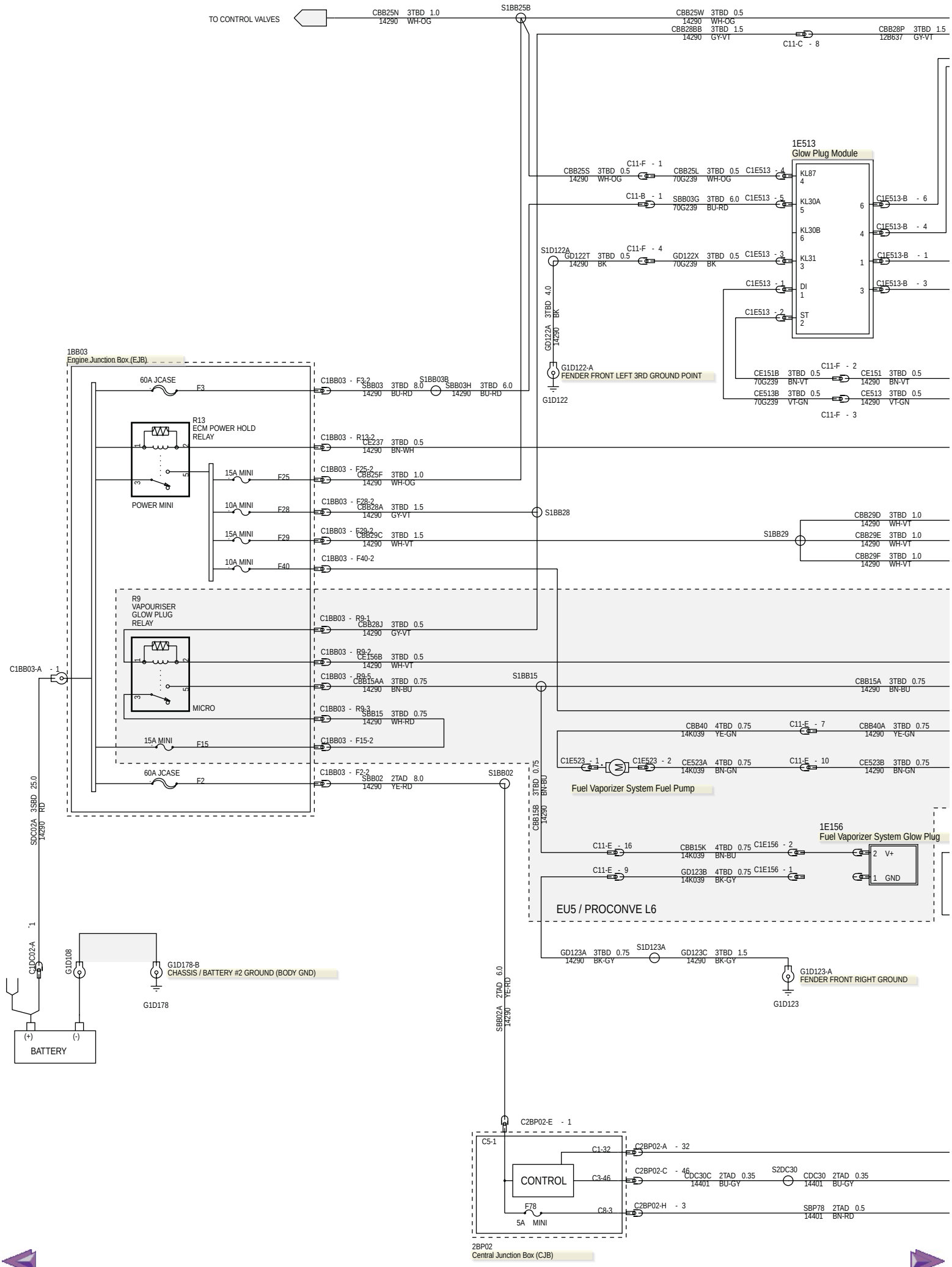

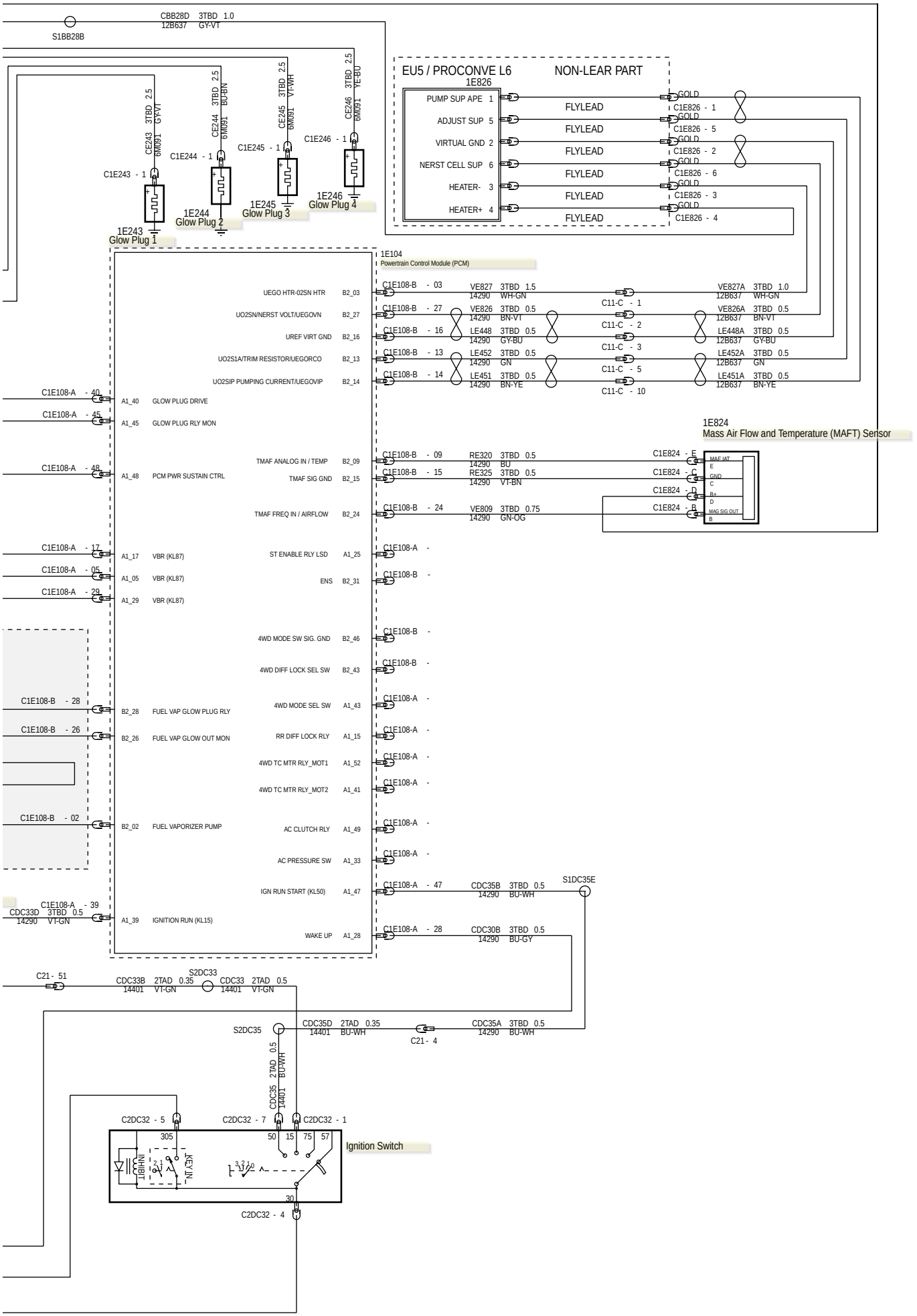
EU5 / PROCONVE L6
1E826
NON-LEAR PART
PUMP SUP APE 1
ADJUST SUP 5
VIRTUAL GND 2
NERST CELL SUP 6
HEATER- 3
HEATER+ 4
FLYLEAD
1E243
Glow Plug 1
1E244
Glow Plug 2
1E245
Glow Plug 3
1E246
Glow Plug 4
1E104
Powertrain Control Module (PCM)
UEGO HTR-02SN HTR B2_03
UO2SN/NERST VOLT/UEGOVN B2_27
UREF VIRT GND B2_16
UO2S1A/TRIM RESISTOR/UEGORCO B2_13
UO2SIP PUMPING CURRENT/UEGOVIP B2_14
GLOW PLUG DRIVE
GLOW PLUG RLY MON
PCM PWR SUSTAIN CTRL
TMAF ANALOG IN / TEMP B2_09
TMAF SIG GND B2_15
TMAF FREQ IN / AIRFLOW B2_24
ST ENABLE RLY LSD A1_25
ENS B2_31
4WD MODE SW SIG. GND B2_46
4WD DIFF LOCK SEL SW B2_43
4WD MODE SEL SW A1_43
RR DIFF LOCK RLY A1_15
4WD TC MTR RLY_MOT1 A1_52
4WD TC MTR RLY_MOT2 A1_41
AC CLUTCH RLY A1_49
AC PRESSURE SW A1_33
IGN RUN START (KL50) A1_47
WAKE UP A1_28
FUEL VAP GLOW PLUG RLY
FUEL VAP GLOW OUT MON
FUEL VAPORIZER PUMP
IGNITION RUN (KL15)
1E824
Mass Air Flow and Temperature (MAFT) Sensor
MAF IAT
GND
B+
MAG SIG OUT
S1BB28B
S1DC35E
S2DC33
S2DC35
Ignition Switch
INHIBIT
KEY IN

303-14B-18 Engine Control—3.2L Duratorq-TDCi (148kW/200PS) - Puma, Vehicles With: 6-Speed Manual Transmission - MT82

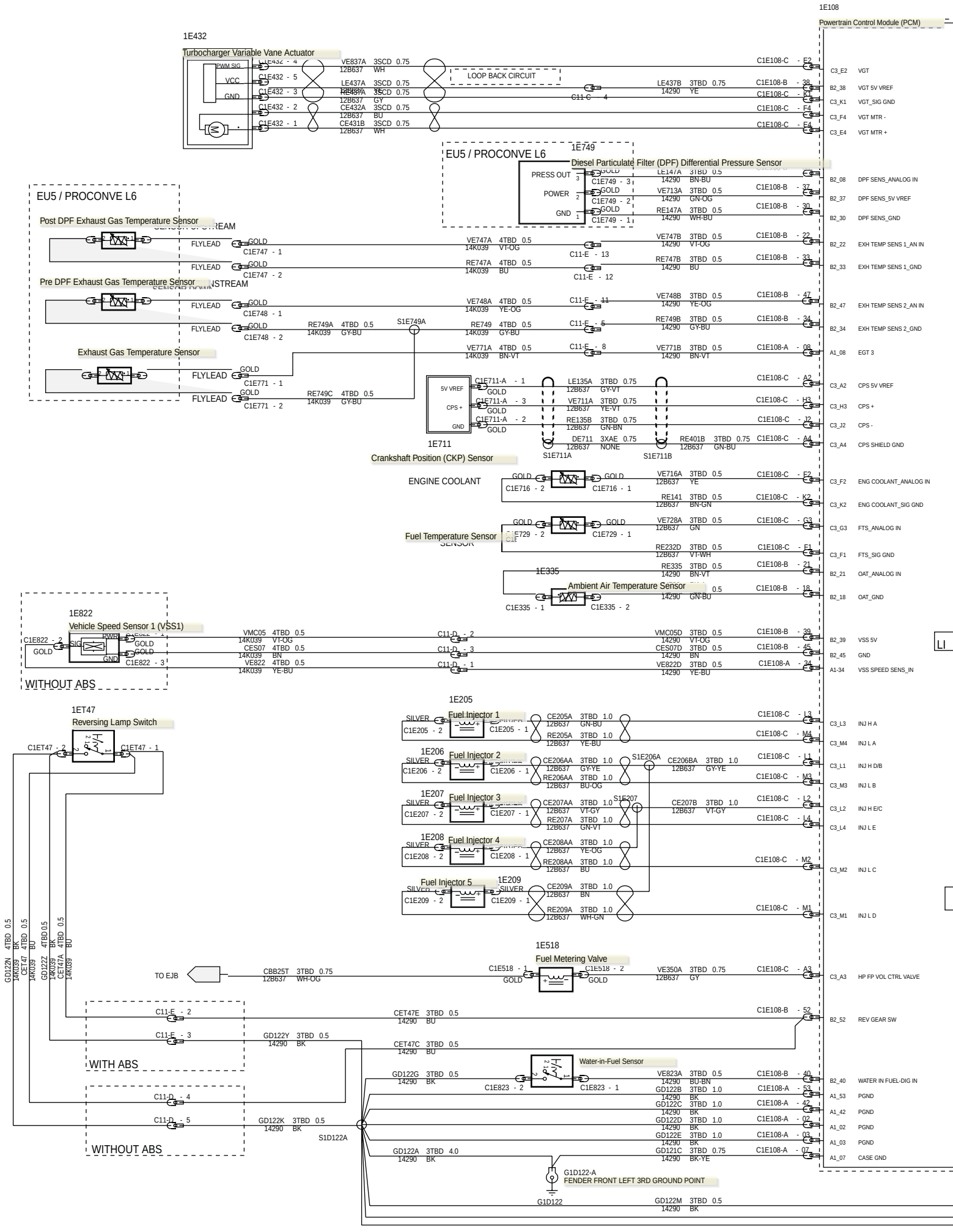

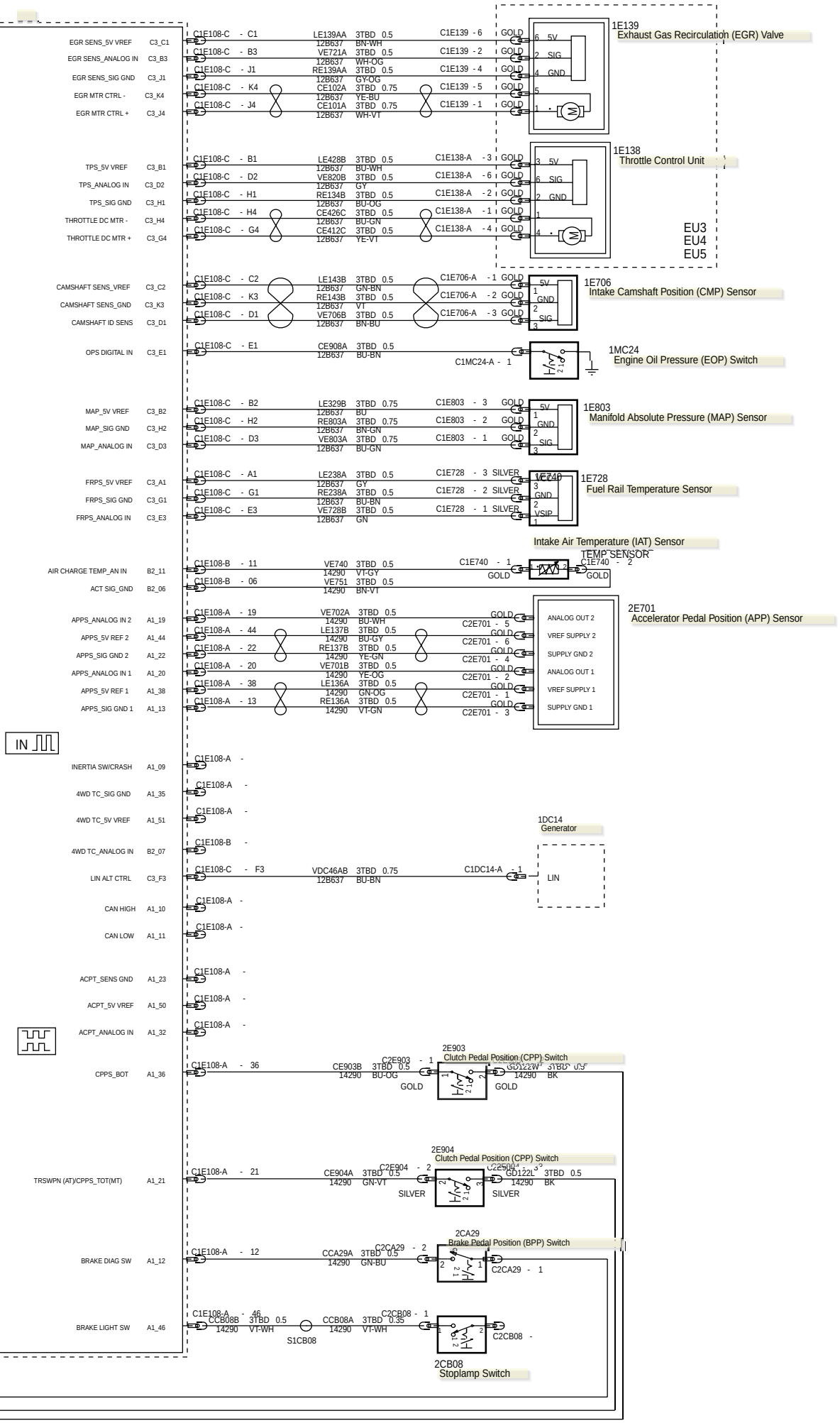
EGR SENS_5V VREF C3_C1
EGR SENS_ANALOG IN C3_B3
EGR SENS_SIG GND C3_J1
EGR MTR CTRL - C3_K4
EGR MTR CTRL + C3_J4
1E139
Exhaust Gas Recirculation (EGR) Valve
TPS_5V VREF C3_B1
TPS_ANALOG IN C3_D2
TPS_SIG GND C3_H1
THROTTLE DC MTR - C3_H4
THROTTLE DC MTR + C3_G4
1E138
Throttle Control Unit
EU3
EU4
EU5
CAMSHAFT SENS_VREF C3_C2
CAMSHAFT SENS_GND C3_K3
CAMSHAFT ID SENS C3_D1
1E706
Intake Camshaft Position (CMP) Sensor
OPS DIGITAL IN C3_E1
1MC24
Engine Oil Pressure (EOP) Switch
MAP_5V VREF C3_B2
MAP_SIG GND C3_H2
MAP_ANALOG IN C3_D3
1E803
Manifold Absolute Pressure (MAP) Sensor
FRPS_5V VREF C3_A1
FRPS_SIG GND C3_G1
FRPS_ANALOG IN C3_E3
1E728
Fuel Rail Temperature Sensor
Intake Air Temperature (IAT) Sensor
TEMP SENSOR
AIR CHARGE TEMP_AN IN B2_11
ACT SIG_GND B2_06
APPS_ANALOG IN 2 A1_19
APPS_5V REF 2 A1_44
APPS_SIG GND 2 A1_22
APPS_ANALOG IN 1 A1_20
APPS_5V REF 1 A1_38
APPS_SIG GND 1 A1_13
2E701
Accelerator Pedal Position (APP) Sensor
ANALOG OUT 2
VREF SUPPLY 2
SUPPLY GND 2
ANALOG OUT 1
VREF SUPPLY 1
SUPPLY GND 1
IN
INERTIA SW/CRASH A1_09
4WD TC_SIG GND A1_35
4WD TC_5V VREF A1_51
4WD TC_ANALOG IN B2_07
LIN ALT CTRL C3_F3
1DC14
Generator
LIN
CAN HIGH A1_10
CAN LOW A1_11
ACPT_SENS GND A1_23
ACPT_5V VREF A1_50
ACPT_ANALOG IN A1_32
CPPS_BOT A1_36
2E903
Clutch Pedal Position (CPP) Switch
TRSWPN (AT)/CPPS_TOT(MT) A1_21
2E904
Clutch Pedal Position (CPP) Switch
BRAKE DIAG SW A1_12
2CA29
Brake Pedal Position (BPP) Switch
BRAKE LIGHT SW A1_46
S1CB08
2CB08
Stoplamp Switch

303-14B-20 Engine Control—3.2L Duratorq-TDCi (148kW/200PS) - Puma, Vehicles With: 6-Speed Manual Transmission - MT82

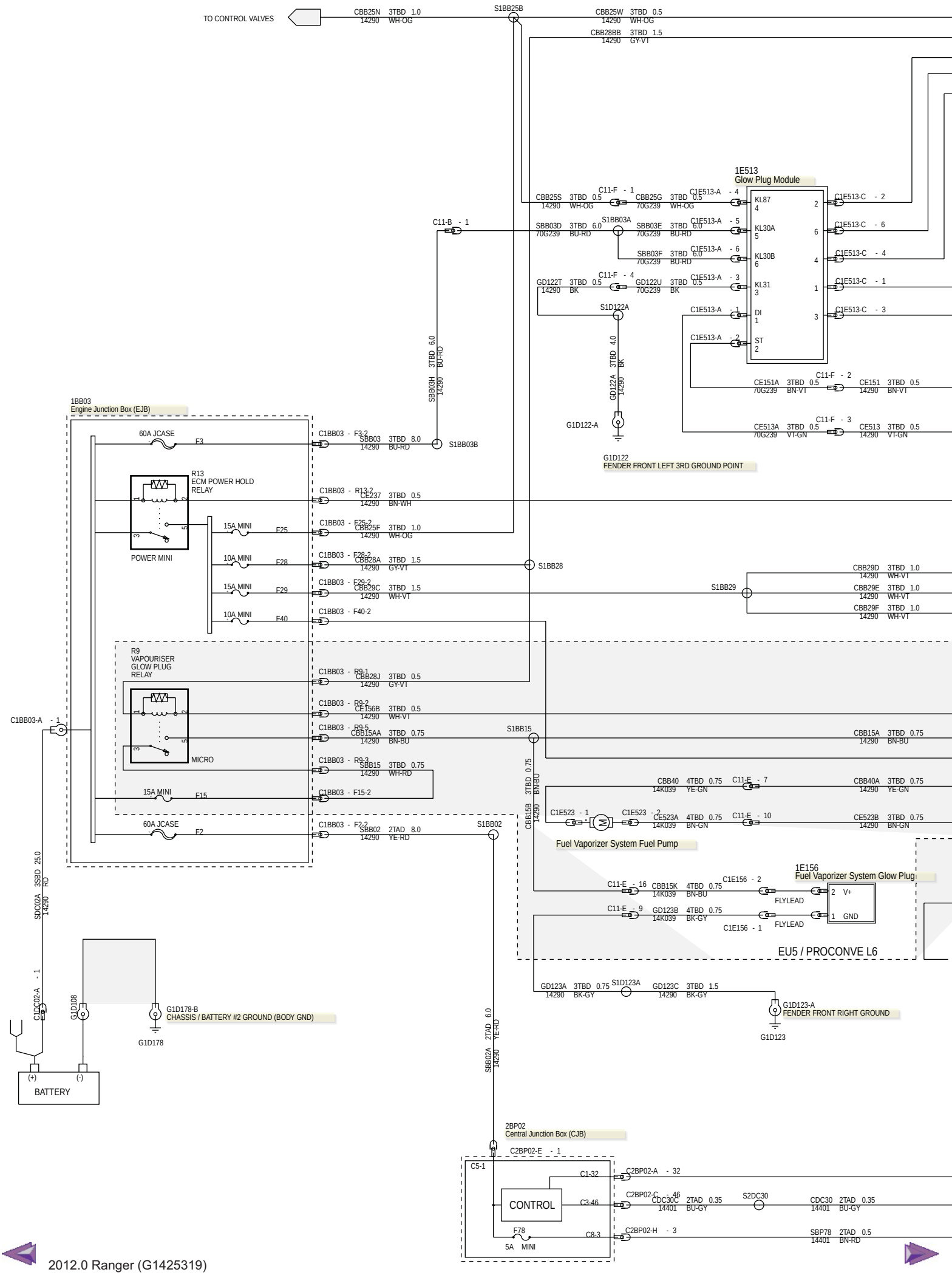

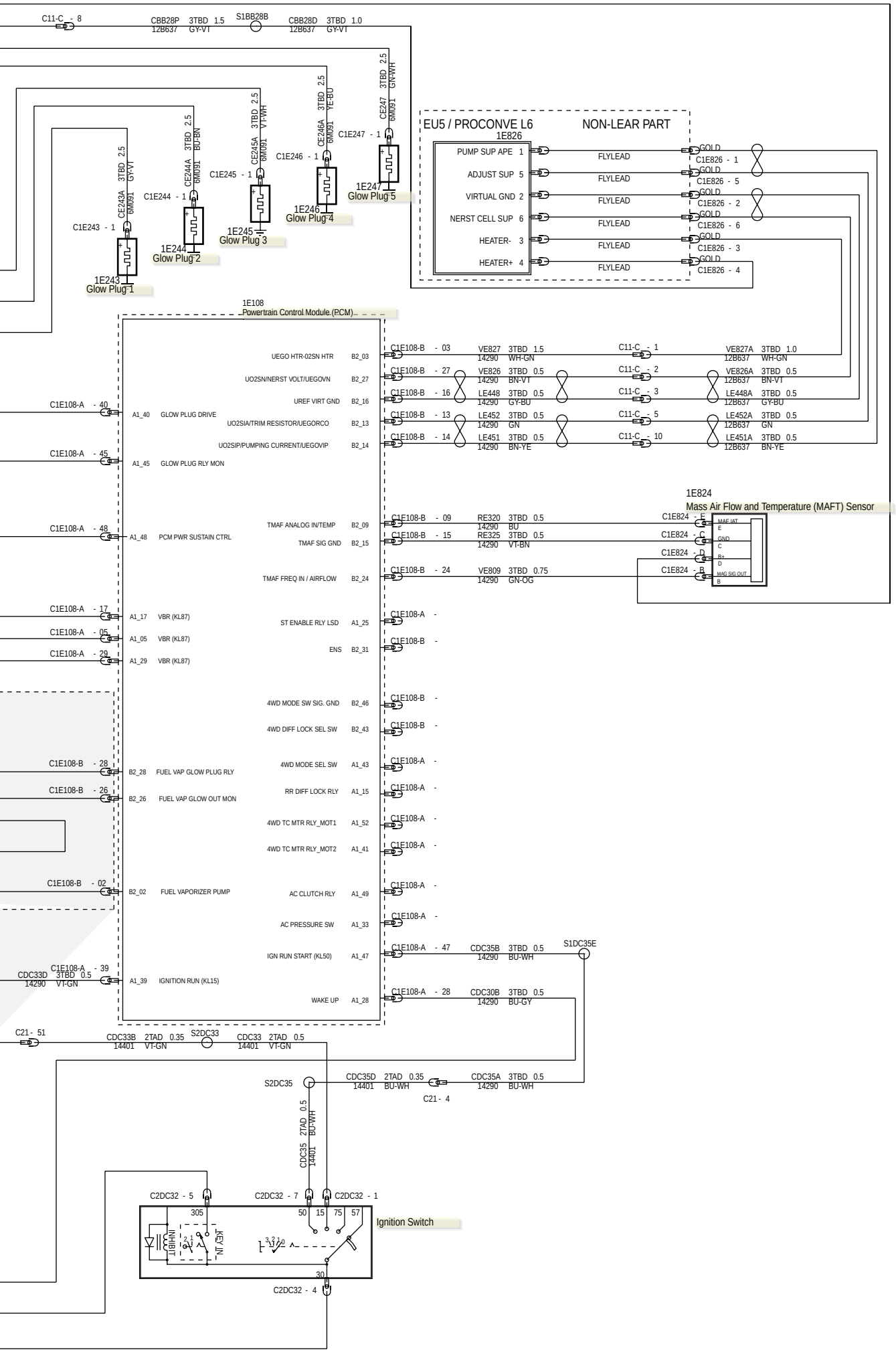
EU5 / PROCONVE L6
NON-LEAR PART
1E826
PUMP SUP APE 1
ADJUST SUP 5
VIRTUAL GND 2
NERST CELL SUP 6
HEATER- 3
HEATER+ 4
FLYLEAD
1E243 Glow Plug 1
1E244 Glow Plug 2
1E245 Glow Plug 3
1E246 Glow Plug 4
1E247 Glow Plug 5
1E108
Powertrain Control Module (PCM)
UEGO HTR-02SN HTR
UO2SN/NERST VOLT/UEGOVN
UREF VIRT GND
UO2SIA/TRIM RESISTOR/UEGORCO
UO2SIP/PUMPING CURRENT/UEGOVIP
GLOW PLUG DRIVE
GLOW PLUG RLY MON
PCM PWR SUSTAIN CTRL
TMAF ANALOG IN/TEMP
TMAF SIG GND
TMAF FREQ IN / AIRFLOW
1E824
Mass Air Flow and Temperature (MAFT) Sensor
ST ENABLE RLY LSD
ENS
4WD MODE SW SIG. GND
4WD DIFF LOCK SEL SW
4WD MODE SEL SW
RR DIFF LOCK RLY
4WD TC MTR RLY_MOT1
4WD TC MTR RLY_MOT2
FUEL VAP GLOW PLUG RLY
FUEL VAP GLOW OUT MON
FUEL VAPORIZER PUMP
AC CLUTCH RLY
AC PRESSURE SW
IGN RUN START (KL50)
IGNITION RUN (KL15)
WAKE UP
VBR (KL87)
Ignition Switch

303-14B-22 Engine Control—3.2L Duratorq-TDCi (148kW/200PS) - Puma, Vehicles With: 6-Speed Automatic Transaxle - 6R80

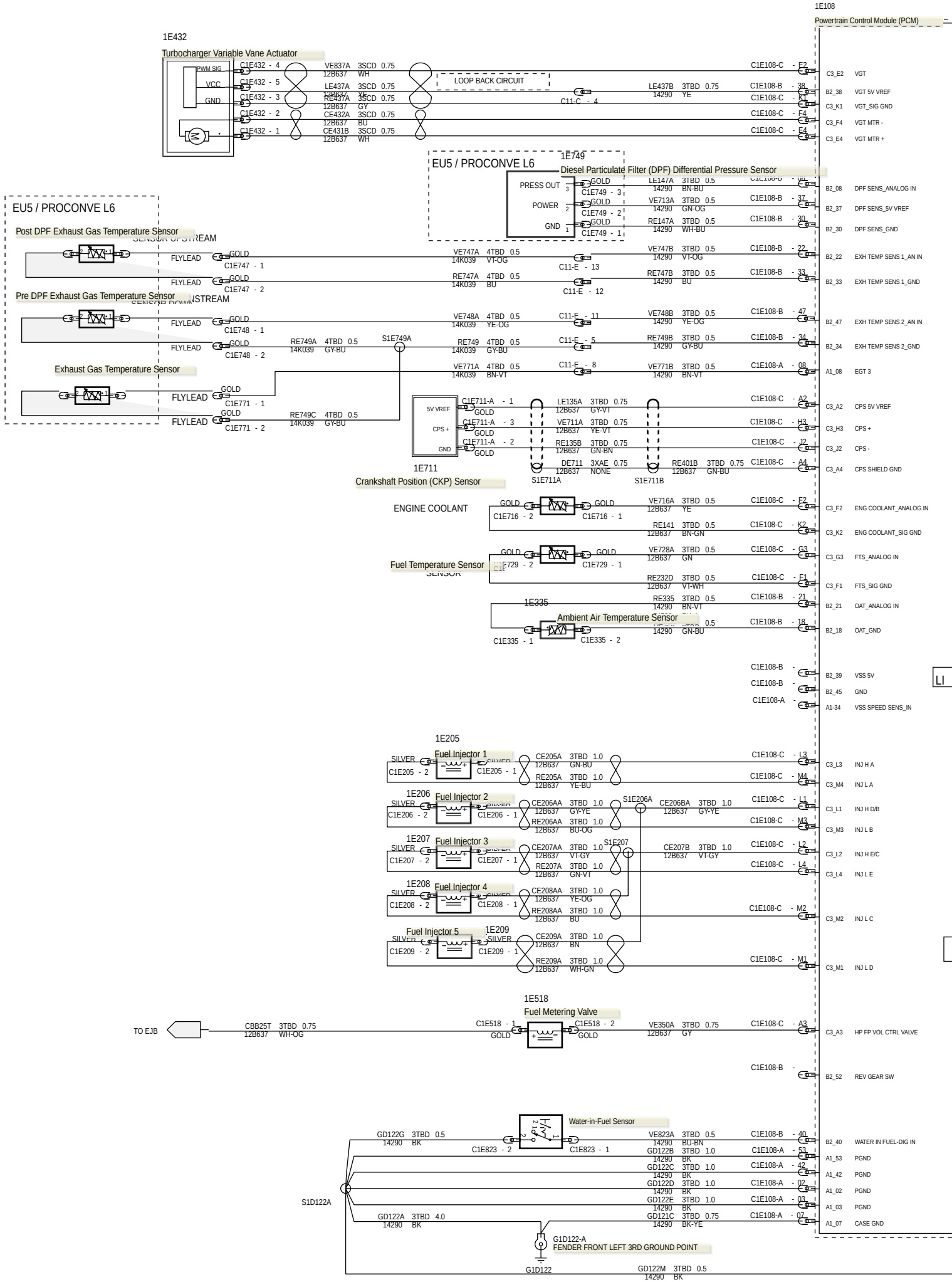

303-14B-23 Engine Control—3.2L Duratorq-TDCi (148kW/200PS) - Puma, Vehicles With: 6-Speed Automatic Transaxle - 6R80

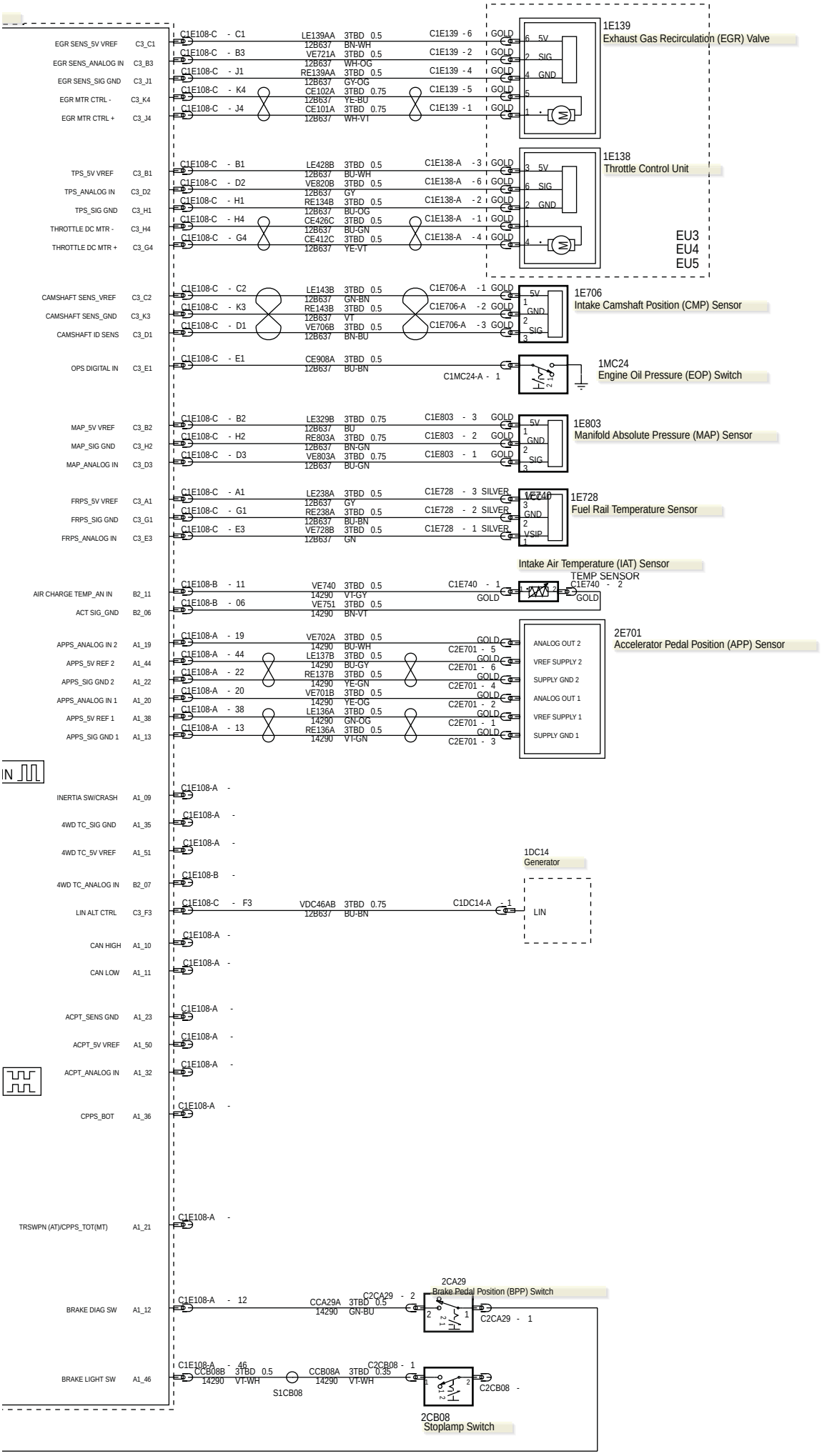

303-14B-24 Engine Control—3.2L Duratorq-TDCi (148kW/200PS) - Puma, Vehicles With: 6-Speed Automatic Transaxle - 6R80

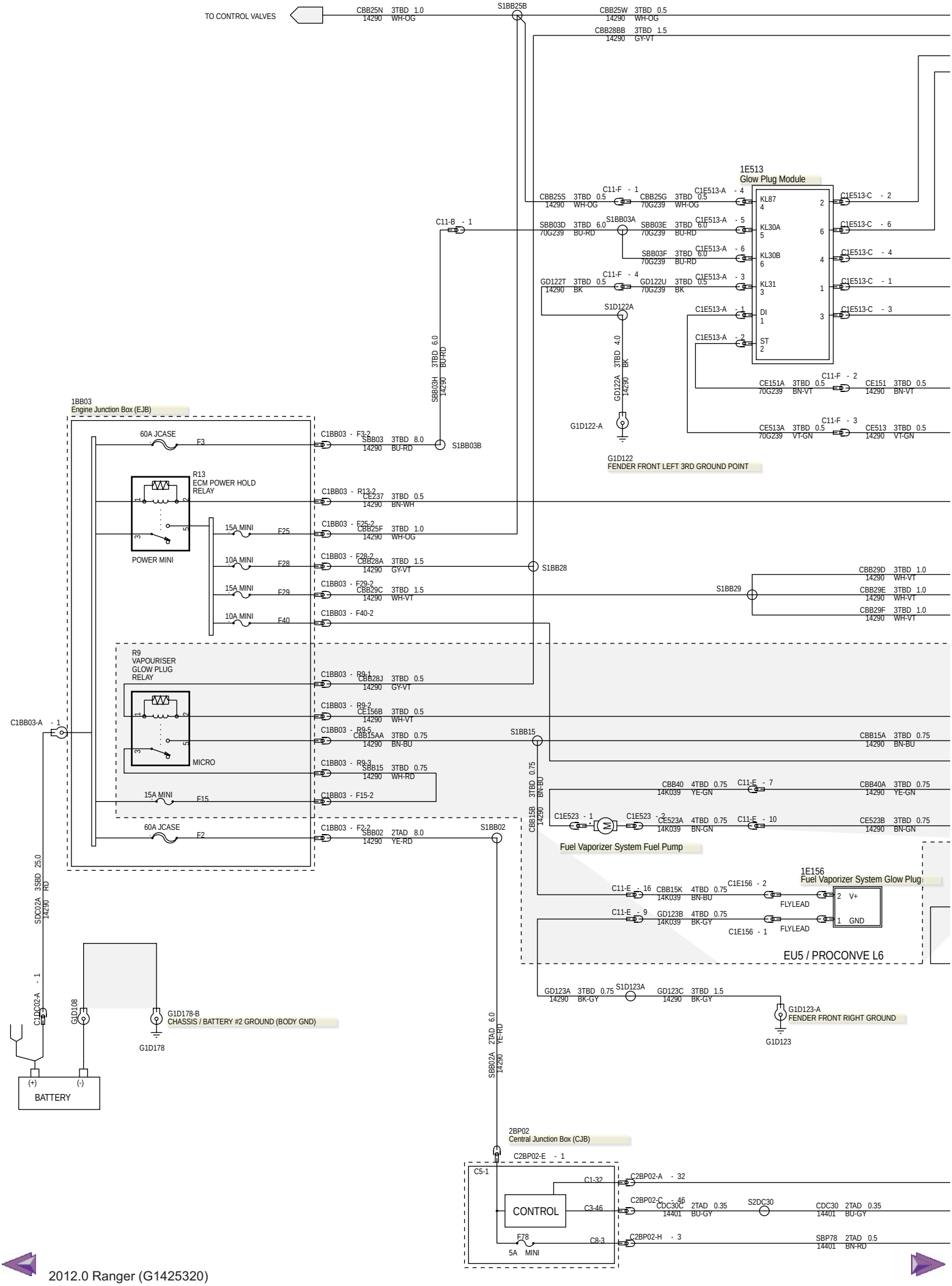

303-14B-25 Engine Control—3.2L Duratorq-TDCi (148kW/200PS) - Puma, Vehicles With: 6-Speed Automatic Transaxle - 6R80

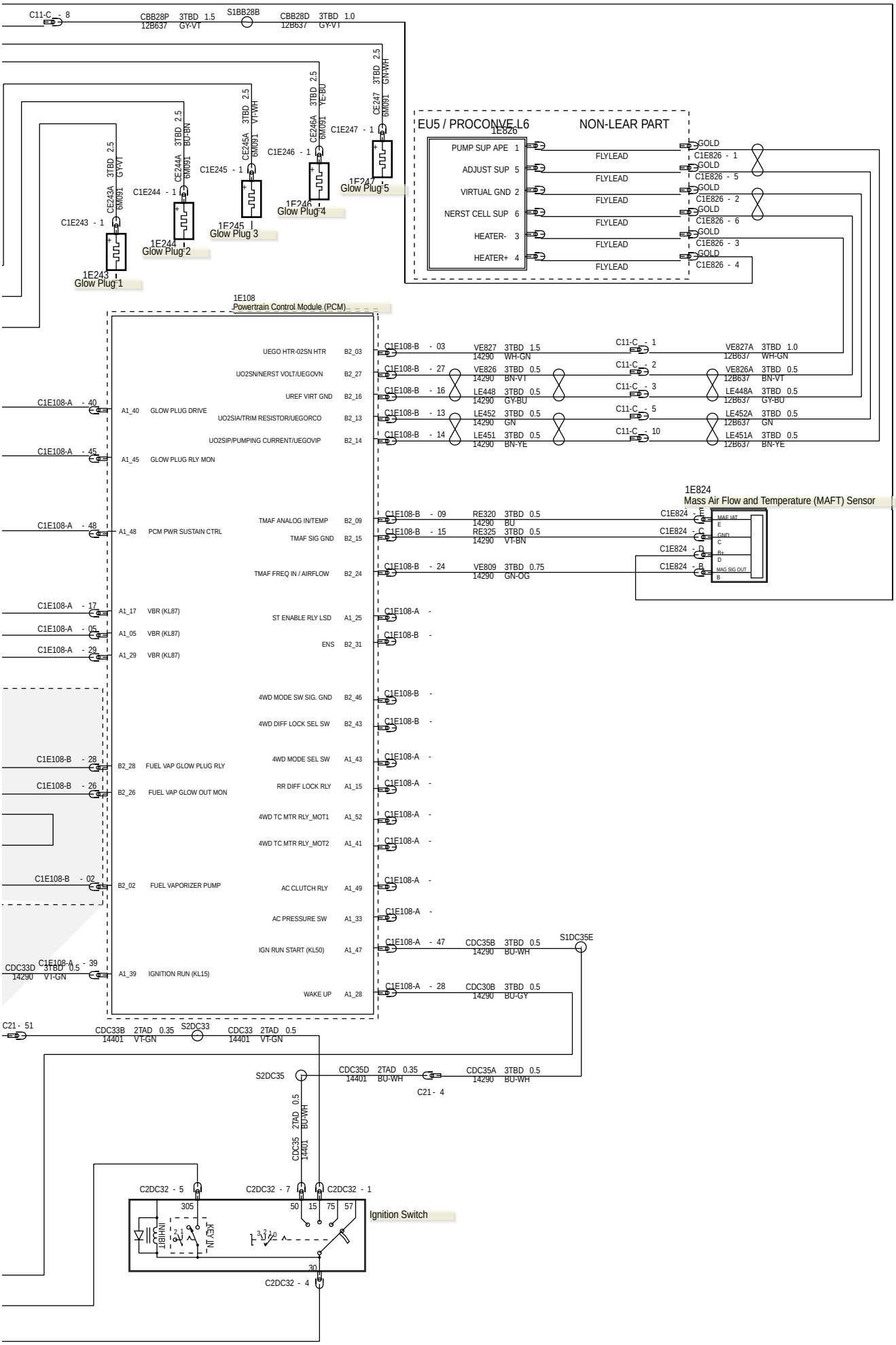

Accelerator Pedal Position (APP) Sensor (G1404002)

PIN 1 => LE136A GN-OG 0.5 3TBD
PIN 2 => VE701B YE-OG 0.5 3TBD
PIN 3 => RE136A VT-GN 0.5 3TBD
PIN 4 => RE137B YE-GN 0.5 3TBD
PIN 5 => VE702A BU-WH 0.5 3TBD
PIN 6 => LE137B BU-GY 0.5 3TBD

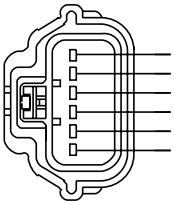

1	LE136B	GN-OG	3TBD	0.5	GOLD
2	VE701A	YE-OG	3TBD	0.5	GOLD
3	RE136B	VT-GN	3TBD	0.5	GOLD
4	RE137A	YE-GN	3TBD	0.5	GOLD
5	VE702B	BU-WH	3TBD	0.5	GOLD
6	LE137A	BU-GY	3TBD	0.5	GOLD

8U5T-14A464-JAA(000)

C2E701

TO ACCELERATOR PEDAL

HARNESS 14290

Brake Pedal Position (BPP) Switch (G1404158)

PIN 2 => CCA29A GN-BU 0.5 3TBD

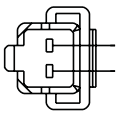

1	GD122M	BK	3TBD	0.5
2	CCA29B	GN-BU	3TBD	0.5

F5LB-14489-BA

C2CA29

TO SPEED CONTROL INHIBIT SWITCH

HARNESS 14290

Clutch Pedal Position (CPP) Switch (G1404159)

PIN 1 => CE903B BU-OG 0.5 3TBD

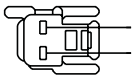

2	GD122W	BK	3TBD	0.5	GOLD
1	CE903A	BU-OG	3TBD	0.5	GOLD

97BG-14489-YBB

C2E903

TO CPP-BT

HARNESS 14290

Clutch Pedal Position (CPP) Switch (G1404160)

PIN 2 => CE904A GN-VT 0.5 3TBD

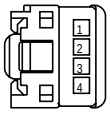

1					
2	CE904B	GN-VT	3TBD	0.5	SILVER
3	GD122L	BK	3TBD	0.5	SILVER
4					

1L2T-14489-GC

C2E904

TO CPP-TT

HARNESS 14290

Crankshaft Position (CKP) Sensor—A (G1404161)

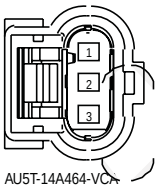

1	LE135A	GY-VT	3TBD	0.75	GOLD
2	RE135B	GN-BN	3TBD	0.75	GOLD
3	VE711A	YE-VT	3TBD	0.75	GOLD

AU5T-14A464-VCA

C1E711-A

TO BI-DIRECTIONAL CRANKSHAFT POSITION SENSOR

HARNESS 12B637

Diesel Particulate Filter (DPF) Differential Pressure Sensor (G1404169)

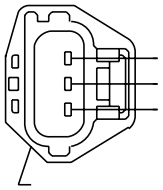

3	LE147A	BN-BU	3TBD	0.5	GOLD
2	VE713A	GN-OG	3TBD	0.5	GOLD
1	RE147A	WH-BU	3TBD	0.5	GOLD

XW4T-14A464-FB

C1E749
TO DPF DELTA PRESSURE SENSOR ASSY

HARNESS 14290

Engine Coolant Temperature (ECT) Sensor (G1404170)

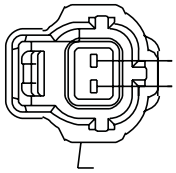

2	RE141	BN-GN	3TBD	0.5	GOLD
1	VE716A	YE	3TBD	0.5	GOLD

F5AB-14A464-BB

C1E716
TO ENGINE COOLANT TEMPERATURE SENSOR

HARNESS 12B637

Engine Oil Pressure (EOP) Switch—A (G1404171)

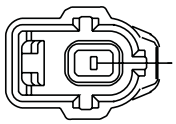

1	CE908A	BU-BN	3TBD	0.5

F65B-14A464-CA

C1MC24-A
TO OIL PRESSURE SWITCH DIESEL

HARNESS 12B637

Exhaust Gas Temperature Sensor (G1408808)

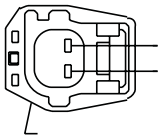

2	RE749C	GY-BU	4TBD	0.5
1	VE771A	BN-VT	4TBD	0.5

XW4T-14A464-AJB

C1E771
TO FLYLEAD EGT3 SENSOR

HARNESS 14K039

Fuel Rail Temperature Sensor (G1404176)

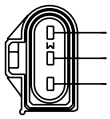

1	VE728B	GN	3TBD	0.5	SILVER
2	RE238A	BU-BN	3TBD	0.5	SILVER
3	LE238A	GY	3TBD	0.5	SILVER

4R8Q-14A464-DB

C1E728
TO FUEL RAIL PRESSURE TRANSDUCER

HARNESS 12B637

Fuel Temperature Sensor (G1404177)

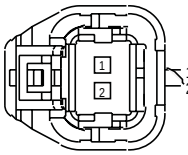

1	VE728A	GN 3TBD	0.5		GOLD
2	RE232D	VT-WH	3TBD	0.5	GOLD

AU5T-14A464-DBA

C1E729
TO FUEL TEMPERATURE SENSOR

HARNESS 12B637

Heated Oxygen Sensor (HO2S) (G1408809)

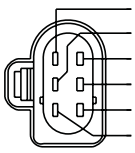

6	VE826A	BN-VT	3TBD	0.5	GOLD
4	CBB28D	GY-VT	3TBD	1.0	GOLD
5	LE452A	GN 3TBD	0.5		GOLD
3	VE827A	WH-GN	3TBD	1.0	GOLD
1	LE451A	BN-YE	3TBD	0.5	GOLD
2	LE448A	GY-BU	3TBD	0.5	GOLD

6G9T-14A464-XDA

C1E826
TO FLYLEAD UHEGO

HARNESS 12B637

Intake Air Temperature (IAT) Sensor (G1404178)

2	VE751	BN-VT	3TBD	0.5	GOLD
1	VE740	VT-GY	3TBD	0.5	GOLD

6M5T-14A464-FBA

C1E740
TO AIRCHARGE TEMP SENSOR

HARNESS 14290

Intake Camshaft Position (CMP) Sensor—A (G1404179)

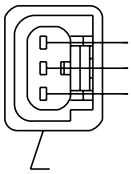

3	VE706B	BN-BU	3TBD	0.5	GOLD
2	RE143B	VT 3TBD	0.5		GOLD
1	LE143B	GN-BN	3TBD	0.5	GOLD

1W7T-14A464-MA

C1E706-A
TO CAMSHAFT POSITION SENSOR DIESEL

HARNESS 12B637

Manifold Absolute Pressure (MAP) Sensor (G1404184)

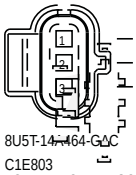

1	VE803A	BU-GN	3TBD	0.75	GOLD
2	RE803A	BN-GN	3TBD	0.75	GOLD
3	LE329B	BU 3TBD	0.75		GOLD

8U5T-14A464-GAC

C1E803
TO MANIFOLD ABSOLUTE PRESSURE

HARNESS 12B637

Mass Air Flow and Temperature (MAFT) Sensor (G1404185)

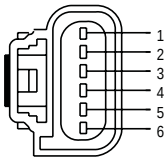

1	
2	RE320 BU 3TBD 0.5
3	CBB25W WH-OG 3TBD 0.5
4	RE235 VT-BN 3TBD 0.5
5	VE809 GN-OG 3TBD 0.75
6	

3W4T-14A464-VA(002)

C1E824
TO TEMPERATURE MASS AIR FLOW SENSOR

HARNESS 14290

Post DPF Exhaust Gas Temperature Sensor (G1404186)

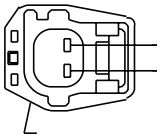

2	RE749A	GY-BU	4TBD	0.5
1	VE748A	YE-OG	4TBD	0.5

XW4T-14A464-AJB

C1E748
TO FLYLEAD DPF EXHAUST TEMPERATURE SENSOR DOWNSTREAM

HARNESS 14K039

Powertrain Control Module (PCM)—A (G1404187)

PIN 36 => CE903B BU-OG 0.5 3TBD

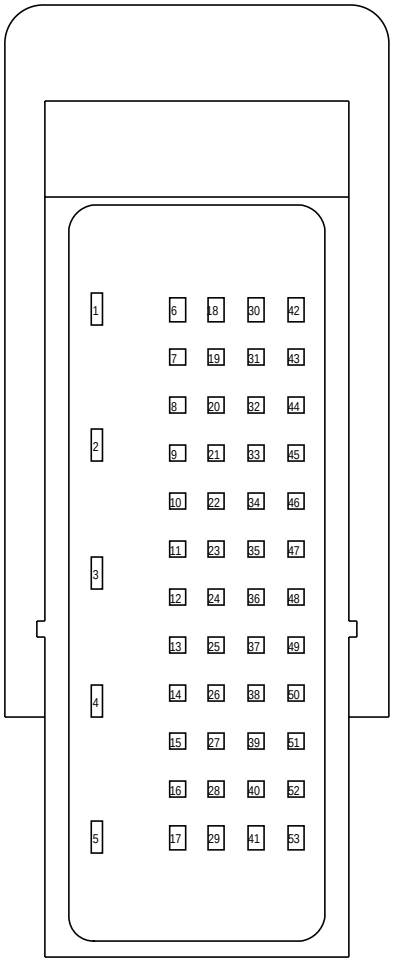

1								
2								
3								
4								
5								
6								
7								
8								
9								
10	VDB04E	WH-BU	3TBD	0.5	+	VDB04P	WH-BU	3TBD 0.5
11	VDB05N	WH3TBD	0.5	+	VDB05P	WH3TBD	0.5	
12	CCA29A	GN-BU	3TBD	0.5				
13	RE136A	VT-GN	3TBD	0.5				
14								
15	VET68B	VT-OG	3TBD	0.5				
16								
17	CBB29D	WH-VT	3TBD	1.0				
18								
19	VE702A	BU-WH	3TBD	0.5				
20	VE701B	YE-OG	3TBD	0.5				
21	CE904A	GN-VT	3TBD	0.5				
22	RE137B	YE-GN	3TBD	0.5				
23	RH433A	BU-GY	3TBD	0.5				
24								
25	CDC12A	YE 3TBD	0.5					
26								
27								
28	CDC30B	BU-GY	3TBD	0.5				
29	CBB29F	WH-VT	3TBD	1.0				
30								
31								
32	VH433B	VT-OG	3TBD	0.5				
33	CH423C	YE 3TBD	0.5					
34	VE822D	YE-BU	3TBD	0.5				
35	RCF09	BN-WH	3TBD	0.5				
36	CET60	WH-GN	3TBD	0.5				
37								
38	LE136A	GN-OG	3TBD	0.5				
39	CDC33D	VT-GN	3TBD	0.5				
40	CE151	BN-VT	3TBD	0.5				
41	CCF08A	GY-OG	3TBD	0.5				
42	GD122C	BK 3TBD	1.0					
43	CCF13	WH-BU	3TBD	0.5				
44	LE137B	BU-GY	3TBD	0.5				
45	CE513	VT-GN	3TBD	0.5				
46	CCB08B	VT-WH	3TBD	0.5				
47	CDC35B	BU-WH	3TBD	0.5				
48	CE237	BN-WH	3TBD	0.5				
49	CEC02A	GN-BU	3TBD	0.5				
50	CH445A	YE-GY	3TBD	0.5				
51	LCF24	YE 3TBD	0.5					
52	CCF07A	BN-GN	3TBD	0.5				
53	GD122B	BK 3TBD	1.0					

AB3N-14A464-AA

C1E108-A
TO ECM1 DIESEL

HARNESS 14290

Powertrain Control Module (PCM)—B (G1404189)

PIN 52 => CET47C BU 0.5 3TBD + CET47E BU 0.5 3TBD

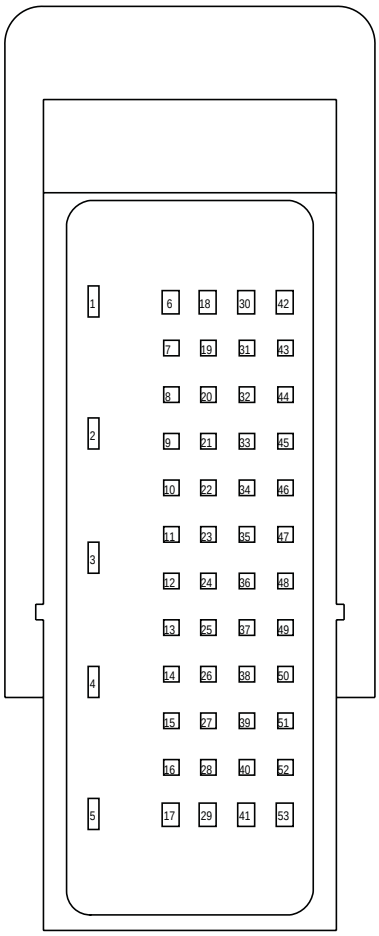

1				
2				
3				
4				
5				
6				
7				
8				
9				
10				
11	VE740	VT-GY	3TBD	0.5
12				
13	LE452	GN 3TBD	0.5	
14	LE451	BN-YE	3TBD	0.5
15	RE325	VT-BN	3TBD	0.5
16	LE448	GY-BU	3TBD	0.5
17				
18	VE750	GN-BU	3TBD	0.5
19				
20				
21	RE335	BN-VT	3TBD	0.5
22	VE747B	VT-OG	3TBD	0.5
23				
24	VE809	GN-OG	3TBD	0.75
25				
26	CBB15A	BN-BU	3TBD	0.75
27	VE826	BN-VT	3TBD	0.5
28	CE156B	WH-VT	3TBD	0.5
29				
30	RE147A	WH-BU	3TBD	0.5
31	CR115D	BN 3TBE	0.5	
32				
33	RE747B	BU 3TBD	0.5	
34	RE749B	GY-BU	3TBD	0.5
35				
36				
37	VE713A	GN-OG	3TBD	0.5
38	LE437B	YE 3TBD	0.75	
39	VMC05D	VT-OG	3TBD	0.5
40	VE823A	BU-BN	3TBD	0.5
41				
42				
43	RET68	YE-GY	3TBD	0.5
44				
45	CES07D	BN 3TBD	0.5	
46	RCF13	WH-BN	3TBD	0.5
47	VE748B	YE-OG	3TBD	0.5
48				
49				
50				
51				
52	CET47E	BU 3TBD	0.5 +	CET47C BU 3TBD 0.5
53				

AB3N-14A464-CA

C1E108-B
TO ECM2 DIESEL

HARNESS 14290

Powertrain Control Module (PCM)—C (G1404205)

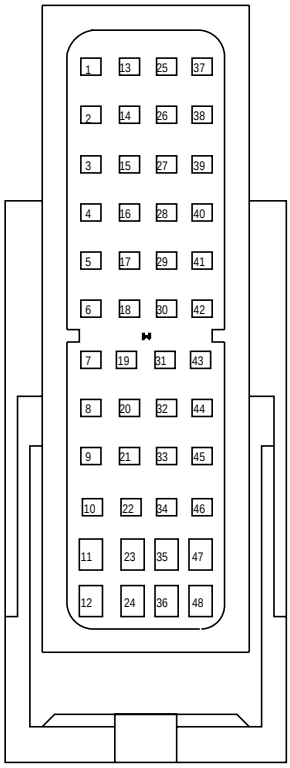

1	RE401B GN-BU 3TBD 0.75
2	CE460A VT-WH 3TBD 0.5
3	
4	
5	CE431B WH 3SCD 0.75
6	CE432A BU 3SCD 0.75
7	CE412C YE-VT 3TBD 0.5
8	CE426C BU-GN 3TBD 0.5
9	CE101A WH-VT 3TBD 0.75
10	CE102A YE-BU 3TBD 0.75
11	RE207A GN-VT 3TBD 1
12	RE205A YE-BU 3TBD 1
13	VE350A GY 3TBD 0.75
14	VE721A WH-OG 3TBD 0.5
15	VE836A VT-GN 3SCD 0.75
16	VE803A BU-GN 3TBD 0.75
17	VE728B GN 3TBD 0.5
18	VDC46AB BU-BN 3TBD 0.75
19	VE728A GN 3TBD 0.5
20	VE711A YE-VT 3TBD 0.75
21	
22	RE143B VT 3TBD 0.5
23	CE205A GN-BU 3TBD 1
24	RE206AA BU-OG 3TBD 1 / RE207 GN-VT 3TBD 1
25	LE135A GY-VT 3TBD 0.75
26	LE329B BU 3TBD 0.75
27	LE143B GN-BN 3TBD 0.5
28	VE820B GY 3TBD 0.5
29	VE837A WH 3SCD 0.75
30	VE716A YE 3TBD 0.5
31	
32	RE803A BN-GN 3TBD 0.75
33	RE135B GN-BN 3TBD 0.75
34	RE141 BN-GN 3TBD 0.5
35	CE207B VT-GY 3TBD 1 / CE208A YE-OG 3TBD 1
36	RE208A BU 3TBD 1 / RE208AA BU 3TBD 1
37	LE238A GY 3TBD 0.5
38	LE428B BU-WH 3TBD 0.5
39	LE139AA BN-WH 3TBD 0.5
40	VE706B BN-BU 3TBD 0.5
41	CE908A BU-BN 3TBD 0.5
42	RE232D VT-WH 3TBD 0.5
43	RE238A BU-BN 3TBD 0.5
44	RE134B BU-OG 3TBD 0.5
45	RE139AA GY-OG 3TBD 0.5
46	RE437A GY 3SCD 0.75 / RE437AA GY 3SCD 0.75
47	CE206B GY-YE 3TBD 1 / CE206BA GY-YE 3TBD 1
48	RE206A BU-OG 3TBD 1 / RE209A WH-GN 3TBD 1

7V6N-14A464-TA(099)

C1E108-C
TO ECM3 DIESEL

HARNESS 12B637

Pre DPF Exhaust Gas Temperature Sensor (G1404206)

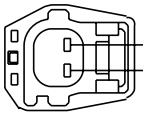

2	RE747A	BU	4TBD	0.5	
1	VE747A	VT-OG	4TBD	0.5	

XW4T-14A464-AHB

C1E747
TO FLYLEAD DPF EXHAUST TEMPERATURE SENSOR UPSTREAM

HARNESS 14K039

Throttle Control Unit—A (G1404207)

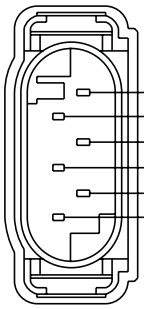

6	VE820B	GY	3TBD	0.5	GOLD
3	LE428B	BU-WH	3TBD	0.5	GOLD
5					
2	RE134B	BU-OG	3TBD	0.5	GOLD
4	CE412C	YE-VT	3TBD	0.5	GOLD
1	CE426C	BU-GN	3TBD	0.5	GOLD

2L1T-14A464-YA

C1E138-A
TO ELECTRONIC THROTTLE BODY DIESEL

HARNESS 12B637

Vehicle Speed Sensor 1 (VSS1) (G1404208)

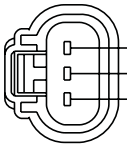

1	VMC05	VT-OG	4TBD	0.5	GOLD
2	VE822	YE-BU	4TBD	0.5	GOLD
3	CES07	BN	4TBD	0.5	GOLD

2L1T-14A464-ZA

C1E822
TO VEHICLE SPEED SENSOR

HARNESS 14K039

Wastegate Control Solenoid (G1404209)

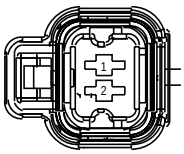

1	CBB25H	WH-OG	3TBD	0.5
2	CE460A	VT-WH	3TBD	0.5

4M5T-14A464-KKA

C1E460
TO EVRV

HARNESS 12B637

SECTION 307-01 Automatic Transmission/Transaxle

— Vehicles With: 6-Speed Automatic Transaxle - 6R80

VEHICLE APPLICATION: 2012.0 Ranger

CONTENTS PAGE

ELECTRICAL SCHEMATICS

Automatic Transmission/Transaxle — LHD 4WD/LHD RWD..... 307-01-2
Automatic Transmission/Transaxle — RHD 4WD/RHD RWD..... 307-01-4

ELECTRICAL CONNECTORS

Transmission Control Module (TCM)..... 307-01-6
Transmission Control Unit Solenoids..... 307-01-6

307-01-2 Automatic Transmission/Transaxle—LHD 4WD/LHD RWD

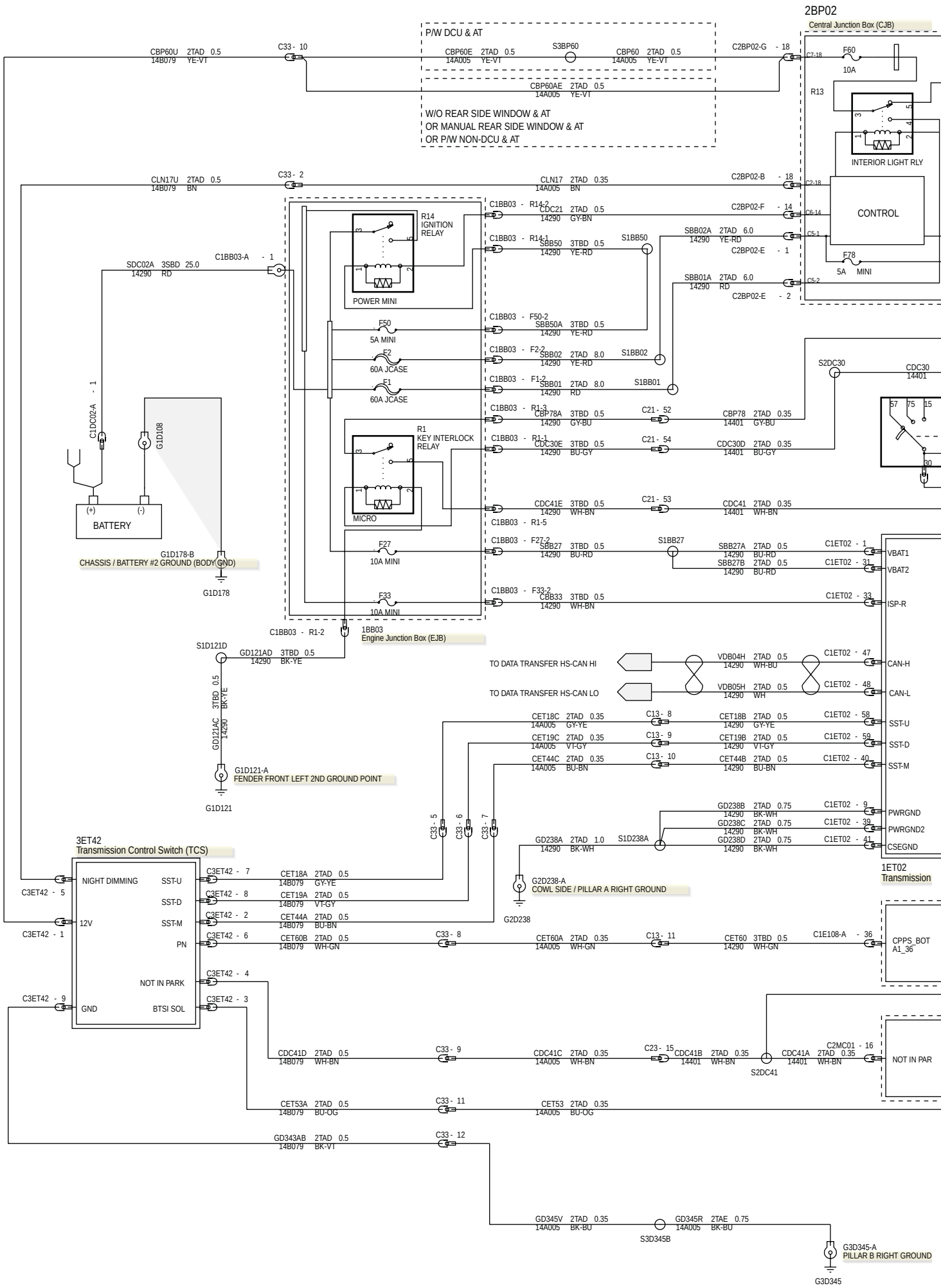

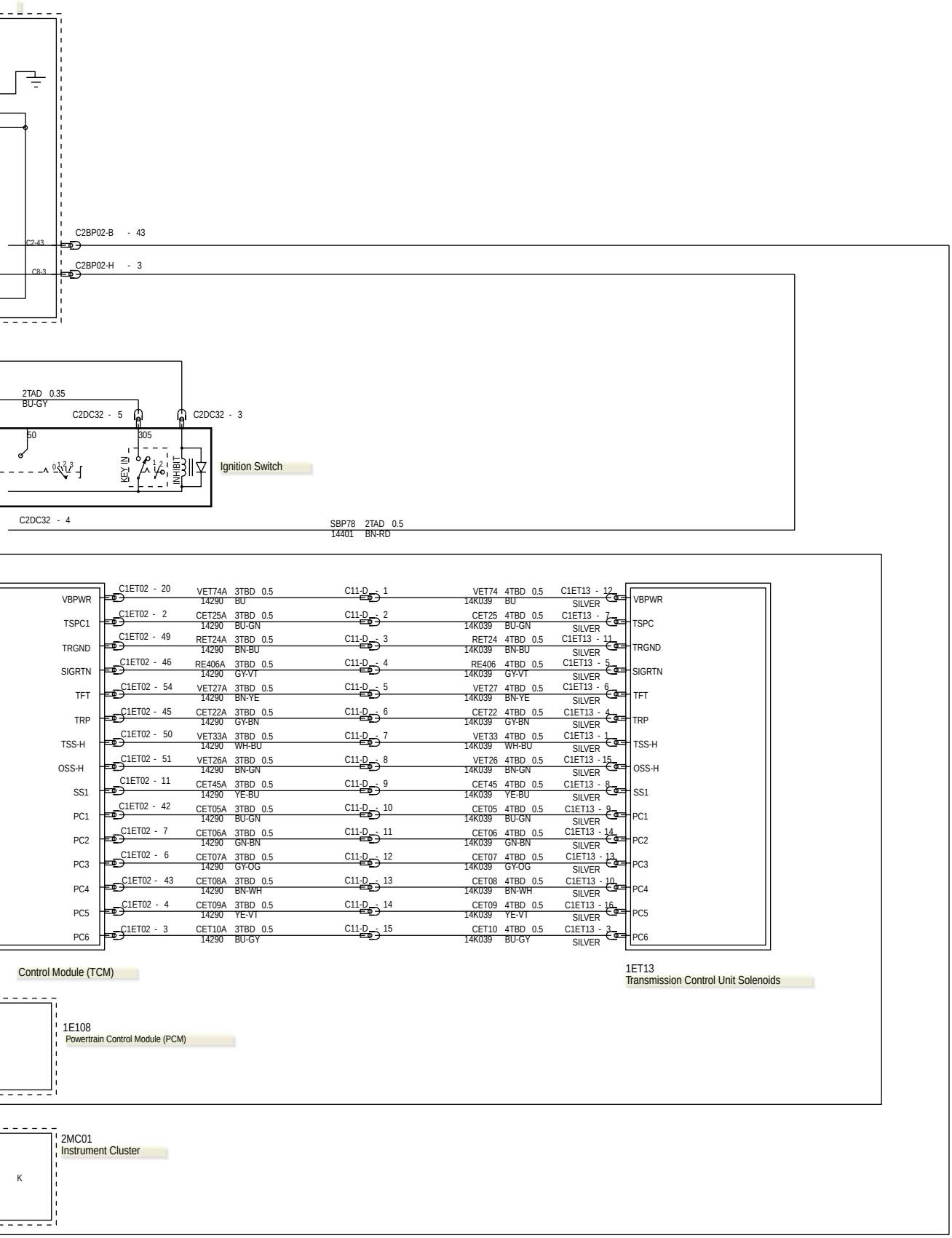
C2BP02-B - 43
C2-43
C2BP02-H - 3
C8-3
2TAD 0.35
BU-GY
C2DC32 - 5
C2DC32 - 3
50
305
KEY IN
INHIBIT
Ignition Switch
C2DC32 - 4
SBP78 2TAD 0.5
14401 BN-RD
VBPWR
TSPC1
TRGND
SIGRTN
TFT
TRP
TSS-H
OSS-H
SS1
PC1
PC2
PC3
PC4
PC5
PC6
C1ET02 - 20
C1ET02 - 2
C1ET02 - 49
C1ET02 - 46
C1ET02 - 54
C1ET02 - 45
C1ET02 - 50
C1ET02 - 51
C1ET02 - 11
C1ET02 - 42
C1ET02 - 7
C1ET02 - 6
C1ET02 - 43
C1ET02 - 4
C1ET02 - 3
VET74A 3TBD 0.5
14290 BU
CET25A 3TBD 0.5
14290 BU-GN
RET24A 3TBD 0.5
14290 BN-BU
RE406A 3TBD 0.5
14290 GY-VT
VET27A 3TBD 0.5
14290 BN-YE
CET22A 3TBD 0.5
14290 GY-BN
VET33A 3TBD 0.5
14290 WH-BU
VET26A 3TBD 0.5
14290 BN-GN
CET45A 3TBD 0.5
14290 YE-BU
CET05A 3TBD 0.5
14290 BU-GN
CET06A 3TBD 0.5
14290 GN-BN
CET07A 3TBD 0.5
14290 GY-OG
CET08A 3TBD 0.5
14290 BN-WH
CET09A 3TBD 0.5
14290 YE-VT
CET10A 3TBD 0.5
14290 BU-GY
C11-D - 1
C11-D - 2
C11-D - 3
C11-D - 4
C11-D - 5
C11-D - 6
C11-D - 7
C11-D - 8
C11-D - 9
C11-D - 10
C11-D - 11
C11-D - 12
C11-D - 13
C11-D - 14
C11-D - 15
VET74 4TBD 0.5
14K039 BU
CET25 4TBD 0.5
14K039 BU-GN
RET24 4TBD 0.5
14K039 BN-BU
RE406 4TBD 0.5
14K039 GY-VT
VET27 4TBD 0.5
14K039 BN-YE
CET22 4TBD 0.5
14K039 GY-BN
VET33 4TBD 0.5
14K039 WH-BU
VET26 4TBD 0.5
14K039 BN-GN
CET45 4TBD 0.5
14K039 YE-BU
CET05 4TBD 0.5
14K039 BU-GN
CET06 4TBD 0.5
14K039 GN-BN
CET07 4TBD 0.5
14K039 GY-OG
CET08 4TBD 0.5
14K039 BN-WH
CET09 4TBD 0.5
14K039 YE-VT
CET10 4TBD 0.5
14K039 BU-GY
C1ET13 - 12
C1ET13 - 7
C1ET13 - 11
C1ET13 - 5
C1ET13 - 6
C1ET13 - 4
C1ET13 - 1
C1ET13 - 15
C1ET13 - 8
C1ET13 - 9
C1ET13 - 14
C1ET13 - 13
C1ET13 - 10
C1ET13 - 16
C1ET13 - 3
SILVER
VBPWR
TSPC
TRGND
SIGRTN
TFT
TRP
TSS-H
OSS-H
SS1
PC1
PC2
PC3
PC4
PC5
PC6
Control Module (TCM)
1ET13
Transmission Control Unit Solenoids
1E108
Powertrain Control Module (PCM)
2MC01
Instrument Cluster
K

307-01-4 Automatic Transmission/Transaxle—RHD 4WD/RHD RWD

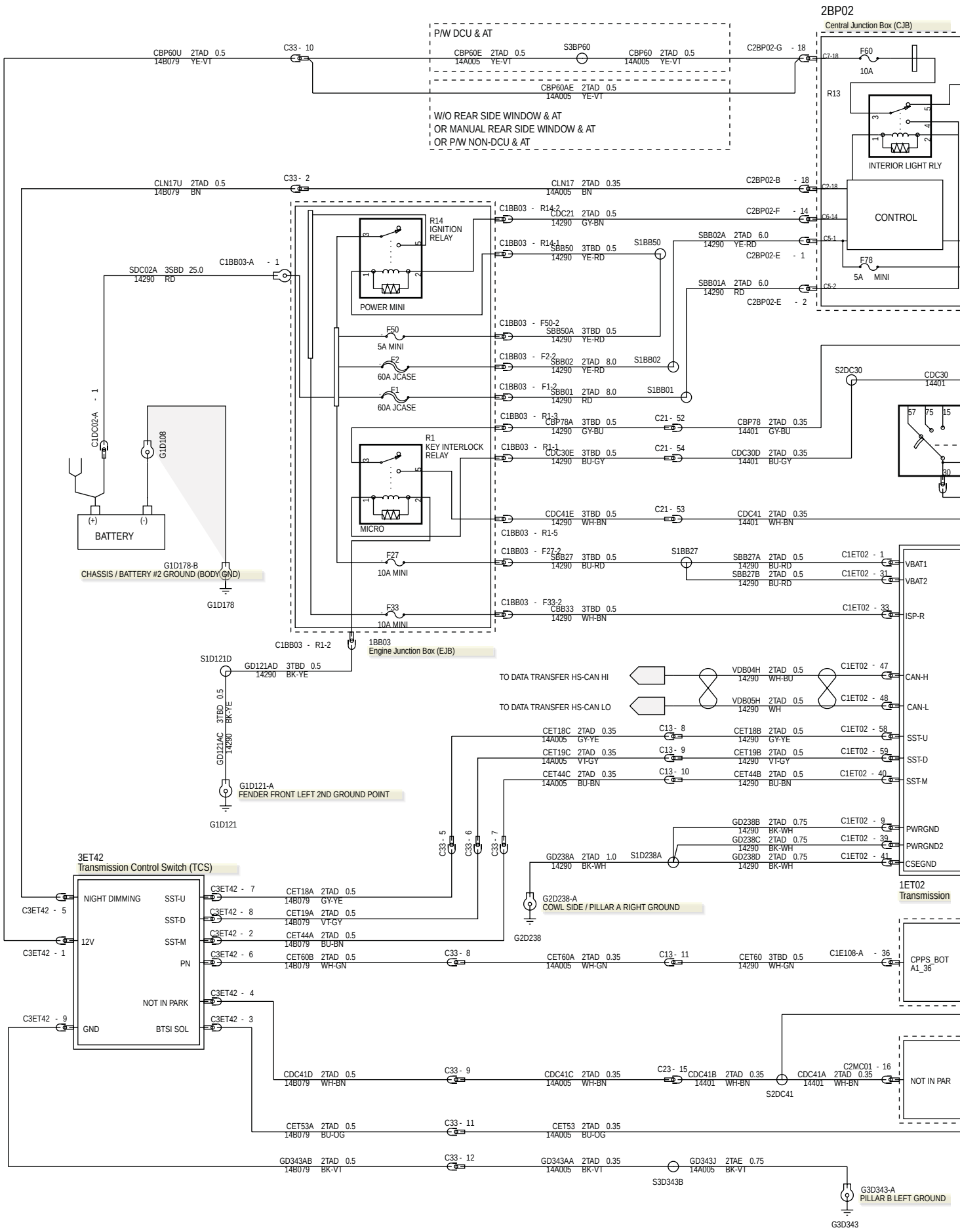

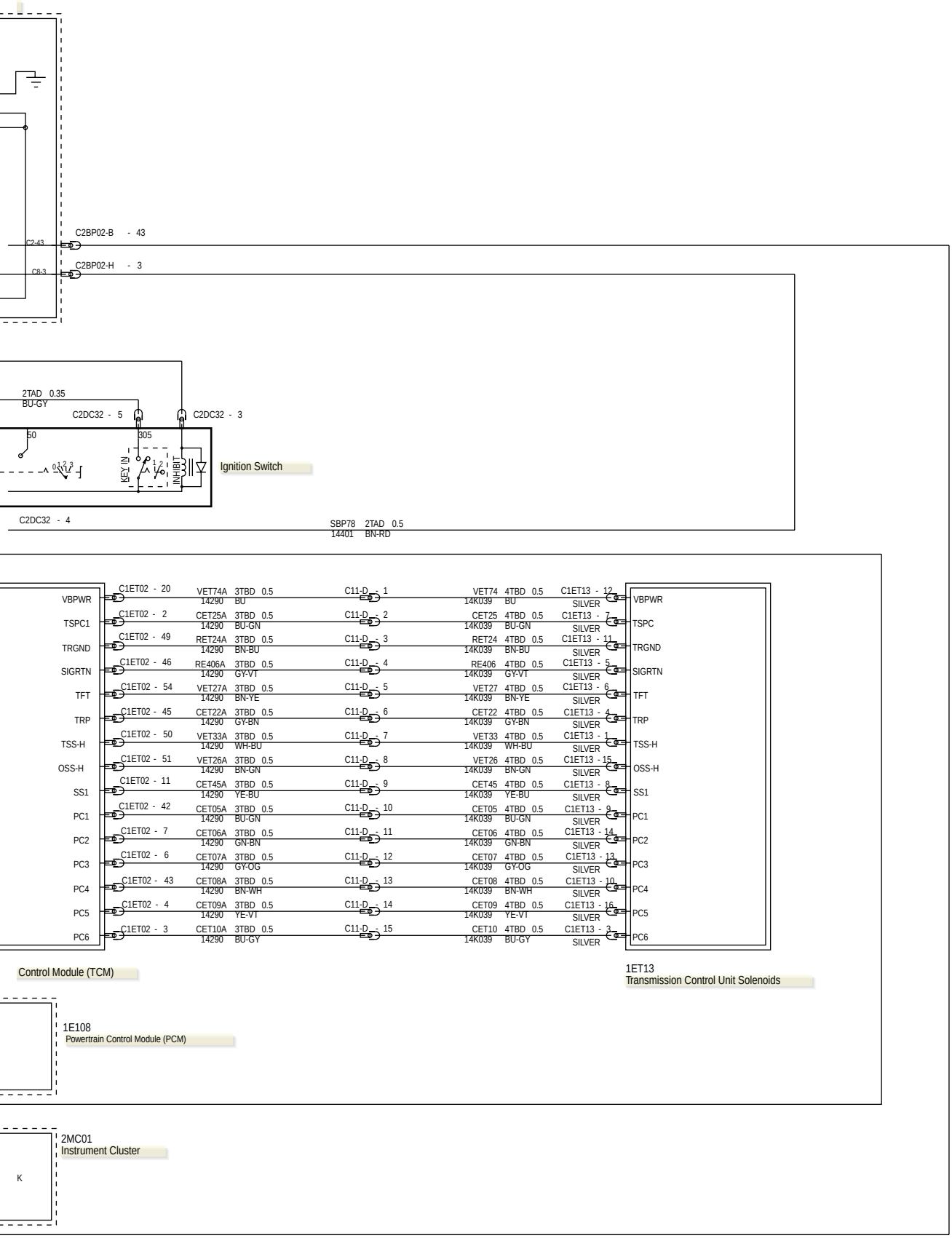
C2BP02-B - 43
C2-43
C2BP02-H - 3
C8-3
2TAD 0.35
BU-GY
C2DC32 - 5
C2DC32 - 3
50
305
KEY IN
INHIBIT
Ignition Switch
C2DC32 - 4
SBP78 2TAD 0.5
14401 BN-RD
VBPWR
TSPC1
TRGND
SIGRTN
TFT
TRP
TSS-H
OSS-H
SS1
PC1
PC2
PC3
PC4
PC5
PC6
C1ET02 - 20
C1ET02 - 2
C1ET02 - 49
C1ET02 - 46
C1ET02 - 54
C1ET02 - 45
C1ET02 - 50
C1ET02 - 51
C1ET02 - 11
C1ET02 - 42
C1ET02 - 7
C1ET02 - 6
C1ET02 - 43
C1ET02 - 4
C1ET02 - 3
VET74A 3TBD 0.5
14290 BU
CET25A 3TBD 0.5
14290 BU-GN
RET24A 3TBD 0.5
14290 BN-BU
RE406A 3TBD 0.5
14290 GY-VT
VET27A 3TBD 0.5
14290 BN-YE
CET22A 3TBD 0.5
14290 GY-BN
VET33A 3TBD 0.5
14290 WH-BU
VET26A 3TBD 0.5
14290 BN-GN
CET45A 3TBD 0.5
14290 YE-BU
CET05A 3TBD 0.5
14290 BU-GN
CET06A 3TBD 0.5
14290 GN-BN
CET07A 3TBD 0.5
14290 GY-OG
CET08A 3TBD 0.5
14290 BN-WH
CET09A 3TBD 0.5
14290 YE-VT
CET10A 3TBD 0.5
14290 BU-GY
C11-D - 1
C11-D - 2
C11-D - 3
C11-D - 4
C11-D - 5
C11-D - 6
C11-D - 7
C11-D - 8
C11-D - 9
C11-D - 10
C11-D - 11
C11-D - 12
C11-D - 13
C11-D - 14
C11-D - 15
VET74 4TBD 0.5
14K039 BU
CET25 4TBD 0.5
14K039 BU-GN
RET24 4TBD 0.5
14K039 BN-BU
RE406 4TBD 0.5
14K039 GY-VT
VET27 4TBD 0.5
14K039 BN-YE
CET22 4TBD 0.5
14K039 GY-BN
VET33 4TBD 0.5
14K039 WH-BU
VET26 4TBD 0.5
14K039 BN-GN
CET45 4TBD 0.5
14K039 YE-BU
CET05 4TBD 0.5
14K039 BU-GN
CET06 4TBD 0.5
14K039 GN-BN
CET07 4TBD 0.5
14K039 GY-OG
CET08 4TBD 0.5
14K039 BN-WH
CET09 4TBD 0.5
14K039 YE-VT
CET10 4TBD 0.5
14K039 BU-GY
C1ET13 - 12
C1ET13 - 7
C1ET13 - 11
C1ET13 - 5
C1ET13 - 6
C1ET13 - 4
C1ET13 - 1
C1ET13 - 15
C1ET13 - 8
C1ET13 - 9
C1ET13 - 14
C1ET13 - 13
C1ET13 - 10
C1ET13 - 16
C1ET13 - 3
SILVER
VBPWR
TSPC
TRGND
SIGRTN
TFT
TRP
TSS-H
OSS-H
SS1
PC1
PC2
PC3
PC4
PC5
PC6
Control Module (TCM)
1ET13
Transmission Control Unit Solenoids
1E108
Powertrain Control Module (PCM)
2MC01
Instrument Cluster
K

Transmission Control Module (TCM) (G1404277)

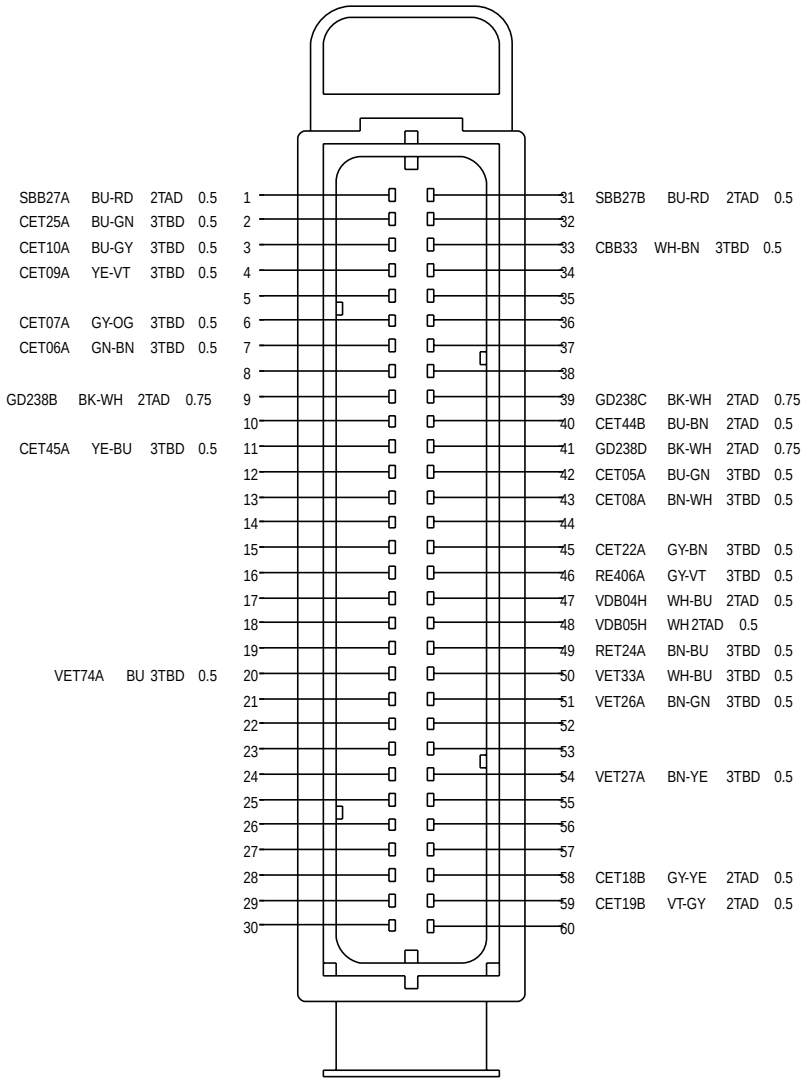

7C3T-14A464-AA(000)

C1ET02
TO TRANSMISSION CONTROL MODULE

HARNESS 14290

Transmission Control Unit Solenoids (G1405435)

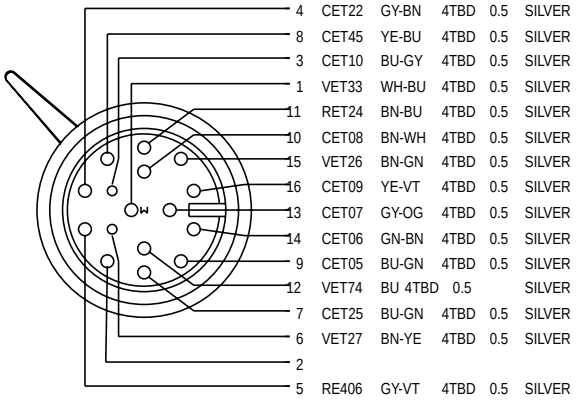

2R8T-14A464-DB

C1ET13
TO TRANSMISSION CONNECTION (AUTO)

HARNESS 14K039

SECTION 307-05 Automatic Transmission/Transaxle External Controls

VEHICLE APPLICATION: 2012.0 Ranger

CONTENTS PAGE

ELECTRICAL CONNECTORS

Transmission Control Switch (TCS)..... 307-05-2

Transmission Control Switch (TCS) (G1404279)

CET60B	WH-GN	2TAD	0.5	6	1	CBP60U	YE-VT	2TAD	0.5
CET18A	GY-YE	2TAD	0.5	7	2	CET44A	BU-BN	2TAD	0.5
CET19A	VT-GY	2TAD	0.5	8	3	CET53A	BU-OG	2TAD	0.5
GD343AB	BK-VT	2TAD	0.5	9	4	CDC41D	WH-BN	2TAD	0.5
				10	5	CLN17U	BN	2TAD	0.5

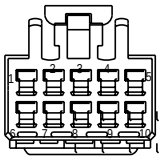

C3ET42
6248-5276
TO AUTO TRANS SHIFTER

HARNESS 14B079

SECTION 308-07 Four-Wheel Drive Systems

VEHICLE APPLICATION: 2012.0 Ranger

CONTENTS PAGE

ELECTRICAL SCHEMATICS

Four-Wheel Drive Systems — 2.5L Duratec-HE (122kW/165PS) - MI4, Vehicles With: Electronic Locking Differential (ELD)..... 308-07-2
Four-Wheel Drive Systems — 2.5L Duratec-HE (122kW/165PS) - MI4, Vehicles Without: Electronic Locking Differential (ELD)..... 308-07-4
Four-Wheel Drive Systems — 2.2L Duratorq-TDCi (88kW/120PS) - Puma/2.2L Duratorq-TDCi (96kW/130PS) - Puma/2.2L Duratorq-TDCi (110kW/150PS) - Puma/3.2L Duratorq-TDCi (148kW/200PS) - Puma, Vehicles With: Electronic Locking Differential (ELD)..... 308-07-6
Four-Wheel Drive Systems — 2.2L Duratorq-TDCi (88kW/120PS) - Puma/2.2L Duratorq-TDCi (96kW/130PS) - Puma/2.2L Duratorq-TDCi (110kW/150PS) - Puma/3.2L Duratorq-TDCi (148kW/200PS) - Puma, Vehicles Without: Electronic Locking Differential (ELD)..... 308-07-8

ELECTRICAL CONNECTORS

Mode Select Switch (MSS)..... 308-07-10
Transfer Case Shift Motor..... 308-07-10

308-07-2 Four-Wheel Drive Systems—2.5L Duratec-HE (122kW/165PS) - MI4, Vehicles With: Electronic Locking Differential (ELD)

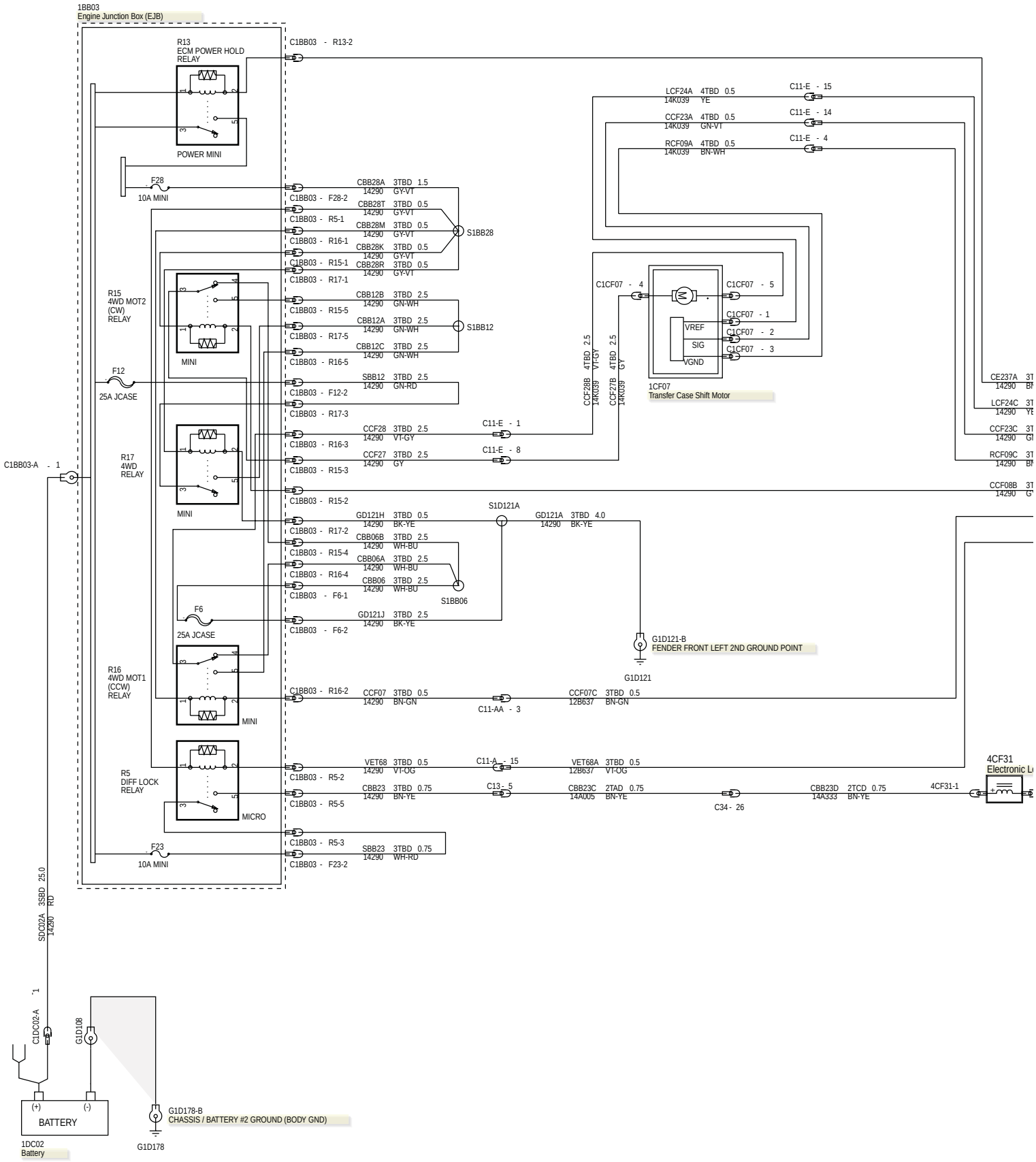

308-07-3 Four-Wheel Drive Systems—2.5L Duratec-HE (122kW/165PS) - MI4, Vehicles With: Electronic Locking Differential (ELD)

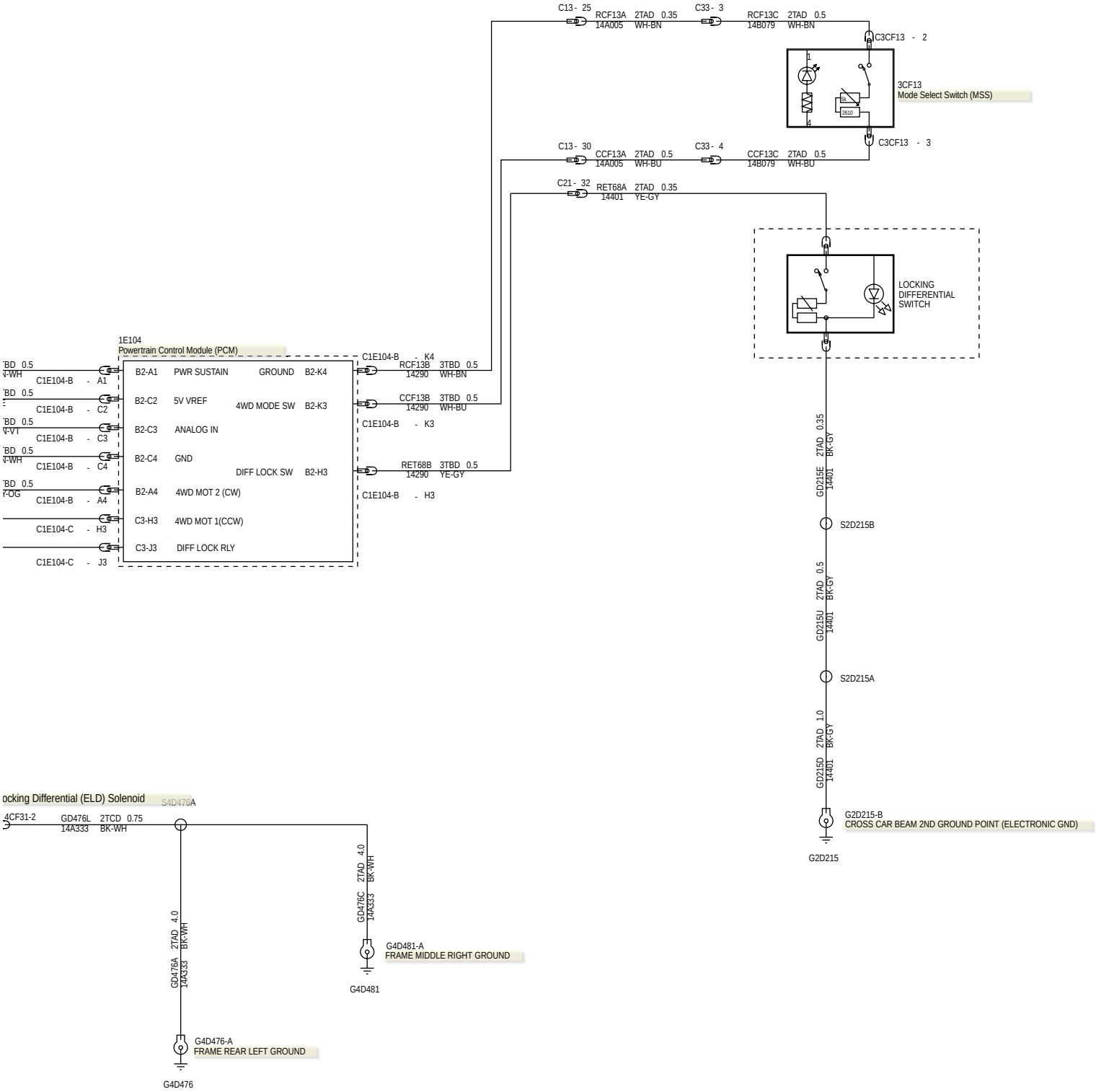

308-07-4 Four-Wheel Drive Systems—2.5L Duratec-HE (122kW/165PS) - MI4, Vehicles Without: Electronic Locking Differential (ELD)

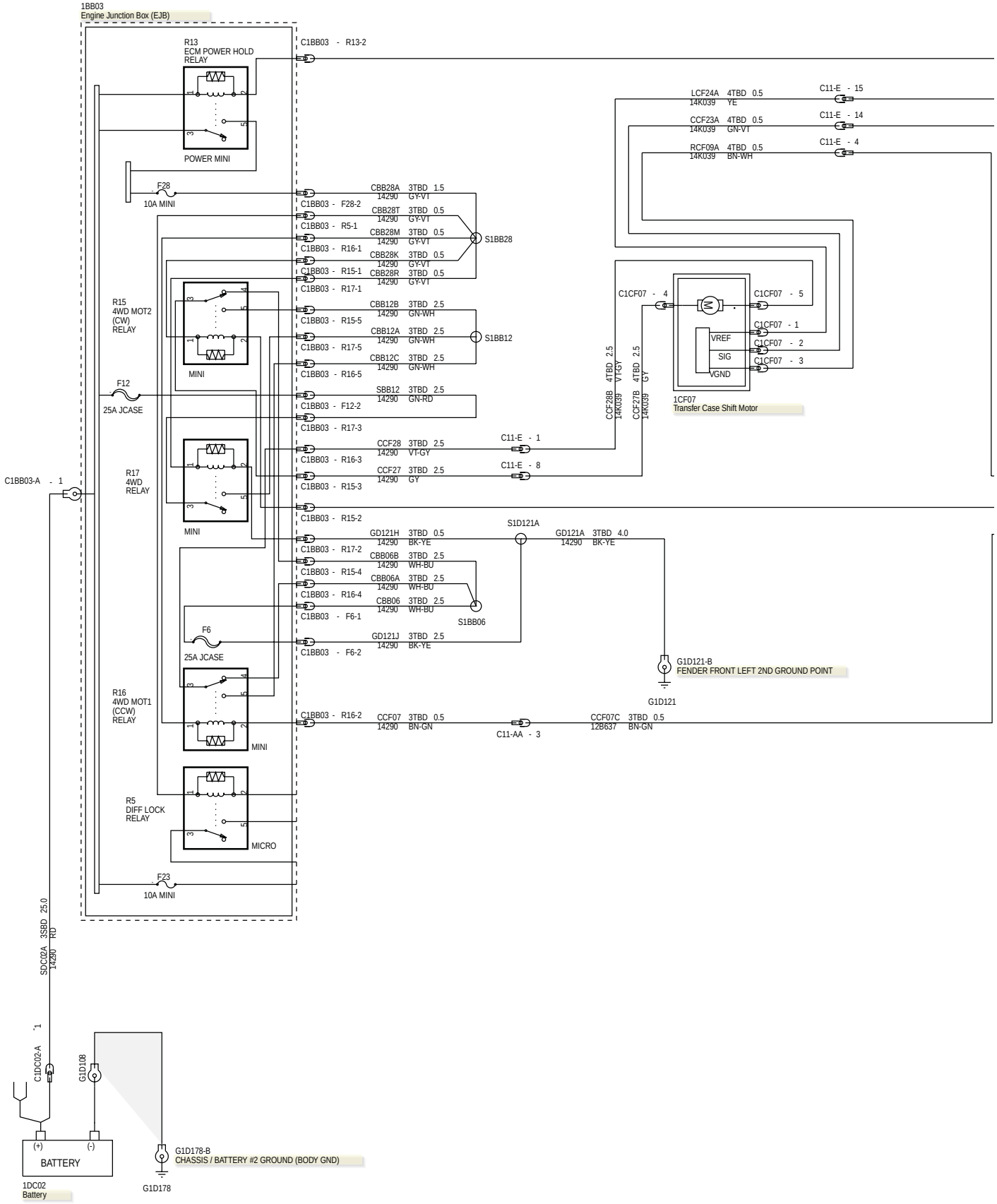

308-07-5 Four-Wheel Drive Systems—2.5L Duratec-HE (122kW/165PS) - MI4, Vehicles Without: Electronic Locking Differential (ELD)

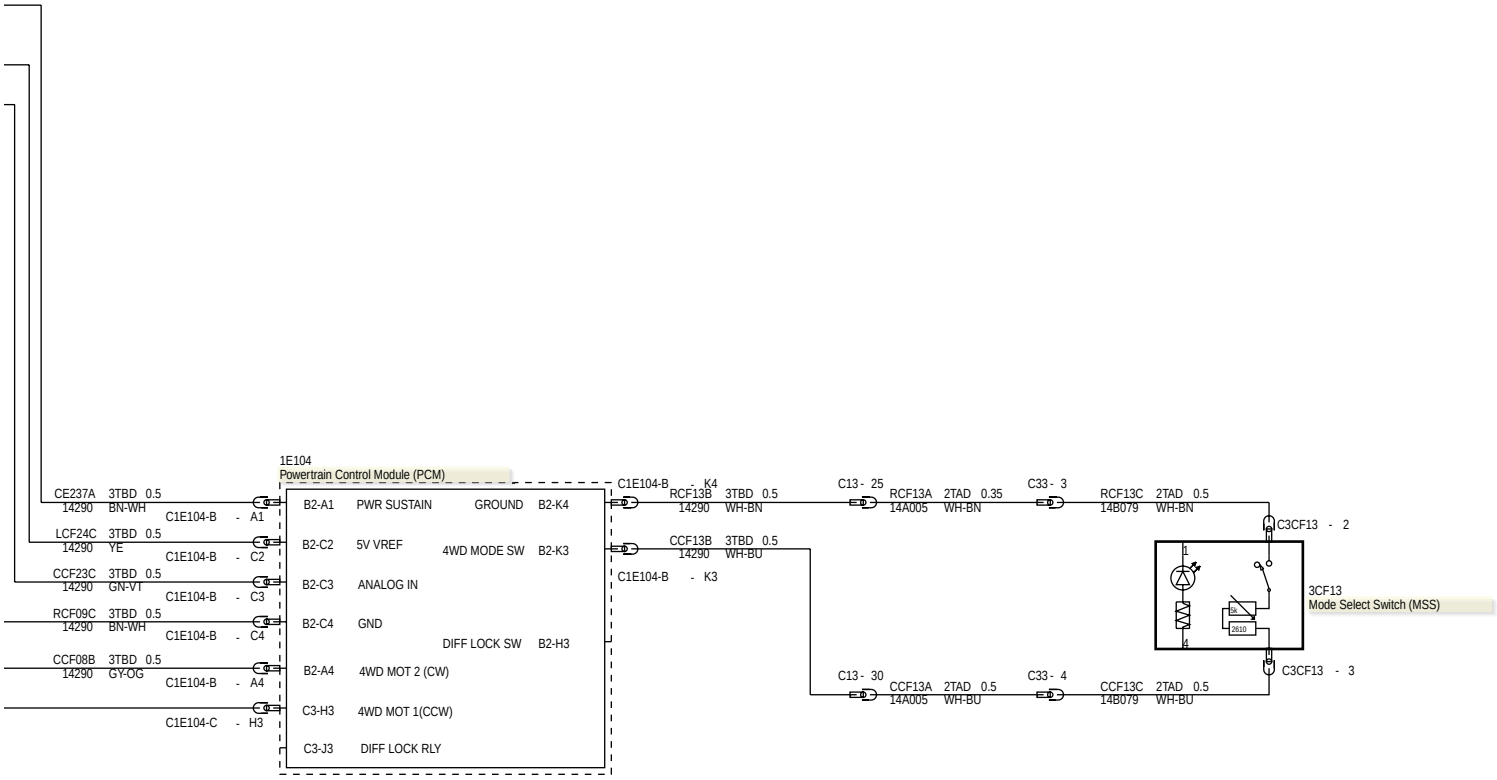

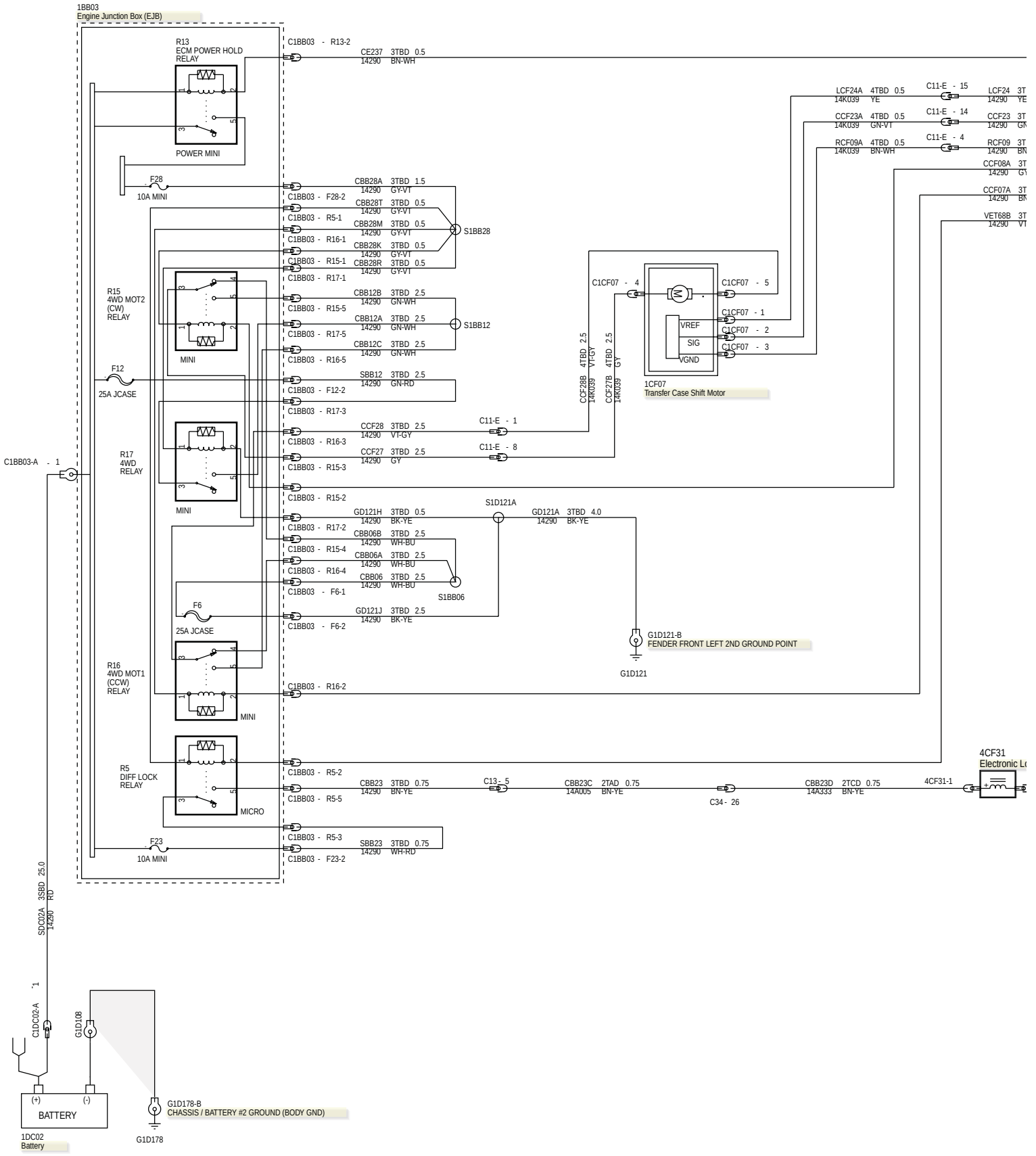
1BB03
Engine Junction Box (EJB)
R13
ECM POWER HOLD
RELAY
POWER MINI
F28
10A MINI
R15
4WD MOT2
(CW)
RELAY
MINI
F12
25A JCASE
R17
4WD
RELAY
MINI
F6
25A JCASE
R16
4WD MOT1
(CCW)
RELAY
MINI
R5
DIFF LOCK
RELAY
MICRO
F23
10A MINI
C1BB03-A - 1
C1BB03 - R13-2
CE237 3TBD 0.5
14290 BN-WH
CBB28A 3TBD 1.5
14290 GY-VT
CBB28T 3TBD 0.5
14290 GY-VT
CBB28M 3TBD 0.5
14290 GY-VT
CBB28K 3TBD 0.5
14290 GY-VT
CBB28R 3TBD 0.5
14290 GY-VT
S1BB28
CBB12B 3TBD 2.5
14290 GN-WH
CBB12A 3TBD 2.5
14290 GN-WH
CBB12C 3TBD 2.5
14290 GN-WH
S1BB12
SBB12 3TBD 2.5
14290 GN-RD
CCF28 3TBD 2.5
14290 VT-GY
CCF27 3TBD 2.5
14290 GY
C11-E - 1
C11-E - 8
GD121H 3TBD 0.5
14290 BK-YE
S1D121A
GD121A 3TBD 4.0
14290 BK-YE
CBB06B 3TBD 2.5
14290 WH-BU
CBB06A 3TBD 2.5
14290 WH-BU
CBB06 3TBD 2.5
14290 WH-BU
S1BB06
GD121J 3TBD 2.5
14290 BK-YE
G1D121-B
FENDER FRONT LEFT 2ND GROUND POINT
G1D121
CBB23 3TBD 0.75
14290 BN-YE
C13- 5
CBB23C 2TAD 0.75
14A005 BN-YE
C34- 26
CBB23D 2TCD 0.75
14A333 BN-YE
4CF31-1
4CF31
Electronic Lo
SBB23 3TBD 0.75
14290 WH-RD
C1CF07 - 4
C1CF07 - 5
C1CF07 - 1
C1CF07 - 2
C1CF07 - 3
VREF
SIG
VGND
1CF07
Transfer Case Shift Motor
CCF28B 4TBD 2.5
14K039 VT-GY
CCF27B 4TBD 2.5
14K039 GY
LCF24A 4TBD 0.5
14K039 YE
C11-E - 15
CCF23A 4TBD 0.5
14K039 GN-VT
C11-E - 14
RCF09A 4TBD 0.5
14K039 BN-WH
C11-E - 4
CCF08A
CCF07A
VET68B
SDC02A 3SBD 25.0
14290 RD
C1DC02-A - 1
G1D108
(+)
(-)
BATTERY
1DC02
Battery
G1D178-B
CHASSIS / BATTERY #2 GROUND (BODY GND)
G1D178

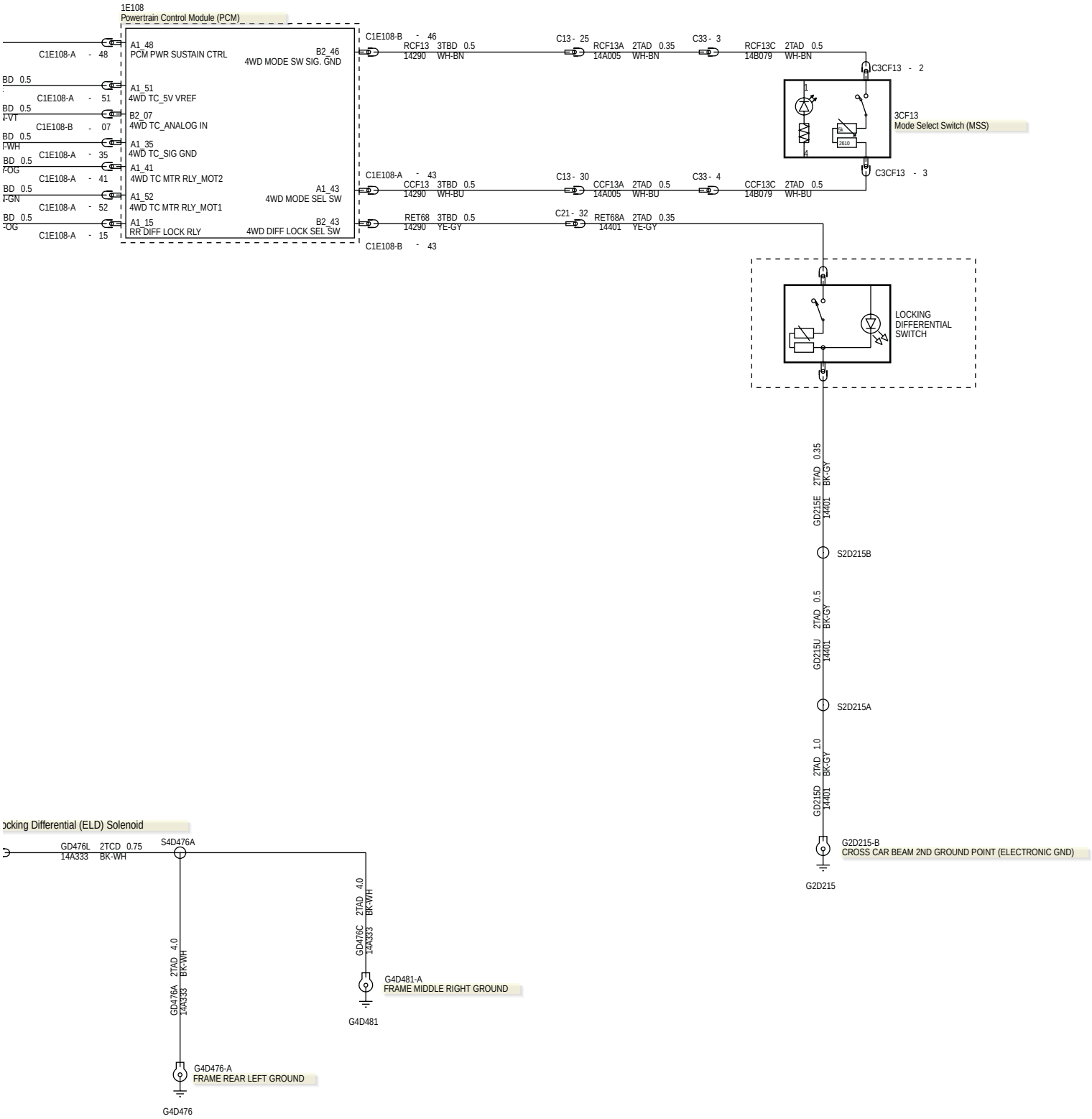
1E108
Powertrain Control Module (PCM)
C1E108-A - 48
A1_48
PCM PWR SUSTAIN CTRL
B2_46
4WD MODE SW SIG. GND
C1E108-A - 51
A1_51
4WD TC_5V VREF
C1E108-B - 07
B2_07
4WD TC_ANALOG IN
C1E108-A - 35
A1_35
4WD TC_SIG GND
C1E108-A - 41
A1_41
4WD TC MTR RLY_MOT2
C1E108-A - 52
A1_52
4WD TC MTR RLY_MOT1
C1E108-A - 15
A1_15
RR DIFF LOCK RLY
A1_43
4WD MODE SEL SW
B2_43
4WD DIFF LOCK SEL SW
C1E108-B - 46
RCF13 3TBD 0.5
14290 WH-BN
C13 - 25
RCF13A 2TAD 0.35
14A005 WH-BN
C33 - 3
RCF13C 2TAD 0.5
14B079 WH-BN
C3CF13 - 2
3CF13
Mode Select Switch (MSS)
C3CF13 - 3
C1E108-A - 43
CCF13 3TBD 0.5
14290 WH-BU
C13 - 30
CCF13A 2TAD 0.5
14A005 WH-BU
C33 - 4
CCF13C 2TAD 0.5
14B079 WH-BU
C1E108-B - 43
RET68 3TBD 0.5
14290 YE-GY
C21 - 32
RET68A 2TAD 0.35
14401 YE-GY
LOCKING
DIFFERENTIAL
SWITCH
GD215E 2TAD 0.35 BK-GY 14401
S2D215B
GD215U 2TAD 0.5 BK-GY 14401
S2D215A
GD215D 2TAD 1.0 BK-GY 14401
G2D215-B
CROSS CAR BEAM 2ND GROUND POINT (ELECTRONIC GND)
G2D215
ocking Differential (ELD) Solenoid
GD476L 2TCD 0.75 BK-WH 14A333
S4D476A
GD476A 2TAD 4.0 BK-WH 14A333
G4D476-A
FRAME REAR LEFT GROUND
G4D476
GD476C 2TAD 4.0 BK-WH 14A333
G4D481-A
FRAME MIDDLE RIGHT GROUND
G4D481

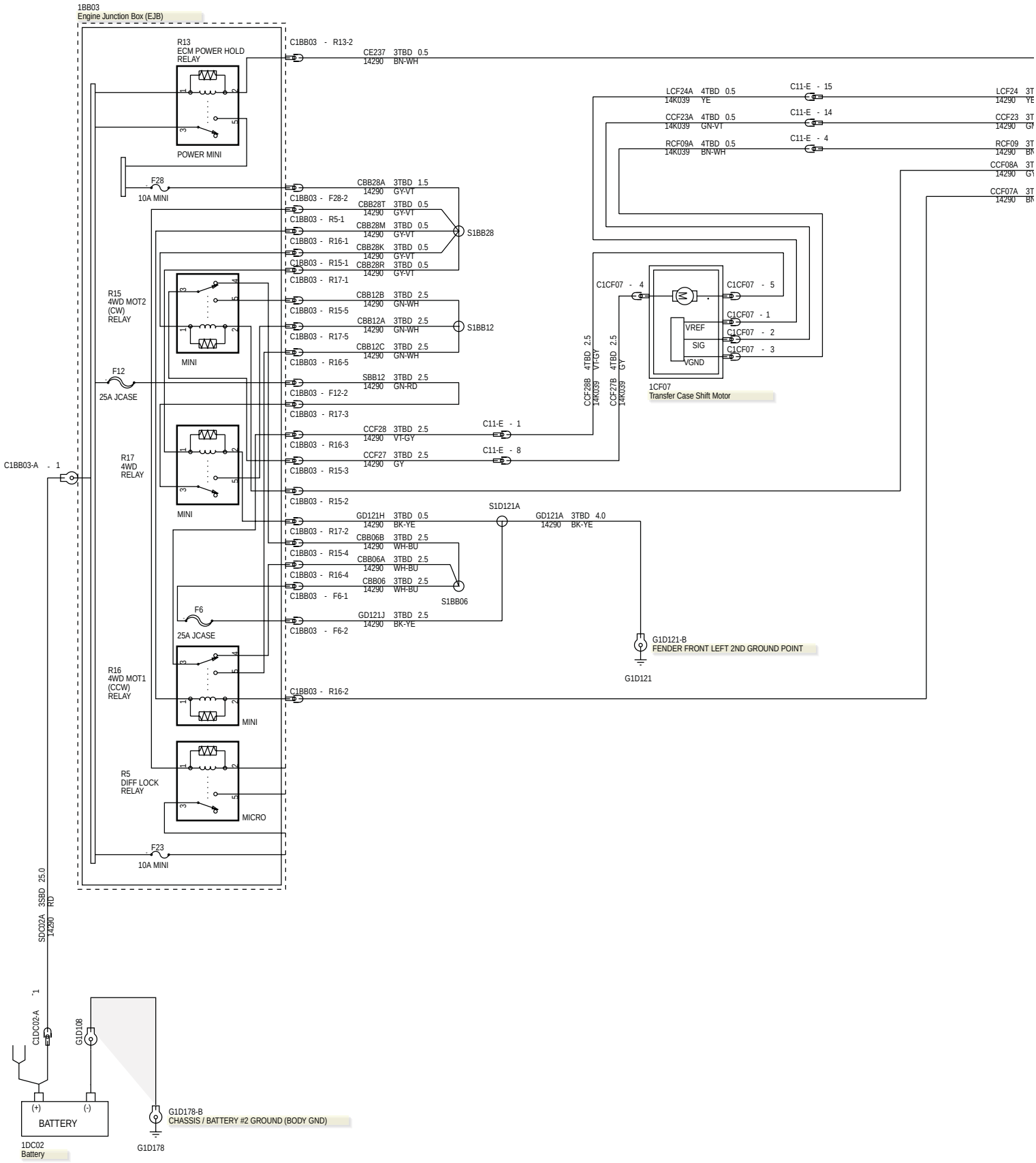
1BB03
Engine Junction Box (EJB)
R13
ECM POWER HOLD
RELAY
POWER MINI
F28
10A MINI
R15
4WD MOT2
(CW)
RELAY
MINI
F12
25A JCASE
R17
4WD
RELAY
MINI
F6
25A JCASE
R16
4WD MOT1
(CCW)
RELAY
MINI
R5
DIFF LOCK
RELAY
MICRO
F23
10A MINI
C1BB03-A - 1
C1BB03 - R13-2
CE237 3TBD 0.5
14290 BN-WH
C1BB03 - F28-2
CBB28A 3TBD 1.5
14290 GY-VT
C1BB03 - R5-1
CBB28T 3TBD 0.5
14290 GY-VT
C1BB03 - R16-1
CBB28M 3TBD 0.5
14290 GY-VT
C1BB03 - R15-1
CBB28K 3TBD 0.5
14290 GY-VT
C1BB03 - R17-1
CBB28R 3TBD 0.5
14290 GY-VT
S1BB28
C1BB03 - R15-5
CBB12B 3TBD 2.5
14290 GN-WH
C1BB03 - R17-5
CBB12A 3TBD 2.5
14290 GN-WH
S1BB12
C1BB03 - R16-5
CBB12C 3TBD 2.5
14290 GN-WH
C1BB03 - F12-2
SBB12 3TBD 2.5
14290 GN-RD
C1BB03 - R17-3
C1BB03 - R16-3
CCF28 3TBD 2.5
14290 VT-GY
C11-E - 1
C1BB03 - R15-3
CCF27 3TBD 2.5
14290 GY
C11-E - 8
C1BB03 - R15-2
C1BB03 - R17-2
GD121H 3TBD 0.5
14290 BK-YE
S1D121A
GD121A 3TBD 4.0
14290 BK-YE
C1BB03 - R15-4
CBB06B 3TBD 2.5
14290 WH-BU
C1BB03 - R16-4
CBB06A 3TBD 2.5
14290 WH-BU
C1BB03 - F6-1
CBB06 3TBD 2.5
14290 WH-BU
S1BB06
C1BB03 - F6-2
GD121J 3TBD 2.5
14290 BK-YE
G1D121-B
FENDER FRONT LEFT 2ND GROUND POINT
G1D121
C1BB03 - R16-2
LCF24A 4TBD 0.5
14K039 YE
C11-E - 15
CCF23A 4TBD 0.5
14K039 GN-VT
C11-E - 14
RCF09A 4TBD 0.5
14K039 BN-WH
C11-E - 4
CCF08A
CCF07A
C1CF07 - 4
C1CF07 - 5
C1CF07 - 1
C1CF07 - 2
C1CF07 - 3
VREF
SIG
VGND
1CF07
Transfer Case Shift Motor
CCF28B 4TBD 2.5
14K039 VT-GY
CCF27B 4TBD 2.5
14K039 GY
SDC02A 3SBD 25.0
14290 RD
C1DC02-A - 1
G1D108
(+)
(-)
BATTERY
1DC02
Battery
G1D178-B
CHASSIS / BATTERY #2 GROUND (BODY GND)
G1D178

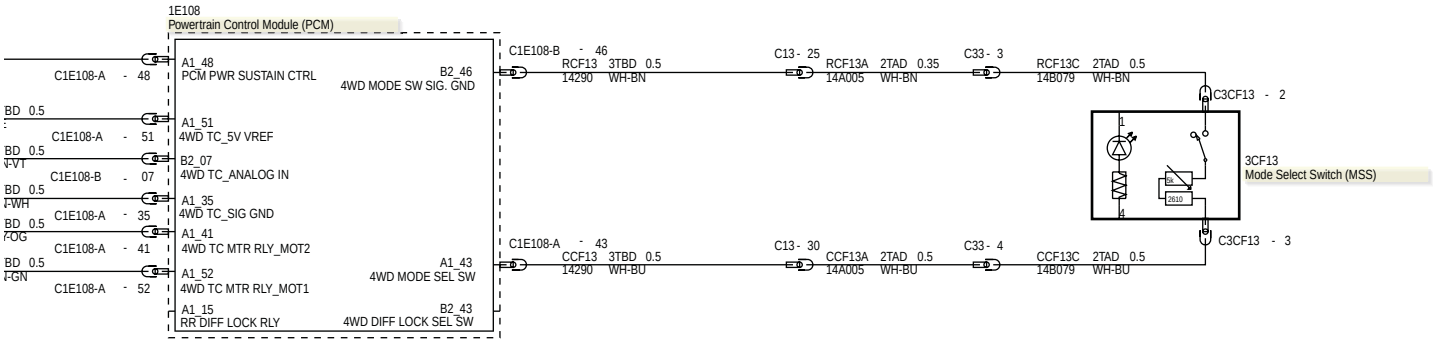
1E108
Powertrain Control Module (PCM)
C1E108-A - 48
A1_48
PCM PWR SUSTAIN CTRL
B2_46
4WD MODE SW SIG. GND
C1E108-A - 51
A1_51
4WD TC_5V VREF
C1E108-B - 07
B2_07
4WD TC_ANALOG IN
C1E108-A - 35
A1_35
4WD TC_SIG GND
C1E108-A - 41
A1_41
4WD TC MTR RLY_MOT2
C1E108-A - 52
A1_52
4WD TC MTR RLY_MOT1
A1_15
RR DIFF LOCK RLY
A1_43
4WD MODE SEL SW
B2_43
4WD DIFF LOCK SEL SW
C1E108-B - 46
RCF13 3TBD 0.5
14290 WH-BN
C13 - 25
RCF13A 2TAD 0.35
14A005 WH-BN
C33 - 3
RCF13C 2TAD 0.5
14B079 WH-BN
C3CF13 - 2
3CF13
Mode Select Switch (MSS)
C3CF13 - 3
C1E108-A - 43
CCF13 3TBD 0.5
14290 WH-BU
C13 - 30
CCF13A 2TAD 0.5
14A005 WH-BU
C33 - 4
CCF13C 2TAD 0.5
14B079 WH-BU

Mode Select Switch (MSS) (G1405439)

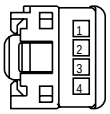

1	GD343AD	BK-VT	2TAD	0.5
2	RCF13C	WH-BN	2TAD	0.5
3	CCF13C	WH-BU	2TAD	0.5
4	CLN17S	BN	2TAD	0.5

1L2T-14489-GC

C3CF13
TO 4WD MODE SWITCH

HARNESS 14B079

Transfer Case Shift Motor (G1405440)

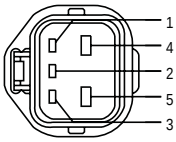

1	LCF24A	YE	4TBD	0.5
4	CCF27B	GY	4TBD	2.5
2	CCF23A	GN-VT	4TBD	0.5
5	CCF28B	VT-GY	4TBD	2.5
3	RCF09A	BN-WH	4TBD	0.5

4W7T-14A464-AA

C1CF07
TO 4WD TRANSFER CASE

HARNESS 14K039

SECTION 309-00 Exhaust System — 2.2L Duratorq-TDCi (Puma) Diesel/3.2L Duratorq-TDCi (Puma) Diesel

VEHICLE APPLICATION: 2012.0 Ranger

CONTENTS PAGE

ELECTRICAL CONNECTORS

Fuel Vaporizer System Glow Plug..... 309-00-2
Fuel Vaporizer System Fuel Pump..... 309-00-2

Fuel Vaporizer System Glow Plug (G1404284)

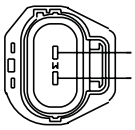

2	CBB15K	BN-BU	4TBD	0.75
1	GD123B	BK-GY	4TBD	0.75

97BG-14A464-VBB

C1E156
TO FLYLEAD VAPOURISER GLOW PLUG

HARNESS 14K039

Fuel Vaporizer System Fuel Pump (G1404285)

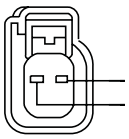

1	CBB40	YE-GN	4TBD	0.75
2	CE523A	BN-GN	4TBD	0.75

AU5T-14A464-PA

C1E523
TO VAPOURISER PUMP

HARNESS 14K039

SECTION 310-00A Fuel System - General Information

— 2.5L Duratec-HE (122kW/165PS) - MI4

VEHICLE APPLICATION: 2012.0 Ranger

CONTENTS PAGE

ELECTRICAL SCHEMATICS

Fuel Supply..... 310-00A-2

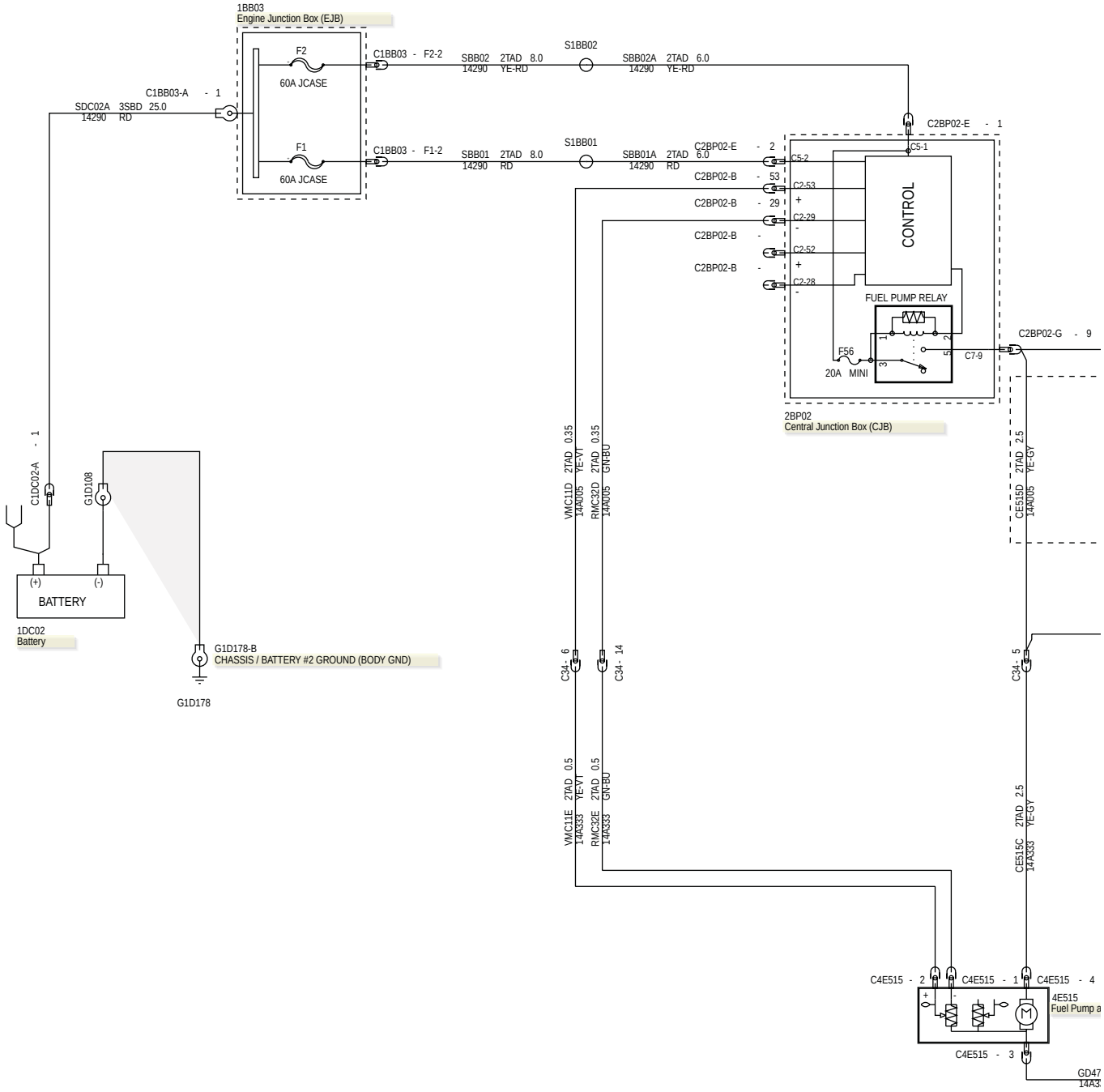
1BB03
Engine Junction Box (EJB)
F2
60A JCASE
F1
60A JCASE
C1BB03 - F2-2
SBB02 2TAD 8.0
14290 YE-RD
S1BB02
SBB02A 2TAD 6.0
14290 YE-RD
C1BB03-A - 1
SDC02A 3SBD 25.0
14290 RD
C1BB03 - F1-2
SBB01 2TAD 8.0
14290 RD
S1BB01
SBB01A 2TAD 6.0
14290 RD
C2BP02-E - 1
C5-1
C2BP02-E - 2
C5-2
C2BP02-B - 53
C2-53
C2BP02-B - 29
C2-29
C2BP02-B -
C2-52
C2BP02-B -
C2-28
CONTROL
FUEL PUMP RELAY
F56
20A MINI
C7-9
C2BP02-G - 9
2BP02
Central Junction Box (CJB)
C1DC02-A - 1
G1D108
(+)
(-)
BATTERY
1DC02
Battery
G1D178-B
CHASSIS / BATTERY #2 GROUND (BODY GND)
G1D178
VMC11D 2TAD 0.35
14A005 YE-VT
RMC32D 2TAD 0.35
14A005 GN-BU
CE515D 2TAD 2.5
14A005 YE-GY
C34 - 6
C34 - 14
C34 - 5
VMC11E 2TAD 0.5
14A333 YE-VT
RMC32E 2TAD 0.5
14A333 GN-BU
CE515C 2TAD 2.5
14A333 YE-GY
C4E515 - 2
C4E515 - 1
C4E515 - 4
4E515
Fuel Pump a
C4E515 - 3
GD47
14A3

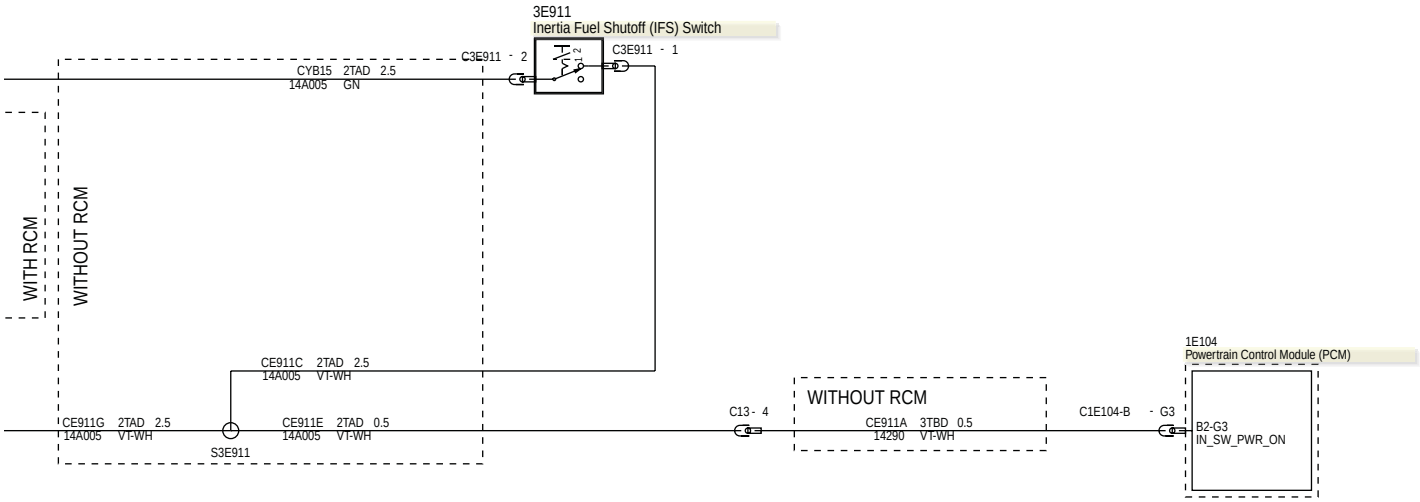
3E911
Inertia Fuel Shutoff (IFS) Switch
C3E911 - 2
C3E911 - 1
CYB15 2TAD 2.5
14A005 GN
WITH RCM
WITHOUT RCM
CE911C 2TAD 2.5
14A005 VT-WH
CE911G 2TAD 2.5
14A005 VT-WH
S3E911
CE911E 2TAD 0.5
14A005 VT-WH
C13 - 4
WITHOUT RCM
CE911A 3TBD 0.5
14290 VT-WH
C1E104-B - G3
1E104
Powertrain Control Module (PCM)
B2-G3
IN_SW_PWR_ON

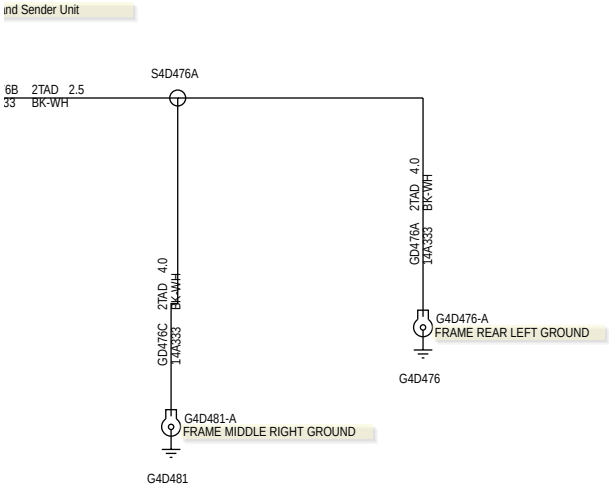
nd Sender Unit
S4D476A
6B 2TAD 2.5
33 BK-WH
GD476A 2TAD 4.0
14A333 BK-WH
G4D476-A
FRAME REAR LEFT GROUND
G4D476
GD476C 2TAD 4.0
14A333 BK-WH
G4D481-A
FRAME MIDDLE RIGHT GROUND
G4D481

SECTION 310-00B Fuel System - General Information

— 2.2L Duratorq-TDCi (Puma) Diesel/3.2L Duratorq-TDCi (Puma) Diesel

VEHICLE APPLICATION: 2012.0 Ranger

CONTENTS PAGE

ELECTRICAL SCHEMATICS

Fuel Supply..... 310-00B-2

310-00B-2 Fuel Supply

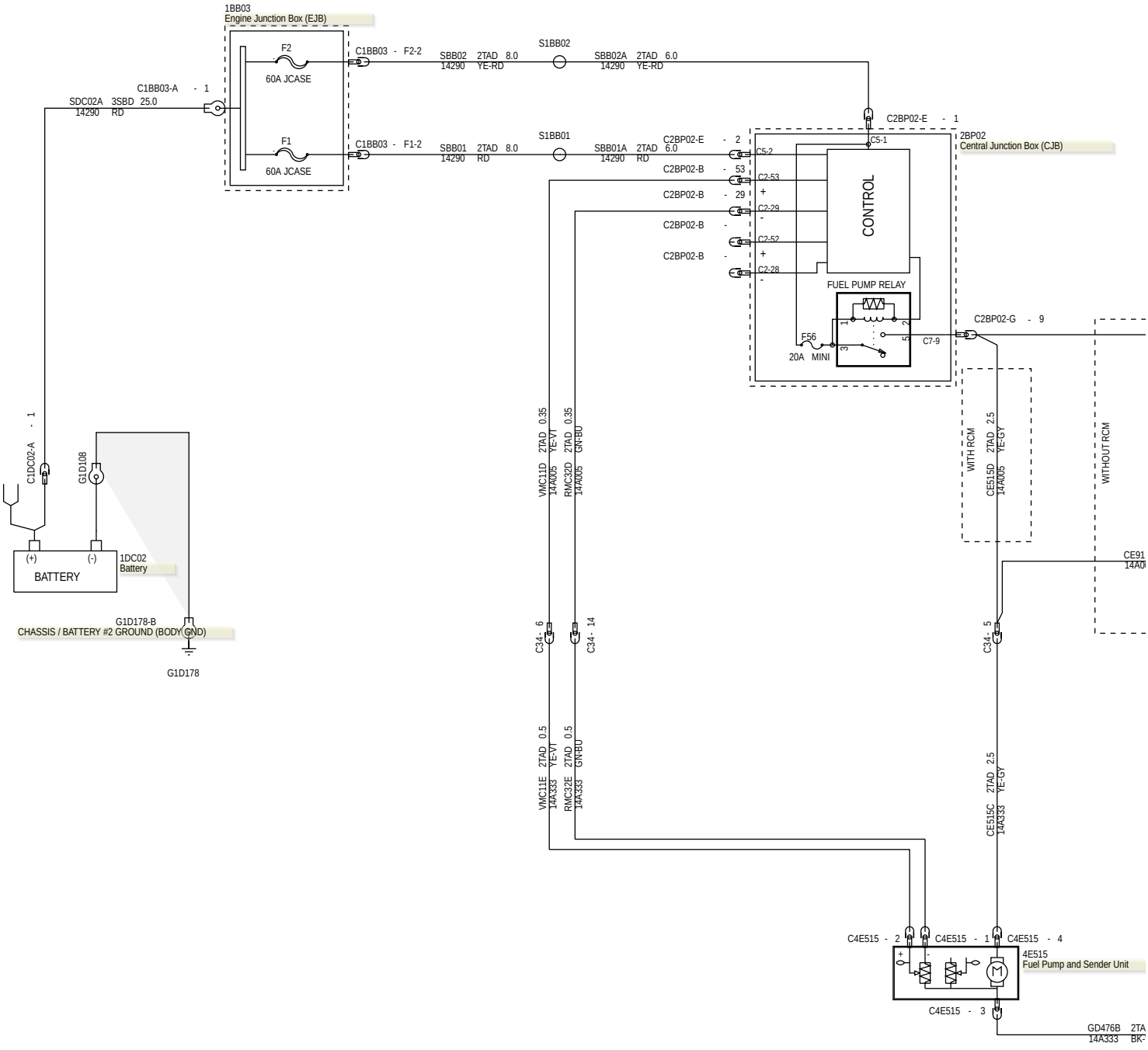

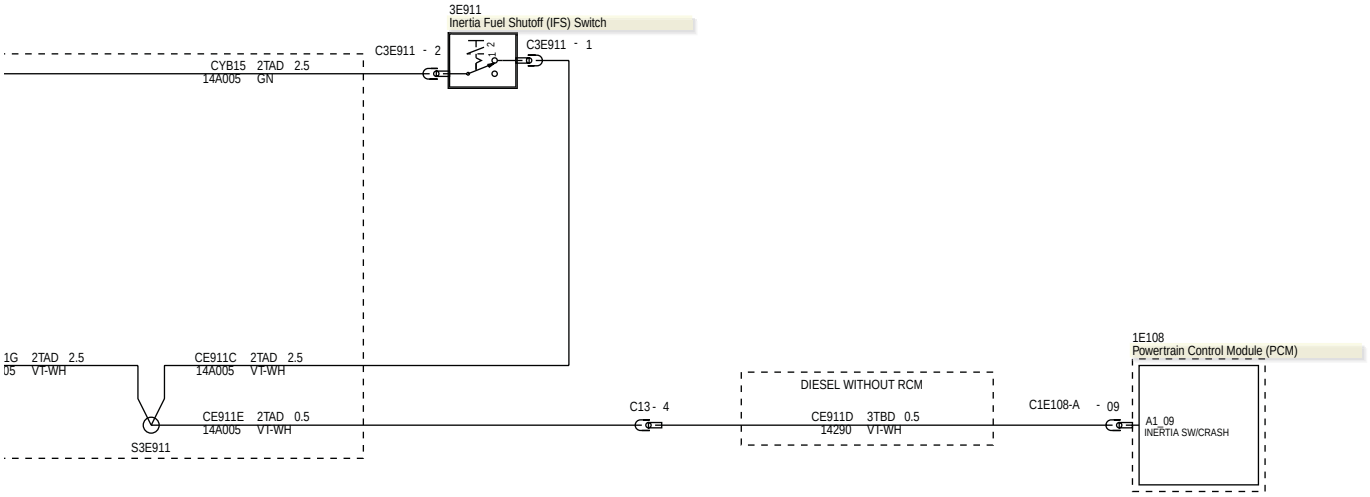
3E911
Inertia Fuel Shutoff (IFS) Switch
C3E911 - 2
C3E911 - 1
CYB15 2TAD 2.5
14A005 GN
1G 2TAD 2.5
05 VT-WH
CE911C 2TAD 2.5
14A005 VT-WH
CE911E 2TAD 0.5
14A005 VT-WH
S3E911
C13 - 4
DIESEL WITHOUT RCM
CE911D 3TBD 0.5
14290 VT-WH
C1E108-A - 09
1E108
Powertrain Control Module (PCM)
A1_09
INERTIA SW/CRASH

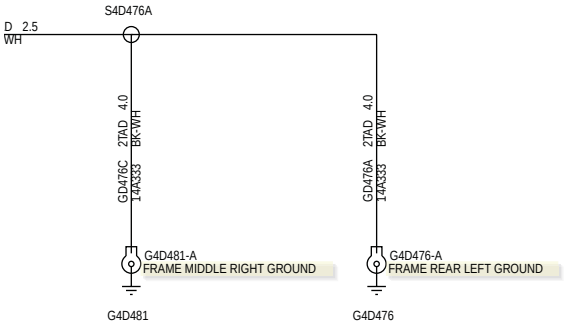
S4D476A
D 2.5
WH
GD476C 2TAD 4.0
14A333 BK-WH
GD476A 2TAD 4.0
14A333 BK-WH
G4D481-A
FRAME MIDDLE RIGHT GROUND
G4D476-A
FRAME REAR LEFT GROUND
G4D481
G4D476

SECTION 310-01A Fuel Tank and Lines

VEHICLE APPLICATION: 2012.0 Ranger

CONTENTS PAGE

ELECTRICAL CONNECTORS

Fuel Pump and Sender Unit..... 310-01A-2
Fuel Level Sensor — A..... 310-01A-2
Inertia Fuel Shutoff (IFS) Switch..... 310-01A-2

Fuel Pump and Sender Unit (G1404288)

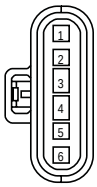

1	RMC32E	GN-BU	2TAD	0.5	+	RMC32A	GN-BU	2TAD	0.5
2	VMC11E	YE-VT	2TAD	0.5	+	VMC11A	YE-VT	2TAD	0.5
3	GD476B	BK-WH	2TAD	2.5					
4	CE515A	YE-GY	2TAD	2.5	+	CE515C	YE-GY	2TAD	2.5
5									
6									

3M5T-14A464-DGB

C4E515
TO FUEL DELIVERY MODULE

HARNESS 14A333

Fuel Level Sensor—A (G1414537)

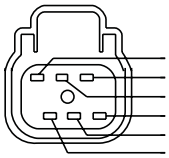

3	CE930A	WH-GN	3TBD	0.75
1	CBB15	BN-BU	3TBD	0.75
2	VE724	GY	3TBD	0.5
4	CBB22K	GN-OG	3TBD	0.75
5	VMC04AA	GY-BN	3TBD	0.5
6	GD121L	BK-YE	3TBD	0.75

YC1T-14A464-EA

C1E724-A
TO FLYLEAD FLEX FUEL

HARNESS 14290

Inertia Fuel Shutoff (IFS) Switch (G1405442)

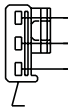

3				
2	CYB15	GN	2TAD	2.5
1	CE911C	VT-WH	2TAD	2.5

E8AB-14489-AA

C3E911
TO FUEL CUTOFF SWITCH

HARNESS 14A005

SECTION 310-01B Fuel Tank and Lines — 2.2L Duratorq-TDCi (Puma) Diesel/3.2L Duratorq-TDCi (Puma) Diesel

VEHICLE APPLICATION: 2012.0 Ranger

CONTENTS PAGE

ELECTRICAL CONNECTORS

Fuel Pump and Sender Unit..... 310-01B-2
Inertia Fuel Shutoff (IFS) Switch..... 310-01B-2
Water-in-Fuel Sensor..... 310-01B-2

Fuel Pump and Sender Unit (G1404288)

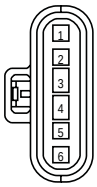

1	RMC32E	GN-BU	2TAD	0.5	+	RMC32A	GN-BU	2TAD	0.5
2	VMC11E	YE-VT	2TAD	0.5	+	VMC11A	YE-VT	2TAD	0.5
3	GD476B	BK-WH	2TAD	2.5					
4	CE515A	YE-GY	2TAD	2.5	+	CE515C	YE-GY	2TAD	2.5
5									
6									

3M5T-14A464-DGB

C4E515
TO FUEL DELIVERY MODULE

HARNESS 14A333

Inertia Fuel Shutoff (IFS) Switch (G1405442)

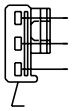

3				
2	CYB15	GN	2TAD	2.5
1	CE911C	VT-WH	2TAD	2.5

E8AB-14489-AA

C3E911
TO FUEL CUTOFF SWITCH

HARNESS 14A005

Water-in-Fuel Sensor (G1404289)

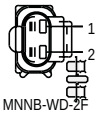

1	VE823A	BU-BN	3TBD	0.5
2	GD122G	BK	3TBD	0.5

:]

MNNB-WD-2F

C1E823

TO FUEL FILTER

HARNESS 14290

SECTION 310-03 Speed Control

VEHICLE APPLICATION: 2012.0 Ranger

CONTENTS PAGE

ELECTRICAL SCHEMATICS

Speed Control..... 310-03-2

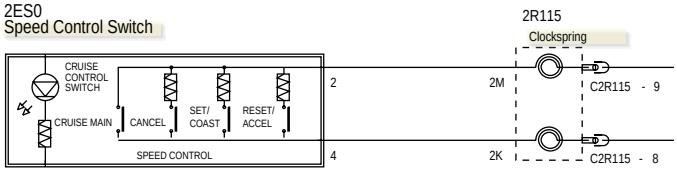
2ES0
Speed Control Switch
CRUISE CONTROL SWITCH
CRUISE MAIN
CANCEL
SET/ COAST
RESET/ ACCEL
SPEED CONTROL
2
4
2M
2K
2R115
Clockspring
C2R115 - 9
C2R115 - 8

VES10 2TAD 0.35
14401 WH
C2BP02-C - 40
C3-40
SPEED CONTROL SW
RES08 2TAD 0.35
14401 GN-BN
C2BP02-C - 55
C3-55
SPEED CONTROL GND
2BP02
Central Junction Box (CJB)

GROUP

4

Electrical

SECTION TITLE PAGE

Climate Control System
Climate Control....412-01
Instrumentation and Warning Systems
Instrument Cluster....413-01
Horn....413-06
Information and Message Center....413-08
Warning Devices....413-09
Parking Aid....413-13
Tachograph....413-17
Battery and Charging System
Battery, Mounting and Cables....414-01
Generator and Regulator....414-02
Information and Entertainment Systems
Information and Entertainment System....415-01
Lighting
Exterior Lighting....417-01
Interior Lighting....417-02
Daytime Running Lamps (DRL)....417-04
Electrical Distribution
Module Communications Network....418-00
Electronic Feature Group
Anti-Theft - Active....419-01A
Anti-Theft - Passive....419-01B
Cruise Control....419-03
Multifunction Electronic Modules....419-10

SECTION 412-01 Climate Control

VEHICLE APPLICATION: 2012.0 Ranger

CONTENTS PAGE

PAGE 1 OF 2

ELECTRICAL SCHEMATICS

Climate Control — 2.2L Duratorq-TDCi (88kW/120PS) - Puma/2.2L Duratorq-TDCi (96kW/130PS) - Puma/2.2L Duratorq-TDCi (110kW/150PS) - Puma/3.2L Duratorq-TDCi (148kW/200PS) - Puma, LHD 4WD/LHD RWD, Vehicles With: Dual Automatic Temperature Control..... 412-01-3
Climate Control — 2.5L Duratec-HE (122kW/165PS) - MI4, LHD 4WD/LHD RWD, Vehicles With: Dual Automatic Temperature Control..... 412-01-5
Climate Control — 2.2L Duratorq-TDCi (88kW/120PS) - Puma/2.2L Duratorq-TDCi (96kW/130PS) - Puma/2.2L Duratorq-TDCi (110kW/150PS) - Puma/3.2L Duratorq-TDCi (148kW/200PS) - Puma, RHD 4WD/RHD RWD, Vehicles With: Dual Automatic Temperature Control..... 412-01-7
Climate Control — 2.5L Duratec-HE (122kW/165PS) - MI4, RHD 4WD/RHD RWD, Vehicles With: Dual Automatic Temperature Control..... 412-01-9
Climate Control — LHD 4WD/LHD RWD, Vehicles Without: Air Conditioning..... 412-01-11
Climate Control — RHD 4WD/RHD RWD, Vehicles Without: Air Conditioning..... 412-01-13
Climate Control — 2.2L Duratorq-TDCi (88kW/120PS) - Puma/2.2L Duratorq-TDCi (96kW/130PS) - Puma/2.2L Duratorq-TDCi (110kW/150PS) - Puma/3.2L Duratorq-TDCi (148kW/200PS) - Puma, LHD 4WD/LHD RWD, Vehicles With: Manual Temperature Control..... 412-01-15
Climate Control — 2.5L Duratec-HE (122kW/165PS) - MI4, LHD 4WD/LHD RWD, Vehicles With: Manual Temperature Control..... 412-01-17
Climate Control — 2.2L Duratorq-TDCi (88kW/120PS) - Puma/2.2L Duratorq-TDCi (96kW/130PS) - Puma/2.2L Duratorq-TDCi (110kW/150PS) - Puma/3.2L Duratorq-TDCi (148kW/200PS) - Puma, RHD 4WD/RHD RWD, Vehicles With: Manual Temperature Control..... 412-01-19
Climate Control — 2.5L Duratec-HE (122kW/165PS) - MI4, RHD 4WD/RHD RWD, Vehicles With: Manual Temperature Control..... 412-01-21

ELECTRICAL CONNECTORS

Air Conditioning (A/C) Dual Pressure Switch..... 412-01-23
Air Conditioning (A/C) Pressure Transducer..... 412-01-23
Ambient Air Temperature Sensor..... 412-01-23
Blower Motor..... 412-01-23
Blower Motor Control Module..... 412-01-24
Blower Motor Resistor..... 412-01-24
Climate Control Module..... 412-01-24
Climate Control Module — A..... 412-01-24
Climate Control Module — B..... 412-01-25
Clutch and Clutch Field Coil..... 412-01-25
Defrost Vent/Register/Footwell Blend Door Actuator..... 412-01-26
Defrost Vent/Register/Footwell Blend Door Actuator — A..... 412-01-26
Evaporator Temperature Sensor..... 412-01-26

PAGE 2 OF 2

Evaporator Temperature Sensor — A..... 412-01-26
Recirculation Blend Door Actuator..... 412-01-27
Recirculation Blend Door Actuator — A..... 412-01-27
Sunload Sensor..... 412-01-27
Temperature Blend Door Actuator..... 412-01-27
Temperature Blend Door Actuator LH..... 412-01-28
Temperature Blend Door Actuator RH..... 412-01-28

412-01-3 Climate Control—2.2L Duratorq-TDCi (88kW/120PS) - Puma/2.2L Duratorq-TDCi (96kW/130PS) - Puma/2.2L Duratorq-TDCi (110kW/150PS) - Puma/3.2L Duratorq-TDCi (148kW/200PS) - Puma, LHD 4WD/LHD RWD, Vehicles With: Dual Automatic Temperature Control

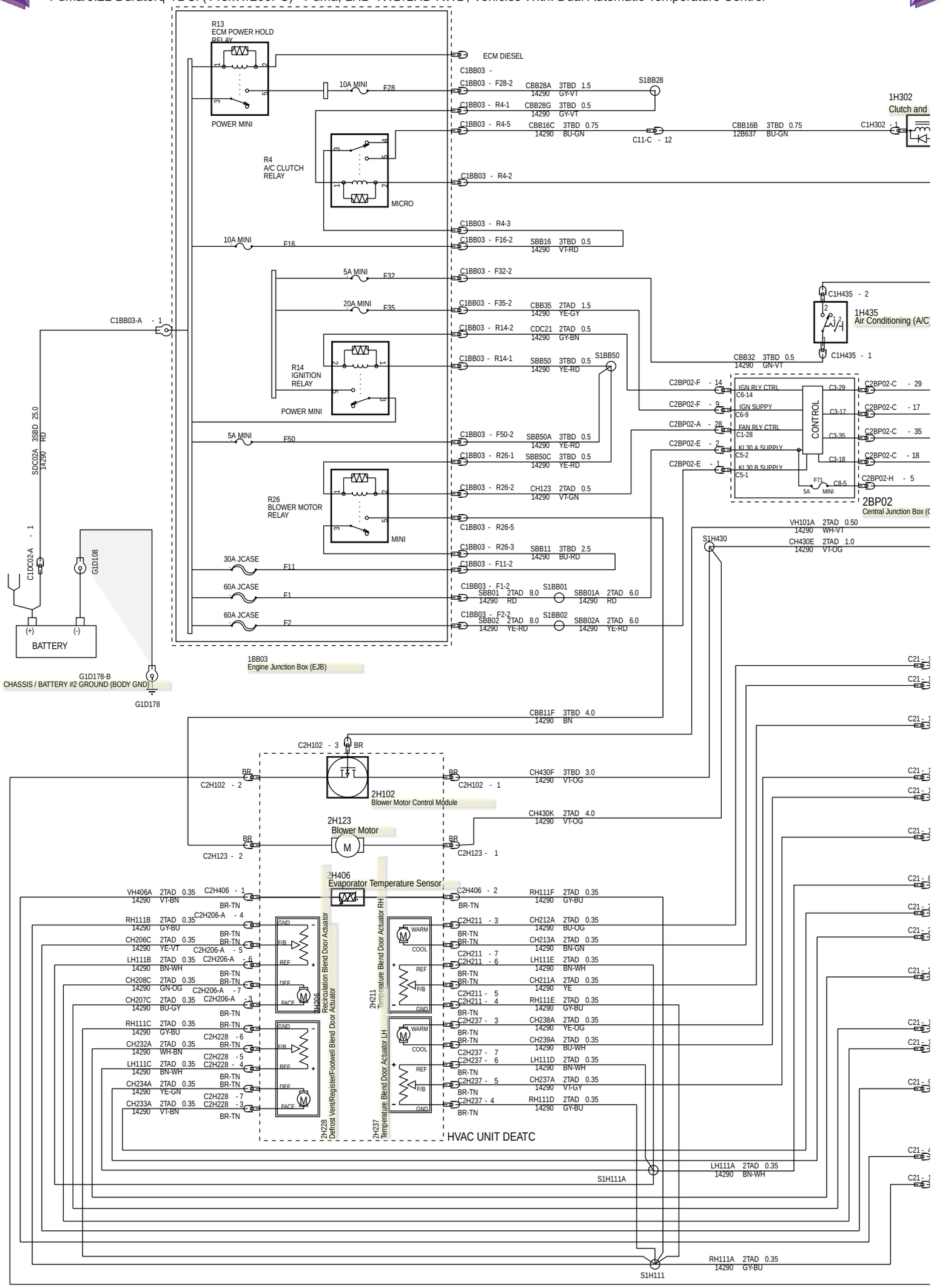

412-01-4 Climate Control—2.2L Duratorq-TDCi (88kW/120PS) - Puma/2.2L Duratorq-TDCi (96kW/130PS) - Puma/2.2L Duratorq-TDCi (110kW/150PS) - Puma/3.2L Duratorq-TDCi (148kW/200PS) - Puma, LHD 4WD/LHD RWD, Vehicles With: Dual Automatic Temperature Control

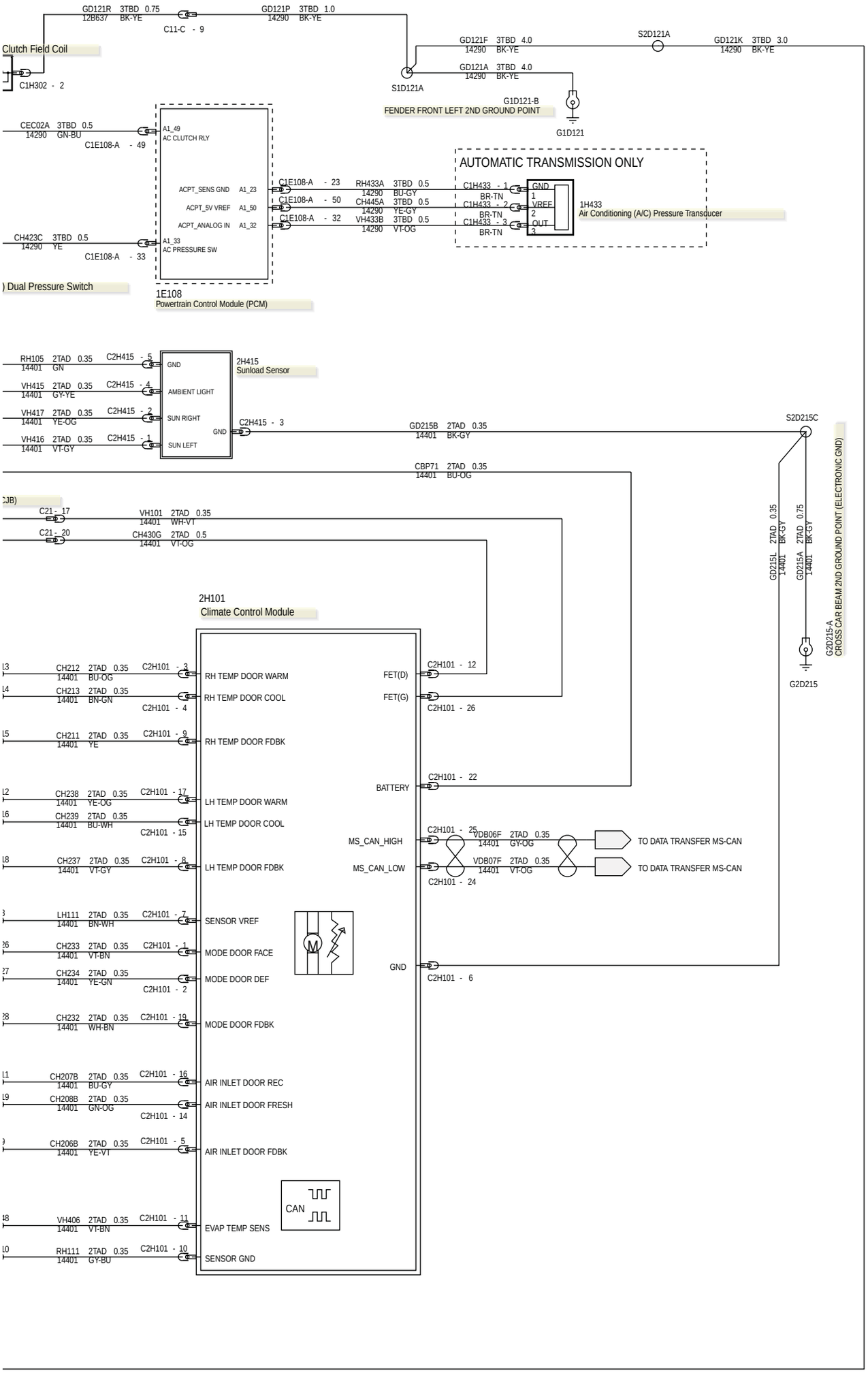

412-01-5 Climate Control—2.5L Duratec-HE (122kW/165PS) - MI4, LHD 4WD/LHD RWD, Vehicles With: Dual Automatic Temperature Control

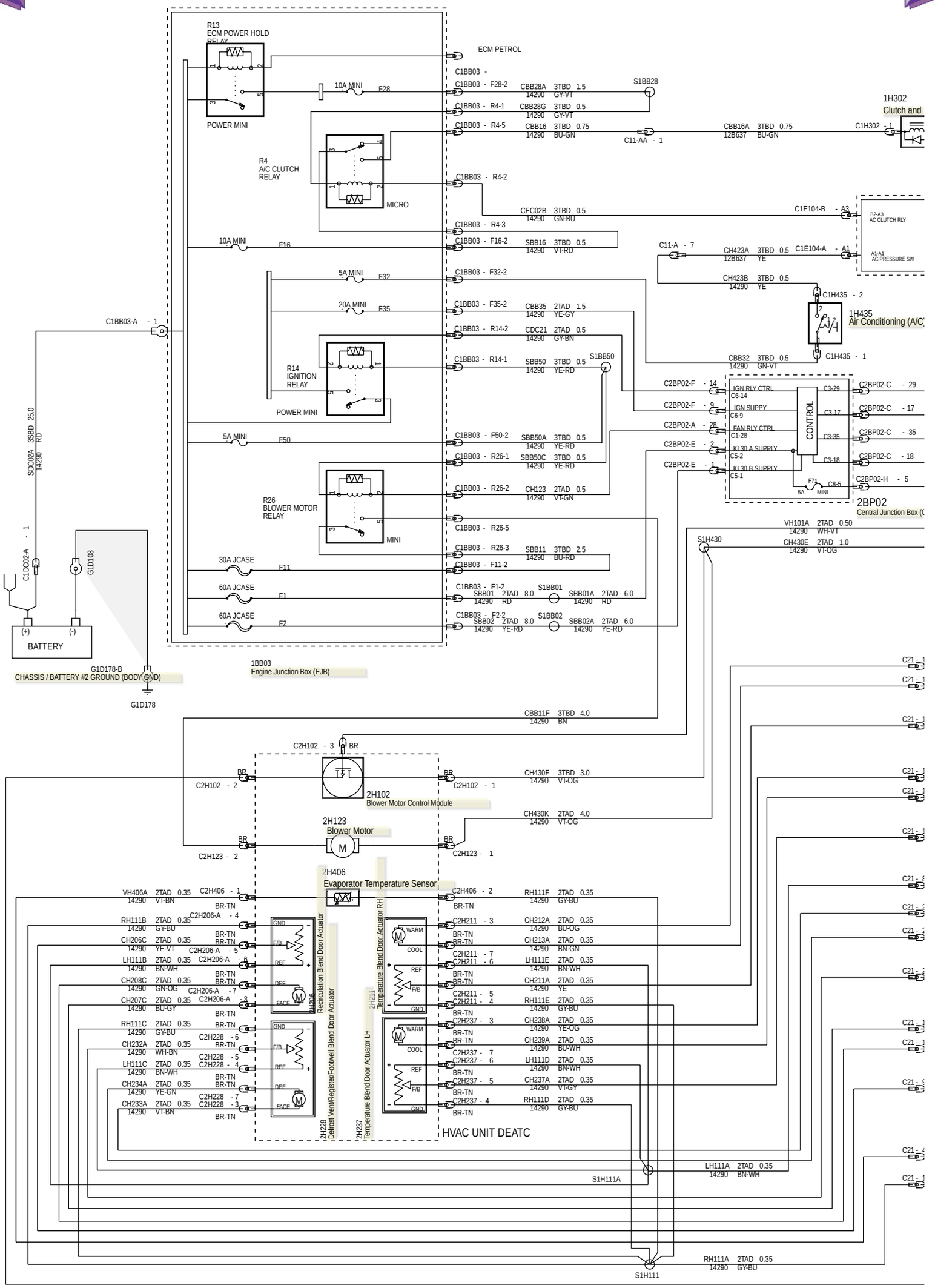

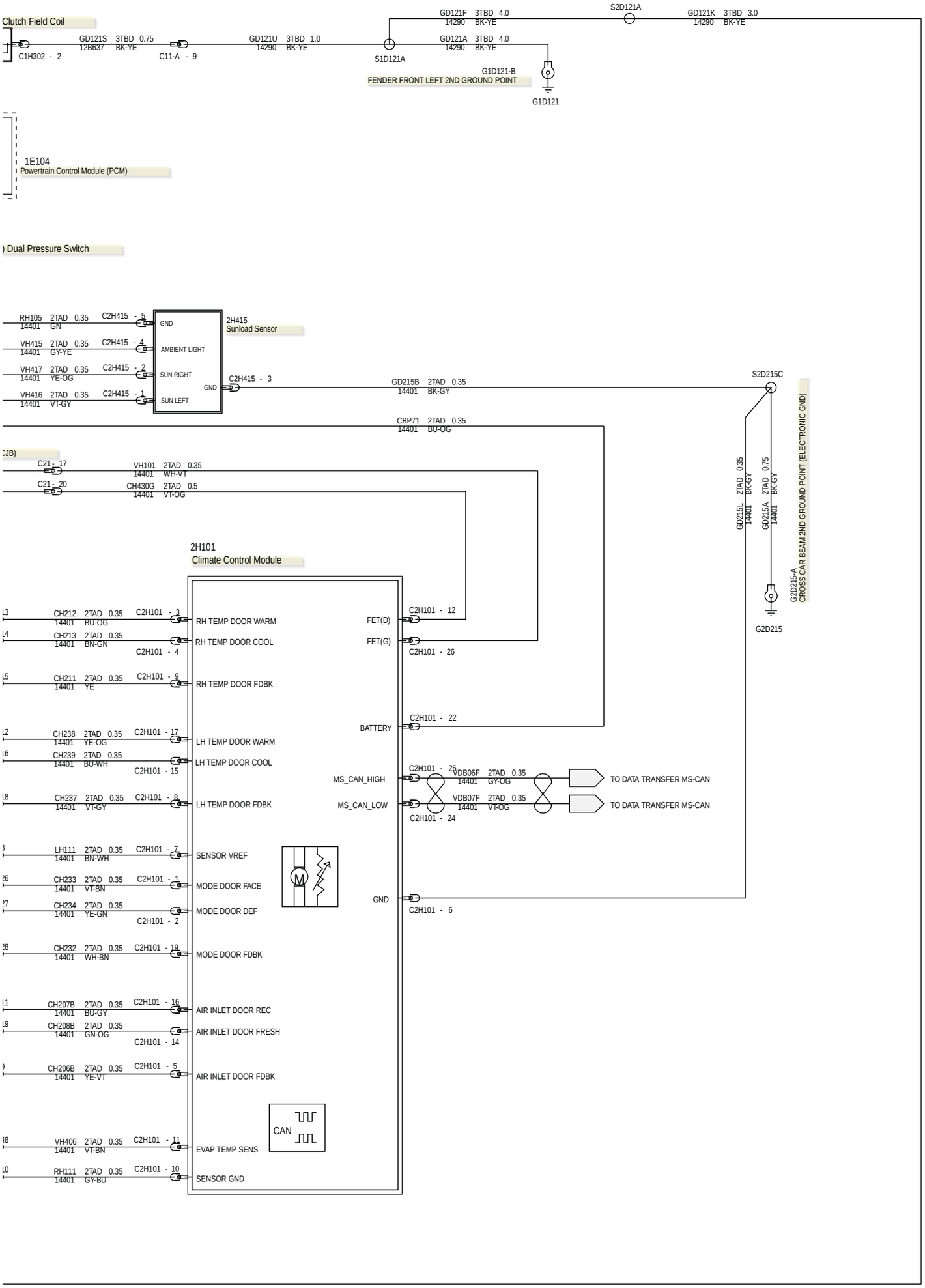
Clutch Field Coil
C1H302 - 2
GD121S 3TBD 0.75
12B637 BK-YE
C11-A - 9
GD121U 3TBD 1.0
14290 BK-YE
S1D121A
GD121F 3TBD 4.0
14290 BK-YE
GD121A 3TBD 4.0
14290 BK-YE
S2D121A
GD121K 3TBD 3.0
14290 BK-YE
G1D121-B
FENDER FRONT LEFT 2ND GROUND POINT
G1D121
1E104
Powertrain Control Module (PCM)
) Dual Pressure Switch
RH105 2TAD 0.35
14401 GN
C2H415 - 5
VH415 2TAD 0.35
14401 GY-YE
C2H415 - 4
VH417 2TAD 0.35
14401 YE-OG
C2H415 - 2
VH416 2TAD 0.35
14401 VT-GY
C2H415 - 1
GND
AMBIENT LIGHT
SUN RIGHT
SUN LEFT
GND
2H415
Sunload Sensor
C2H415 - 3
GD215B 2TAD 0.35
14401 BK-GY
S2D215C
CBP71 2TAD 0.35
14401 BU-OG
CJB)
C21 - 17
VH101 2TAD 0.35
14401 WH-VT
C21 - 20
CH430G 2TAD 0.5
14401 VT-OG
GD215L 2TAD 0.35
14401 BK-GY
GD215A 2TAD 0.75
14401 BK-GY
G2D215-A
CROSS CAR BEAM 2ND GROUND POINT (ELECTRONIC GND)
G2D215
2H101
Climate Control Module
CH212 2TAD 0.35
14401 BU-OG
C2H101 - 3
RH TEMP DOOR WARM
CH213 2TAD 0.35
14401 BN-GN
C2H101 - 4
RH TEMP DOOR COOL
CH211 2TAD 0.35
14401 YE
C2H101 - 9
RH TEMP DOOR FDBK
CH238 2TAD 0.35
14401 YE-OG
C2H101 - 17
LH TEMP DOOR WARM
CH239 2TAD 0.35
14401 BU-WH
C2H101 - 15
LH TEMP DOOR COOL
CH237 2TAD 0.35
14401 VT-GY
C2H101 - 8
LH TEMP DOOR FDBK
LH111 2TAD 0.35
14401 BN-WH
C2H101 - 7
SENSOR VREF
CH233 2TAD 0.35
14401 VT-BN
C2H101 - 1
MODE DOOR FACE
CH234 2TAD 0.35
14401 YE-GN
C2H101 - 2
MODE DOOR DEF
CH232 2TAD 0.35
14401 WH-BN
C2H101 - 19
MODE DOOR FDBK
CH207B 2TAD 0.35
14401 BU-GY
C2H101 - 16
AIR INLET DOOR REC
CH208B 2TAD 0.35
14401 GN-OG
C2H101 - 14
AIR INLET DOOR FRESH
CH206B 2TAD 0.35
14401 YE-VT
C2H101 - 5
AIR INLET DOOR FDBK
VH406 2TAD 0.35
14401 VT-BN
C2H101 - 11
EVAP TEMP SENS
RH111 2TAD 0.35
14401 GY-BU
C2H101 - 10
SENSOR GND
CAN
FET(D)
C2H101 - 12
FET(G)
C2H101 - 26
BATTERY
C2H101 - 22
MS_CAN_HIGH
C2H101 - 25
VDB06F 2TAD 0.35
14401 GY-OG
MS_CAN_LOW
VDB07F 2TAD 0.35
14401 VT-OG
C2H101 - 24
TO DATA TRANSFER MS-CAN
TO DATA TRANSFER MS-CAN
GND
C2H101 - 6

412-01-7 Climate Control—2.2L Duratorq-TDCi (88kW/120PS) - Puma/2.2L Duratorq-TDCi (96kW/130PS) - Puma/2.2L Duratorq-TDCi (110kW/150PS) - Puma/3.2L Duratorq-TDCi (148kW/200PS) - Puma, RHD 4WD/RHD RWD, Vehicles With: Dual Automatic Temperature Control

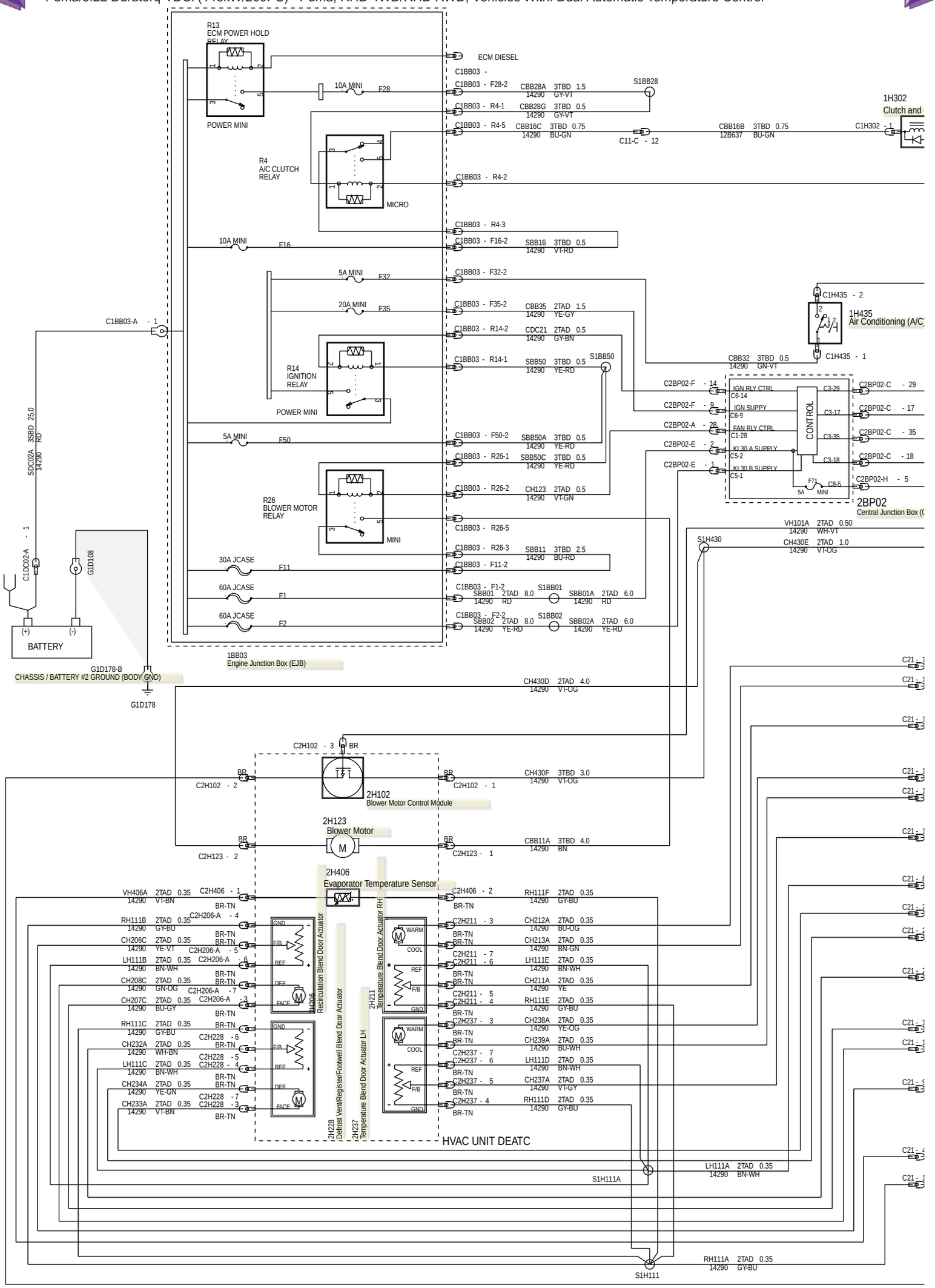

412-01-8 Climate Control—2.2L Duratorq-TDCi (88kW/120PS) - Puma/2.2L Duratorq-TDCi (96kW/130PS) - Puma/2.2L Duratorq-TDCi (110kW/150PS) - Puma/3.2L Duratorq-TDCi (148kW/200PS) - Puma, RHD 4WD/RHD RWD, Vehicles With: Dual Automatic Temperature Control

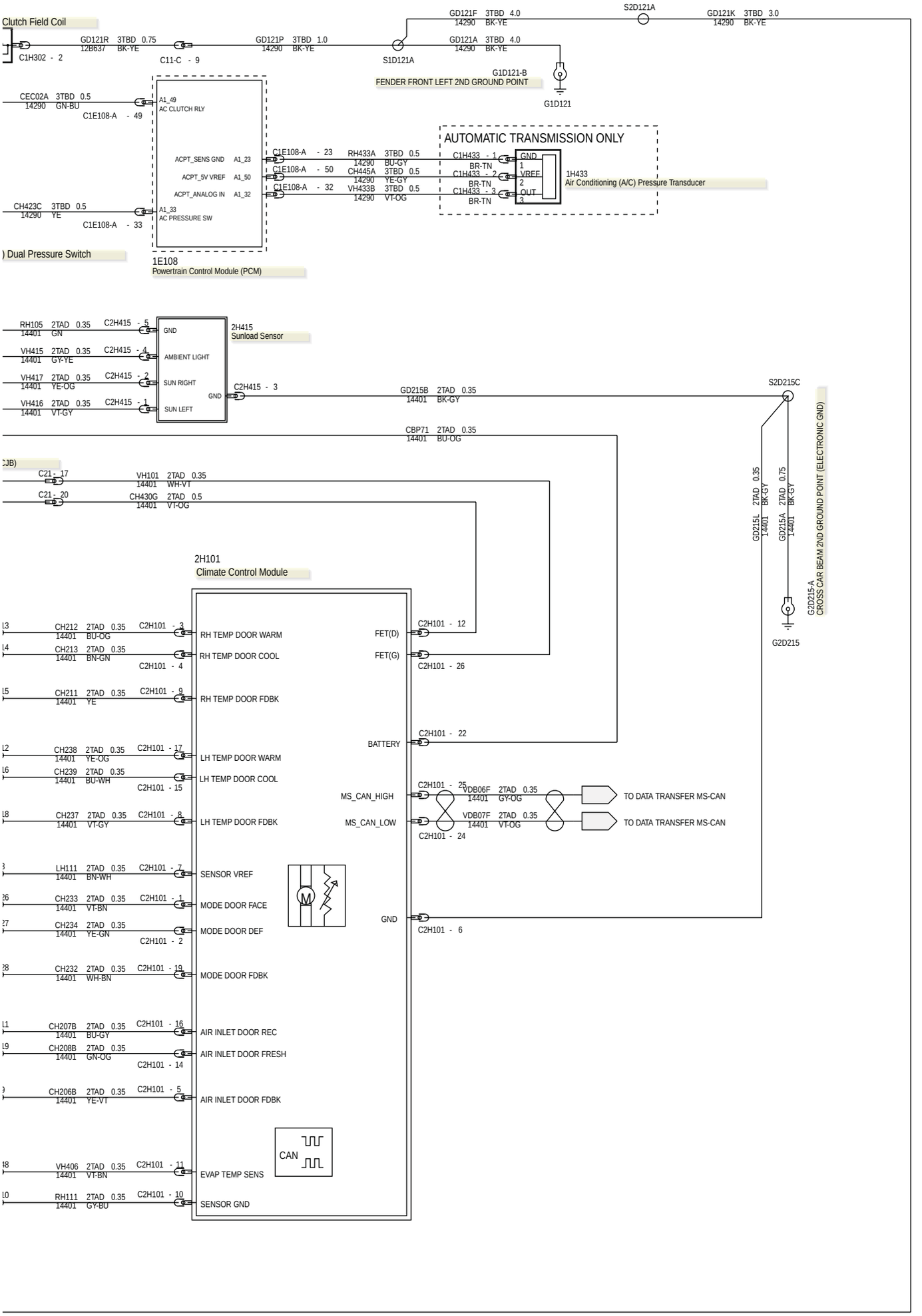

412-01-9 Climate Control—2.5L Duratec-HE (122kW/165PS) - MI4, RHD 4WD/RHD RWD, Vehicles With: Dual Automatic Temperature Control

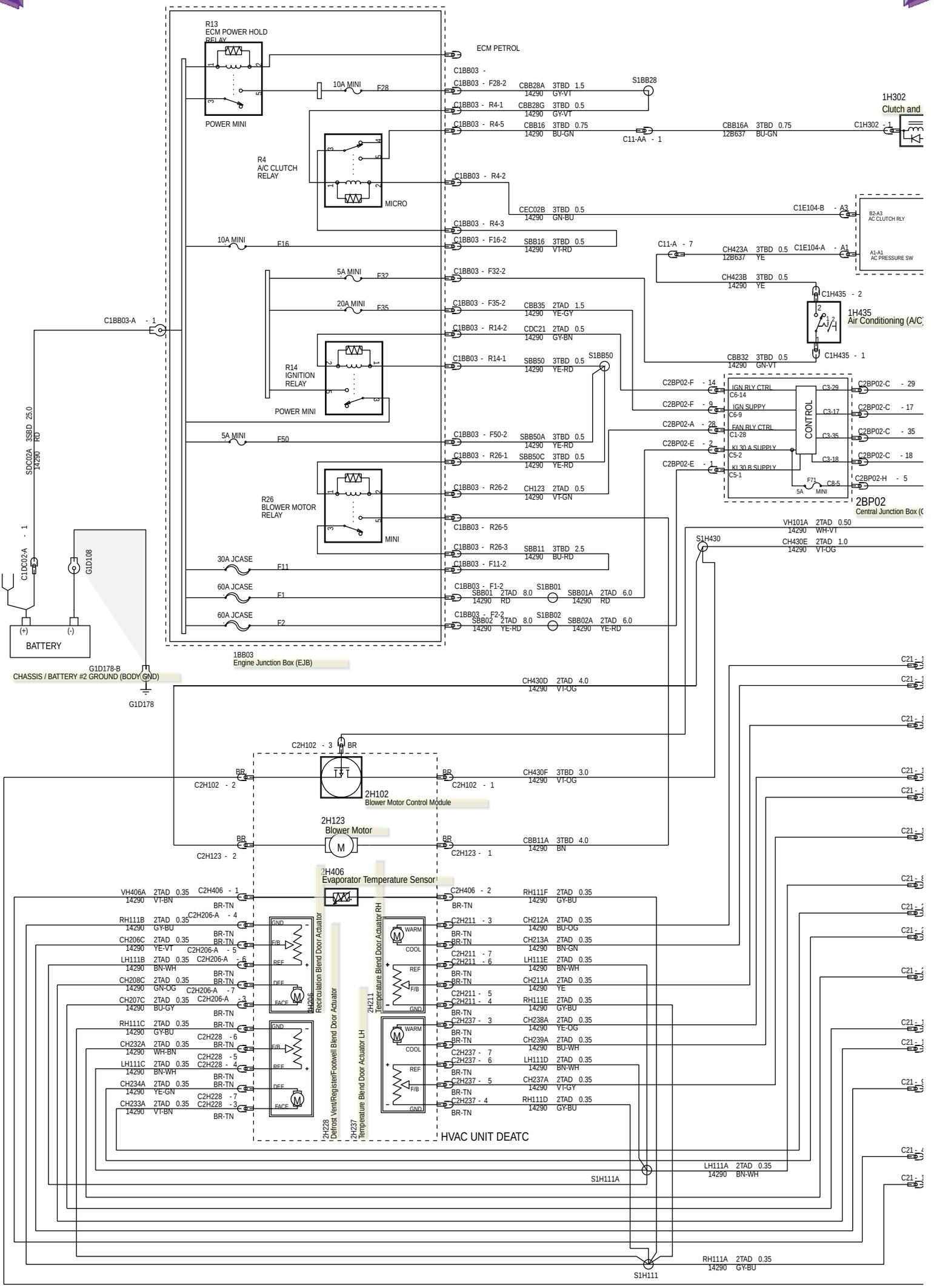

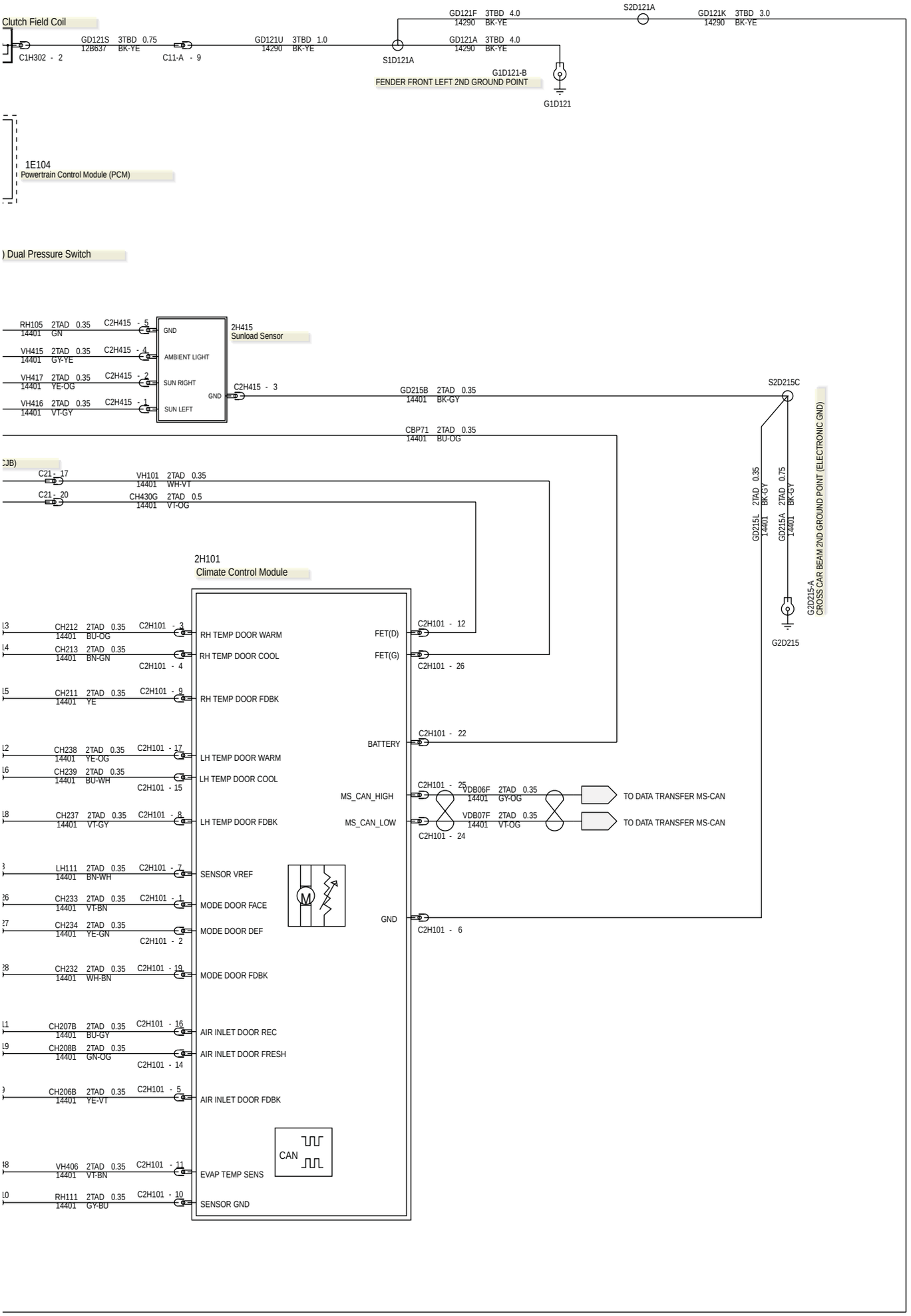
Clutch Field Coil
C1H302 - 2
GD121S 3TBD 0.75 12B637 BK-YE
C11-A - 9
GD121U 3TBD 1.0 14290 BK-YE
S1D121A
GD121F 3TBD 4.0 14290 BK-YE
GD121A 3TBD 4.0 14290 BK-YE
S2D121A
GD121K 3TBD 3.0 14290 BK-YE
G1D121-B
FENDER FRONT LEFT 2ND GROUND POINT
G1D121
1E104
Powertrain Control Module (PCM)
) Dual Pressure Switch
RH105 2TAD 0.35 14401 GN
VH415 2TAD 0.35 14401 GY-YE
VH417 2TAD 0.35 14401 YE-OG
VH416 2TAD 0.35 14401 VT-GY
C2H415 - 5
C2H415 - 4
C2H415 - 2
C2H415 - 1
GND
AMBIENT LIGHT
SUN RIGHT
SUN LEFT
GND
2H415
Sunload Sensor
C2H415 - 3
GD215B 2TAD 0.35 14401 BK-GY
S2D215C
CBP71 2TAD 0.35 14401 BU-OG
CJB)
C21 - 17
VH101 2TAD 0.35 14401 WH-VT
C21 - 20
CH430G 2TAD 0.5 14401 VT-OG
GD215L 2TAD 0.35 14401 BK-GY
GD215A 2TAD 0.75 14401 BK-GY
G2D215-A
CROSS CAR BEAM 2ND GROUND POINT (ELECTRONIC GND)
G2D215
2H101
Climate Control Module
CH212 2TAD 0.35 14401 BU-OG
C2H101 - 3
RH TEMP DOOR WARM
CH213 2TAD 0.35 14401 BN-GN
C2H101 - 4
RH TEMP DOOR COOL
CH211 2TAD 0.35 14401 YE
C2H101 - 9
RH TEMP DOOR FDBK
CH238 2TAD 0.35 14401 YE-OG
C2H101 - 17
LH TEMP DOOR WARM
CH239 2TAD 0.35 14401 BU-WH
C2H101 - 15
LH TEMP DOOR COOL
CH237 2TAD 0.35 14401 VT-GY
C2H101 - 8
LH TEMP DOOR FDBK
LH111 2TAD 0.35 14401 BN-WH
C2H101 - 7
SENSOR VREF
CH233 2TAD 0.35 14401 VT-BN
C2H101 - 1
MODE DOOR FACE
CH234 2TAD 0.35 14401 YE-GN
C2H101 - 2
MODE DOOR DEF
CH232 2TAD 0.35 14401 WH-BN
C2H101 - 19
MODE DOOR FDBK
CH207B 2TAD 0.35 14401 BU-GY
C2H101 - 16
AIR INLET DOOR REC
CH208B 2TAD 0.35 14401 GN-OG
C2H101 - 14
AIR INLET DOOR FRESH
CH206B 2TAD 0.35 14401 YE-VT
C2H101 - 5
AIR INLET DOOR FDBK
VH406 2TAD 0.35 14401 VT-BN
C2H101 - 11
EVAP TEMP SENS
RH111 2TAD 0.35 14401 GY-BU
C2H101 - 10
SENSOR GND
CAN
FET(D)
C2H101 - 12
FET(G)
C2H101 - 26
BATTERY
C2H101 - 22
MS_CAN_HIGH
C2H101 - 25
VDB06F 2TAD 0.35 14401 GY-OG
TO DATA TRANSFER MS-CAN
MS_CAN_LOW
VDB07F 2TAD 0.35 14401 VT-OG
C2H101 - 24
TO DATA TRANSFER MS-CAN
GND
C2H101 - 6

412-01-11 Climate Control—LHD 4WD/LHD RWD, Vehicles Without: Air Conditioning

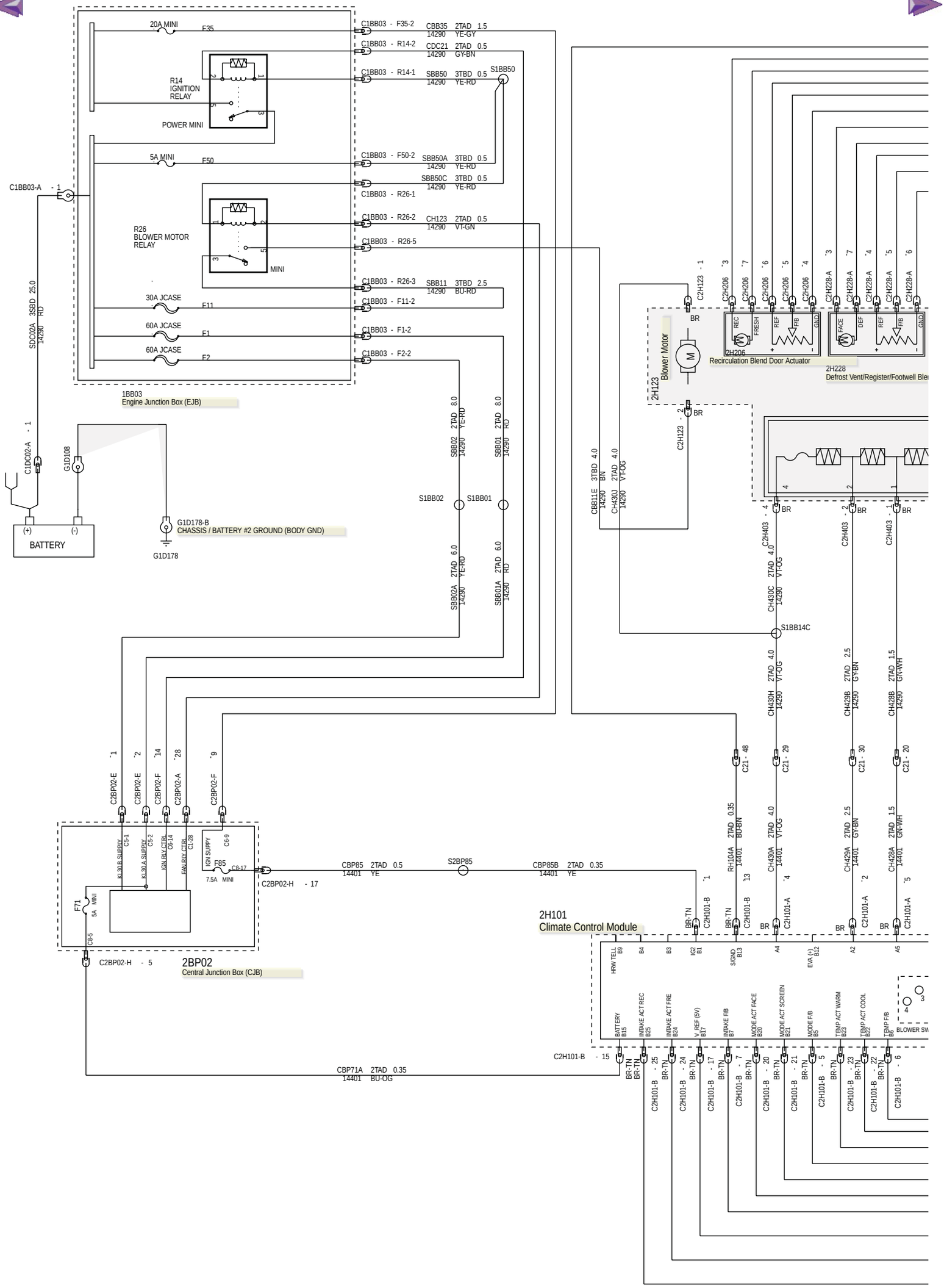

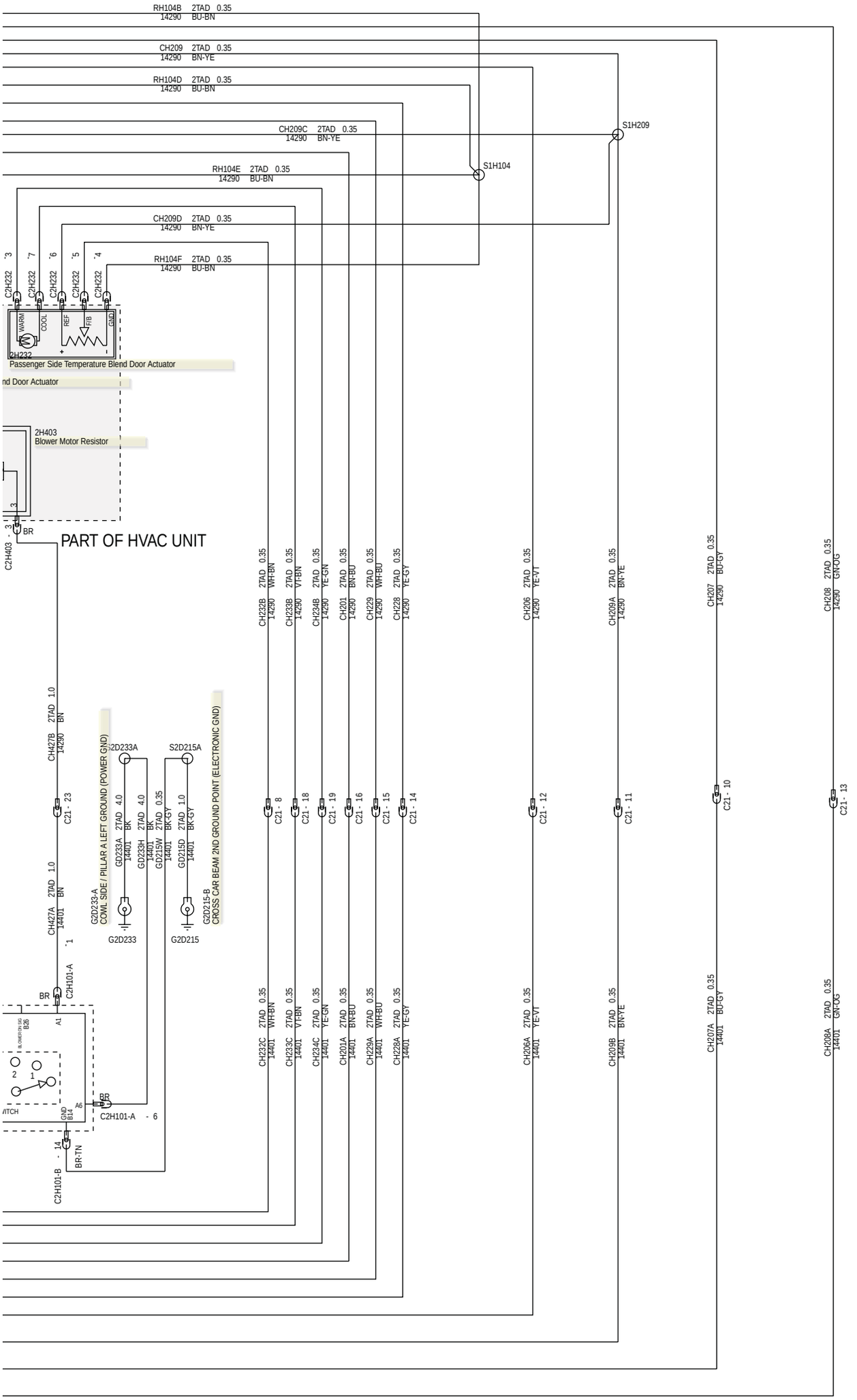
RH104B 2TAD 0.35 14290 BU-BN
CH209 2TAD 0.35 14290 BN-YE
RH104D 2TAD 0.35 14290 BU-BN
CH209C 2TAD 0.35 14290 BN-YE
S1H209
RH104E 2TAD 0.35 14290 BU-BN
S1H104
CH209D 2TAD 0.35 14290 BN-YE
RH104F 2TAD 0.35 14290 BU-BN
C2H232
WARM
COOL
REF
F/B
GND
2H232
Passenger Side Temperature Blend Door Actuator
2H403
Blower Motor Resistor
C2H403
BR
PART OF HVAC UNIT
CH233B 2TAD 0.35 14290 WH-BN
CH233B 2TAD 0.35 14290 VT-BN
CH234B 2TAD 0.35 14290 YE-GN
CH201 2TAD 0.35 14290 BN-BU
CH229 2TAD 0.35 14290 WH-BU
CH228 2TAD 0.35 14290 YE-GY
CH206 2TAD 0.35 14290 YE-VT
CH209A 2TAD 0.35 14290 BN-YE
CH207 2TAD 0.35 14290 BU-GY
CH208 2TAD 0.35 14290 GN-OG
CH427B 2TAD 1.0 14290 BN
CH427A 2TAD 1.0 14401 BN
C21 - 23
C21 - 8
C21 - 18
C21 - 19
C21 - 16
C21 - 15
C21 - 14
C21 - 12
C21 - 11
C21 - 10
C21 - 13
S2D233A
S2D215A
GD233A 2TAD 4.0 14401 BK
GD233H 2TAD 4.0 14401 BK
GD215W 2TAD 0.35 14401 BK-GY
GD215D 2TAD 1.0 14401 BK-GY
G2D233-A COWL SIDE / PILLAR A LEFT GROUND (POWER GND)
G2D215-B CROSS CAR BEAM 2ND GROUND POINT (ELECTRONIC GND)
G2D233
G2D215
C2H101-A
CH232C 2TAD 0.35 14401 WH-BN
CH233C 2TAD 0.35 14401 VT-BN
CH234C 2TAD 0.35 14401 YE-GN
CH201A 2TAD 0.35 14401 BN-BU
CH229A 2TAD 0.35 14401 WH-BU
CH228A 2TAD 0.35 14401 YE-GY
CH206A 2TAD 0.35 14401 YE-VT
CH209B 2TAD 0.35 14401 BN-YE
CH207A 2TAD 0.35 14401 BU-GY
CH208A 2TAD 0.35 14401 GN-OG
A1
A6
GND B14
C2H101-A - 6
C2H101-B - 14
BR-TN

412-01-13 Climate Control—RHD 4WD/RHD RWD, Vehicles Without: Air Conditioning

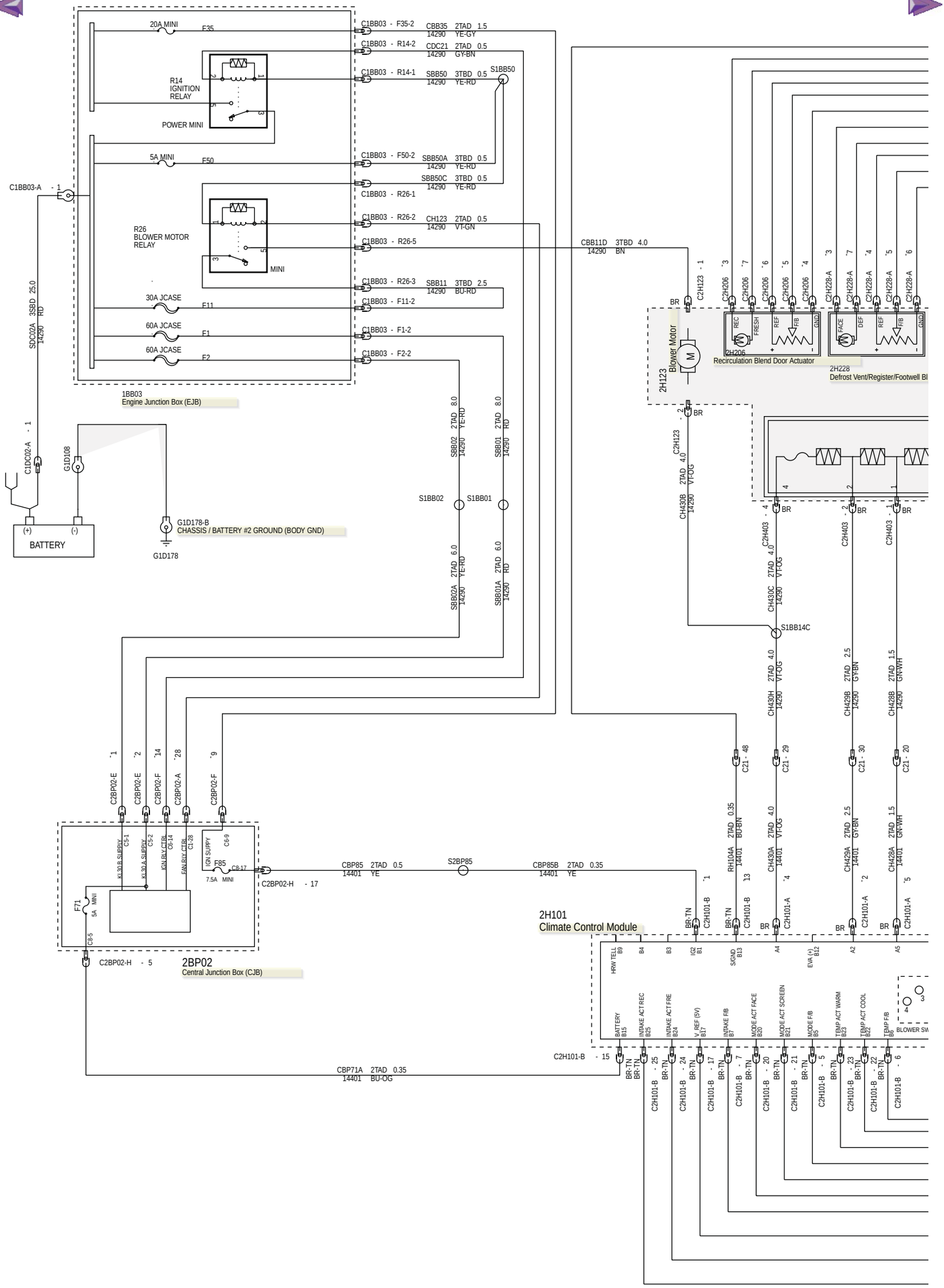

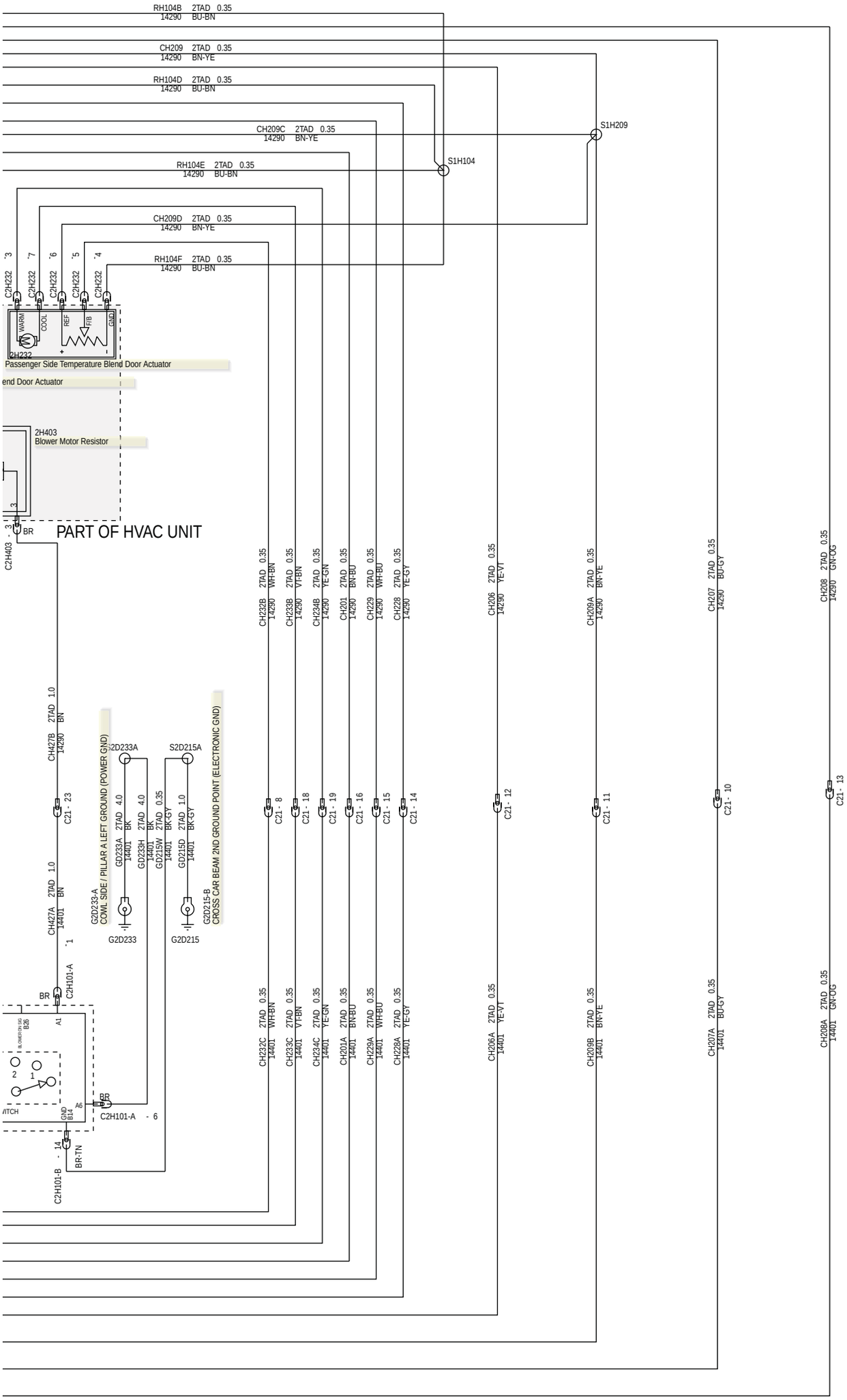
RH104B 2TAD 0.35 14290 BU-BN
CH209 2TAD 0.35 14290 BN-YE
RH104D 2TAD 0.35 14290 BU-BN
CH209C 2TAD 0.35 14290 BN-YE
RH104E 2TAD 0.35 14290 BU-BN
CH209D 2TAD 0.35 14290 BN-YE
RH104F 2TAD 0.35 14290 BU-BN
S1H209
S1H104
C2H232
WARM
COOL
REF
F/B
GND
2H232
Passenger Side Temperature Blend Door Actuator
end Door Actuator
2H403
Blower Motor Resistor
C2H403
BR
PART OF HVAC UNIT
CH233B 2TAD 0.35 14290 WH-BN
CH233B 2TAD 0.35 14290 VT-BN
CH234B 2TAD 0.35 14290 YE-GN
CH201 2TAD 0.35 14290 BN-BU
CH229 2TAD 0.35 14290 WH-BU
CH228 2TAD 0.35 14290 YE-GY
CH206 2TAD 0.35 14290 YE-VT
CH209A 2TAD 0.35 14290 BN-YE
CH207 2TAD 0.35 14290 BU-GY
CH208 2TAD 0.35 14290 GN-OG
CH427B 2TAD 1.0 14290 BN
C21- 23
C21- 8
C21- 18
C21- 19
C21- 16
C21- 15
C21- 14
C21- 12
C21- 11
C21- 10
C21- 13
S2D233A
S2D215A
GD233A 2TAD 4.0 14401 BK
GD233H 2TAD 4.0 14401 BK
GD215W 2TAD 0.35 14401 BK-GY
GD215D 2TAD 1.0 14401 BK-GY
G2D233-A COWL SIDE / PILLAR A LEFT GROUND (POWER GND)
G2D215-B CROSS CAR BEAM 2ND GROUND POINT (ELECTRONIC GND)
G2D233
G2D215
CH427A 2TAD 1.0 14401 BN
C2H101-A
CH232C 2TAD 0.35 14401 WH-BN
CH233C 2TAD 0.35 14401 VT-BN
CH234C 2TAD 0.35 14401 YE-GN
CH201A 2TAD 0.35 14401 BN-BU
CH229A 2TAD 0.35 14401 WH-BU
CH228A 2TAD 0.35 14401 YE-GY
CH206A 2TAD 0.35 14401 YE-VT
CH209B 2TAD 0.35 14401 BN-YE
CH207A 2TAD 0.35 14401 BU-GY
CH208A 2TAD 0.35 14401 GN-OG
C2H101-A - 6
C2H101-B - 14
BR-TN

412-01-15 Climate Control—2.2L Duratorq-TDCi (88kW/120PS) - Puma/2.2L Duratorq-TDCi (96kW/130PS) - Puma/2.2L Duratorq-TDCi (110kW/150PS) - Puma/3.2L Duratorq-TDCi (148kW/200PS) - Puma, LHD 4WD/LHD RWD, Vehicles With: Manual Temperature Control

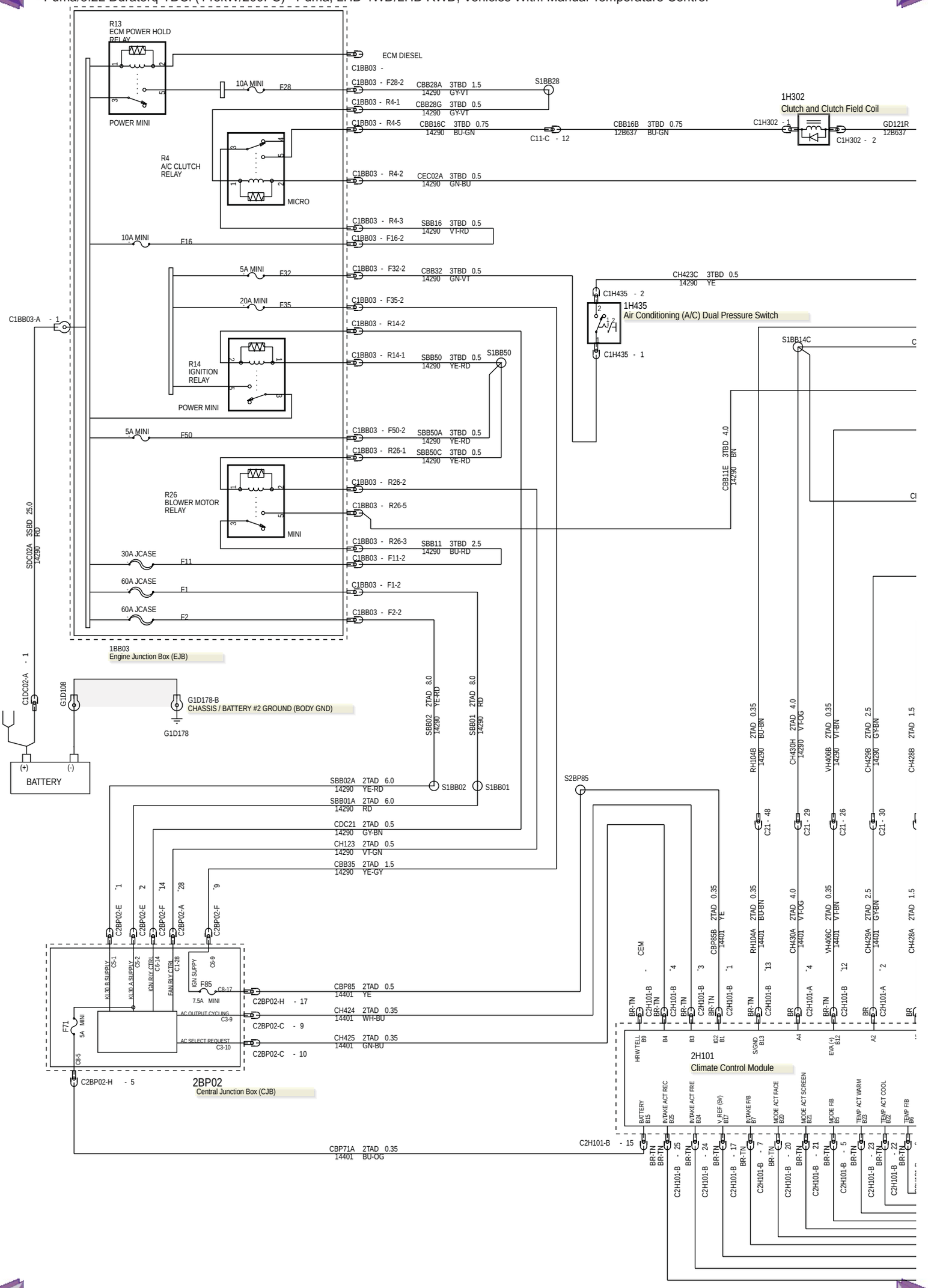

412-01-16 Climate Control—2.2L Duratorq-TDCi (88kW/120PS) - Puma/2.2L Duratorq-TDCi (96kW/130PS) - Puma/2.2L Duratorq-TDCi (110kW/150PS) - Puma/3.2L Duratorq-TDCi (148kW/200PS) - Puma, LHD 4WD/LHD RWD, Vehicles With: Manual Temperature Control

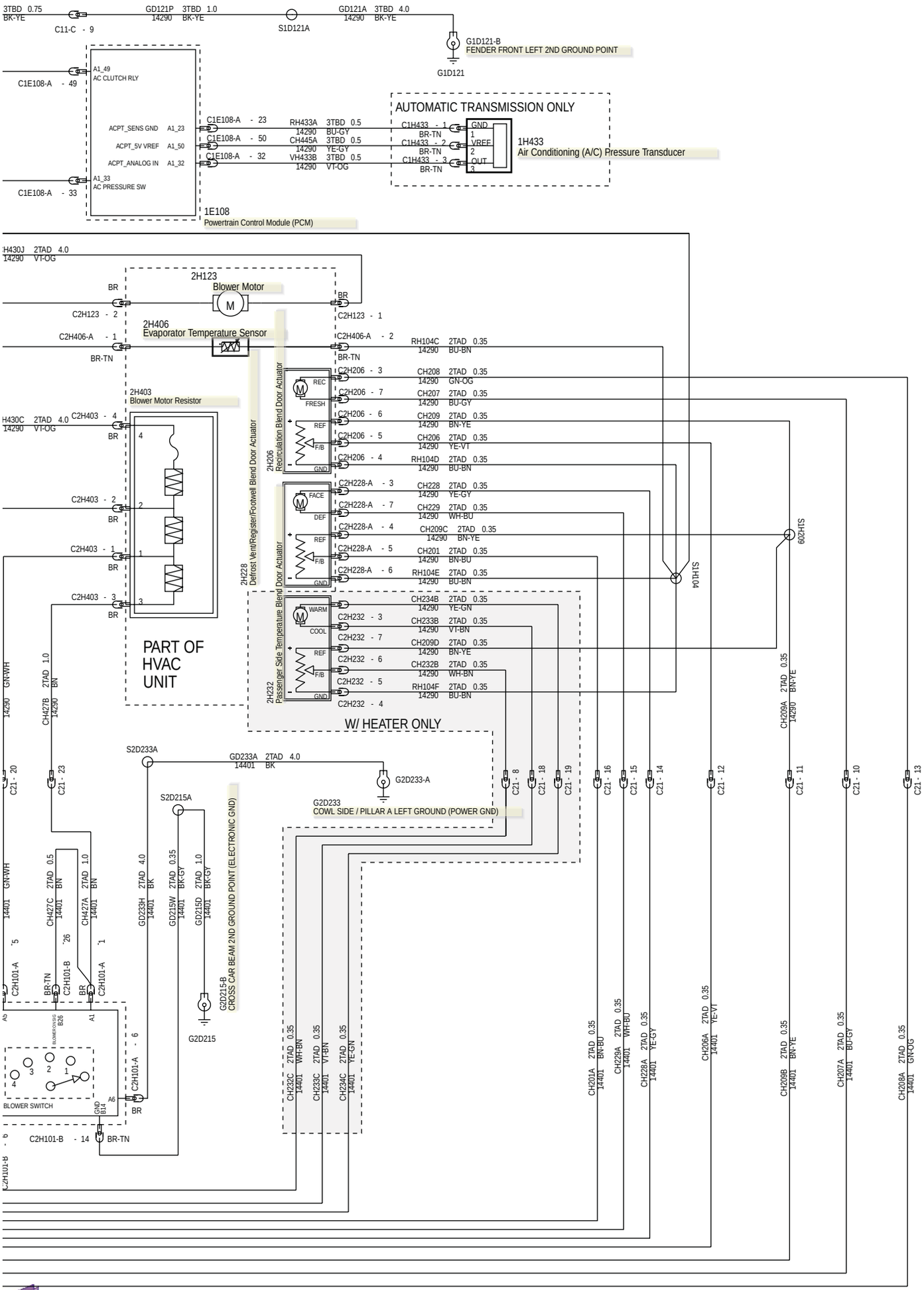

412-01-17 Climate Control—2.5L Duratec-HE (122kW/165PS) - MI4, LHD 4WD/LHD RWD, Vehicles With: Manual Temperature Control

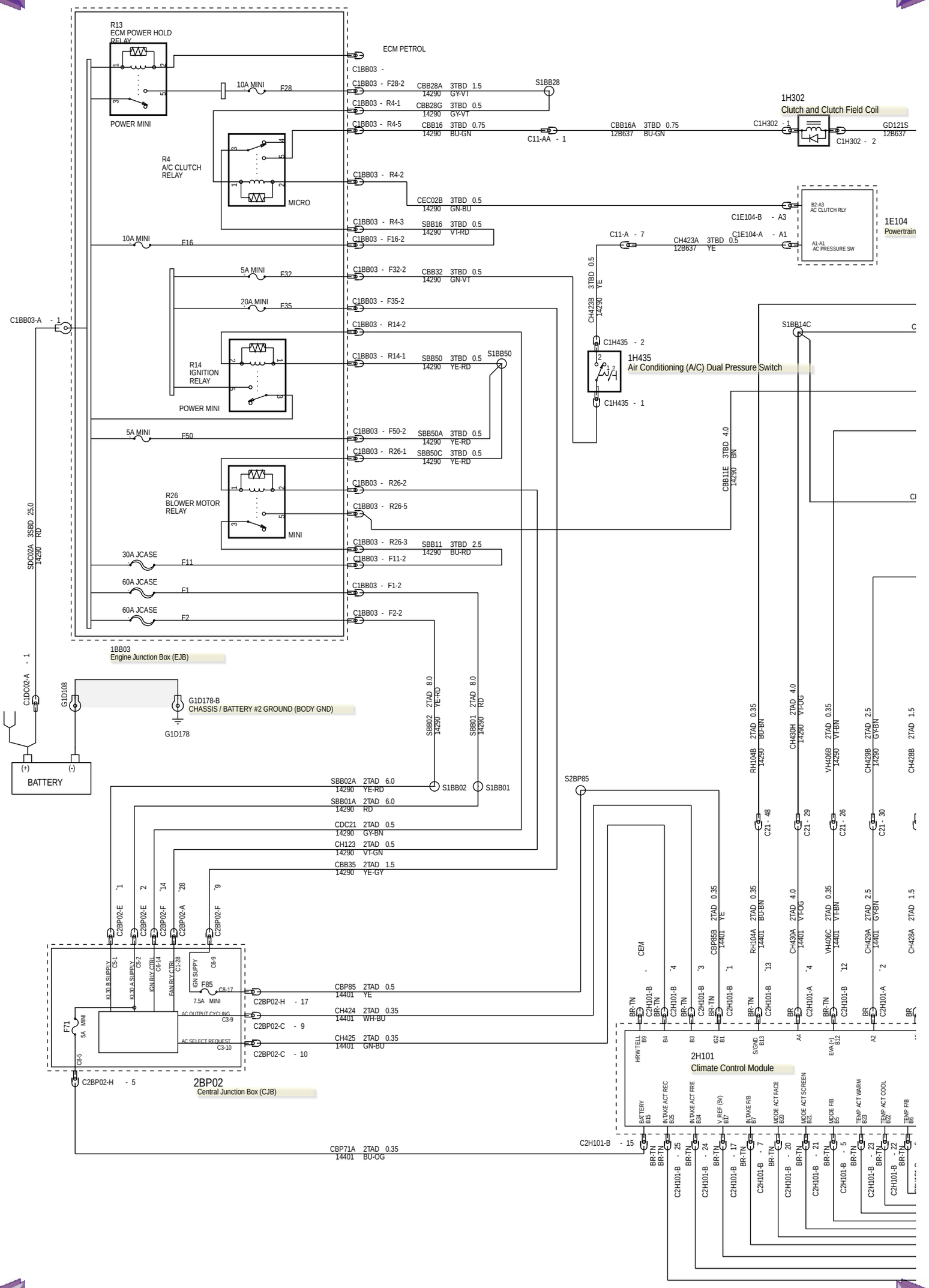

412-01-18 Climate Control—2.5L Duratec-HE (122kW/165PS) - MI4, LHD 4WD/LHD RWD, Vehicles With: Manual Temperature Control

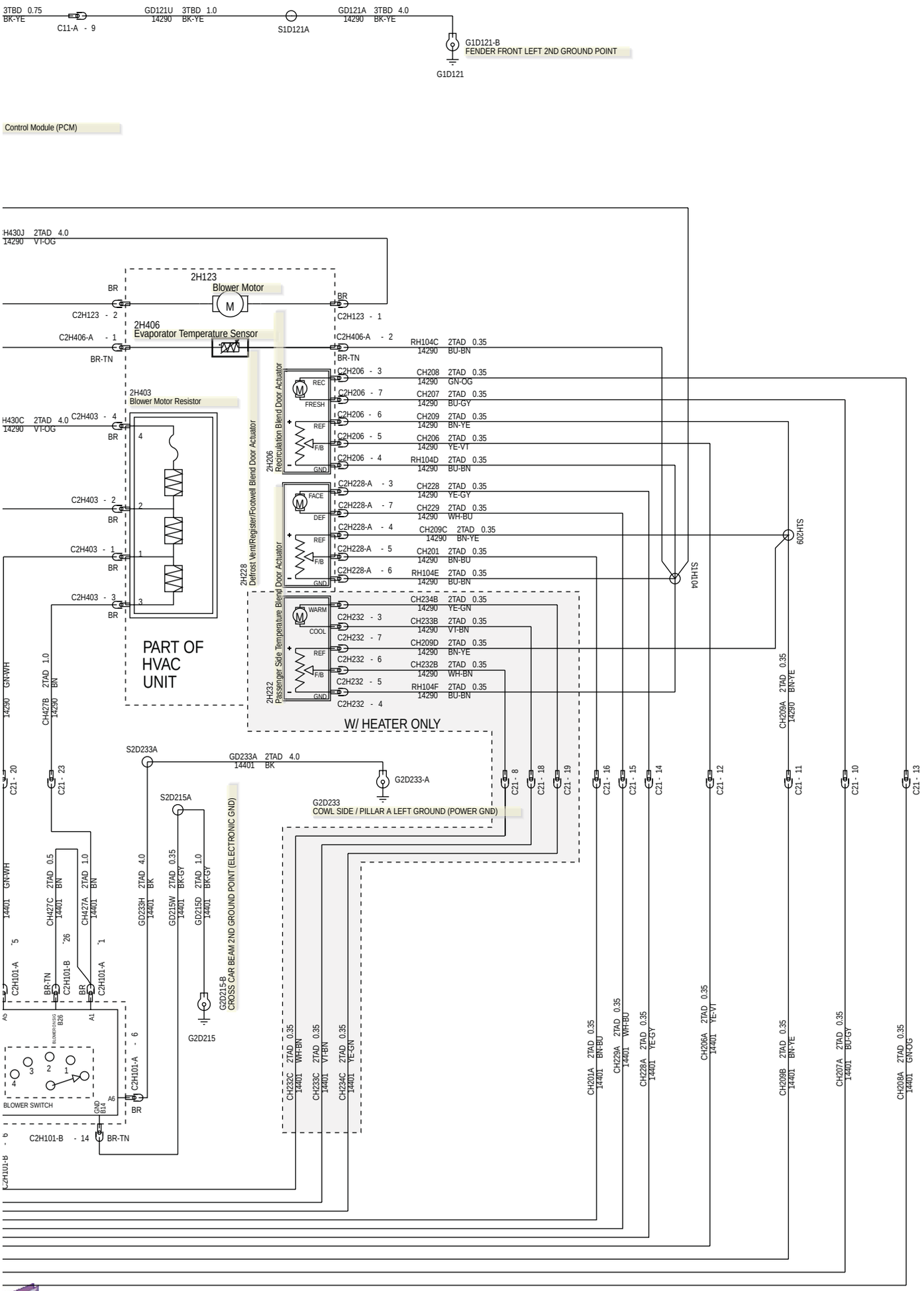

412-01-19 Climate Control—2.2L Duratorq-TDCi (88kW/120PS) - Puma/2.2L Duratorq-TDCi (96kW/130PS) - Puma/2.2L Duratorq-TDCi (110kW/150PS) - Puma/3.2L Duratorq-TDCi (148kW/200PS) - Puma, RHD 4WD/RHD RWD, Vehicles With: Manual Temperature Control

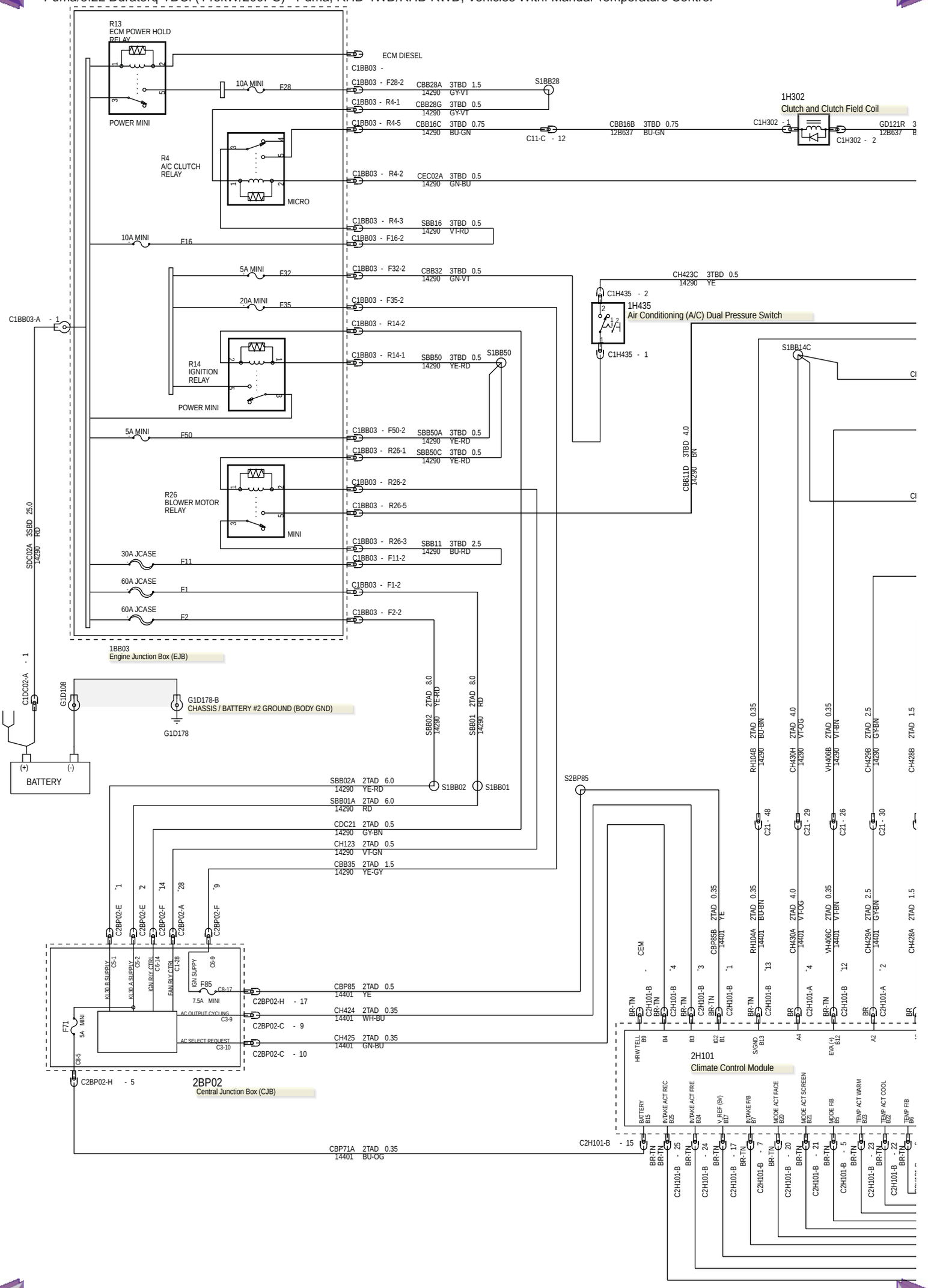

412-01-20 Climate Control—2.2L Duratorq-TDCi (88kW/120PS) - Puma/2.2L Duratorq-TDCi (96kW/130PS) - Puma/2.2L Duratorq-TDCi (110kW/150PS) - Puma/3.2L Duratorq-TDCi (148kW/200PS) - Puma, RHD 4WD/RHD RWD, Vehicles With: Manual Temperature Control

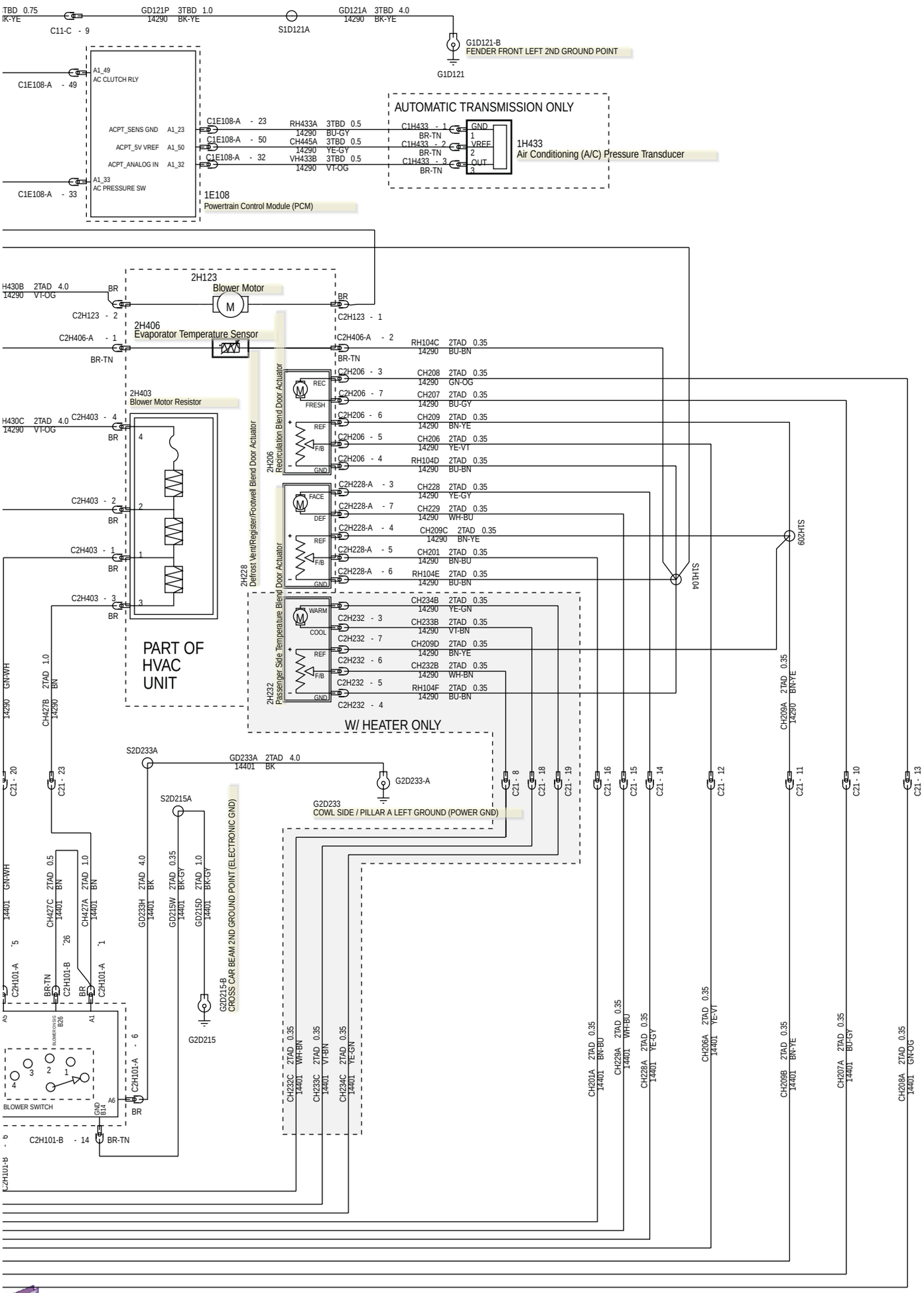

412-01-21 Climate Control—2.5L Duratec-HE (122kW/165PS) - MI4, RHD 4WD/RHD RWD, Vehicles With: Manual Temperature Control

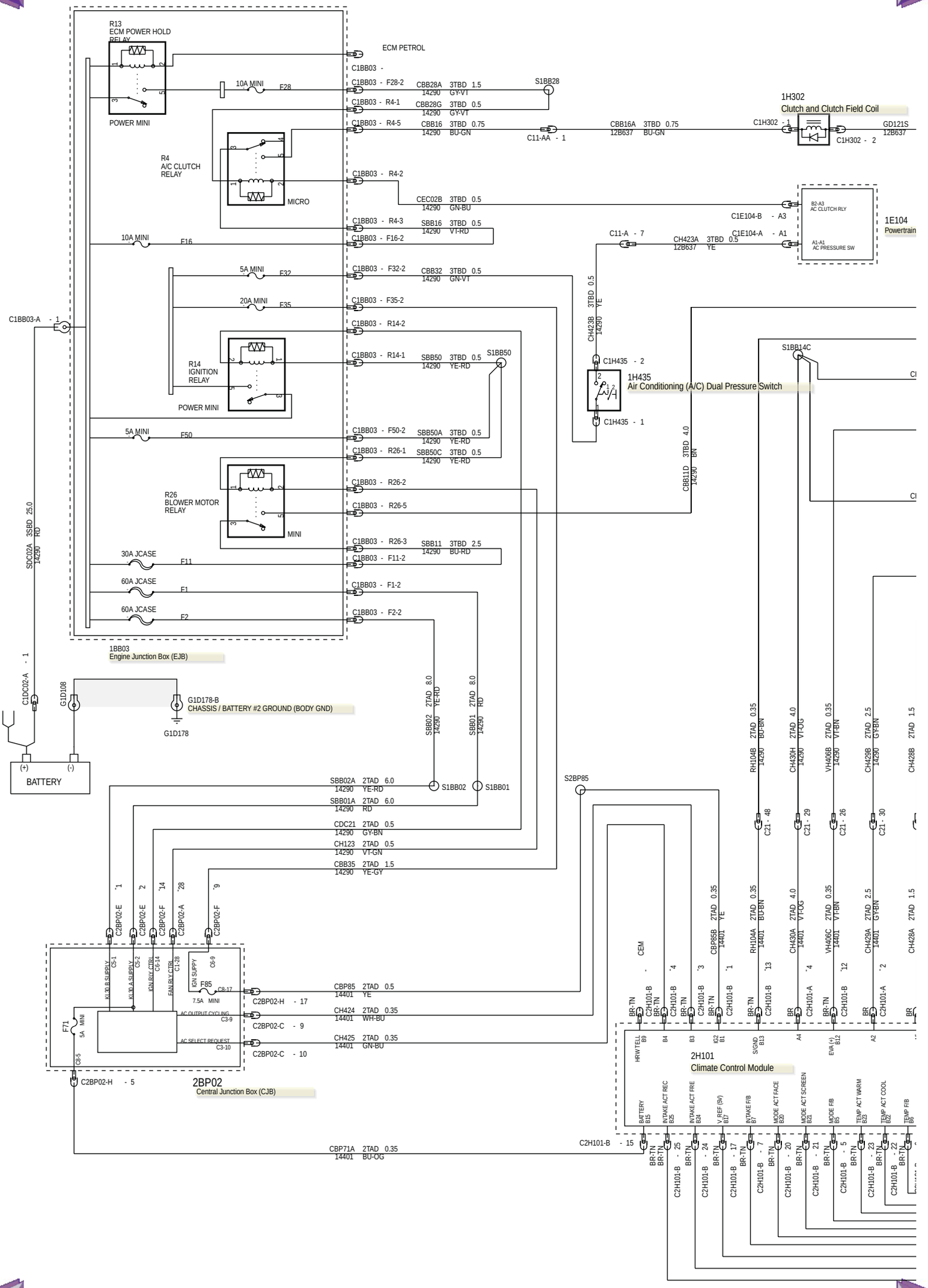

412-01-22 Climate Control—2.5L Duratec-HE (122kW/165PS) - MI4, RHD 4WD/RHD RWD, Vehicles With: Manual Temperature Control

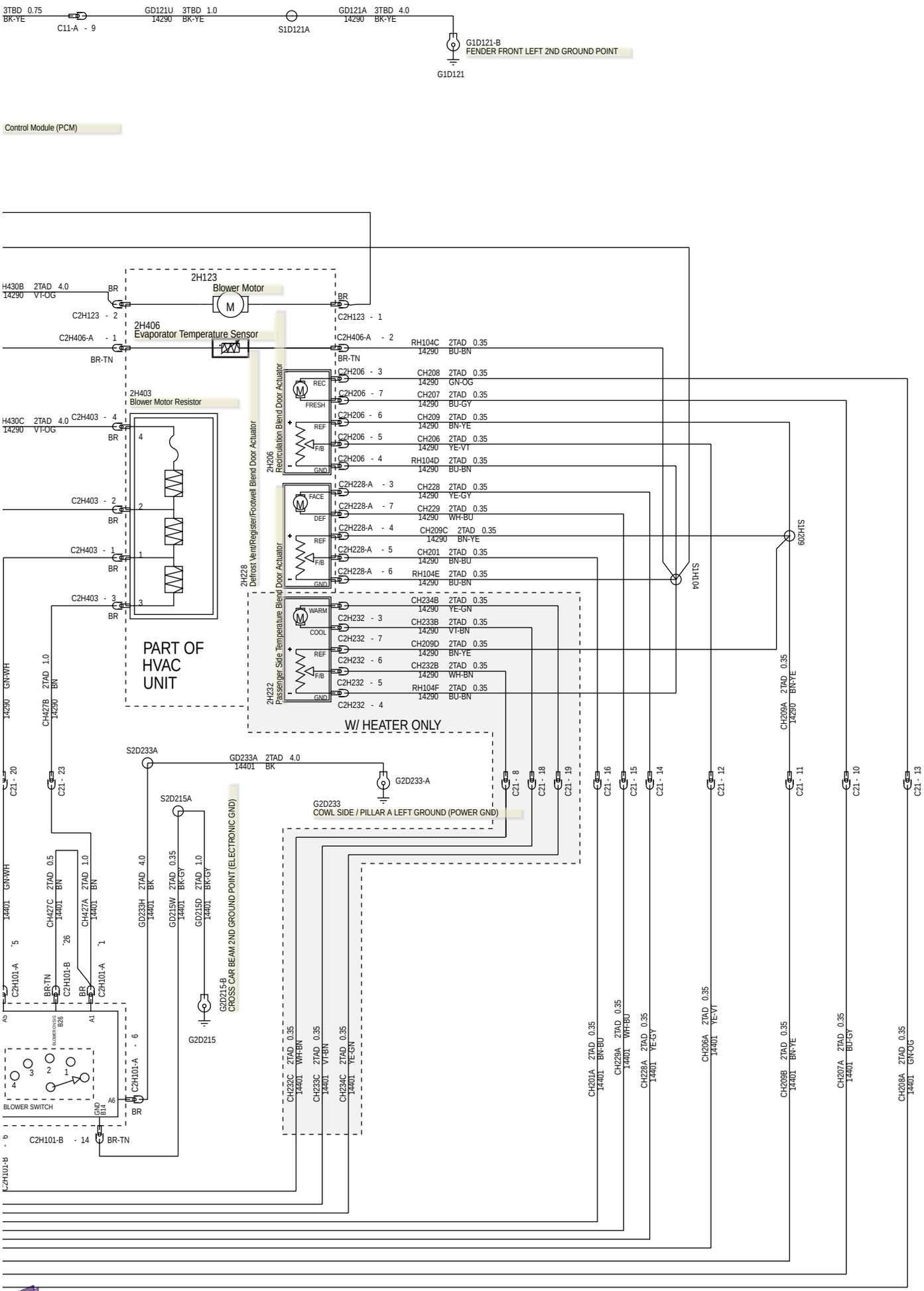

Air Conditioning (A/C) Dual Pressure Switch (G1404297)

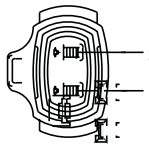

2 CH423C YE 3TBD 0.5 + CH423B YE 3TBD 0.5

1 CBB32 GN-VT 3TBD 0.5

7323-9327
C1H435
TO AC PRESSURE SWITCH
HARNESS 14290

Air Conditioning (A/C) Pressure Transducer (G1404298)

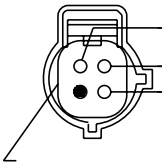

2 CH445A YE-GY 3TBD 0.5 BR-TN

1 RH433A BU-GY 3TBD 0.5 BR-TN

3 VH433B VT-OG 3TBD 0.5 BR-TN

F75B-14A464-AGA

C1H433
TO PRESSURE TRANSDUCER

HARNESS 14290

Ambient Air Temperature Sensor (G1404299)

PIN 1 => RE335 BN-VT 0.5 3TBD
PIN 2 => VE750 GN-BU 0.5 3TBD

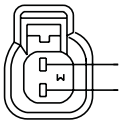

1 RE335A BN-VT 3TBD 0.5

2 VE750A GN-BU 3TBD 0.5

1S7T-14A464-CB

C1E335
TO AMBIENT TEMP SENSOR

HARNESS 14290

Blower Motor (G1404300)

PIN 1 => CBB11A BN 4.0 3TBD
PIN 1 => CBB11A BN 4.0 3TBD + CH430K VT-OG 4.0 2TAD
PIN 1 => CH430J VT-OG 4.0 2TAD + CBB11D BN 4.0 3TBD
PIN 2 => CBB11F BN 4.0 3TBD
PIN 2 => CH430D VT-OG 4.0 2TAD + CBB11F BN 4.0 3TBD

1 CBB11D BN 3TBD 4.0 + CH430J VT-OG 2TAD 4.0 BR

2 CBB11E BN 3TBD 4.0 + CH430B VT-OG 2TAD 4.0 BR

YC1T-14489-DA

C2H123
TO HVAC UNIT3 HEATER BLOWER MOTOR

HARNESS 14290

Blower Motor Control Module (G1404301)

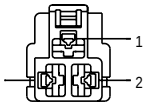

VH101A WH-VT 2TAD 0.50 BR 3

1 CH430F VT-OG 3TBD 3.0 BR
2 GD121K BK-YE 3TBD 3.0 BR

KUM-PH776-03027
C2H102
TO FET

HARNESS 14290

Blower Motor Resistor (G1404307)

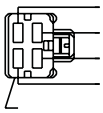

4 CH430C VT-OG 2TAD 4.0 BR
2 CH429B GY-BN 2TAD 2.5 BR
1 CH428B GN-WH 2TAD 1.5 BR
3 CH427B BN 2TAD 1.0 BR

YC1T-14489-EA

C2H403
TO HVAC UNIT1 BLOWER SERIES RESISTOR

HARNESS 14290

Climate Control Module (G1404308)

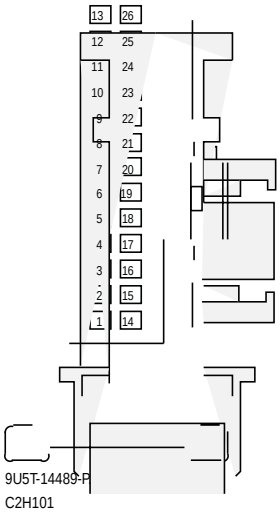

1	CH233	VT-BN	2TAD	0.35
2	CH234	YE-GN	2TAD	0.35
3	CH212	BU-OG	2TAD	0.35
4	CH213	BN-GN	2TAD	0.35
5	CH206B	YE-VT	2TAD	0.35
6	GD215L	BK-GY	2TAD	0.35
7	LH111	BN-WH	2TAD	0.35
8	CH237	VT-GY	2TAD	0.35
9	CH211	YE	2TAD	0.35
10	RH111	GY-BU	2TAD	0.35
11	VH406	VT-BN	2TAD	0.35
12	CH430G	VT-OG	2TAD	0.5
13				
14	CH208B	GN-OG	2TAD	0.35
15	CH239	BU-WH	2TAD	0.35
16	CH207B	BU-GY	2TAD	0.35
17	CH238	YE-OG	2TAD	0.35
18				
19	CH232	WH-BN	2TAD	0.35
20				
21				
22	CBP71	BU-OG	2TAD	0.35
23				
24	VDB07F	VT-OG	2TAD	0.35
25	VDB06F	GY-OG	2TAD	0.35
26	VH101	WH-VT	2TAD	0.35

9U5T-14489-P

C2H101
TO DEATC

HARNESS 14401

Climate Control Module—A (G1404309)

PIN 1 => CH427A BN 1.0 2TAD

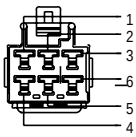

1 CH427C BN 2TAD 0.5 BR
2 CH429A GY-BN 2TAD 2.5 BR
3
6 GD233H BK 2TAD 4.0 BR
5 CH428A GN-WH 2TAD 1.5 BR
4 CH430A VT-OG 2TAD 4.0 BR

7283-1169

C2H101-A

TO HVAC CONTROL HEAD MANUAL AC HEATER1 (BLOWER SWITCH)

HARNESS 14401

Climate Control Module—B (G1404310)

CBP71A	BU-OG	2TAD	0.35	BR-TN	15		1	CBP85B	YE	2TAD	0.35	BR-TN
CLN17L	BN	2TAD	0.35	BR-TN	16		2					
CH209B	BN-YE	2TAD	0.35	BR-TN	17		3	CH424	WH-BU	2TAD	0.35	BR-TN
					18		4	CH425	GN-BU	2TAD	0.35	BR-TN
CHP03	GN-BN	2TAD	0.35	BR-TN	19		5	CH201A	BN-BU	2TAD	0.35	BR-TN
CH228A	YE-GY	2TAD	0.35	BR-TN	20		6	CH232C	WH-BN	2TAD	0.35	BR-TN
CH229A	WH-BU	2TAD	0.35	BR-TN	21		7	CH206A	YE-VT	2TAD	0.35	BR-TN
CH233C	VT-BN	2TAD	0.35	BR-TN	22		8	CRD09A	BU-GY	2TAD	0.35	BR-TN
CH234C	YE-GN	2TAD	0.35	BR-TN	23		9	CRD04A	BN-GN	2TAD	0.35	BR-TN
CH207A	BU-GY	2TAD	0.35	BR-TN	24		10	CRD08A	GN-OG	2TAD	0.35	BR-TN
CH208A	GN-OG	2TAD	0.35	BR-TN	25		11	CRD03A	BU-GN	2TAD	0.35	BR-TN
CH427C	BN	2TAD	0.5	BR-TN	26		12	VH406C	VT-BN	2TAD	0.35	BR-TN
					27		13	RH104A	BU-BN	2TAD	0.35	BR-TN
GD214M	BK-BU	2TAD	0.35	BR-TN	28		14	GD215W	BK-GY	2TAD	0.35	BR-TN

C2H101-B
1565380-1
TO HVAC CONTROL HEAD MANUAL AC HEATER2 (PCB MAIN)
HARNESS 14401

Clutch and Clutch Field Coil (G1404311)

PIN 1 => CBB16A BU-GN 0.75 3TBD + CBB16B BU-GN 0.75 3TBD
PIN 2 => GD121S BK-YE 0.75 3TBD + GD121R BK-YE 0.75 3TBD

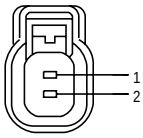

1	CBB16B	BU-GN	3TBD	0.75	+	CBB16A	BU-GN	3TBD	0.75
2	GD121R	BK-YE	3TBD	0.75	+	GD121S	BK-YE	3TBD	0.75

4W7T-14A464-CB
C1H302
TO AC COMPRESSOR
HARNESS 12B637

Defrost Vent/Register/Footwell Blend Door Actuator (G1404318)

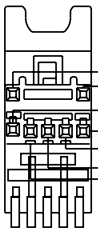

2					
1					
7	CH234A	YE-GN	2TAD	0.35	BR-TN
3	CH233A	VT-BN	2TAD	0.35	BR-TN
4	LH111C	BN-WH	2TAD	0.35	BR-TN
5	CH232A	WH-BN	2TAD	0.35	BR-TN
6	RH111C	GY-BU	2TAD	0.35	BR-TN

C2H228
PH845-07010
TO MODE DOOR
HARNESS 14290

Defrost Vent/Register/Footwell Blend Door Actuator—A (G1404319)

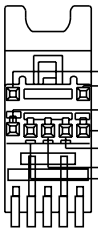

2				
1				
7	CH229	WH-BU	2TAD	0.35
3	CH228	YE-GY	2TAD	0.35
4	CH209C	BN-YE	2TAD	0.35
5	CH201	BN-BU	2TAD	0.35
6	RH104E	BU-BN	2TAD	0.35

C2H228-A
PH845-07010
TO HVAC UNIT1 MODE DOOR ACTUATOR
HARNESS 14290

Evaporator Temperature Sensor (G1404320)

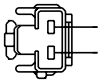

2	RH111F	GY-BU	2TAD	0.35	BR-TN
1	VH406A	VT-BN	2TAD	0.35	BR-TN

7T4T-14489-CA
C2H406
TO EVAPORATOR TEMP SENSOR
HARNESS 14290

Evaporator Temperature Sensor—A (G1404321)

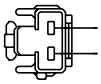

2	RH104C	BU-BN	2TAD	0.35	BR-TN
1	VH406B	VT-BN	2TAD	0.35	BR-TN

7T4T-14489-CA
C2H406-A
TO HVAC UNIT2 EVAPORATOR TEMP SENSOR
HARNESS 14290

Recirculation Blend Door Actuator (G1404322)

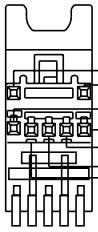

2				
1				
7	CH207	BU-GY	2TAD	0.35
3	CH208	GN-OG	2TAD	0.35
4	RH104D	BU-BN	2TAD	0.35
5	CH206	YE-VT	2TAD	0.35
6	CH209	BN-YE	2TAD	0.35

C2H206
PH845-07010
TO HVAC UNIT RECIRCULATION ACTUATOR
HARNESS 14290

Recirculation Blend Door Actuator—A (G1404323)

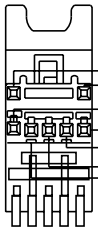

2					
1					
7	CH208C	GN-OG	2TAD	0.35	BR-TN
3	CH207C	BU-GY	2TAD	0.35	BR-TN
4	RH111B	GY-BU	2TAD	0.35	BR-TN
5	CH206C	YE-VT	2TAD	0.35	BR-TN
6	LH111B	BN-WH	2TAD	0.35	BR-TN

C2H206-A
PH845-07010
TO AIR INLET DOOR
HARNESS 14290

Sunload Sensor (G1404326)

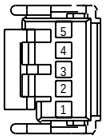

1	VH416	VT-GY	2TAD	0.35
2	VH417	YE-OG	2TAD	0.35
3	GD215B	BK-GY	2TAD	0.35
4	VH415	GY-YE	2TAD	0.35
5	RH105	GN	2TAD	0.35

6W8T-14489-AHA
C2H415
TO SUN LOAD SENSOR
HARNESS 14401

Temperature Blend Door Actuator (G1404327)

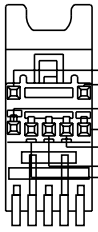

2				
1				
7	CH233B	VT-BN	2TAD	0.35
3	CH234B	YE-GN	2TAD	0.35
4	RH104F	BU-BN	2TAD	0.35
5	CH232B	WH-BN	2TAD	0.35
6	CH209D	BN-YE	2TAD	0.35

C2H232
PH845-07010
TO HVAC UNIT1 TEMP DOOR ACTUATOR
HARNESS 14290

Temperature Blend Door Actuator LH (G1406232)

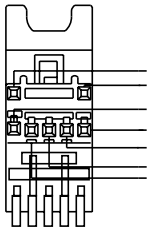

2					
1					
7	CH239A	BU-WH	2TAD	0.35	BR-TN
3	CH238A	YE-OG	2TAD	0.35	BR-TN
4	RH111D	GY-BU	2TAD	0.35	BR-TN
5	CH237A	VT-GY	2TAD	0.35	BR-TN
6	LH111D	BN-WH	2TAD	0.35	BR-TN

C2H237

PH845-07010

TO LH TEMP DOOR

HARNESS 14290

Temperature Blend Door Actuator RH (G1406233)

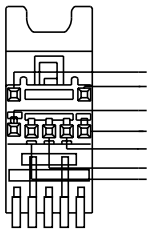

2					
1					
7	CH213A	BN-GN	2TAD	0.35	BR-TN
3	CH212A	BU-OG	2TAD	0.35	BR-TN
4	RH111E	GY-BU	2TAD	0.35	BR-TN
5	CH211A	YE	2TAD	0.35	BR-TN
6	LH111E	BN-WH	2TAD	0.35	BR-TN

C2H211

PH845-07010

TO RH TEMP DOOR

HARNESS 14290

SECTION 413-01 Instrument Cluster

VEHICLE APPLICATION: 2012.0 Ranger

CONTENTS PAGE

ELECTRICAL SCHEMATICS

Instrument Cluster — LHD 4WD/LHD RWD..... 413-01-2
Instrument Cluster — RHD 4WD/RHD RWD..... 413-01-4

ELECTRICAL CONNECTORS

Instrument Cluster..... 413-01-6

413-01-2 Instrument Cluster—LHD 4WD/LHD RWD

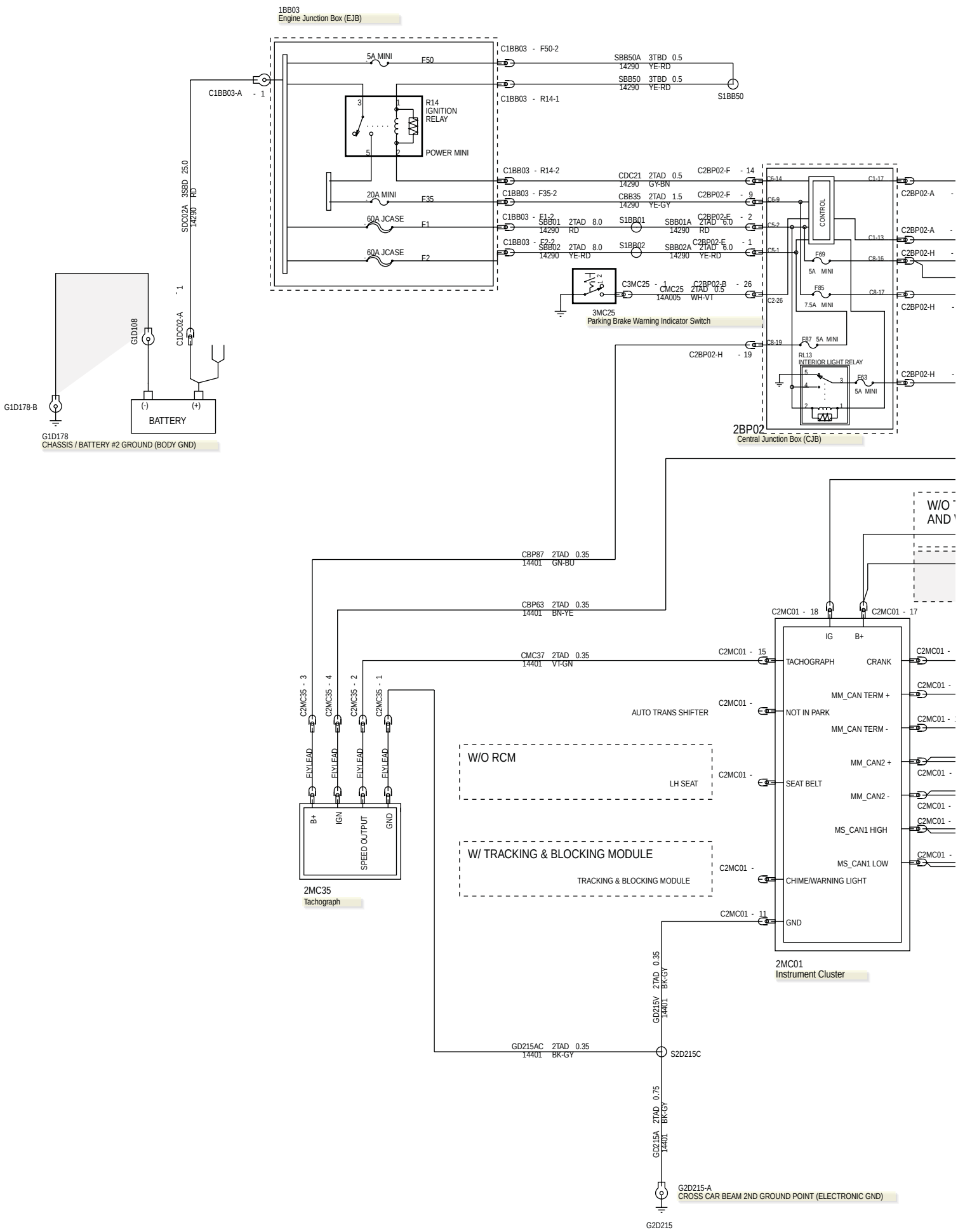

413-01-3 Instrument Cluster—LHD 4WD/LHD RWD

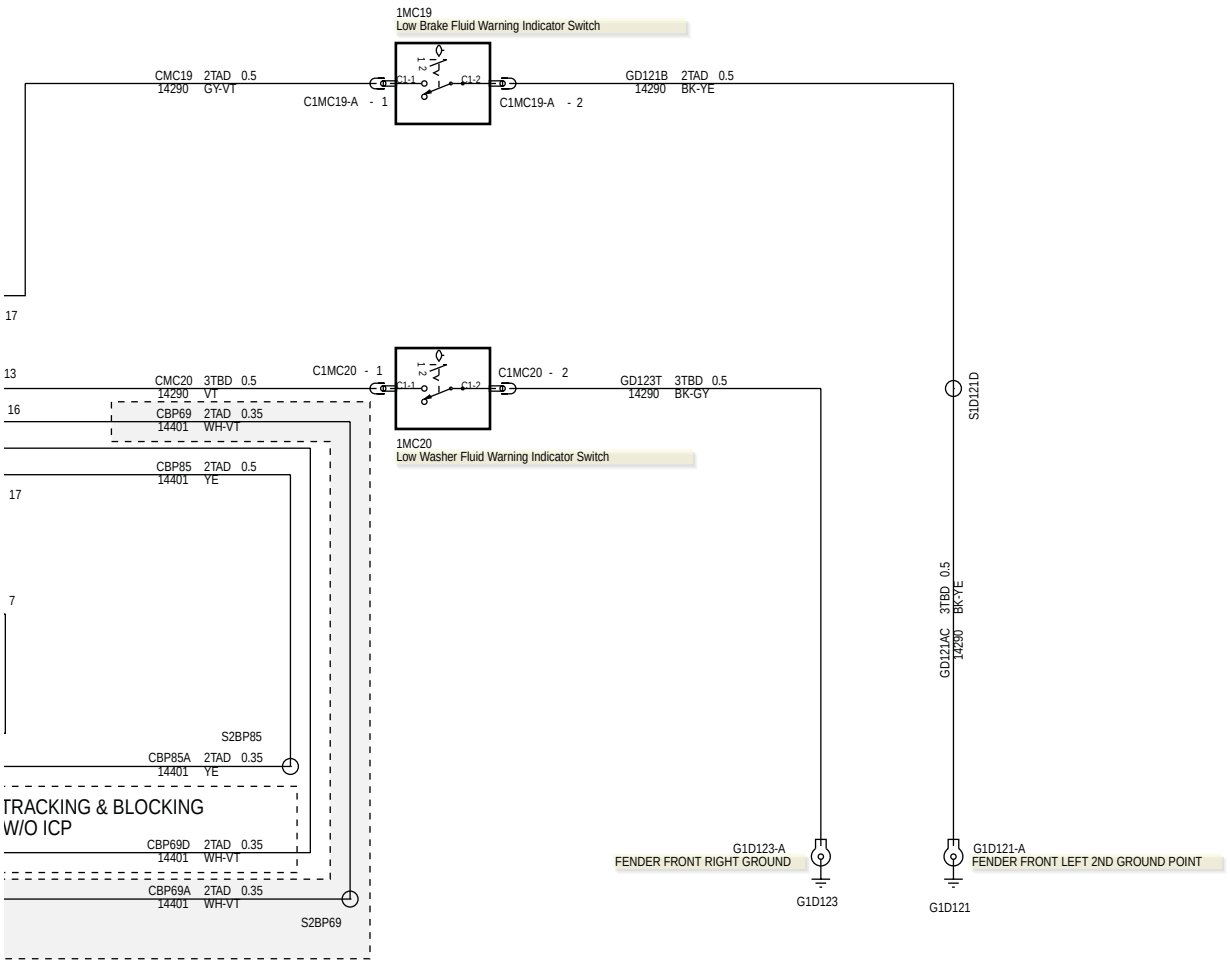

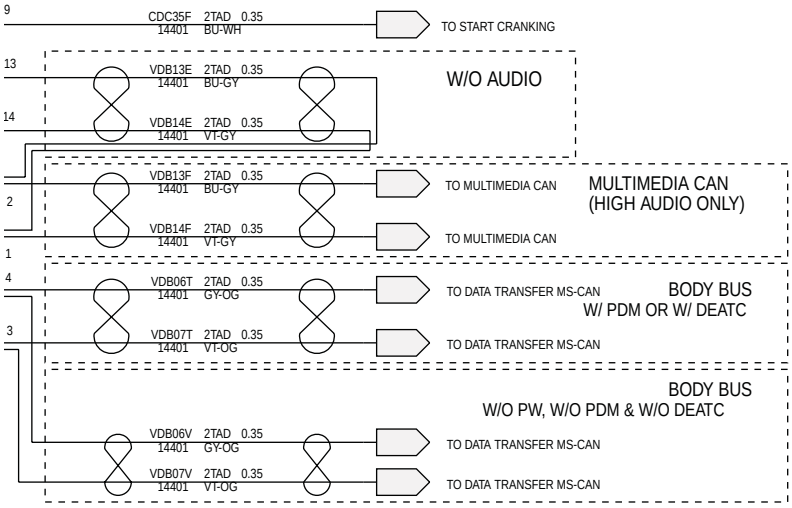

413-01-4 Instrument Cluster—RHD 4WD/RHD RWD

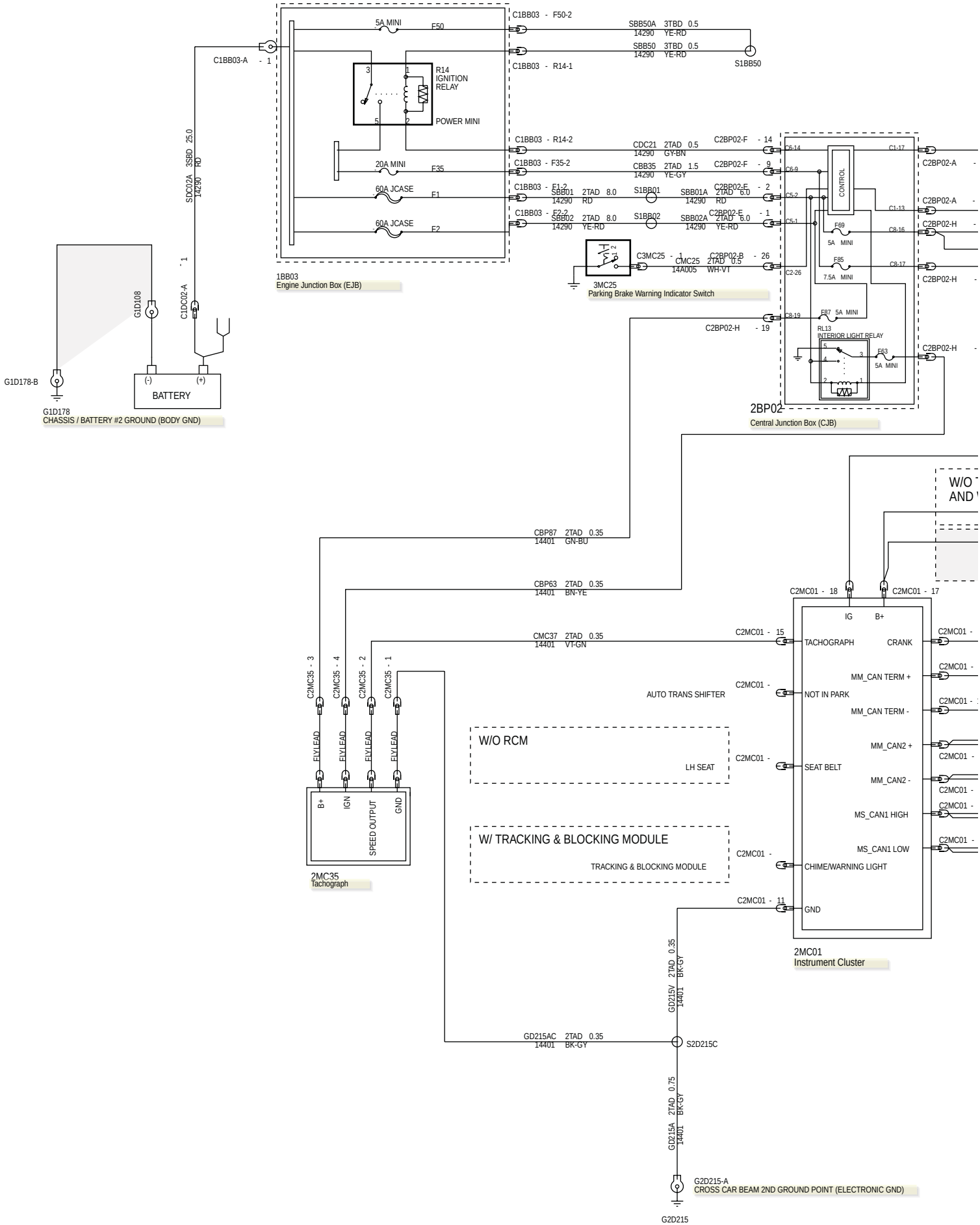

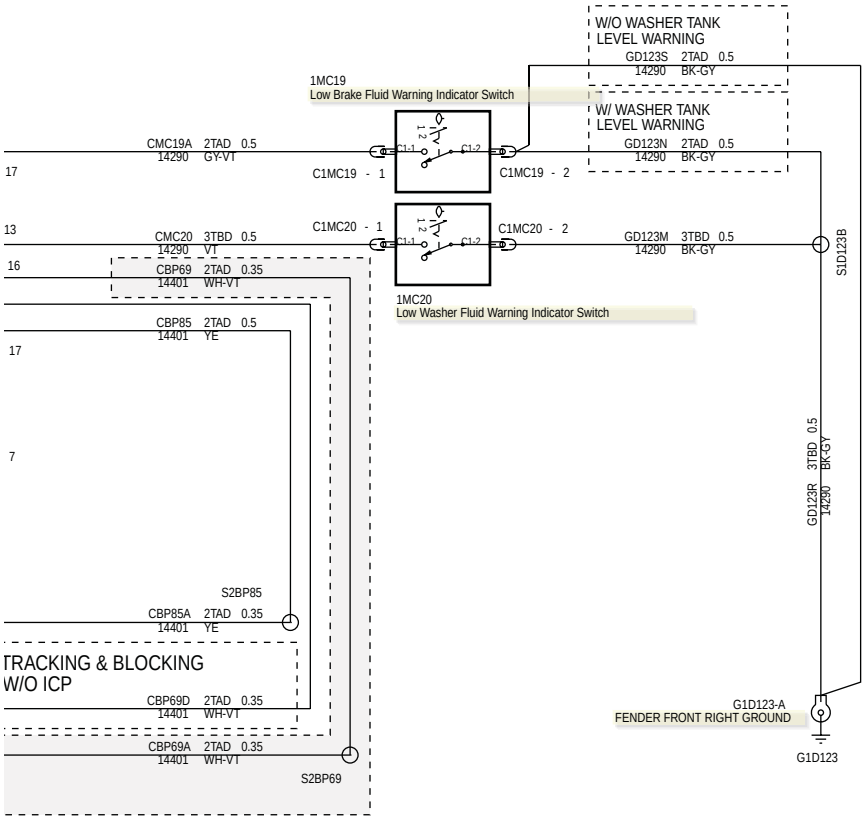
W/O WASHER TANK LEVEL WARNING
GD123S 2TAD 0.5
14290 BK-GY
W/ WASHER TANK LEVEL WARNING
GD123N 2TAD 0.5
14290 BK-GY
1MC19
Low Brake Fluid Warning Indicator Switch
CMC19A 2TAD 0.5
14290 GY-VT
17
C1MC19 - 1
C1MC19 - 2
13
CMC20 3TBD 0.5
14290 VT
C1MC20 - 1
C1MC20 - 2
GD123M 3TBD 0.5
14290 BK-GY
S1D123B
16
CBP69 2TAD 0.35
14401 WH-VT
1MC20
Low Washer Fluid Warning Indicator Switch
CBP85 2TAD 0.5
14401 YE
17
7
GD123R 3TBD 0.5
14290 BK-GY
S2BP85
CBP85A 2TAD 0.35
14401 YE
TRACKING & BLOCKING
W/O ICP
CBP69D 2TAD 0.35
14401 WH-VT
G1D123-A
FENDER FRONT RIGHT GROUND
G1D123
CBP69A 2TAD 0.35
14401 WH-VT
S2BP69

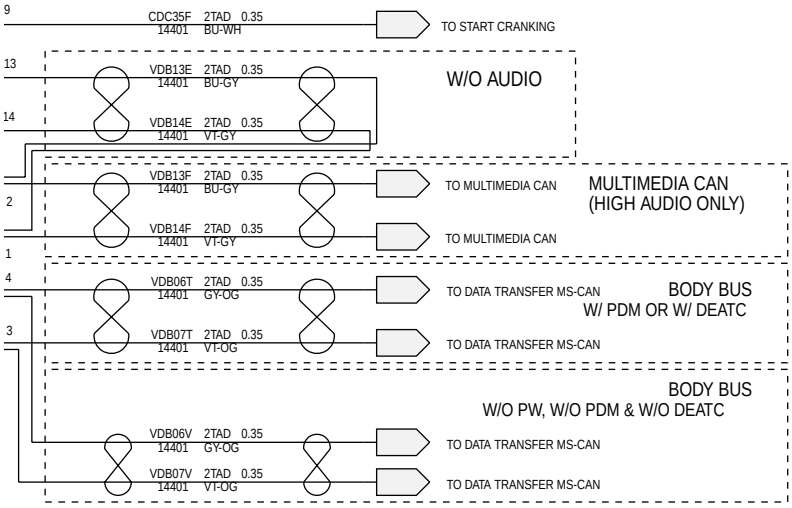
9
CDC35F 2TAD 0.35
14401 BU-WH
TO START CRANKING
13
VDB13E 2TAD 0.35
14401 BU-GY
W/O AUDIO
14
VDB14E 2TAD 0.35
14401 VT-GY
VDB13F 2TAD 0.35
14401 BU-GY
TO MULTIMEDIA CAN
MULTIMEDIA CAN
(HIGH AUDIO ONLY)
2
VDB14F 2TAD 0.35
14401 VT-GY
TO MULTIMEDIA CAN
1
4
VDB06T 2TAD 0.35
14401 GY-OG
TO DATA TRANSFER MS-CAN
BODY BUS
W/ PDM OR W/ DEATC
3
VDB07T 2TAD 0.35
14401 VT-OG
TO DATA TRANSFER MS-CAN
BODY BUS
W/O PW, W/O PDM & W/O DEATC
VDB06V 2TAD 0.35
14401 GY-OG
TO DATA TRANSFER MS-CAN
VDB07V 2TAD 0.35
14401 VT-OG
TO DATA TRANSFER MS-CAN

Instrument Cluster (G1404379)

PIN 1 => VDB14F VT-GY 0.35 2TAD + VDB14E VT-GY 0.35 2TAD
PIN 2 => VDB13F BU-GY 0.35 2TAD + VDB13E BU-GY 0.35 2TAD

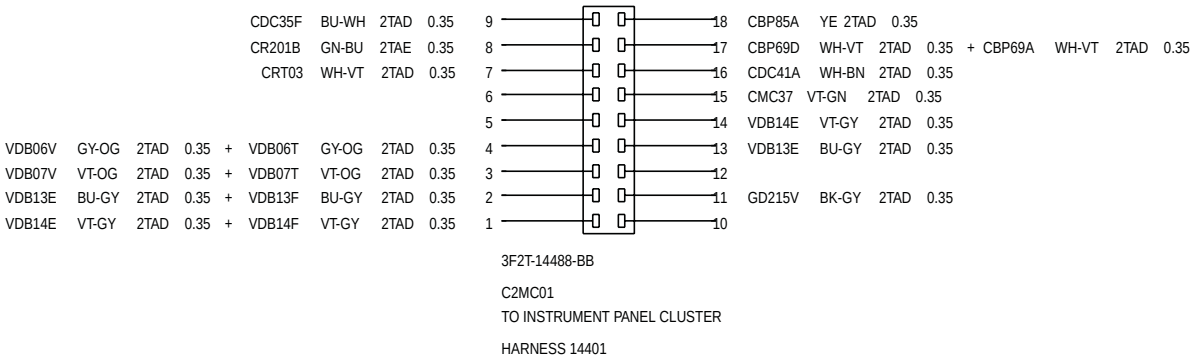

3F2T-14488-BB

C2MC01
TO INSTRUMENT PANEL CLUSTER

HARNESS 14401

SECTION 413-06 Horn

VEHICLE APPLICATION: 2012.0 Ranger

CONTENTS PAGE

ELECTRICAL SCHEMATICS

Horn..... 413-06-2

ELECTRICAL CONNECTORS

Horn..... 413-06-4
Horn — A..... 413-06-4

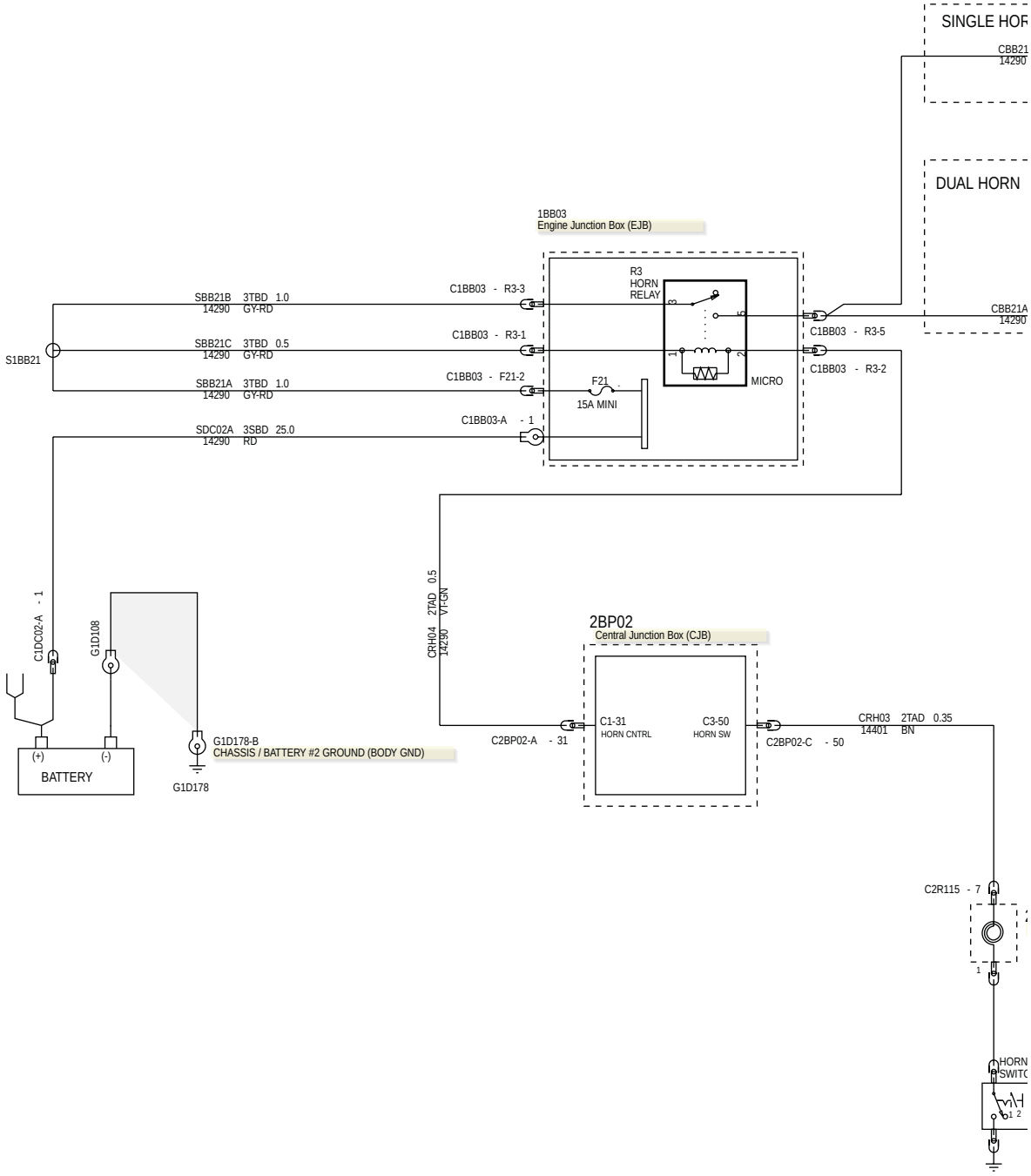
SINGLE HOR
CBB21
14290
DUAL HORN
1BB03
Engine Junction Box (EJB)
R3
HORN
RELAY
SBB21B 3TBD 1.0
14290 GY-RD
C1BB03 - R3-3
SBB21C 3TBD 0.5
14290 GY-RD
C1BB03 - R3-1
S1BB21
SBB21A 3TBD 1.0
14290 GY-RD
C1BB03 - F21-2
F21
15A MINI
MICRO
C1BB03 - R3-5
C1BB03 - R3-2
CBB21A
14290
SDC02A 3SBD 25.0
14290 RD
C1BB03-A - 1
C1DC02-A - 1
G1D108
CRH04 2TAD 0.5
14290 VT-GN
2BP02
Central Junction Box (CJB)
C1-31
HORN CNTRL
C3-50
HORN SW
C2BP02-A - 31
C2BP02-C - 50
CRH03 2TAD 0.35
14401 BN
(+)
(-)
BATTERY
G1D178-B
CHASSIS / BATTERY #2 GROUND (BODY GND)
G1D178
C2R115 - 7
HORN
SWITC

413-06-3 Horn

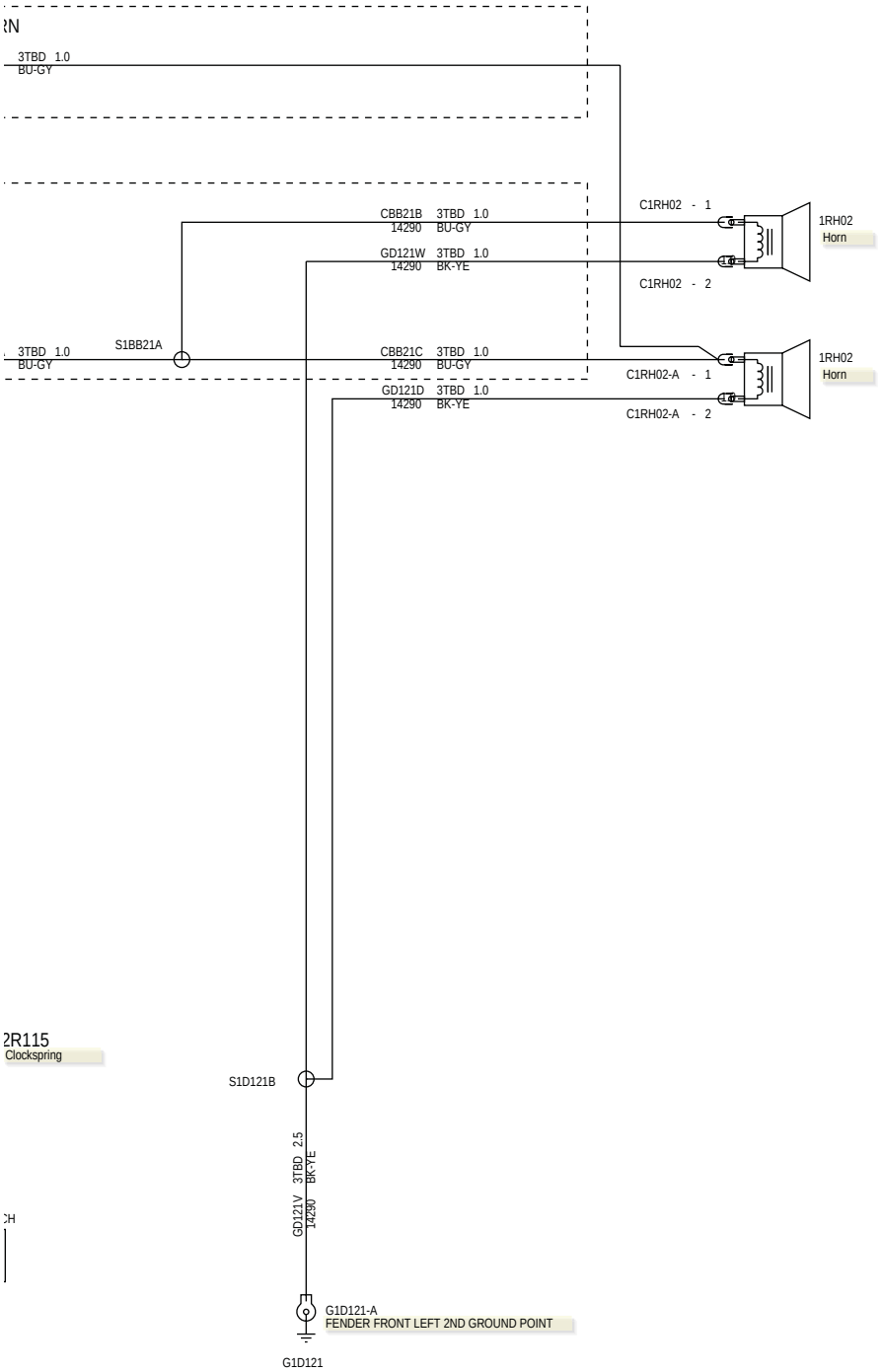
3TBD 1.0
BU-GY
CBB21B 3TBD 1.0
14290 BU-GY
GD121W 3TBD 1.0
14290 BK-YE
C1RH02 - 1
C1RH02 - 2
1RH02
Horn
S1BB21A
3TBD 1.0
BU-GY
CBB21C 3TBD 1.0
14290 BU-GY
GD121D 3TBD 1.0
14290 BK-YE
C1RH02-A - 1
C1RH02-A - 2
1RH02
Horn
2R115
Clockspring
S1D121B
GD121V 3TBD 2.5
14290 BK-YE
G1D121-A
FENDER FRONT LEFT 2ND GROUND POINT
G1D121

Horn (G1404384)

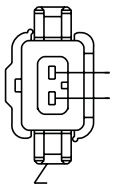

1 CBB21B BU-GY 3TBD 1.0
2 GD121W BK-YE 3TBD 1.0

F6AB-14A464-HA

C1RH02
TO HORN RH

HARNESS 14290

Horn—A (G1404385)

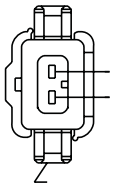

1 CBB21 BU-GY 3TBD 1.0 + CBB21C BU-GY 3TBD 1.0
2 GD121D BK-YE 3TBD 1.0

F6AB-14A464-HA

C1RH02-A
TO HORN LH

HARNESS 14290

SECTION 413-08 Information and Message Center

VEHICLE APPLICATION: 2012.0 Ranger

CONTENTS PAGE

ELECTRICAL SCHEMATICS

Message Center — LHD 4WD/LHD RWD..... 413-08-2
Message Center — RHD 4WD/RHD RWD..... 413-08-4

ELECTRICAL CONNECTORS

Message Center Module..... 413-08-6
Message Center Module — A..... 413-08-6
Message Center Module — B..... 413-08-6
Message Center Module — C..... 413-08-6
Message Center Module — D..... 413-08-6
Message Center Module — E..... 413-08-7
Message Center Module — F..... 413-08-7
Message Center Module — G..... 413-08-7
Message Center Module — H..... 413-08-7

413-08-2 Message Center—LHD 4WD/LHD RWD

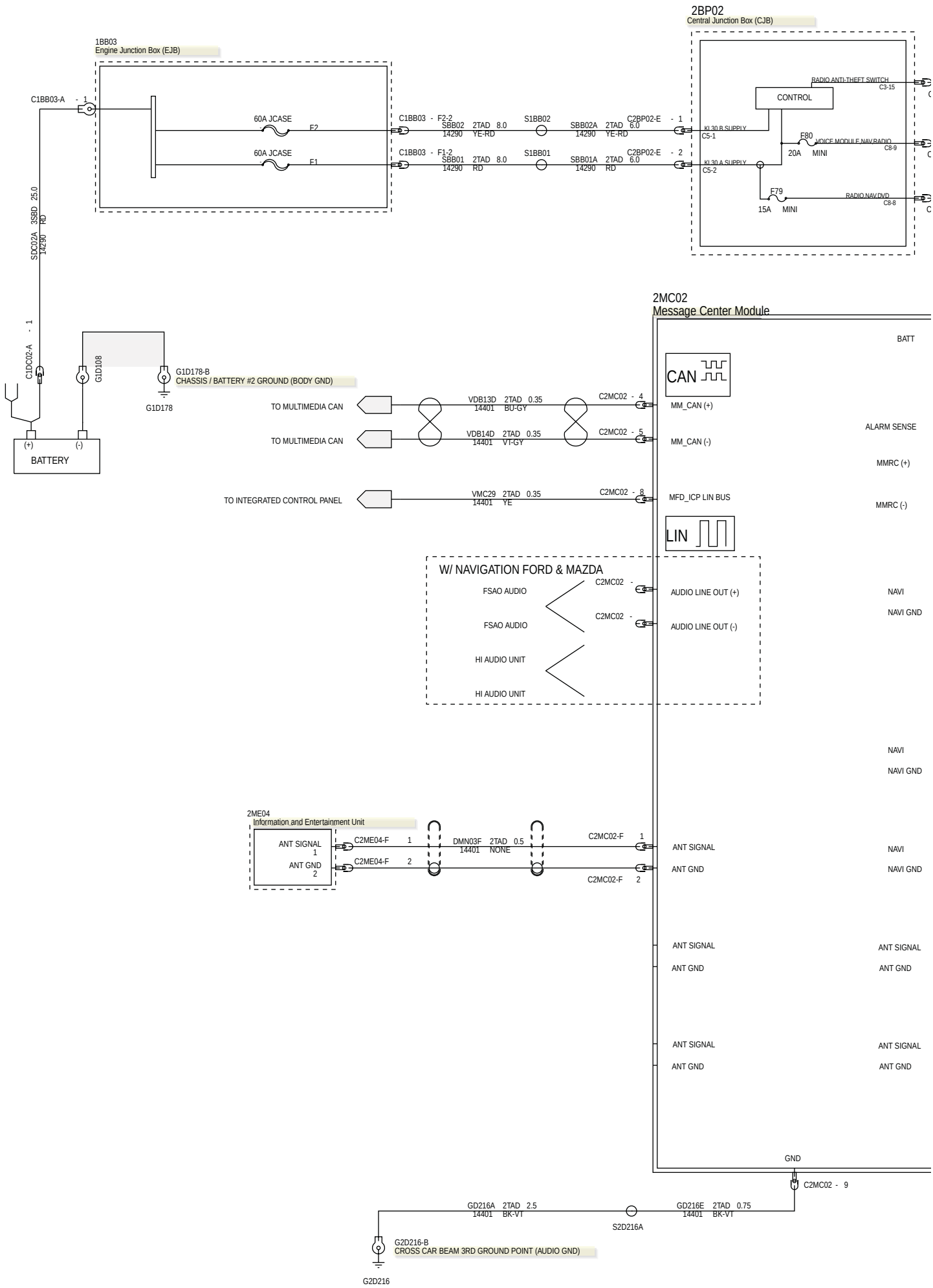

413-08-3 Message Center—LHD 4WD/LHD RWD

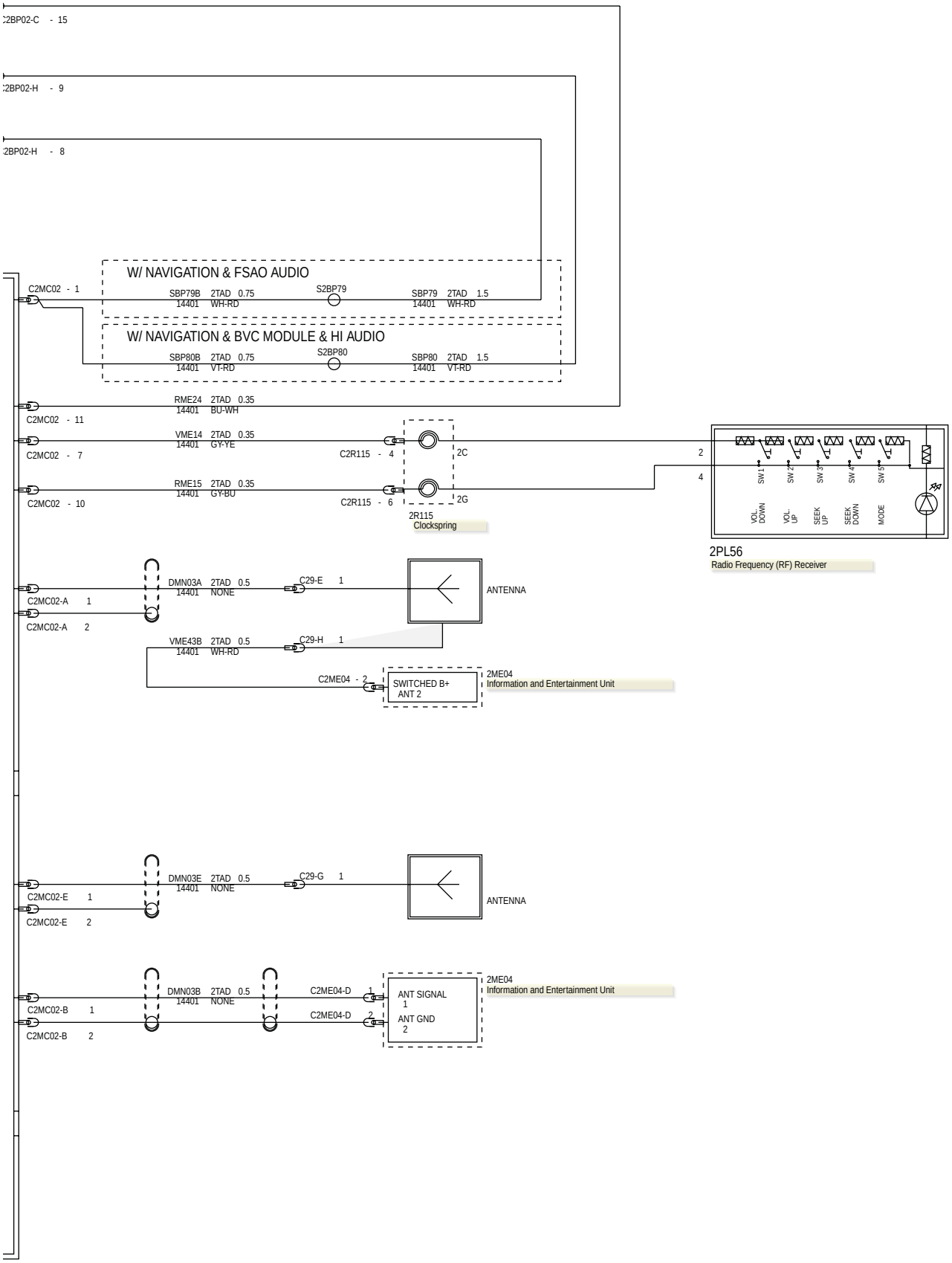

413-08-4 Message Center—RHD 4WD/RHD RWD

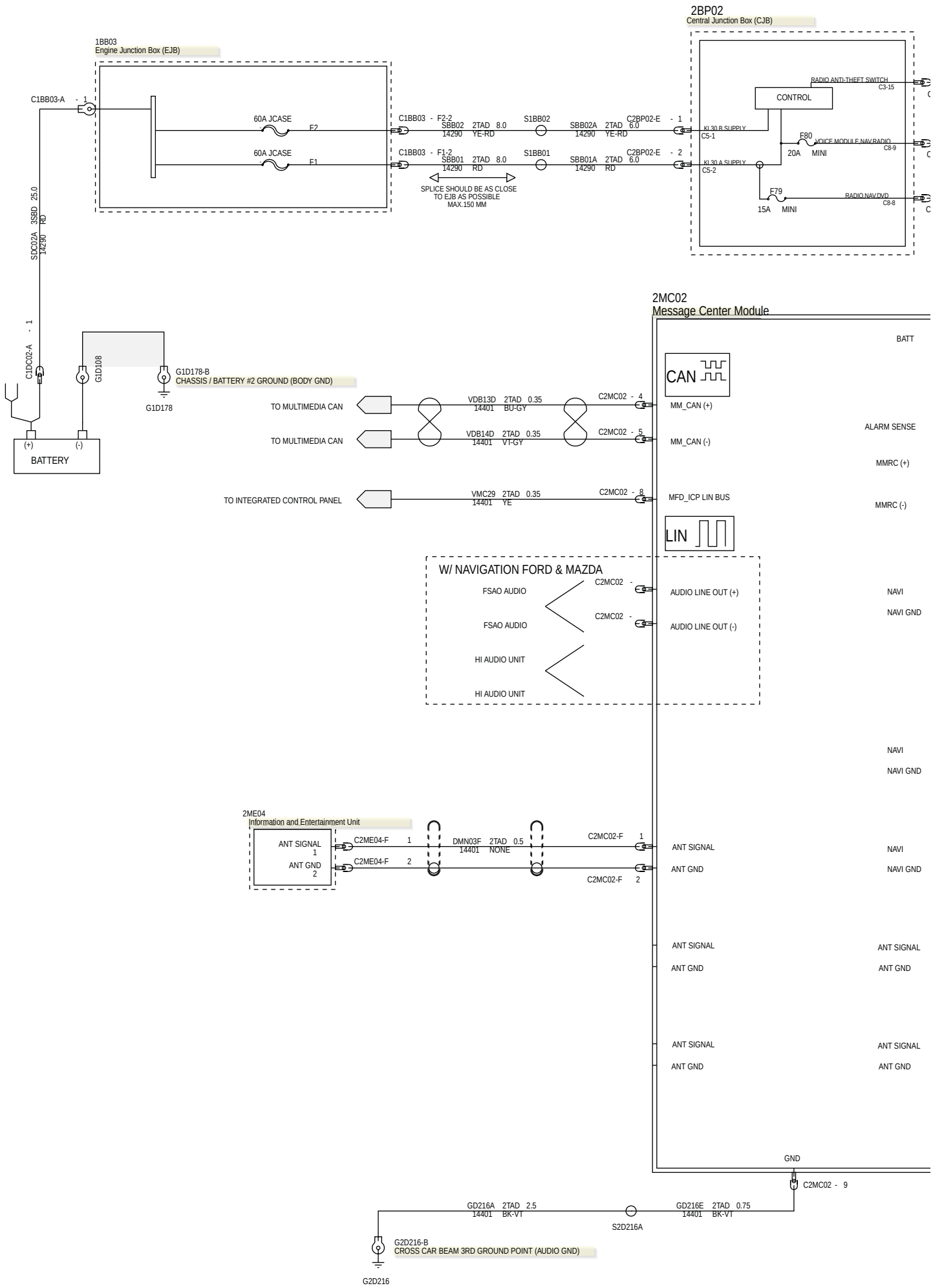

413-08-5 Message Center—RHD 4WD/RHD RWD

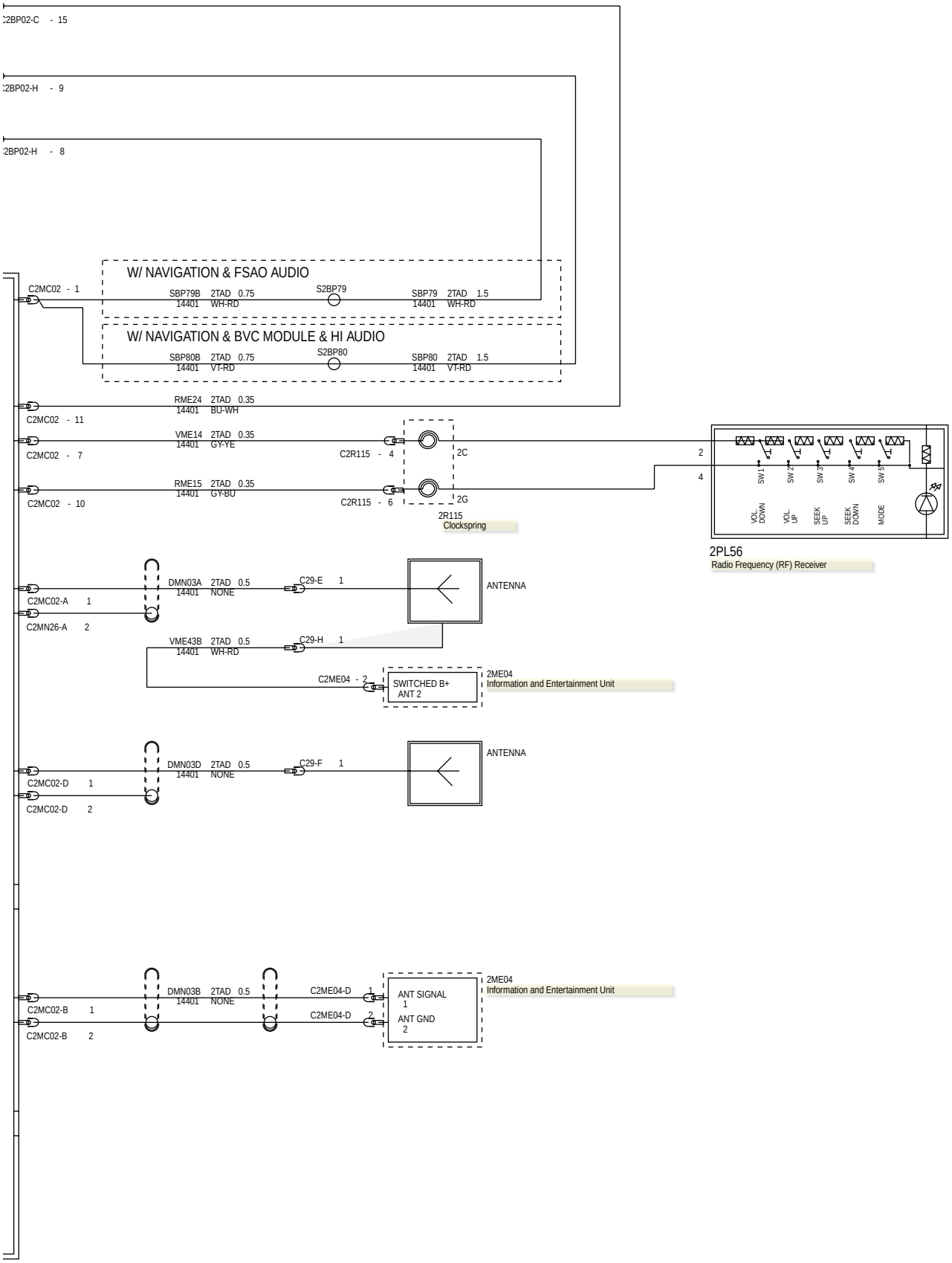

Message Center Module (G1404400)

PIN 6 => VMN07A GY 0.35 2TAD
PIN 12 => RMN07A VT 0.35 2TAD

						VMN07	GY	2TAD	0.35	6	12	RMN07	VT	2TAD	0.35
					VDB14D	VT-GY	2TAD	0.35	5	11	RME24	BU-WH	2TAD	0.35
					VDB13D	BU-GY	2TAD	0.35	4	10	RME15	GY-BU	2TAD	0.35
									3	9	GD216E	BK-VT	2TAD	0.75
									2	8	VMC29	YE	2TAD	0.35
SBP79B	WH-RD	2TAD	0.75	+	SBP80B	VT-RD	2TAD	0.75	1	7	VME14	GY-YE	2TAD	0.35

8V5T-14489-ANA

C2MC02
TO MULTIFUNCTION DISPLAY
HARNESS 14401

Message Center Module—A (G1404401)

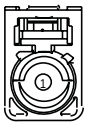

-
1 DMN03A NONE 2TAD 0.5

7H2T-14489-AKB
C2MC02-A
TO MULTIFUNCTION DISPLAY
HARNESS 14401

Message Center Module—B (G1404402)

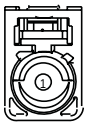

-
1 DMN03B NONE 2TAD 0.5

7H2T-14489-AKB
C2MC02-B
TO MULTIFUNCTION DISPLAY
HARNESS 14401

Message Center Module—C (G1404403)

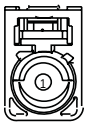

-
1 DMN03C NONE 2TAD 0.5

7H2T-14489-AKB
C2MC02-C
TO MULTIFUNCTION DISPLAY
HARNESS 14401

Message Center Module—D (G1404404)

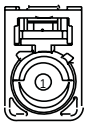

-
1 DMN03D NONE 2TAD 0.5

7H2T-14489-AKB
C2MC02-D
TO MULTIFUNCTION DISPLAY
HARNESS 14401

Message Center Module—E (G1404405)

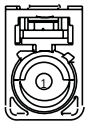

- 1 DMN03E NONE 2TAD 0.5

7H2T-14489-AKB
C2MC02-E
TO MULTIFUNCTION DISPLAY
HARNESS 14401

Message Center Module—F (G1404406)

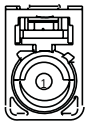

- 1 DMN03F NONE 2TAD 0.5

7H2T-14489-AKB
C2MC02-F
TO MULTIFUNCTION DISPLAY
HARNESS 14401

Message Center Module—G (G1404407)

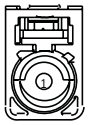

- 1 DMN03G NONE 2TAD 0.5

7H2T-14489-AKB
C2MC02-G
TO MULTIFUNCTION DISPLAY
HARNESS 14401

Message Center Module—H (G1404408)

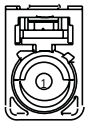

- 1 DMN03H NONE 2TAD 0.5

7H2T-14489-AKB
C2MC02-H
TO MULTIFUNCTION DISPLAY
HARNESS 14401

SECTION 413-09 Warning Devices

VEHICLE APPLICATION: 2012.0 Ranger

CONTENTS PAGE

ELECTRICAL CONNECTORS

Low Washer Fluid Warning Indicator Switch..... 413-09-2

Low Washer Fluid Warning Indicator Switch (G1404410)

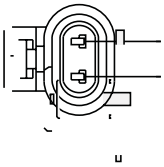

12158214
C1MC20
TO WASHER FLUID LEVEL SWITCH
HARNESS 14290

SECTION 413-13 Parking Aid

VEHICLE APPLICATION: 2012.0 Ranger

CONTENTS PAGE

ELECTRICAL SCHEMATICS

Parking Aid — LHD 4WD/LHD RWD, Vehicles With: Parking Aid Camera..... 413-13-2
Parking Aid — LHD 4WD/LHD RWD, Vehicles Without: Parking Aid Camera..... 413-13-4
Parking Aid — RHD 4WD/RHD RWD, Vehicles With: Parking Aid Camera..... 413-13-6
Parking Aid — RHD 4WD/RHD RWD, Vehicles Without: Parking Aid Camera..... 413-13-8

ELECTRICAL CONNECTORS

Parking Aid Module..... 413-13-10
Parking Aid Module — A..... 413-13-10
Rear Inner Parking Aid Sensor LH/Center..... 413-13-10
Rear Inner Parking Aid Sensor RH..... 413-13-10
Rear Outer Parking Aid Sensor LH..... 413-13-10
Rear Outer Parking Aid Sensor RH..... 413-13-11
Rear Parking Aid Camera..... 413-13-11

413-13-2 Parking Aid—LHD 4WD/LHD RWD, Vehicles With: Parking Aid Camera

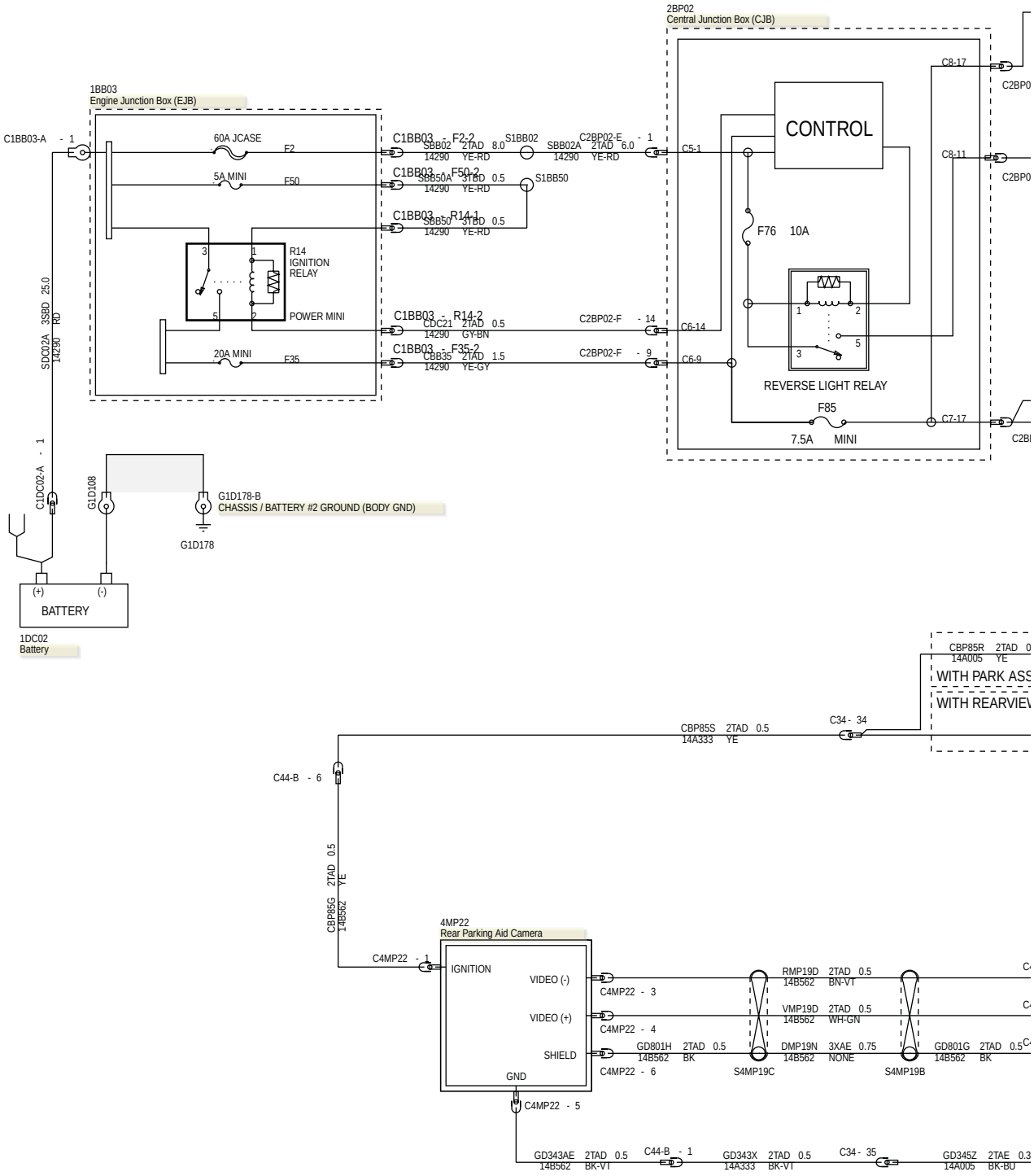

413-13-3 Parking Aid—LHD 4WD/LHD RWD, Vehicles With: Parking Aid Camera

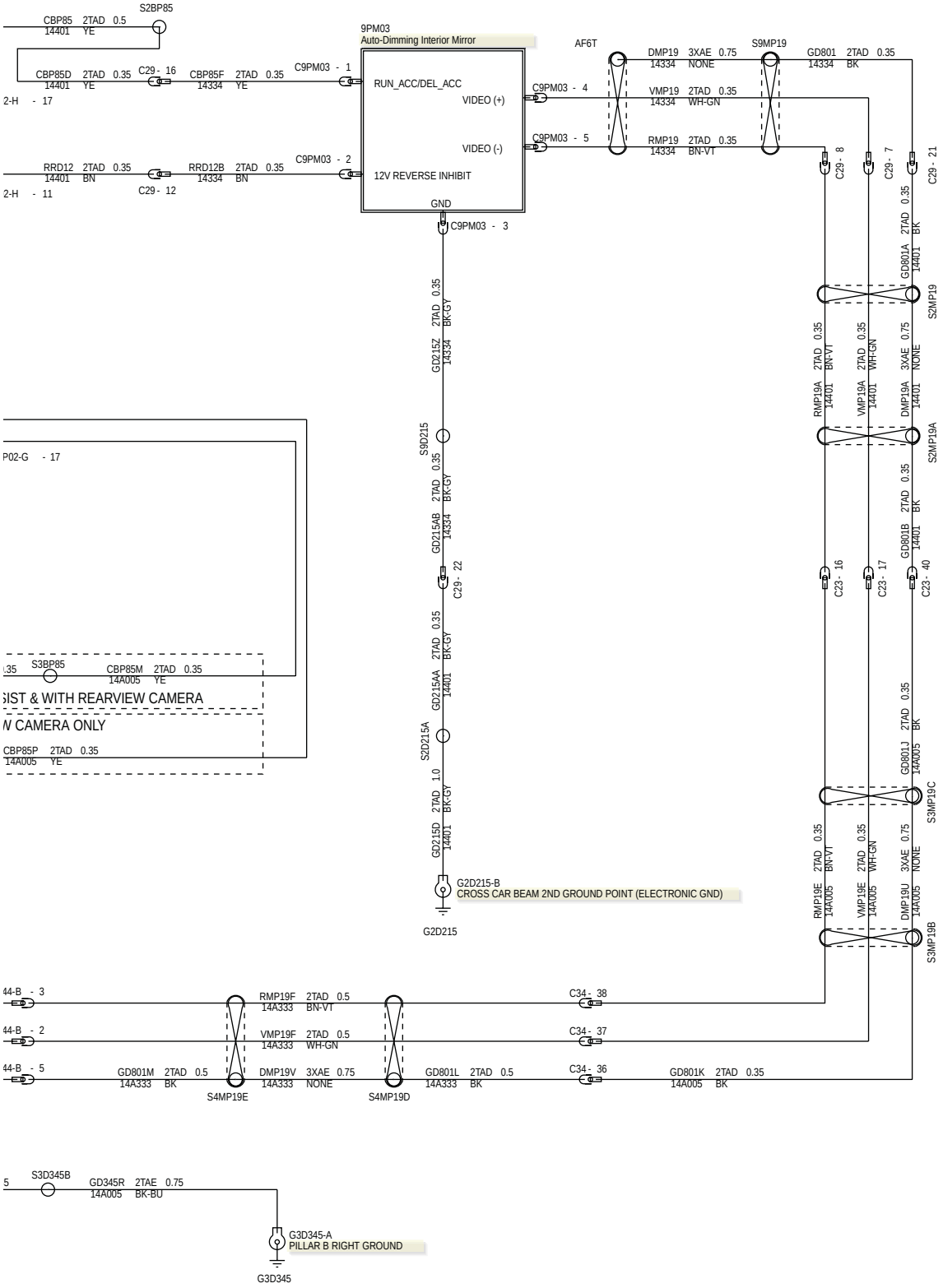

413-13-4 Parking Aid—LHD 4WD/LHD RWD, Vehicles Without: Parking Aid Camera

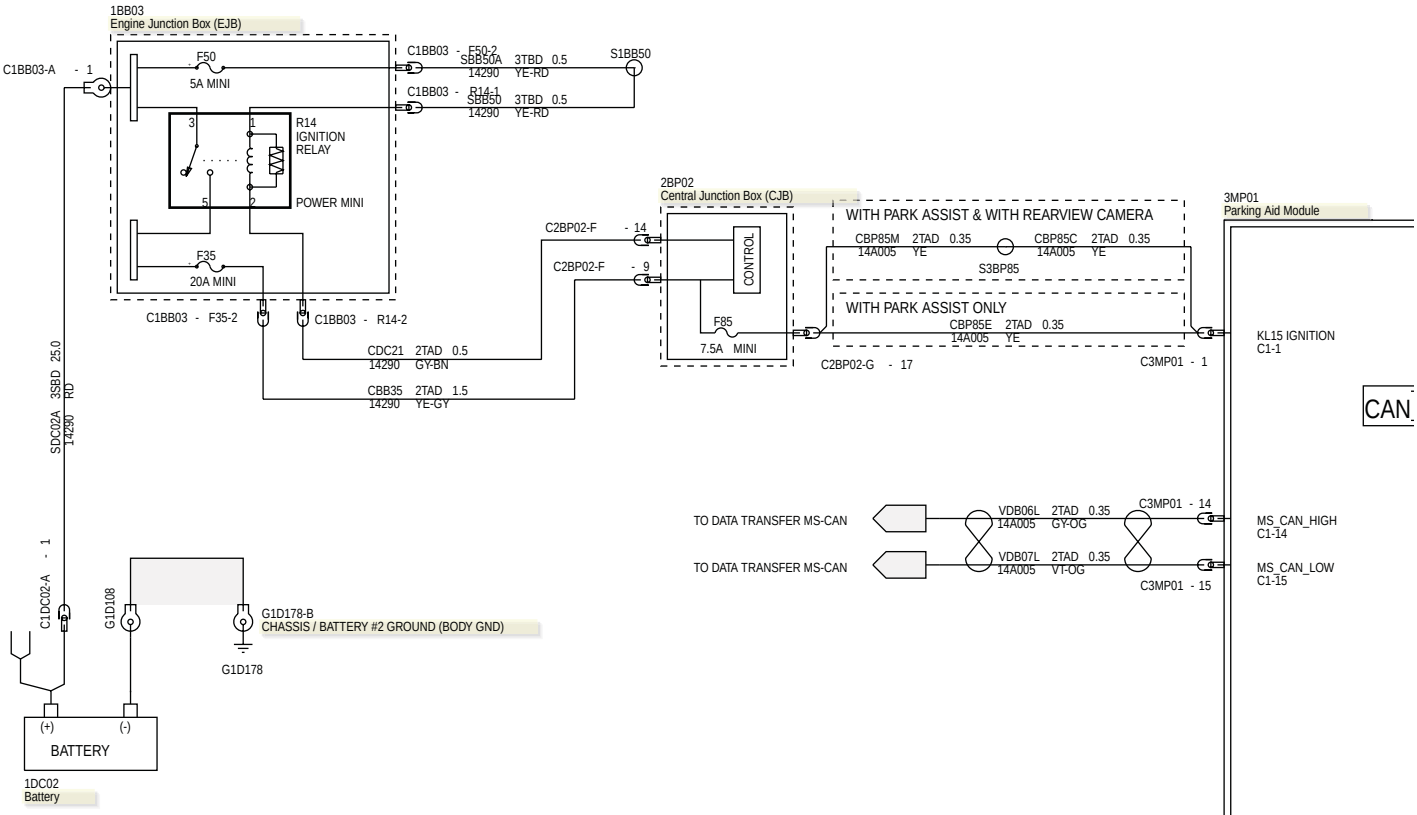

413-13-5 Parking Aid—LHD 4WD/LHD RWD, Vehicles Without: Parking Aid Camera

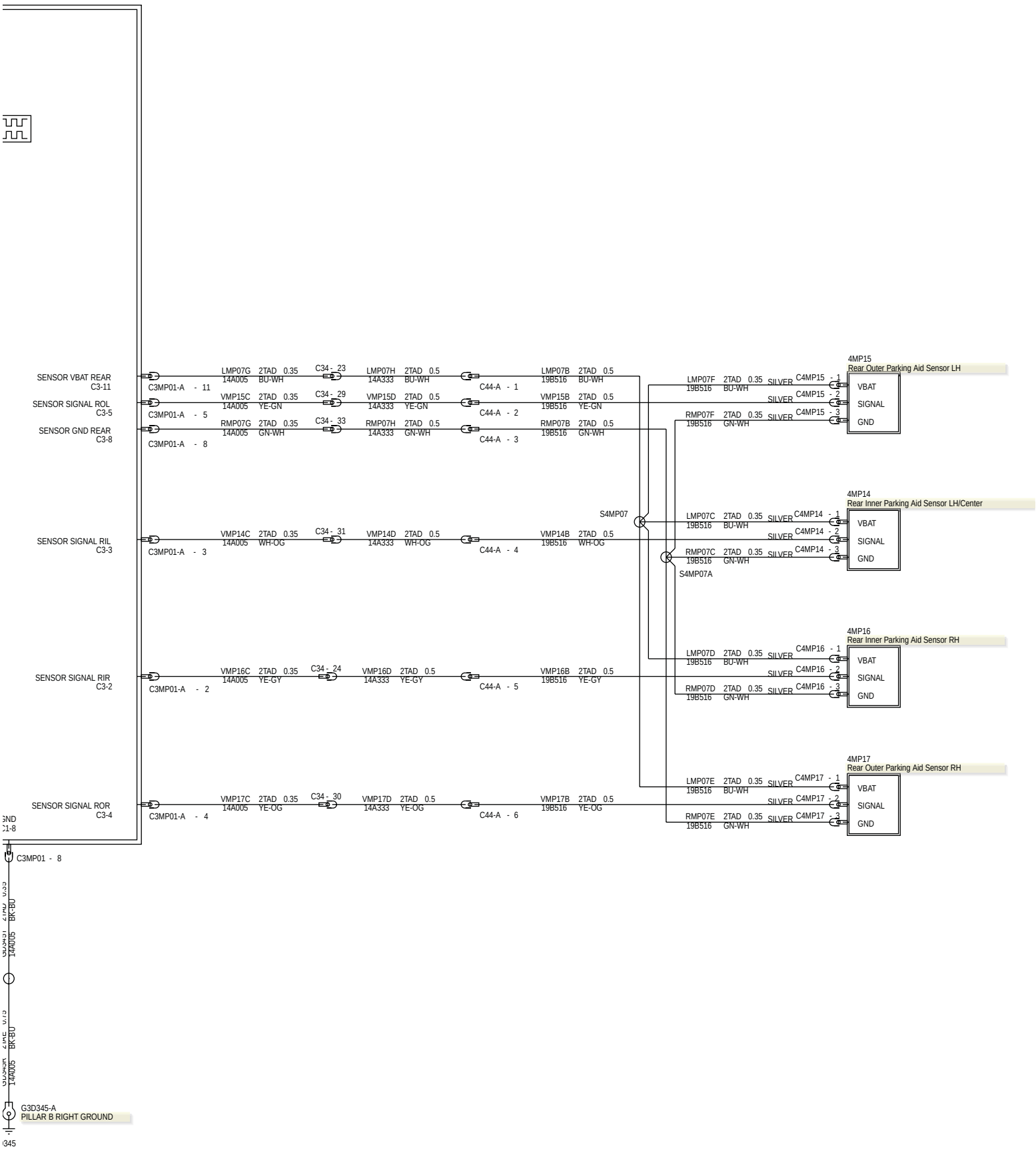

413-13-6 Parking Aid—RHD 4WD/RHD RWD, Vehicles With: Parking Aid Camera

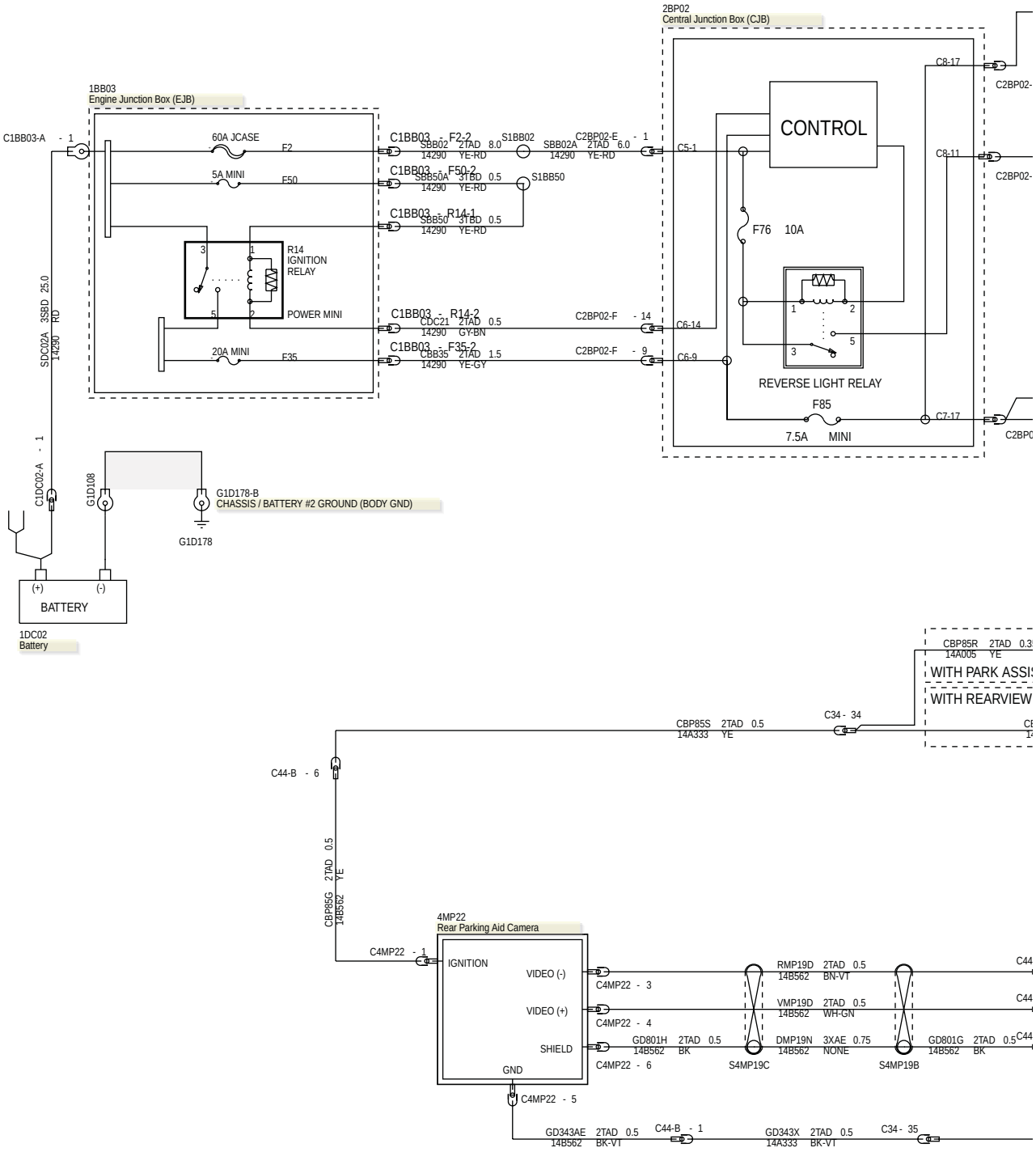

413-13-7 Parking Aid—RHD 4WD/RHD RWD, Vehicles With: Parking Aid Camera

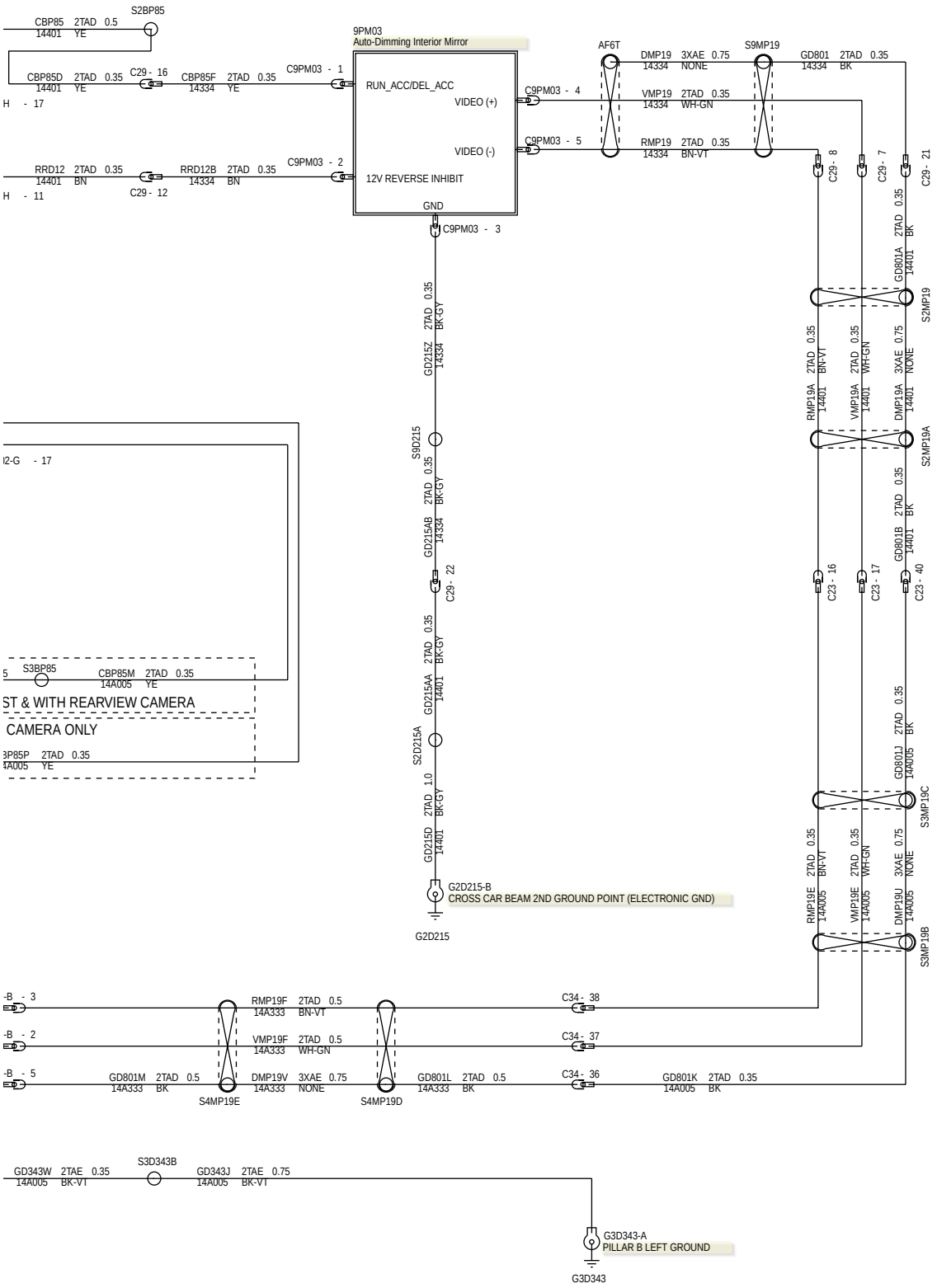

413-13-8 Parking Aid—RHD 4WD/RHD RWD, Vehicles Without: Parking Aid Camera

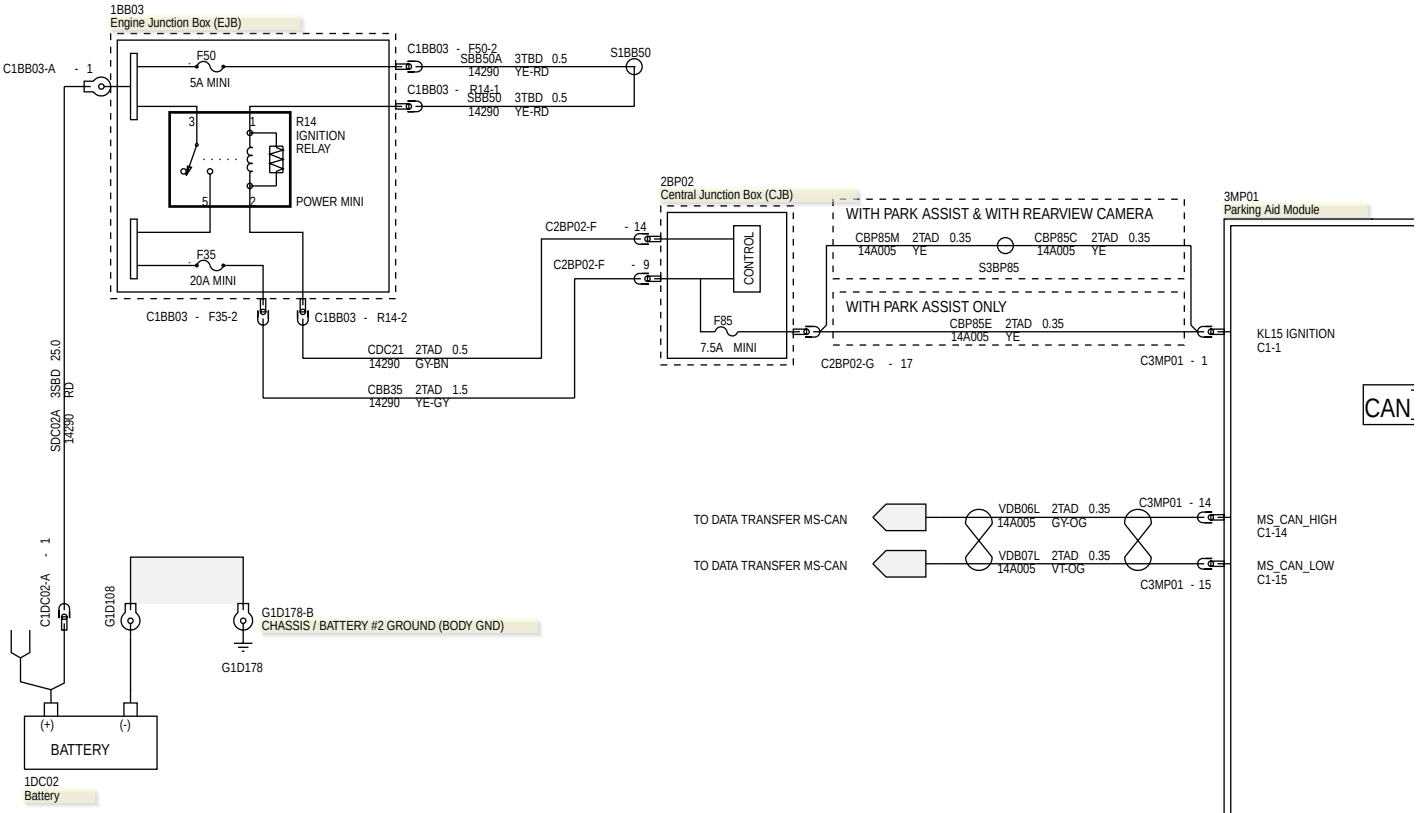

413-13-9 Parking Aid—RHD 4WD/RHD RWD, Vehicles Without: Parking Aid Camera

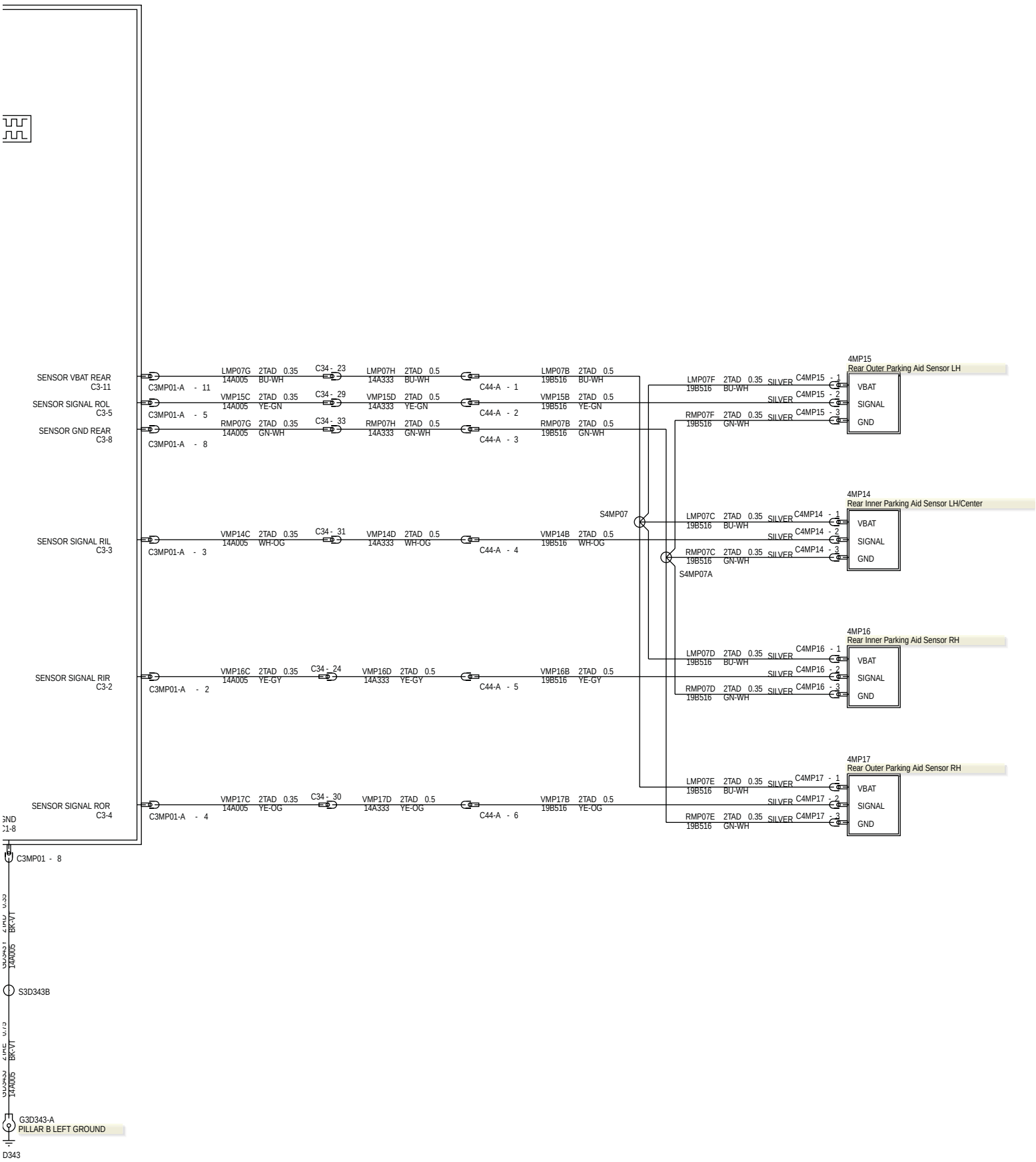

Parking Aid Module (G1405447)

PIN 8 => GD345T BK-BU 0.35 2TAD

		CBP85C	YE	2TAD	0.35	+	CBP85E	YE	2TAD	0.35	1			9					
											2			10					
											3			11					
											4			12					
											5			13					
											6			14	VDB06L	GY-OG	2TAD	0.35
											7			15	VDB07L	VT-OG	2TAD	0.35
GD343Y	BK-VT	2TAD	0.35	+	GD345T	BK-BU	2TAD	0.35	8			16						

6G9T-14489-ASA

C3MP01
TO PARKING AID MODULE

HARNESS 14A005

Parking Aid Module—A (G1405448)

									1			7											
VMP16C	YE-GY	2TAD	0.35	+	VMP16	YE-GY	2TAD	0.5	2			8	RMP07G	GN-WH	2TAD	0.35	+	RMP07	GN-WH	2TAD	0.5
VMP14C	WH-OG	2TAD	0.35	+	VMP14	WH-OG	2TAD	0.5	3			9									
VMP17C	YE-OG	2TAD	0.35	+	VMP17	YE-OG	2TAD	0.5	4			10									
VMP15C	YE-GN	2TAD	0.35	+	VMP15	YE-GN	2TAD	0.5	5			11	LMP07G	BU-WH	2TAD	0.35	+	LMP07	BU-WH	2TAD	0.5
									6			12									

6G9T-14489-AMA

C3MP01-A
TO PARK AID MODULE CONNECTOR C

HARNESS 14A005

Rear Inner Parking Aid Sensor LH/Center (G1404416)

1	LMP07C	BU-WH	2TAD	0.35	SILVER
2	VMP14B	WH-OG	2TAD	0.5	SILVER
3	RMP07C	GN-WH	2TAD	0.35	SILVER

6W8T-14A464-EC

C4MP14
TO PARK ASSIST SENSOR REAR MIDDLE LEFT

HARNESS 19B516

Rear Inner Parking Aid Sensor RH (G1404417)

1	LMP07D	BU-WH	2TAD	0.35	SILVER
2	VMP16B	YE-GY	2TAD	0.5	SILVER
3	RMP07D	GN-WH	2TAD	0.35	SILVER

6W8T-14A464-EC

C4MP16
TO PARK ASSIST SENSOR REAR MIDDLE RIGHT

HARNESS 19B516

Rear Outer Parking Aid Sensor LH (G1404418)

1	LMP07F	BU-WH	2TAD	0.35	SILVER
2	VMP15B	YE-GN	2TAD	0.5	SILVER
3	RMP07F	GN-WH	2TAD	0.35	SILVER

6W8T-14A464-EC

C4MP15
TO PARK ASSIST SENSOR REAR LEFT

HARNESS 19B516

Rear Outer Parking Aid Sensor RH (G1404419)

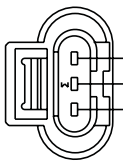

1	LMP07E	BU-WH	2TAD	0.35	SILVER
2	VMP17B	YE-OG	2TAD	0.5	SILVER
3	RMP07E	GN-WH	2TAD	0.35	SILVER

6W8T-14A464-EC

C4MP17

TO PARK ASSIST SENSOR REAR RIGHT

HARNESS 19B516

Rear Parking Aid Camera (G1405449)

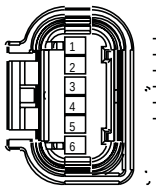

1	CBP85G	YE	2TAD	0.5
2				
3	RMP19D	BN-VT	2TAD	0.5
4	VMP19D	WH-GN	2TAD	0.5
5	GD343AE	BK-VT	2TAD	0.5
6	GD801H	BK	2TAD	0.5

BU5T-14A464-NA

C4MP22
TO REARVIEW CAMERA

HARNESS 14B562

SECTION 413-17 Tachograph

VEHICLE APPLICATION: 2012.0 Ranger

CONTENTS PAGE

ELECTRICAL CONNECTORS

Tachograph..... 413-17-2

Tachograph (G1404423)

CBP63	BN-YE	2TAD	0.35	4
CMC37	VT-GN	2TAD	0.35	2
GD215AC	BK-GY	2TAD	0.35	1
CBP87	GN-BU	2TAD	0.35	3

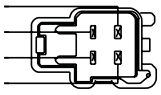

4S7T-14A459-VDA

C2MC35
TO TACHOGRAPH

HARNESS 14401

SECTION 414-01 Battery, Mounting and Cables

VEHICLE APPLICATION: 2012.0 Ranger

CONTENTS PAGE

ELECTRICAL CONNECTORS

Battery — A..... 414-01-2
Battery — C..... 414-01-2
Battery Monitoring Sensor..... 414-01-2

Battery—A (G1404427)

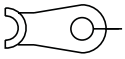

1 SDC02A RD 3SBD 25.0

3M5T-14463-HTA

C1DC02-A
TO BATTERY+1

HARNESS 14290

Battery—C (G1404428)

PIN 1 => SDF01A RD 25.0 3SCD + SDF01B RD 35.0 3SCD

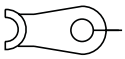

1 SDF01B RD 3SCD 35.0 + SDF01A RD 3SCD 25.0

3M5T-14463-HTA

C1DC02-C
TO BATTERY+2

HARNESS 14300

Battery Monitoring Sensor (G1404429)

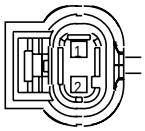

1 SBB30 BN-RD 3TBD 1.0 SILVER
2 CDC56 WH3TBD 0.5 SILVER

AV6N-14A464-ZA

C1DC57
TO BATTERY MONITORING SENSOR

HARNESS 14290

SECTION 414-02 Generator and Regulator

VEHICLE APPLICATION: 2012.0 Ranger

CONTENTS PAGE

ELECTRICAL SCHEMATICS

Charging System — 2.2L Duratorq-TDCi (88kW/120PS) - Puma/2.2L Duratorq-TDCi (96kW/130PS) - Puma/2.2L Duratorq-TDCi (110kW/150PS) - Puma..... 414-02-2
Charging System — 3.2L Duratorq-TDCi (148kW/200PS) - Puma..... 414-02-4
Charging System — 2.5L Duratec-HE (122kW/165PS) - MI4..... 414-02-6

ELECTRICAL CONNECTORS

Generator..... 414-02-8
Generator — A..... 414-02-8

414-02-2 Charging System—2.2L Duratorq-TDCi (88kW/120PS) - Puma/2.2L Duratorq-TDCi (96kW/130PS) - Puma/2.2L Duratorq-TDCi **(110KW/150PS**- Puma

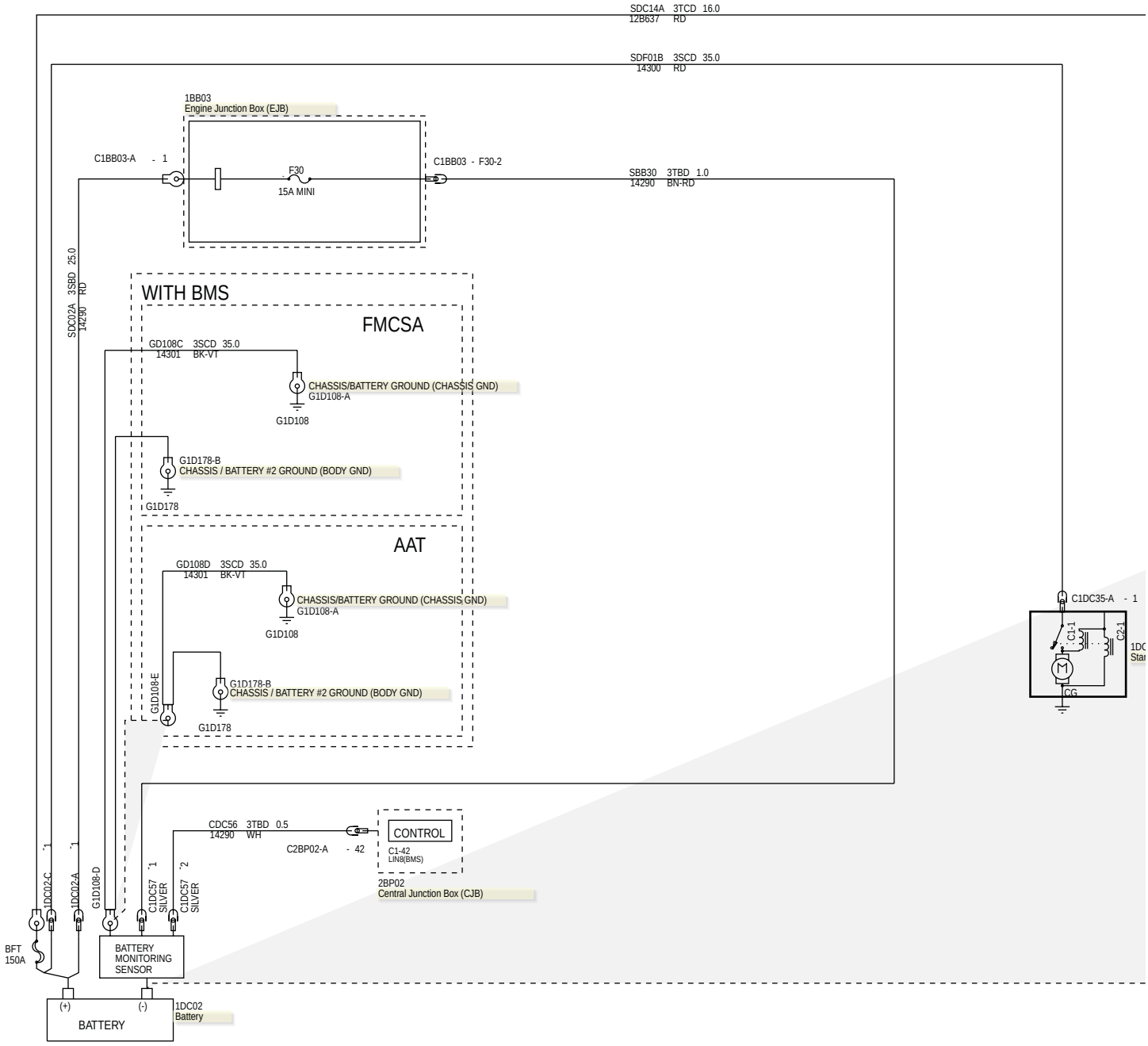

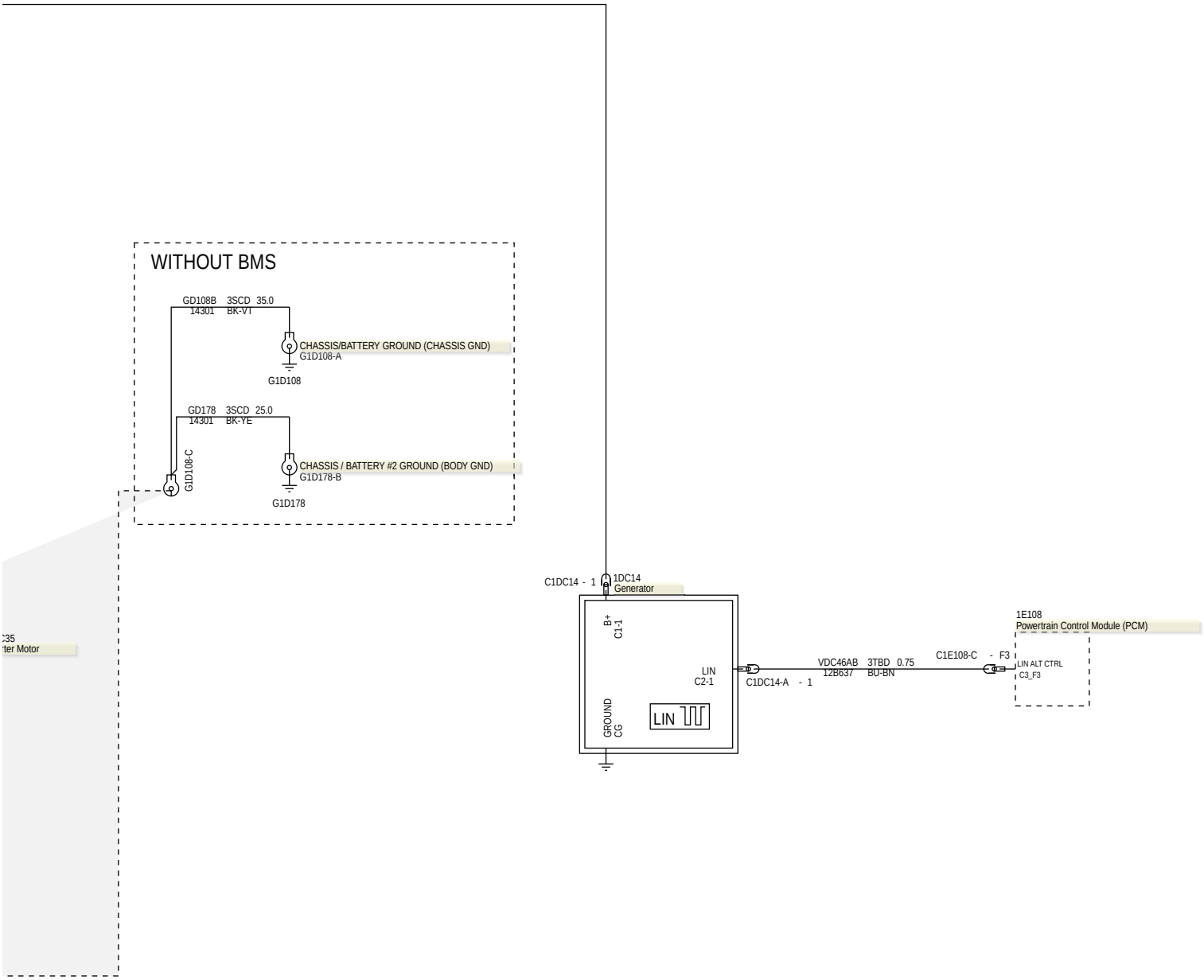
WITHOUT BMS
GD108B 3SCD 35.0
14301 BK-VT
CHASSIS/BATTERY GROUND (CHASSIS GND)
G1D108-A
G1D108
GD178 3SCD 25.0
14301 BK-YE
CHASSIS / BATTERY #2 GROUND (BODY GND)
G1D178-B
G1D178
G1D108-C
C1DC14 - 1
1DC14
Generator
B+
C1-1
LIN
C2-1
GROUND
CG
LIN
C1DC14-A - 1
VDC46AB 3TBD 0.75
12B637 BU-BN
C1E108-C - F3
1E108
Powertrain Control Module (PCM)
LIN ALT CTRL
C3_F3

414-02-4 Charging System—3.2L Duratorq-TDCi (148kW/200PS) - Puma

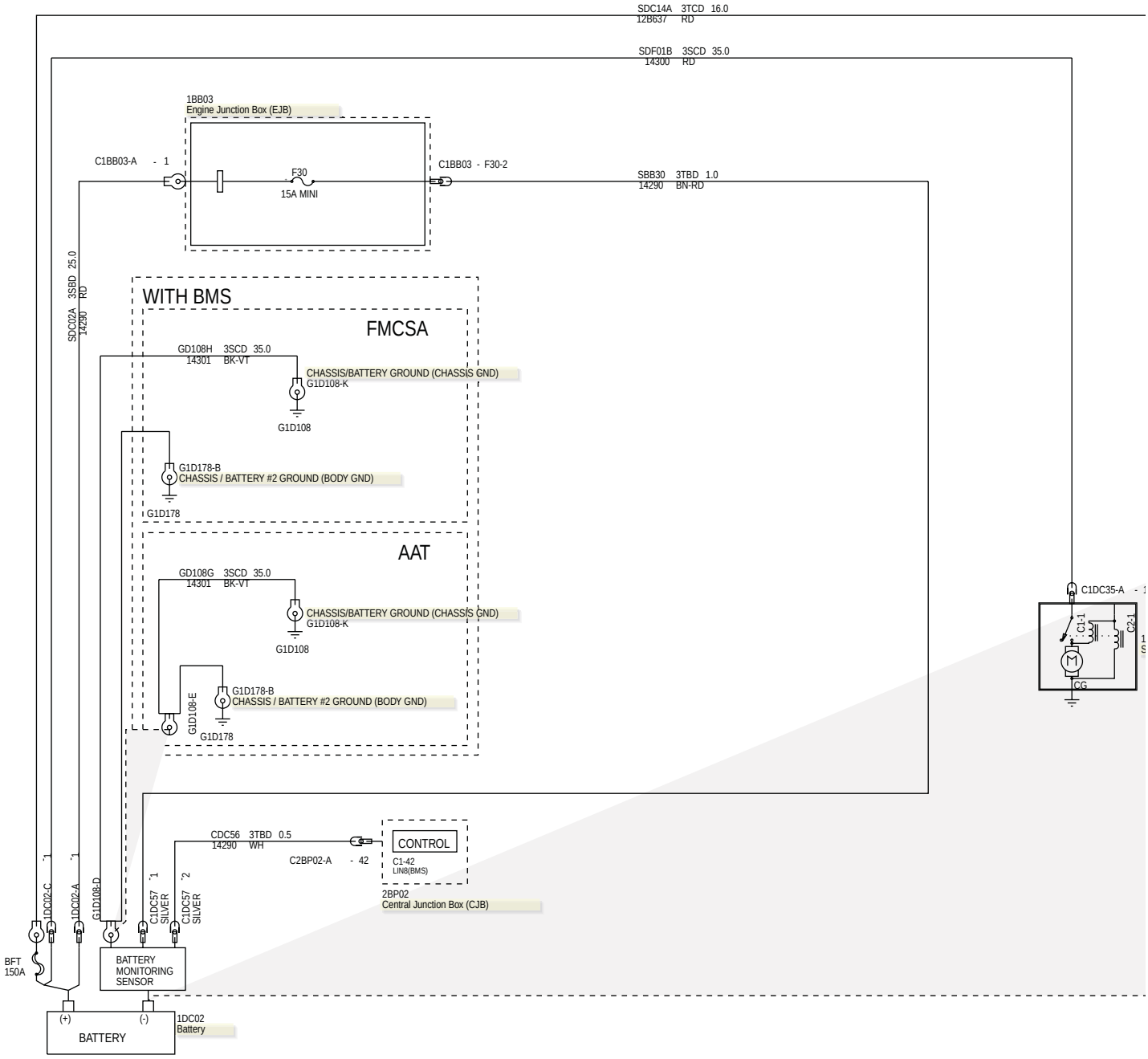

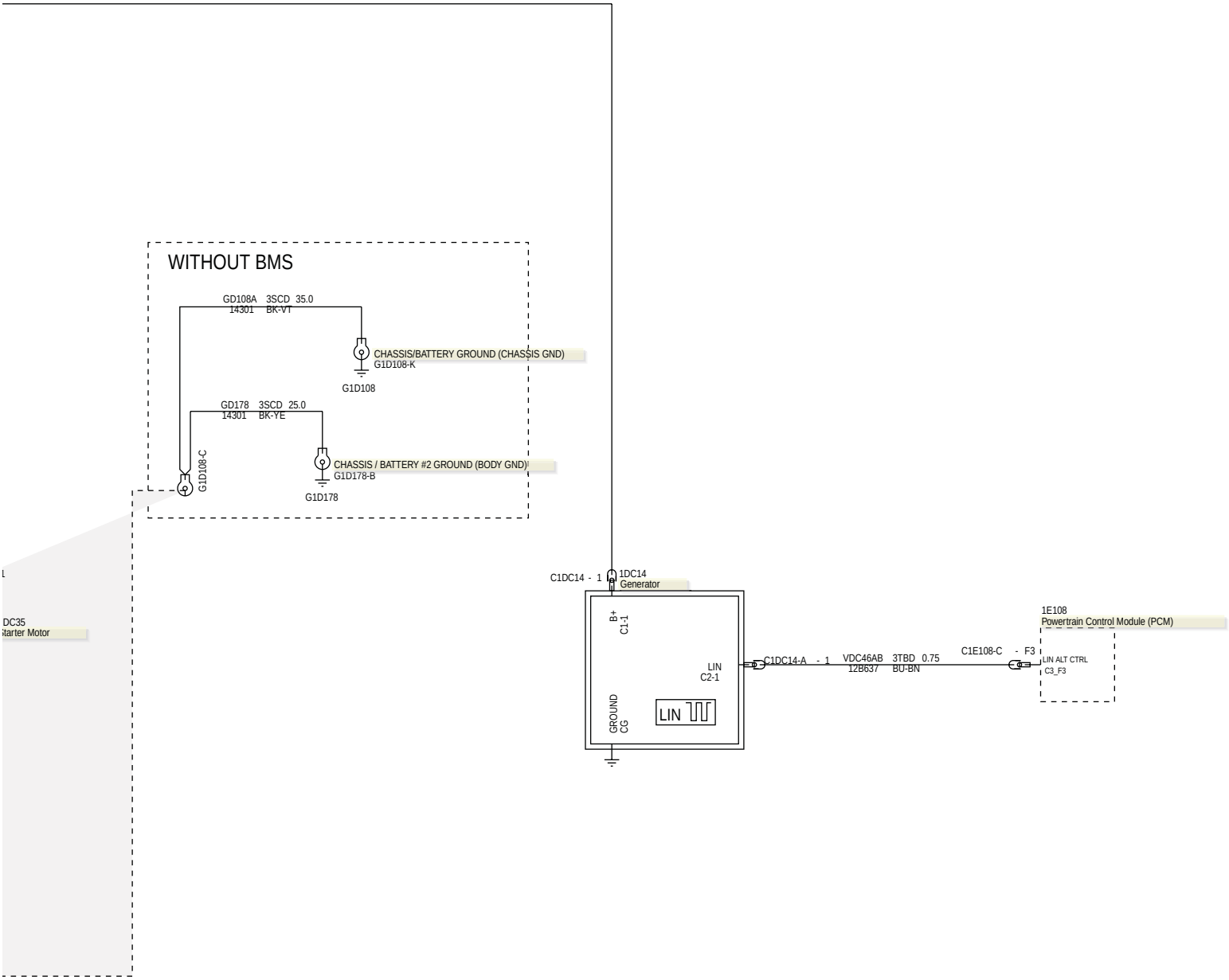
WITHOUT BMS
GD108A 3SCD 35.0
14301 BK-VT
CHASSIS/BATTERY GROUND (CHASSIS GND)
G1D108-K
G1D108
GD178 3SCD 25.0
14301 BK-YE
CHASSIS / BATTERY #2 GROUND (BODY GND)
G1D178-B
G1D178
G1D108-C
C1DC14 - 1
1DC14
Generator
B+
C1-1
LIN
C2-1
GROUND
CG
LIN
C1DC14-A - 1
VDC46AB 3TBD 0.75
12B637 BU-BN
C1E108-C - F3
1E108
Powertrain Control Module (PCM)
LIN ALT CTRL
C3_F3

414-02-6 Charging System—2.5L Duratec-HE (122kW/165PS) - MI4

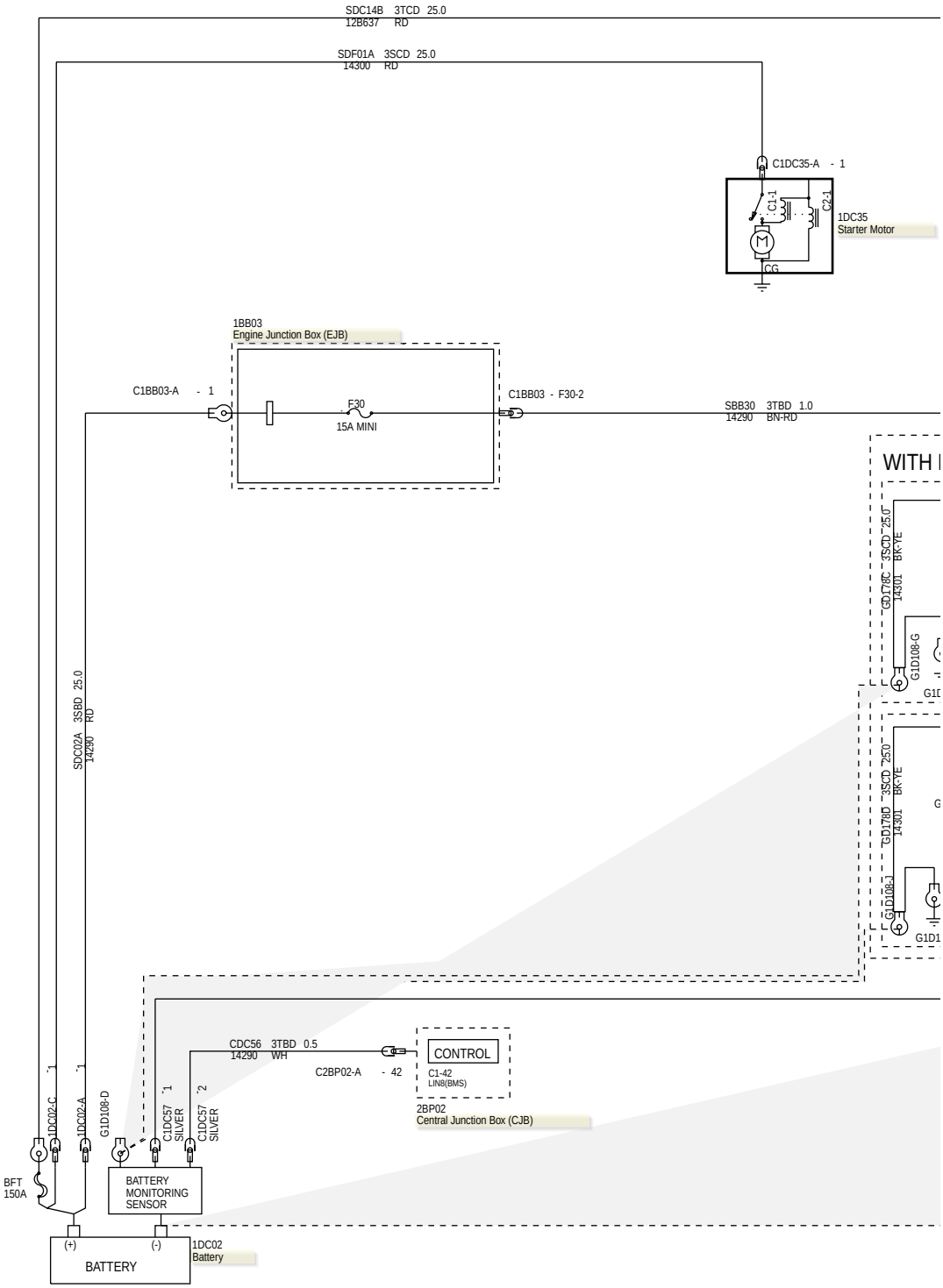

414-02-7 Charging System—2.5L Duratec-HE (122kW/165PS) - MI4

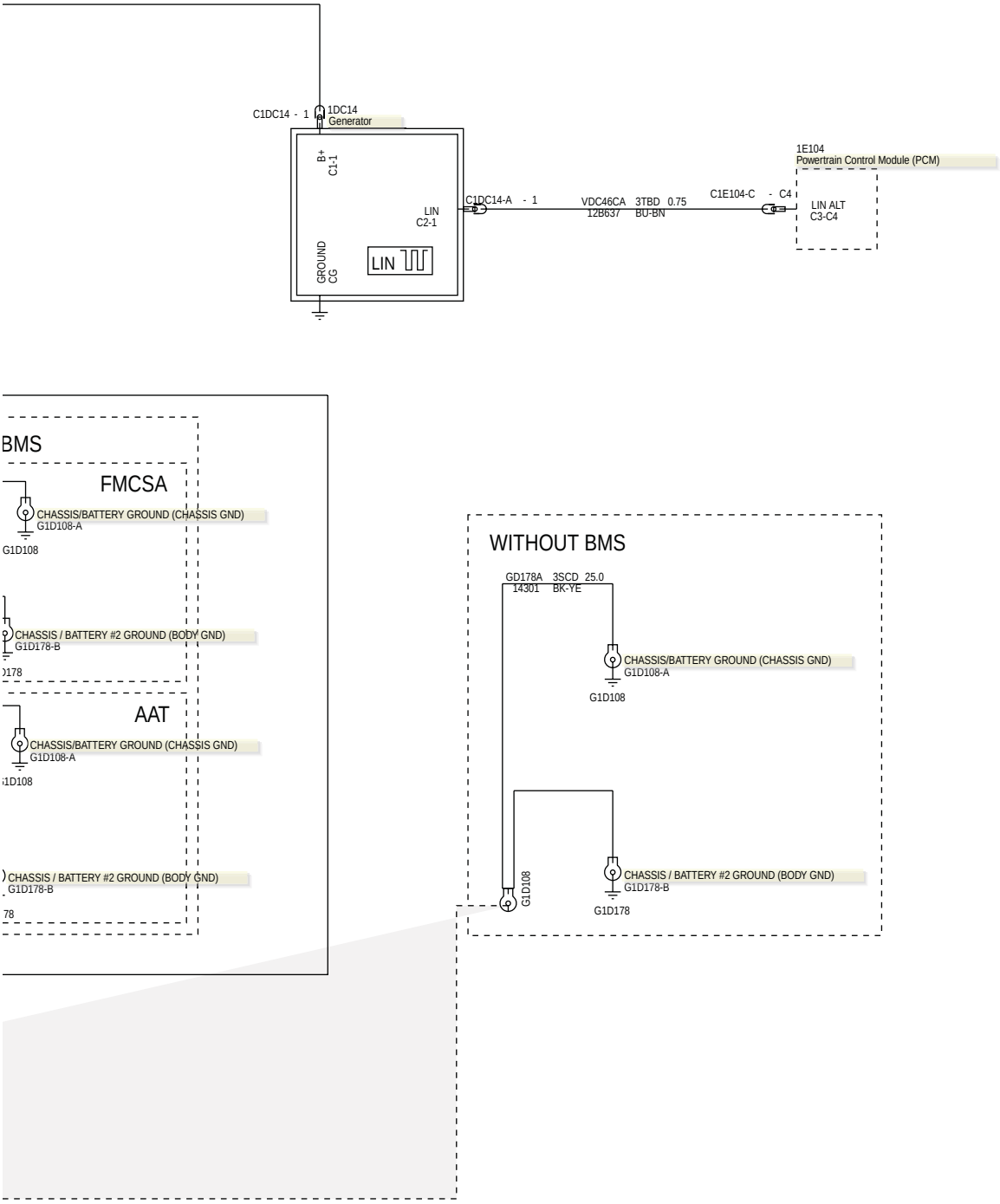

Generator (G1404432)

1 SDC14A RD 3TCD 16.0 + SDC14B RD 3TCD 25.0

2S6T-14463-JA

C1DC14
TO ALTERNATOR (B+)

HARNESS 12B637

Generator—A (G1404433)

PIN 1 => VDC46AB BU-BN 0.75 3TBD

1 VDC46CA BU-BN 3TBD 0.75 + VDC46AB BU-BN 3TBD 0.75
2

4R8T-14A464-FA

C1DC14-A
TO ALTERNATOR (LIN)

HARNESS 12B637

SECTION 415-01 Information and Entertainment System

VEHICLE APPLICATION: 2012.0 Ranger

CONTENTS PAGE

PAGE 1 OF 2

ELECTRICAL SCHEMATICS

Audio System — Single Cab, LHD 4WD/LHD RWD, Vehicles With: Single DIN Standard Audio Unit..... 415-01-3
Audio System — Single Cab, RHD 4WD/RHD RWD, Vehicles With: Single DIN Standard Audio Unit..... 415-01-5
Audio System — Double Cab, LHD 4WD/LHD RWD, Vehicles With: Single DIN Standard Audio Unit..... 415-01-7
Audio System — Double Cab, RHD 4WD/RHD RWD, Vehicles With: Single DIN Standard Audio Unit..... 415-01-9
Audio System — Super Cab, LHD 4WD/LHD RWD, Vehicles With: Single DIN Standard Audio Unit..... 415-01-11
Audio System — Super Cab, RHD 4WD/RHD RWD, Vehicles With: Single DIN Standard Audio Unit..... 415-01-13
Audio System — Single Cab, LHD 4WD/LHD RWD, Vehicles With: Bluetooth and Voice Control..... 415-01-15
Audio System — Single Cab, LHD 4WD/LHD RWD, Vehicles Without: Bluetooth and Voice Control..... 415-01-19
Audio System — Double Cab, LHD 4WD/LHD RWD, Vehicles With: Bluetooth and Voice Control..... 415-01-21
Audio System — Double Cab, LHD 4WD/LHD RWD, Vehicles Without: Bluetooth and Voice Control..... 415-01-25
Audio System — Super Cab, LHD 4WD/LHD RWD, Vehicles With: Bluetooth and Voice Control..... 415-01-27
Audio System — Super Cab, LHD 4WD/LHD RWD, Vehicles Without: Bluetooth and Voice Control..... 415-01-31
Audio System — Single Cab, RHD 4WD/RHD RWD, Vehicles With: Bluetooth and Voice Control..... 415-01-35
Audio System — Single Cab, RHD 4WD/RHD RWD, Vehicles Without: Bluetooth and Voice Control..... 415-01-39
Audio System — Double Cab, RHD 4WD/RHD RWD, Vehicles With: Bluetooth and Voice Control..... 415-01-41
Audio System — Double Cab, RHD 4WD/RHD RWD, Vehicles Without: Bluetooth and Voice Control..... 415-01-45
Audio System — Super Cab, RHD 4WD/RHD RWD, Vehicles With: Bluetooth and Voice Control..... 415-01-47
Audio System — Super Cab, RHD 4WD/RHD RWD, Vehicles Without: Bluetooth and Voice Control..... 415-01-51

ELECTRICAL CONNECTORS

Audio Input Socket..... 415-01-53
Audio Unit..... 415-01-53

PAGE 2 OF 2

Audio Unit — J..... 415-01-53
Cellular Phone Microphone..... 415-01-53
Communications Module — A..... 415-01-54
Communications Module — B..... 415-01-54
Front Door Speaker LH..... 415-01-54
Front Door Speaker RH..... 415-01-54
Front Door Tweeter Speaker LH..... 415-01-55
Front Door Tweeter Speaker RH..... 415-01-55
Information and Entertainment Control Panel..... 415-01-55
Information and Entertainment Unit..... 415-01-55
Information and Entertainment Unit — A..... 415-01-56
Information and Entertainment Unit — B..... 415-01-56
Information and Entertainment Unit — D..... 415-01-56
Information and Entertainment Unit — F..... 415-01-56
Information and Entertainment Unit — K..... 415-01-57
Noise Suppression Capacitor..... 415-01-57
Rear Door Speaker LH..... 415-01-57
Rear Door Speaker RH..... 415-01-57

415-01-3 Audio System—Single Cab, LHD 4WD/LHD RWD, Vehicles With: Single DIN Standard Audio Unit

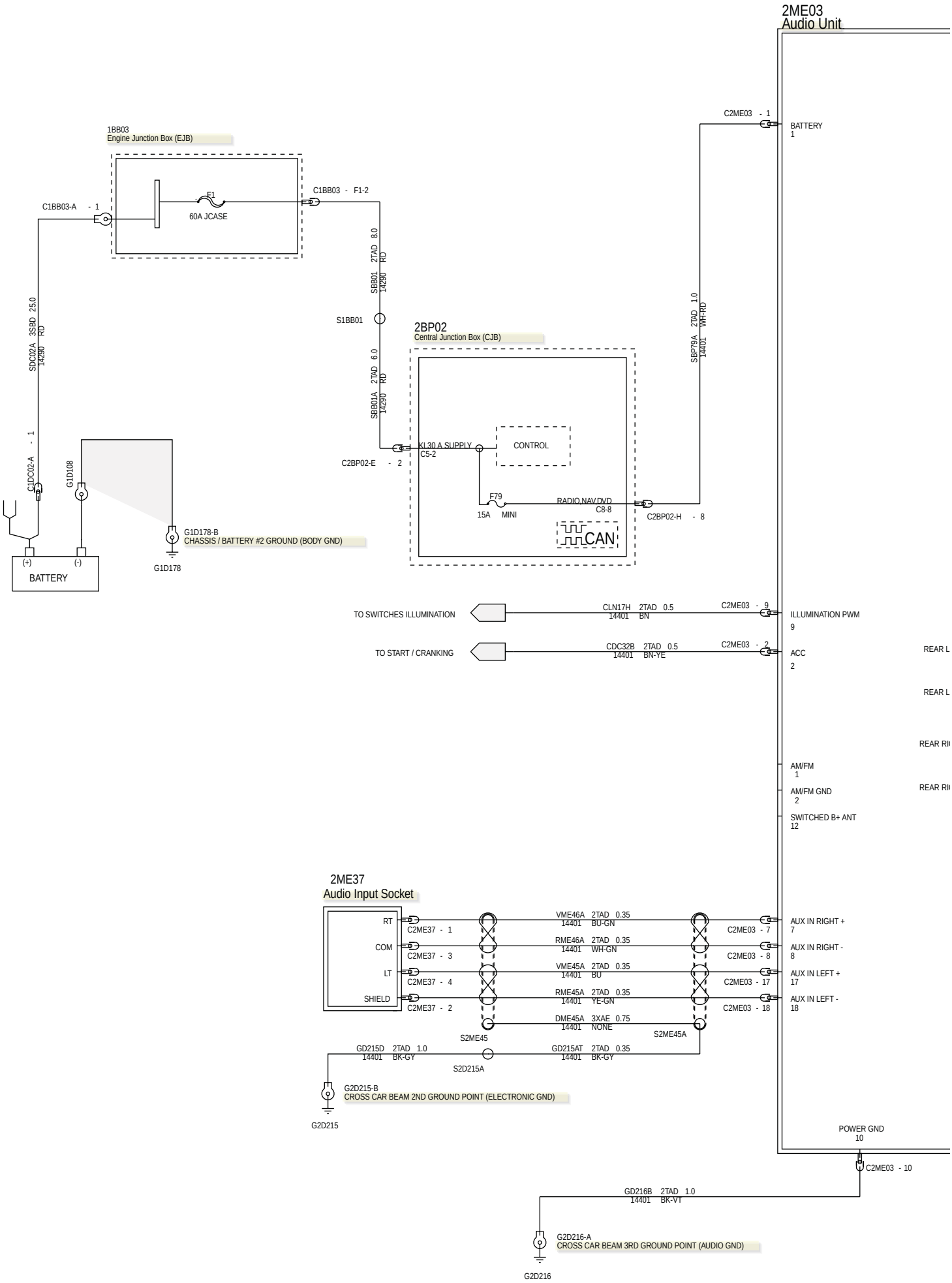

415-01-4 Audio System—Single Cab, LHD 4WD/LHD RWD, Vehicles With: Single DIN Standard Audio Unit

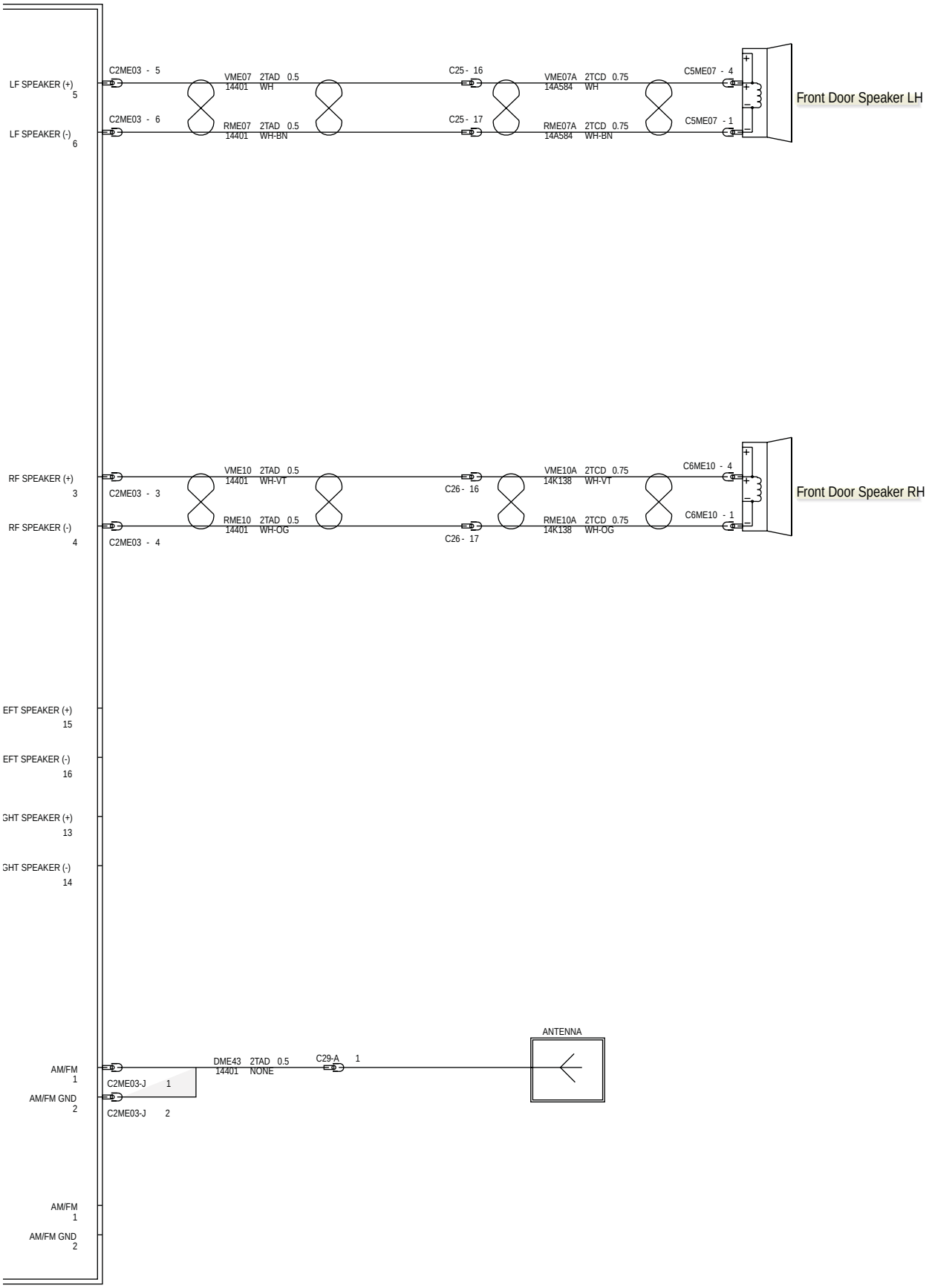

415-01-5 Audio System—Single Cab, RHD 4WD/RHD RWD, Vehicles With: Single DIN Standard Audio Unit

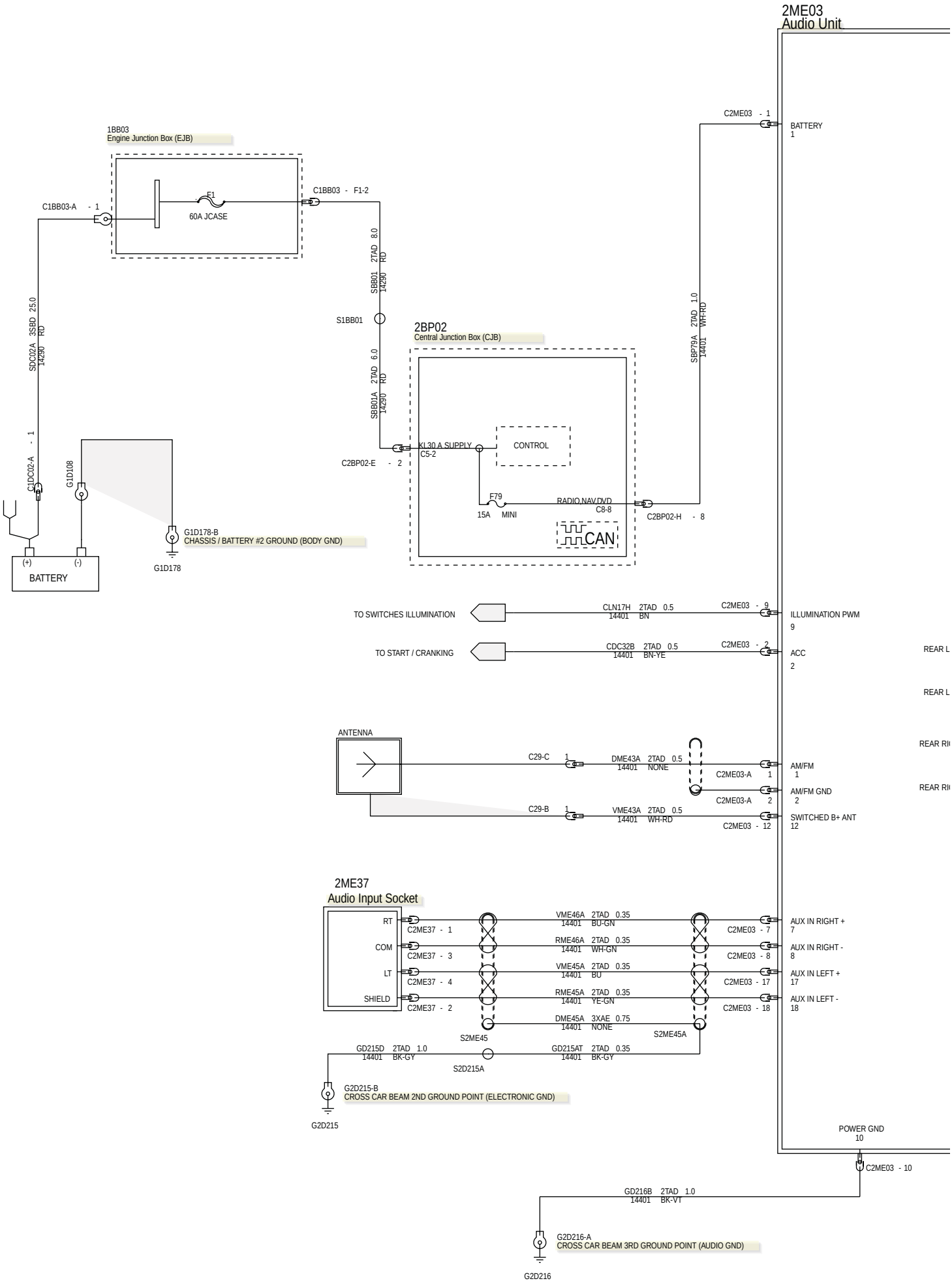

415-01-6 Audio System—Single Cab, RHD 4WD/RHD RWD, Vehicles With: Single DIN Standard Audio Unit

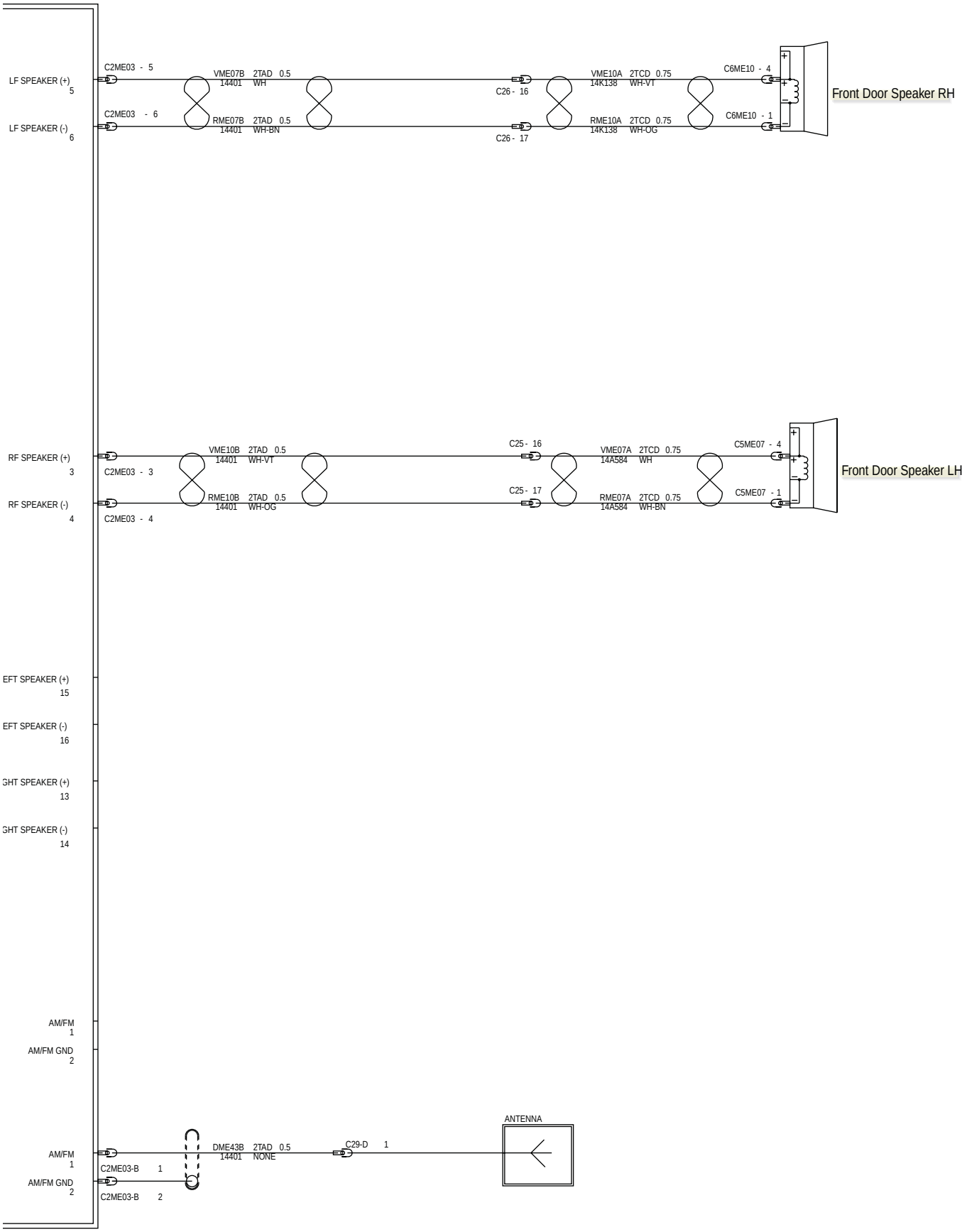

415-01-7 Audio System—Double Cab, LHD 4WD/LHD RWD, Vehicles With: Single DIN Standard Audio Unit

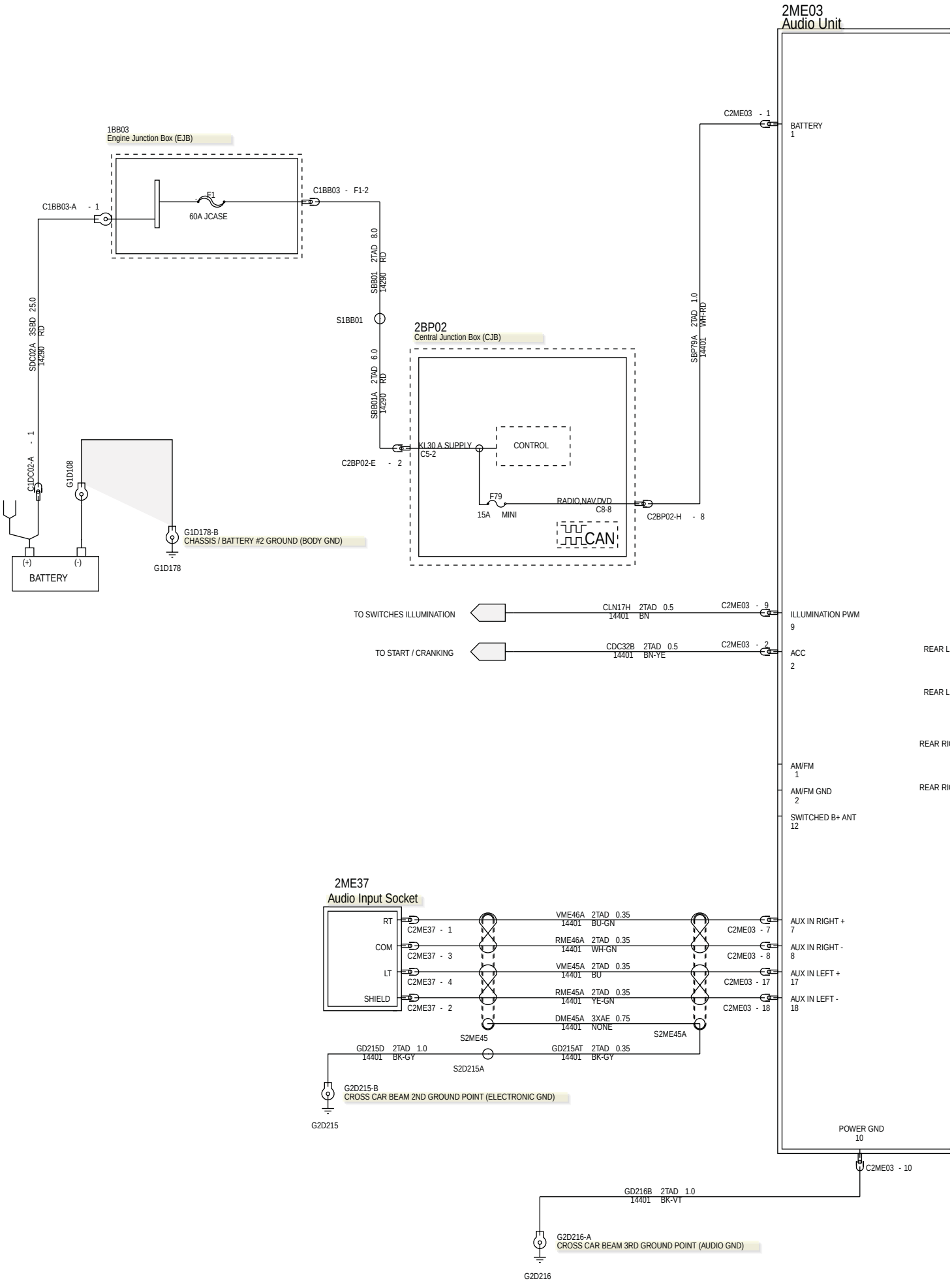

415-01-8 Audio System—Double Cab, LHD 4WD/LHD RWD, Vehicles With: Single DIN Standard Audio Unit

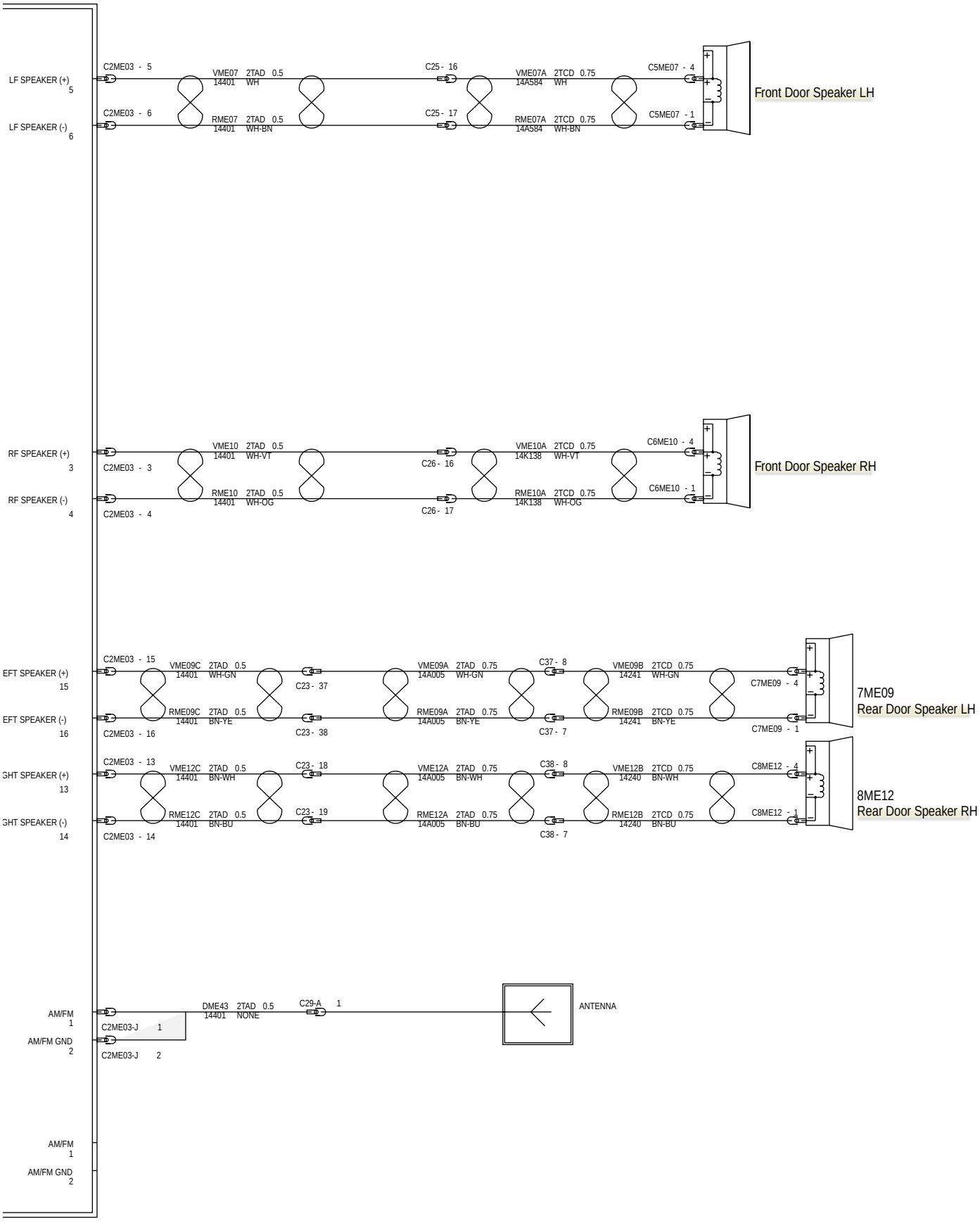

415-01-9 Audio System—Double Cab, RHD 4WD/RHD RWD, Vehicles With: Single DIN Standard Audio Unit

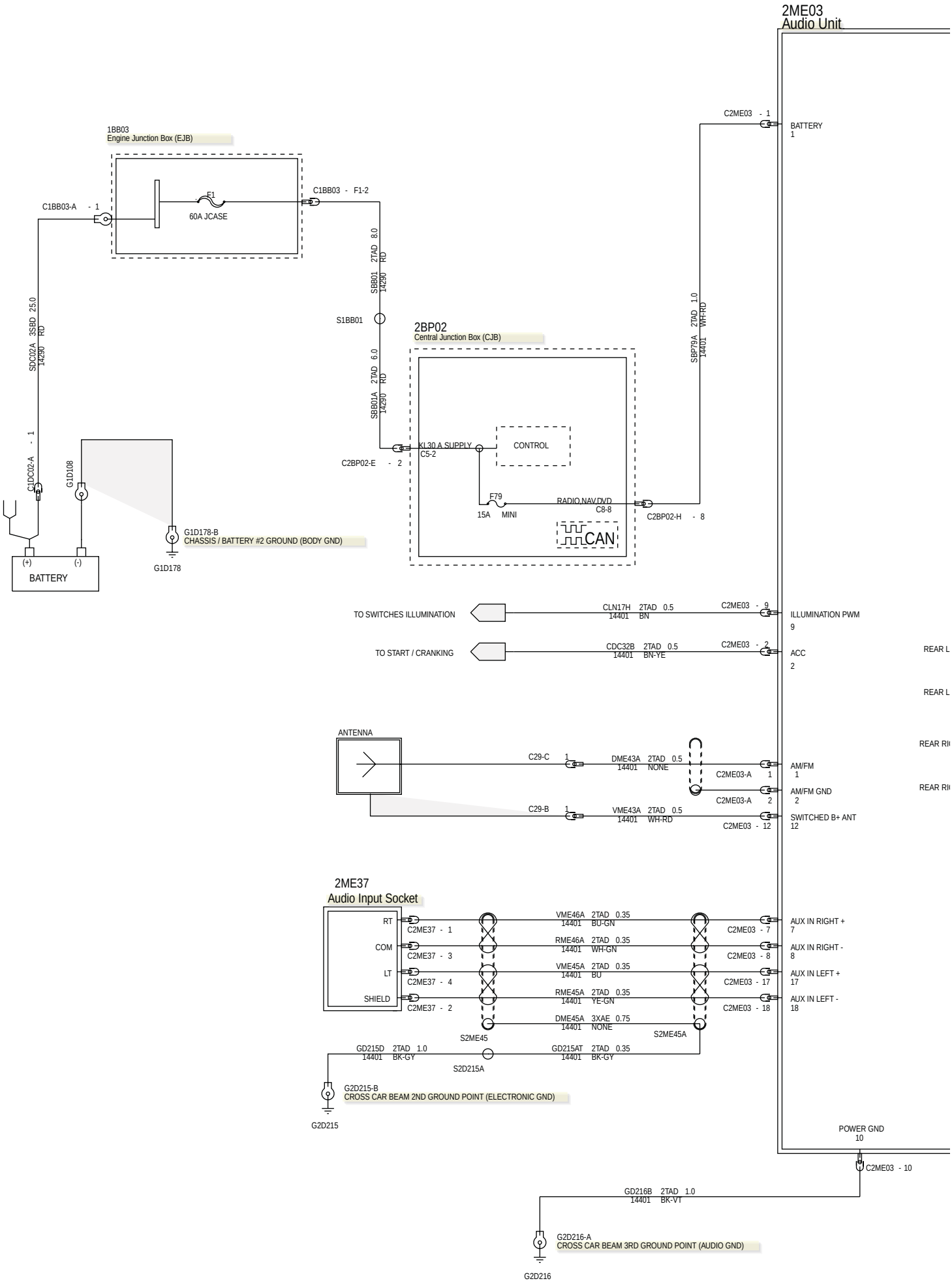

415-01-10 Audio System—Double Cab, RHD 4WD/RHD RWD, Vehicles With: Single DIN Standard Audio Unit

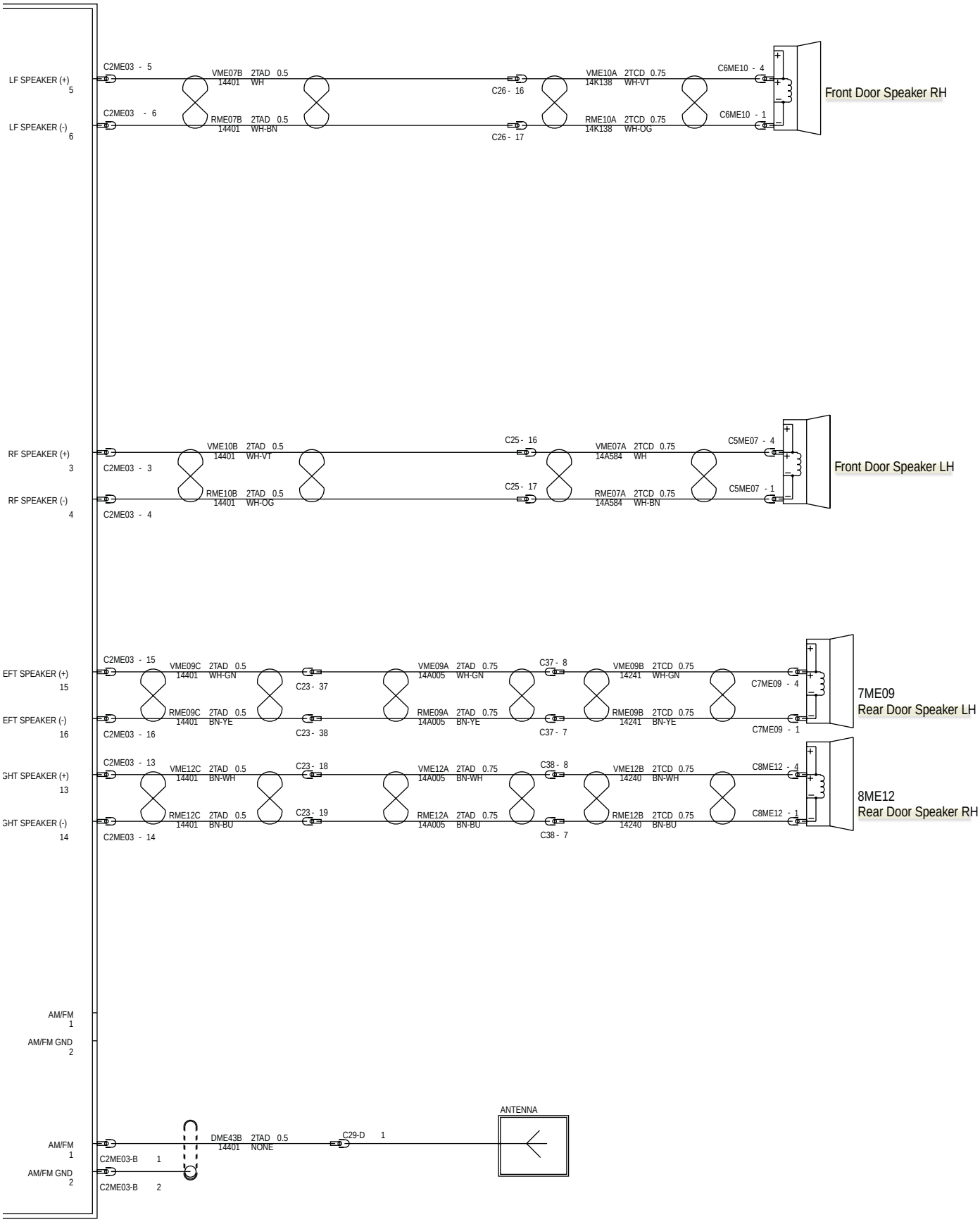

415-01-11 Audio System—Super Cab, LHD 4WD/LHD RWD, Vehicles With: Single DIN Standard Audio Unit

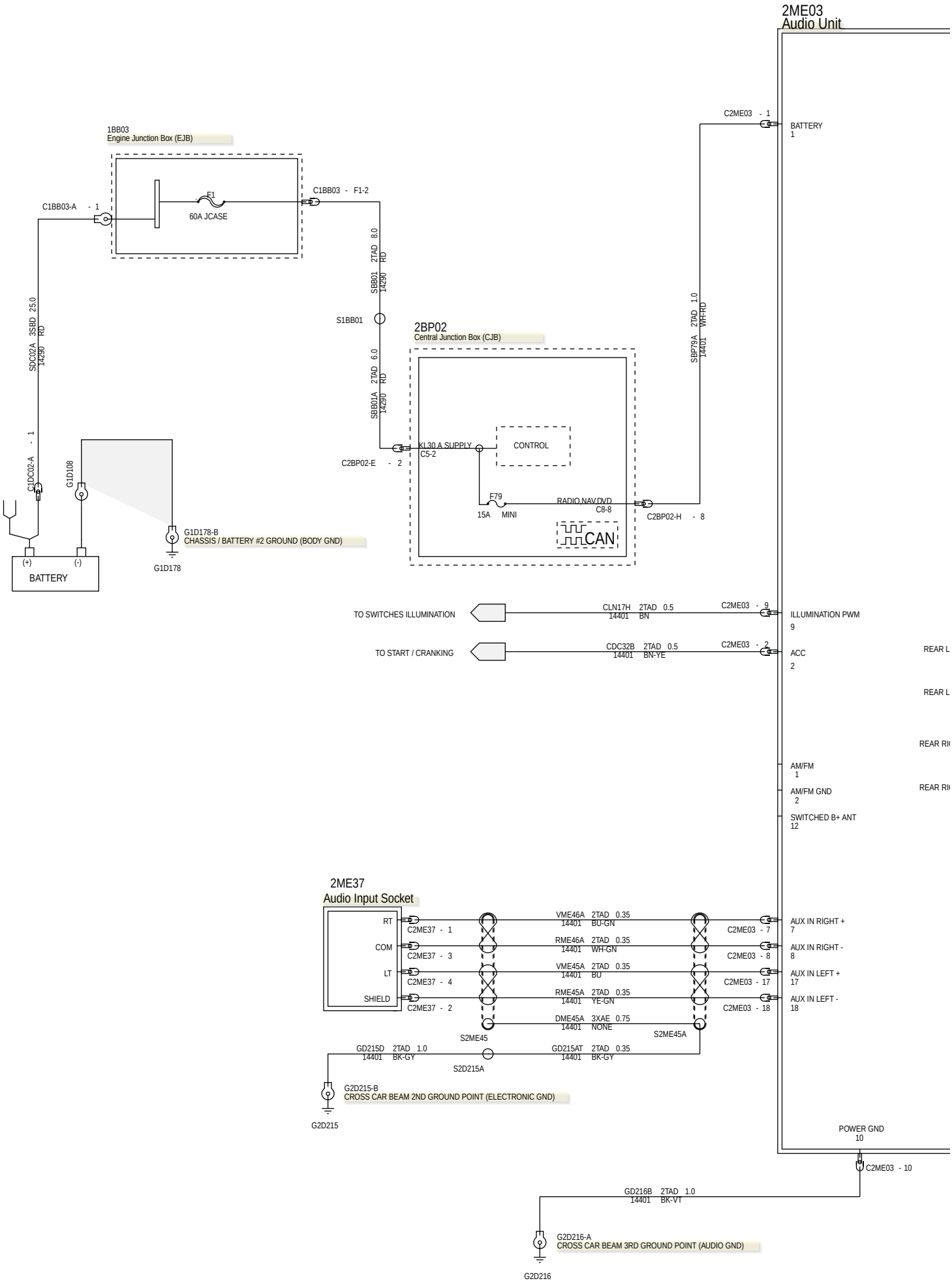

415-01-12 Audio System—Super Cab, LHD 4WD/LHD RWD, Vehicles With: Single DIN Standard Audio Unit

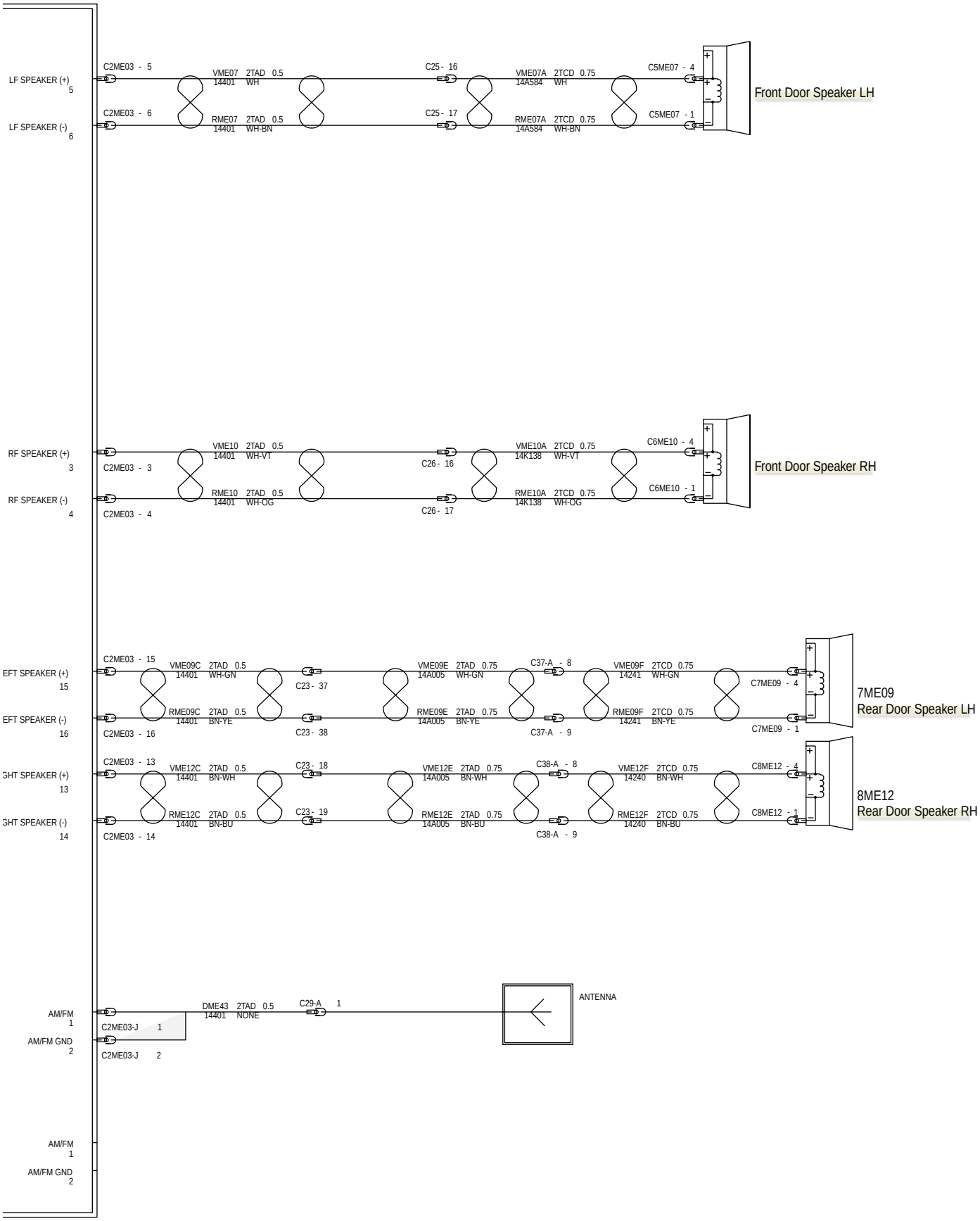

415-01-13 Audio System—Super Cab, RHD 4WD/RHD RWD, Vehicles With: Single DIN Standard Audio Unit

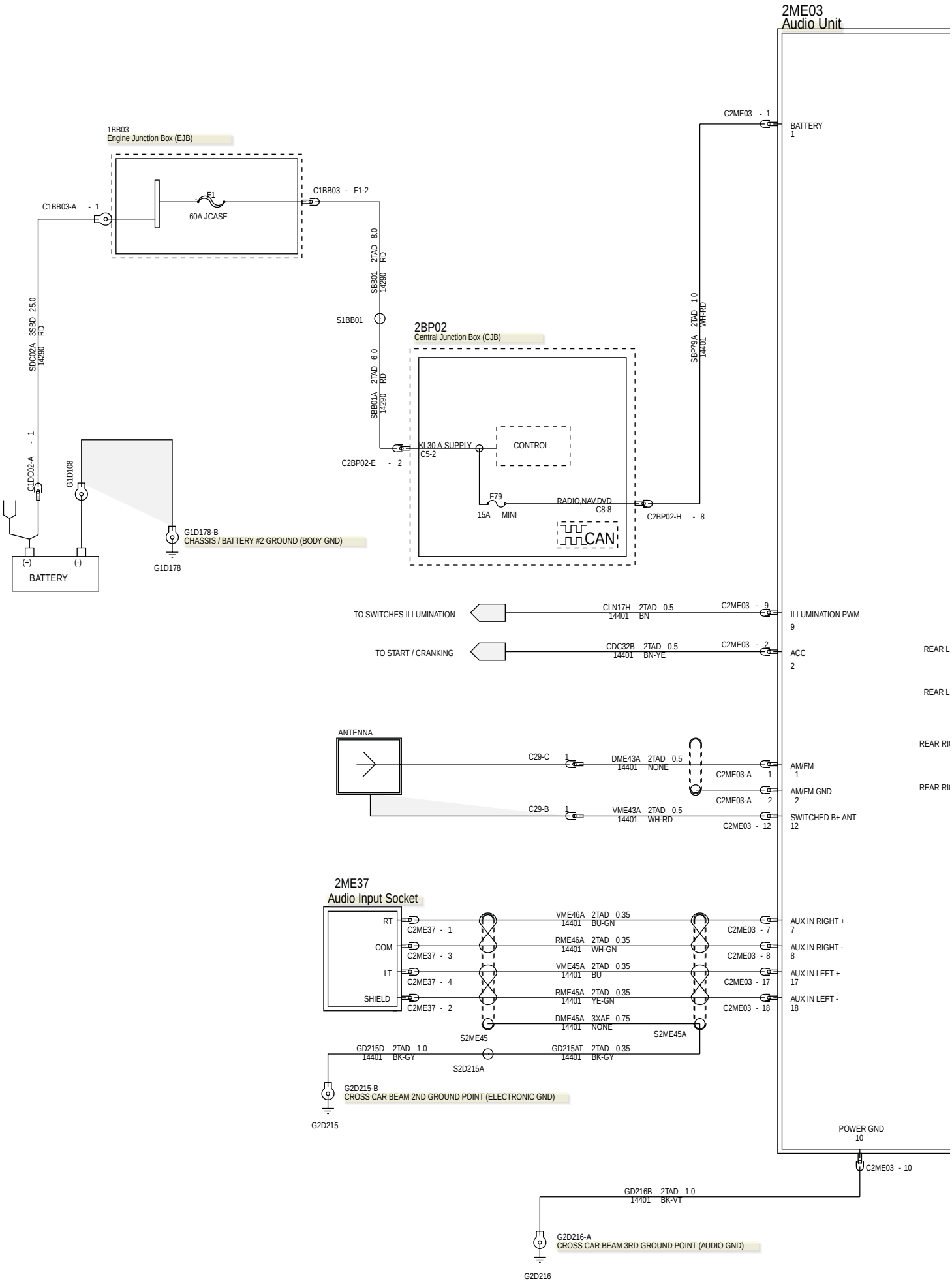

415-01-14 Audio System—Super Cab, RHD 4WD/RHD RWD, Vehicles With: Single DIN Standard Audio Unit

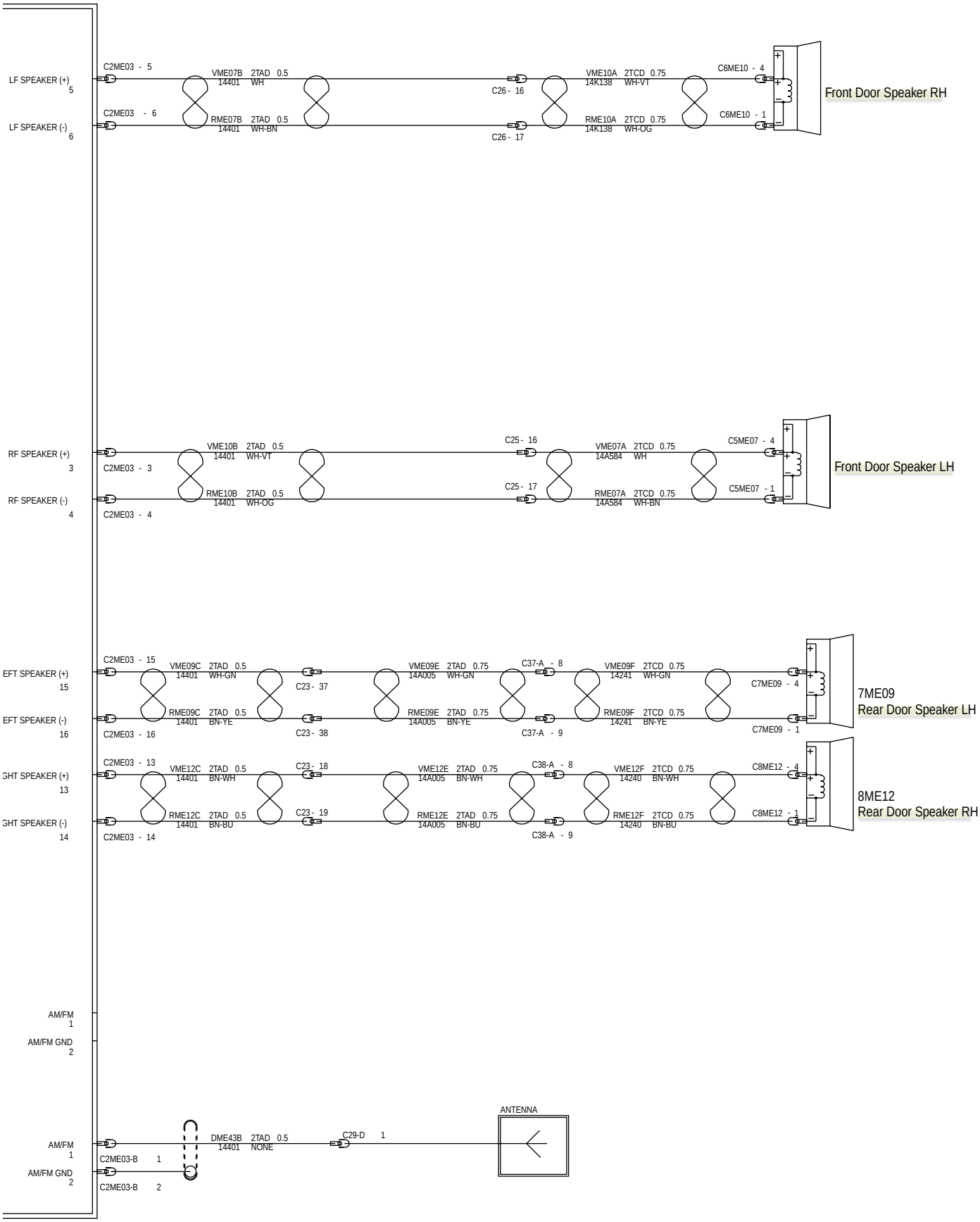

415-01-15 Audio System—Single Cab, LHD 4WD/LHD RWD, Vehicles With: Bluetooth and Voice Control

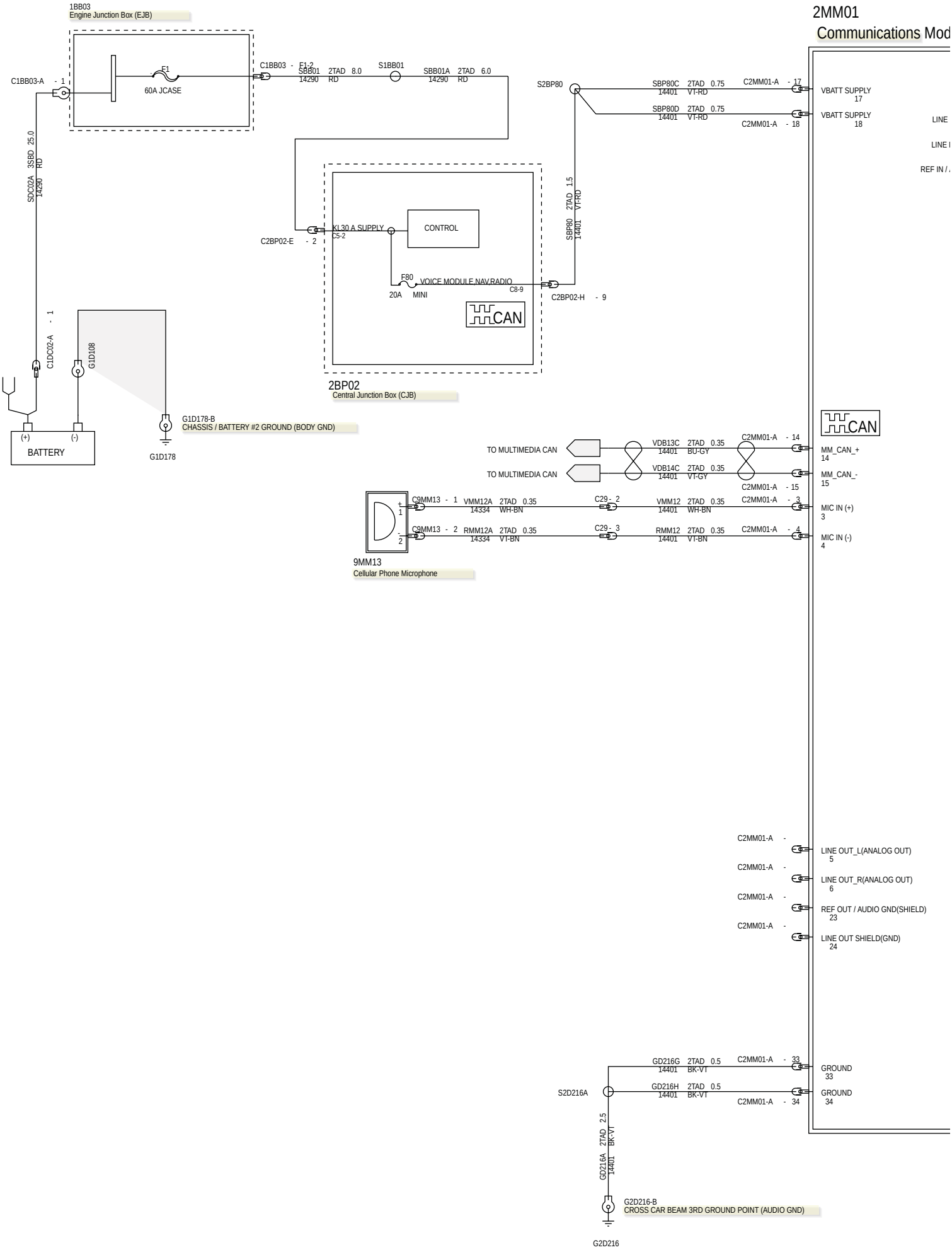

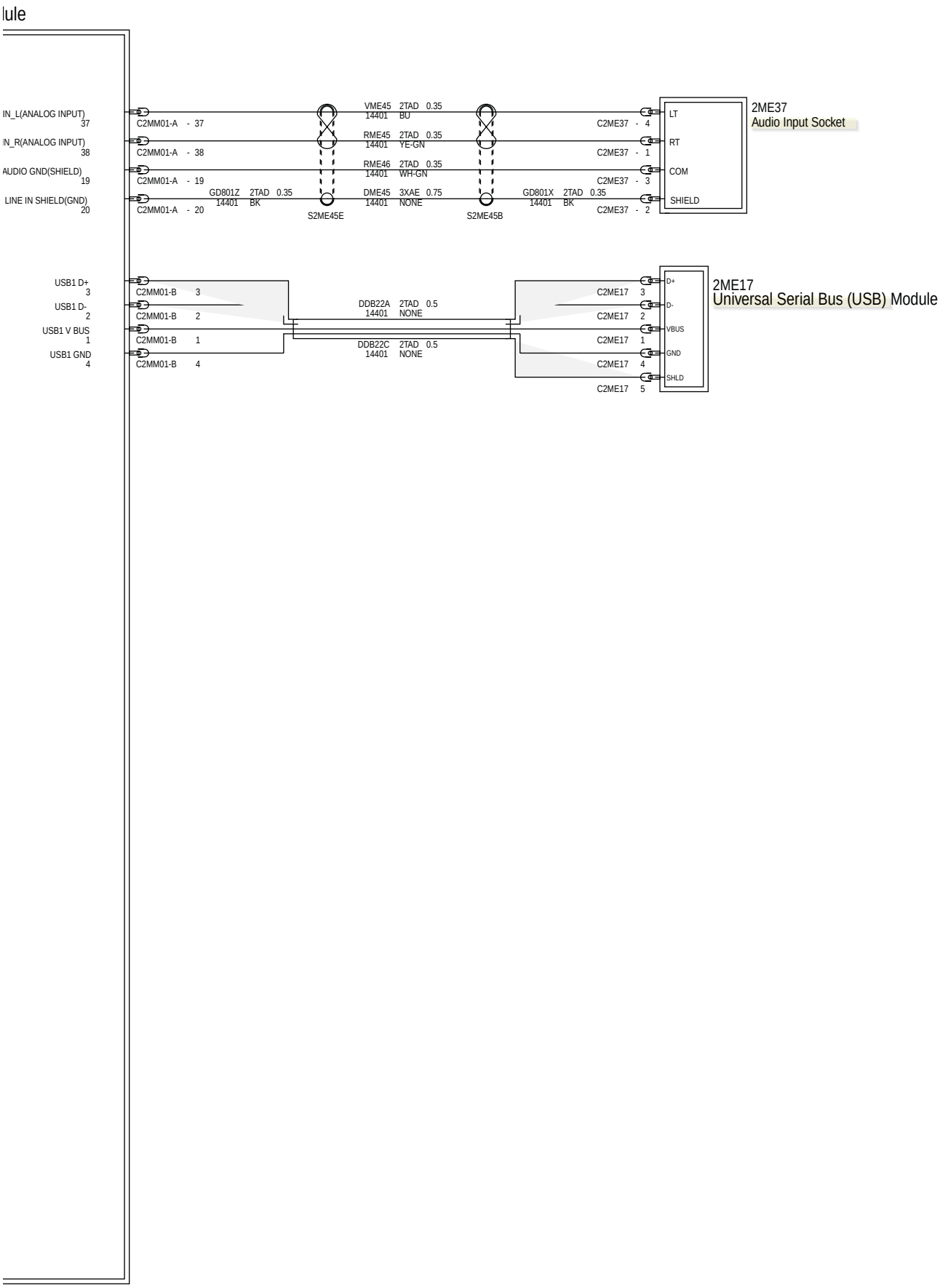
lule
IN_L(ANALOG INPUT)
37
IN_R(ANALOG INPUT)
38
AUDIO GND(SHIELD)
19
LINE IN SHIELD(GND)
20
C2MM01-A - 37
C2MM01-A - 38
C2MM01-A - 19
C2MM01-A - 20
GD801Z 2TAD 0.35
14401 BK
S2ME45E
VME45 2TAD 0.35
14401 BU
RME45 2TAD 0.35
14401 YE-GN
RME46 2TAD 0.35
14401 WH-GN
DME45 3XAE 0.75
14401 NONE
S2ME45B
GD801X 2TAD 0.35
14401 BK
C2ME37 - 4
C2ME37 - 1
C2ME37 - 3
C2ME37 - 2
LT
RT
COM
SHIELD
2ME37
Audio Input Socket
USB1 D+
3
USB1 D-
2
USB1 V BUS
1
USB1 GND
4
C2MM01-B 3
C2MM01-B 2
C2MM01-B 1
C2MM01-B 4
DDB22A 2TAD 0.5
14401 NONE
DDB22C 2TAD 0.5
14401 NONE
C2ME17 3
C2ME17 2
C2ME17 1
C2ME17 4
C2ME17 5
D+
D-
VBUS
GND
SHLD
2ME17
Universal Serial Bus (USB) Module

415-01-17 Audio System—Single Cab, LHD 4WD/LHD RWD, Vehicles With: Bluetooth and Voice Control

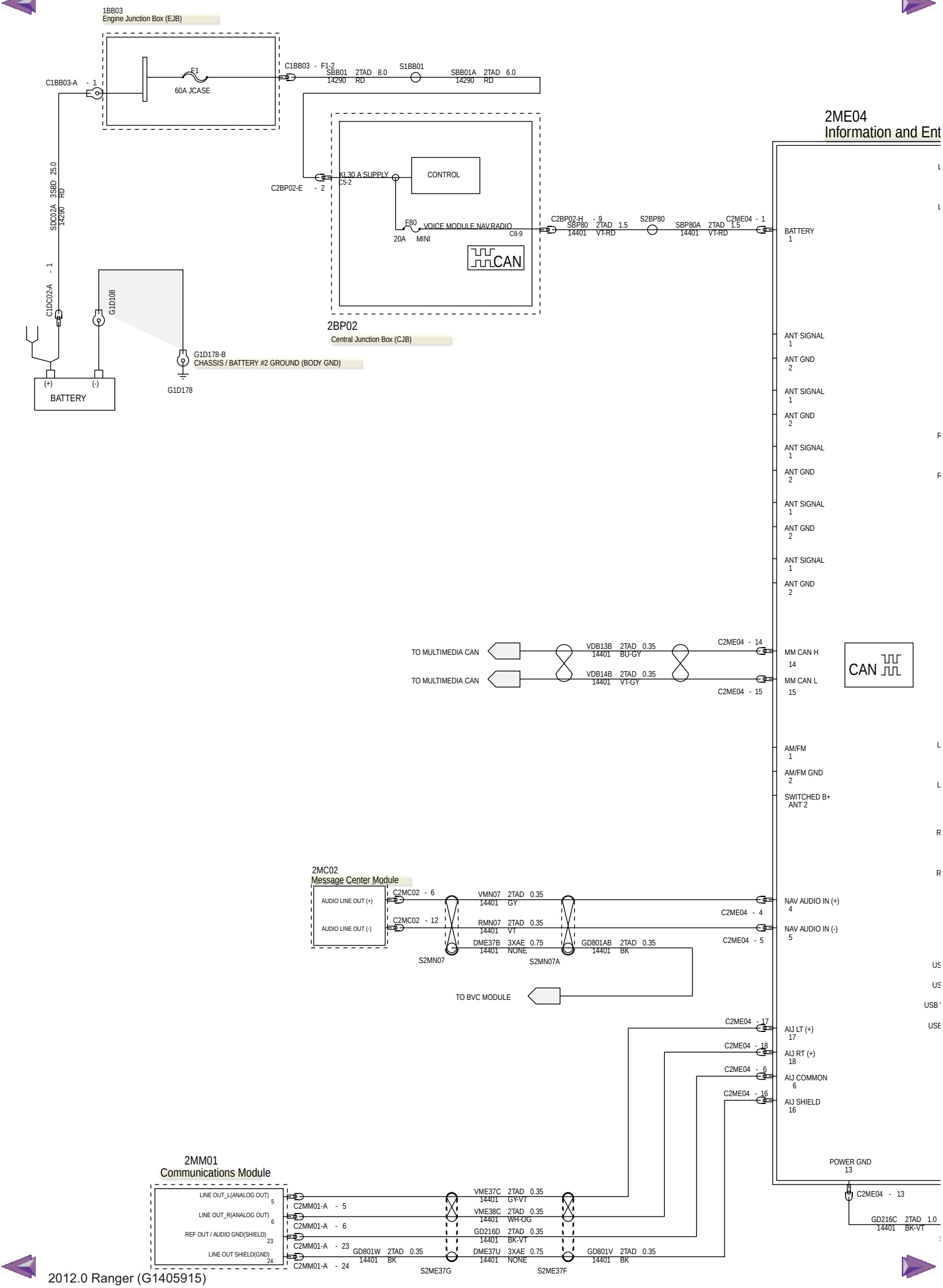

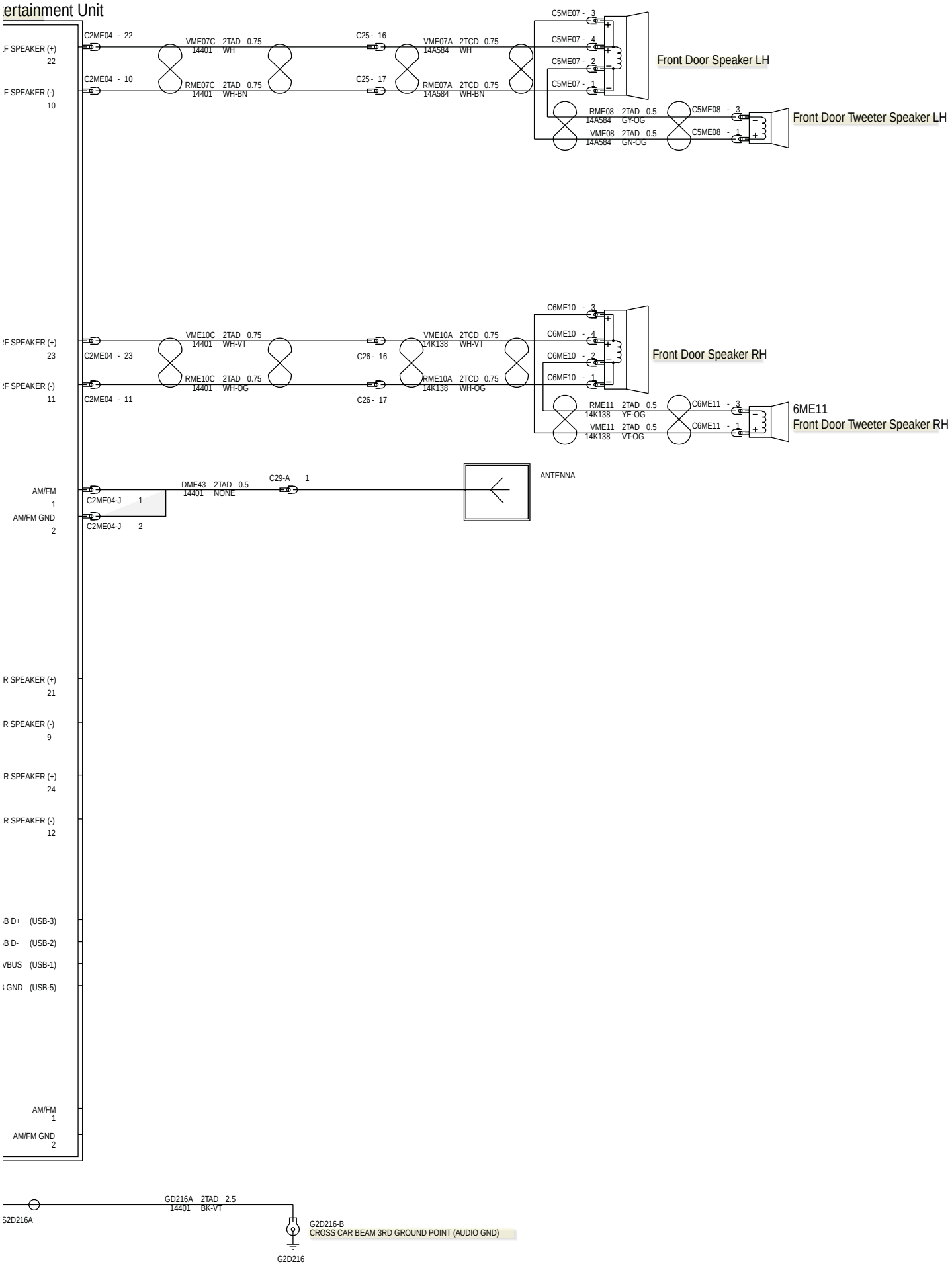
ertainment Unit
F SPEAKER (+)
22
F SPEAKER (-)
10
C2ME04 - 22
C2ME04 - 10
VME07C 2TAD 0.75
14401 WH
RME07C 2TAD 0.75
14401 WH-BN
C25 - 16
C25 - 17
VME07A 2TCD 0.75
14A584 WH
RME07A 2TCD 0.75
14A584 WH-BN
C5ME07 - 3
C5ME07 - 4
C5ME07 - 2
C5ME07 - 1
Front Door Speaker LH
RME08 2TAD 0.5
14A584 GY-OG
VME08 2TAD 0.5
14A584 GN-OG
C5ME08 - 3
C5ME08 - 1
Front Door Tweeter Speaker LH
F SPEAKER (+)
23
F SPEAKER (-)
11
C2ME04 - 23
C2ME04 - 11
VME10C 2TAD 0.75
14401 WH-VT
RME10C 2TAD 0.75
14401 WH-OG
C26 - 16
C26 - 17
VME10A 2TCD 0.75
14K138 WH-VT
RME10A 2TCD 0.75
14K138 WH-OG
C6ME10 - 3
C6ME10 - 4
C6ME10 - 2
C6ME10 - 1
Front Door Speaker RH
RME11 2TAD 0.5
14K138 YE-OG
VME11 2TAD 0.5
14K138 VT-OG
C6ME11 - 3
C6ME11 - 1
6ME11
Front Door Tweeter Speaker RH
AM/FM
1
AM/FM GND
2
C2ME04-J 1
C2ME04-J 2
DME43 2TAD 0.5
14401 NONE
C29-A 1
ANTENNA
R SPEAKER (+)
21
R SPEAKER (-)
9
R SPEAKER (+)
24
R SPEAKER (-)
12
B D+ (USB-3)
B D- (USB-2)
VBUS (USB-1)
GND (USB-5)
AM/FM
1
AM/FM GND
2
S2D216A
GD216A 2TAD 2.5
14401 BK-VT
G2D216-B
CROSS CAR BEAM 3RD GROUND POINT (AUDIO GND)
G2D216

415-01-19 Audio System—Single Cab, LHD 4WD/LHD RWD, Vehicles Without: Bluetooth and Voice Control

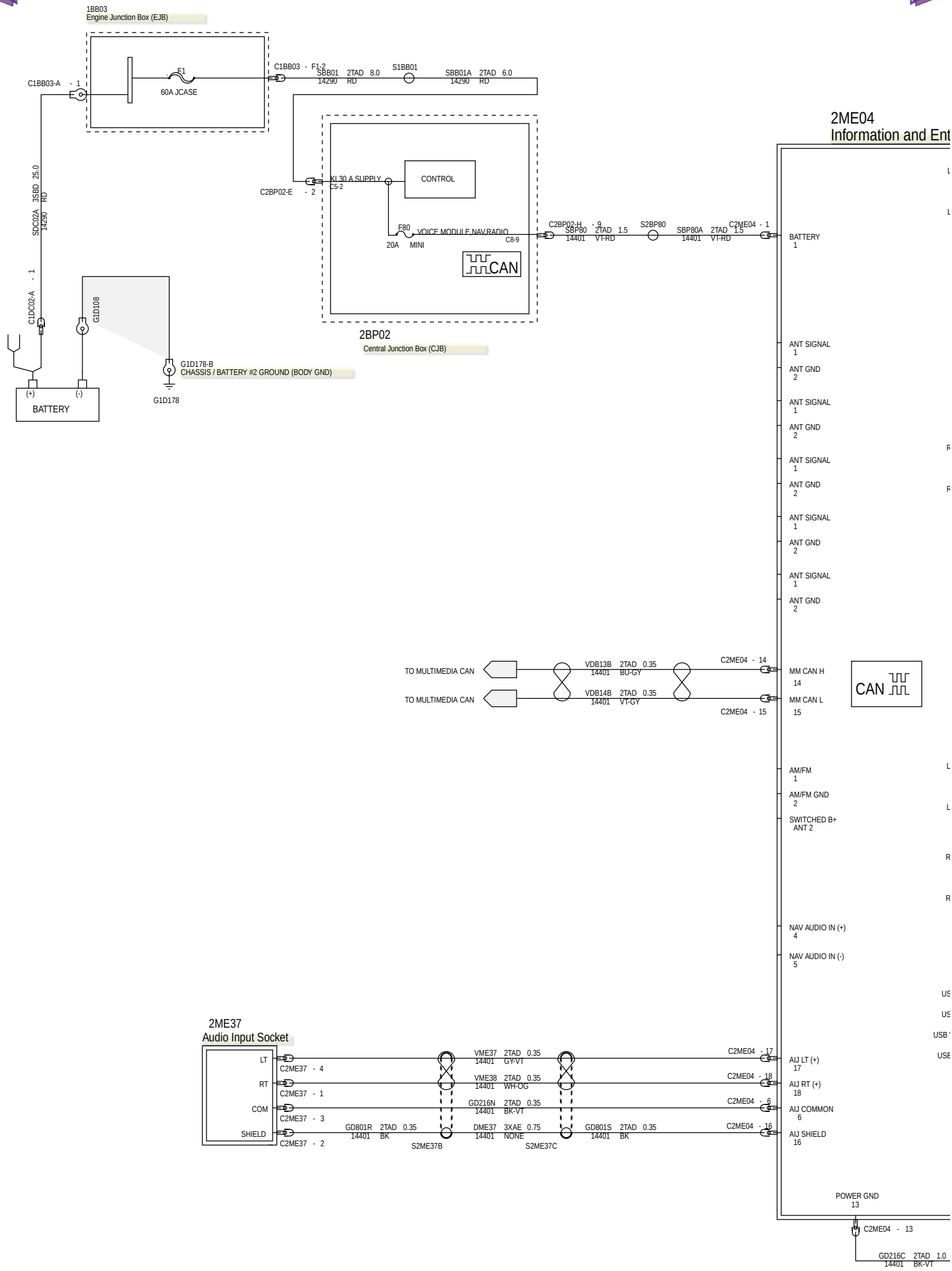

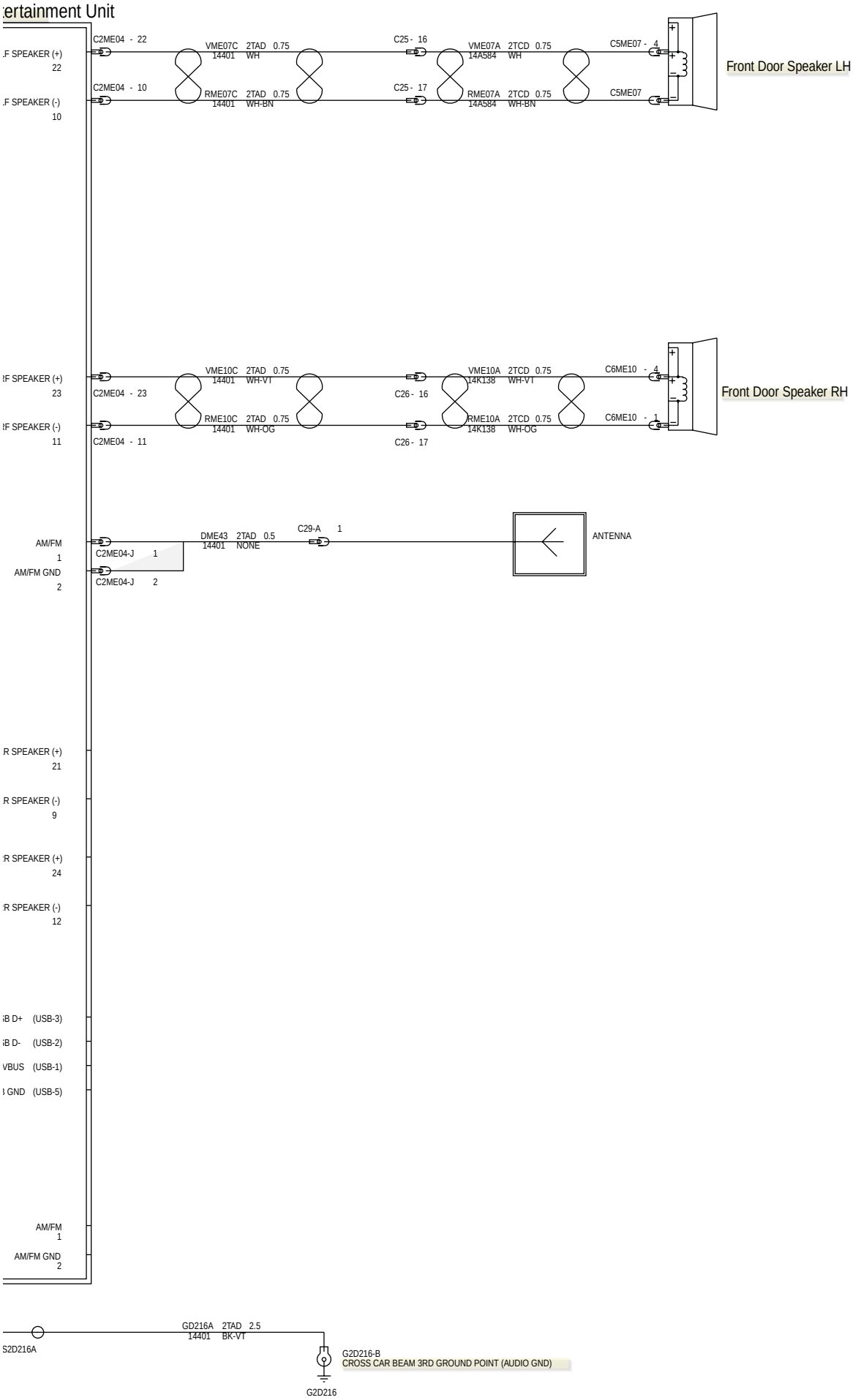
ertainment Unit
F SPEAKER (+)
22
F SPEAKER (-)
10
C2ME04 - 22
C2ME04 - 10
VME07C 2TAD 0.75
14401 WH
RME07C 2TAD 0.75
14401 WH-BN
C25 - 16
C25 - 17
VME07A 2TCD 0.75
14A584 WH
RME07A 2TCD 0.75
14A584 WH-BN
C5ME07 - 4
C5ME07
Front Door Speaker LH
F SPEAKER (+)
23
F SPEAKER (-)
11
C2ME04 - 23
C2ME04 - 11
VME10C 2TAD 0.75
14401 WH-VT
RME10C 2TAD 0.75
14401 WH-OG
C26 - 16
C26 - 17
VME10A 2TCD 0.75
14K138 WH-VT
RME10A 2TCD 0.75
14K138 WH-OG
C6ME10 - 4
C6ME10 - 1
Front Door Speaker RH
AM/FM
1
AM/FM GND
2
C2ME04-J 1
C2ME04-J 2
DME43 2TAD 0.5
14401 NONE
C29-A 1
ANTENNA
R SPEAKER (+)
21
R SPEAKER (-)
9
R SPEAKER (+)
24
R SPEAKER (-)
12
B D+ (USB-3)
B D- (USB-2)
VBUS (USB-1)
GND (USB-5)
AM/FM
1
AM/FM GND
2
S2D216A
GD216A 2TAD 2.5
14401 BK-VT
G2D216-B
CROSS CAR BEAM 3RD GROUND POINT (AUDIO GND)
G2D216

415-01-21 Audio System—Double Cab, LHD 4WD/LHD RWD, Vehicles With: Bluetooth and Voice Control

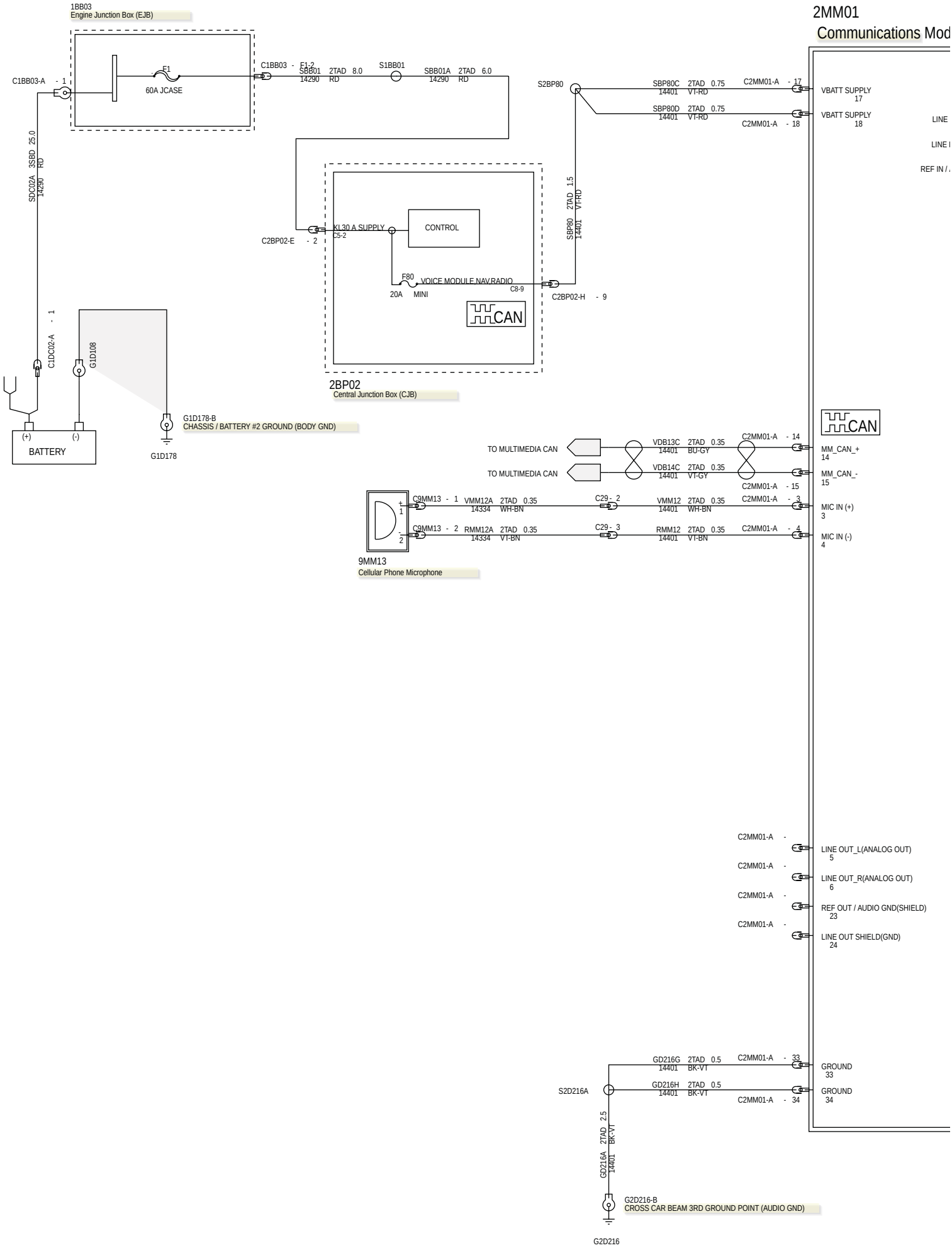

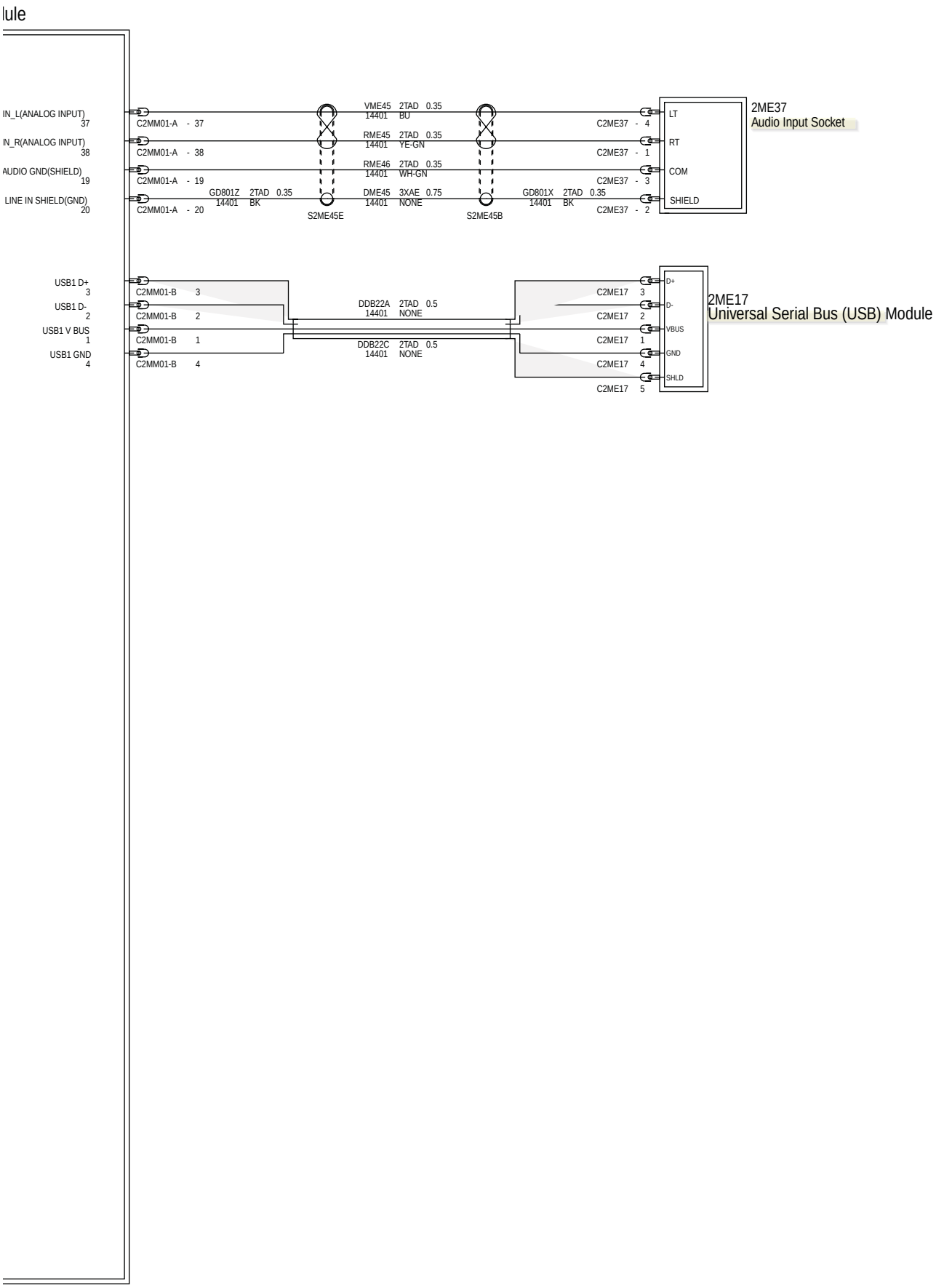
lule
IN_L(ANALOG INPUT)
37
IN_R(ANALOG INPUT)
38
AUDIO GND(SHIELD)
19
LINE IN SHIELD(GND)
20
C2MM01-A - 37
C2MM01-A - 38
C2MM01-A - 19
C2MM01-A - 20
GD801Z 2TAD 0.35
14401 BK
S2ME45E
VME45 2TAD 0.35
14401 BU
RME45 2TAD 0.35
14401 YE-GN
RME46 2TAD 0.35
14401 WH-GN
DME45 3XAE 0.75
14401 NONE
S2ME45B
GD801X 2TAD 0.35
14401 BK
C2ME37 - 4
C2ME37 - 1
C2ME37 - 3
C2ME37 - 2
LT
RT
COM
SHIELD
2ME37
Audio Input Socket
USB1 D+
3
USB1 D-
2
USB1 V BUS
1
USB1 GND
4
C2MM01-B 3
C2MM01-B 2
C2MM01-B 1
C2MM01-B 4
DDB22A 2TAD 0.5
14401 NONE
DDB22C 2TAD 0.5
14401 NONE
C2ME17 3
C2ME17 2
C2ME17 1
C2ME17 4
C2ME17 5
D+
D-
VBUS
GND
SHLD
2ME17
Universal Serial Bus (USB) Module

415-01-23 Audio System—Double Cab, LHD 4WD/LHD RWD, Vehicles With: Bluetooth and Voice Control

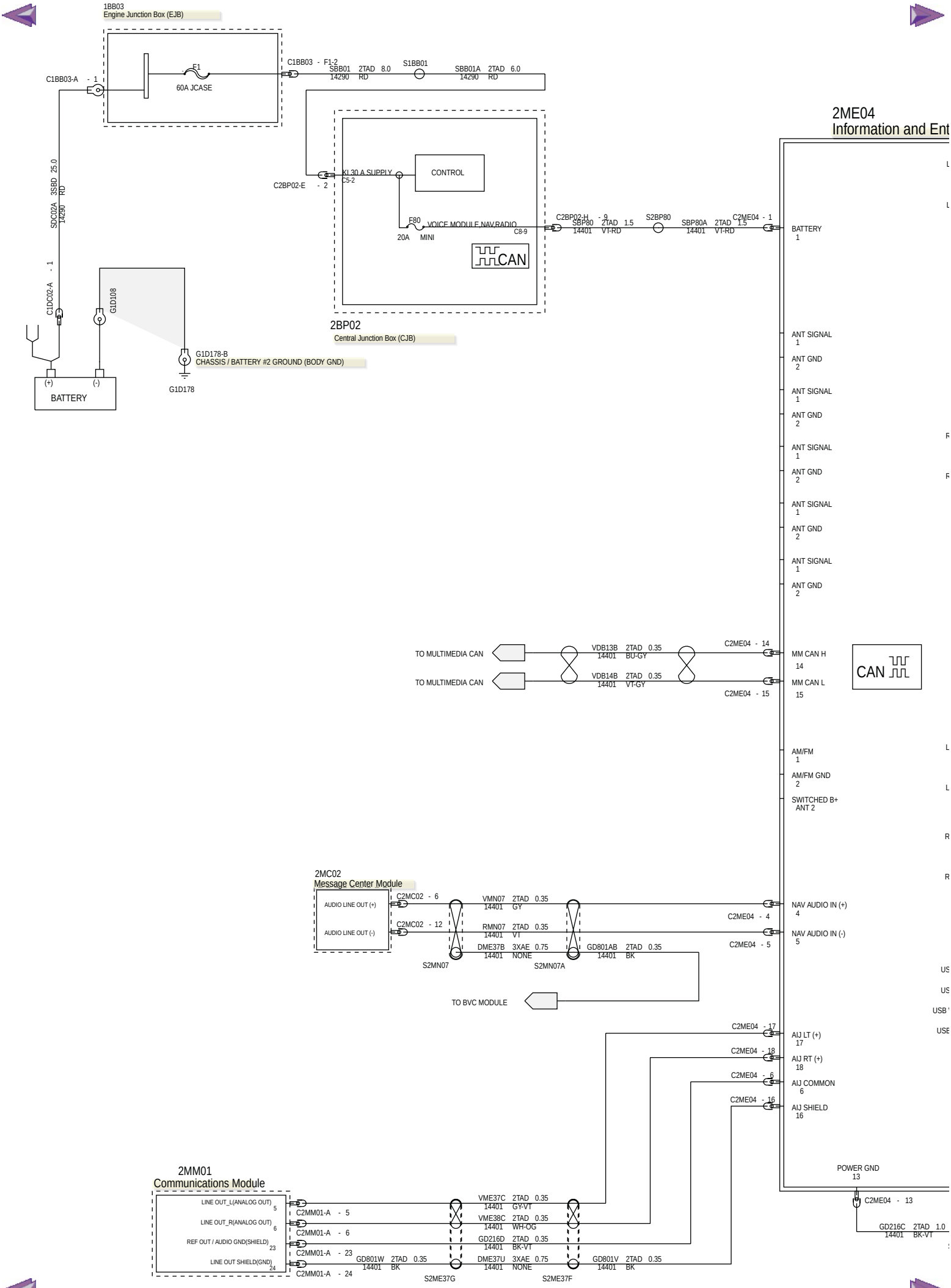

415-01-24 Audio System—Double Cab, LHD 4WD/LHD RWD, Vehicles With: Bluetooth and Voice Control

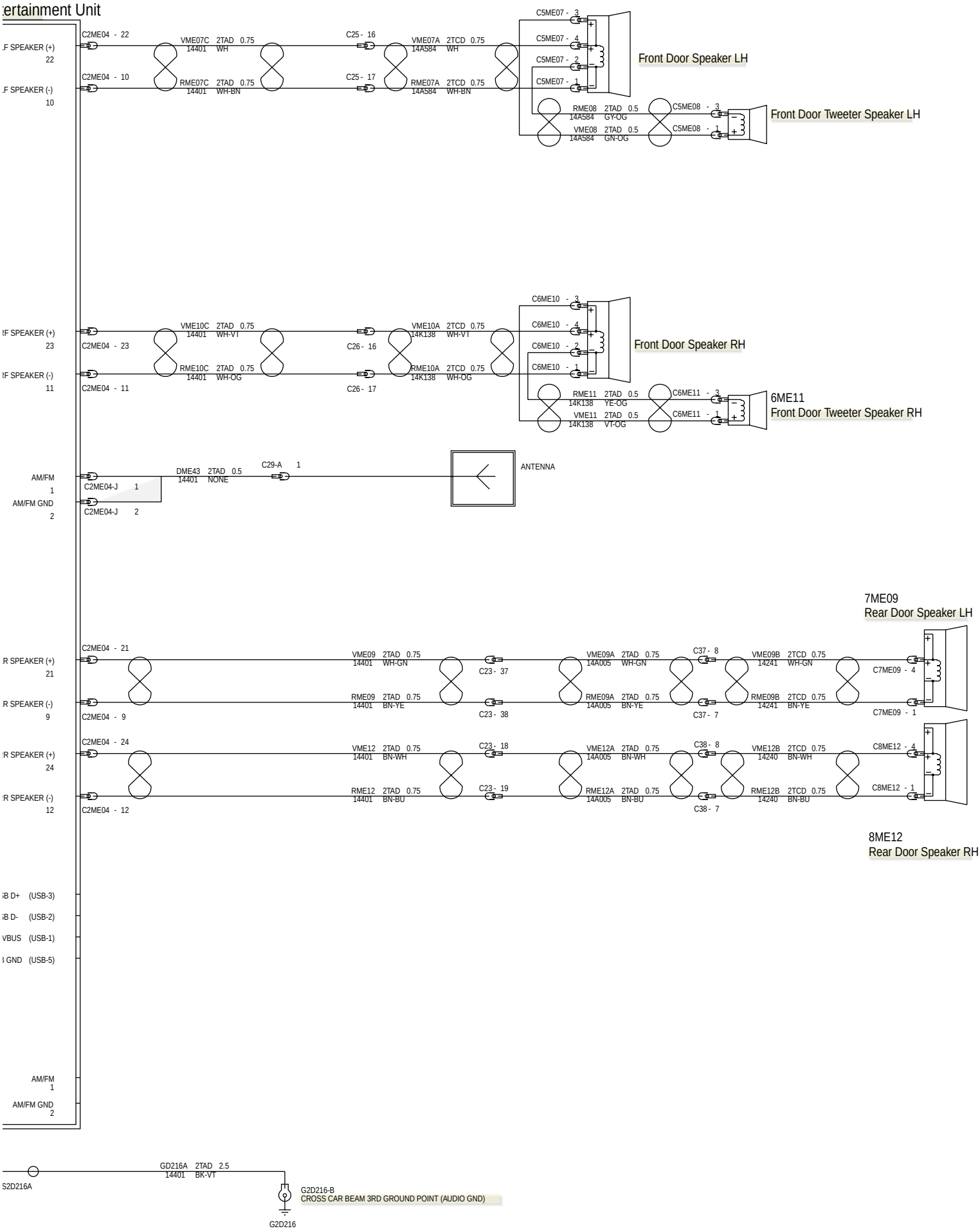

415-01-25 Audio System—Double Cab, LHD 4WD/LHD RWD, Vehicles Without: Bluetooth and Voice Control

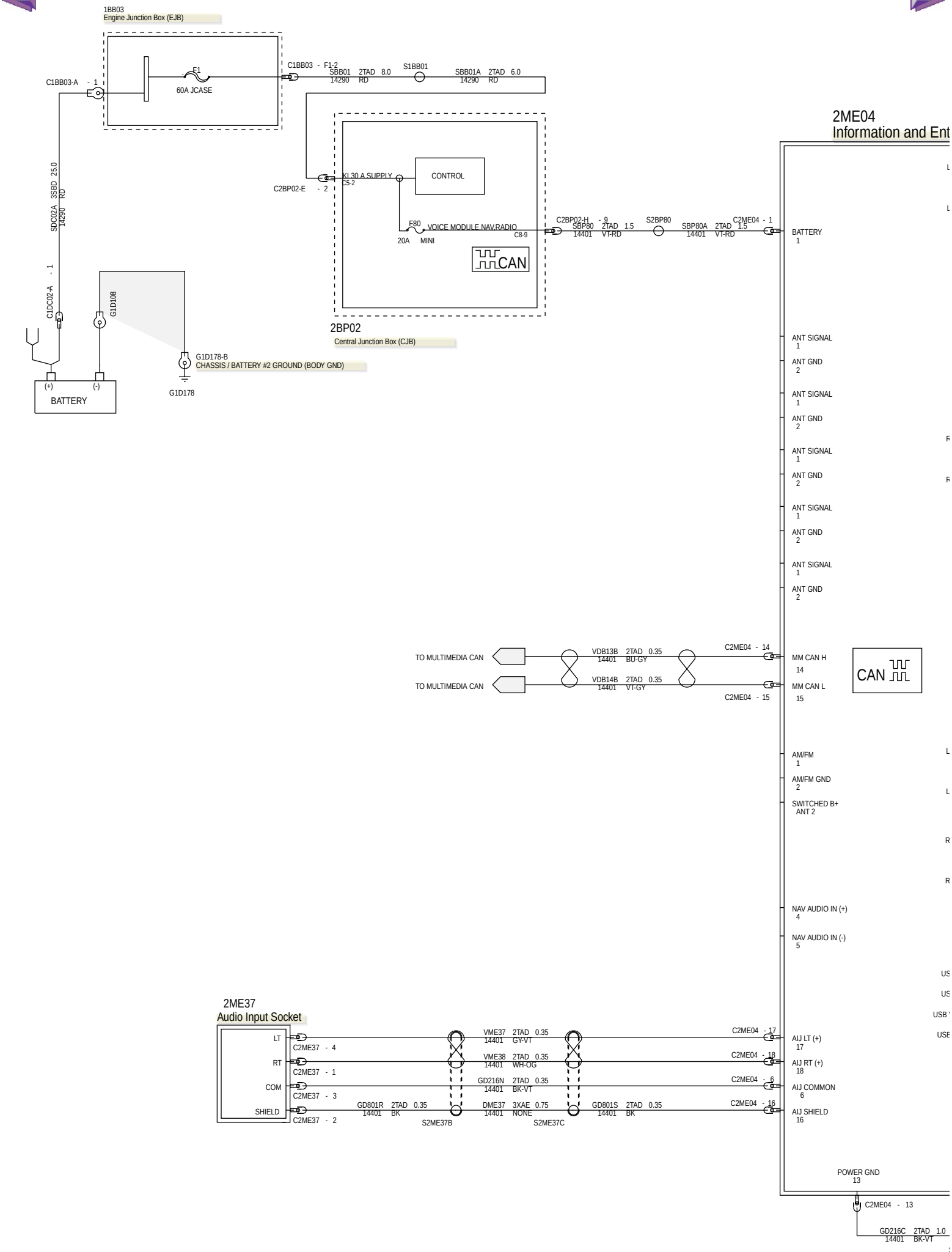

415-01-26 Audio System—Double Cab, LHD 4WD/LHD RWD, Vehicles Without: Bluetooth and Voice Control

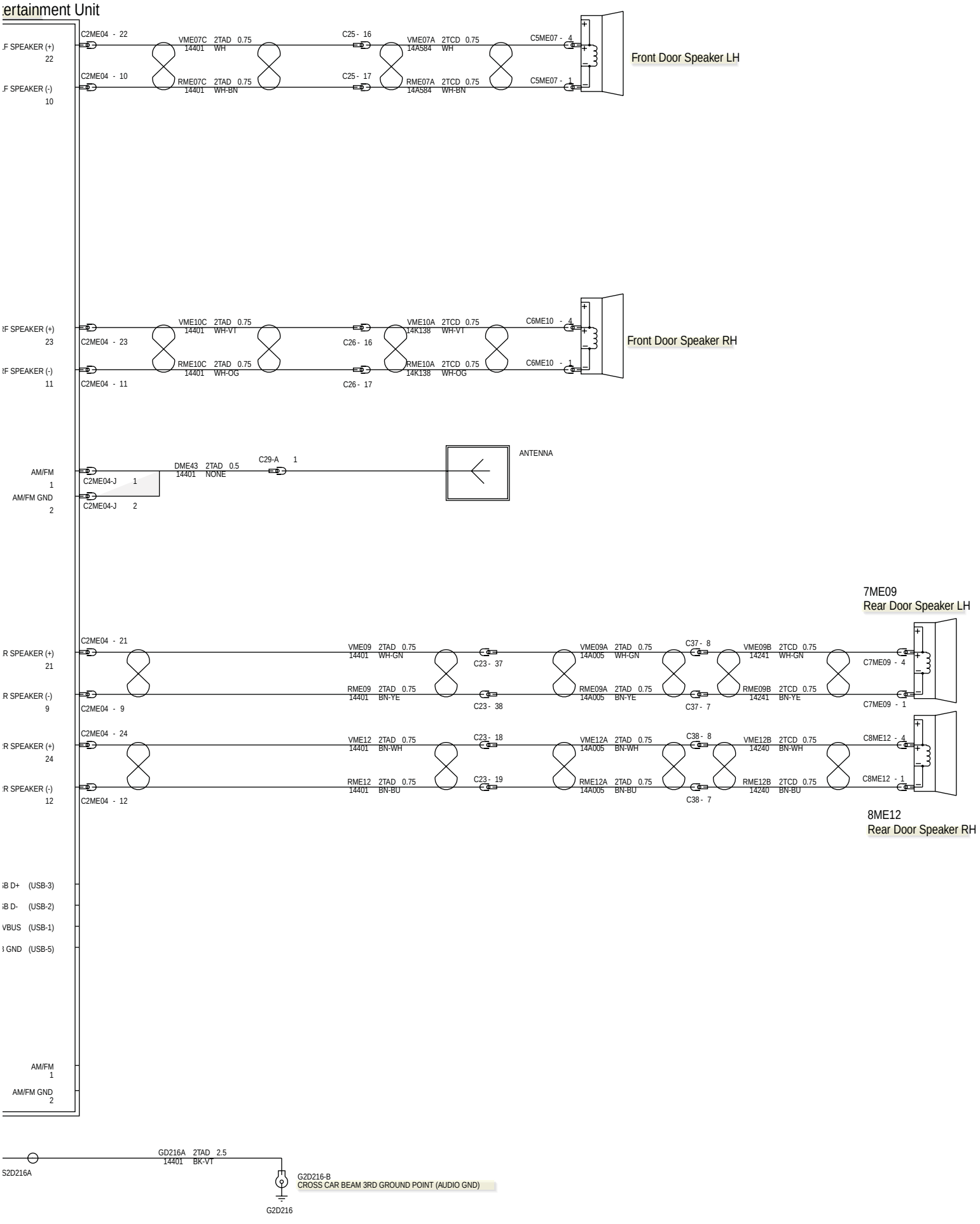

415-01-27 Audio System—Super Cab, LHD 4WD/LHD RWD, Vehicles With: Bluetooth and Voice Control

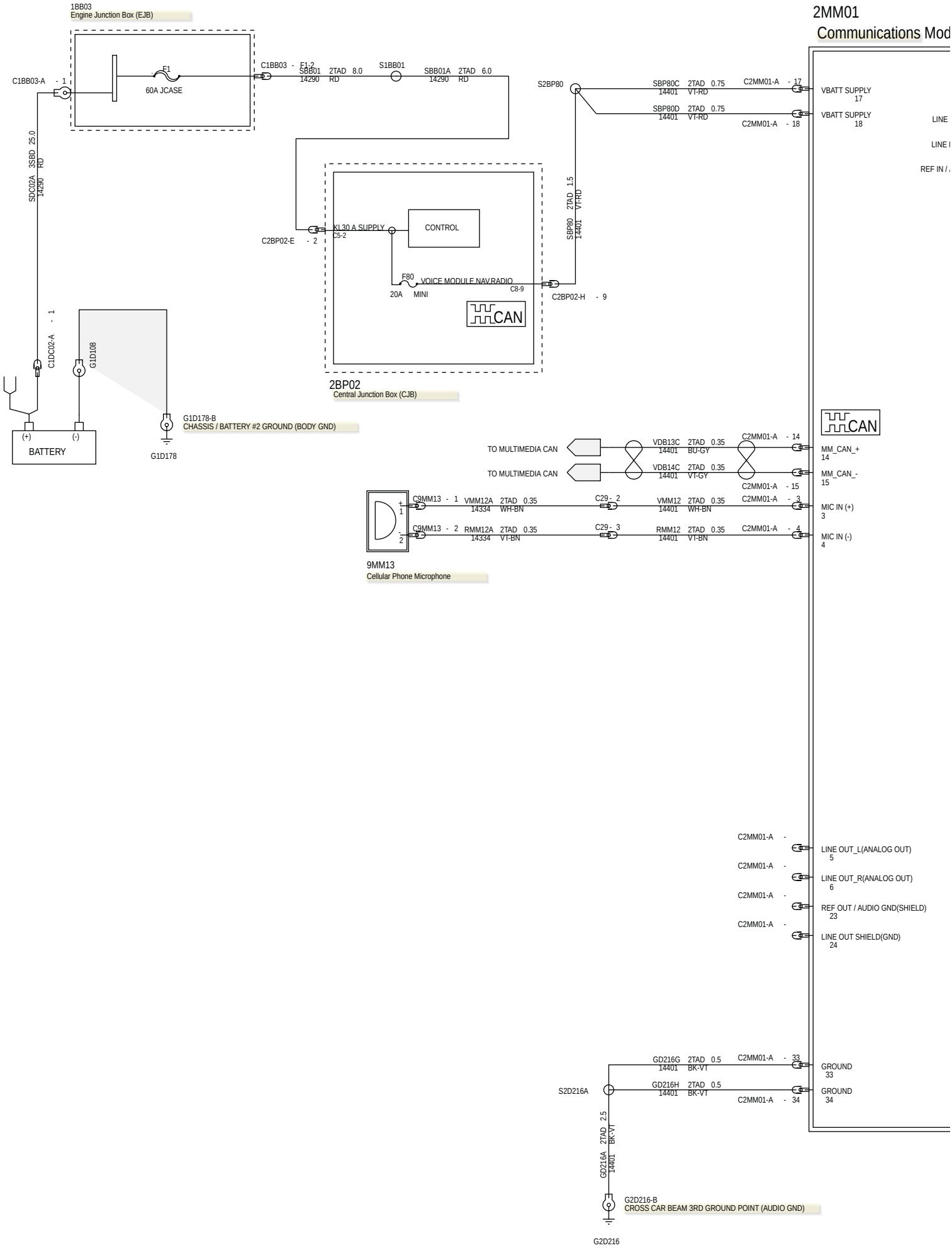

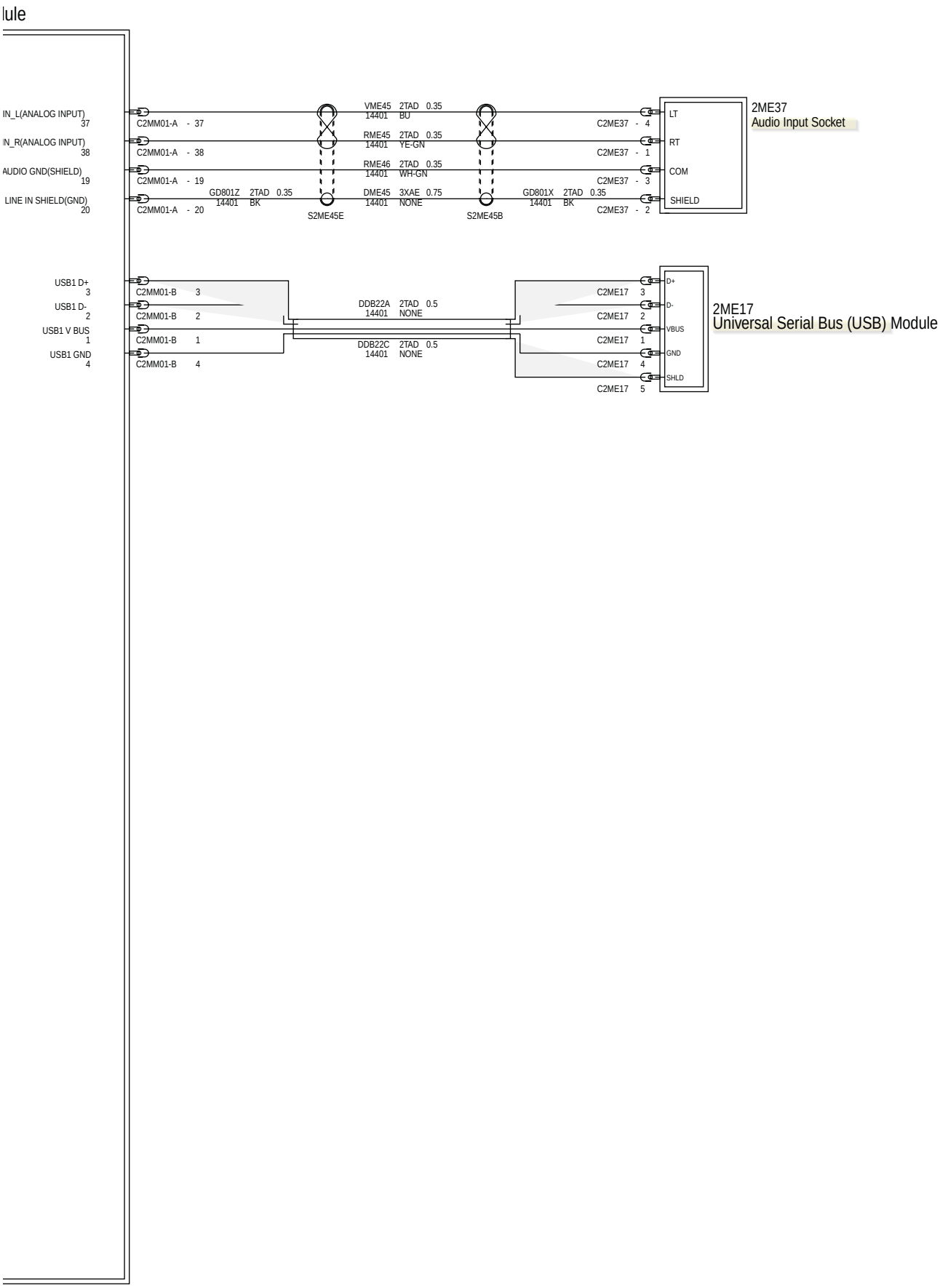
lule
IN_L(ANALOG INPUT)
37
IN_R(ANALOG INPUT)
38
AUDIO GND(SHIELD)
19
LINE IN SHIELD(GND)
20
C2MM01-A - 37
C2MM01-A - 38
C2MM01-A - 19
C2MM01-A - 20
GD801Z 2TAD 0.35
14401 BK
S2ME45E
VME45 2TAD 0.35
14401 BU
RME45 2TAD 0.35
14401 YE-GN
RME46 2TAD 0.35
14401 WH-GN
DME45 3XAE 0.75
14401 NONE
S2ME45B
GD801X 2TAD 0.35
14401 BK
C2ME37 - 4
C2ME37 - 1
C2ME37 - 3
C2ME37 - 2
LT
RT
COM
SHIELD
2ME37
Audio Input Socket
USB1 D+
3
USB1 D-
2
USB1 V BUS
1
USB1 GND
4
C2MM01-B 3
C2MM01-B 2
C2MM01-B 1
C2MM01-B 4
DDB22A 2TAD 0.5
14401 NONE
DDB22C 2TAD 0.5
14401 NONE
C2ME17 3
C2ME17 2
C2ME17 1
C2ME17 4
C2ME17 5
D+
D-
VBUS
GND
SHLD
2ME17
Universal Serial Bus (USB) Module

415-01-29 Audio System—Super Cab, LHD 4WD/LHD RWD, Vehicles With: Bluetooth and Voice Control

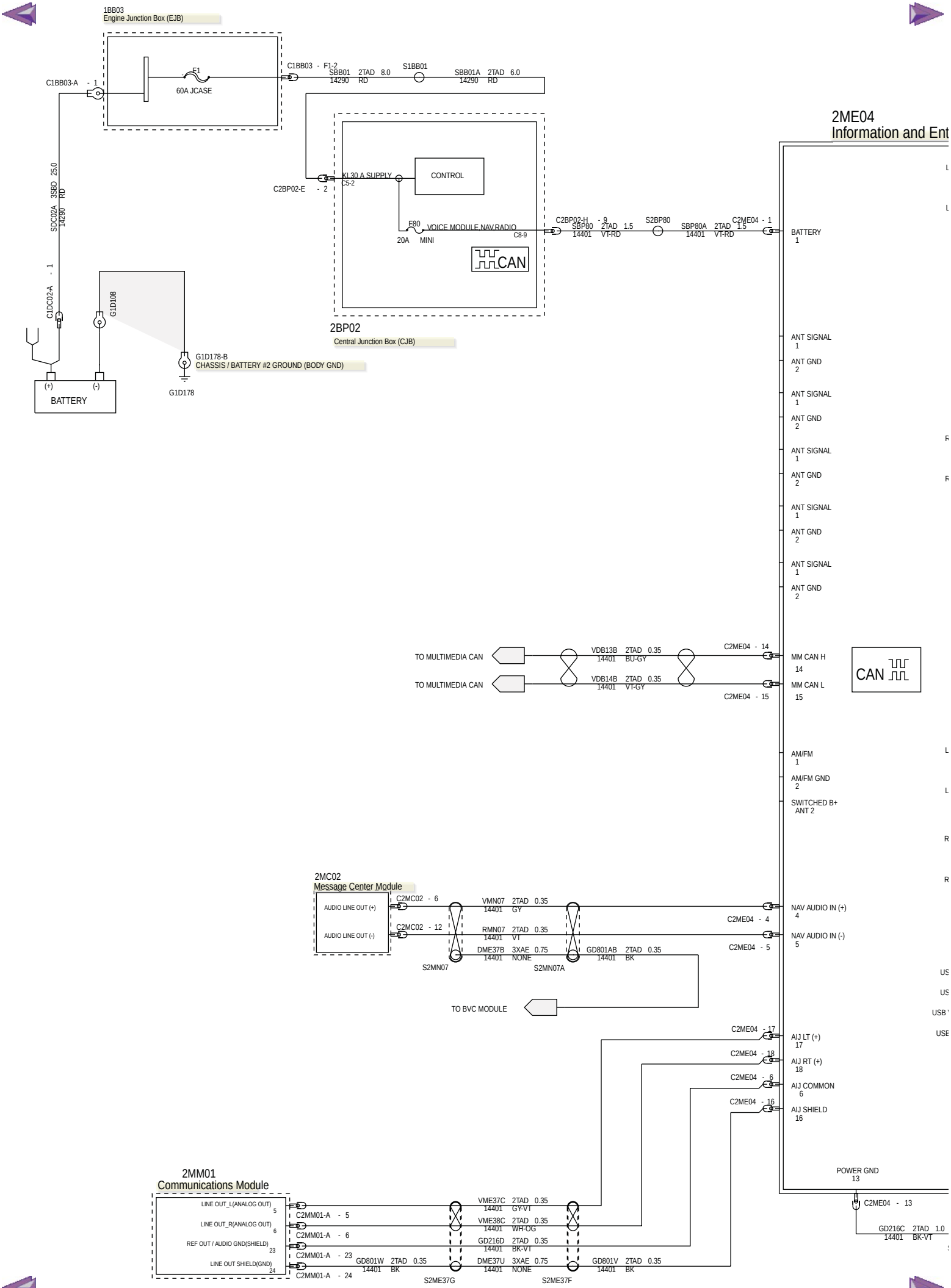

415-01-30 Audio System—Super Cab, LHD 4WD/LHD RWD, Vehicles With: Bluetooth and Voice Control

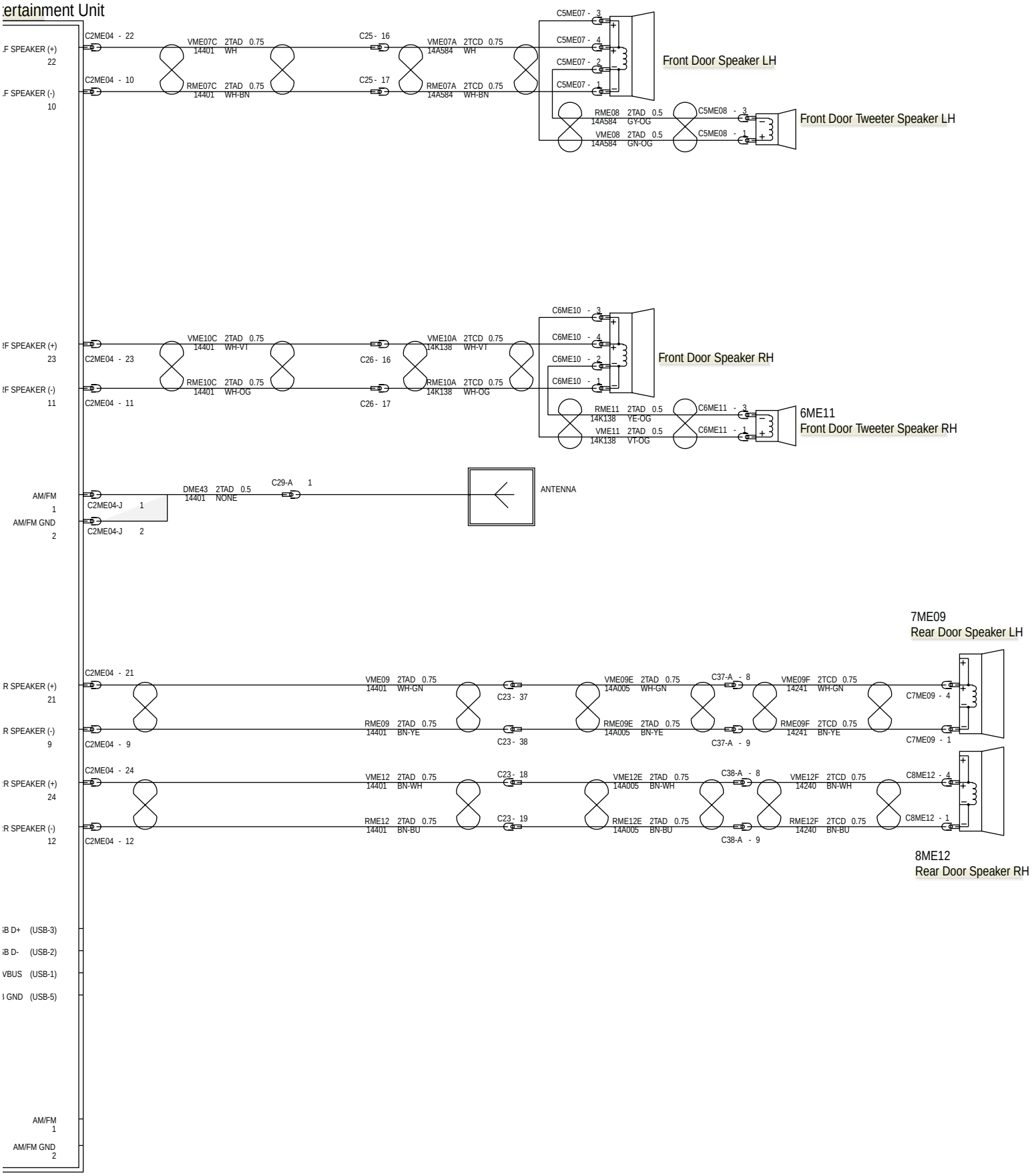

TO BE UPDATED LATER

TO BE UPDATED LATER

415-01-33 Audio System—Super Cab, LHD 4WD/LHD RWD, Vehicles Without: Bluetooth and Voice Control

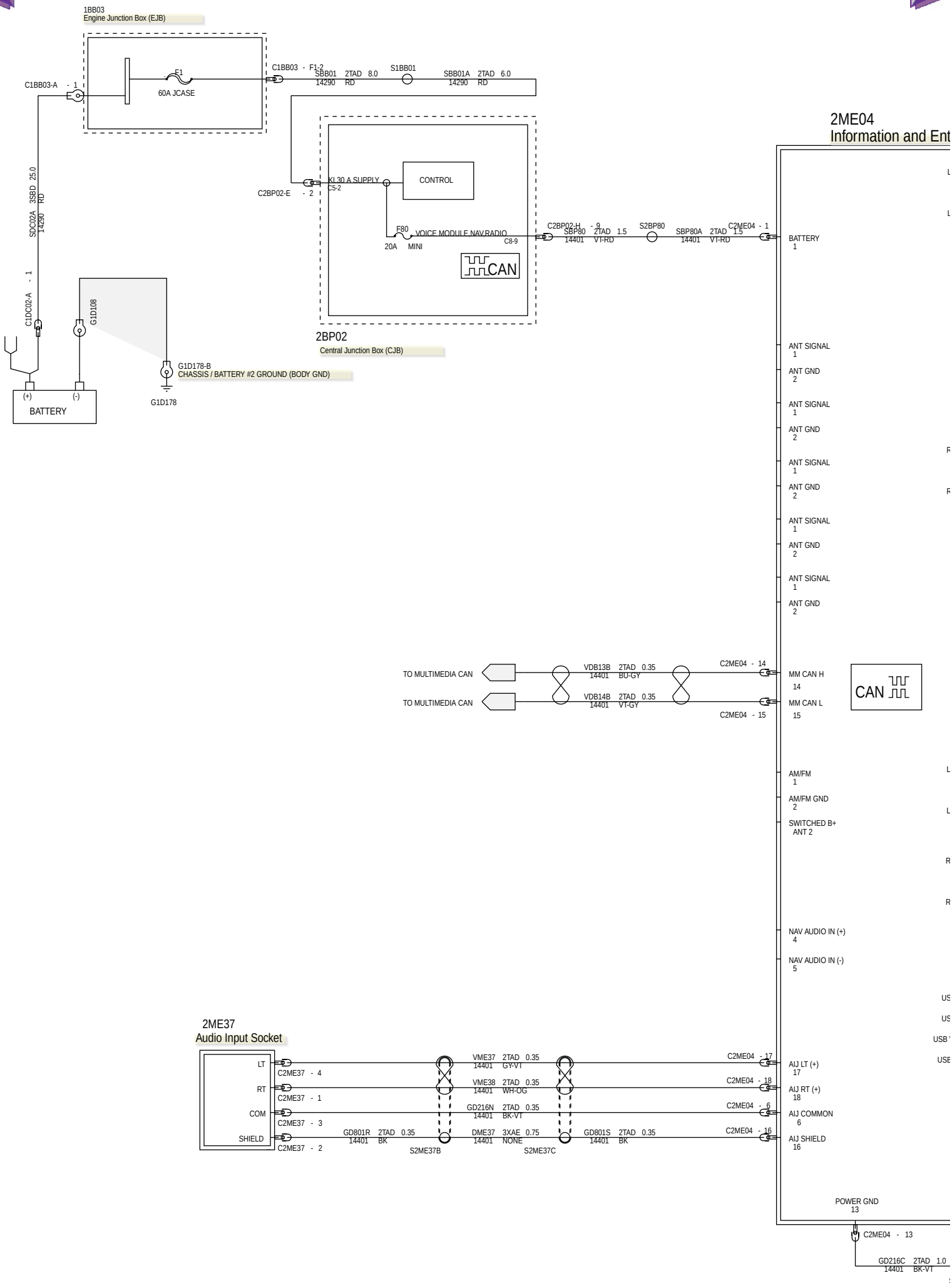

415-01-34 Audio System—Super Cab, LHD 4WD/LHD RWD, Vehicles Without: Bluetooth and Voice Control

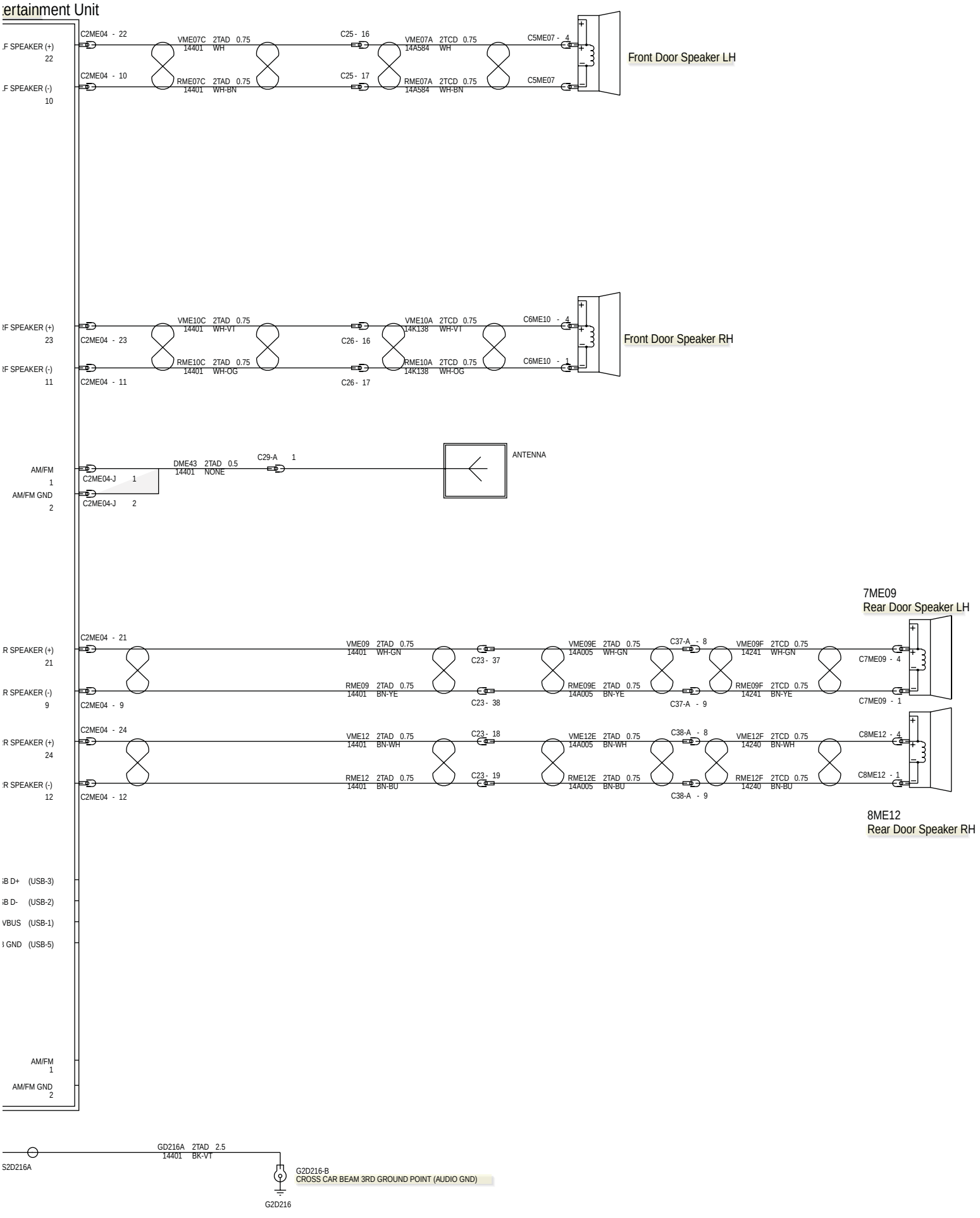

415-01-35 Audio System—Single Cab, RHD 4WD/RHD RWD, Vehicles With: Bluetooth and Voice Control

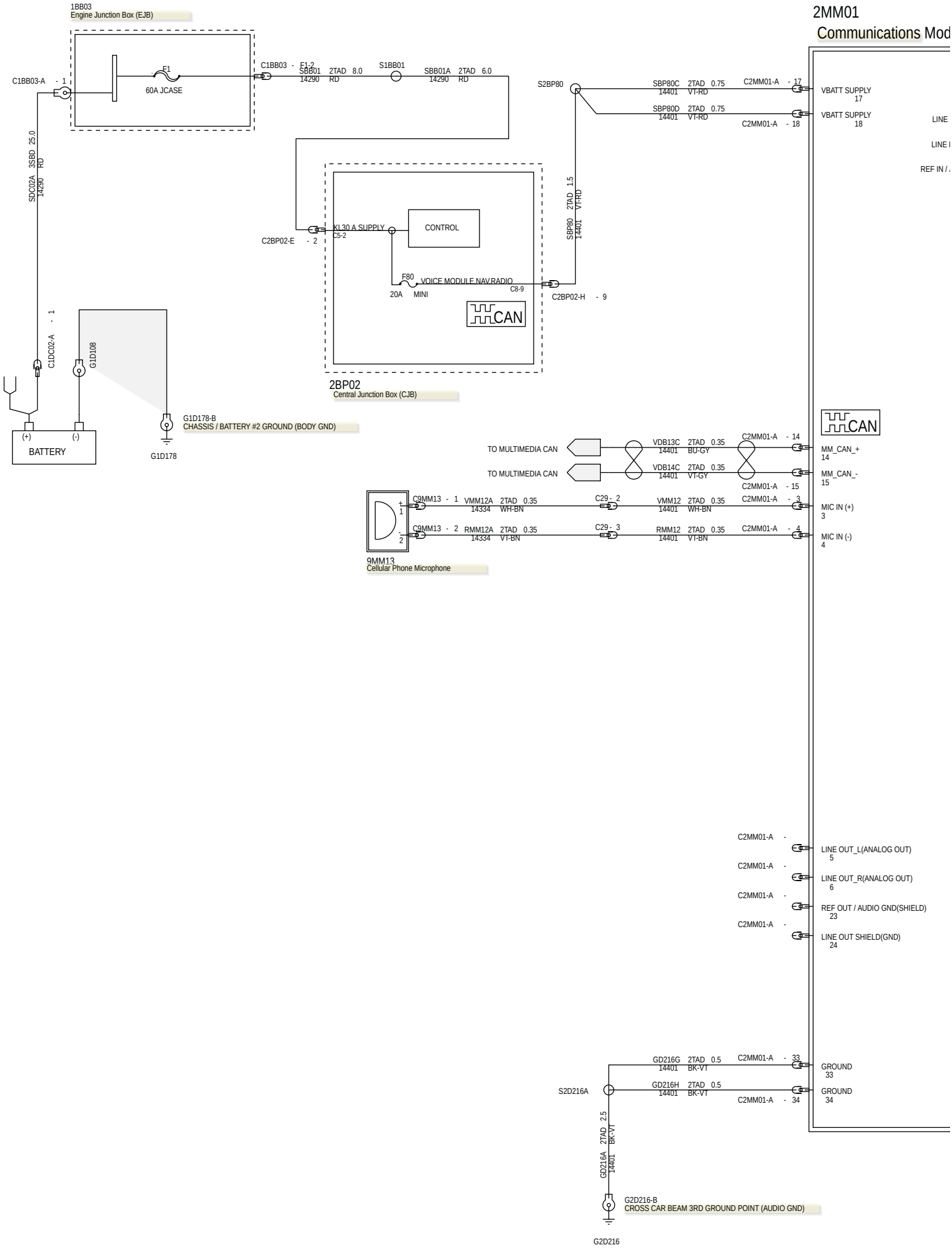

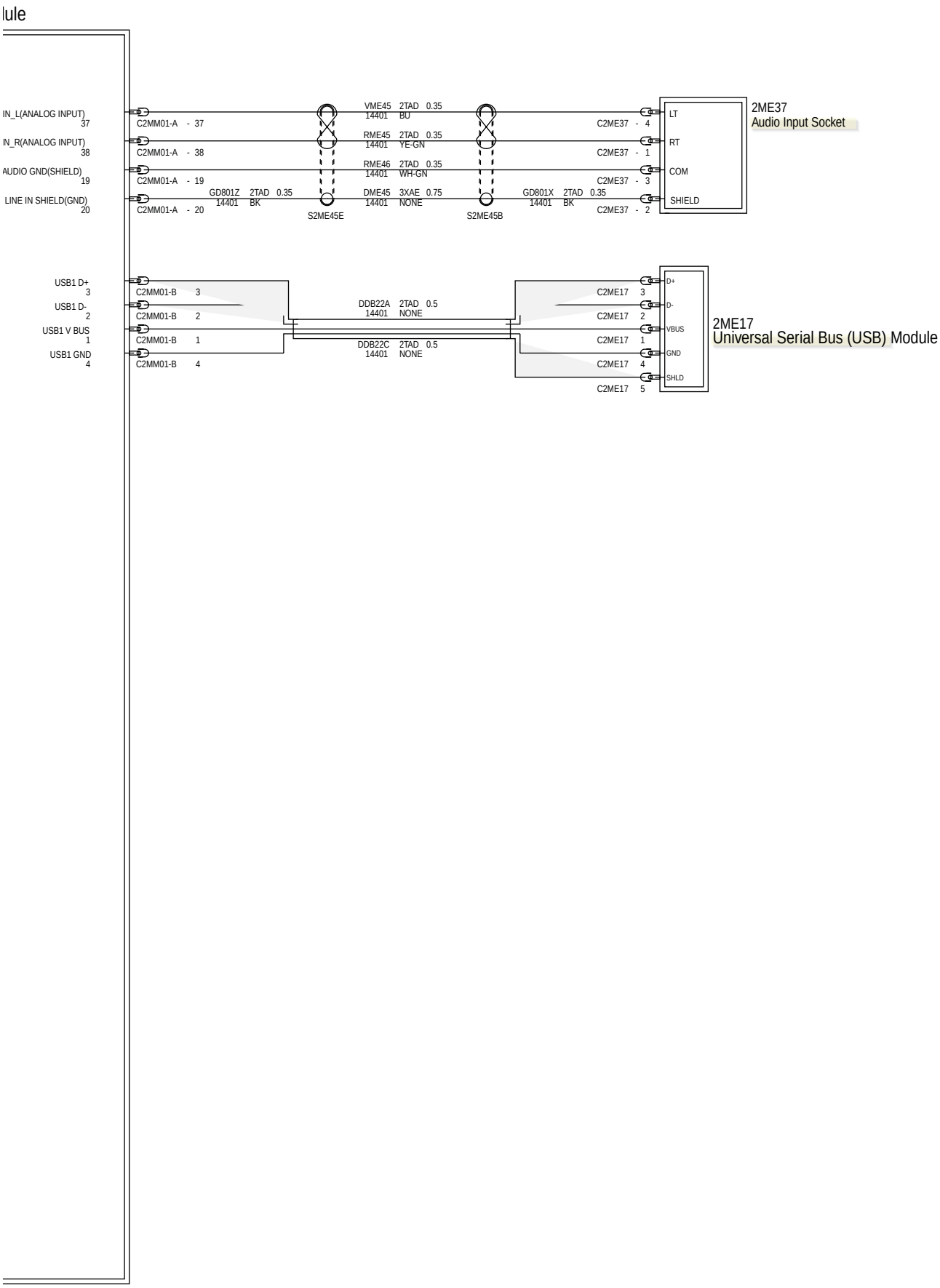
lule
IN_L(ANALOG INPUT)
37
IN_R(ANALOG INPUT)
38
AUDIO GND(SHIELD)
19
LINE IN SHIELD(GND)
20
C2MM01-A - 37
C2MM01-A - 38
C2MM01-A - 19
C2MM01-A - 20
GD801Z 2TAD 0.35
14401 BK
S2ME45E
VME45 2TAD 0.35
14401 BU
RME45 2TAD 0.35
14401 YE-GN
RME46 2TAD 0.35
14401 WH-GN
DME45 3XAE 0.75
14401 NONE
S2ME45B
GD801X 2TAD 0.35
14401 BK
C2ME37 - 4
C2ME37 - 1
C2ME37 - 3
C2ME37 - 2
LT
RT
COM
SHIELD
2ME37
Audio Input Socket
USB1 D+
3
USB1 D-
2
USB1 V BUS
1
USB1 GND
4
C2MM01-B 3
C2MM01-B 2
C2MM01-B 1
C2MM01-B 4
DDB22A 2TAD 0.5
14401 NONE
DDB22C 2TAD 0.5
14401 NONE
C2ME17 3
C2ME17 2
C2ME17 1
C2ME17 4
C2ME17 5
D+
D-
VBUS
GND
SHLD
2ME17
Universal Serial Bus (USB) Module

415-01-37 Audio System—Single Cab, RHD 4WD/RHD RWD, Vehicles With: Bluetooth and Voice Control

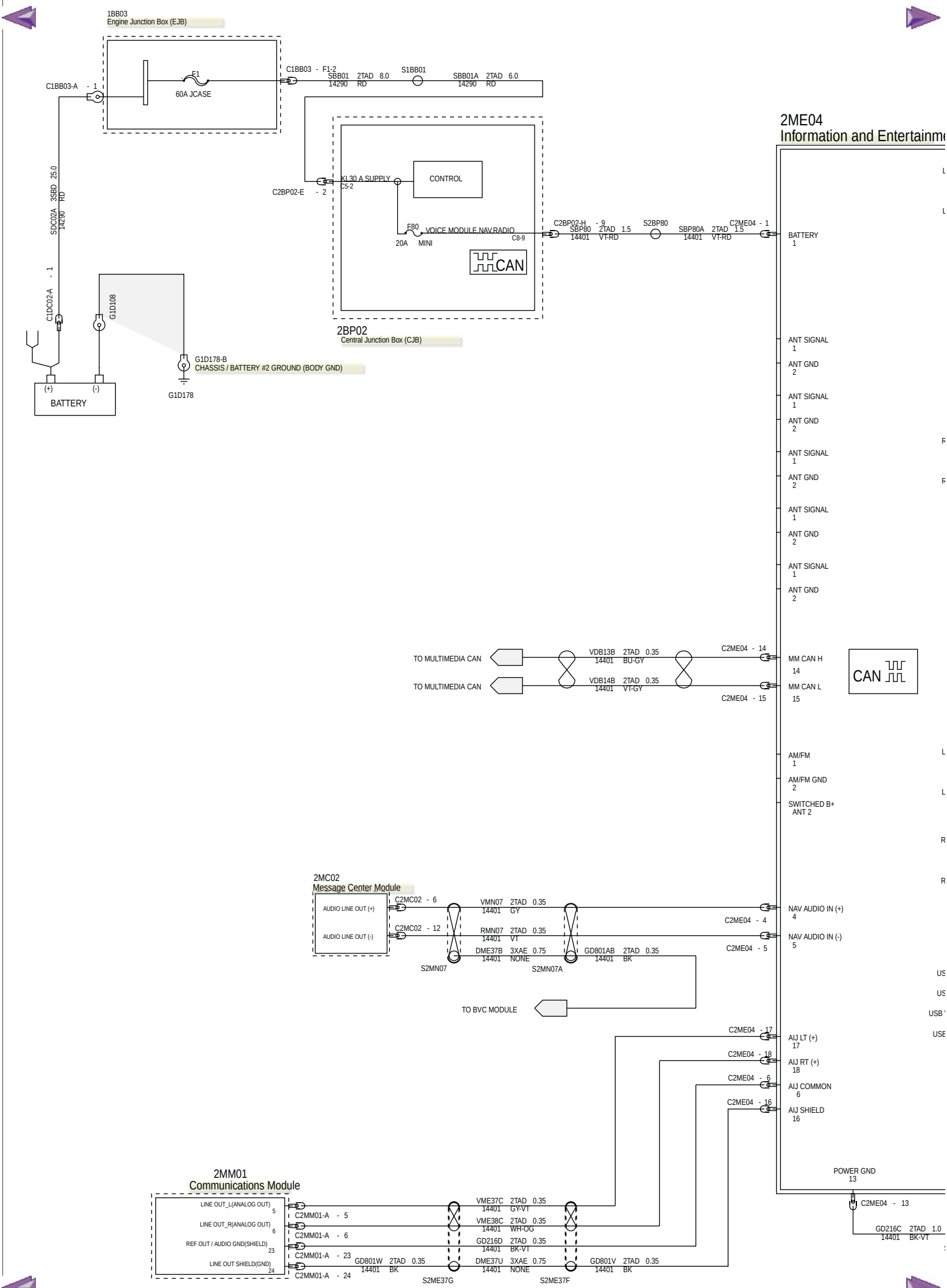

415-01-38 Audio System—Single Cab, RHD 4WD/RHD RWD, Vehicles With: Bluetooth and Voice Control

415-01-39 Audio System—Single Cab, RHD 4WD/RHD RWD, Vehicles Without: Bluetooth and Voice Control

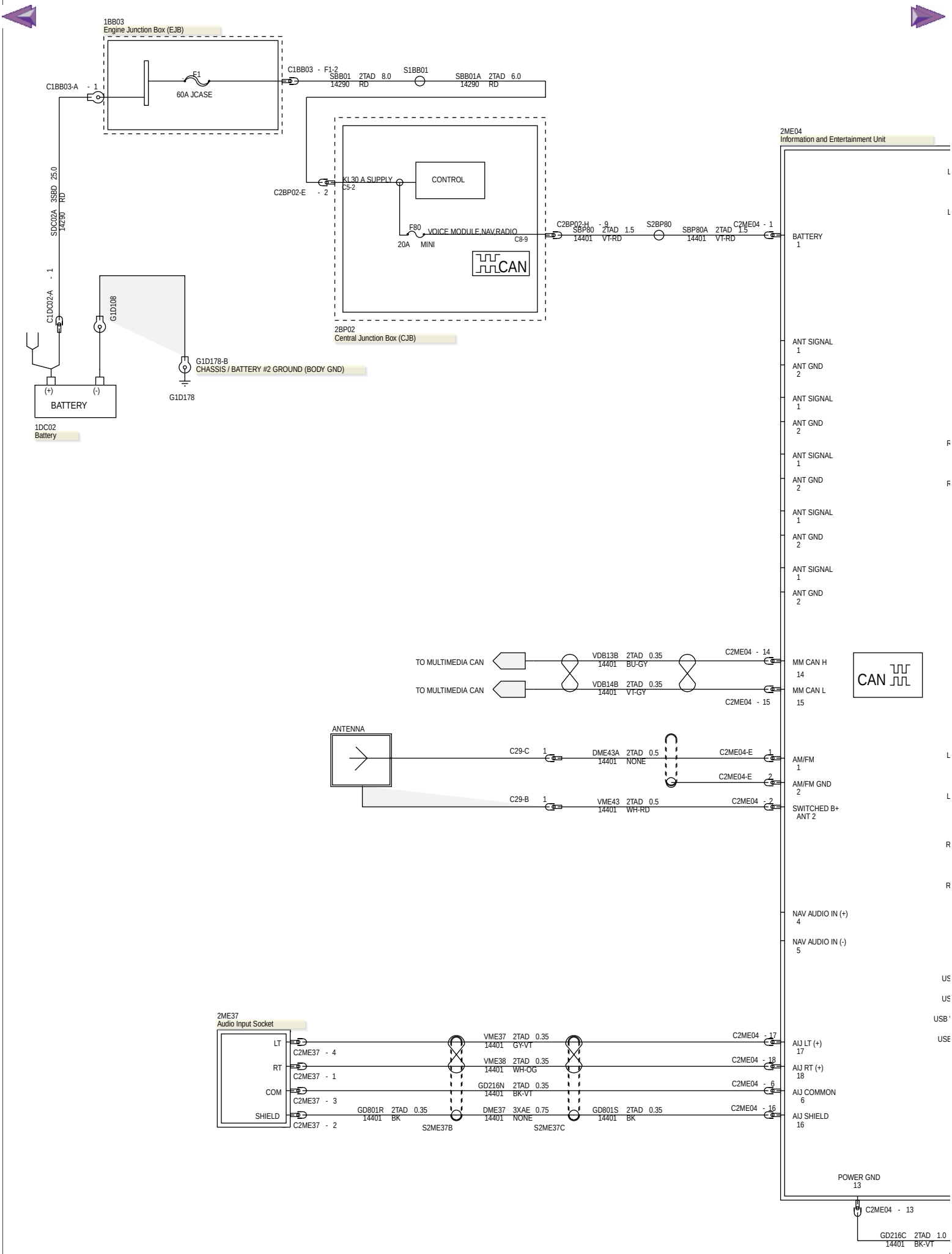

415-01-40 Audio System—Single Cab, RHD 4WD/RHD RWD, Vehicles Without: Bluetooth and Voice Control

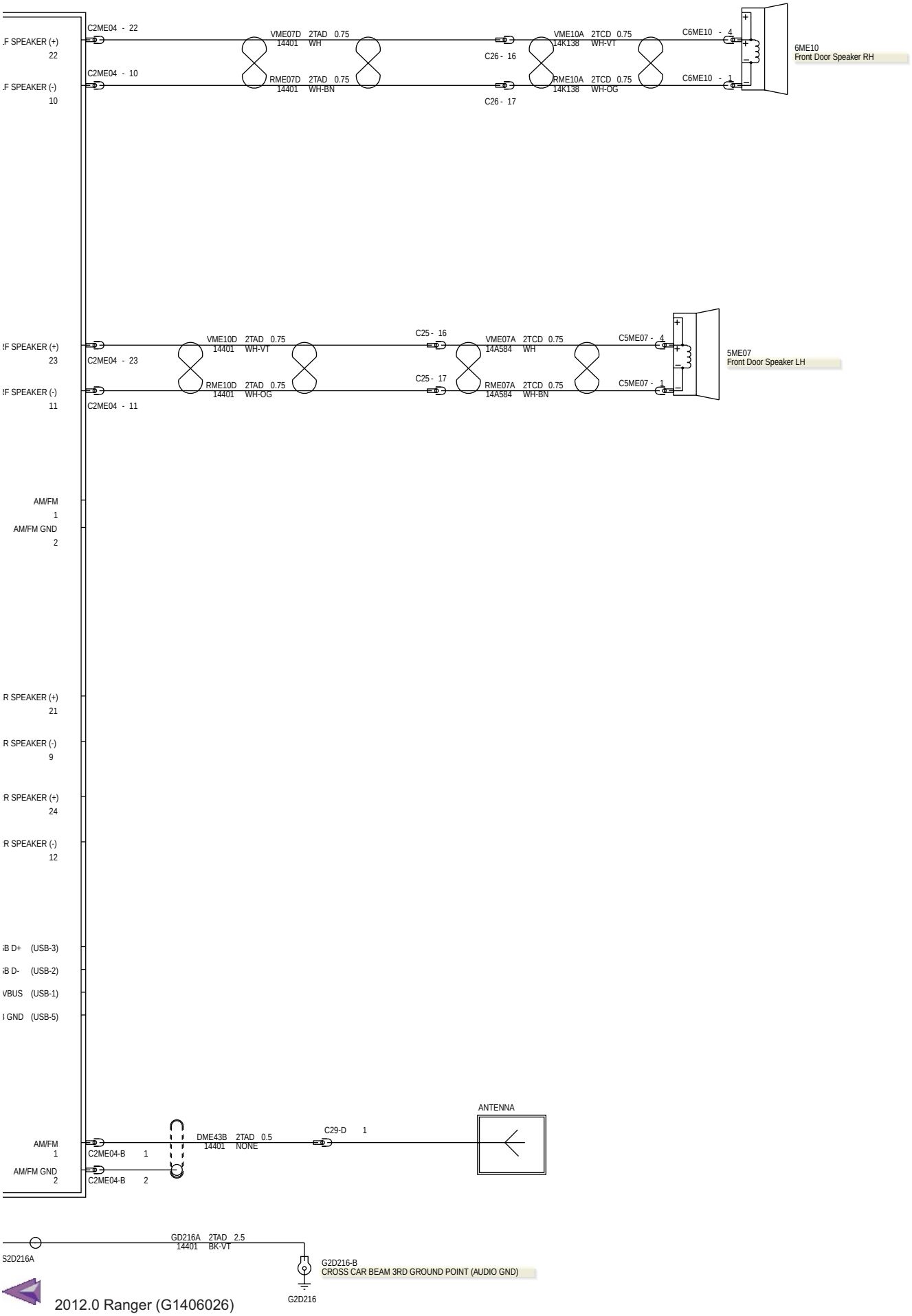

415-01-41 Audio System—Double Cab, RHD 4WD/RHD RWD, Vehicles With: Bluetooth and Voice Control

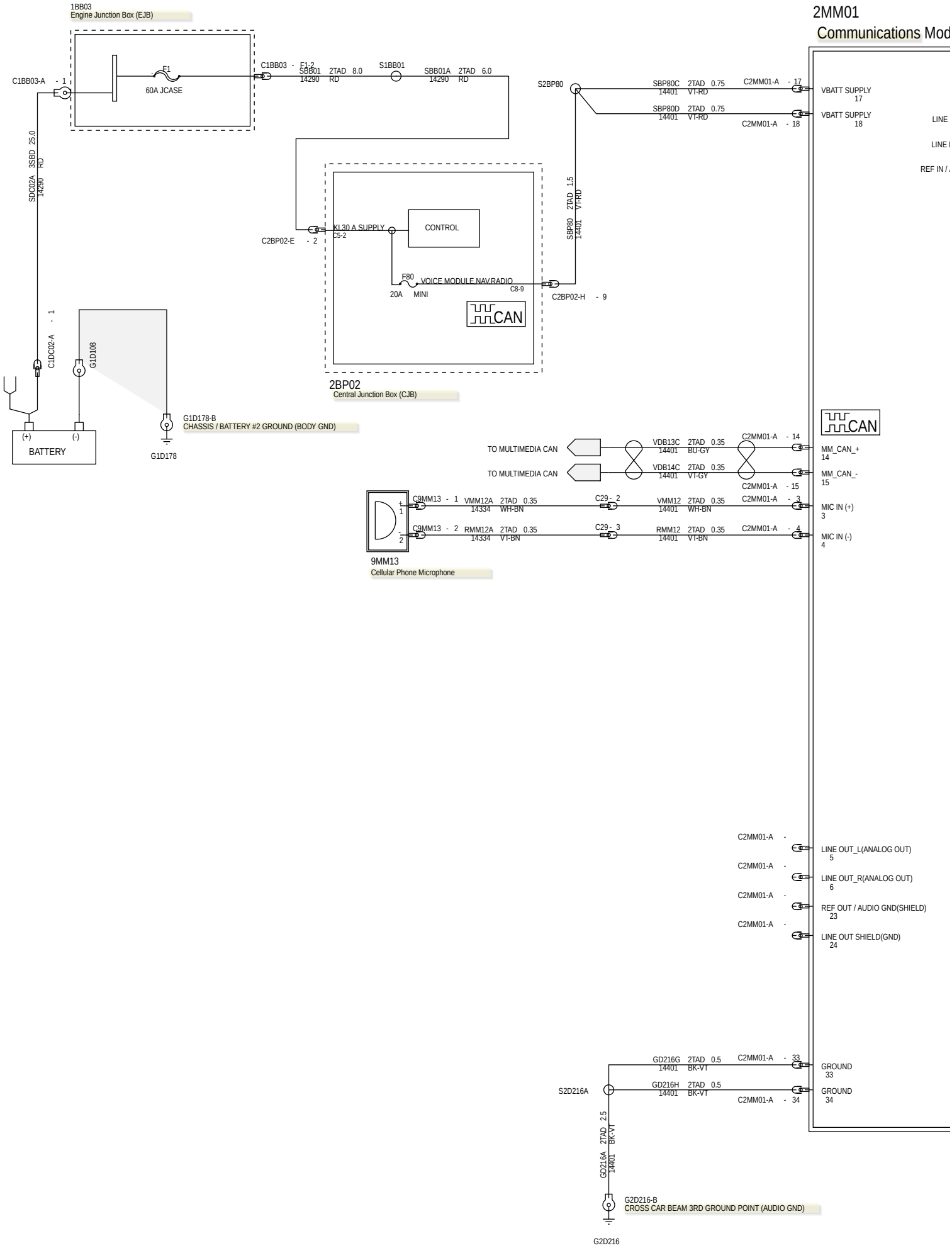

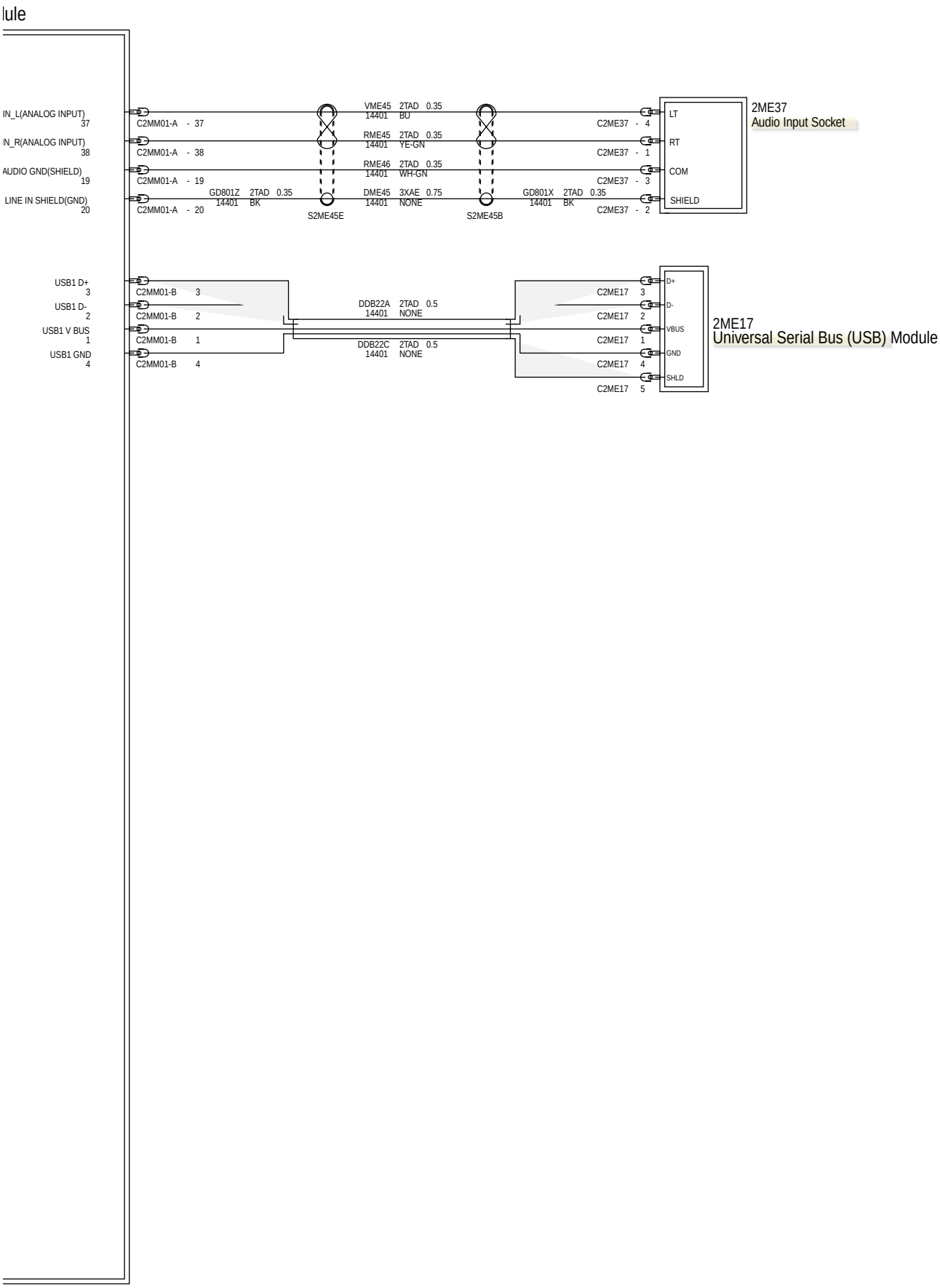
lule
IN_L(ANALOG INPUT)
37
IN_R(ANALOG INPUT)
38
AUDIO GND(SHIELD)
19
LINE IN SHIELD(GND)
20
C2MM01-A - 37
C2MM01-A - 38
C2MM01-A - 19
C2MM01-A - 20
GD801Z 2TAD 0.35
14401 BK
S2ME45E
VME45 2TAD 0.35
14401 BU
RME45 2TAD 0.35
14401 YE-GN
RME46 2TAD 0.35
14401 WH-GN
DME45 3XAE 0.75
14401 NONE
S2ME45B
GD801X 2TAD 0.35
14401 BK
C2ME37 - 4
C2ME37 - 1
C2ME37 - 3
C2ME37 - 2
LT
RT
COM
SHIELD
2ME37
Audio Input Socket
USB1 D+
3
USB1 D-
2
USB1 V BUS
1
USB1 GND
4
C2MM01-B 3
C2MM01-B 2
C2MM01-B 1
C2MM01-B 4
DDB22A 2TAD 0.5
14401 NONE
DDB22C 2TAD 0.5
14401 NONE
C2ME17 3
C2ME17 2
C2ME17 1
C2ME17 4
C2ME17 5
D+
D-
VBUS
GND
SHLD
2ME17
Universal Serial Bus (USB) Module

415-01-43 Audio System—Double Cab, RHD 4WD/RHD RWD, Vehicles With: Bluetooth and Voice Control

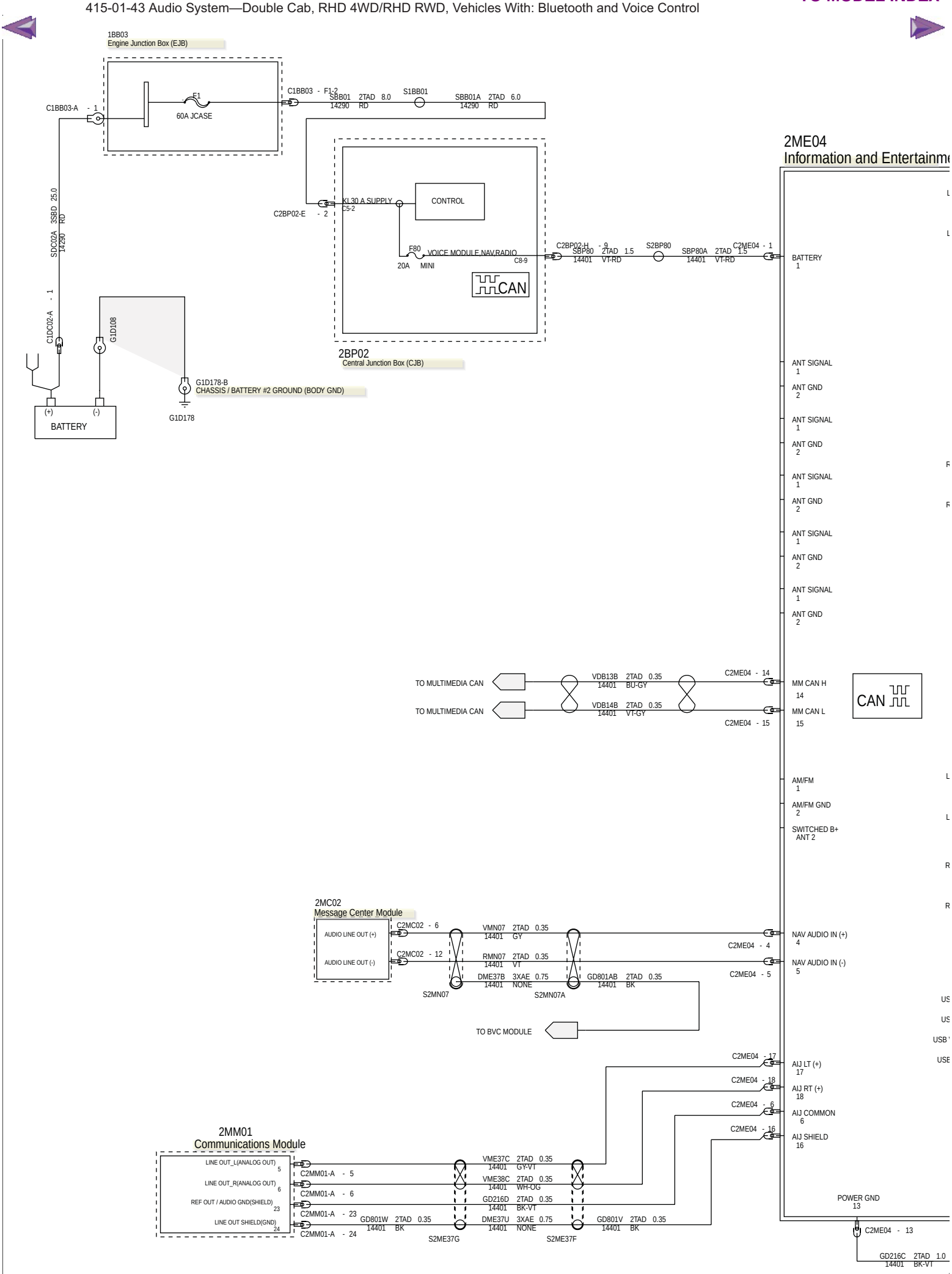

415-01-44 Audio System—Double Cab, RHD 4WD/RHD RWD, Vehicles With: Bluetooth and Voice Control

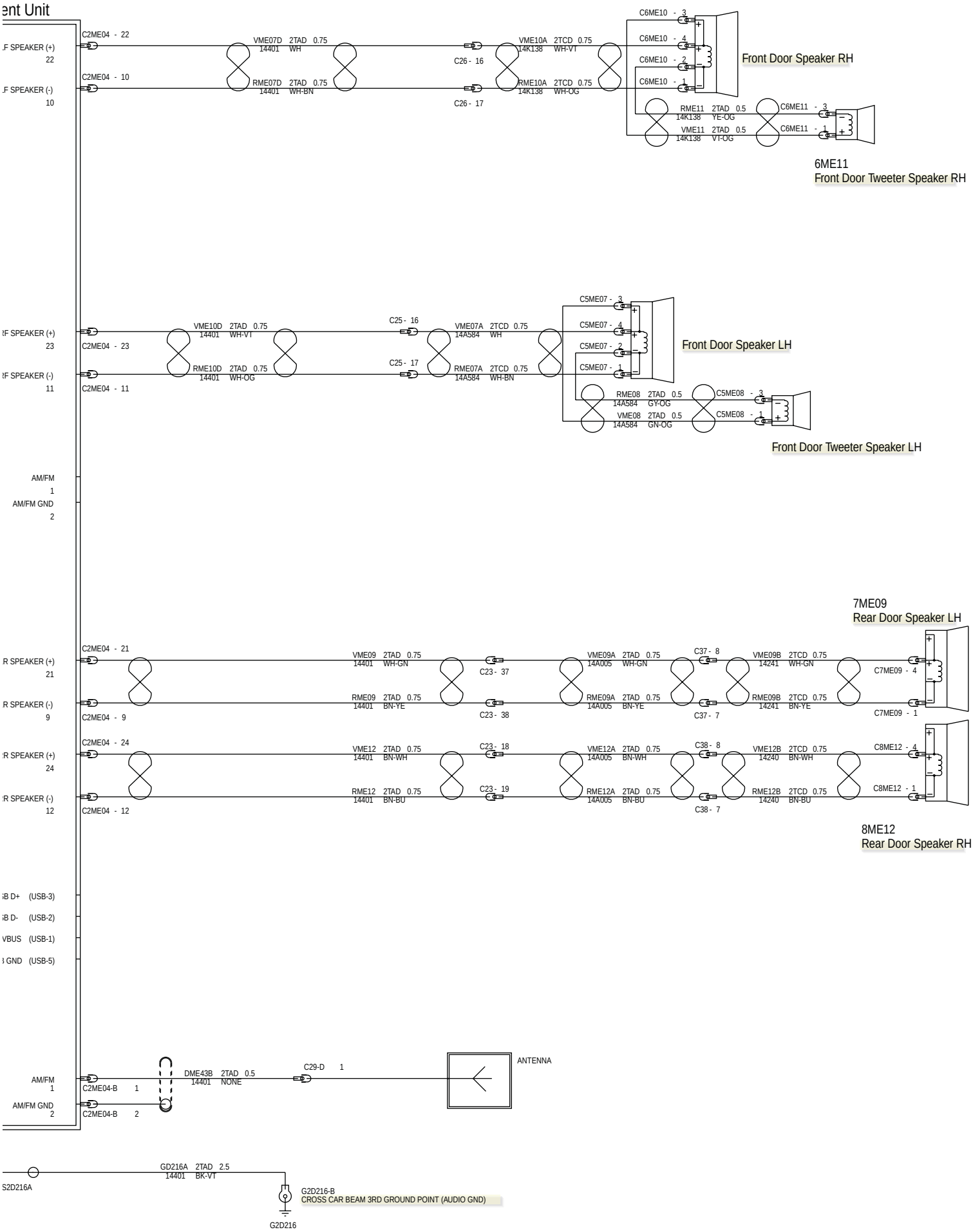

415-01-45 Audio System—Double Cab, RHD 4WD/RHD RWD, Vehicles Without: Bluetooth and Voice Control

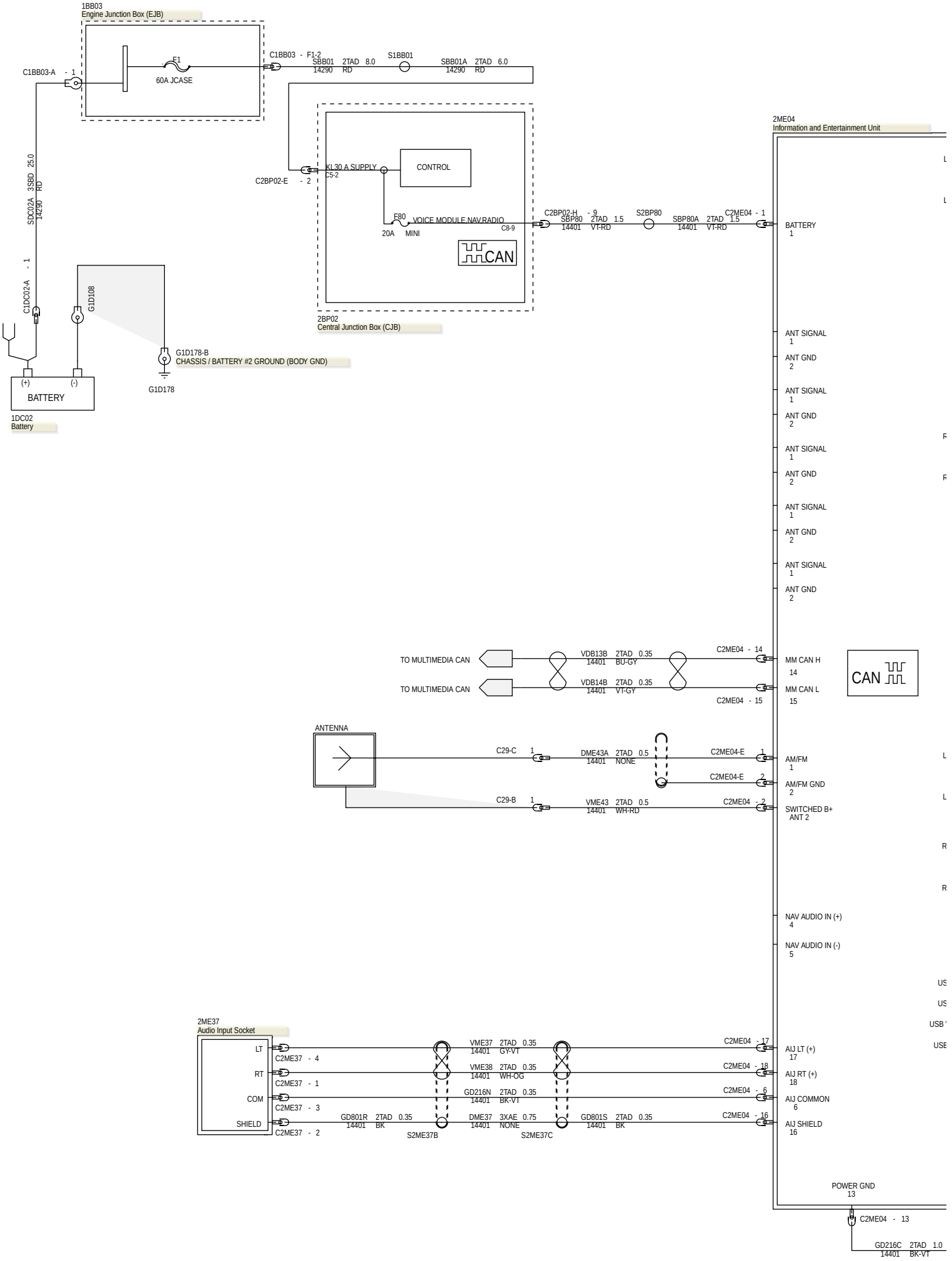

415-01-46 Audio System—Double Cab, RHD 4WD/RHD RWD, Vehicles Without: Bluetooth and Voice Control

415-01-47 Audio System—Super Cab, RHD 4WD/RHD RWD, Vehicles With: Bluetooth and Voice Control

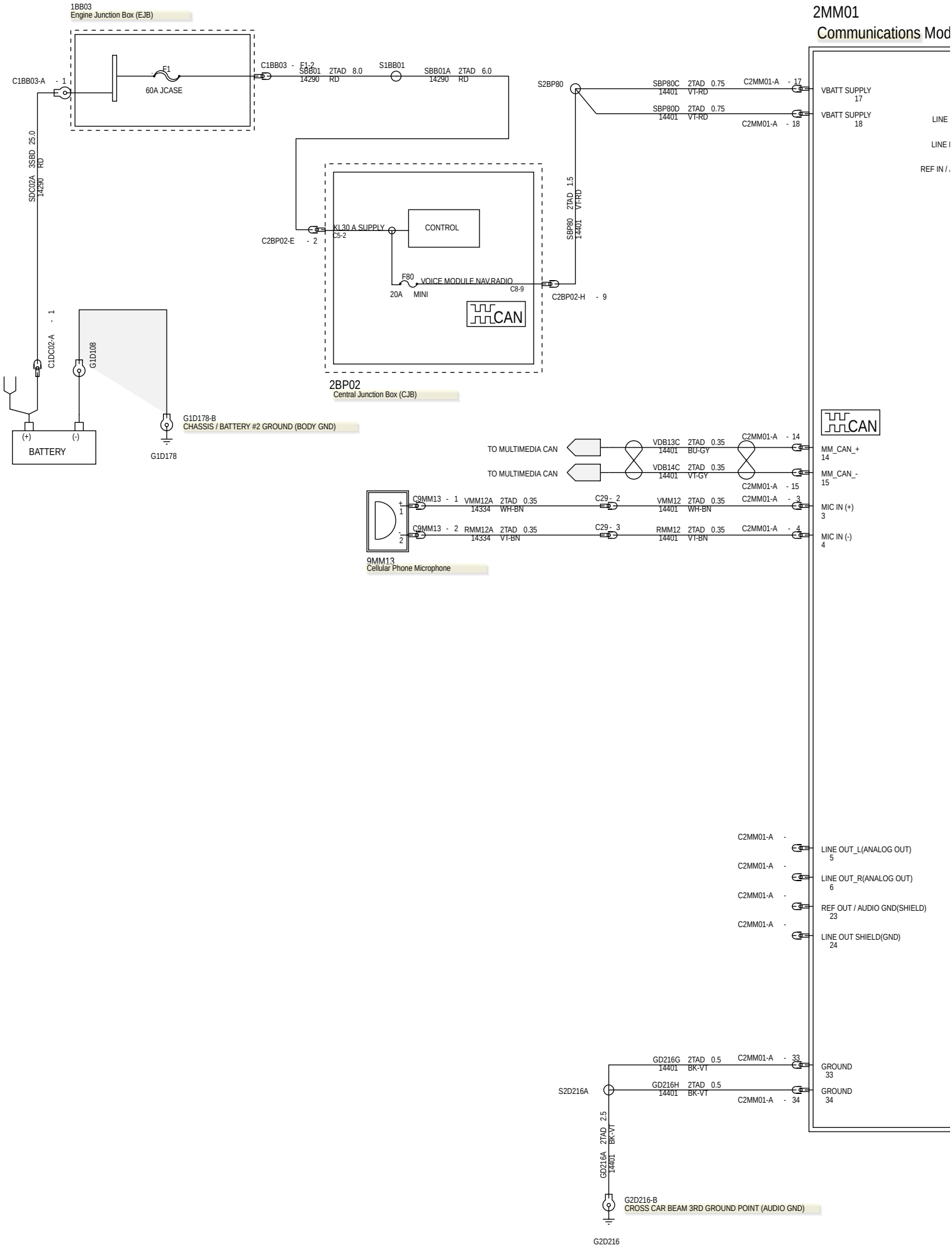

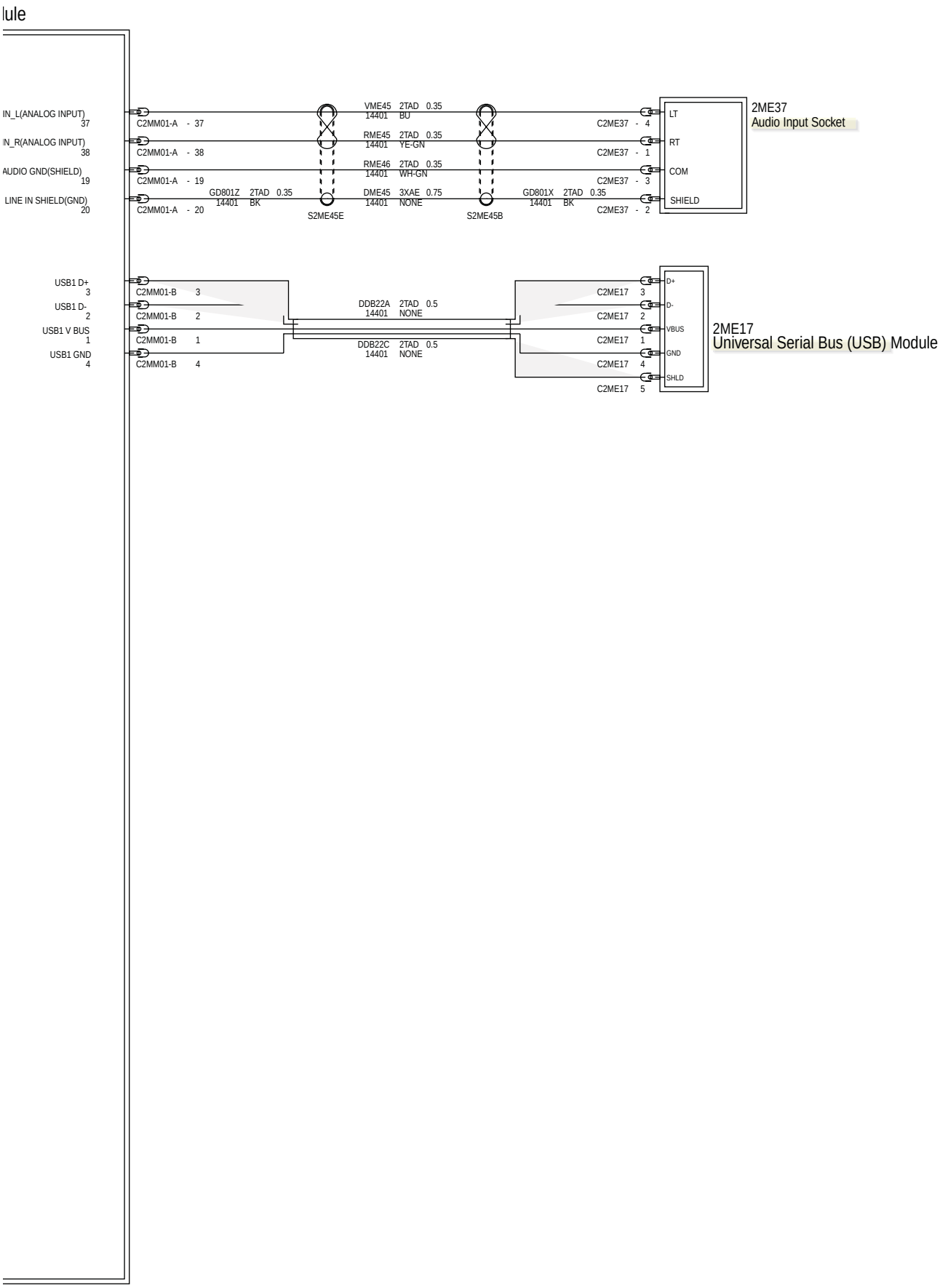
lule
IN_L(ANALOG INPUT)
37
IN_R(ANALOG INPUT)
38
AUDIO GND(SHIELD)
19
LINE IN SHIELD(GND)
20
C2MM01-A - 37
C2MM01-A - 38
C2MM01-A - 19
C2MM01-A - 20
GD801Z 2TAD 0.35
14401 BK
S2ME45E
VME45 2TAD 0.35
14401 BU
RME45 2TAD 0.35
14401 YE-GN
RME46 2TAD 0.35
14401 WH-GN
DME45 3XAE 0.75
14401 NONE
S2ME45B
GD801X 2TAD 0.35
14401 BK
C2ME37 - 4
C2ME37 - 1
C2ME37 - 3
C2ME37 - 2
LT
RT
COM
SHIELD
2ME37
Audio Input Socket
USB1 D+
3
USB1 D-
2
USB1 V BUS
1
USB1 GND
4
C2MM01-B 3
C2MM01-B 2
C2MM01-B 1
C2MM01-B 4
DDB22A 2TAD 0.5
14401 NONE
DDB22C 2TAD 0.5
14401 NONE
C2ME17 3
C2ME17 2
C2ME17 1
C2ME17 4
C2ME17 5
D+
D-
VBUS
GND
SHLD
2ME17
Universal Serial Bus (USB) Module

415-01-49 Audio System—Super Cab, RHD 4WD/RHD RWD, Vehicles With: Bluetooth and Voice Control

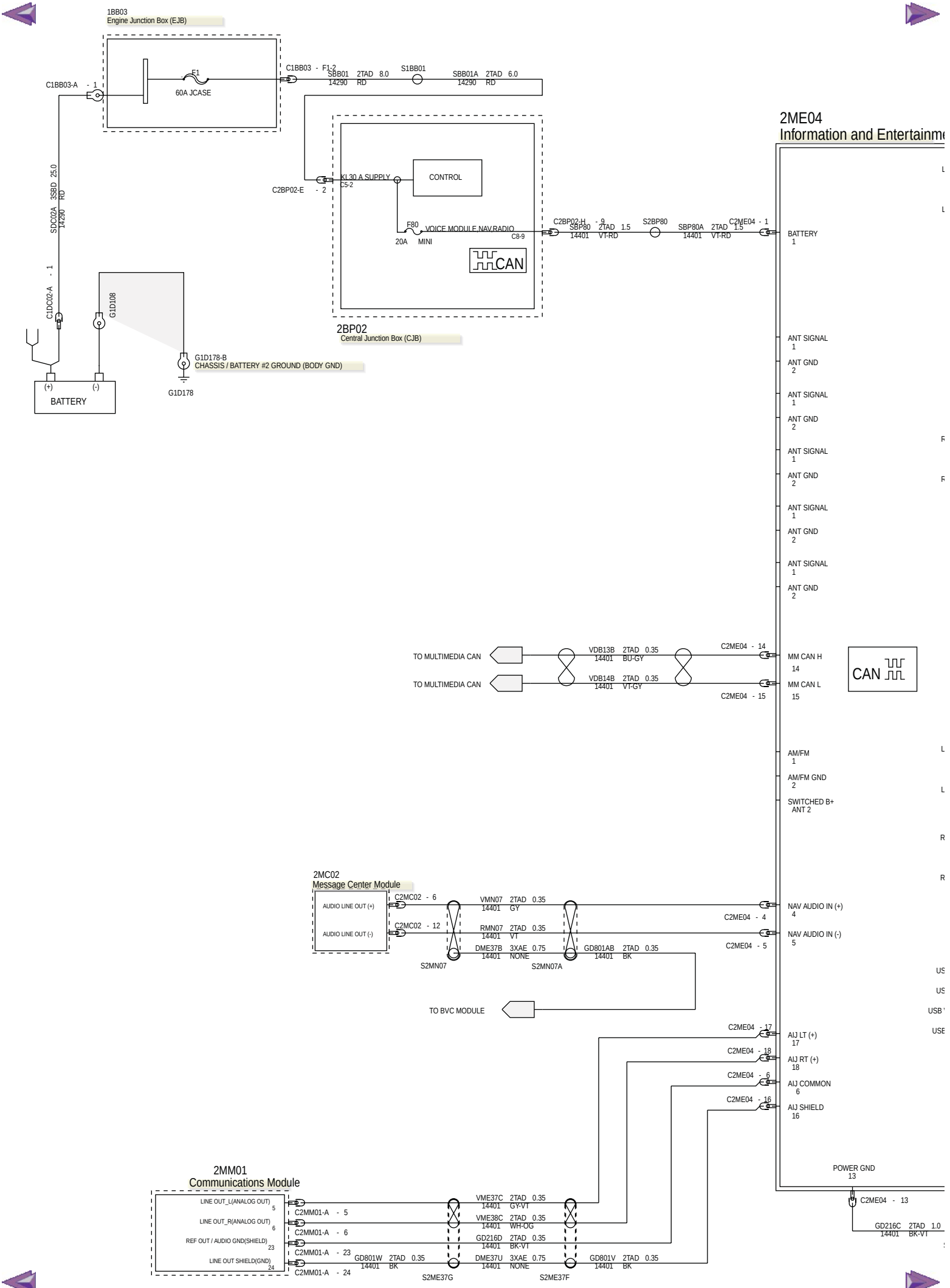

415-01-50 Audio System—Super Cab, RHD 4WD/RHD RWD, Vehicles With: Bluetooth and Voice Control

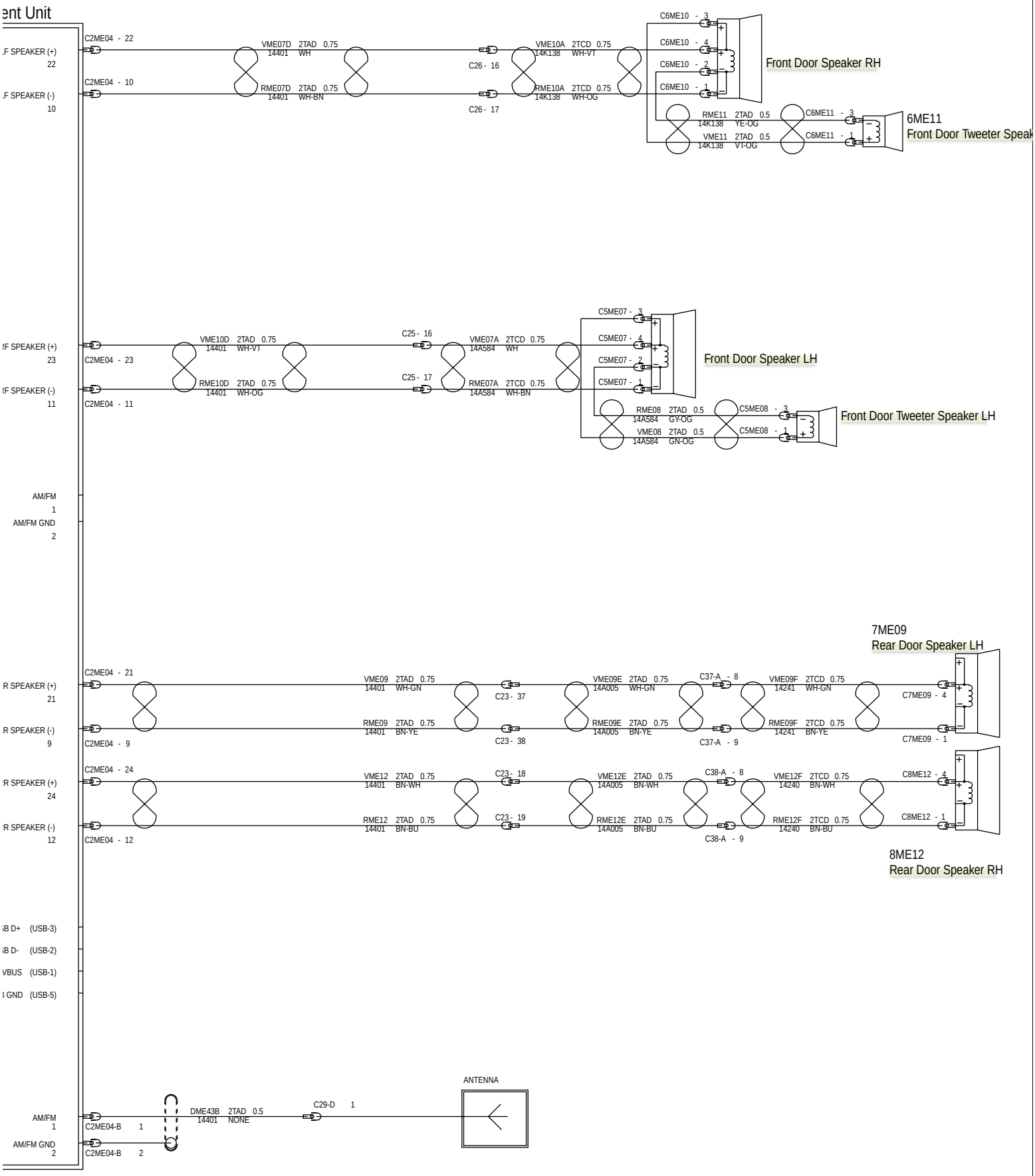

415-01-51 Audio System—Super Cab, RHD 4WD/RHD RWD, Vehicles Without: Bluetooth and Voice Control

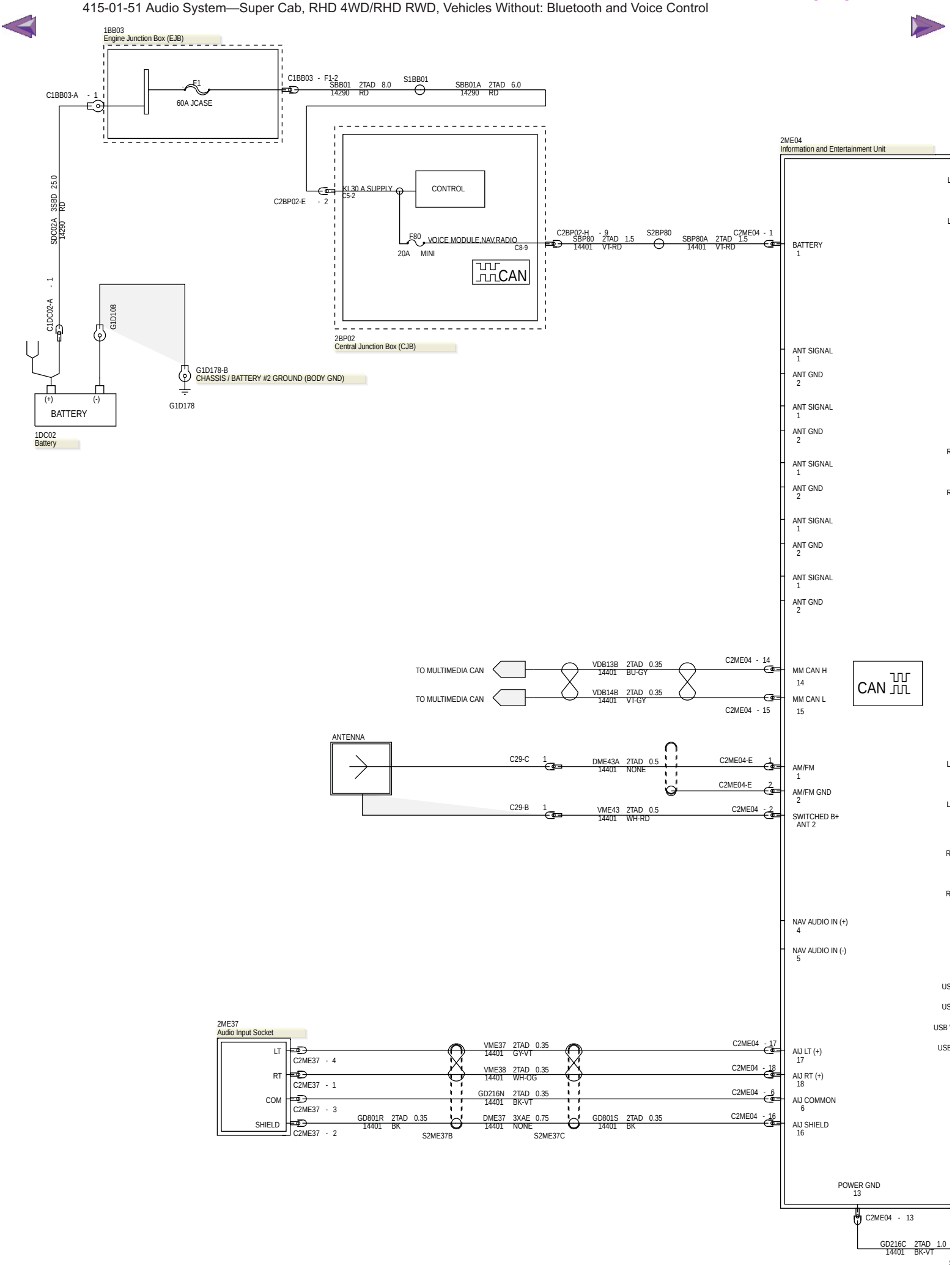

415-01-52 Audio System—Super Cab, RHD 4WD/RHD RWD, Vehicles Without: Bluetooth and Voice Control

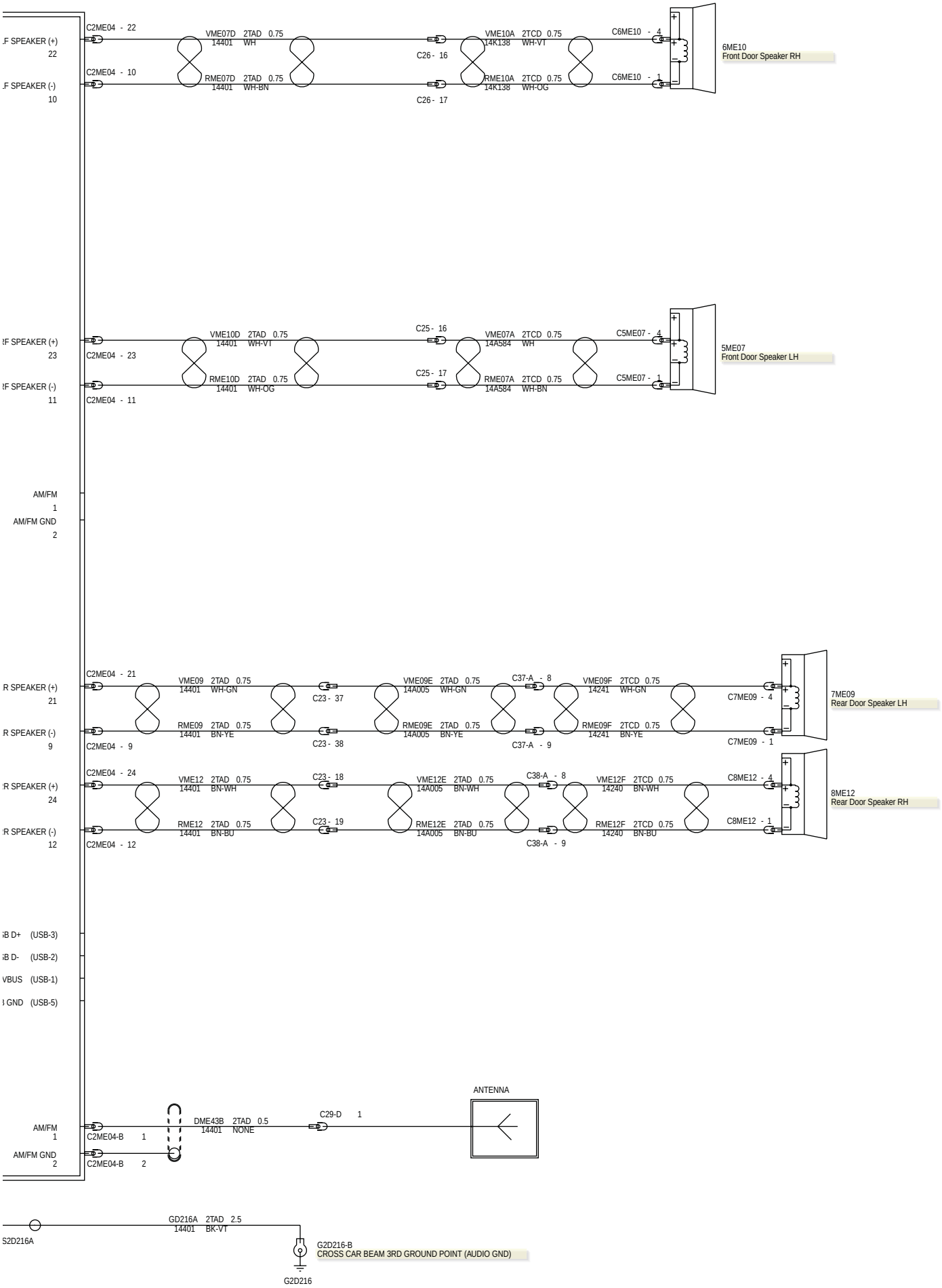

Audio Input Socket (G1404453)

PIN 1 => RME45 YE-GN 0.35 2TAD
PIN 1 => VME38 WH-OG 0.35 2TAD
PIN 1 => VME38B WH-OG 0.35 2TAD
PIN 2 => GD801R BK 0.35 2TAD
PIN 2 => GD801T BK 0.35 2TAD
PIN 2 => GD801X BK 0.35 2TAD
PIN 3 => GD216M BK-VT 0.35 2TAD
PIN 3 => GD216N BK-VT 0.35 2TAD
PIN 3 => RME46 WH-GN 0.35 2TAD
PIN 4 => VME37 GY-VT 0.35 2TAD
PIN 4 => VME37B GY-VT 0.35 2TAD
PIN 4 => VME45 BU 0.35 2TAD

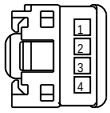

1 VME46A BU-GN 2TAD 0.35
2 RME45A YE-GN 2TAD 0.35
3 RME46A WH-GN 2TAD 0.35
4 VME45A BU 2TAD 0.35

1L2T-14489-GC

C2ME37
TO AUX JACK

HARNESS 14401

Audio Unit (G1404454)

SBP79A WH-RD 2TAD 1.0 1
CDC32B BN-YE 2TAD 0.5 2
VME10 WH-VT 2TAD 0.5 + VME10B WH-VT 2TAD 0.5 3
RME10 WH-OG 2TAD 0.5 + RME10B WH-OG 2TAD 0.5 4
VME07B WH 2TAD 0.5 + VME07 WH 2TAD 0.5 5
RME07B WH-BN 2TAD 0.5 + RME07 WH-BN 2TAD 0.5 6
VME46A BU-GN 2TAD 0.35 7
RME46A WH-GN 2TAD 0.35 8
CLN17H BN 2TAD 0.5 9
GD216B BK-VT 2TAD 1.0 10

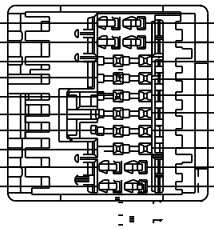

11
12 VME43A WH-RD 2TAD 0.5
13 VME12C BN-WH 2TAD 0.5
14 RME12C BN-BU 2TAD 0.5
15 VME09C WH-GN 2TAD 0.5
16 RME09C BN-YE 2TAD 0.5
17 VME45A BU 2TAD 0.35
18 RME45A YE-GN 2TAD 0.35
19
20

C2ME03
MX5-A-20S-C
TO AUDIO SINGLE DIN
HARNESS 14401

Audio Unit—J (G1414611)

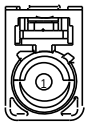

1 DME43 NONE 2TAD 0.5

7H2T-14489-AKB

C2ME03-J
TO LHD PASSIVE ANTENNA

HARNESS 14401

Cellular Phone Microphone (G1405451)

RMM12A VT-BN 2TAD 0.35 2
VMM12A WH-BN 2TAD 0.35 1

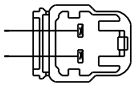

96BG-14A459-AA

C9MM13
TO MICROPHONE

HARNESS 14334

Communications Module—A (G1404456)

PIN 5 => VME37F GY-VT 0.35 2TAD
PIN 6 => VME38F WH-OG 0.35 2TAD
PIN 23 => GD216L BK-VT 0.35 2TAD
PIN 24 => GD801AF BK 0.35 2TAD

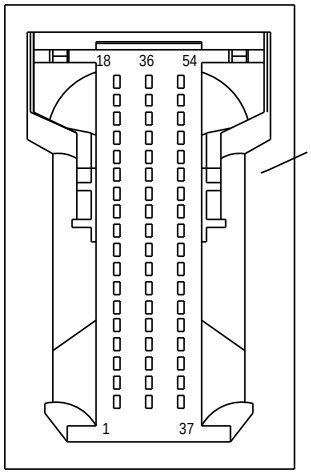

Pin	Wire			
3	VMM12	WH-BN	2TAD	0.35
4	RMM12	VT-BN	2TAD	0.35
5	VME37C	GY-VT	2TAD	0.35
6	VME38C	WH-OG	2TAD	0.35
14	VDB13C	BU-GY	2TAD	0.35
15	VDB14C	VT-GY	2TAD	0.35
17	SBP80C	VT-RD	2TAD	0.75
18	SBP80D	VT-RD	2TAD	0.75
19	RME46	WH-GN	2TAD	0.35
20	GD801Z	BK	2TAD	0.35
23	GD216D	BK-VT	2TAD	0.35
24	GD801W	BK	2TAD	0.35
33	GD216G	BK-VT	2TAD	0.5
34	GD216H	BK-VT	2TAD	0.5
37	VME45	BU	2TAD	0.35
38	RME45	YE-GN	2TAD	0.35

C2MM01-A
1X4T-14N003-CB
TO BVC MODULE 2
HARNESS 14401

Communications Module—B (G1404457)

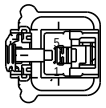

Pin	Wire			
4	DDB22C	NONE	2TAD	0.5
1	DDB22A	NONE	2TAD	0.5

7U5T-19C041-AA
C2MM01-B
TO BVC MODULE USB
HARNESS 14401

Front Door Speaker LH (G1404458)

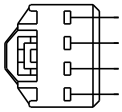

Pin	Wire			
1	RME07A	WH-BN	2TCD	0.75
2	RME08	GY-OG	2TAD	0.5
3	VME08	GN-OG	2TAD	0.5
4	VME07A	WH	2TCD	0.75

3M5T-14489-RDA
C5ME07
TO DRIVER SPEAKER
HARNESS 14A584

Front Door Speaker RH (G1404459)

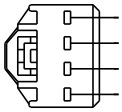

Pin	Wire			
1	RME10A	WH-OG	2TCD	0.75
2	RME11	YE-OG	2TAD	0.5
3	VME11	VT-OG	2TAD	0.5
4	VME10A	WH-VT	2TCD	0.75

3M5T-14489-RDA
C6ME10
TO PASSENGER SPEAKER
HARNESS 14K138

Front Door Tweeter Speaker LH (G1404460)

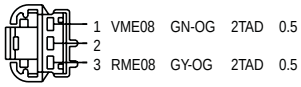

2L2T-14A464-BA

C5ME08
TO DRIVER TWEETER

HARNESS 14A584

Front Door Tweeter Speaker RH (G1404461)

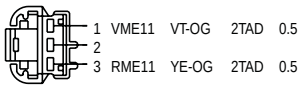

2L2T-14A464-BA

C6ME11
TO PASSENGER TWEETER

HARNESS 14K138

Information and Entertainment Control Panel (G1404462)

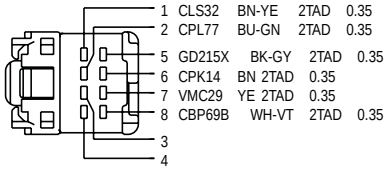

2L7T-14489-BA

C2LS51
TO INTEGRATED CONTROL PANEL

HARNESS 14401

Information and Entertainment Unit (G1404463)

PIN 2 => VME43 WH-RD 0.5 2TAD
PIN 14 => VDB13B BU-GY 0.35 2TAD
PIN 15 => VDB14B VT-GY 0.35 2TAD

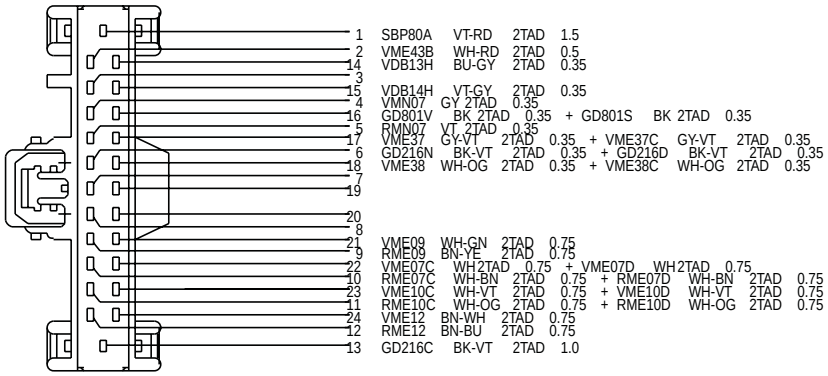

9U5T-14489-MA

C2ME04
TO AUDIO UNIT

HARNESS 14401

Information and Entertainment Unit—A (G1404464)

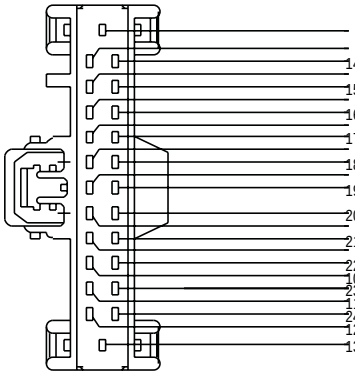

1	SBP79C	WH-RD	2TAD	1.0					
2									
14	VDB13G	BU-GY	2TAD	0.35					
3									
15	VDB14G	VT-GY	2TAD	0.35					
4	VMN07A	GY	2TAD	0.35					
16	GD801U	BK	2TAD	0.35					
5	RMN07A	VT	2TAD	0.35					
17	VME37B	GY-VT	2TAD	0.35					
6	GD216M	BK-VT	2TAD	0.35					
18	VME38B	WH-OG	2TAD	0.35					
7									
19	RMM12B	VT-BN	2TAD	0.35					
20	VMM12B	WH-BN	2TAD	0.35					
8									
21	VME09D	WH-GN	2TAD	0.75					
9	RME09D	BN-YE	2TAD	0.75					
22	VME07E	WH	2TAD	0.75	+	VME07F	WH	2TAD	0.75
10	RME07E	WH-BN	2TAD	0.75	+	RME07F	WH-BN	2TAD	0.75
23	VME10E	WH-VT	2TAD	0.75	+	VME10F	WH-VT	2TAD	0.75
11	RME10E	WH-OG	2TAD	0.75	+	RME10F	WH-OG	2TAD	0.75
24	VME12D	BN-WH	2TAD	0.75					
12	RME12D	BN-BU	2TAD	0.75					
13	GD216F	BK-VT	2TAD	1.0					

9U5T-14489-MA

C2ME04-A

TO FSAO AUDIO

HARNESS 14401

Information and Entertainment Unit—B (G1409231)

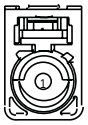

1	DME43B	NONE	2TAD	0.5

7H2T-14489-AKB

C2ME04-B
TO RHD PASSIVE ANTENNA

HARNESS 14401

Information and Entertainment Unit—D (G1404466)

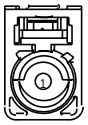

1	DMN03B	NONE	2TAD	0.5

7H2T-14489-AKB

C2ME04-D
TO FORD ACTIVE ANTENNA

HARNESS 14401

Information and Entertainment Unit—F (G1404467)

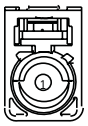

1	DMN03F	NONE	2TAD	0.5

7H2T-14489-AKB

C2ME04-F
TO FORD PASSIVE ANTENNA

HARNESS 14401

Information and Entertainment Unit—K (G1404468)

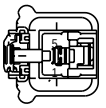

5 DDB22B NONE 2TAD 0.5
4
3
2
1 DDB22 NONE 2TAD 0.5

7U5T-19C041-AA

C2ME04-K

TO AUDIO UNIT USB (FSAO)

HARNESS 14401

Noise Suppression Capacitor (G1404474)

1 CBB25K WH-OG 3TBD 1.0

2L1T-14A464-AJA

C1ME19

TO NOISE SUPPRESSION CAPACITOR

HARNESS 12B637

Rear Door Speaker LH (G1404469)

PIN 1 => RME09B BN-YE 0.75 2TCD
PIN 1 => RME09B BN-YE 0.75 2TCD + RME09F BN-YE 0.75 2TCD
PIN 4 => VME09B WH-GN 0.75 2TCD
PIN 4 => VME09B WH-GN 0.75 2TCD + VME09F WH-GN 0.75 2TCD

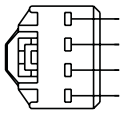

1 RME09F BN-YE 2TCD 0.75 + RME09B BN-YE 2TCD 0.75
2
3
4 VME09F WH-GN 2TCD 0.75 + VME09B WH-GN 2TCD 0.75

3M5T-14489-RDA

C7ME09

TO LEFT REAR DOOR SPEAKER

HARNESS 14241

Rear Door Speaker RH (G1404470)

PIN 1 => RME12B BN-BU 0.75 2TCD
PIN 1 => RME12B BN-BU 0.75 2TCD + RME12F BN-BU 0.75 2TCD
PIN 4 => VME12B BN-WH 0.75 2TCD
PIN 4 => VME12B BN-WH 0.75 2TCD + VME12F BN-WH 0.75 2TCD

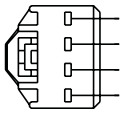

1 RME12F BN-BU 2TCD 0.75 + RME12B BN-BU 2TCD 0.75
2
3
4 VME12F BN-WH 2TCD 0.75 + VME12B BN-WH 2TCD 0.75

3M5T-14489-RDA

C8ME12

TO RIGHT REAR DOOR SPEAKER

HARNESS 14240

SECTION 417-01 Exterior Lighting

VEHICLE APPLICATION: 2012.0 Ranger

CONTENTS PAGE

PAGE 1 OF 2

ELECTRICAL SCHEMATICS

Autolamps — LHD 4WD/LHD RWD..... 417-01-3
Autolamps — RHD 4WD/RHD RWD..... 417-01-5
Headlamp Leveling..... 417-01-7
Exterior Lighting — LHD 4WD/LHD RWD..... 417-01-9
Exterior Lighting — RHD 4WD/RHD RWD..... 417-01-11
Fog Lamps — LHD 4WD/LHD RWD..... 417-01-13
Fog Lamps — RHD 4WD/RHD RWD..... 417-01-15
Trailer Socket — LHD 4WD/LHD RWD..... 417-01-17
Trailer Socket — RHD 4WD/RHD RWD..... 417-01-21
Turn Signal and Hazard Lamps — LHD 4WD/LHD RWD..... 417-01-25
Turn Signal and Hazard Lamps — RHD 4WD/RHD RWD..... 417-01-27

ELECTRICAL CONNECTORS

Front Fog Lamp LH..... 417-01-29
Front Fog Lamp RH..... 417-01-29
Front Side Marker Lamp LH..... 417-01-29
Front Side Marker Lamp RH..... 417-01-29
Headlamp Assembly LH..... 417-01-29
Headlamp Assembly RH..... 417-01-30
Headlamp Control Module..... 417-01-30
Headlamp Control Module — A..... 417-01-30
Headlamp Leveling Switch..... 417-01-30
High Mounted Stoplamp..... 417-01-30
High Mounted Stoplamp..... 417-01-31
License Plate Lamp..... 417-01-31
License Plate Lamp — A..... 417-01-31
Parking Lamp LH..... 417-01-31
Parking Lamp RH..... 417-01-31
Rear Lamp Assembly LH..... 417-01-32
Rear Lamp Assembly RH..... 417-01-32
Reversing Lamp Switch..... 417-01-32
Side Turn Signal Lamp LH..... 417-01-32
Side Turn Signal Lamp RH..... 417-01-33
Stoplamp Switch..... 417-01-33
Trailer Socket..... 417-01-33
Trailer Socket — A..... 417-01-33
Trailer Socket — B..... 417-01-34
Trailer Socket — C..... 417-01-34
Trailer Socket — D..... 417-01-34
Trailer Socket — E..... 417-01-34
Trailer Socket — F..... 417-01-35

PAGE 2 OF 2

Trailer Socket — G..... 417-01-35
Trailer Socket — H..... 417-01-35
Trailer Socket — J..... 417-01-35
Trailer Module..... 417-01-36
Trailer Module — A..... 417-01-36
Trailer Module — B..... 417-01-36

417-01-3 Autolamps—LHD 4WD/LHD RWD

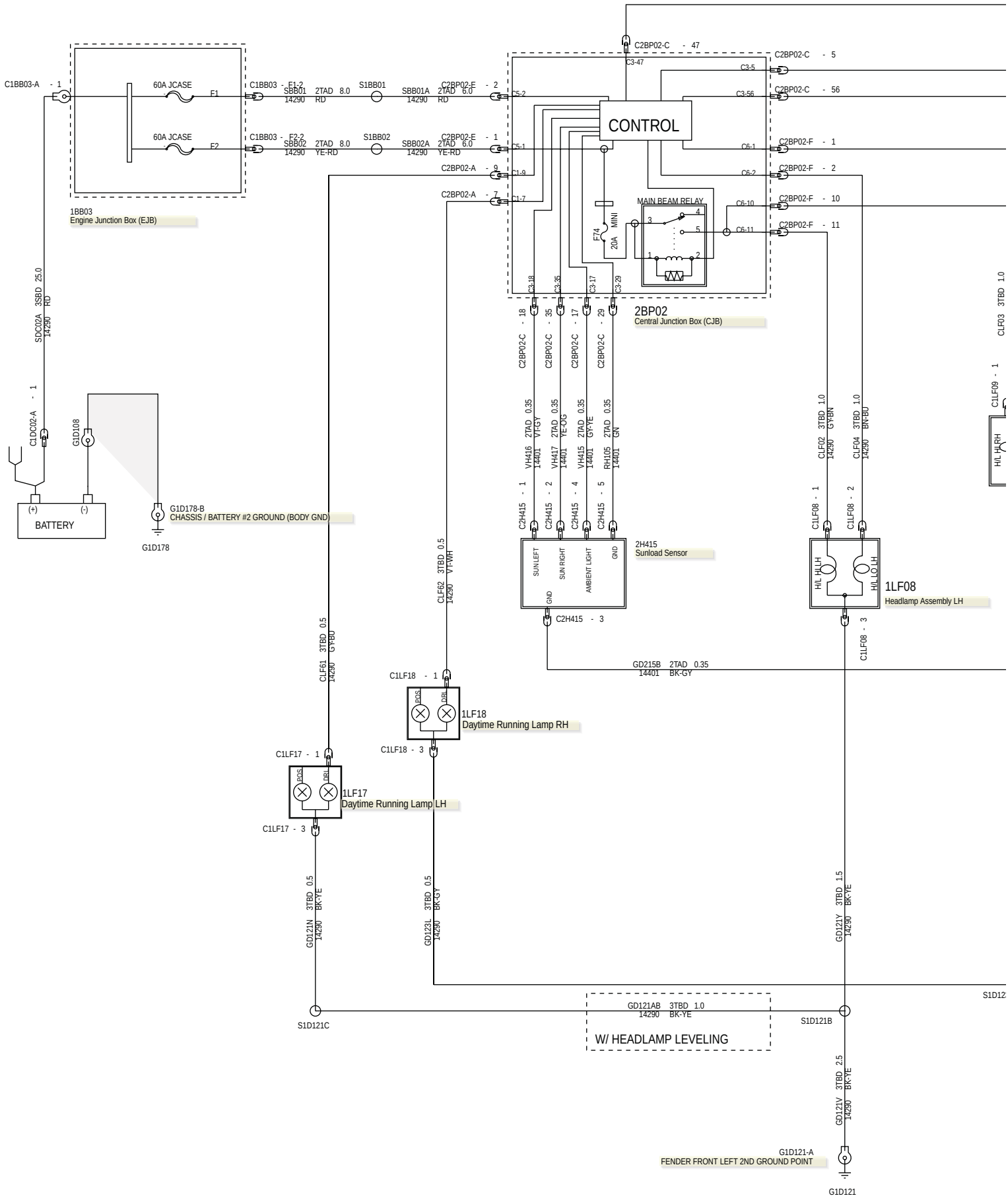

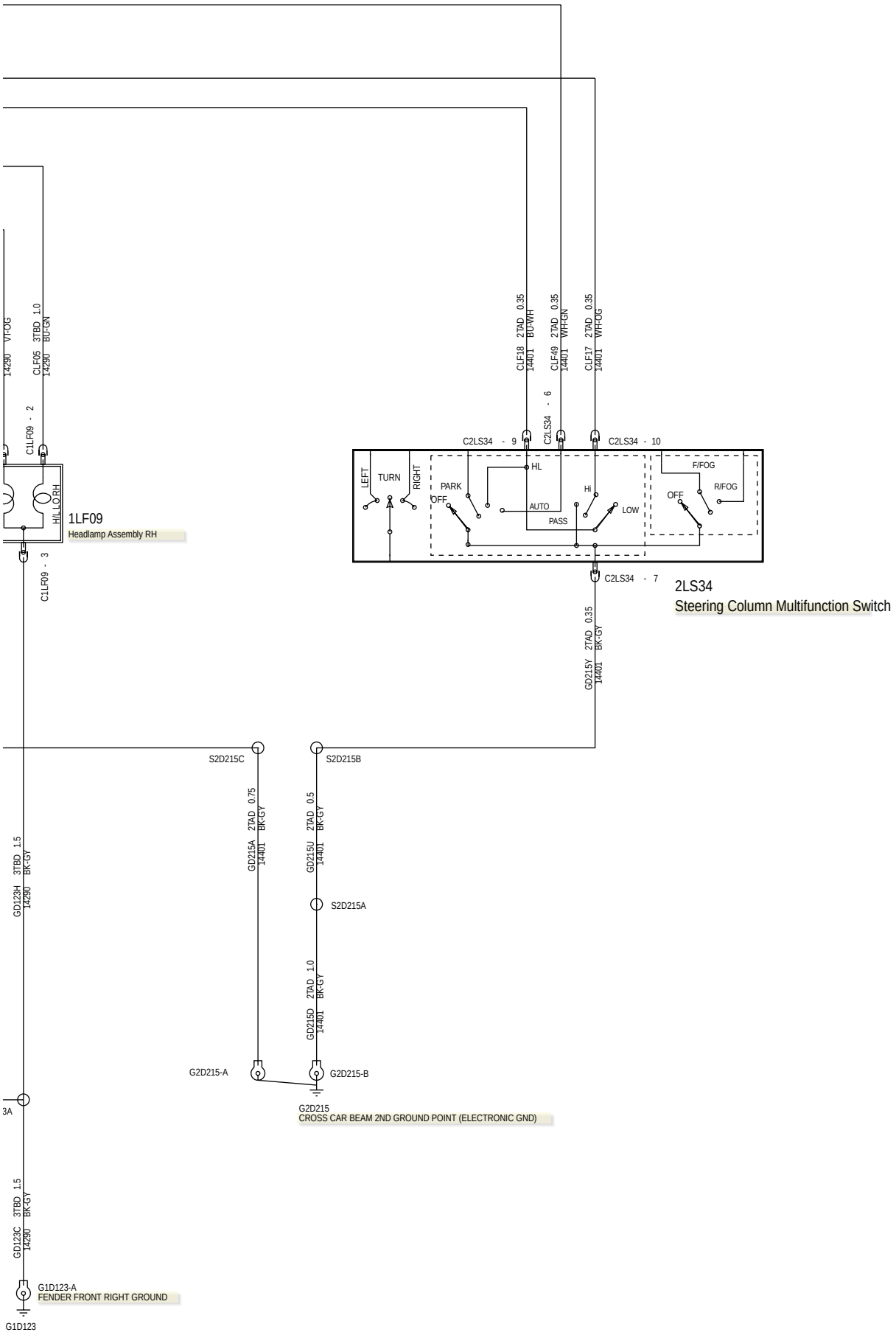
1LF09
Headlamp Assembly RH
H/L LO RH
C1LF09 - 2
C1LF09 - 3
CLF05 3TBD 1.0 14290 BU-GN
14290 VT-OG
CLF18 2TAD 0.35 14401 BU-WH
CLF49 2TAD 0.35 14401 WH-GN
CLF17 2TAD 0.35 14401 WH-OG
C2LS34 - 9
C2LS34 - 6
C2LS34 - 10
C2LS34 - 7
2LS34
Steering Column Multifunction Switch
LEFT
TURN
RIGHT
PARK
OFF
HL
AUTO
PASS
Hi
LOW
F/FOG
R/FOG
OFF
GD215Y 2TAD 0.35 14401 BK-GY
S2D215C
S2D215B
S2D215A
GD215A 2TAD 0.75 14401 BK-GY
GD215U 2TAD 0.5 14401 BK-GY
GD215D 2TAD 1.0 14401 BK-GY
GD123H 3TBD 1.5 14290 BK-GY
GD123C 3TBD 1.5 14290 BK-GY
G2D215-A
G2D215-B
G2D215
CROSS CAR BEAM 2ND GROUND POINT (ELECTRONIC GND)
3A
G1D123-A
FENDER FRONT RIGHT GROUND
G1D123

417-01-5 Autolamps—RHD 4WD/RHD RWD

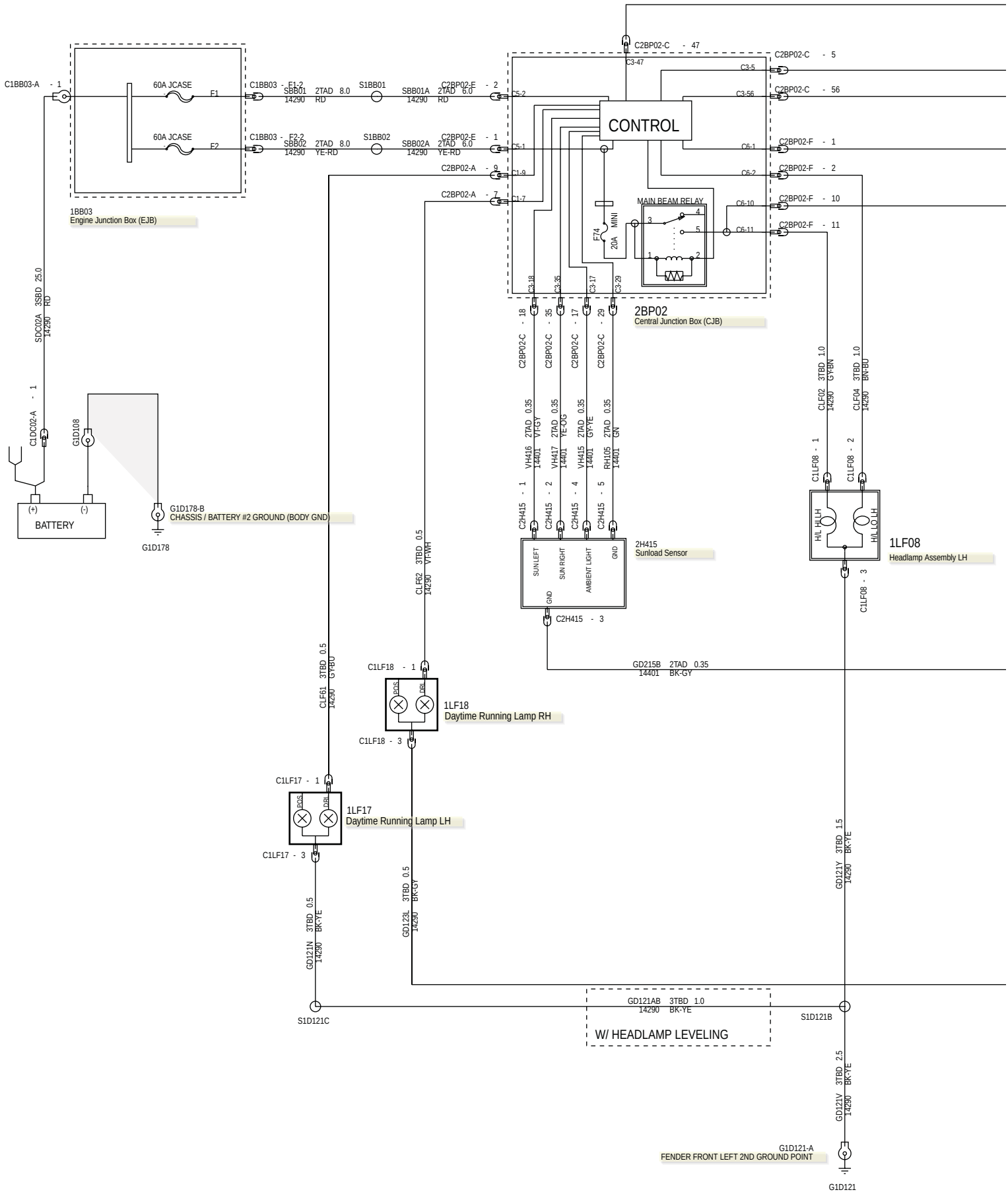

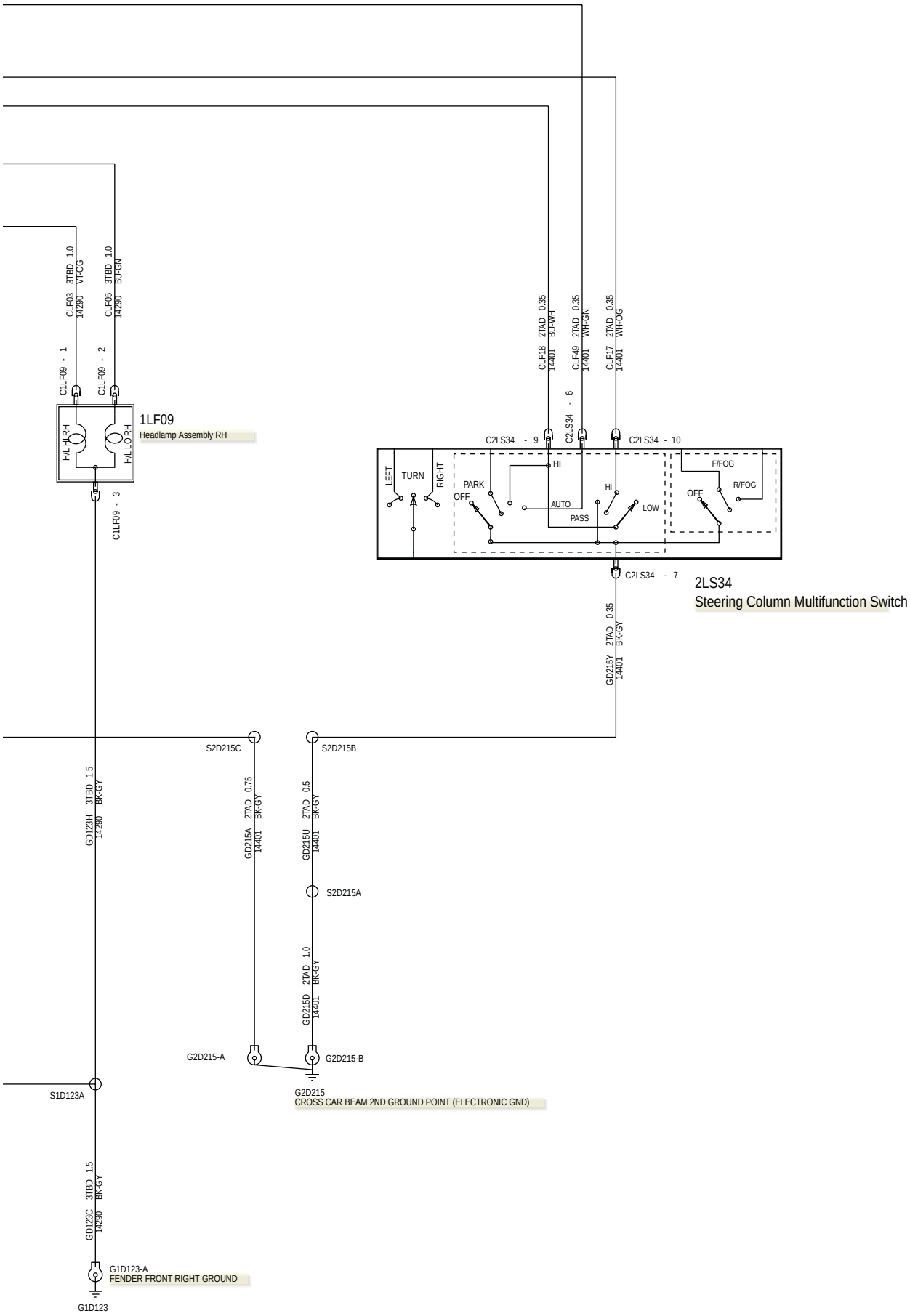
CLF03 3TBD 1.0 14290 VT-OG
CLF05 3TBD 1.0 14290 BU-GN
C1LF09 - 1
C1LF09 - 2
C1LF09 - 3
H/L HI RH
H/L LO RH
1LF09
Headlamp Assembly RH
CLF18 2TAD 0.35 14401 BU-WH
CLF49 2TAD 0.35 14401 WH-GN
CLF17 2TAD 0.35 14401 WH-OG
C2LS34 - 6
C2LS34 - 9
C2LS34 - 10
C2LS34 - 7
LEFT
TURN
RIGHT
PARK
OFF
HL
AUTO
PASS
Hi
LOW
F/FOG
R/FOG
OFF
2LS34
Steering Column Multifunction Switch
GD215Y 2TAD 0.35 14401 BK-GY
S2D215C
S2D215B
S2D215A
GD123H 3TBD 1.5 14290 BK-GY
GD215A 2TAD 0.75 14401 BK-GY
GD215U 2TAD 0.5 14401 BK-GY
GD215D 2TAD 1.0 14401 BK-GY
G2D215-A
G2D215-B
G2D215
CROSS CAR BEAM 2ND GROUND POINT (ELECTRONIC GND)
S1D123A
GD123C 3TBD 1.5 14290 BK-GY
G1D123-A
FENDER FRONT RIGHT GROUND
G1D123

417-01-7 Headlamp Leveling

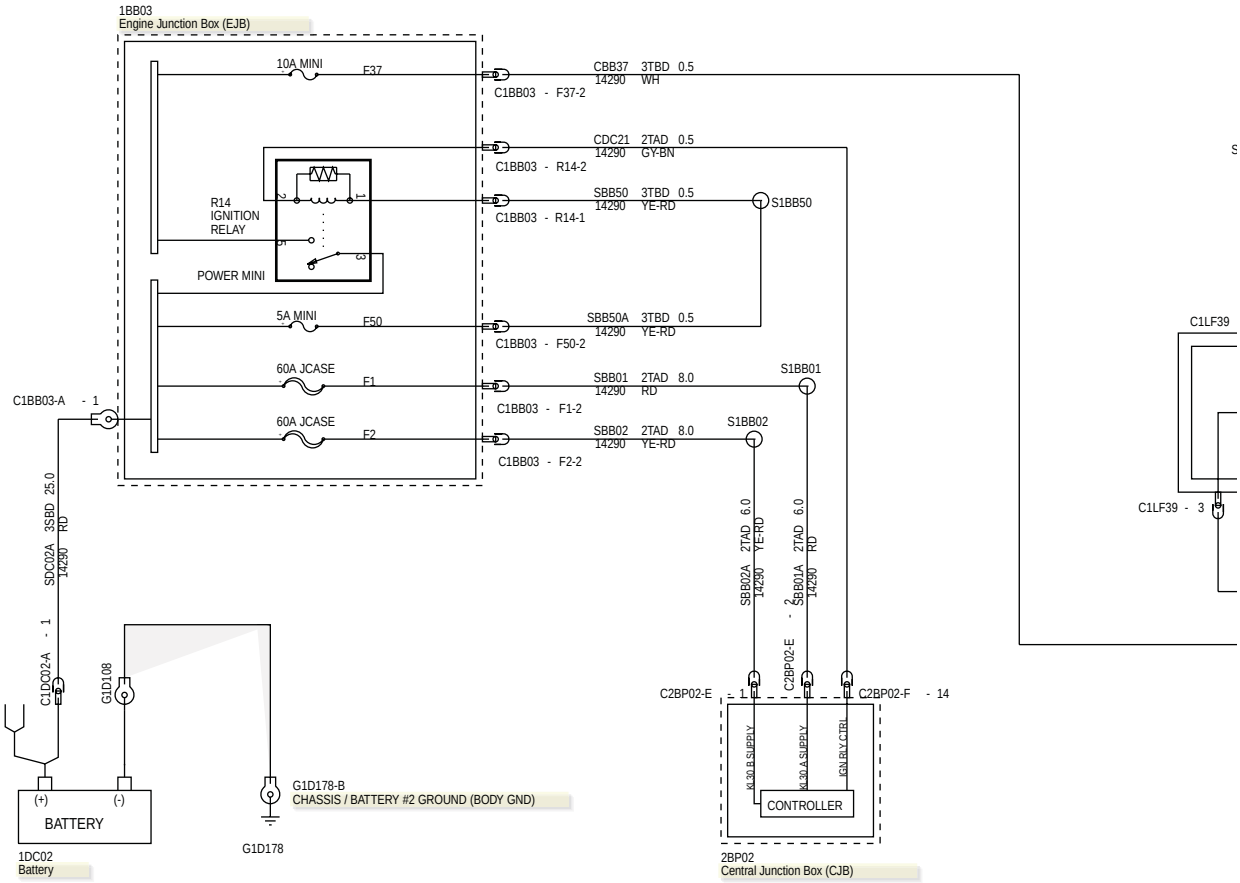

417-01-8 Headlamp Leveling

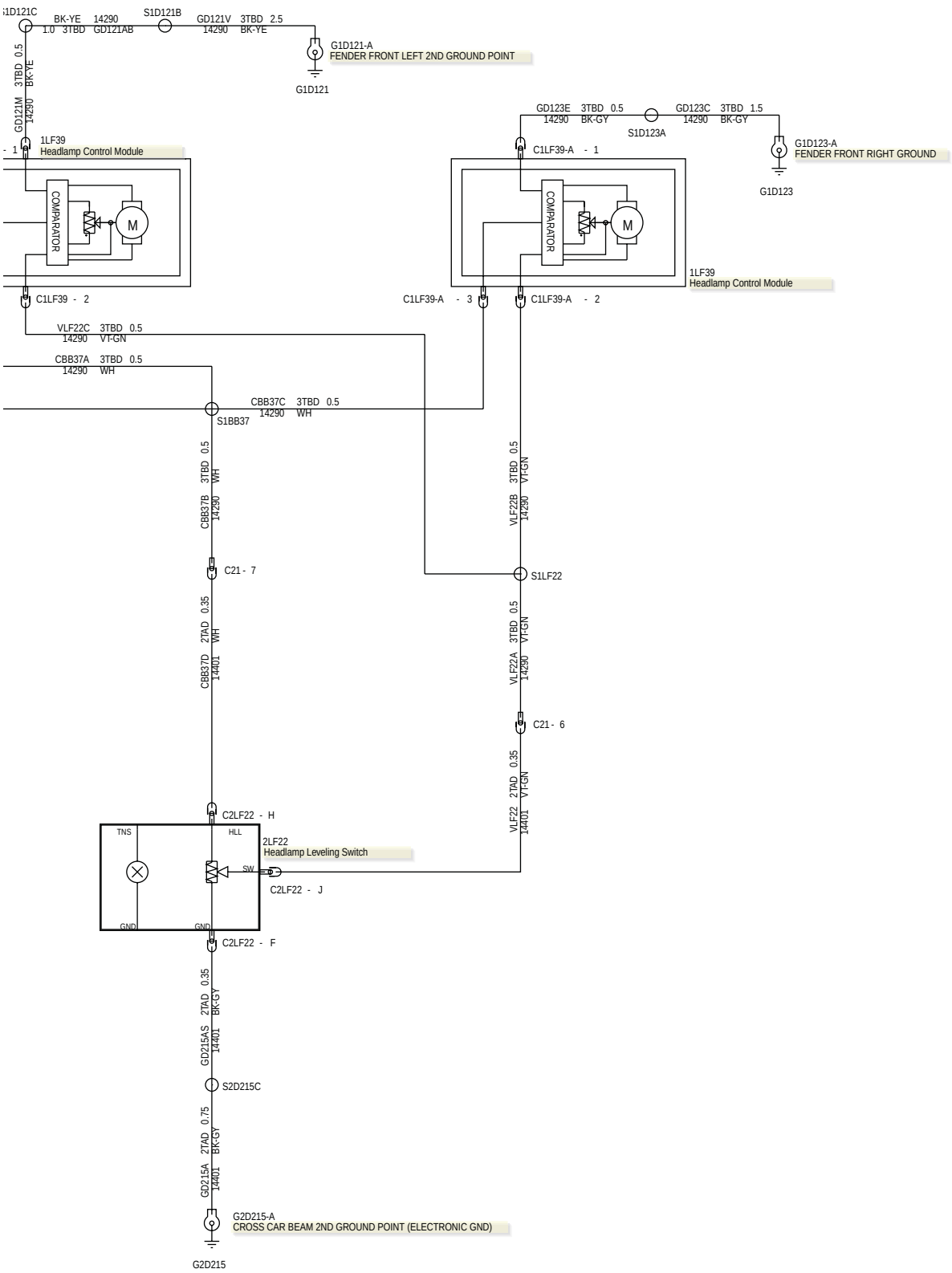

417-01-9 Exterior Lighting—LHD 4WD/LHD RWD

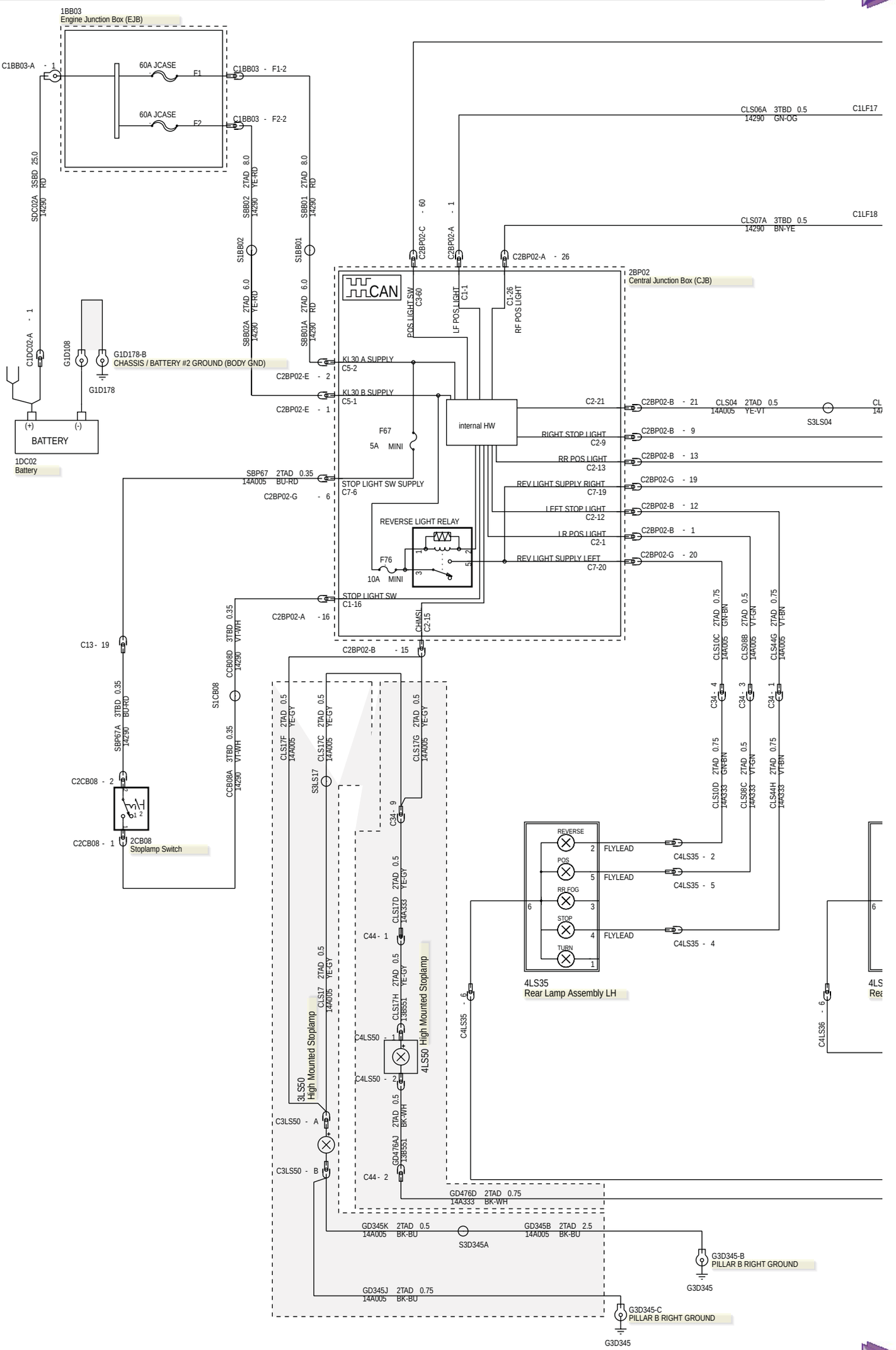

417-01-10 Exterior Lighting—LHD 4WD/LHD RWD

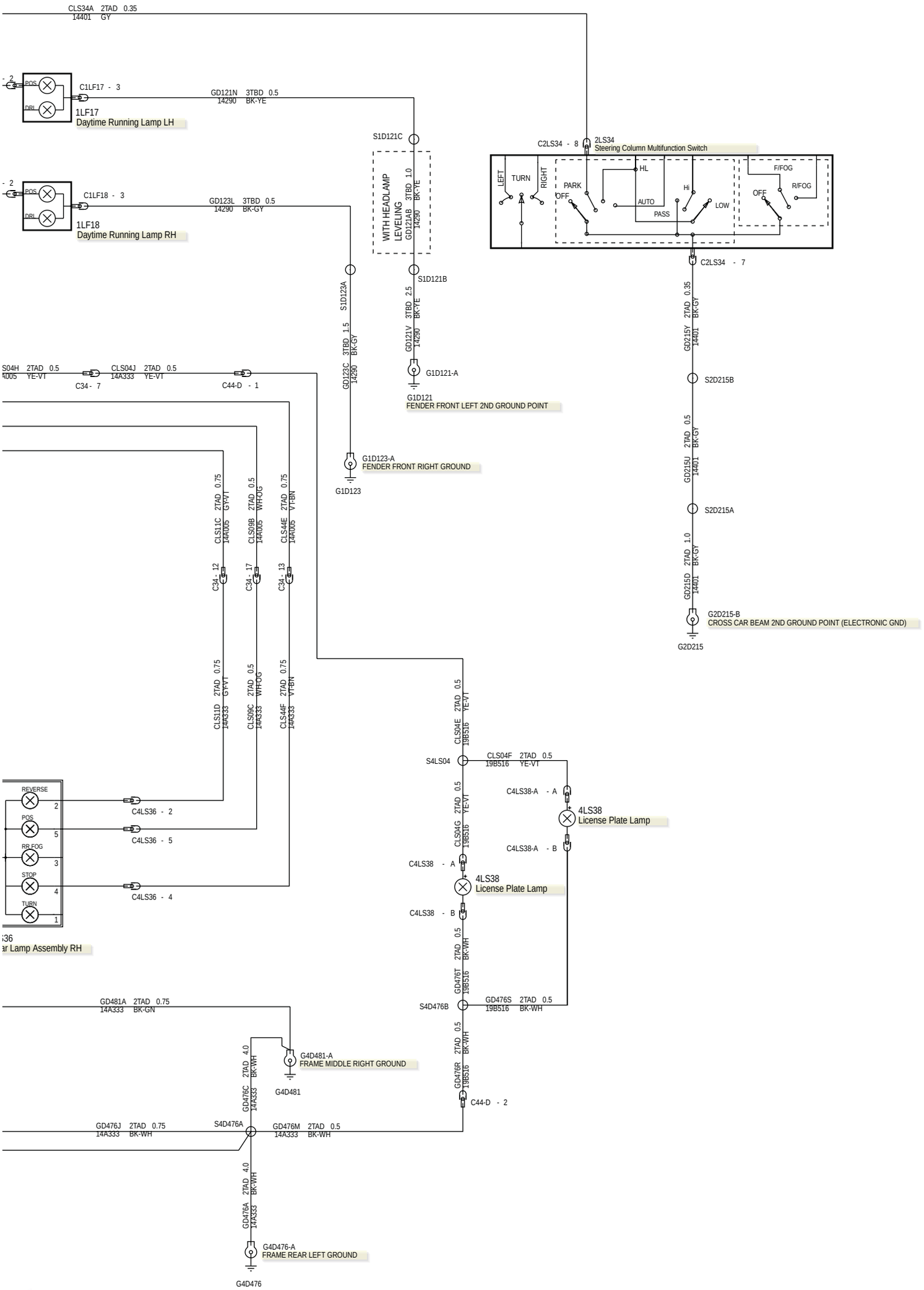

417-01-11 Exterior Lighting—RHD 4WD/RHD RWD

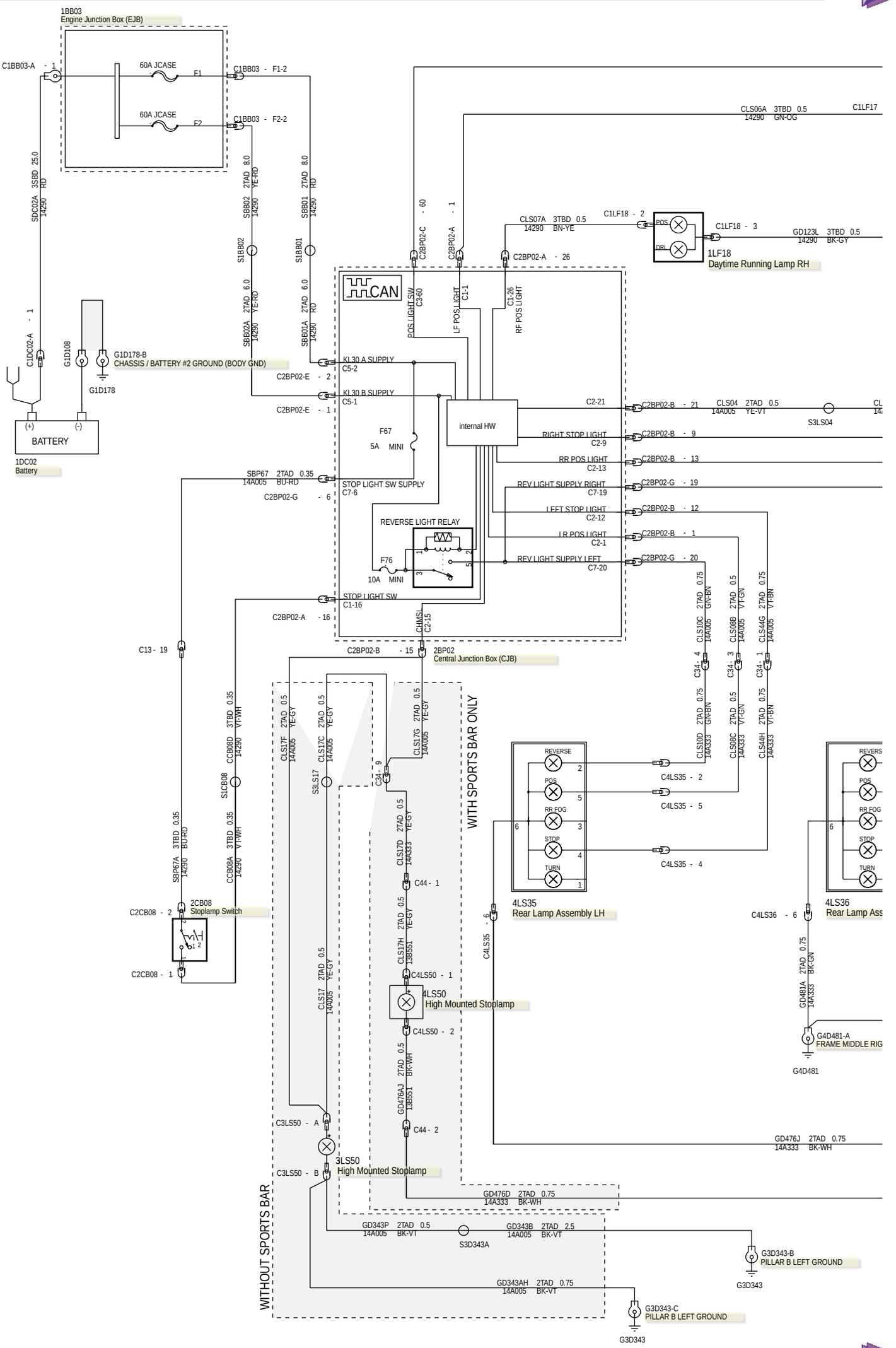

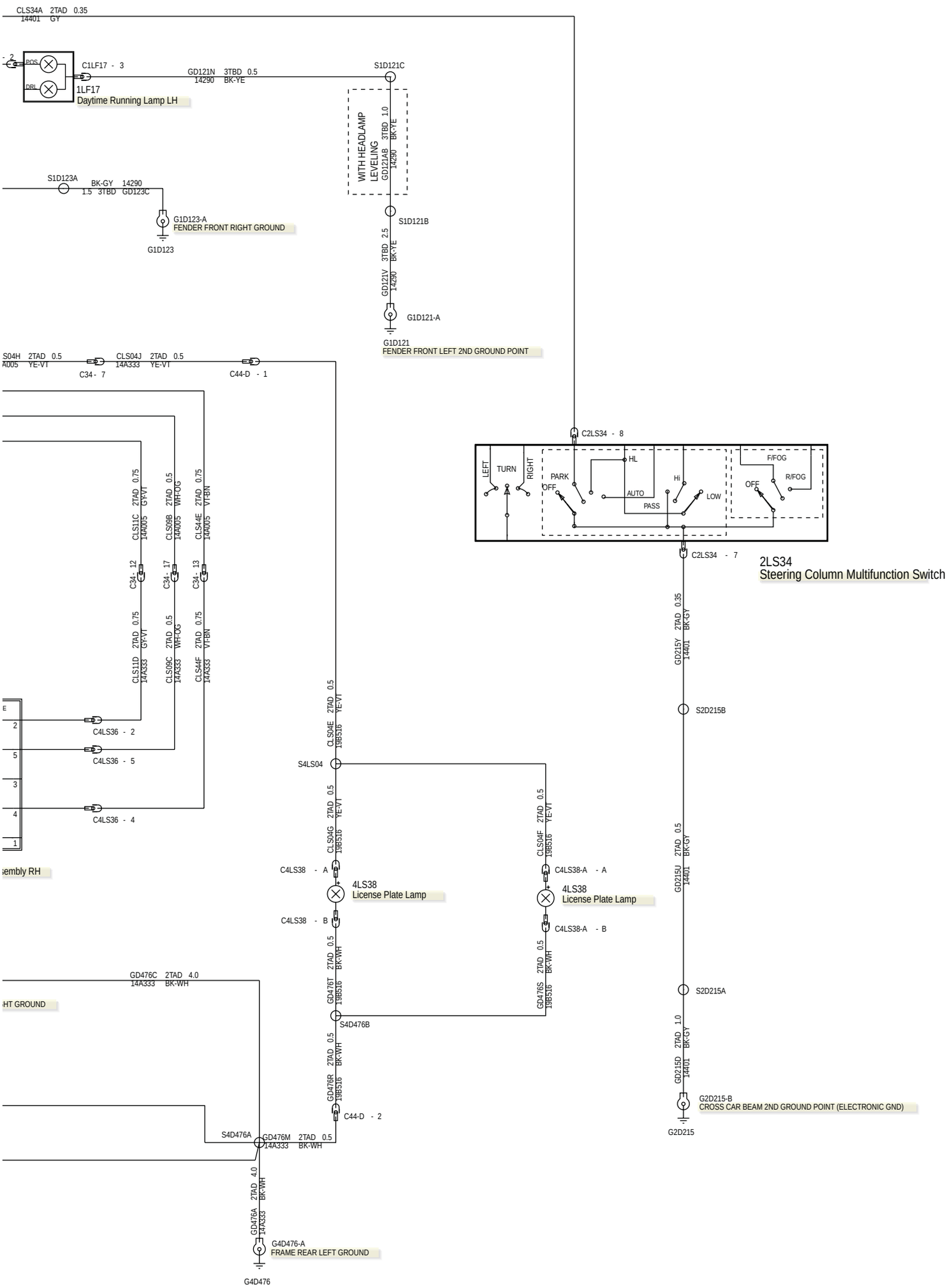
CLS34A 2TAD 0.35
14401 GY
POS
DRL
C1LF17 - 3
1LF17
Daytime Running Lamp LH
GD121N 3TBD 0.5
14290 BK-YE
S1D121C
WITH HEADLAMP LEVELING
GD121AB 3TBD 1.0
14290 BK-YE
S1D123A
BK-GY 14290
1.5 3TBD GD123C
G1D123-A
FENDER FRONT RIGHT GROUND
G1D123
S1D121B
GD121V 3TBD 2.5
14290 BK-YE
G1D121-A
G1D121
FENDER FRONT LEFT 2ND GROUND POINT
CLS04H 2TAD 0.5
A005 YE-VT
C34 - 7
CLS04J 2TAD 0.5
14A333 YE-VT
C44-D - 1
C2LS34 - 8
LEFT
TURN
RIGHT
PARK
OFF
HL
AUTO
PASS
Hi
LOW
F/FOG
R/FOG
OFF
C2LS34 - 7
2LS34
Steering Column Multifunction Switch
CLS11C 2TAD 0.75
14A005 GY-VT
CLS09B 2TAD 0.5
14A005 WH-OG
CLS44E 2TAD 0.75
14A005 VT-BN
C34 - 12
C34 - 17
C34 - 13
CLS11D 2TAD 0.75
14A333 GY-VT
CLS09C 2TAD 0.5
14A333 WH-OG
CLS44F 2TAD 0.75
14A333 VT-BN
C4LS36 - 2
C4LS36 - 5
C4LS36 - 4
embly RH
CLS04E 2TAD 0.5
19B516 YE-VT
S4LS04
CLS04G 2TAD 0.5
19B516 YE-VT
C4LS38 - A
4LS38
License Plate Lamp
C4LS38 - B
CLS04F 2TAD 0.5
19B516 YE-VT
C4LS38-A - A
4LS38
License Plate Lamp
C4LS38-A - B
GD476T 2TAD 0.5
19B516 BK-WH
GD476S 2TAD 0.5
19B516 BK-WH
S4D476B
GD476R 2TAD 0.5
19B516 BK-WH
C44-D - 2
GD476C 2TAD 4.0
14A333 BK-WH
HT GROUND
S4D476A
GD476M 2TAD 0.5
14A333 BK-WH
GD476A 2TAD 4.0
14A333 BK-WH
G4D476-A
FRAME REAR LEFT GROUND
G4D476
GD215Y 2TAD 0.35
14401 BK-GY
S2D215B
GD215U 2TAD 0.5
14401 BK-GY
S2D215A
GD215D 2TAD 1.0
14401 BK-GY
G2D215-B
CROSS CAR BEAM 2ND GROUND POINT (ELECTRONIC GND)
G2D215

417-01-13 Fog Lamps—LHD 4WD/LHD RWD

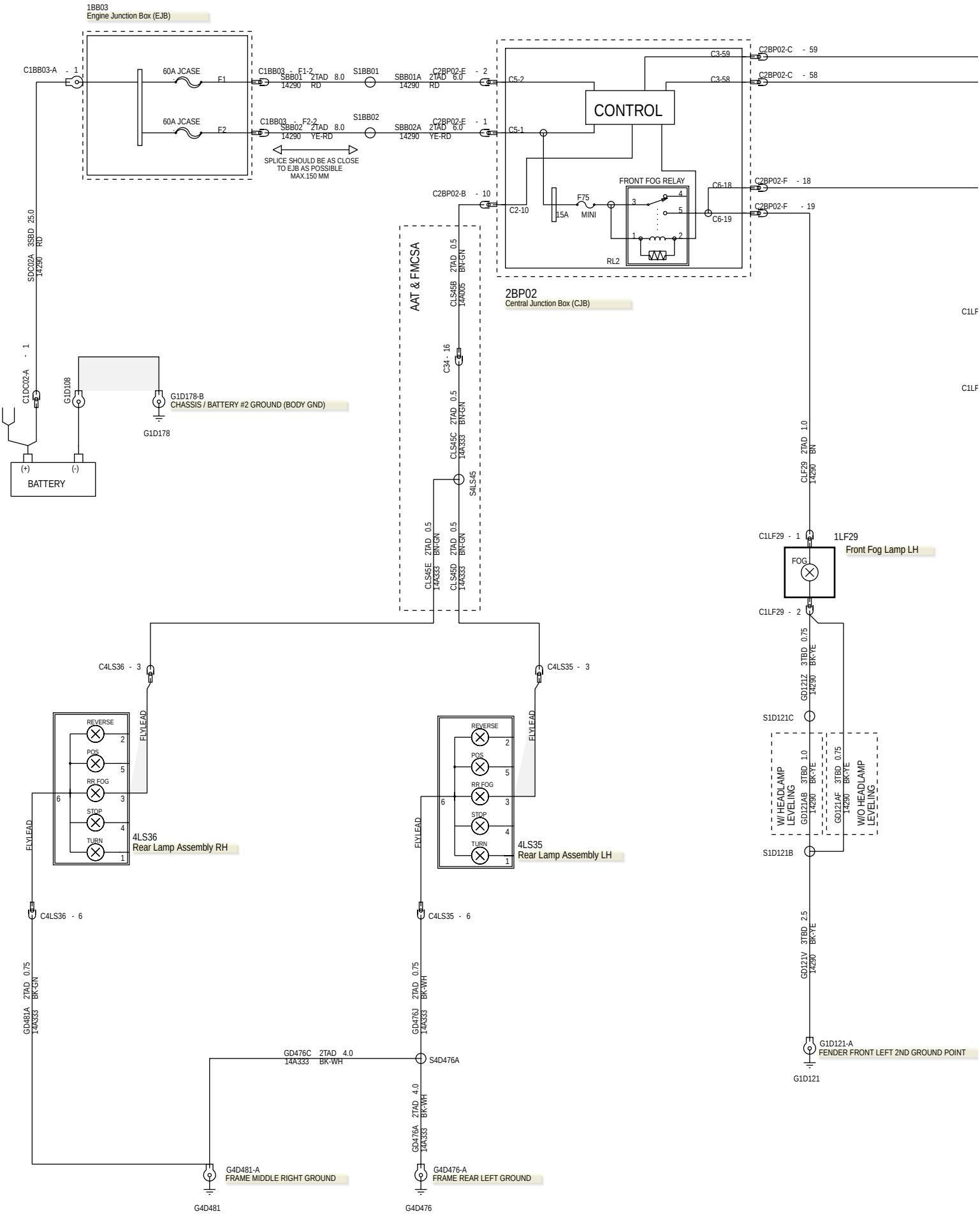

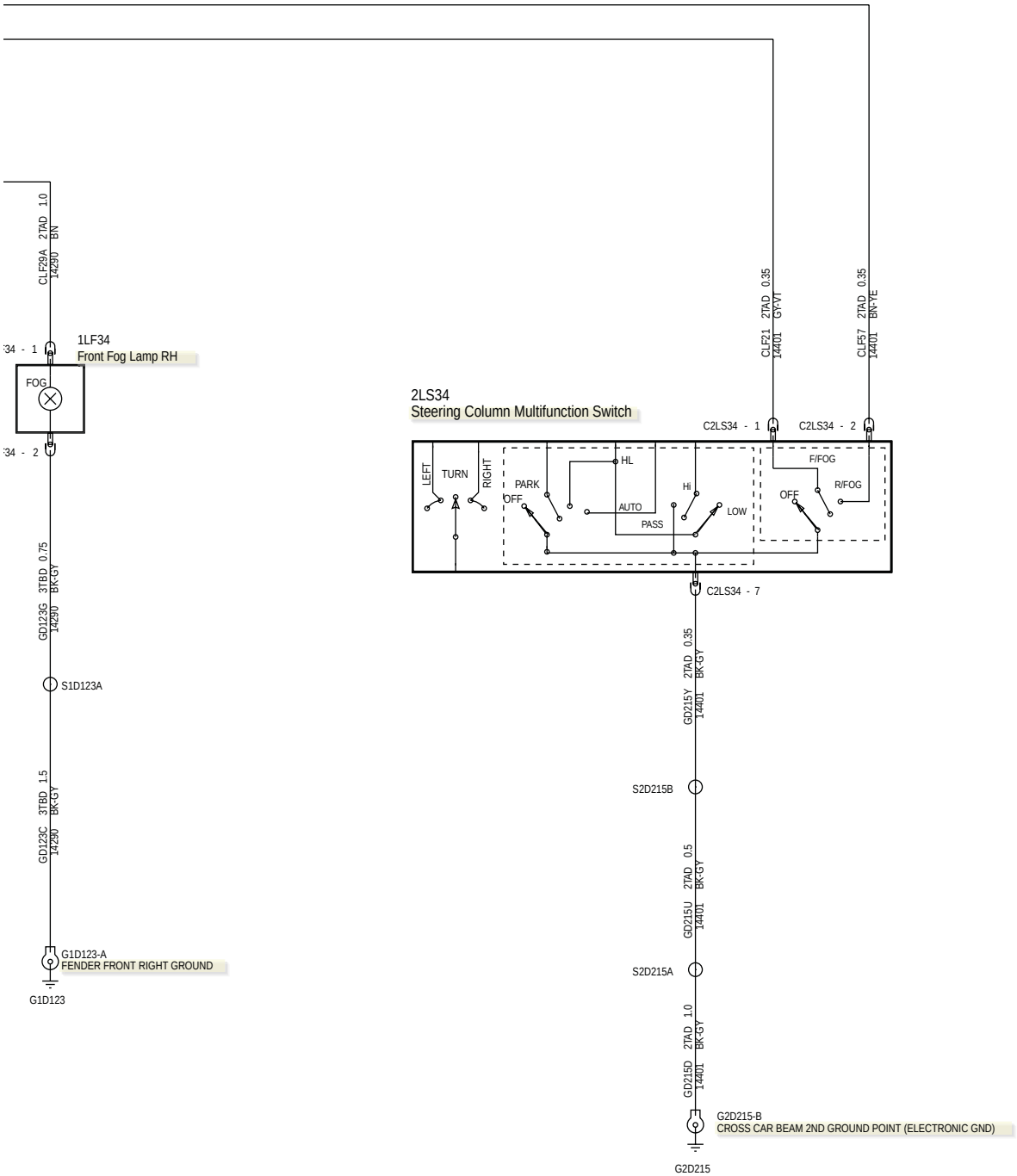
CLF29A 2TAD 1.0
14290 BN
34 - 1
1LF34
Front Fog Lamp RH
FOG
34 - 2
GD123G 3TBD 0.75
14290 BK-GY
S1D123A
GD123C 3TBD 1.5
14290 BK-GY
G1D123-A
FENDER FRONT RIGHT GROUND
G1D123
CLF21 2TAD 0.35
14401 GY-VT
CLF57 2TAD 0.35
14401 BN-YE
2LS34
Steering Column Multifunction Switch
C2LS34 - 1
C2LS34 - 2
LEFT
TURN
RIGHT
PARK
OFF
HL
AUTO
PASS
Hi
LOW
F/FOG
OFF
R/FOG
C2LS34 - 7
GD215Y 2TAD 0.35
14401 BK-GY
S2D215B
GD215U 2TAD 0.5
14401 BK-GY
S2D215A
GD215D 2TAD 1.0
14401 BK-GY
G2D215-B
CROSS CAR BEAM 2ND GROUND POINT (ELECTRONIC GND)
G2D215

417-01-15 Fog Lamps—RHD 4WD/RHD RWD

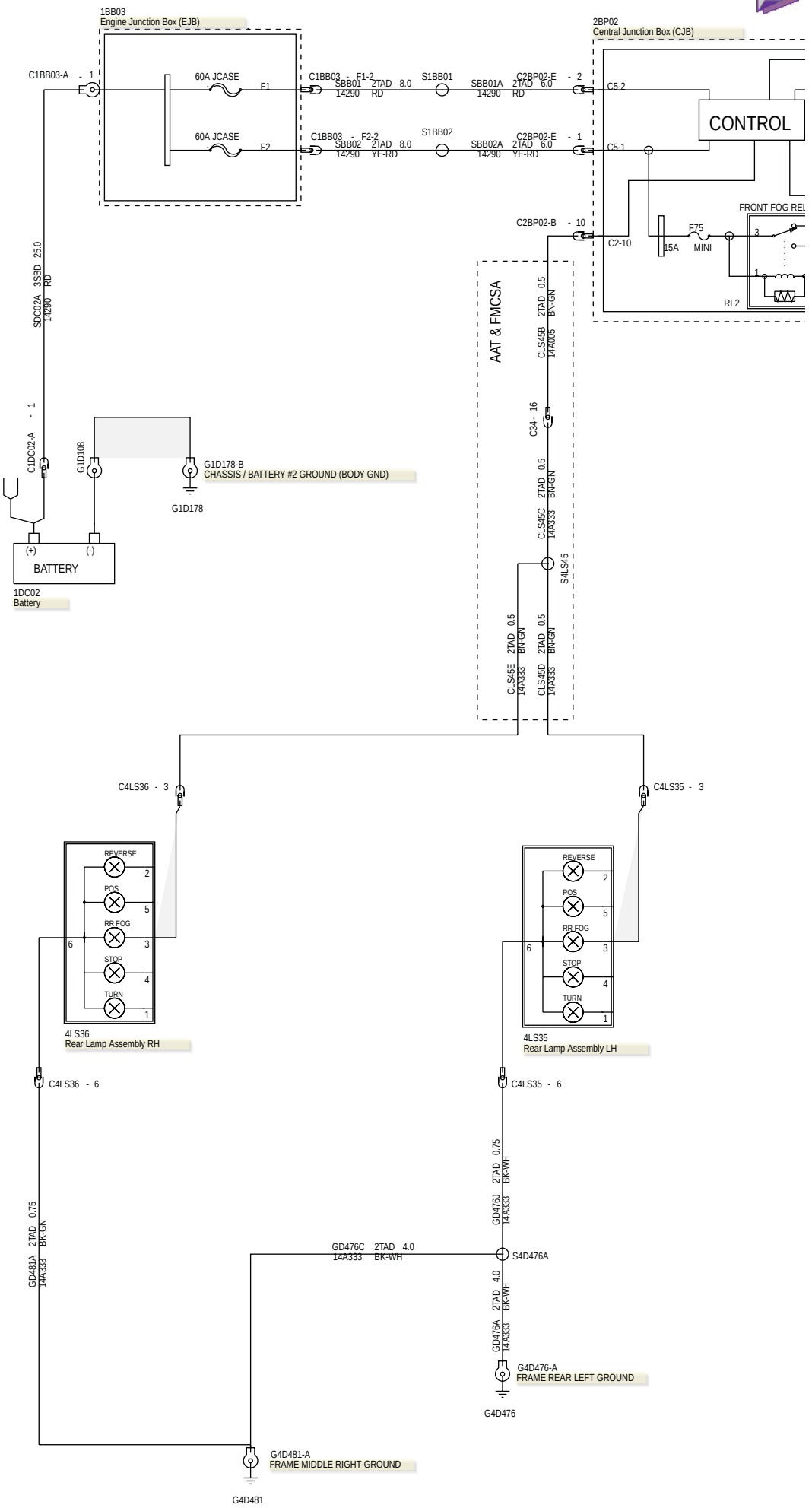

417-01-16 Fog Lamps—RHD 4WD/RHD RWD

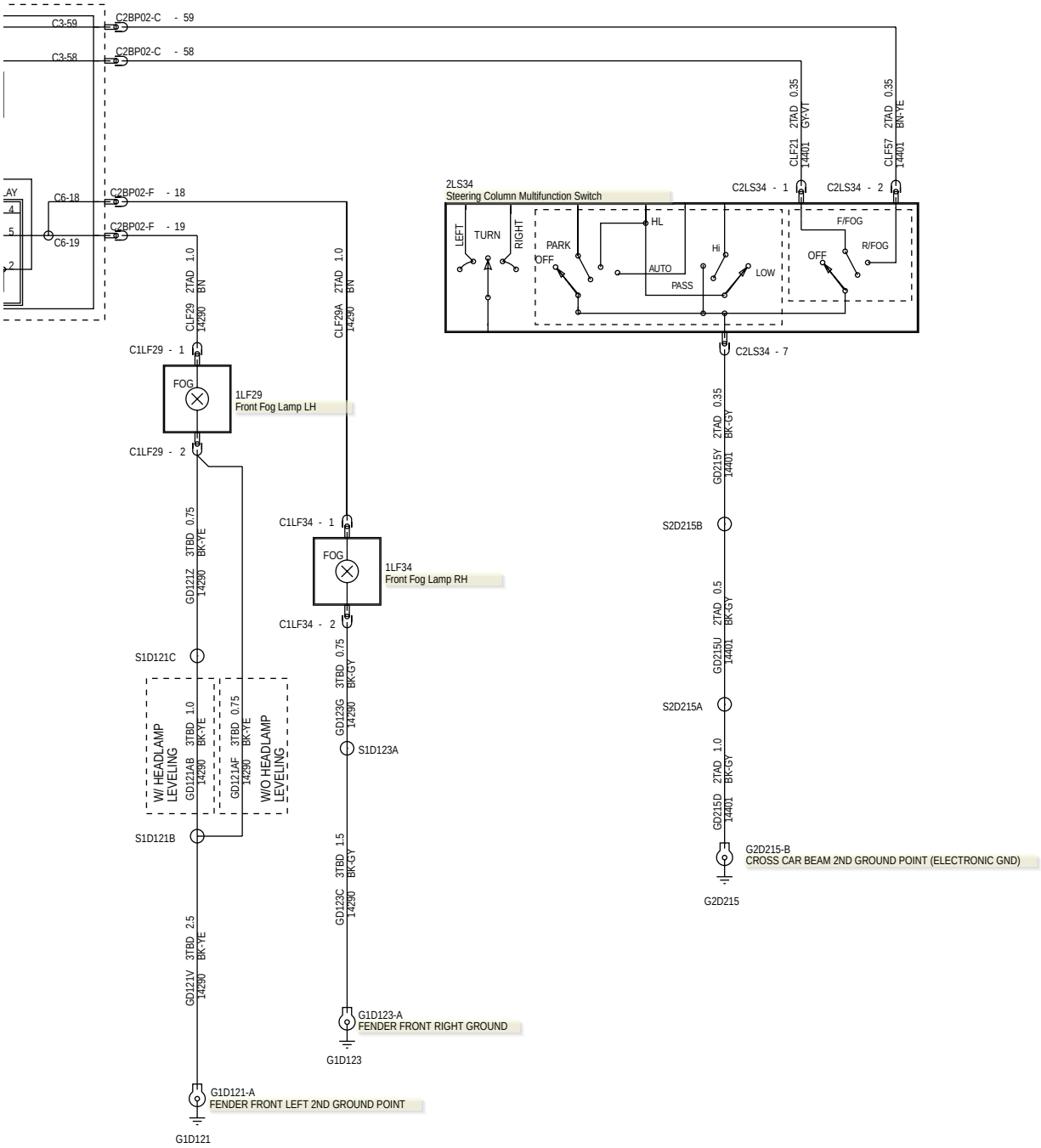

AUSTRALIA & NEW ZEALAND ONLY

AFTERMARKET LEVEL A
(VEHICLE/HARNESS HAVE TRAILER TOW FEATURE)

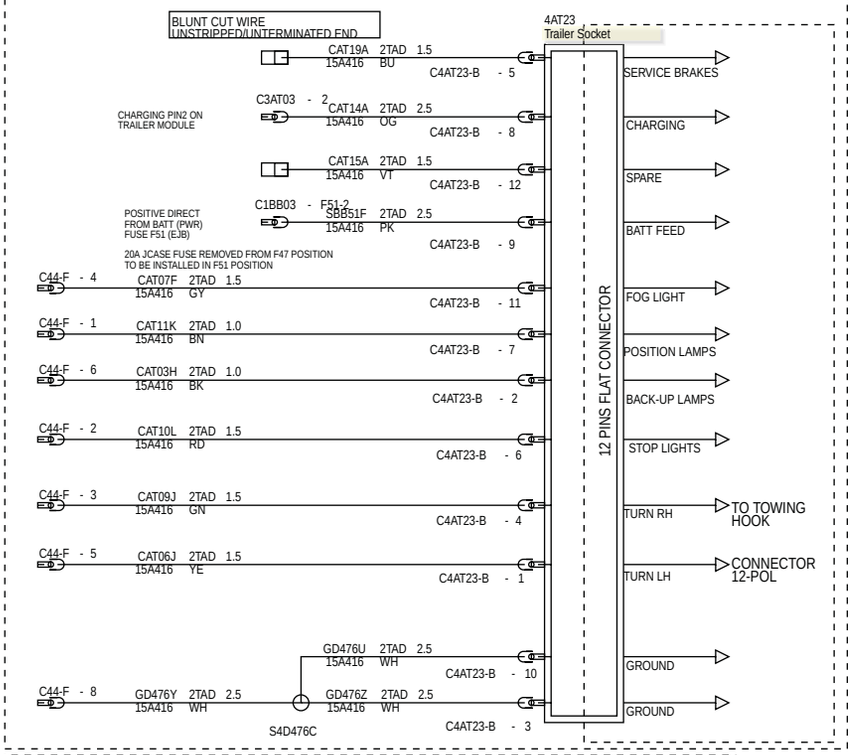

AUSTRALIA & NEW ZEALAND ONLY

AFTERMARKET LEVEL B
(VEHICLE DON'T HAVE PRE IN
TRAILER TOW FEATURE)

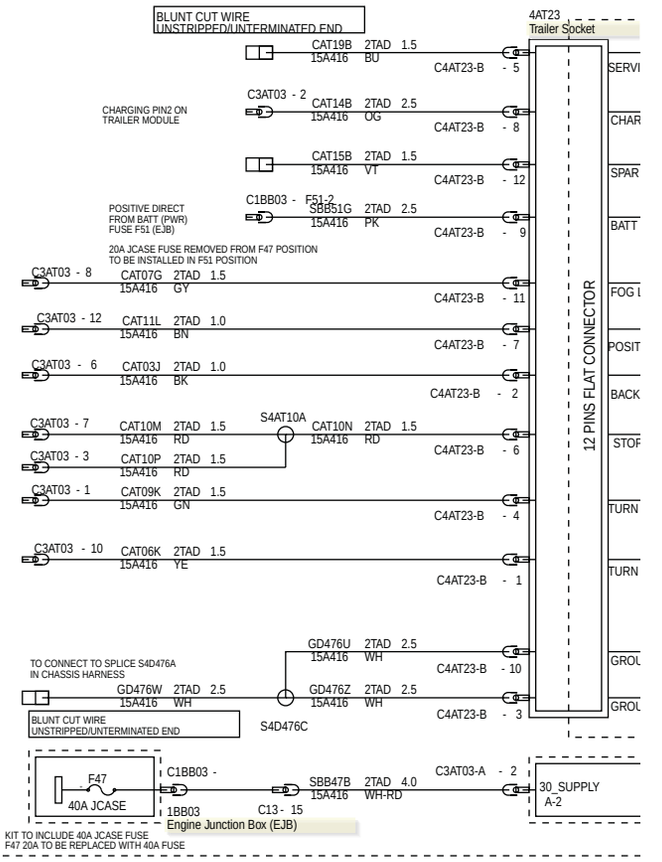

EU (EXCEPT UK ONLY)

AFTERMARKET LEVEL D
(VEHICLE/HARNESS HAVE TRAILER TOW FEATURE)

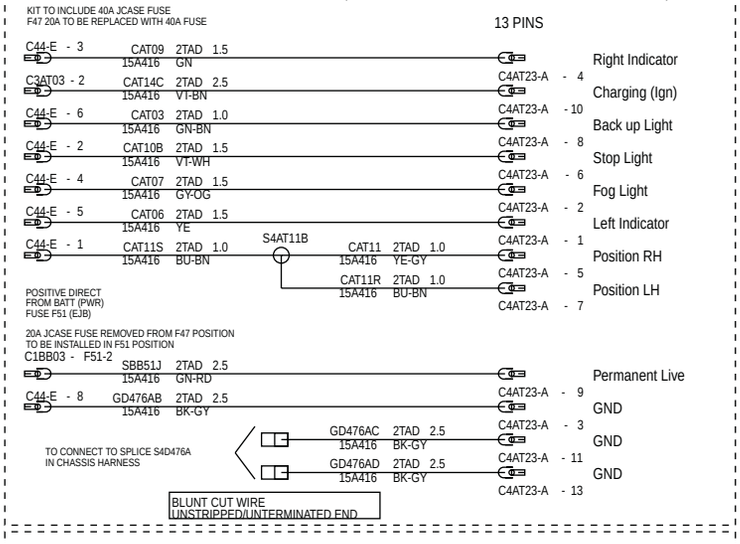

AFTERMARKET LEVEL E
(VEHICLE DON'T HAVE PRE INSTALLED
TRAILER TOW FEATURE)

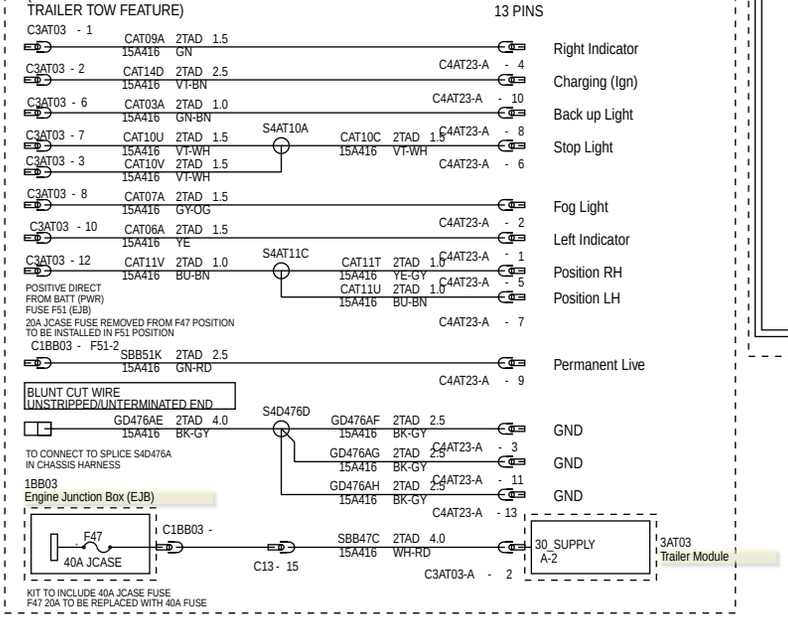

EU, EXCEPT UK ONLY (WITH RESISTOR)

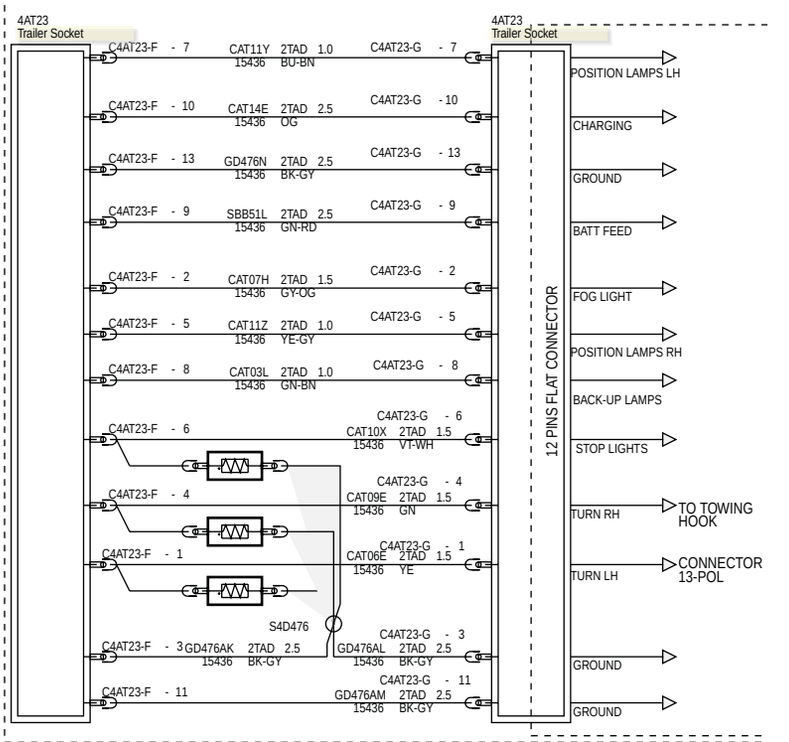

417-01-18 Trailer Socket—LHD 4WD/LHD RWD

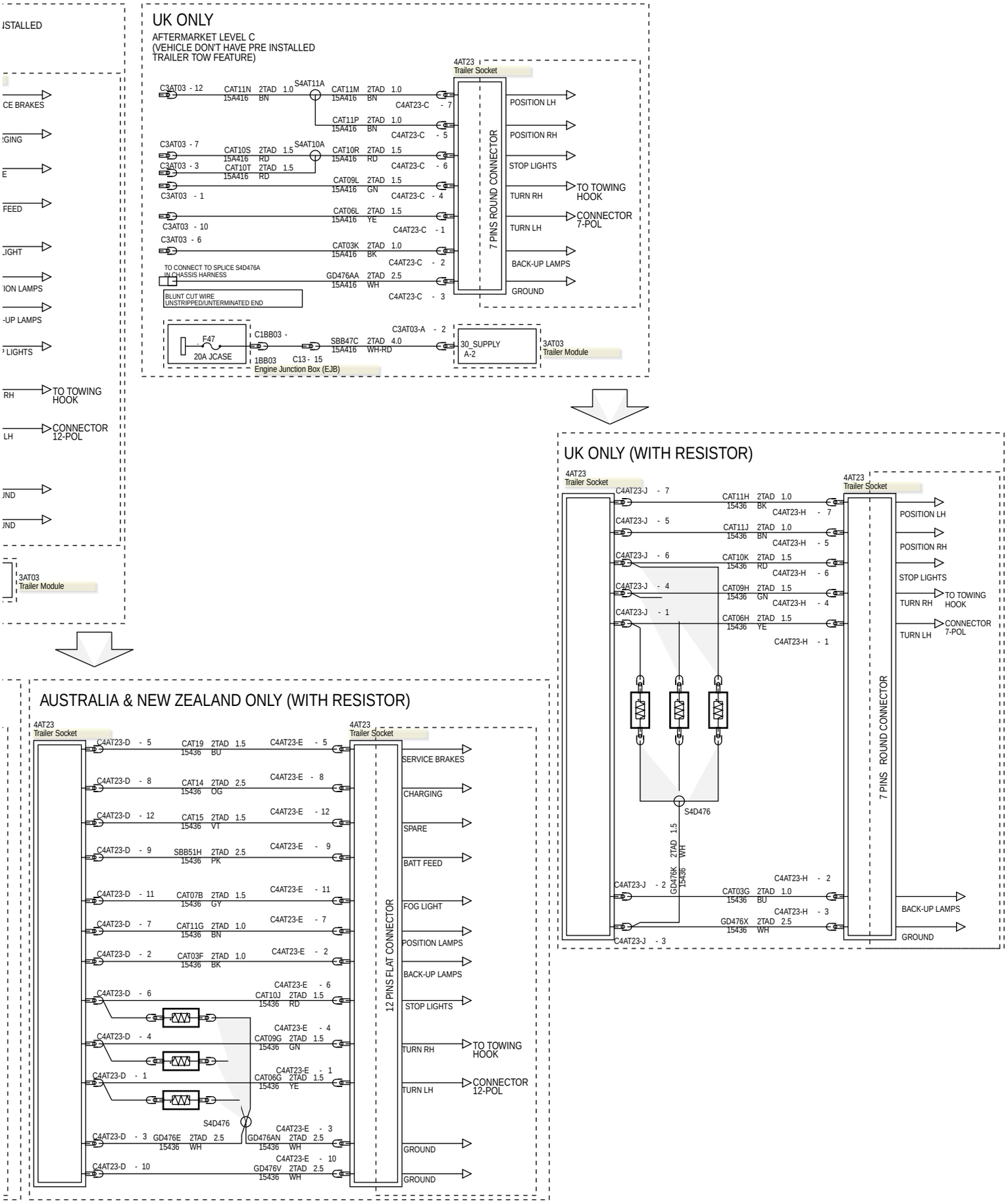

417-01-19 Trailer Socket—LHD 4WD/LHD RWD

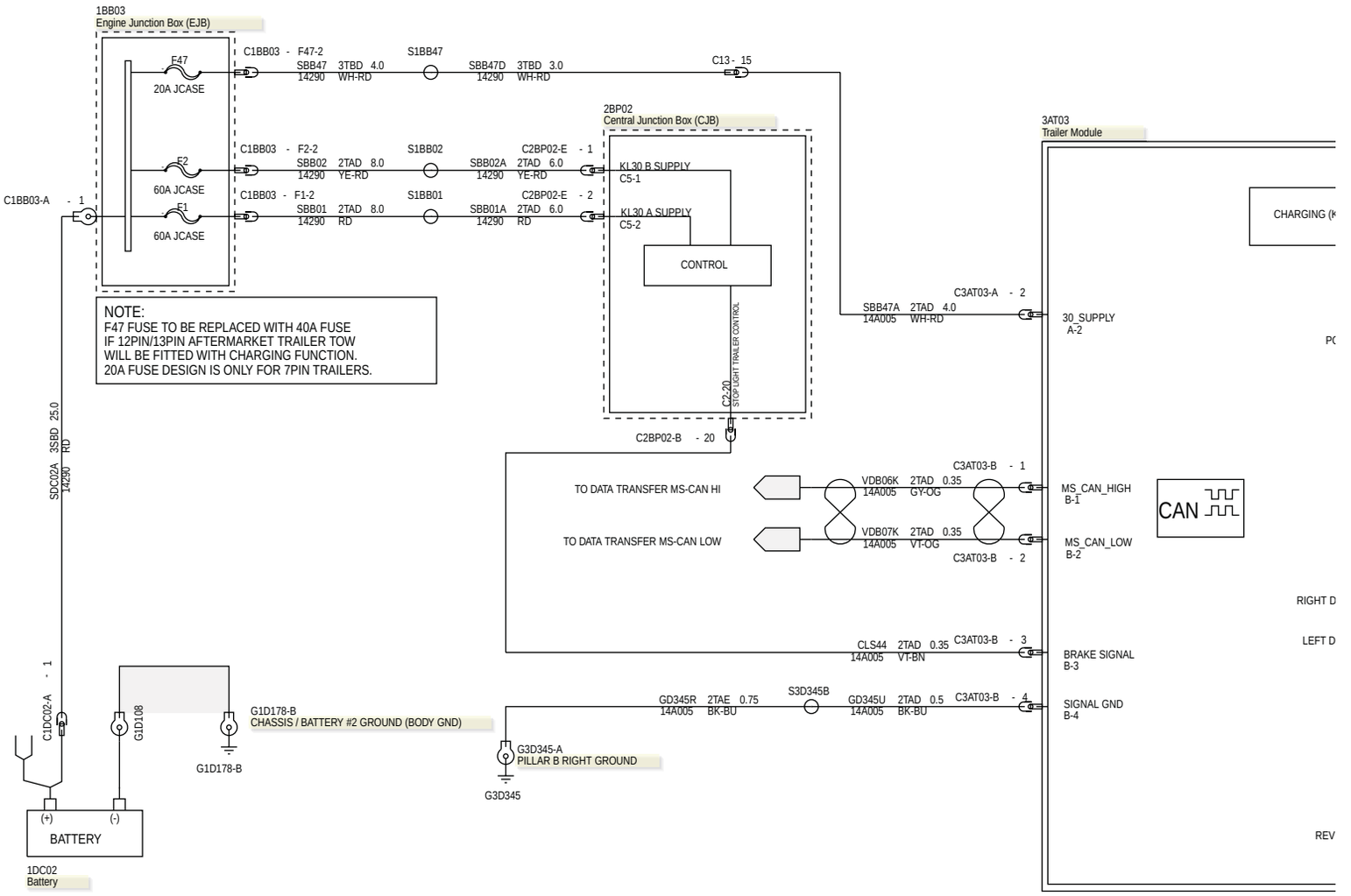

417-01-20 Trailer Socket—LHD 4WD/LHD RWD

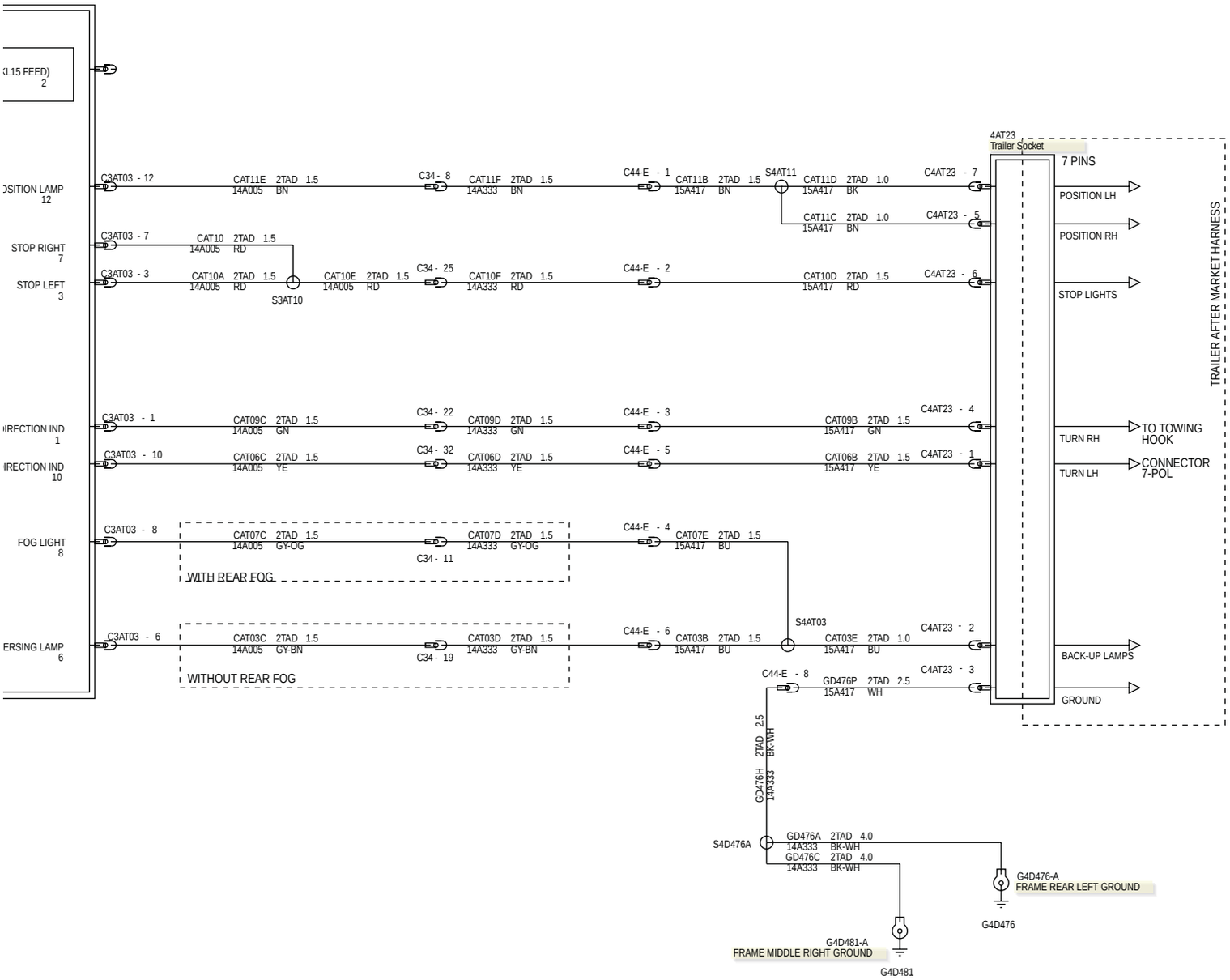

AUSTRALIA & NEW ZEALAND ONLY

AFTERMARKET LEVEL A
(VEHICLE/HARNESS HAVE TRAILER TOW FEATURE)

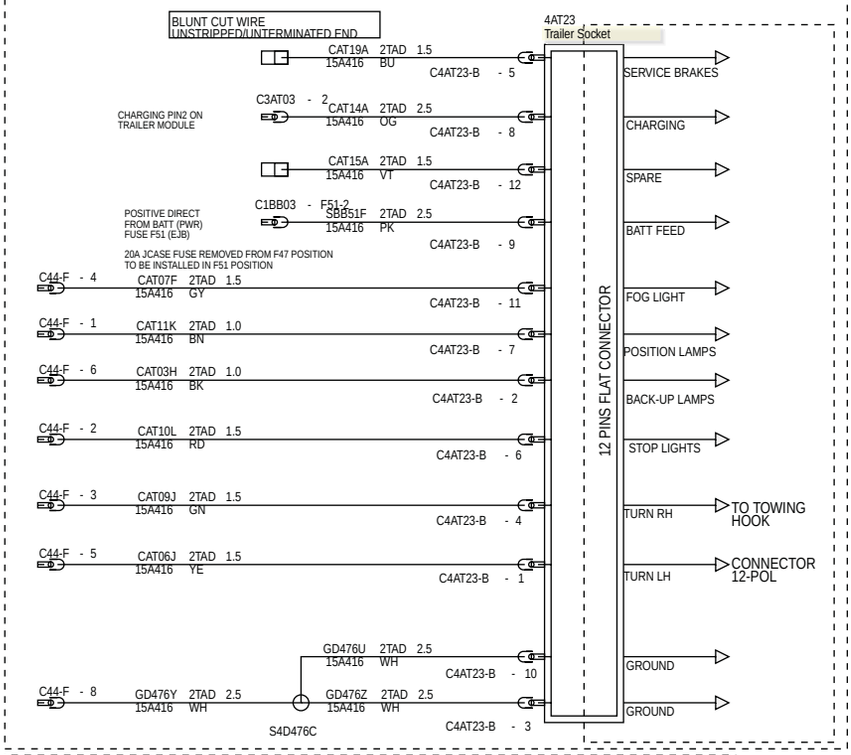

AUSTRALIA & NEW ZEALAND ONLY

AFTERMARKET LEVEL B
(VEHICLE DON'T HAVE PRE IN
TRAILER TOW FEATURE)

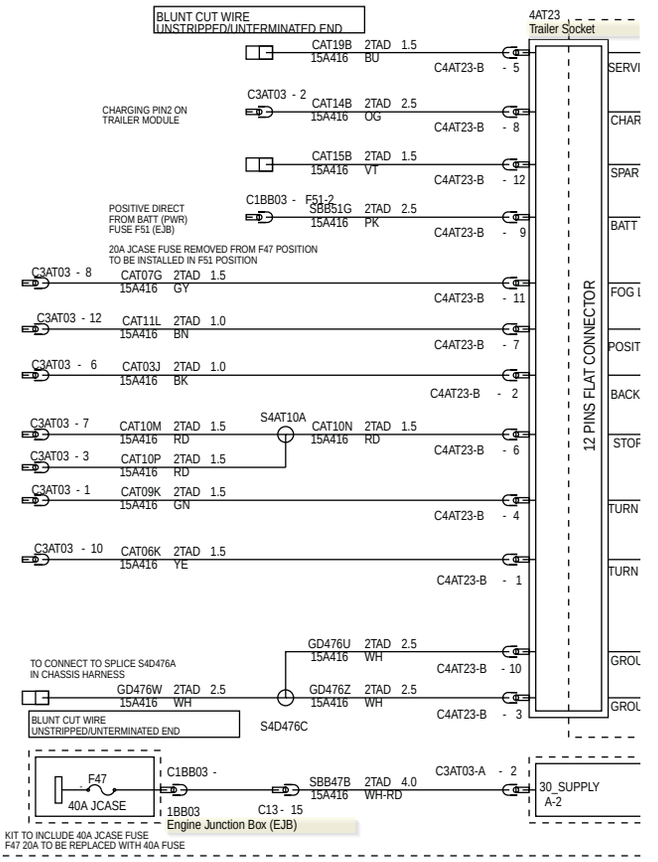

EU (EXCEPT UK ONLY)

AFTERMARKET LEVEL D
(VEHICLE/HARNESS HAVE TRAILER TOW FEATURE)

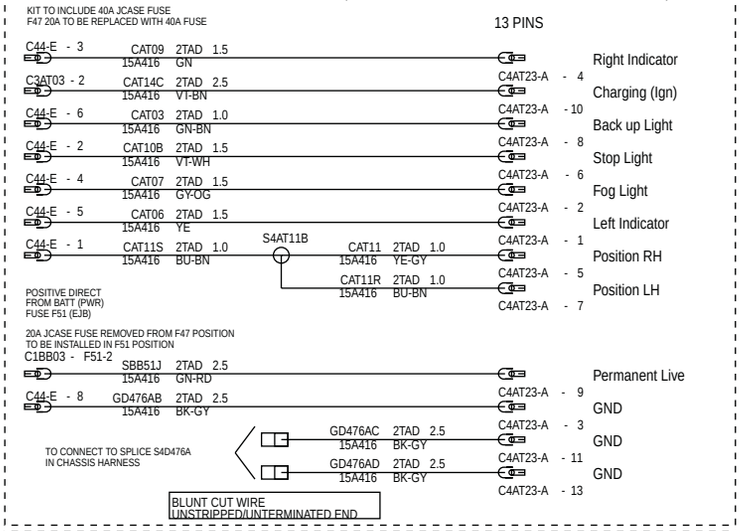

AFTERMARKET LEVEL E
(VEHICLE DON'T HAVE PRE INSTALLED
TRAILER TOW FEATURE)

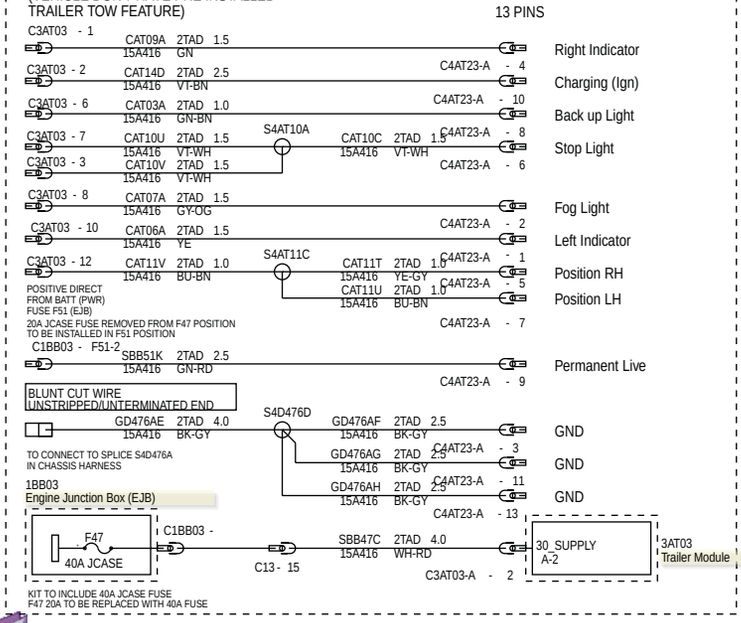

EU, EXCEPT UK ONLY (WITH RESISTOR)

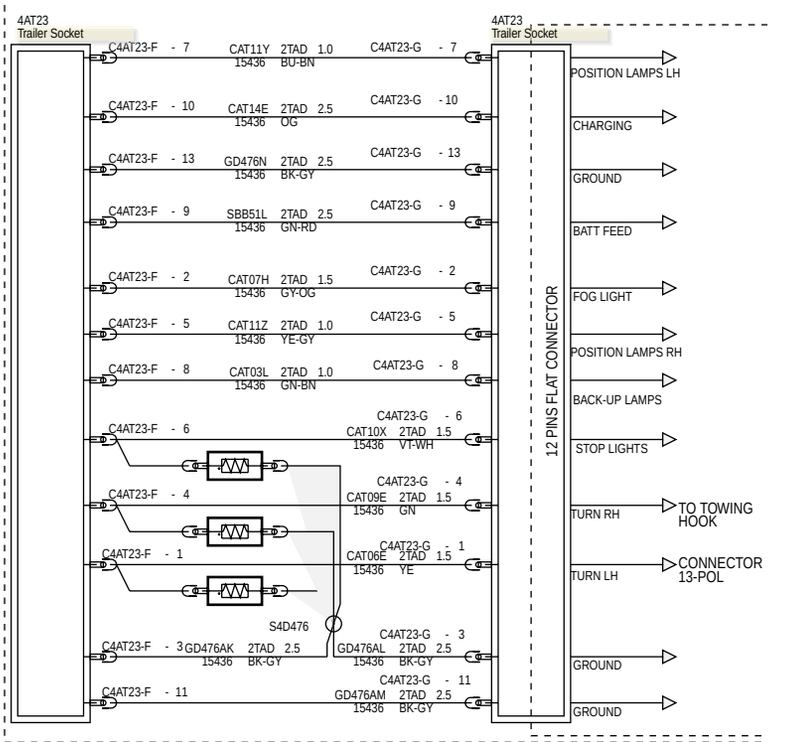

417-01-22 Trailer Socket—RHD 4WD/RHD RWD

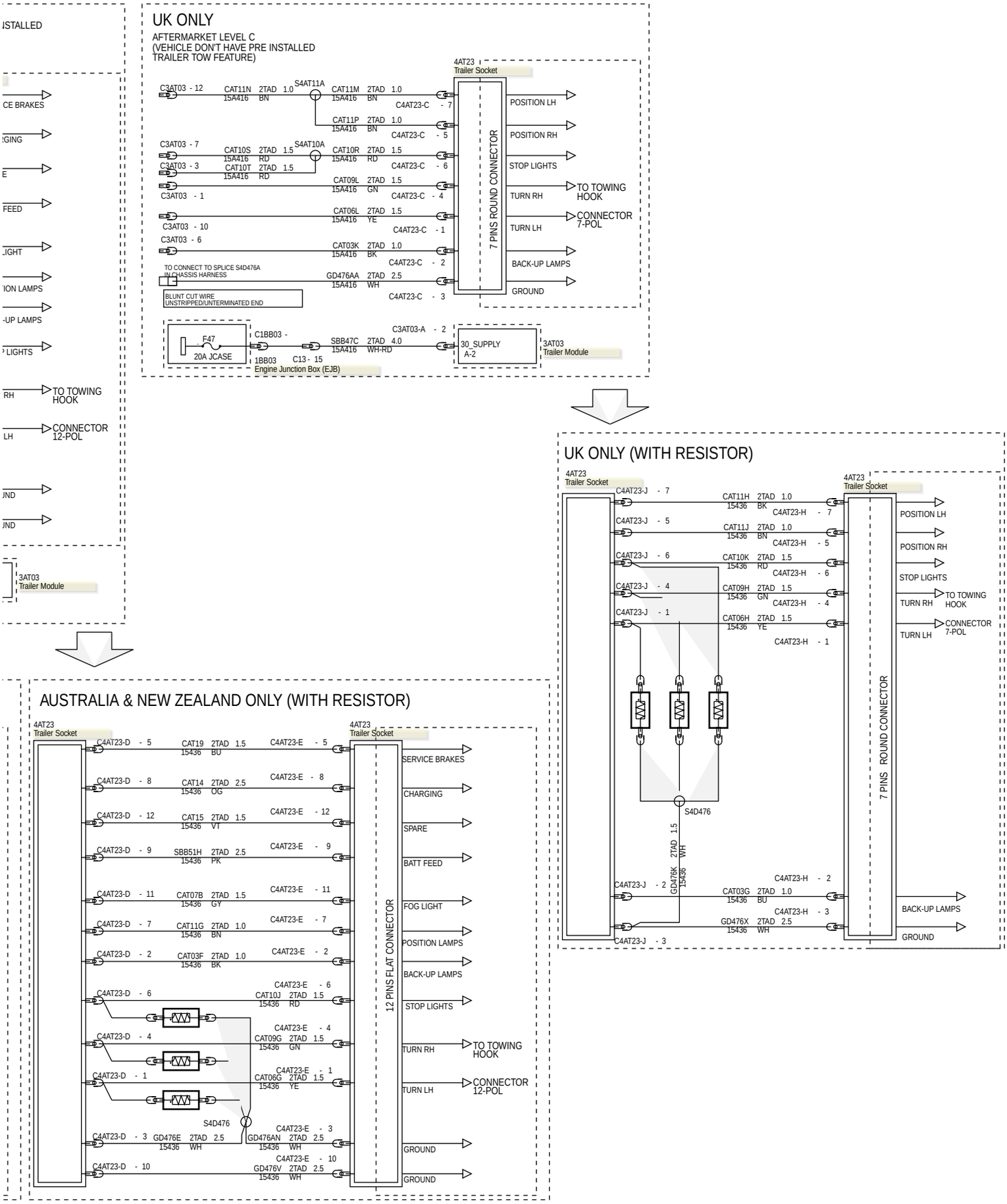

417-01-23 Trailer Socket—RHD 4WD/RHD RWD

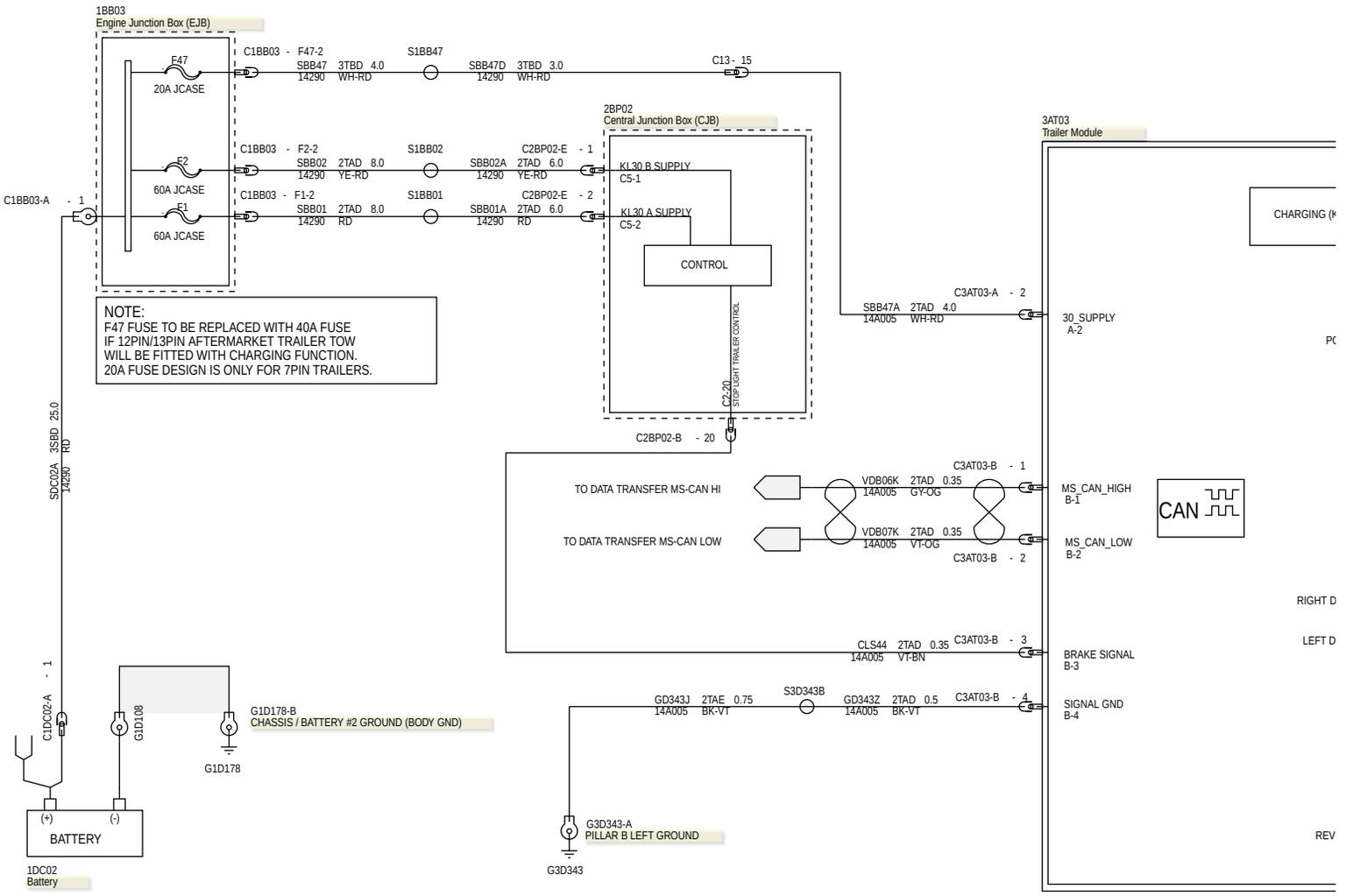

NOTE:
F47 FUSE TO BE REPLACED WITH 40A FUSE
IF 12PIN/13PIN AFTERMARKET TRAILER TOW
WILL BE FITTED WITH CHARGING FUNCTION.
20A FUSE DESIGN IS ONLY FOR 7PIN TRAILERS.

417-01-24 Trailer Socket—RHD 4WD/RHD RWD

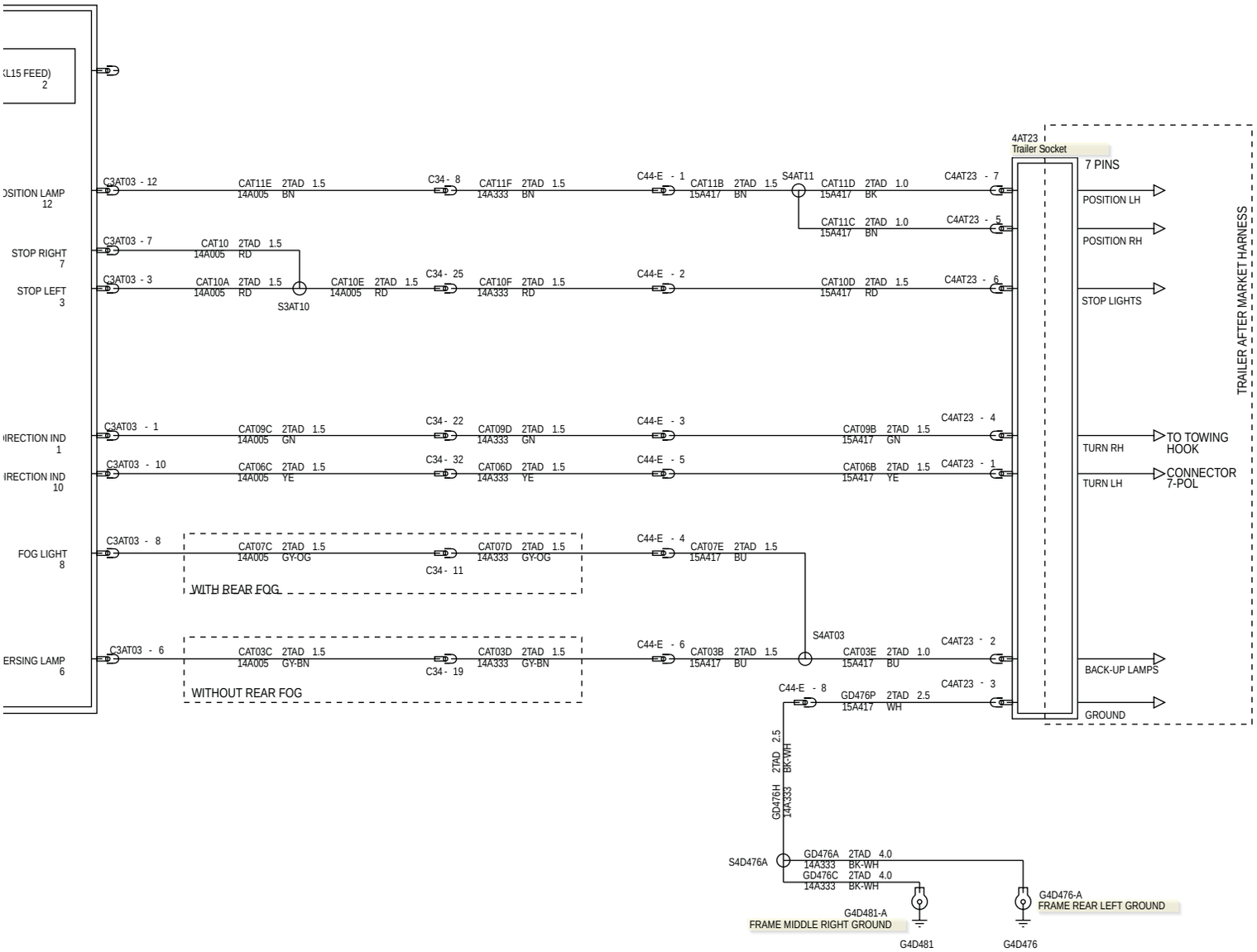

417-01-25 Turn Signal and Hazard Lamps—LHD 4WD/LHD RWD

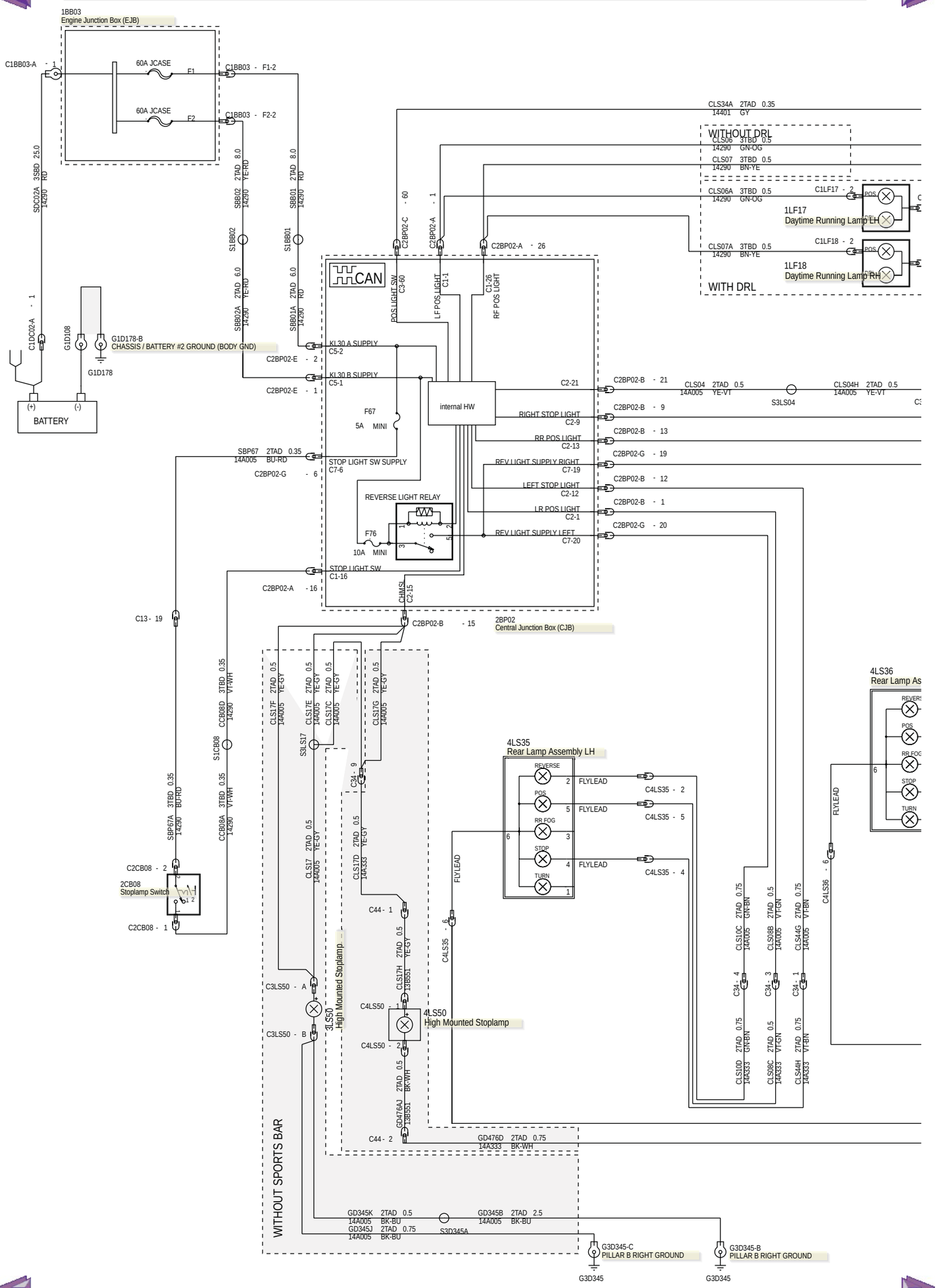

417-01-26 Turn Signal and Hazard Lamps—LHD 4WD/LHD RWD

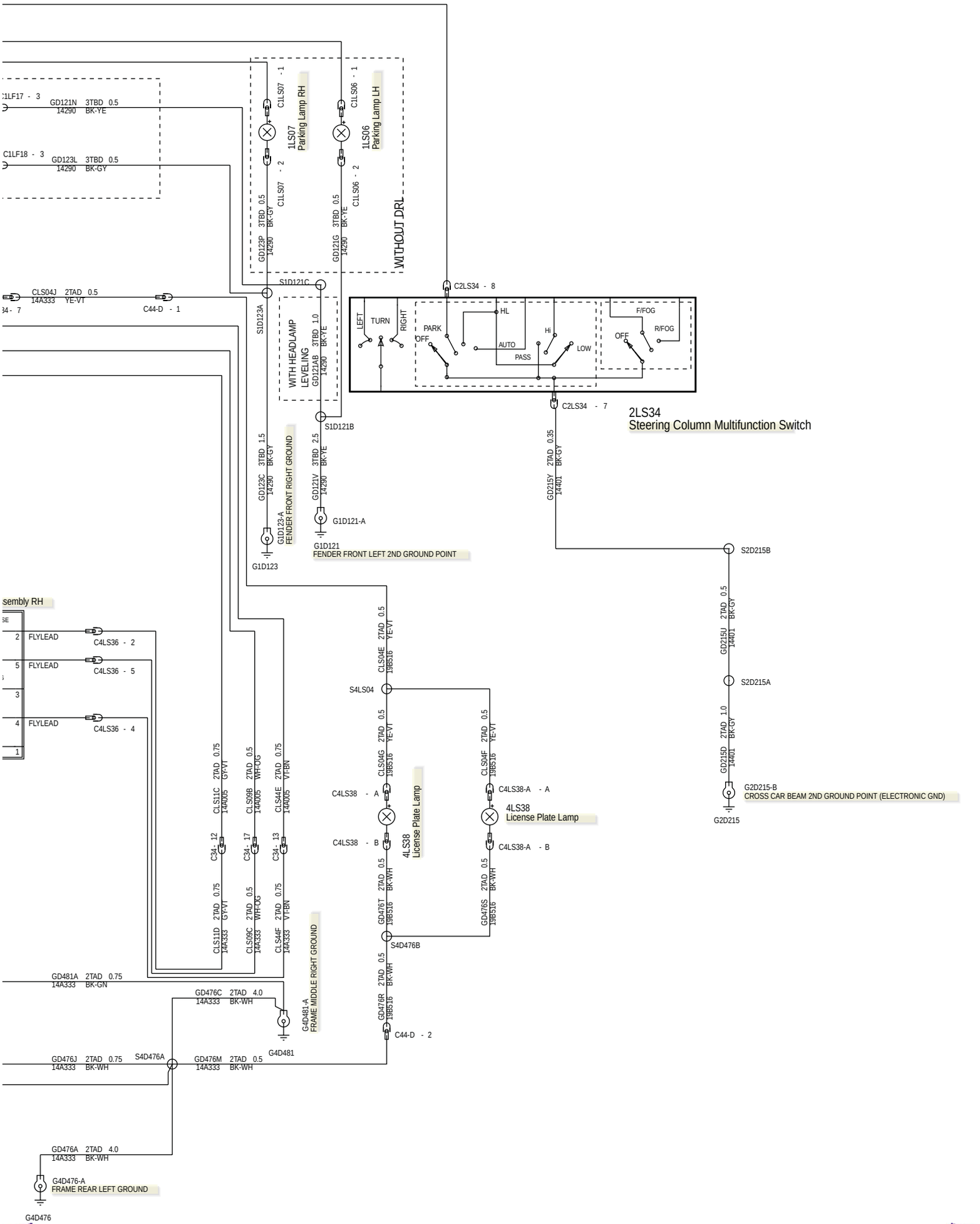

417-01-27 Turn Signal and Hazard Lamps—RHD 4WD/RHD RWD

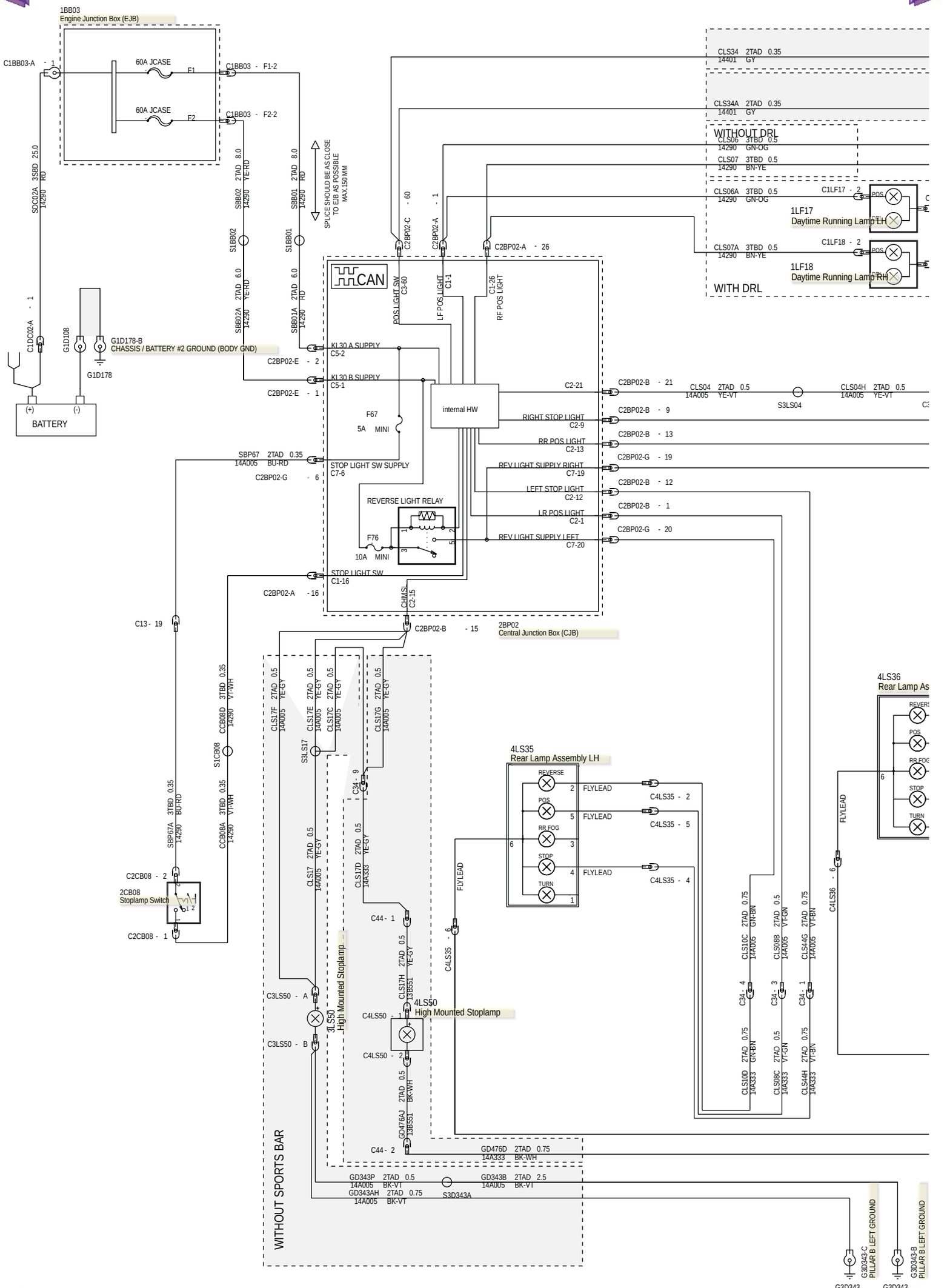

417-01-28 Turn Signal and Hazard Lamps—RHD 4WD/RHD RWD

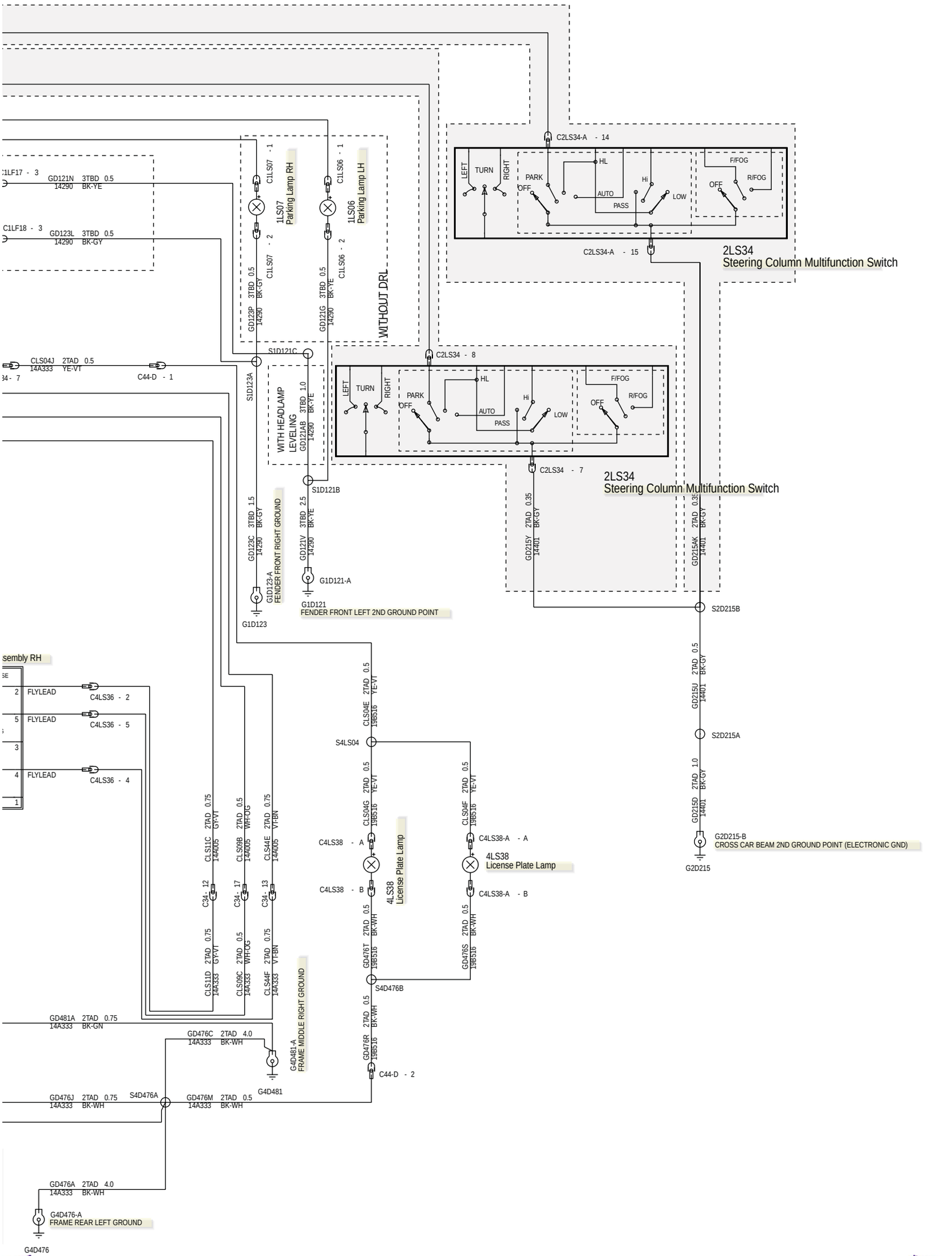

Front Fog Lamp LH (G1404490)

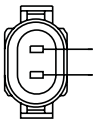

1 CLF29 BN 2TAD 1.0
2 GD121AF BK-YE 3TBD 0.75 + GD121Z BK-YE 3TBD 0.75

F5HT-14A464-FA
C1LF29
TO FRONT FOGLAMP LH
HARNESS 14290

Front Fog Lamp RH (G1404491)

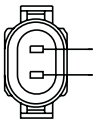

1 CLF29A BN 2TAD 1.0
2 GD123G BK-GY 3TBD 0.75

F5HT-14A464-FA
C1LF34
TO FRONT FOGLAMP RH
HARNESS 14290

Front Side Marker Lamp LH (G1404492)

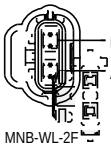

B GD121E BK-YE 3TBD 0.5
A CLS55G GN-BU 3TBD 0.5

MNB-WL-2F
C1LS13
TO SIDE REPEATER LH
HARNESS 14290

Front Side Marker Lamp RH (G1404493)

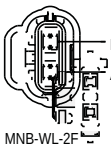

B GD121AH BK-YE 3TBD 0.5
A CLS54G BU-OG 3TBD 0.5

MNB-WL-2F
C1LS14
TO SIDE REPEATER RH
HARNESS 14290

Headlamp Assembly LH (G1404494)

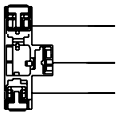

1 CLF02 GY-BN 3TBD 1.0
2 CLF04 BN-BU 3TBD 1.0
3 GD121Y BK-YE 3TBD 1.5

CBS-PL-3P
C1LF08
TO H/L (LH)
HARNESS 14290

Headlamp Assembly RH (G1404495)

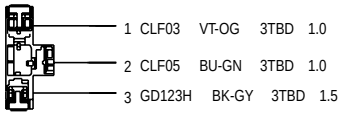

CBS-PL-3P

C1LF09
TO H/L (RH)

HARNESS 14290

Headlamp Control Module (G1426376)

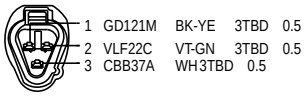

MNNE2-WD-3F
C1LF39
TO LEFT HEADLAMP LEVELING MOTOR

HARNESS 14290

Headlamp Control Module—A (G1426378)

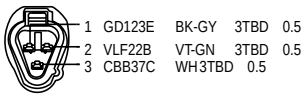

MNNE2-WD-3F
C1LF39-A
TO RIGHT HEADLAMP LEVELING MOTOR

HARNESS 14290

Headlamp Leveling Switch (G1426380)

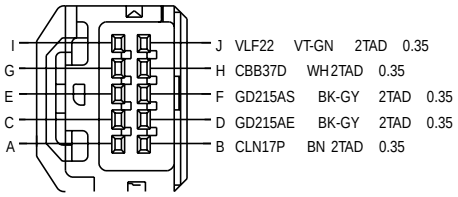

C2LF22
MQL-DL-10F
TO HEADLAMP LEVELING SWITCH

HARNESS 14401

High Mounted Stoplamp (G1404496)

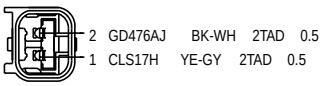

C4LS50
6181-6492
TO HMSL

HARNESS 13B551

High Mounted Stoplamp (G1405453)

PIN B => GD343P BK-VT 0.5 2TAD
PIN B => GD345K BK-BU 0.5 2TAD

CLS17 YE-GY 2TAD 0.5 + CLS17F YE-GY 2TAD 0.5 A – B GD343P BK-VT 2TAD 0.5

MNNL-AL-2F
C3LS50
TO CHMSL
HARNESS 14A005

License Plate Lamp (G1404497)

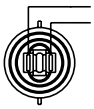

A CLS04G YE-VT 2TAD 0.5
B GD476T BK-WH 2TAD 0.5

C4LS38
2M5A-13K370-FB

TO REAR LICENSE PLATE LAMP(LH)
HARNESS 19B516

License Plate Lamp—A (G1404498)

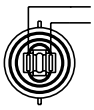

A CLS04F YE-VT 2TAD 0.5
B GD476S BK-WH 2TAD 0.5

C4LS38-A
2M5A-13K370-FB

TO REAR LICENSE PLATE LAMP(RH)
HARNESS 19B516

Parking Lamp LH (G1404499)

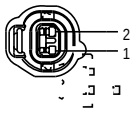

2 GD121G BK-YE 3TBD 0.5
1 CLS06 GN-OG 3TBD 0.5

MNC1-WD-2F
C1LS06
TO FRONT POSITION LAMP LH
HARNESS 14290

Parking Lamp RH (G1404500)

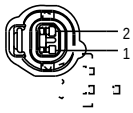

2 GD123P BK-GY 3TBD 0.5
1 CLS07 BN-YE 3TBD 0.5

MNC1-WD-2F
C1LS07
TO FRONT POSITION LAMP RH
HARNESS 14290

Rear Lamp Assembly LH (G1404501)

IMAGE NOT AVAILABLE

Rear Lamp Assembly RH (G1404502)

IMAGE NOT AVAILABLE

Reversing Lamp Switch (G1404503)

PIN 1 => CET47A BU 0.5 4TBD + CET47 BU 0.5 4TBD
PIN 2 => GD122Z BK 0.5 4TBD

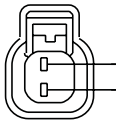

1 CET47 BU 4TBD 0.5
2 GD122N BK 4TBD 0.5 + GD122Z BK 4TBD 0.5

XR3T-14A464-AA

C1ET47
TO REVERSE LAMP SWITCH

HARNESS 14K039

Side Turn Signal Lamp LH (G1404504)

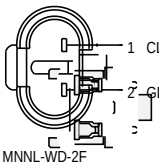

1 CLS55H GN-BU 3TBD 0.5

2 GD121AA BK-YE 3TBD 0.5

MNNL-WD-2F
C1LS21
TO FRONT TURN LAMP LH
HARNESS 14290

Side Turn Signal Lamp RH (G1404507)

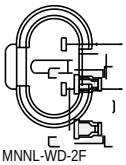

1 CLS54H BU-OG 3TBD 0.5

2 GD123F BK-GY 3TBD 0.5

MNNL-WD-2F

C1LS25

TO FRONT TURN LAMP RH

HARNESS 14290

Stoplamp Switch (G1404508)

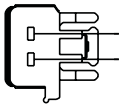

2 SBP67A BU-RD 3TBD 0.35

1 CCB08A VT-WH 3TBD 0.35

97BG-14489-VBB

C2CB08

TO STOP LIGHT SWITCH

HARNESS 14290

Trailer Socket (G1404574)

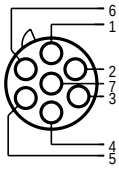

6 CAT10D RD 2TAD 1.5

1 CAT06B YE 2TAD 1.5

2 CAT03E BU 2TAD 1.0

7 CAT11D BK 2TAD 1.0

3 GD476P WH 2TAD 2.5

4 CAT09B GN 2TAD 1.5

5 CAT11C BN 2TAD 1.0

4205-6022

C4AT23

TO TRAILER TOW CONNECTOR

HARNESS 15A417

Trailer Socket—A (G1404575)

PIN 1 => CAT06 YE 1.5 2TAD
PIN 2 => CAT07 GY-OG 1.5 2TAD
PIN 3 => GD476AB BK-GY 2.5 2TAD
PIN 4 => CAT09 GN 1.5 2TAD
PIN 5 => CAT11 YE-GY 1.0 2TAD
PIN 6 => CAT10B VT-WH 1.5 2TAD
PIN 7 => CAT11R BU-BN 1.0 2TAD
PIN 8 => CAT03 GN-BN 1.0 2TAD
PIN 9 => SBB51J GN-RD 2.5 2TAD
PIN 10 => CAT14C VT-BN 2.5 2TAD
PIN 11 => GD476AC BK-GY 2.5 2TAD
PIN 13 => GD476AD BK-GY 2.5 2TAD

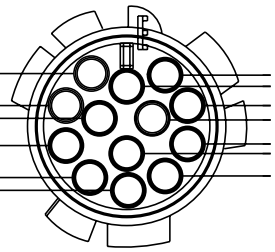

GD476AH BK-GY 2TAD 2.5 13

CAT11T YE-GY 2TAD 1.0 5

CAT09A GN 2TAD 1.5 4

CAT10C VT-WH 2TAD 1.5 6

CAT11U BU-BN 2TAD 1.0 7

CAT03A GN-BN 2TAD 1.0 8

12 GD476AF BK-GY 2TAD 2.5

3

11 GD476AG BK-GY 2TAD 2.5

2 CAT07A GY-OG 2TAD 1.5

10 CAT14D VT-BN 2TAD 2.5

1 CAT06A YE 2TAD 1.5

9 SBB51K GN-RD 2TAD 2.5 + SBB51X GN-RD 2TAD 2.5

C4AT23-A

4505-6032

TO TRAILER TOW CONNECTOR

HARNESS 15A416

Trailer Socket—B (G1404576)

PIN 1 => CAT06J YE 1.5 2TAD
PIN 2 => CAT03H BK 1.0 2TAD
PIN 4 => CAT09J GN 1.5 2TAD
PIN 5 => CAT19A BU 1.5 2TAD
PIN 6 => CAT10L RD 1.5 2TAD
PIN 7 => CAT11K BN 1.0 2TAD
PIN 8 => CAT14A OG 2.5 2TAD
PIN 9 => SBB51F PK 2.5 2TAD
PIN 11 => CAT07F GY 1.5 2TAD
PIN 12 => CAT15A VT 1.5 2TAD

VIEW WITH LID OPEN

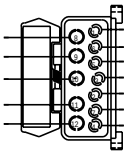

				CAT14B	OG	2TAD	2.5	8	1	CAT06K	YE 2TAD 1.5
SBB51G	PK	2TAD	2.5 +	SBB51V	PK	2TAD	2.5	9	6	CAT10N	RD 2TAD 1.5
				GD476U	WH	2TAD	2.5	10	5	CAT19B	BU 2TAD 1.5
				CAT07G	GY	2TAD	1.5	11	3	GD476Z	WH 2TAD 2.5
				CAT15B	VT	2TAD	1.5	12	2	CAT03J	BK 2TAD 1.0
									7	CAT11L	BN 2TAD 1.0
									4	CAT09K	GN 2TAD 1.5

TS-12-F

C4AT23-B

TO CONN PN 12 PINS

HARNESS 15A416

Trailer Socket—C (G1404577)

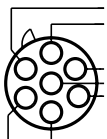

6	CAT10R	RD 2TAD	1.5
1	CAT06L	YE 2TAD	1.5
2	CAT03K	BK 2TAD	1.0
7	CAT11M	BN 2TAD	1.0
3	GD476AA	WH 2TAD	2.5
4	CAT09L	GN 2TAD	1.5
5	CAT11P	BN 2TAD	1.0

4205-6022

C4AT23-C

TO CONN PN 7 PINS

HARNESS 15A416

Trailer Socket—D (G1404578)

CAT14	OG	2TAD	2.5	8	–	1	CAT06G	YE 2TAD	1.5
SBB51H	PK	2TAD	2.5	9	–	6	CAT10J	RD 2TAD	1.5
GD476V	WH	2TAD	2.5	10	–	5	CAT19	BU 2TAD	1.5
CAT07B	GY	2TAD	1.5	11	–	3	GD476E	WH 2TAD	2.5
CAT15	VT	2TAD	1.5	12	–	2	CAT03F	BK 2TAD	1.0
						7	CAT11G	BN 2TAD	1.0
						4	CAT09G	GN 2TAD	1.5

TP-12-F

C4AT23-D

TO CONN PN 12 PINS

HARNESS 15436

Trailer Socket—E (G1404579)

VIEW WITH LID OPEN

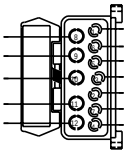

CAT14	OG	2TAD	2.5	8	1	CAT06G	YE 2TAD	1.5
SBB51H	PK	2TAD	2.5	9	6	CAT10J	RD 2TAD	1.5
GD476V	WH	2TAD	2.5	10	5	CAT19	BU 2TAD	1.5
CAT07B	GY	2TAD	1.5	11	3	GD476AN	WH 2TAD	2.5
CAT15	VT	2TAD	1.5	12	2	CAT03F	BK 2TAD	1.0
					7	CAT11G	BN 2TAD	1.0
					4	CAT09G	GN 2TAD	1.5

TS-12-F

C4AT23-E

TO CONN PN 12 PINS

HARNESS 15436

Trailer Socket—F (G1404580)

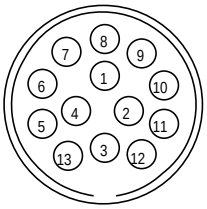

1	CAT06E	YE	2TAD	1.5
2	CAT07H	GY-OG	2TAD	1.5
3				
4	CAT09E	GN	2TAD	1.5
5	CAT11Z	YE-GY	2TAD	1.0
6	CAT10X	VT-WH	2TAD	1.5
7	CAT11Y	BU-BN	2TAD	1.0
8	CAT03L	GN-BN	2TAD	1.0
9	SBB51L	GN-RD	2TAD	2.5
10	CAT14E	OG	2TAD	2.5
11	GD476AM	BK-GY	2TAD	2.5
12	GD476AK	BK-GY	2TAD	2.5
13	GD476N	BK-GY	2TAD	2.5

3502-2472
C4AT23-F
TO CONN PN 13 PINS
HARNESS 15436

Trailer Socket—G (G1404581)

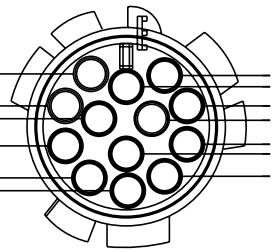

GD476N	BK-GY	2TAD	2.5	13
CAT11Z	YE-GY	2TAD	1.0	5
CAT09E	GN	2TAD	1.5	4
CAT10X	VT-WH	2TAD	1.5	6
CAT11Y	BU-BN	2TAD	1.0	7
CAT03L	GN-BN	2TAD	1.0	8

12	GD476AL	BK-GY	2TAD	2.5
3				
11	GD476AM	BK-GY	2TAD	2.5
2	CAT07H	GY-OG	2TAD	1.5
10	CAT14E	OG	2TAD	2.5
1	CAT06E	YE	2TAD	1.5
9	SBB51L	GN-RD	2TAD	2.5

C4AT23-G
4505-6032
TO CONN PN 13 PINS
HARNESS 15436

Trailer Socket—H (G1404582)

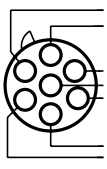

6	CAT10K	RD	2TAD	1.5
1	CAT06H	YE	2TAD	1.5
2	CAT03G	BU	2TAD	1.0
7	CAT11H	BK	2TAD	1.0
3	GD476X	WH	2TAD	2.5
4	CAT09H	GN	2TAD	1.5
5	CAT11J	BN	2TAD	1.0

4205-6022
C4AT23-H
TO CONN PN 7 PINS
HARNESS 15436

Trailer Socket—J (G1404583)

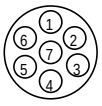

1	CAT06H	YE	2TAD	1.5				
2	CAT03G	BU	2TAD	1.0				
3	GD476K	WH	2TAD	1.5	+	GD476X	WH	2TAD 2.5
4	CAT09H	GN	2TAD	1.5				
5	CAT11J	BN	2TAD	1.0				
6	CAT10K	RD	2TAD	1.5				
7	CAT11H	BK	2TAD	1.0				

3102-2471
C4AT23-J
TO CONN PN 7 PINS
HARNESS 15436

Trailer Module (G1406836)

PIN 1 => CAT09C GN 1.5 2TAD
PIN 1 => CAT09K GN 1.5 2TAD
PIN 1 => CAT09L GN 1.5 2TAD
PIN 2 => CAT14A OG 2.5 2TAD
PIN 2 => CAT14B OG 2.5 2TAD
PIN 2 => CAT14C VT-BN 2.5 2TAD
PIN 3 => CAT10A RD 1.5 2TAD
PIN 3 => CAT10P RD 1.5 2TAD
PIN 3 => CAT10T RD 1.5 2TAD
PIN 6 => CAT03C GY-BN 1.5 2TAD
PIN 6 => CAT03J BK 1.0 2TAD
PIN 6 => CAT03K BK 1.0 2TAD
PIN 7 => CAT10 RD 1.5 2TAD
PIN 7 => CAT10M RD 1.5 2TAD
PIN 7 => CAT10S RD 1.5 2TAD
PIN 8 => CAT07C GY-OG 1.5 2TAD
PIN 8 => CAT07G GY 1.5 2TAD
PIN 10 => CAT06C YE 1.5 2TAD
PIN 10 => CAT06K YE 1.5 2TAD
PIN 10 => CAT06L YE 1.5 2TAD
PIN 12 => CAT11E BN 1.5 2TAD
PIN 12 => CAT11L BN 1.0 2TAD
PIN 12 => CAT11N BN 1.0 2TAD

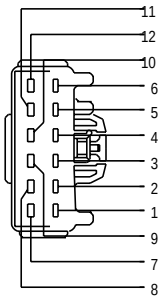

4S7T-14489-YJA

C3AT03

TO TRAILER TOW MODULE(TRAILER CONN)

HARNESS 14A005

Trailer Module—A (G1406837)

PIN 2 => SBB47A WH-RD 4.0 2TAD
PIN 2 => SBB47B WH-RD 4.0 2TAD

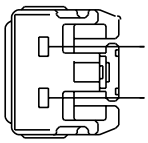

3M5T-14489-KBA

C3AT03-A

TO TRAILER TOW MODULE(POWER)

HARNESS 14A005

Trailer Module—B (G1406838)

PIN 4 => GD345U BK-BU 0.5 2TAD

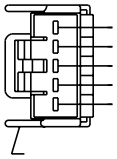

XR8T-14489-FA

C3AT03-B

TO TRAILER TOW MODULE(CAN)

HARNESS 14A005

SECTION 417-02 Interior Lighting

VEHICLE APPLICATION: 2012.0 Ranger

CONTENTS PAGE

ELECTRICAL SCHEMATICS

Courtesy and Demand Lighting — Single Cab, LHD 4WD/LHD RWD..... 417-02-2
Courtesy and Demand Lighting — Double Cab, LHD 4WD/LHD RWD..... 417-02-4
Courtesy and Demand Lighting — Super Cab, LHD 4WD/LHD RWD..... 417-02-6
Courtesy and Demand Lighting — Single Cab, RHD 4WD/RHD RWD..... 417-02-8
Courtesy and Demand Lighting — Double Cab, RHD 4WD/RHD RWD..... 417-02-10
Courtesy and Demand Lighting — Super Cab, RHD 4WD/RHD RWD..... 417-02-12
Instrument Cluster and Panel Illumination — LHD 4WD/LHD RWD..... 417-02-14
Instrument Cluster and Panel Illumination — RHD 4WD/RHD RWD..... 417-02-16

ELECTRICAL CONNECTORS

Footwell Lamp LH..... 417-02-18
Footwell Lamp RH..... 417-02-18
Front Door Trim Panel Ambient Lighting Lamp LH..... 417-02-18
Front Door Trim Panel Ambient Lighting Lamp RH..... 417-02-18
Glove Compartment Lamp..... 417-02-18
Interior Front Door Handle Ambient Lighting Lamp LH..... 417-02-19
Interior Front Door Handle Ambient Lighting Lamp RH..... 417-02-19
Overhead Ambient Lighting Lamp..... 417-02-19
Overhead Ambient Lighting Lamp — A..... 417-02-19
Overhead Ambient Lighting Lamp — B..... 417-02-19
Rear Interior Lamp..... 417-02-19
Rear Interior Lamp — A..... 417-02-20

417-02-2 Courtesy and Demand Lighting—Single Cab, LHD 4WD/LHD RWD

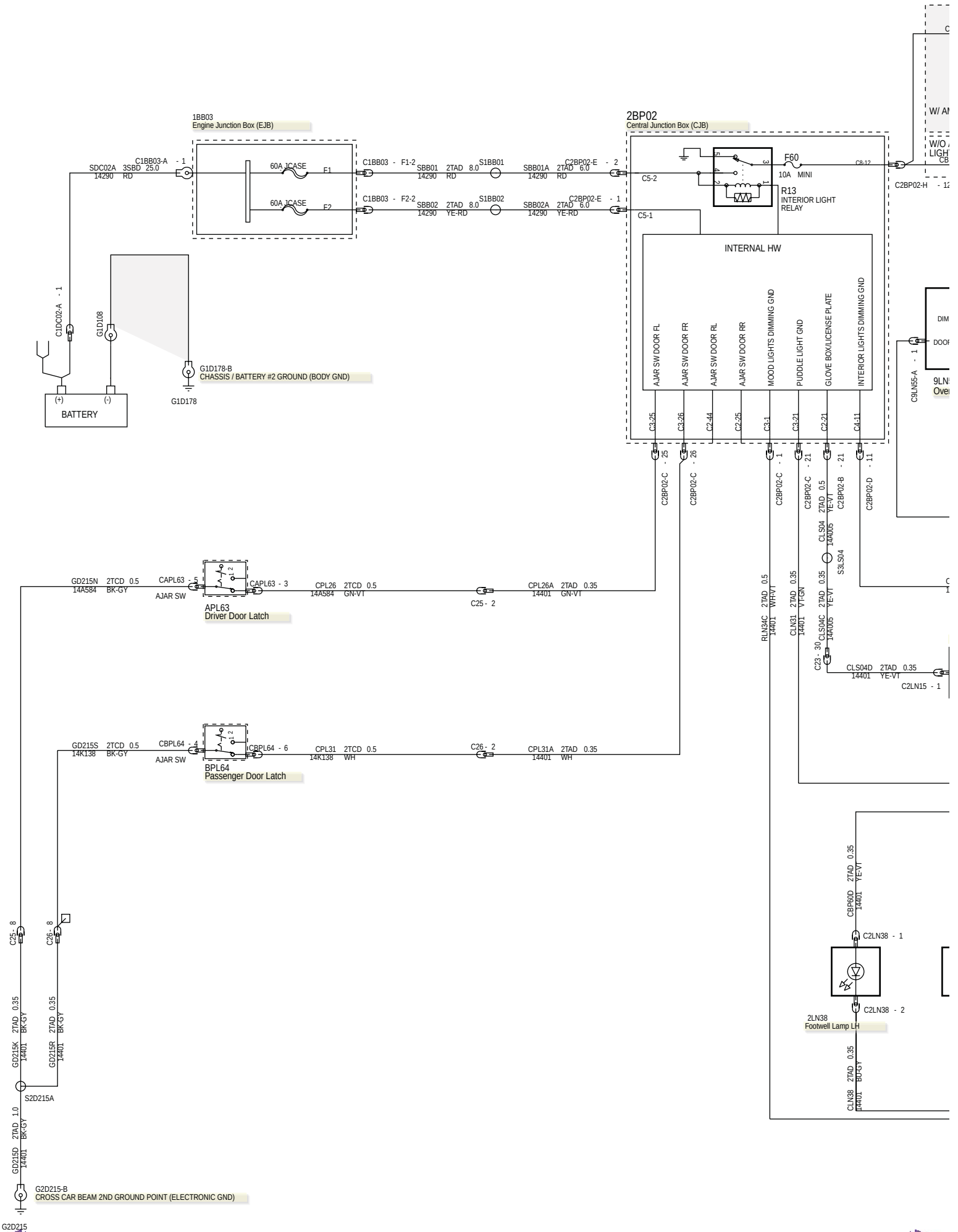

417-02-3 Courtesy and Demand Lighting—Single Cab, LHD 4WD/LHD RWD

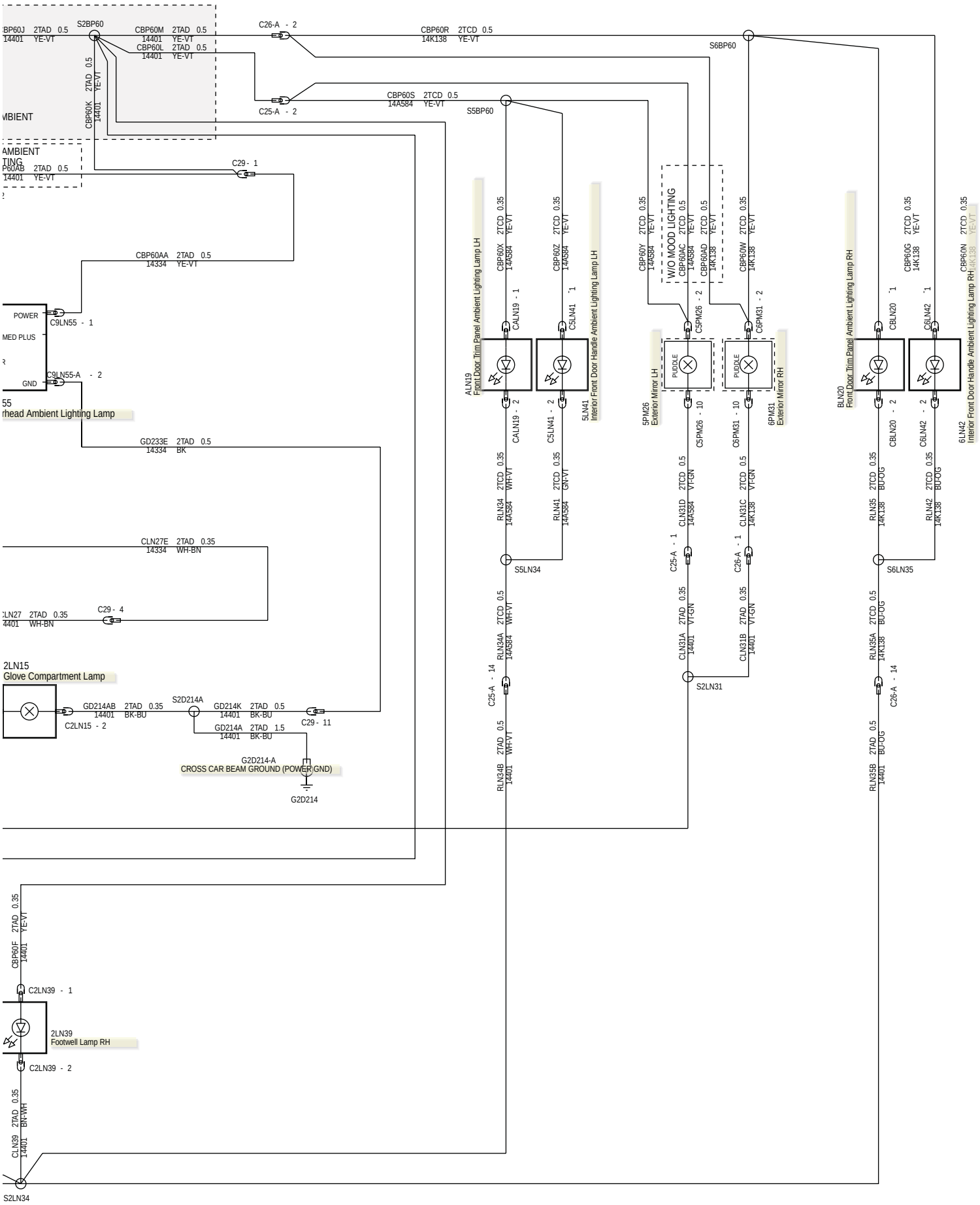

417-02-4 Courtesy and Demand Lighting—Double Cab, LHD 4WD/LHD RWD

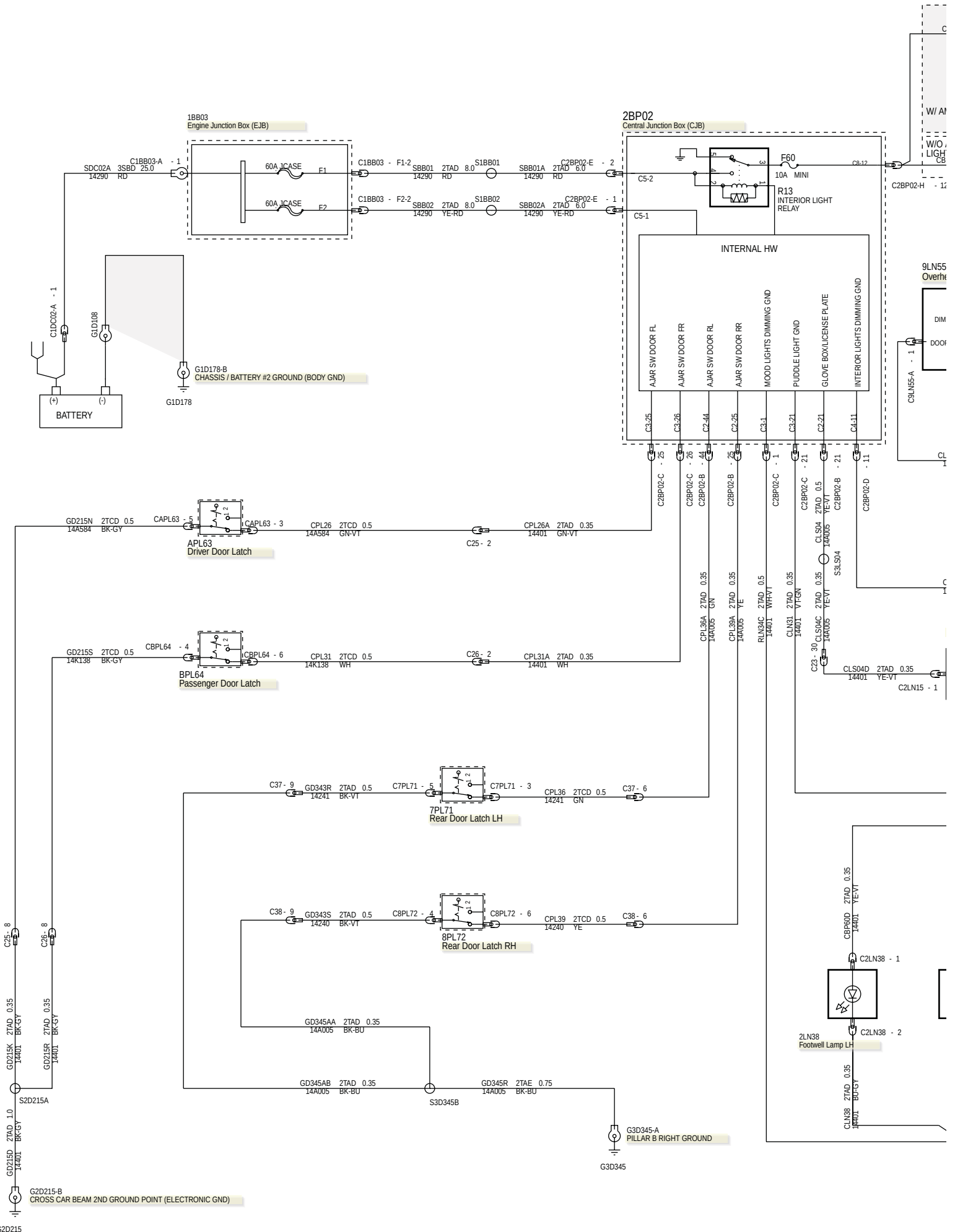

417-02-5 Courtesy and Demand Lighting—Double Cab, LHD 4WD/LHD RWD

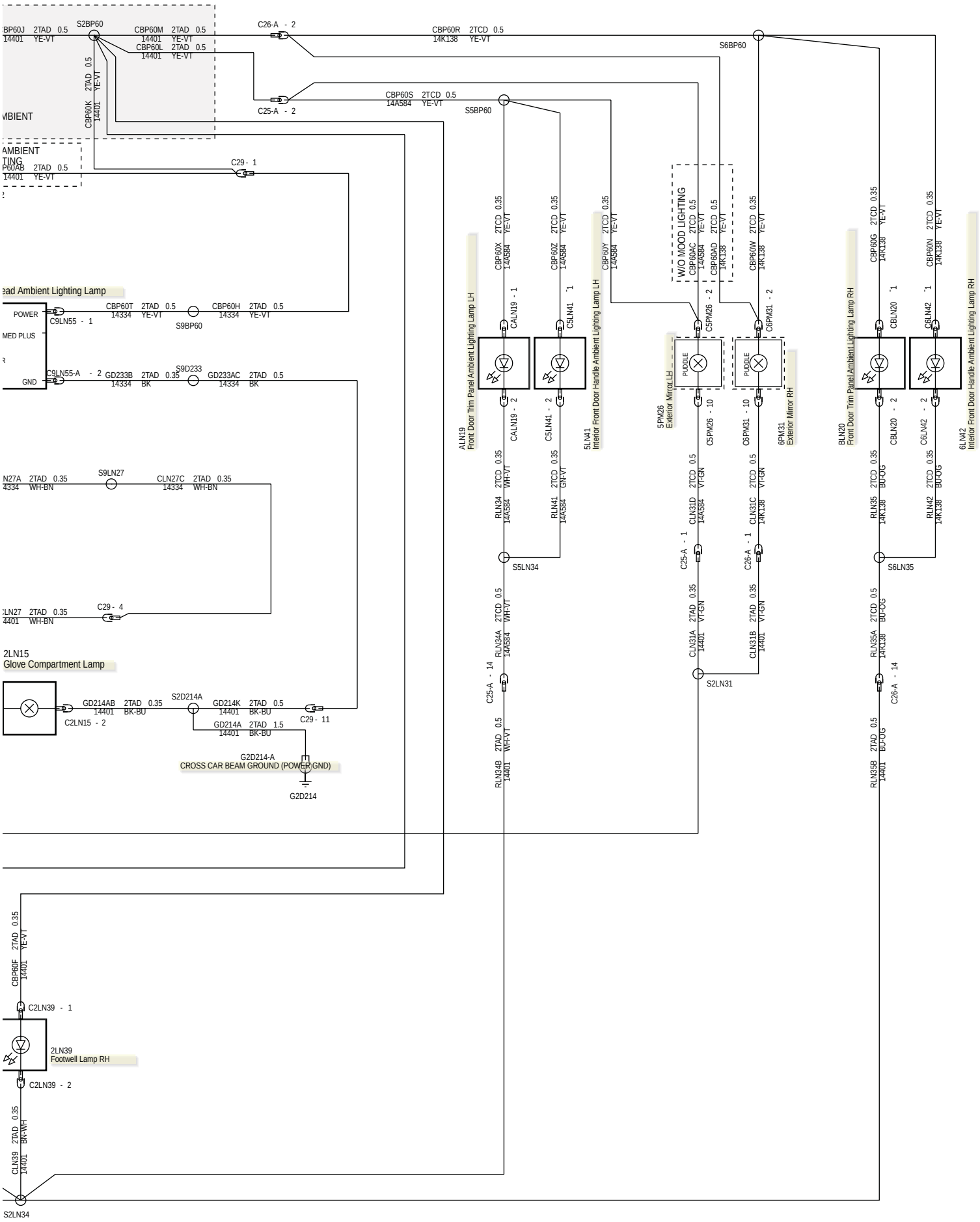

417-02-6 Courtesy and Demand Lighting—Super Cab, LHD 4WD/LHD RWD

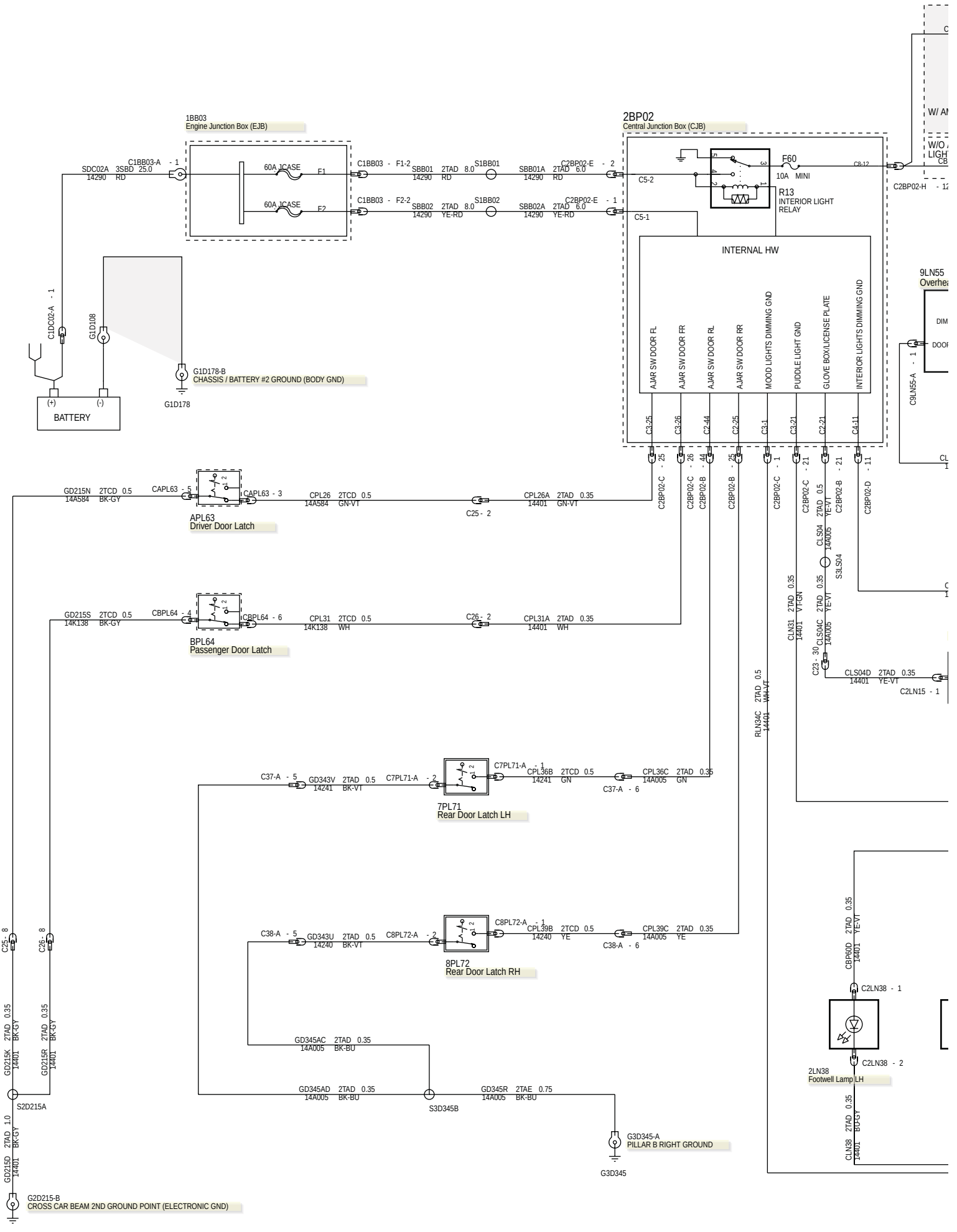

417-02-7 Courtesy and Demand Lighting—Super Cab, LHD 4WD/LHD RWD

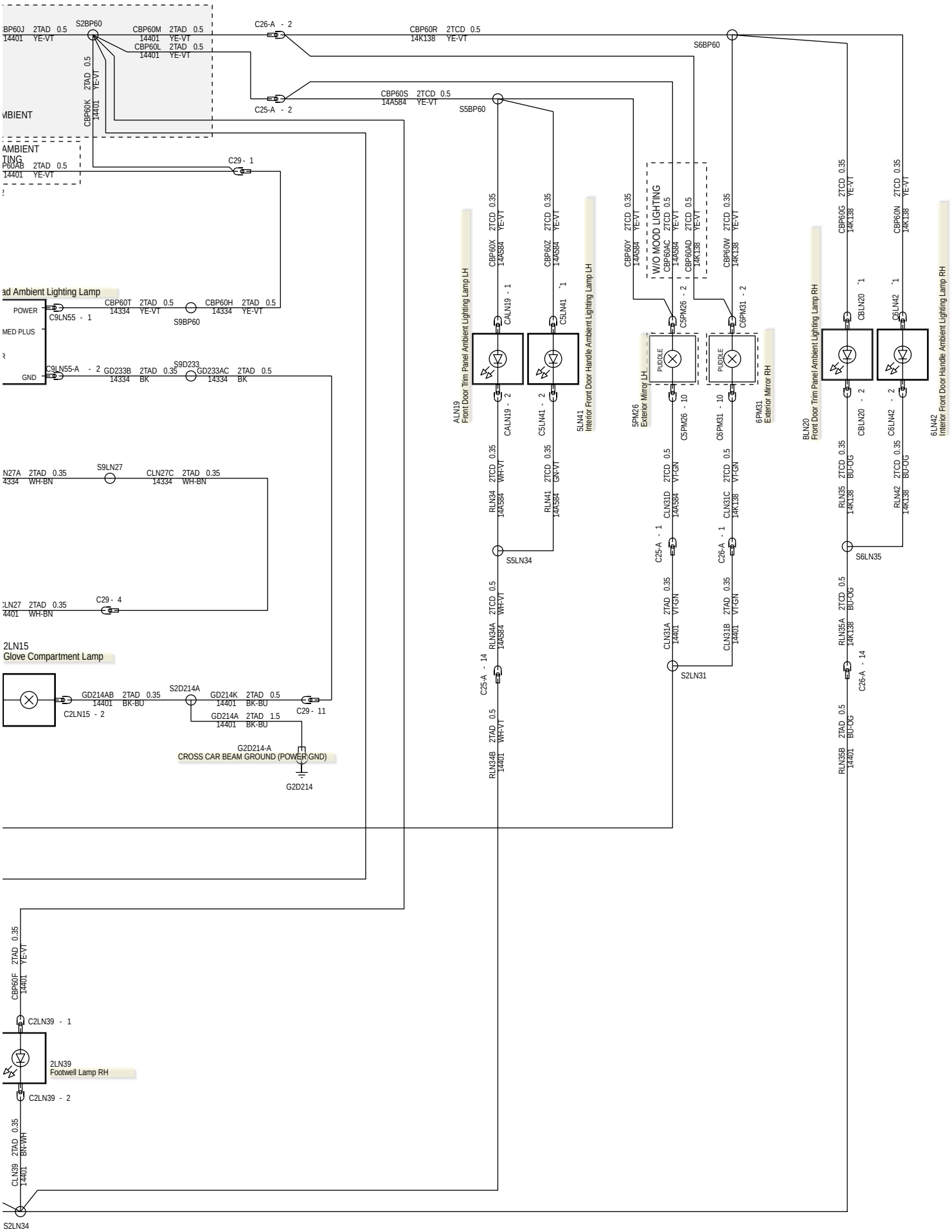

417-02-8 Courtesy and Demand Lighting—Single Cab, RHD 4WD/RHD RWD

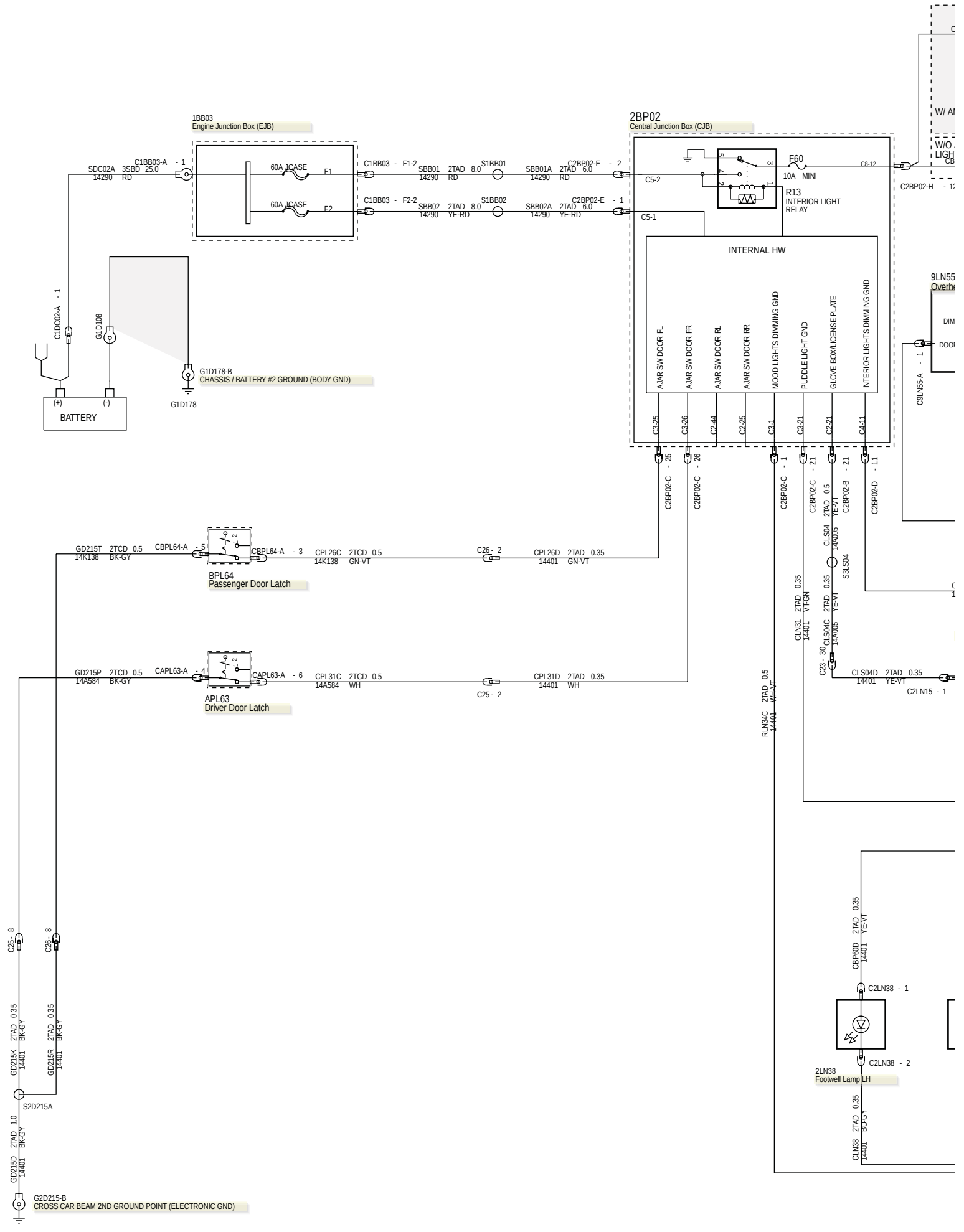

417-02-9 Courtesy and Demand Lighting—Single Cab, RHD 4WD/RHD RWD

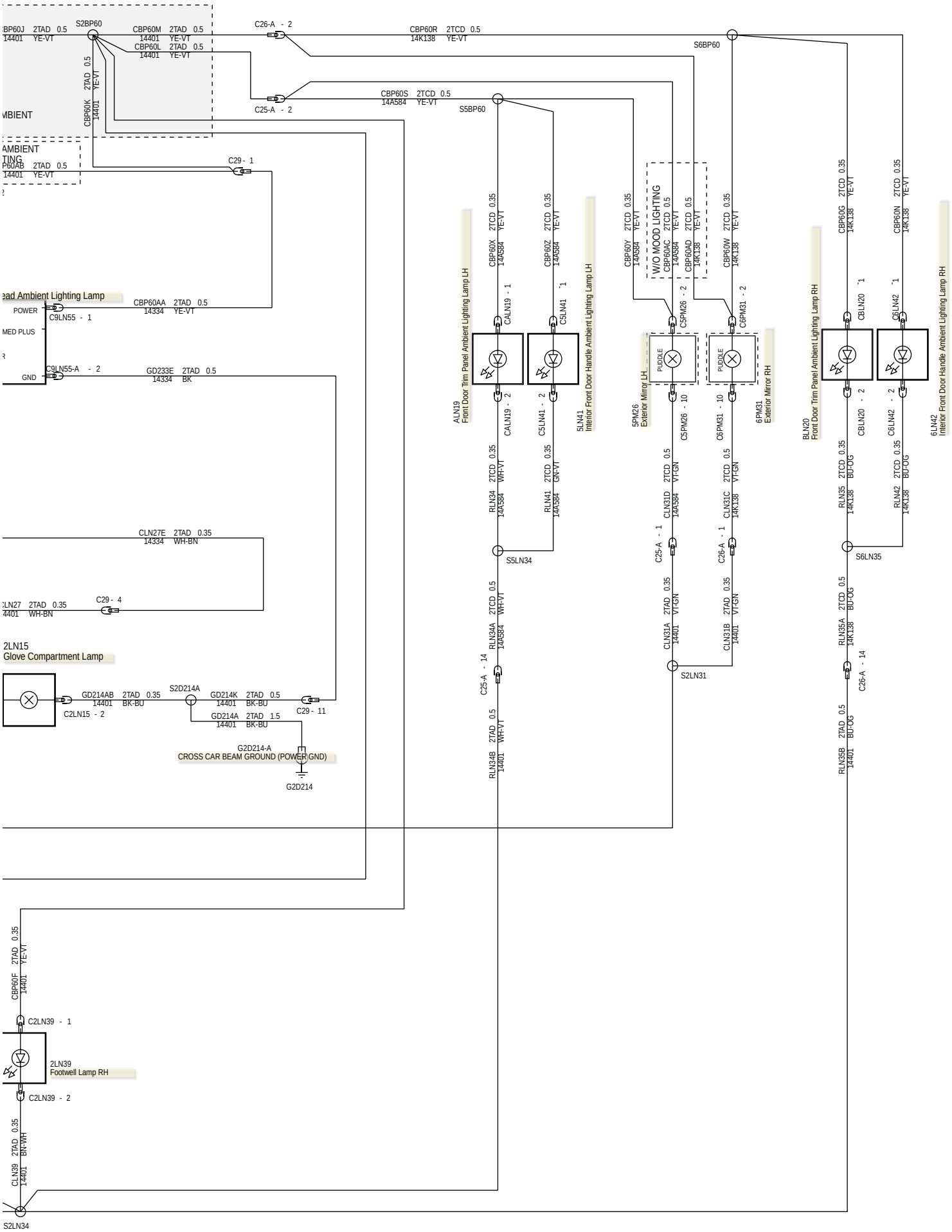

417-02-10 Courtesy and Demand Lighting—Double Cab, RHD 4WD/RHD RWD

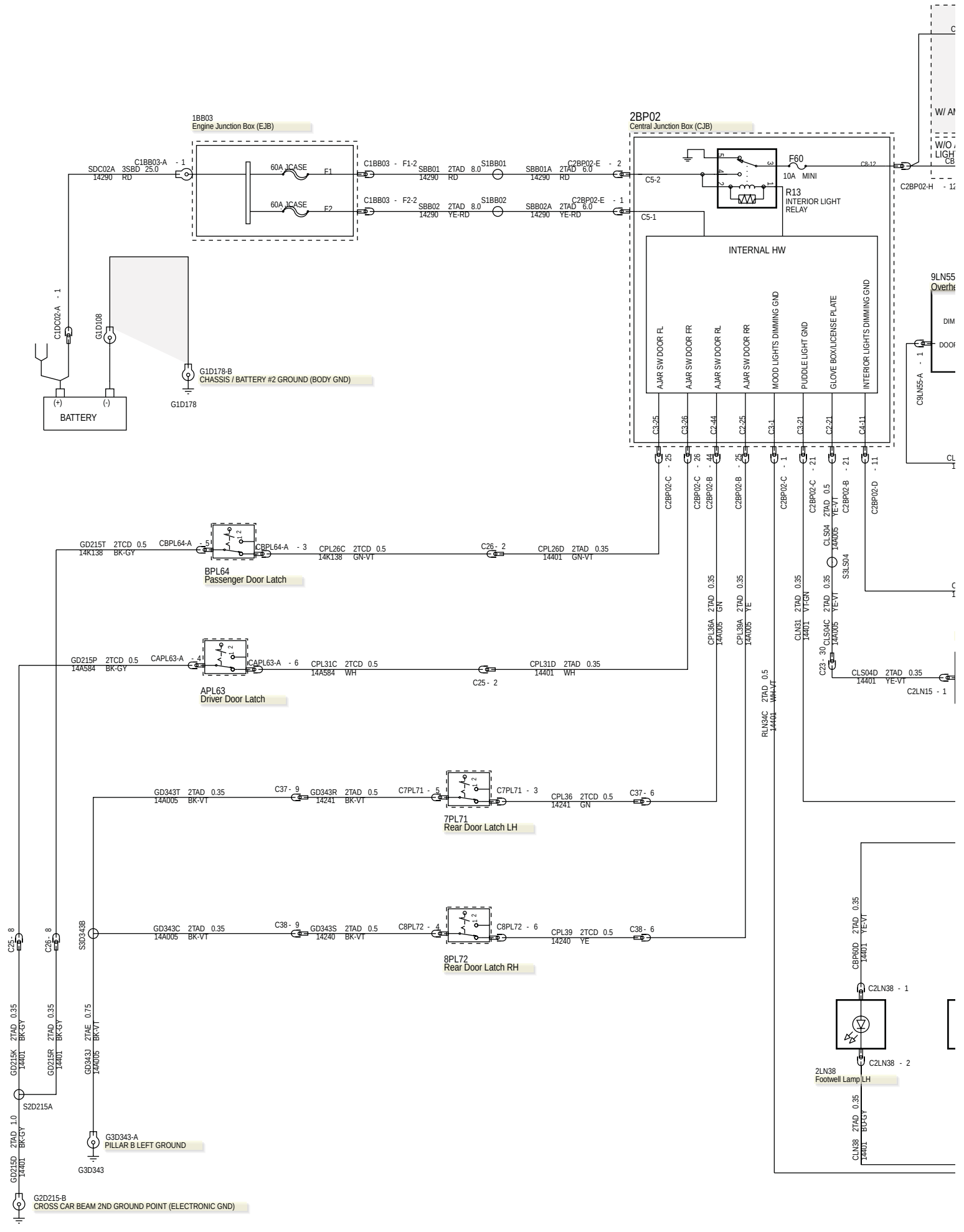

417-02-11 Courtesy and Demand Lighting—Double Cab, RHD 4WD/RHD RWD

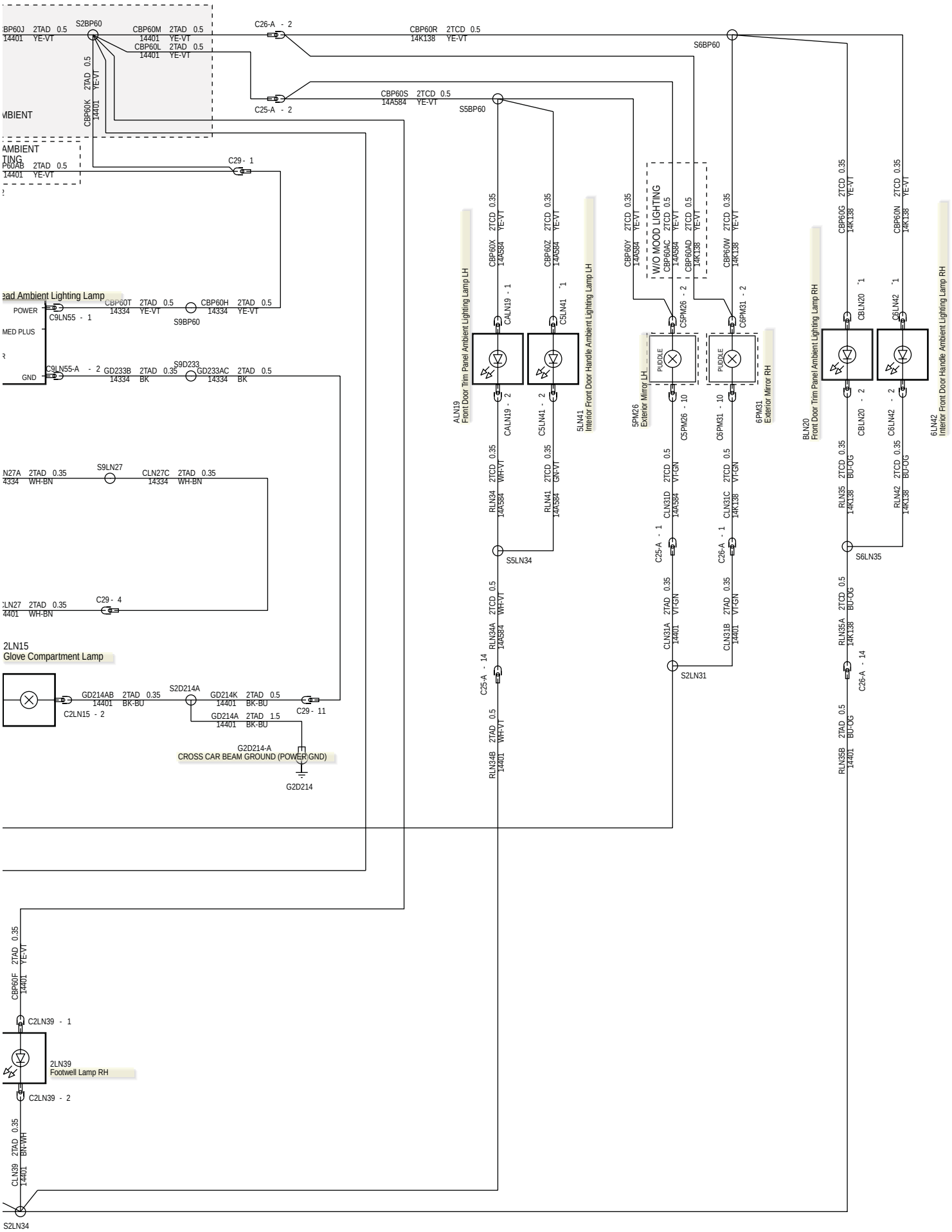

417-02-12 Courtesy and Demand Lighting—Super Cab, RHD 4WD/RHD RWD

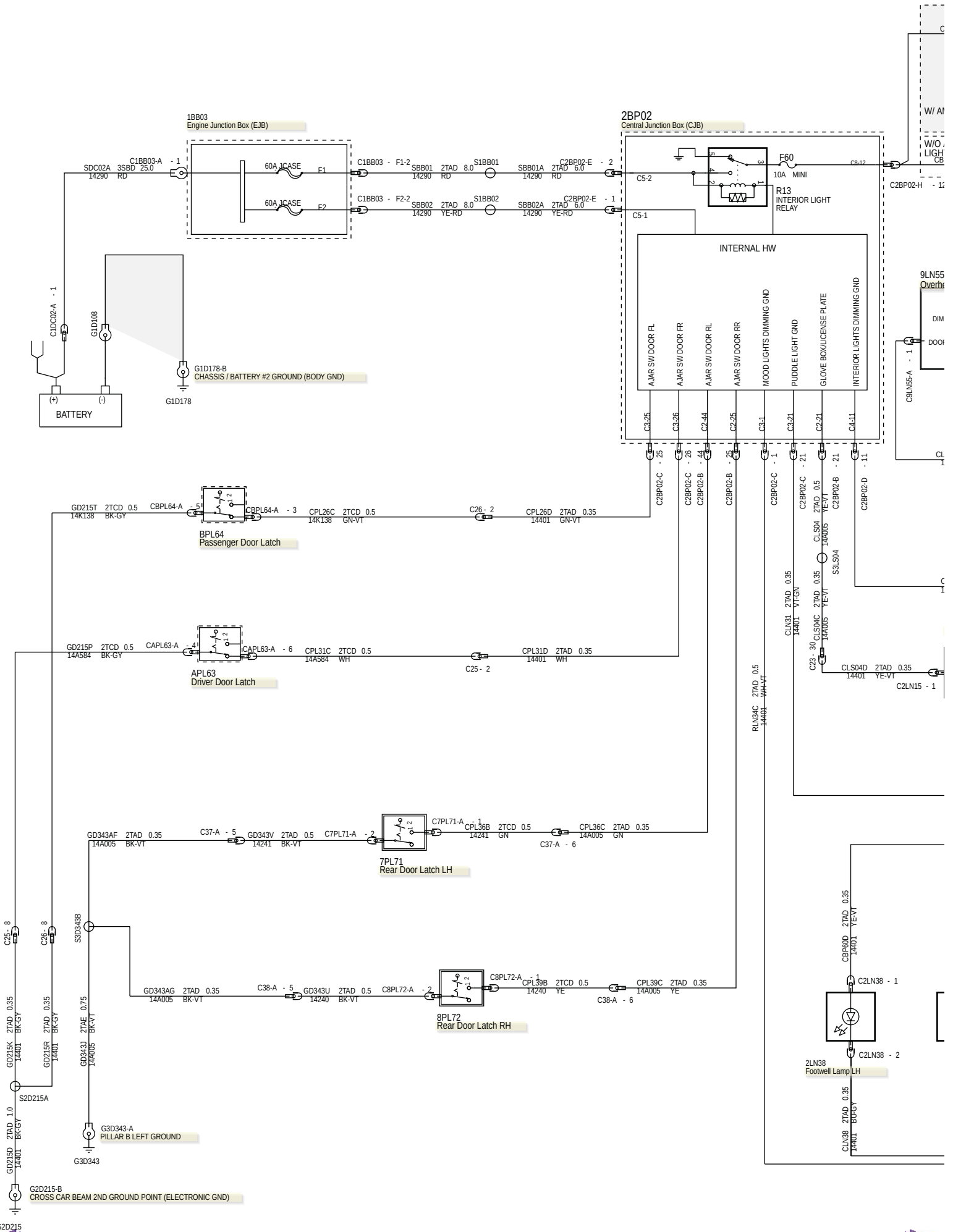

417-02-13 Courtesy and Demand Lighting—Super Cab, RHD 4WD/RHD RWD

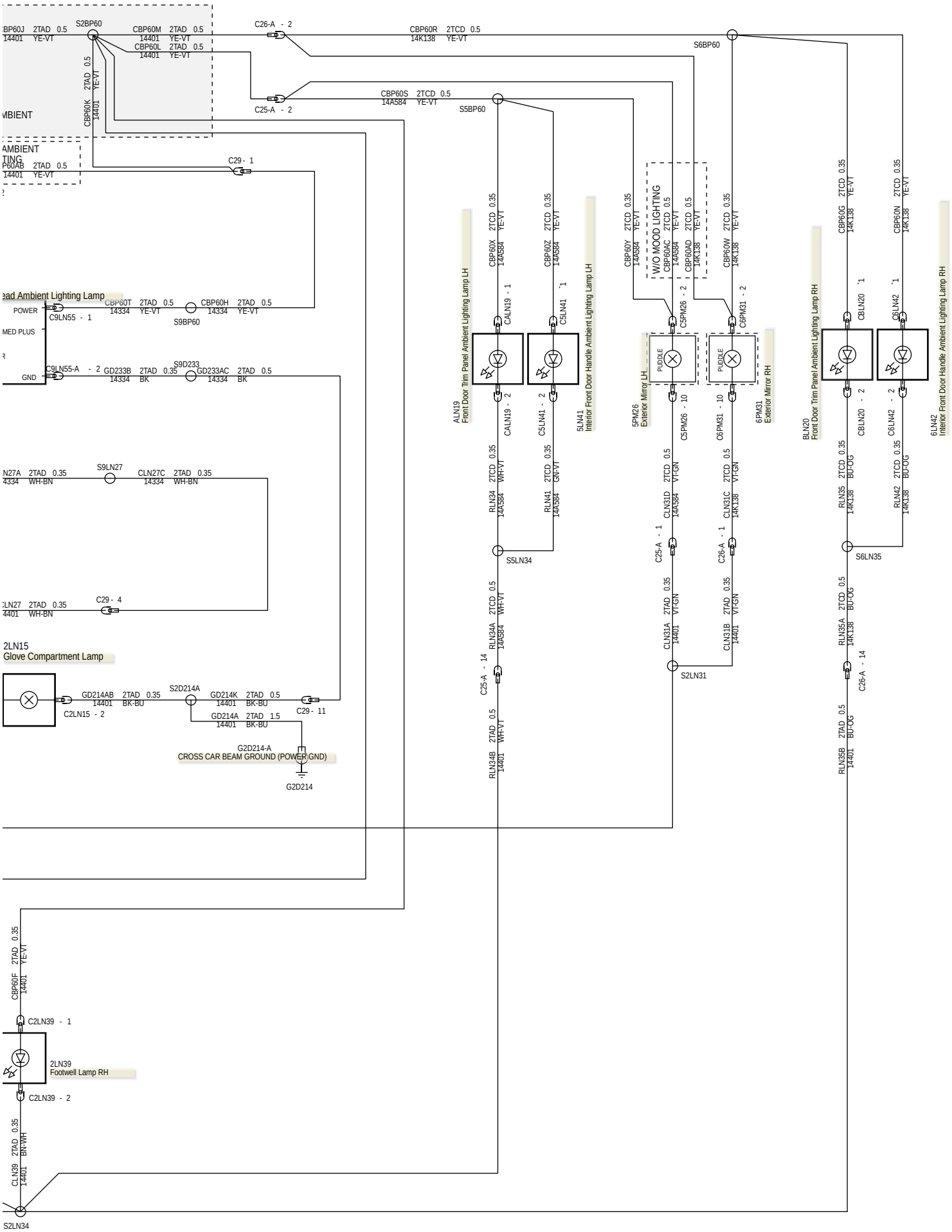

417-02-14 Instrument Cluster and Panel Illumination—LHD 4WD/LHD RWD

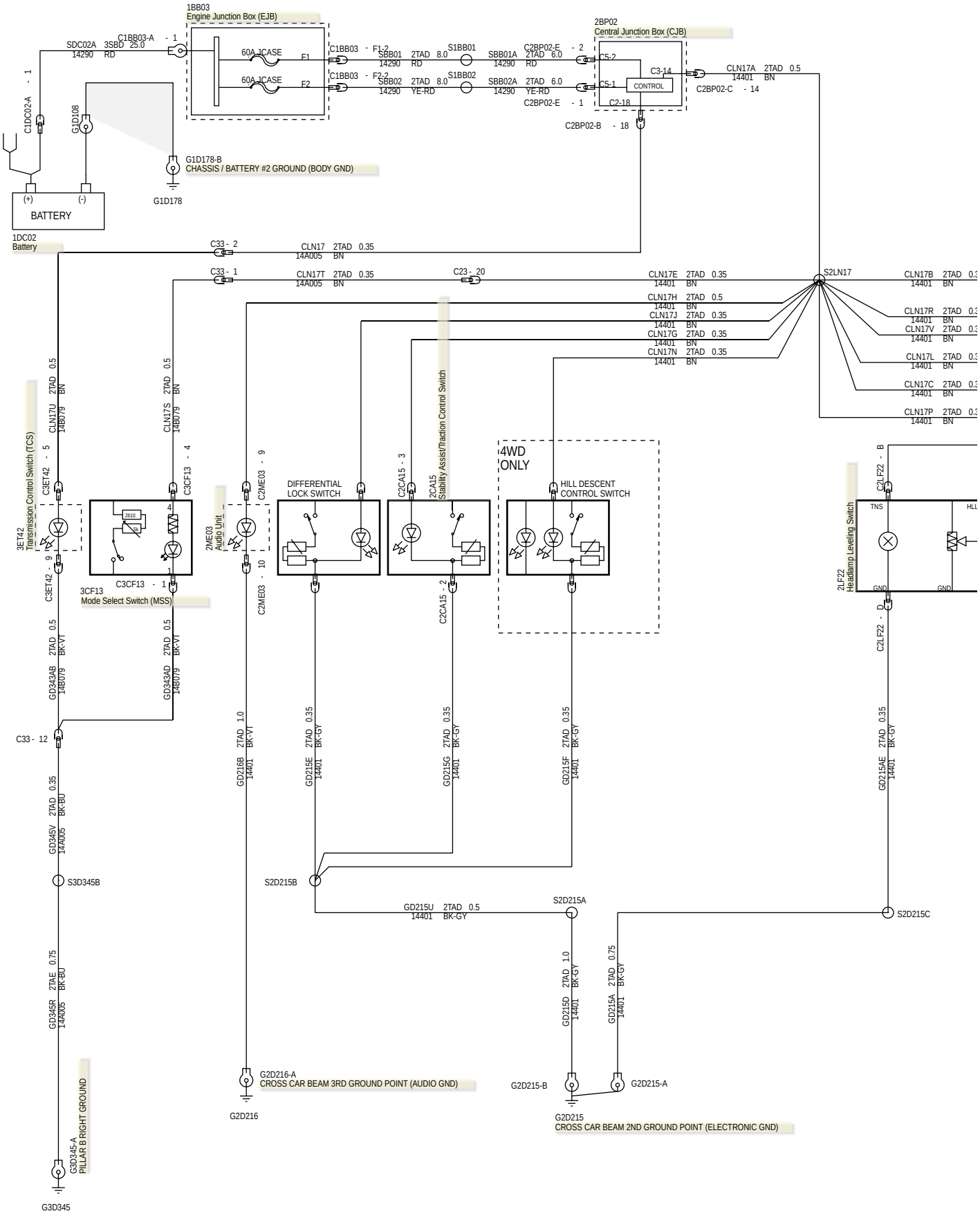

417-02-15 Instrument Cluster and Panel Illumination—LHD 4WD/LHD RWD

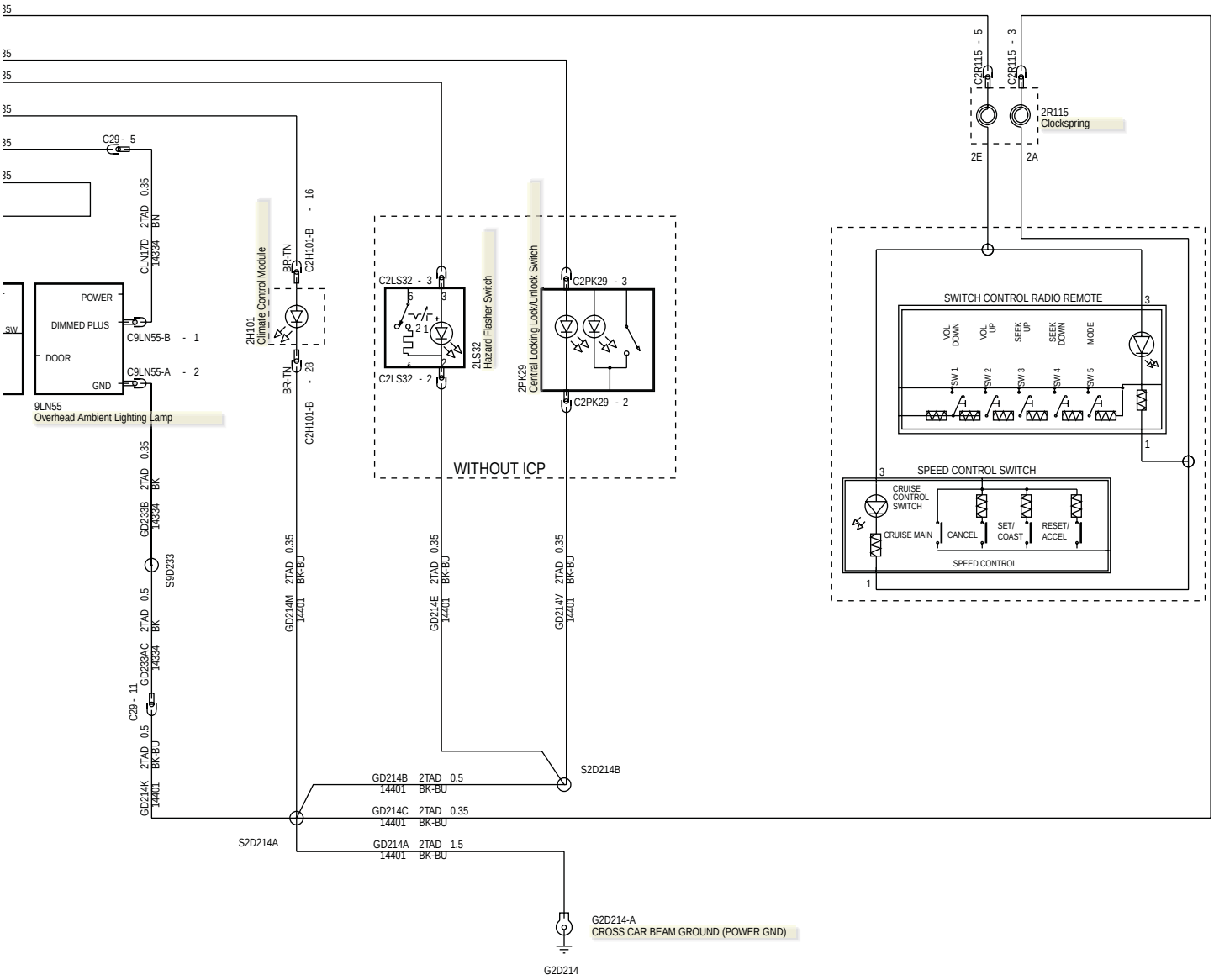

417-02-16 Instrument Cluster and Panel Illumination—RHD 4WD/RHD RWD

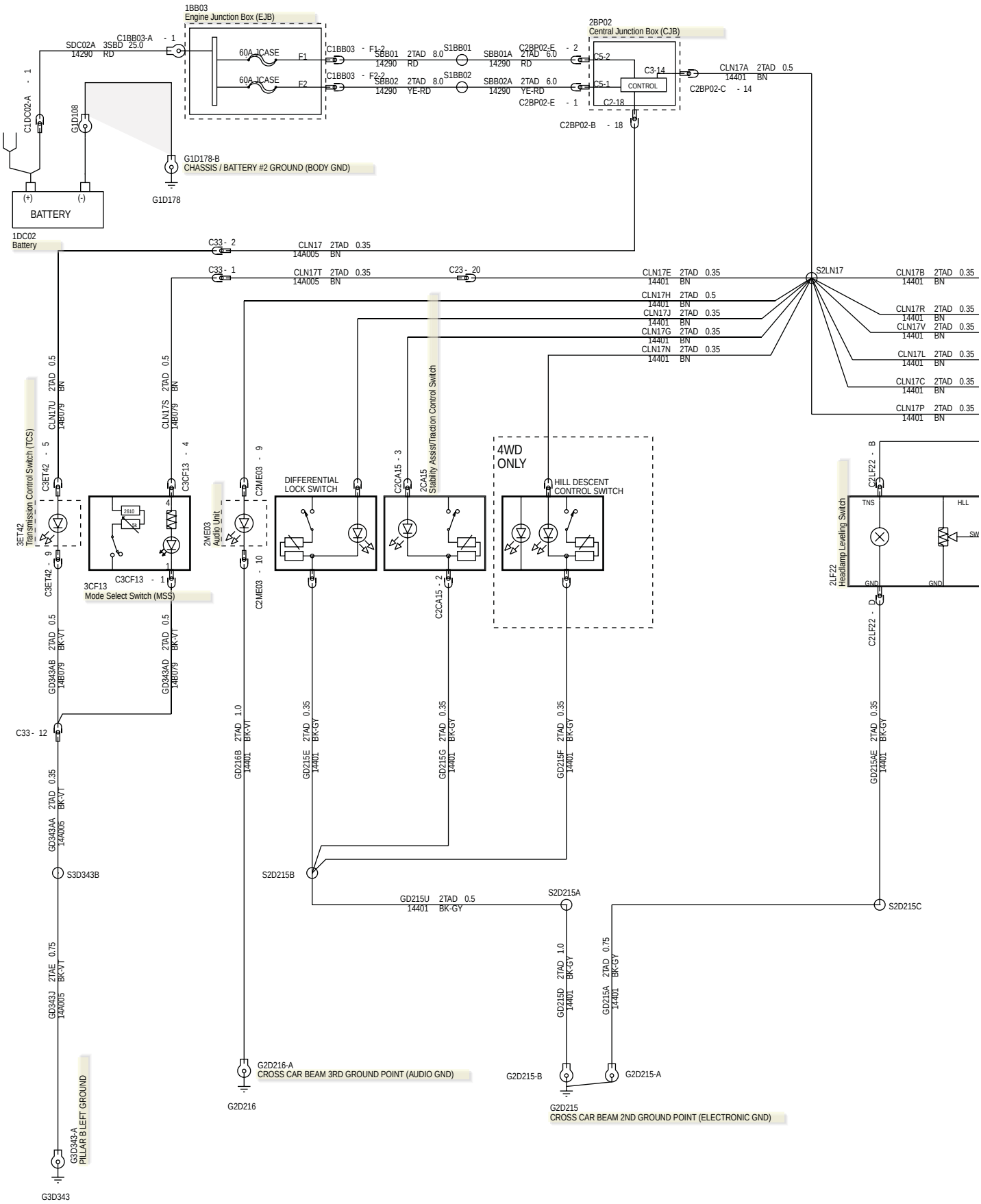

417-02-17 Instrument Cluster and Panel Illumination—RHD 4WD/RHD RWD

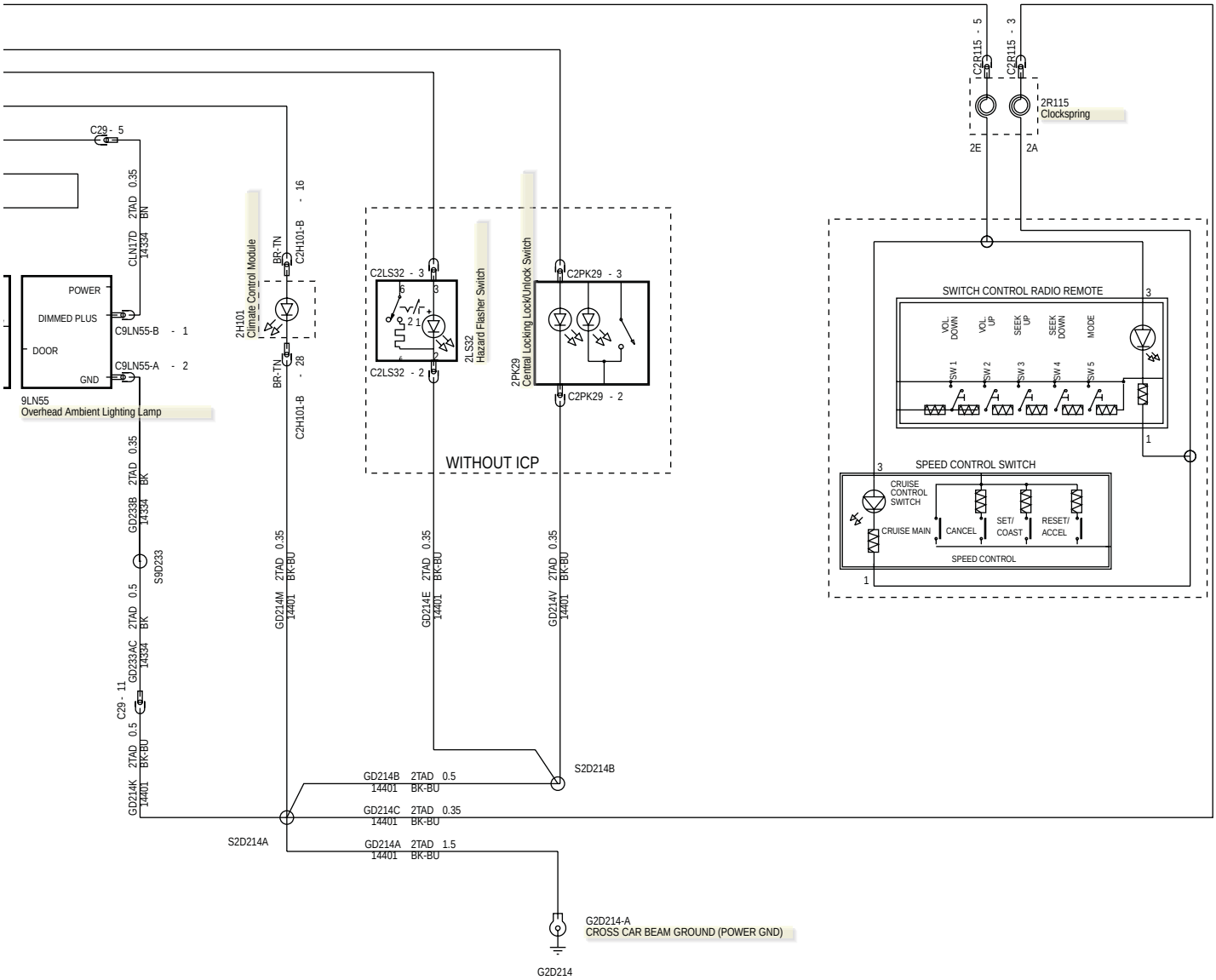

Footwell Lamp LH (G1404517)

1 CBP60D YE-VT 2TAD 0.35
2 CLN38 BU-GY 2TAD 0.35
3

3M5T-14489-ACB

C2LN38
TO IP FOOTWELL DRIVER

HARNESS 14401

Footwell Lamp RH (G1404521)

1 CBP60F YE-VT 2TAD 0.35
2 CLN39 BN-WH 2TAD 0.35
3

3M5T-14489-ACB

C2LN39
TO IP FOOTWELL PASSENGER

HARNESS 14401

Front Door Trim Panel Ambient Lighting Lamp LH (G1408819)

1 CBP60X YE-VT 2TCD 0.35
2 RLN34 WH-VT 2TCD 0.35
3

3M5T-14489-ACB

CALN19
TO DRIVER FRONT DOOR MAP POCKET

HARNESS 14A584

Front Door Trim Panel Ambient Lighting Lamp RH (G1408821)

1 CBP60G YE-VT 2TCD 0.35
2 RLN35 BU-OG 2TCD 0.35
3

3M5T-14489-ACB

CBLN20
TO PASSENGER FRONT DOOR MAP POCKET

HARNESS 14K138

Glove Compartment Lamp (G1404522)

CLS04D YE-VT 2TAD 0.35 1 2 GD214AB BK-BU 2TAD 0.35

C2LN15
WBS-AL-10TB
TO GLOVE BOX LAMP
HARNESS 14401

Interior Front Door Handle Ambient Lighting Lamp LH (G1404528)

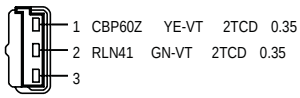

3M5T-14489-ACB

C5LN41
TO DRIVER FRONT DOOR RELEASE HANDLE

HARNESS 14A584

Interior Front Door Handle Ambient Lighting Lamp RH (G1404529)

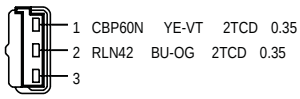

3M5T-14489-ACB

C6LN42
TO PASSENGER FRONT DOOR RELEASE HANDLE

HARNESS 14K138

Overhead Ambient Lighting Lamp (G1405457)

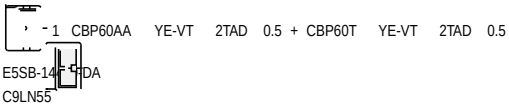

E5SB-14
DA
C9LN55
TO OVERHEAD CONSOLE 1

HARNESS 14334

Overhead Ambient Lighting Lamp—A (G1405458)

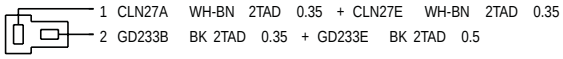

81AG-14488-GA

C9LN55-A
TO OVERHEAD CONSOLE 2

HARNESS 14334

Overhead Ambient Lighting Lamp—B (G1405459)

6M5T-14489-GAA

C9LN55-B
TO OVERHEAD CONSOLE MOOD LIGHTING

HARNESS 14334

Rear Interior Lamp (G1404530)

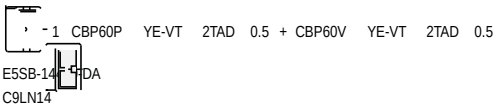

E5SB-14
DA
C9LN14
TO INTERIOR LAMP DOME 1

HARNESS 14334

Rear Interior Lamp—A (G1404531)

PIN 2 => GD233AB BK 0.35 2TAD

1 CLN27D WH-BN 2TAD 0.35 + CLN27B WH-BN 2TAD 0.35
2 GD233C BK 2TAD 0.5 + GD233AB BK 2TAD 0.35

81AG-14488-GA

C9LN14-A
TO INTERIOR LAMP DOME 2

HARNESS 14334

SECTION 417-04 Daytime Running Lamps (DRL)

VEHICLE APPLICATION: 2012.0 Ranger

CONTENTS PAGE

ELECTRICAL CONNECTORS

Daytime Running Lamp LH..... 417-04-2
Daytime Running Lamp RH..... 417-04-2

Daytime Running Lamp LH (G1404537)

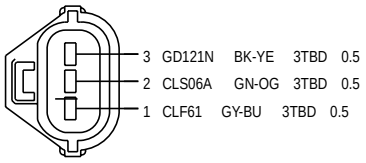

6189-0177
C1LF17
TO DRL POSITION LAMP LH

HARNESS 14290

Daytime Running Lamp RH (G1404538)

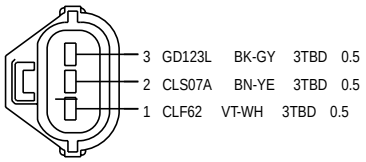

6189-0177
C1LF18
TO DRL POSITION LAMP RH

HARNESS 14290

SECTION 418-00 Module Communications Network

VEHICLE APPLICATION: 2012.0 Ranger

CONTENTS PAGE

ELECTRICAL SCHEMATICS

Diagnostics..... 418-00-2
Communications Network - High-Speed (HS) Controller Area Network (CAN) Bus — Vehicles With: 5-Speed Manual Transmission - MT75/6-Speed Manual Transmission - MT82..... 418-00-4
Communications Network - High-Speed (HS) Controller Area Network (CAN) Bus — Vehicles With: 6-Speed Automatic Transaxle - 6R80..... 418-00-6
Communications Network - Mid-Speed (MS) Controller Area Network (CAN) Bus..... 418-00-8
Communications Network - Multimedia (MM) Controller Area Network (CAN) Bus..... 418-00-10
Communications Network - Local Interconnect Network (LIN) Bus — 2.2L Duratorq-TDCi (88kW/120PS) - Puma/2.2L Duratorq-TDCi (96kW/130PS) - Puma/2.2L Duratorq-TDCi (110kW/150PS) - Puma/3.2L Duratorq-TDCi (148kW/200PS) - Puma, LHD 4WD/LHD RWD..... 418-00-12
Communications Network - Local Interconnect Network (LIN) Bus — 2.5L Duratec-HE (122kW/165PS) - MI4, LHD 4WD/LHD RWD..... 418-00-14
Communications Network - Local Interconnect Network (LIN) Bus — 2.2L Duratorq-TDCi (88kW/120PS) - Puma/2.2L Duratorq-TDCi (96kW/130PS) - Puma/2.2L Duratorq-TDCi (110kW/150PS) - Puma/3.2L Duratorq-TDCi (148kW/200PS) - Puma, RHD 4WD/RHD RWD..... 418-00-16
Communications Network - Local Interconnect Network (LIN) Bus — 2.5L Duratec-HE (122kW/165PS) - MI4, RHD 4WD/RHD RWD..... 418-00-18

ELECTRICAL CONNECTORS

Central Junction Box (CJB) — A..... 418-00-20
Central Junction Box (CJB) — B..... 418-00-20
Central Junction Box (CJB) — C..... 418-00-21
Central Junction Box (CJB) — D..... 418-00-21
Central Junction Box (CJB) — E..... 418-00-21
Central Junction Box (CJB) — F..... 418-00-22
Central Junction Box (CJB) — G..... 418-00-22
Central Junction Box (CJB) — H..... 418-00-22
Data Link Connector (DLC)..... 418-00-23
Engine Junction Box (EJB)..... 418-00-24
Engine Junction Box (EJB) — A..... 418-00-24

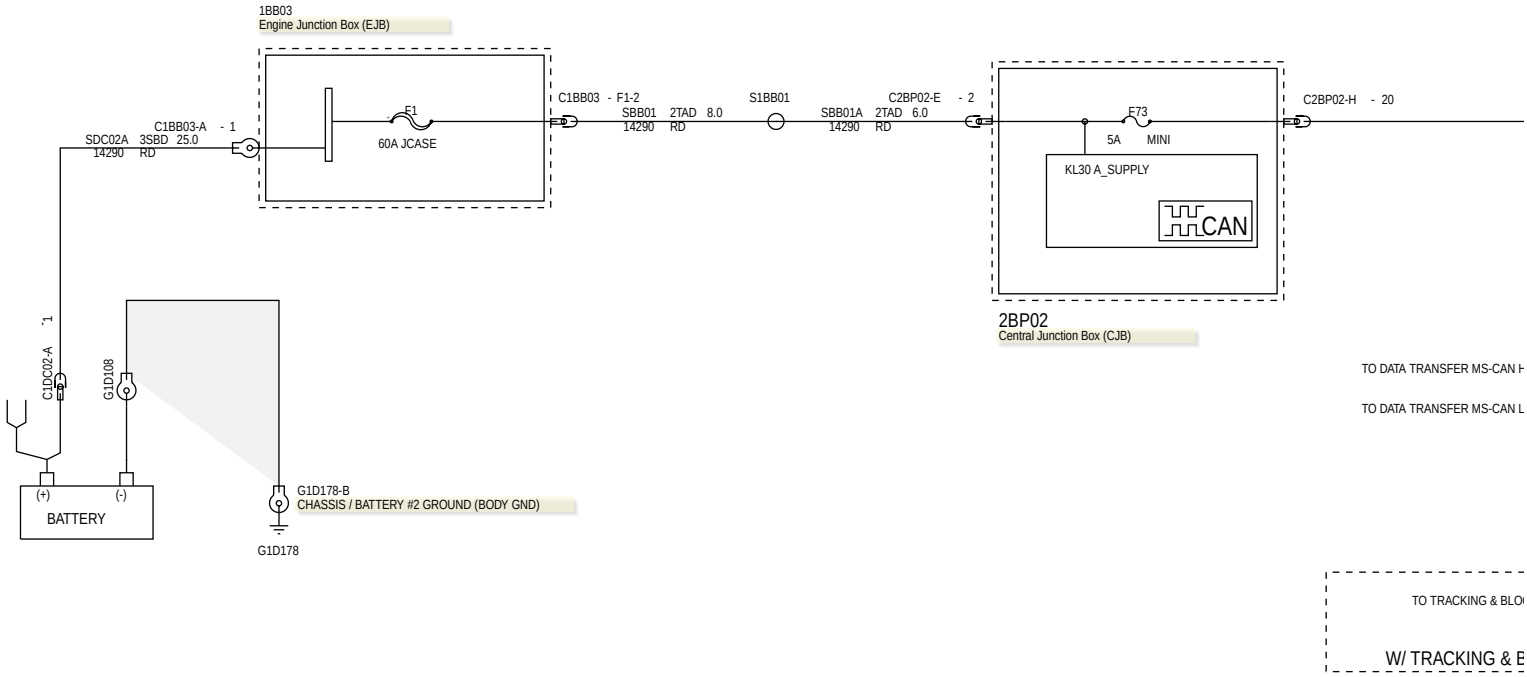
1BB03
Engine Junction Box (EJB)
C1BB03-A - 1
SDC02A 3SBD 25.0
14290 RD
F1
60A JCASE
C1BB03 - F1-2
SBB01 2TAD 8.0
14290 RD
S1BB01
C2BP02-E - 2
SBB01A 2TAD 6.0
14290 RD
F73
5A MINI
KL30 A_SUPPLY
CAN
C2BP02-H - 20
2BP02
Central Junction Box (CJB)
TO DATA TRANSFER MS-CAN H
TO DATA TRANSFER MS-CAN L
C1DC02-A 1
G1D108
(+)
(-)
BATTERY
G1D178-B
CHASSIS / BATTERY #2 GROUND (BODY GND)
G1D178
TO TRACKING & BLO
W/ TRACKING & B

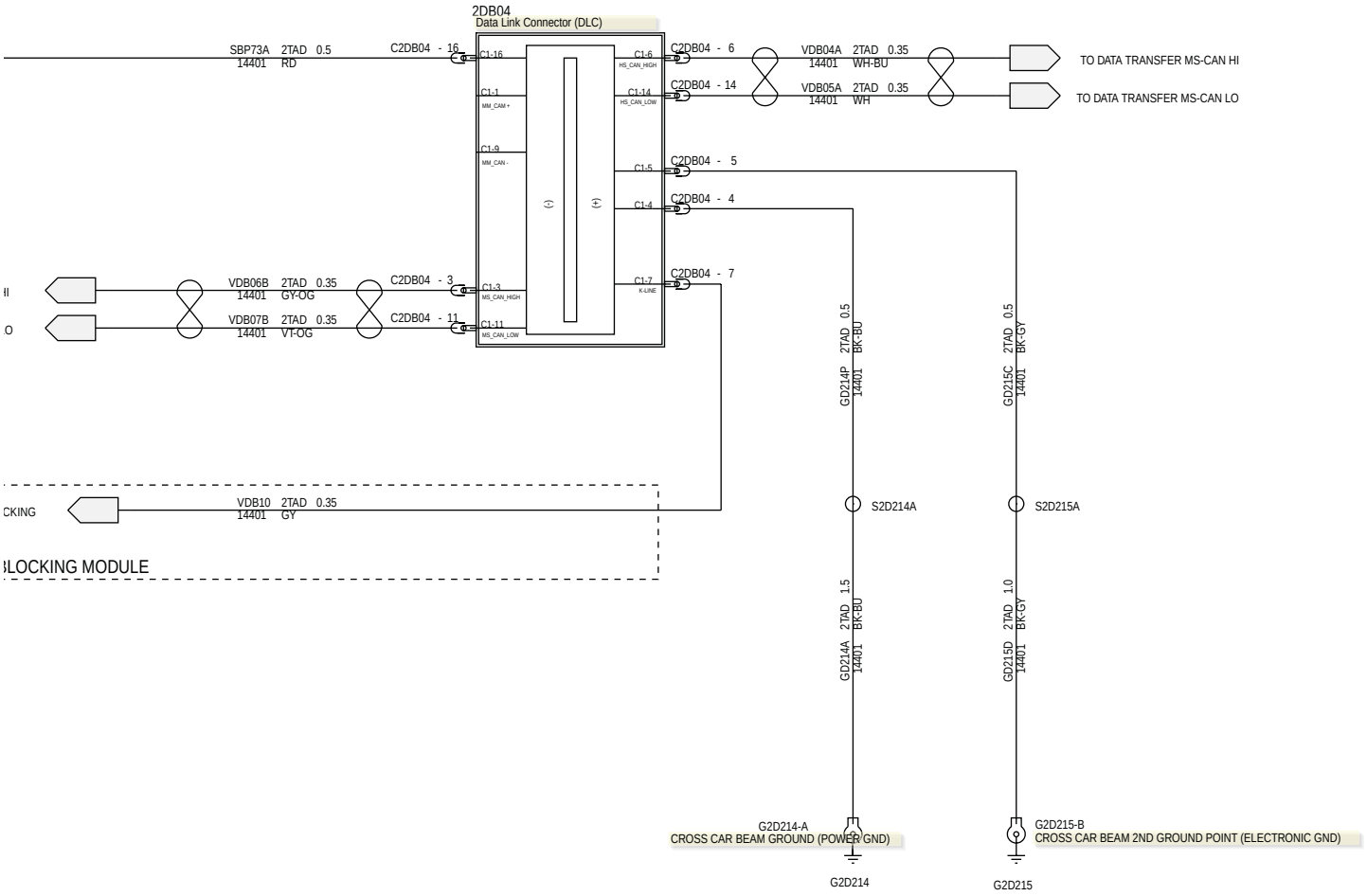
2DB04
Data Link Connector (DLC)
SBP73A 2TAD 0.5
14401 RD
C2DB04 - 16
C1-16
C1-1
MM_CAN +
C1-9
MM_CAN -
C1-3
MS_CAN_HIGH
C1-11
MS_CAN_LOW
(-)
(+)
C1-6
HS_CAN_HIGH
C1-14
HS_CAN_LOW
C1-5
C1-4
C1-7
K-LINE
C2DB04 - 6
C2DB04 - 14
C2DB04 - 5
C2DB04 - 4
C2DB04 - 7
VDB04A 2TAD 0.35
14401 WH-BU
VDB05A 2TAD 0.35
14401 WH
TO DATA TRANSFER MS-CAN HI
TO DATA TRANSFER MS-CAN LO
VDB06B 2TAD 0.35
14401 GY-OG
VDB07B 2TAD 0.35
14401 VT-OG
C2DB04 - 3
C2DB04 - 11
VDB10 2TAD 0.35
14401 GY
GD214P 2TAD 0.5
14401 BK-BU
GD215C 2TAD 0.5
14401 BK-GY
S2D214A
S2D215A
GD214A 2TAD 1.5
14401 BK-BU
GD215D 2TAD 1.0
14401 BK-GY
G2D214-A
CROSS CAR BEAM GROUND (POWER GND)
G2D214
G2D215-B
CROSS CAR BEAM 2ND GROUND POINT (ELECTRONIC GND)
G2D215

418-00-4 Communications Network - High-Speed (HS) Controller Area Network (CAN) Bus—Vehicles With: 5-Speed Manual Transmission - MT75/6-Speed Manual Transmission - MT82

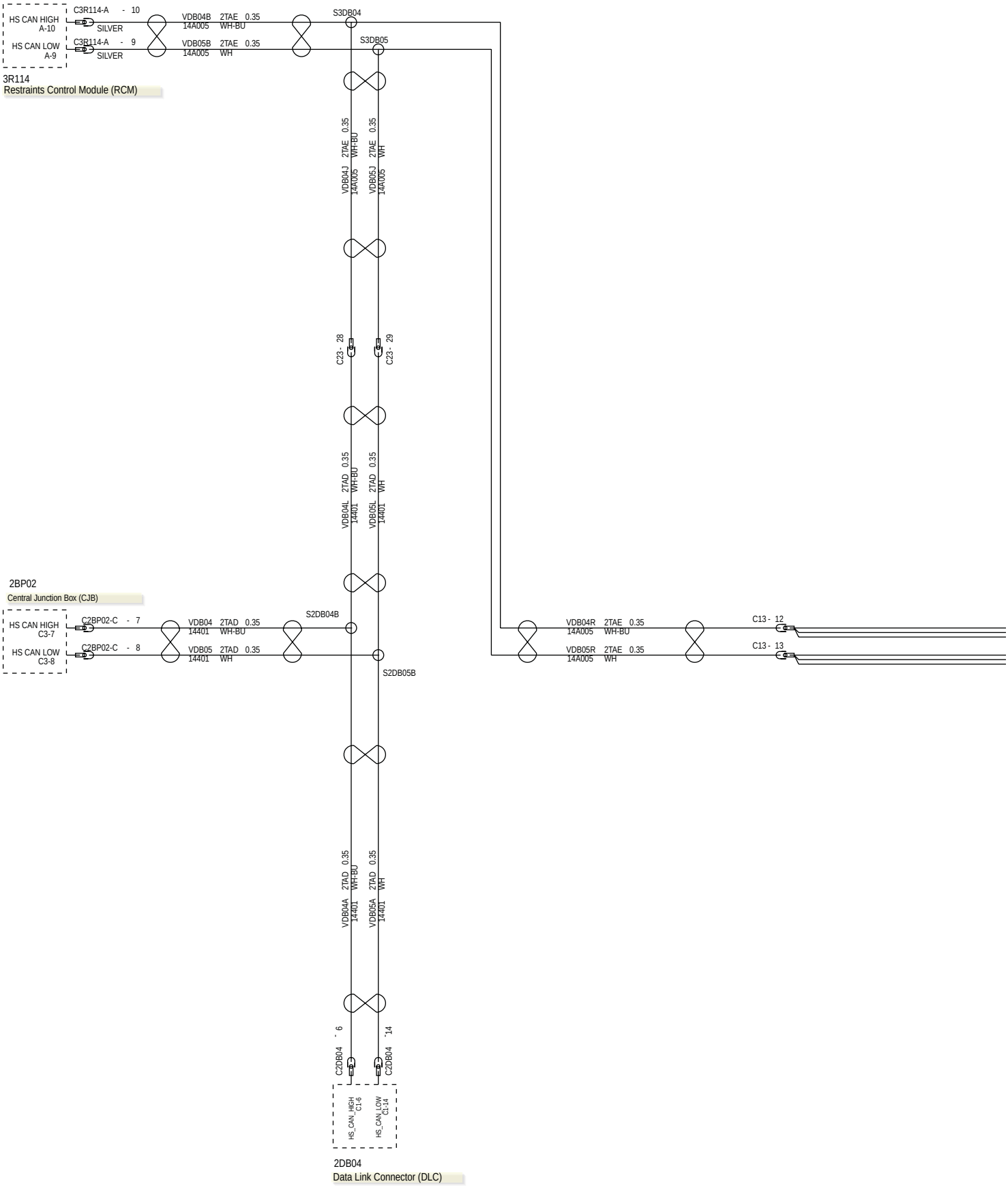

418-00-5 Communications Network - High-Speed (HS) Controller Area Network (CAN) Bus—Vehicles With: 5-Speed Manual Transmission - MT75/6-Speed Manual Transmission - MT82

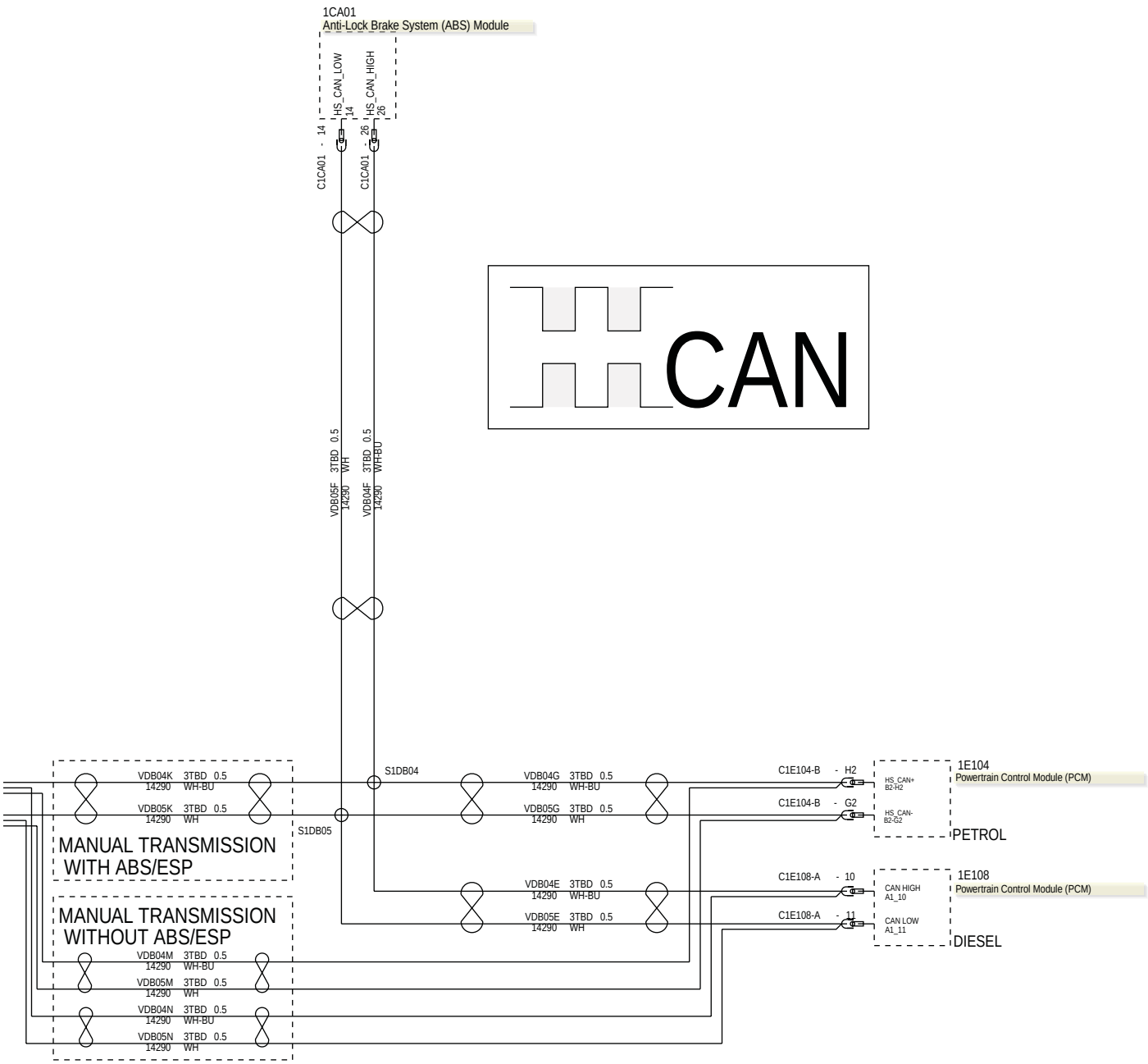

418-00-6 Communications Network - High-Speed (HS) Controller Area Network (CAN) Bus—Vehicles With: 6-Speed Automati Transaxle - 6R80

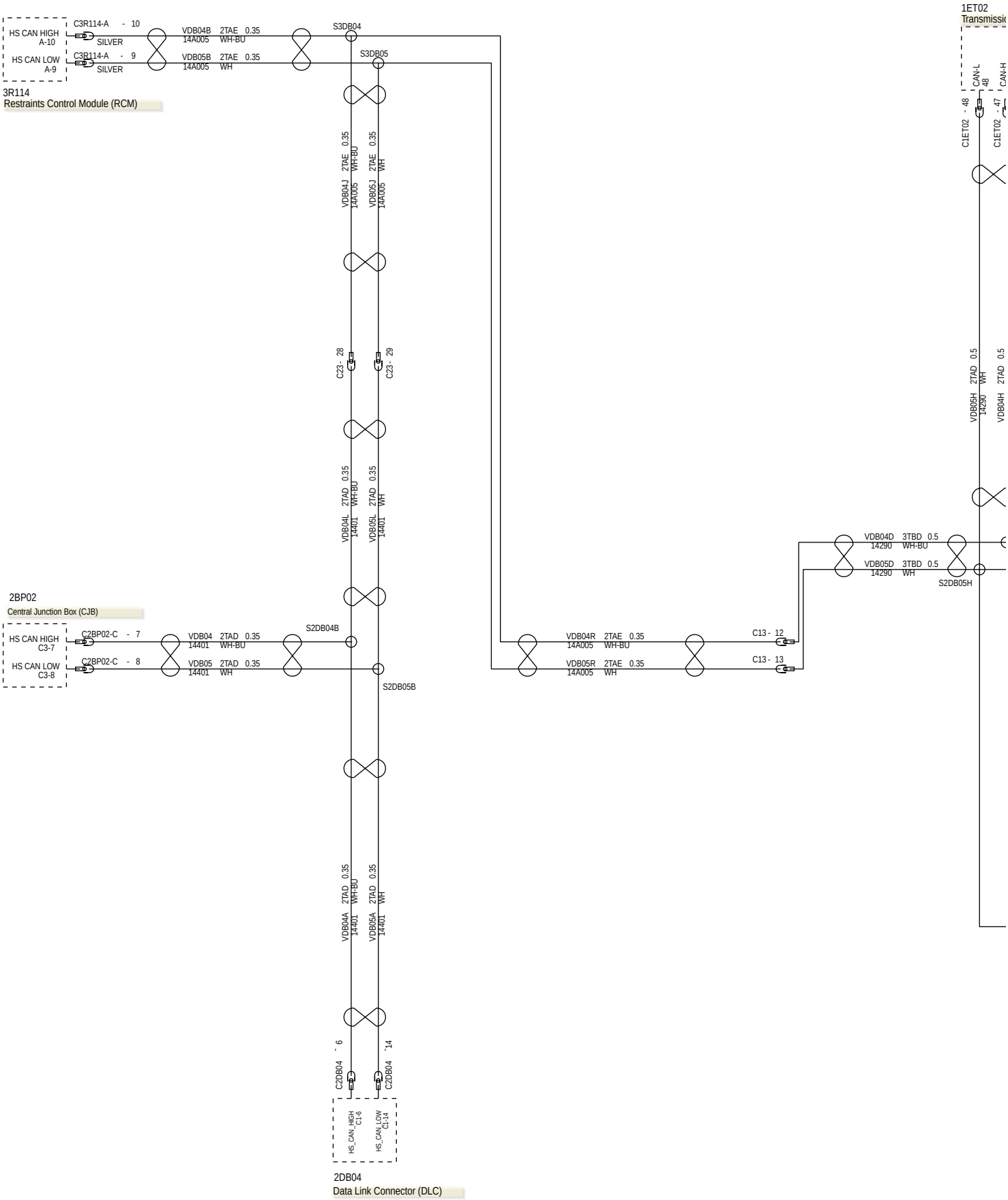

418-00-7 Communications Network - High-Speed (HS) Controller Area Network (CAN) Bus—Vehicles With: 6-Speed Automatic Transaxle - 6R80

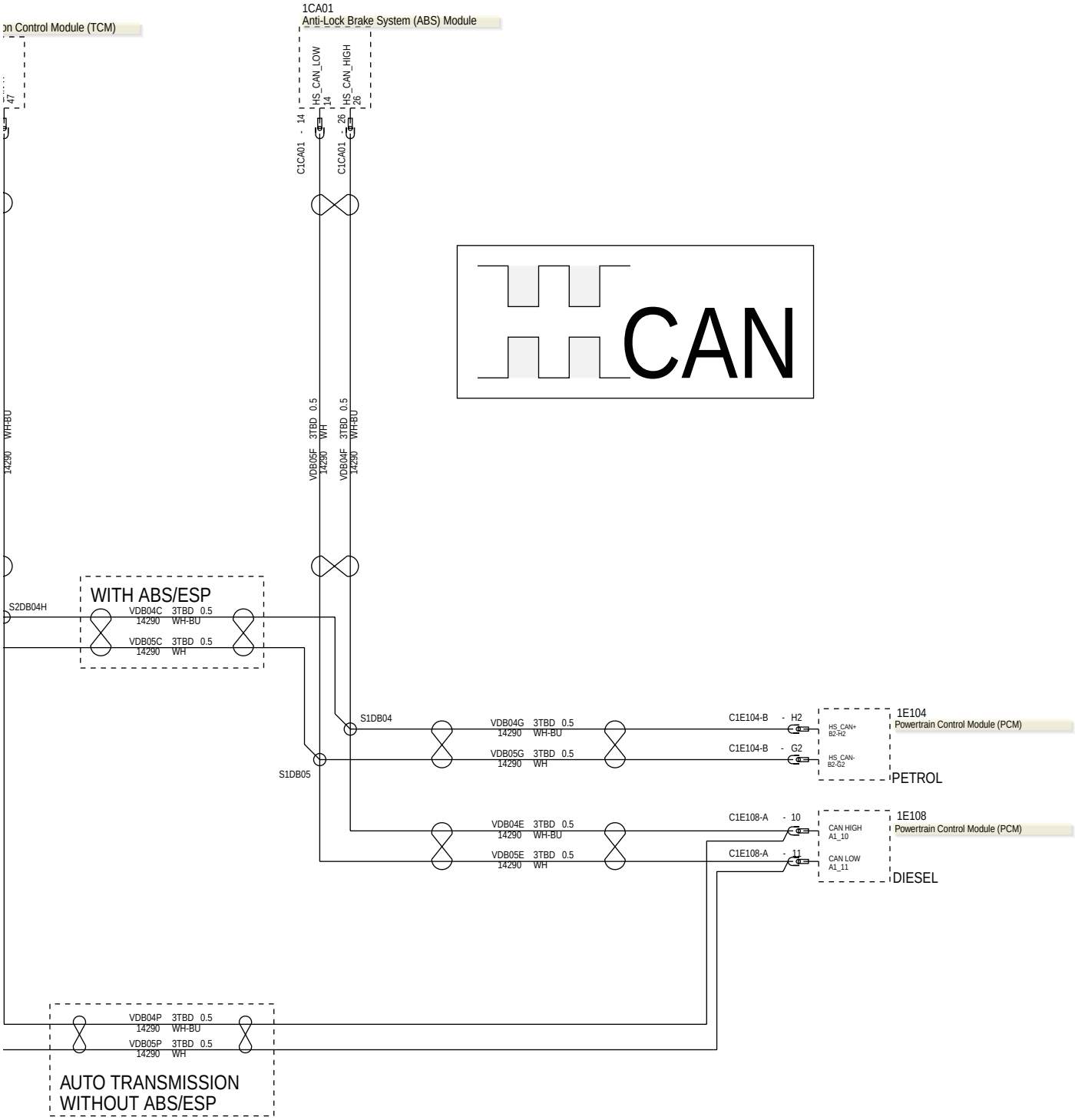

418-00-8 Communications Network - Mid-Speed (MS) Controller Area Network (CAN) Bus

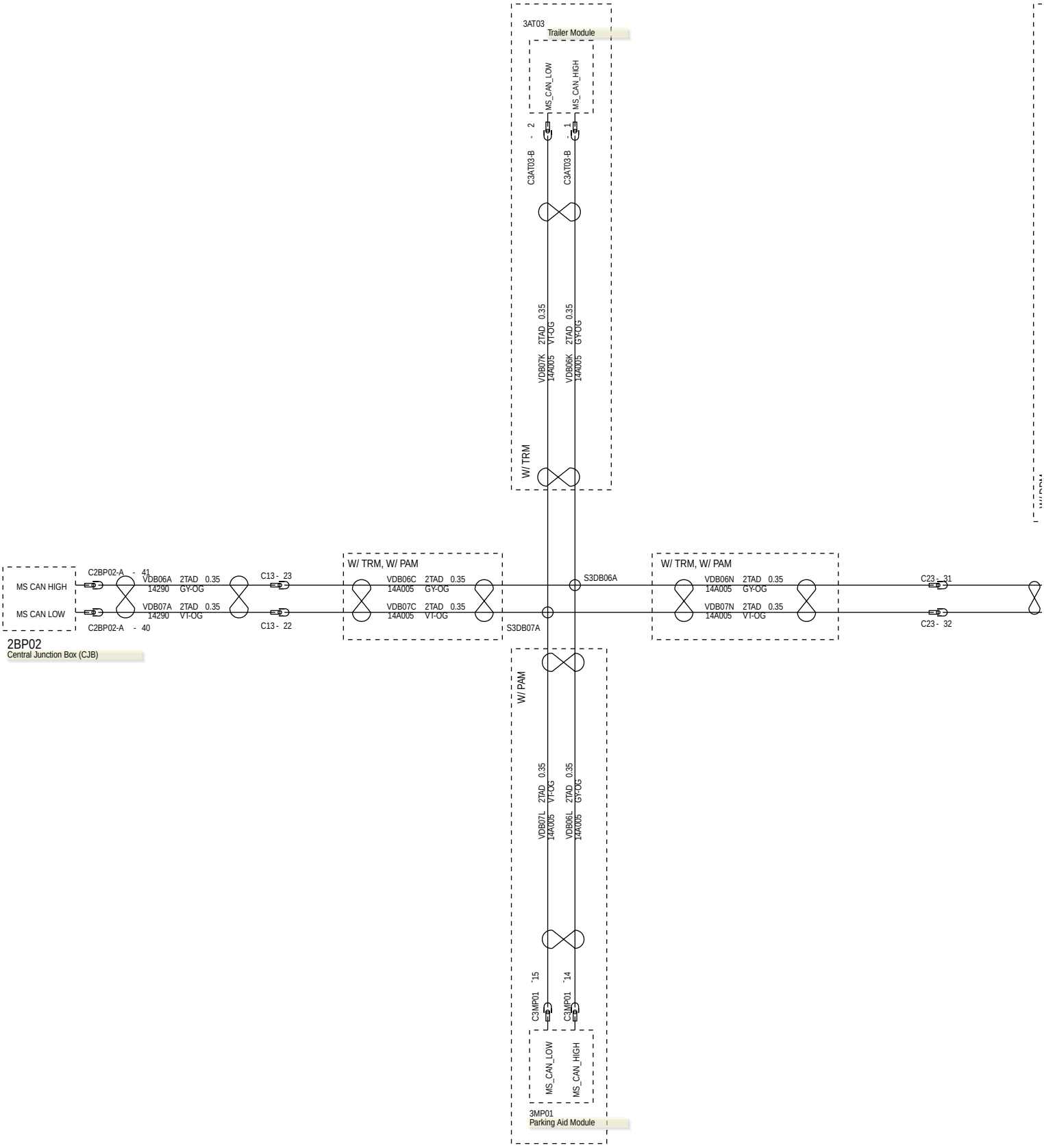

CAN

418-00-9 Communications Network - Mid-Speed (MS) Controller Area Network (CAN) Bus

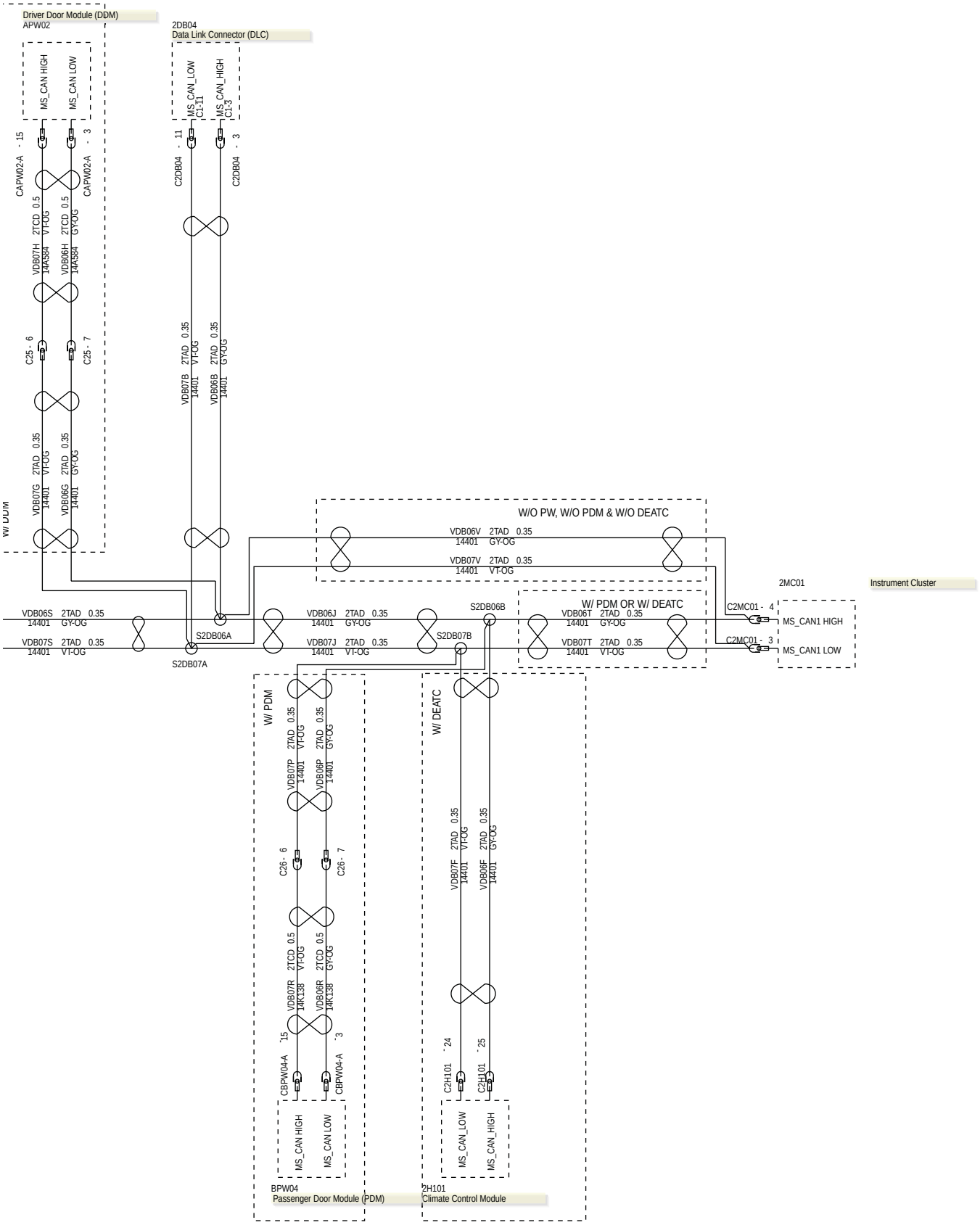

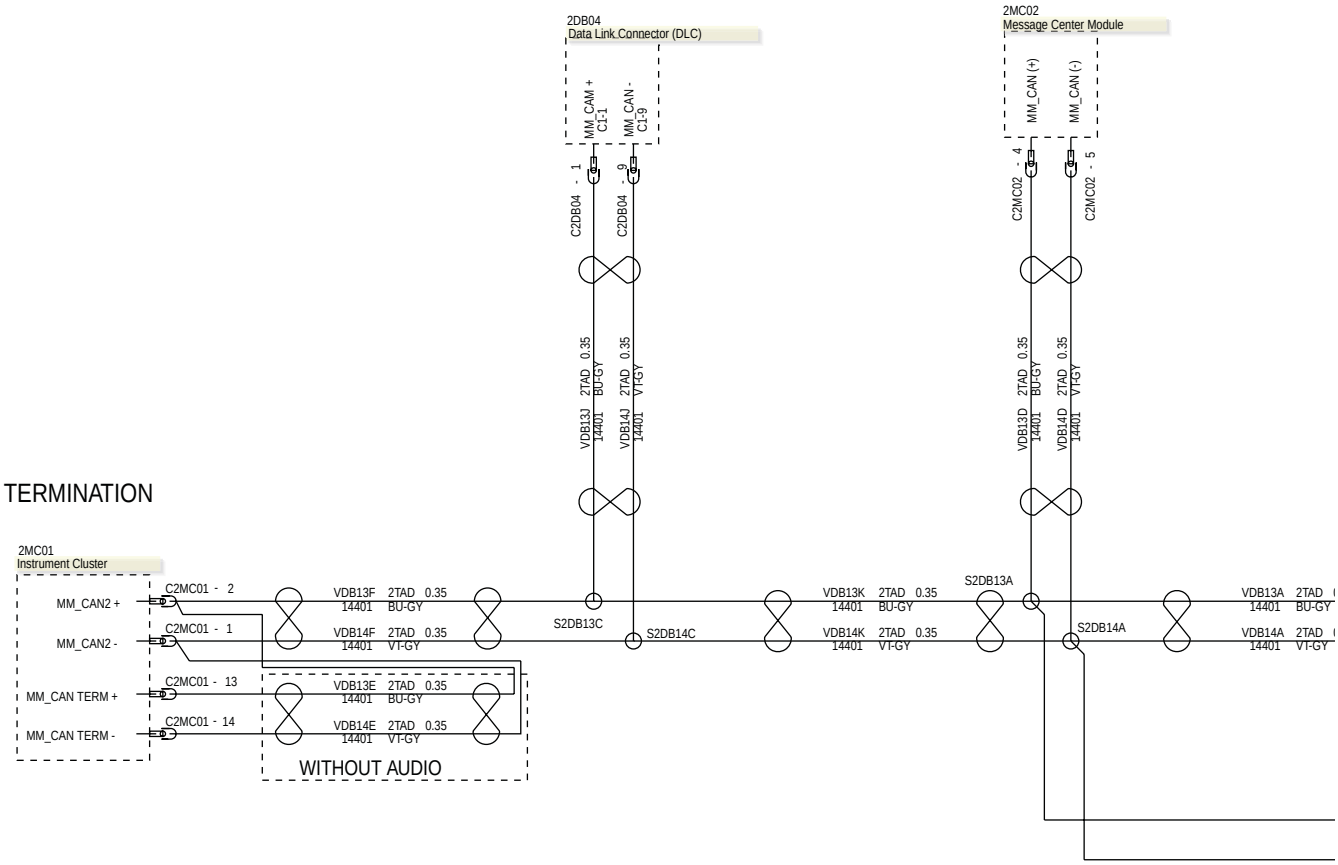
2DB04
Data Link Connector (DLC)
MM_CAN +
C1-1
MM_CAN -
C1-9
C2DB04 - 1
C2DB04 - 9
VDB13J 2TAD 0.35
14401 BU-GY
VDB14J 2TAD 0.35
14401 VT-GY
2MC02
Message Center Module
MM_CAN (+)
MM_CAN (-)
C2MC02 - 4
C2MC02 - 5
VDB13D 2TAD 0.35
14401 BU-GY
VDB14D 2TAD 0.35
14401 VT-GY
TERMINATION
2MC01
Instrument Cluster
MM_CAN2 +
MM_CAN2 -
MM_CAN TERM +
MM_CAN TERM -
C2MC01 - 2
C2MC01 - 1
C2MC01 - 13
C2MC01 - 14
VDB13F 2TAD 0.35
14401 BU-GY
VDB14F 2TAD 0.35
14401 VT-GY
VDB13E 2TAD 0.35
14401 BU-GY
VDB14E 2TAD 0.35
14401 VT-GY
WITHOUT AUDIO
S2DB13C
S2DB14C
VDB13K 2TAD 0.35
14401 BU-GY
VDB14K 2TAD 0.35
14401 VT-GY
S2DB13A
S2DB14A
VDB13A 2TAD
14401 BU-GY
VDB14A 2TAD
14401 VT-GY

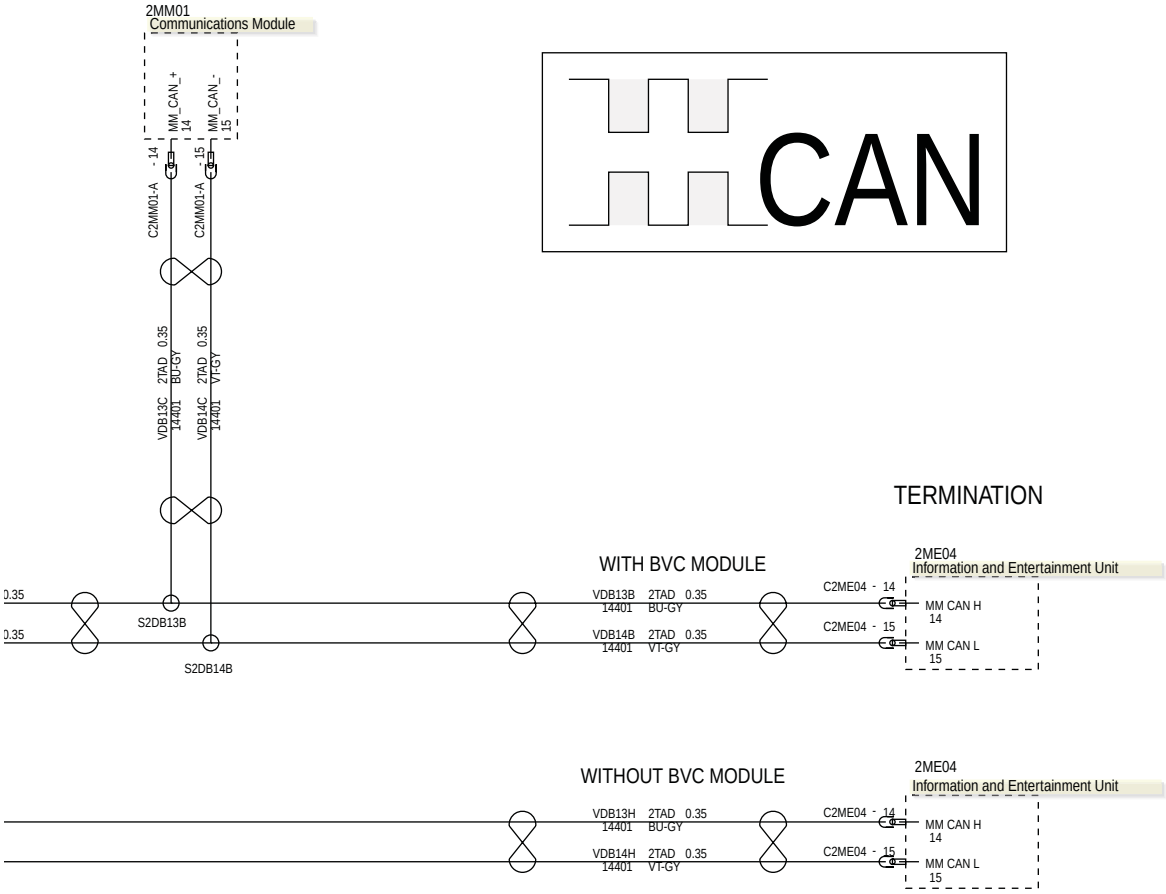
2MM01
Communications Module
MM_CAN_+
14
MM_CAN_-
15
C2MM01-A - 14
C2MM01-A - 15
VDB13C 2TAD 0.35
14401 BU-GY
VDB14C 2TAD 0.35
14401 VT-GY
CAN
TERMINATION
WITH BVC MODULE
S2DB13B
S2DB14B
VDB13B 2TAD 0.35
14401 BU-GY
VDB14B 2TAD 0.35
14401 VT-GY
C2ME04 - 14
C2ME04 - 15
2ME04
Information and Entertainment Unit
MM CAN H
14
MM CAN L
15
WITHOUT BVC MODULE
VDB13H 2TAD 0.35
14401 BU-GY
VDB14H 2TAD 0.35
14401 VT-GY
C2ME04 - 14
C2ME04 - 15
2ME04
Information and Entertainment Unit
MM CAN H
14
MM CAN L
15

418-00-12 Communications Network - Local Interconnect Network (LIN) Bus—2.2L Duratorq-TDCi (88kW/120PS) - Puma/2.2L Duratorq-TDCi (96kW/130PS) - Puma/2.2L Duratorq-TDCi (110kW/150PS) - Puma/3.2L Duratorq-TDCi (148kW/200PS) - Puma, LHD 4WD/LHD RWD

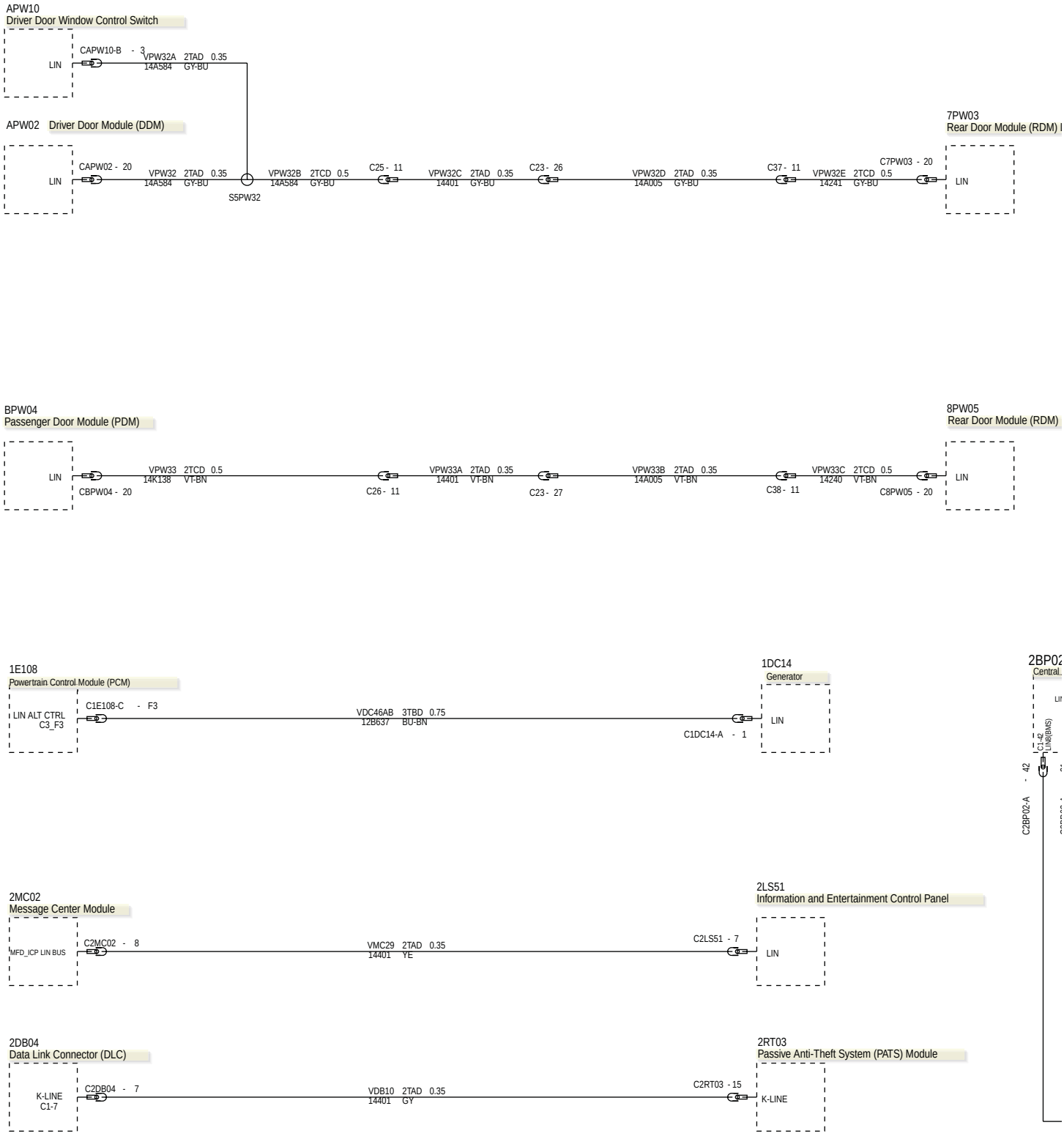

418-00-13 Communications Network - Local Interconnect Network (LIN) Bus—2.2L Duratorq-TDCi (88kW/120PS) - Puma/2.2L Duratorq-TDCi (96kW/130PS) - Puma/2.2L Duratorq-TDCi (110kW/150PS) - Puma/3.2L Duratorq-TDCi (148kW/200PS) - Puma, LHD 4WD/LHD RWD

LH

RH

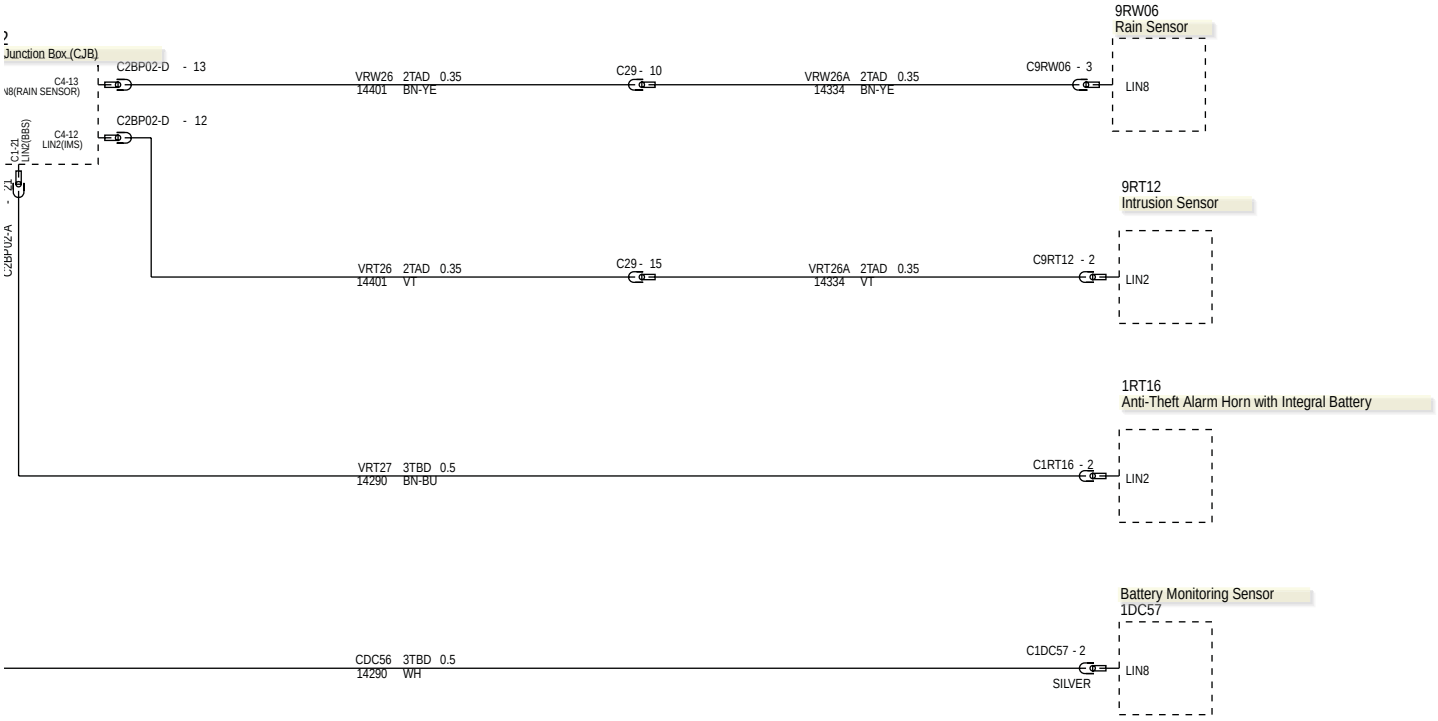

418-00-14 Communications Network - Local Interconnect Network (LIN) Bus—2.5L Duratec-HE (122kW/165PS) - MI4, LHD 4WD/LHD RWD

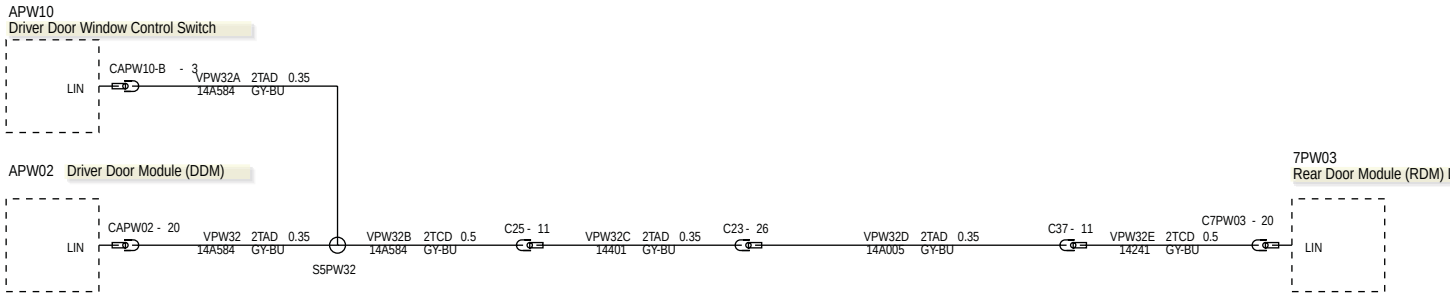

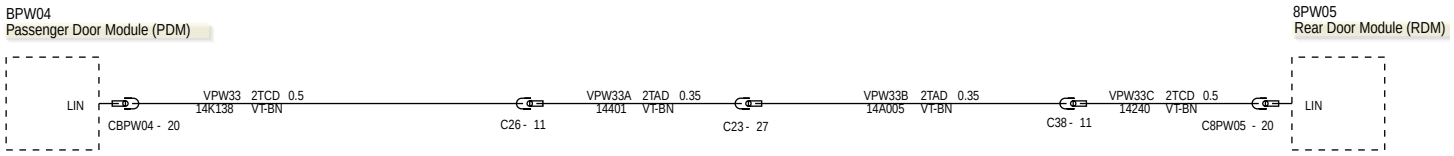

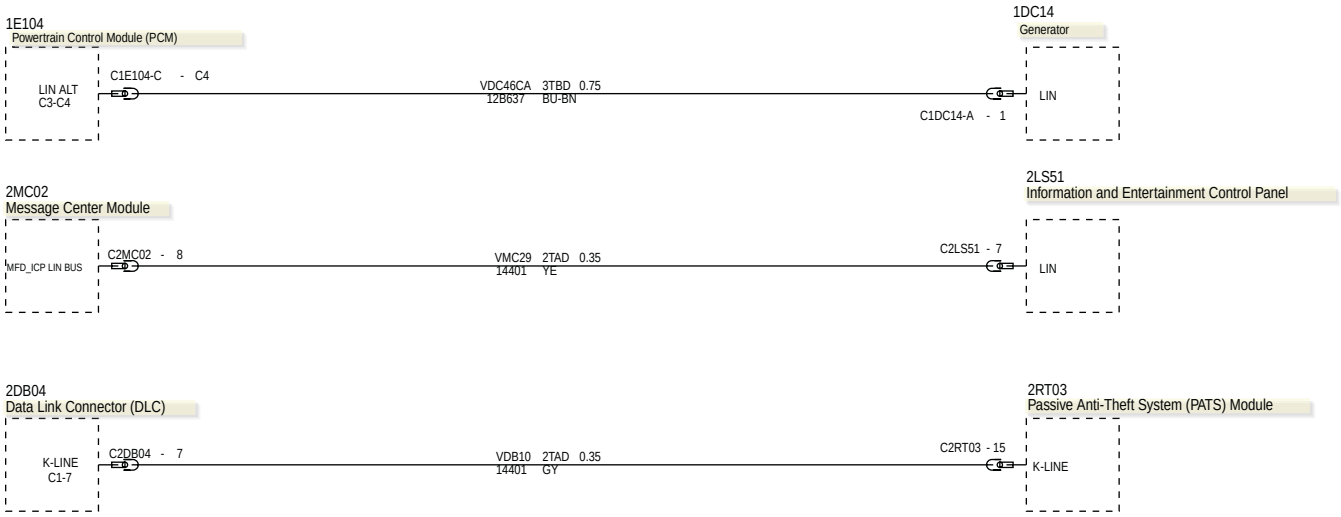

418-00-15 Communications Network - Local Interconnect Network (LIN) Bus—2.5L Duratec-HE (122kW/165PS) - MI4, LHD 4WD/LHD RWD

LH

RH

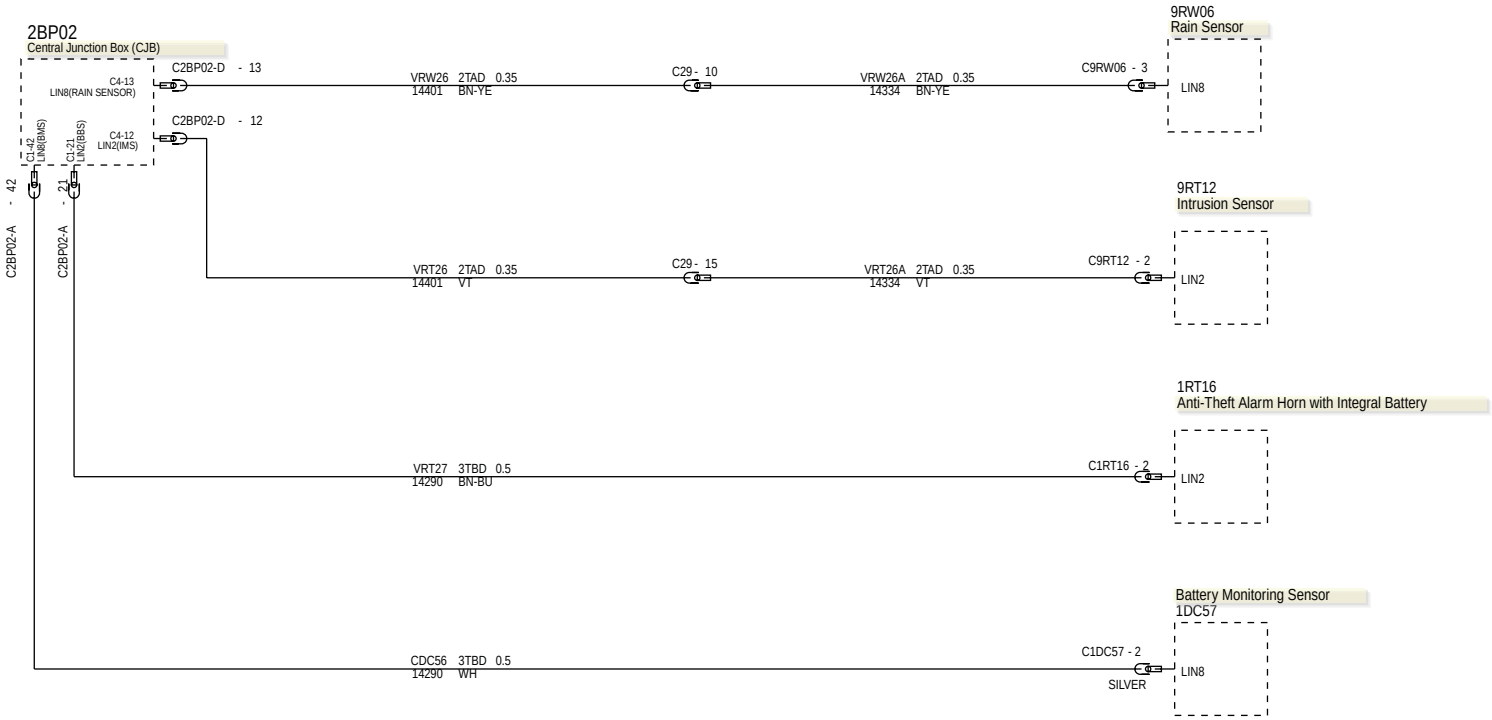

418-00-16 Communications Network - Local Interconnect Network (LIN) Bus—2.2L Duratorq-TDCi (88kW/120PS) - Puma/2.2L Duratorq-TDCi (96kW/130PS) - Puma/2.2L Duratorq-TDCi (110kW/150PS) - Puma/3.2L Duratorq-TDCi (148kW/200PS) - Puma, RHD 4WD/RHD RWD

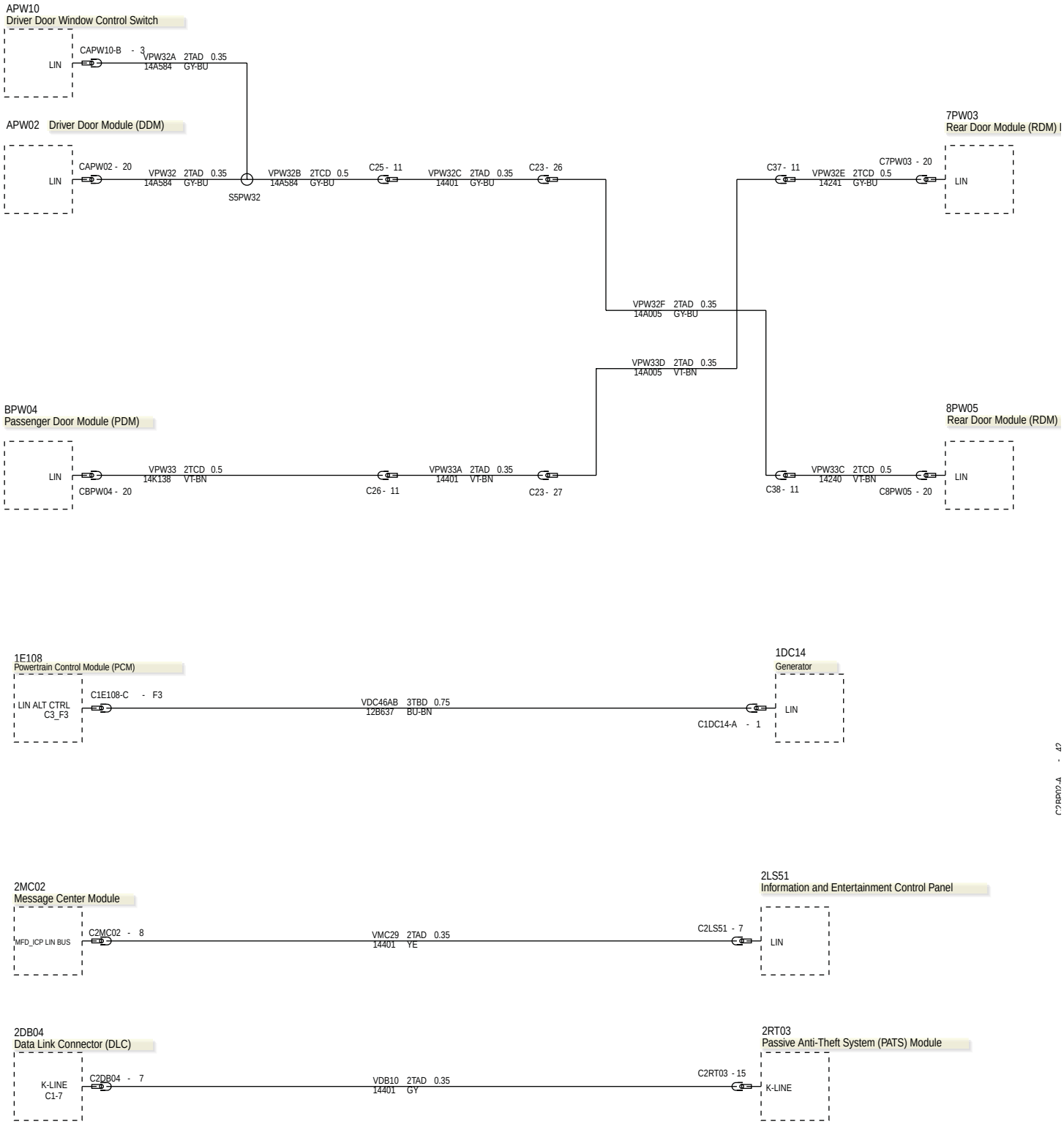

418-00-17 Communications Network - Local Interconnect Network (LIN) Bus—2.2L Duratorq-TDCi (88kW/120PS) - Puma/2.2L Duratorq-TDCi (96kW/130PS) - Puma/2.2L Duratorq-TDCi (110kW/150PS) - Puma/3.2L Duratorq-TDCi (148kW/200PS) - Puma, RHD 4WD/RHD RWD

LH

RH

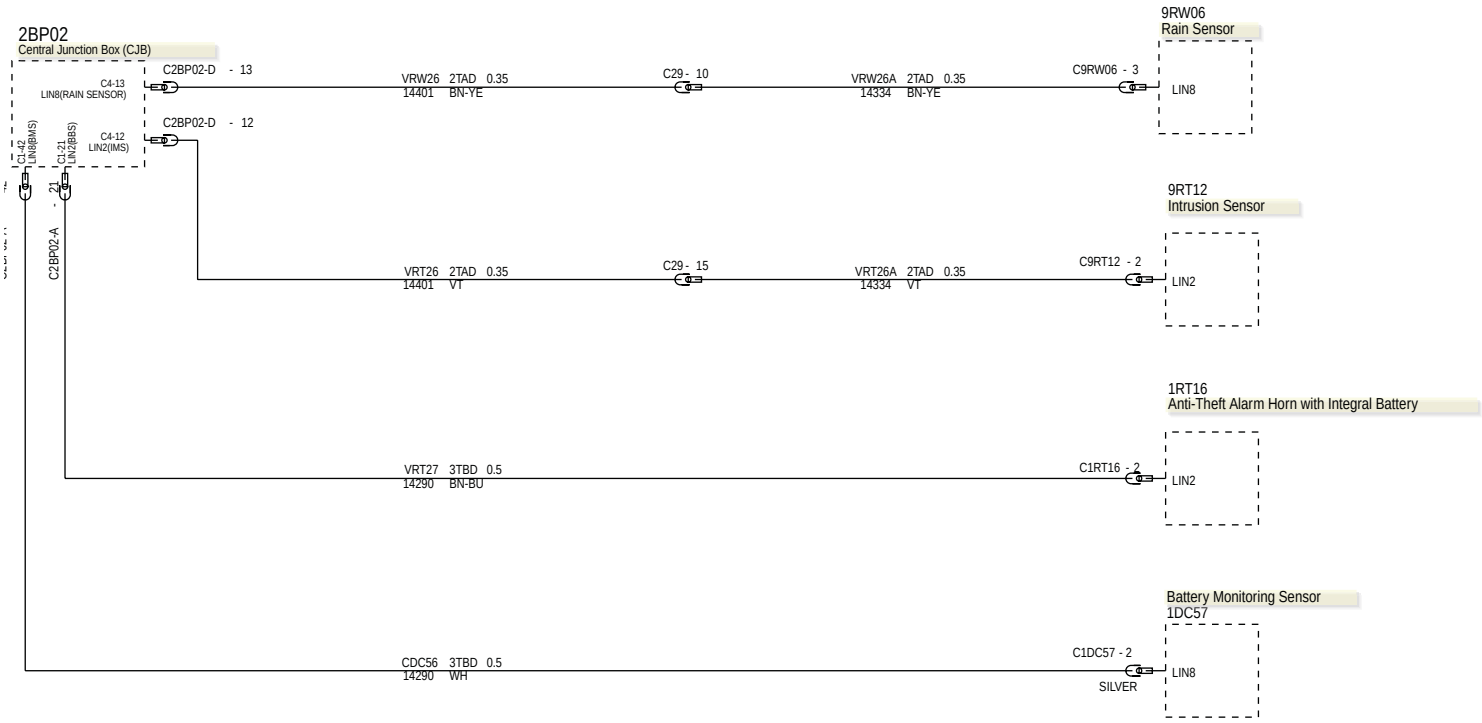

418-00-18 Communications Network - Local Interconnect Network (LIN) Bus—2.5L Duratec-HE (122kW/165PS) - MI4, RHD 4WD/RHD RWD

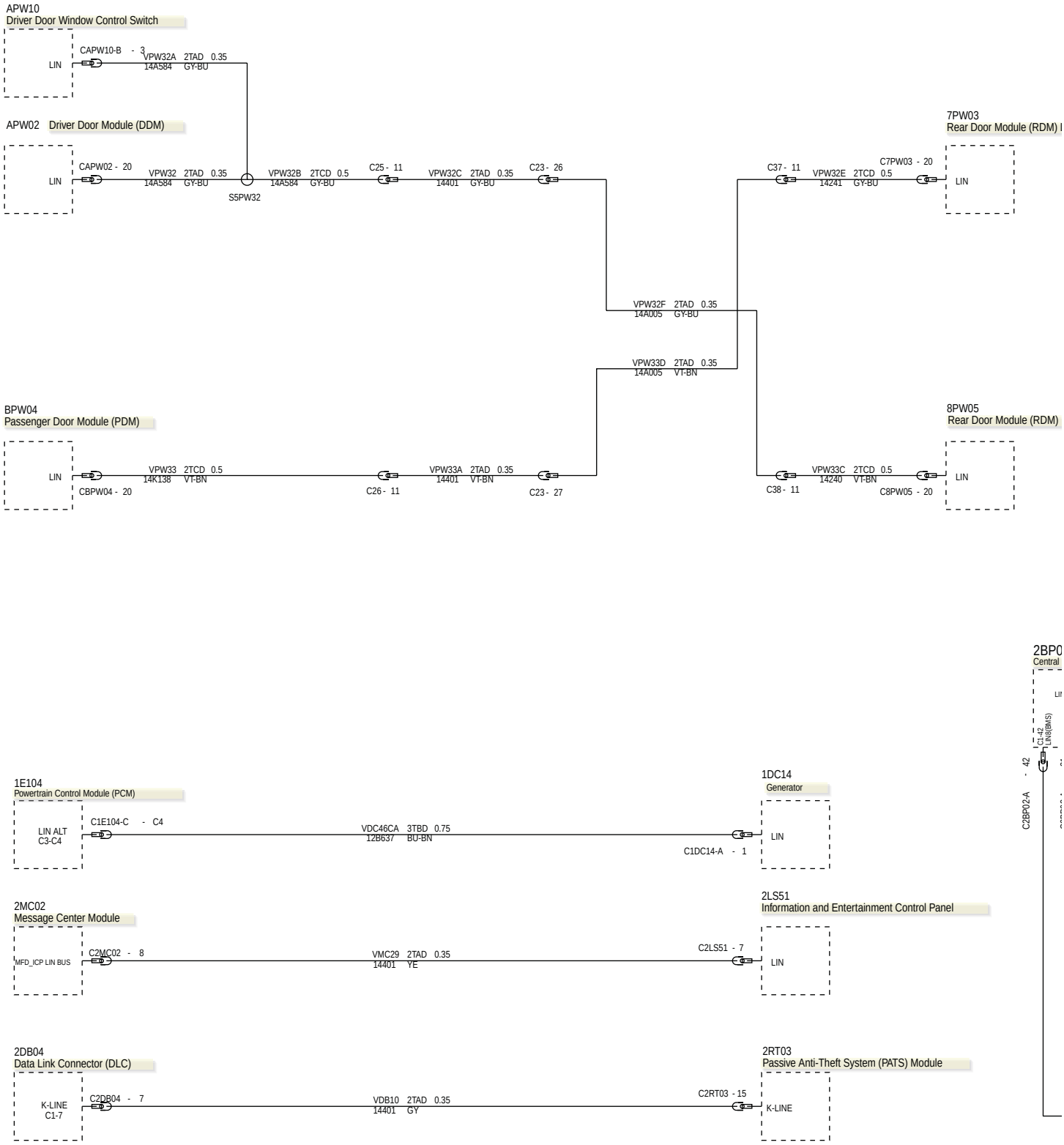

418-00-19 Communications Network - Local Interconnect Network (LIN) Bus—2.5L Duratec-HE (122kW/165PS) - MI4, RHD 4WD/RHD RWD

LH

RH

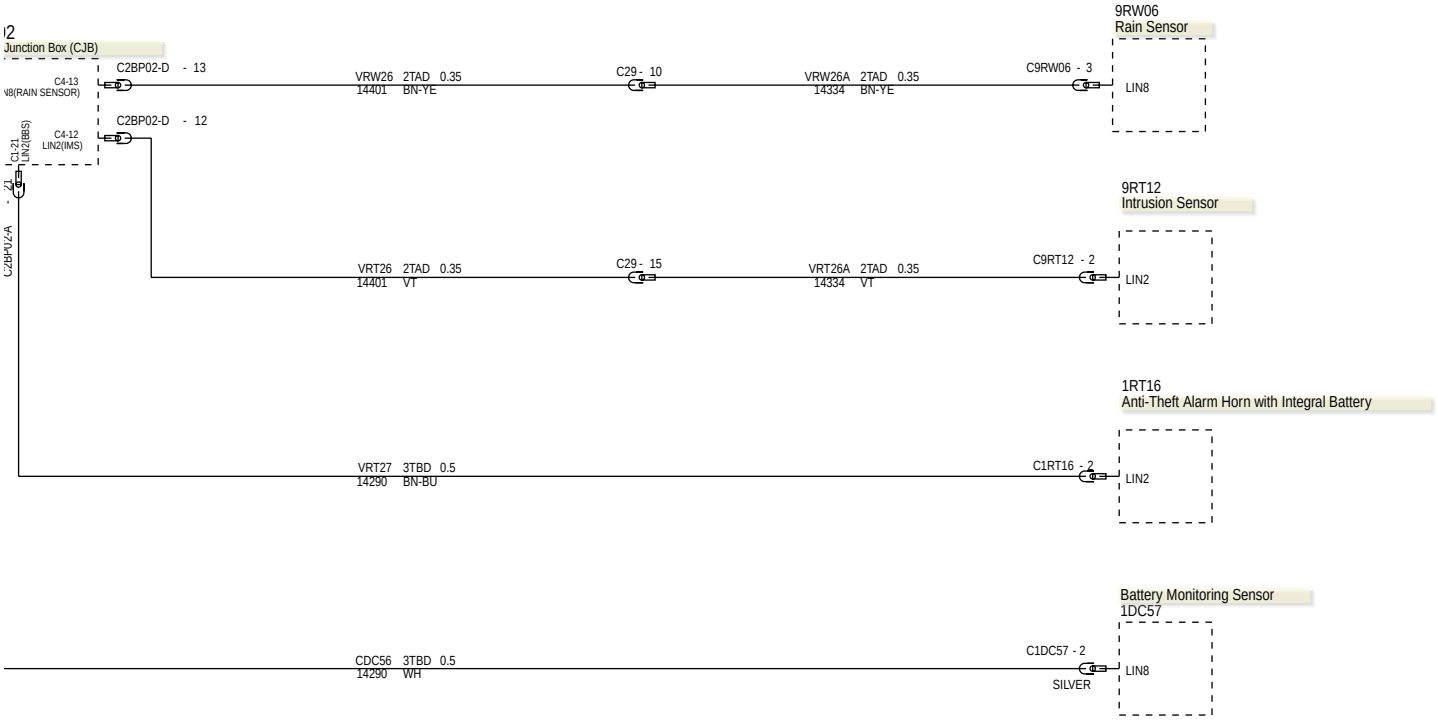

Central Junction Box (CJB)—A (G1404549)

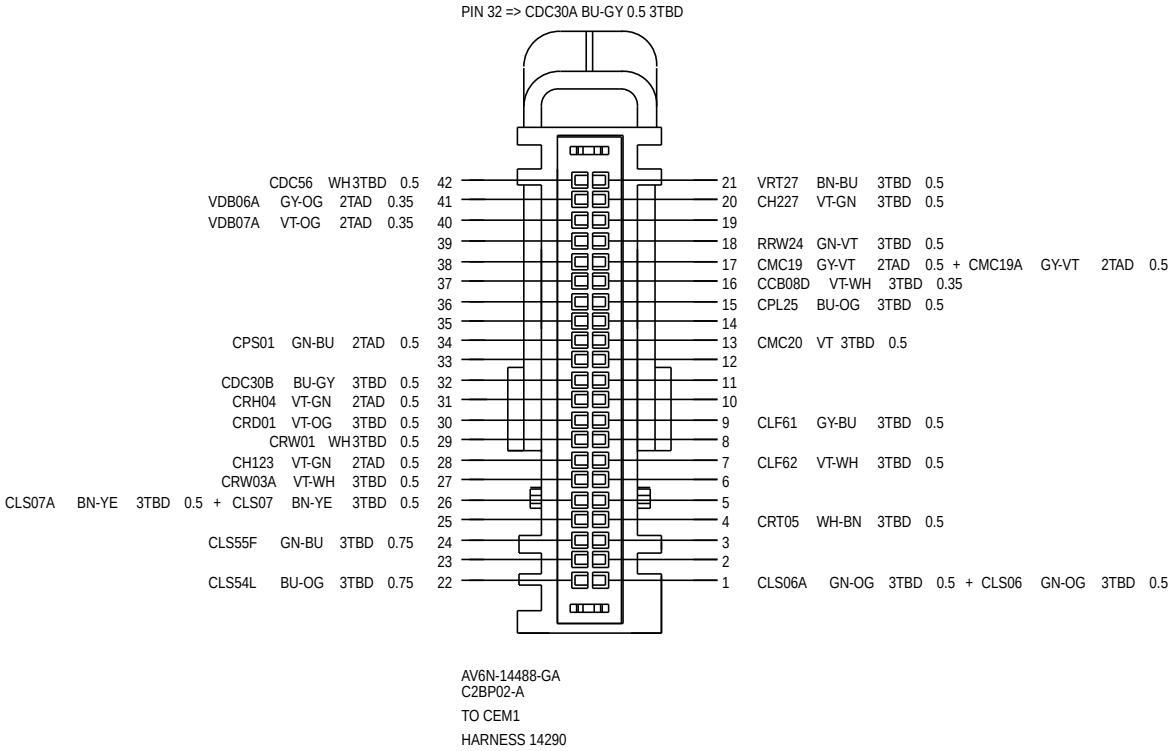

Central Junction Box (CJB)—B (G1404550)

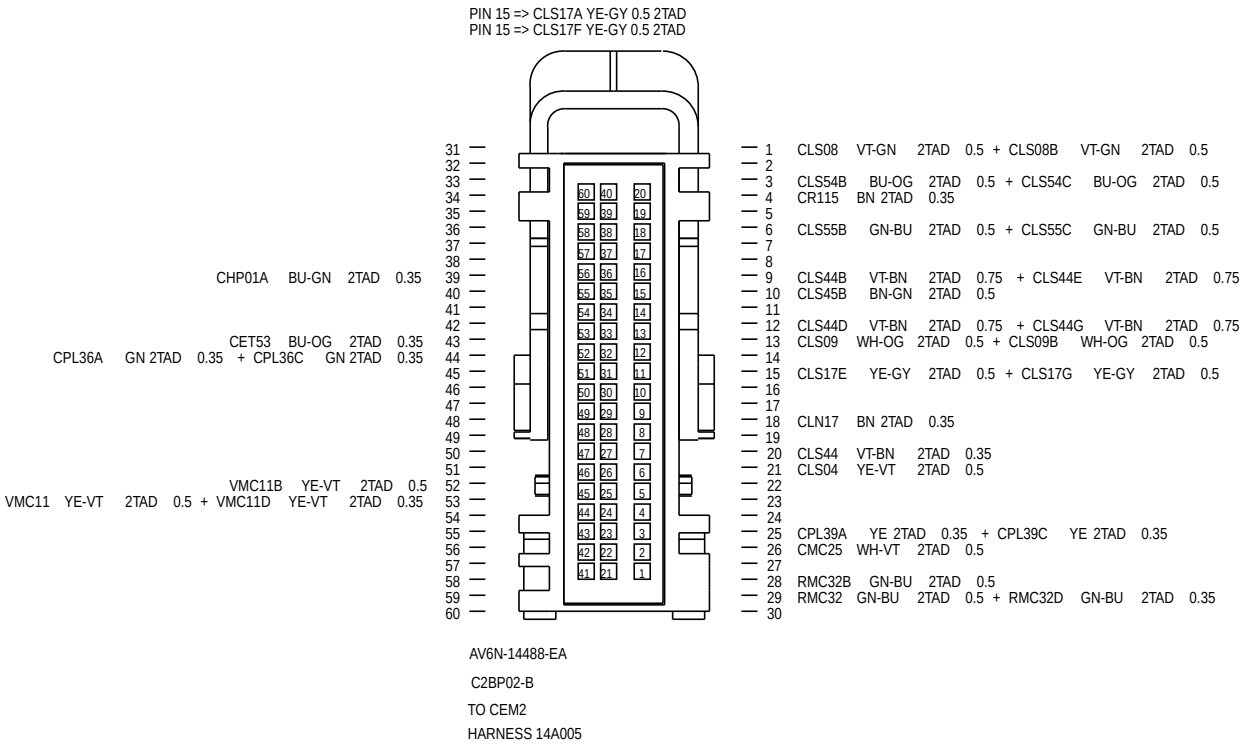

Central Junction Box (CJB)—C (G1404551)

PIN 13 => CPL77B BU-GN 0.35 2TAD
PIN 22 => CPK14B BN 0.35 2TAD
PIN 34 => VRT23A VT-GY 0.35 2TAD
PIN 54 => VRT24A YE-OG 0.35 2TAD

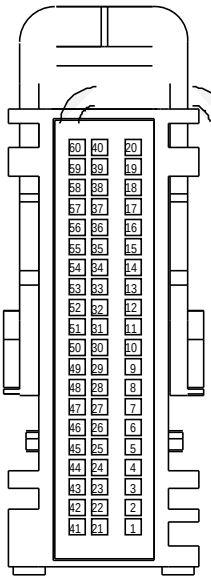

Pin	Wire	Color	Gauge	Pin	Wire	Color	Gauge
1	RLN34C	WH-VT	2TAD 0.5				
2	CRD04A	BN-GN	2TAD 0.35				
3	CLS49A	BN-GN	2TAD 0.35	+	CLS49	BN-GN	2TAD 0.35
4	CPL51A	BU-GN	2TAD 0.35				
5	CLF17	WH-OG	2TAD 0.35	+	CLF17A	WH-OG	2TAD 0.35
6	CRW10A	BU-GN	2TAD 0.35	+	CRW10	BU-GN	2TAD 0.35
7	VDB04	WH-BU	2TAD 0.35				
8	VDB05	WH	2TAD 0.35				
9	CH424	WH-BU	2TAD 0.35				
10	CH425	GN-BU	2TAD 0.35				
11	CPL28A	VT-BN	2TAD 0.35				
12							
13	CPL77	BU-GN	2TAD 0.35	+	CPL77A	BU-GN	2TAD 0.35
14	CLN17A	BN	2TAD 0.5				
15	RME24	BU-WH	2TAD 0.35				
16							
17	VH415	GY-YE	2TAD 0.35				
18	VH416	VT-GY	2TAD 0.35				
19							
20							
21	CLN31	VT-GN	2TAD 0.35				
22	CPK14	BN	2TAD 0.35	+	CPK14A	BN	2TAD 0.35
23	CPL29A	YE-GY	2TAD 0.35				
24	CRW08A	VT-OG	2TAD 0.35	+	CRW08	VT-OG	2TAD 0.35
25	CPL26A	GN-VT	2TAD 0.35	+	CPL26D	GN-VT	2TAD 0.35
26	CPL31A	WH	2TAD 0.35	+	CPL31D	WH	2TAD 0.35
27	CLS32A	BN-YE	2TAD 0.35	+	CLS32	BN-YE	2TAD 0.35
28	CPL66	BU-BN	2TAD 0.35				
29	RH105	GN	2TAD 0.35				
30	RRT25A	VT-WH	2TAD 0.35				

Pin	Wire	Color	Gauge	Pin	Wire	Color	Gauge
31	CRD03A	BU-GN	2TAD 0.35				
32							
33	CHP03	GN-BN	2TAD 0.35				
34	VRT23B	VT-GY	2TAD 0.35				
35	VH417	YE-OG	2TAD 0.35				
36	CRW17A	GN-VT	2TAD 0.35	+	CRW17	GN-VT	2TAD 0.35
37	RRW30A	BN-VT	2TAD 0.35	+	RRW30	BN-VT	2TAD 0.35
38							
39							
40	VES10	WH	2TAD 0.35				
41	CR116	GN-WH	2TAD 0.35				
42							
43	CDC33A	VT-GN	2TAD 0.35				
44	CDC32C	BN-YE	2TAD 0.35	+	CDC32A	BN-YE	2TAD 0.35
45	CRD09A	BU-GY	2TAD 0.35				
46	CDC30C	BU-GY	2TAD 0.35				
47	CLF27	GN-BN	2TAD 0.35	+	CLF27A	GN-BN	2TAD 0.35
48	CRD08A	GN-OG	2TAD 0.35				
49	VRW11A	GN-BN	2TAD 0.35	+	VRW11	GN-BN	2TAD 0.35
50	CRH03	BN	2TAD 0.35				
51	GD284A	BK-GY	2TAD 0.75				
52							
53	CLS46	GN-BU	2TAD 0.35	+	CLS46A	GN-BU	2TAD 0.35
54	VRT24B	YE-OG	2TAD 0.35				
55	RES08	GN-BN	2TAD 0.35				
56	CLF18	BU-WH	2TAD 0.35	+	CLF18A	BU-WH	2TAD 0.35
57	CRW07A	GY-BN	2TAD 0.35	+	CRW07	GY-BN	2TAD 0.35
58	CLF21A	GY-VT	2TAD 0.35	+	CLF21	GY-VT	2TAD 0.35
59	CLF57	BN-YE	2TAD 0.35				
60	CLS34	GY	2TAD 0.35	+	CLS34A	GY	2TAD 0.35

AV6N-14488-CA
C2BP02-C
TO CEM3
HARNESS 14401

Central Junction Box (CJB)—D (G1404552)

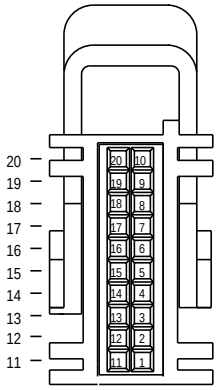

Pin	Wire	Color	Gauge
20			
19			
18	SBP81	RD	2TAD 0.35
17	CRW32	BN	2TAD 0.35
16			
15			
14			
13	VRW26	BN-YE	2TAD 0.35
12	VRT26	VT	2TAD 0.35
11	CLN27	WH-BN	2TAD 0.35

AV6N-14488-AA
C2BP02-D
TO CEM4
HARNESS 14401

Central Junction Box (CJB)—E (G1404553)

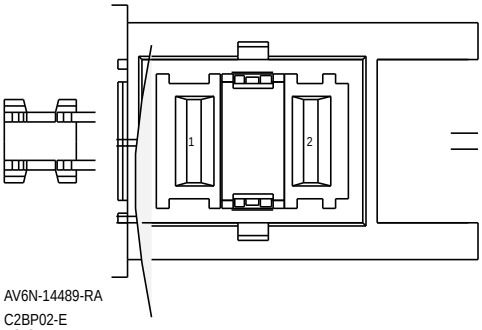

1 SBB02A YE-RD 2TAD 6.0
2 SBB01A RD 2TAD 6.0

AV6N-14489-RA
C2BP02-E
TO CEM5
HARNESS 14290

Central Junction Box (CJB)—F (G1404554)

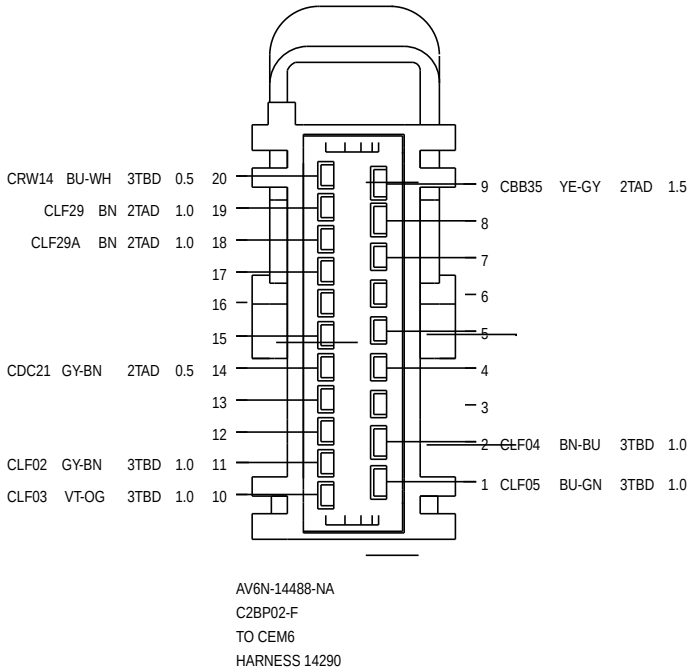

Central Junction Box (CJB)—G (G1404555)

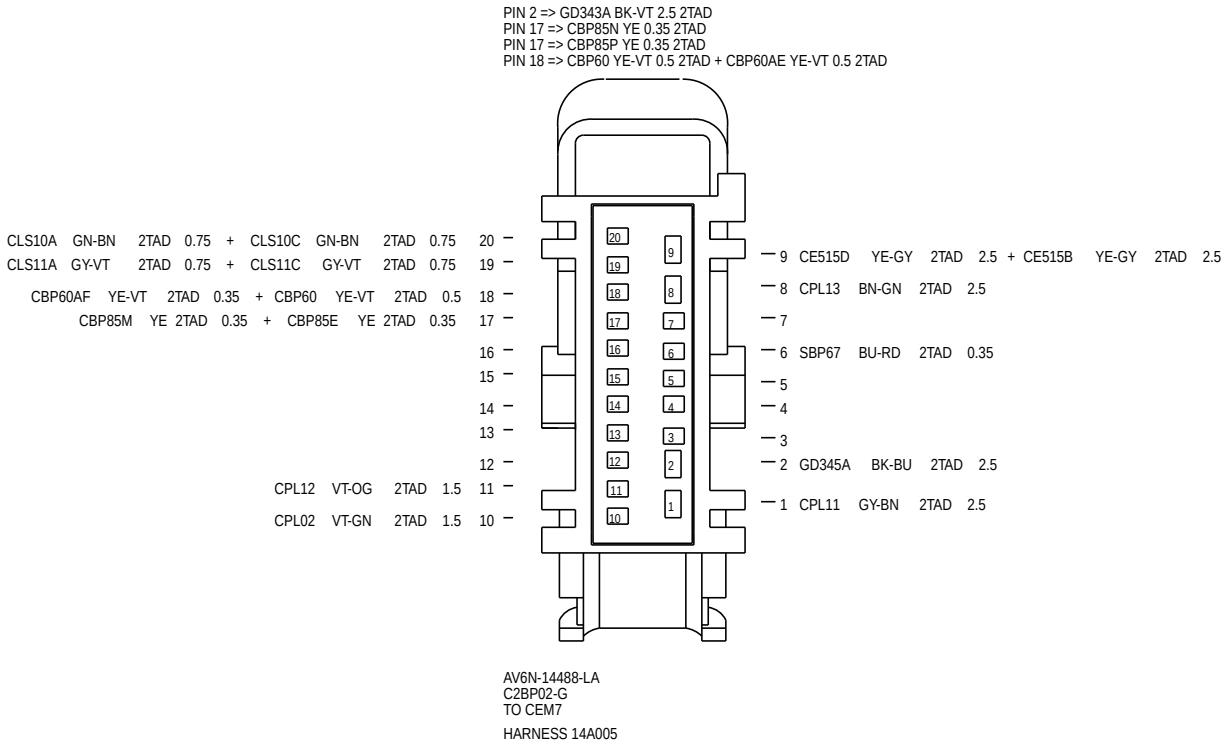

Central Junction Box (CJB)—H (G1404556)

PIN 5 => CBP71 BU-OG 0.35 2TAD
PIN 8 => SBP79A WH-RD 1.0 2TAD
PIN 16 => CBP69D WH-VT 0.35 2TAD

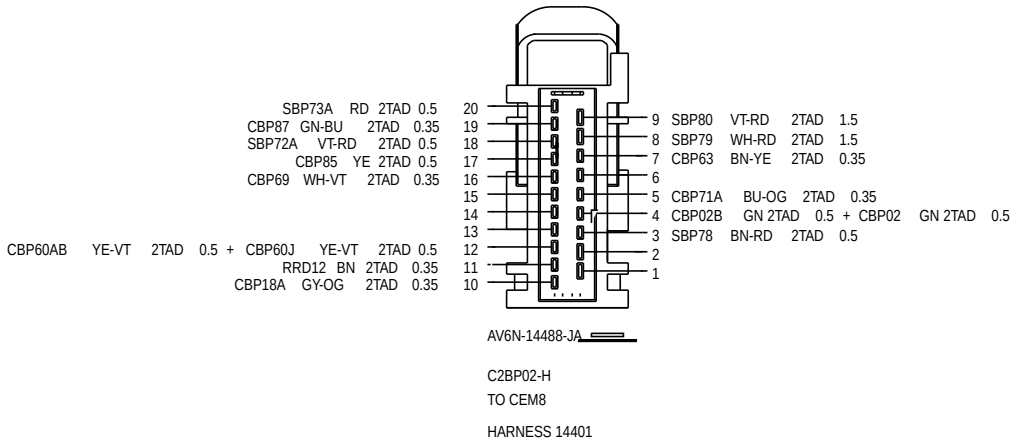

Data Link Connector (DLC) (G1404560)

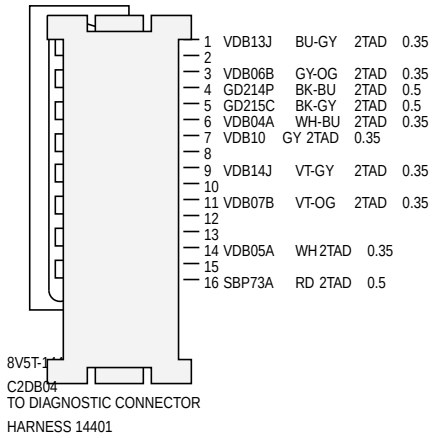

Engine Junction Box (EJB) (G1404561)

Thumbnail

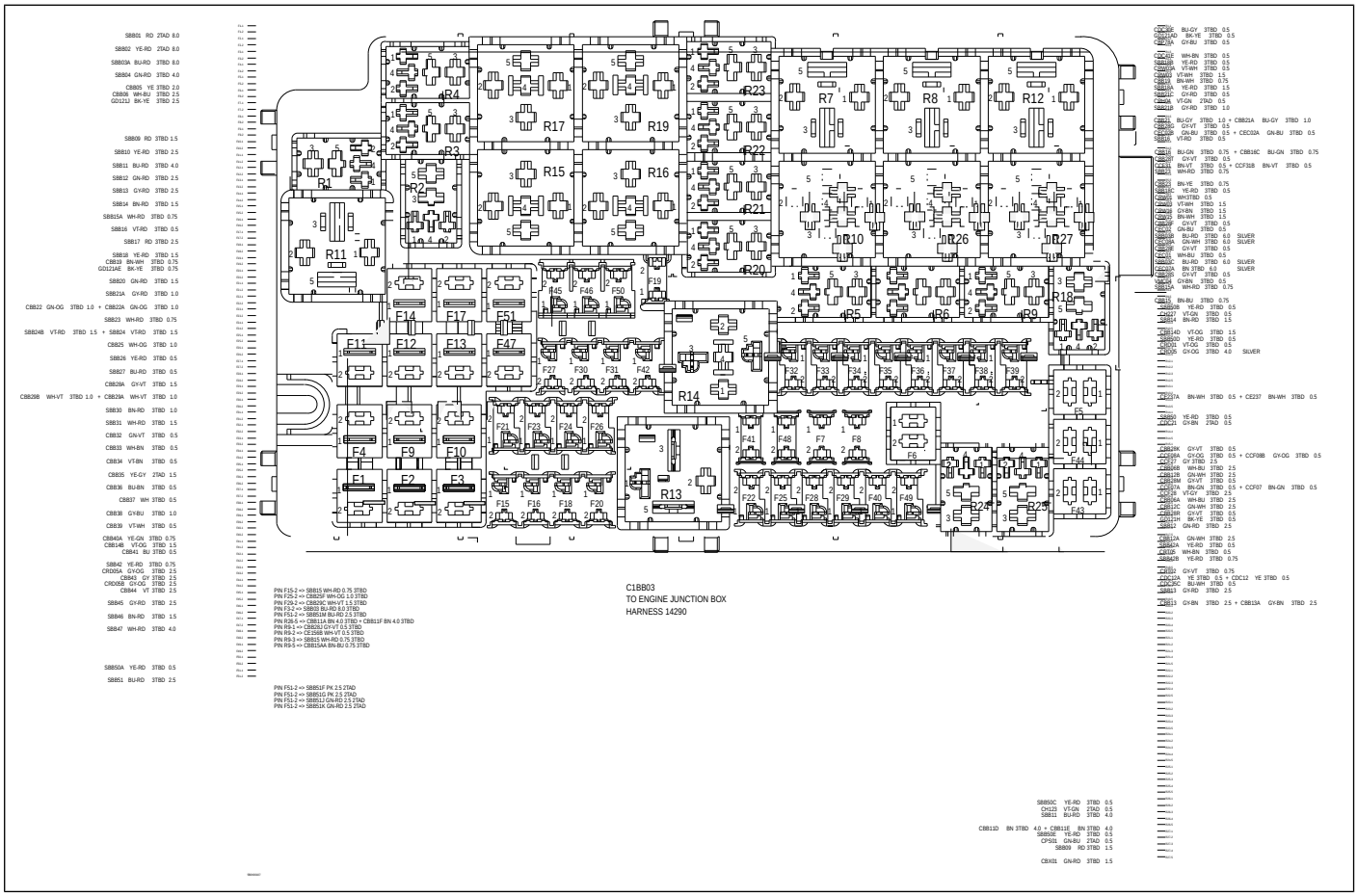

Part 3 of 3

Engine Junction Box (EJB)—A (G1404562)

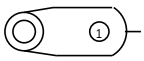

1 SDC02A RD 3SBD 25.0

5M5T-14463-GLA

C1BB03-A
TO ENGINE JUNCTION BOX

HARNESS 14290

SECTION 419-01A Anti-Theft - Active

VEHICLE APPLICATION: 2012.0 Ranger

CONTENTS PAGE

ELECTRICAL SCHEMATICS

Anti-Theft Alarm System — Single Cab, LHD 4WD/LHD RWD..... 419-01A-2
Anti-Theft Alarm System — Double Cab, LHD 4WD/LHD RWD..... 419-01A-4
Anti-Theft Alarm System — Super Cab, LHD 4WD/LHD RWD..... 419-01A-6
Anti-Theft Alarm System — Single Cab, RHD 4WD/RHD RWD..... 419-01A-8
Anti-Theft Alarm System — Double Cab, RHD 4WD/RHD RWD..... 419-01A-10
Anti-Theft Alarm System — Super Cab, RHD 4WD/RHD RWD..... 419-01A-12

ELECTRICAL CONNECTORS

Anti-Theft Alarm Horn..... 419-01A-14
Anti-Theft Alarm Horn with Integral Battery..... 419-01A-14
Anti-Theft Alarm Module..... 419-01A-14
Hood Switch..... 419-01A-14
Intrusion Sensor..... 419-01A-14

419-01A-2 Anti-Theft Alarm System—Single Cab, LHD 4WD/LHD RWD

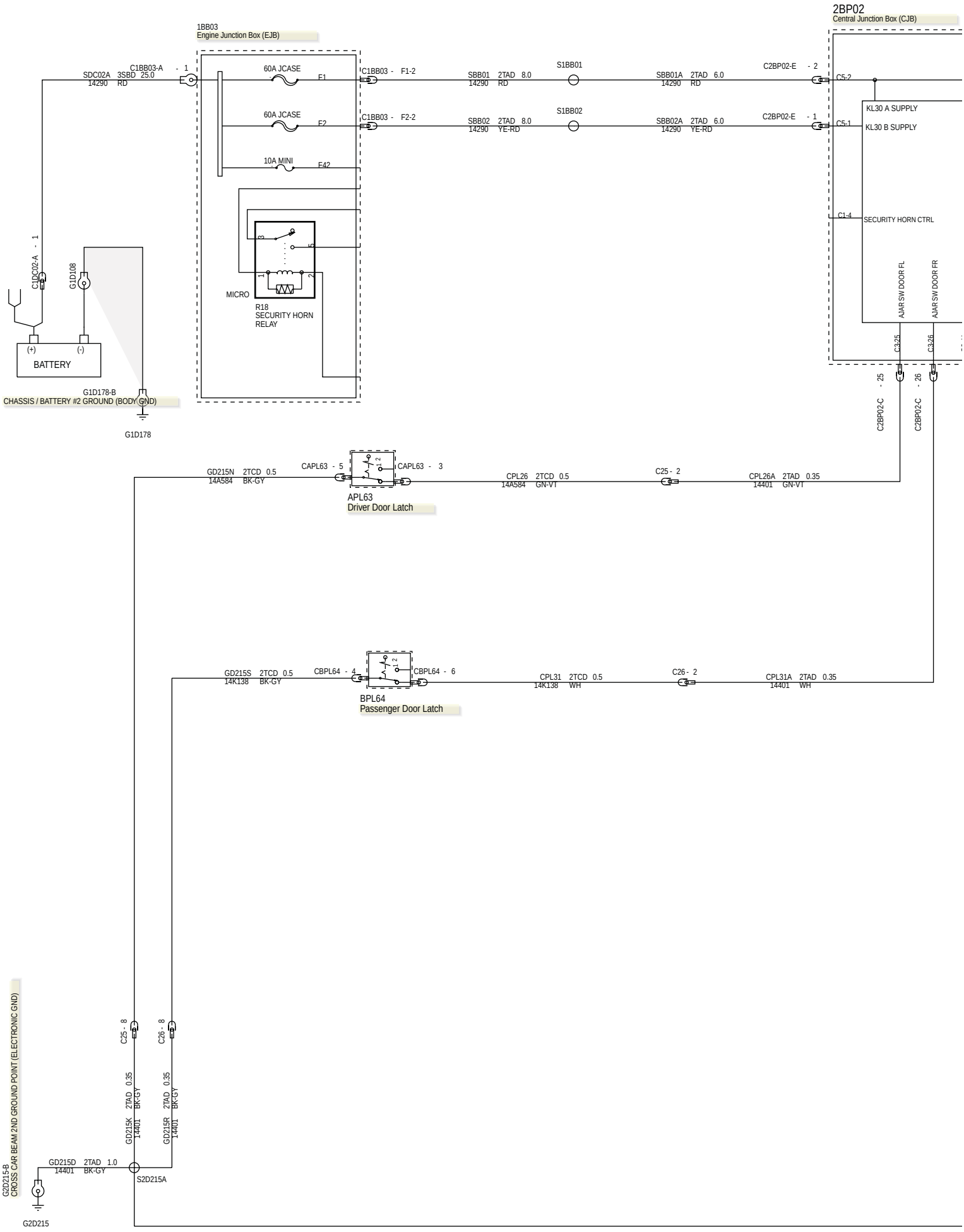

419-01A-3 Anti-Theft Alarm System—Single Cab, LHD 4WD/LHD RWD

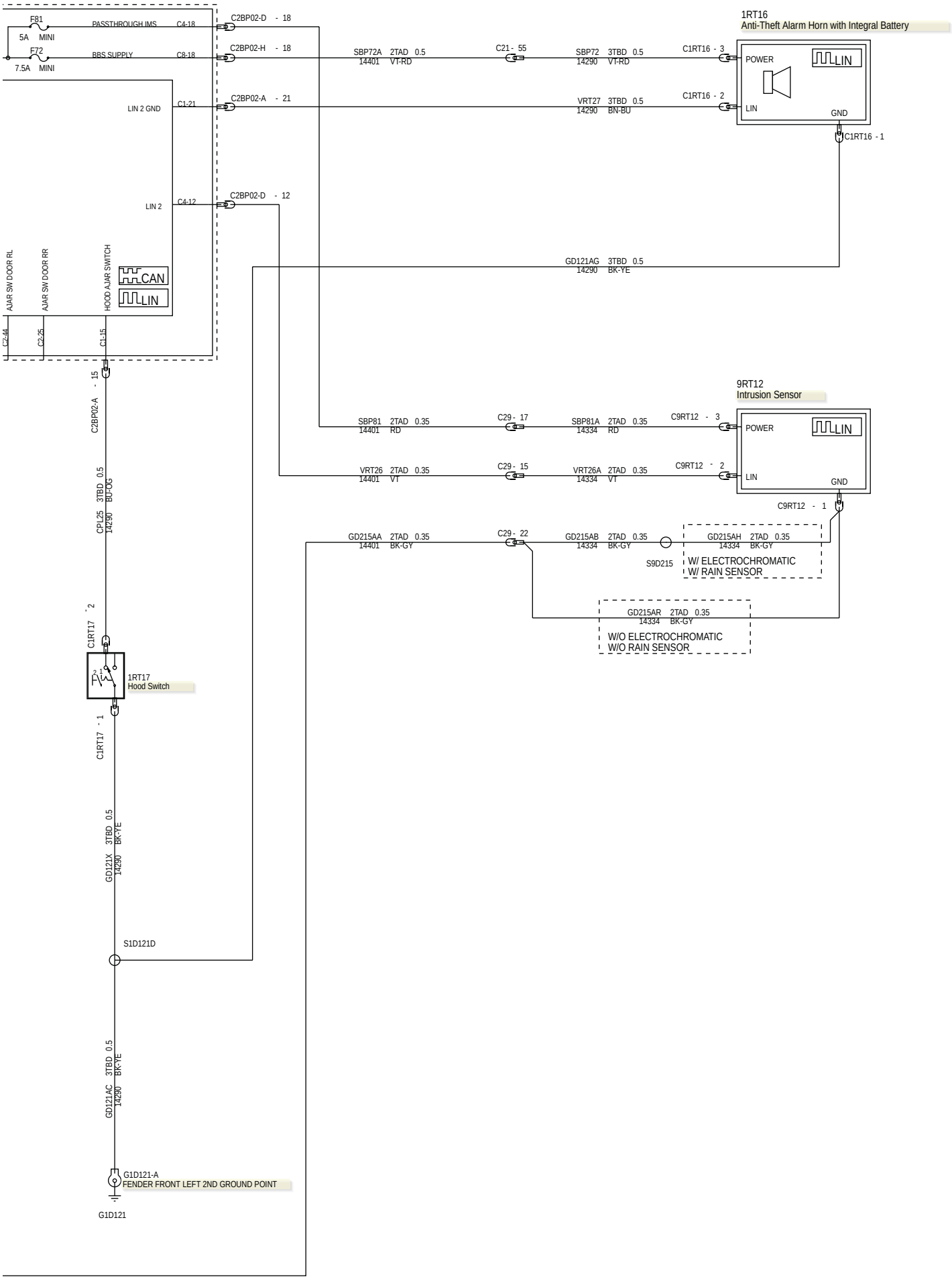

419-01A-4 Anti-Theft Alarm System—Double Cab, LHD 4WD/LHD RWD

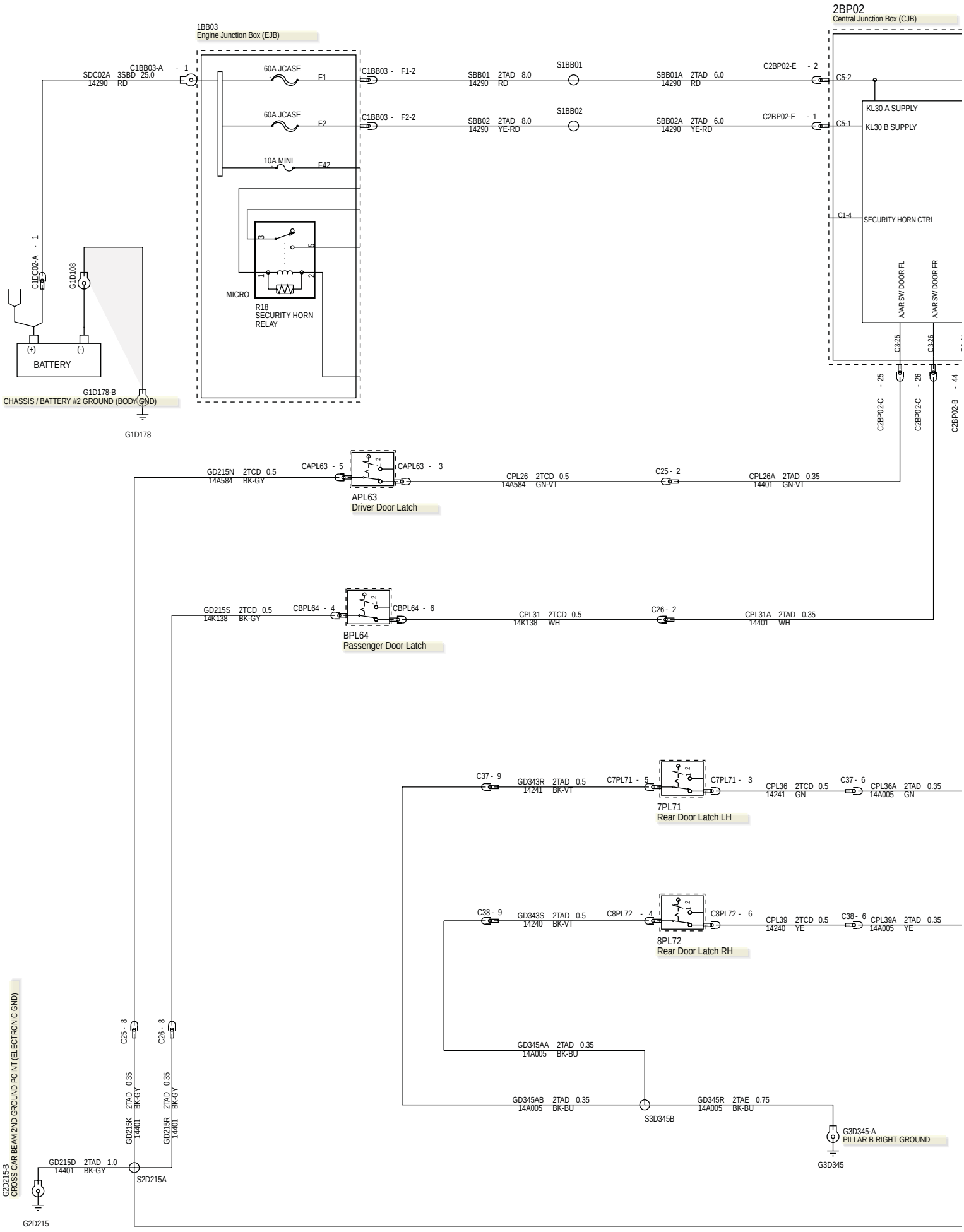

419-01A-5 Anti-Theft Alarm System—Double Cab, LHD 4WD/LHD RWD

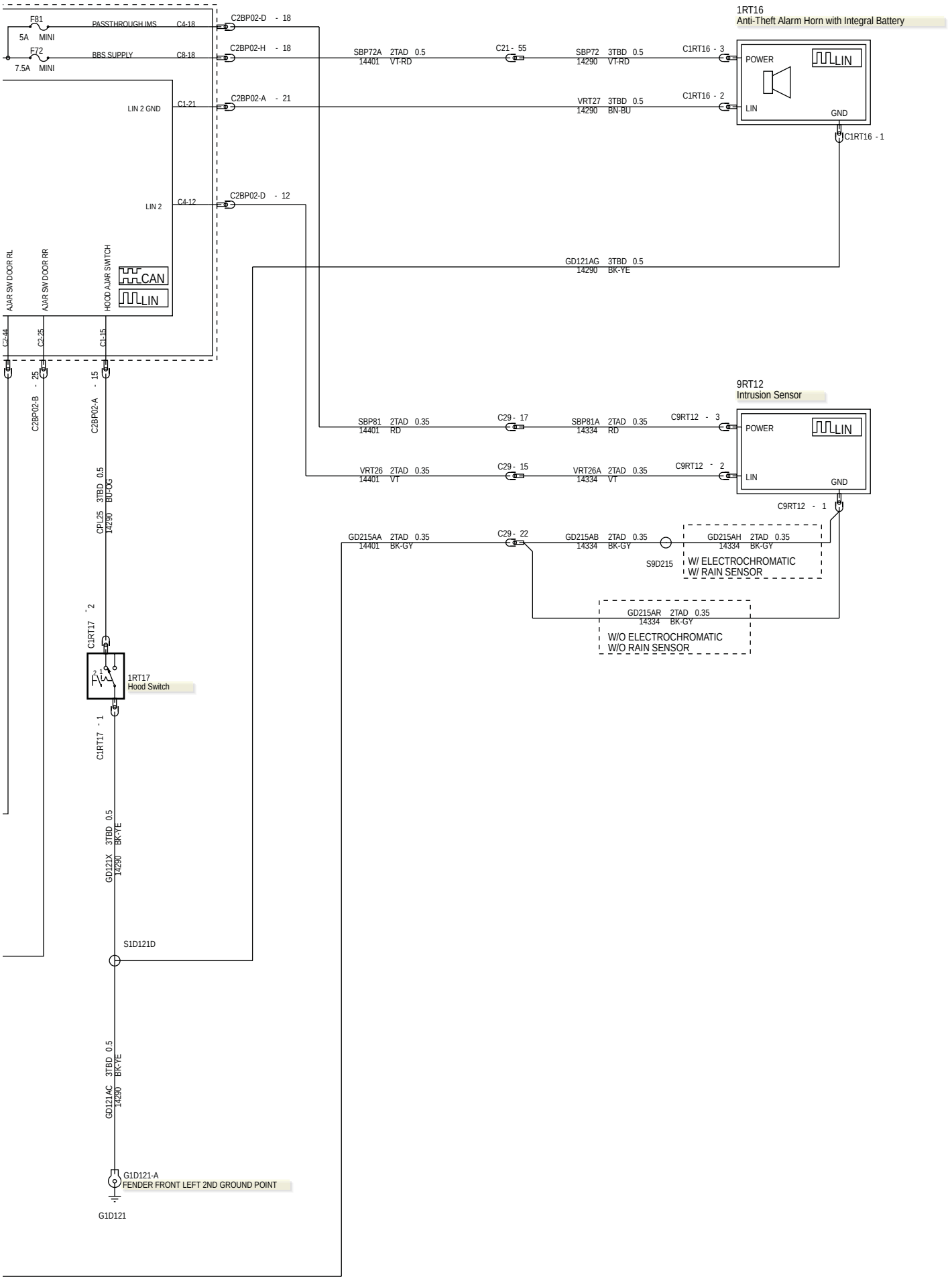

419-01A-6 Anti-Theft Alarm System—Super Cab, LHD 4WD/LHD RWD

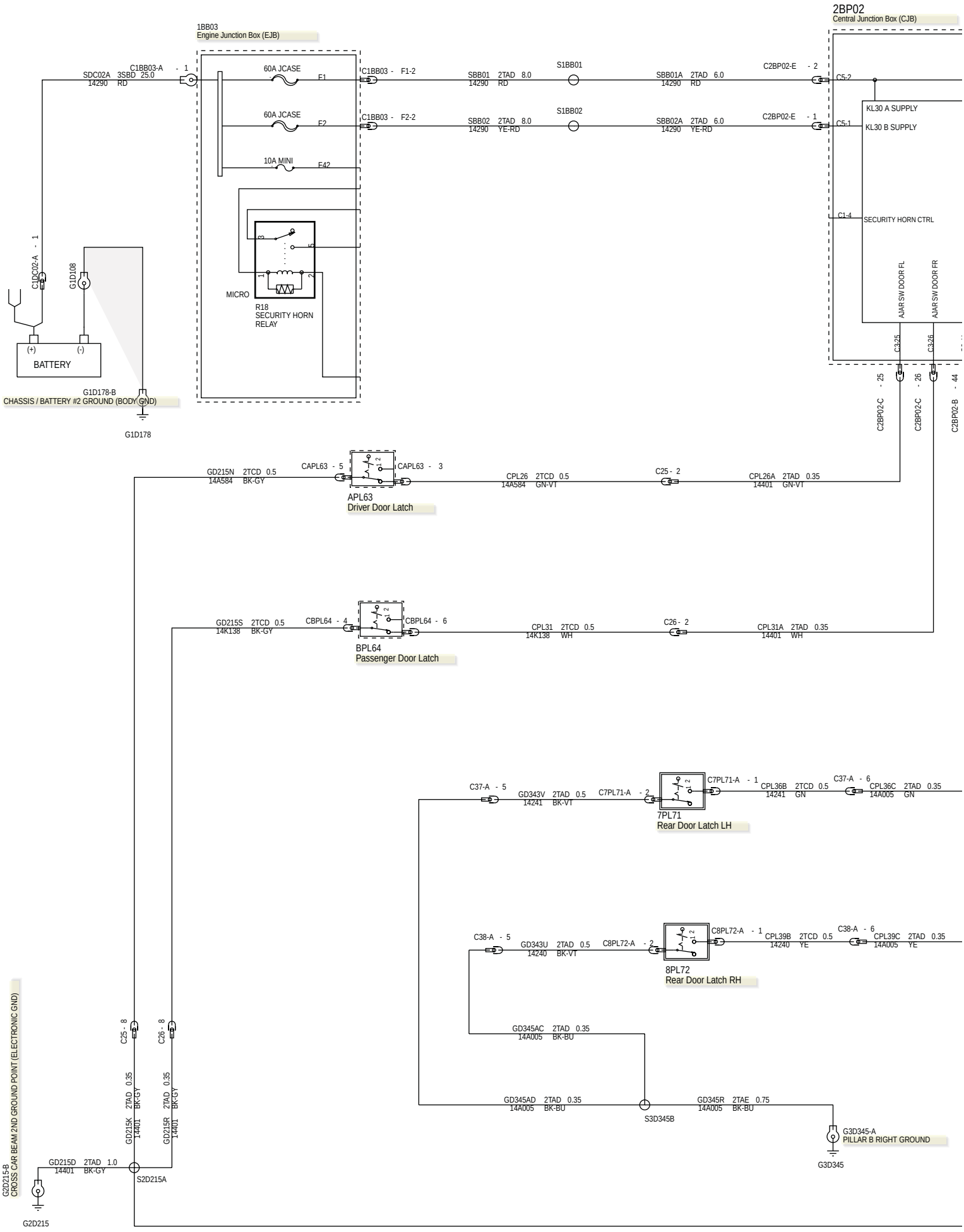

419-01A-7 Anti-Theft Alarm System—Super Cab, LHD 4WD/LHD RWD

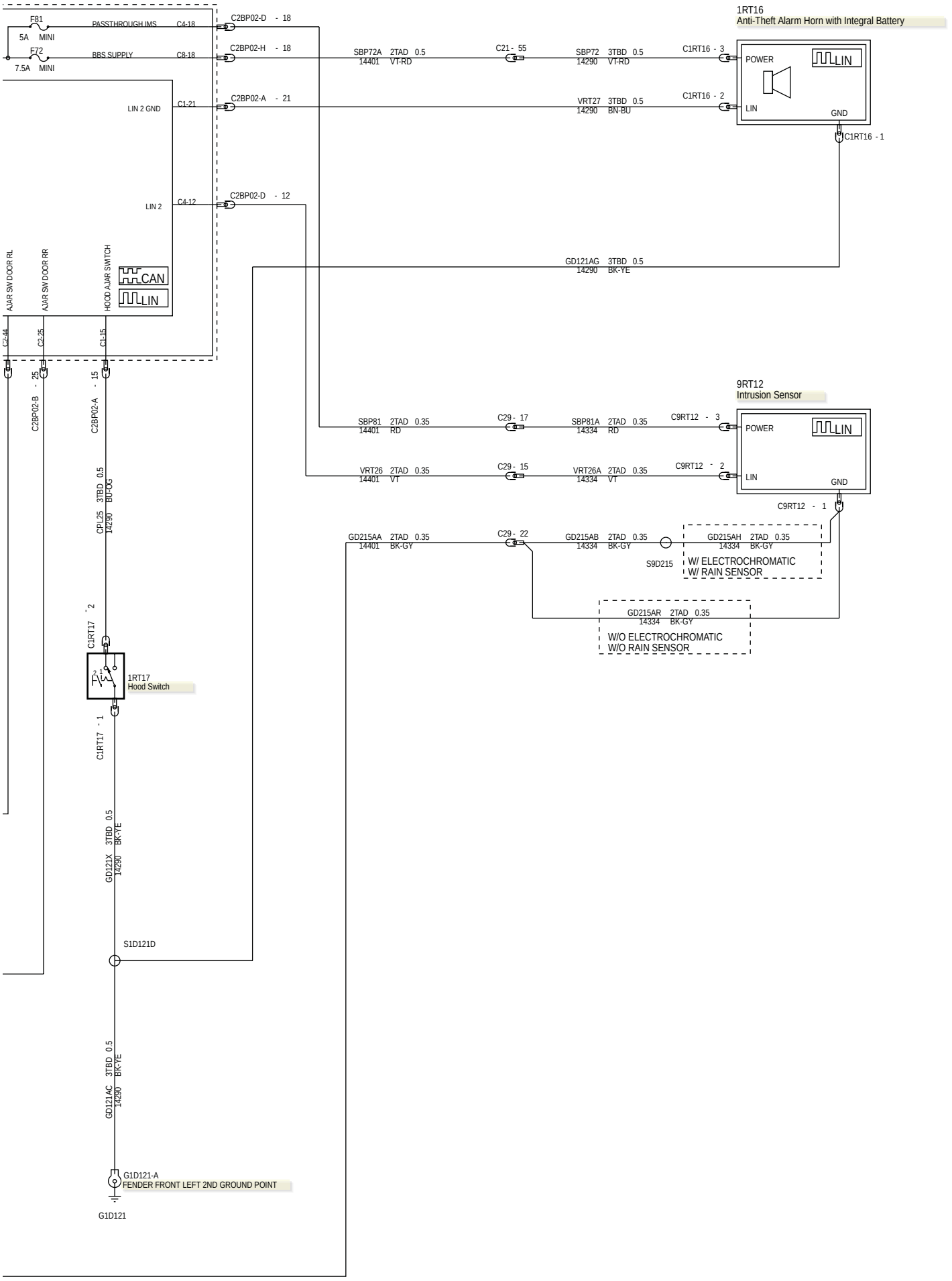

419-01A-8 Anti-Theft Alarm System—Single Cab, RHD 4WD/RHD RWD

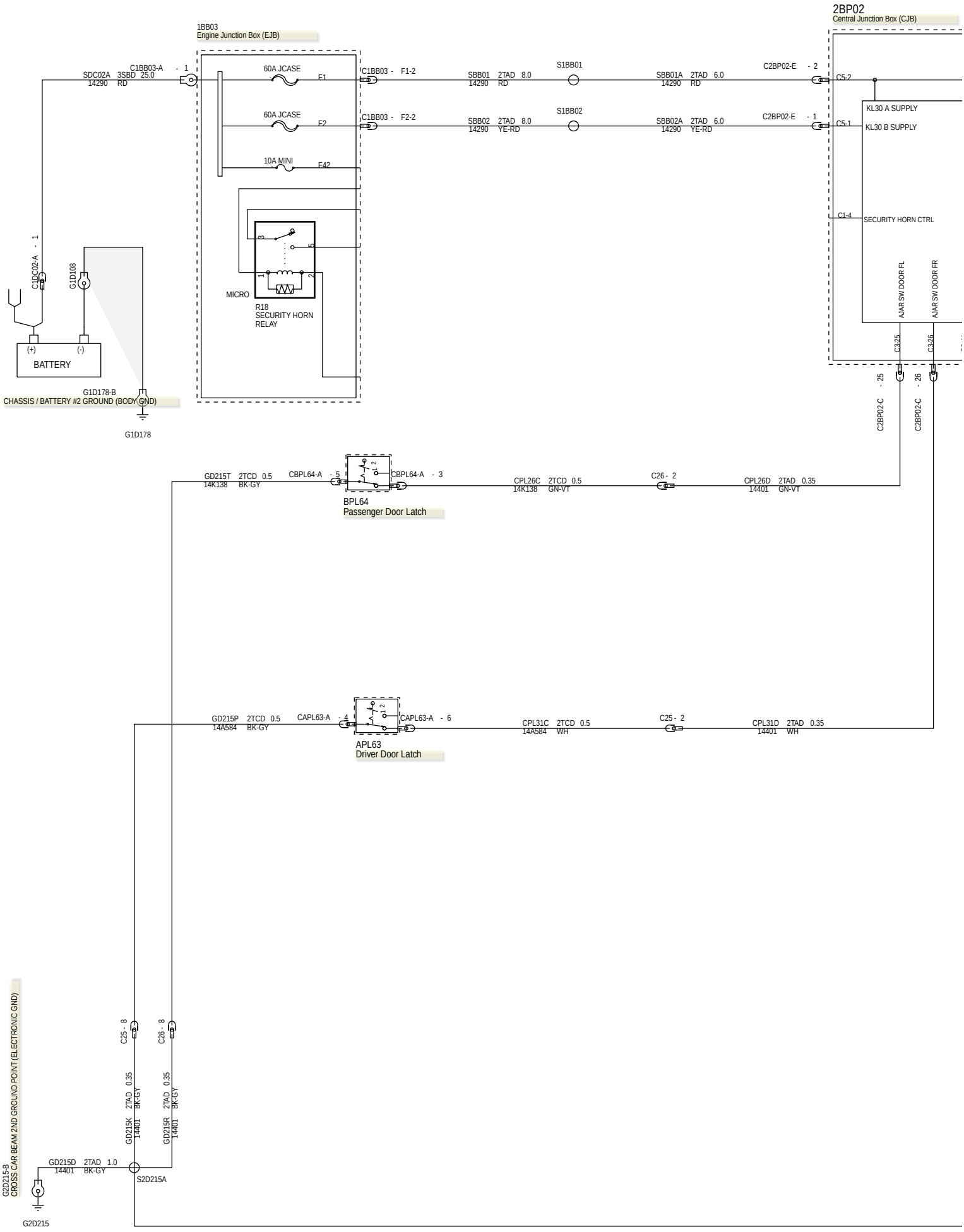

419-01A-9 Anti-Theft Alarm System—Single Cab, RHD 4WD/RHD RWD

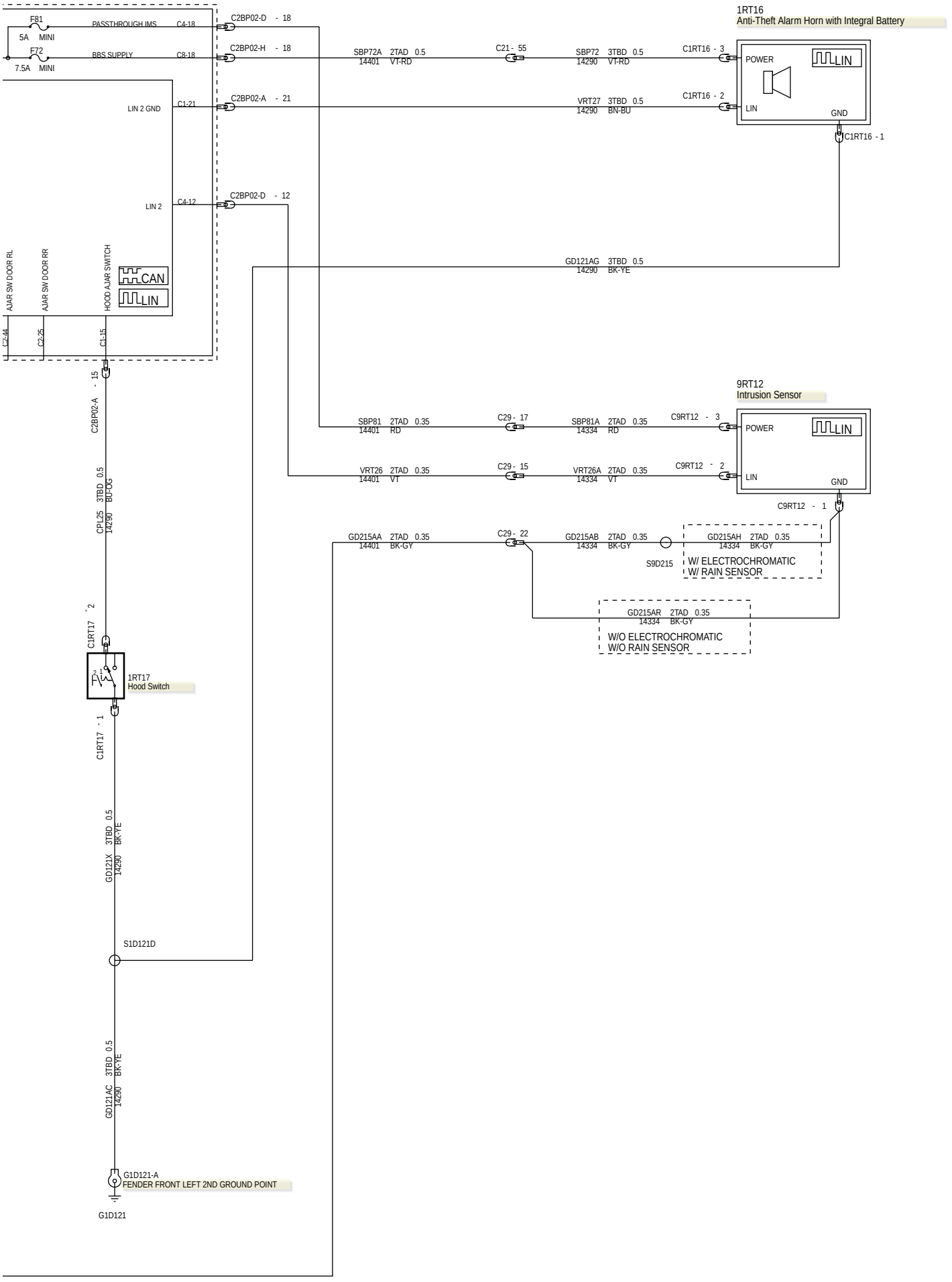

419-01A-10 Anti-Theft Alarm System—Double Cab, RHD 4WD/RHD RWD

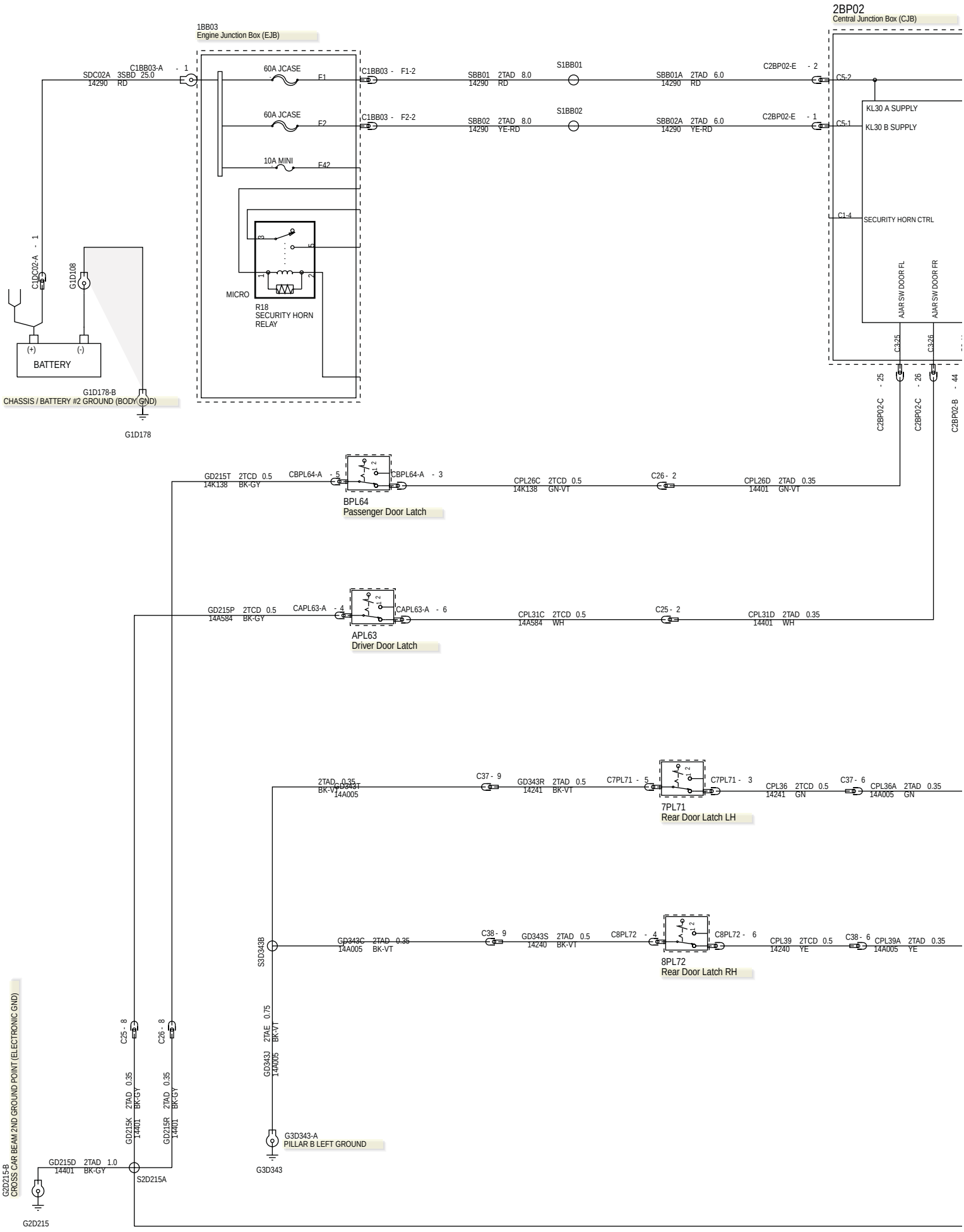

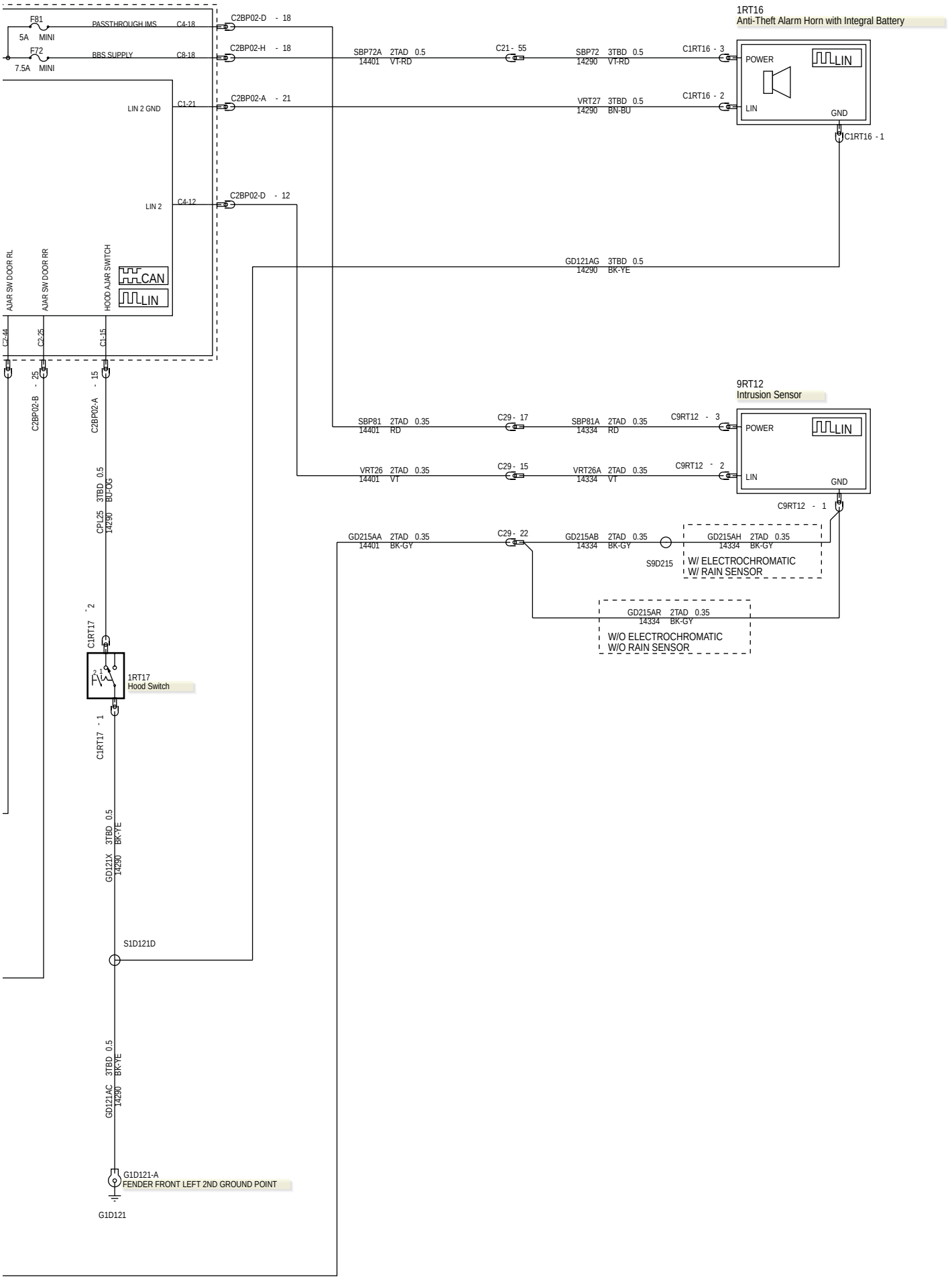
F81
5A MINI
F72
7.5A MINI
PASSTHROUGH IMS
BBS SUPPLY
C4-18
C8-18
C2BP02-D - 18
C2BP02-H - 18
C2BP02-A - 21
C2BP02-D - 12
LIN 2 GND
C1-21
LIN 2
C4-12
SBP72A 2TAD 0.5
14401 VT-RD
C21 - 55
SBP72 3TBD 0.5
14290 VT-RD
C1RT16 - 3
VRT27 3TBD 0.5
14290 BN-BU
C1RT16 - 2
1RT16
Anti-Theft Alarm Horn with Integral Battery
POWER
LIN
GND
C1RT16 - 1
GD121AG 3TBD 0.5
14290 BK-YE
AJAR SW DOOR RL
AJAR SW DOOR RR
HOOD AJAR SWITCH
CAN
LIN
C2-44
C2-25
C1-15
C2BP02-B - 25
C2BP02-A - 15
CP1-25 3TBD 0.5
14290 BU-OG
SBP81 2TAD 0.35
14401 RD
C29 - 17
SBP81A 2TAD 0.35
14334 RD
C9RT12 - 3
9RT12
Intrusion Sensor
VRT26 2TAD 0.35
14401 VT
C29 - 15
VRT26A 2TAD 0.35
14334 VT
C9RT12 - 2
C9RT12 - 1
GD215AA 2TAD 0.35
14401 BK-GY
C29 - 22
GD215AB 2TAD 0.35
14334 BK-GY
S9D215
GD215AH 2TAD 0.35
14334 BK-GY
W/ ELECTROCHROMATIC
W/ RAIN SENSOR
GD215AR 2TAD 0.35
14334 BK-GY
W/O ELECTROCHROMATIC
W/O RAIN SENSOR
C1RT17 - 2
1RT17
Hood Switch
C1RT17 - 1
GD121X 3TBD 0.5
14290 BK-YE
S1D121D
GD121AC 3TBD 0.5
14290 BK-YE
G1D121-A
FENDER FRONT LEFT 2ND GROUND POINT
G1D121

419-01A-12 Anti-Theft Alarm System—Super Cab, RHD 4WD/RHD RWD

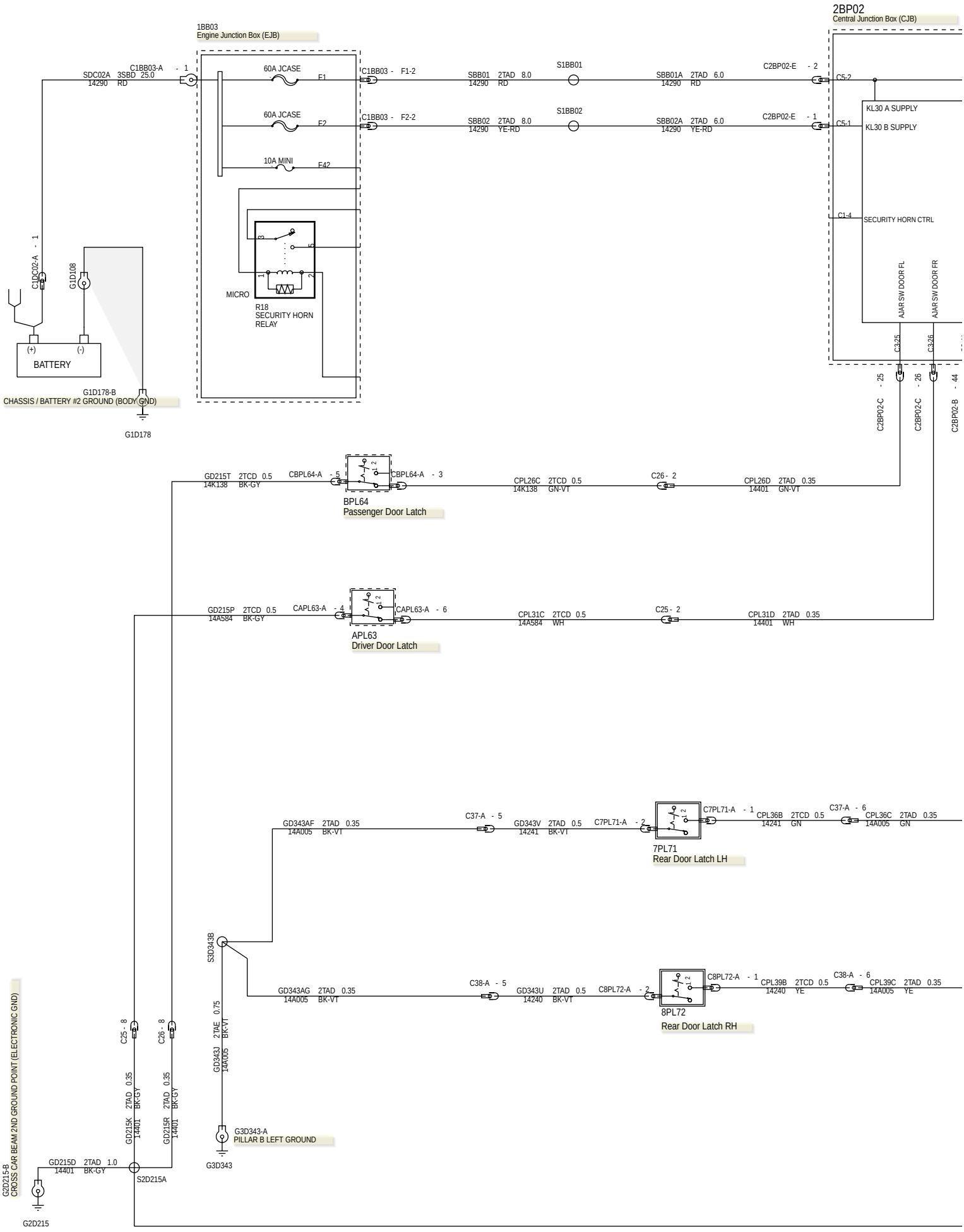

419-01A-13 Anti-Theft Alarm System—Super Cab, RHD 4WD/RHD RWD

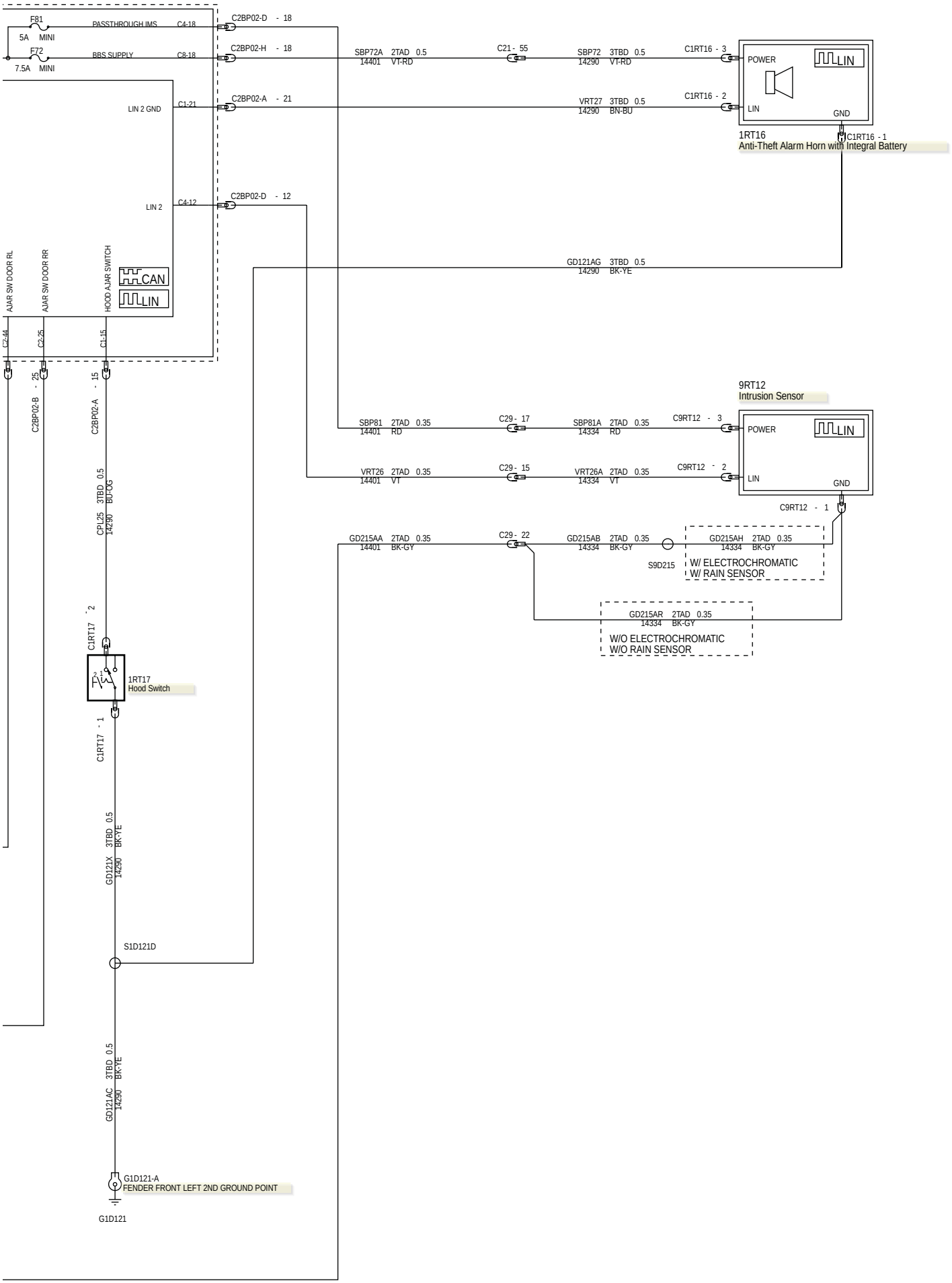

Anti-Theft Alarm Horn (G1405461)

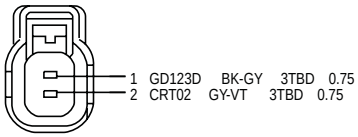

4W7T-14A464-BB

C1RT02
TO SECURITY HORN

HARNESS 14290

Anti-Theft Alarm Horn with Integral Battery (G1404588)

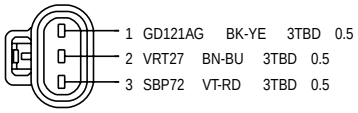

2R8T-14A464-EA

C1RT16
TO BATTERY BACKED SOUNDER

HARNESS 14290

Anti-Theft Alarm Module (G1404589)

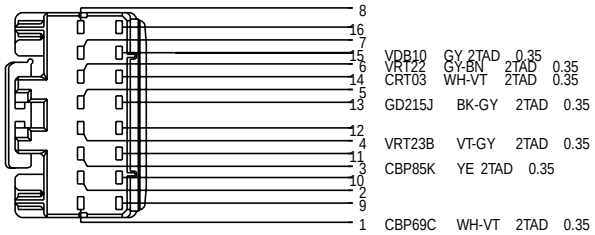

3W4T-14A464-XA

C2RT03
TO TRACKING & BLOCKING MODULE

HARNESS 14401

Hood Switch (G1404590)

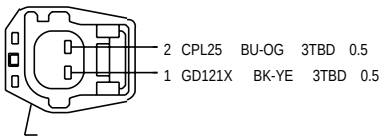

XW4T-14A464-AJB

C1RT17
TO HOOD AJAR SWITCH

HARNESS 14290

Intrusion Sensor (G1404591)

PIN 1 => GD215AR BK-GY 0.35 2TAD + GD215AH BK-GY 0.35 2TAD

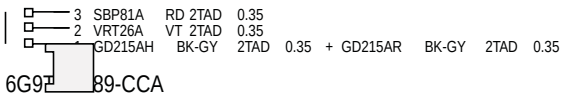

6G9T 89-CCA

C9RT12
TO INTERIOR MOTION SENSOR

HARNESS 14334

SECTION 419-01B Anti-Theft - Passive

VEHICLE APPLICATION: 2012.0 Ranger

CONTENTS PAGE

ELECTRICAL SCHEMATICS

Passive Anti-Theft System (PATS)..... 419-01B-2

ELECTRICAL CONNECTORS

Passive Anti-Theft System (PATS) Transceiver..... 419-01B-4

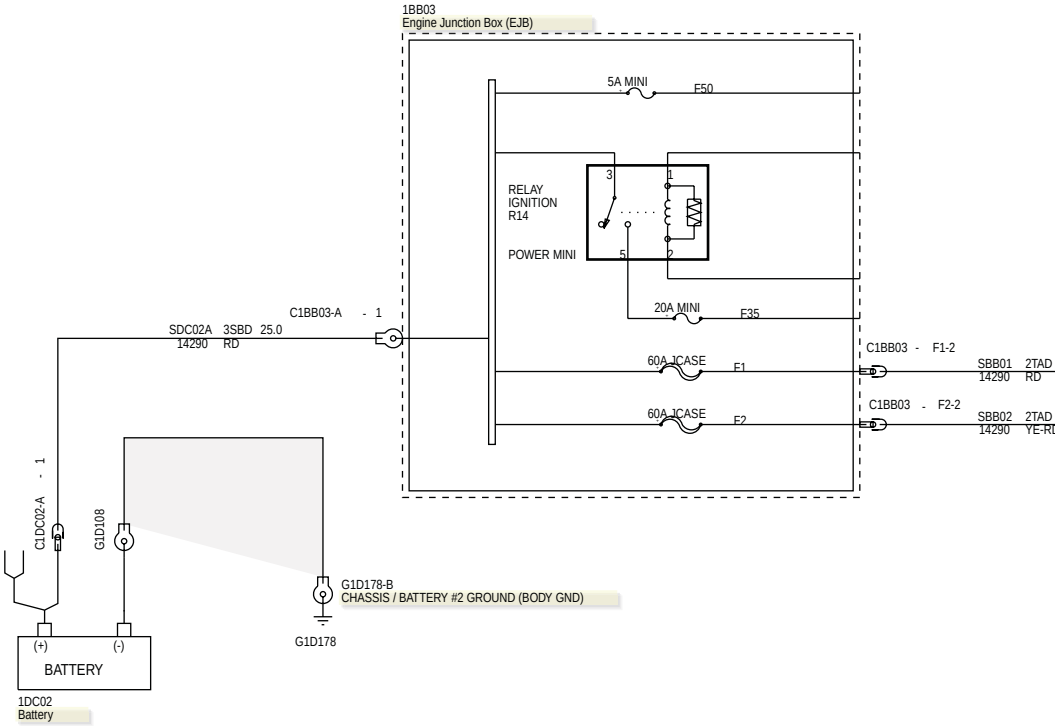
1BB03
Engine Junction Box (EJB)
5A MINI
F50
RELAY
IGNITION
R14
POWER MINI
3
1
5
2
20A MINI
F35
C1BB03-A - 1
SDC02A 3SBD 25.0
14290 RD
60A 1CASE
F1
C1BB03 - F1-2
SBB01 2TAD
14290 RD
60A 1CASE
F2
C1BB03 - F2-2
SBB02 2TAD
14290 YE-RD
C1DC02-A - 1
G1D108
G1D178-B
CHASSIS / BATTERY #2 GROUND (BODY GND)
G1D178
(+)
(-)
BATTERY
1DC02
Battery

419-01B-3 Passive Anti-Theft System (PATS)

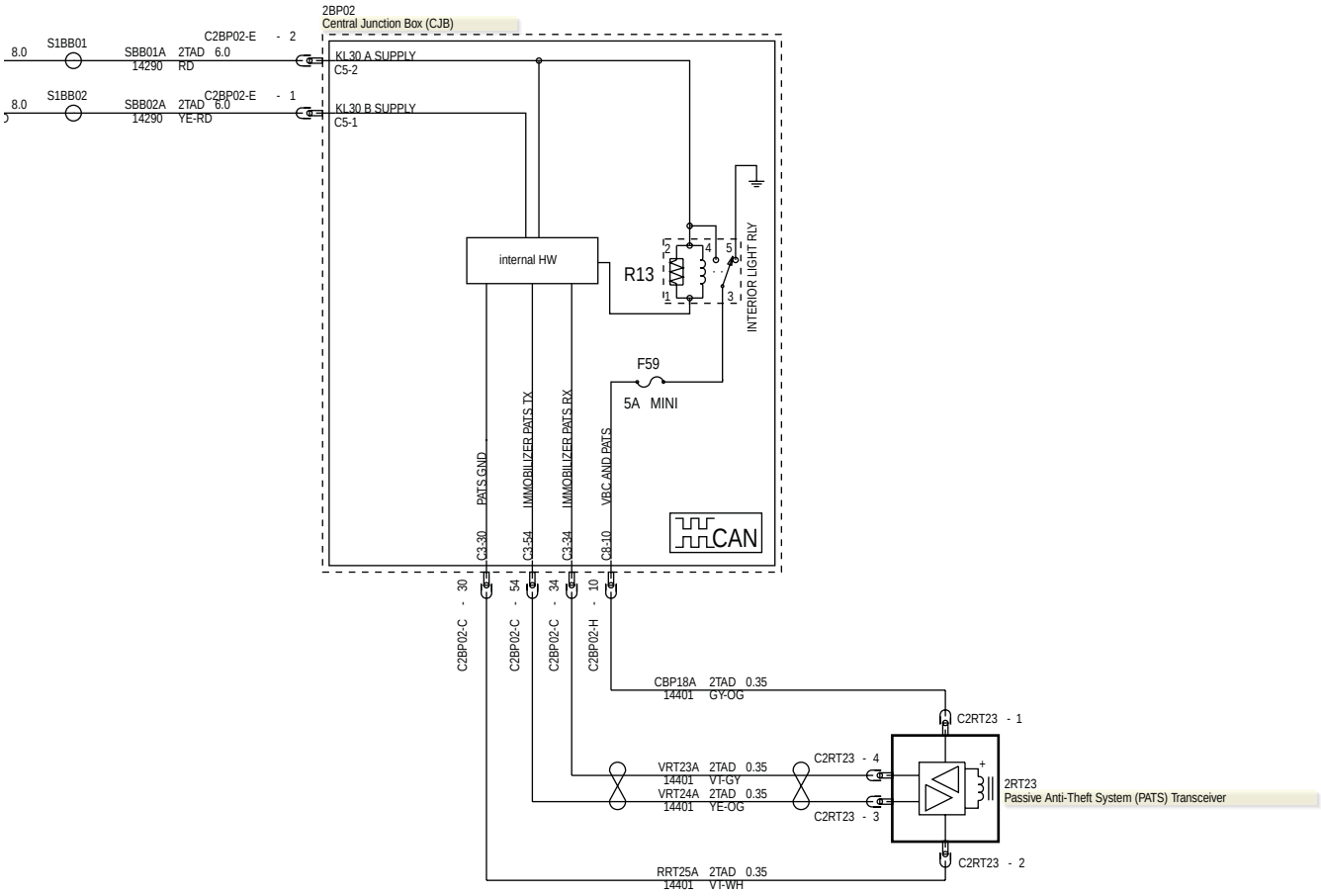

Passive Anti-Theft System (PATS) Transceiver (G1404593)

PIN 3 => VRT24B YE-OG 0.35 2TAD
PIN 4 => VRT22 GY-BN 0.35 2TAD

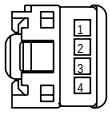

1	CBP18A	GY-OG	2TAD	0.35
2	RRT25A	VT-WH	2TAD	0.35
3	VRT24A	YE-OG	2TAD	0.35
4	VRT23A	VT-GY	2TAD	0.35

1L2T-14489-GC

C2RT23
TO PATS TRANSCEIVER

HARNESS 14401

SECTION 419-03 Cruise Control

VEHICLE APPLICATION: 2012.0 Ranger

CONTENTS PAGE

ELECTRICAL CONNECTORS

Cruise Control Switch..... 419-03-2

Cruise Control Switch (G1425385)

IMAGE NOT AVAILABLE

SECTION 419-10 Multifunction Electronic Modules

VEHICLE APPLICATION: 2012.0 Ranger

CONTENTS PAGE

ELECTRICAL CONNECTORS

Driver Door Module (DDM)..... 419-10-2
Driver Door Module (DDM) — A..... 419-10-2
Passenger Door Module (PDM)..... 419-10-2
Passenger Door Module (PDM) — A..... 419-10-3
Rear Door Module (RDM) LH..... 419-10-3
Rear Door Module (RDM) RH..... 419-10-3

Driver Door Module (DDM) (G1405466)

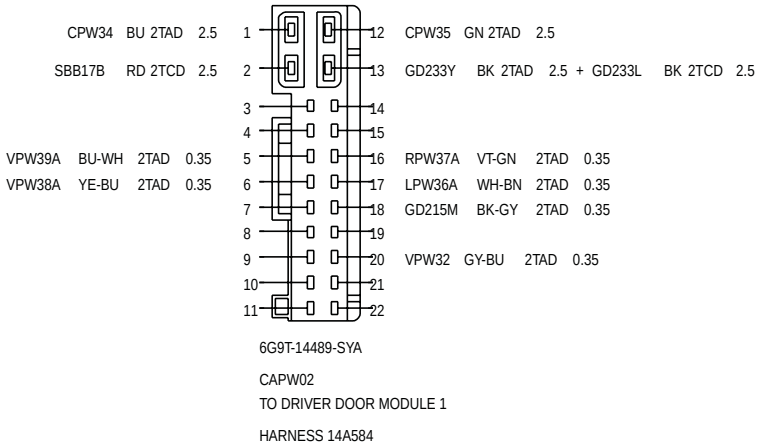

Driver Door Module (DDM)—A (G1405467)

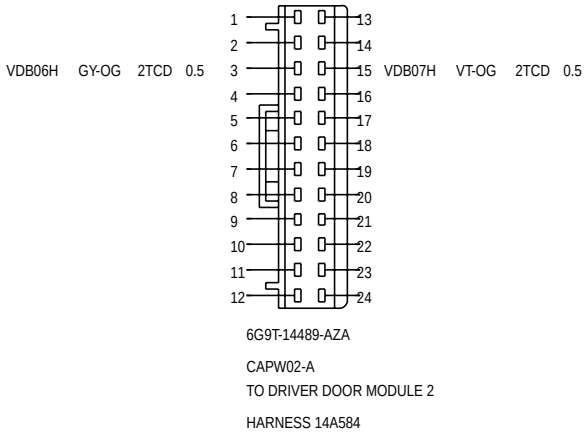

Passenger Door Module (PDM) (G1405468)

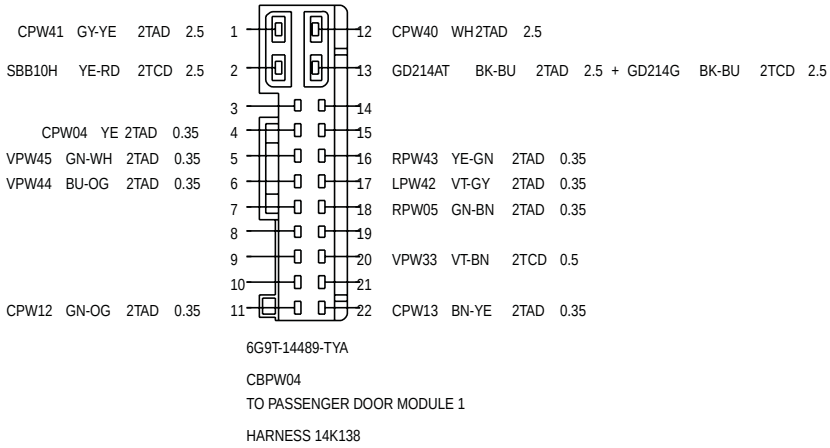

Passenger Door Module (PDM)—A (G1405469)

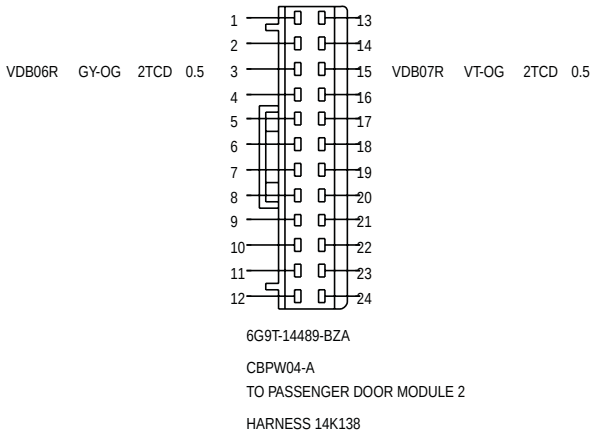

Rear Door Module (RDM) LH (G1404710)

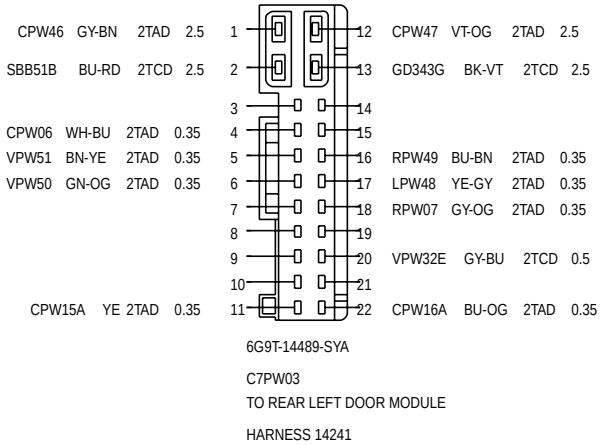

Rear Door Module (RDM) RH (G1404711)

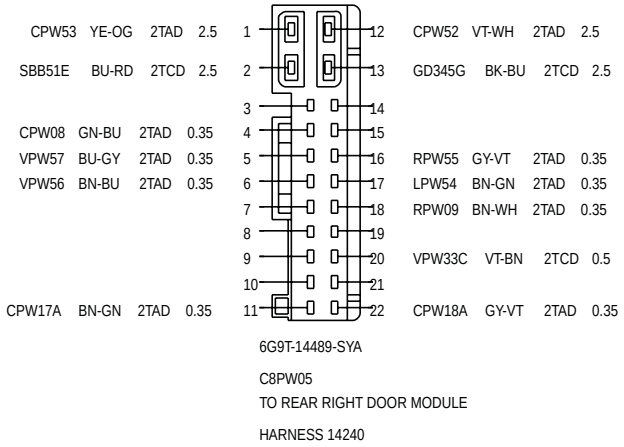

GROUP

5

Body and Paint

SECTION TITLE PAGE

Body and Paint
Rear View Mirrors....501-09
Seating....501-10
Glass, Frames and Mechanisms....501-11
Instrument Panel and Console....501-12
Handles, Locks, Latches and Entry Systems....501-14
Wipers and Washers....501-16
Safety Belt System....501-20A
Supplemental Restraint System....501-20B

SECTION 501-09 Rear View Mirrors

VEHICLE APPLICATION: 2012.0 Ranger

CONTENTS PAGE

ELECTRICAL SCHEMATICS

Auto-Dimming Interior Mirror..... 501-09-2
Power Exterior Mirrors — LHD 4WD/LHD RWD..... 501-09-4
Power Exterior Mirrors — RHD 4WD/RHD RWD..... 501-09-6

ELECTRICAL CONNECTORS

Auto-Dimming Interior Mirror..... 501-09-8
Exterior Mirror Control Switch..... 501-09-8
Exterior Mirror LH..... 501-09-8
Exterior Mirror RH..... 501-09-8

501-09-2 Auto-Dimming Interior Mirror

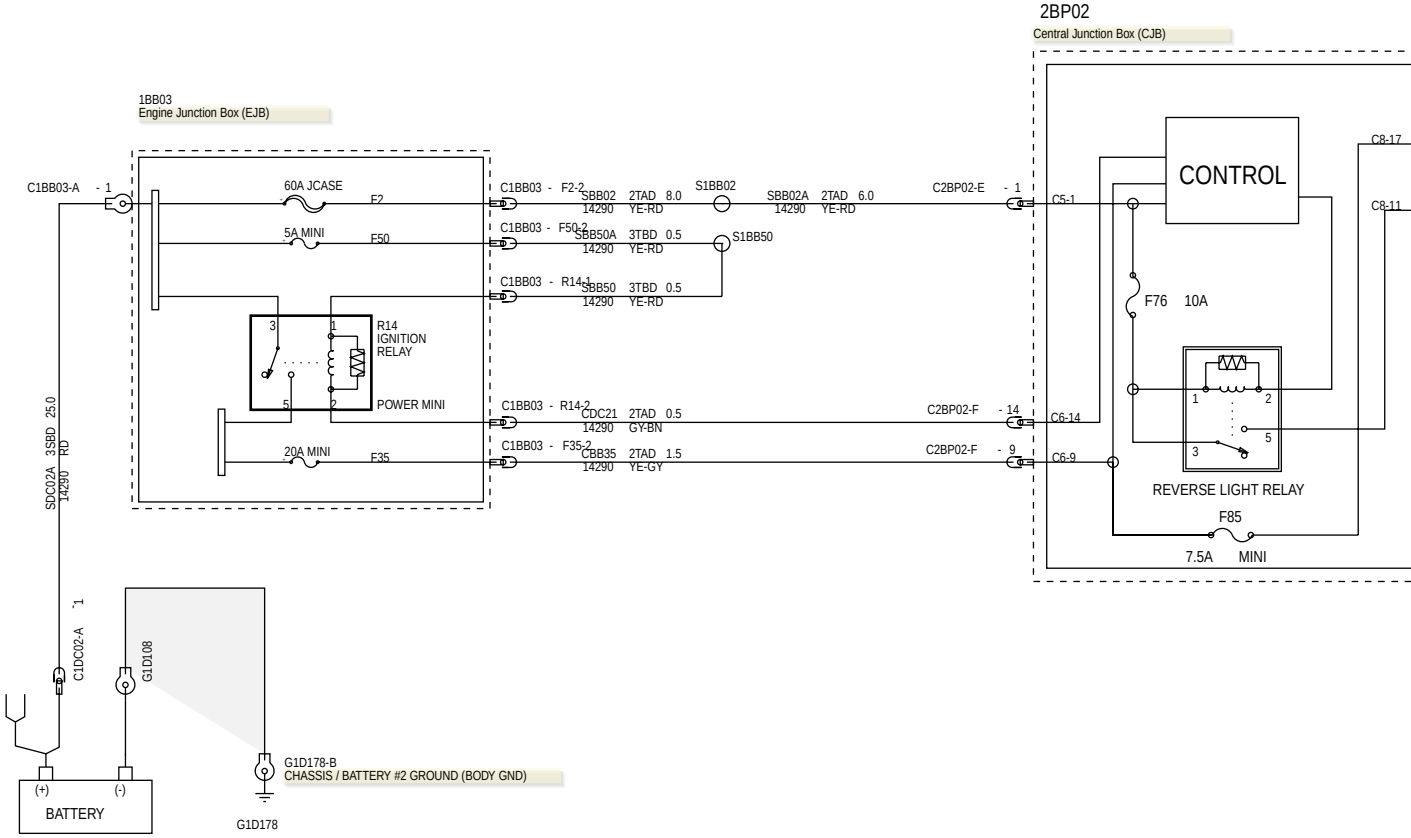

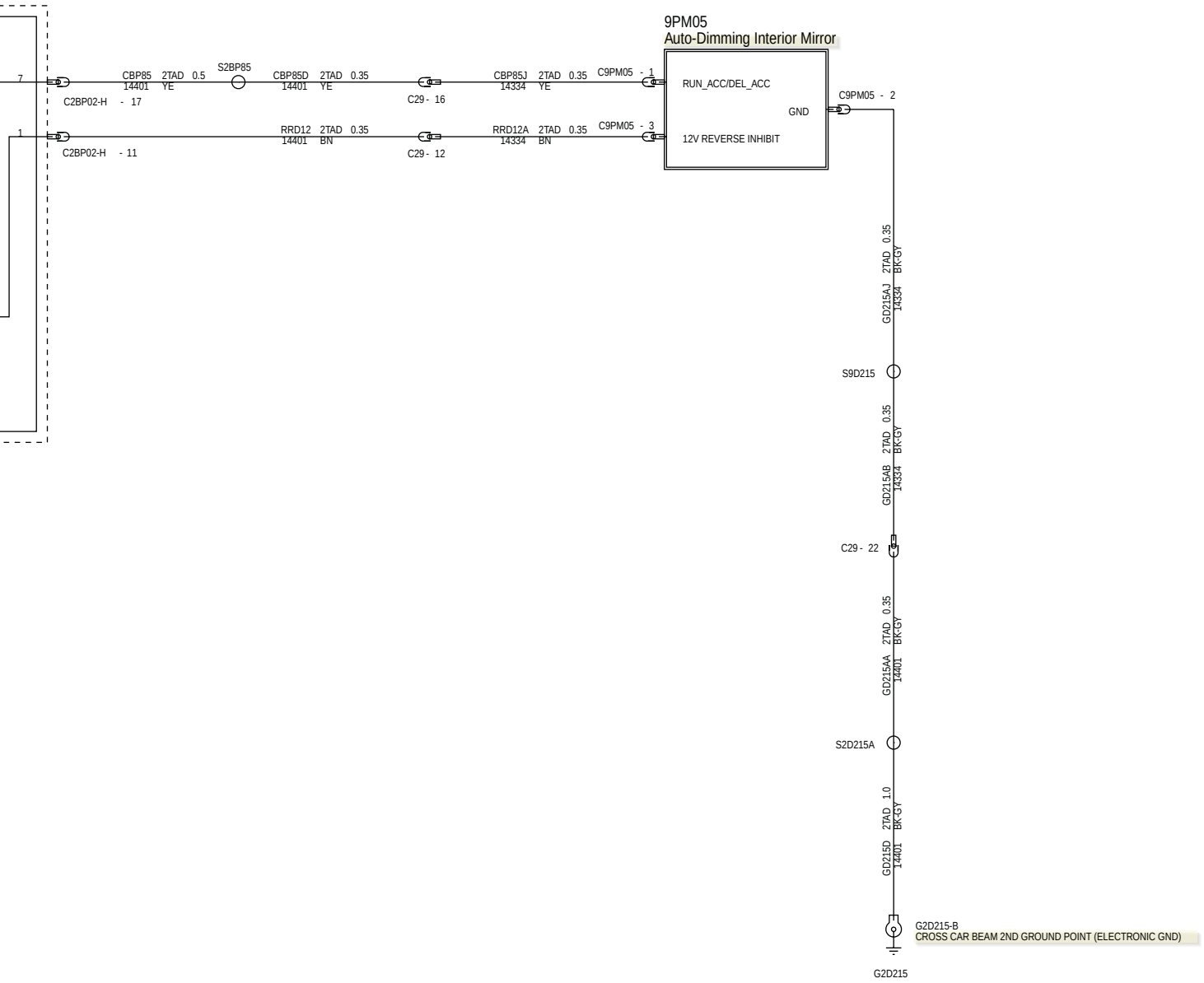
9PM05
Auto-Dimming Interior Mirror
RUN_ACC/DEL_ACC
GND
12V REVERSE INHIBIT
C9PM05 - 1
C9PM05 - 2
C9PM05 - 3
CBP85 2TAD 0.5
14401 YE
S2BP85
CBP85D 2TAD 0.35
14401 YE
CBP85J 2TAD 0.35
14334 YE
C2BP02-H - 17
C29 - 16
RRD12 2TAD 0.35
14401 BN
RRD12A 2TAD 0.35
14334 BN
C2BP02-H - 11
C29 - 12
GD215AJ 2TAD 0.35
14334 BK-GY
S9D215
GD215AB 2TAD 0.35
14334 BK-GY
C29 - 22
GD215AA 2TAD 0.35
14401 BK-GY
S2D215A
GD215D 2TAD 1.0
14401 BK-GY
G2D215-B
CROSS CAR BEAM 2ND GROUND POINT (ELECTRONIC GND)
G2D215

501-09-4 Power Exterior Mirrors—LHD 4WD/LHD RWD

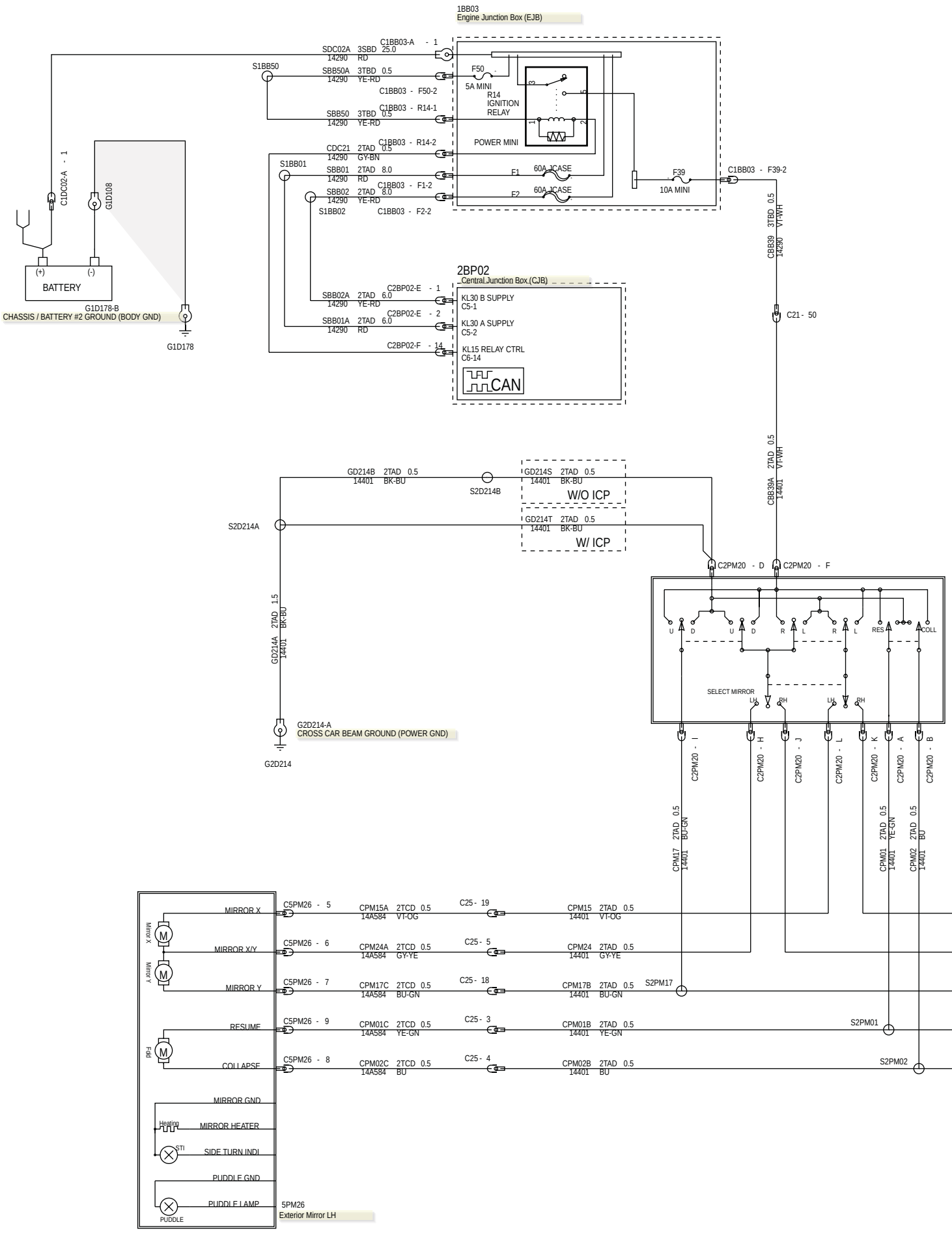

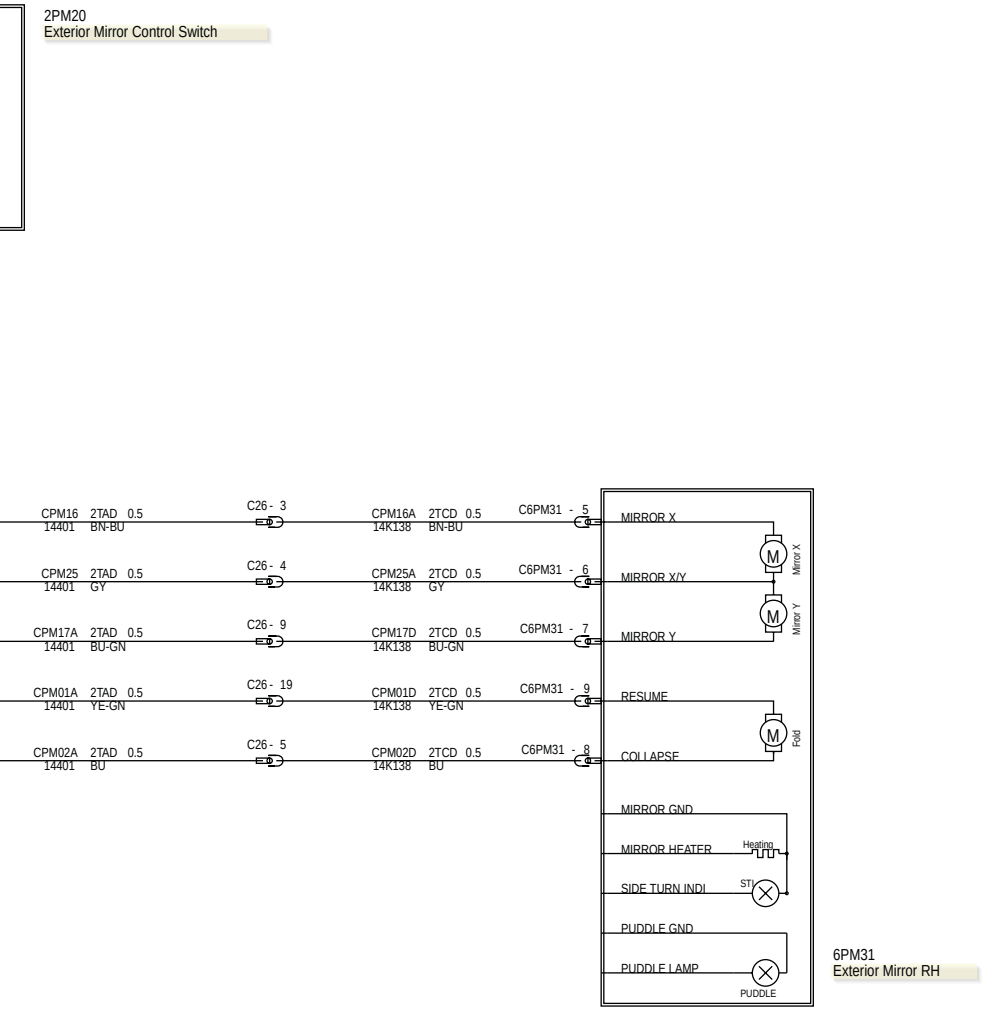
2PM20
Exterior Mirror Control Switch
CPM16 2TAD 0.5
14401 BN-BU
C26 - 3
CPM16A 2TCD 0.5
14K138 BN-BU
C6PM31 - 5
MIRROR X
CPM25 2TAD 0.5
14401 GY
C26 - 4
CPM25A 2TCD 0.5
14K138 GY
C6PM31 - 6
MIRROR X/Y
Mirror X
Mirror Y
CPM17A 2TAD 0.5
14401 BU-GN
C26 - 9
CPM17D 2TCD 0.5
14K138 BU-GN
C6PM31 - 7
MIRROR Y
CPM01A 2TAD 0.5
14401 YE-GN
C26 - 19
CPM01D 2TCD 0.5
14K138 YE-GN
C6PM31 - 9
RESUME
Fold
CPM02A 2TAD 0.5
14401 BU
C26 - 5
CPM02D 2TCD 0.5
14K138 BU
C6PM31 - 8
COLLAPSE
MIRROR GND
MIRROR HEATER
Heating
SIDE TURN INDI
STI
PUDDLE GND
PUDDLE LAMP
PUDDLE
6PM31
Exterior Mirror RH

501-09-6 Power Exterior Mirrors—RHD 4WD/RHD RWD

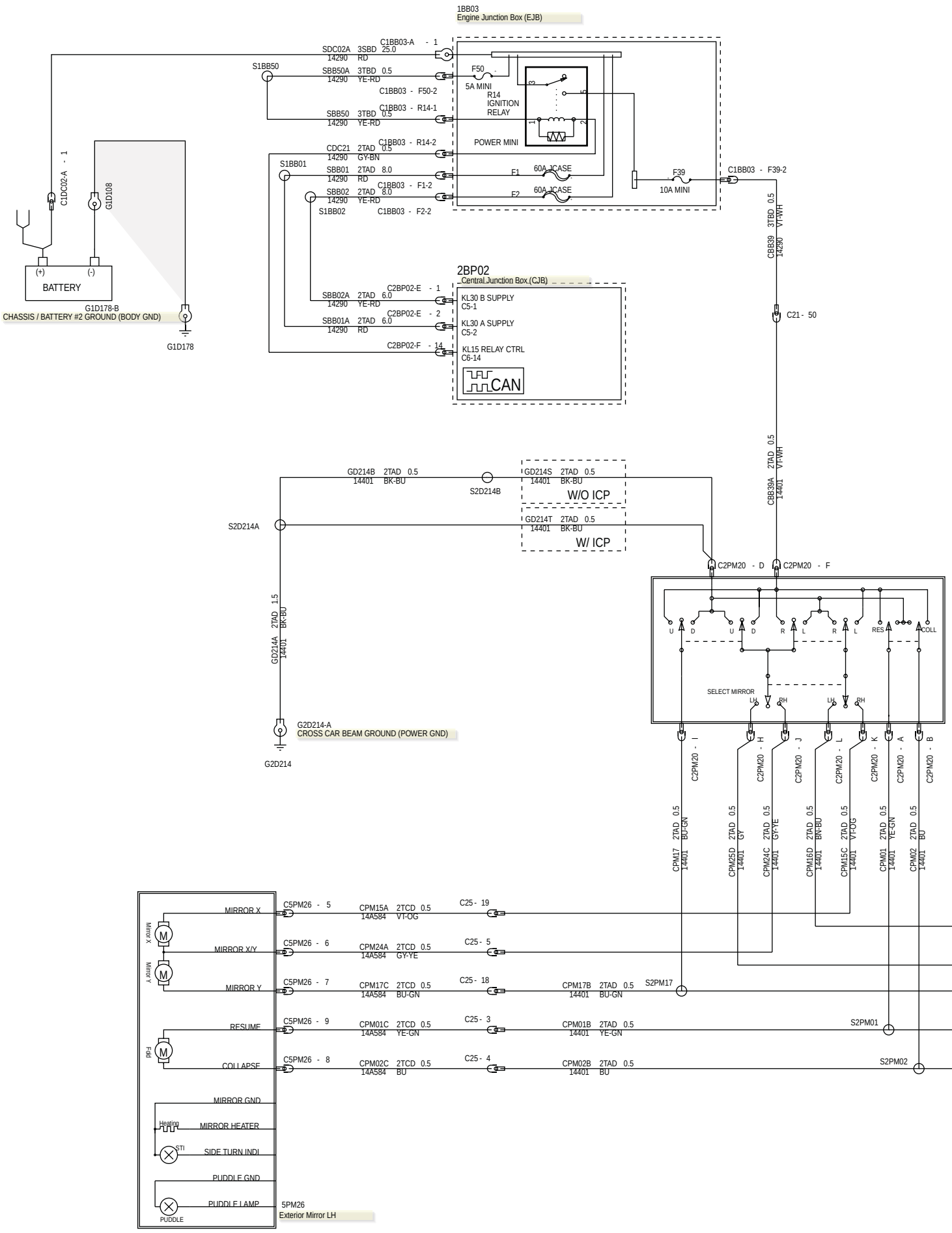

Scroll down to view the diagram

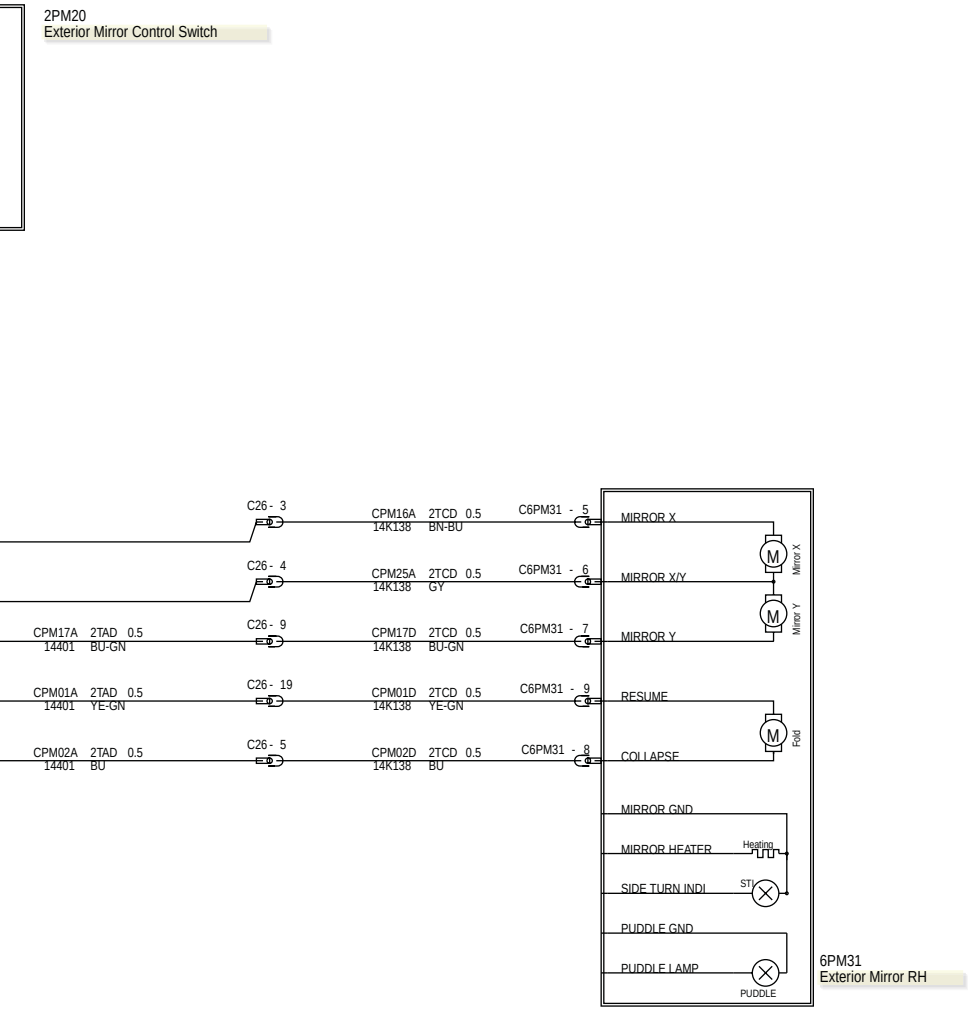

Auto-Dimming Interior Mirror (G1404714)

1 CBP85J YE 2TAD 0.35
2 GD215AJ BK-GY 2TAD 0.35
3 RRD12A BN 2TAD 0.35

3M5T-14489-ACB

C9PM05
TO ELECTROCHROMATIC MIRROR

HARNESS 14334

Exterior Mirror Control Switch (G1404729)

CPM15C VT-OG 2TAD 0.5 + CPM16 BN-BU 2TAD 0.5
CPM17 BU-GN 2TAD 0.5
CPM01 YE-GN 2TAD 0.5

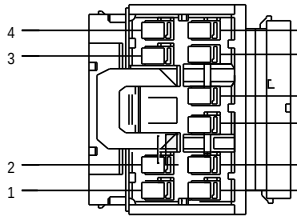

4
3
2
1

10 CPM15 VT-OG 2TAD 0.5 + CPM16D BN-BU 2TAD 0.5
9 CPM24C GY-YE 2TAD 0.5 + CPM25 GY 2TAD 0.5
8 CPM24 GY-YE 2TAD 0.5 + CPM25D GY 2TAD 0.5
7 CBB39A VT-WH 2TAD 0.5
6 GD214S BK-BU 2TAD 0.5 + GD214T BK-BU 2TAD 0.5
5 CPM02 BU 2TAD 0.5

C2PM20
MS-AL-10F
TO MIRROR ADJUST SWITCH
HARNESS 14401

Exterior Mirror LH (G1404730)

PIN 5 => CPM15D VT-OG 0.35 2TAD + CPM15B VT-OG 0.35 2TAD
PIN 6 => CPM24D GY-YE 0.35 2TAD + CPM24B GY-YE 0.35 2TAD
PIN 7 => CPM17F BU-GN 0.35 2TAD
PIN 8 => CPM02F BU 0.35 2TAD
PIN 9 => CPM01F YE-GN 0.35 2TAD

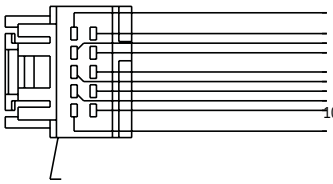

1 GD233AA BK 2TAD 0.5
6 CPM24A GY-YE 2TCD 0.5
2 CBP60AC YE-VT 2TCD 0.5 + CBP60Y YE-VT 2TCD 0.35
7 CPM17C BU-GN 2TCD 0.5
8 CPM02C BU 2TCD 0.5
3 CLS55M GN-BU 2TCD 0.5
9 CPM01C YE-GN 2TCD 0.5
4 CBB41E BU 2TCD 0.5
10 CLN31D VT-GN 2TCD 0.5
5 CPM15A VT-OG 2TCD 0.5

2L1T-14A464-GA

C5PM26
TO DRIVER MIRROR UNIT

HARNESS 14A584

Exterior Mirror RH (G1406842)

PIN 1 => GD214AU BK-BU 0.5 2TAD
PIN 1 => GD214AU BK-BU 0.5 2TAD + GD214AV BK-BU 0.5 2TCD

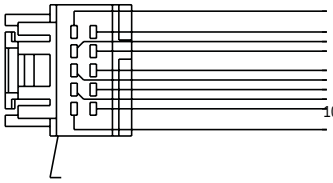

1 GD214AV BK-BU 2TCD 0.5 + GD214AU BK-BU 2TAD 0.5
6 CPM25A GY 2TCD 0.5
2 CBP60W YE-VT 2TCD 0.35 + CBP60AD YE-VT 2TCD 0.5
7 CPM17D BU-GN 2TCD 0.5
8 CPM02D BU 2TCD 0.5
3 CLS54M BU-OG 2TCD 0.5
9 CPM01D YE-GN 2TCD 0.5
4 CBB41D BU 2TCD 0.5
10 CLN31C VT-GN 2TCD 0.5
5 CPM16A BN-BU 2TCD 0.5

2L1T-14A464-GA

C6PM31
TO PASSENGER MIRROR UNIT

HARNESS 14K138

SECTION 501-10 Seating

VEHICLE APPLICATION: 2012.0 Ranger

CONTENTS PAGE

ELECTRICAL SCHEMATICS

Heated Seats — LHD 4WD/LHD RWD..... 501-10-2
Heated Seats — RHD 4WD/RHD RWD..... 501-10-4
Power Seats — LHD 4WD/LHD RWD..... 501-10-6
Power Seats — RHD 4WD/RHD RWD..... 501-10-8

501-10-2 Heated Seats—LHD 4WD/LHD RWD

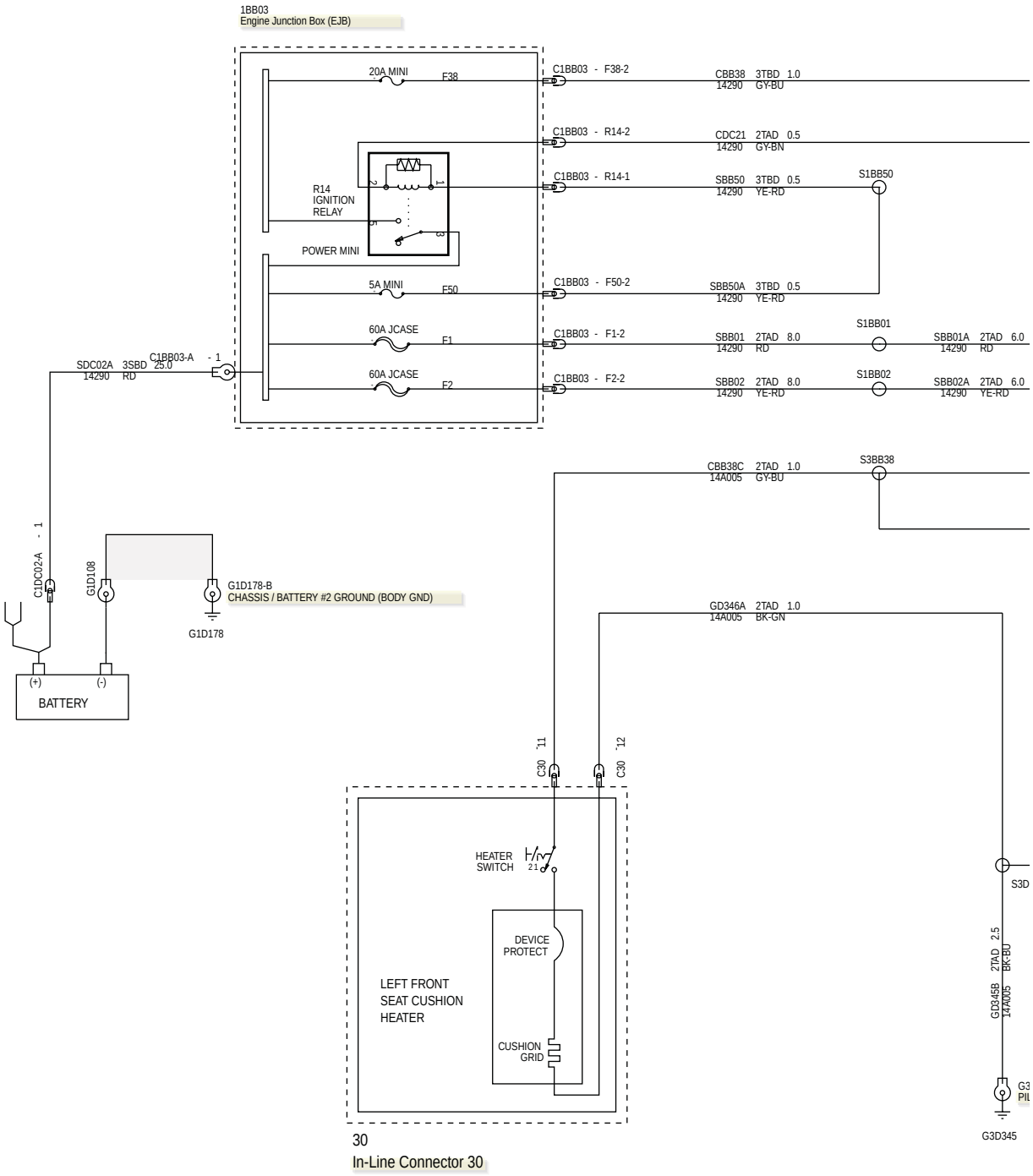

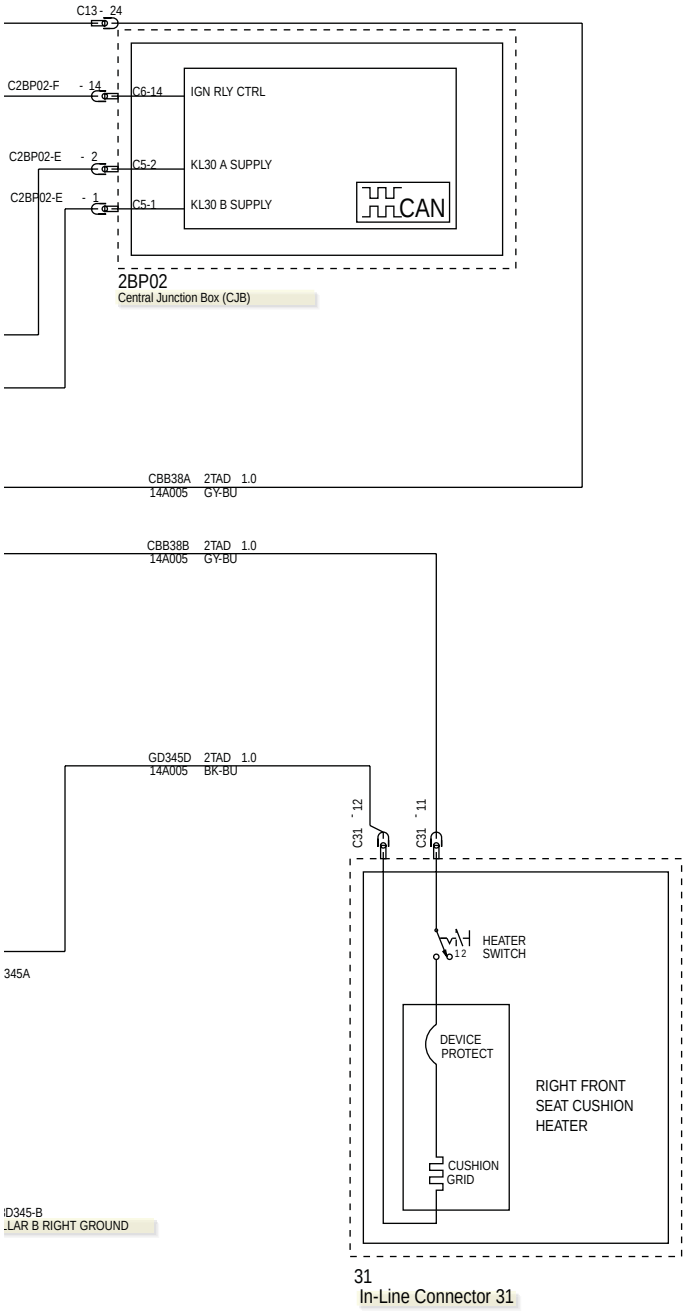
C13 - 24
C2BP02-F - 14
C6-14
IGN RLY CTRL
C2BP02-E - 2
C5-2
KL30 A SUPPLY
C2BP02-E - 1
C5-1
KL30 B SUPPLY
CAN
2BP02
Central Junction Box (CJB)
CBB38A 2TAD 1.0
14A005 GY-BU
CBB38B 2TAD 1.0
14A005 GY-BU
GD345D 2TAD 1.0
14A005 BK-BU
C31 - 12
C31 - 11
HEATER
SWITCH
DEVICE
PROTECT
RIGHT FRONT
SEAT CUSHION
HEATER
CUSHION
GRID
345A
D345-B
LAR B RIGHT GROUND
31
In-Line Connector 31

501-10-4 Heated Seats—RHD 4WD/RHD RWD

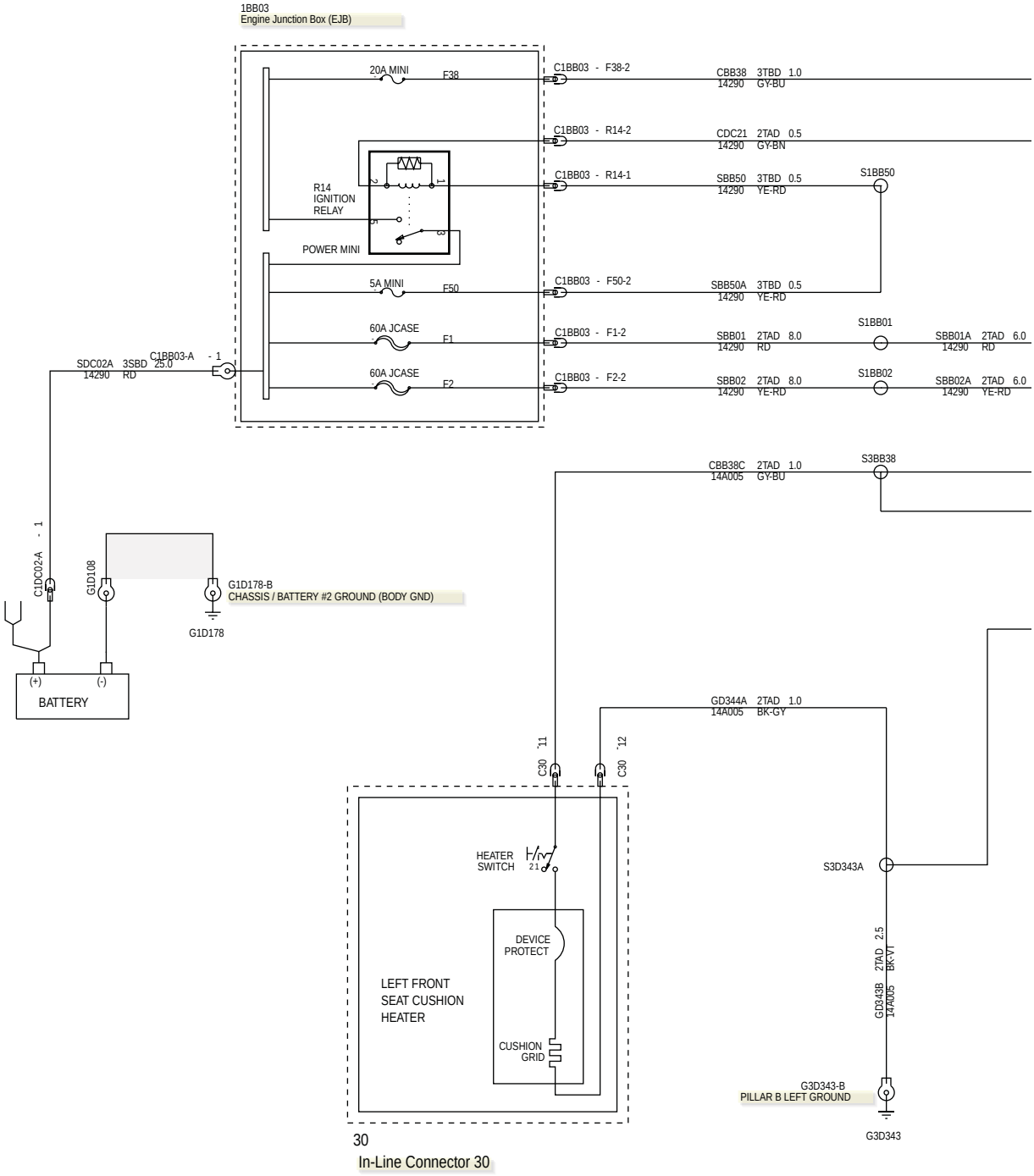

501-10-5 Heated Seats—RHD 4WD/RHD RWD

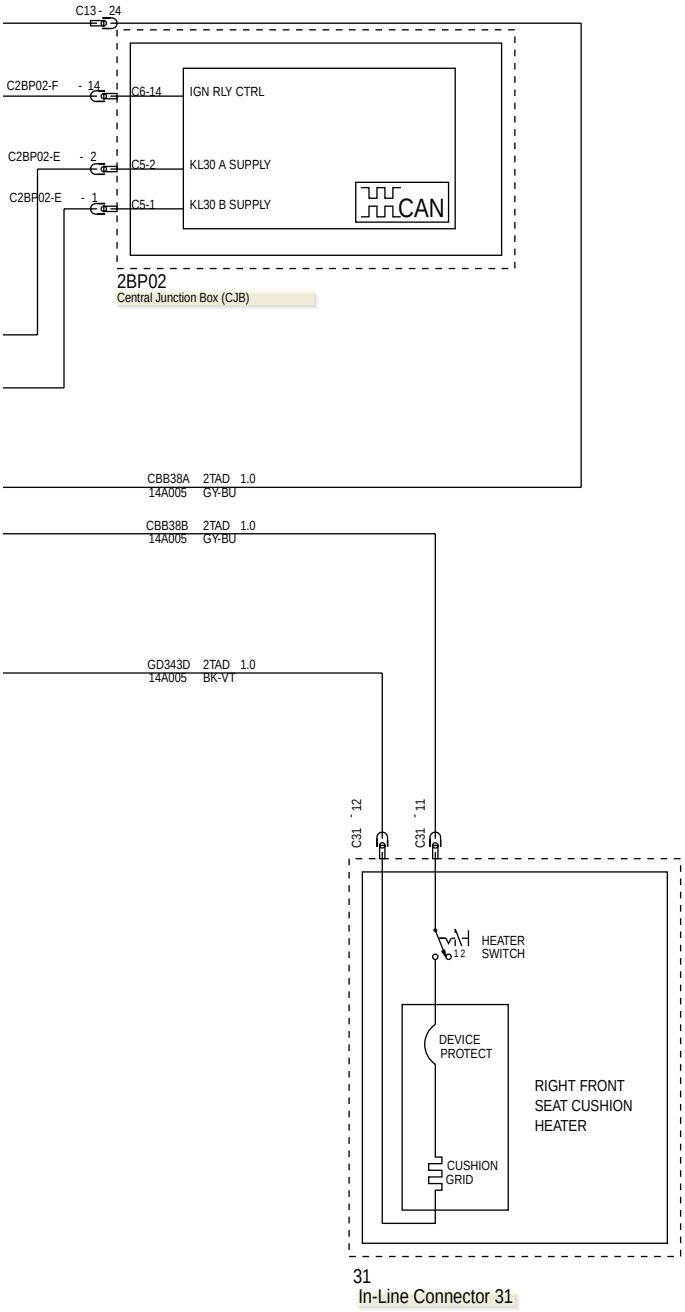

501-10-6 Power Seats—LHD 4WD/LHD RWD

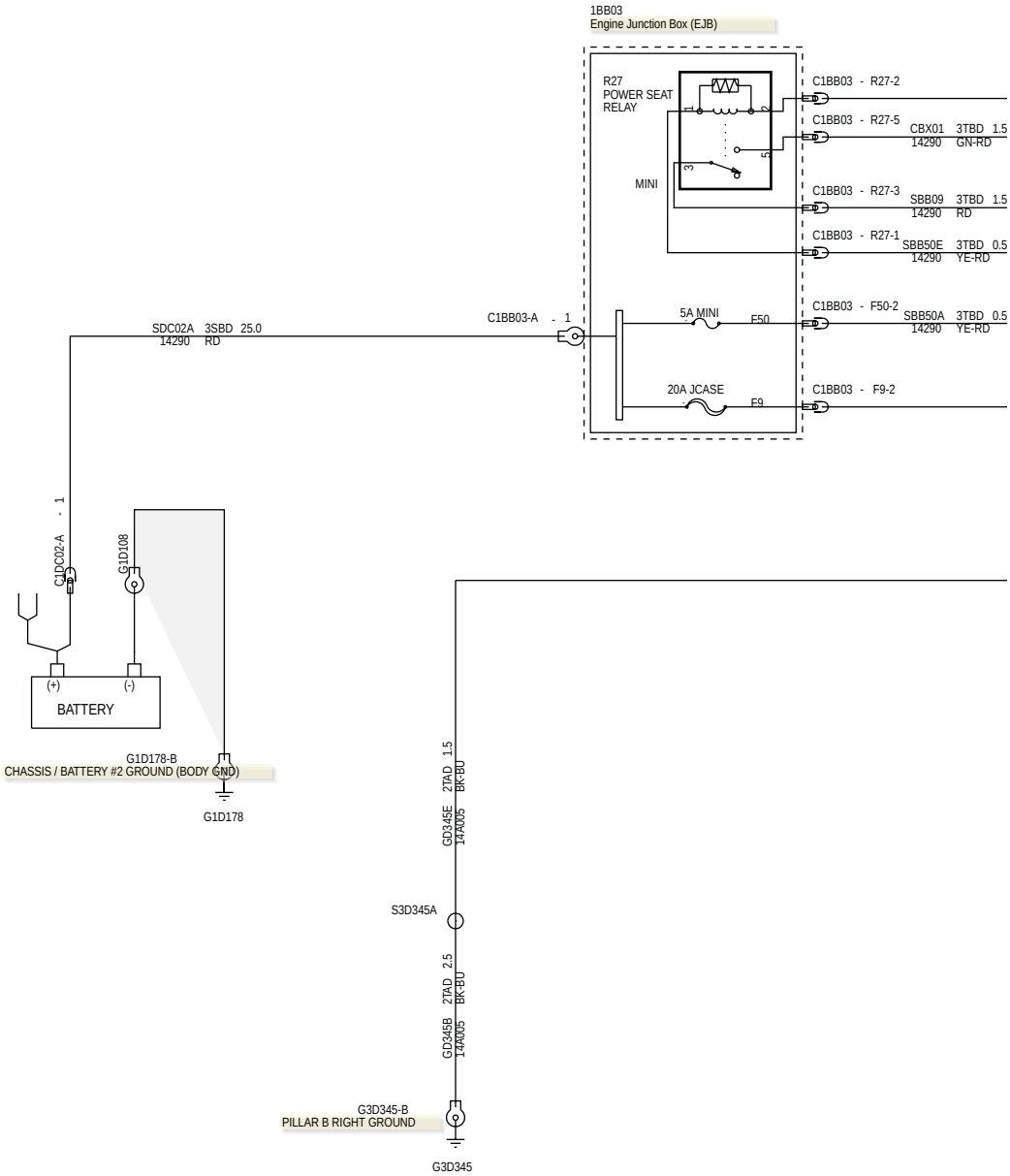

501-10-7 Power Seats—LHD 4WD/LHD RWD

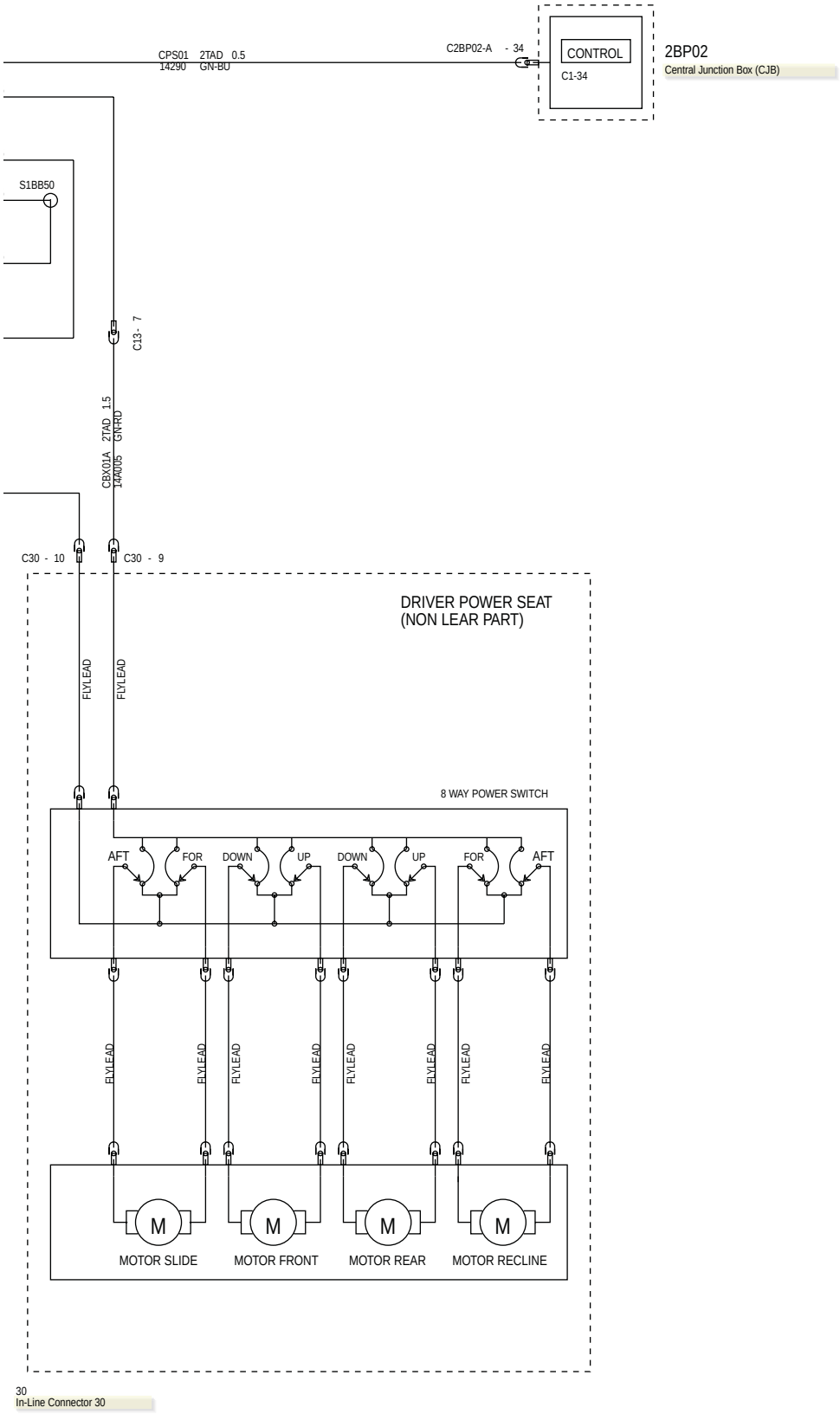

30
In-Line Connector 30

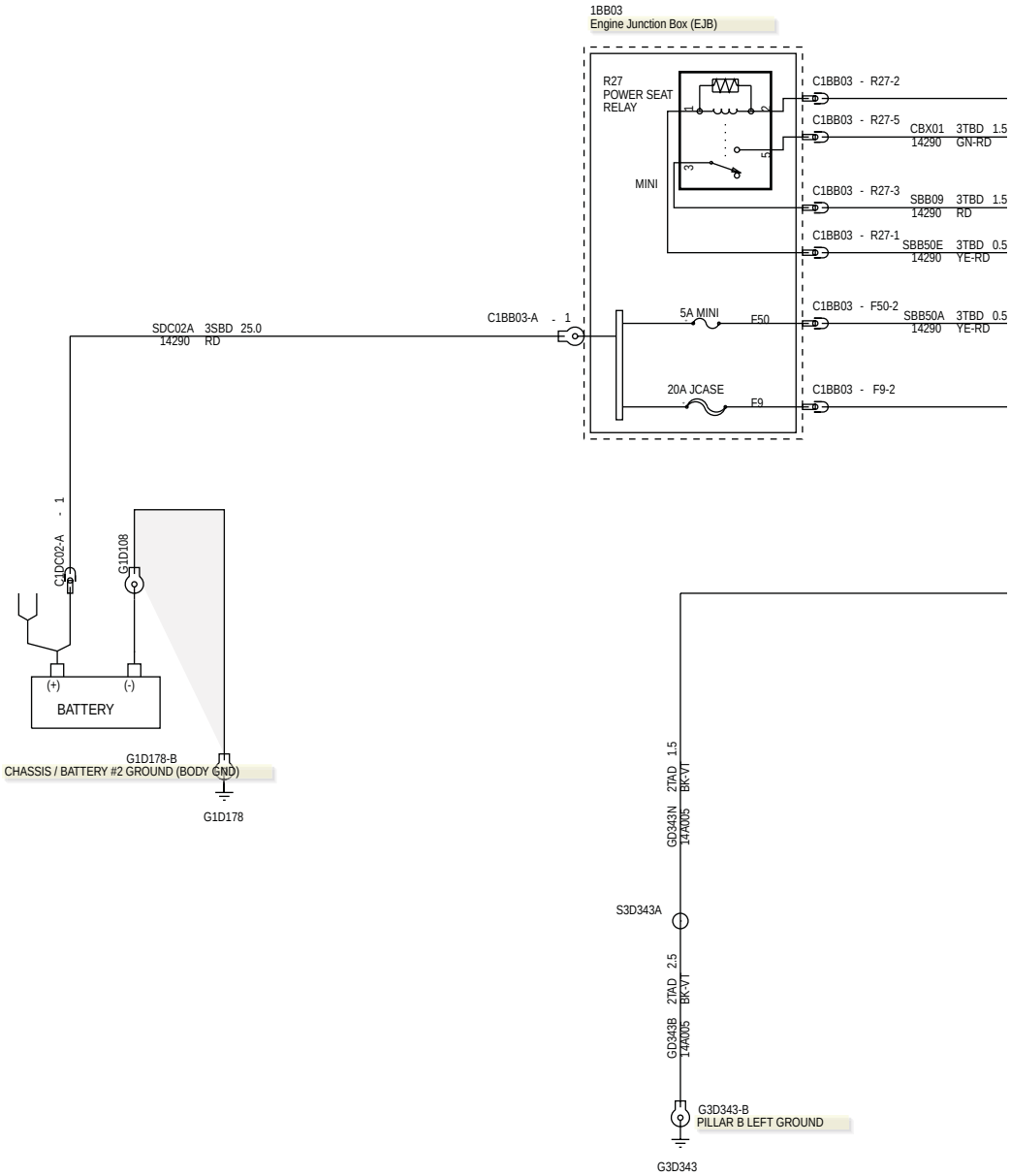
1BB03
Engine Junction Box (EJB)
R27
POWER SEAT
RELAY
MINI
C1BB03 - R27-2
C1BB03 - R27-5
CBX01 3TBD 1.5
14290 GN-RD
C1BB03 - R27-3
SBB09 3TBD 1.5
14290 RD
C1BB03 - R27-1
SBB50E 3TBD 0.5
14290 YE-RD
C1BB03 - F50-2
SBB50A 3TBD 0.5
14290 YE-RD
C1BB03 - F9-2
5A MINI
F50
20A JCASE
F9
C1BB03-A - 1
SDC02A 3SBD 25.0
14290 RD
C1DC02-A - 1
G1D108
(+)
(-)
BATTERY
G1D178-B
CHASSIS / BATTERY #2 GROUND (BODY GND)
G1D178
GD343N 2TAD 1.5
14A005 BK-VT
S3D343A
GD343B 2TAD 2.5
14A005 BK-VT
G3D343-B
PILLAR B LEFT GROUND
G3D343

501-10-9 Power Seats—RHD 4WD/RHD RWD

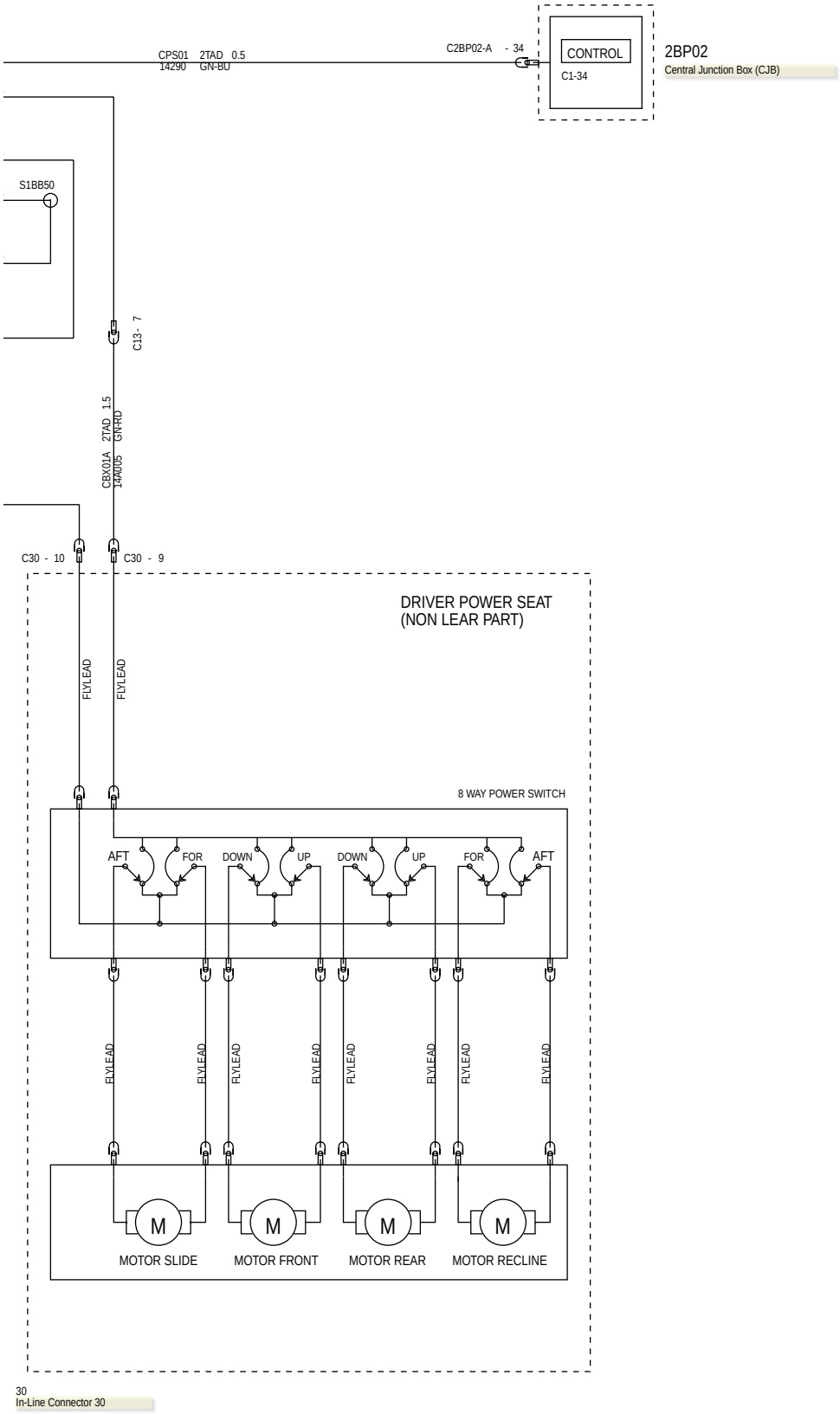

30
In-Line Connector 30

SECTION 501-11 Glass, Frames and Mechanisms

VEHICLE APPLICATION: 2012.0 Ranger

CONTENTS PAGE

ELECTRICAL SCHEMATICS

Heated Windshield and Rear Window — LHD 4WD/LHD RWD..... 501-11-2
Heated Windshield and Rear Window — RHD 4WD/RHD RWD..... 501-11-4
Power Windows — LHD 4WD/LHD RWD, Vehicles With: Door Module..... 501-11-6
Power Windows — RHD 4WD/RHD RWD, Vehicles With: Door Module..... 501-11-8
Power Windows — LHD 4WD/LHD RWD, Vehicles Without: Door Module..... 501-11-10
Power Windows — RHD 4WD/RHD RWD, Vehicles Without: Door Module..... 501-11-12

ELECTRICAL CONNECTORS

Driver Door Window Control Switch..... 501-11-14
Driver Door Window Control Switch — A..... 501-11-14
Driver Door Window Control Switch — B..... 501-11-14
Driver Door Window Regulator Motor..... 501-11-14
Driver Door Window Regulator Motor — A..... 501-11-15
Heated Rear Window Element..... 501-11-15
Heated Rear Window Element — A..... 501-11-15
Heated Windshield Element LH..... 501-11-15
Heated Windshield Element RH..... 501-11-15
Passenger Door Window Control Switch..... 501-11-15
Passenger Door Window Control Switch — A..... 501-11-16
Passenger Door Window Regulator Motor..... 501-11-16
Passenger Door Window Regulator Motor — A..... 501-11-16
Rear Door Window Control Switch LH..... 501-11-16
Rear Door Window Control Switch LH — A..... 501-11-16
Rear Door Window Control Switch RH..... 501-11-17
Rear Door Window Control Switch RH — A..... 501-11-17
Rear Door Window Regulator Motor LH..... 501-11-17
Rear Door Window Regulator Motor LH — A..... 501-11-17
Rear Door Window Regulator Motor RH..... 501-11-17
Rear Door Window Regulator Motor RH — A..... 501-11-18

501-11-2 Heated Windshield and Rear Window—LHD 4WD/LHD RWD

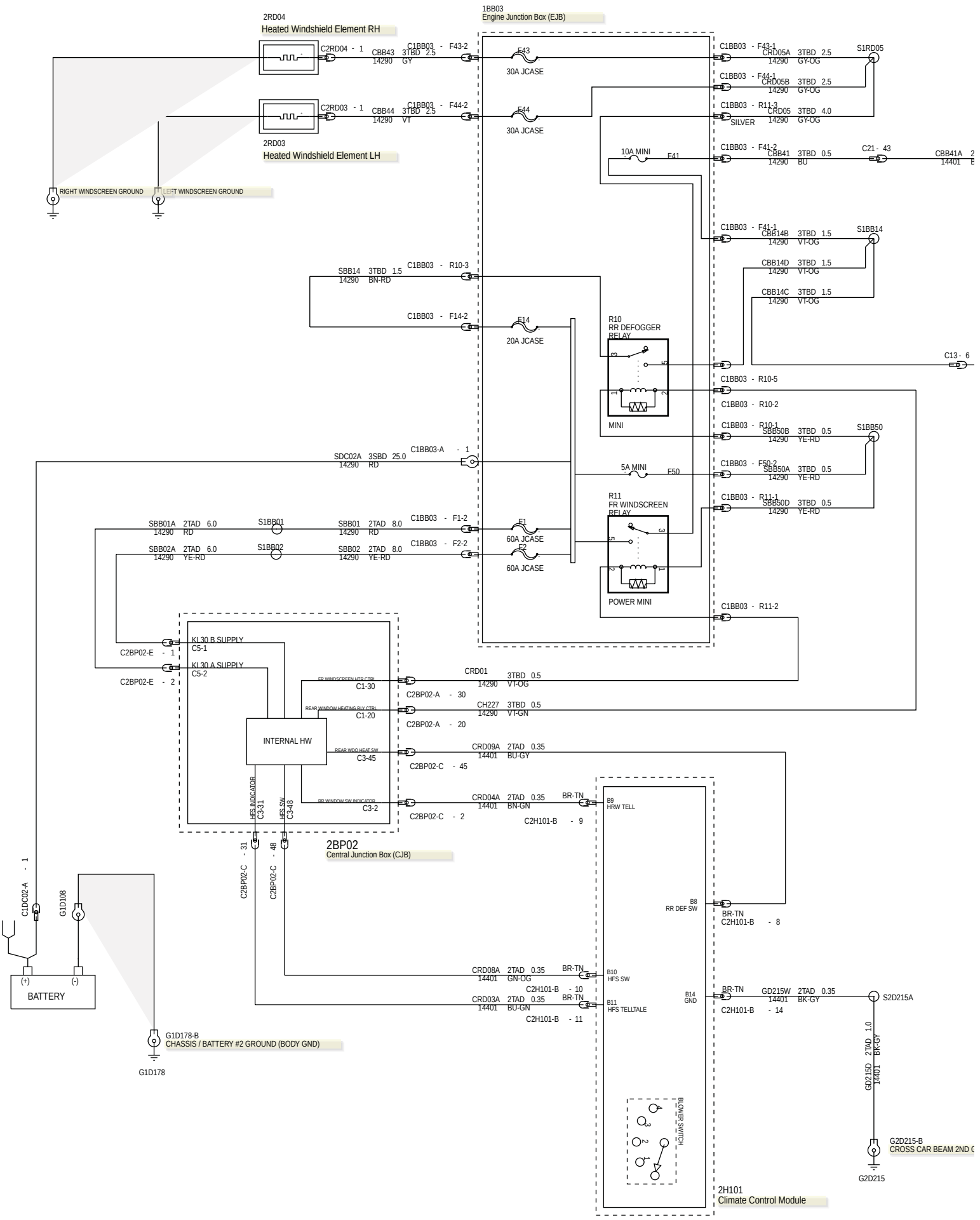

501-11-3 Heated Windshield and Rear Window—LHD 4WD/LHD RWD

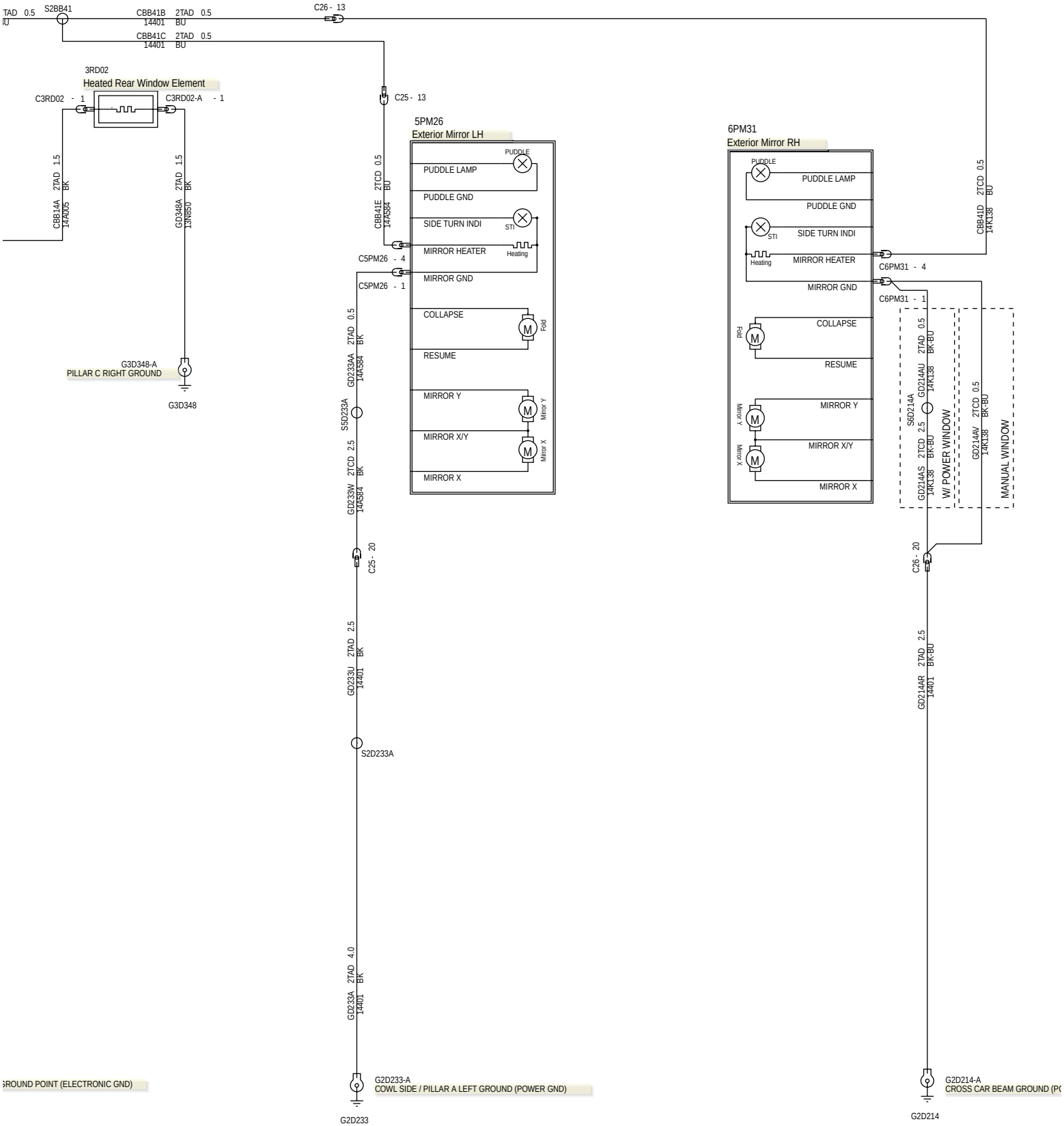

501-11-4 Heated Windshield and Rear Window—RHD 4WD/RHD RWD

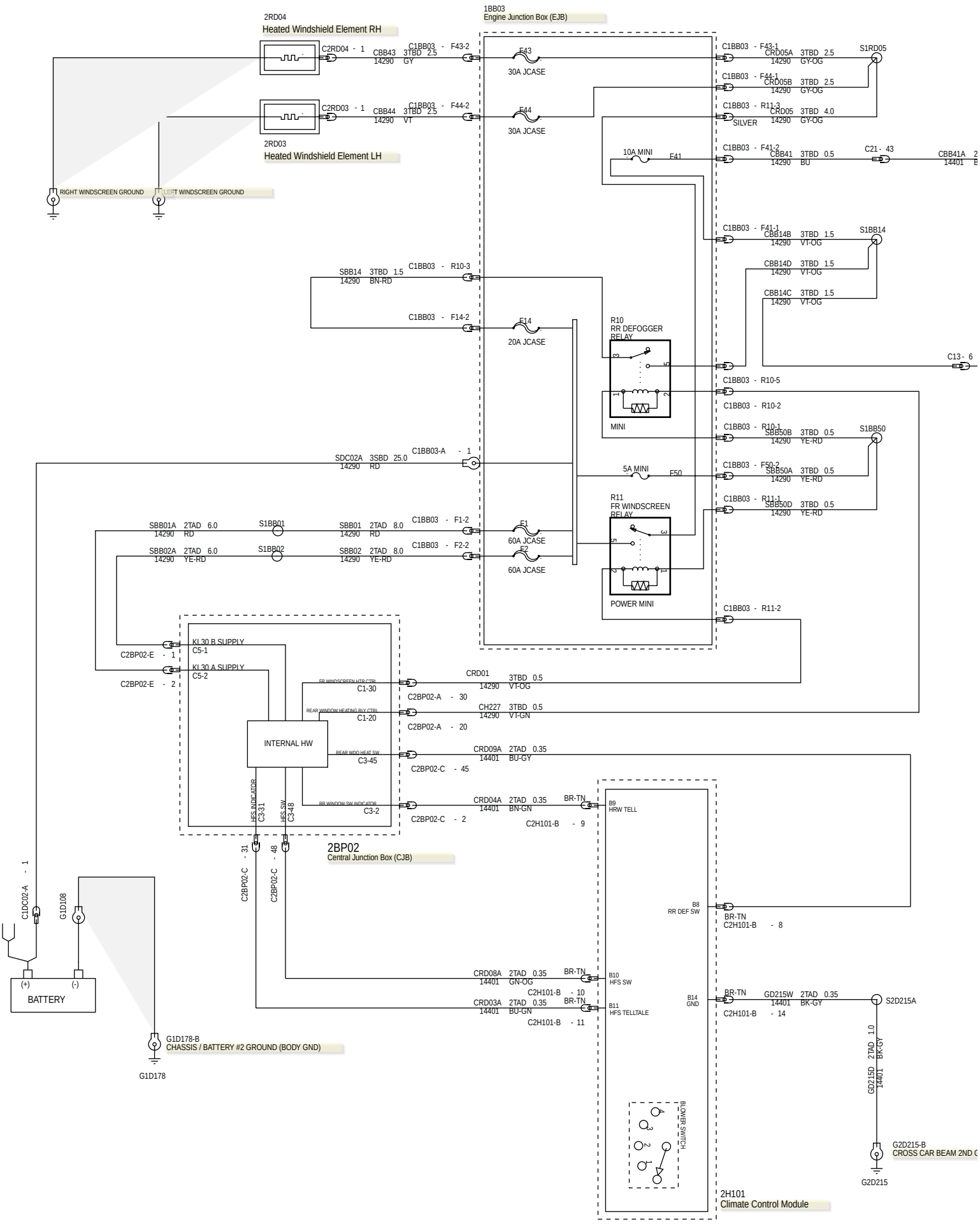

501-11-5 Heated Windshield and Rear Window—RHD 4WD/RHD RWD

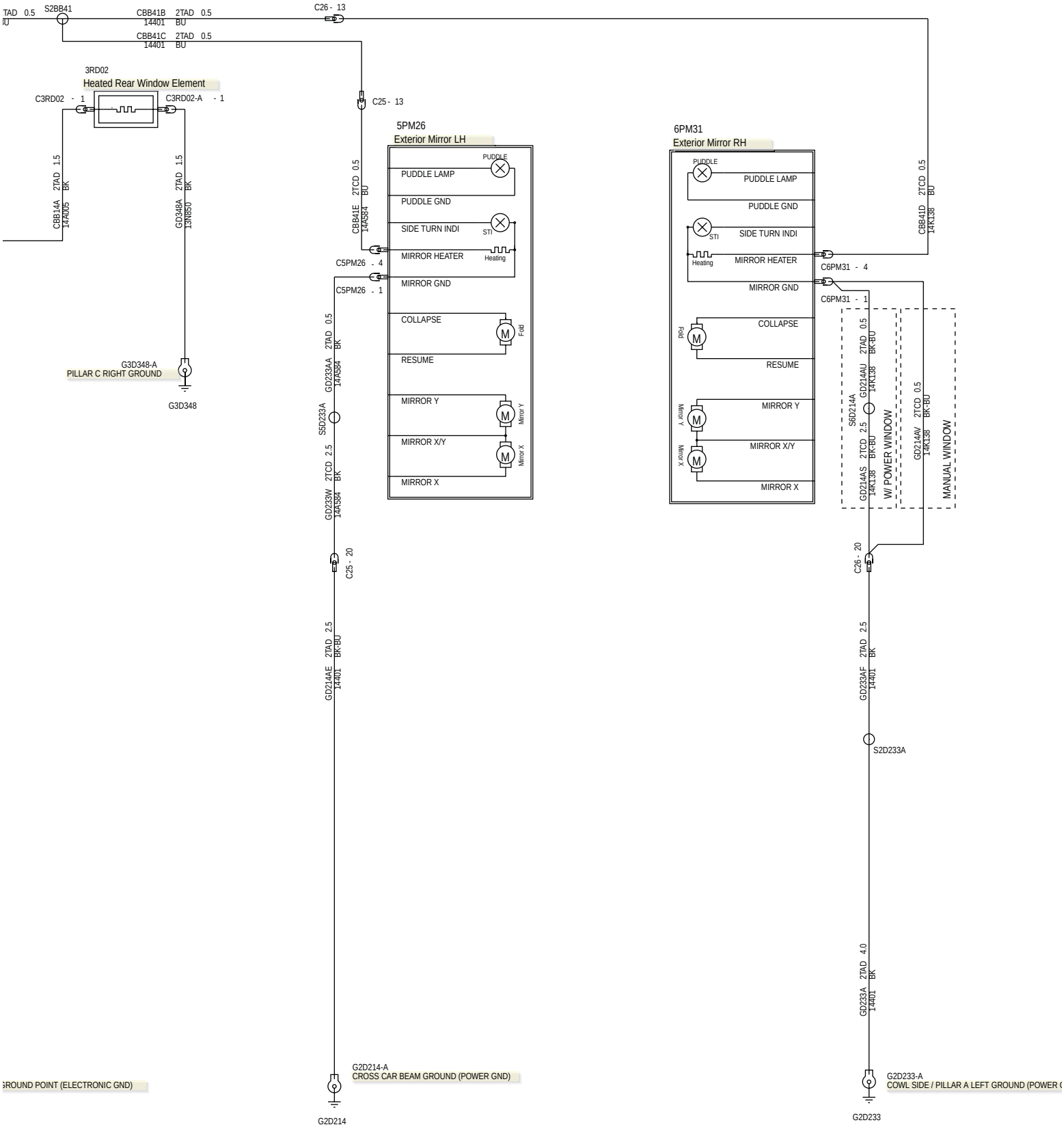

501-11-6 Power Windows—LHD 4WD/LHD RWD, Vehicles With: Door Module

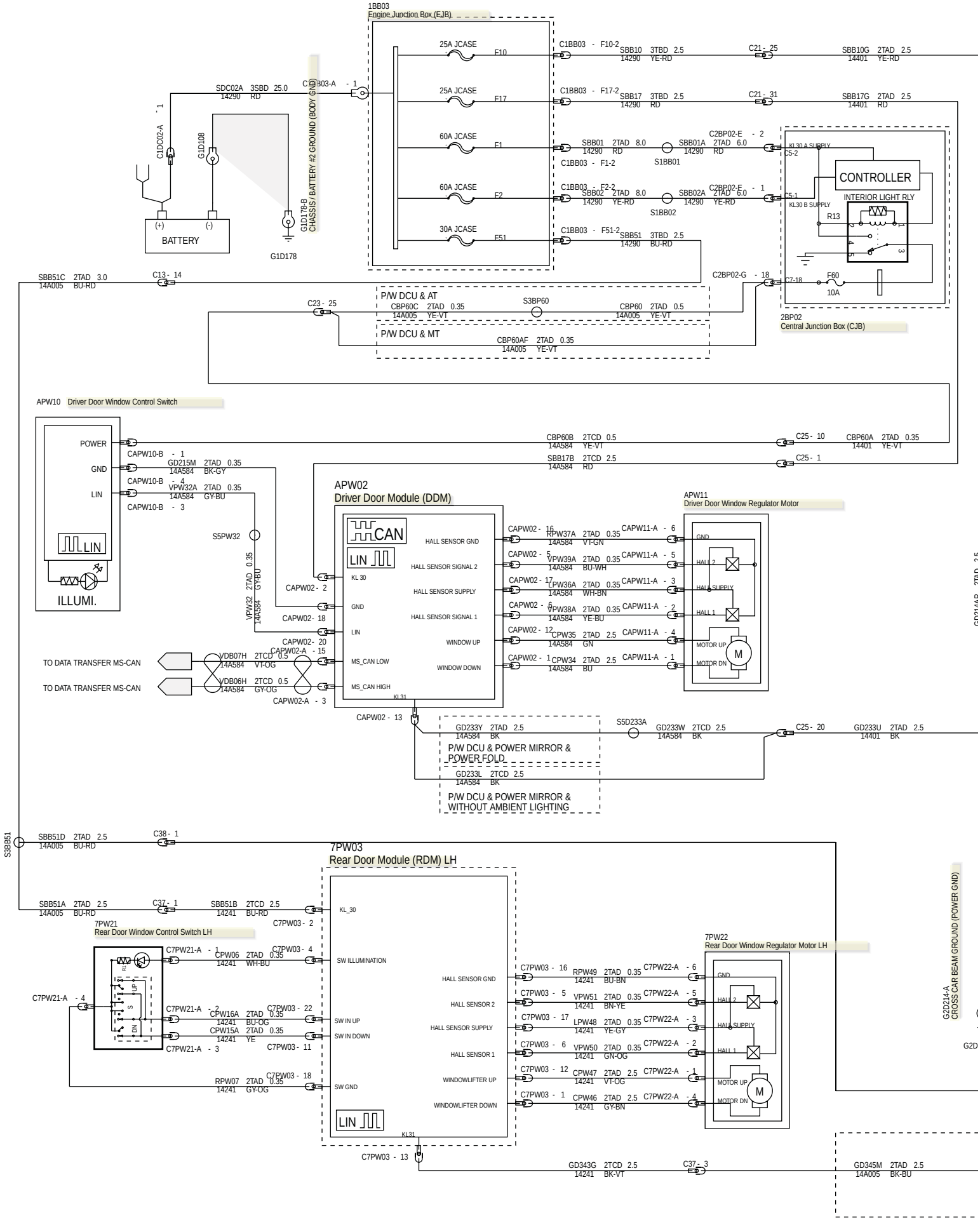

501-11-7 Power Windows—LHD 4WD/LHD RWD, Vehicles With: Door Module

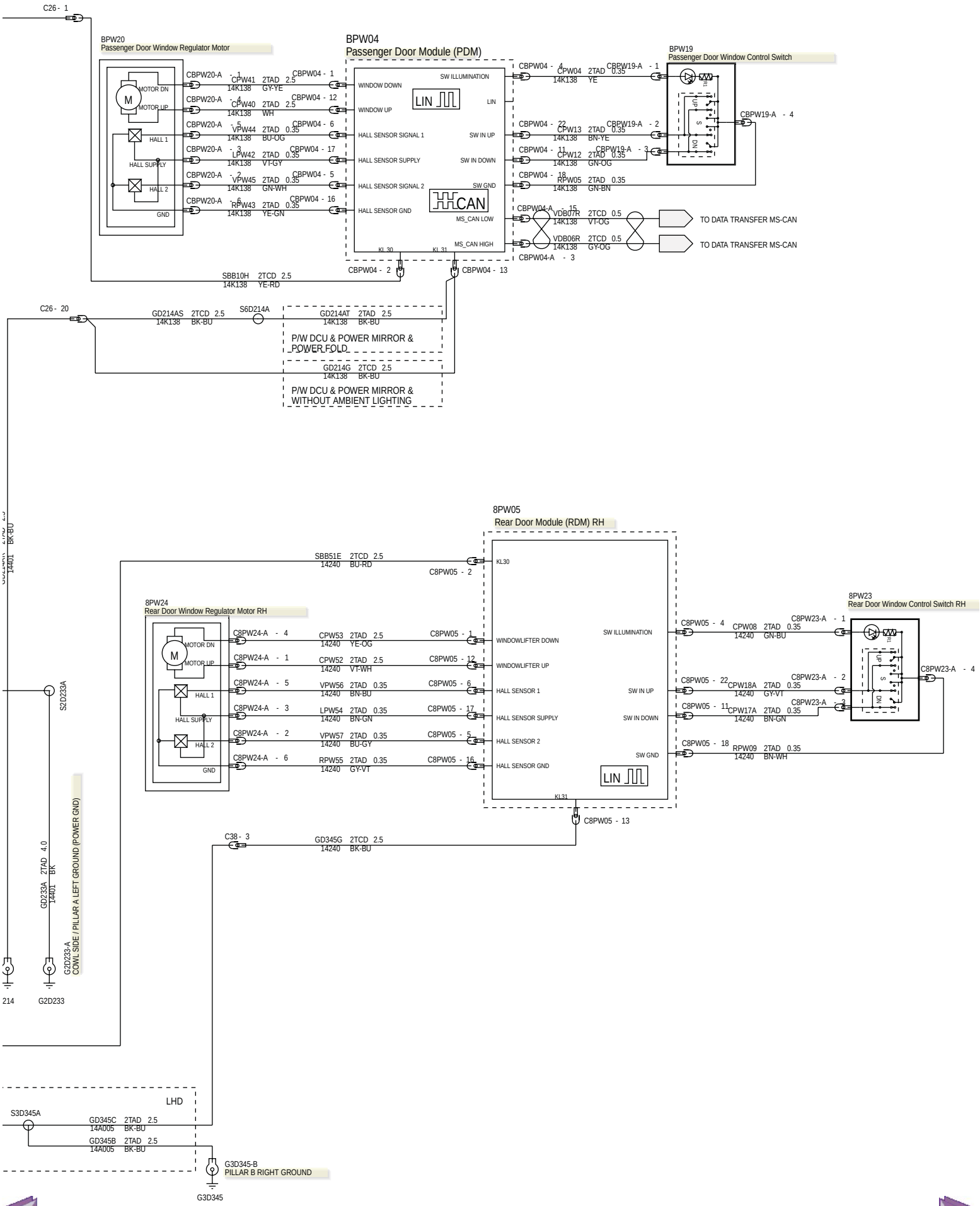

501-11-8 Power Windows—RHD 4WD/RHD RWD, Vehicles With: Door Module

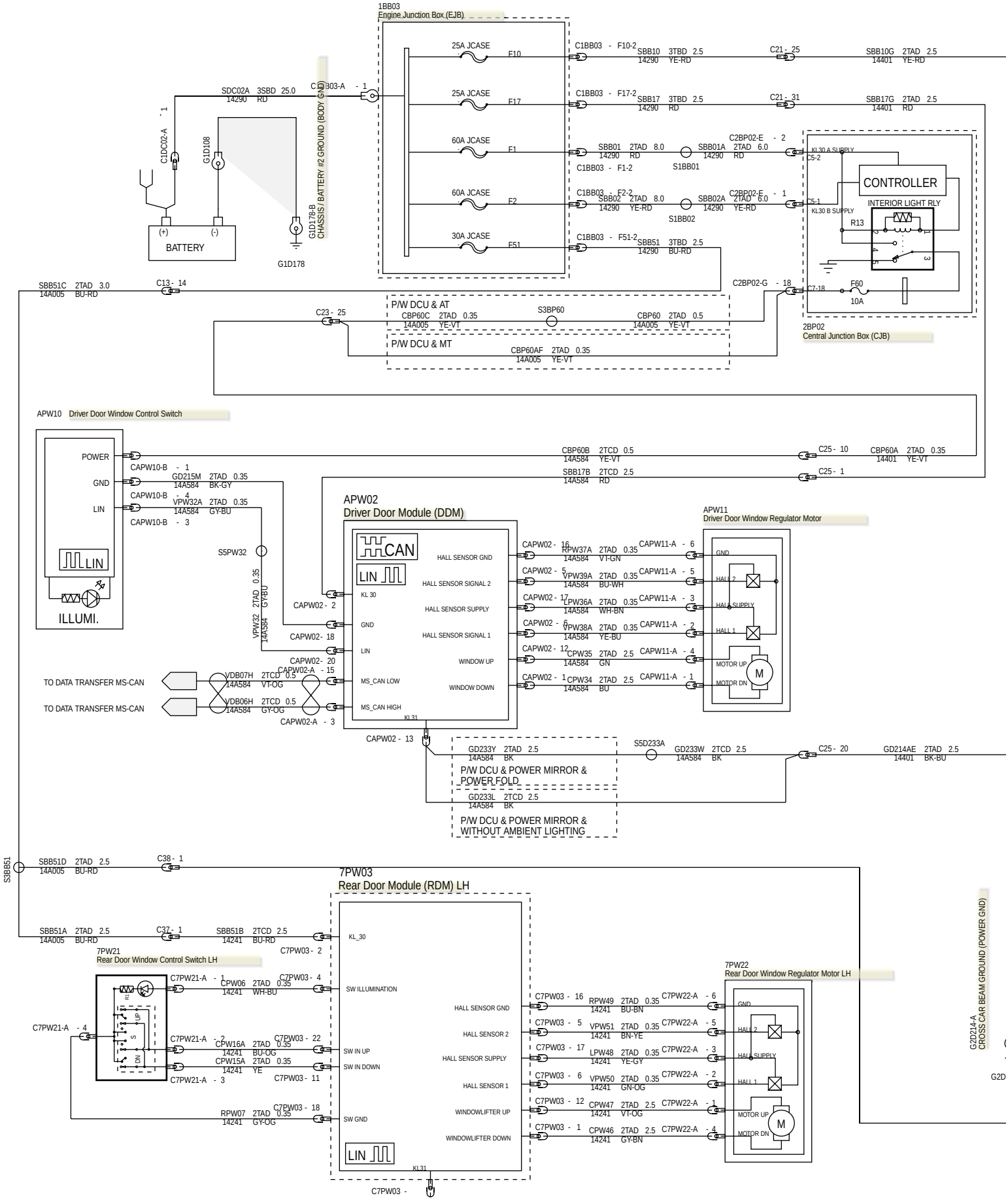

501-11-9 Power Windows—RHD 4WD/RHD RWD, Vehicles With: Door Module

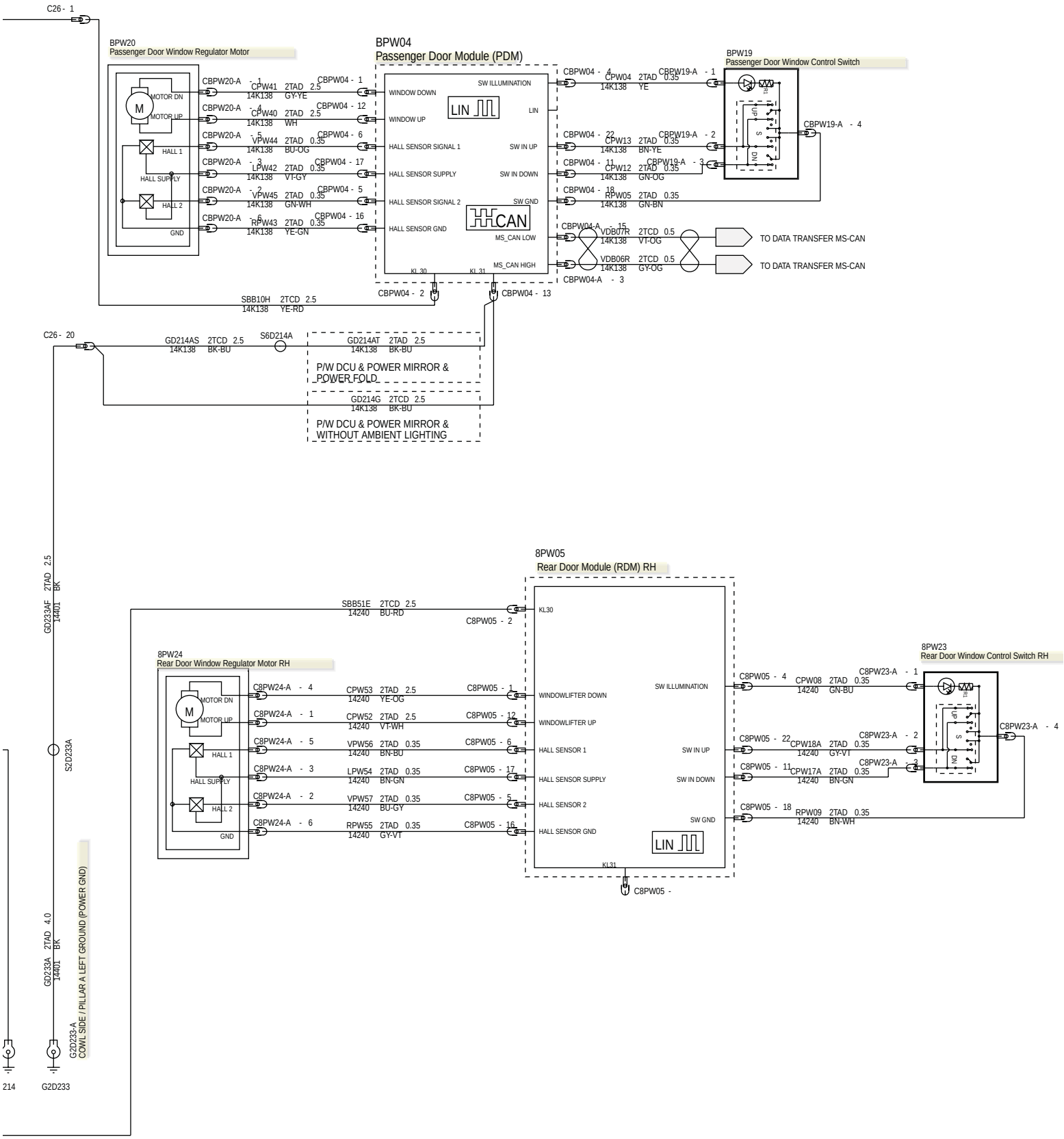

501-11-10 Power Windows—LHD 4WD/LHD RWD, Vehicles Without: Door Module

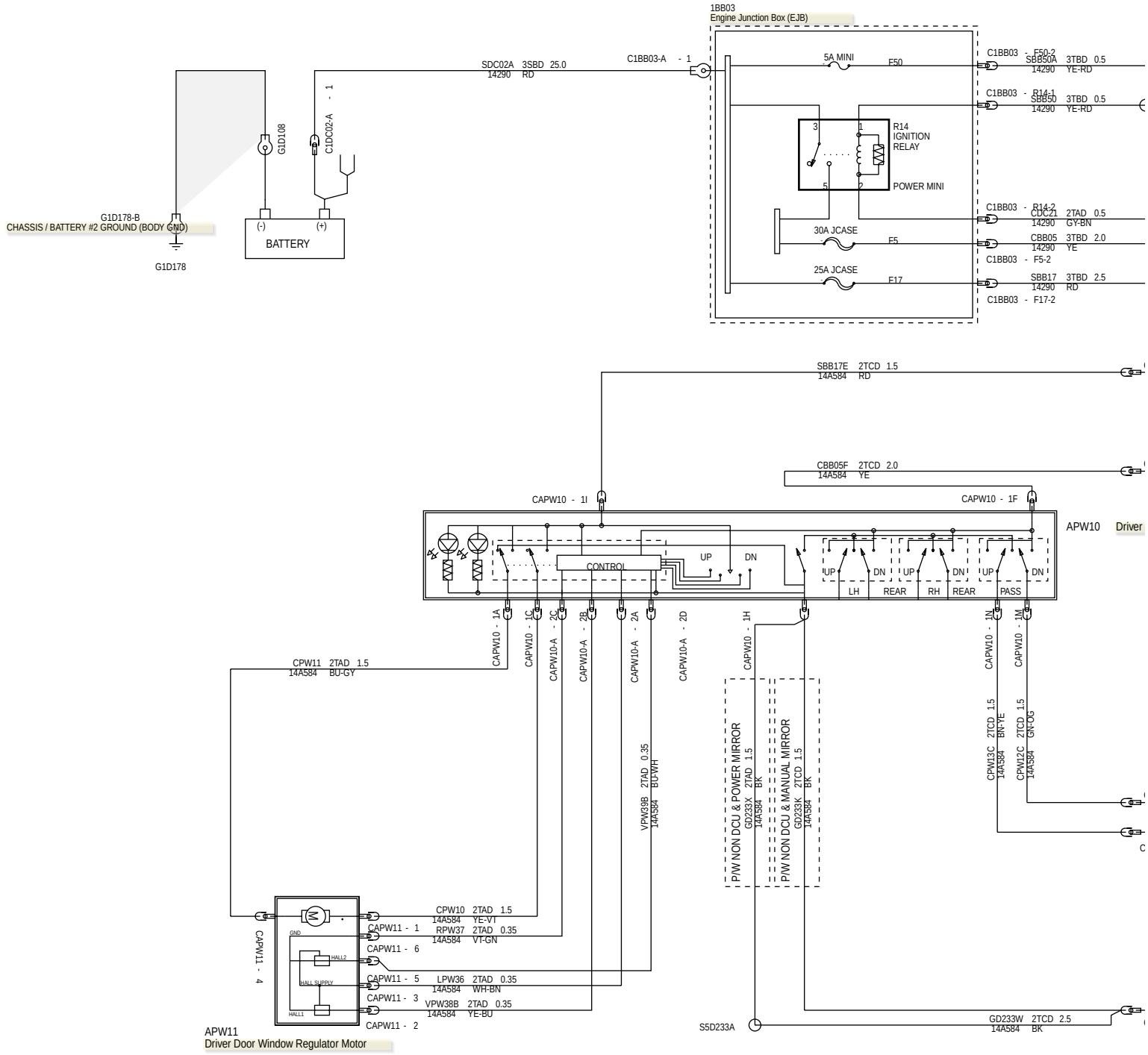

501-11-11 Power Windows—LHD 4WD/LHD RWD, Vehicles Without: Door Module

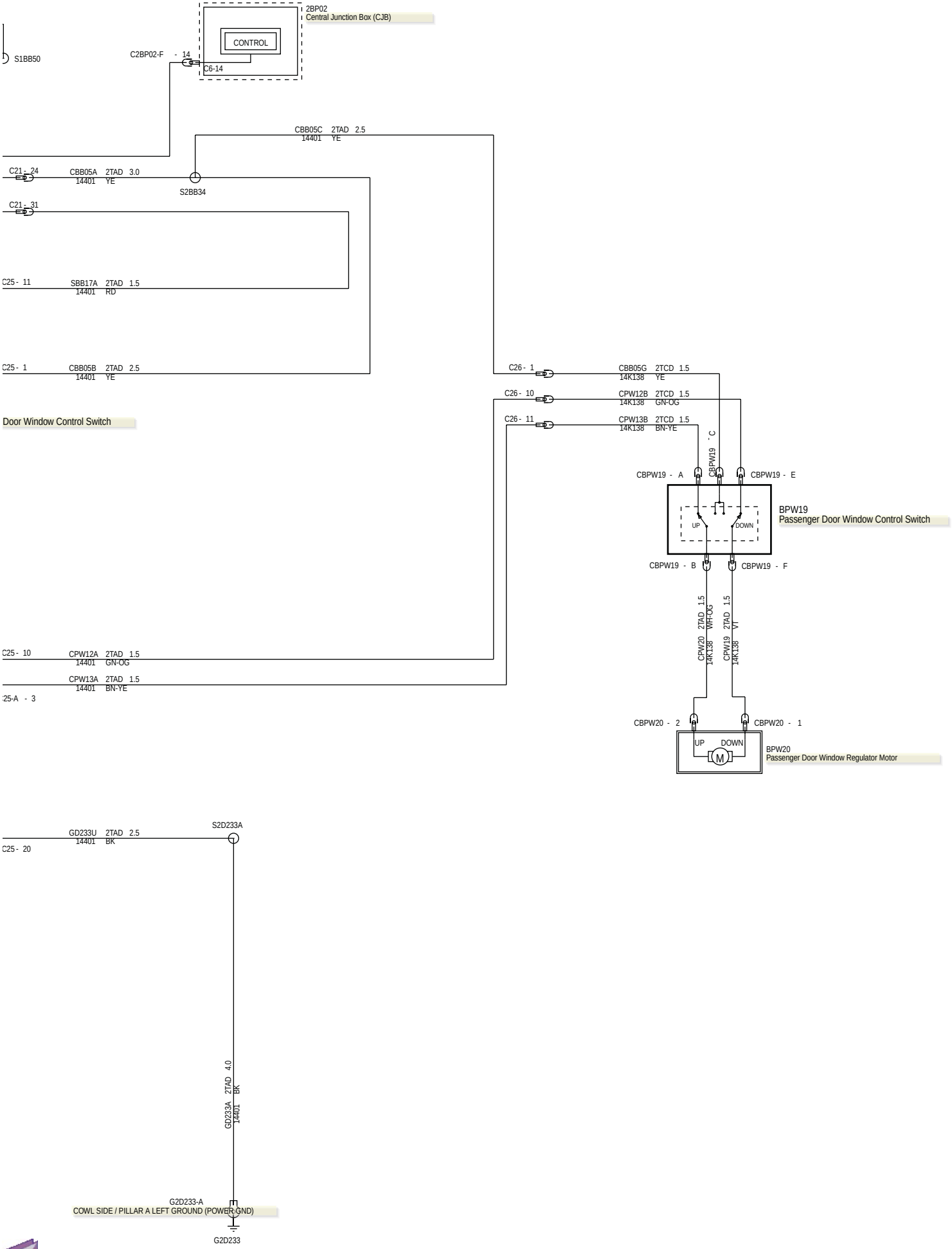

501-11-12 Power Windows—RHD 4WD/RHD RWD, Vehicles Without: Door Module

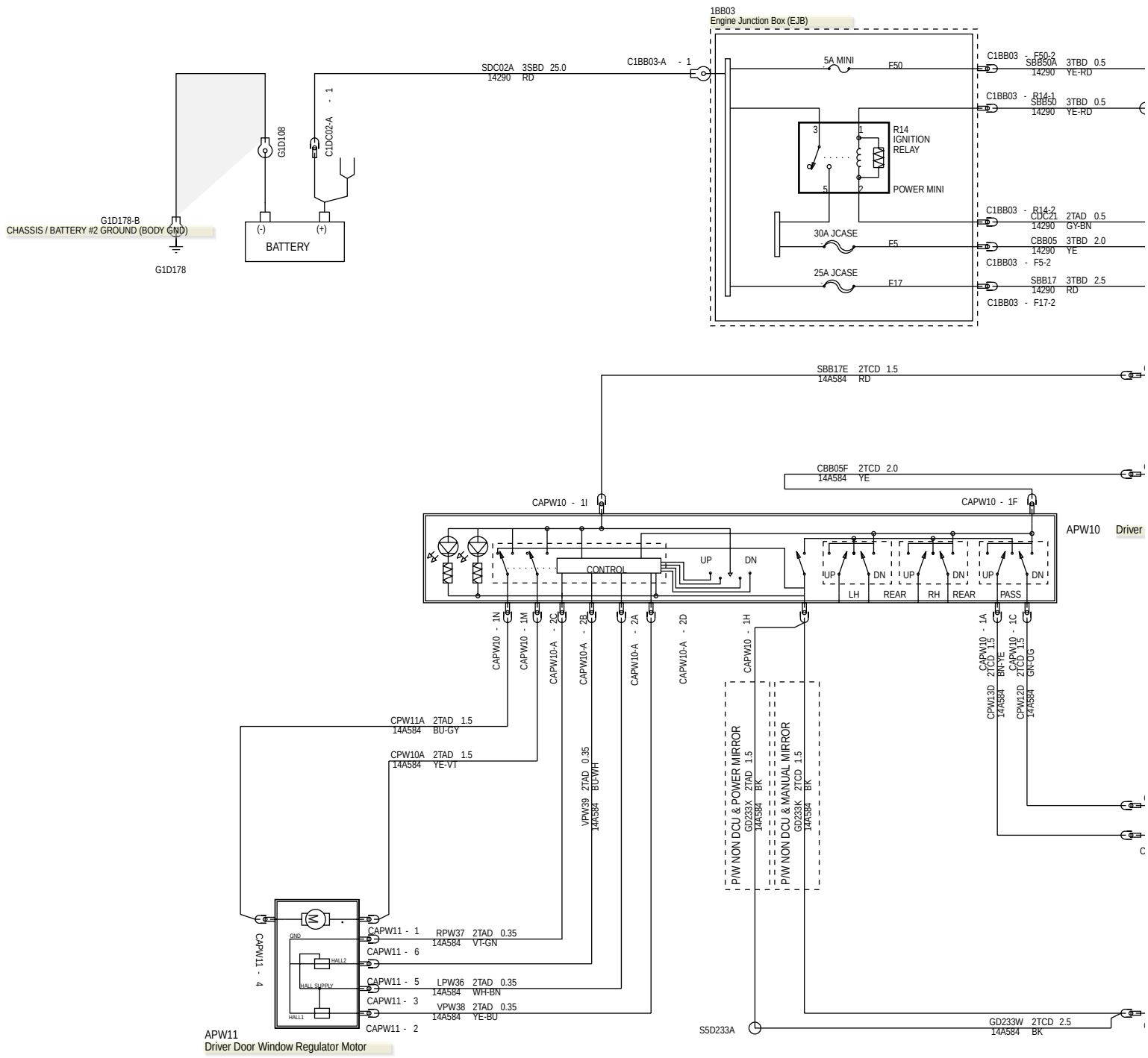

501-11-13 Power Windows—RHD 4WD/RHD RWD, Vehicles Without: Door Module

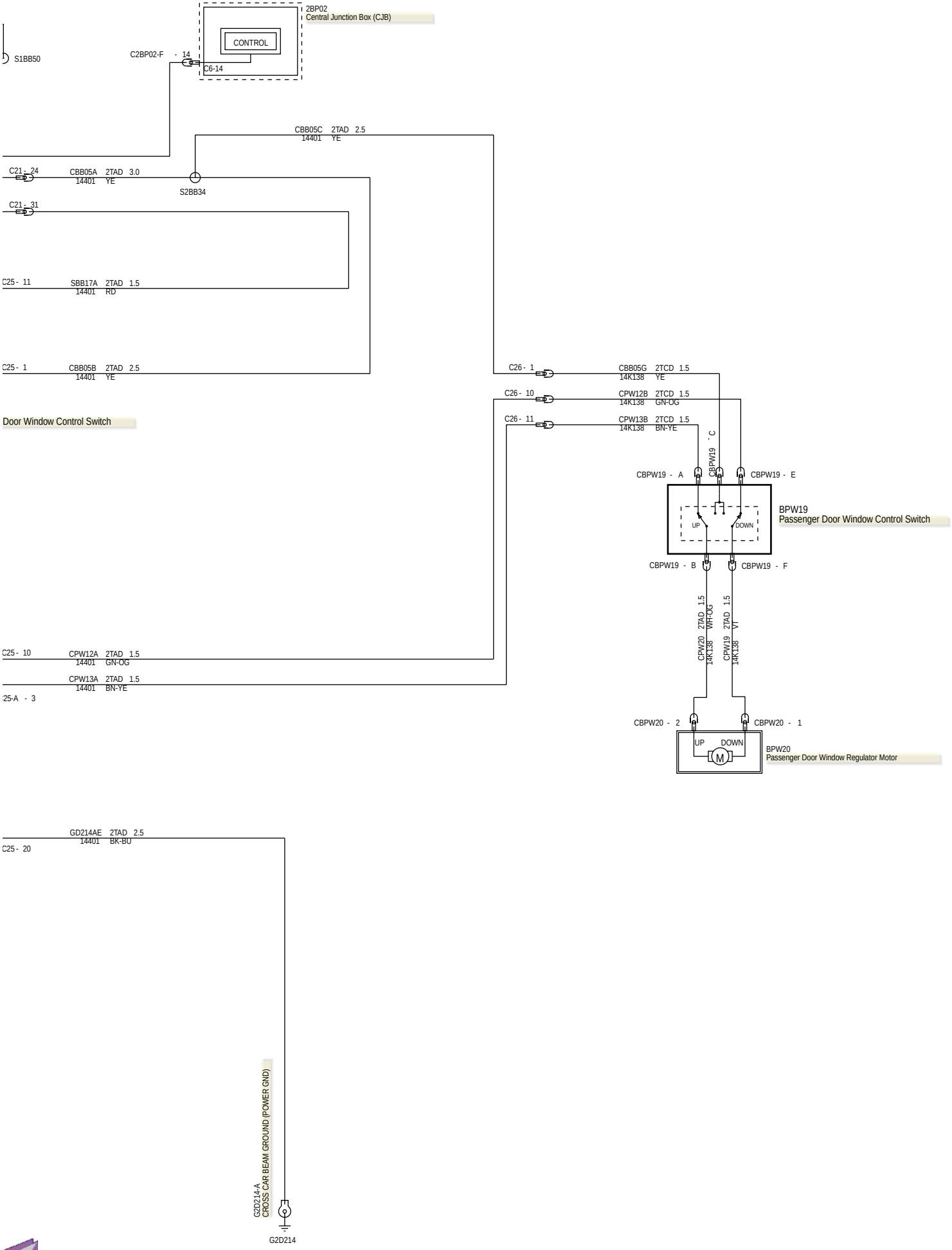

Driver Door Window Control Switch (G1405479)

IMAGE NOT AVAILABLE

Driver Door Window Control Switch—A (G1405480)

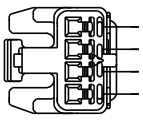

2D VPW39B BU-WH 2TAD 0.35 + VPW38 YE-BU 2TAD 0.35
2C RPW37 VT-GN 2TAD 0.35
2B VPW38B YE-BU 2TAD 0.35 + VPW39 BU-WH 2TAD 0.35
2A LPW36 WH-BN 2TAD 0.35

MNN-DL-4F
CAPW10-A
TO WINDOW SWITCH DRIVER DOOR 2
HARNESS 14A584

Driver Door Window Control Switch—B (G1405481)

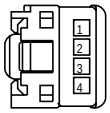

1
2
3 VPW32A GY-BU 2TAD 0.35
4 GD215M BK-GY 2TAD 0.35

1L2T-14489-GC
CAPW10-B
TO DRIVER DOOR SWITCH PACK
HARNESS 14A584

Driver Door Window Regulator Motor (G1405489)

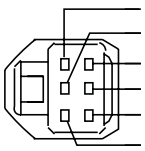

1 CPW10A YE-VT 2TAD 1.5 + CPW10 YE-VT 2TAD 1.5
2 VPW38 YE-BU 2TAD 0.35 + VPW38B YE-BU 2TAD 0.35
4 CPW11 BU-GY 2TAD 1.5 + CPW11A BU-GY 2TAD 1.5
5 VPW39 BU-WH 2TAD 0.35 + VPW39B BU-WH 2TAD 0.35
6 RPW37 VT-GN 2TAD 0.35
3 LPW36 WH-BN 2TAD 0.35

8V5T-14A464-APA
CAPW11
TO DRIVER POWER WINDOW SMART MOTOR
HARNESS 14A584

Driver Door Window Regulator Motor—A (G1405490)

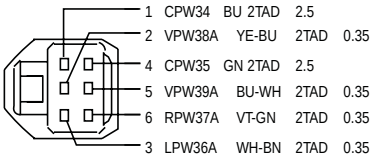

8V5T-14A464-APA

CAPW11-A
TO DRIVER WINDOW MOTOR MODULE

HARNESS 14A584

Heated Rear Window Element (G1405474)

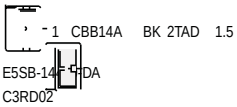

E5SB-14A464-DA

C3RD02

TO REAR DEFOGGER

HARNESS 14A005

Heated Rear Window Element—A (G1405475)

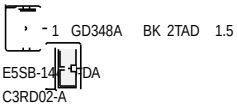

E5SB-14A464-DA

C3RD02-A

TO REAR DEFOGGER GND

HARNESS 13N850

Heated Windshield Element LH (G1404732)

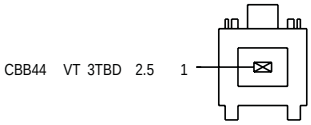

XR8T-14A624-NA

C2RD03
TO WINDSCREEN HEATING LEFT

HARNESS 14290

Heated Windshield Element RH (G1404738)

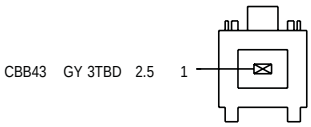

XR8T-14A624-NA

C2RD04
TO WINDSCREEN HEATING RIGHT

HARNESS 14290

Passenger Door Window Control Switch (G1405495)

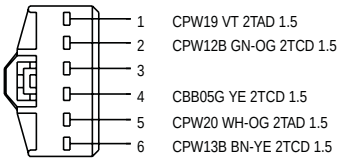

3M5T-14489-DFA

CBPW19
TO PASSENGER DOOR WINDOW SWITCH

HARNESS 14K138

Passenger Door Window Control Switch—A (G1405496)

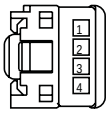

1 CPW04 YE 2TAD 0.35
2 CPW13 BN-YE 2TAD 0.35
3 CPW12 GN-OG 2TAD 0.35
4 RPW05 GN-BN 2TAD 0.35

1L2T-14489-GC

CBPW19-A
TO PASSENGER DOOR WINDOW SWITCH

HARNESS 14K138

Passenger Door Window Regulator Motor (G1405497)

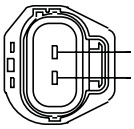

2 CPW20 WH-OG 2TAD 1.5
1 CPW19 VT 2TAD 1.5

8V5T-14A464-AMA

CBPW20
TO PASSENGER POWER WINDOW MOTOR

HARNESS 14K138

Passenger Door Window Regulator Motor—A (G1405498)

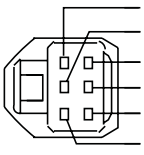

1 CPW41 GY-YE 2TAD 2.5
2 VPW45 GN-WH 2TAD 0.35
4 CPW40 WH 2TAD 2.5
5 VPW44 BU-OG 2TAD 0.35
6 RPW43 YE-GN 2TAD 0.35
3 LPW42 VT-GY 2TAD 0.35

8V5T-14A464-APA

CBPW20-A
TO PASSENGER WINDOW MOTOR MODULE

HARNESS 14K138

Rear Door Window Control Switch LH (G1404739)

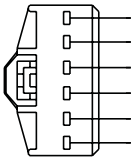

1 CPW15 YE 2TAD 1.5
2 CPW21C BN 2TCD 1.5
3
4 CBB05K YE 2TCD 1.5
5 CPW16 BU-OG 2TAD 1.5
6 CPW22C GN-VT 2TCD 1.5

3M5T-14489-DFA

C7PW21
TO REAR LEFT DOOR WINDOW SW

HARNESS 14241

Rear Door Window Control Switch LH—A (G1404740)

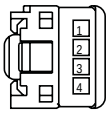

1
2
3
4 RPW07 GY-OG 2TAD 0.35

1L2T-14489-GC

C7PW21-A
TO REAR LEFT WINDOW SWITCH

HARNESS 14241

Rear Door Window Control Switch RH (G1404741)

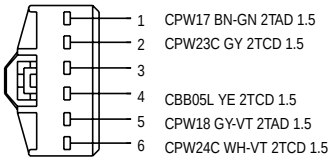

3M5T-14489-DFA

C8PW23
TO REAR RIGHT DOOR WINDOW SW

HARNESS 14240

Rear Door Window Control Switch RH—A (G1404742)

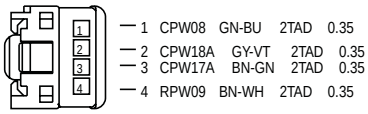

1L2T-14489-GC

C8PW23-A
TO REAR RIGHT WINDOW SWITCH

HARNESS 14240

Rear Door Window Regulator Motor LH (G1404747)

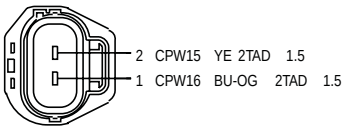

8V5T-14A464-AMA

C7PW22
TO REAR LEFT POWER WINDOW MOTOR

HARNESS 14241

Rear Door Window Regulator Motor LH—A (G1404748)

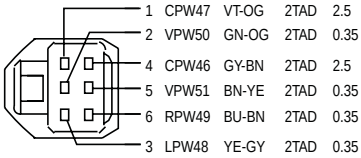

8V5T-14A464-APA

C7PW22-A
TO REAR LEFT WINDOW MOTOR MODULE

HARNESS 14241

Rear Door Window Regulator Motor RH (G1404749)

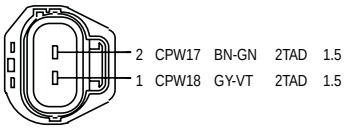

8V5T-14A464-AMA

C8PW24
TO REAR RIGHT POWER WINDOW MOTOR

HARNESS 14240

Rear Door Window Regulator Motor RH—A (G1404750)

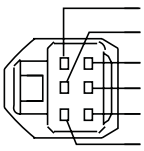

1	CPW52	VT-WH	2TAD	2.5
2	VPW57	BU-GY	2TAD	0.35
4	CPW53	YE-OG	2TAD	2.5
5	VPW56	BN-BU	2TAD	0.35
6	RPW55	GY-VT	2TAD	0.35
3	LPW54	BN-GN	2TAD	0.35

8V5T-14A464-APA

C8PW24-A
TO REAR RIGHT WINDOW MOTOR MODULE

HARNESS 14240

SECTION 501-12 Instrument Panel and Console

VEHICLE APPLICATION: 2012.0 Ranger

CONTENTS PAGE

ELECTRICAL CONNECTORS

Cigar Lighter..... 501-12-2
Front Power Outlet Socket..... 501-12-2
Luggage Compartment Power Outlet Socket..... 501-12-2
Rear Passenger Power Outlet Socket..... 501-12-2
Rear Passenger Power Outlet Socket — A..... 501-12-2

Cigar Lighter (G1404760)

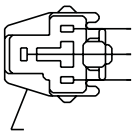

2
3 GD233P BK 2TAD 1.5
1 SBB20A GN-RD 2TAD 1.5

F8OB-14489-BC

C2DC07
TO CIGAR LIGHTER IP

HARNESS 14401

Front Power Outlet Socket (G1404761)

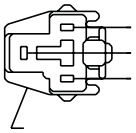

2
3 GD233R BK 2TAD 1.5
1 SBB24A VT-RD 2TAD 1.5

F8OB-14489-BC

C2DC08
TO POWER POINT IP

HARNESS 14401

Luggage Compartment Power Outlet Socket (G1404762)

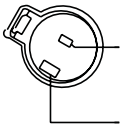

1 SBB46C BN-RD 2TAD 2.5

2 GD476G BK-WH 2TAD 2.5

YL5T-14A464-AA

C4DC10
TO POWER POINT BEDLINER

HARNESS 19B966

Rear Passenger Power Outlet Socket (G1404763)

PIN 3 => GD345N BK-BU 2.5 2TAD + GD345P BK-BU 1.5 2TAD

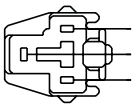

2
3 GD343H BK-VT 2TAD 2.5 + GD343M BK-VT 2TAD 1.5
1 SBB31A WH-RD 2TAD 1.5

F8OB-14489-CD

C3DC09
TO POWER POINT CONSOLE REAR

HARNESS 14A005

Rear Passenger Power Outlet Socket—A (G1404764)

PIN 3 => GD345H BK-BU 2.5 2TAD + GD345F BK-BU 1.5 2TAD

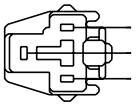

2
3 GD343E BK-VT 2TAD 1.5 + GD343F BK-VT 2TAD 2.5
1 SBB24E VT-RD 2TAD 1.5

F8OB-14489-CD

C3DC09-A
TO POWER POINT CONSOLE TOP

HARNESS 14A005

SECTION 501-14 Handles, Locks, Latches and Entry Systems

VEHICLE APPLICATION: 2012.0 Ranger

CONTENTS PAGE

ELECTRICAL SCHEMATICS

Power Door Locks — LHD 4WD/LHD RWD..... 501-14-2
Power Door Locks — RHD 4WD/RHD RWD..... 501-14-4

ELECTRICAL CONNECTORS

Central Locking Lock/Unlock Switch..... 501-14-6
Driver Door Latch..... 501-14-6
Driver Door Latch — A..... 501-14-6
Fuel Filler Door Latch Motor..... 501-14-6
Passenger Door Latch — A..... 501-14-7
Passenger Door Latch..... 501-14-7
Rear Door Latch LH..... 501-14-7
Rear Door Latch LH — A..... 501-14-7
Rear Door Latch RH..... 501-14-8
Rear Door Latch RH — A..... 501-14-8
Radio Frequency (RF) Receiver..... 501-14-8

501-14-2 Power Door Locks—LHD 4WD/LHD RWD

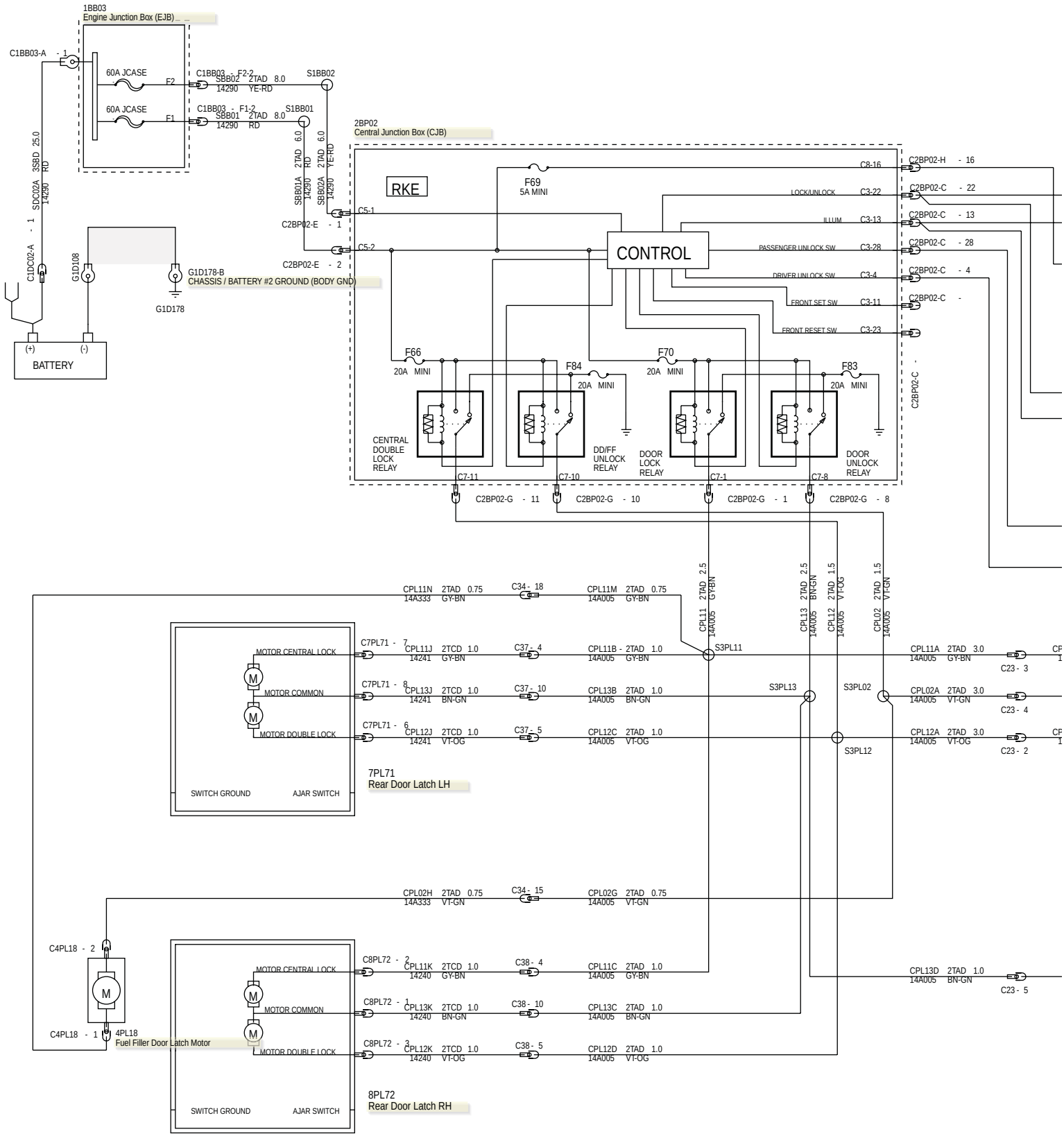

501-14-3 Power Door Locks—LHD 4WD/LHD RWD

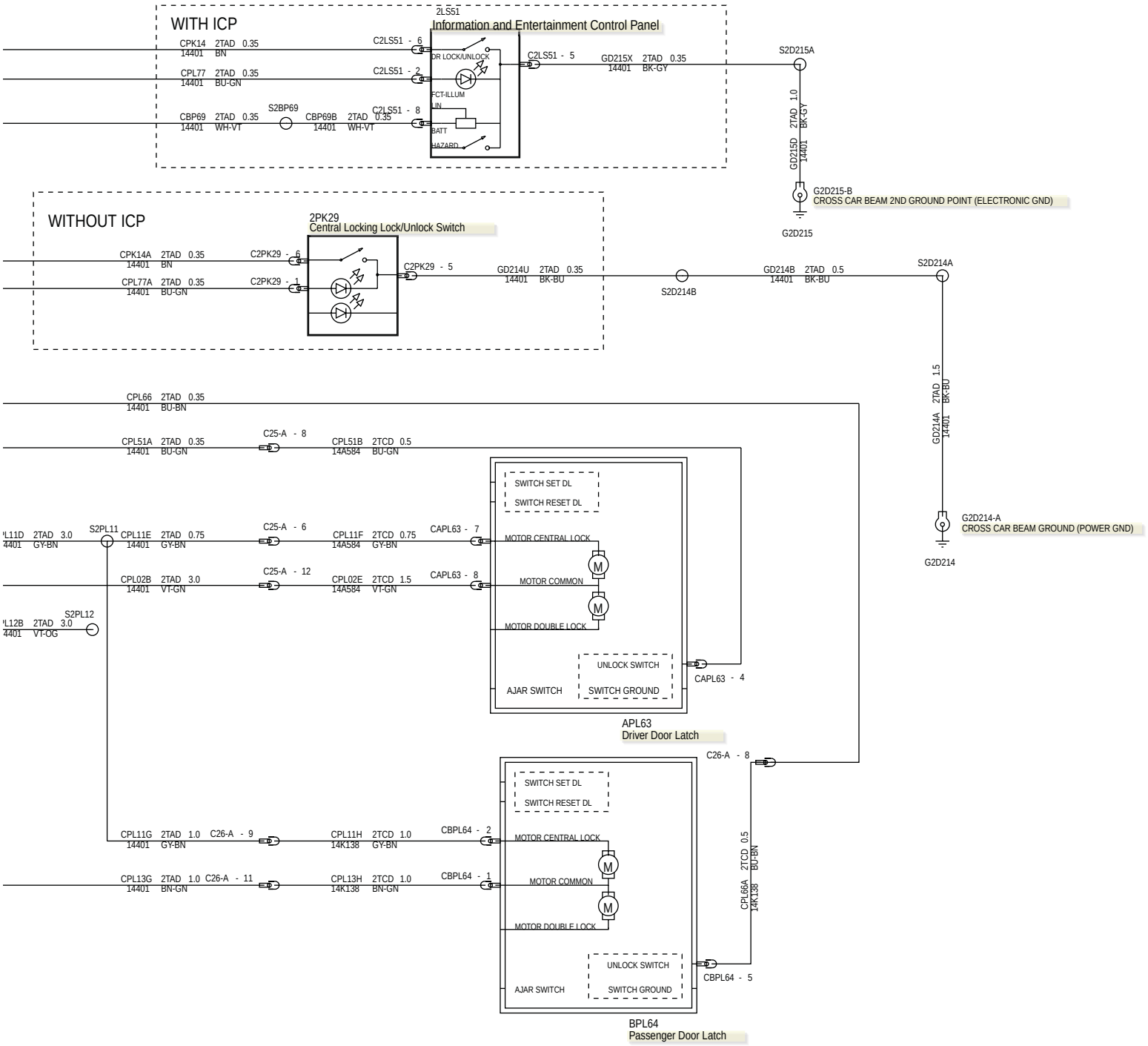

501-14-4 Power Door Locks—RHD 4WD/RHD RWD

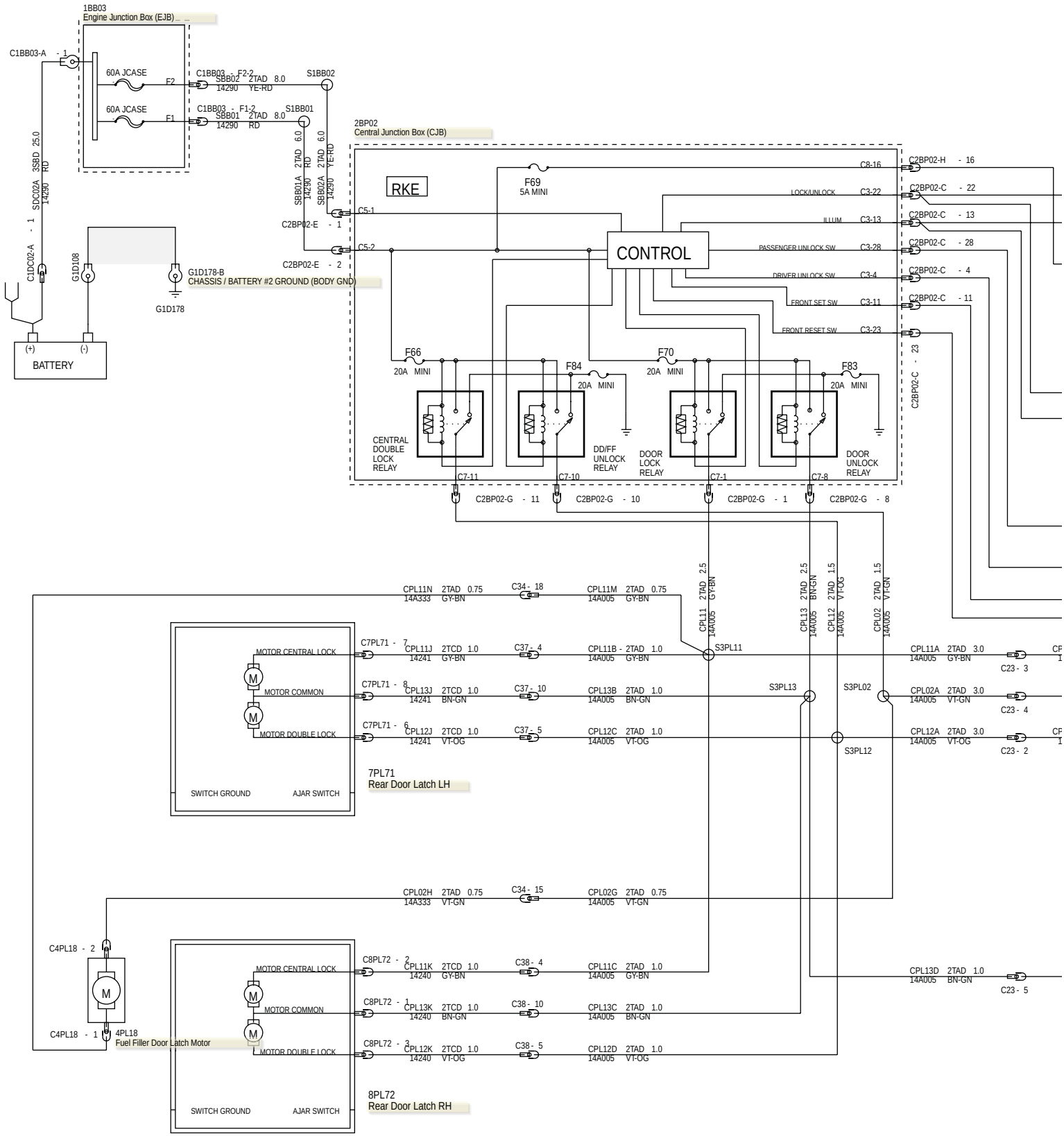

501-14-5 Power Door Locks—RHD 4WD/RHD RWD

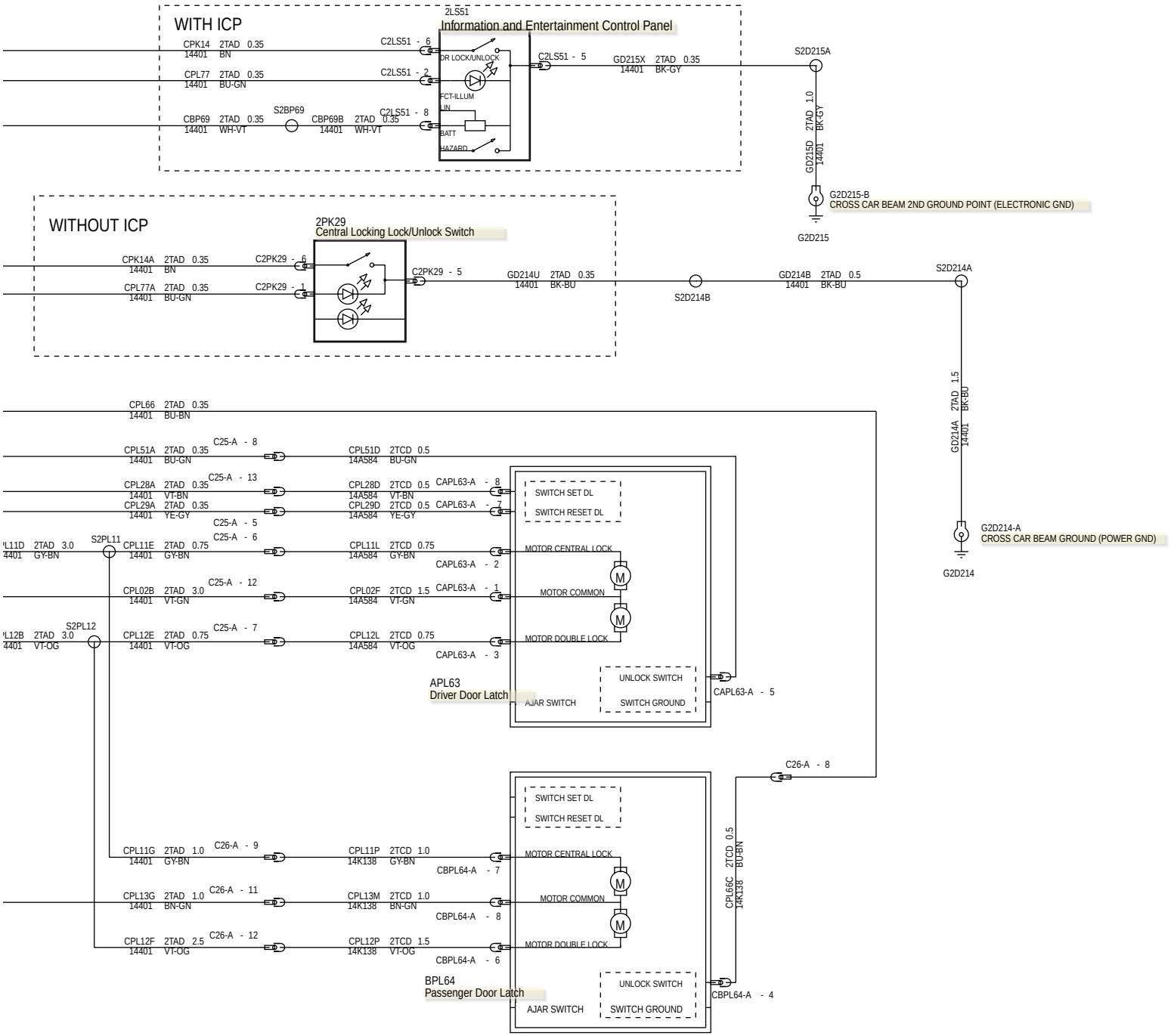

Central Locking Lock/Unlock Switch (G1414613)

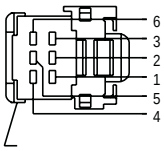

6	CPK14A	BN	2TAD	0.35
3	CLN17R	BN	2TAD	0.35
2	GD214V	BK-BU	2TAD	0.35
1	CPL77A	BU-GN	2TAD	0.35
5	GD214U	BK-BU	2TAD	0.35
4				

4S7T-14489-DA

C2PK29
TO CENTRAL LOCK SWITCH FORD

HARNESS 14401

Driver Door Latch (G1408453)

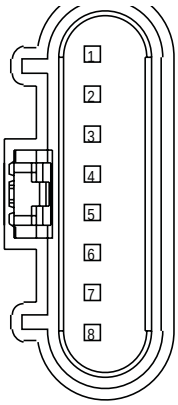

1				
2				
3	CPL26	GN-VT	2TCD	0.5
4	CPL51B	BU-GN	2TCD	0.5
5	GD215N	BK-GY	2TCD	0.5
6				
7	CPL11F	GY-BN	2TCD	0.75
8	CPL02E	VT-GN	2TCD	1.5

9U5T-14A464-VAA

CAPL63
TO FRONT LEFT DOOR LATCH

HARNESS 14A584

Driver Door Latch—A (G1405510)

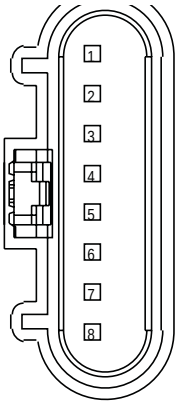

1	CPL02F	VT-GN	2TCD	1.5
2	CPL11L	GY-BN	2TCD	0.75
3	CPL12L	VT-OG	2TCD	0.75
4	GD215P	BK-GY	2TCD	0.5
5	CPL51D	BU-GN	2TCD	0.5
6	CPL31C	WH	2TCD	0.5
7	CPL29D	YE-GY	2TCD	0.5
8	CPL28D	VT-BN	2TCD	0.5

9U5T-14A464-VAA

CAPL63-A
TO FRONT RIGHT DOOR LATCH

HARNESS 14A584

Fuel Filler Door Latch Motor (G1404769)

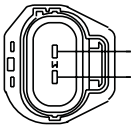

2	CPL02H	VT-GN	2TAD	0.75	+	CPL02D	VT-GN	2TAD	0.75
1	CPL11S	GY-BN	2TAD	0.75	+	CPL11N	GY-BN	2TAD	0.75

97BG-14A464-VBB

C4PL18
TO FUEL FLAP LOCKING MOTOR

HARNESS 14A333

Passenger Door Latch—A (G1405511)

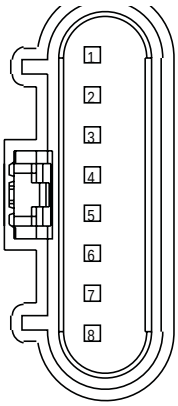

1				
2				
3	CPL26C	GN-VT	2TCD	0.5
4	CPL66C	BU-BN	2TCD	0.5
5	GD215T	BK-GY	2TCD	0.5
6	CPL12P	VT-OG	2TCD	1.5
7	CPL11P	GY-BN	2TCD	1.0
8	CPL13M	BN-GN	2TCD	1.0

9U5T-14A464-VAA

CBPL64-A
TO FRONT LEFT DOOR LATCH

HARNESS 14K138

Passenger Door Latch (G1408454)

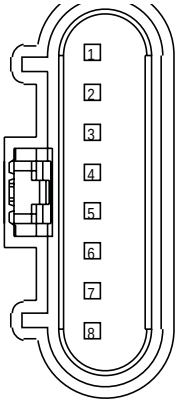

1	CPL13H	BN-GN	2TCD	1.0
2	CPL11H	GY-BN	2TCD	1.0
3				
4	GD215S	BK-GY	2TCD	0.5
5	CPL66A	BU-BN	2TCD	0.5
6	CPL31	WH	2TCD	0.5
7				
8				

9U5T-14A464-VAA

CBPL64
TO FRONT RIGHT DOOR LATCH

HARNESS 14K138

Rear Door Latch LH (G1404775)

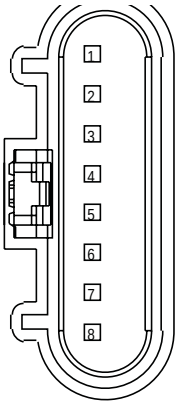

1				
2				
3	CPL36	GN	2TCD	0.5
4				
5	GD343R	BK-VT	2TAD	0.5
6	CPL12J	VT-OG	2TCD	1.0
7	CPL11J	GY-BN	2TCD	1.0
8	CPL13J	BN-GN	2TCD	1.0

9U5T-14A464-VAA

C7PL71
TO REAR LEFT DOOR LATCH (DOUBLE CAB)

HARNESS 14241

Rear Door Latch LH—A (G1404776)

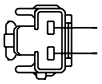

2	GD343V	BK-VT	2TAD	0.5
1	CPL36B	GN	2TCD	0.5

7T4T-14489-CA

C7PL71-A
TO REAR LEFT DOOR AJAR SW (RAP)

HARNESS 14241

Rear Door Latch RH (G1404777)

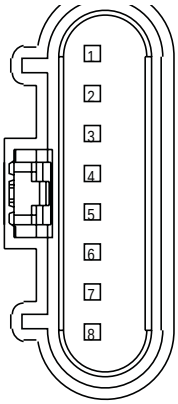

1	CPL13K	BN-GN	2TCD	1.0
2	CPL11K	GY-BN	2TCD	1.0
3	CPL12K	VT-OG	2TCD	1.0
4	GD343S	BK-VT	2TAD	0.5
5				
6	CPL39	YE	2TCD	0.5
7				
8				

9U5T-14A464-VAA

C8PL72
TO REAR RIGHT DOOR LATCH (DOUBLE CAB)

HARNESS 14240

Rear Door Latch RH—A (G1404778)

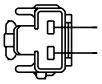

2	GD343U	BK-VT	2TAD	0.5
1	CPL39B	YE	2TCD	0.5

7T4T-14489-CA

C8PL72-A
TO REAR RIGHT DOOR AJAR SW (RAP)

HARNESS 14240

Radio Frequency (RF) Receiver (G1406665)

IMAGE NOT AVAILABLE

SECTION 501-16 Wipers and Washers

VEHICLE APPLICATION: 2012.0 Ranger

CONTENTS PAGE

ELECTRICAL SCHEMATICS

Wipers and Washers — LHD 4WD/LHD RWD..... 501-16-2
Wipers and Washers — RHD 4WD/RHD RWD..... 501-16-4

ELECTRICAL CONNECTORS

Rain Sensor..... 501-16-6
Windshield Washer Pump..... 501-16-6
Windshield Wiper Motor..... 501-16-6
Windshield Wiper/Washer Switch..... 501-16-6
Windshield Wiper/Washer Switch — A..... 501-16-7

501-16-2 Wipers and Washers—LHD 4WD/LHD RWD

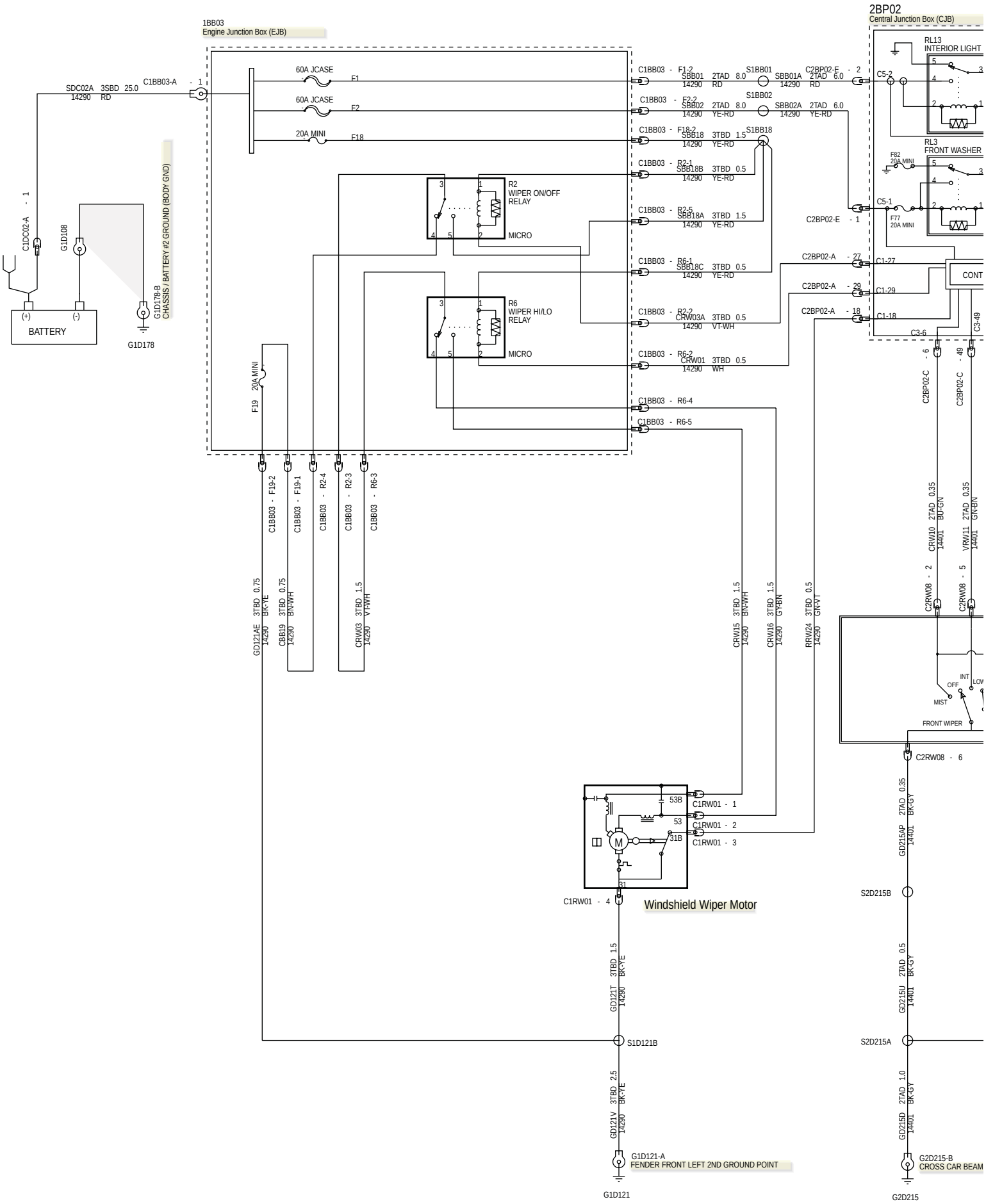

501-16-3 Wipers and Washers—LHD 4WD/LHD RWD

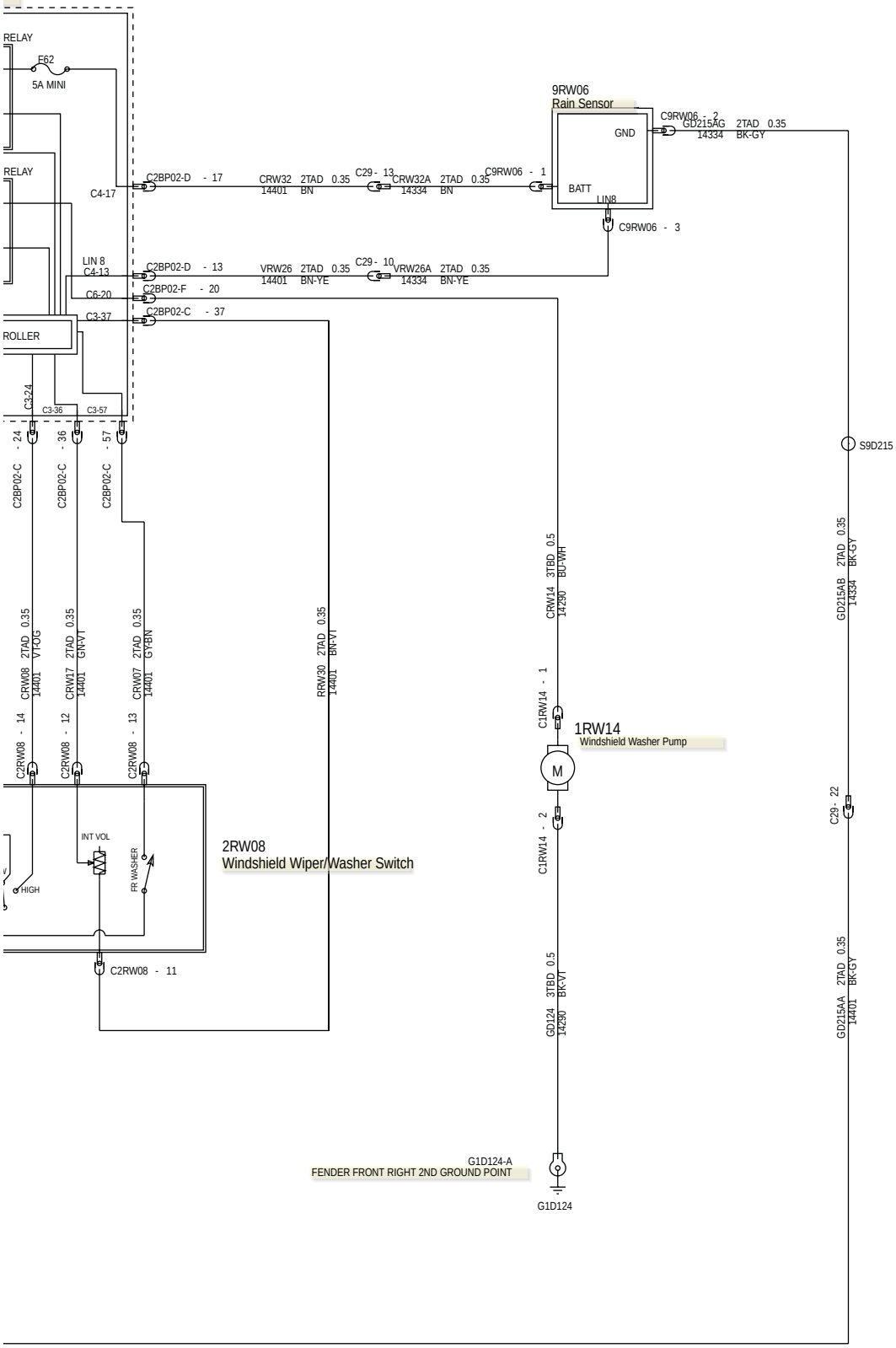

2ND GROUND POINT (ELECTRONIC GND)

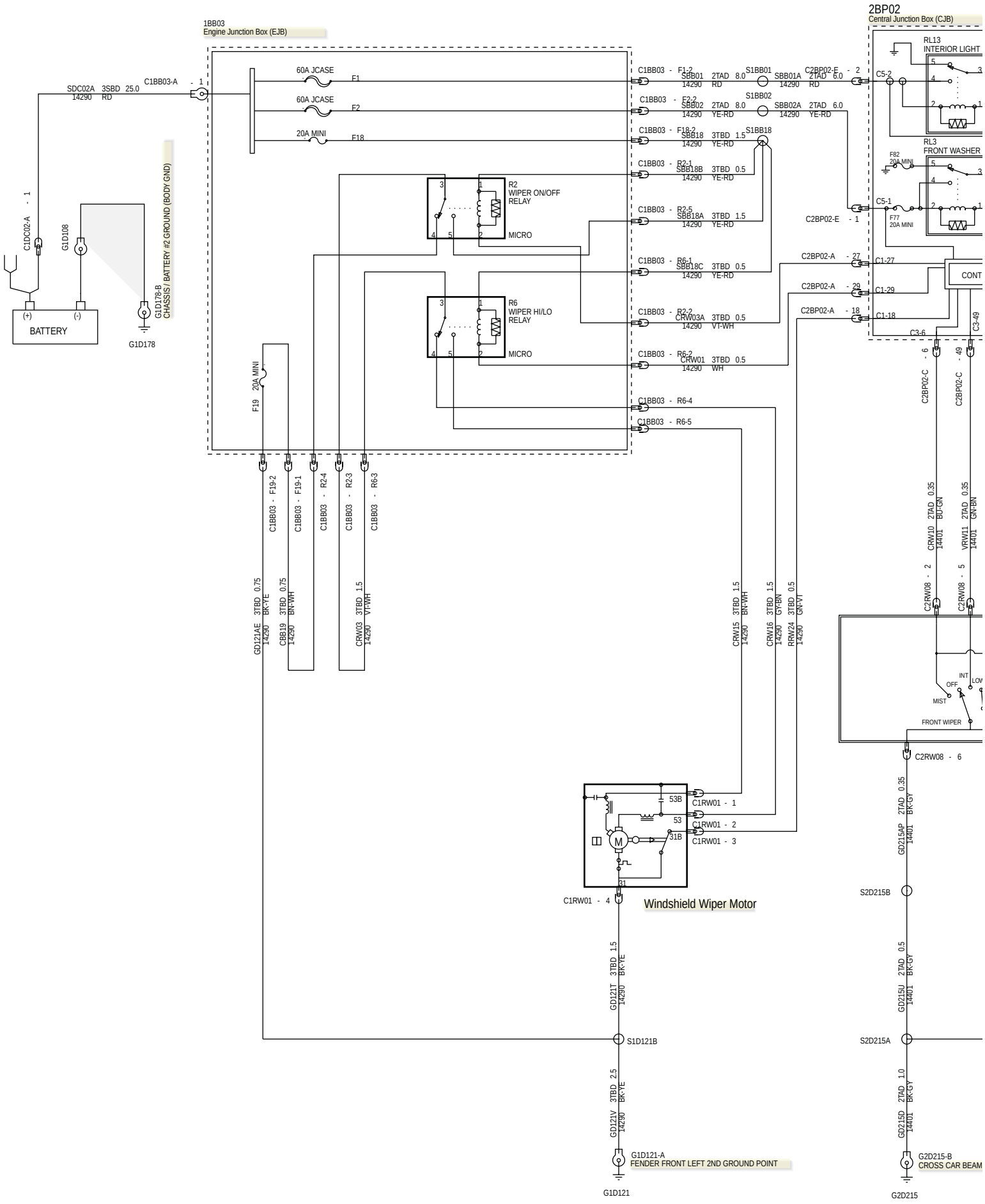
1BB03
Engine Junction Box (EJB)
2BP02
Central Junction Box (CJB)
60A JCASE
F1
60A JCASE
F2
20A MINI
F18
20A MINI
F19
R2
WIPER ON/OFF
RELAY
MICRO
R6
WIPER HI/LO
RELAY
MICRO
BATTERY
(+)
(-)
G1D178
G1D108
C1DC02-A - 1
G1D178-B
CHASSIS/ BATTERY #2 GROUND (BODY GND)
SDC02A 3SBD 25.0
14290 RD
C1BB03-A - 1
C1BB03 - F1-2
SBB01 2TAD 8.0
14290 RD
S1BB01
SBB01A 2TAD 6.0
14290 RD
C2BP02-E - 2
C1BB03 - F2-2
SBB02 2TAD 8.0
14290 YE-RD
S1BB02
SBB02A 2TAD 6.0
14290 YE-RD
C1BB03 - F18-2
SBB18 3TBD 1.5
14290 YE-RD
S1BB18
C1BB03 - R2-1
SBB18B 3TBD 0.5
14290 YE-RD
C1BB03 - R2-5
SBB18A 3TBD 1.5
14290 YE-RD
C2BP02-E - 1
C1BB03 - R6-1
SBB18C 3TBD 0.5
14290 YE-RD
C2BP02-A - 27
C2BP02-A - 29
C2BP02-A - 18
C1BB03 - R2-2
CRW03A 3TBD 0.5
14290 VT-WH
C1BB03 - R6-2
CRW01 3TBD 0.5
14290 WH
C1BB03 - R6-4
C1BB03 - R6-5
RL13
INTERIOR LIGHT
RL3
FRONT WASHER
F82
20A MINI
F77
20A MINI
C5-2
C5-1
C1-27
C1-29
C1-18
C3-6
C3-49
CONT
C2BP02-C - 6
C2BP02-C - 49
C1BB03 - F19-2
C1BB03 - F19-1
C1BB03 - R2-4
C1BB03 - R2-3
C1BB03 - R6-3
GD121AE 3TBD 0.75
14290 BK-YE
CBB19 3TBD 0.75
14290 BN-WH
CRW03 3TBD 1.5
14290 VT-WH
CRW15 3TBD 1.5
14290 BN-WH
CRW16 3TBD 1.5
14290 GY-BN
RRW24 3TBD 0.5
14290 GN-VT
CRW10 2TAD 0.35
14401 BU-GN
VRW11 2TAD 0.35
14401 GN-BN
C2RW08 - 2
C2RW08 - 5
INT
OFF
MIST
FRONT WIPER
C2RW08 - 6
53B
53
31B
31
M
C1RW01 - 1
C1RW01 - 2
C1RW01 - 3
C1RW01 - 4
Windshield Wiper Motor
GD2215AP 2TAD 0.35
14401 BK-GY
S2D215B
GD121T 3TBD 1.5
14290 BK-YE
GD215U 2TAD 0.5
14401 BK-GY
S1D121B
S2D215A
GD121V 3TBD 2.5
14290 BK-YE
GD215D 2TAD 1.0
14401 BK-GY
G1D121-A
FENDER FRONT LEFT 2ND GROUND POINT
G1D121
G2D215-B
CROSS CAR BEAM
G2D215

501-16-5 Wipers and Washers—RHD 4WD/RHD RWD

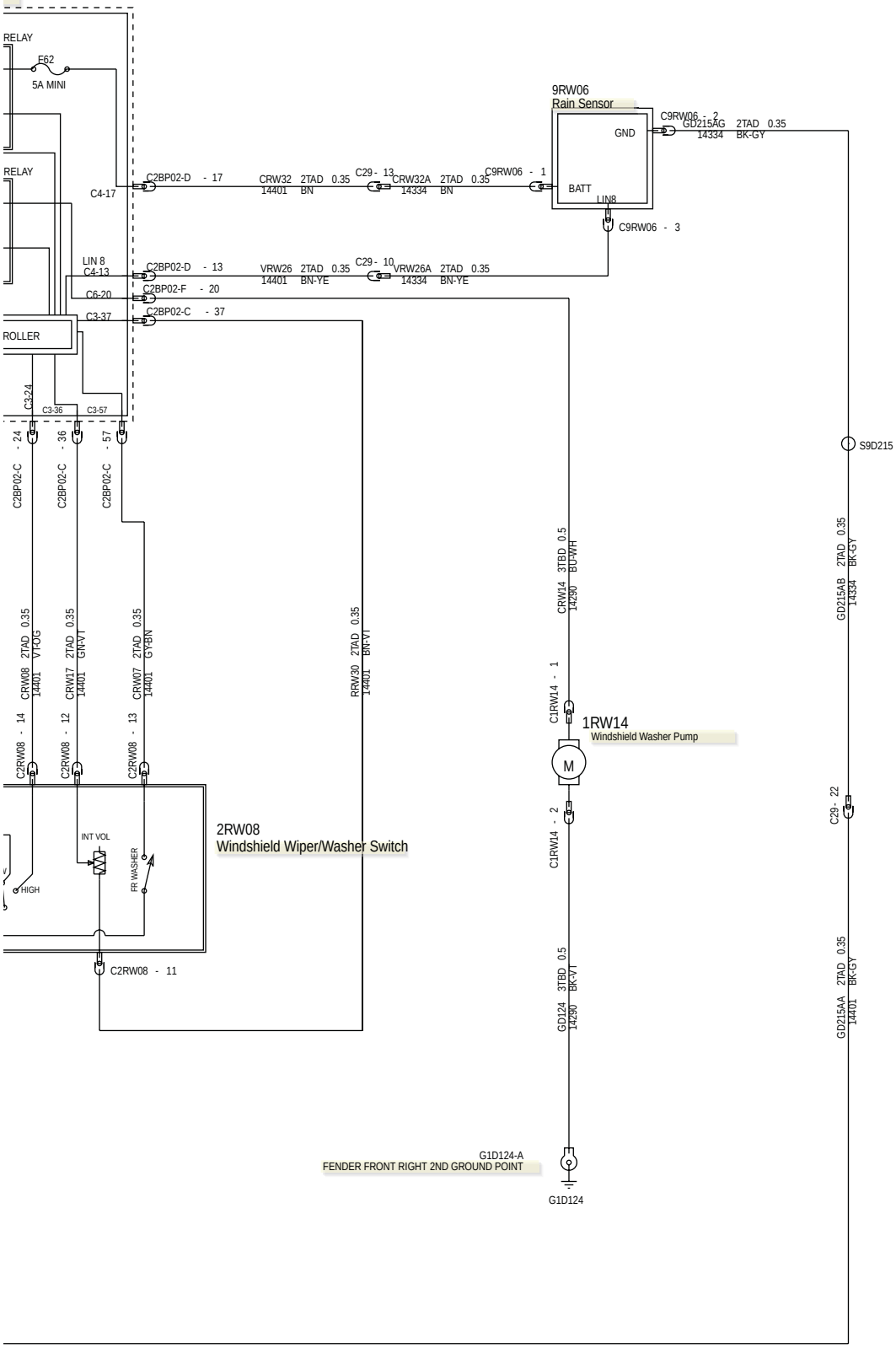

2ND GROUND POINT (ELECTRONIC GND)

Rain Sensor (G1404788)

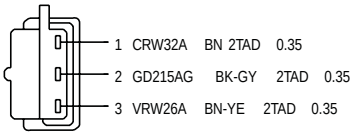

1X4T-14489-RA

C9RW06
TO RAIN SENSOR

HARNESS 14334

Windshield Washer Pump (G1404789)

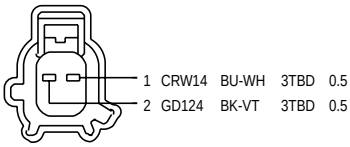

1L2T-14A464-AA

C1RW14
TO WASHER MOTOR

HARNESS 14290

Windshield Wiper Motor (G1404790)

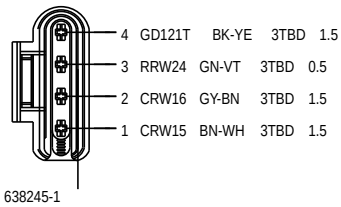

638245-1

C1RW01
TO WIPER MOTOR
HARNESS 14290

Windshield Wiper/Washer Switch (G1404791)

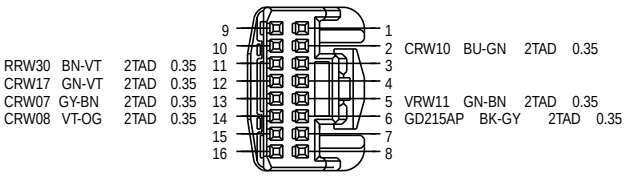

C2RW08
MQTZ-DL-16F
TO STALK SWITCHES WIPER
HARNESS 14401

Windshield Wiper/Washer Switch—A (G1404792)

CRW10A	BU-GN	2TAD	0.35	6		12			
				5		11	RRW30A	BN-VT	2TAD 0.35
				4		10	CRW17A	GN-VT	2TAD 0.35
VRW11A	GN-BN	2TAD	0.35	3		9	CRW07A	GY-BN	2TAD 0.35
GD215AN	BK-GY	2TAD	0.35	2		8	CRW08A	VT-OG	2TAD 0.35
				1		7			

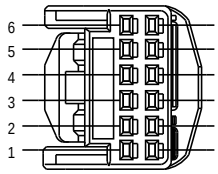

C2RW08-A
MQTZ-DL-12F
TO STALK SWITCHES WIPER (RHD W/O RFOG)
HARNESS 14401

SECTION 501-20A Safety Belt System

VEHICLE APPLICATION: 2012.0 Ranger

CONTENTS PAGE

ELECTRICAL CONNECTORS

Driver Safety Belt Pretensioner..... 501-20A-2
Passenger Safety Belt Pretensioner..... 501-20A-2
Rear Safety Belt Retractor and Pretensioner..... 501-20A-2
Rear Safety Belt Retractor and Pretensioner..... 501-20A-2

Driver Safety Belt Pretensioner (G1404795)

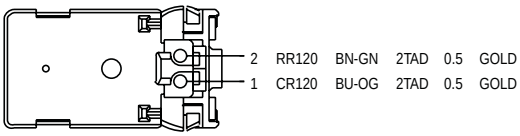

6E5T-14489-AA

C3R120
TO DRIVER BELT PRETENSIONER

HARNESS 14A005

Passenger Safety Belt Pretensioner (G1404796)

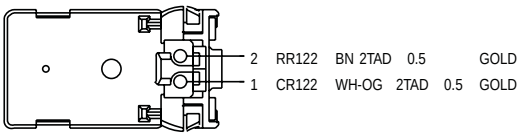

6E5T-14489-AA

C3R122
TO PASSENGER BELT PRETENSIONER

HARNESS 14A005

Rear Safety Belt Retractor and Pretensioner (G1425540)

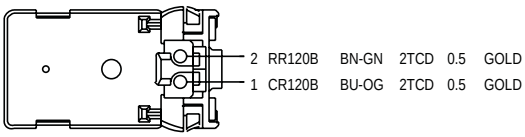

6E5T-14489-AA

C3R123
TO LEFT BELT PRETENSIONER LHD=DRIVER SIDE / RHD=PASSENGER SIDE

HARNESS 14241

Rear Safety Belt Retractor and Pretensioner (G1425541)

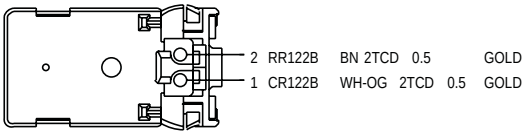

6E5T-14489-AA

C3R125
TO RIGHT BELT PRETENSIONER LHD=PASSENGER SIDE / RHD=DRIVER SIDE

HARNESS 14240

SECTION 501-20B Supplemental Restraint System

VEHICLE APPLICATION: 2012.0 Ranger

CONTENTS PAGE

ELECTRICAL SCHEMATICS

Air Bags and Safety Belt Pretensioners — Single Cab, LHD 4WD/LHD RWD, Vehicles With: Passenger Air Bag Deactivation Switch..... 501-20B-3
Air Bags and Safety Belt Pretensioners — Single Cab, LHD 4WD/LHD RWD, Vehicles Without: Passenger Air Bag Deactivation Switch..... 501-20B-5
Air Bags and Safety Belt Pretensioners — Double Cab, LHD 4WD/LHD RWD, Vehicles With: Passenger Air Bag Deactivation Switch..... 501-20B-7
Air Bags and Safety Belt Pretensioners — Double Cab, LHD 4WD/LHD RWD, Vehicles Without: Passenger Air Bag Deactivation Switch..... 501-20B-9
Air Bags and Safety Belt Pretensioners — Super Cab, LHD 4WD/LHD RWD, Vehicles With: Passenger Air Bag Deactivation Switch..... 501-20B-11
Air Bags and Safety Belt Pretensioners — Super Cab, LHD 4WD/LHD RWD, Vehicles Without: Passenger Air Bag Deactivation Switch..... 501-20B-13
Air Bags and Safety Belt Pretensioners — Single Cab, RHD 4WD/RHD RWD, Vehicles With: Passenger Air Bag Deactivation Switch..... 501-20B-15
Air Bags and Safety Belt Pretensioners — Single Cab, RHD 4WD/RHD RWD, Vehicles Without: Passenger Air Bag Deactivation Switch..... 501-20B-17
Air Bags and Safety Belt Pretensioners — Double Cab, RHD 4WD/RHD RWD, Vehicles With: Passenger Air Bag Deactivation Switch..... 501-20B-19
Air Bags and Safety Belt Pretensioners — Double Cab, RHD 4WD/RHD RWD, Vehicles Without: Passenger Air Bag Deactivation Switch..... 501-20B-21
Air Bags and Safety Belt Pretensioners — Super Cab, RHD 4WD/RHD RWD, Vehicles With: Passenger Air Bag Deactivation Switch..... 501-20B-23
Air Bags and Safety Belt Pretensioners — Super Cab, RHD 4WD/RHD RWD, Vehicles Without: Passenger Air Bag Deactivation Switch..... 501-20B-25

ELECTRICAL CONNECTORS

Clockspring..... 501-20B-27
Clockspring — A..... 501-20B-27
Driver Door Side Impact Sensor..... 501-20B-27
Driver Lower Air Bag Module..... 501-20B-27
Driver Side Air Curtain Module..... 501-20B-28
Front Impact Severity Sensor..... 501-20B-28
Passenger Air Bag Deactivation (PAD) Indicator..... 501-20B-28
Passenger Air Bag Deactivation (PAD) Indicator — A..... 501-20B-28
Passenger Air Bag Deactivation (PAD) Switch..... 501-20B-29
Passenger Air Bag Module..... 501-20B-29
Passenger Side Air Curtain Module..... 501-20B-29
Passenger Door Side Impact Sensor..... 501-20B-29
Restraints Control Module (RCM)..... 501-20B-30
Restraints Control Module (RCM) — A..... 501-20B-30
Side Impact Sensor LH..... 501-20B-30

PAGE 2 OF 2

Side Impact Sensor RH..... 501-20B-30

501-20B-3 Air Bags and Safety Belt Pretensioners—Single Cab, LHD 4WD/LHD RWD, Vehicles With: Passenger Air Bag Deactivation Switch

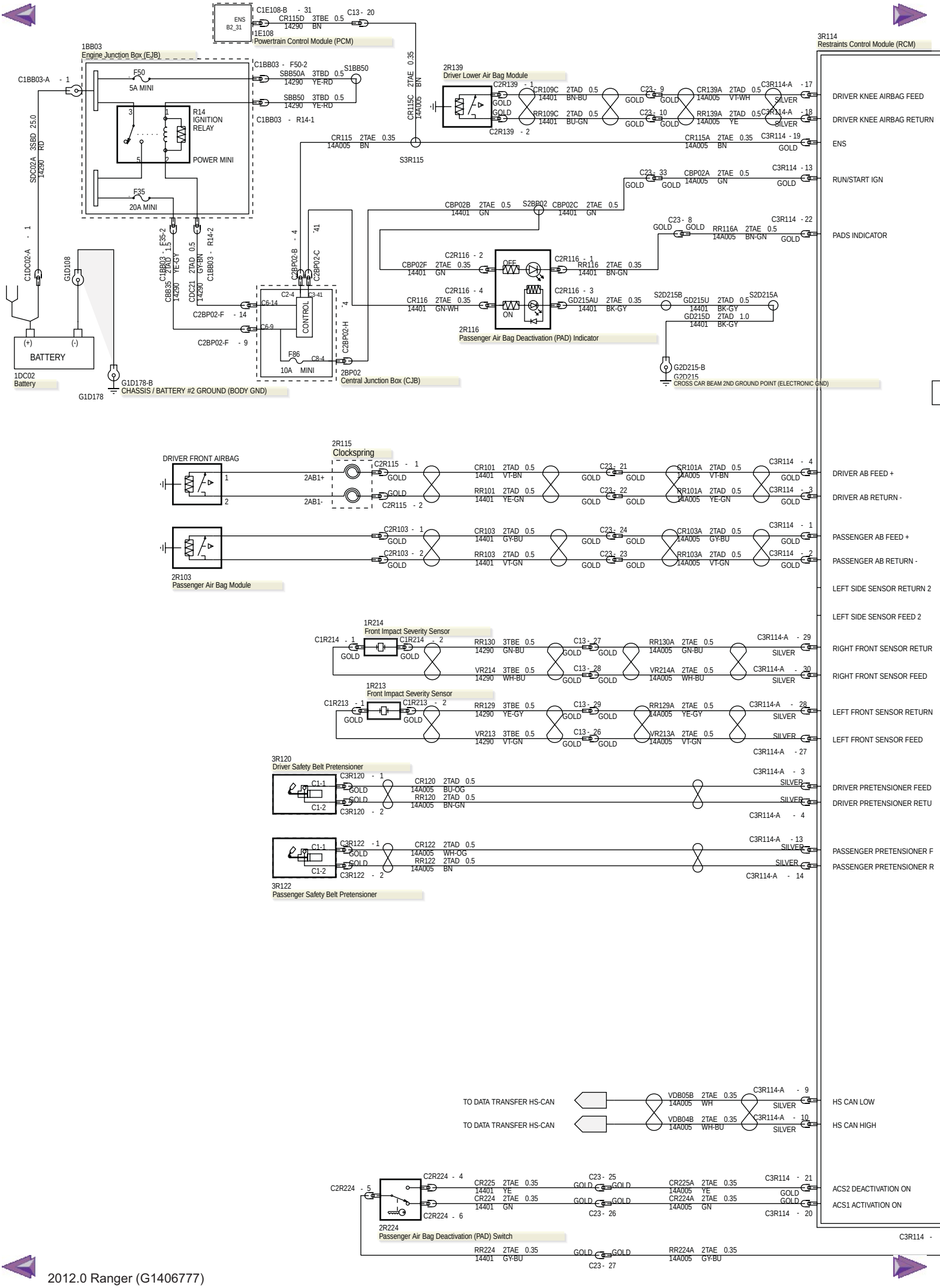

501-20B-4 Air Bags and Safety Belt Pretensioners—Single Cab, LHD 4WD/LHD RWD, Vehicles With: Passenger Air Bag Deactivation Switch

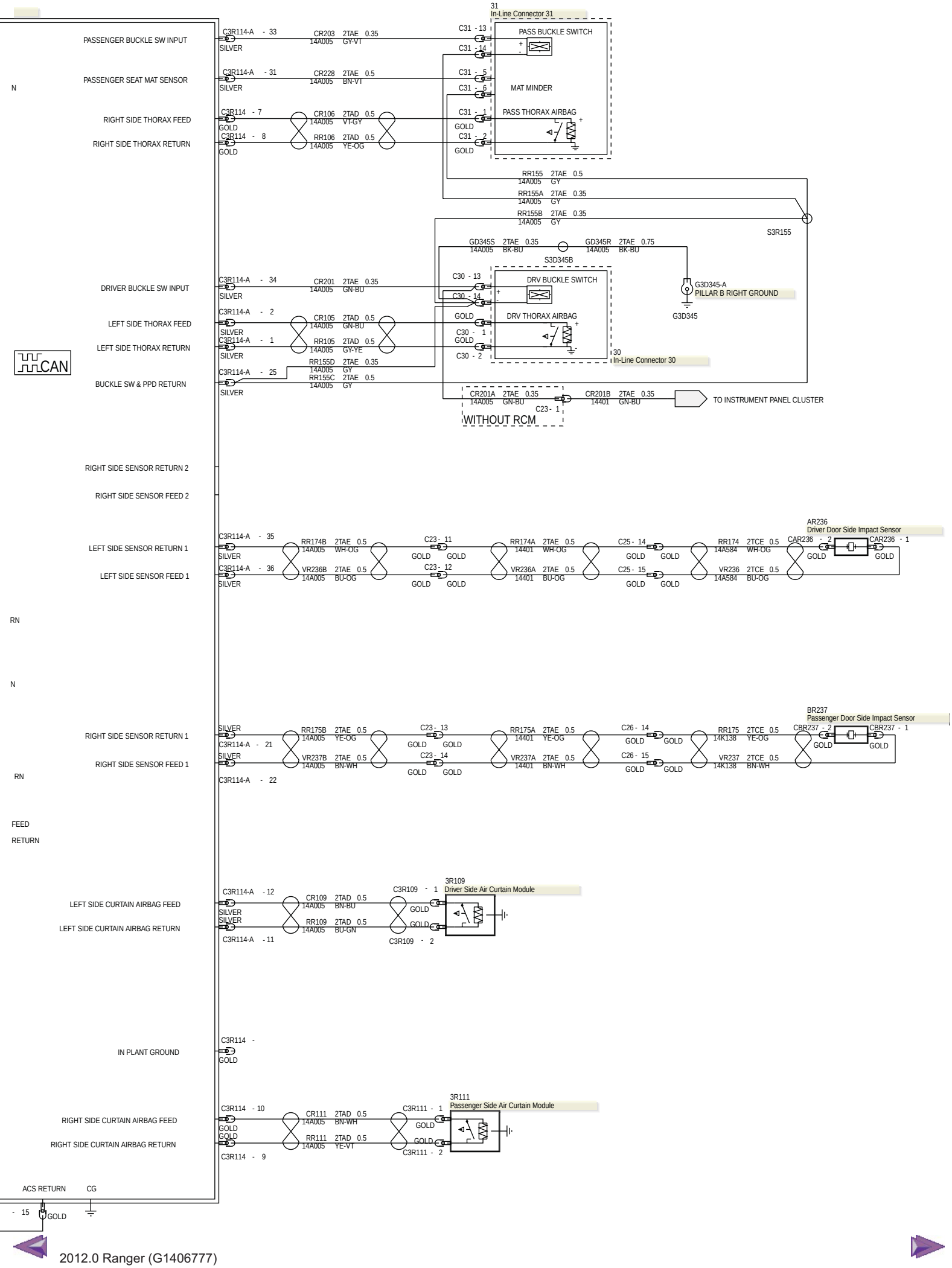

501-20B-5 Air Bags and Safety Belt Pretensioners—Single Cab, LHD 4WD/LHD RWD, Vehicles Without: Passenger Air Bag Deactivation Switch

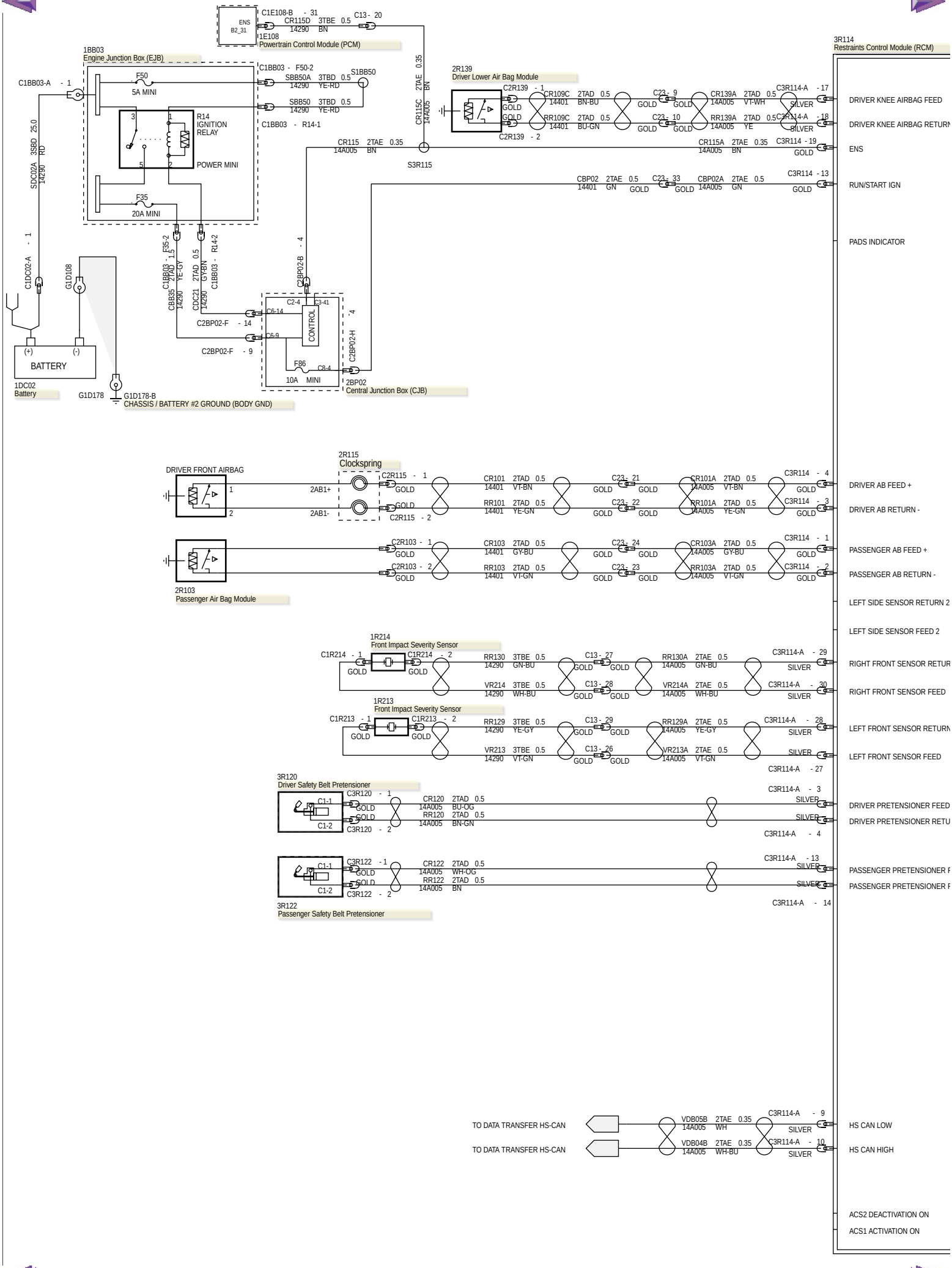

501-20B-6 Air Bags and Safety Belt Pretensioners—Single Cab, LHD 4WD/LHD RWD, Vehicles Without: Passenger Air Bag Deactivation Switch

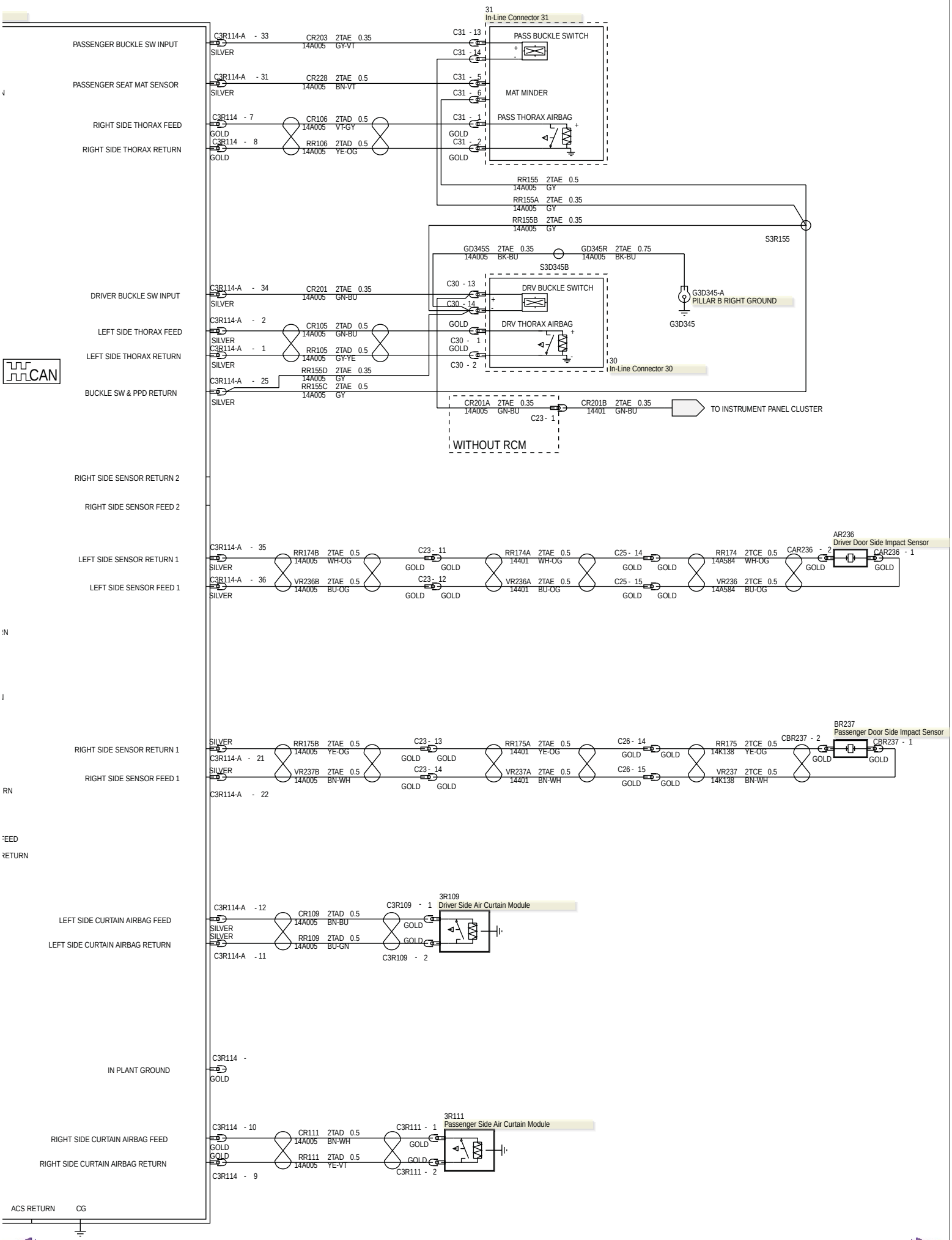

501-20B-7 Air Bags and Safety Belt Pretensioners—Double Cab, LHD 4WD/LHD RWD, Vehicles With: Passenger Air Bag Deactivation Switch

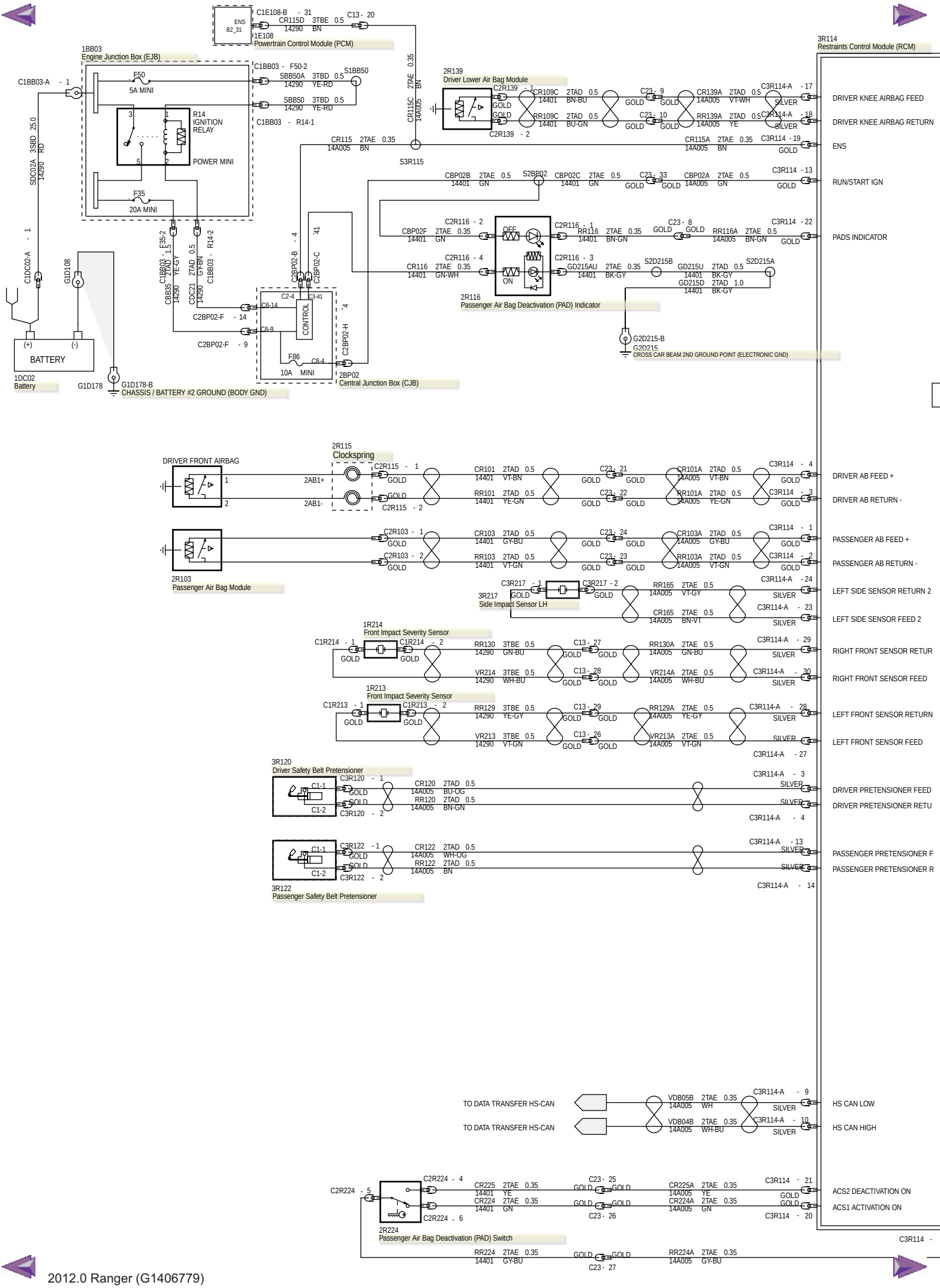

501-20B-8 Air Bags and Safety Belt Pretensioners—Double Cab, LHD 4WD/LHD RWD, Vehicles With: Passenger Air Bag Deactivation Switch

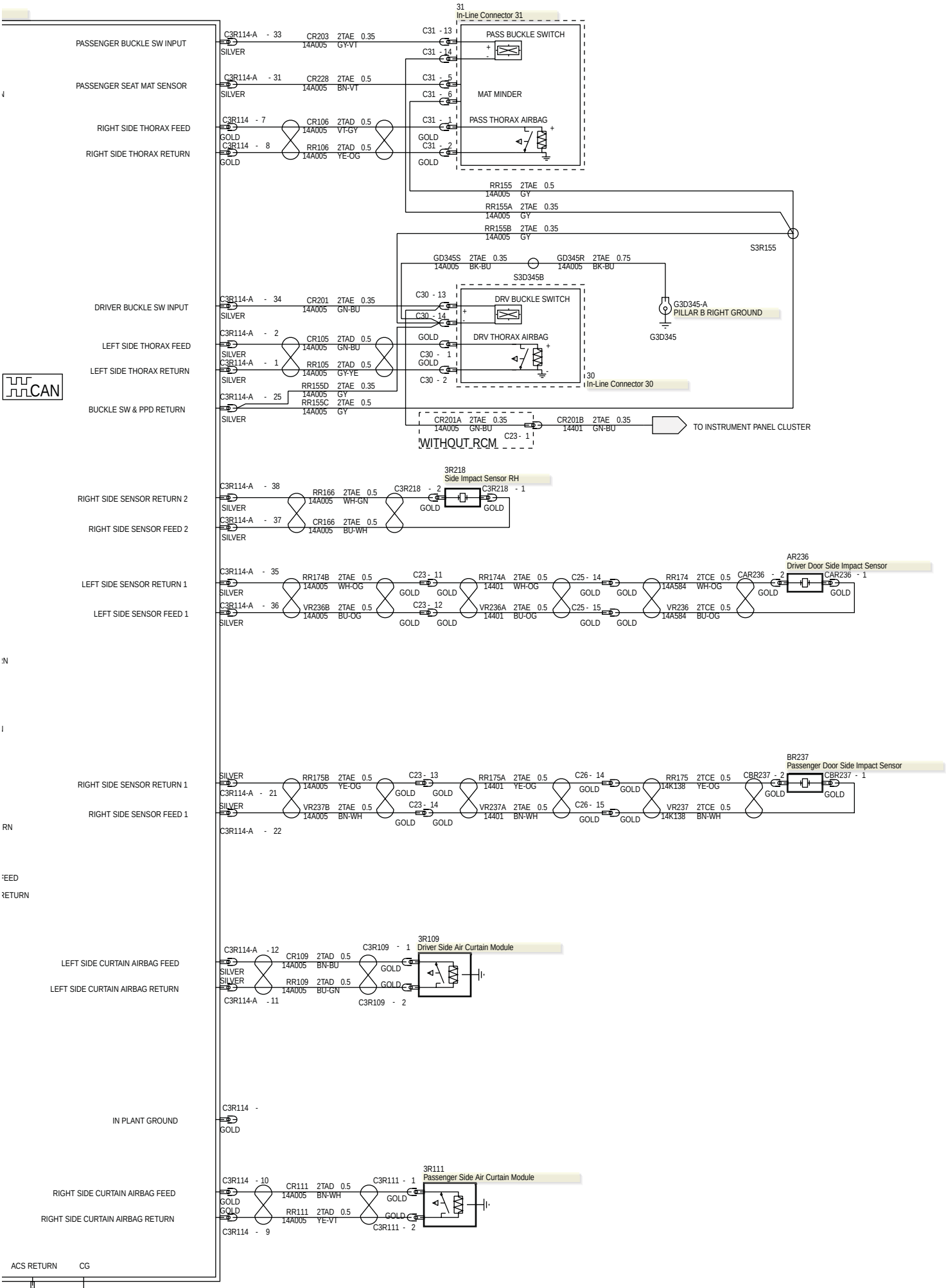

501-20B-9 Air Bags and Safety Belt Pretensioners—Double Cab, LHD 4WD/LHD RWD, Vehicles Without: Passenger Air Bag Deactivation Switch

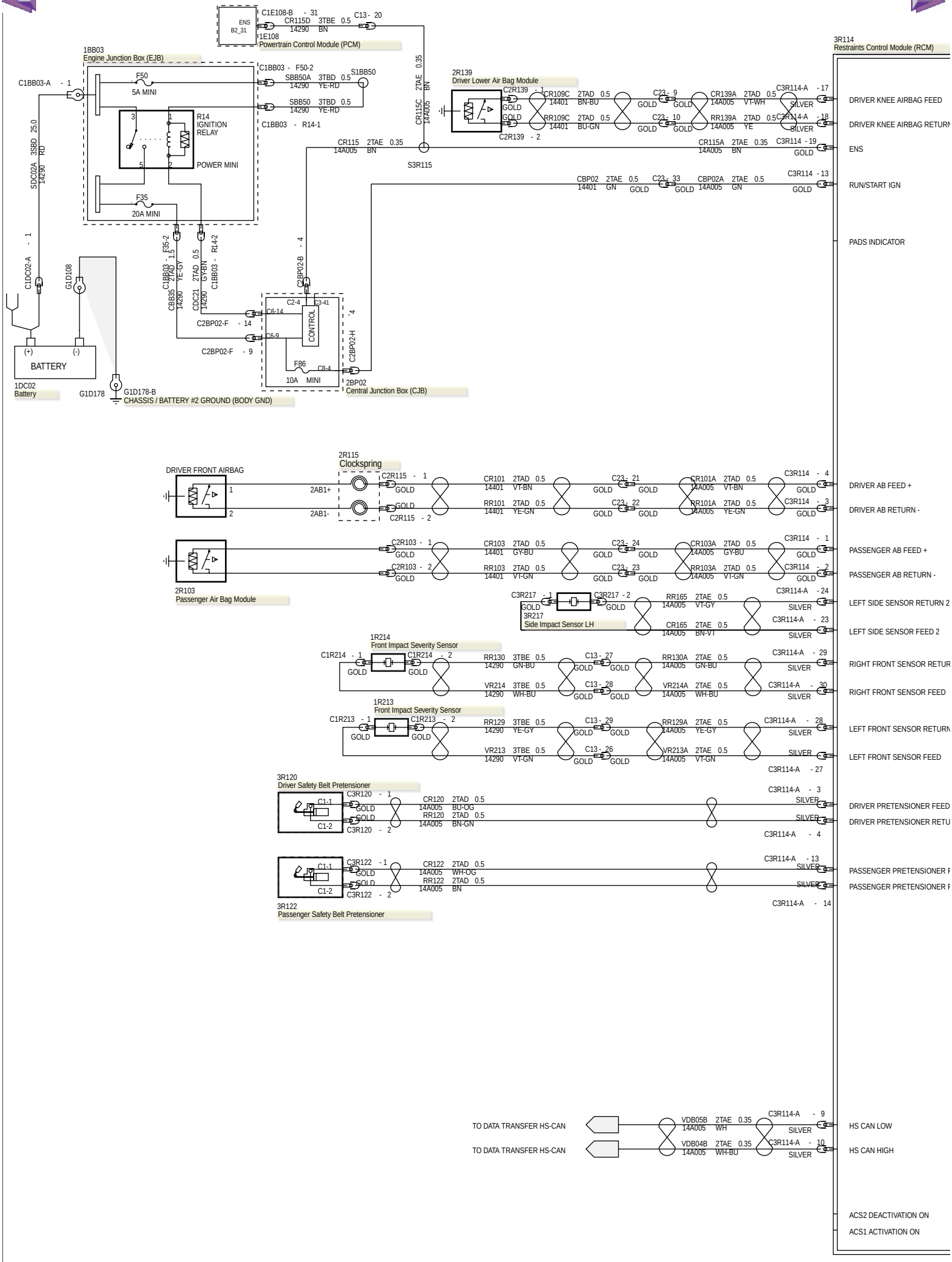

501-20B-10 Air Bags and Safety Belt Pretensioners—Double Cab, LHD 4WD/LHD RWD, Vehicles Without: Passenger Air Bag Deactivation Switch

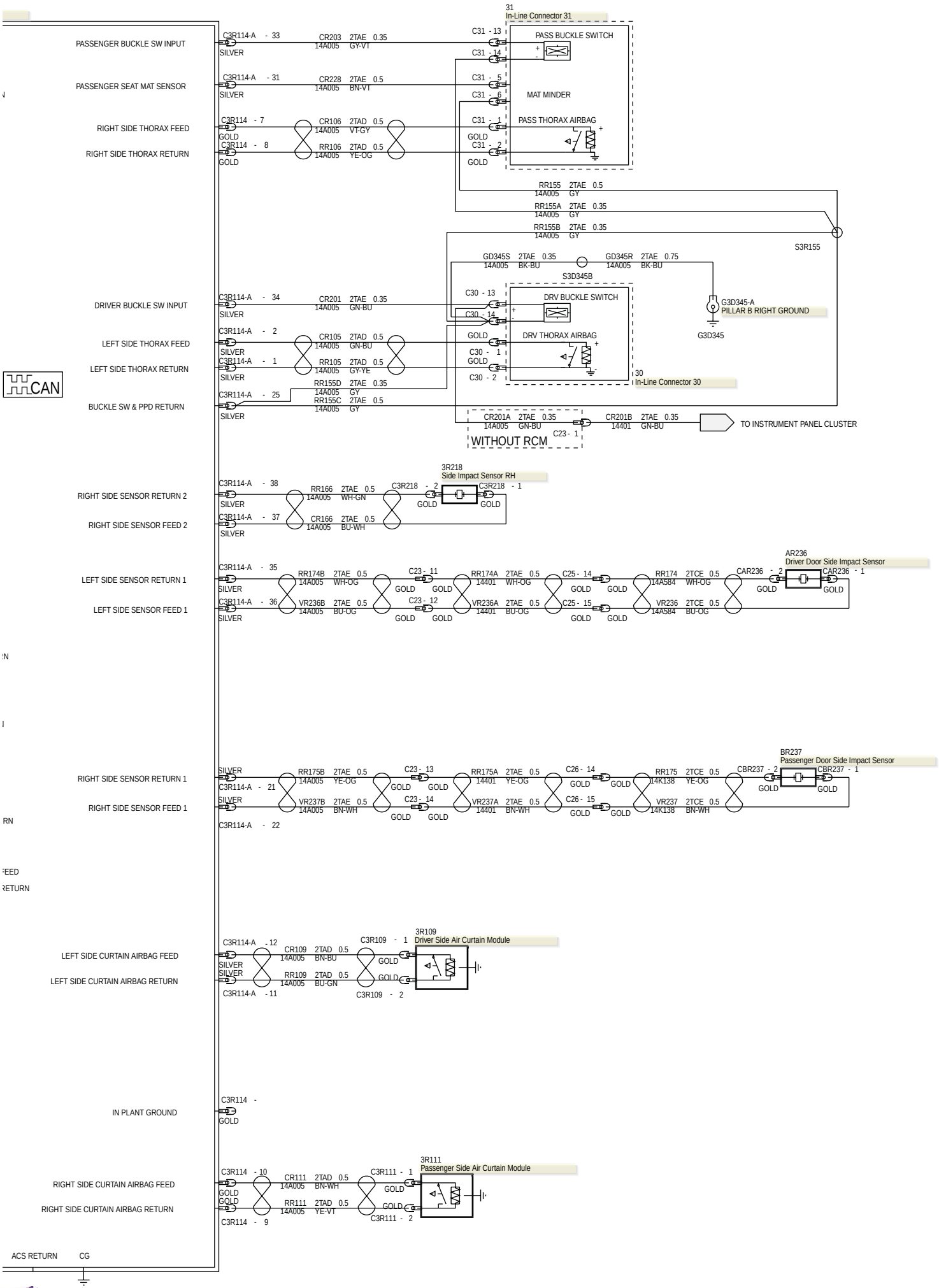

501-20B-11 Air Bags and Safety Belt Pretensioners—Super Cab, LHD 4WD/LHD RWD, Vehicles With: Passenger Air Bag Deactivation Switch

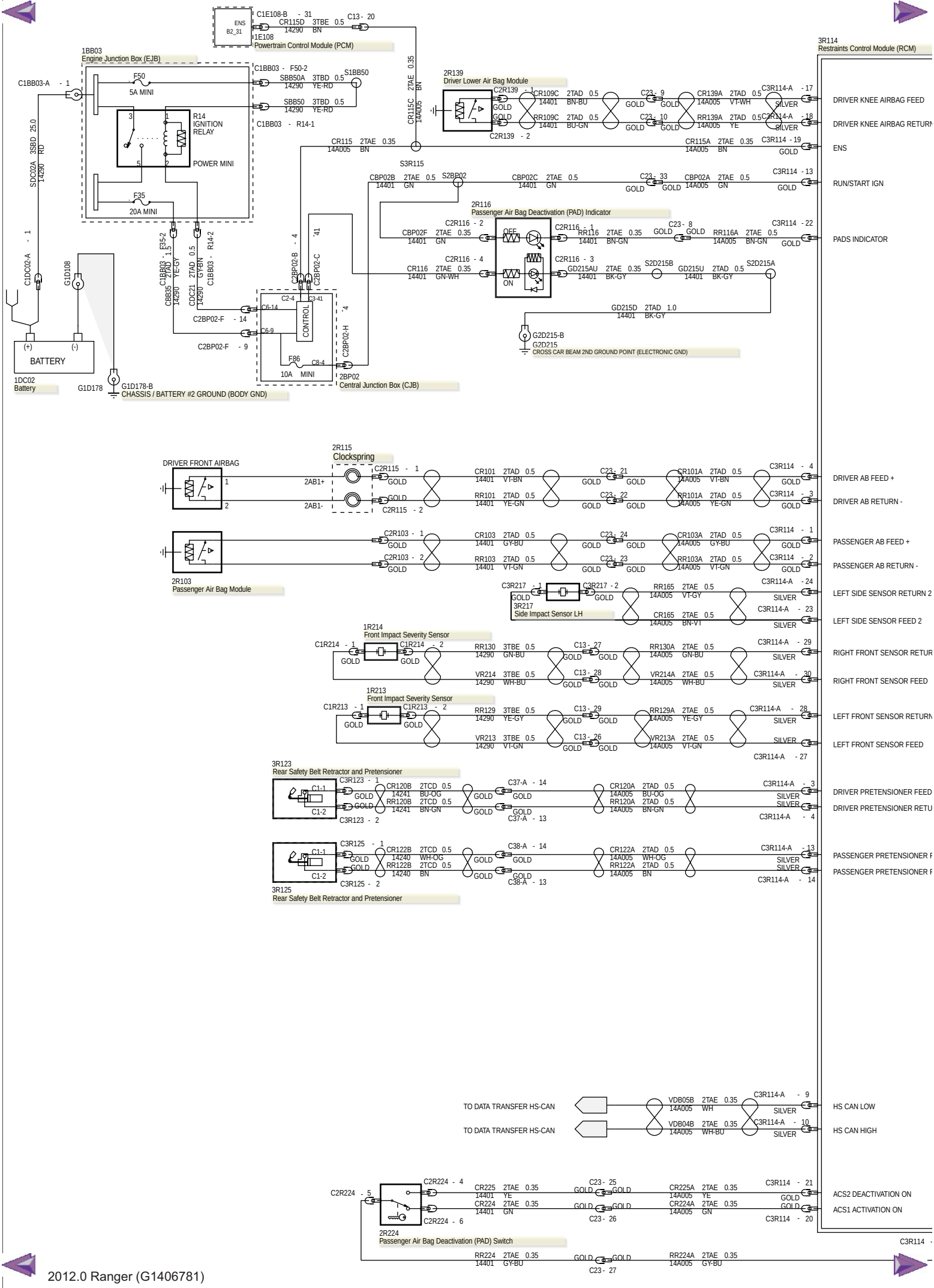

501-20B-12 Air Bags and Safety Belt Pretensioners—Super Cab, LHD 4WD/LHD RWD, Vehicles With: Passenger Air Bag Deactivation Switch

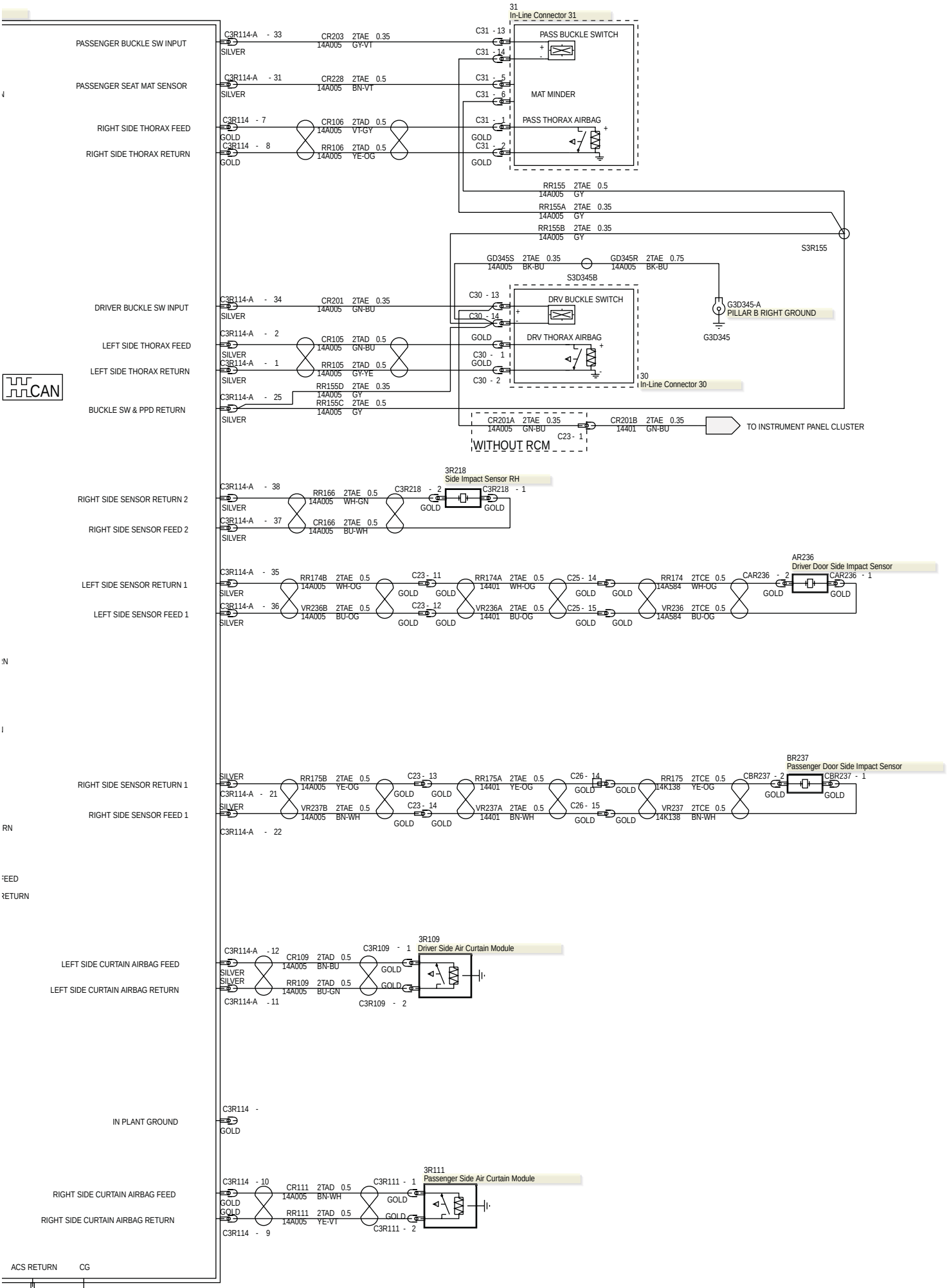

501-20B-13 Air Bags and Safety Belt Pretensioners—Super Cab, LHD 4WD/LHD RWD, Vehicles Without: Passenger Air Bag Deactivation Switch

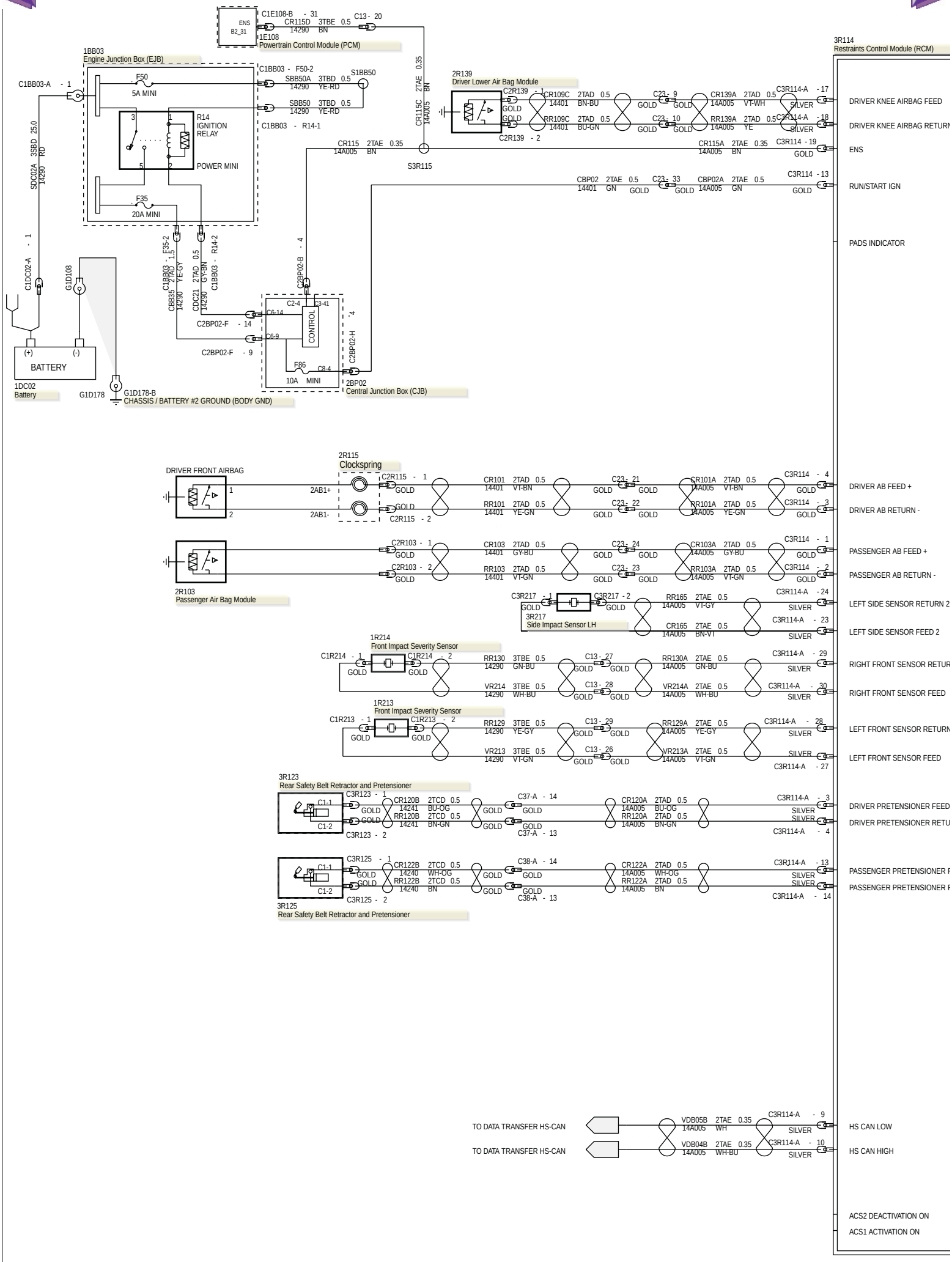

501-20B-14 Air Bags and Safety Belt Pretensioners—Super Cab, LHD 4WD/LHD RWD, Vehicles Without: Passenger Air Bag Deactivation Switch

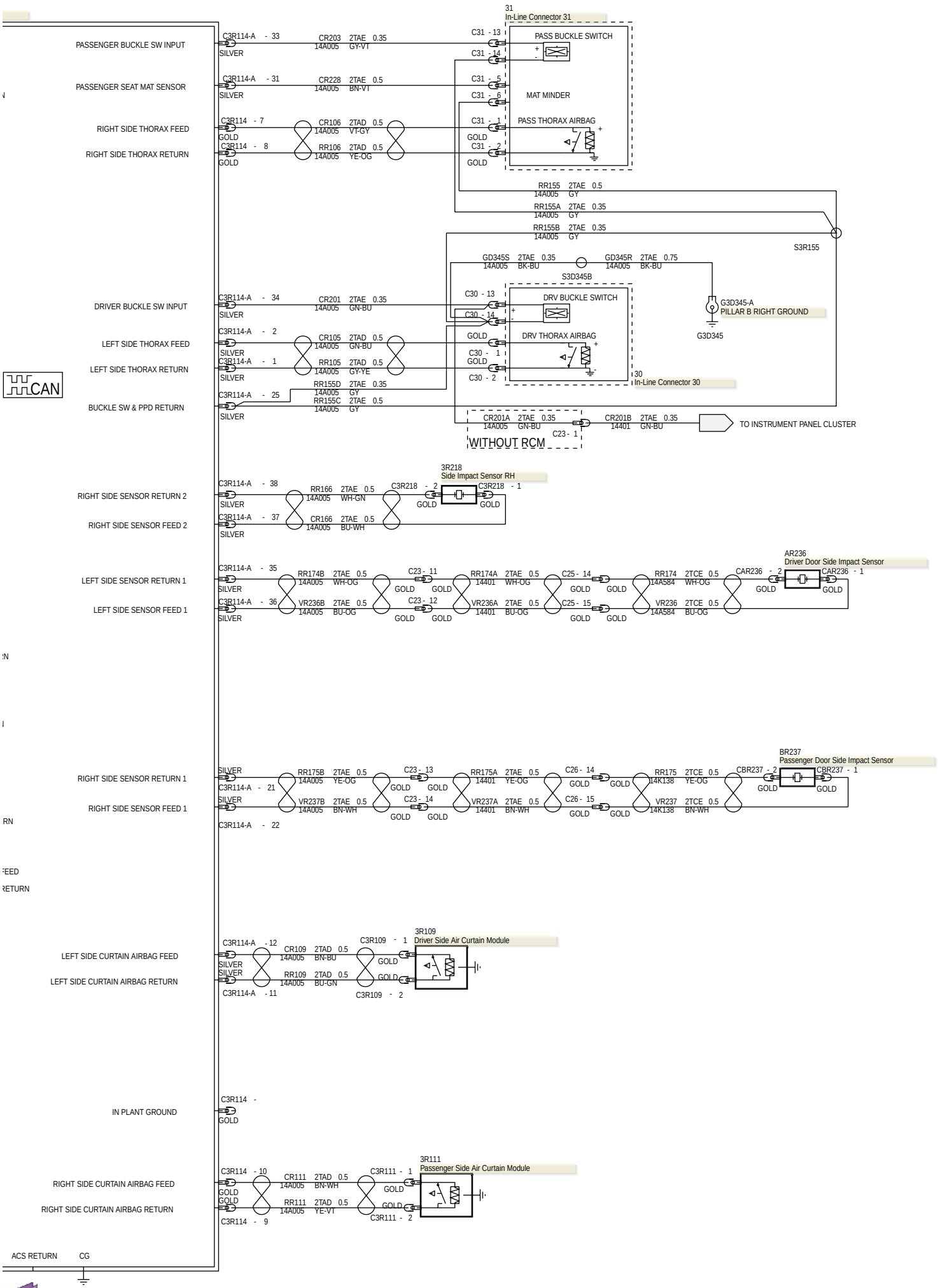

501-20B-15 Air Bags and Safety Belt Pretensioners—Single Cab, RHD 4WD/RHD RWD, Vehicles With: Passenger Air Bag Deactivation Switch

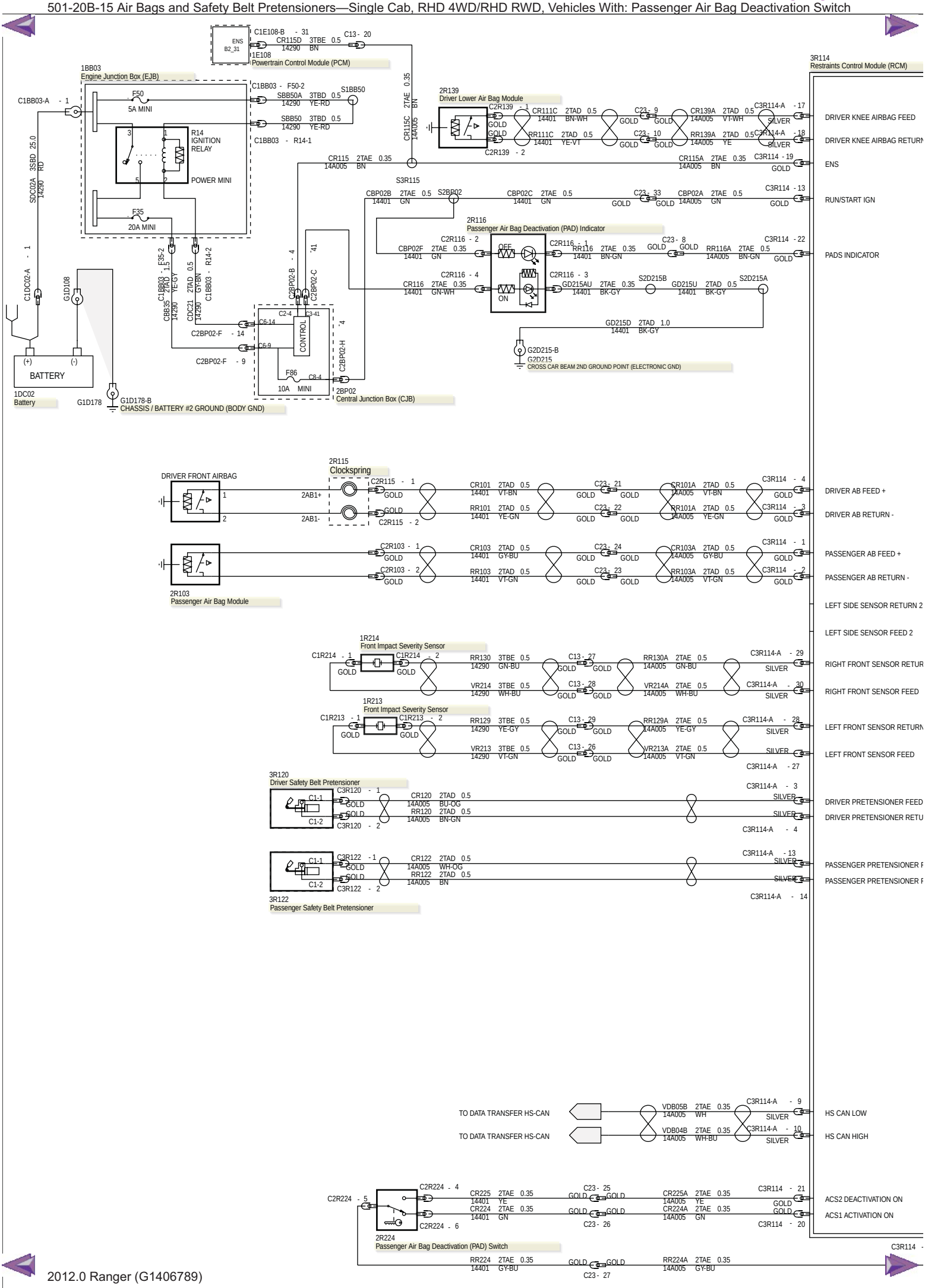

501-20B-16 Air Bags and Safety Belt Pretensioners—Single Cab, RHD 4WD/RHD RWD, Vehicles With: Passenger Air Bag Deactivation Switch

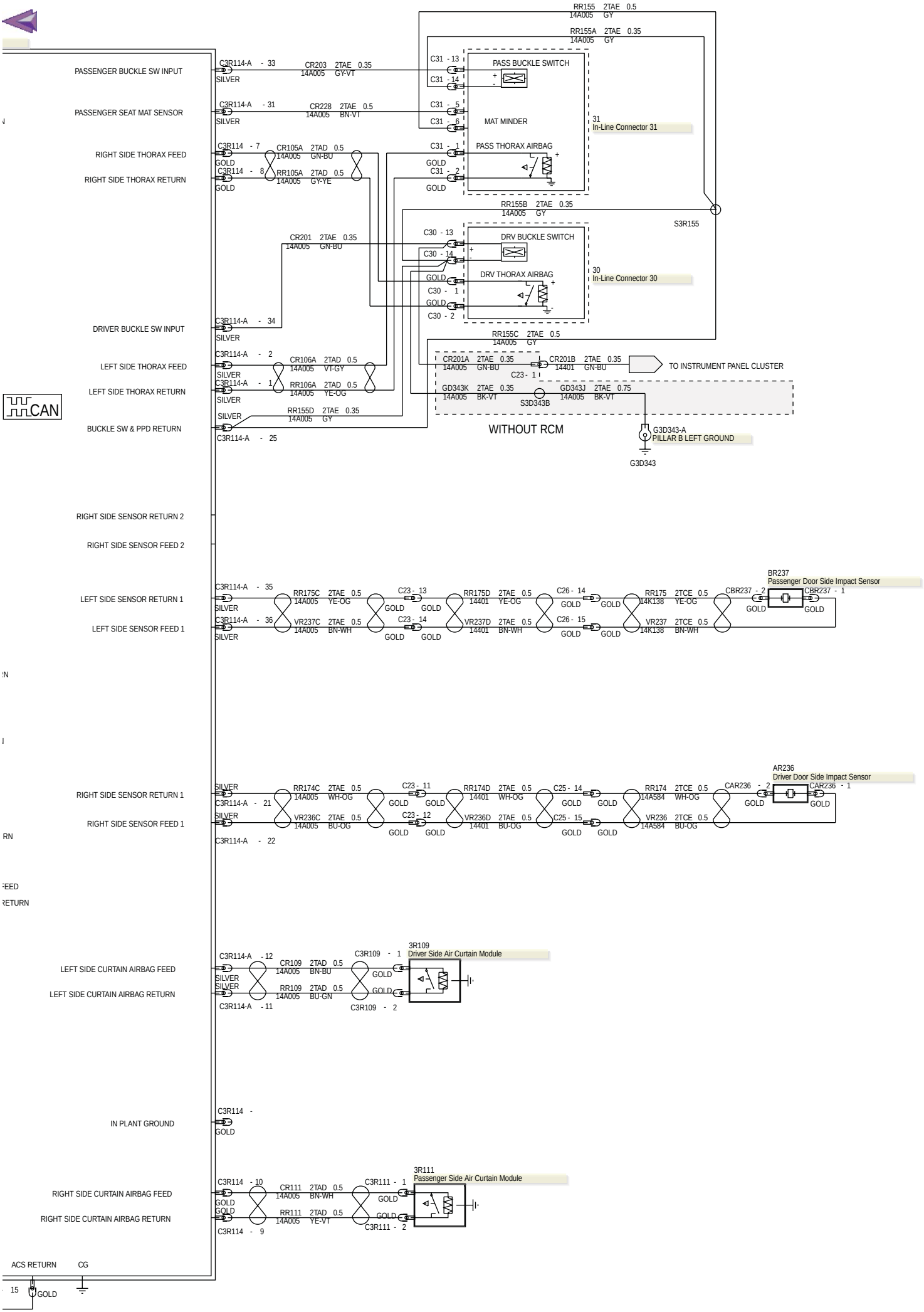

501-20B-17 Air Bags and Safety Belt Pretensioners—Single Cab, RHD 4WD/RHD RWD, Vehicles Without: Passenger Air Bag Deactivation Switch

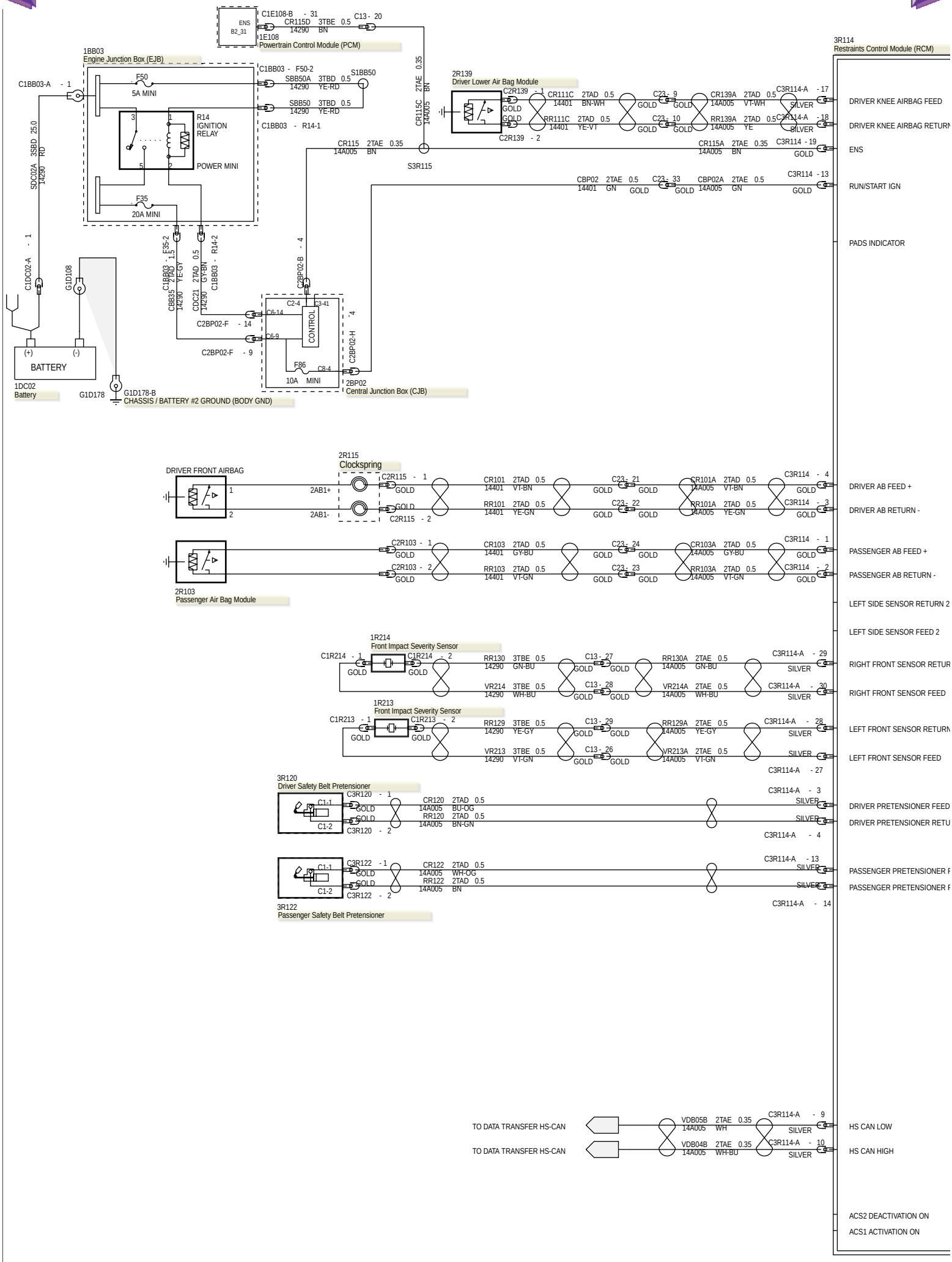

501-20B-18 Air Bags and Safety Belt Pretensioners—Single Cab, RHD 4WD/RHD RWD, Vehicles Without: Passenger Air Bag Deactivation Switch

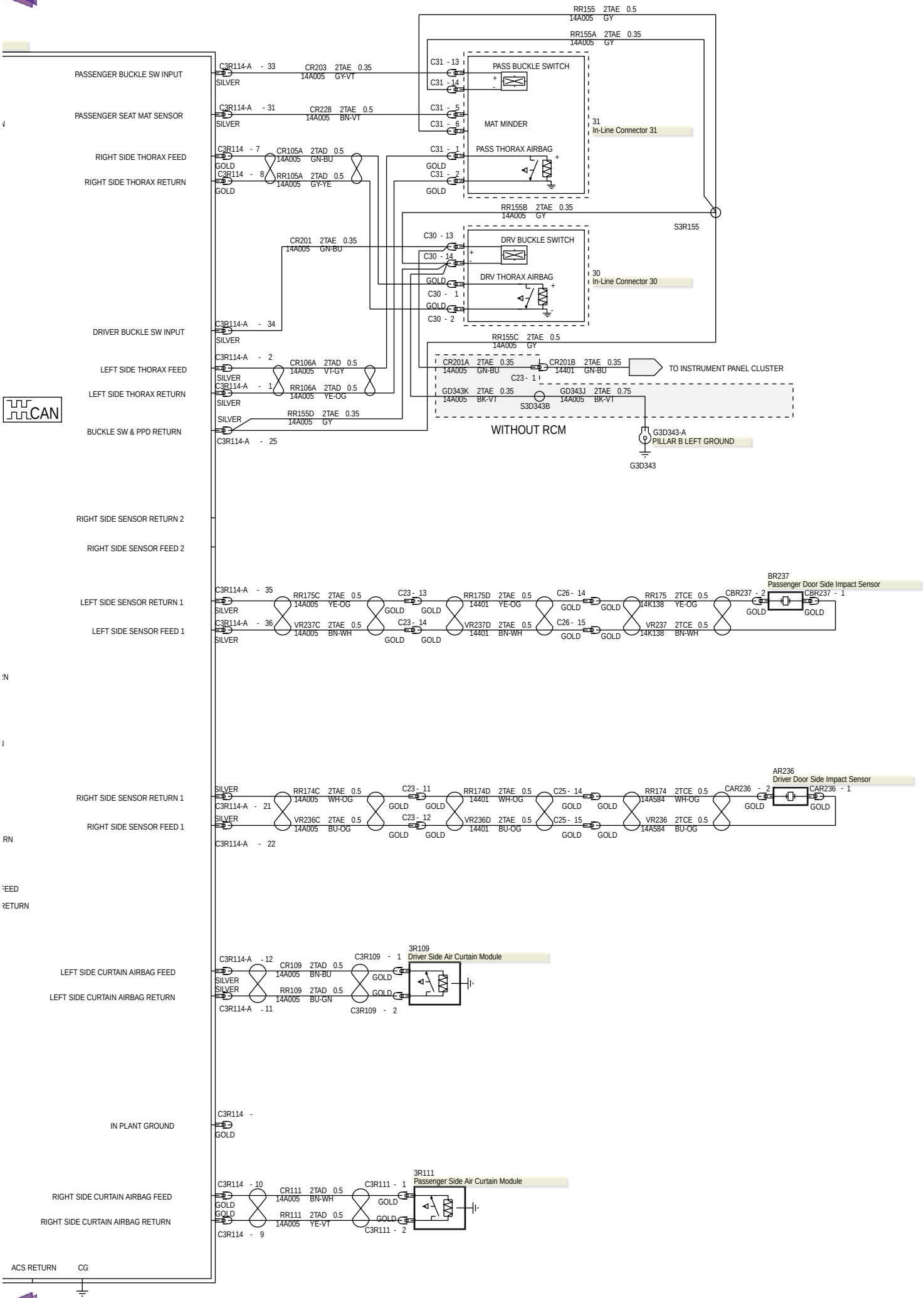

501-20B-19 Air Bags and Safety Belt Pretensioners—Double Cab, RHD 4WD/RHD RWD, Vehicles With: Passenger Air Bag Deactivation Switch

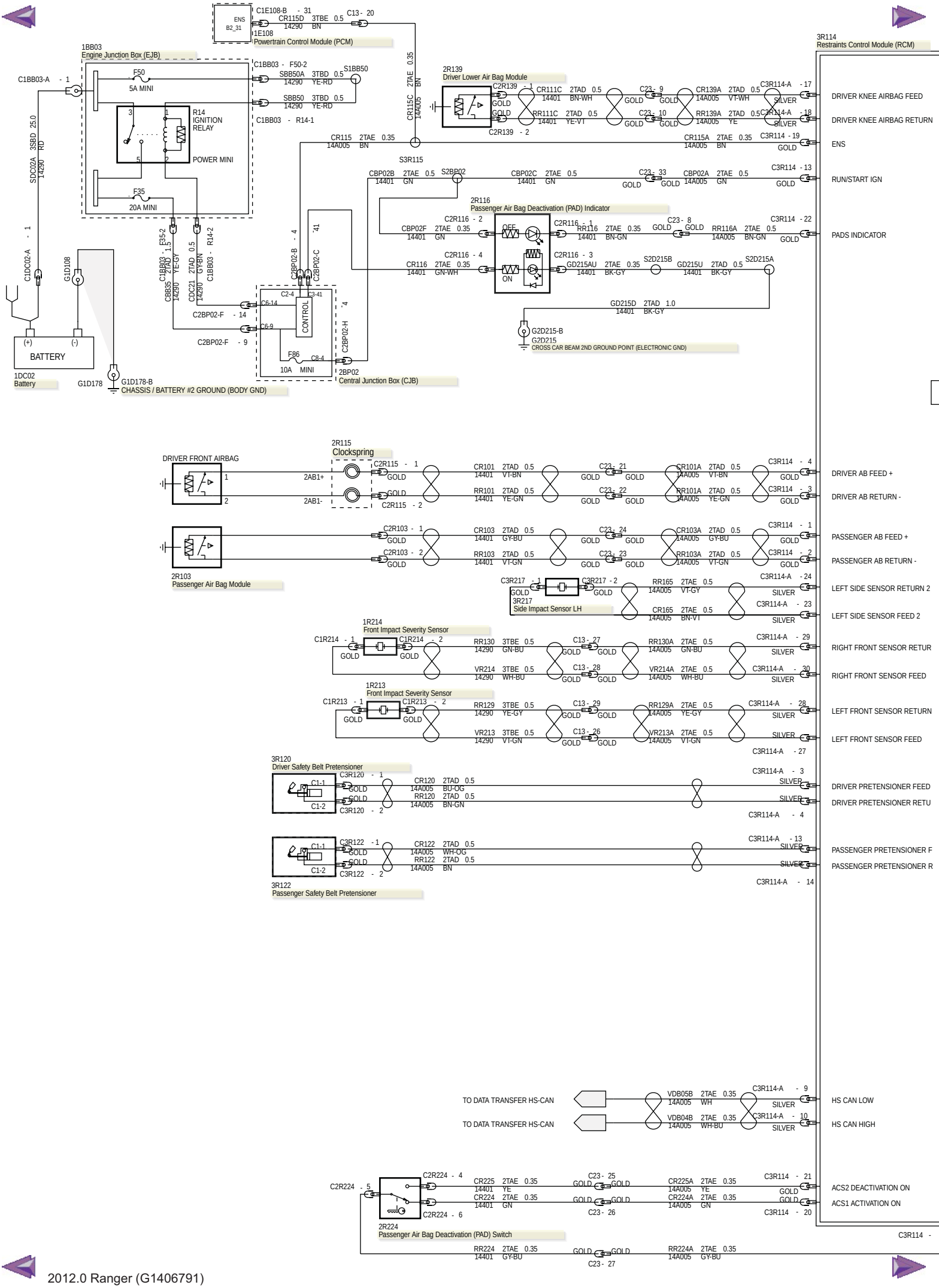

501-20B-20 Air Bags and Safety Belt Pretensioners—Double Cab, RHD 4WD/RHD RWD, Vehicles With: Passenger Air Bag Deactivation Switch

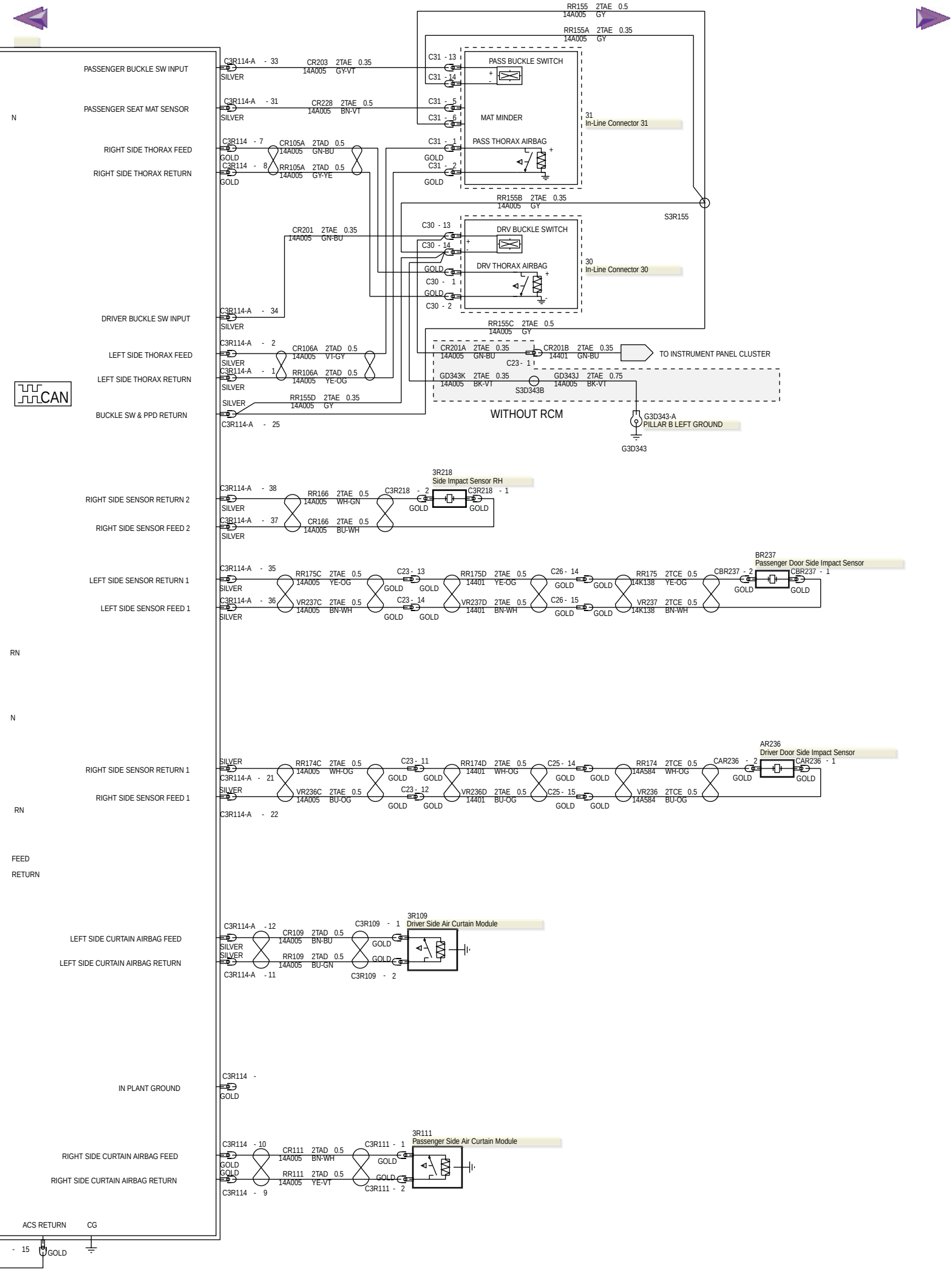

501-20B-21 Air Bags and Safety Belt Pretensioners—Double Cab, RHD 4WD/RHD RWD, Vehicles Without: Passenger Air Bag Deactivation Switch

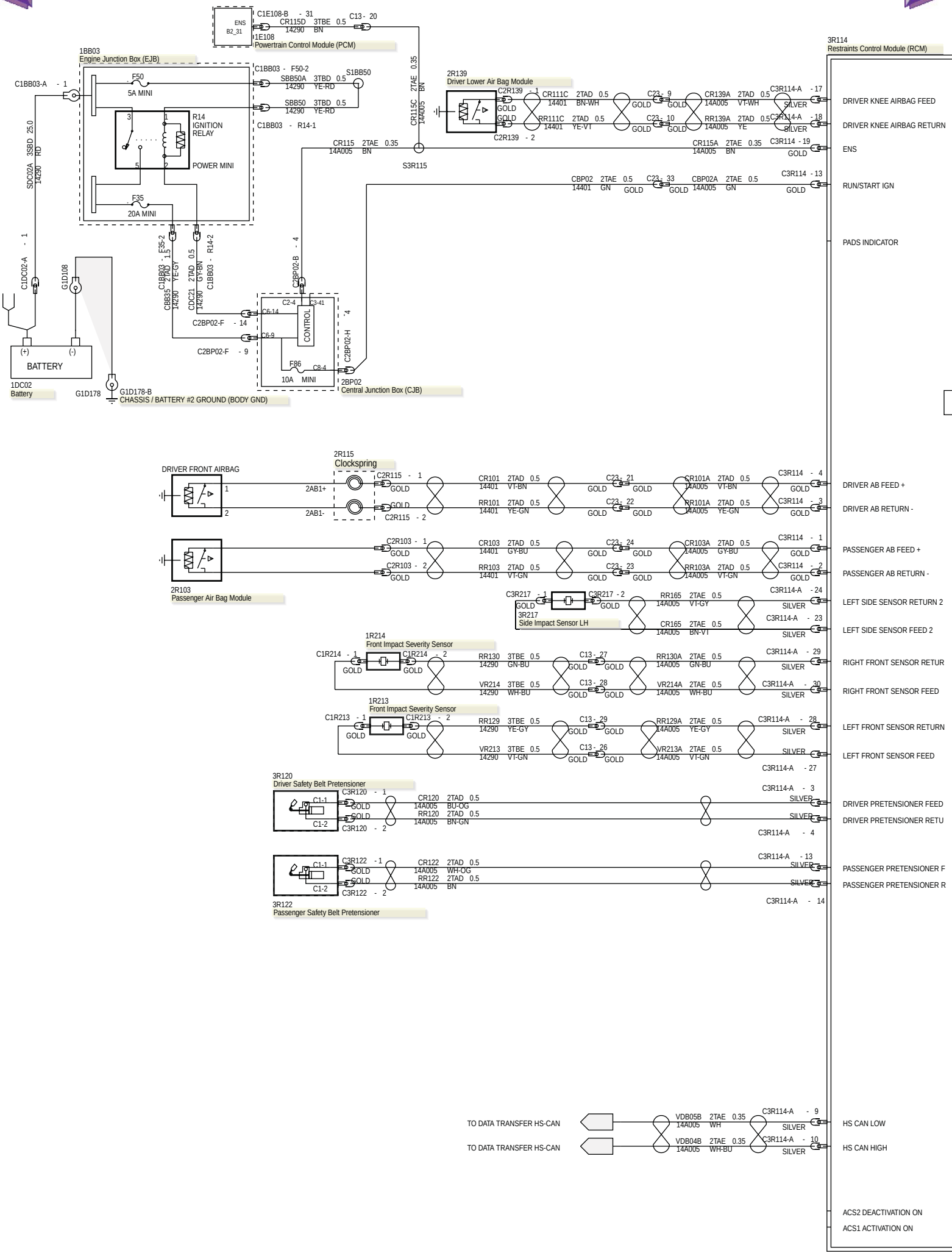

501-20B-22 Air Bags and Safety Belt Pretensioners—Double Cab, RHD 4WD/RHD RWD, Vehicles Without: Passenger Air Bag Deactivation Switch

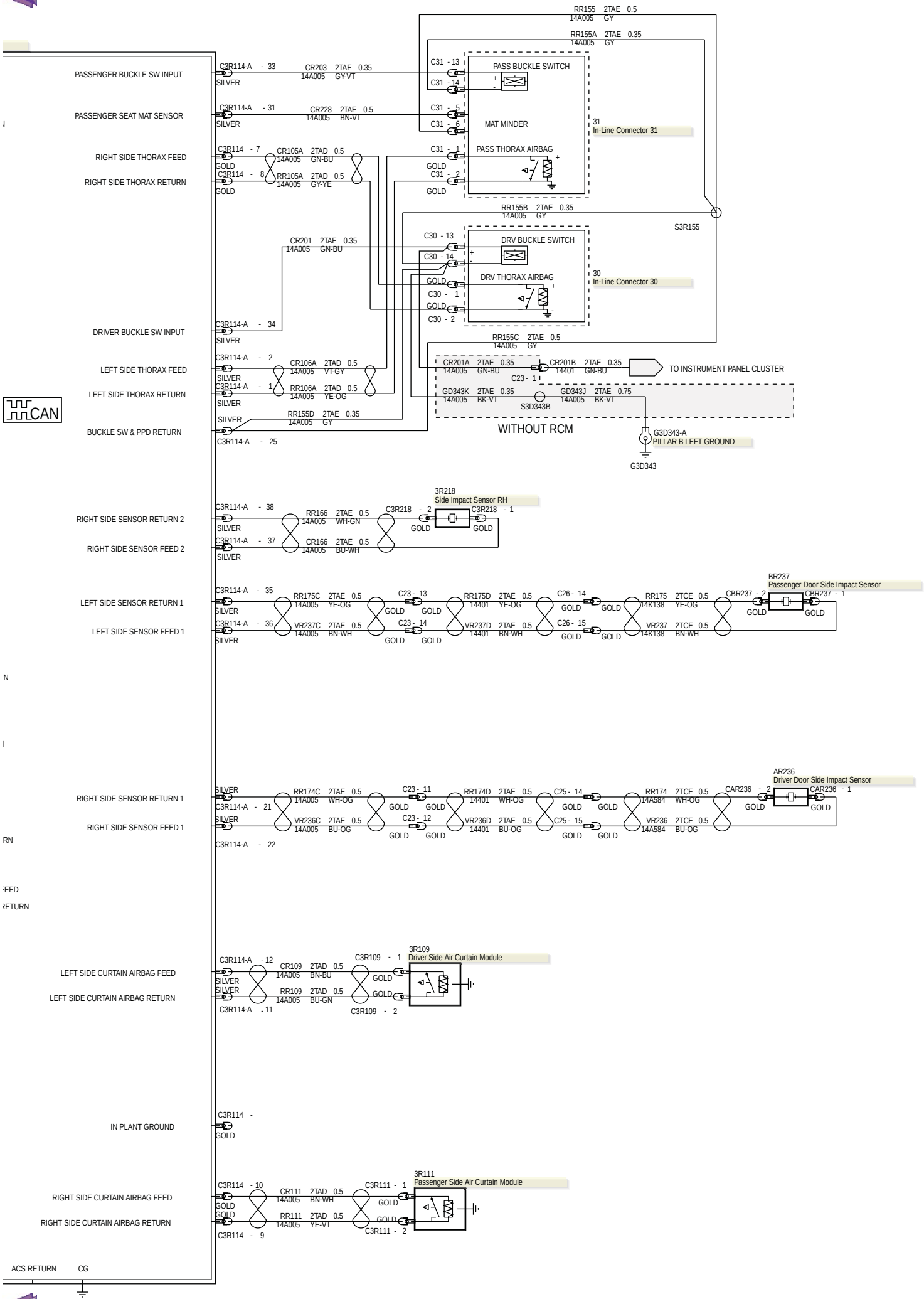

501-20B-23 Air Bags and Safety Belt Pretensioners—Super Cab, RHD 4WD/RHD RWD, Vehicles With: Passenger Air Bag Deactivation Switch

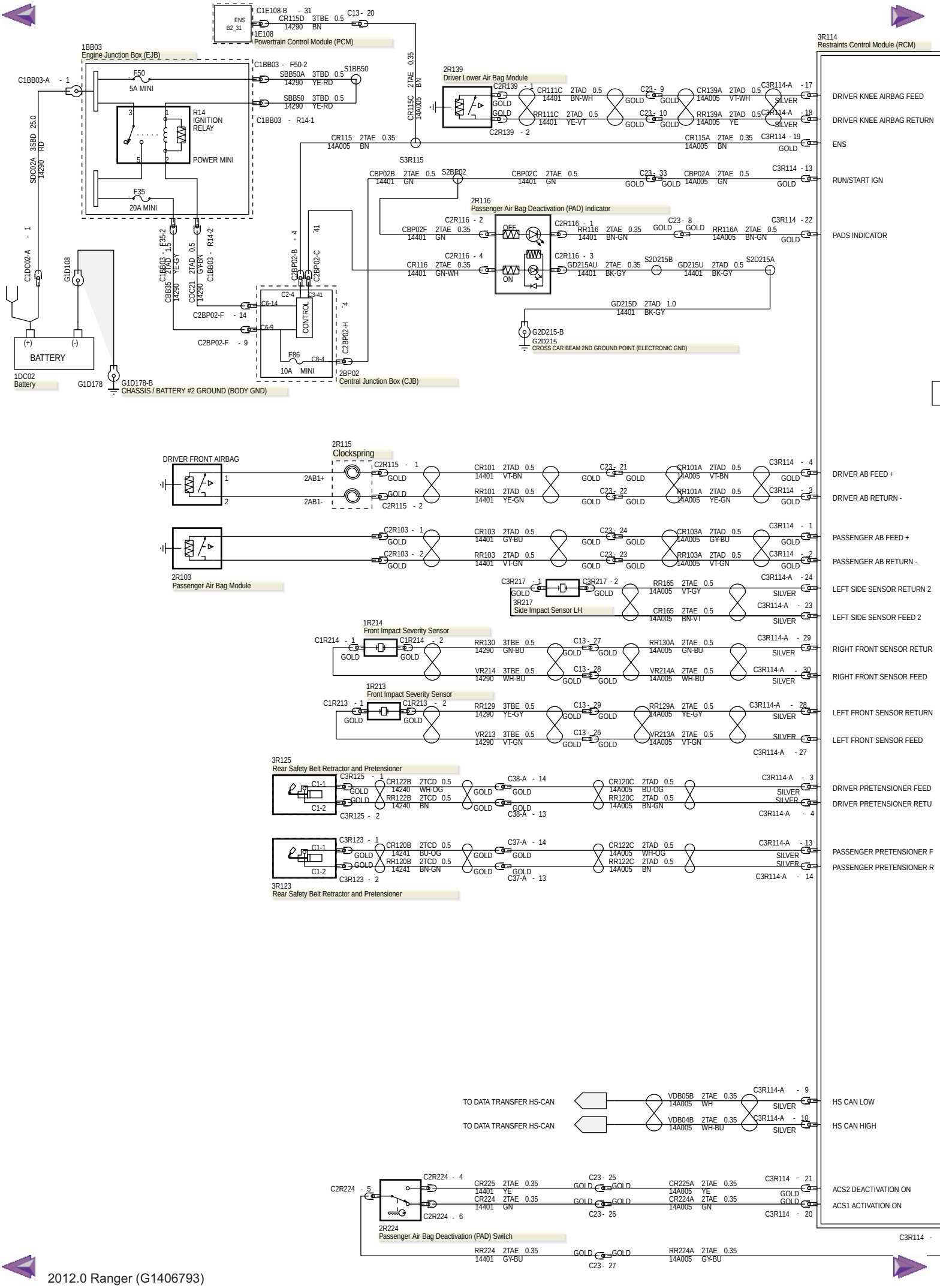

501-20B-24 Air Bags and Safety Belt Pretensioners—Super Cab, RHD 4WD/RHD RWD, Vehicles With: Passenger Air Bag Deactivation Switch

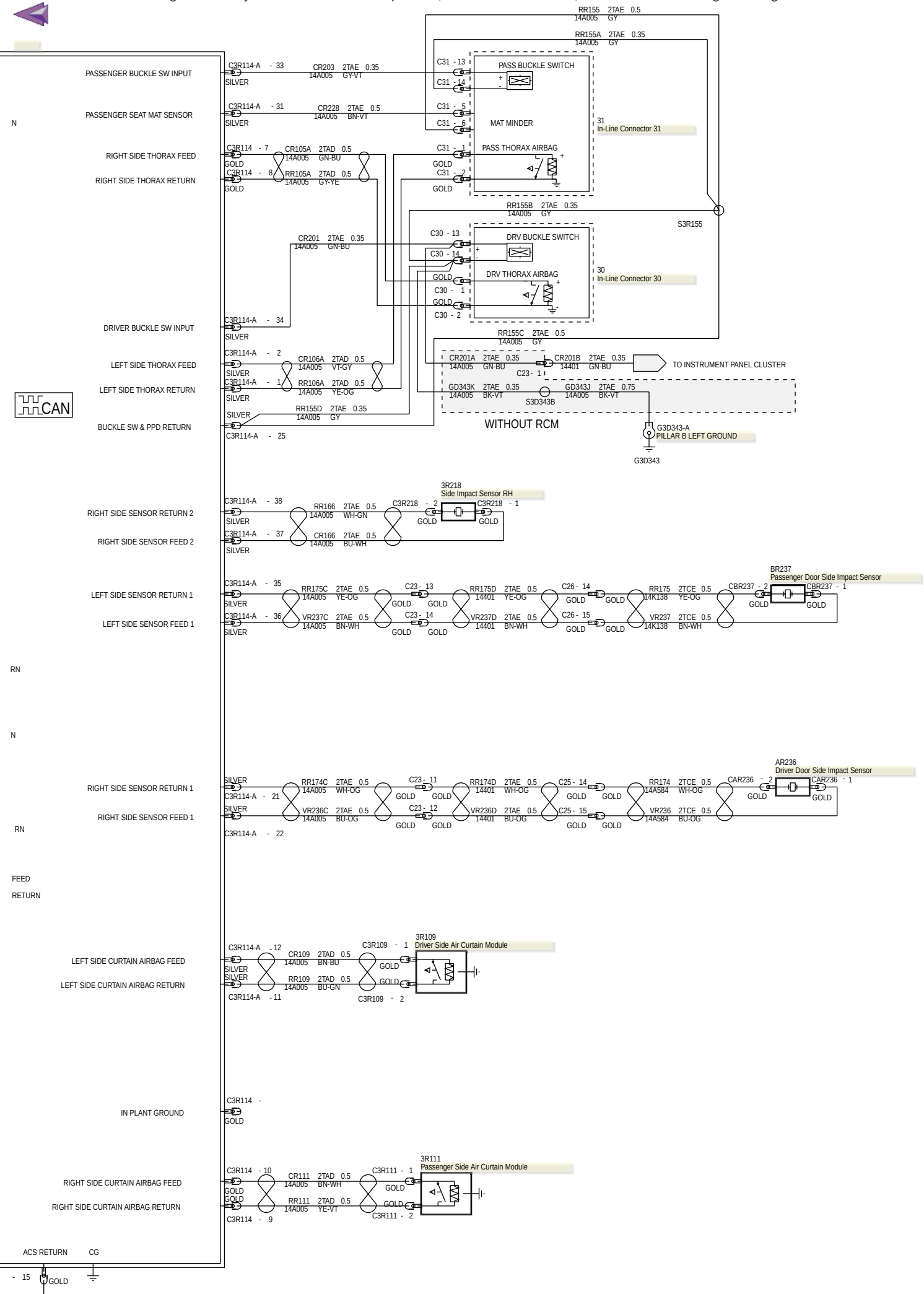

501-20B-25 Air Bags and Safety Belt Pretensioners—Super Cab, RHD 4WD/RHD RWD, Vehicles Without: Passenger Air Bag Deactivation Switch

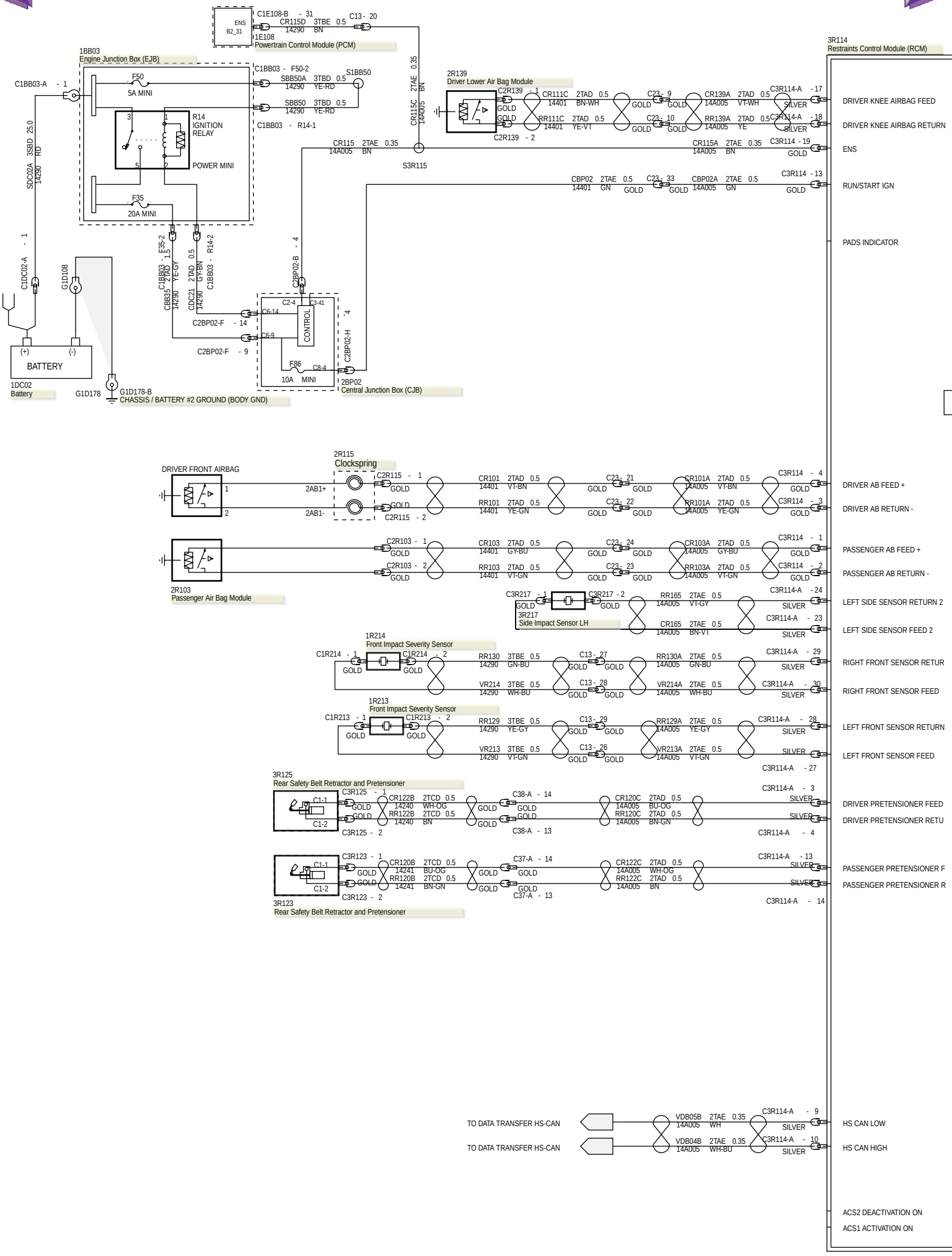

501-20B-26 Air Bags and Safety Belt Pretensioners—Super Cab, RHD 4WD/RHD RWD, Vehicles Without: Passenger Air Bag Deactivation Switch

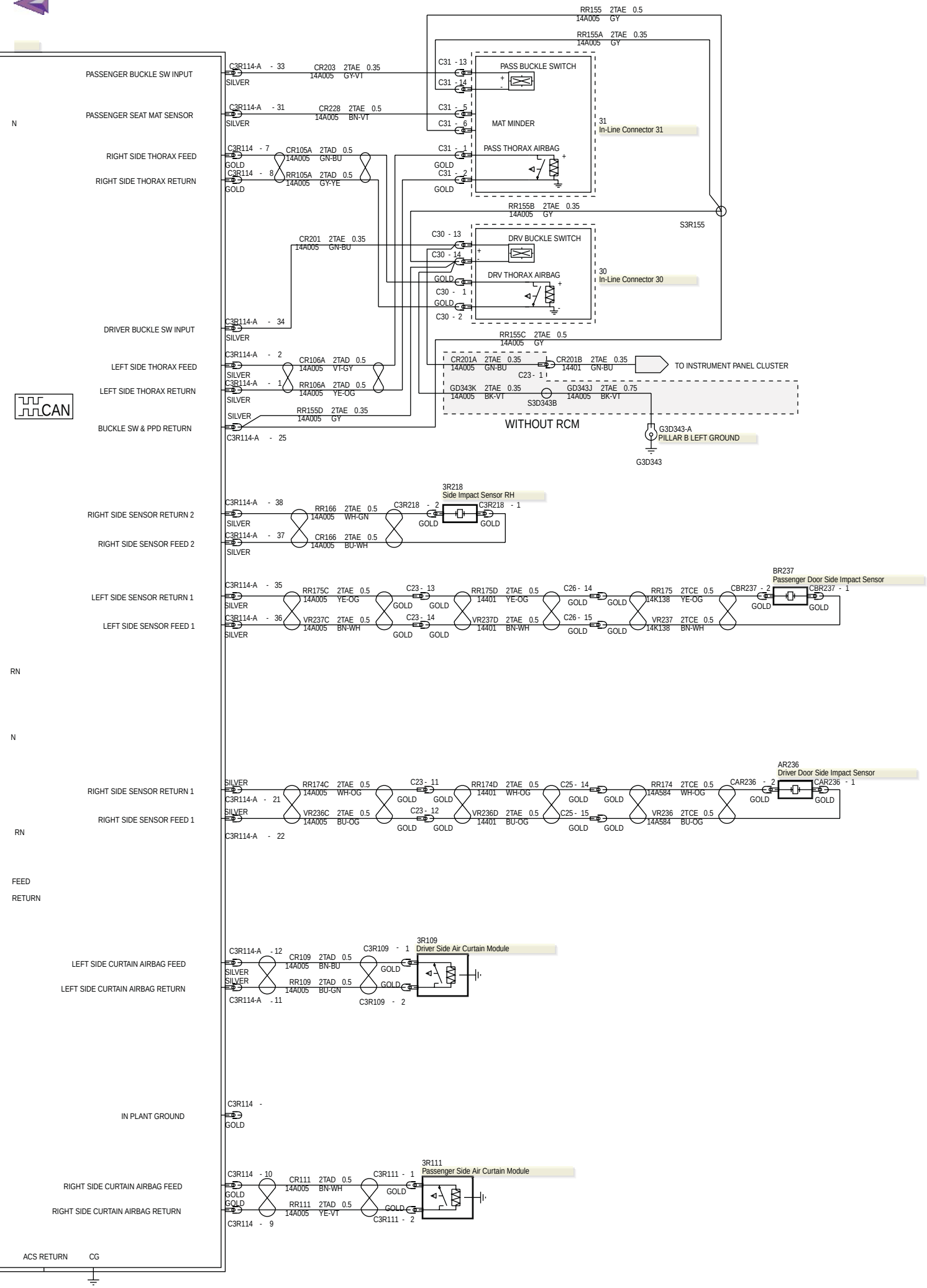

Clockspring (G1404843)

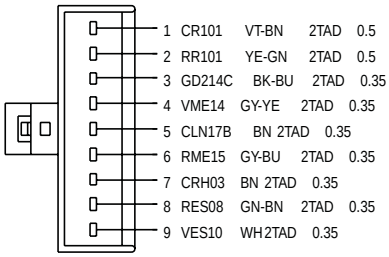

1S7T-14489-YA

C2R115
TO CLOCKSPRING

HARNESS 14401

Clockspring—A (G1404844)

IMAGE NOT AVAILABLE

Driver Door Side Impact Sensor (G1414600)

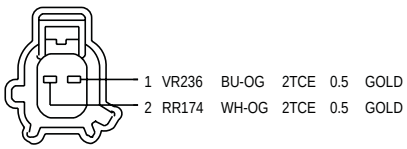

1L2T-14A464-AA

CAR236
TO PERIPHERAL PRESSURE SENSOR DRIVER SIDE

HARNESS 14A584

Driver Lower Air Bag Module (G1404860)

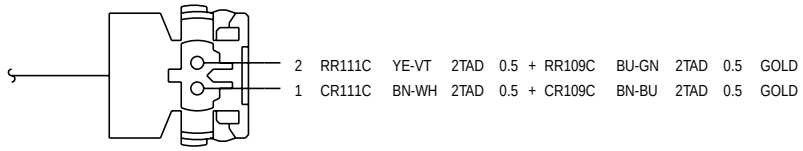

8U5T-14A464-EA

C2R139
TO DRIVER KNEE AIRBAG

HARNESS 14401

Driver Side Air Curtain Module (G1404865)

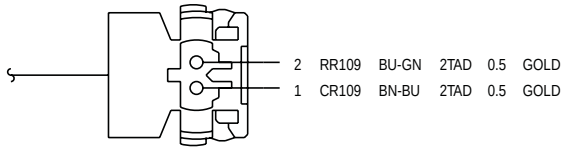

8U5T-14A464-EA

C3R109
TO LEFT SIDE CURTAIN AIRBAG

HARNESS 14A005

Front Impact Severity Sensor (G1404866)

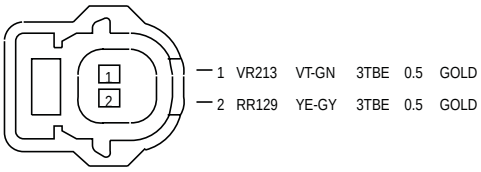

9A8T-14A464-DA
C1R213
TO PERIPHERAL CRASH SENSOR FRONT LEFT
HARNESS 14290

Passenger Air Bag Deactivation (PAD) Indicator (G1404867)

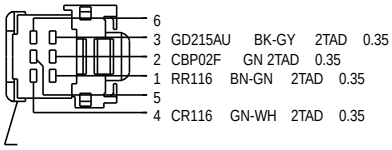

4S7T-14489-DA
C2R116
TO PADS INDICATOR (FORD)
HARNESS 14401

Passenger Air Bag Deactivation (PAD) Indicator—A (G1404868)

IMAGE NOT AVAILABLE

Passenger Air Bag Deactivation (PAD) Switch (G1404876)

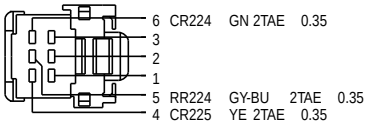

2S6T-14489-GA

C2R224
TO PASSENGER AIRBAG DEACTIVATION SWITCH

HARNESS 14401

Passenger Air Bag Module (G1404877)

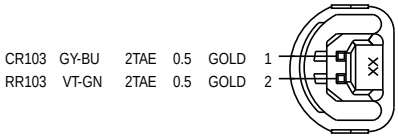

3218500B6
C2R103
TO PASSENGER FRONT AIRBAG

HARNESS 14401

Passenger Side Air Curtain Module (G1404878)

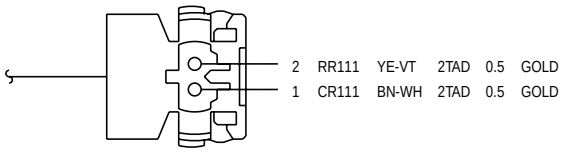

8U5T-14A464-EA

C3R111
TO RIGHT SIDE CURTAIN AIRBAG

HARNESS 14A005

Passenger Door Side Impact Sensor (G1408833)

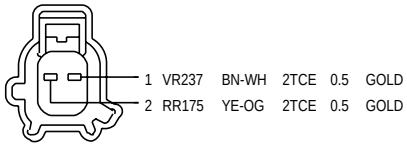

1L2T-14A464-AA

CBR237
TO PERIPHERAL PRESSURE SENSOR PASSENGER SIDE

HARNESS 14K138

Restraints Control Module (RCM) (G1404879)

CR106	VT-GY	2TAD	0.5	+	CR105A	GN-BU	2TAD	0.5	GOLD	7											13	CBP02A	GN 2TAE 0.5 GOLD
RR106	YE-OG	2TAD	0.5	+	RR105A	GY-YE	2TAD	0.5	GOLD	8											14		
					RR111	YE-VT	2TAD	0.5	GOLD	9											15	RR224A	GY-BU 2TAE 0.35 GOLD
					CR103A	GY-BU	2TAD	0.5	GOLD	1											19	CR115A	BN 2TAE 0.35 GOLD
					RR103A	VT-GN	2TAD	0.5	GOLD	2												CR224A	GN 2TAE 0.35 GOLD
					RR101A	YE-GN	2TAD	0.5	GOLD	3											21	CR225A	YE 2TAE 0.35 GOLD
					CR101A	VT-BN	2TAD	0.5	GOLD	4											22	RR116A	BN-GN 2TAE 0.5 GOLD
										5											23		
										6											24		
					CR111	BN-WH	2TAD	0.5	GOLD	10											16		
										11											17		
										12													

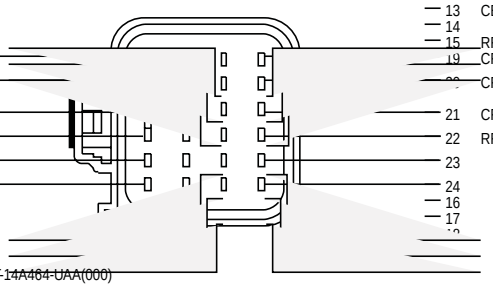

8U5T-14A464-UAA(000)

C3R114

TO RESTRAINTS CONTROL SYSTEM 1

HARNESS 14A005

Restraints Control Module (RCM)—A (G1404880)

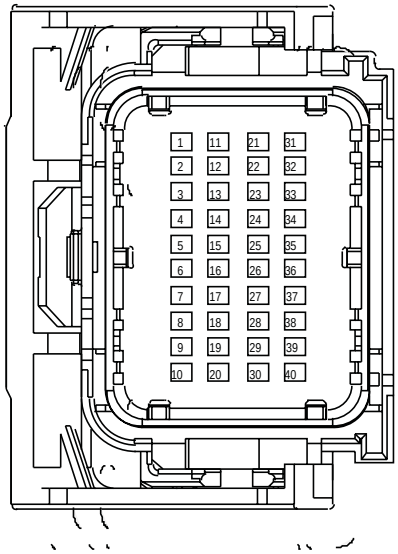

1	RR106A	YE-OG	2TAD	0.5	+	RR105	GY-YE	2TAD	0.5	SILVER
2	CR106A	VT-GY	2TAD	0.5	+	CR105	GN-BU	2TAD	0.5	SILVER
3	CR120A	BU-OG	2TAD	0.5	+	CR120C	BU-OG	2TAD	0.5	SILVER
4	RR120A	BN-GN	2TAD	0.5	+	RR120C	BN-GN	2TAD	0.5	SILVER
5										
6										
7										
8										
9	VDB05B	WH	2TAE	0.35						SILVER
10	VDB04B	WH-BU	2TAE	0.35						SILVER
11	RR109	BU-GN	2TAD	0.5						SILVER
12	CR109	BN-BU	2TAD	0.5						SILVER
13	CR122C	WH-OG	2TAD	0.5	+	CR122A	WH-OG	2TAD	0.5	SILVER
14	RR122C	BN	2TAD	0.5	+	RR122A	BN	2TAD	0.5	SILVER
15										
16										
17	CR139A	VT-WH	2TAD	0.5						SILVER
18	RR139A	YE	2TAD	0.5						SILVER
19										
20										
21	RR174C	WH-OG	2TAE	0.5	+	RR175B	YE-OG	2TAE	0.5	SILVER
22	VR236C	BU-OG	2TAE	0.5	+	VR237B	BN-WH	2TAE	0.5	SILVER
23	CR165	BN-VT	2TAE	0.5						SILVER
24	RR165	VT-GY	2TAE	0.5						SILVER
25	RR155C	GY	2TAE	0.5	+	RR155D	GY	2TAE	0.35	SILVER
26										
27	VR213A	VT-GN	2TAE	0.5						SILVER
28	RR129A	YE-GY	2TAE	0.5						SILVER
29	RR130A	GN-BU	2TAE	0.5						SILVER
30	VR214A	WH-BU	2TAE	0.5						SILVER
31	CR228	BN-VT	2TAE	0.5						SILVER
32										
33	CR203	GY-VT	2TAE	0.35						SILVER
34	CR201	GN-BU	2TAE	0.35						SILVER
35	RR175C	YE-OG	2TAE	0.5	+	RR174B	WH-OG	2TAE	0.5	SILVER
36	VR237C	BN-WH	2TAE	0.5	+	VR236B	BU-OG	2TAE	0.5	SILVER
37	CR166	BU-WH	2TAE	0.5						SILVER
38	RR166	WH-GN	2TAE	0.5						SILVER
39										
40										

9U5T-14A464-DAA(000)

C3R114-A
TO RESTRAINTS CONTROL SYSTEM 2

HARNESS 14A005

Side Impact Sensor LH (G1404881)

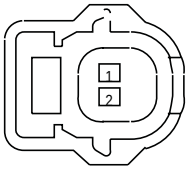

1	CR165	BN-VT	2TAE	0.5	GOLD
2	RR165	VT-GY	2TAE	0.5	GOLD

9A8T-14A464-DA

C3R217
TO PERIPHERAL CRASH SENSOR LEFT SIDE

HARNESS 14A005

Side Impact Sensor RH (G1404882)

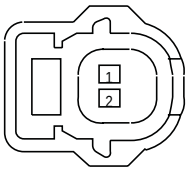

1	CR166	BU-WH	2TAE	0.5	GOLD
2	RR166	WH-GN	2TAE	0.5	GOLD

9A8T-14A464-DA

C3R218
TO PERIPHERAL CRASH SENSOR RIGHT SIDE

HARNESS 14A005

GROUP

General Wiring Information

7

SECTION TITLE PAGE

Wiring Information
General Information.....700-00
Fuse and Relay Information.....700-01
Power Distribution.....700-02
Grounding Strategy.....700-03
Electrical Connectors.....700-04

SECTION 700-00 General Information

VEHICLE APPLICATION: 2012.0 Ranger

CONTENTS PAGE

PAGE 1 OF 2

COMPONENT LOCATION

B-Pillar LH — Single Cab..... 700-00-3
B-Pillar RH — Single Cab..... 700-00-4
B-Pillar LH — Super Cab..... 700-00-5
B-Pillar RH — Super Cab..... 700-00-6
Central Junction Box (CJB) — LHD..... 700-00-7
Central Junction Box (CJB) — RHD..... 700-00-8
Climate Control Assembly — Vehicles With: Dual Automatic Temperature Control, LHD.. 700-00-9
Climate Control Assembly — Vehicles With: Manual Temperature Control, LHD..... 700-00-10
Climate Control Assembly — Vehicles With: Air Conditioning, LHD..... 700-00-11
Climate Control Assembly — Vehicles Without: Air Conditioning, LHD..... 700-00-12
Climate Control Assembly — Vehicles With: Dual Automatic Temperature Control, RHD.. 700-00-13
Climate Control Assembly — Vehicles With: Manual Temperature Control, RHD..... 700-00-14
Climate Control Assembly — Vehicles With: Air Conditioning, RHD..... 700-00-15
Climate Control Assembly — Vehicles Without: Air Conditioning, RHD..... 700-00-16
Driver Door Interior View — Double Cab, LHD..... 700-00-17
Driver Door Interior View — Single Cab/Super Cab, LHD..... 700-00-18
Driver Door Interior View — Double Cab, RHD..... 700-00-19
Driver Door Interior View — Single Cab/Super Cab, RHD..... 700-00-20
Engine Compartment Left-Hand View — LHD..... 700-00-21
Engine Compartment Left-Hand View — RHD..... 700-00-22
Engine Compartment Right-Hand View — LHD..... 700-00-23
Engine Compartment Right-Hand View — RHD..... 700-00-24
Engine Left-Hand View — 2.5L Duratec-HE (122kW/165PS) - MI4..... 700-00-25
Engine Right-Hand View — 2.5L Duratec-HE (122kW/165PS) - MI4..... 700-00-26
Engine Left-Hand View — 2.5L Duratec-HE (122kW/165PS) - MI4, Compressed Natural Gas (CNG)/Ethanol/Liquefied Petroleum Gas (LPG)..... 700-00-27
Engine Right-Hand View — 2.5L Duratec-HE (122kW/165PS) - MI4, Compressed Natural Gas (CNG)/Ethanol/Liquefied Petroleum Gas (LPG)..... 700-00-28
Engine Upper View — 2.5L Duratec-HE (122kW/165PS) - MI4, Compressed Natural Gas (CNG)/Ethanol/Liquefied Petroleum Gas (LPG)..... 700-00-29
Engine Left-Hand View — 2.2L Duratorq-TDCi (88kW/120PS) - Puma/2.2L Duratorq-TDCi (96kW/130PS) - Puma/2.2L Duratorq-TDCi (110kW/150PS) - Puma..... 700-00-30
Engine Right-Hand View — 2.2L Duratorq-TDCi (88kW/120PS) - Puma/2.2L Duratorq-TDCi (96kW/130PS) - Puma..... 700-00-31
Engine Right-Hand View — 2.2L Duratorq-TDCi (110kW/150PS) - Puma..... 700-00-32
Engine Upper View — 2.2L Duratorq-TDCi (88kW/120PS) - Puma/2.2L Duratorq-TDCi (110kW/150PS) - Puma..... 700-00-33
Engine Left-Hand View — 2.2L Duratorq-TDCi (88kW/120PS) - Puma/2.2L Duratorq-TDCi (110kW/150PS) - Puma..... 700-00-34
Engine Left-Hand View — 3.2L Duratorq-TDCi (148kW/200PS) - Puma..... 700-00-35
Engine Right-Hand View — 3.2L Duratorq-TDCi (148kW/200PS) - Puma..... 700-00-36
Engine Upper View — 3.2L Duratorq-TDCi (148kW/200PS) - Puma..... 700-00-37

PAGE 2 OF 2

Engine Left-Hand View — 3.2L Duratorq-TDCi (148kW/200PS) - Puma..... 700-00-38
Engine Right-Hand View — 3.2L Duratorq-TDCi (148kW/200PS) - Puma..... 700-00-39
Engine Upper View — 3.2L Duratorq-TDCi (148kW/200PS) - Puma..... 700-00-40
Front Fender LH..... 700-00-41
Front Fender RH..... 700-00-42
Front Floor Left-Hand View — Single Cab, LHD..... 700-00-43
Front Floor Right-Hand View — Single Cab, LHD..... 700-00-44
Front Floor Left-Hand View — Double Cab, LHD..... 700-00-45
Front Floor Right-Hand View — Double Cab, LHD..... 700-00-46
Front Floor Left-Hand View — Super Cab, LHD..... 700-00-47
Front Floor Right-Hand View — Super Cab, LHD..... 700-00-48
Front Floor Left-Hand View — Single Cab, RHD..... 700-00-49
Front Floor Right-Hand View — Single Cab, RHD..... 700-00-50
Front Floor Left-Hand View — Double Cab, RHD..... 700-00-51
Front Floor Right-Hand View — Double Cab, RHD..... 700-00-52
Front Floor Left-Hand View — Super Cab, RHD..... 700-00-53
Front Floor Right-Hand View — Super Cab, RHD..... 700-00-54
Fuel Tank..... 700-00-55
Headliner — Single Cab, LHD..... 700-00-56
Headliner — Double Cab, LHD..... 700-00-57
Headliner — Super Cab, LHD..... 700-00-58
Headliner — Single Cab, RHD..... 700-00-59
Headliner — Double Cab, RHD..... 700-00-60
Headliner — Super Cab, RHD..... 700-00-61
Instrument Panel — LHD..... 700-00-62
Instrument Panel — RHD..... 700-00-63
Passenger Door Interior View — Double Cab, LHD..... 700-00-64
Passenger Door Interior View — Single Cab/Super Cab, LHD..... 700-00-65
Passenger Door Interior View — Double Cab, RHD..... 700-00-66
Passenger Door Interior View — Single Cab/Super Cab, RHD..... 700-00-67
Rear Bumper..... 700-00-68
Rear Door LH Interior View..... 700-00-69
Rear Door RH Interior View..... 700-00-70
Rear Axle..... 700-00-71
Rear Under Floor View..... 700-00-72
Steering Column Switches Front View..... 700-00-73
Steering Column Switches Rear View..... 700-00-74
Steering Wheel..... 700-00-75
Transmission Left-Hand View — Vehicles With: 5-Speed Manual Transmission - MT75 4x2..... 700-00-76
Transmission Right-Hand View — Vehicles With: 6-Speed Manual Transmission - MT82 4x2..... 700-00-77
Transmission Right-Hand View — Vehicles With: 6-Speed Automatic Transaxle - 6R80 4x2..... 700-00-78
Transmission Left-Hand View — Vehicles With: 5-Speed Manual Transmission - MT75 4x4..... 700-00-79
Transmission Right-Hand View — Vehicles With: 6-Speed Manual Transmission (MT82 4x4)..... 700-00-80
Transmission Right-Hand View — Vehicles With: 6-Speed Automatic Transaxle - 6R80 4x4..... 700-00-81

COMPONENT LOCATION

B-Pillar LH - Single Cab

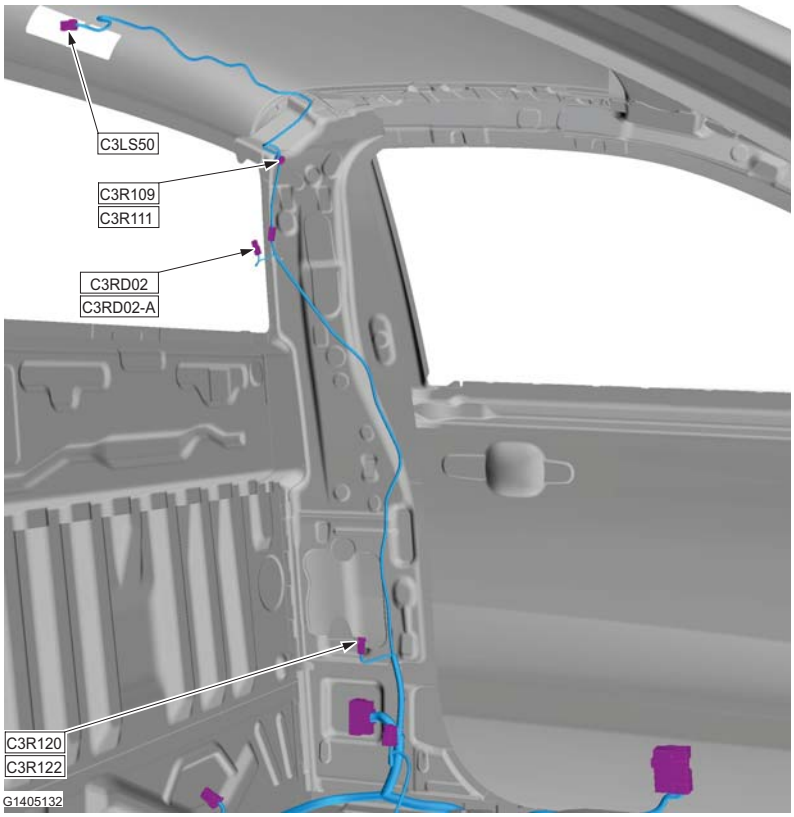

COMPONENT LOCATION

B-Pillar RH - Single Cab

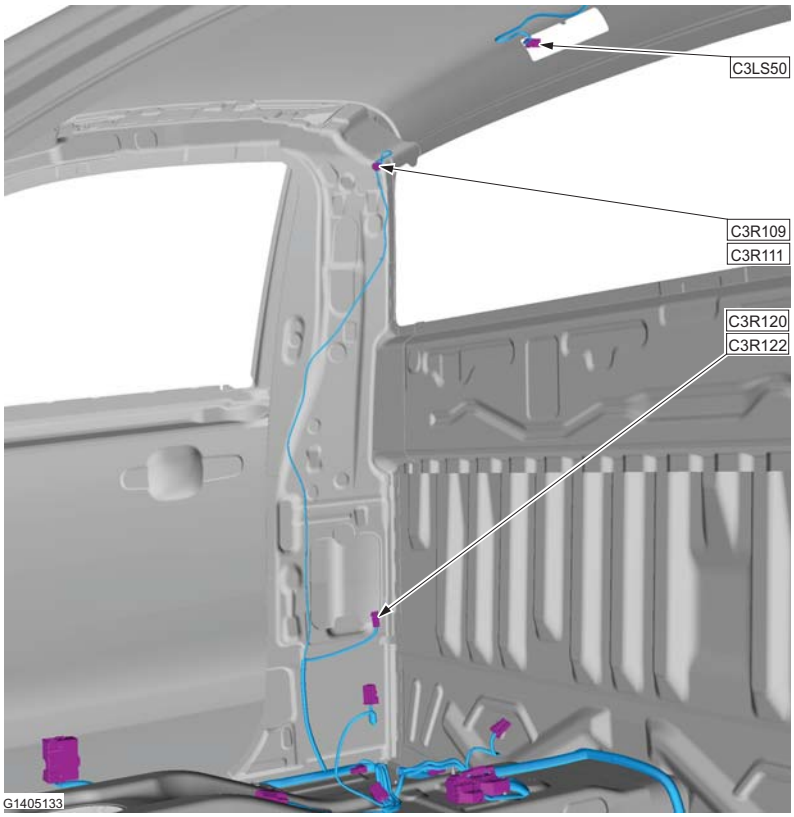

COMPONENT LOCATION

B-Pillar LH - Super Cab

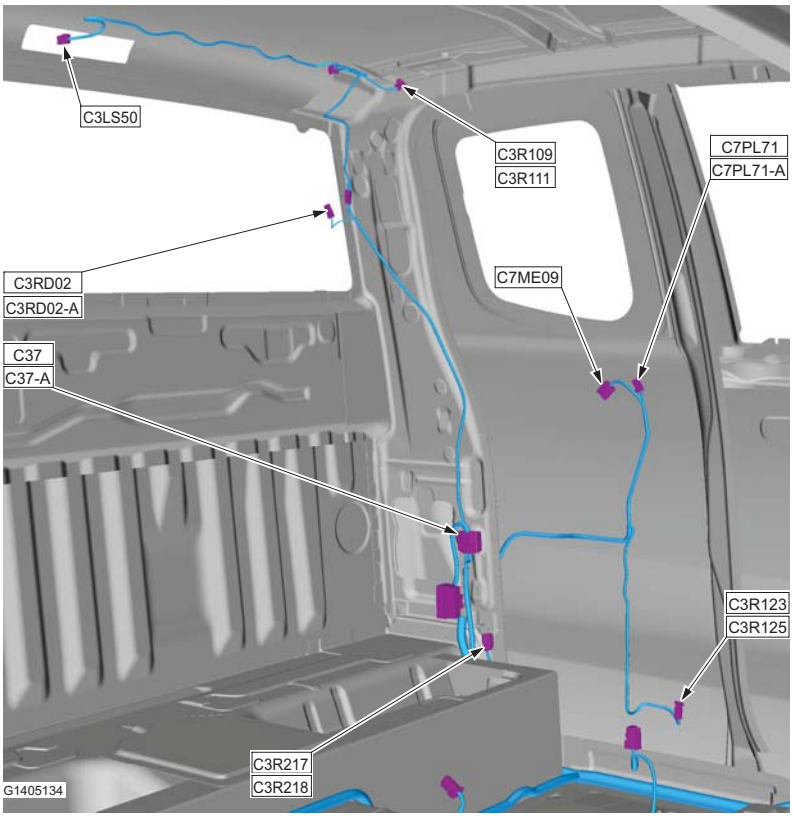

COMPONENT LOCATION

B-Pillar RH - Super Cab

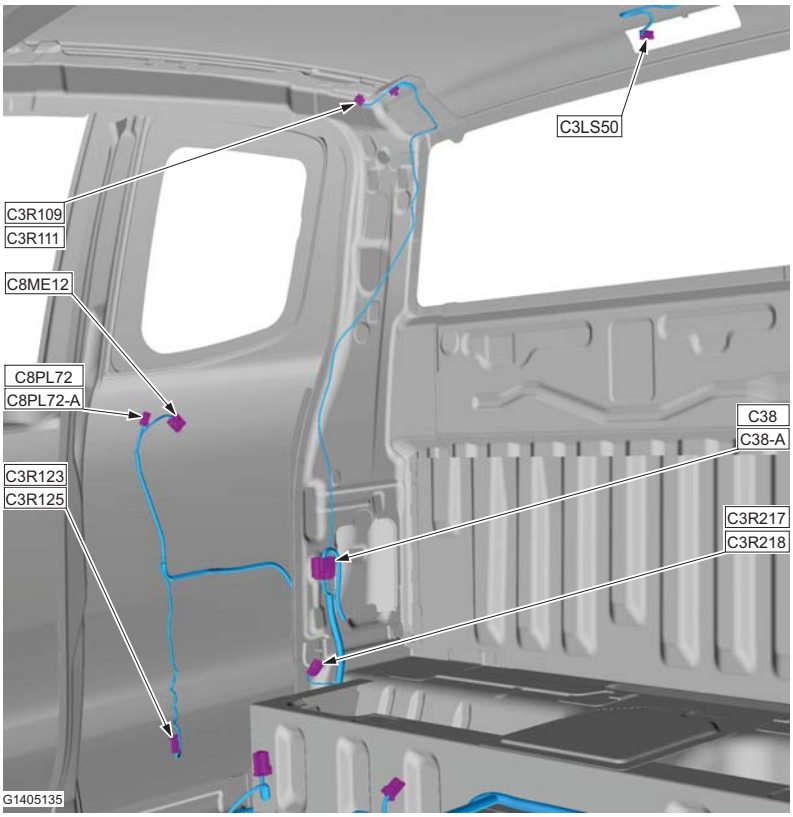

COMPONENT LOCATION

Central Junction Box (CJB) - LHD

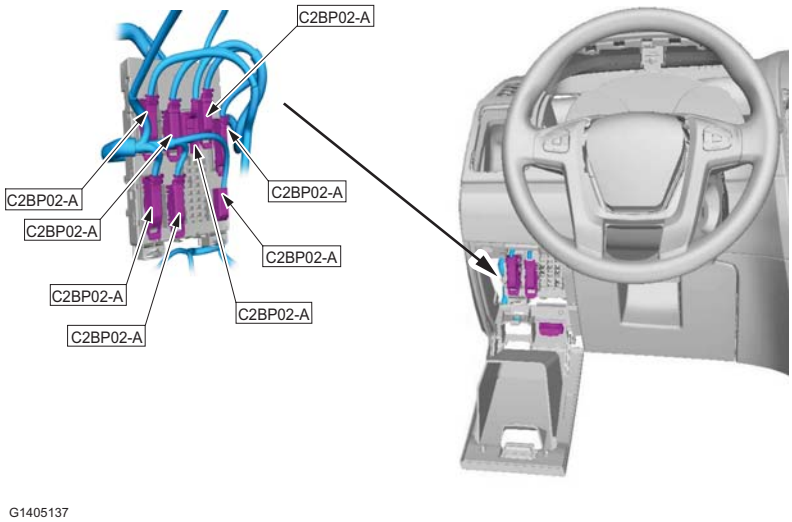

COMPONENT LOCATION

Central Junction Box (CJB) - RHD

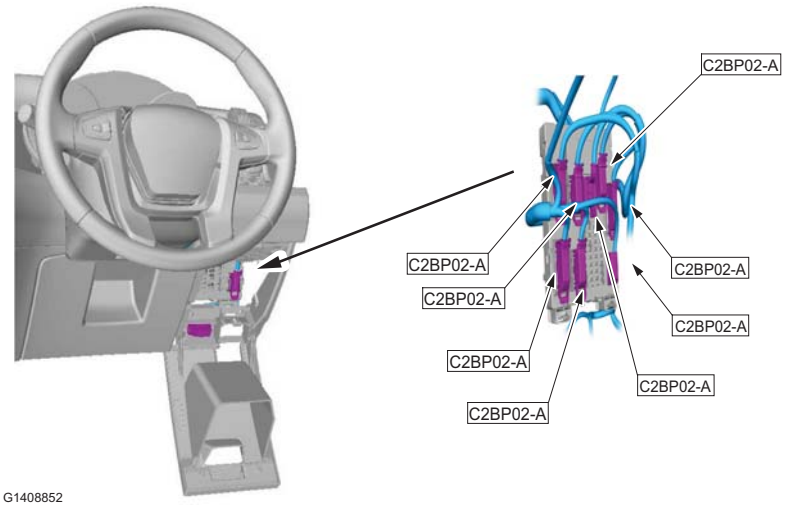

COMPONENT LOCATION

Climate Control Assembly - Vehicles With: Dual Automatic Temperature Control, LHD

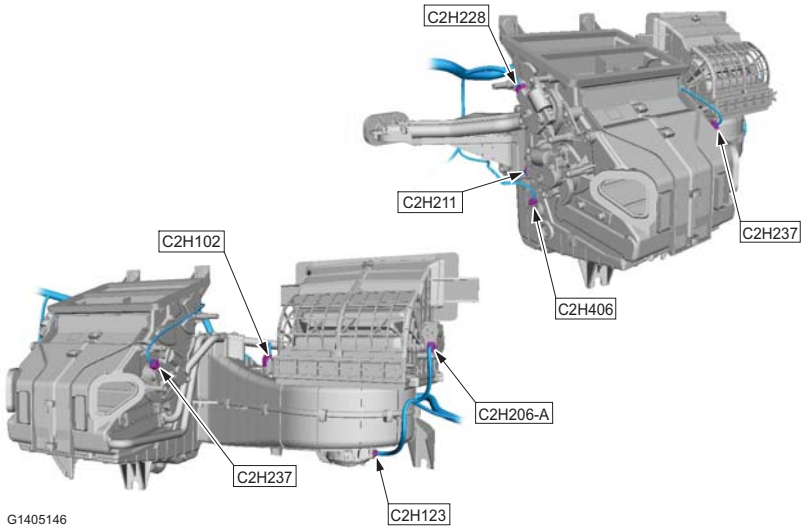

COMPONENT LOCATION

Climate Control Assembly - Vehicles With: Manual Temperature Control, LHD

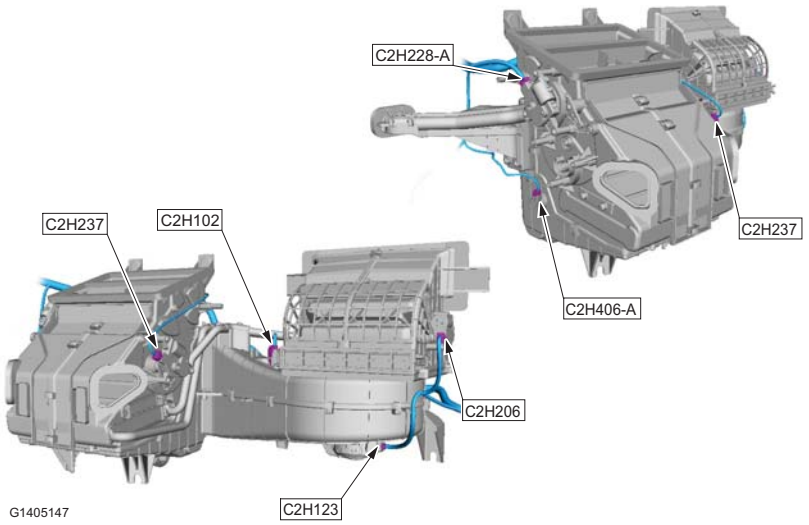

COMPONENT LOCATION

Climate Control Assembly - Vehicles With: Air Conditioning, LHD

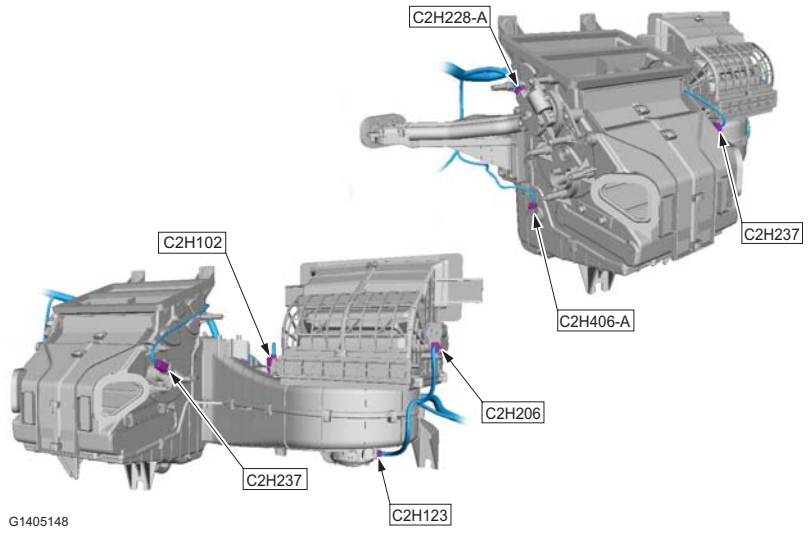

COMPONENT LOCATION

Climate Control Assembly - Vehicles Without: Air Conditioning, LHD

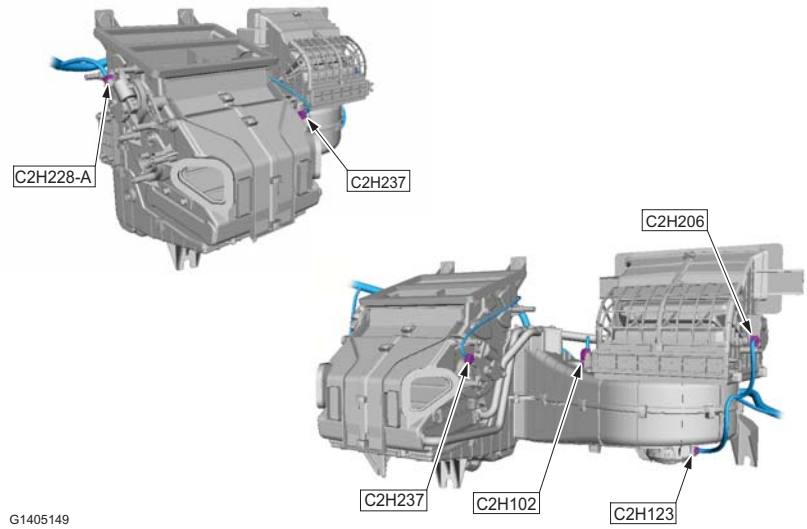

COMPONENT LOCATION

Climate Control Assembly - Vehicles With: Dual Automatic Temperature Control, RHD

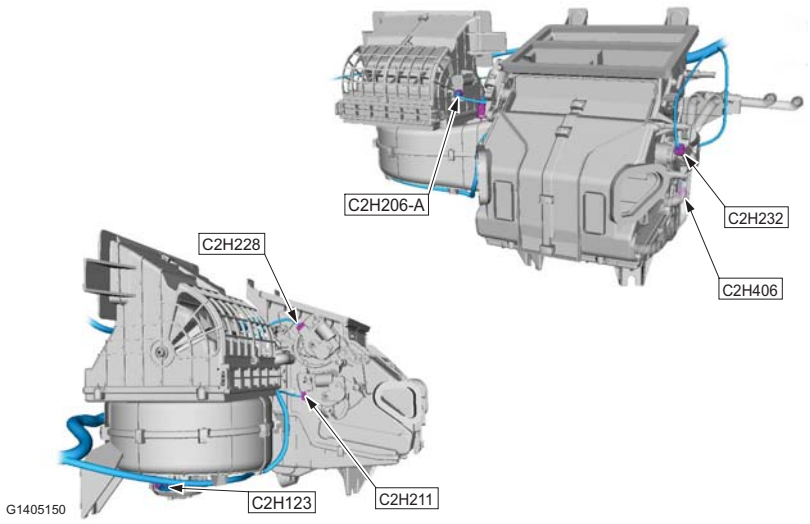

COMPONENT LOCATION

Climate Control Assembly - Vehicles With: Manual Temperature Control, RHD

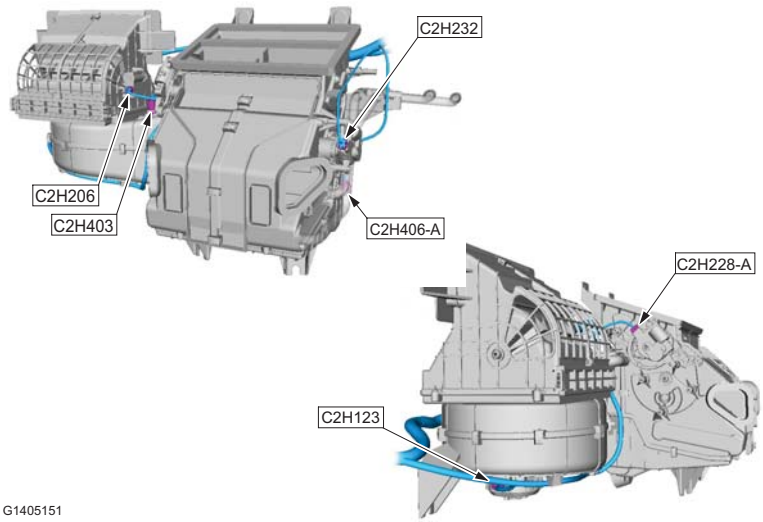

COMPONENT LOCATION

Climate Control Assembly - Vehicles With: Air Conditioning, RHD

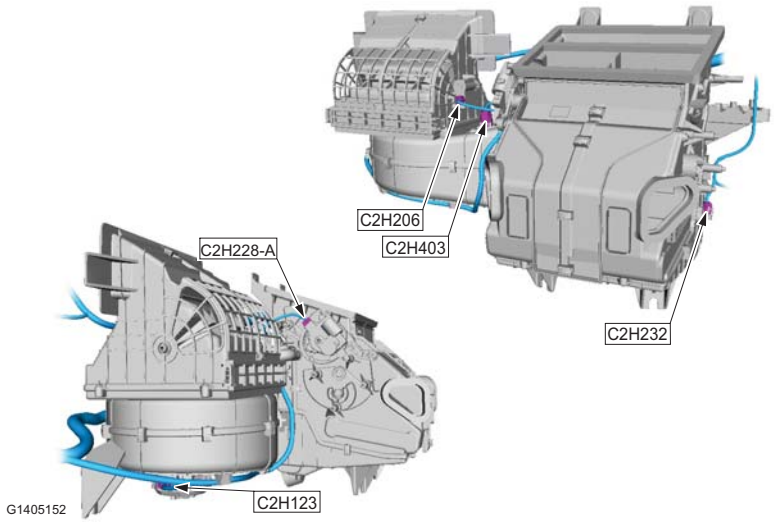

COMPONENT LOCATION

Climate Control Assembly - Vehicles Without: Air Conditioning, RHD

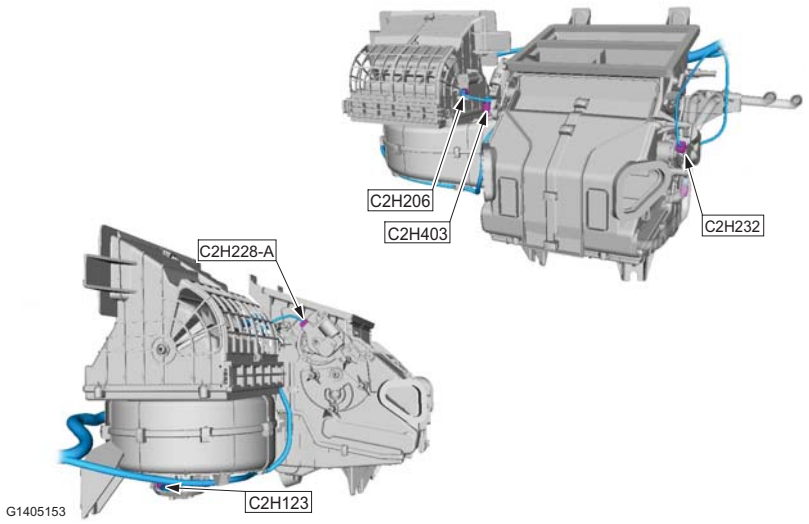

COMPONENT LOCATION

Driver Door Interior View - Double Cab, LHD

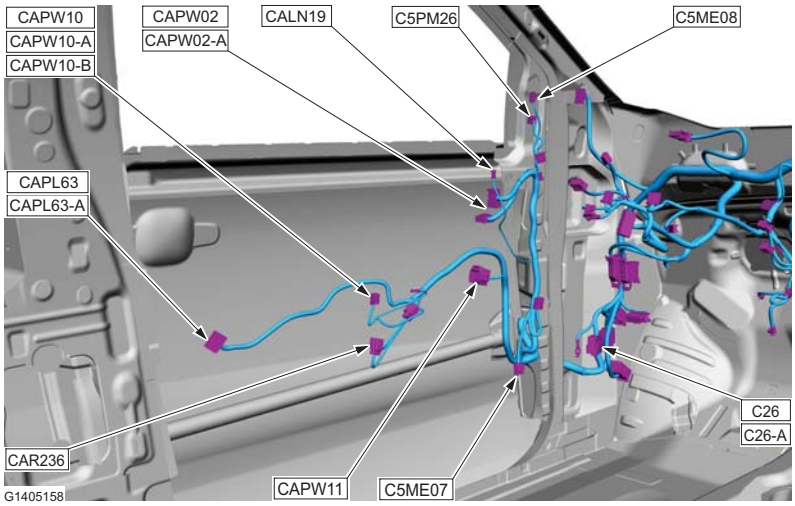

COMPONENT LOCATION

Driver Door Interior View - Single Cab/Super Cab, LHD

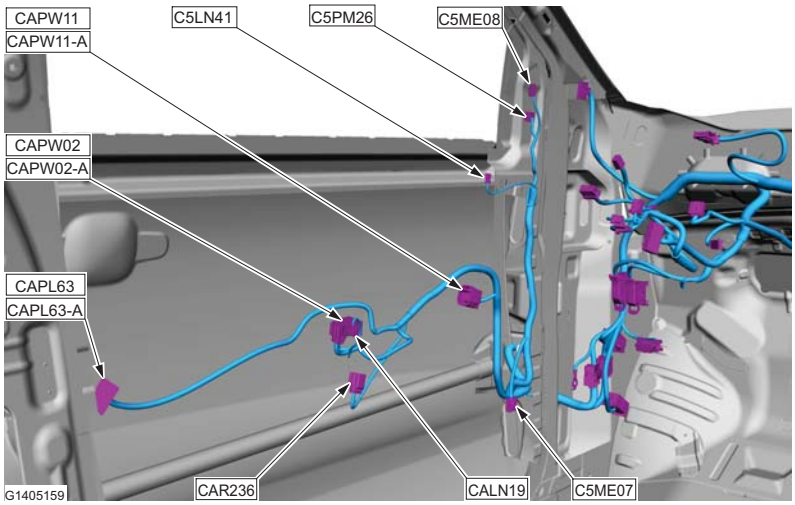

COMPONENT LOCATION

Driver Door Interior View - Double Cab, RHD

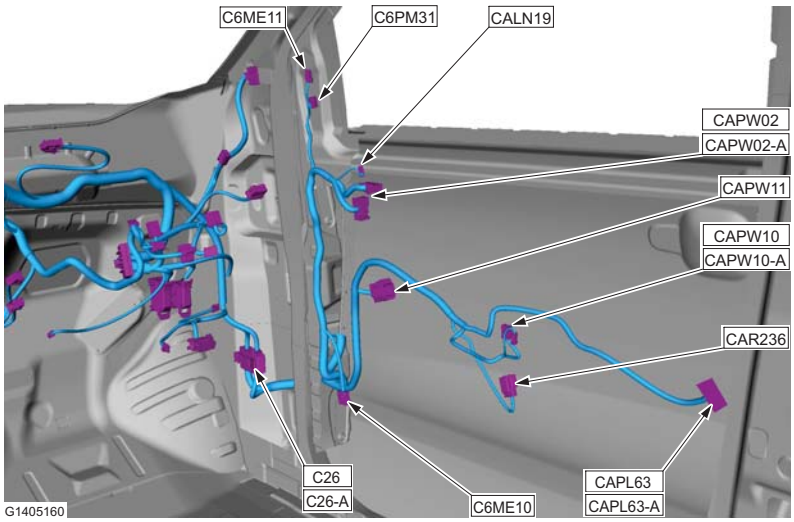

COMPONENT LOCATION

Driver Door Interior View - Single Cab/Super Cab, RHD

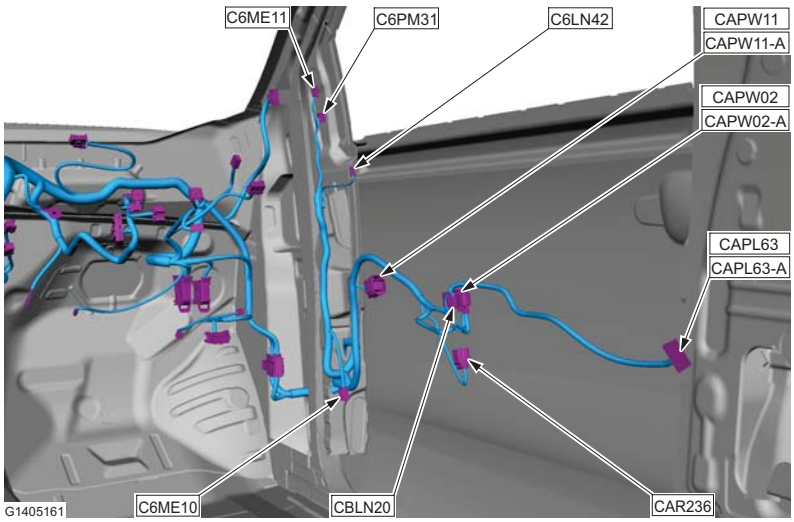

COMPONENT LOCATION

Engine Compartment Left-Hand View - LHD

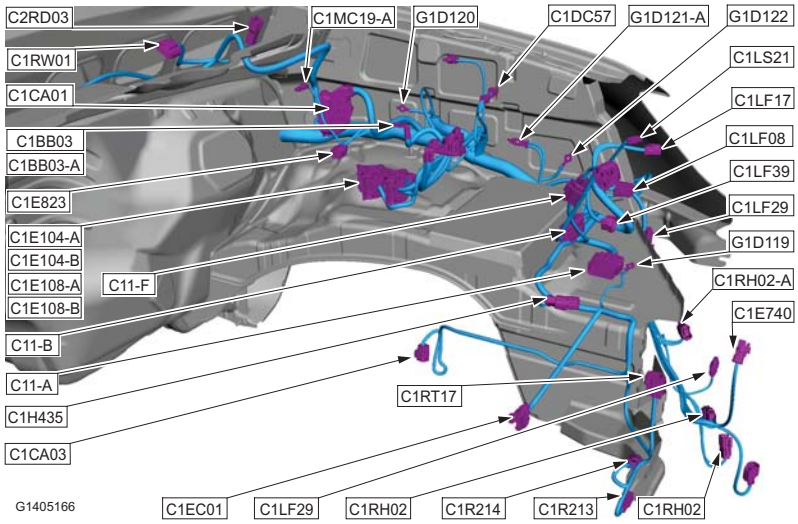

COMPONENT LOCATION

Engine Compartment Left-Hand View - RHD

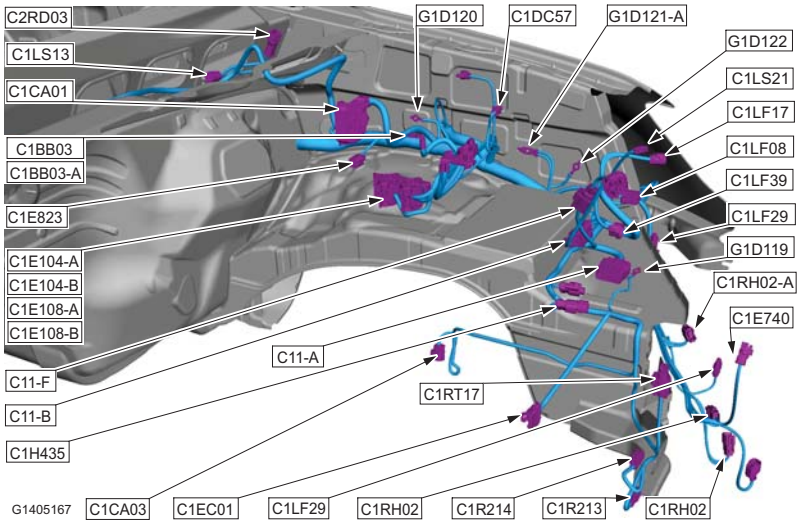

COMPONENT LOCATION

Engine Compartment Right-Hand View - LHD

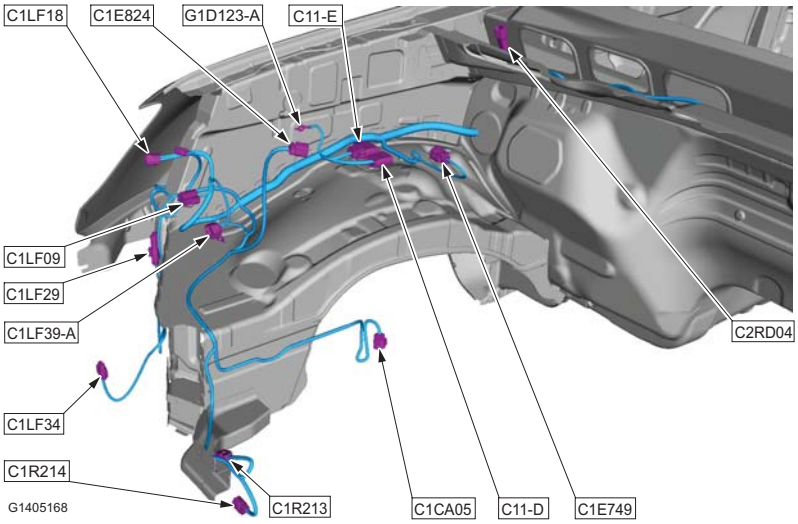

COMPONENT LOCATION

Engine Compartment Right-Hand View - RHD

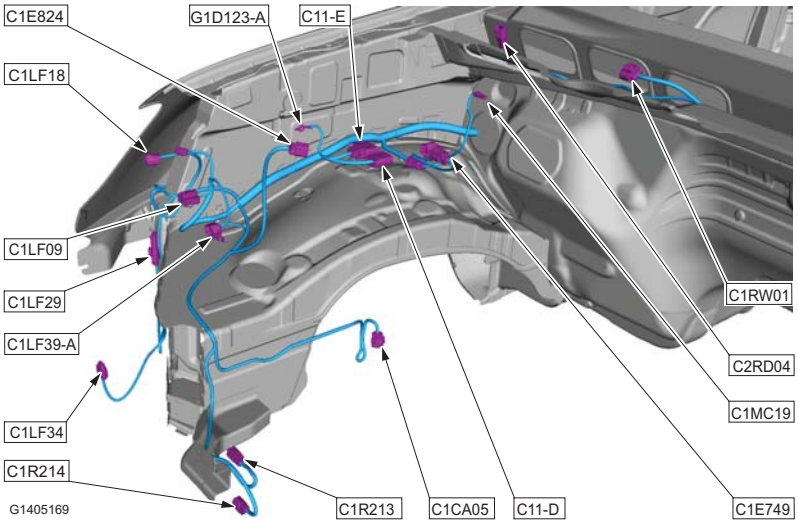

COMPONENT LOCATION

Engine Left-Hand View - 2.5L Duratec-HE (122kW/165PS) - MI4

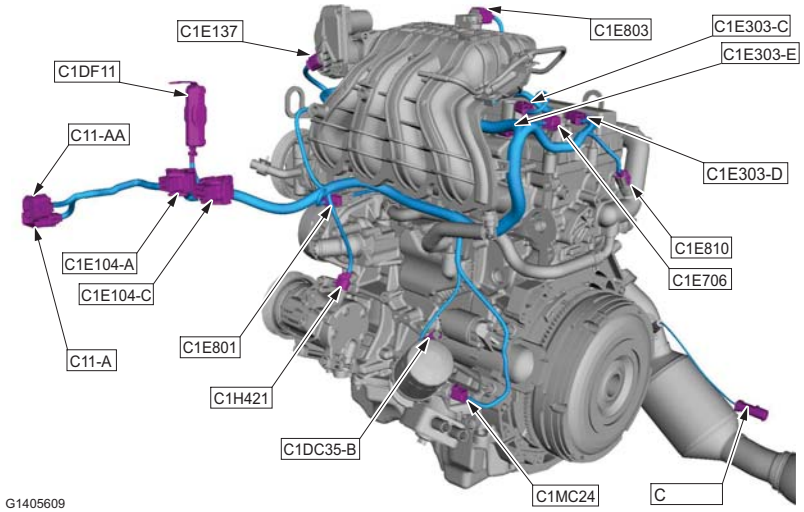

COMPONENT LOCATION

Engine Right-Hand View - 2.5L Duratec-HE (122kW/165PS) - MI4

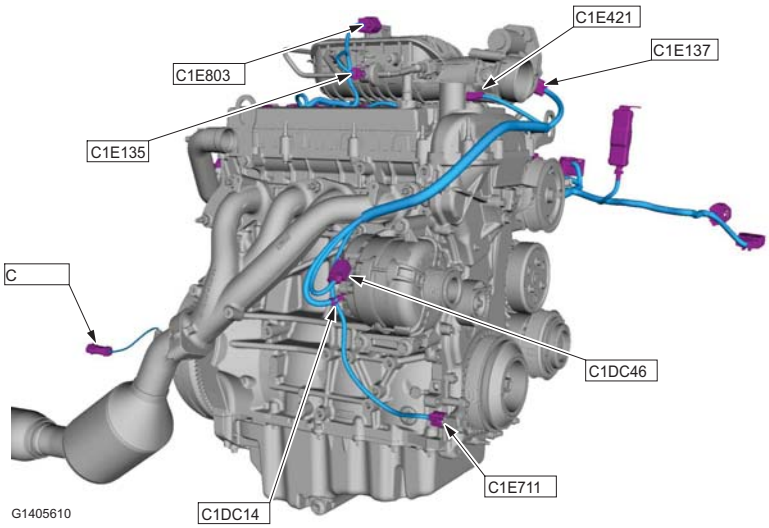

COMPONENT LOCATION

Engine Left-Hand View - 2.5L Duratec-HE (122kW/165PS) - MI4, Compressed Natural Gas (CNG)/Ethanol/Liquefied Petroleum Gas (LPG)

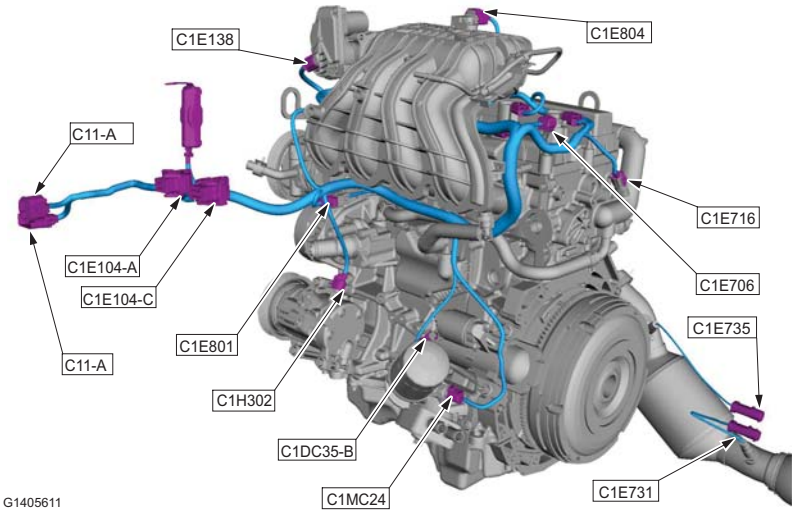

COMPONENT LOCATION

Engine Right-Hand View - 2.5L Duratec-HE (122kW/165PS) - MI4, Compressed Natural Gas (CNG)/Ethanol/Liquefied Petroleum Gas (LPG)

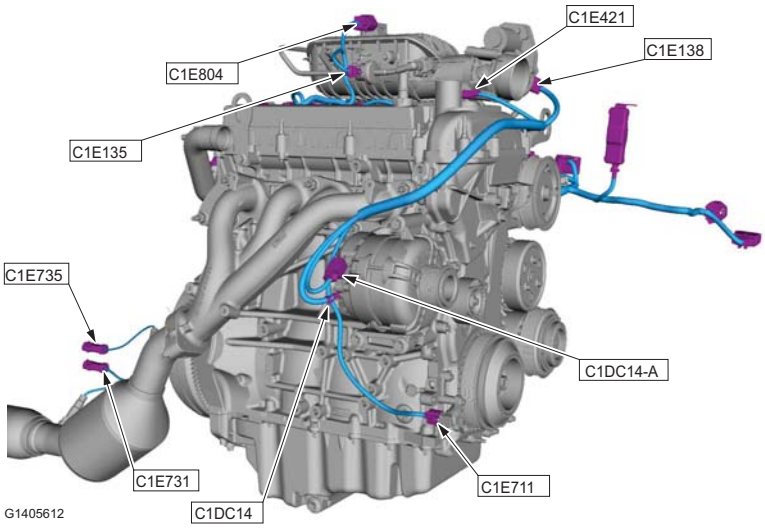

COMPONENT LOCATION

Engine Upper View - 2.5L Duratec-HE (122kW/165PS) - MI4, Compressed Natural Gas (CNG)/Ethanol/Liquefied Petroleum Gas (LPG)

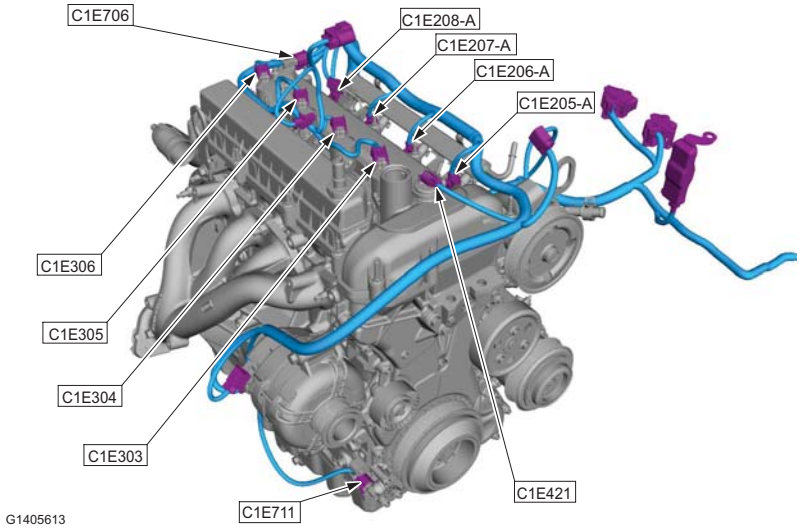

COMPONENT LOCATION

Engine Left-Hand View - 2.2L Duratorq-TDCi (88kW/120PS) - Puma/2.2L Duratorq-TDCi (96kW/130PS) - Puma/2.2L Duratorq-TDCi (110kW/150PS) - Puma

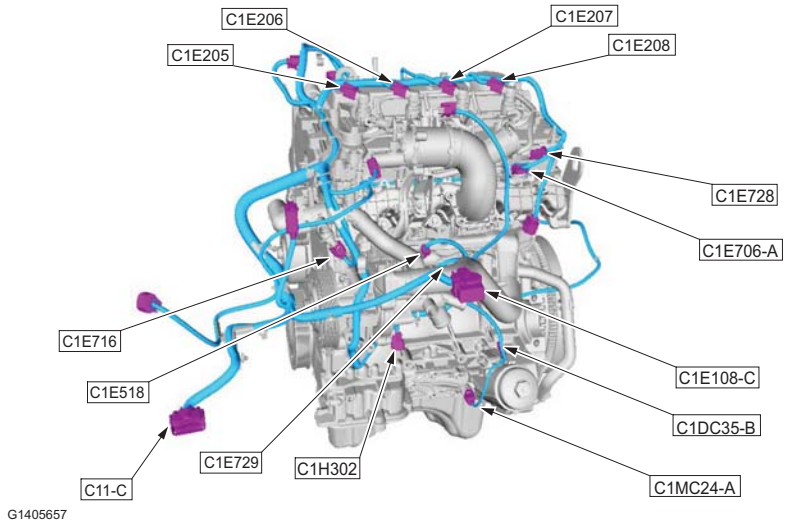

COMPONENT LOCATION

Engine Right-Hand View - 2.2L Duratorq-TDCi (88kW/120PS) - Puma/2.2L Duratorq-TDCi (96kW/130PS) - Puma

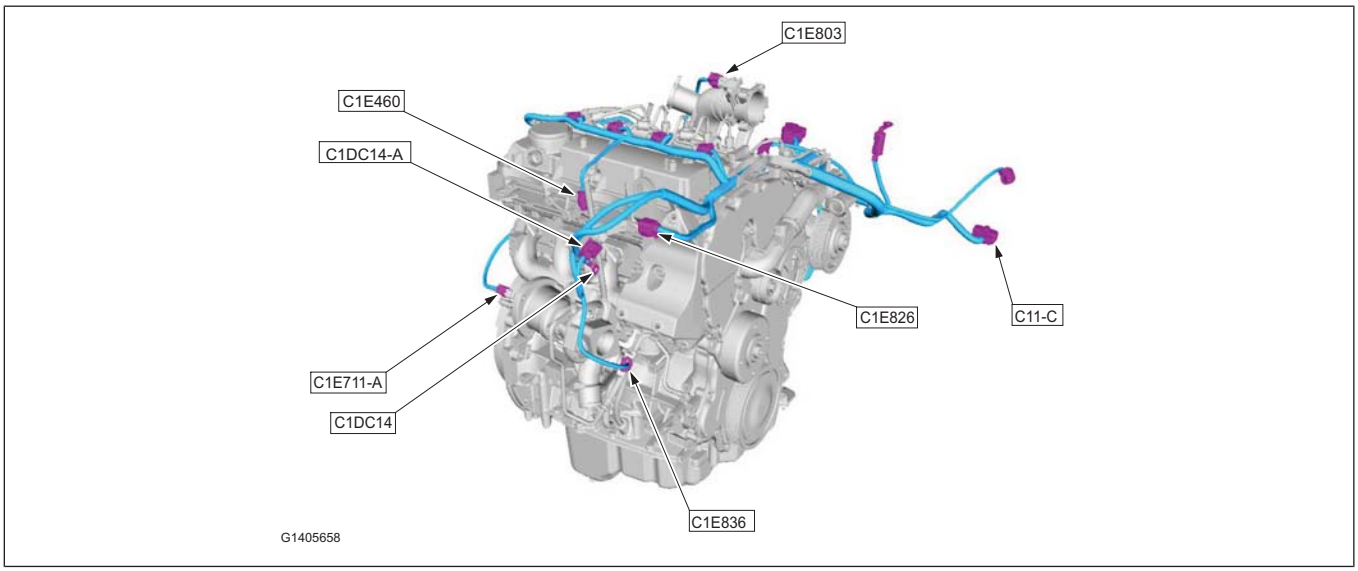

COMPONENT LOCATION

Engine Right-Hand View - 2.2L Duratorq-TDCi (110kW/150PS) - Puma

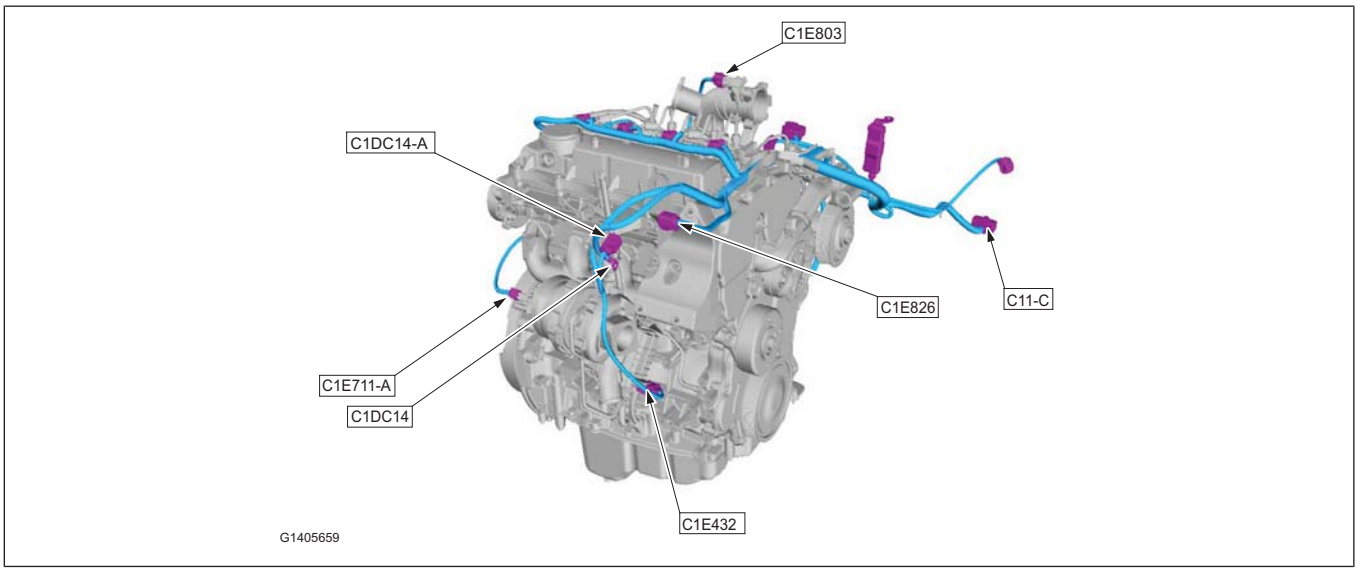

COMPONENT LOCATION

Engine Upper View - 2.2L Duratorq-TDCi (88kW/120PS) - Puma/2.2L Duratorq-TDCi (110kW/150PS) - Puma

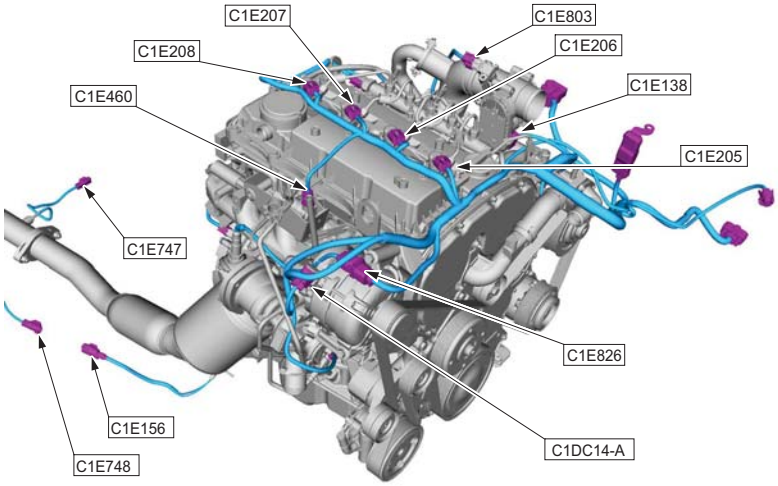

COMPONENT LOCATION

Engine Left-Hand View - 2.2L Duratorq-TDCi (88kW/120PS) - Puma/2.2L Duratorq-TDCi (110kW/150PS) - Puma

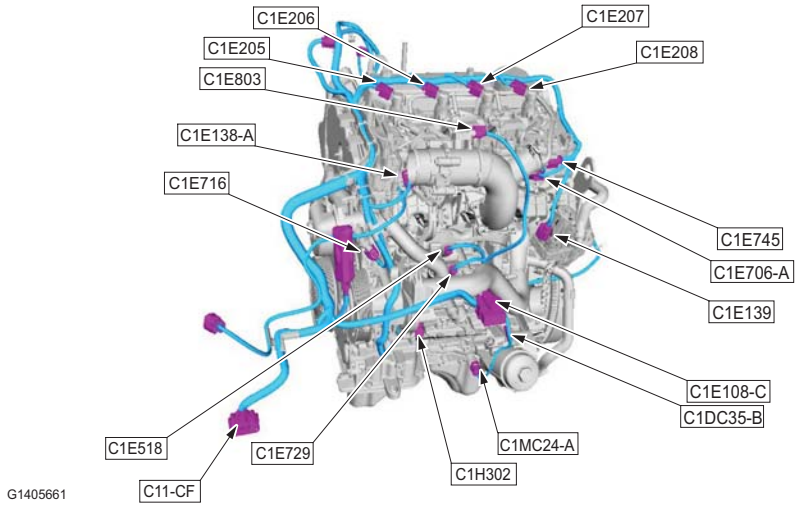

COMPONENT LOCATION

Engine Left-Hand View - 3.2L Duratorq-TDCi (148kW/200PS) - Puma

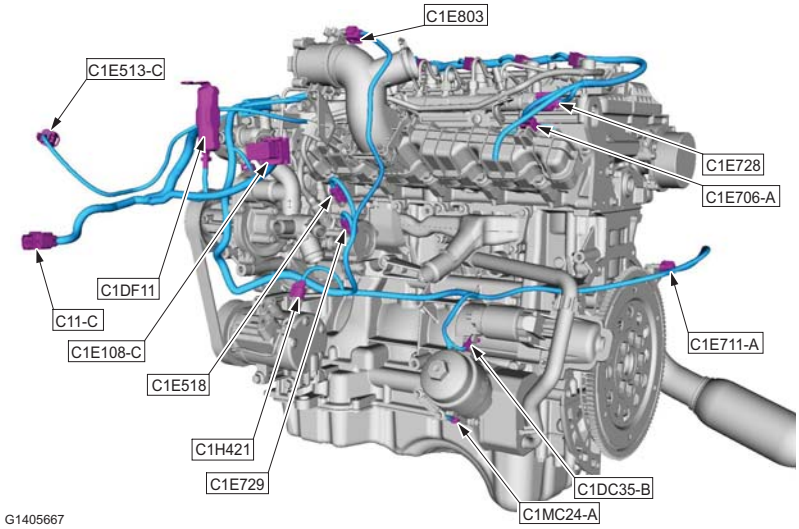

COMPONENT LOCATION

Engine Right-Hand View - 3.2L Duratorq-TDCi (148kW/200PS) - Puma

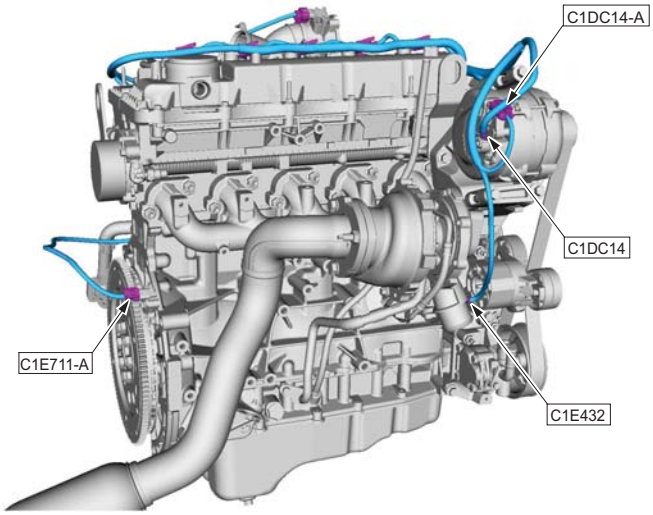

COMPONENT LOCATION

Engine Upper View - 3.2L Duratorq-TDCi (148kW/200PS) - Puma

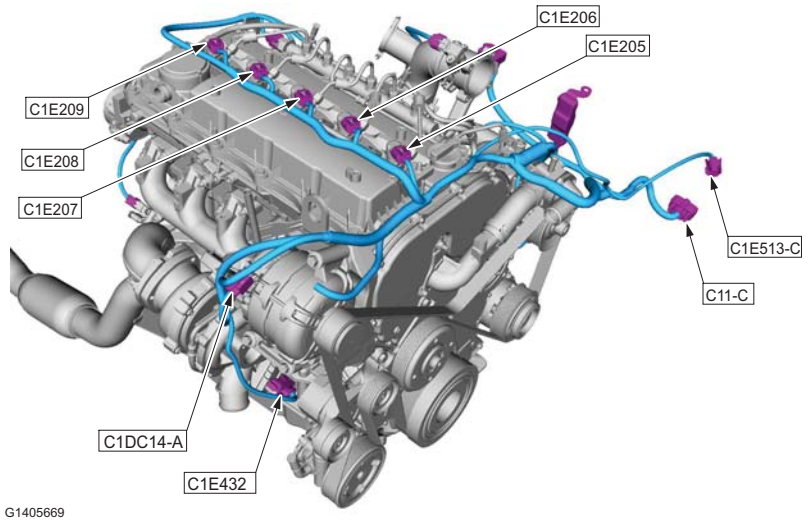

COMPONENT LOCATION

Engine Left-Hand View - 3.2L Duratorq-TDCi (148kW/200PS) - Puma

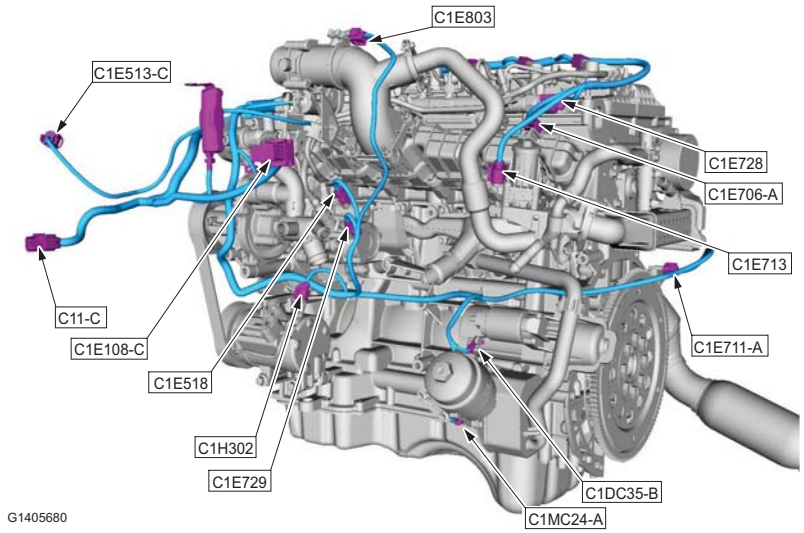

COMPONENT LOCATION

Engine Right-Hand View - 3.2L Duratorq-TDCi (148kW/200PS) - Puma

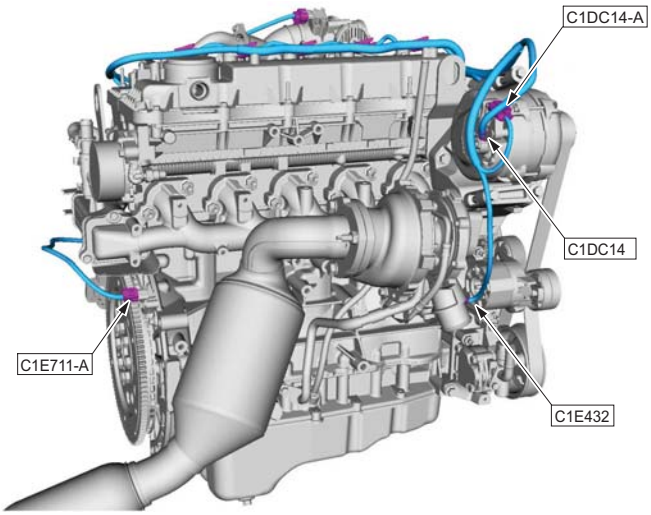

COMPONENT LOCATION

Engine Upper View - 3.2L Duratorq-TDCi (148kW/200PS) - Puma

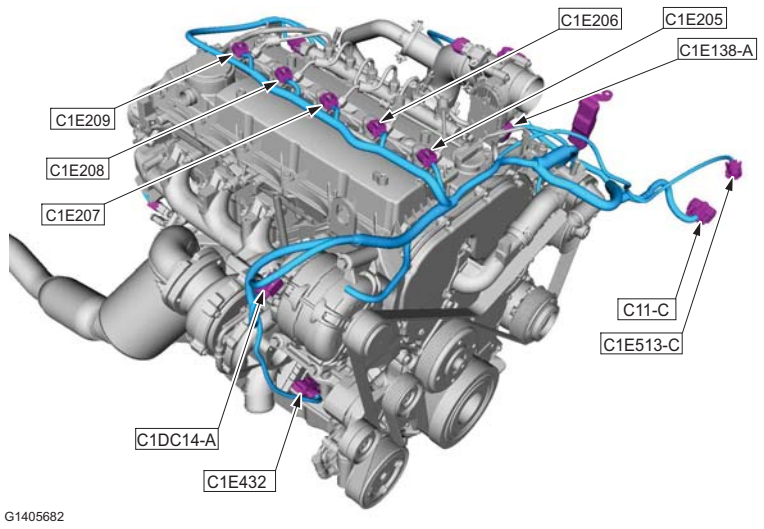

COMPONENT LOCATION

Front Fender LH

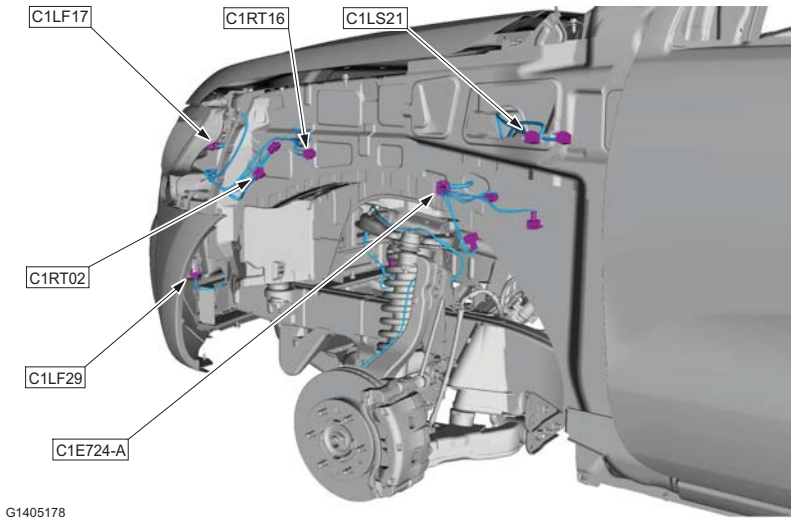

COMPONENT LOCATION

Front Fender RH

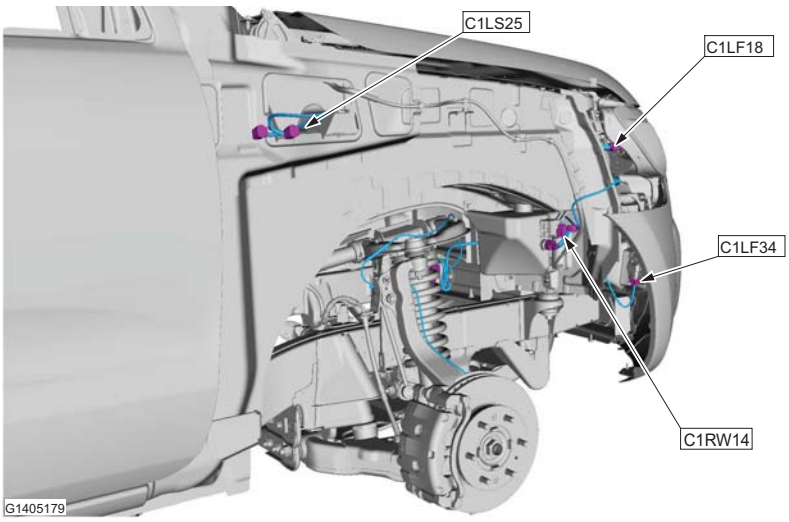

COMPONENT LOCATION

Front Floor Left-Hand View - Single Cab, LHD

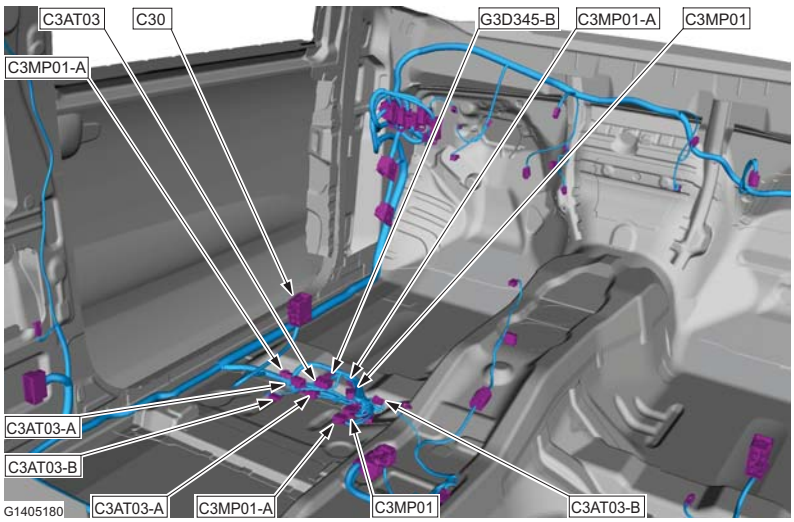

COMPONENT LOCATION

Front Floor Right-Hand View - Single Cab, LHD

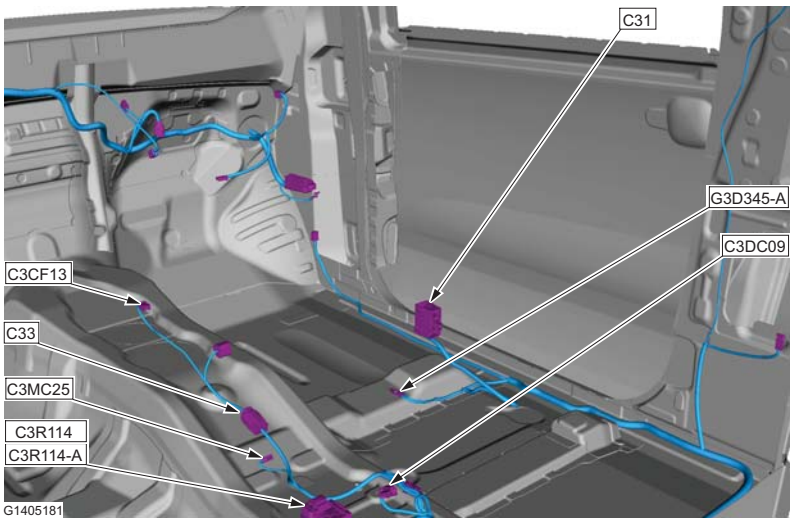

COMPONENT LOCATION

Front Floor Left-Hand View - Double Cab, LHD

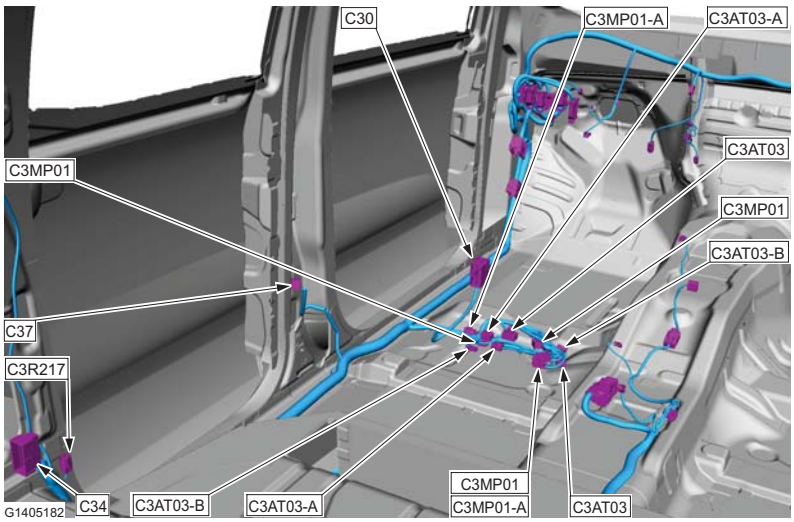

COMPONENT LOCATION

Front Floor Right-Hand View - Double Cab, LHD

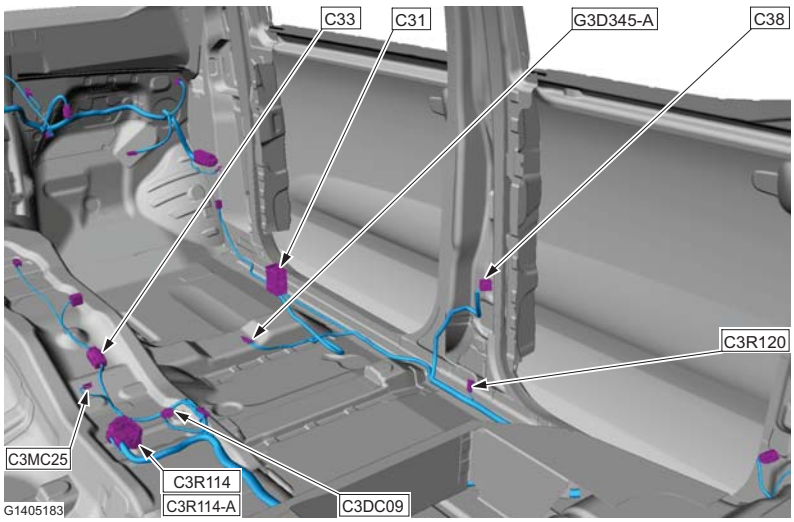

COMPONENT LOCATION

Front Floor Left-Hand View - Super Cab, LHD

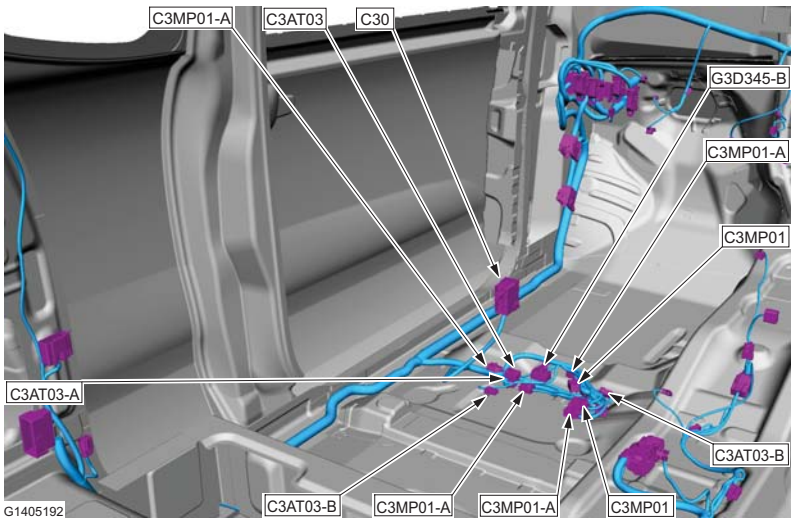

COMPONENT LOCATION

Front Floor Right-Hand View - Super Cab, LHD

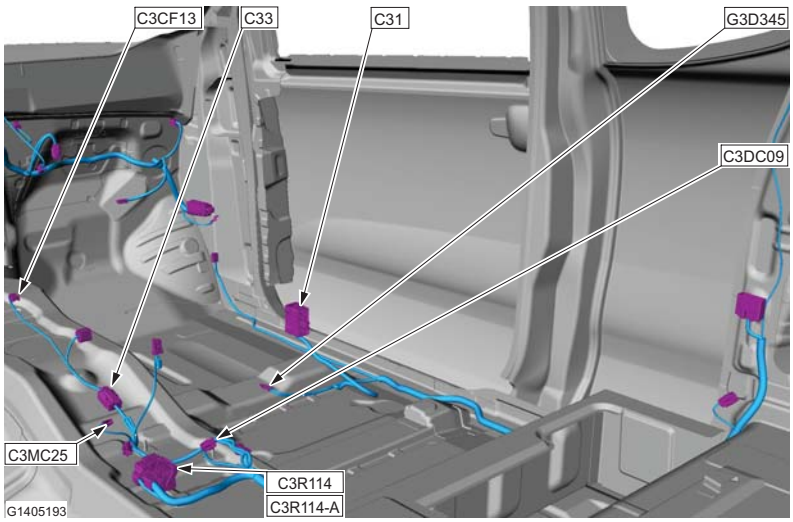

COMPONENT LOCATION

Front Floor Left-Hand View - Single Cab, RHD

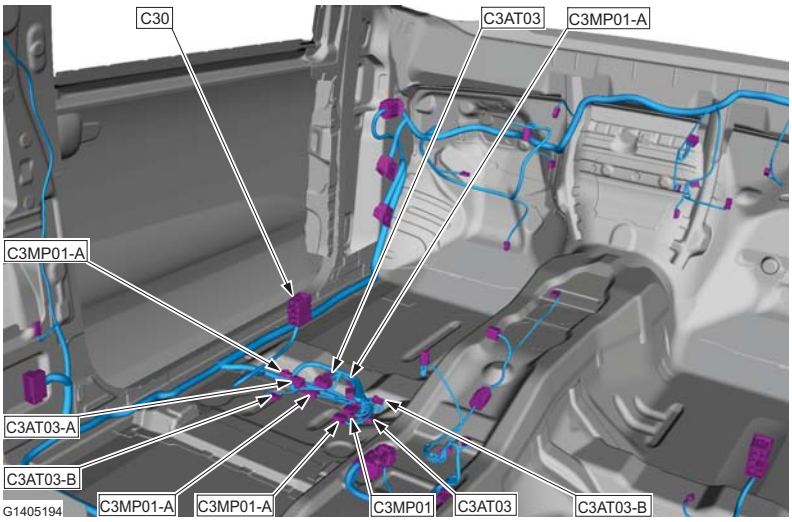

COMPONENT LOCATION

Front Floor Right-Hand View - Single Cab, RHD

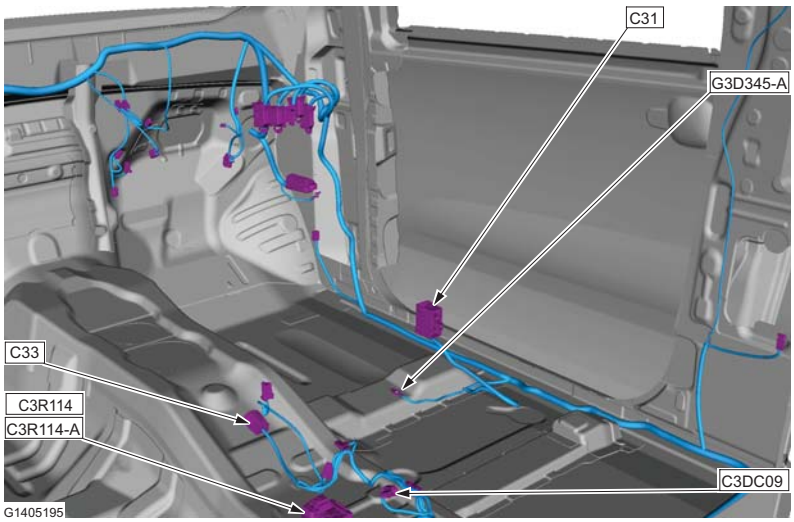

COMPONENT LOCATION

Front Floor Left-Hand View - Double Cab, RHD

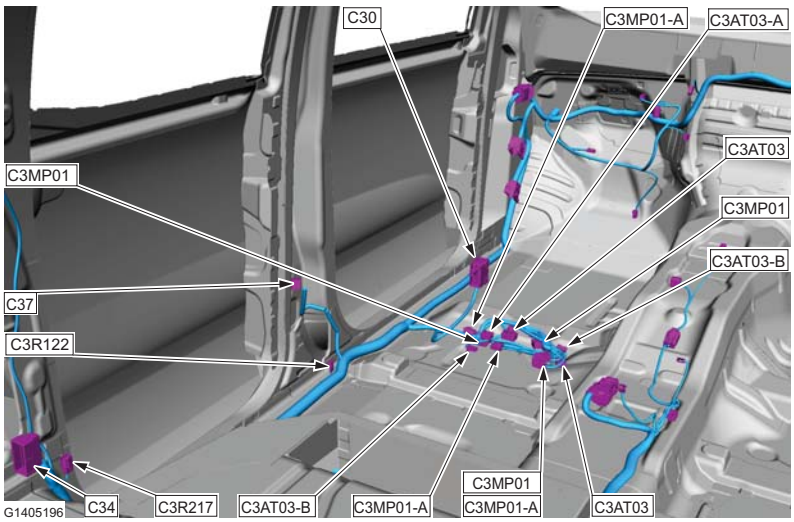

COMPONENT LOCATION

Front Floor Right-Hand View - Double Cab, RHD

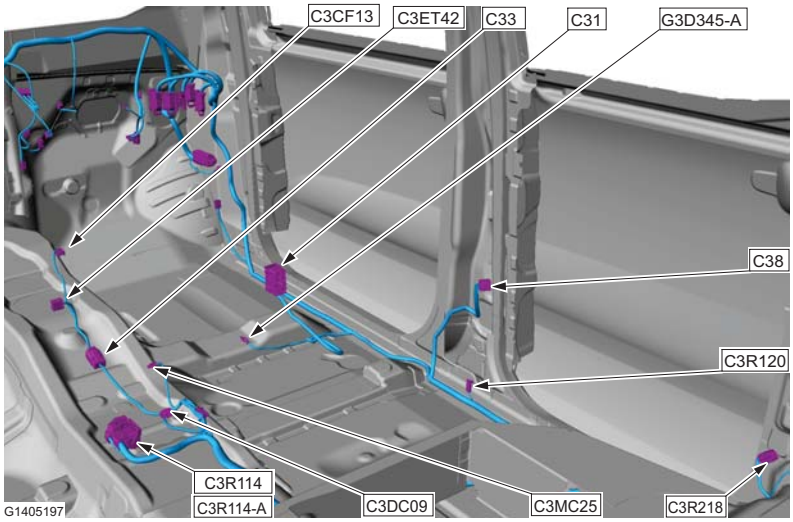

COMPONENT LOCATION

Front Floor Left-Hand View - Super Cab, RHD

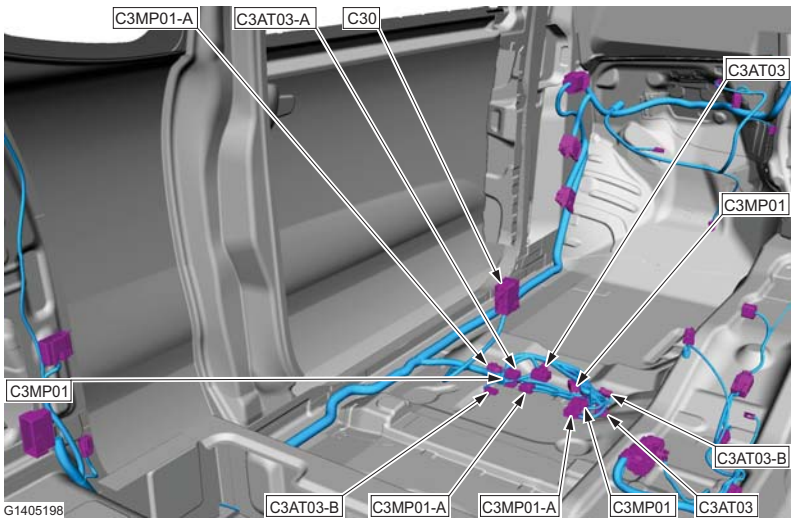

COMPONENT LOCATION

Front Floor Right-Hand View - Super Cab, RHD

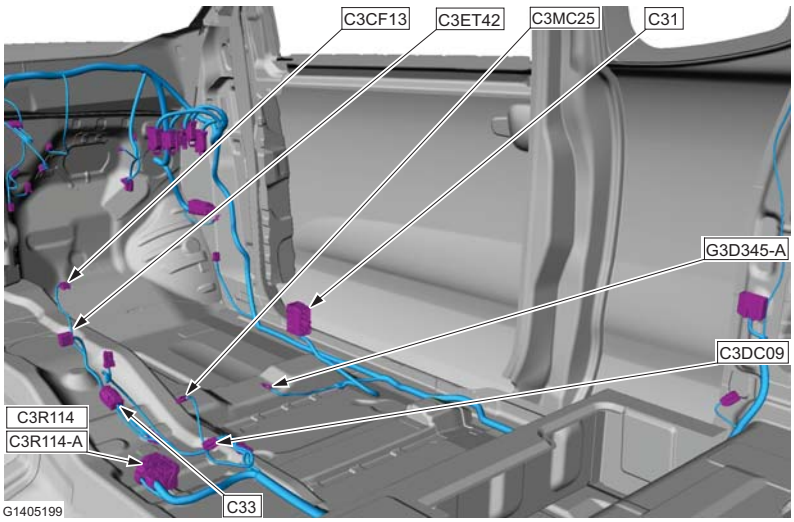

COMPONENT LOCATION

Fuel Tank

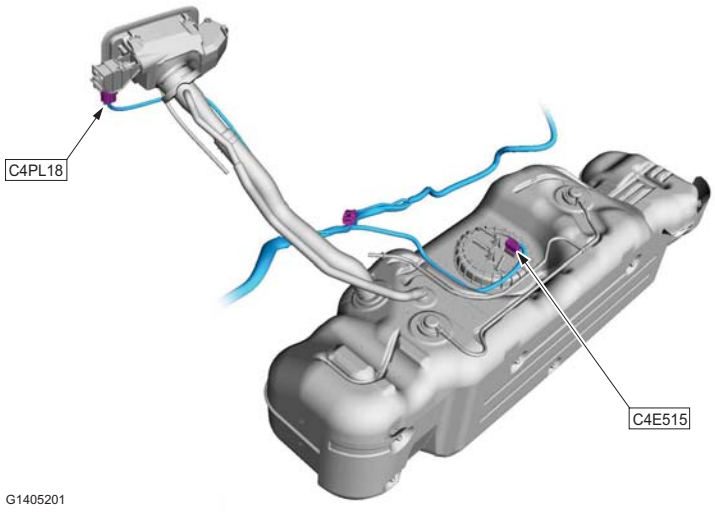

COMPONENT LOCATION

Headliner - Single Cab, LHD

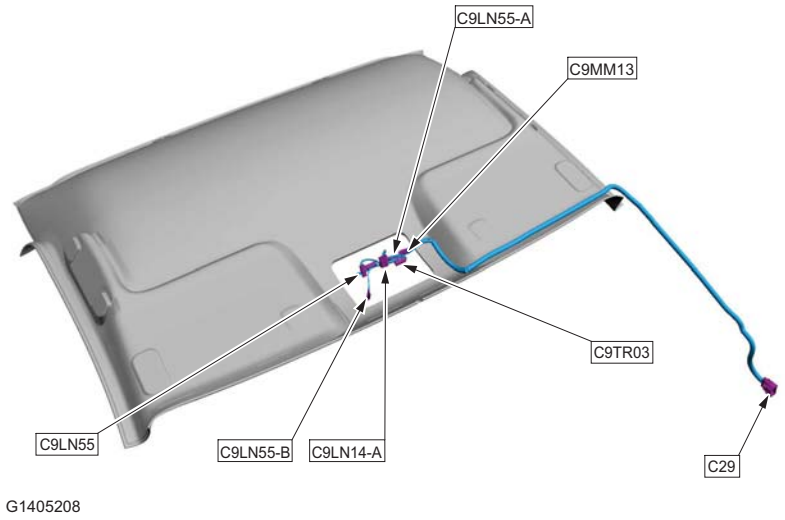

COMPONENT LOCATION

Headliner - Double Cab, LHD

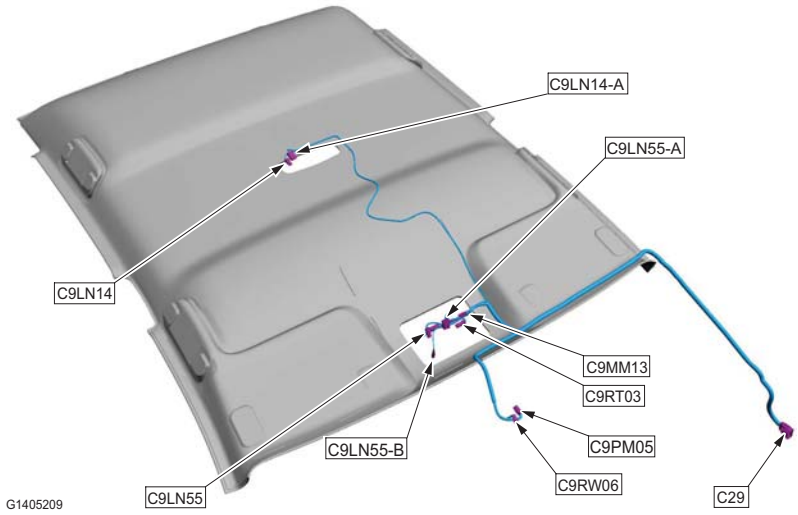

COMPONENT LOCATION

Headliner - Super Cab, LHD

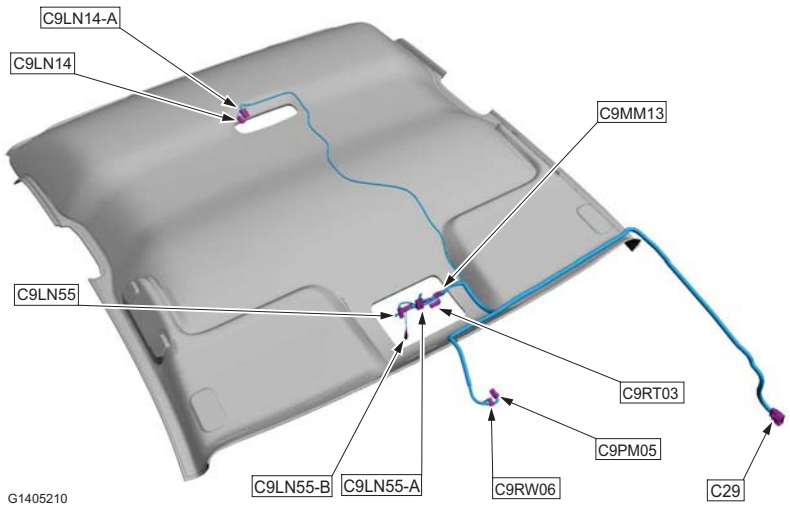

COMPONENT LOCATION

Headliner - Single Cab, RHD

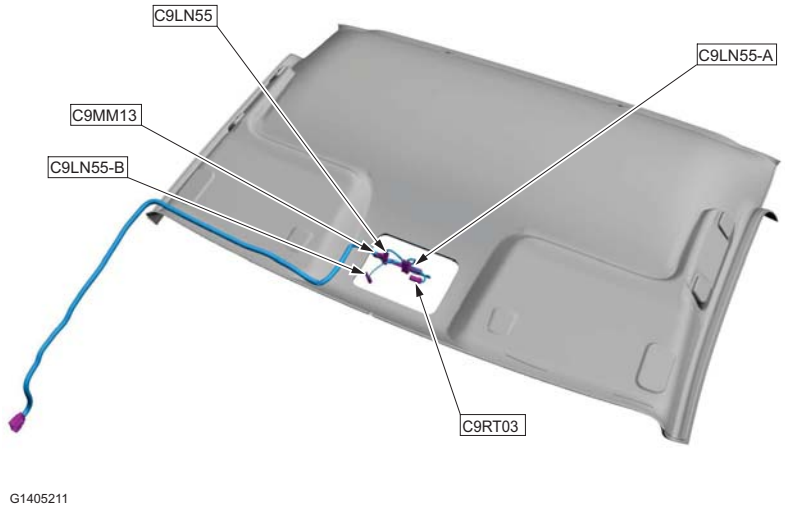

COMPONENT LOCATION

Headliner - Double Cab, RHD

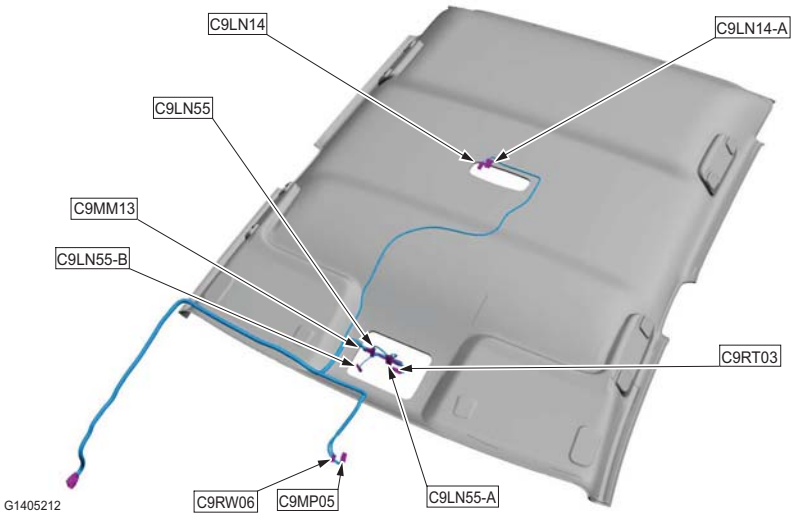

COMPONENT LOCATION

Headliner - Super Cab, RHD

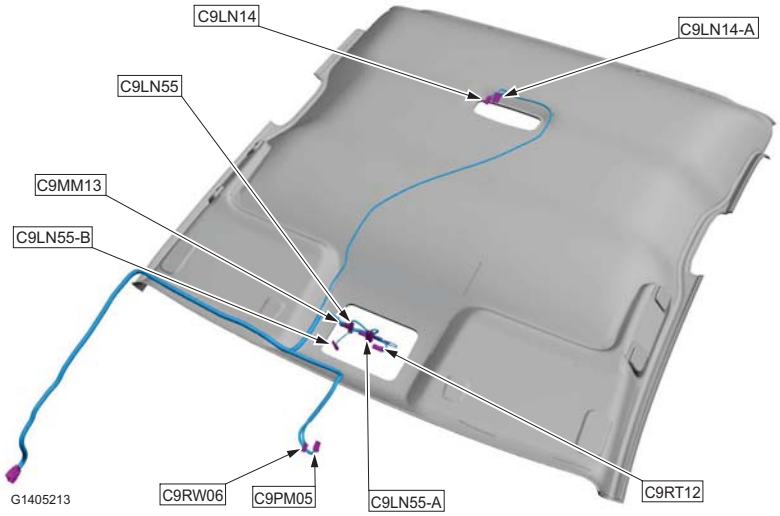

COMPONENT LOCATION

Instrument Panel - LHD

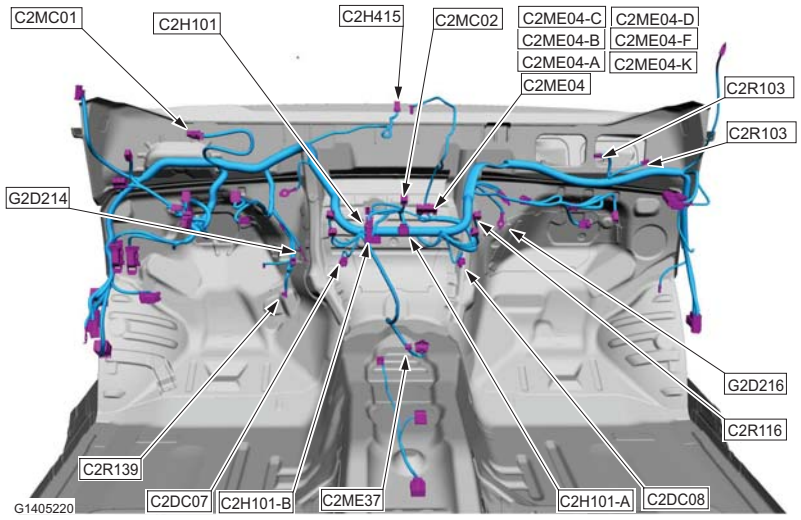

COMPONENT LOCATION

Instrument Panel - RHD

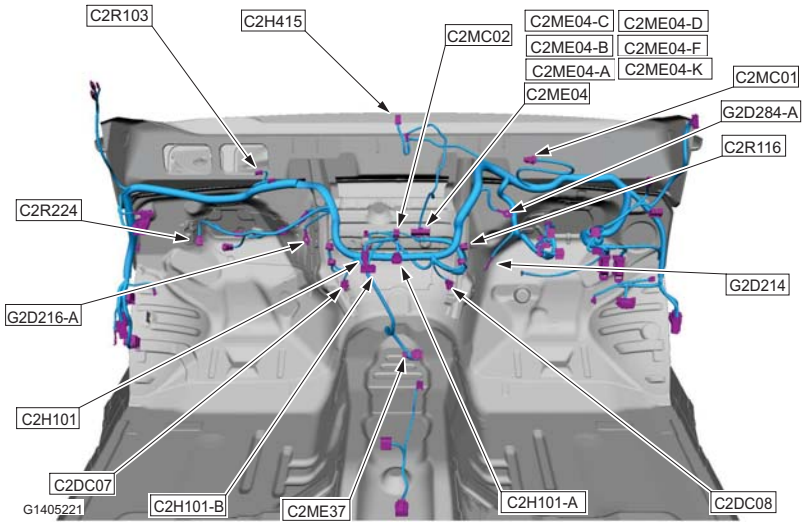

COMPONENT LOCATION

Passenger Door Interior View - Double Cab, LHD

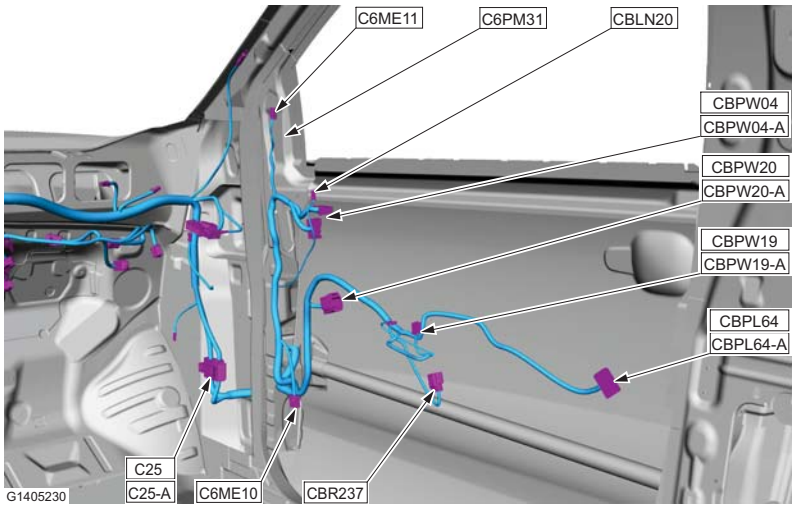

COMPONENT LOCATION

Passenger Door Interior View - Single Cab/Super Cab, LHD

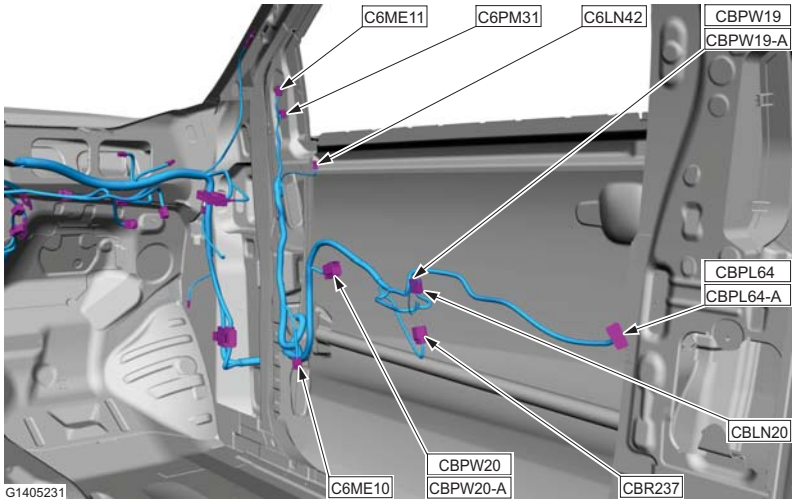

COMPONENT LOCATION

Passenger Door Interior View - Double Cab, RHD

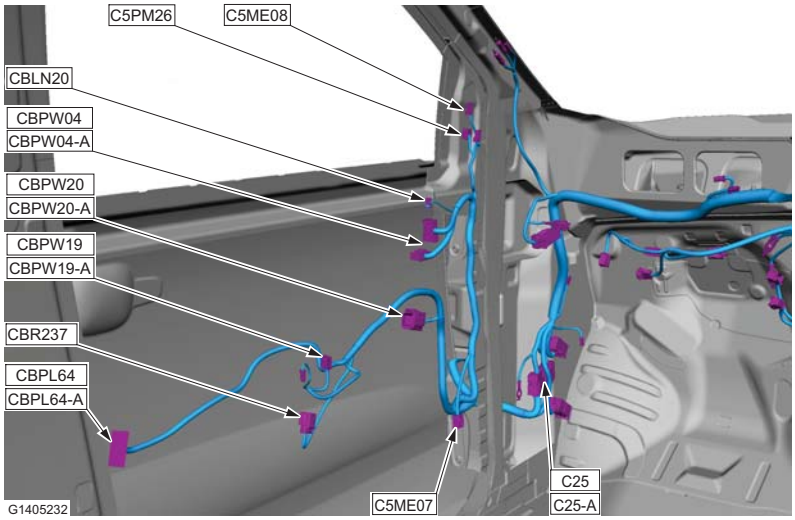

COMPONENT LOCATION

Passenger Door Interior View - Single Cab/Super Cab, RHD

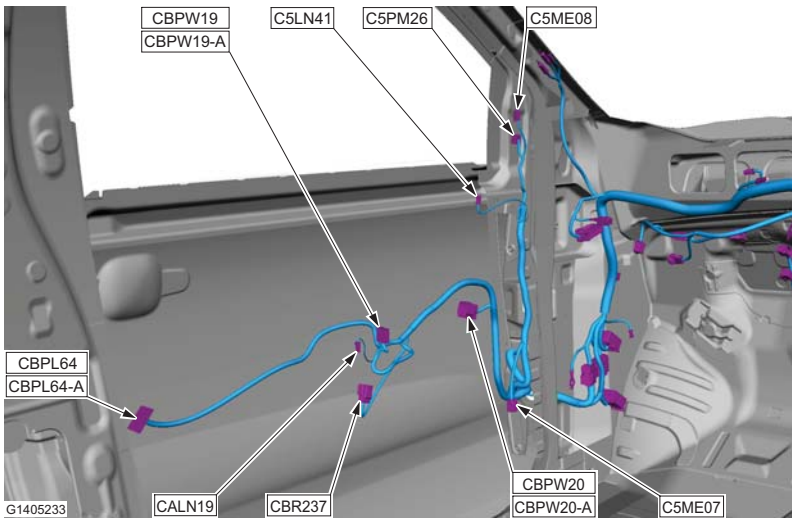

COMPONENT LOCATION

Rear Bumper

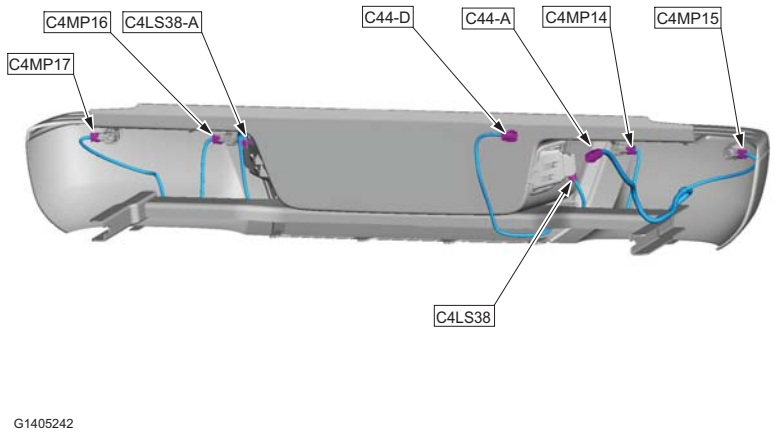

COMPONENT LOCATION

Rear Door LH Interior View

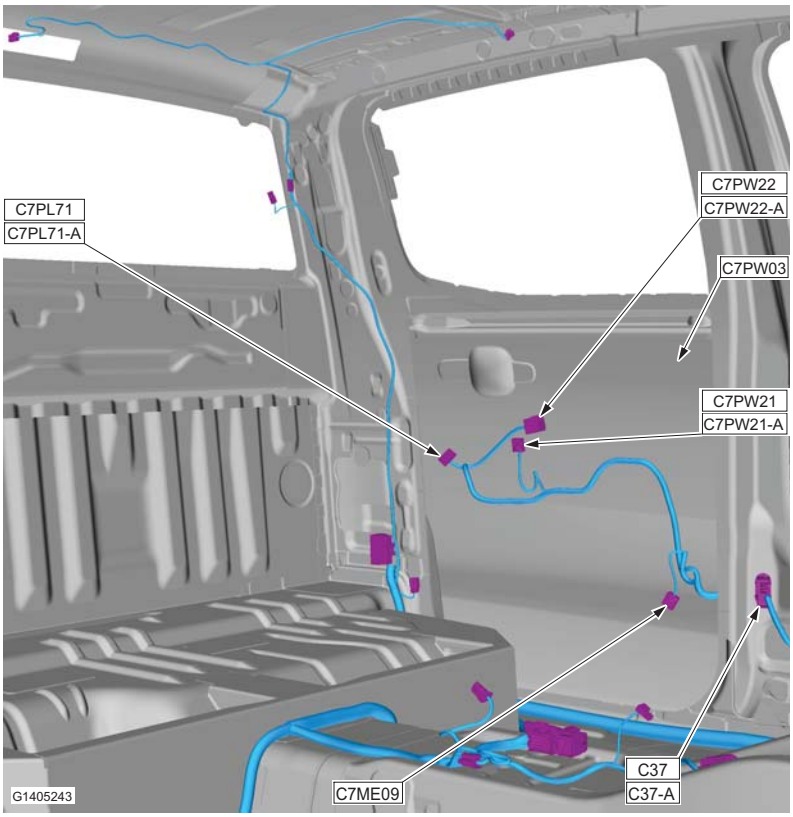

COMPONENT LOCATION

Rear Door RH Interior View

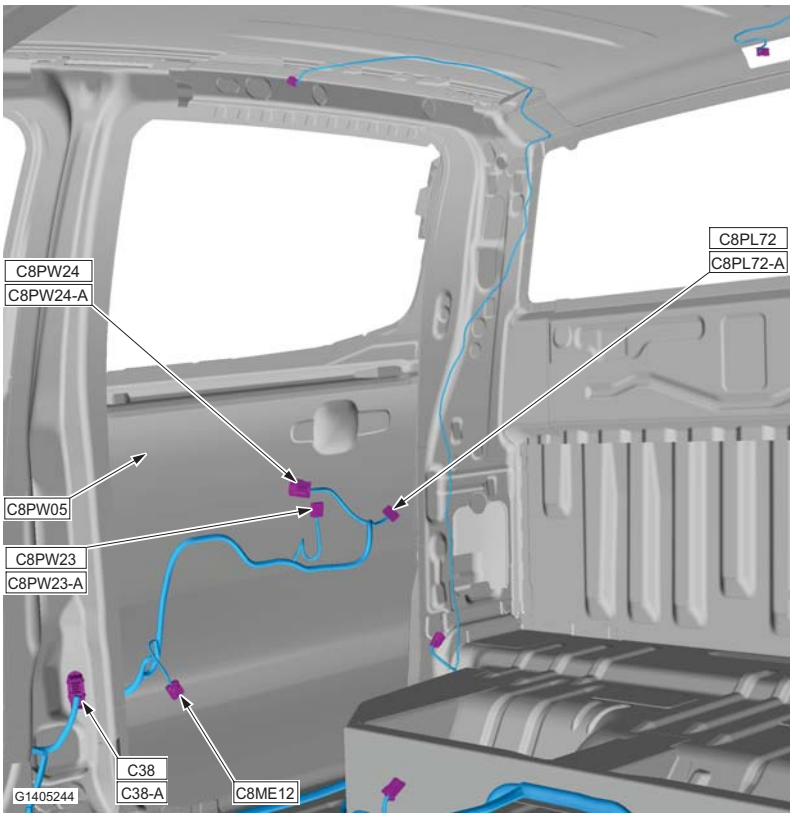

COMPONENT LOCATION

Rear Axle

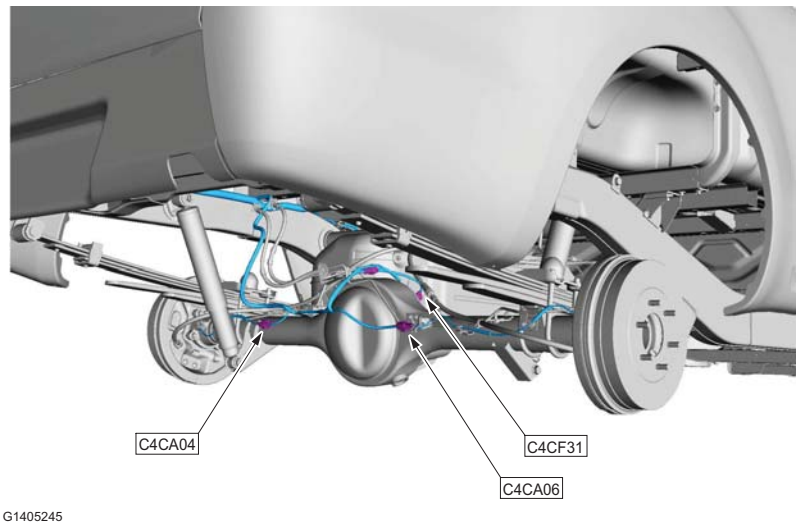

COMPONENT LOCATION

Rear Under Floor View

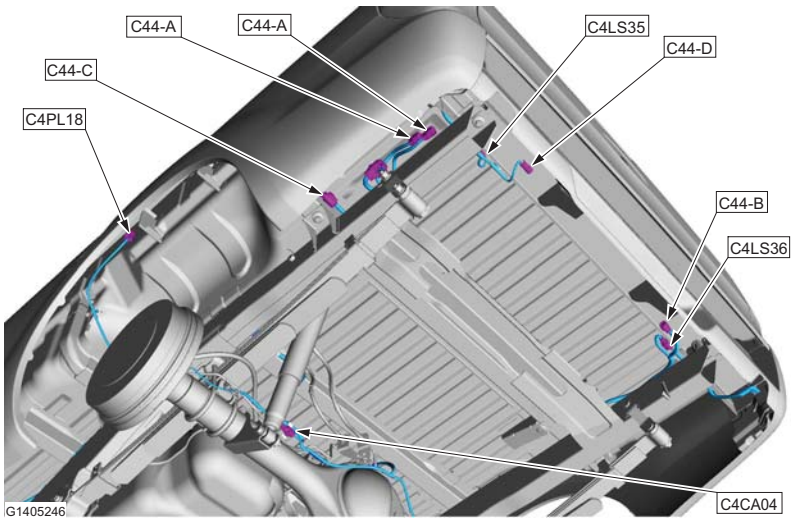

COMPONENT LOCATION

Steering Column Switches Front View

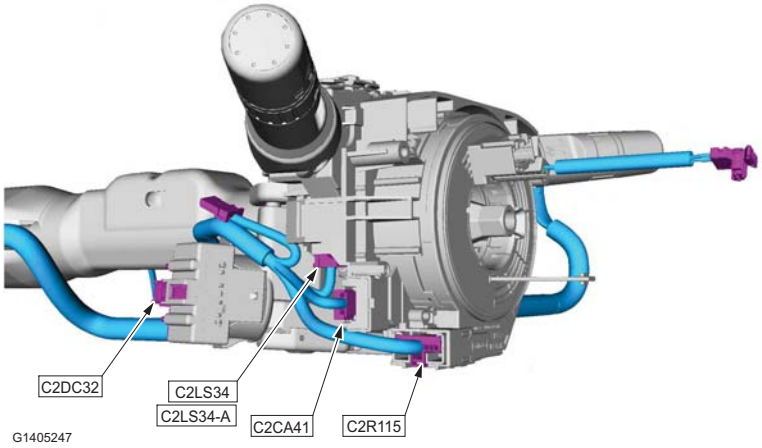

COMPONENT LOCATION

Steering Column Switches Rear View

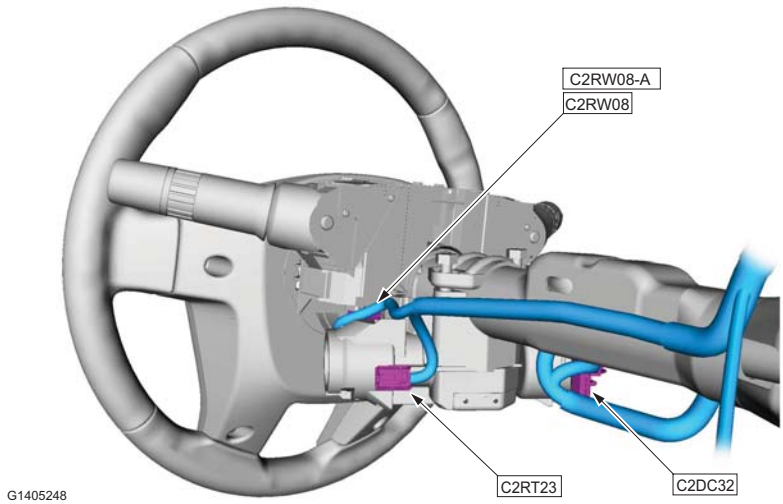

COMPONENT LOCATION

Steering Wheel

COMPONENT LOCATION

Transmission Left-Hand View - Vehicles With: 5-Speed Manual Transmission - MT75 4x2

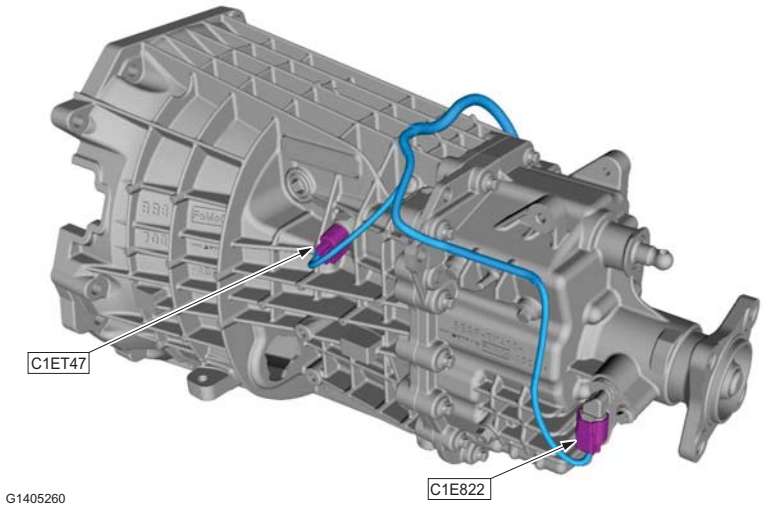

COMPONENT LOCATION

Transmission Right-Hand View - Vehicles With: 6-Speed Manual Transmission - MT82 4x2

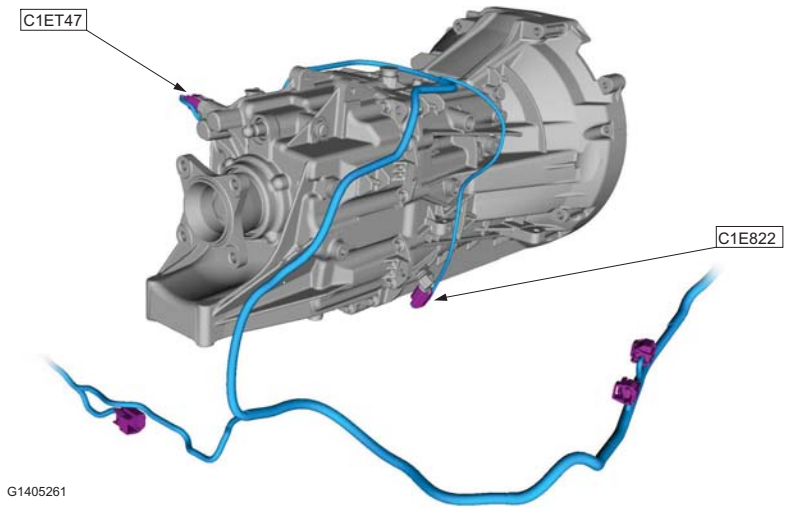

COMPONENT LOCATION

Transmission Right-Hand View - Vehicles With: 6-Speed Automatic Transaxle - 6R80 4x2

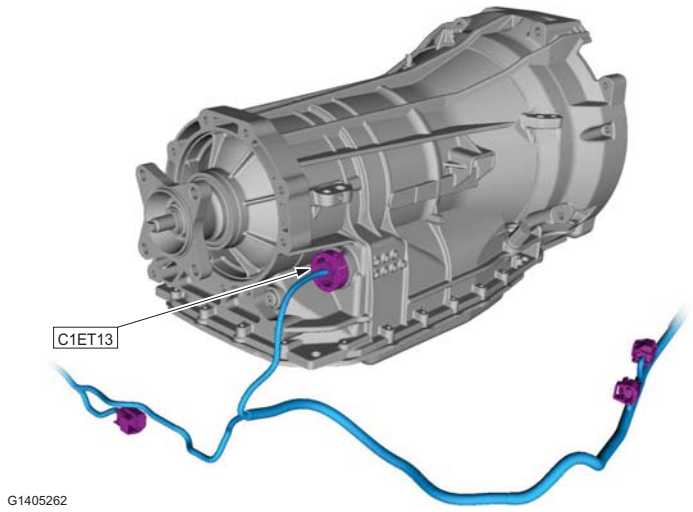

COMPONENT LOCATION

Transmission Left-Hand View - Vehicles With: 5-Speed Manual Transmission - MT75 4x4

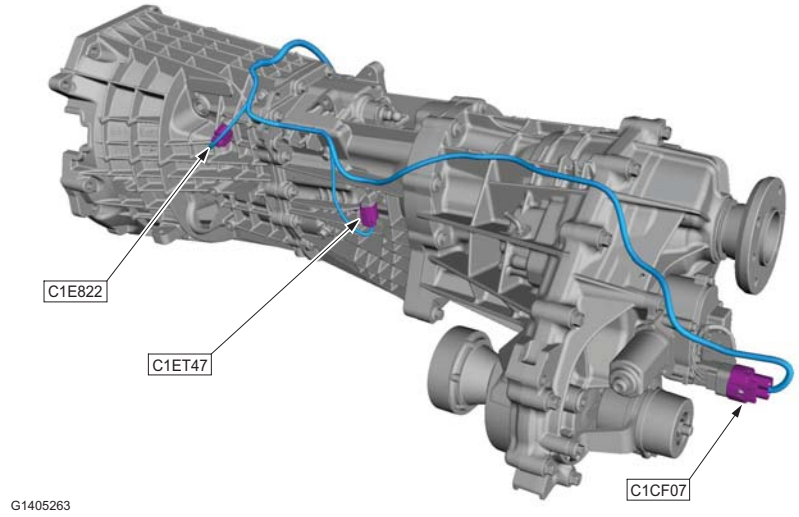

COMPONENT LOCATION

Transmission Right-Hand View - Vehicles With: 6-Speed Manual Transmission (MT82 4x4)

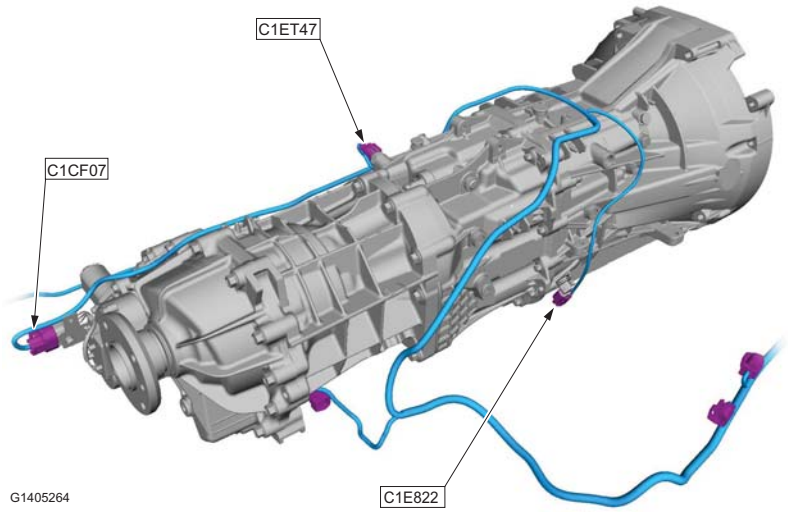

COMPONENT LOCATION

Transmission Right-Hand View - Vehicles With: 6-Speed Automatic Transaxle - 6R80 4x4

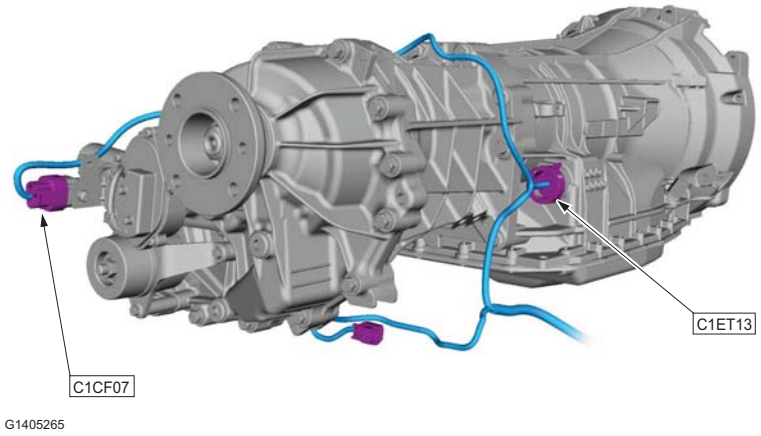

SECTION 700-01 Fuse and Relay Information

VEHICLE APPLICATION: 2012.0 Ranger

CONTENTS PAGE

ELECTRICAL SCHEMATICS

Central Junction Box (CJB) — LHD 4WD/LHD RWD..... 700-01-2
Central Junction Box (CJB) — RHD 4WD/RHD RWD..... 700-01-4

700-01-2 Central Junction Box (CJB)—LHD 4WD/LHD RWD

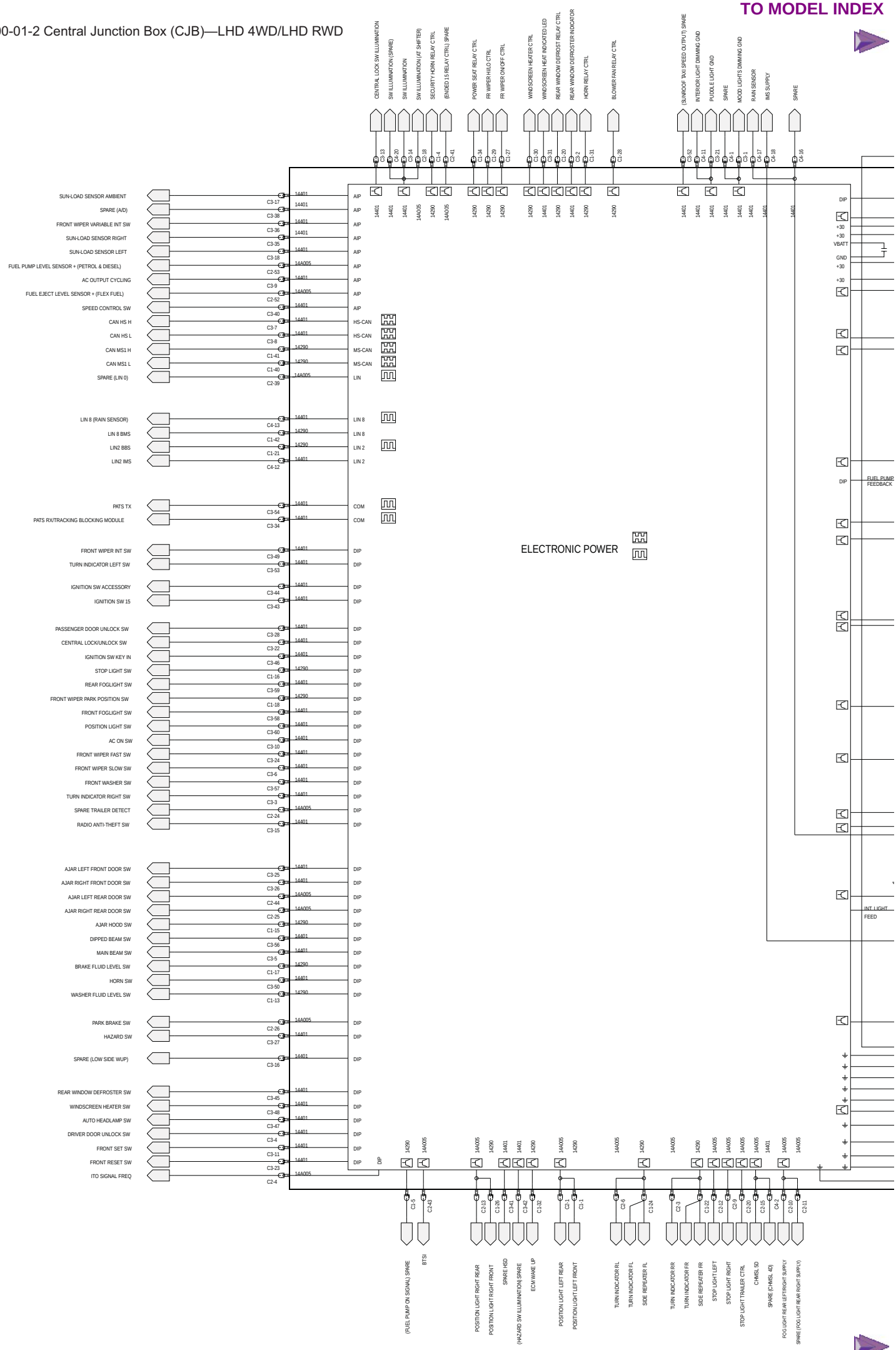

700-01-3 Central Junction Box (CJB)—LHD 4WD/LHD RWD

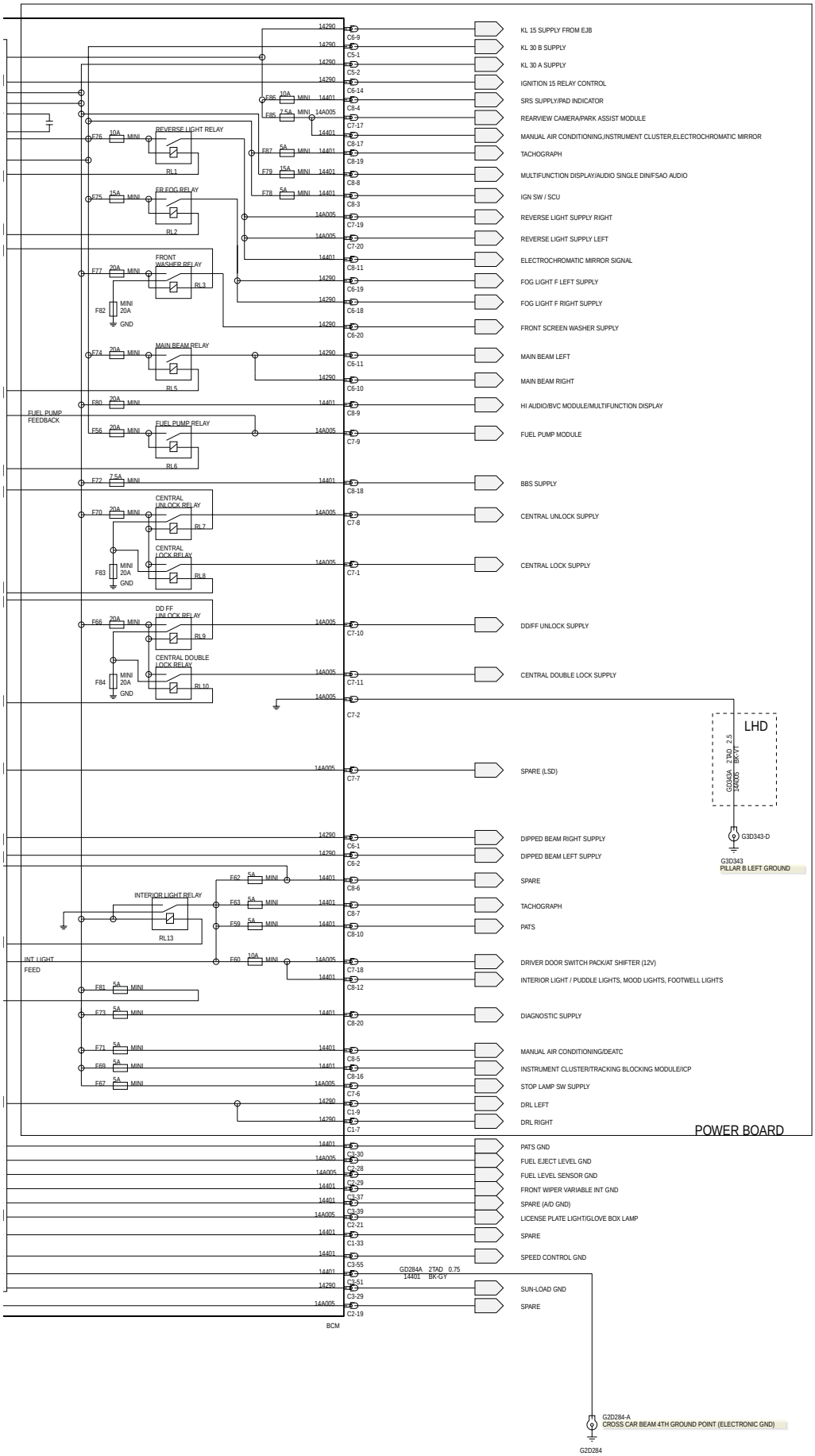

700-01-4 Central Junction Box (CJB)—RHD 4WD/RHD RWD

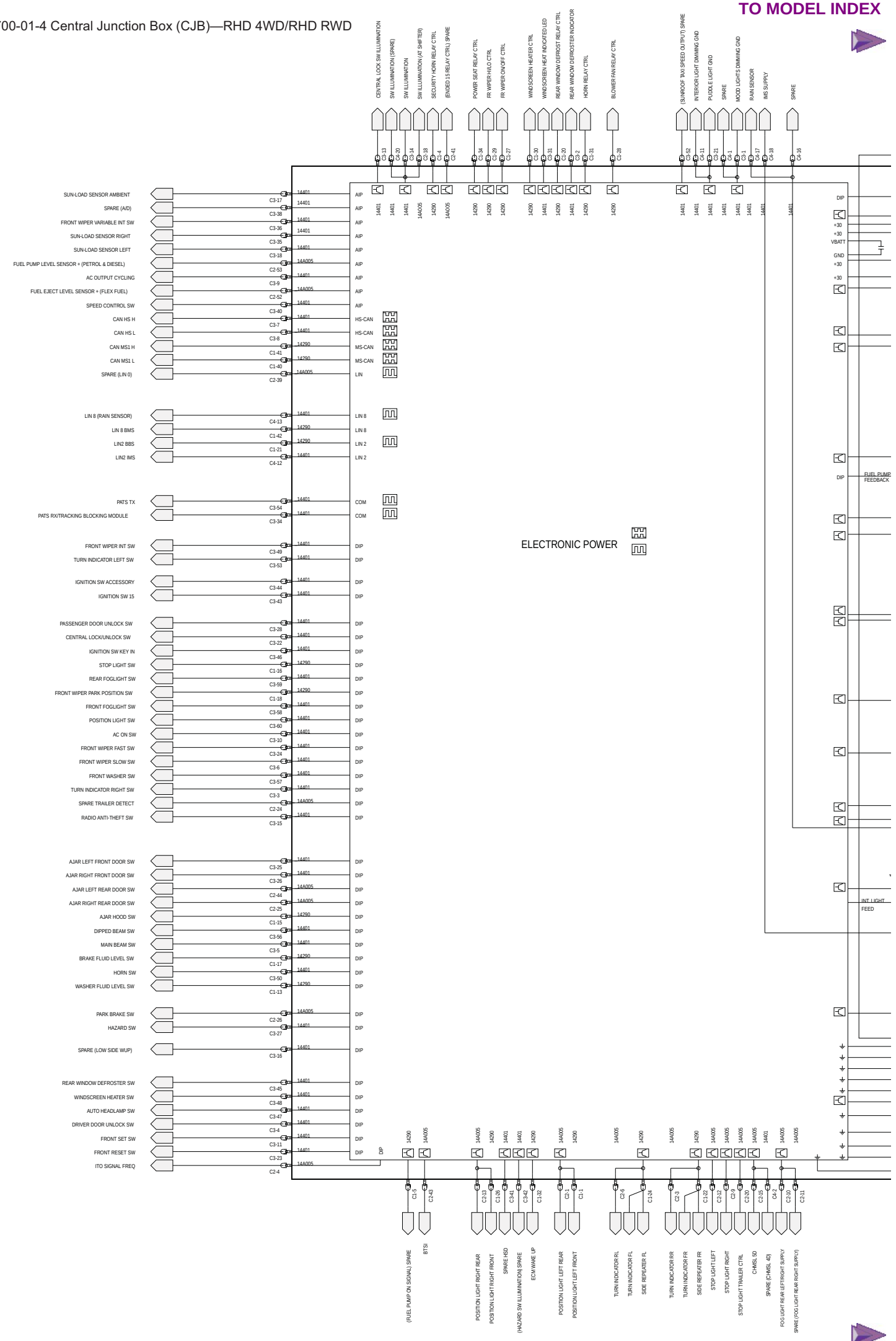

700-01-5 Central Junction Box (CJB)—RHD 4WD/RHD RWD

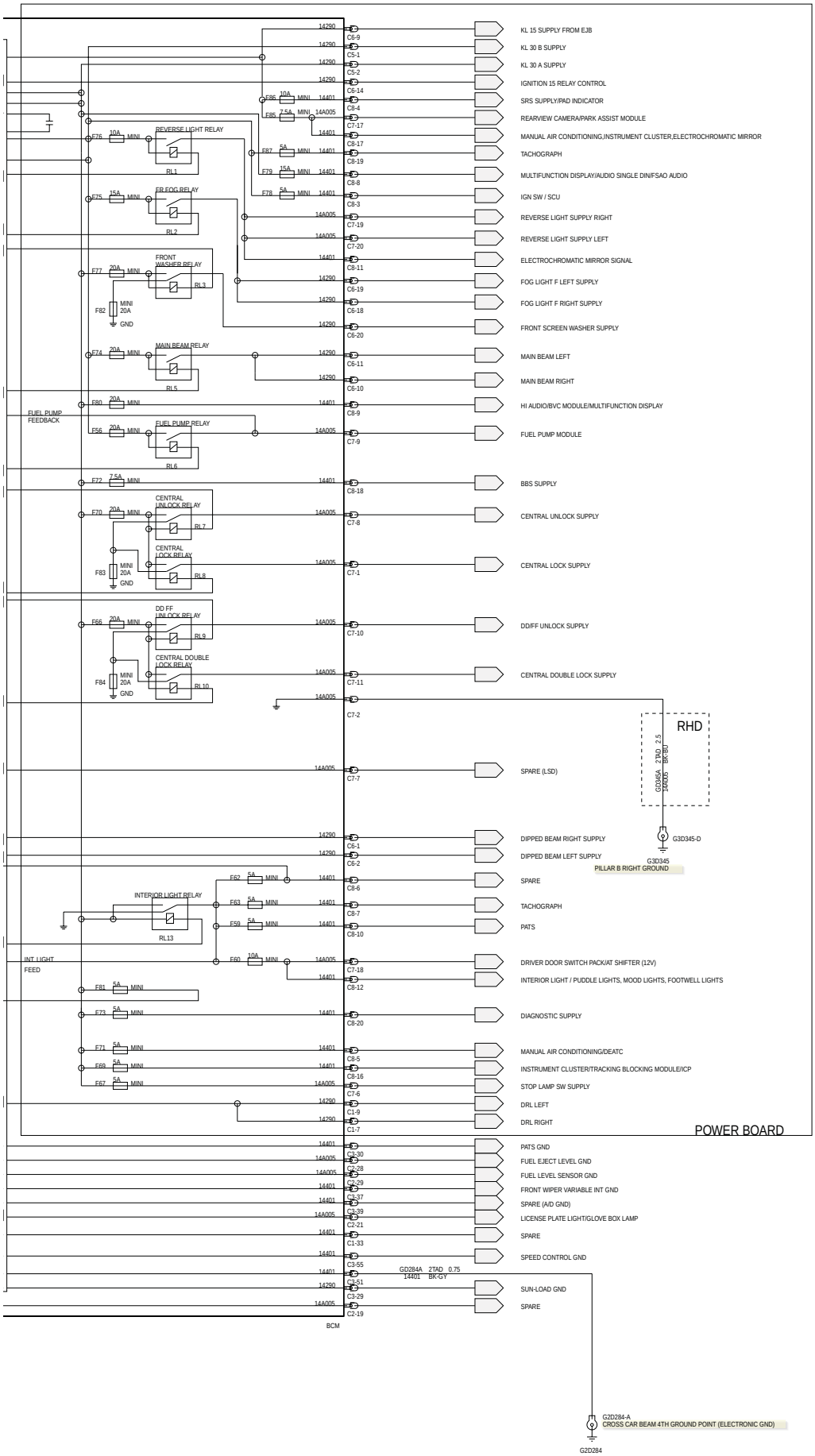

NOTE :

AIP - ANALOG INPUT
DIP - DIGITAL INPUT
FET - HIGH SIDE DRIVER OR LOW SIDE DRIVER
ALL RELAYS IN BCM ARE SOLDERED

SECTION 700-02 Power Distribution

VEHICLE APPLICATION: 2012.0 Ranger

CONTENTS PAGE

ELECTRICAL SCHEMATICS

Cigar Lighter and Power Points — LHD 4WD/LHD RWD..... 700-02-2
Cigar Lighter and Power Points — RHD 4WD/RHD RWD..... 700-02-4
Power Distribution..... 700-02-6

700-02-2 Cigar Lighter and Power Points—LHD 4WD/LHD RWD

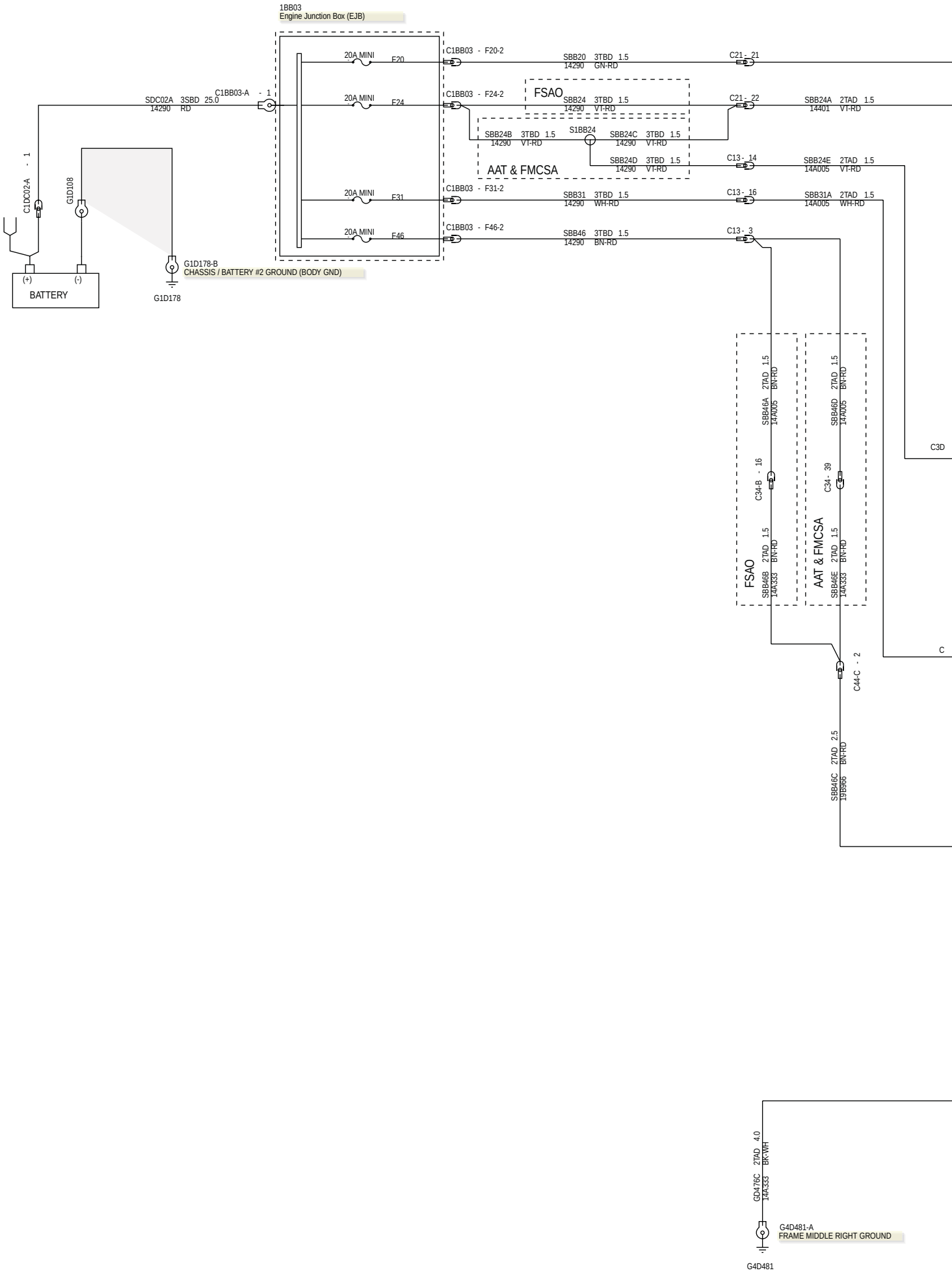

700-02-3 Cigar Lighter and Power Points—LHD 4WD/LHD RWD

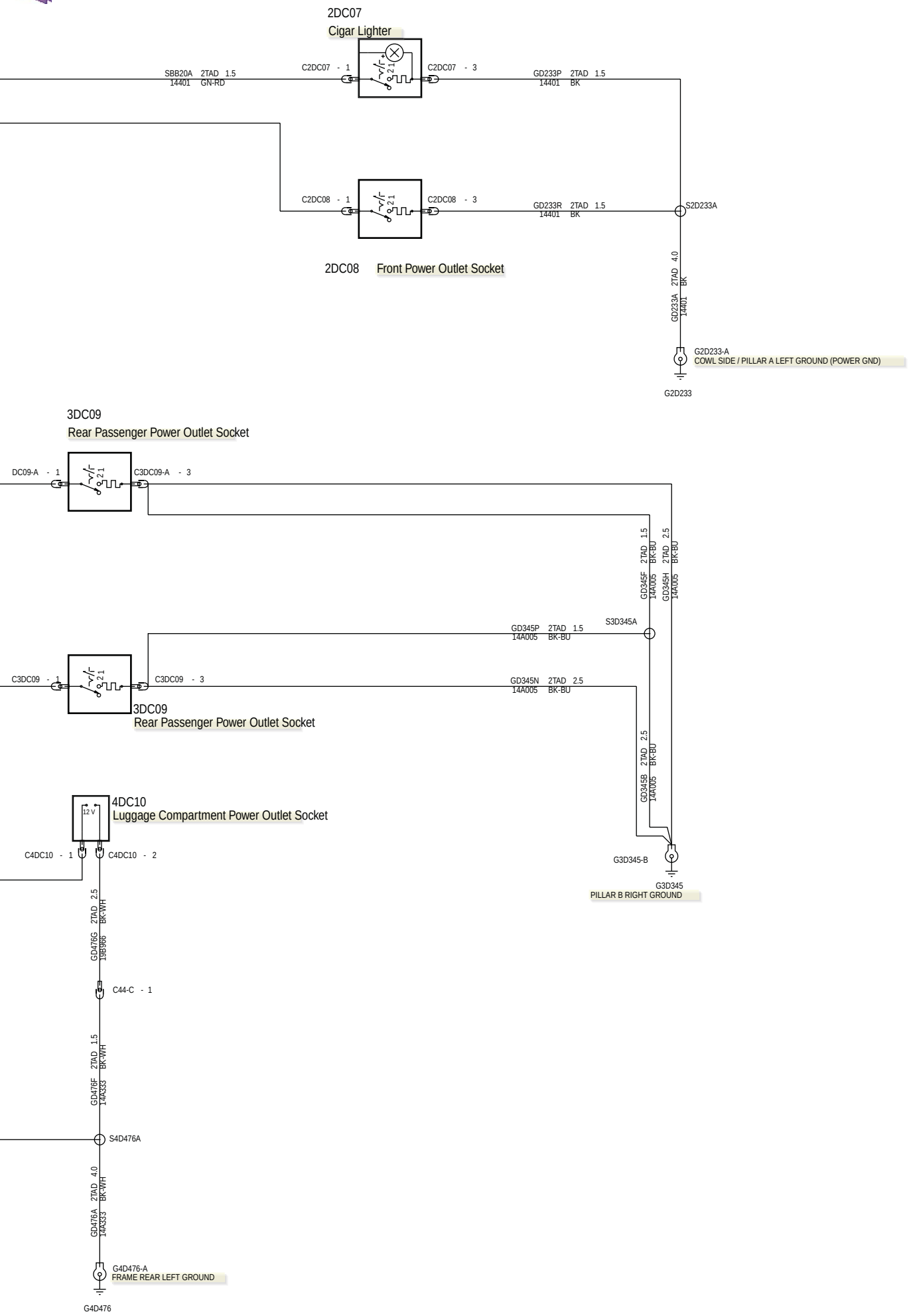

700-02-4 Cigar Lighter and Power Points—RHD 4WD/RHD RWD

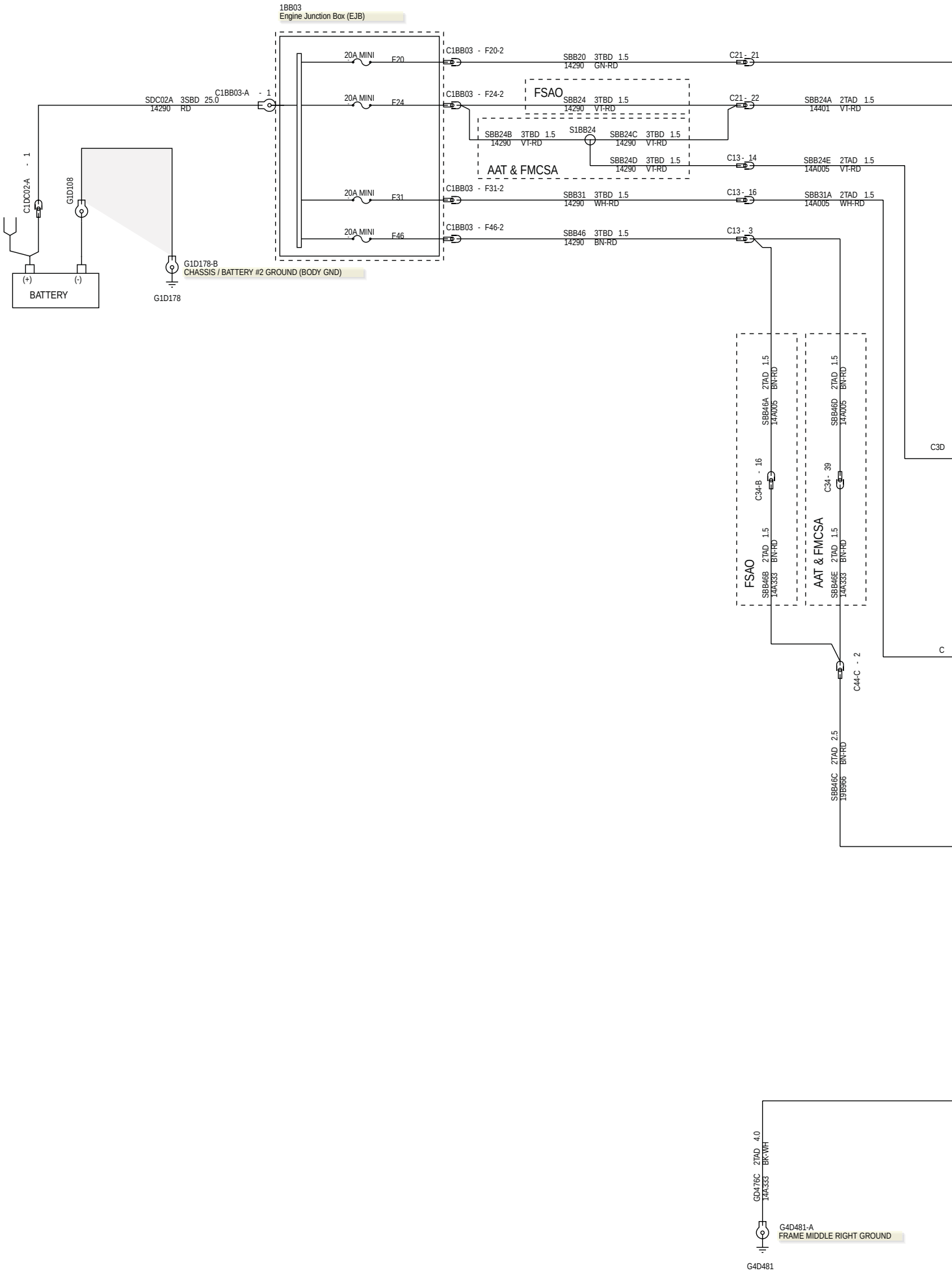

700-02-5 Cigar Lighter and Power Points—RHD 4WD/RHD RWD

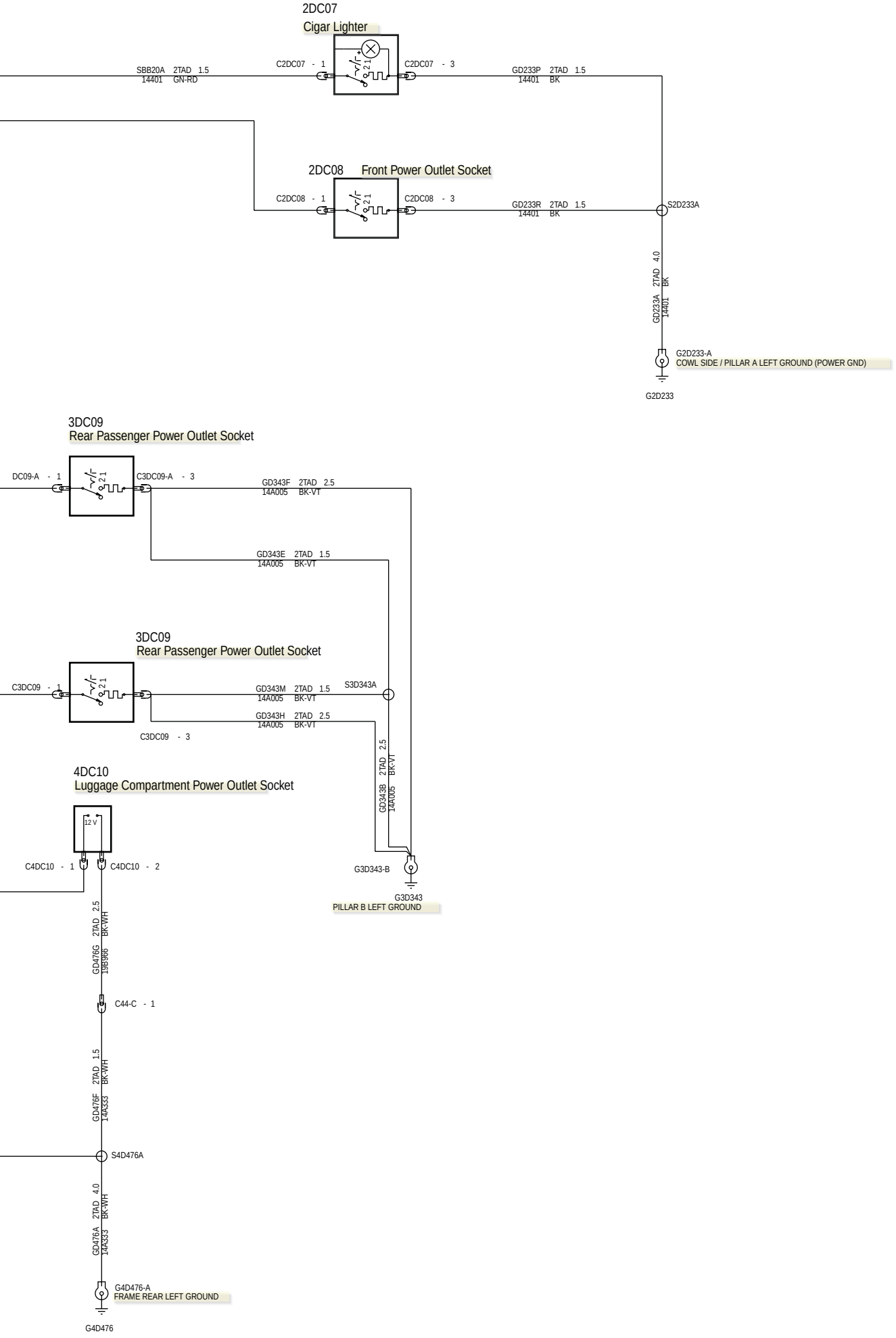

700-02-6 Power Distribution

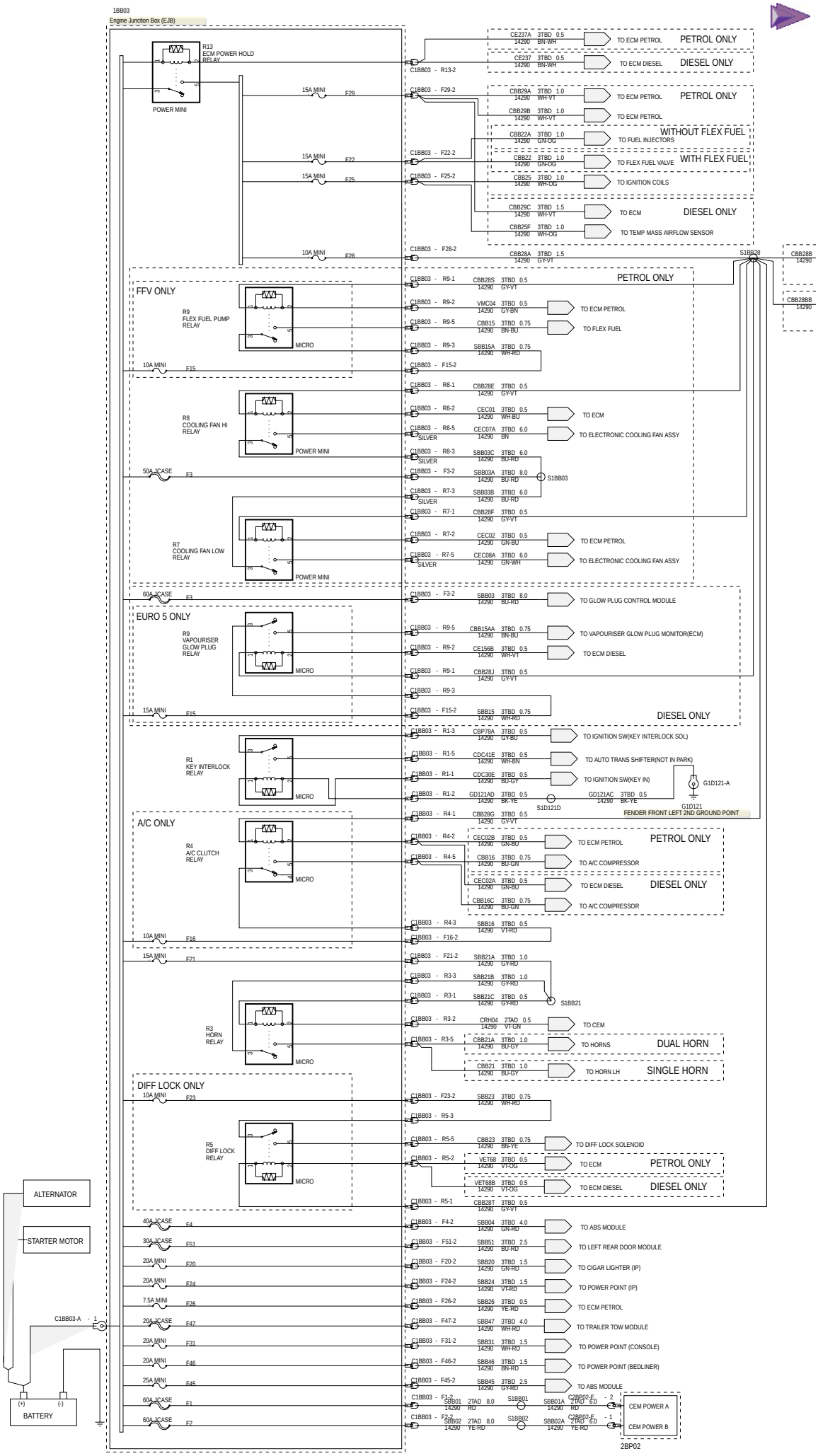

700-02-7 Power Distribution

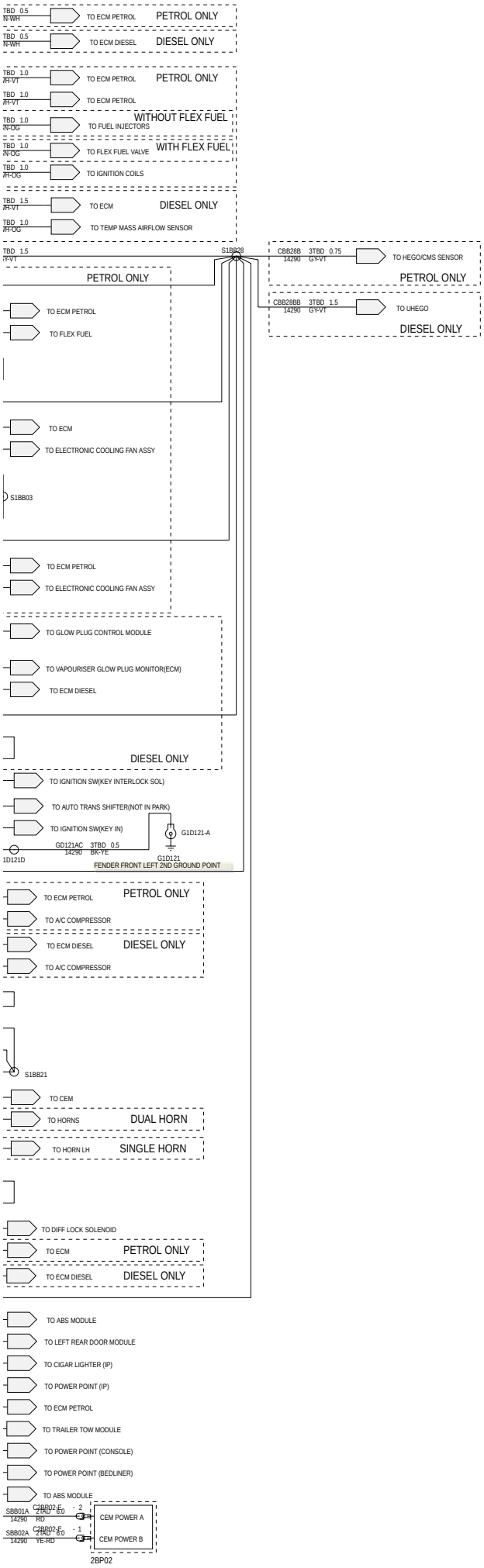

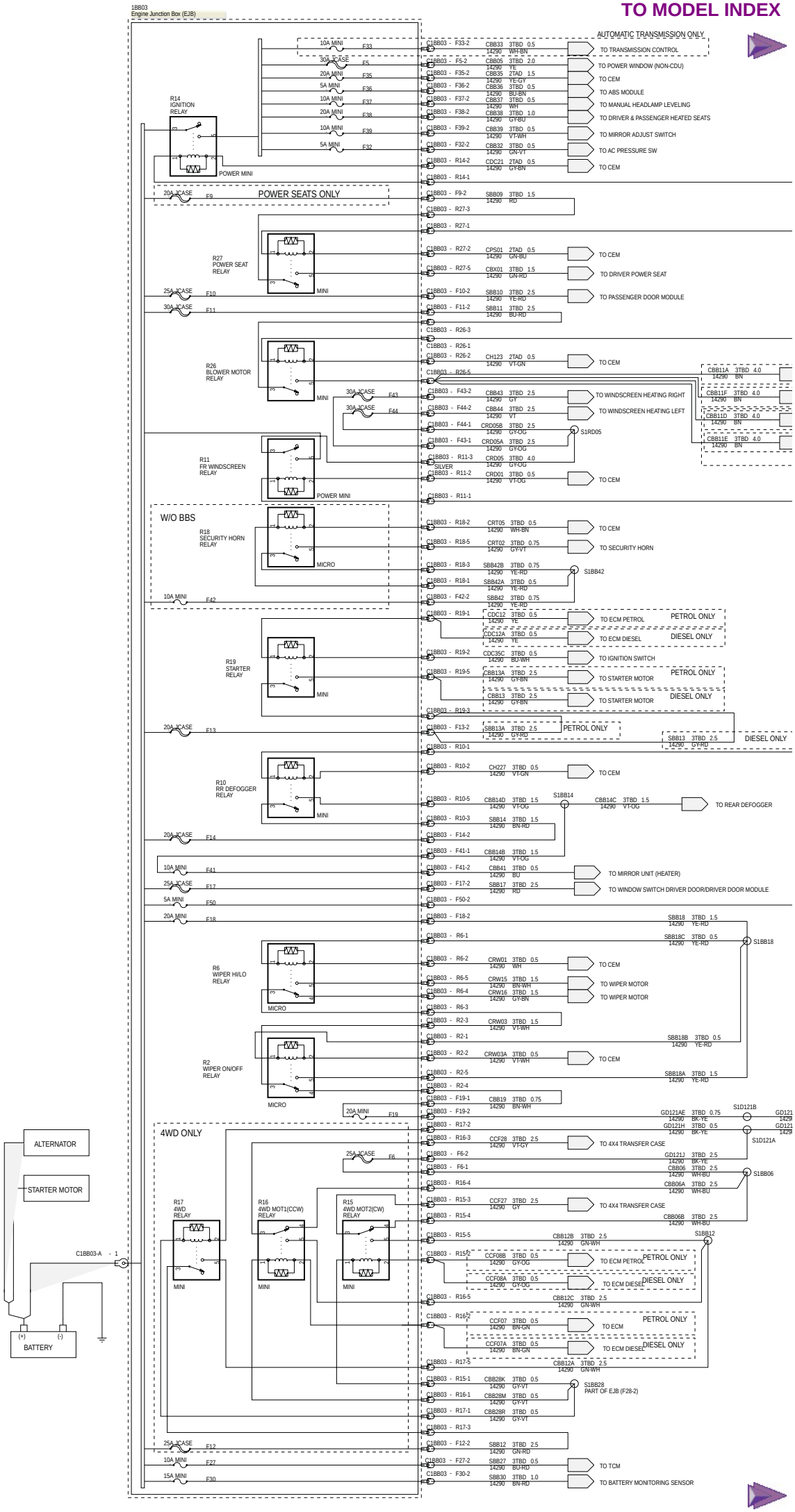
1BB03
Engine Junction Box (EJB)
AUTOMATIC TRANSMISSION ONLY
TO TRANSMISSION CONTROL
TO POWER WINDOW (NON-CDU)
TO CEM
TO ABS MODULE
TO MANUAL HEADLAMP LEVELING
TO DRIVER & PASSENGER HEATED SEATS
TO MIRROR ADJUST SWITCH
TO AC PRESSURE SW
R14
IGNITION
RELAY
POWER MINI
POWER SEATS ONLY
R27
POWER SEAT
RELAY
MINI
TO DRIVER POWER SEAT
TO PASSENGER DOOR MODULE
R26
BLOWER MOTOR
RELAY
TO WINDSCREEN HEATING RIGHT
TO WINDSCREEN HEATING LEFT
S1RD05
R11
FR WINDSCREEN
RELAY
SILVER
W/O BBS
R18
SECURITY HORN
RELAY
MICRO
TO SECURITY HORN
S1BB42
R19
STARTER
RELAY
PETROL ONLY
DIESEL ONLY
TO ECM PETROL
TO ECM DIESEL
TO IGNITION SWITCH
TO STARTER MOTOR
R10
RR DEFOGGER
RELAY
S1BB14
TO REAR DEFOGGER
TO MIRROR UNIT (HEATER)
TO WINDOW SWITCH DRIVER DOOR/DRIVER DOOR MODULE
R6
WIPER HI/LO
RELAY
TO WIPER MOTOR
S1BB18
R2
WIPER ON/OFF
RELAY
S1D121B
S1D121A
4WD ONLY
TO 4X4 TRANSFER CASE
S1BB06
ALTERNATOR
STARTER MOTOR
BATTERY
C1BB03-A - 1
R17
4WD
RELAY
R16
4WD MOT1(CCW)
RELAY
R15
4WD MOT2(CW)
RELAY
S1BB12
TO ECM
S1BB28
PART OF EJB (F28-2)
TO TCM
TO BATTERY MONITORING SENSOR

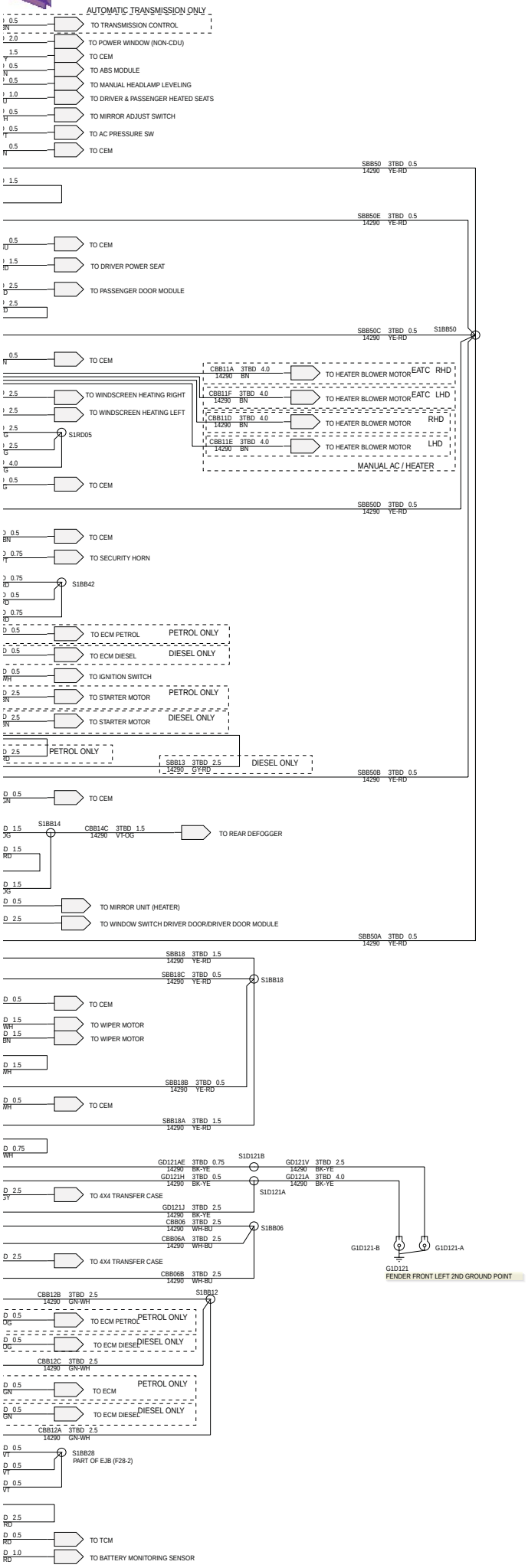
AUTOMATIC TRANSMISSION ONLY
TO TRANSMISSION CONTROL
TO POWER WINDOW (NON-CDU)
TO CEM
TO ABS MODULE
TO MANUAL HEADLAMP LEVELING
TO DRIVER & PASSENGER HEATED SEATS
TO MIRROR ADJUST SWITCH
TO AC PRESSURE SW
TO CEM
SBB50 3TBD 0.5
14290 YE-RD
SBB50E 3TBD 0.5
14290 YE-RD
TO CEM
TO DRIVER POWER SEAT
TO PASSENGER DOOR MODULE
SBB50C 3TBD 0.5
14290 YE-RD
S1BB50
TO CEM
CBB11A 3TBD 4.0
14290 BN
TO HEATER BLOWER MOTOR
EATC RHD
TO WINDSCREEN HEATING RIGHT
CBB11F 3TBD 4.0
14290 BN
TO HEATER BLOWER MOTOR
EATC LHD
TO WINDSCREEN HEATING LEFT
CBB11D 3TBD 4.0
14290 BN
TO HEATER BLOWER MOTOR
RHD
S1RD05
CBB11E 3TBD 4.0
14290 BN
TO HEATER BLOWER MOTOR
LHD
MANUAL AC / HEATER
TO CEM
SBB50D 3TBD 0.5
14290 YE-RD
TO CEM
TO SECURITY HORN
S1BB42
TO ECM PETROL
PETROL ONLY
TO ECM DIESEL
DIESEL ONLY
TO IGNITION SWITCH
TO STARTER MOTOR
PETROL ONLY
TO STARTER MOTOR
DIESEL ONLY
PETROL ONLY
SBB13 3TBD 2.5
14290 GY-RD
DIESEL ONLY
SBB50B 3TBD 0.5
14290 YE-RD
TO CEM
S1BB14
CBB14C 3TBD 1.5
14290 VT-OG
TO REAR DEFOGGER
TO MIRROR UNIT (HEATER)
TO WINDOW SWITCH DRIVER DOOR/DRIVER DOOR MODULE
SBB50A 3TBD 0.5
14290 YE-RD
SBB18 3TBD 1.5
14290 YE-RD
SBB18C 3TBD 0.5
14290 YE-RD
S1BB18
TO CEM
TO WIPER MOTOR
TO WIPER MOTOR
SBB18B 3TBD 0.5
14290 YE-RD
TO CEM
SBB18A 3TBD 1.5
14290 YE-RD
S1D121B
GD121AE 3TBD 0.75
14290 BK-YE
GD121V 3TBD 2.5
14290 BK-YE
GD121H 3TBD 0.5
14290 BK-YE
GD121A 3TBD 4.0
14290 BK-YE
S1D121A
TO 4X4 TRANSFER CASE
GD121J 3TBD 2.5
14290 BK-YE
CBB06 3TBD 2.5
14290 WH-BU
S1BB06
CBB06A 3TBD 2.5
14290 WH-BU
G1D121-B
G1D121-A
TO 4X4 TRANSFER CASE
G1D121
FENDER FRONT LEFT 2ND GROUND POINT
CBB06B 3TBD 2.5
14290 WH-BU
CBB12B 3TBD 2.5
14290 GN-WH
S1BB12
TO ECM PETROL
PETROL ONLY
TO ECM DIESEL
DIESEL ONLY
CBB12C 3TBD 2.5
14290 GN-WH
TO ECM
PETROL ONLY
TO ECM DIESEL
DIESEL ONLY
CBB12A 3TBD 2.5
14290 GN-WH
S1BB28
PART OF EJB (F28-2)
TO TCM
TO BATTERY MONITORING SENSOR

SECTION 700-03 Grounding Strategy

VEHICLE APPLICATION: 2012.0 Ranger

CONTENTS PAGE

ELECTRICAL SCHEMATICS

Grounding — LHD..... 700-03-2
Grounding — RHD..... 700-03-10

700-03-2 Grounding—LHD

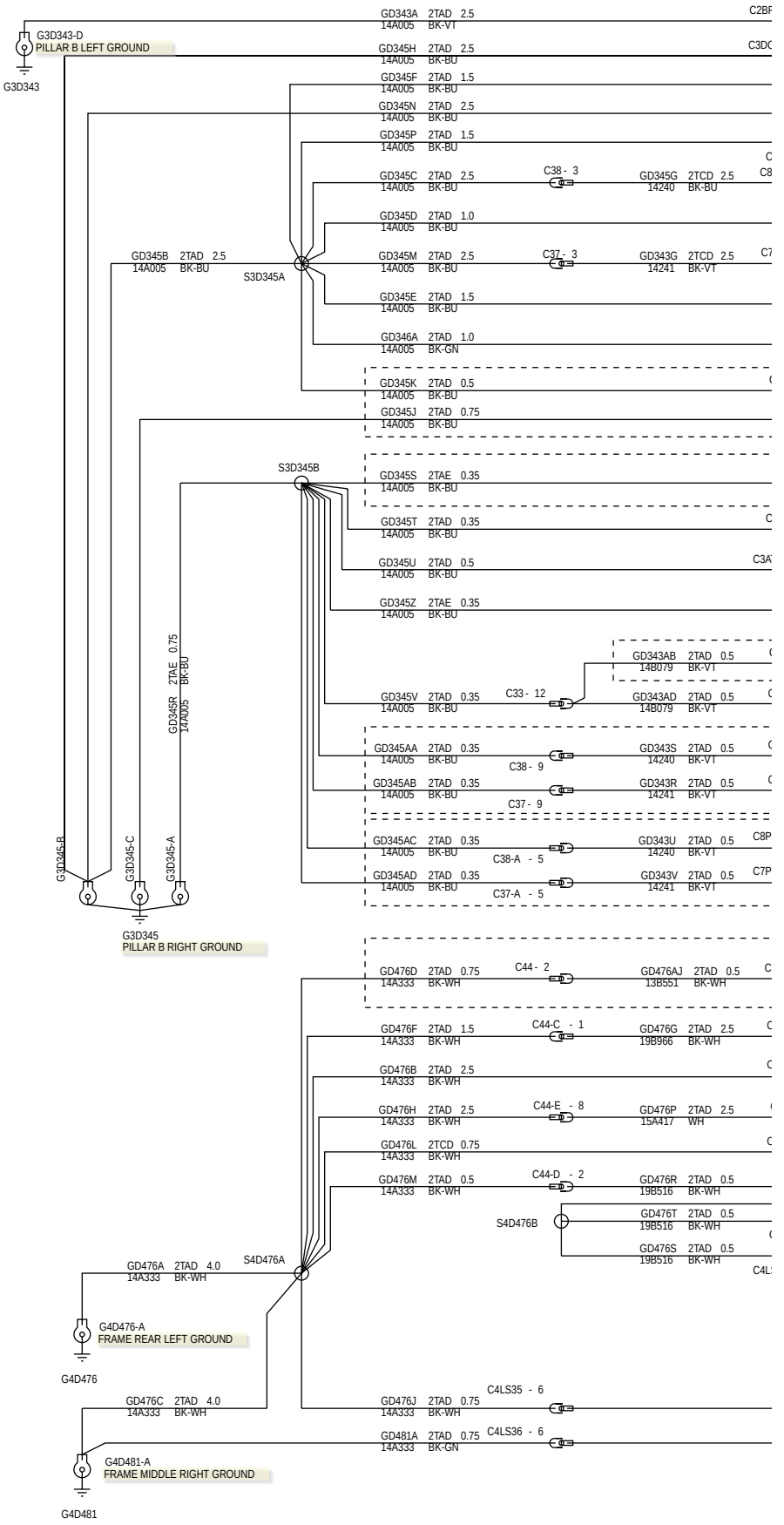

700-03-3 Grounding—LHD

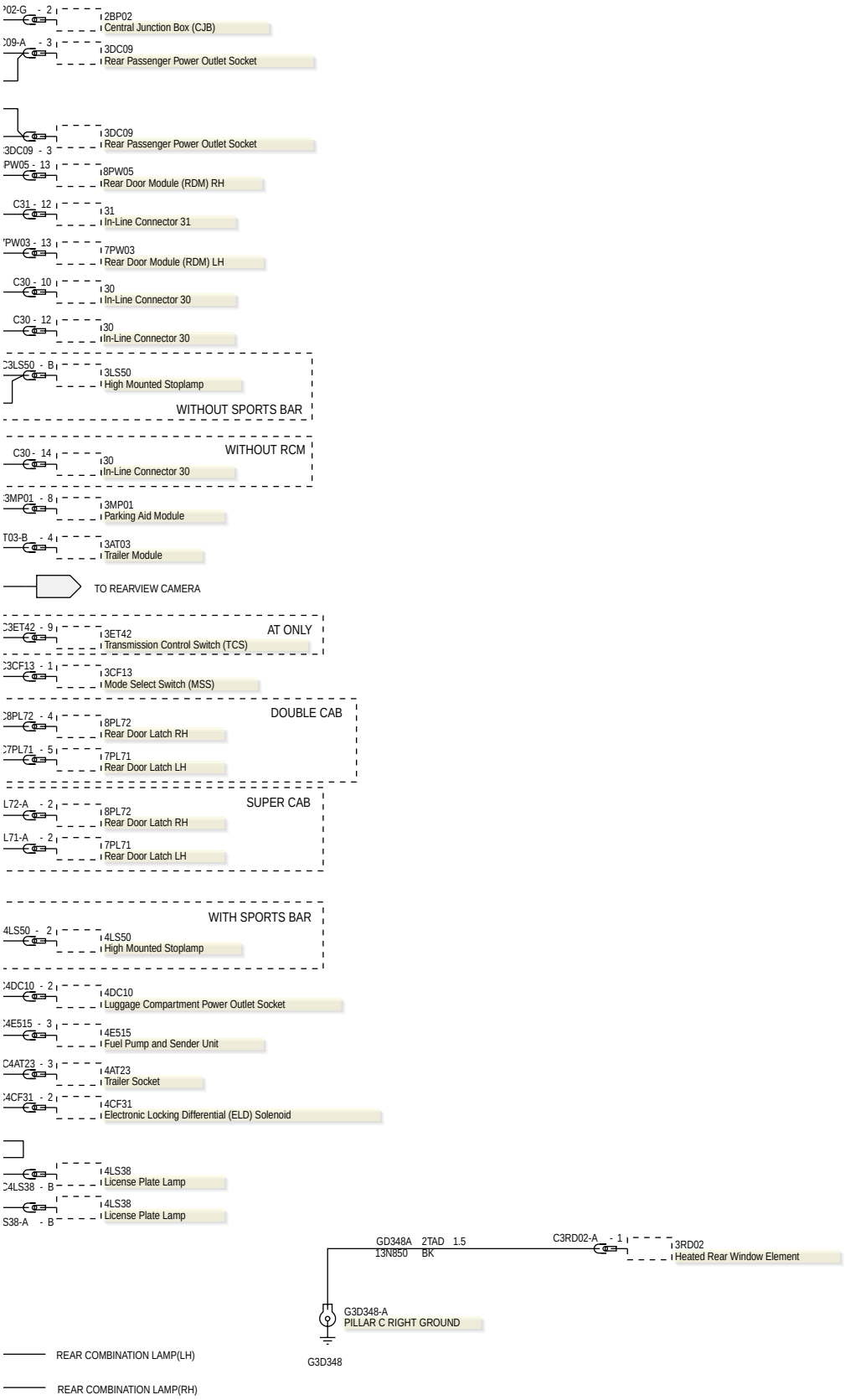

700-03-4 Grounding—LHD

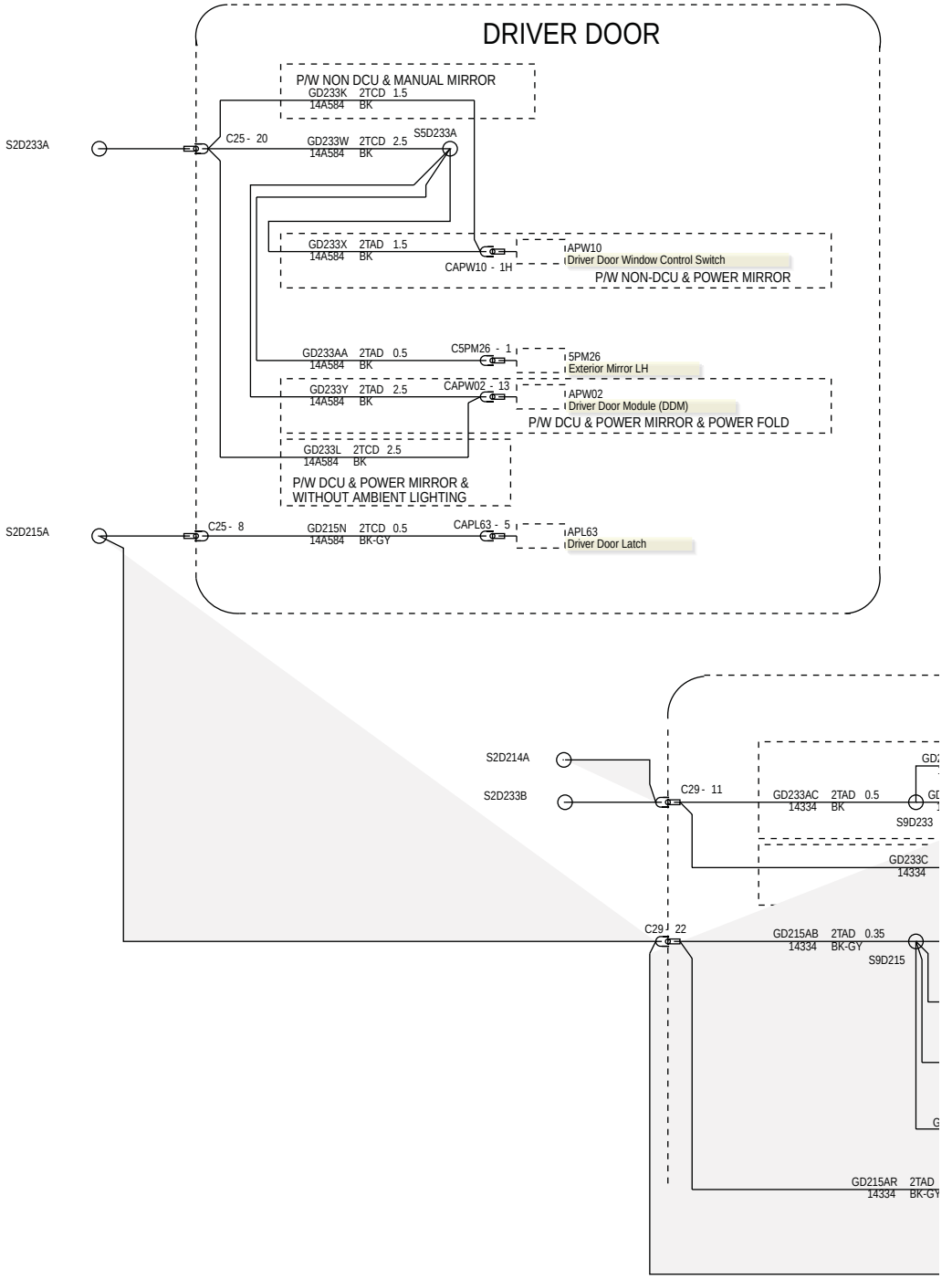

700-03-5 Grounding—LHD

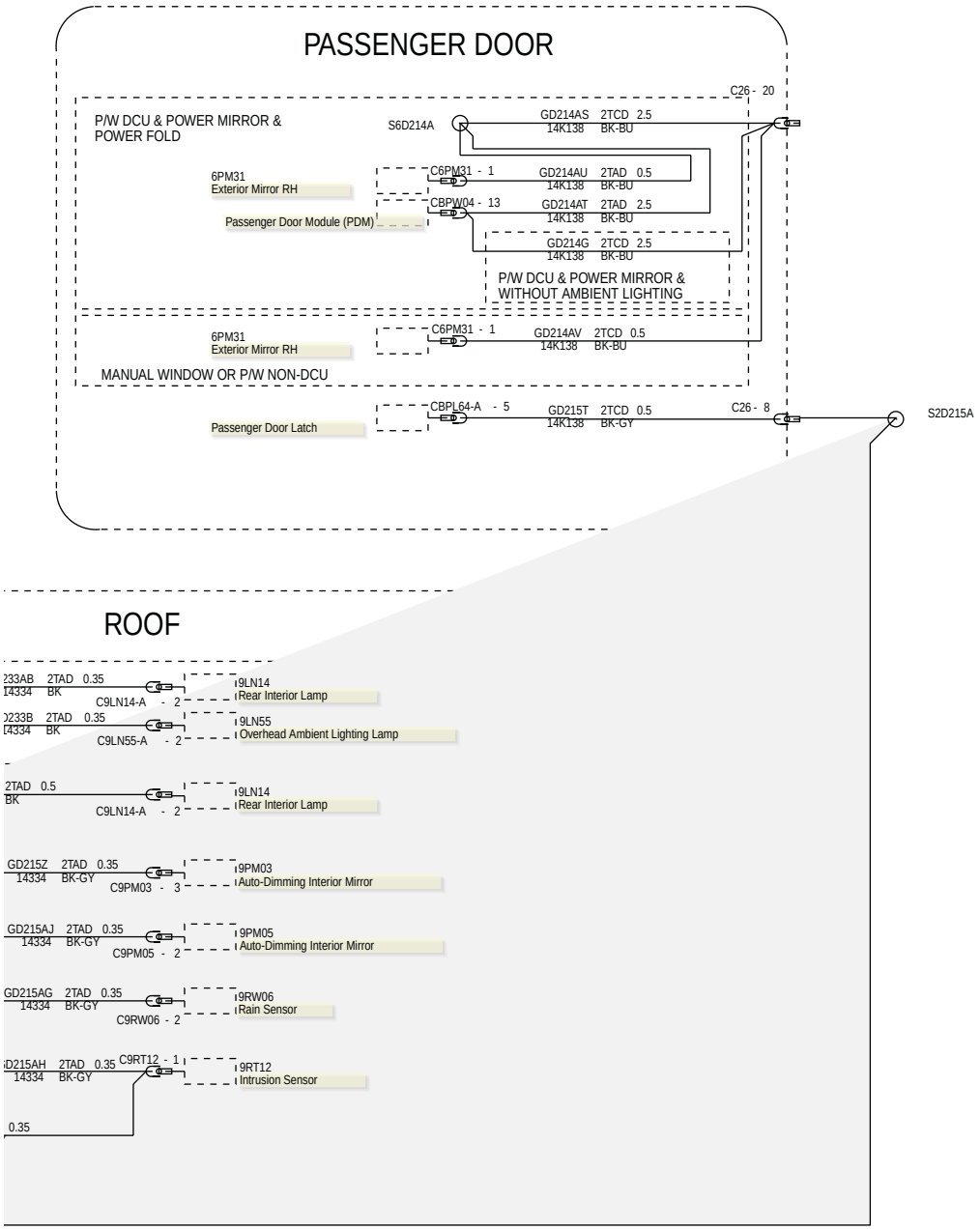

700-03-6 Grounding—LHD

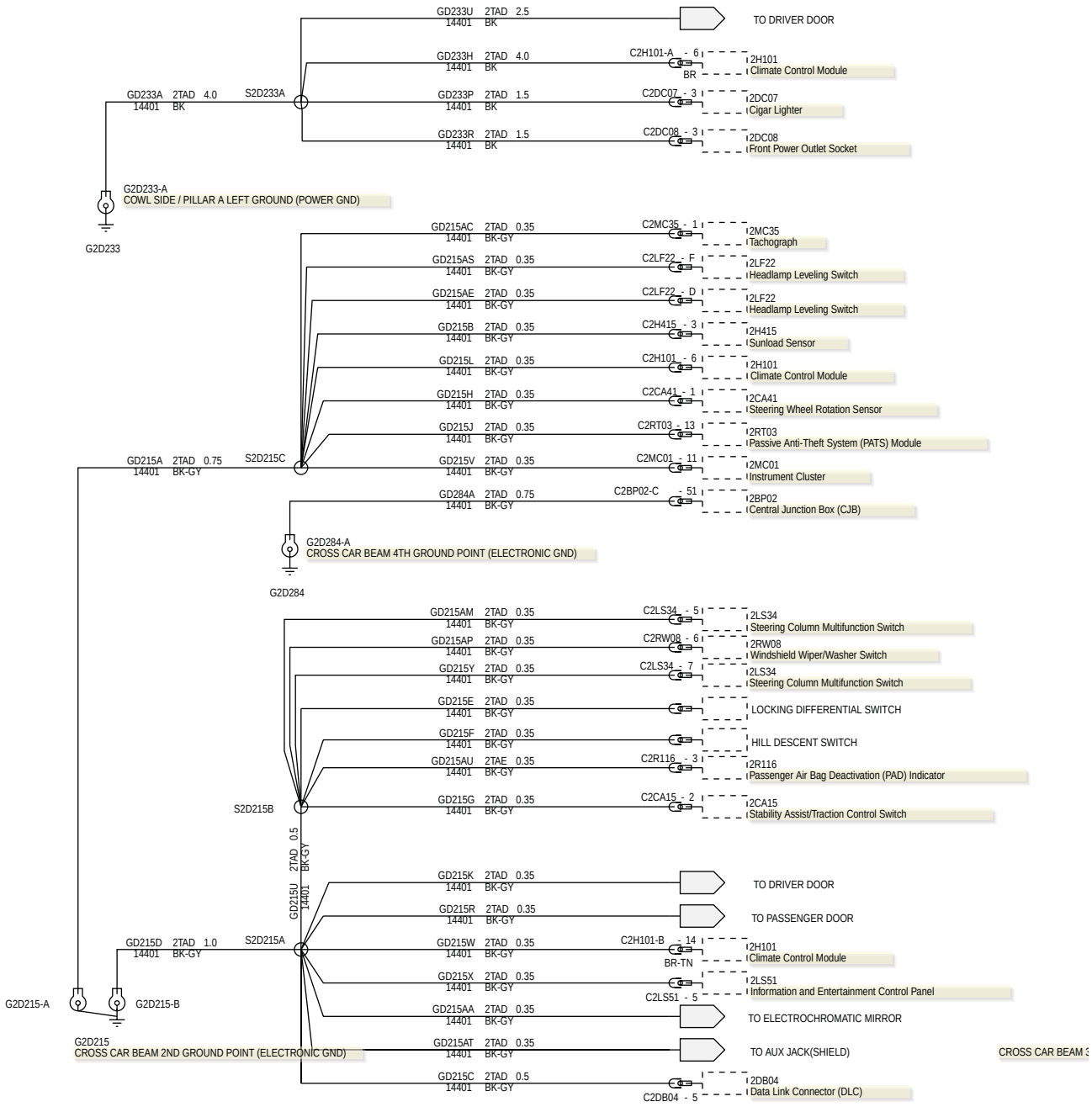

700-03-7 Grounding—LHD

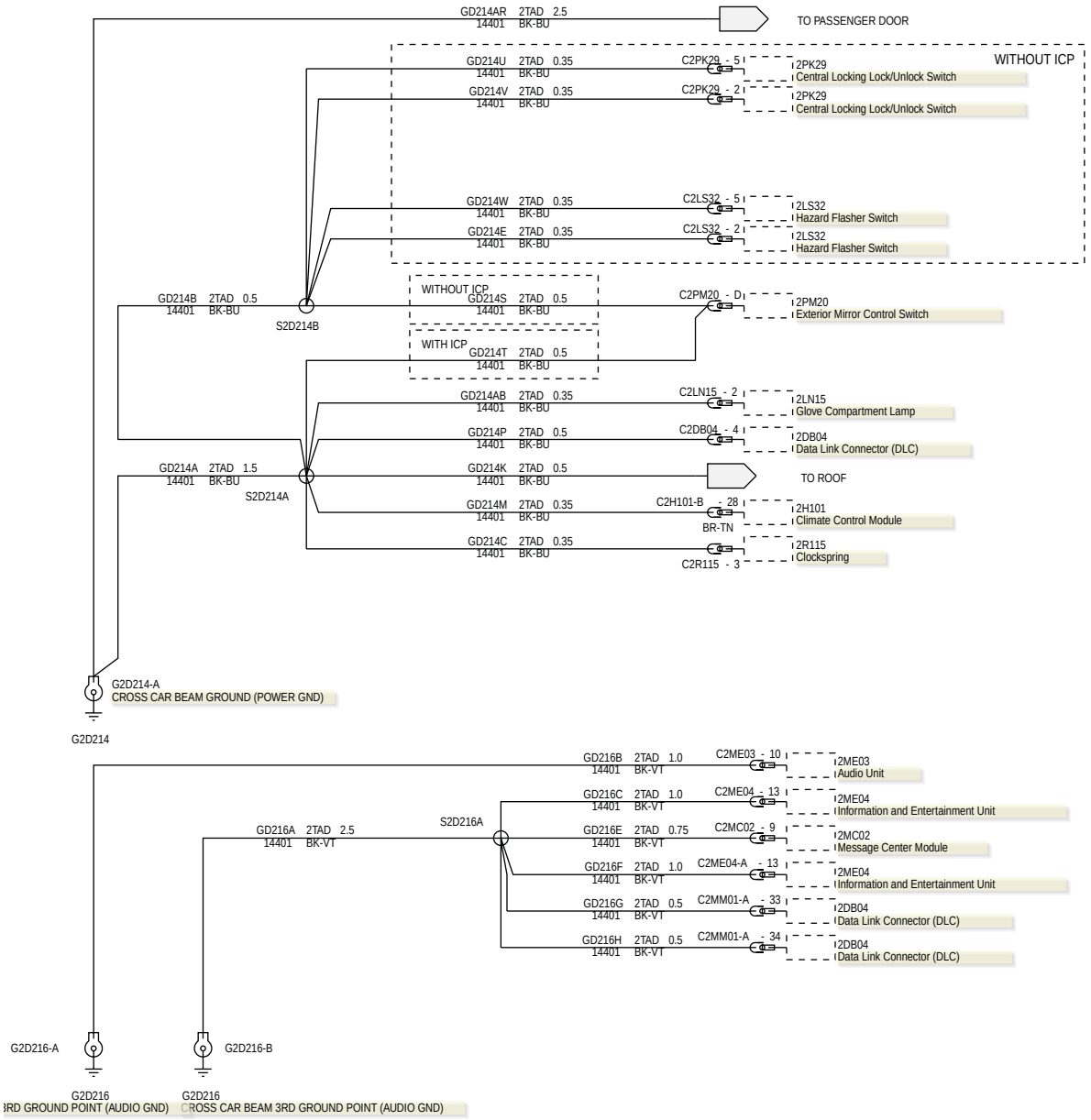

700-03-8 Grounding—LHD

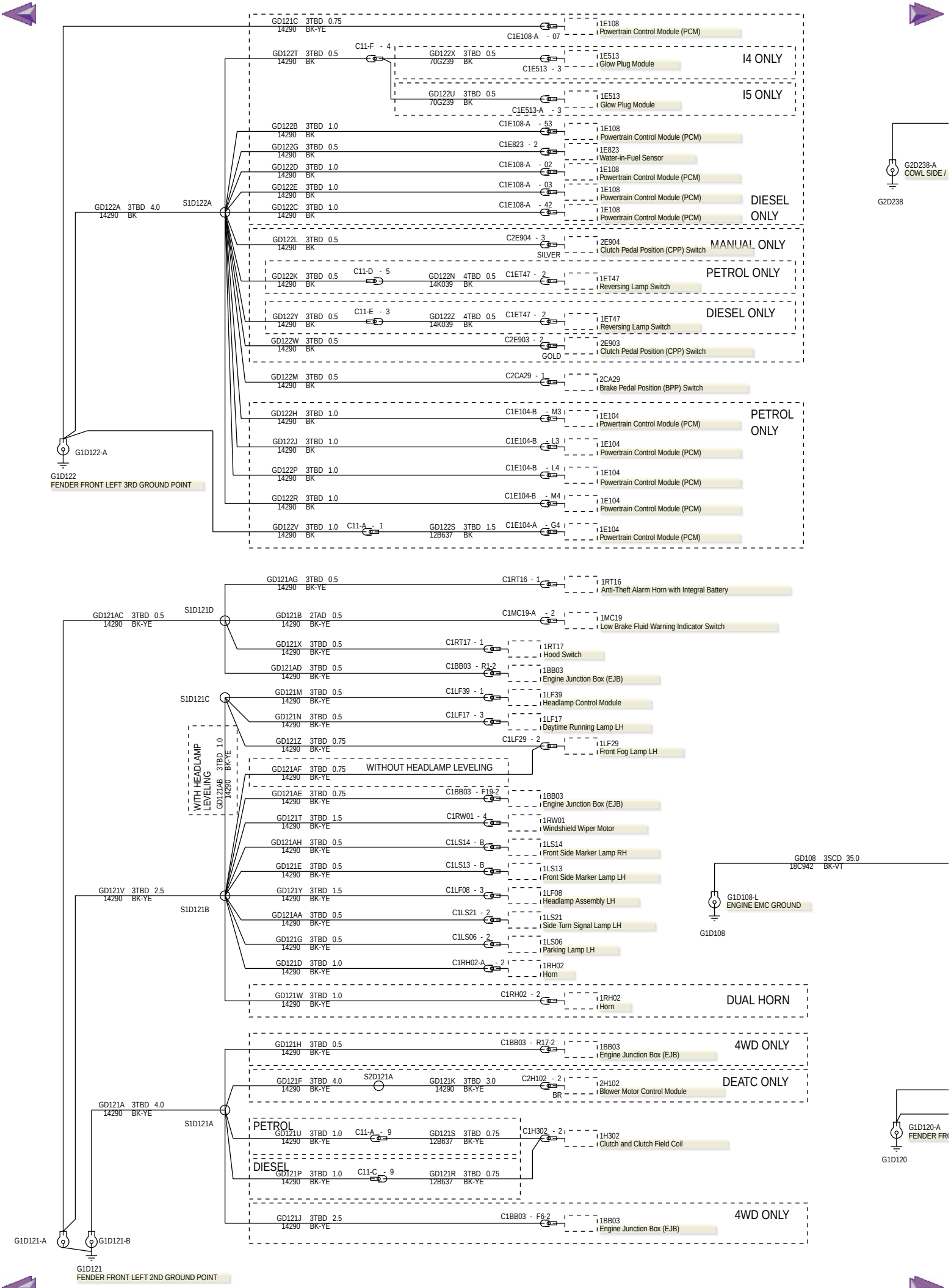

700-03-9 Grounding—LHD

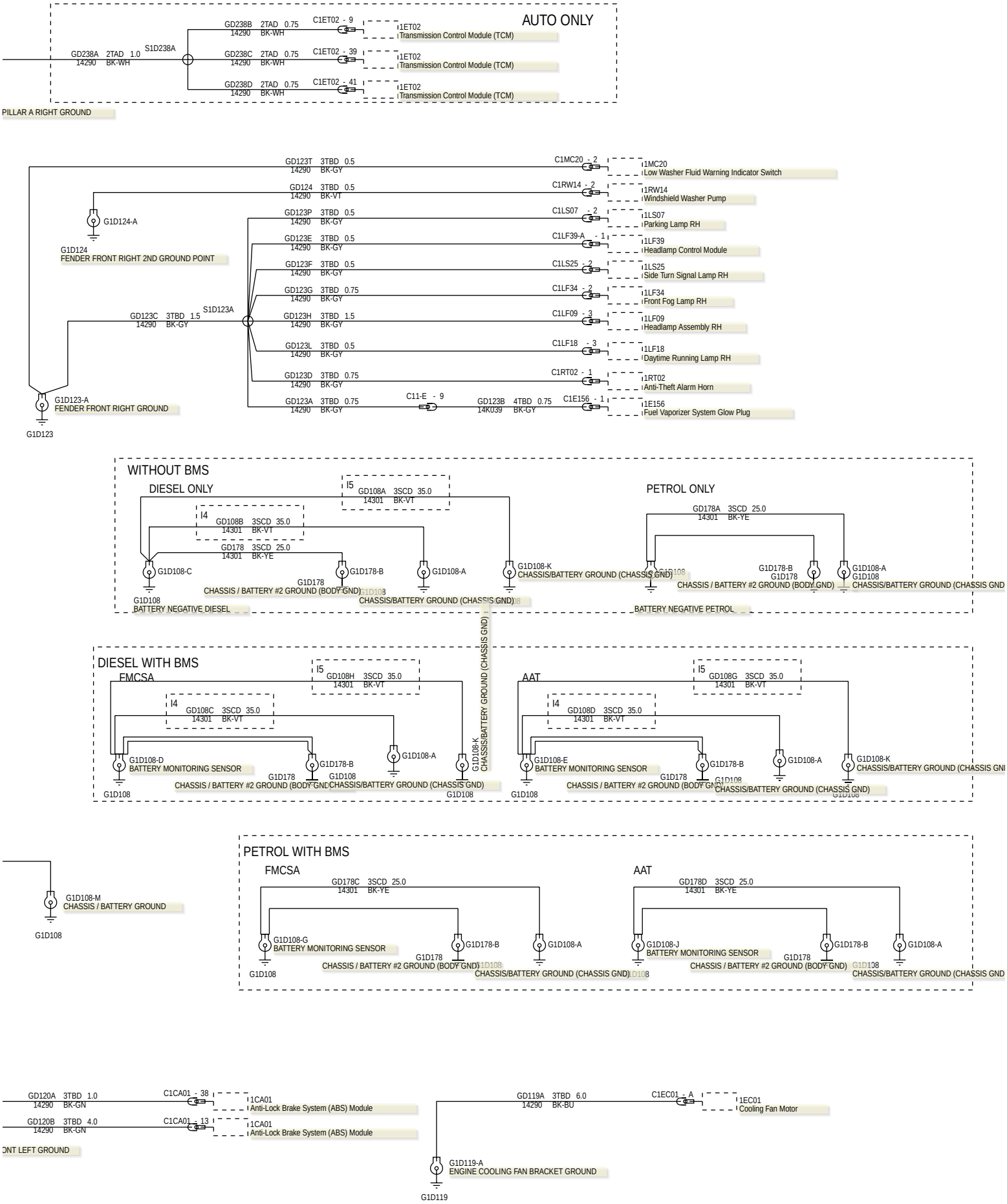

700-03-10 Grounding—RHD

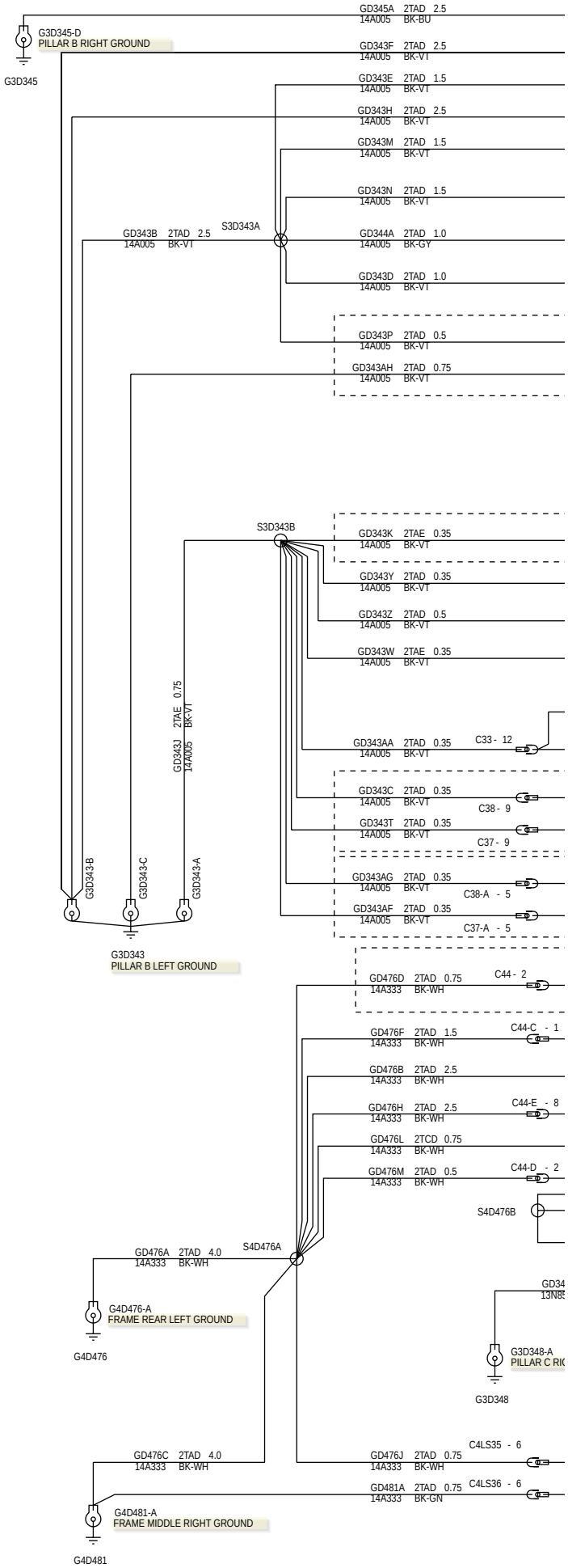

700-03-11 Grounding—RHD

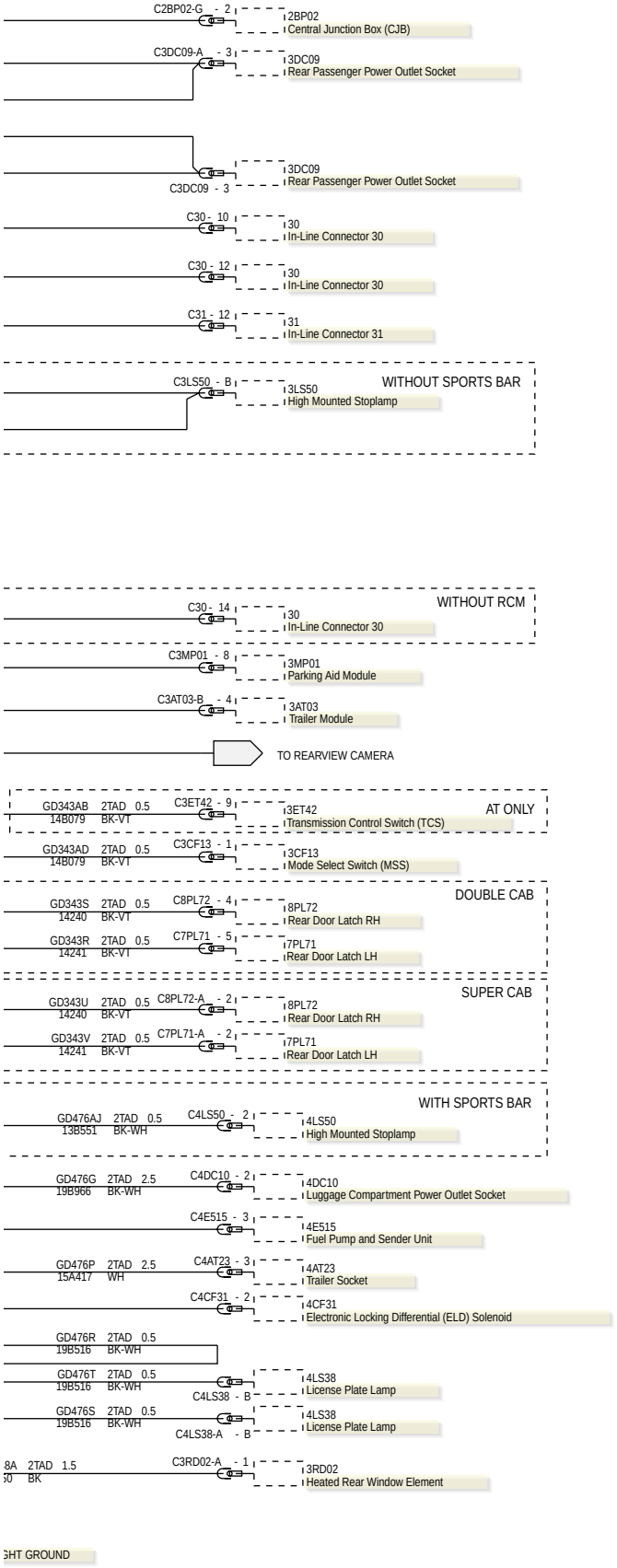

700-03-12 Grounding—RHD

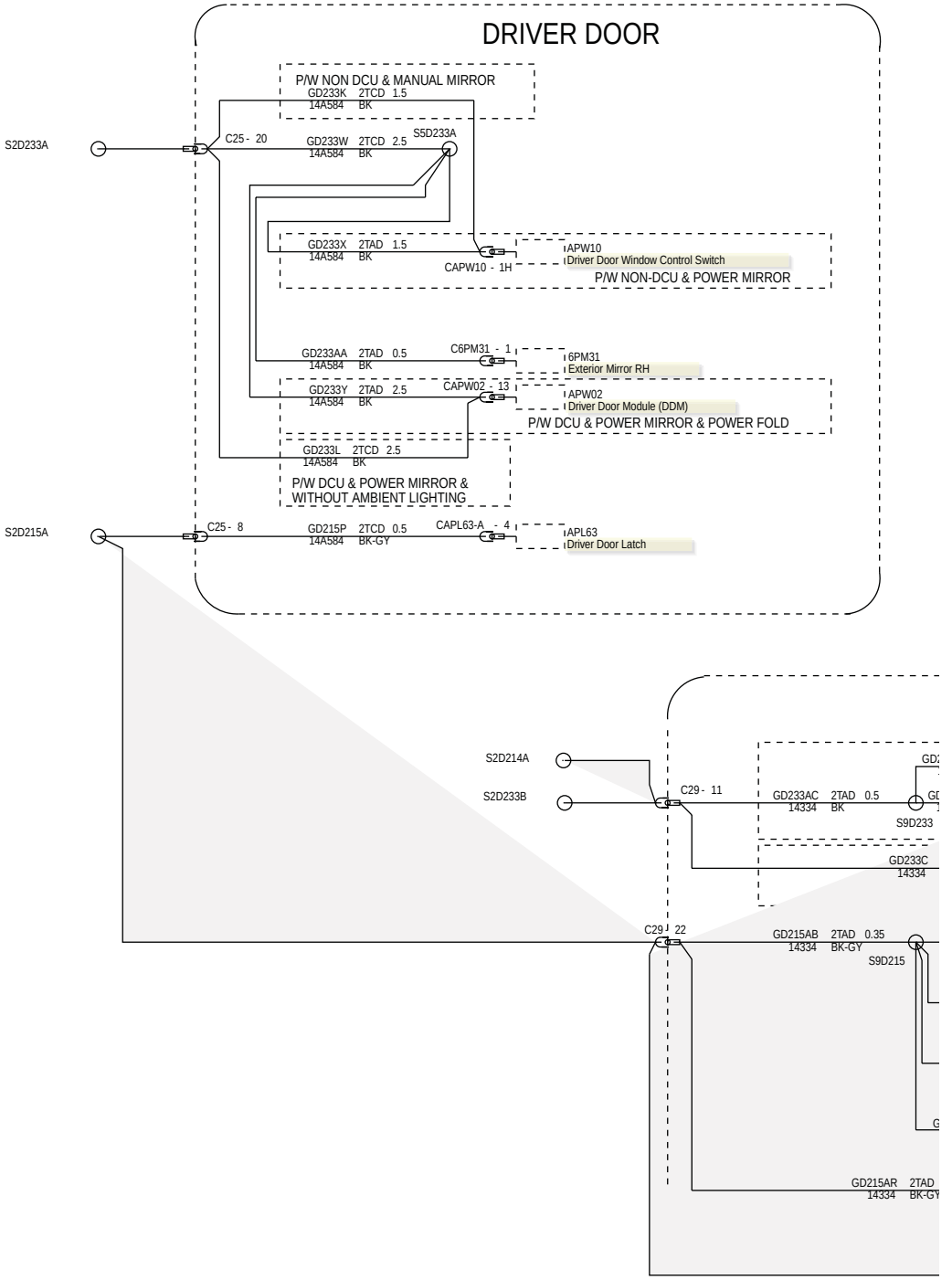

700-03-13 Grounding—RHD

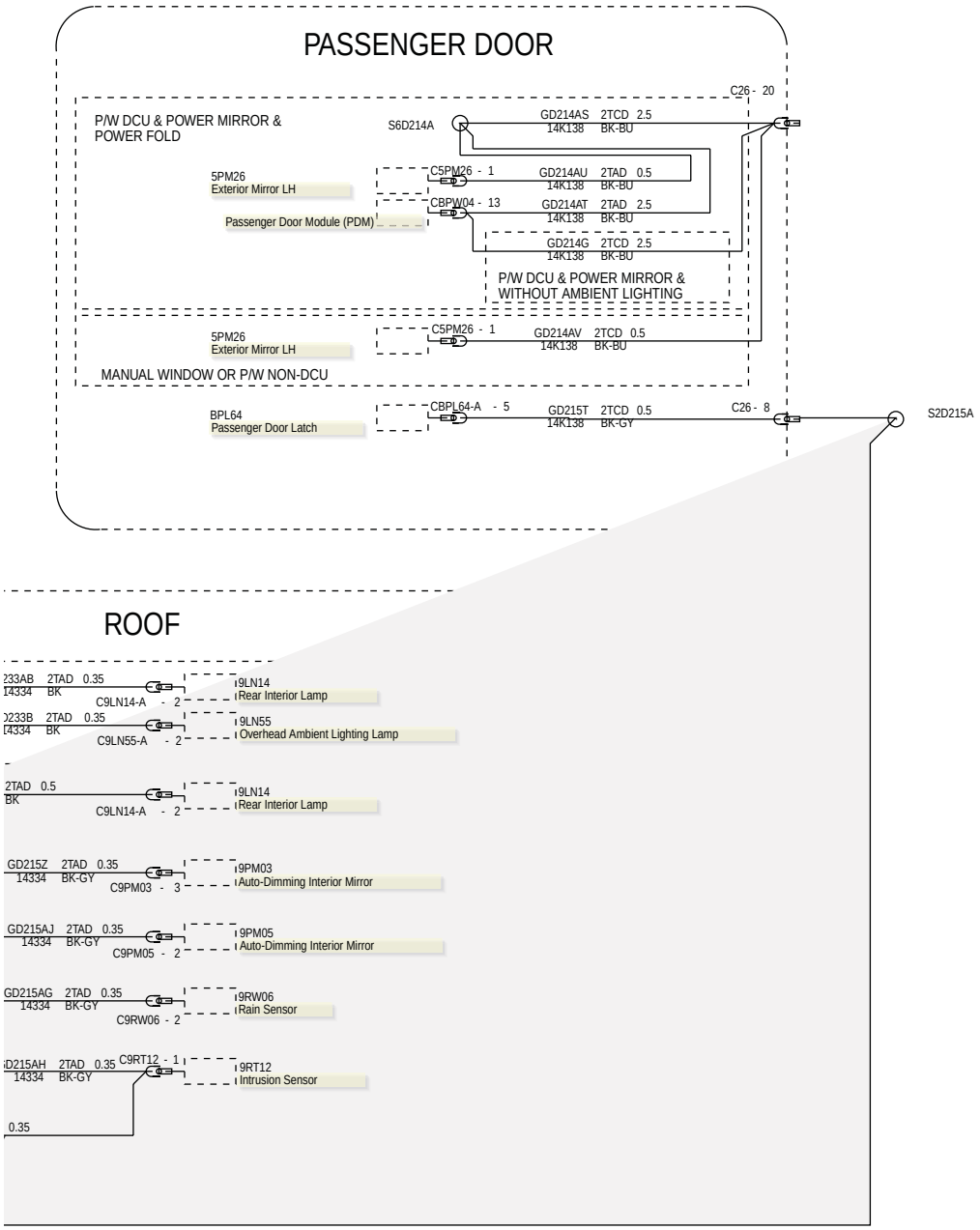

700-03-14 Grounding—RHD

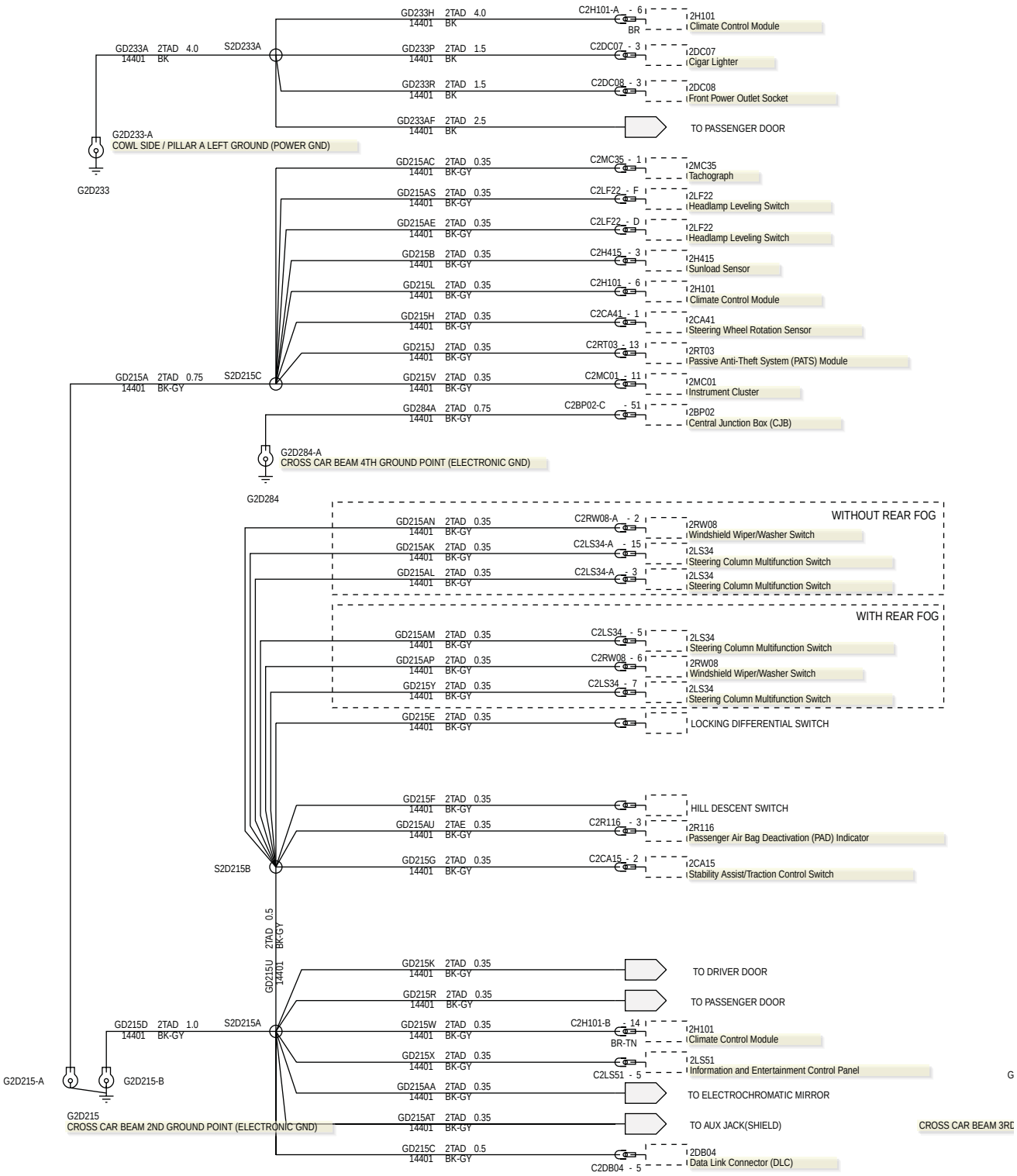

700-03-15 Grounding—RHD

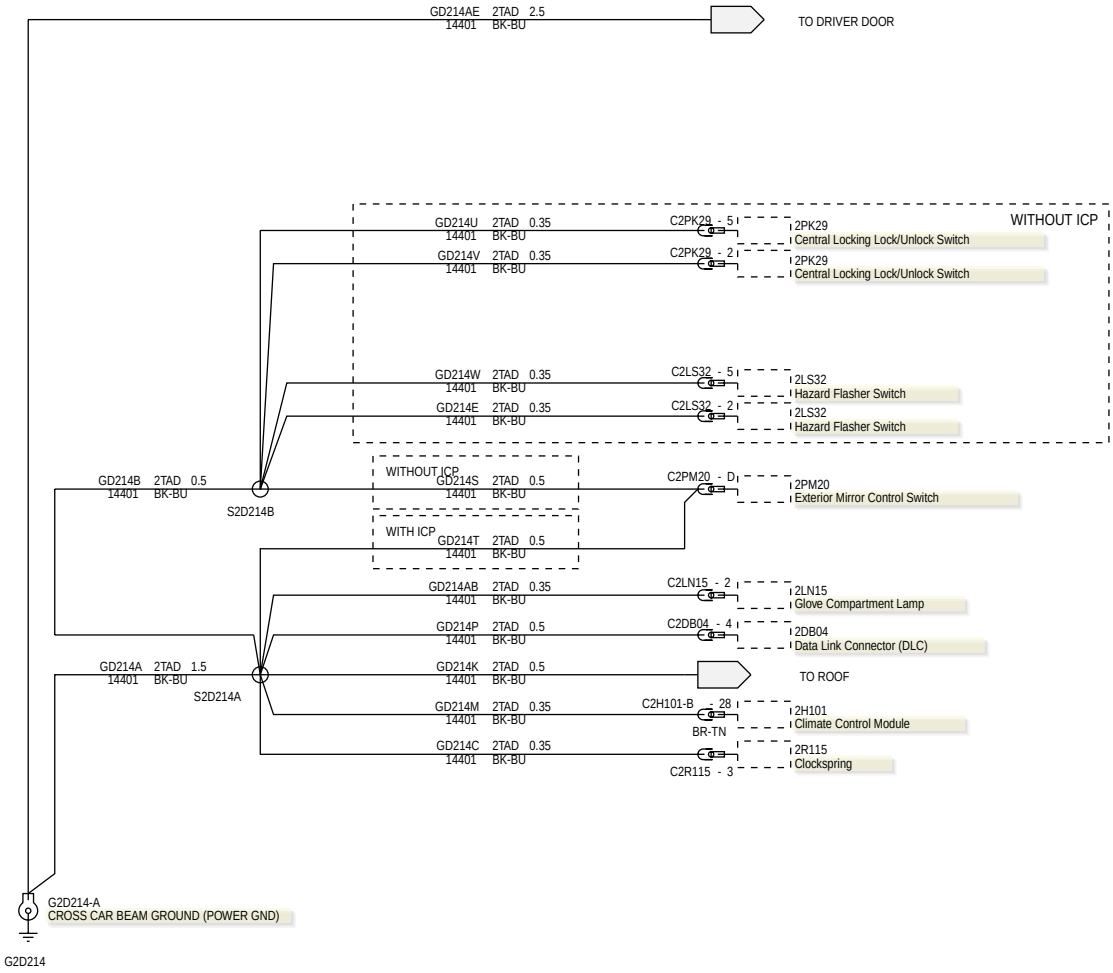

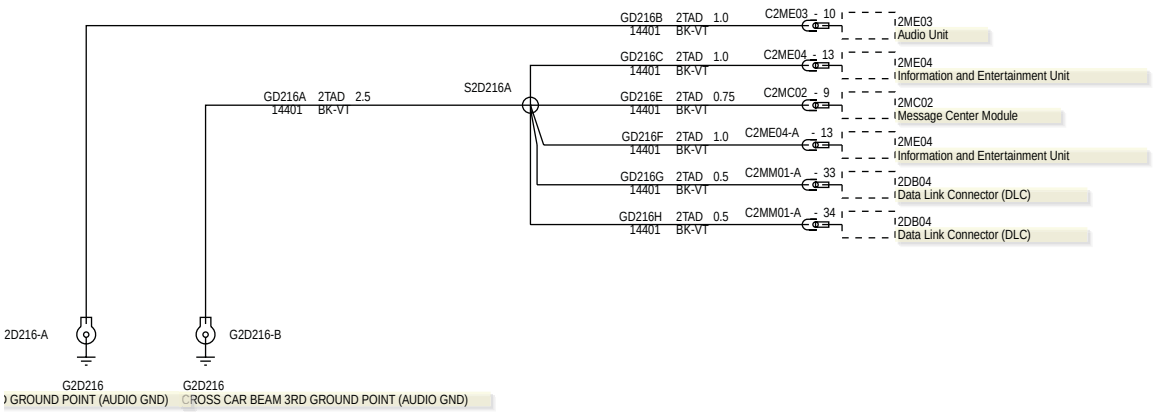

700-03-16 Grounding—RHD

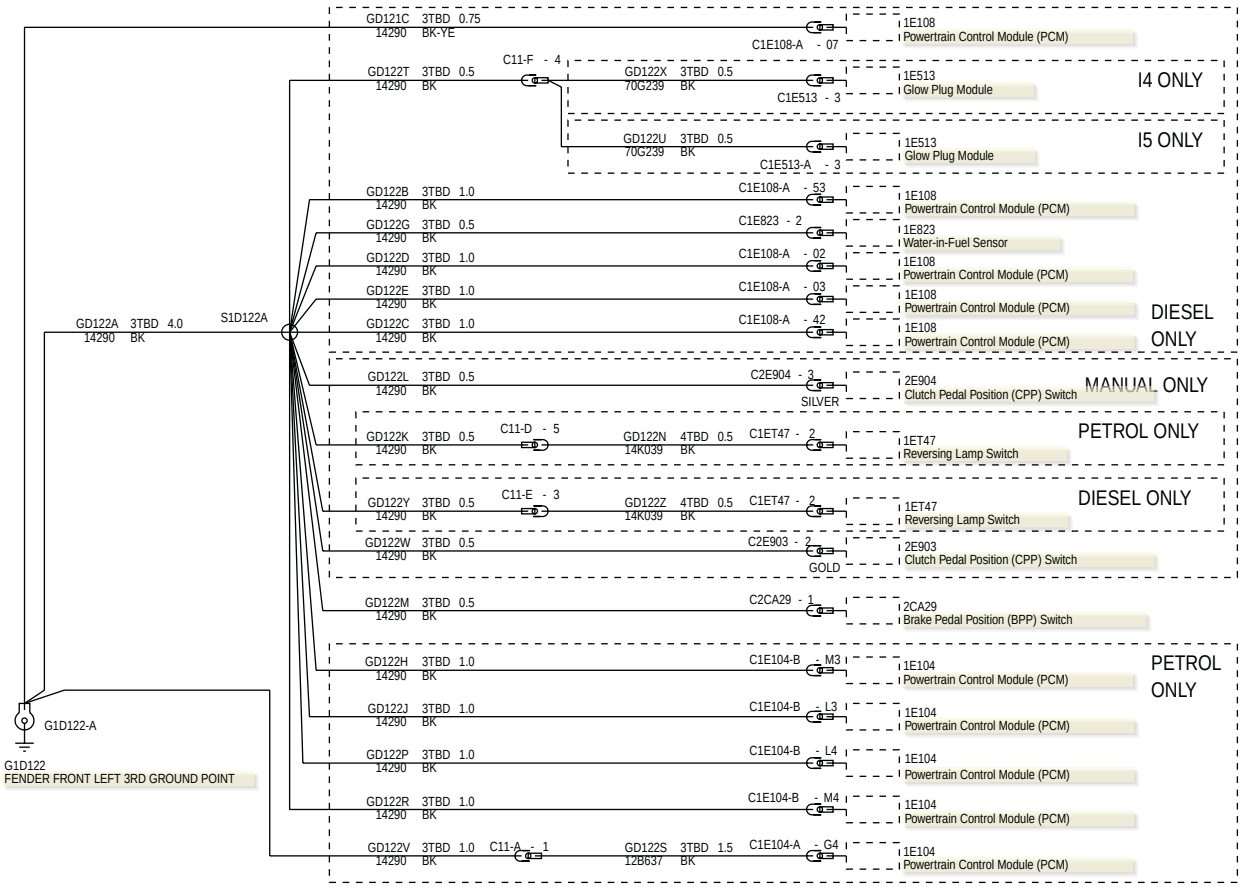

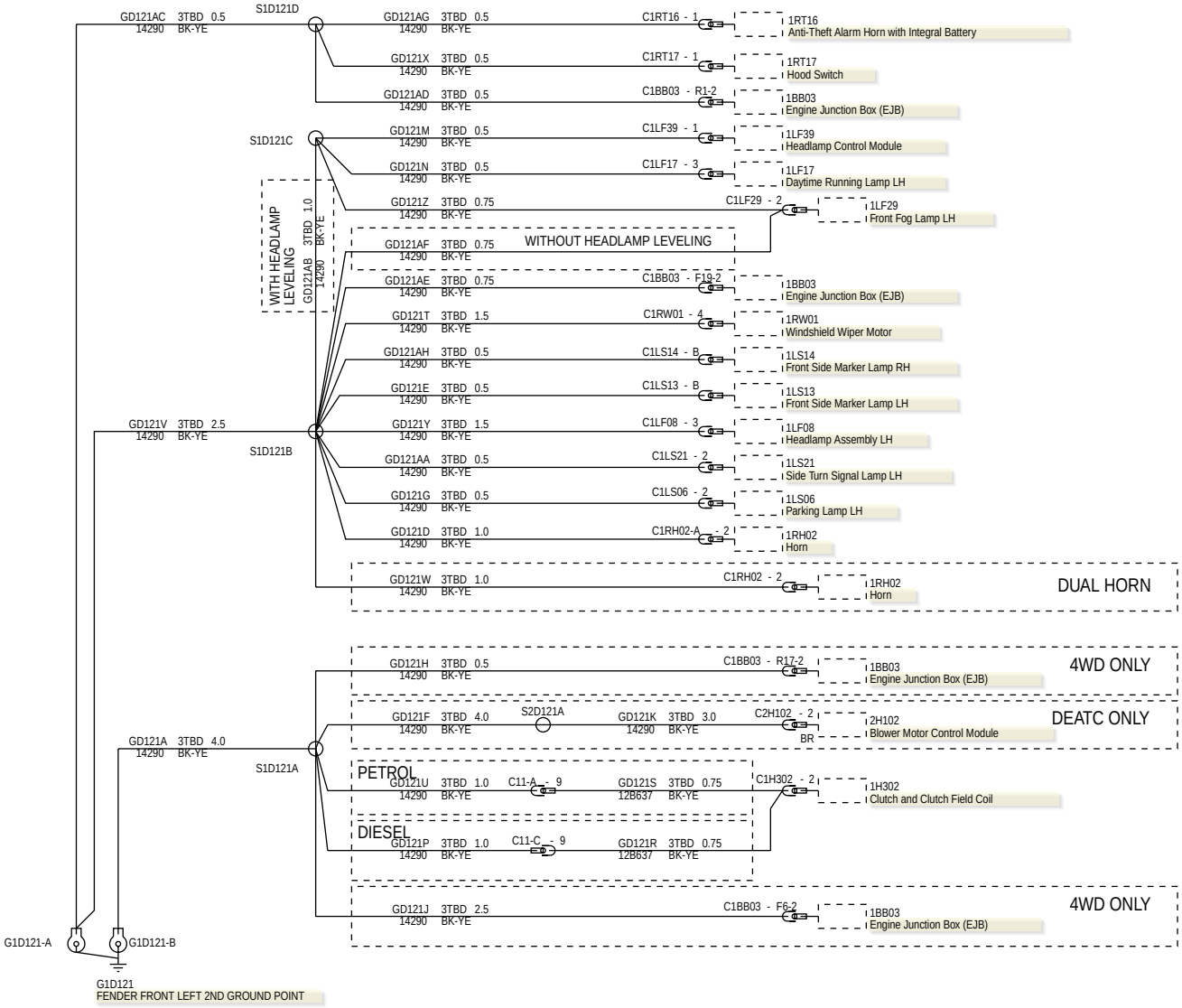

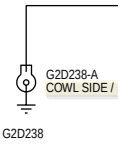

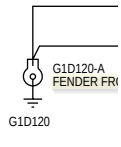

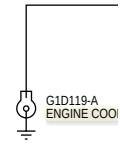

700-03-17 Grounding—RHD

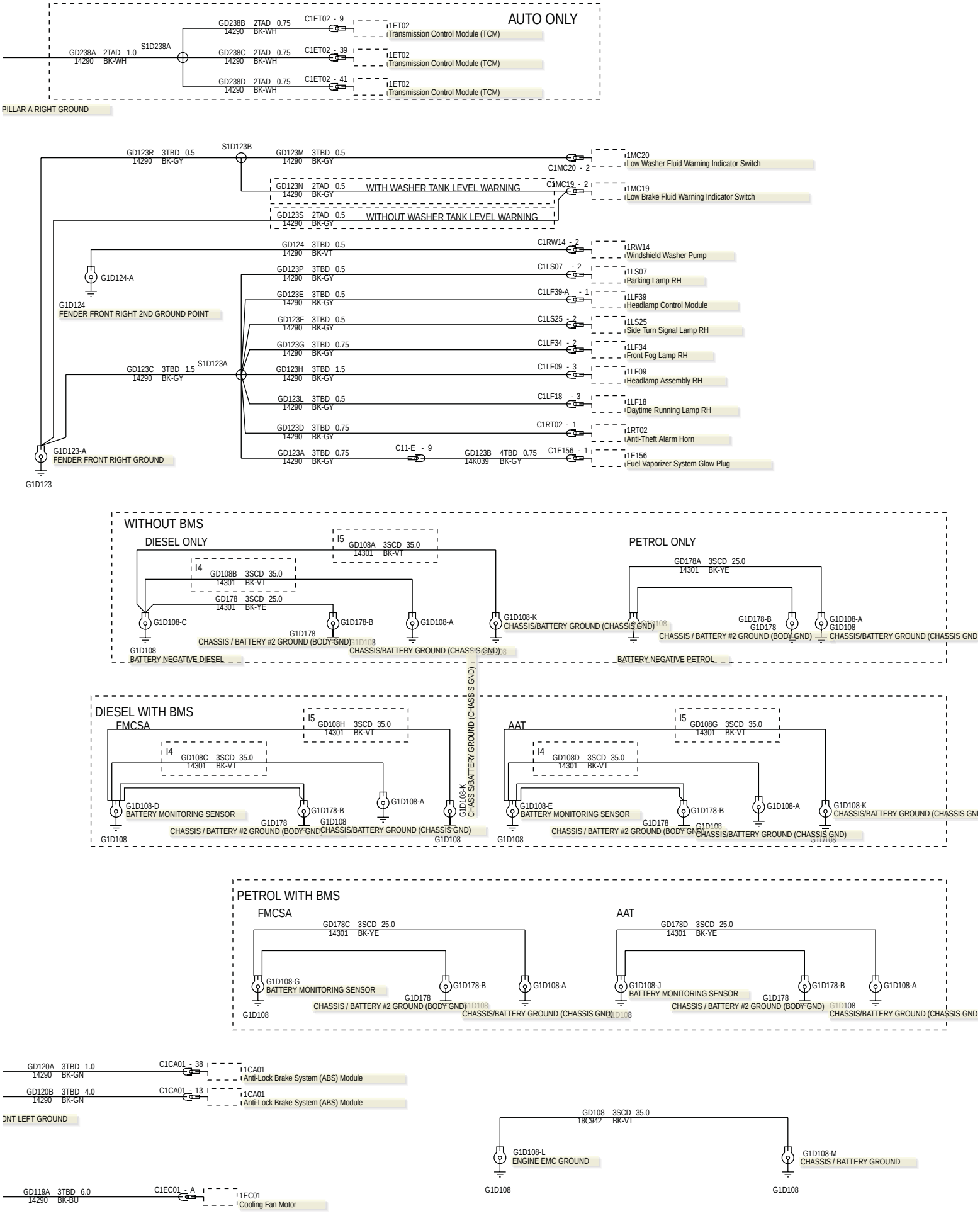

SECTION 700-04 Electrical Connectors

VEHICLE APPLICATION: 2012.0 Ranger

CONTENTS PAGE

ELECTRICAL CONNECTORS

In-Line Connector 11 — A..... 700-04-2
In-Line Connector 11 — AA..... 700-04-2
In-Line Connector 11 — B..... 700-04-3
In-Line Connector 11 — C..... 700-04-3
In-Line Connector 11 — D..... 700-04-4
In-Line Connector 11 — E..... 700-04-6
In-Line Connector 11 — F..... 700-04-6
In-Line Connector 13..... 700-04-7
In-Line Connector 21..... 700-04-9
In-Line Connector 23..... 700-04-12
In-Line Connector 25..... 700-04-13
In-Line Connector 25 — A..... 700-04-14
In-Line Connector 26..... 700-04-14
In-Line Connector 26 — A..... 700-04-14
In-Line Connector 29..... 700-04-15
In-Line Connector 30..... 700-04-15
In-Line Connector 31..... 700-04-16
In-Line Connector 33..... 700-04-16
In-Line Connector 34..... 700-04-17
In-Line Connector 34 — A..... 700-04-19
In-Line Connector 34 — B..... 700-04-20
In-Line Connector 37..... 700-04-21
In-Line Connector 37 — A..... 700-04-22
In-Line Connector 38..... 700-04-23
In-Line Connector 38 — A..... 700-04-23
In-Line Connector 44..... 700-04-23
In-Line Connector 44 — A..... 700-04-24
In-Line Connector 44 — B..... 700-04-24
In-Line Connector 44 — C..... 700-04-25
In-Line Connector 44 — D..... 700-04-25
In-Line Connector 44 — E..... 700-04-26
In-Line Connector 44 — F..... 700-04-26

In-Line Connector 11—A (G1404899)

Thumbnail

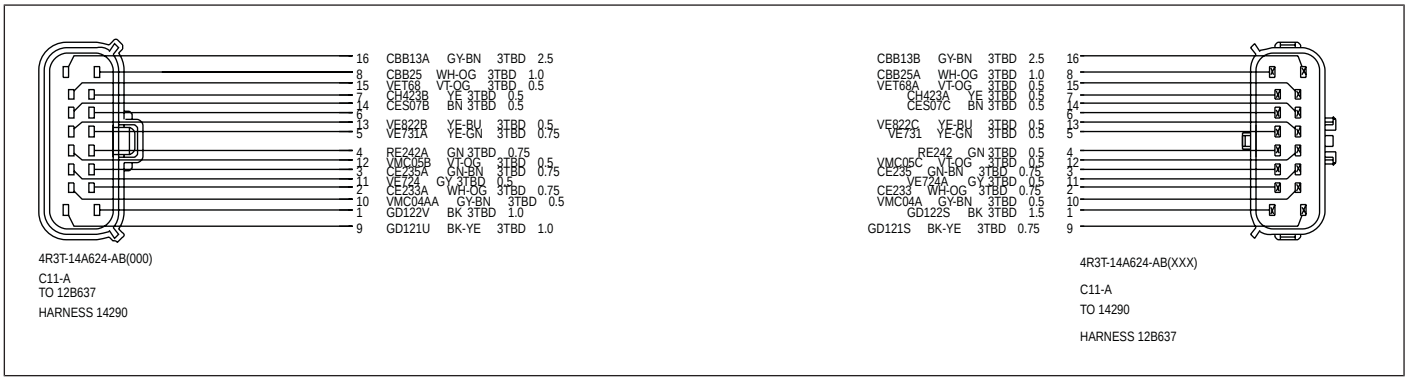

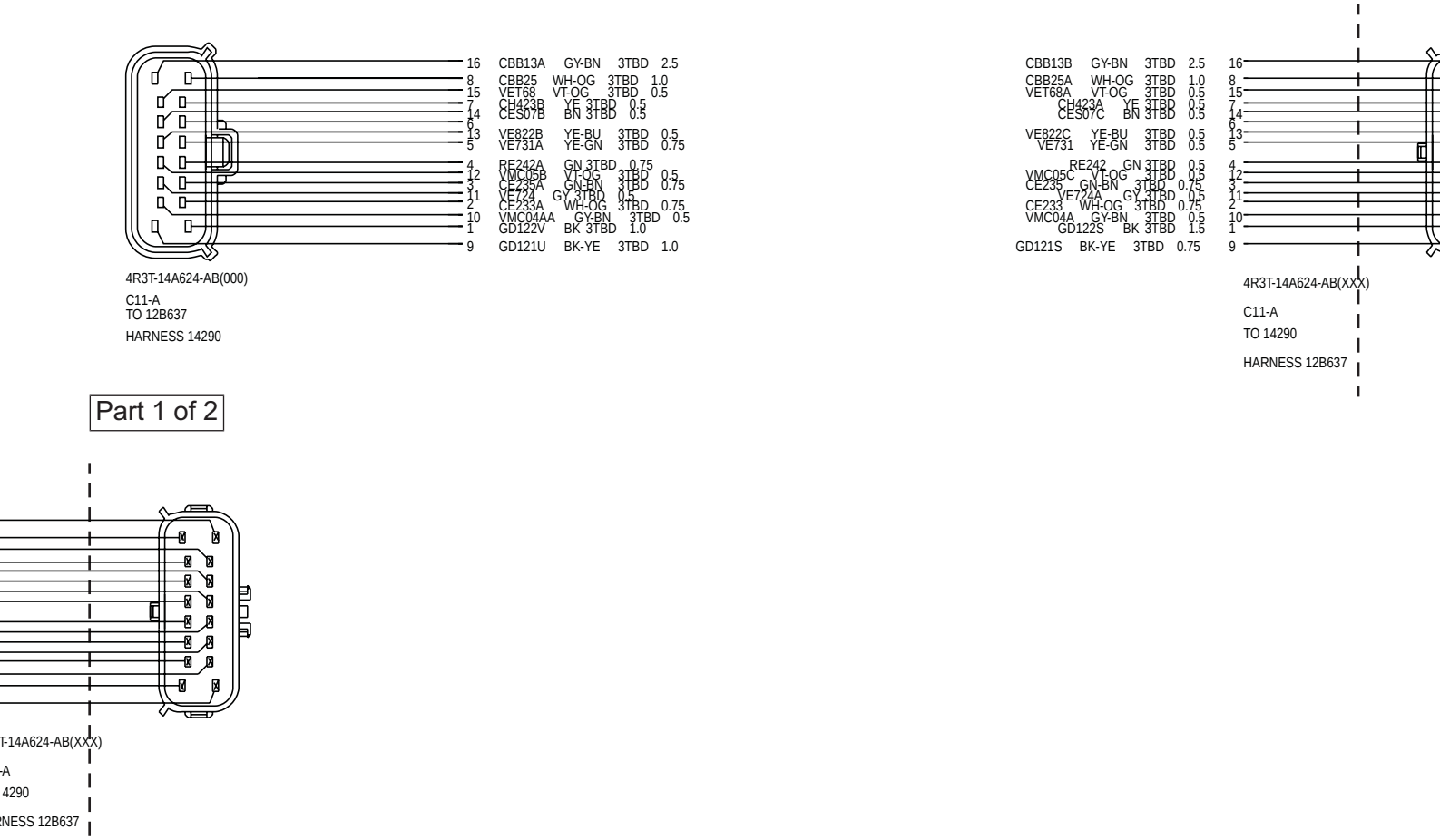

Part 1 of 2

Part 2 of 2

In-Line Connector 11—AA (G1404900)

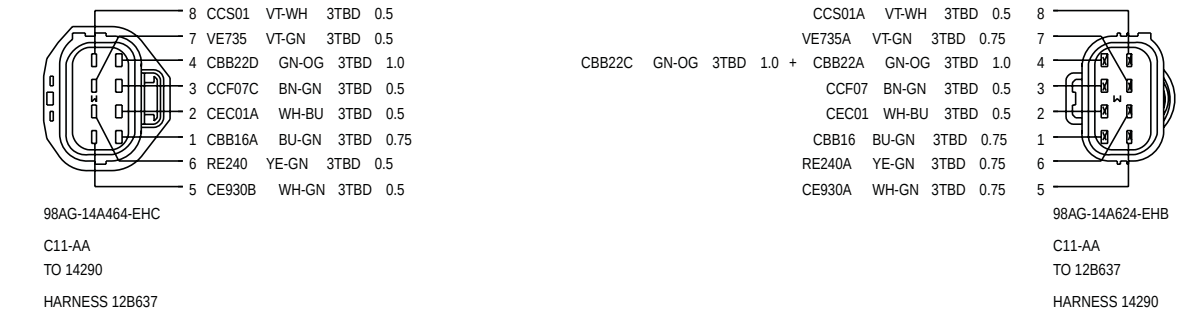

In-Line Connector 11—B (G1404901)

PIN 1 => SBB03G BU-RD 6.0 3TBD

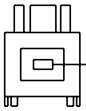

1 SBB03D BU-RD 3TBD 6.0

XR8T-14A464-LA

C11-B

TO 14290

HARNESS 70G239

SBB03H BU-RD 3TBD 6.0 1

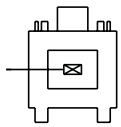

XR8T-14A624-NA

C11-B

TO 70G239

HARNESS 14290

In-Line Connector 11—C (G1404902)

Thumbnail

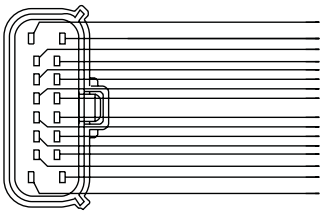

16 CBB13C GY-BN 3TBD 2.5
8 CBB28P GY-VT 3TBD 1.5
15
7
14
6
13
5 LE452A GN 3TBD 0.5
4 LE437A YE 3SCD 0.75 + LE437AA YE 3SCD 0.75
12 CBB16B BU-GN 3TBD 0.75
3 LE448A GY-BU 3TBD 0.5
11 CBB25T WH-OG 3TBD 0.75 + CBB25P WH-OG 3TBD 1.0
2 VE826A BN-VT 3TBD 0.5
10 LE451A BN-YE 3TBD 0.5
1 VE827A WH-GN 3TBD 1.0
9 GD121R BK-YE 3TBD 0.75

4R3T-14A624-AB(000)

C11-C
TO 14290

HARNESS 12B637

CBB13 GY-BN 3TBD 2.5 16
CBB28BB GY-VT 3TBD 1.5 8
15
7
14
6
13
LE452 GN 3TBD 0.5 5
LE437B YE 3TBD 0.75 4
CBB16C BU-GN 3TBD 0.75 12
LE448 GY-BU 3TBD 0.5 3
CBB25N WH-OG 3TBD 1.0 11
VE826 BN-VT 3TBD 0.5 2
LE451 BN-YE 3TBD 0.5 10
VE827 WH-GN 3TBD 1.5 1
GD121P BK-YE 3TBD 1.0 9

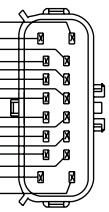

4R3T-14A624-AB(XXX)

C11-C

TO 12B637

HARNESS 14290

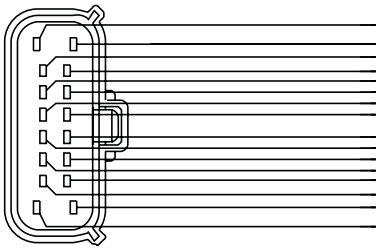

16 CBB13C GY-BN 3TBD 2.5
8 CBB28P GY-VT 3TBD 1.5
15
7
14
6
13
5 LE452A GN 3TBD 0.5
4 LE437A YE 3SCD 0.75 + LE437AA YE 3SCD 0.75
12 CBB16B BU-GN 3TBD 0.75
3 LE448A GY-BU 3TBD 0.5
11 CBB25T WH-OG 3TBD 0.75 + CBB25P WH-OG 3TBD 1.0
2 VE826A BN-VT 3TBD 0.5
10 LE451A BN-YE 3TBD 0.5
1 VE827A WH-GN 3TBD 1.0
9 GD121R BK-YE 3TBD 0.75

4R3T-14A624-AB(000)

C11-C
TO 14290

HARNESS 12B637

CBB13 GY-BN 3TBD 2.5 16
CBB28BB GY-VT 3TBD 1.5 8
15
7
14
6
13
LE452 GN 3TBD 0.5 5
LE437B YE 3TBD 0.75 4
CBB16C BU-GN 3TBD 0.75 12
LE448 GY-BU 3TBD 0.5 3
CBB25N WH-OG 3TBD 1.0 11
VE826 BN-VT 3TBD 0.5 2
LE451 BN-YE 3TBD 0.5 10
VE827 WH-GN 3TBD 1.5 1
GD121P BK-YE 3TBD 1.0 9

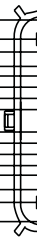

4R3T-14A624-AB(XXX)

C11-C

TO 12B637

HARNESS 14290

Part 1 of 2

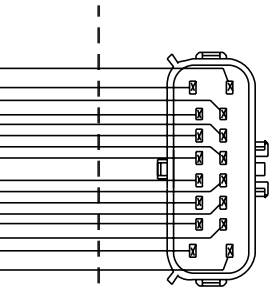

14A624-AB(XXX)

C

2B637

IESS 14290

Part 2 of 2

In-Line Connector 11—D (G1404903)

Thumbnail

PIN 1 => VET74 BU 0.5 4TBD
PIN 2 => CET25 BU-GN 0.5 4TBD
PIN 3 => RET24 BN-BU 0.5 4TBD
PIN 4 => RE406 GY-VT 0.5 4TBD
PIN 5 => VET27 BN-YE 0.5 4TBD
PIN 8 => VET26 BN-GN 0.5 4TBD
PIN 9 => CET45 YE-BU 0.5 4TBD
PIN 10 => CET05 BU-GN 0.5 4TBD
PIN 11 => CET06 GN-BN 0.5 4TBD
PIN 12 => CET07 GY-OG 0.5 4TBD
PIN 13 => CET08 BN-WH 0.5 4TBD
PIN 14 => CET09 YE-VT 0.5 4TBD

PIN 1 => VE822D YE-BU 0.5 3TBD
PIN 1 => VET74A BU 0.5 3TBD
PIN 2 => CET25A BU-GN 0.5 3TBD
PIN 2 => VMC05D VT-OG 0.5 3TBD
PIN 3 => CES07D BN 0.5 3TBD
PIN 3 => RET24A BN-BU 0.5 3TBD
PIN 4 => CET47C BU 0.5 3TBD
PIN 4 => RE406A GY-VT 0.5 3TBD
PIN 5 => VET27A BN-YE 0.5 3TBD
PIN 8 => VET26A BN-GN 0.5 3TBD
PIN 9 => CET45A YE-BU 0.5 3TBD
PIN 10 => CET05A BU-GN 0.5 3TBD
PIN 11 => CET06A GN-BN 0.5 3TBD
PIN 12 => CET07A GY-OG 0.5 3TBD
PIN 13 => CET08A BN-WH 0.5 3TBD
PIN 14 => CET09A YE-VT 0.5 3TBD

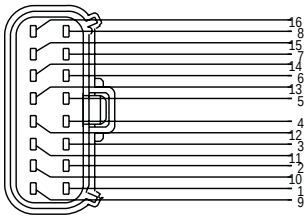

16							
8	CBB28H	GY-VT	4TBD	0.75	+ CBB28L	GY-VT	4TBD 0.75
15	CET10	BU-GY	4TBD	0.5			
7	VET33	WH-BU	4TBD	0.5			
14	CE233C	WH-OG	4TBD	0.75			
6	CET22	GY-BN	4TBD	0.5			
13	VE731C	YE-GN	4TBD	0.75			
5	GD122N	BK	4TBD	0.5			
4	CET47	BU	4TBD	0.5			
12	RE242C	GN	4TBD	0.75			
3	CES07	BN	4TBD	0.5			
11	CE235C	GN-BN	4TBD	0.75			
2	VMC05	VT-OG	4TBD	0.5			
10	VE735C	VT-GN	4TBD	0.75			
1	VE822	YE-BU	4TBD	0.5			
9	RE240C	YE-GN	4TBD	0.75			

4L3T-14A624-XA(009)

C11-D

TO 14290

HARNESS 14K039

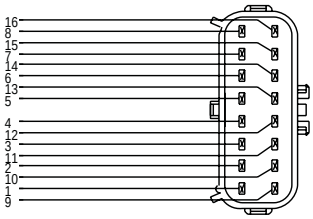

CBB28B	GY-VT	3TBD	0.75	16
CET10A	BU-GY	3TBD	0.5	8
VET33A	WH-BU	3TBD	0.5	15
CE233A	WH-OG	3TBD	0.75	7
CET22A	GY-BN	3TBD	0.5	14
VE731A	YE-GN	3TBD	0.75	6
GD122K	BK	3TBD	0.5	13
CET47D	BU	3TBD	0.5	5
RE242A	GN	3TBD	0.75	4
CES07B	BN	3TBD	0.5	12
CE235A	GN-BN	3TBD	0.75	3
VMC05B	VT-OG	3TBD	0.5	11
VE735A	VT-GN	3TBD	0.75	2
VE822B	YE-BU	3TBD	0.5	10
RE240A	YE-GN	3TBD	0.75	1
				9

4L3T-14A624-XA(XXX)

C11-D

TO 14K039

HARNESS 14290

PIN 1 => VET74 BU 0.5 4TBD
PIN 2 => CET25 BU-GN 0.5 4TBD
PIN 3 => RET24 BN-BU 0.5 4TBD
PIN 4 => RE406 GY-VT 0.5 4TBD
PIN 5 => VET27 BN-YE 0.5 4TBD
PIN 8 => VET26 BN-GN 0.5 4TBD
PIN 9 => CET45 YE-BU 0.5 4TBD
PIN 10 => CET05 BU-GN 0.5 4TBD
PIN 11 => CET06 GN-BN 0.5 4TBD
PIN 12 => CET07 GY-OG 0.5 4TBD
PIN 13 => CET08 BN-WH 0.5 4TBD
PIN 14 => CET09 YE-VT 0.5 4TBD

PIN 1 => VE822D YE-BU 0.5 3TBD
PIN 1 => VET74A BU 0.5 3TBD
PIN 2 => CET25A BU-GN 0.5 3TBD
PIN 2 => VMC05D VT-OG 0.5 3TBD
PIN 3 => CES07D BN 0.5 3TBD
PIN 3 => RET24A BN-BU 0.5 3TBD
PIN 4 => CET47C BU 0.5 3TBD
PIN 4 => RE406A GY-VT 0.5 3TBD
PIN 5 => VET27A BN-YE 0.5 3TBD
PIN 8 => VET26A BN-GN 0.5 3TBD
PIN 9 => CET45A YE-BU 0.5 3TBD
PIN 10 => CET05A BU-GN 0.5 3TBD
PIN 11 => CET06A GN-BN 0.5 3TBD
PIN 12 => CET07A GY-OG 0.5 3TBD
PIN 13 => CET08A BN-WH 0.5 3TBD
PIN 14 => CET09A YE-VT 0.5 3TBD

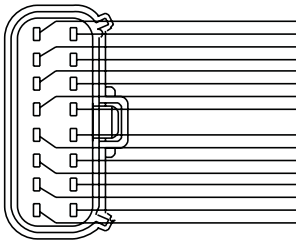

16							
8	CBB28H	GY-VT	4TBD	0.75	+ CBB28L	GY-VT	4TBD 0.75
15	CET10	BU-GY	4TBD	0.5			
7	VET33	WH-BU	4TBD	0.5			
14	CE233C	WH-OG	4TBD	0.75			
6	CET22	GY-BN	4TBD	0.5			
13	VE731C	YE-GN	4TBD	0.75			
5	GD122N	BK	4TBD	0.5			
4	CET47	BU	4TBD	0.5			
12	RE242C	GN	4TBD	0.75			
3	CES07	BN	4TBD	0.5			
11	CE235C	GN-BN	4TBD	0.75			
2	VMC05	VT-OG	4TBD	0.5			
10	VE735C	VT-GN	4TBD	0.75			
1	VE822	YE-BU	4TBD	0.5			
9	RE240C	YE-GN	4TBD	0.75			

4L3T-14A624-XA(009)

C11-D

TO 14290

HARNESS 14K039

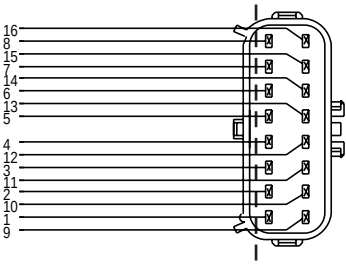

CBB28B	GY-VT	3TBD	0.75	16
CET10A	BU-GY	3TBD	0.5	8
VET33A	WH-BU	3TBD	0.5	15
CE233A	WH-OG	3TBD	0.75	7
CET22A	GY-BN	3TBD	0.5	14
VE731A	YE-GN	3TBD	0.75	6
GD122K	BK	3TBD	0.5	13
CET47D	BU	3TBD	0.5	5
RE242A	GN	3TBD	0.75	4
CES07B	BN	3TBD	0.5	12
CE235A	GN-BN	3TBD	0.75	3
VMC05B	VT-OG	3TBD	0.5	11
VE735A	VT-GN	3TBD	0.75	2
VE822B	YE-BU	3TBD	0.5	10
RE240A	YE-GN	3TBD	0.75	1
				9

4L3T-14A624-XA(XXX)

C11-D

TO 14K039

HARNESS 14290

Part 1 of 2

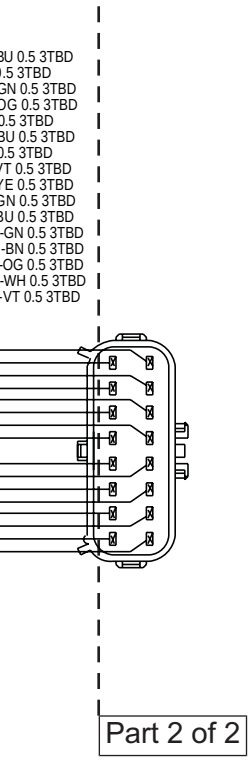
BU 0.5 3TBD
.5 3TBD
GN 0.5 3TBD
OG 0.5 3TBD
0.5 3TBD
BU 0.5 3TBD
0.5 3TBD
T 0.5 3TBD
E 0.5 3TBD
GN 0.5 3TBD
BU 0.5 3TBD
-GN 0.5 3TBD
-BN 0.5 3TBD
-OG 0.5 3TBD
-WH 0.5 3TBD
-VT 0.5 3TBD

Part 2 of 2

In-Line Connector 11—E (G1404904)

Thumbnail

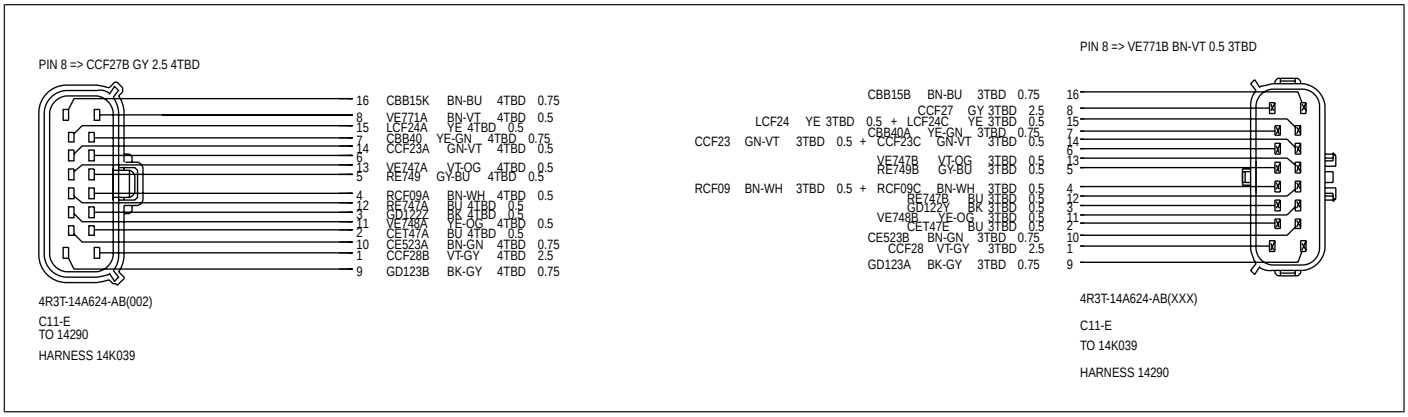

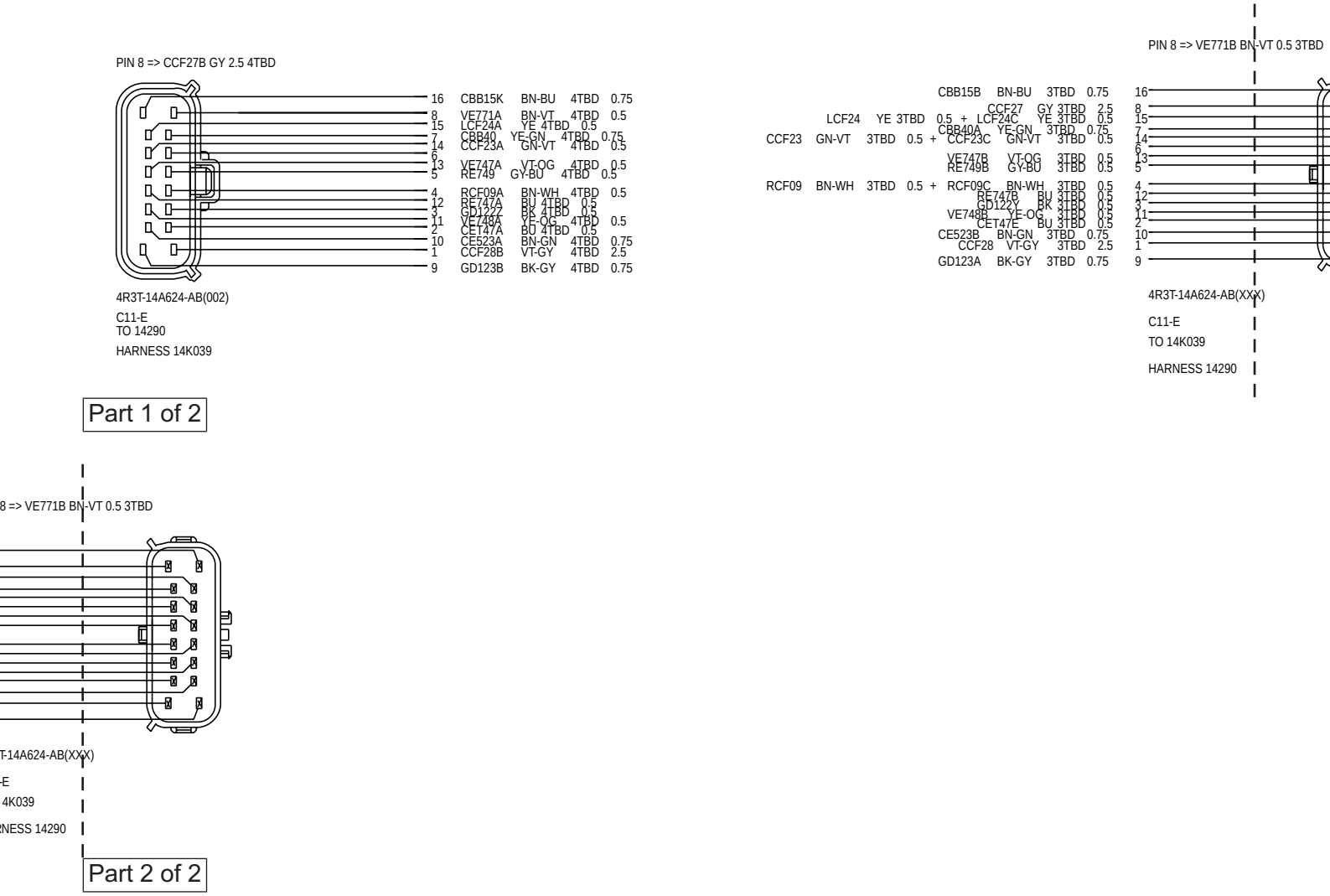

Part 1 of 2

Part 2 of 2

In-Line Connector 11—F (G1404905)

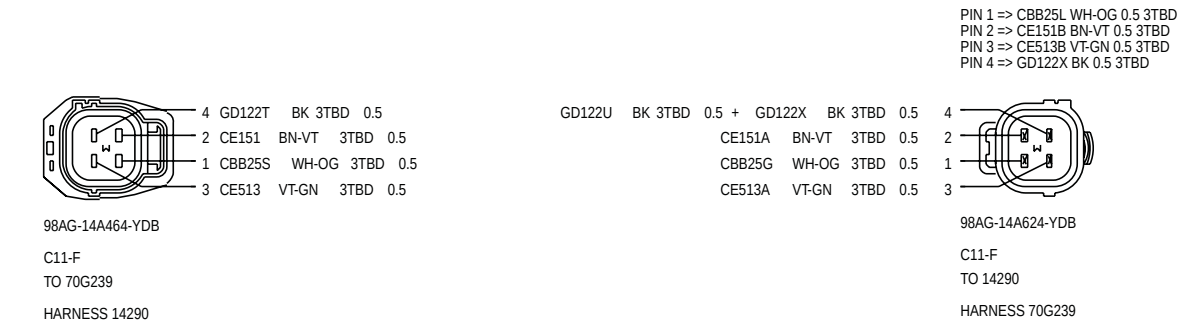

In-Line Connector 13 (G1404906)

Thumbnail

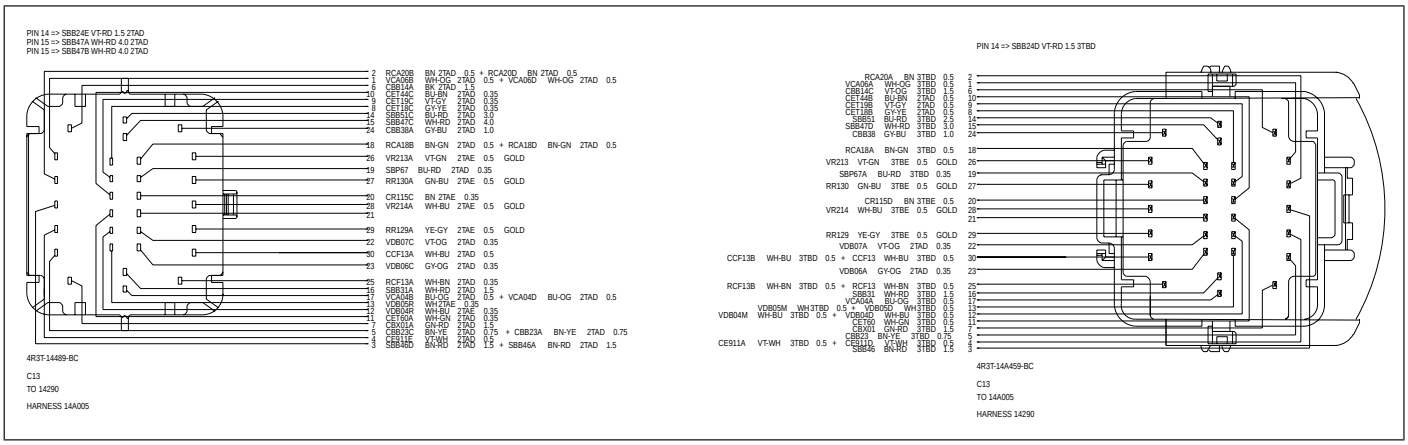

PIN 14 => SBB24E VT-RD 1.5 2TAD
PIN 15 => SBB47A WH-RD 4.0 2TAD
PIN 15 => SBB47B WH-RD 4.0 2TAD

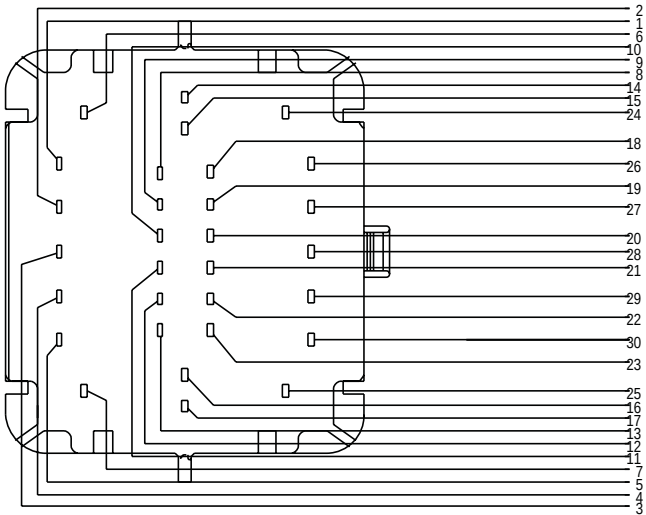

2	RCA20B	BN 2TAD	0.5	+	RCA20D	BN 2TAD	0.5		
1	VCA06B	WH-OG	2TAD	0.5	+	VCA06D	WH-OG	2TAD	0.5
6	CBB14A	BK 2TAD	1.5						
10	CET44C	BU-BN	2TAD	0.35					
9	CET19C	VT-GY	2TAD	0.35					
8	CET18C	GY-YE	2TAD	0.35					
14	SBB51C	BU-RD	2TAD	3.0					
15	SBB47C	WH-RD	2TAD	4.0					
24	CBB38A	GY-BU	2TAD	1.0					
18	RCA18B	BN-GN	2TAD	0.5	+	RCA18D	BN-GN	2TAD	0.5
26	VR213A	VT-GN	2TAE	0.5	GOLD				
19	SBP67	BU-RD	2TAD	0.35					
27	RR130A	GN-BU	2TAE	0.5	GOLD				
20	CR115C	BN 2TAE	0.35						
28	VR214A	WH-BU	2TAE	0.5	GOLD				
21									
29	RR129A	YE-GY	2TAE	0.5	GOLD				
22	VDB07C	VT-OG	2TAD	0.35					
30	CCF13A	WH-BU	2TAD	0.5					
23	VDB06C	GY-OG	2TAD	0.35					
25	RCF13A	WH-BN	2TAD	0.35					
16	SBB31A	WH-RD	2TAD	1.5					
17	VCA04B	BU-OG	2TAD	0.5	+	VCA04D	BU-OG	2TAD	0.5
13	VDB05R	WH2TAE	0.35						
12	VDB04R	WH-BU	2TAE	0.35					
11	CET60A	WH-GN	2TAD	0.35					
7	CBX01A	GN-RD	2TAD	1.5					
5	CBB23C	BN-YE	2TAD	0.75	+	CBB23A	BN-YE	2TAD	0.75
4	CE911E	VT-WH	2TAD	0.5					
3	SBB46D	BN-RD	2TAD	1.5	+	SBB46A	BN-RD	2TAD	1.5

4R3T-14489-BC

C13

TO 14290

HARNESS 14A005

CCF13B WH-BU

RCF13B WH-BN

VDB05M

VDB04M WH-BU 3

CE911A VT-WH 3

Part 1 of 2

Part 1 of 2

PIN 14 => SBB24D VT-RD 1.5 3TBD

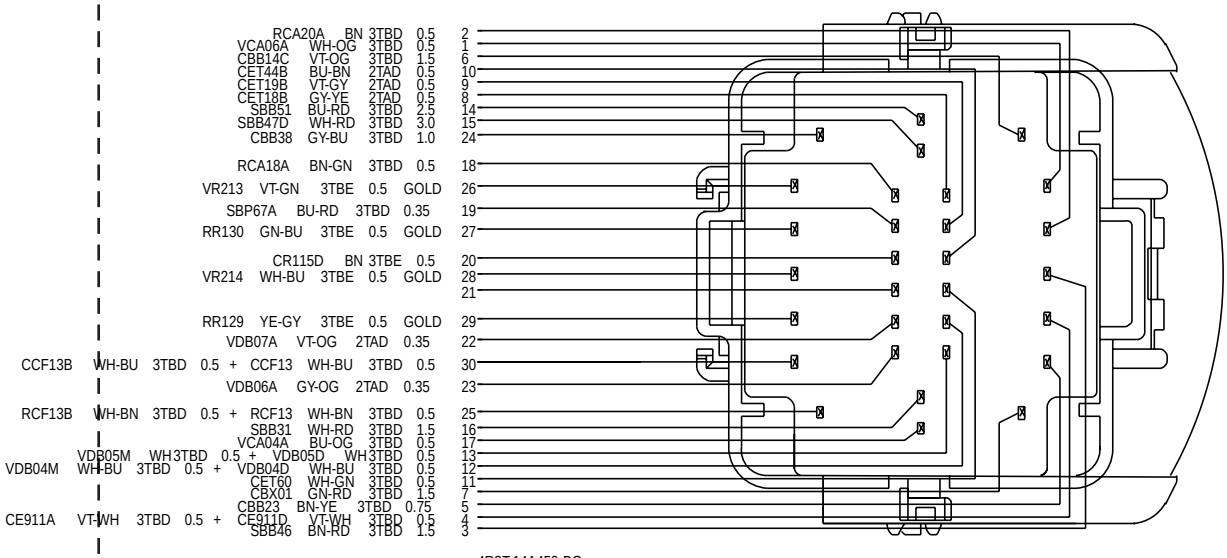

4R3T-14A459-BC

C13

TO 14A005

HARNESS 14290

Part 2 of 2

In-Line Connector 21 (G1404907)

Thumbnail

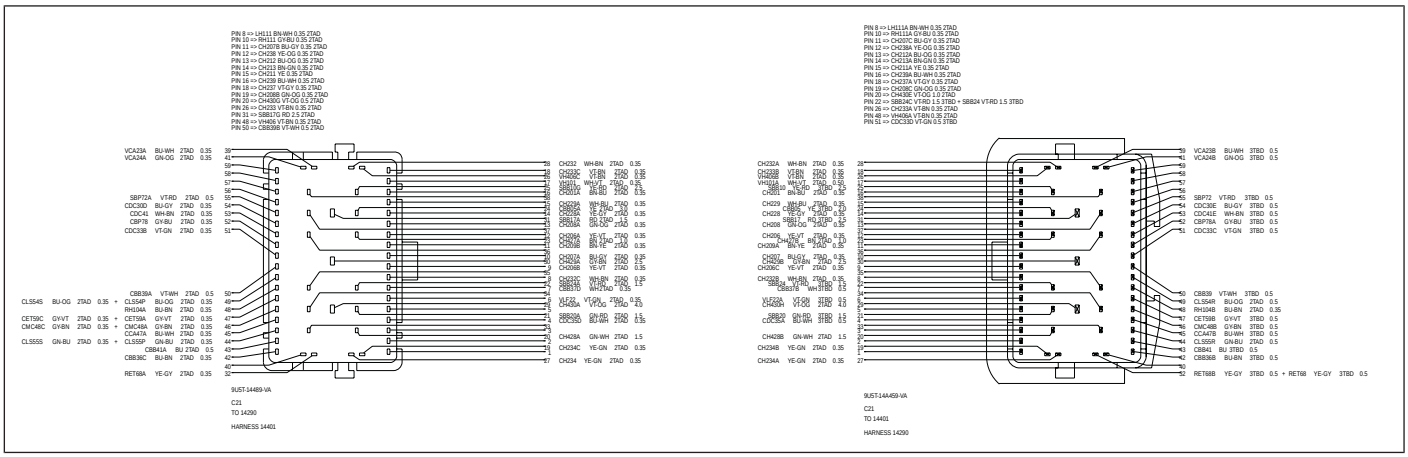

PIN 8 => LH111 BN-WH 0.35 2TAD
PIN 10 => RH111 GY-BU 0.35 2TAD
PIN 11 => CH207B BU-GY 0.35 2TAD
PIN 12 => CH238 YE-OG 0.35 2TAD
PIN 13 => CH212 BU-OG 0.35 2TAD
PIN 14 => CH213 BN-GN 0.35 2TAD
PIN 15 => CH211 YE 0.35 2TAD
PIN 16 => CH239 BU-WH 0.35 2TAD
PIN 18 => CH237 VT-GY 0.35 2TAD
PIN 19 => CH208B GN-OG 0.35 2TAD
PIN 20 => CH430G VT-OG 0.5 2TAD
PIN 26 => CH233 VT-BN 0.35 2TAD
PIN 31 => SBB17G RD 2.5 2TAD
PIN 48 => VH406 VT-BN 0.35 2TAD
PIN 50 => CBB39B VT-WH 0.5 2TAD

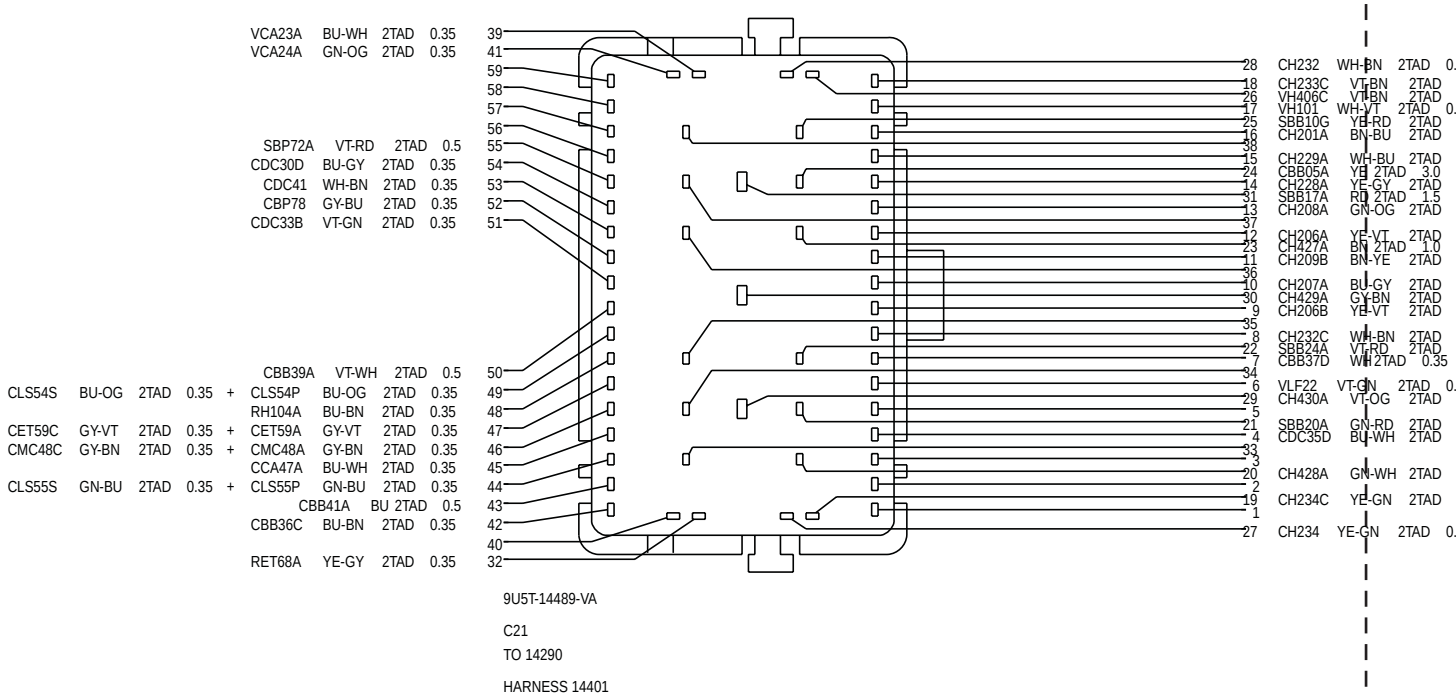

Part 1 of 3

PIN 8 => LH111A BN-WH 0.35 2TAD
PIN 10 => RH111A GY-BU 0.35 2TAD
PIN 11 => CH207C BU-GY 0.35 2TAD
PIN 12 => CH238A YE-OG 0.35 2TAD
PIN 13 => CH212A BU-OG 0.35 2TAD
PIN 14 => CH213A BN-GN 0.35 2TAD
PIN 15 => CH211A YE 0.35 2TAD
PIN 16 => CH239A BU-WH 0.35 2TAD
PIN 18 => CH237A VT-GY 0.35 2TAD
PIN 19 => CH208C GN-OG 0.35 2TAD
PIN 20 => CH430E VT-OG 1.0 2TAD
PIN 22 => SBB24C VT-RD 1.5 3TBD + SBB24 VT-RD 1.5 3TBD
PIN 26 => CH233A VT-BN 0.35 2TAD
PIN 48 => VH406A VT-BN 0.35 2TAD
PIN 51 => CDC33D VT-GN 0.5 3TBD

CH232	WH-BN	2TAD	0.35	CH232A	WH-BN	2TAD	0.35
CH233C	VT-BN	2TAD	0.35	CH233B	VT-BN	2TAD	0.35
VH406C	VT-BN	2TAD	0.35	VH406B	VT-BN	2TAD	0.35
VH101	WH-VT	2TAD	0.35	VH101A	WH-VT	2TAD	0.50
SBB10G	YE-RD	2TAD	2.5	SBB10	YE-RD	3TBD	2.5
CH201A	BN-BU	2TAD	0.35	CH201	BN-BU	2TAD	0.35
CH229A	WH-BU	2TAD	0.35	CH229	WH-BU	2TAD	0.35
CBB05A	YE	2TAD	3.0	CBB05	YE	3TBD	2.0
CH228A	YE-GY	2TAD	0.35	CH228	YE-GY	2TAD	0.35
SBB17A	RD	2TAD	1.5	SBB17	RD	3TBD	2.5
CH208A	GN-OG	2TAD	0.35	CH208	GN-OG	2TAD	0.35
CH206A	YE-VT	2TAD	0.35	CH206	YE-VT	2TAD	0.35
CH427A	BN	2TAD	1.0	CH427B	BN	2TAD	1.0
CH209B	BN-YE	2TAD	0.35	CH209A	BN-YE	2TAD	0.35
CH207A	BU-GY	2TAD	0.35	CH207	BU-GY	2TAD	0.35
CH429A	GY-BN	2TAD	2.5	CH429B	GY-BN	2TAD	2.5
CH206B	YE-VT	2TAD	0.35	CH206C	YE-VT	2TAD	0.35
CH232C	WH-BN	2TAD	0.35	CH232B	WH-BN	2TAD	0.35
SBB24A	VT-RD	2TAD	1.5	SBB24	VT-RD	3TBD	1.5
CBB37D	WH	2TAD	0.35	CBB37B	WH	3TBD	0.5
VLF22	VT-GN	2TAD	0.35	VLF22A	VT-GN	3TBD	0.5
CH430A	VT-OG	2TAD	4.0	CH430H	VT-OG	2TAD	4.0
SBB20A	GN-RD	2TAD	1.5	SBB20	GN-RD	3TBD	1.5
CDC35D	BU-WH	2TAD	0.35	CDC35A	BU-WH	3TBD	0.5
CH428A	GN-WH	2TAD	1.5	CH428B	GN-WH	2TAD	1.5
CH234C	YE-GN	2TAD	0.35	CH234B	YE-GN	2TAD	0.35
CH234	YE-GN	2TAD	0.35	CH234A	YE-GN	2TAD	0.35

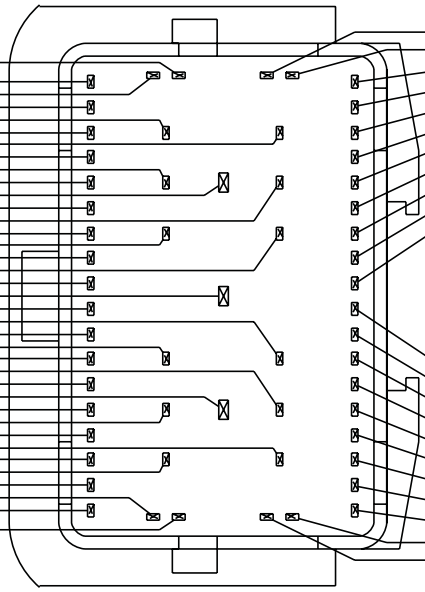

9U5T-14A459-VA

C21

TO 14401

HARNESS 14290

Part 2 of 3

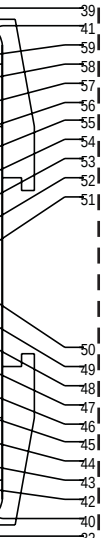

39	VCA23B	BU-WH	3TBD	0.5
41	VCA24B	GN-OG	3TBD	0.5
59				
58				
57				
56				
55	SBP72	VT-RD	3TBD	0.5
54	CDC30E	BU-GY	3TBD	0.5
53	CDC41E	WH-BN	3TBD	0.5
52	CBP78A	GY-BU	3TBD	0.5
51	CDC33C	VT-GN	3TBD	0.5
50	CBB39	VT-WH	3TBD	0.5
49	CLS54R	BU-OG	2TAD	0.5
48	RH104B	BU-BN	2TAD	0.35
47	CET59B	GY-VT	3TBD	0.5
46	CMC48B	GY-BN	3TBD	0.5
45	CCA47B	BU-WH	3TBD	0.5
44	CLS55R	GN-BU	2TAD	0.5
43	CBB41	BU	3TBD	0.5
42	CBB36B	BU-BN	3TBD	0.5
40				
32	RET68B	YE-GY	3TBD	0.5 + RET68 YE-GY 3TBD 0.5

Part 3 of 3

In-Line Connector 23 (G1404908)

Thumbnail

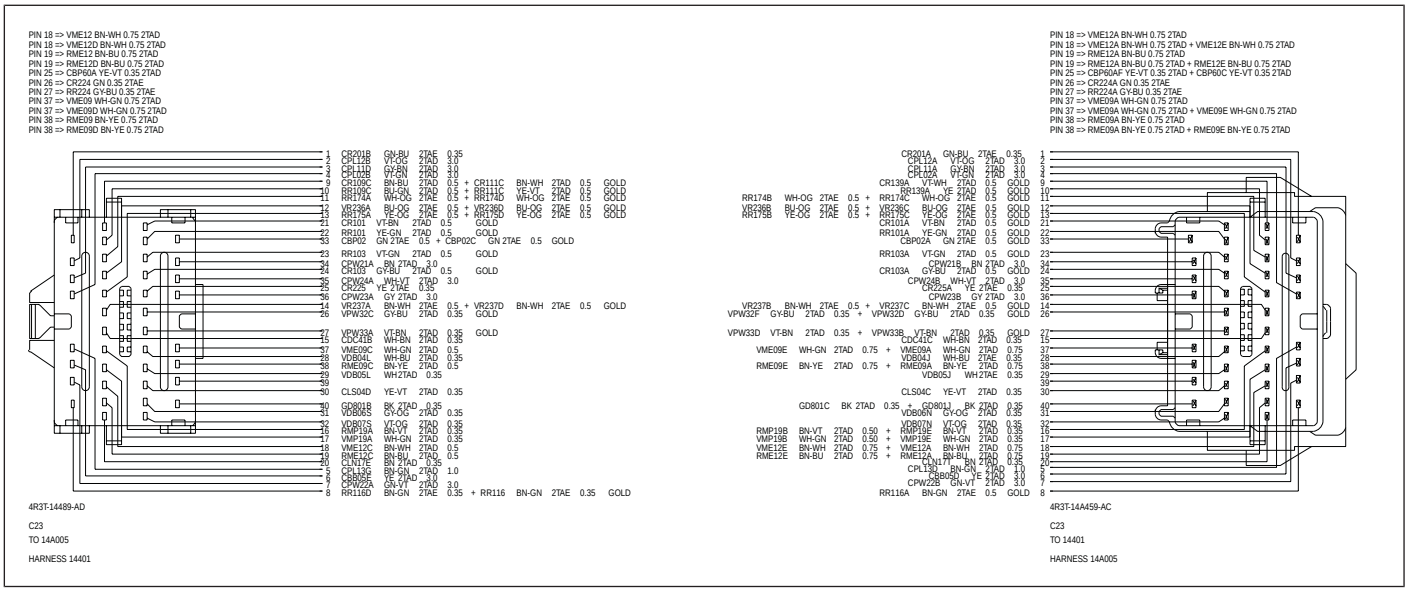

PIN 18 => VME12 BN-WH 0.75 2TAD
PIN 18 => VME12D BN-WH 0.75 2TAD
PIN 19 => RME12 BN-BU 0.75 2TAD
PIN 19 => RME12D BN-BU 0.75 2TAD
PIN 25 => CBP60A YE-VT 0.35 2TAD
PIN 26 => CR224 GN 0.35 2TAE
PIN 27 => RR224 GY-BU 0.35 2TAE
PIN 37 => VME09 WH-GN 0.75 2TAD
PIN 37 => VME09D WH-GN 0.75 2TAD
PIN 38 => RME09 BN-YE 0.75 2TAD
PIN 38 => RME09D BN-YE 0.75 2TAD

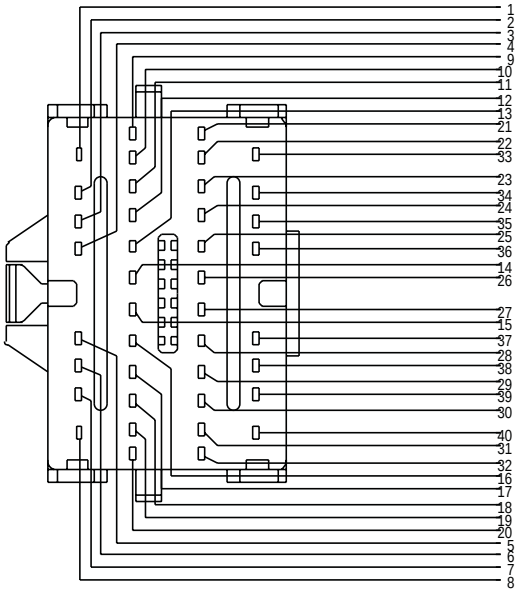

1	CR201B	GN-BU	2TAE	0.35																			
2	CPL12B	VT-OG	2TAD	3.0																			
3	CPL11D	GY-BN	2TAD	3.0																			
4	CPL02B	VT-GN	2TAD	3.0																			
9	CR109C	BN-BU	2TAD	0.5	+	CR111C	BN-WH	2TAD	0.5	GOLD													
10	RR109C	BU-GN	2TAD	0.5	+	RR111C	YE-VT	2TAD	0.5	GOLD													
11	RR174A	WH-OG	2TAE	0.5	+	RR174D	WH-OG	2TAE	0.5	GOLD													
12	VR236A	BU-OG	2TAE	0.5	+	VR236D	BU-OG	2TAE	0.5	GOLD													
13	RR175A	YE-OG	2TAE	0.5	+	RR175D	YE-OG	2TAE	0.5	GOLD													
21	CR101	VT-BN	2TAD	0.5		GOLD																	
22	RR101	YE-GN	2TAD	0.5		GOLD																	
33	CBP02	GN 2TAE	0.5	+	CBP02C	GN 2TAE	0.5	GOLD															
23	RR103	VT-GN	2TAD	0.5		GOLD																	
34	CPW21A	BN 2TAD	3.0																				
24	CR103	GY-BU	2TAD	0.5		GOLD																	
35	CPW24A	WH-VT	2TAD	3.0																			
25	CR225	YE 2TAE	0.35																				
36	CPW23A	GY 2TAD	3.0																				
14	VR237A	BN-WH	2TAE	0.5	+	VR237D	BN-WH	2TAE	0.5	GOLD													
26	VPW32C	GY-BU	2TAD	0.35		GOLD																	
27	VPW33A	VT-BN	2TAD	0.35		GOLD																	
15	CDC41B	WH-BN	2TAD	0.35																			
37	VME09C	WH-GN	2TAD	0.5																			
28	VDB04L	WH-BU	2TAD	0.35																			
38	RME09C	BN-YE	2TAD	0.5																			
29	VDB05L	WH 2TAD	0.35																				
39																							
30	CLS04D	YE-VT	2TAD	0.35																			
40	GD801B	BK 2TAD	0.35																				
31	VDB06S	GY-OG	2TAD	0.35																			
32	VDB07S	VT-OG	2TAD	0.35																			
16	RMP19A	BN-VT	2TAD	0.35																			
17	VMP19A	WH-GN	2TAD	0.35																			
18	VME12C	BN-WH	2TAD	0.5																			
19	RME12C	BN-BU	2TAD	0.5																			
20	CLN17E	BN 2TAD	0.35																				
5	CPL13G	BN-GN	2TAD	1.0																			
6	CBB05E	YE 2TAD	3.0																				
7	CPW22A	GN-VT	2TAD	3.0																			
8	RR116D	BN-GN	2TAE	0.35	+	RR116	BN-GN	2TAE	0.35	GOLD													

4R3T-14489-AD

C23

TO 14A005

HARNESS 14401

Part 1 of 2

PIN 18 => VME12A BN-WH 0.75 2TAD
PIN 18 => VME12A BN-WH 0.75 2TAD + VME12E BN-WH 0.75 2TAD
PIN 19 => RME12A BN-BU 0.75 2TAD
PIN 19 => RME12A BN-BU 0.75 2TAD + RME12E BN-BU 0.75 2TAD
PIN 25 => CBP60AF YE-VT 0.35 2TAD + CBP60C YE-VT 0.35 2TAD
PIN 26 => CR224A GN 0.35 2TAE
PIN 27 => RR224A GY-BU 0.35 2TAE
PIN 37 => VME09A WH-GN 0.75 2TAD
PIN 37 => VME09A WH-GN 0.75 2TAD + VME09E WH-GN 0.75 2TAD
PIN 38 => RME09A BN-YE 0.75 2TAD
PIN 38 => RME09A BN-YE 0.75 2TAD + RME09E BN-YE 0.75 2TAD

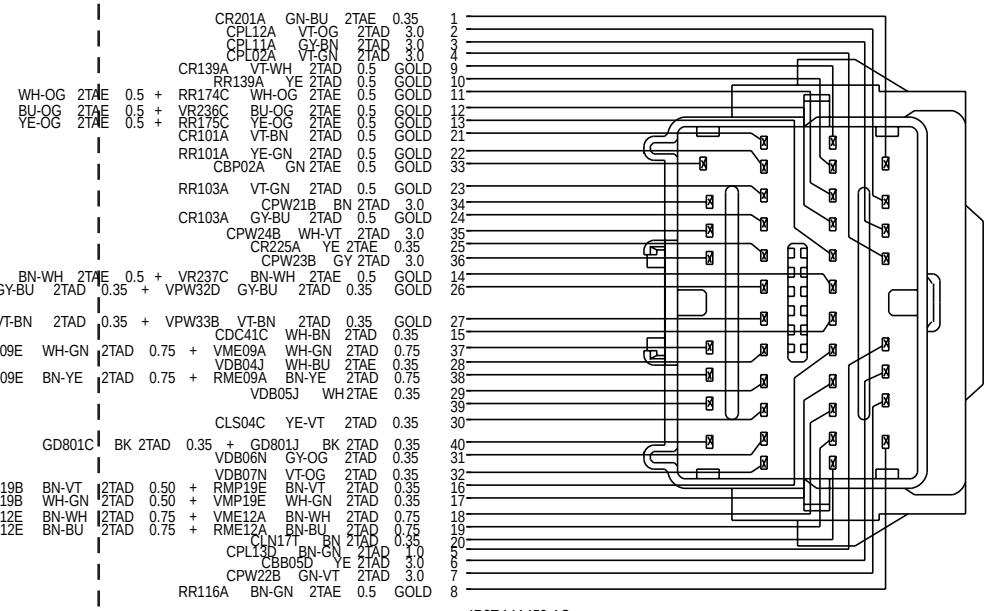

4R3T-14A459-AC

C23

TO 14401

HARNESS 14A005

Part 2 of 2

In-Line Connector 25 (G1404909)

Thumbnail

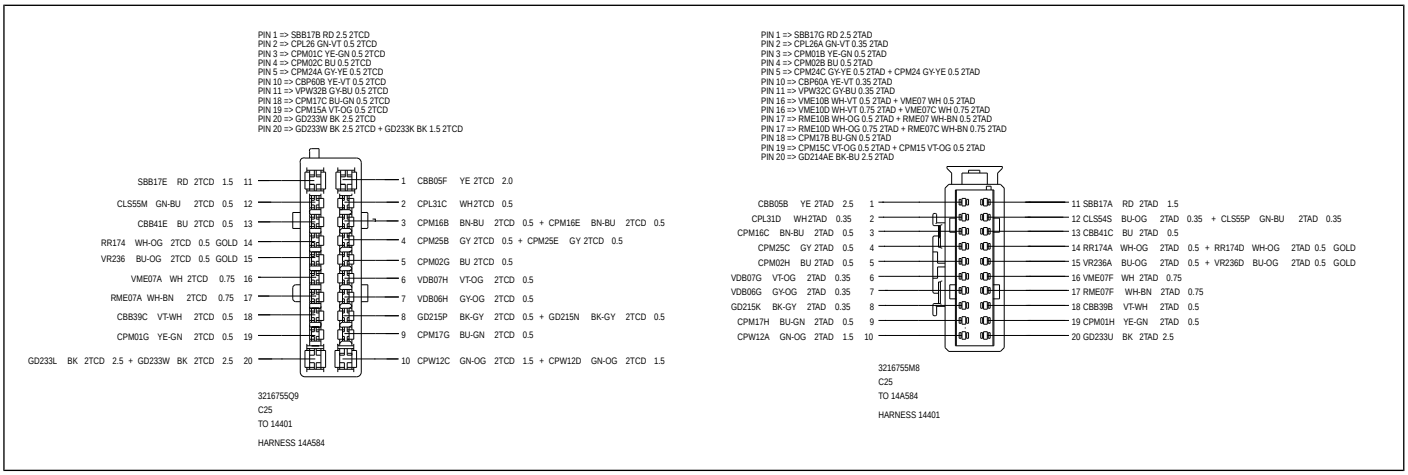

PIN 1 => SBB17B RD 2.5 2TCD
PIN 2 => CPL26 GN-VT 0.5 2TCD
PIN 3 => CPM01C YE-GN 0.5 2TCD
PIN 4 => CPM02C BU 0.5 2TCD
PIN 5 => CPM24A GY-YE 0.5 2TCD
PIN 10 => CBP60B YE-VT 0.5 2TCD
PIN 11 => VPW32B GY-BU 0.5 2TCD
PIN 18 => CPM17C BU-GN 0.5 2TCD
PIN 19 => CPM15A VT-OG 0.5 2TCD
PIN 20 => GD233W BK 2.5 2TCD
PIN 20 => GD233W BK 2.5 2TCD + GD233K BK 1.5 2TCD

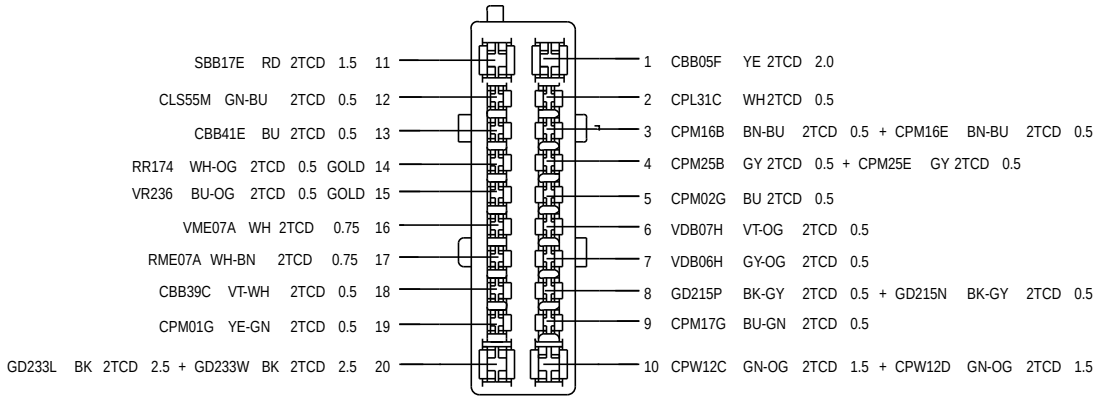

PIN 1 => SBB17G RD 2.5 2TAD
PIN 2 => CPL26A GN-VT 0.35 2T
PIN 3 => CPM01B YE-GN 0.5 2TA
PIN 4 => CPM02B BU 0.5 2TAD
PIN 5 => CPM24C GY-YE 0.5 2TA
PIN 10 => CBP60A YE-VT 0.35 2
PIN 11 => VPW32C GY-BU 0.35
PIN 16 => VME10B WH-VT 0.5 2
PIN 16 => VME10D WH-VT 0.75
PIN 17 => RME10B WH-OG 0.5 2
PIN 17 => RME10D WH-OG 0.75
PIN 18 => CPM17B BU-GN 0.5 2
PIN 19 => CPM15C VT-OG 0.5 2
PIN 20 => GD214AE BK-BU 2.5 2
CBB05B YE 2TAD 2.5 1
CPL31D WH 2TAD 0.35 2
CPM16C BN-BU 2TAD 0.5 3
CPM25C GY 2TAD 0.5 4
CPM02H BU 2TAD 0.5 5
VDB07G VT-OG 2TAD 0.35 6
VDB06G GY-OG 2TAD 0.35 7
GD215K BK-GY 2TAD 0.35 8
CPM17H BU-GN 2TAD 0.5 9
CPW12A GN-OG 2TAD 1.5 10

Part 1 of 2

IN 1 => SBB17G RD 2.5 2TAD
IN 2 => CPL26A GN-VT 0.35 2TAD
IN 3 => CPM01B YE-GN 0.5 2TAD
IN 4 => CPM02B BU 0.5 2TAD
IN 5 => CPM24D GY-YE 0.5 2TAD + CPM24 GY-YE 0.5 2TAD
IN 10 => CBP60A YE-VT 0.35 2TAD
IN 11 => VPW32C GY-BU 0.35 2TAD
IN 16 => VME10B WH-VT 0.5 2TAD + VME07 WH 0.5 2TAD
IN 16 => VME10D WH-VT 0.75 2TAD + VME07C WH 0.75 2TAD
IN 17 => RME10B WH-OG 0.5 2TAD + RME07 WH-BN 0.5 2TAD
IN 17 => RME10D WH-OG 0.75 2TAD + RME07C WH-BN 0.75 2TAD
IN 18 => CPM17B BU-GN 0.5 2TAD
IN 19 => CPM15C VT-OG 0.5 2TAD + CPM15 VT-OG 0.5 2TAD
IN 20 => GD214AE BK-BU 2.5 2TAD

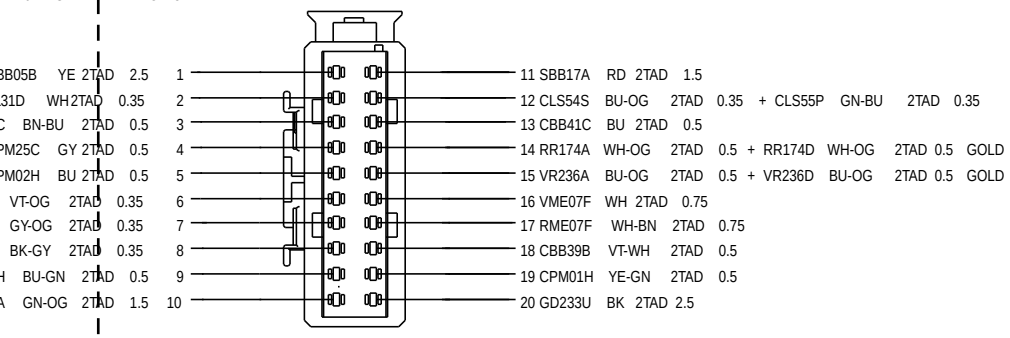

3216755M8
C25
TO 14A584

HARNESS 14401

Part 2 of 2

In-Line Connector 25—A (G1404910)

PIN 6 => CPL11L GY-BN 0.75 2TCD
PIN 8 => CPL51D BU-GN 0.5 2TCD
PIN 12 => CPL02F VT-GN 1.5 2TCD

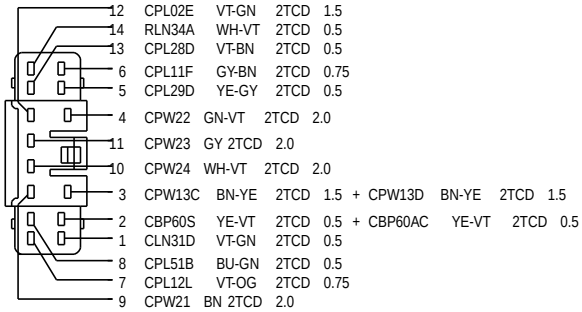

4L3T-14489-AC

C25-A

TO 14401

HARNESS 14A584

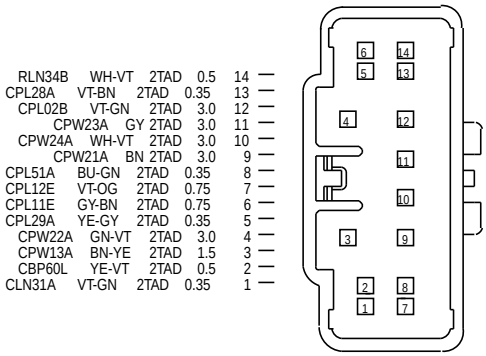

BU5T-14A459-BA

C25-A
TO 14A584

HARNESS 14401

In-Line Connector 26 (G1404924)

Thumbnail

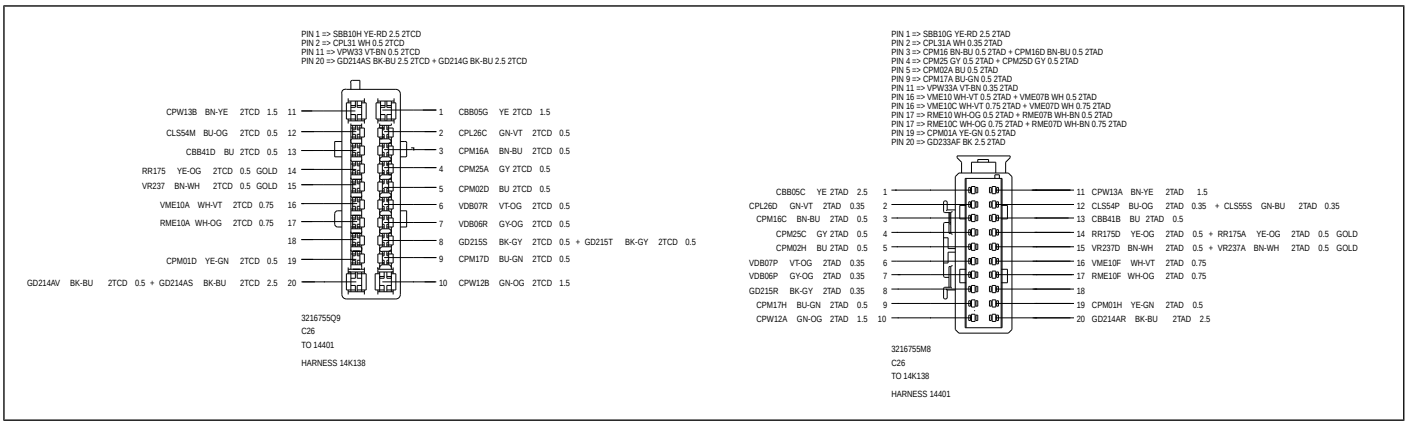

PIN 1 => SBB10H YE-RD 2.5 2TCD
PIN 2 => CPL31 WH 0.5 2TCD
PIN 11 => VPW33 VT-BN 0.5 2TCD
PIN 20 => GD214AS BK-BU 2.5 2TCD + GD214G BK-BU 2.5 2TCD

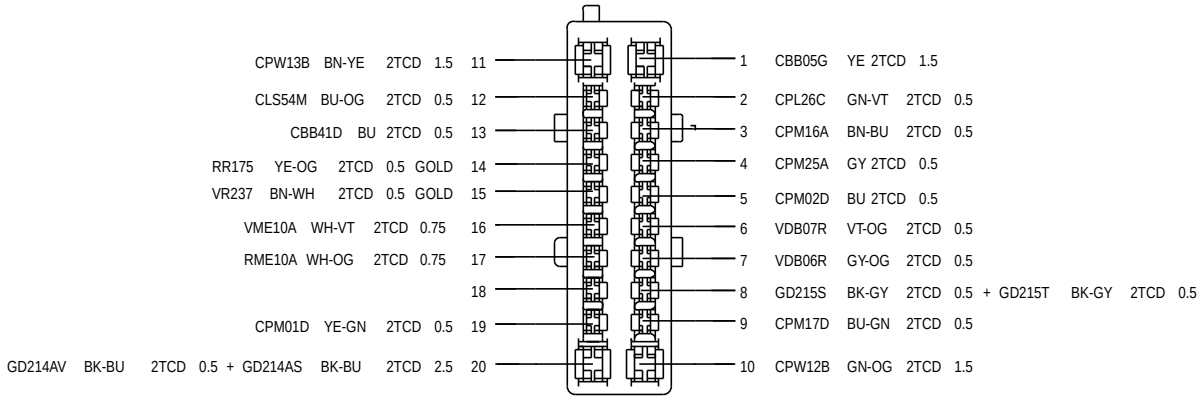

3216755Q9
C26
TO 14401
HARNESS 14K138

CBB05C YE 2TA
CPL26D GN-VT 2TAD
CPM16C BN-BU 2TA
CPM25C GY 2TA
CPM02H BU 2TA
VDB07P VT-OG 2TAD
VDB06P GY-OG 2TAD
GD215R BK-GY 2TAD
CPM17H BU-GN 2TA
CPW12A GN-OG 2TA

Part 1 of 2

PIN 1 => SBB10G YE-RD 2.5 2TAD
PIN 2 => CPL31A WH 0.35 2TAD
PIN 3 => CPM16 BN-BU 0.5 2TAD + CPM16D BN-BU 0.5 2TAD
PIN 4 => CPM25 GY 0.5 2TAD + CPM25D GY 0.5 2TAD
PIN 5 => CPM02A BU 0.5 2TAD
PIN 9 => CPM17A BU-GN 0.5 2TAD
PIN 11 => VPW33A VT-BN 0.35 2TAD
PIN 16 => VME10 WH-VT 0.5 2TAD + VME07B WH 0.5 2TAD
PIN 16 => VME10C WH-VT 0.75 2TAD + VME07D WH 0.75 2TAD
PIN 17 => RME10 WH-OG 0.5 2TAD + RME07B WH-BN 0.5 2TAD
PIN 17 => RME10C WH-OG 0.75 2TAD + RME07D WH-BN 0.75 2TAD
PIN 19 => CPM01A YE-GN 0.5 2TAD
PIN 20 => GD233AF BK 2.5 2TAD

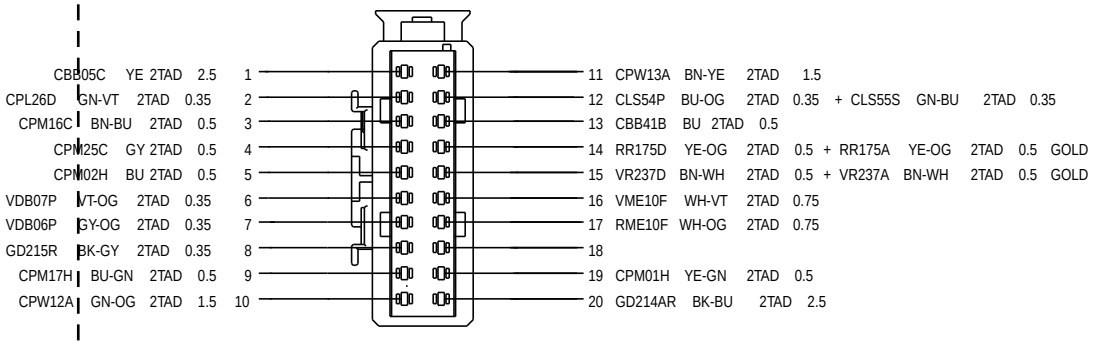

3216755M8
C26
TO 14K138
HARNESS 14401

Part 2 of 2

In-Line Connector 26—A (G1404925)

PIN 8 => CPL66C BU-BN 0.5 2TCD
PIN 9 => CPL11P GY-BN 1.0 2TCD
PIN 11 => CPL13M BN-GN 1.0 2TCD

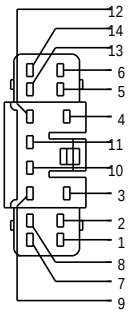

Pin	Wire				
12	CPL12P	VT-OG	2TCD	1.5	
14	RLN35A	BU-OG	2TCD	0.5	
13					
6					
5					
4					
11	CPL13H	BN-GN	2TCD	1.0	
10					
3					
2	CBP60AD	YE-VT	2TCD	0.5	+ CBP60R YE-VT 2TCD 0.5
1	CLN31C	VT-GN	2TCD	0.5	
8	CPL66A	BU-BN	2TCD	0.5	
7					
9	CPL11H	GY-BN	2TCD	1.0	

4L3T-14489-AC

C26-A

TO 14401

HARNESS 14K138

Wire				Pin
RLN35B	BU-OG	2TAD	0.5	14
				13
CPL12F	VT-OG	2TAD	2.5	12
CPL13G	BN-GN	2TAD	1.0	11
				10
CPL11G	GY-BN	2TAD	1.0	9
CPL66	BU-BN	2TAD	0.35	8
				7
				6
				5
				4
				3
CBP60M	YE-VT	2TAD	0.5	2
CLN31B	VT-GN	2TAD	0.35	1

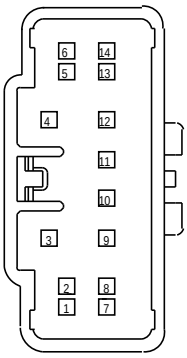

BU5T-14A459-BA

C26-A
TO 14K138

HARNESS 14401

In-Line Connector 29 (G1404926)

PIN 2 => VMM12B WH-BN 0.35 2TAD
PIN 3 => RMM12B VT-BN 0.35 2TAD

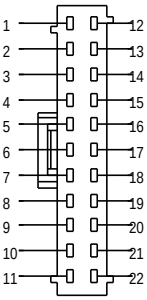

Pin	Wire				
1	CBP60AB	YE-VT	2TAD	0.5	+ CBP60K YE-VT 2TAD 0.5
2	VMM12	WH-BN	2TAD	0.35	
3	RMM12	VT-BN	2TAD	0.35	
4	CLN27	WH-BN	2TAD	0.35	
5	CLN17C	BN	2TAD	0.35	
6					
7	VMP19A	WH-GN	2TAD	0.35	
8	RMP19A	BN-VT	2TAD	0.35	
9					
10	VRW26	BN-YE	2TAD	0.35	
11	GD214K	BK-BU	2TAD	0.5	
12	RRD12	BN	2TAD	0.35	
13	CRW32	BN	2TAD	0.35	
14					
15	VRT26	VT	2TAD	0.35	
16	CBP85D	YE	2TAD	0.35	
17	SBP81	RD	2TAD	0.35	
18					
19					
20					
21	GD801A	BK	2TAD	0.35	
22	GD215AA	BK-GY	2TAD	0.35	

1S7T-14489-SB

C29

TO 14334

HARNESS 14401

PIN 11 => GD233C BK 0.5 2TAD + GD233AC BK 0.5 2TAD
PIN 12 => RRD12B BN 0.35 2TAD
PIN 16 => CBP85F YE 0.35 2TAD

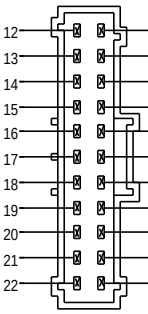

Pin	Wire				
12	RRD12A	BN	2TAD	0.35	
13	CRW32A	BN	2TAD	0.35	
14					
15	VRT26A	VT	2TAD	0.35	
16	CBP85J	YE	2TAD	0.35	
17	SBP81A	RD	2TAD	0.35	
18					
19					
20					
21	GD801	BK	2TAD	0.35	
22	GD215AB	BK-GY	2TAD	0.35	+ GD215AR BK-GY 2TAD 0.35
1	CBP60AA	YE-VT	2TAD	0.5	+ CBP60H YE-VT 2TAD 0.5
2	VMM12A	WH-BN	2TAD	0.35	
3	RMM12A	VT-BN	2TAD	0.35	
4	CLN27C	WH-BN	2TAD	0.35	+ CLN27E WH-BN 2TAD 0.35
5	CLN17D	BN	2TAD	0.35	
6					
7	VMP19	WH-GN	2TAD	0.35	
8	RMP19	BN-VT	2TAD	0.35	
9					
10	VRW26A	BN-YE	2TAD	0.35	
11	GD233AC	BK	2TAD	0.5	+ GD233E BK 2TAD 0.5

1S7T-14A459-SB

C29

TO 14401

HARNESS 14334

In-Line Connector 30 (G1404927)

PIN 10 => GD345E BK-BU 1.5 2TAD
PIN 12 => GD346A BK-GN 1.0 2TAD
PIN 14 => GD343K BK-VT 0.35 2TAE
PIN 14 => GD345S BK-BU 0.35 2TAE

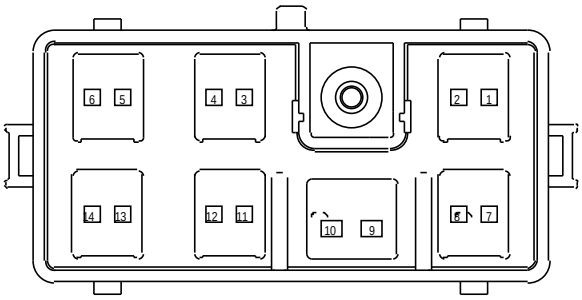

1	CR105	GN-BU	2TAD	0.5	+	CR105A	GN-BU	2TAD	0.5	GOLD
2	RR105	GY-YE	2TAD	0.5	+	RR105A	GY-YE	2TAD	0.5	GOLD
3										
4										
5										
6										
7										
8										
9	CBX01A	GN-RD	2TAD	1.5						
10	GD343N	BK-VT	2TAD	1.5	+	GD345E	BK-BU	2TAD	1.5	
11	CBB38C	GY-BU	2TAD	1.0						
12	GD344A	BK-GY	2TAD	1.0	+	GD346A	BK-GN	2TAD	1.0	
13	CR201	GN-BU	2TAE	0.35	+	CR201A	GN-BU	2TAE	0.35	
14	RR155B	GY 2TAE	0.35	+	GD343K	BK-VT	2TAE	0.35		

2M5T-14489-LPC

C30
TO DRIVER SEAT CONNECTOR

HARNESS 14A005

In-Line Connector 31 (G1404928)

PIN 12 => GD343D BK-VT 1.0 2TAD

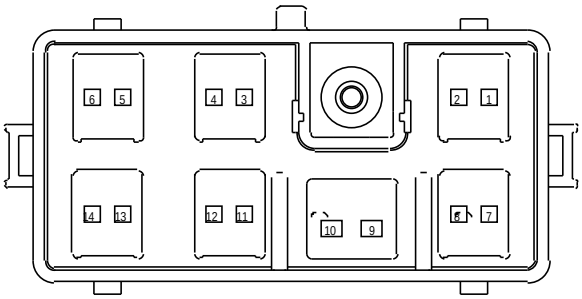

1	CR106	VT-GY	2TAD	0.5	+	CR106A	VT-GY	2TAD	0.5	GOLD
2	RR106	YE-OG	2TAD	0.5	+	RR106A	YE-OG	2TAD	0.5	GOLD
3										
4										
5	CR228	BN-VT	2TAE	0.5						
6	RR155	GY 2TAE	0.5							
7										
8										
9										
10										
11	CBB38B	GY-BU	2TAD	1.0						
12	GD345D	BK-BU	2TAD	1.0	+	GD343D	BK-VT	2TAD	1.0	
13	CR203	GY-VT	2TAE	0.35						
14	RR155A	GY 2TAE	0.35							

2M5T-14489-LPC

C31
TO PASSENGER SEAT CONNECTOR

HARNESS 14A005

In-Line Connector 33 (G1404929)

PIN 12 => GD343AD BK-VT 0.5 2TAD + GD343AB BK-VT 0.5 2TAD

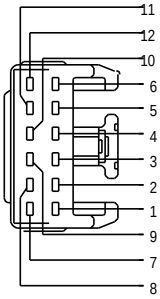

11	CET53A	BU-OG	2TAD	0.5
12	GD343AB	BK-VT	2TAD	0.5
10	CBP60U	YE-VT	2TAD	0.5
6	CET19A	VT-GY	2TAD	0.5
5	CET18A	GY-YE	2TAD	0.5
4	CCF13C	WH-BU	2TAD	0.5
3	RCF13C	WH-BN	2TAD	0.5
2	CLN17U	BN 2TAD	0.5	
1	CLN17S	BN 2TAD	0.5	
9	CDC41D	WH-BN	2TAD	0.5
7	CET44A	BU-BN	2TAD	0.5
8	CET60B	WH-GN	2TAD	0.5

4S7T-14489-VKA

C33
TO 14A005

HARNESS 14B079

PIN 12 => GD343AA BK-VT 0.35 2TAD
PIN 12 => GD343AA BK-VT 0.35 2TAD + GD345V BK-BU 0.35 2TAD

						CET53	BU-OG	2TAD	0.35	11
GD343AA	BK-VT	2TAD	0.35	+		GD345V	BK-BU	2TAD	0.35	12
CBP60E	YE-VT	2TAD	0.5	+		CBP60AE	YE-VT	2TAD	0.5	10
						CET19C	VT-GY	2TAD	0.35	6
						CET18C	GY-YE	2TAD	0.35	5
						CCF13A	WH-BU	2TAD	0.5	4
						RCF13A	WH-BN	2TAD	0.35	3
						CLN17	BN 2TAD	0.35		2
						CLN17T	BN 2TAD	0.35		1
						CDC41C	WH-BN	2TAD	0.35	9
						CET44C	BU-BN	2TAD	0.35	7
						CET60A	WH-GN	2TAD	0.35	8

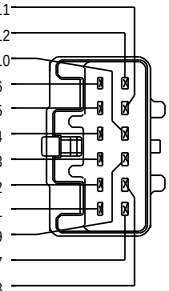

4S7T-14A459-VKA

C33
TO 14B079

HARNESS 14A005

In-Line Connector 34 (G1404930)

Thumbnail

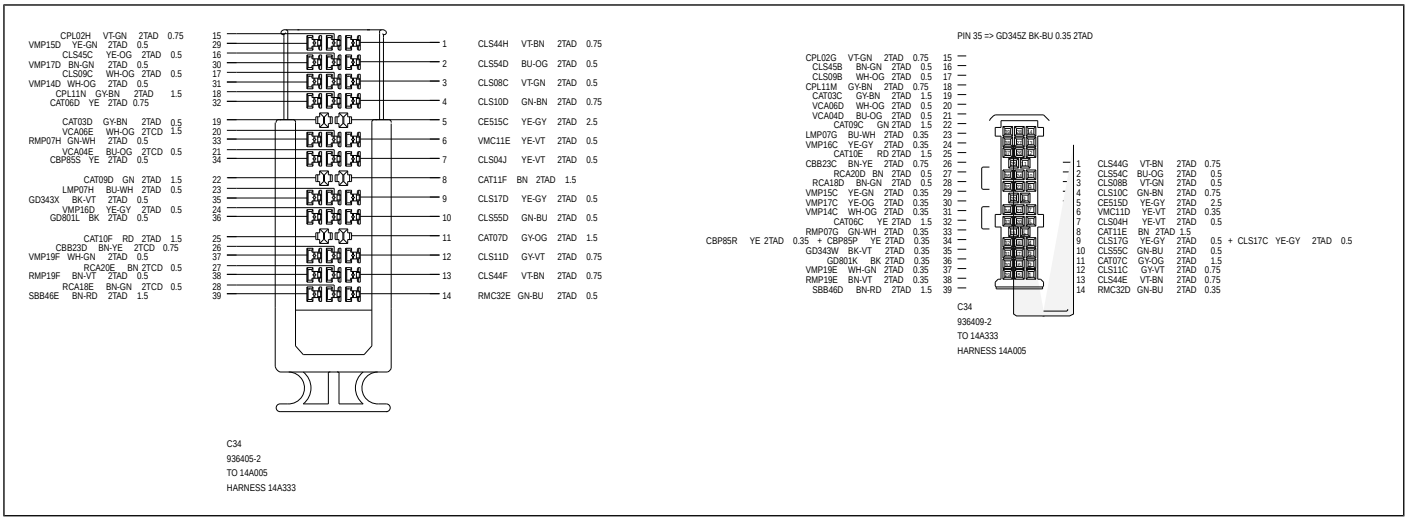

Part 1 of 2

PIN 35 => GD345Z BK-BU 0.35 2TAD

CPL02G	VT-GN	2TAD	0.75	15
CLS45B	BN-GN	2TAD	0.5	16
CLS09B	WH-OG	2TAD	0.5	17
CPL11M	GY-BN	2TAD	0.75	18
CAT03C	GY-BN	2TAD	1.5	19
VCA06D	WH-OG	2TAD	0.5	20
VCA04D	BU-OG	2TAD	0.5	21
CAT09C	GN	2TAD	1.5	22
LMP07G	BU-WH	2TAD	0.35	23
VMP16C	YE-GY	2TAD	0.35	24
CAT10E	RD	2TAD	1.5	25
CBB23C	BN-YE	2TAD	0.75	26
RCA20D	BN	2TAD	0.5	27
RCA18D	BN-GN	2TAD	0.5	28
VMP15C	YE-GN	2TAD	0.35	29
VMP17C	YE-OG	2TAD	0.35	30
VMP14C	WH-OG	2TAD	0.35	31
CAT06C	YE	2TAD	1.5	32
RMP07G	GN-WH	2TAD	0.35	33
0.35 + CBP85P	YE	2TAD	0.35	34
GD343W	BK-VT	2TAD	0.35	35
GD801K	BK	2TAD	0.35	36
VMP19E	WH-GN	2TAD	0.35	37
RMP19E	BN-VT	2TAD	0.35	38
SBB46D	BN-RD	2TAD	1.5	39

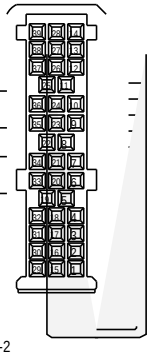

1	CLS44G	VT-BN	2TAD	0.75
2	CLS54C	BU-OG	2TAD	0.5
3	CLS08B	VT-GN	2TAD	0.5
4	CLS10C	GN-BN	2TAD	0.75
5	CE515D	YE-GY	2TAD	2.5
6	VMC11D	YE-VT	2TAD	0.35
7	CLS04H	YE-VT	2TAD	0.5
8	CAT11E	BN	2TAD	1.5
9	CLS17G	YE-GY	2TAD	0.5 + CLS17C YE-GY 2TAD 0.5
10	CLS55C	GN-BU	2TAD	0.5
11	CAT07C	GY-OG	2TAD	1.5
12	CLS11C	GY-VT	2TAD	0.75
13	CLS44E	VT-BN	2TAD	0.75
14	RMC32D	GN-BU	2TAD	0.35

C34

936409-2

TO 14A333

HARNESS 14A005

Part 2 of 2

In-Line Connector 34—A (G1404931)

Thumbnail

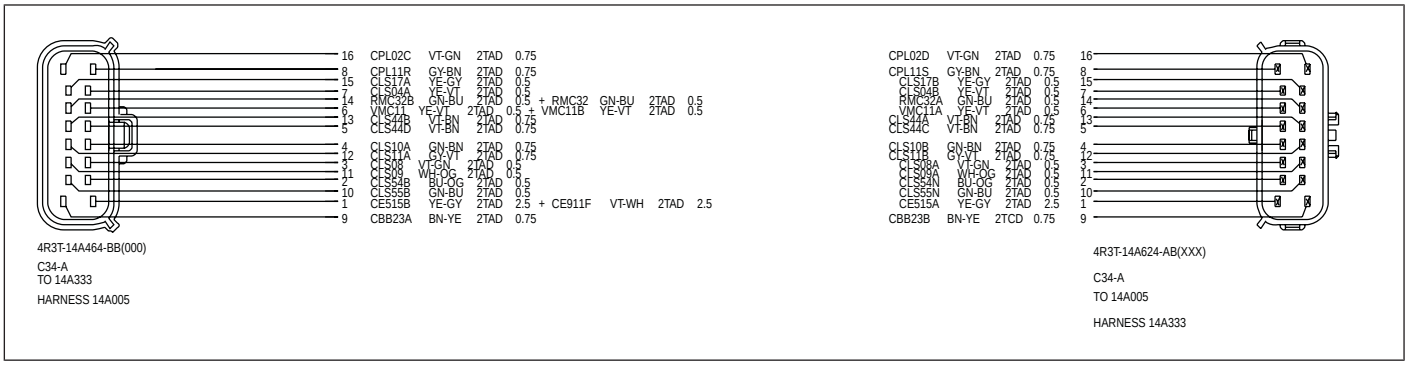

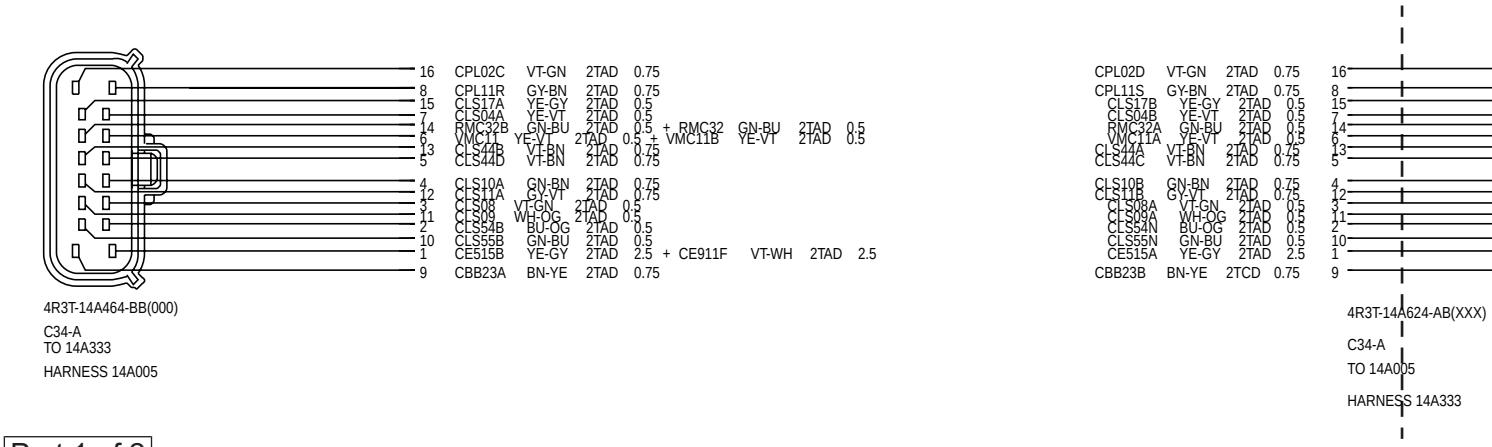

Part 1 of 2

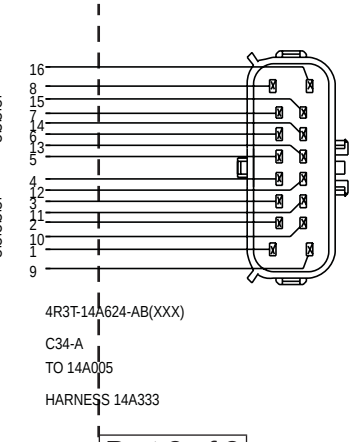

Part 2 of 2

In-Line Connector 34—B (G1404932)

Thumbnail

PIN 1 => GD343L BK-VT 0.35 2TAE
PIN 1 => GD343L BK-VT 0.35 2TAE + GD345Y BK-BU 0.35 2TAE

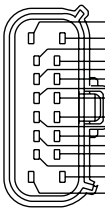

16	SBB46A	BN-RD	2TAD	1.5				
8	CBP85N	YE	2TAD	0.35	+	CBP85L	YE	2TAD 0.35
15	VMP14	WH-OG	2TAD	0.5				
7	VMP15	YE-GN	2TAD	0.5				
14	VMP17	YE-OG	2TAD	0.5				
6	VMP16	YE-GY	2TAD	0.5				
13	RMP07	GN-WH	2TAD	0.5				
5	LMP07	BU-WH	2TAD	0.5				
4	VCA04B	BU-OG	2TAD	0.5				
12	RCA18B	BN-GN	2TAD	0.5				
3	VCA06B	WH-OG	2TAD	0.5				
11	RCA20B	BN	2TAD	0.5				
2	VMP19B	WH-GN	2TAD	0.50				
10	RMP19B	BN-VT	2TAD	0.50				
1	GD345Y	BK-BU	2TAE	0.35				
9	GD801D	BK	2TAD	0.35				

5C3T-14A464-HB(000)

C34-B

TO 14A333

HARNESS 14A005

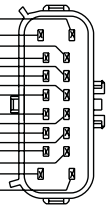

SBB46B	BN-RD	2TAD	1.5	16	
CBP85H	YE	2TAD	0.5	8	
VMP14A	WH-OG	2TAD	0.5	15	
VMP15A	YE-GN	2TAD	0.5	7	
VMP17A	YE-OG	2TAD	0.5	14	
VMP16A	YE-GY	2TAD	0.5	6	
RMP07A	GN-WH	2TAD	0.5	13	
LMP07A	BU-WH	2TAD	0.5	5	
VCA04C	BU-OG	2TCD	0.5	4	
RCA18C	BN-GN	2TCD	0.5	12	
VCA06C	WH-OG	2TCD	0.5	3	
RCA20C	BN	2TCD	0.5	11	
VMP19C	WH-GN	2TAD	0.5	2	
RMP19C	BN-VT	2TAD	0.5	10	
GD343AC	BK-VT	2TAD	0.5	1	
GD801E	BK	2TAD	0.5	9	

5C3T-14A624-HB(XXX)

C34-B

TO 14A005

HARNESS 14A333

PIN 1 => GD343L BK-VT 0.35 2TAE
PIN 1 => GD343L BK-VT 0.35 2TAE + GD345Y BK-BU 0.35 2TAE

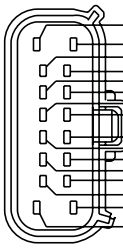

16	SBB46A	BN-RD	2TAD	1.5				
8	CBP85N	YE	2TAD	0.35	+	CBP85L	YE	2TAD 0.35
15	VMP14	WH-OG	2TAD	0.5				
7	VMP15	YE-GN	2TAD	0.5				
14	VMP17	YE-OG	2TAD	0.5				
6	VMP16	YE-GY	2TAD	0.5				
13	RMP07	GN-WH	2TAD	0.5				
5	LMP07	BU-WH	2TAD	0.5				
4	VCA04B	BU-OG	2TAD	0.5				
12	RCA18B	BN-GN	2TAD	0.5				
3	VCA06B	WH-OG	2TAD	0.5				
11	RCA20B	BN	2TAD	0.5				
2	VMP19B	WH-GN	2TAD	0.50				
10	RMP19B	BN-VT	2TAD	0.50				
1	GD345Y	BK-BU	2TAE	0.35				
9	GD801D	BK	2TAD	0.35				

5C3T-14A464-HB(000)

C34-B

TO 14A333

HARNESS 14A005

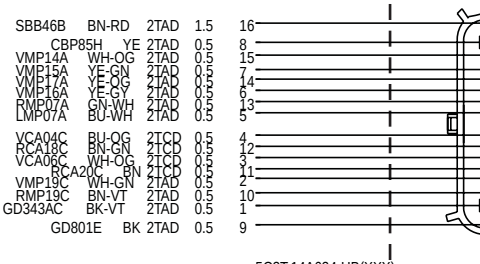

SBB46B	BN-RD	2TAD	1.5	16	
CBP85H	YE	2TAD	0.5	8	
VMP14A	WH-OG	2TAD	0.5	15	
VMP15A	YE-GN	2TAD	0.5	7	
VMP17A	YE-OG	2TAD	0.5	14	
VMP16A	YE-GY	2TAD	0.5	6	
RMP07A	GN-WH	2TAD	0.5	13	
LMP07A	BU-WH	2TAD	0.5	5	
VCA04C	BU-OG	2TCD	0.5	4	
RCA18C	BN-GN	2TCD	0.5	12	
VCA06C	WH-OG	2TCD	0.5	3	
RCA20C	BN	2TCD	0.5	11	
VMP19C	WH-GN	2TAD	0.5	2	
RMP19C	BN-VT	2TAD	0.5	10	
GD343AC	BK-VT	2TAD	0.5	1	
GD801E	BK	2TAD	0.5	9	

5C3T-14A624-HB(XXX)

C34-B

TO 14A005

HARNESS 14A333

Part 1 of 2

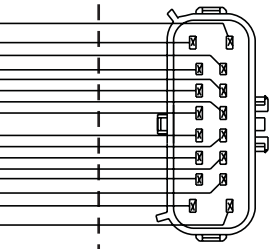

14A624-HB(XXX)

3

A005

IESS 14A333

Part 2 of 2

In-Line Connector 37 (G1404933)

Thumbnail

PIN 1 => SBB51A BU-RD 2.5 2TAD
PIN 3 => GD345M BK-BU 2.5 2TAD
PIN 9 => GD343T BK-VT 0.35 2TAD

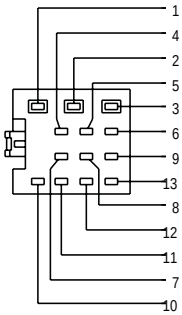

1	CPW21B	BN 2TAD	3.0	
4	CPL11B	GY-BN 2TAD	1.0	
2	CPW22B	GN-VT 2TAD	3.0	
5	CPL12C	VT-OG 2TAD	1.0	
3	CBB05H	YE 2TAD	3.0	
6	CPL36A	GN 2TAD	0.35	
9	GD345AB	BK-BU 2TAD	0.35	+ GD343T BK-VT 2TAD 0.35
13				
8	VME09A	WH-GN 2TAD	0.75	
12				
11	VPW32D	GY-BU 2TAD	0.35	+ VPW33D VT-BN 2TAD 0.35
7	RME09A	BN-YE 2TAD	0.75	
10	CPL13B	BN-GN 2TAD	1.0	

3M5T-14489-RNA

C37

TO 14241

HARNESS 14A005

PIN 1 => SBB51B BU-RD 2.5 2TCD
PIN 3 => GD343G BK-VT 2.5 2TCD

CPL13J	BN-GN	2TCD	1.0	10
CPW21C	BN	2TCD	1.5	1
VPW32E	GY-BU	2TCD	0.5	11
RME09B	BN-YE	2TCD	0.75	7
CPL11J	GY-BN	2TCD	1.0	4
CPW22C	GN-VT	2TCD	1.5	2
CPL12J	VT-OG	2TCD	1.0	5
VME09B	WH-GN	2TCD	0.75	8
				12
CBB05K	YE	2TCD	1.5	3
CPL36	GN	2TCD	0.5	6
GD343R	BK-VT	2TAD	0.5	9
				13
				16
				19
				22
				26
				18
				21
				25
				15
				24
				20
				17
				23
				14

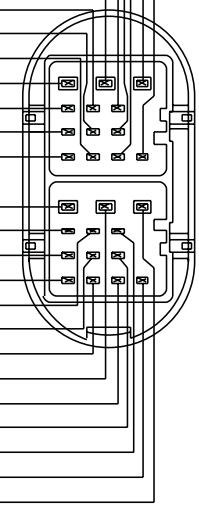

3M5T-14A624-RPD

C37

TO 14A005

HARNESS 14241

PIN 1 => SBB51A BU-RD 2.5 2TAD
PIN 3 => GD345M BK-BU 2.5 2TAD
PIN 9 => GD343T BK-VT 0.35 2TAD

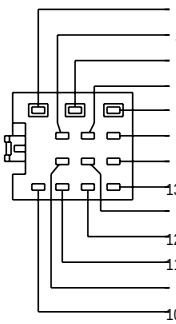

1	CPW21B	BN 2TAD	3.0	
4	CPL11B	GY-BN 2TAD	1.0	
2	CPW22B	GN-VT 2TAD	3.0	
5	CPL12C	VT-OG 2TAD	1.0	
3	CBB05H	YE 2TAD	3.0	
6	CPL36A	GN 2TAD	0.35	
9	GD345AB	BK-BU 2TAD	0.35	+ GD343T BK-VT 2TAD 0.35
13				
8	VME09A	WH-GN 2TAD	0.75	
12				
11	VPW32D	GY-BU 2TAD	0.35	+ VPW33D VT-BN 2TAD 0.35
7	RME09A	BN-YE 2TAD	0.75	
10	CPL13B	BN-GN 2TAD	1.0	

3M5T-14489-RNA

C37

TO 14241

HARNESS 14A005

PIN 1 => SBB51B BU-RD 2.5 2TCD
PIN 3 => GD343G BK-VT 2.5 2TCD

CPL13J	BN-GN	2TCD	1.0	10
CPW21C	BN	2TCD	1.5	1
VPW32E	GY-BU	2TCD	0.5	11
RME09B	BN-YE	2TCD	0.75	7
CPL11J	GY-BN	2TCD	1.0	4
CPW22C	GN-VT	2TCD	1.5	2
CPL12J	VT-OG	2TCD	1.0	5
VME09B	WH-GN	2TCD	0.75	8
				12
CBB05K	YE	2TCD	1.5	3
CPL36	GN	2TCD	0.5	6
GD343R	BK-VT	2TAD	0.5	9
				13
				16
				19
				22
				26
				18
				21
				25
				15
				24
				20
				17
				23
				14

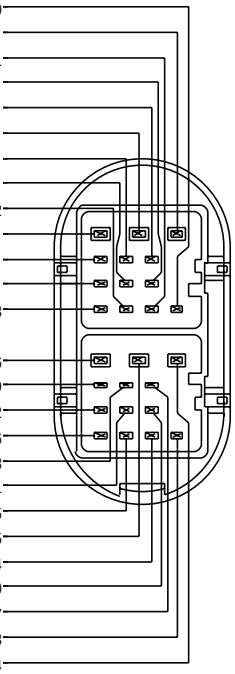

3M5T-14A624-RPD

C37

TO 14A005

HARNESS 14241

Part 1 of 2

Part 2 of 2

In-Line Connector 37—A (G1404934)

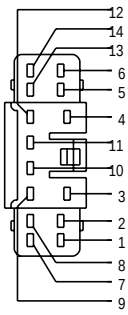

Pin	Wire	Color	Circuit	Size	Terminal
14	CR120B	BU-OG	2TCD	0.5	GOLD
13	RR120B	BN-GN	2TCD	0.5	GOLD
6	CPL36B	GN	2TCD	0.5	
5	GD343V	BK-VT	2TAD	0.5	
8	VME09F	WH-GN	2TCD	0.75	
9	RME09F	BN-YE	2TCD	0.75	

4L3T-14489-AC

C37-A
TO 14A005

HARNESS 14241

PIN 5 => GD345AD BK-BU 0.35 2TAD
PIN 5 => GD345AD BK-BU 0.35 2TAD + GD343AF BK-VT 0.35 2TAD

Pin	Wire	Color	Circuit	Size	Terminal
14	CR122C	WH-OG	2TAD	0.5 +	CR120A BU-OG 2TAD 0.5 GOLD
13	RR122C	BN	2TAD	0.5 +	RR120A BN-GN 2TAD 0.5 GOLD
12					
11					
10					
9	RME09E	BN-YE	2TAD	0.75	
8	VME09E	WH-GN	2TAD	0.75	
7					
6	CPL36C	GN	2TAD	0.35	
5	GD343AF	BK-VT	2TAD	0.35 +	GD345AD BK-BU 2TAD 0.35
4					
3					
2					
1					

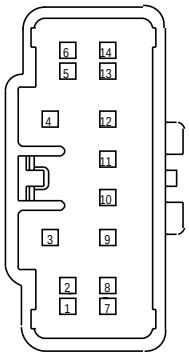

BU5T-14A459-BA

C37-A
TO 14241

HARNESS 14A005

In-Line Connector 38 (G1404935)

PIN 1 => SBB51D BU-RD 2.5 2TAD
PIN 3 => GD345C BK-BU 2.5 2TAD
PIN 9 => GD343C BK-VT 0.35 2TAD
PIN 9 => GD343C BK-VT 0.35 2TAD + GD345AA BK-BU 0.35 2TAD

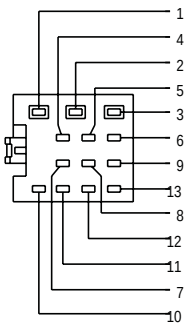

1	CPW24B	WH-VT	2TAD	3.0	
4	CPL11C	GY-BN	2TAD	1.0	
2	CPW23B	GY	2TAD	3.0	
5	CPL12D	VT-OG	2TAD	1.0	
3	CBB05J	YE	2TAD	3.0	
6	CPL39A	YE	2TAD	0.35	
9	GD345AA	BK-BU	2TAD	0.35	+ GD343C BK-VT 2TAD 0.35
13					
8	VME12A	BN-WH	2TAD	0.75	
12					
11	VPW32F	GY-BU	2TAD	0.35	+ VPW33B VT-BN 2TAD 0.35
7	RME12A	BN-BU	2TAD	0.75	
10	CPL13C	BN-GN	2TAD	1.0	

3M5T-14489-RNA

C38

TO 14240

HARNESS 14A005

PIN 1 => SBB51E BU-RD 2.5 2TCD
PIN 3 => GD345G BK-BU 2.5 2TCD

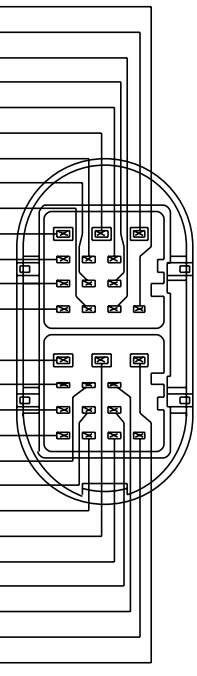

CPL13K	BN-GN	2TCD	1.0	10	
CPW24C	WH-VT	2TCD	1.5	1	
VPW33C	VT-BN	2TCD	0.5	11	
RME12B	BN-BU	2TCD	0.75	7	
CPL11K	GY-BN	2TCD	1.0	4	
CPW23C	GY	2TCD	1.5	2	
CPL12K	VT-OG	2TCD	1.0	5	
VME12B	BN-WH	2TCD	0.75	8	
				12	
CBB05L	YE	2TCD	1.5	3	
CPL39	YE	2TCD	0.5	6	
GD343S	BK-VT	2TAD	0.5	9	
				13	
				16	
				19	
				22	
				26	
				18	
				21	
				25	
				15	
				24	
				20	
				17	
				23	
				14	

3M5T-14A624-RPD

C38

TO 14A005

HARNESS 14240

In-Line Connector 38—A (G1404936)

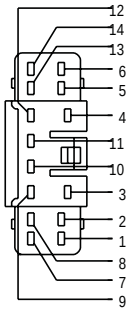

12					
14	CR122B	WH-OG	2TCD	0.5	GOLD
13	RR122B	BN	2TCD	0.5	GOLD
6	CPL39B	YE	2TCD	0.5	
5	GD343U	BK-VT	2TAD	0.5	
4					
11					
10					
3					
2					
1					
8	VME12F	BN-WH	2TCD	0.75	
7					
9	RME12F	BN-BU	2TCD	0.75	

4L3T-14489-AC

C38-A

TO 14A005

HARNESS 14240

PIN 5 => GD343AG BK-VT 0.35 2TAD
PIN 5 => GD343AG BK-VT 0.35 2TAD + GD345AC BK-BU 0.35 2TAD

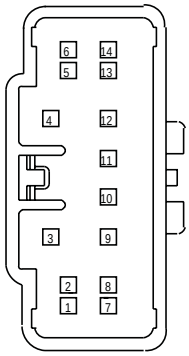

CR122A	WH-OG	2TAD	0.5	+	CR120C	BU-OG	2TAD	0.5	GOLD	14
RR122A	BN	2TAD	0.5	+	RR120C	BN-GN	2TAD	0.5	GOLD	13
										12
										11
										10
					RME12E	BN-BU	2TAD	0.75		9
					VME12E	BN-WH	2TAD	0.75		8
										7
					CPL39C	YE	2TAD	0.35		6
GD343AG	BK-VT	2TAD	0.35	+	GD345AC	BK-BU	2TAD	0.35		5
										4
										3
										2
										1

BU5T-14A459-BA

C38-A
TO 14240

HARNESS 14A005

In-Line Connector 44 (G1404944)

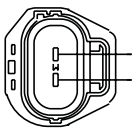

2	GD476AJ	BK-WH	2TAD	0.5
1	CLS17H	YE-GY	2TAD	0.5

97BG-14A464-VBB

C44

TO 14A333

HARNESS 13B551

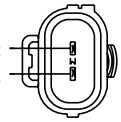

					GD476D	BK-WH	2TAD	0.75		2
CLS17D	YE-GY	2TAD	0.5	+	CLS17B	YE-GY	2TAD	0.5		1

97BG-14A624-VBB

C44

TO 13B551

HARNESS 14A333

In-Line Connector 44—A (G1404945)

Thumbnail

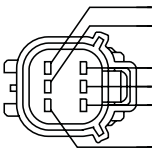

6	VMP17D	YE-OG	2TAD	0.5	+	VMP17A	YE-OG	2TAD	0.5
5	VMP16D	YE-GY	2TAD	0.5	+	VMP16A	YE-GY	2TAD	0.5
3	RMP07H	GN-WH	2TAD	0.5	+	RMP07A	GN-WH	2TAD	0.5
2	VMP15D	YE-GN	2TAD	0.5	+	VMP15A	YE-GN	2TAD	0.5
1	LMP07H	BU-WH	2TAD	0.5	+	LMP07A	BU-WH	2TAD	0.5
4	VMP14D	WH-OG	2TAD	0.5	+	VMP14A	WH-OG	2TAD	0.5

AU5T-14A464-FA(000)

C44-A
TO 19B516

HARNESS 14A333

VMP17B	YE-OG	2TAD	0.5	6
VMP16B	YE-GY	2TAD	0.5	5
RMP07B	GN-WH	2TAD	0.5	3
VMP15B	YE-GN	2TAD	0.5	2
LMP07B	BU-WH	2TAD	0.5	1
VMP14B	WH-OG	2TAD	0.5	4

5W7T-14A624-EA(XXX)

C44-A
TO 14A333

HARNESS 19B516

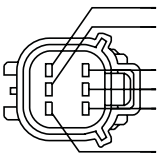

6	VMP17D	YE-OG	2TAD	0.5	+	VMP17A	YE-OG	2TAD	0.5
5	VMP16D	YE-GY	2TAD	0.5	+	VMP16A	YE-GY	2TAD	0.5
3	RMP07H	GN-WH	2TAD	0.5	+	RMP07A	GN-WH	2TAD	0.5
2	VMP15D	YE-GN	2TAD	0.5	+	VMP15A	YE-GN	2TAD	0.5
1	LMP07H	BU-WH	2TAD	0.5	+	LMP07A	BU-WH	2TAD	0.5
4	VMP14D	WH-OG	2TAD	0.5	+	VMP14A	WH-OG	2TAD	0.5

AU5T-14A464-FA(000)

C44-A
TO 19B516

HARNESS 14A333

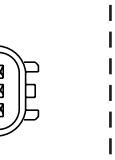

VMP17B	YE-OG	2TAD	0.5	6
VMP16B	YE-GY	2TAD	0.5	5
RMP07B	GN-WH	2TAD	0.5	3
VMP15B	YE-GN	2TAD	0.5	2
LMP07B	BU-WH	2TAD	0.5	1
VMP14B	WH-OG	2TAD	0.5	4

5W7T-14A624-EA(XXX)

C44-A
TO 14A333

HARNESS 19B516

Part 1 of 2

Part 2 of 2

In-Line Connector 44—B (G1404946)

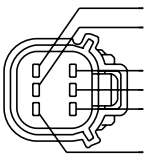

6	CBP85H	YE	2TAD	0.5	+	CBP85S	YE	2TAD	0.5
5	GD801F	BK	2TAD	0.5	+	GD801M	BK	2TAD	0.5
3	RMP19C	BN-VT	2TAD	0.5	+	RMP19F	BN-VT	2TAD	0.5
2	VMP19C	WH-GN	2TAD	0.5	+	VMP19F	WH-GN	2TAD	0.5
1	GD343AC	BK-VT	2TAD	0.5	+	GD343X	BK-VT	2TAD	0.5
4									

3W4T-14A464-AA(000)

C44-B
TO 14B562

HARNESS 14A333

CBP85G	YE	2TAD	0.5	6
GD801G	BK	2TAD	0.5	5
RMP19D	BN-VT	2TAD	0.5	3
VMP19D	WH-GN	2TAD	0.5	2
GD343AE	BK-VT	2TAD	0.5	1
				4

5W7T-14A624-EA(XXX)

C44-B
TO 14A333

HARNESS 14B652

In-Line Connector 44—C (G1404947)

Thumbnail

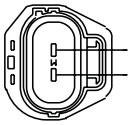

2 SBB46E BN-RD 2TAD 1.5 + SBB46B BN-RD 2TAD 1.5
1 GD476F BK-WH 2TAD 1.5

97BG-14A464-VBB

C44-C
TO 19B966

HARNESS 14A333

SBB46C BN-RD 2TAD 2.5 2
GD476G BK-WH 2TAD 2.5 1

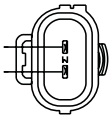

97BG-14A624-VBB

C44-C
TO 14A333

HARNESS 19B966

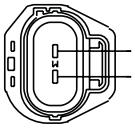

2 SBB46E BN-RD 2TAD 1.5 + SBB46B BN-RD 2TAD 1.5
1 GD476F BK-WH 2TAD 1.5

97BG-14A464-VBB

C44-C
TO 19B966

HARNESS 14A333

SBB46C BN-RD 2TAD 2.5 2
GD476G BK-WH 2TAD 2.5 1

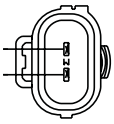

97BG-14A624-VBB

C44-C
TO 14A333

HARNESS 19B966

Part 1 of 2

-VBB

B966

Part 2 of 2

In-Line Connector 44—D (G1404948)

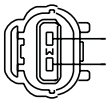

1 CLS04E YE-VT 2TAD 0.5
2 GD476R BK-WH 2TAD 0.5

2S7T-14A464-GA

C44-D
TO 14A333

HARNESS 19B516

CLS04B YE-VT 2TAD 0.5 + CLS04J YE-VT 2TAD 0.5 1
GD476M BK-WH 2TAD 0.5 2

2S7T-14A624-GA

C44-D
TO 19B516

HARNESS 14A333

In-Line Connector 44—E (G1404949)

PIN 1 => CAT11B BN 1.5 2TAD
PIN 2 => CAT10D RD 1.5 2TAD
PIN 3 => CAT09B GN 1.5 2TAD
PIN 4 => CAT07E BU 1.5 2TAD
PIN 5 => CAT06B YE 1.5 2TAD
PIN 6 => CAT03B BU 1.5 2TAD
PIN 8 => GD476P WH 2.5 2TAD

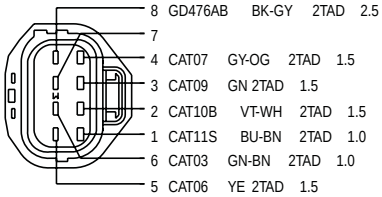

98AG-14A464-EHC

C44-E

TO 14A333

HARNESS 15A417

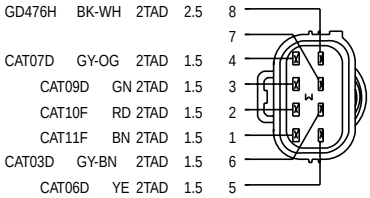

98AG-14A624-EHB

C44-E

TO 15A417

HARNESS 14A333

In-Line Connector 44—F (G1404950)

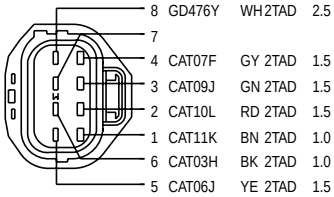

98AG-14A464-EHC

C44-F

TO INLINE~15A416~14A333

HARNESS 15A416

Index

2.2L Duratorq-TDCi (110kW/150PS) - Puma.....303-04B
2.2L Duratorq-TDCi (110kW/150PS) - Puma.....303-06B
2.2L Duratorq-TDCi (110kW/150PS) - Puma.....303-07B
2.2L Duratorq-TDCi (110kW/150PS) - Puma.....303-08
2.2L Duratorq-TDCi (110kW/150PS) - Puma.....303-14B
2.2L Duratorq-TDCi (110kW/150PS) - Puma.....309-00
2.2L Duratorq-TDCi (110kW/150PS) - Puma.....310-00B
2.2L Duratorq-TDCi (110kW/150PS) - Puma.....310-01B
2.2L Duratorq-TDCi (88kW/120PS) - Puma.....303-04B
2.2L Duratorq-TDCi (88kW/120PS) - Puma.....303-06B
2.2L Duratorq-TDCi (88kW/120PS) - Puma.....303-07B
2.2L Duratorq-TDCi (88kW/120PS) - Puma.....303-08
2.2L Duratorq-TDCi (88kW/120PS) - Puma.....303-14B
2.2L Duratorq-TDCi (88kW/120PS) - Puma.....309-00
2.2L Duratorq-TDCi (88kW/120PS) - Puma.....310-00B
2.2L Duratorq-TDCi (88kW/120PS) - Puma.....310-01B
2.2L Duratorq-TDCi (96kW/130PS) - Puma.....303-04B
2.2L Duratorq-TDCi (96kW/130PS) - Puma.....303-06B
2.2L Duratorq-TDCi (96kW/130PS) - Puma.....303-07B
2.2L Duratorq-TDCi (96kW/130PS) - Puma.....303-08
2.2L Duratorq-TDCi (96kW/130PS) - Puma.....303-14B
2.2L Duratorq-TDCi (96kW/130PS) - Puma.....309-00
2.2L Duratorq-TDCi (96kW/130PS) - Puma.....310-00B
2.2L Duratorq-TDCi (96kW/130PS) - Puma.....310-01B
2.5L Duratec-HE (122kW/165PS) - MI4.....303-04A
2.5L Duratec-HE (122kW/165PS) - MI4.....303-06A
2.5L Duratec-HE (122kW/165PS) - MI4.....303-07A
2.5L Duratec-HE (122kW/165PS) - MI4.....303-14A
2.5L Duratec-HE (122kW/165PS) - MI4.....310-00A
3.2L Duratorq-TDCi (148kW/200PS) - Puma.....303-04C
3.2L Duratorq-TDCi (148kW/200PS) - Puma.....303-06B
3.2L Duratorq-TDCi (148kW/200PS) - Puma.....303-07C
3.2L Duratorq-TDCi (148kW/200PS) - Puma.....303-08
3.2L Duratorq-TDCi (148kW/200PS) - Puma.....303-14B
3.2L Duratorq-TDCi (148kW/200PS) - Puma.....309-00

Index

3.2L Duratorq-TDCi (148kW/200PS) - Puma.....310-00B
3.2L Duratorq-TDCi (148kW/200PS) - Puma.....310-01B
6-Speed Automatic Transaxle - 6R80.....307-01
About This Manual.....100-00
Accelerator Pedal Position (APP) Sensor.....303-14A
Accelerator Pedal Position (APP) Sensor.....303-14B
Air Bags and Safety Belt Pretensioners—Single Cab, LHD 4WD/LHD RWD, Vehicles With: Passenger Air Bag Deactivation Switch.....501-20B
Air Bags and Safety Belt Pretensioners—Single Cab, LHD 4WD/LHD RWD, Vehicles Without: Passenger Air Bag Deactivation Switch.....501-20B
Air Bags and Safety Belt Pretensioners—Double Cab, LHD 4WD/LHD RWD, Vehicles With: Passenger Air Bag Deactivation Switch.....501-20B
Air Bags and Safety Belt Pretensioners—Double Cab, LHD 4WD/LHD RWD, Vehicles Without: Passenger Air Bag Deactivation Switch.....501-20B
Air Bags and Safety Belt Pretensioners—Super Cab, LHD 4WD/LHD RWD, Vehicles With: Passenger Air Bag Deactivation Switch.....501-20B
Air Bags and Safety Belt Pretensioners—Super Cab, LHD 4WD/LHD RWD, Vehicles Without: Passenger Air Bag Deactivation Switch.....501-20B
Air Bags and Safety Belt Pretensioners—Single Cab, RHD 4WD/RHD RWD, Vehicles With: Passenger Air Bag Deactivation Switch.....501-20B
Air Bags and Safety Belt Pretensioners—Single Cab, RHD 4WD/RHD RWD, Vehicles Without: Passenger Air Bag Deactivation Switch.....501-20B
Air Bags and Safety Belt Pretensioners—Double Cab, RHD 4WD/RHD RWD, Vehicles With: Passenger Air Bag Deactivation Switch.....501-20B
Air Bags and Safety Belt Pretensioners—Double Cab, RHD 4WD/RHD RWD, Vehicles Without: Passenger Air Bag Deactivation Switch.....501-20B
Air Bags and Safety Belt Pretensioners—Super Cab, RHD 4WD/RHD RWD, Vehicles With: Passenger Air Bag Deactivation Switch.....501-20B
Air Bags and Safety Belt Pretensioners—Super Cab, RHD 4WD/RHD RWD, Vehicles Without: Passenger Air Bag Deactivation Switch.....501-20B
Air Conditioning (A/C) Dual Pressure Switch.....412-01
Air Conditioning (A/C) Pressure Transducer.....412-01
Ambient Air Temperature Sensor.....412-01
Anti-Lock Brake System (ABS) Module.....206-09A
Anti-Lock Brake System (ABS) Module.....206-09C
Anti-Lock Control.....206-09A
Anti-Lock Control - Stability Assist.....206-09B
Anti-Theft Alarm Horn.....419-01A
Anti-Theft Alarm Horn with Integral Battery.....419-01A
Anti-Theft Alarm Module.....419-01A
Anti-Theft Alarm System—Double Cab, LHD 4WD/LHD RWD.....419-01A

Index

Anti-Theft Alarm System—Single Cab, LHD 4WD/LHD RWD.....419-01A
Anti-Theft Alarm System—Super Cab, LHD 4WD/LHD RWD.....419-01A
Anti-Theft Alarm System—Double Cab, RHD 4WD/RHD RWD.....419-01A
Anti-Theft Alarm System—Single Cab, RHD 4WD/RHD RWD.....419-01A
Anti-Theft Alarm System—Super Cab, RHD 4WD/RHD RWD.....419-01A
Audio Input Socket.....415-01
Audio System—Single Cab, LHD 4WD/LHD RWD, Vehicles With: Single DIN Standard Audio Unit.....415-01
Audio System—Single Cab, RHD 4WD/RHD RWD, Vehicles With: Single DIN Standard Audio Unit.....415-01
Audio System—Double Cab, LHD 4WD/LHD RWD, Vehicles With: Single DIN Standard Audio Unit.....415-01
Audio System—Double Cab, RHD 4WD/RHD RWD, Vehicles With: Single DIN Standard Audio Unit.....415-01
Audio System—Super Cab, LHD 4WD/LHD RWD, Vehicles With: Single DIN Standard Audio Unit.....415-01
Audio System—Super Cab, RHD 4WD/RHD RWD, Vehicles With: Single DIN Standard Audio Unit.....415-01
Audio System—Single Cab, LHD 4WD/LHD RWD, Vehicles With: Bluetooth and Voice Control.....415-01
Audio System—Single Cab, LHD 4WD/LHD RWD, Vehicles Without: Bluetooth and Voice Control.....415-01
Audio System—Double Cab, LHD 4WD/LHD RWD, Vehicles With: Bluetooth and Voice Control.....415-01
Audio System—Double Cab, LHD 4WD/LHD RWD, Vehicles Without: Bluetooth and Voice Control.....415-01
Audio System—Super Cab, LHD 4WD/LHD RWD, Vehicles With: Bluetooth and Voice Control.....415-01
Audio System—Super Cab, LHD 4WD/LHD RWD, Vehicles Without: Bluetooth and Voice Control.....415-01
Audio System—Single Cab, RHD 4WD/RHD RWD, Vehicles With: Bluetooth and Voice Control.....415-01
Audio System—Single Cab, RHD 4WD/RHD RWD, Vehicles Without: Bluetooth and Voice Control.....415-01
Audio System—Double Cab, RHD 4WD/RHD RWD, Vehicles With: Bluetooth and Voice Control.....415-01
Audio System—Double Cab, Vehicles Without: Bluetooth and Voice Control, RHD.....415-01
Audio System—Super Cab, RHD 4WD/RHD RWD, Vehicles With: Bluetooth and Voice Control.....415-01
Audio System—Super Cab, RHD 4WD/RHD RWD, Vehicles Without: Bluetooth and Voice Control.....415-01
Audio Unit.....415-01
Audio Unit—A.....415-01
Audio Unit—B.....415-01
Audio Unit—J.....415-01
Auto-Dimming Interior Mirror.....501-09
Auto-Dimming Interior Mirror.....501-09
Auto-Dimming Interior Mirror.....501-09

Index

Autolamps—LHD 4WD/LHD RWD.....417-01
Autolamps—RHD 4WD/RHD RWD.....417-01
Automatic Transmission/Transaxle—LHD 4WD/LHD RWD.....307-01
Automatic Transmission/Transaxle—RHD 4WD/RHD RWD.....307-01
Battery—A.....414-01
Battery—C.....414-01
Battery Monitoring Sensor.....414-01
Blower Motor.....412-01
Blower Motor Control Module.....412-01
Blower Motor Resistor.....412-01
B-Pillar LH—Single Cab.....700-00
B-Pillar LH—Super Cab.....700-00
B-Pillar RH—Single Cab.....700-00
B-Pillar RH—Super Cab.....700-00
Brake Pedal Position (BPP) Switch.....303-14A
Brake Pedal Position (BPP) Switch.....303-14B
Catalyst Monitor Sensor.....303-14A
Cellular Phone Microphone.....415-01
Central Junction Box (CJB)—A.....418-00
Central Junction Box (CJB)—B.....418-00
Central Junction Box (CJB)—C.....418-00
Central Junction Box (CJB)—D.....418-00
Central Junction Box (CJB)—E.....418-00
Central Junction Box (CJB)—F.....418-00
Central Junction Box (CJB)—G.....418-00
Central Junction Box (CJB)—H.....418-00
Central Junction Box (CJB)—LHD 4WD/LHD RWD.....700-00
Central Junction Box (CJB)—RHD 4WD/RHD RWD.....700-00
Central Junction Box (CJB)—LHD 4WD/LHD RWD.....700-01
Central Junction Box (CJB)—RHD 4WD/RHD RWD.....700-01
Central Locking Lock/Unlock Switch.....501-14
Charging System—2.2L Duratorq-TDCi (88kW/120PS) - Puma/2.2L Duratorq-TDCi (96kW/130PS) - Puma/2.2L Duratorq-TDCi (110kW/150PS) - Puma.....414-02
Charging System—3.2L Duratorq-TDCi (148kW/200PS) - Puma.....414-02
Charging System—2.5L Duratec-HE (122kW/165PS) - MI4.....414-02
Cigar Lighter.....501-12
Cigar Lighter and Power Points—LHD 4WD/LHD RWD.....700-02
Cigar Lighter and Power Points—RHD 4WD/RHD RWD.....700-02
Climate Control—2.2L Duratorq-TDCi (88kW/120PS) - Puma/2.2L Duratorq-TDCi (96kW/130PS) - Puma/2.2L Duratorq-TDCi (110kW/150PS) - Puma/3.2L Duratorq-TDCi (148kW/200PS) - Puma, LHD 4WD/LHD RWD, Vehicles With: Dual Automatic Temperature Control.....412-01
Climate Control—2.5L Duratec-HE (122kW/165PS) - MI4, LHD 4WD/LHD RWD, Vehicles With: Dual Automatic Temperature Control.....412-01
Climate Control—2.2L Duratorq-TDCi (88kW/120PS) - Puma/2.2L Duratorq-TDCi (96kW/130PS) - Puma/2.2L Duratorq-TDCi (110kW/150PS) - Puma/3.2L Duratorq-TDCi

Index

(148kW/200PS) - Puma, RHD 4WD/RHD RWD, Vehicles With: Dual Automatic Temperature Control.....412-01
Climate Control—2.5L Duratec-HE (122kW/165PS) - MI4, RHD 4WD/RHD RWD, Vehicles With: Dual Automatic Temperature Control.....412-01
Climate Control—LHD 4WD/LHD RWD, Vehicles Without: Air Conditioning.....412-01
Climate Control—RHD 4WD/RHD RWD, Vehicles Without: Air Conditioning.....412-01
Climate Control—2.2L Duratorq-TDCi (88kW/120PS) - Puma/2.2L Duratorq-TDCi (96kW/130PS) - Puma/2.2L Duratorq-TDCi (110kW/150PS) - Puma/3.2L Duratorq-TDCi (148kW/200PS) - Puma, LHD 4WD/LHD RWD, Vehicles With: Manual Temperature Control.....412-01
Climate Control—2.5L Duratec-HE (122kW/165PS) - MI4, LHD 4WD/LHD RWD, Vehicles With: Manual Temperature Control.....412-01
Climate Control—2.2L Duratorq-TDCi (88kW/120PS) - Puma/2.2L Duratorq-TDCi (96kW/130PS) - Puma/2.2L Duratorq-TDCi (110kW/150PS) - Puma/3.2L Duratorq-TDCi (148kW/200PS) - Puma, RHD 4WD/RHD RWD, Vehicles With: Manual Temperature Control.....412-01
Climate Control—2.5L Duratec-HE (122kW/165PS) - MI4, RHD 4WD/RHD RWD, Vehicles With: Manual Temperature Control.....412-01
Climate Control Assembly—LHD 4WD/LHD RWD, Vehicles With: Dual Automatic Temperature Control.....700-00
Climate Control Assembly—LHD 4WD/LHD RWD, Vehicles With: Manual Temperature Control.....700-00
Climate Control Assembly—LHD 4WD/LHD RWD, Vehicles With: Air Conditioning.....700-00
Climate Control Assembly—LHD 4WD/LHD RWD, Vehicles Without: Air Conditioning.....700-00
Climate Control Assembly—RHD 4WD/RHD RWD, Vehicles With: Dual Automatic Temperature Control.....700-00
Climate Control Assembly—RHD 4WD/RHD RWD, Vehicles With: Manual Temperature Control.....700-00
Climate Control Assembly—RHD 4WD/RHD RWD, Vehicles With: Air Conditioning.....700-00
Climate Control Assembly—RHD 4WD/RHD RWD, Vehicles Without: Air Conditioning.....700-00
Climate Control Module.....412-01
Climate Control Module—A.....412-01
Climate Control Module—B.....412-01
Clockspring.....501-20B
Clockspring—A.....501-20B
Clutch and Clutch Field Coil.....412-01
Clutch Pedal Position (CPP) Switch.....303-14A
Clutch Pedal Position (CPP) Switch.....303-14A
Clutch Pedal Position (CPP) Switch.....303-14B
Clutch Pedal Position (CPP) Switch.....303-14B
Communications Module—A.....415-01
Communications Module—B.....415-01
Communications Network - High-Speed (HS) Controller Area Network (CAN) Bus—Vehicles With: 5-Speed

Index

Manual Transmission - MT75/6-Speed Manual Transmission - MT82.....418-00
Communications Network - High-Speed (HS) Controller Area Network (CAN) Bus—Vehicles With: 6-Speed Automatic Transaxle - 6R80.....418-00
Communications Network - Local Interconnect Network (LIN) Bus—2.2L Duratorq-TDCi (88kW/120PS) - Puma/2.2L Duratorq-TDCi (96kW/130PS) - Puma/2.2L Duratorq-TDCi (110kW/150PS) - Puma/3.2L Duratorq-TDCi (148kW/200PS) - Puma, LHD 4WD/LHD RWD.....418-00
Communications Network - Local Interconnect Network (LIN) Bus—2.5L Duratec-HE (122kW/165PS) - MI4, LHD 4WD/LHD RWD.....418-00
Communications Network - Local Interconnect Network (LIN) Bus—2.2L Duratorq-TDCi (88kW/120PS) - Puma/2.2L Duratorq-TDCi (96kW/130PS) - Puma/2.2L Duratorq-TDCi (110kW/150PS) - Puma/3.2L Duratorq-TDCi (148kW/200PS) - Puma, RHD 4WD/RHD RWD.....418-00
Communications Network - Local Interconnect Network (LIN) Bus—2.5L Duratec-HE (122kW/165PS) - MI4, RHD 4WD/RHD RWD.....418-00
Communications Network - Mid-Speed (MS) Controller Area Network (CAN) Bus.....418-00
Communications Network - Multimedia (MM) Controller Area Network (CAN) Bus.....418-00
Cooling Fan Motor.....303-03
Courtesy and Demand Lighting—Single Cab, LHD 4WD/LHD RWD.....417-02
Courtesy and Demand Lighting—Double Cab, LHD 4WD/LHD RWD.....417-02
Courtesy and Demand Lighting—Super Cab, LHD 4WD/LHD RWD.....417-02
Courtesy and Demand Lighting—Single Cab, RHD 4WD/RHD RWD.....417-02
Courtesy and Demand Lighting—Double Cab, RHD 4WD/RHD RWD.....417-02
Courtesy and Demand Lighting—Super Cab, RHD 4WD/RHD RWD.....417-02
Crankshaft Position (CKP) Sensor.....303-14A
Crankshaft Position (CKP) Sensor—A.....303-14B
Cruise Control Switch.....419-03
Data Link Connector (DLC).....418-00
Daytime Running Lamp LH.....417-04
Daytime Running Lamp RH.....417-04
Defrost Vent/Register/Footwell Blend Door Actuator.....412-01
Defrost Vent/Register/Footwell Blend Door Actuator—A.....412-01
Diagnostics.....418-00
Diesel Particulate Filter (DPF) Differential Pressure Sensor.....303-14B
Driver Door Interior View—Double Cab, LHD 4WD/LHD RWD.....700-00
Driver Door Interior View—Single Cab/Super Cab, LHD 4WD/LHD RWD.....700-00
Driver Door Interior View—Double Cab, RHD 4WD/RHD RWD.....700-00
Driver Door Interior View—Single Cab/Super Cab, RHD 4WD/RHD RWD.....700-00
Driver Door Latch.....501-14
Driver Door Latch—A.....501-14
Driver Door Module (DDM).....419-10

Index

Driver Door Module (DDM)—A....419-10
Driver Door Side Impact Sensor....501-20B
Driver Door Window Control Switch....501-11
Driver Door Window Control Switch—A....501-11
Driver Door Window Control Switch—B....501-11
Driver Door Window Regulator Motor....501-11
Driver Door Window Regulator Motor—A....501-11
Driver Lower Air Bag Module....501-20B
Driver Safety Belt Pretensioner....501-20A
Driver Side Air Curtain Module....501-20B
Electronic Locking Differential (ELD) Solenoid....205-02
Engine Compartment Left-Hand View—LHD 4WD/LHD RWD....700-00
Engine Compartment Left-Hand View—RHD 4WD/RHD RWD....700-00
Engine Compartment Right-Hand View—LHD 4WD/LHD RWD....700-00
Engine Compartment Right-Hand View—RHD 4WD/RHD RWD....700-00
Engine Control—2.5L Duratec-HE (122kW/165PS) - MI4, Compressed Natural Gas (CNG)/Ethanol/Liquefied Petroleum Gas (LPG)....303-14A
Engine Control....303-14A
Engine Control—2.2L Duratorq-TDCi (88kW/120PS) - Puma....303-14B
Engine Control—2.2L Duratorq-TDCi (110kW/150PS) - Puma, Vehicles With: 6-Speed Automatic Transaxle - 6R80, Emission Requirements: DGA Emissions....303-14B
Engine Control—2.2L Duratorq-TDCi (88kW/120PS) - Puma/2.2L Duratorq-TDCi (96kW/130PS) - Puma/2.2L Duratorq-TDCi (110kW/150PS) - Puma, Vehicles With: 5-Speed Manual Transmission - MT75/6-Speed Manual Transmission - MT82....303-14B
Engine Control—2.2L Duratorq-TDCi (88kW/120PS) - Puma/2.2L Duratorq-TDCi (96kW/130PS) - Puma/2.2L Duratorq-TDCi (110kW/150PS) - Puma, Vehicles With: 6-Speed Automatic Transaxle - 6R80....303-14B
Engine Control—3.2L Duratorq-TDCi (148kW/200PS) - Puma, Vehicles With: 6-Speed Automatic Transaxle - 6R80....303-14B
Engine Control—3.2L Duratorq-TDCi (148kW/200PS) - Puma, Vehicles With: 6-Speed Manual Transmission - MT82....303-14B
Engine Control—3.2L Duratorq-TDCi (148kW/200PS) - Puma, Vehicles With: 6-Speed Automatic Transaxle - 6R80, Emission Requirements: DGA Emissions....303-14B
Engine Coolant Temperature (ECT) Sensor—A....303-14A
Engine Coolant Temperature (ECT) Sensor....303-14B
Engine Junction Box (EJB)....418-00
Engine Junction Box (EJB)—A....418-00
Engine Left-Hand View—2.5L Duratec-HE (122kW/165PS) - MI4....700-00
Engine Left-Hand View—2.5L Duratec-HE (122kW/165PS) - MI4, Emission Requirements: DGA Emissions, Compressed

Index

Natural Gas (CNG)/Ethanol/Liquefied Petroleum Gas (LPG).....700-00
Engine Left-Hand View—2.2L Duratorq-TDCi (88kW/120PS) - Puma/2.2L Duratorq-TDCi (96kW/130PS) - Puma/2.2L Duratorq-TDCi (110kW/150PS) - Puma, Emission Requirements: DGA Emissions.....700-00
Engine Left-Hand View—2.2L Duratorq-TDCi (88kW/120PS) - Puma/2.2L Duratorq-TDCi (110kW/150PS) - Puma, Emission Requirements: DGA Emissions.....700-00
Engine Left-Hand View—3.2L Duratorq-TDCi (148kW/200PS) - Puma.....700-00
Engine Left-Hand View—3.2L Duratorq-TDCi (148kW/200PS) - Puma, Emission Requirements: DGA Emissions.....700-00
Engine Left-Hand View—3.2L Duratorq-TDCi (148kW/200PS) - Puma, Emission Requirements: DGA Emissions.....700-00
Engine Oil Pressure (EOP) Switch.....303-14A
Engine Oil Pressure (EOP) Switch—A.....303-14B
Engine Right-Hand View—2.5L Duratec-HE (122kW/165PS) - MI4.....700-00
Engine Right-Hand View—2.5L Duratec-HE (122kW/165PS) - MI4, Emission Requirements: DGA Emissions, Compressed Natural Gas (CNG)/Ethanol/Liquefied Petroleum Gas (LPG).....700-00
Engine Right-Hand View—2.2L Duratorq-TDCi (88kW/120PS) - Puma/2.2L Duratorq-TDCi (96kW/130PS) - Puma.....700-00
Engine Right-Hand View—2.2L Duratorq-TDCi (110kW/150PS) - Puma.....700-00
Engine Right-Hand View—3.2L Duratorq-TDCi (148kW/200PS) - Puma.....700-00
Engine Right-Hand View—3.2L Duratorq-TDCi (148kW/200PS) - Puma, Emission Requirements: DGA Emissions.....700-00
Engine Right-Hand View—3.2L Duratorq-TDCi (148kW/200PS) - Puma, Emission Requirements: DGA Emissions.....700-00
Engine Upper View—2.5L Duratec-HE (122kW/165PS) - MI4, Emission Requirements: DGA Emissions, Compressed Natural Gas (CNG)/Ethanol/Liquefied Petroleum Gas (LPG).....700-00
Engine Upper View—2.2L Duratorq-TDCi (88kW/120PS) - Puma/2.2L Duratorq-TDCi (110kW/150PS) - Puma, Emission Requirements: DGA Emissions.....700-00
Engine Upper View—3.2L Duratorq-TDCi (148kW/200PS) - Puma.....700-00
Engine Upper View—3.2L Duratorq-TDCi (148kW/200PS) - Puma, Emission Requirements: DGA Emissions.....700-00
Engine Upper View—3.2L Duratorq-TDCi (148kW/200PS) - Puma, Emission Requirements: DGA Emissions.....700-00
Evaporative Emission Canister Purge Valve.....303-13
Evaporator Temperature Sensor.....412-01
Evaporator Temperature Sensor—A.....412-01
Exhaust Gas Recirculation (EGR) Valve.....303-08

Index

Exhaust Gas Temperature Sensor.....303-14B
Exterior Lighting—LHD 4WD/LHD RWD.....417-01
Exterior Lighting—RHD 4WD/RHD RWD.....417-01
Exterior Mirror Control Switch.....501-09
Exterior Mirror LH.....501-09
Exterior Mirror RH.....501-09
Fog Lamps—LHD 4WD/LHD RWD.....417-01
Fog Lamps—RHD 4WD/RHD RWD.....417-01
Footwell Lamp LH.....417-02
Footwell Lamp RH.....417-02
Four-Wheel Drive Systems—2.5L Duratec-HE (122kW/165PS) - MI4, Vehicles With: Electronic Locking Differential (ELD).....308-07
Four-Wheel Drive Systems—2.5L Duratec-HE (122kW/165PS) - MI4, Vehicles Without: Electronic Locking Differential (ELD).....308-07
Four-Wheel Drive Systems—2.2L Duratorq-TDCi (88kW/120PS) - Puma/2.2L Duratorq-TDCi (96kW/130PS) - Puma/2.2L Duratorq-TDCi (110kW/150PS) - Puma/3.2L Duratorq-TDCi (148kW/200PS) - Puma, Vehicles With: Electronic Locking Differential (ELD).....308-07
Four-Wheel Drive Systems—2.2L Duratorq-TDCi (88kW/120PS) - Puma/2.2L Duratorq-TDCi (96kW/130PS) - Puma/2.2L Duratorq-TDCi (110kW/150PS) - Puma/3.2L Duratorq-TDCi (148kW/200PS) - Puma, Vehicles Without: Electronic Locking Differential (ELD).....308-07
Front Door Speaker LH.....415-01
Front Door Speaker RH.....415-01
Front Door Trim Panel Ambient Lighting Lamp LH.....417-02
Front Door Trim Panel Ambient Lighting Lamp RH.....417-02
Front Door Tweeter Speaker LH.....415-01
Front Door Tweeter Speaker RH.....415-01
Front Fender LH.....700-00
Front Fender RH.....700-00
Front Floor Left-Hand View—Single Cab, LHD 4WD/LHD RWD.....700-00
Front Floor Left-Hand View—Double Cab, LHD 4WD/LHD RWD.....700-00
Front Floor Left-Hand View—Super Cab, LHD 4WD/LHD RWD.....700-00
Front Floor Left-Hand View—Single Cab, RHD 4WD/LHD RWD.....700-00
Front Floor Left-Hand View—Double Cab, RHD 4WD/RHD RWD.....700-00
Front Floor Left-Hand View—Super Cab, RHD 4WD/RHD RWD.....700-00
Front Floor Right-Hand View—Single Cab, LHD 4WD/LHD RWD.....700-00
Front Floor Right-Hand View—Double Cab, LHD 4WD/LHD RWD.....700-00
Front Floor Right-Hand View—Super Cab, LHD 4WD/LHD RWD.....700-00
Front Floor Right-Hand View—Single Cab, RHD 4WD/RHD RWD.....700-00
Front Floor Right-Hand View—Double Cab, RHD 4WD/RHD RWD.....700-00
Front Floor Right-Hand View—Super Cab, RHD 4WD/RHD RWD.....700-00
Front Fog Lamp LH.....417-01
Front Fog Lamp RH.....417-01
Front Impact Severity Sensor.....501-20B
Front Impact Severity Sensor.....501-20B

Index

Front Power Outlet Socket.....501-12
Front Side Marker Lamp LH.....417-01
Front Side Marker Lamp RH.....417-01
Front Wheel Speed Sensor LH.....206-09A
Front Wheel Speed Sensor LH.....206-09C
Front Wheel Speed Sensor RH.....206-09A
Front Wheel Speed Sensor RH.....206-09C
Fuel Filler Door Latch Motor.....501-14
Fuel Injector 1—A.....303-04A
Fuel Injector 1.....303-04B
Fuel Injector 1.....303-04C
Fuel Injector 2—A.....303-04A
Fuel Injector 2.....303-04B
Fuel Injector 2.....303-04C
Fuel Injector 3—A.....303-04A
Fuel Injector 3.....303-04B
Fuel Injector 3.....303-04C
Fuel Injector 4—A.....303-04A
Fuel Injector 4.....303-04B
Fuel Injector 4.....303-04C
Fuel Injector 5.....303-04C
Fuel Level Sensor—A.....310-01A
Fuel Metering Valve.....303-04B
Fuel Metering Valve.....303-04C
Fuel Pump and Sender Unit.....310-01A
Fuel Pump and Sender Unit.....310-01B
Fuel Rail Temperature Sensor.....303-14B
Fuel Supply.....310-00A
Fuel Supply.....310-00B
Fuel Tank.....700-00
Fuel Temperature Sensor.....303-14B
Fuel Vaporizer System Fuel Pump.....309-00
Fuel Vaporizer System Glow Plug.....309-00
Generator.....414-02
Generator—A.....414-02
Glove Compartment Lamp.....417-02
Glow Plug 1.....303-07B
Glow Plug 1.....303-07C
Glow Plug 2.....303-07B
Glow Plug 2.....303-07C
Glow Plug 3.....303-07B
Glow Plug 3.....303-07C
Glow Plug 4.....303-07B
Glow Plug 4.....303-07C
Glow Plug 5.....303-07C
Glow Plug Module.....303-07B
Glow Plug Module—B.....303-07B
Glow Plug Module—A.....303-07C
Glow Plug Module—C.....303-07C
Grounding—LHD 4WD/LHD RWD.....700-03
Grounding—RHD 4WD/RHD RWD.....700-03
Hazard Flasher Switch.....211-05
Headlamp Assembly LH.....417-01
Headlamp Assembly RH.....417-01
Headlamp Control Module.....417-01
Headlamp Control Module—A.....417-01
Headlamp Leveling.....417-01
Headlamp Leveling Switch.....417-01
Headliner—Single Cab, LHD 4WD/LHD RWD.....700-00
Headliner—Double Cab, LHD 4WD/LHD RWD.....700-00
Headliner—Super Cab, LHD 4WD/LHD RWD.....700-00
Headliner—Single Cab, RHD 4WD/RHD RWD.....700-00
Headliner—Double Cab, RHD 4WD/RHD RWD.....700-00
Headliner—Super Cab, RHD 4WD/RHD RWD.....700-00
Heated Oxygen Sensor (HO2S).....303-14A
Heated Oxygen Sensor (HO2S).....303-14B
Heated Rear Window Element.....501-11
Heated Rear Window Element—A.....501-11
Heated Seats—LHD 4WD/LHD RWD.....501-10

Index

Heated Seats—RHD 4WD/RHD RWD.....501-10
Heated Windshield and Rear Window—LHD 4WD/LHD RWD.....501-11
Heated Windshield and Rear Window—RHD 4WD/RHD RWD.....501-11
Heated Windshield Element LH.....501-11
Heated Windshield Element RH.....501-11
High Mounted Stoplamp.....417-01
High Mounted Stoplamp.....417-01
Hood Switch.....419-01A
Horn.....413-06
Horn.....413-06
Horn—A.....413-06
Ignition Coil-On-Plug 1.....303-07A
Ignition Coil-On-Plug 2.....303-07A
Ignition Coil-On-Plug 3.....303-07A
Ignition Coil-On-Plug 4.....303-07A
Ignition Switch.....211-05
Inertia Fuel Shutoff (IFS) Switch.....310-01A
Inertia Fuel Shutoff (IFS) Switch.....310-01B
Information and Entertainment Control Panel.....415-01
Information and Entertainment Unit.....415-01
Information and Entertainment Unit—A.....415-01
Information and Entertainment Unit—B.....415-01
Information and Entertainment Unit—D.....415-01
Information and Entertainment Unit—E.....415-01
Information and Entertainment Unit—F.....415-01
Information and Entertainment Unit—K.....415-01
Information and Entertainment Unit—J.....415-01
In-Line Connector 11—A.....700-04
In-Line Connector 11—AA.....700-04
In-Line Connector 11—B.....700-04
In-Line Connector 11—C.....700-04
In-Line Connector 11—D.....700-04
In-Line Connector 11—E.....700-04
In-Line Connector 11—F.....700-04
In-Line Connector 13.....700-04
In-Line Connector 21.....700-04
In-Line Connector 23.....700-04
In-Line Connector 25.....700-04
In-Line Connector 25—A.....700-04
In-Line Connector 26.....700-04
In-Line Connector 26—A.....700-04
In-Line Connector 29.....700-04
In-Line Connector 30.....700-04
In-Line Connector 31.....700-04
In-Line Connector 33.....700-04
In-Line Connector 34.....700-04
In-Line Connector 34—A.....700-04
In-Line Connector 34—B.....700-04
In-Line Connector 37.....700-04
In-Line Connector 37—A.....700-04
In-Line Connector 38.....700-04
In-Line Connector 38—A.....700-04
In-Line Connector 44.....700-04
In-Line Connector 44—A.....700-04
In-Line Connector 44—B.....700-04
In-Line Connector 44—C.....700-04
In-Line Connector 44—D.....700-04
In-Line Connector 44—E.....700-04
In-Line Connector 44—F.....700-04
Instrument Cluster—LHD 4WD/LHD RWD.....413-01
Instrument Cluster—RHD 4WD/RHD RWD.....413-01
Instrument Cluster.....413-01

Index

Instrument Cluster and Panel Illumination—LHD 4WD/LHD RWD....417-02
Instrument Cluster and Panel Illumination—RHD 4WD/RHD RWD....417-02
Instrument Panel—LHD 4WD/LHD RWD....700-00
Instrument Panel—RHD 4WD/RHD RWD....700-00
Intake Air Temperature (IAT) Sensor....303-14B
Intake Camshaft Position (CMP) Sensor....303-14A
Intake Camshaft Position (CMP) Sensor—A....303-14B
Intake Variable Valve Timing (VVT) Oil Control Solenoid....303-14A
Interior Front Door Handle Ambient Lighting Lamp LH....417-02
Interior Front Door Handle Ambient Lighting Lamp RH....417-02
Intrusion Sensor....419-01A
Knock Sensor (KS)....303-14A
License Plate Lamp....417-01
License Plate Lamp—A....417-01
Low Brake Fluid Warning Indicator Switch....206-06
Low Brake Fluid Warning Indicator Switch—A....206-06
Low Washer Fluid Warning Indicator Switch....413-09
Luggage Compartment Power Outlet Socket....501-12
Manifold Absolute Pressure (MAP) Sensor....303-14B
Manifold Absolute Pressure and Temperature (MAPT) Sensor....303-14A
Mass Air Flow and Temperature (MAFT) Sensor....303-14B
Message Center—LHD 4WD/LHD RWD....413-08
Message Center—RHD 4WD/RHD RWD....413-08
Message Center Module....413-08
Message Center Module—A....413-08
Message Center Module—B....413-08
Message Center Module—C....413-08
Message Center Module—D....413-08
Message Center Module—E....413-08
Message Center Module—F....413-08
Message Center Module—G....413-08
Message Center Module—H....413-08
Mode Select Switch (MSS)....308-07
Noise Suppression Capacitor....415-01
Overhead Ambient Lighting Lamp....417-02
Overhead Ambient Lighting Lamp—A....417-02
Overhead Ambient Lighting Lamp—B....417-02
Parking Aid—LHD 4WD/LHD RWD, Vehicles With: Parking Aid Camera....413-13
Parking Aid—LHD 4WD/LHD RWD, Vehicles Without: Parking Aid Camera....413-13
Parking Aid—RHD 4WD/RHD RWD, Vehicles With: Parking Aid Camera....413-13
Parking Aid—RHD 4WD/RHD RWD, Vehicles Without: Parking Aid Camera....413-13
Parking Aid Module....413-13
Parking Aid Module—A....413-13
Parking Brake Warning Indicator Switch....206-05
Parking Lamp LH....417-01
Parking Lamp RH....417-01
Passenger Air Bag Deactivation (PAD) Indicator....501-20B
Passenger Air Bag Deactivation (PAD) Indicator—A....501-20B
Passenger Air Bag Deactivation (PAD) Switch....501-20B

Index

Passenger Air Bag Module.....501-20B
Passenger Door Interior View—Double Cab, LHD 4WD/LHD RWD.....700-00
Passenger Door Interior View—Double Cab, RHD 4WD/RHD RWD.....700-00
Passenger Door Interior View—Single Cab/Super Cab, LHD 4WD/LHD RWD.....700-00
Passenger Door Interior View—Single Cab/Super Cab, RHD 4WD/RHD RWD.....700-00
Passenger Door Latch—A.....501-14
Passenger Door Latch.....501-14
Passenger Door Module (PDM).....419-10
Passenger Door Module (PDM)—A.....419-10
Passenger Door Side Impact Sensor.....501-20B
Passenger Door Window Control Switch.....501-11
Passenger Door Window Control Switch—A.....501-11
Passenger Door Window Regulator Motor.....501-11
Passenger Door Window Regulator Motor—A.....501-11
Passenger Safety Belt Pretensioner.....501-20A
Passenger Side Air Curtain Module.....501-20B
Passive Anti-Theft System (PATS).....419-01B
Passive Anti-Theft System (PATS) Transceiver.....419-01B
Post DPF Exhaust Gas Temperature Sensor.....303-14B
Power Distribution.....700-02
Power Door Locks—LHD 4WD/LHD RWD.....501-14
Power Door Locks—RHD 4WD/RHD RWD.....501-14
Power Exterior Mirrors—LHD 4WD/LHD RWD.....501-09
Power Exterior Mirrors—RHD 4WD/RHD RWD.....501-09
Power Seats—LHD 4WD/LHD RWD.....501-10
Power Seats—RHD 4WD/RHD RWD.....501-10
Power Steering Pressure (PSP) Switch.....303-14A
Power Windows—LHD 4WD/LHD RWD, Vehicles With: Door Module.....501-11
Power Windows—RHD 4WD/RHD RWD, Vehicles With: Door Module.....501-11
Power Windows—LHD 4WD/LHD RWD, Vehicles Without: Door Module.....501-11
Power Windows—RHD 4WD/RHD RWD, Vehicles Without: Door Module.....501-11
Powertrain Control Module (PCM)—A.....303-14A
Powertrain Control Module (PCM)—B.....303-14A
Powertrain Control Module (PCM)—C.....303-14A
Powertrain Control Module (PCM)—A.....303-14B
Powertrain Control Module (PCM)—B.....303-14B
Powertrain Control Module (PCM)—C.....303-14B
Pre DPF Exhaust Gas Temperature Sensor.....303-14B
Radio Frequency (RF) Receiver.....501-14
Rain Sensor.....501-16
Rear Axle.....700-00
Rear Bumper.....700-00
Rear Door Latch LH.....501-14
Rear Door Latch LH—A.....501-14
Rear Door Latch RH.....501-14
Rear Door Latch RH—A.....501-14
Rear Door LH Interior View.....700-00
Rear Door Module (RDM) LH.....419-10
Rear Door Module (RDM) RH.....419-10

Index

Rear Door RH Interior View.....700-00
Rear Door Speaker LH.....415-01
Rear Door Speaker RH.....415-01
Rear Door Window Control Switch LH.....501-11
Rear Door Window Control Switch LH—A.....501-11
Rear Door Window Control Switch RH.....501-11
Rear Door Window Control Switch RH—A.....501-11
Rear Door Window Regulator Motor LH.....501-11
Rear Door Window Regulator Motor LH—A.....501-11
Rear Door Window Regulator Motor RH.....501-11
Rear Door Window Regulator Motor RH—A.....501-11
Rear Inner Parking Aid Sensor LH/Center.....413-13
Rear Inner Parking Aid Sensor RH.....413-13
Rear Interior Lamp.....417-02
Rear Interior Lamp—A.....417-02
Rear Lamp Assembly LH.....417-01
Rear Lamp Assembly RH.....417-01
Rear Outer Parking Aid Sensor LH.....413-13
Rear Outer Parking Aid Sensor RH.....413-13
Rear Parking Aid Camera.....413-13
Rear Passenger Power Outlet Socket.....501-12
Rear Passenger Power Outlet Socket—A.....501-12
Rear Safety Belt Retractor and Pretensioner.....501-20A
Rear Safety Belt Retractor and Pretensioner.....501-20A
Rear Under Floor View.....700-00
Rear Wheel Speed Sensor LH.....206-09A
Rear Wheel Speed Sensor LH.....206-09C
Rear Wheel Speed Sensor RH.....206-09A
Rear Wheel Speed Sensor RH.....206-09C
Recirculation Blend Door Actuator.....412-01
Recirculation Blend Door Actuator—A.....412-01
Restraints Control Module (RCM).....501-20B
Restraints Control Module (RCM)—A.....501-20B
Reversing Lamp Switch.....417-01
Side Impact Sensor LH.....501-20B
Side Impact Sensor RH.....501-20B
Side Turn Signal Lamp LH.....417-01
Side Turn Signal Lamp RH.....417-01
Speed Control.....310-03
Stability Assist/Traction Control Switch.....206-09B
Stability Assist/Traction Control Switch.....206-09C
Starter Motor—A.....303-06A
Starter Motor—B.....303-06A
Starter Motor—A.....303-06B
Starter Motor—B.....303-06B
Starting System—Vehicles With: 5-Speed Manual Transmission - MT75.....303-06A
Starting System—Vehicles With: 5-Speed Manual Transmission - MT75/6-Speed Manual Transmission - MT82.....303-06B
Starting System—Vehicles With: 6-Speed Automatic Transaxle - 6R80, LHD 4WD/LHD RWD.....303-06B
Starting System—Vehicles With: 6-Speed Automatic Transaxle - 6R80, RHD 4WD/RHD RWD.....303-06B
Steering Column Multifunction Switch.....211-05
Steering Column Multifunction Switch—A.....211-05
Steering Column Switches Front View.....700-00

Index

Steering Column Switches Rear View....700-00
Steering Wheel....700-00
Steering Wheel Rotation Sensor....206-09B
Steering Wheel Rotation Sensor....206-09C
Stoplamp Switch....417-01
Sunload Sensor....412-01
Symbols Glossary....100-00
Tachograph....413-17
Temperature Blend Door Actuator....412-01
Temperature Blend Door Actuator LH....412-01
Temperature Blend Door Actuator RH....412-01
Throttle Control Unit....303-14A
Throttle Control Unit—A....303-14B
Trailer Module....417-01
Trailer Module—A....417-01
Trailer Module—B....417-01
Trailer Socket—LHD 4WD/LHD RWD....417-01
Trailer Socket—RHD 4WD/RHD RWD....417-01
Trailer Socket....417-01
Trailer Socket—A....417-01
Trailer Socket—B....417-01
Trailer Socket—C....417-01
Trailer Socket—D....417-01
Trailer Socket—E....417-01
Trailer Socket—F....417-01
Trailer Socket—G....417-01
Trailer Socket—H....417-01
Trailer Socket—J....417-01
Transfer Case Shift Motor....308-07
Transmission Control Module (TCM)....307-01
Transmission Control Switch (TCS)....307-05
Transmission Control Unit Solenoids....307-01
Transmission Left-Hand View—Vehicles With: 5-Speed Manual Transmission - MT75, 2WD....700-00
Transmission Left-Hand View—Vehicles With: 5-Speed Manual Transmission - MT75, 4WD....700-00
Transmission Right-Hand View—Vehicles With: 6-Speed Manual Transmission - MT82, 2WD....700-00
Transmission Right-Hand View—Vehicles With: 6-Speed Automatic Transaxle - 6R80, 2WD....700-00
Transmission Right-Hand View—Vehicles With: 6-Speed Manual Transmission - MT82, 4WD....700-00
Transmission Right-Hand View—Vehicles With: 6-Speed Automatic Transaxle - 6R80, 4WD....700-00
Turbocharger Variable Vane Actuator....303-04D
Turn Signal and Hazard Lamps—LHD 4WD/LHD RWD....417-01
Turn Signal and Hazard Lamps—RHD 4WD/RHD RWD....417-01
Universal Serial Bus (USB) Module....415-01
Universal Serial Bus (USB) Module—A....415-01
Vehicle Speed Sensor 1 (VSS1)....303-14A
Vehicle Speed Sensor 1 (VSS1)....303-14B
Wastegate Control Solenoid....303-14B
Wastegate Position Sensor....303-04D
Water-in-Fuel Sensor....310-01B
Windshield Washer Pump....501-16
Windshield Wiper Motor....501-16
Windshield Wiper/Washer Switch....501-16
Windshield Wiper/Washer Switch—A....501-16
Wipers and Washers—LHD 4WD/LHD RWD....501-16

Index

Wipers and Washers—RHD
4WD/RHD RWD.....501-16

FOREWORD

To the best of our knowledge, the illustrations, technical information, data and descriptions in this issue were correct at the time of going to print. The right to change prices, specifications, and equipment and maintenance instructions at any time without notice is reserved as part of FORD policy of continuous development and improvement for the benefit of our customers.

No part of this publication may be reproduced, stored in a data processing system or transmitted in any form, electronic, mechanical, photocopy, recording, translation or by any other means without prior permission of Ford Motor Company. No liability can be accepted for any inaccuracies in this publication, although every possible care has been taken to make it as complete and accurate as possible.

© Ford Motor Company 2011

2011.50 Ranger

Workshop Manual

Table of Contents

GROUP 1 General Information

Service Information
General Information 100-00
Identification Codes 100-01
Jacking and Lifting 100-02
Noise, Vibration and Harshness 100-04

GROUP 2 Chassis

Suspension
Wheel Alignment Specifications
Suspension System - General Information 204-00
Front Suspension 204-01
Rear Suspension 204-02
Wheels and Tires 204-04

Driveline
Driveshaft 205-01
Rear Drive Axle/Differential 205-02
Front Drive Axle/Differential 205-03
Front Drive Halfshafts 205-04
Rear Drive Halfshafts 205-05

Brake System
Brake System - General Information 206-00
Drum Brake 206-02
Front Disc Brake 206-03
Parking Brake and Actuation 206-05
Hydraulic Brake Actuation 206-06
Power Brake Actuation 206-07
Anti-Lock Control 206-09A
Anti-Lock Control - Traction Control 206-09B

Steering System
Steering System - General Information 211-00
Power Steering 211-02
Steering Linkage 211-03
Steering Column 211-04
Steering Column Switches 211-05

GROUP 3 Powertrain

Engine
Engine System - General Information 303-00
Engine - 2.5L Duratec-HE (122kW/165PS) - MI4 303-01A
Engine - 2.2L Duratorq-TDCi (88kW/120PS) - Puma/2.2L Duratorq-TDCi (96kW/130PS) - Puma/2.2L Duratorq-TDCi (110kW/150PS) - Puma 303-01B
Engine - 3.2L Duratorq-TDCi (148kW/200PS) - Puma 303-01C
Engine Cooling - 2.2L Duratorq-TDCi (88kW/120PS) - Puma/2.2L Duratorq-TDCi (96kW/130PS) - Puma/2.2L Duratorq-TDCi (110kW/150PS) - Puma 303-03A
Engine Cooling - 3.2L Duratorq-TDCi (148kW/200PS) - Puma 303-03B
Engine Cooling 303-03C
Fuel Charging and Controls - 2.5L Duratec-HE (122kW/165PS) - MI4 303-04A
Fuel Charging and Controls - 2.2L Duratorq-TDCi (88kW/120PS) - Puma/2.2L Duratorq-TDCi (96kW/130PS) - Puma/2.2L Duratorq-TDCi (110kW/150PS) - Puma 303-04B
Fuel Charging and Controls - 3.2L Duratorq-TDCi (148kW/200PS) - Puma 303-04C
Fuel Charging and Controls - Turbocharger 303-04D
Accessory Drive - 2.5L Duratec-HE (122kW/165PS) - MI4 303-05A
Accessory Drive - 2.2L Duratorq-TDCi (88kW/120PS) - Puma/2.2L Duratorq-TDCi (96kW/130PS) - Puma/2.2L Duratorq-TDCi

(110kW/150PS) - Puma/3.2L Duratorq-TDCi (148kW/200PS) - Puma 303-05B
Starting System - 2.5L Duratec-HE (122kW/165PS) - MI4 303-06A
Starting System - 2.2L Duratorq-TDCi (88kW/120PS) - Puma/2.2L Duratorq-TDCi (96kW/130PS) - Puma/2.2L Duratorq-TDCi (110kW/150PS) - Puma/3.2L Duratorq-TDCi (148kW/200PS) - Puma 303-06B
Engine Ignition - 2.5L Duratec-HE (122kW/165PS) - MI4 303-07A
Glow Plug System - 2.2L Duratorq-TDCi (88kW/120PS) - Puma/2.2L Duratorq-TDCi (96kW/130PS) - Puma/2.2L Duratorq-TDCi (110kW/150PS) - Puma 303-07B
Glow Plug System - 3.2L Duratorq-TDCi (148kW/200PS) - Puma 303-07C
Engine Emission Control - 2.2L Duratorq-TDCi (88kW/120PS) - Puma/2.2L Duratorq-TDCi (96kW/130PS) - Puma/2.2L Duratorq-TDCi (110kW/150PS) - Puma/3.2L Duratorq-TDCi (148kW/200PS) - Puma 303-08A
Engine Emission Control 303-08B
Intake Air Distribution and Filtering - 2.5L Duratec-HE (122kW/165PS) - MI4 303-12A
Intake Air Distribution and Filtering - 2.2L Duratorq-TDCi (88kW/120PS) - Puma/2.2L Duratorq-TDCi (96kW/130PS) - Puma/2.2L Duratorq-TDCi (110kW/150PS) - Puma/3.2L Duratorq-TDCi (148kW/200PS) - Puma 303-12B
Evaporative Emissions 303-13
Electronic Engine Controls - 2.5L Duratec-HE (122kW/165PS) - MI4 303-14A
Electronic Engine Controls - 2.2L Duratorq-TDCi (88kW/120PS) - Puma/2.2L Duratorq-TDCi (96kW/130PS) - Puma/2.2L Duratorq-TDCi (110kW/150PS) - Puma/3.2L Duratorq-TDCi (148kW/200PS) - Puma 303-14B

Automatic Transmission/Transaxle

Automatic Transmission/Transaxle - Vehicles With: 6-Speed Automatic Transaxle - 6R80 307-01
Transmission/Transaxle Cooling 307-02
Automatic Transmission/Transaxle External Controls 307-05

Manual Transmission/Transaxle, Clutch and Transfer Case

Manual Transmission/Transaxle and Clutch - General Information 308-00
Clutch - Vehicles With: 5-Speed Manual Transmission - MT75 308-01A
Clutch - Vehicles With: 6-Speed Manual Transmission - MT82 308-01B
Clutch Controls - Vehicles With: 5-Speed Manual Transmission - MT75 308-02A
Clutch Controls - Vehicles With: 6-Speed Manual Transmission - MT82 308-02B
Manual Transmission/Transaxle - Vehicles With: 5-Speed Manual Transmission - MT75 308-03A
Manual Transmission/Transaxle - Vehicles With: 6-Speed Manual Transmission - MT82 308-03B
Manual Transmission/Transaxle External Controls - Vehicles With: MT-75 308-06A
Manual Transmission/Transaxle External Controls - Vehicles With: MT82 308-06B
Transfer Case - Vehicles With: 5-Speed Manual Transmission - MT75/6-Speed Manual Transmission - MT82 308-07A
Transfer Case - Vehicles With: 6-Speed Automatic Transaxle - 6R80 308-07B

Exhaust System

Exhaust System - 2.5L Duratec-HE (122kW/165PS) - MI4 309-00A
Exhaust System - 2.2L Duratorq-TDCi (88kW/120PS) - Puma/2.2L Duratorq-TDCi (96kW/130PS) - Puma/2.2L Duratorq-TDCi (110kW/150PS) - Puma/3.2L Duratorq-TDCi (148kW/200PS) - Puma 309-00B

Fuel System - General Information

Fuel System - General Information - 2.5L Duratec-HE (122kW/165PS) - MI4 310-00A
Fuel System - General Information - 2.2L Duratorq-TDCi (88kW/120PS) - Puma/2.2L Duratorq-TDCi

(96kW/130PS) - Puma/2.2L Duratorq-TDCi (110kW/150PS) - Puma/3.2L Duratorq-TDCi (148kW/200PS) - Puma 310-00B
Fuel Tank and Lines 310-01A
Fuel Tank and Lines - 2.2L Duratorq-TDCi (88kW/120PS) - Puma/2.2L Duratorq-TDCi (96kW/130PS) - Puma/2.2L Duratorq-TDCi (110kW/150PS) - Puma/3.2L Duratorq-TDCi (148kW/200PS) - Puma 310-01B
Acceleration Control 310-02

GROUP 4 Electrical

Climate Control System
Climate Control System - General Information 412-00
Climate Control 412-01
Auxiliary Climate Control 412-02
Instrumentation and Warning Systems
Instrument Cluster 413-01
Horn 413-06
Warning Devices 413-09
Parking Aid 413-13
Battery and Charging System
Charging System - General Information 414-00
Battery, Mounting and Cables 414-01
Generator and Regulator 414-02
Information and Entertainment Systems
Information and Entertainment System - General Information 415-00
Information and Entertainment System 415-01
Lighting
Exterior Lighting 417-01
Interior Lighting 417-02
Daytime Running Lamps (DRL) 417-04
Electrical Distribution
Module Communications Network 418-00
Module Configuration 418-01
Wiring Harnesses 418-02
Electronic Feature Group
Anti-Theft - Active 419-01A
Anti-Theft - Passive 419-01B
Multifunction Electronic Modules 419-10

GROUP 5 Body & Paint

GROUP

1

General Information

SECTION TITLE PAGE

Service Information
General Information.....100-00
Identification Codes.....100-01
Jacking and Lifting.....100-02
Noise, Vibration and Harshness.....100-04

SECTION 100-00 General Information

VEHICLE APPLICATION: 2011.50 Ranger

CONTENTS PAGE

PAGE 1 OF 2

DESCRIPTION AND OPERATION

About This Manual..... 100-00-3
Introduction..... 100-00-3
How to Use This Manual - Repair Procedures..... 100-00-3
Special Tools..... 100-00-3
Important Safety Instructions..... 100-00-3
Warnings, Cautions and Notes in This Manual..... 100-00-3
Overview Procedures..... 100-00-3
Trustmark Authoring Standards (TAS) Procedures..... 100-00-5
How to Use This Manual - Diagnosis and Testing procedures 100-00-15
Symbols Glossary..... 100-00-16
Health and Safety Precautions..... 100-00-38
Introduction..... 100-00-38
Acids and Alkalis..... 100-00-38
Air Bags..... 100-00-38
Air Conditioning Refrigerant..... 100-00-38
Adhesives and Sealers..... 100-00-39
Antifreeze..... 100-00-40
Asbestos..... 100-00-40
Battery Acids..... 100-00-40
Brake and Clutch Linings and Pads..... 100-00-40
Brake Fluids (Polyalkylene Glycols)..... 100-00-40
Brazing..... 100-00-40
Chemical Materials..... 100-00-40
Chlorofluorocarbons (CFC)..... 100-00-41
Clutch Fluids..... 100-00-41
Clutch Linings and Pads..... 100-00-41
Corrosion Protection Materials..... 100-00-41
Cutting..... 100-00-41
Dewaxing..... 100-00-41
Dusts..... 100-00-42
Electric Shock..... 100-00-42
Engine Oils..... 100-00-42
Exhaust Fumes..... 100-00-42
Fibre Insulation..... 100-00-42
Fire..... 100-00-42
First Aid..... 100-00-43
Fluoroelastomer..... 100-00-43
Foams - Polyurethane..... 100-00-43
Freon..... 100-00-43
Fuels..... 100-00-43
Gas Cylinders..... 100-00-44
Gases..... 100-00-44
Gaskets (Fluoroelastomer)..... 100-00-44
General Workshop Tools and Equipment..... 100-00-44

PAGE 2 OF 2

High Pressure Air, Lubrication and Oil Test Equipment..... 100-00-45
Halon..... 100-00-45
Legal Aspects..... 100-00-45
Lubricants and Greases..... 100-00-45
Transmission Fluids..... 100-00-45
Noise..... 100-00-46
Noise Insulation Materials..... 100-00-46
O-Rings (Fluoroelastomer)..... 100-00-46
Paints..... 100-00-46
Pressurized Equipment..... 100-00-47
Solder..... 100-00-47
Solvents..... 100-00-47
Sound Insulation..... 100-00-47
Suspended Loads..... 100-00-47
Transmission Brake Bands..... 100-00-48
Underseal..... 100-00-48
Viton..... 100-00-48
Welding..... 100-00-48
Warning Symbols on Vehicles..... 100-00-49
White Spirit..... 100-00-50
Standard Workshop Practices..... 100-00-51
Vehicle in Workshop..... 100-00-51
Towing the Vehicle..... 100-00-51
Connecting a Slave Battery Using Jumper Cables..... 100-00-51
Component Cleaning..... 100-00-52
Calibration of Essential Measuring Equipment..... 100-00-52
Solvents, Sealants and Adhesives..... 100-00-54
Introduction..... 100-00-54
Road/Roller Testing..... 100-00-55
Pre-Test Checks..... 100-00-55
Starting the Engine..... 100-00-55
Road or Roller Testing..... 100-00-55
Brake Testing..... 100-00-56
Air Conditioning (A/C) System Health and Safety Precautions..... 100-00-57
Battery and Battery Charging Health and Safety Precautions..... 100-00-58
Brake System Health and Safety Precautions..... 100-00-59
Steering System Health and Safety Precautions..... 100-00-60
Engine Cooling System Health and Safety Precautions..... 100-00-61
Petrol and Petrol-Ethanol Fuel Systems Health and Safety Precautions..... 100-00-62
Diesel Fuel System Health and Safety Precautions..... 100-00-63
Liquefied Petroleum Gas (LPG) Fuel Systems Health and Safety Precautions..... 100-00-64
Compressed Natural Gas (CNG) Fuel Systems Health and Safety Precautions..... 100-00-65
Supplemental Restraint System (SRS) Health and Safety Precautions..... 100-00-66
Window Glass Health and Safety Precautions..... 100-00-67

DESCRIPTION AND OPERATION

About This Manual

Introduction

This manual covers diagnosis and testing and repair procedures.

This manual is structured into groups and sections, with specific system sections collected together under their relevant group.

A group covers a specific portion of the vehicle. The manual is divided into five groups, General Information, Chassis, Powertrain, Electrical and Body and Paint. The number of the group is the first number of a section number.

Within Etis, the navigation tree will list the groups. After selecting a group the navigation tree will then list the sections within that group. Each section has a contents list detailing Specifications, Description and Operation, Diagnosis and Testing, General Procedures, Disassembly and Assembly, Removal and Installation.

If components need to be removed or disassembled in sequence, the sequence will be identified numerically in a graphic and the corresponding text will be numbered accordingly.

All left-hand and right-hand references to the vehicle are taken from a position sitting in the driver seat looking forward.

All left-hand and right-hand references to the engine are taken from a position at the flywheel looking towards the front camshaft pulley.

How to Use This Manual - Repair Procedures

This manual has been written in a format that is designed to meet the needs of technicians worldwide. The objective is to use common formats and include similar content in each manual.

This manual provides general descriptions for accomplishing diagnosis and testing, service and repair work with tested, effective techniques. Following them will help assure reliability.

Special Tools

The special tool(s) table provided at the beginning of each procedure shows all special tools required to carry out a repair. Where possible, illustrations are provided to assist in identifying the special tool required.

Important Safety Instructions

Appropriate service methods and correct repair procedures are essential for the safe, reliable operation of all motor vehicles as well as the personal safety of the individual carrying out the work.

This manual cannot possibly anticipate all such variations and provide advice or cautions as to each. Anyone who departs from the instructions provided in this manual must first establish that he compromises neither his personal safety nor the vehicle integrity by his choice of methods, tools or components.

Warnings, Cautions and Notes in This Manual

WARNING: Warnings are used to indicate that failure to follow a procedure correctly may result in personal injury.

CAUTION: Cautions are used to indicate that failure to follow a procedure correctly may result in damage to the vehicle or equipment being used.

NOTE: Notes are used to provide additional essential information required to carry out a complete and satisfactory repair.

A warning, caution or note is placed at the beginning of a series of steps if it applies to multiple steps. If the warning, caution or note only applies to one step, it is placed at the beginning of the specific step (after the step number).

Overview Procedures

Overview procedures contain an exploded view illustration(s). The numbered sequence within the illustration(s) indicate the order to be followed when removing/disassembling or when installing/assembling a component. Additional information, symbol(s) or a torque figure, may also be shown alongside the component.

There are ten symbols used to give additional information when removing/disassembling or when installing/assembling a component.

DESCRIPTION AND OPERATION

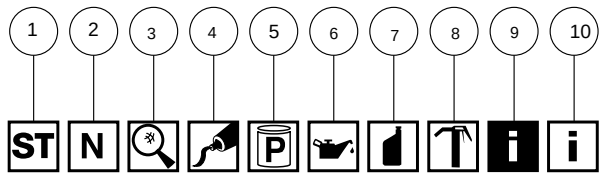

TIE42918

Item	Designation	Description
1	Special tool	A special tool is required for this component. There will also be a removal or installation symbol alongside the special tool symbol.
2	Install new component	Discard the old component and install a new component.
3	Inspect	Check the component for damage.
4	Apply sealant	Apply sealant to the component as specified in the materials table.
5	Apply petroleum jelly	Apply petroleum jelly to the component as specified in the materials table.
6	Apply oil	Apply oil to the component as specified in the materials table.
7	Apply fluid	Apply fluid to the component as specified in the materials table.
8	Apply grease	Apply grease to the component as specified in the materials table.
9	Removal or Disassembly detail	Go to the removal or disassembly detail for additional information to remove or disassemble a component
10	Installation or Assembly detail	Go to the installation or assembly detail for additional information to install or assemble a component

Special Tools and Torque Figures

Any requirement for special tools will picture the tool, showing it in use and with its tool number shown. Torque settings will be given at the relevant point in the procedure.

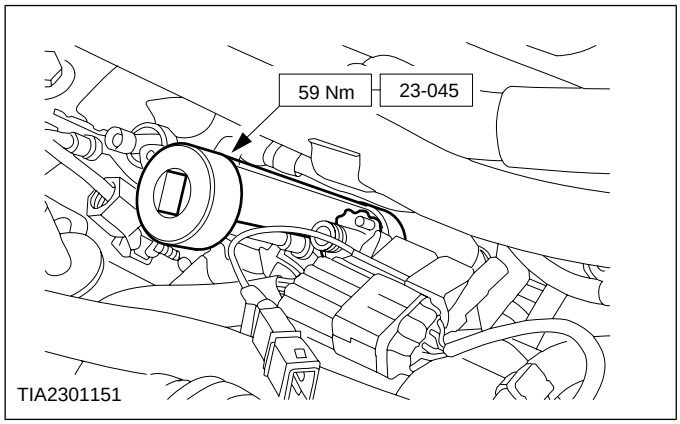

TIA2301151

DESCRIPTION AND OPERATION

Trustmark Authoring Standards (TAS) Procedures

NOTE: TAS style procedures can be identified by steps that have no accompanying step text and the magenta color of the electrical connectors and fasteners such as nuts, bolts, clamps or clips.

A TAS removal and installation procedure uses a sequence of color illustrations to indicate the order to be followed when removing/disassembling or installing/assembling a component.

Many of the TAS procedures will have the installation information within the removal steps. These procedures will have the following note at the beginning of the procedure:

NOTE: Removal steps in this procedure may contain installation details.

Reuse of fasteners and seals and gaskets

The following list details the general policy for the reuse of fasteners and seals and gaskets.

Types of self-locking nuts and bolts

NOTE: There are more types of self-locking fasteners available than shown in following illustration.

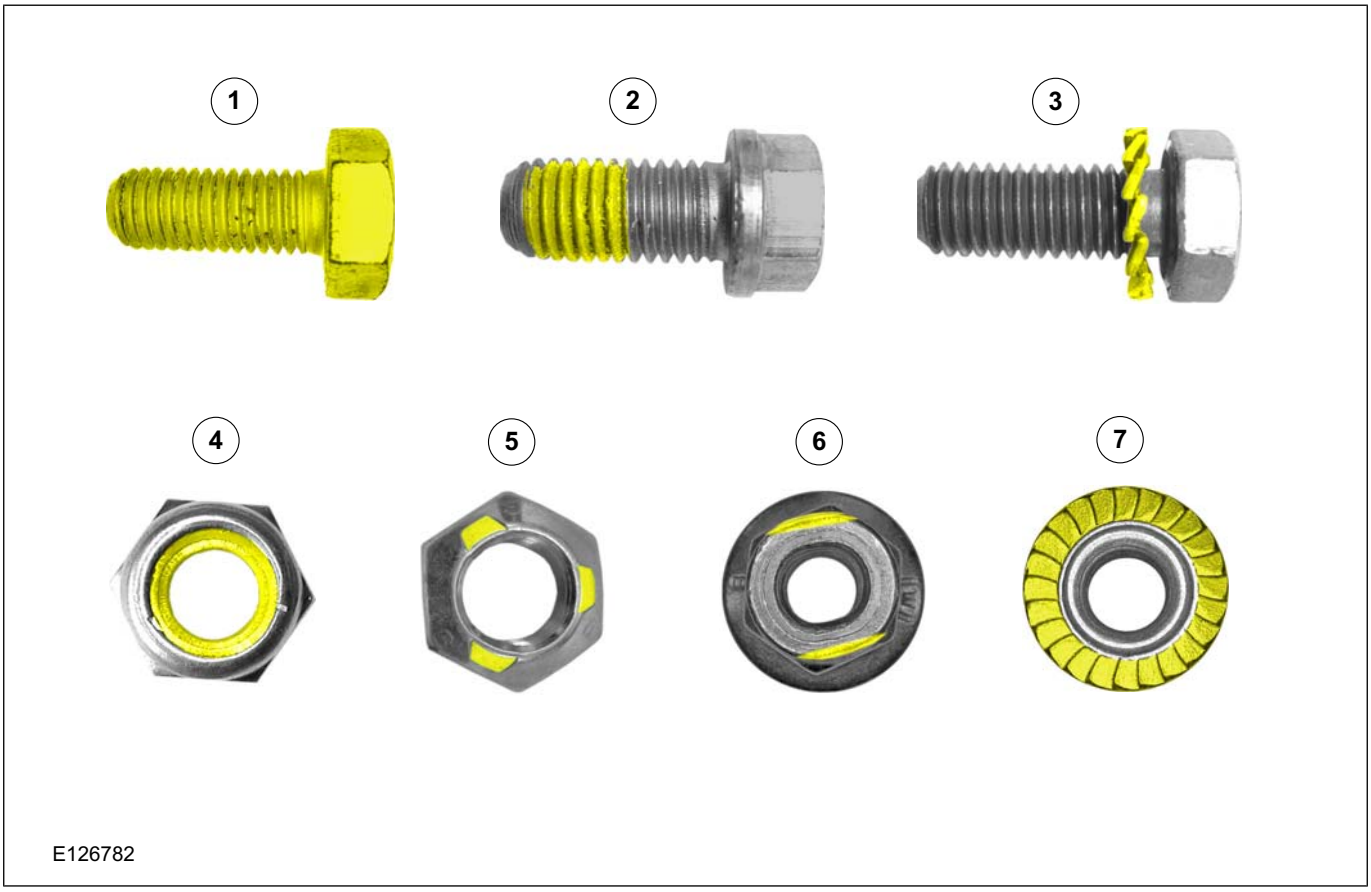

Item	Description
1	Completely coated self-locking bolt
2	Partially coated self-locking bolt
3	Self-locking bolt with a locking washer
4	Self-locking nut with a plastic locking insert
5	Self-locking nut with thread deformation (3 dents)
6	Self-locking nut with thread deformation (squeeze of thread to oval shape)
7	Self-locking nut with integrated locking ring

- All types of seals and gaskets must be discarded and new seals and gaskets installed unless otherwise stated within the procedure.
- Nuts and bolts with a chemical coating for locking and/or sealing and/or antiseize must be discarded unless the procedure advises to reapply the coating with a specified material.
- Nuts and bolts with a mechanical locking such as thread inserts, thread deformation or locking washers must be discarded and new nuts and bolts installed unless otherwise stated within the procedure.
- Torque to yield bolts must be discarded and new torque to yield bolts installed unless

DESCRIPTION AND OPERATION

otherwise stated within the procedure, recognizable by a tightening torque with more than one stage together with a torque angle.

Specification procedures will contain all technical data that are not part of a repair procedure.

Reuse of exterior trim parts

All type of glued exterior trim parts or parts fastened with adhesive tape must be discarded and new parts installed unless otherwise stated within the procedure.

TAS Graphics

Colors used in the graphic are as follows:

- Blue - Indicates the target item, item to be removed/installed or disassembled/assembled
- Green and Brown - Indicates a secondary item that needs to be detached, removed/installed or disassembled/assembled prior to the target item
- Yellow - Component that is touched or affected in a way but remains in the vehicle. It may be detached, attached, moved, modified, checked, adjusted etc.
- Magenta - Indicates electrical connectors and fasteners such as nuts, bolts, clamps or clips
- Pale Blue - is for the special tool(s) and general equipment

One illustration may have multiple steps assigned to it.

Numbered pointers are used to indicate the number of electrical connectors and fasteners such as nuts, bolts, clamps or clips.

Items in the illustration can be transparent or use cutouts to show hidden detail(s).

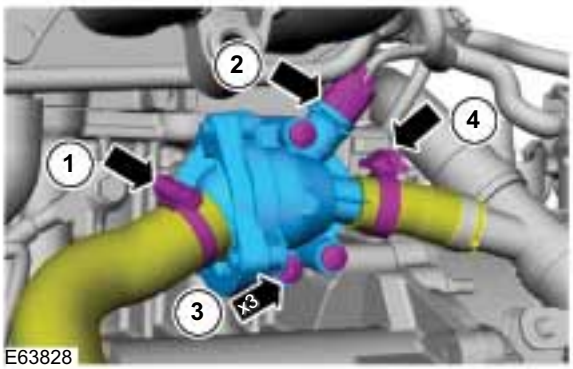

E63828

E60043

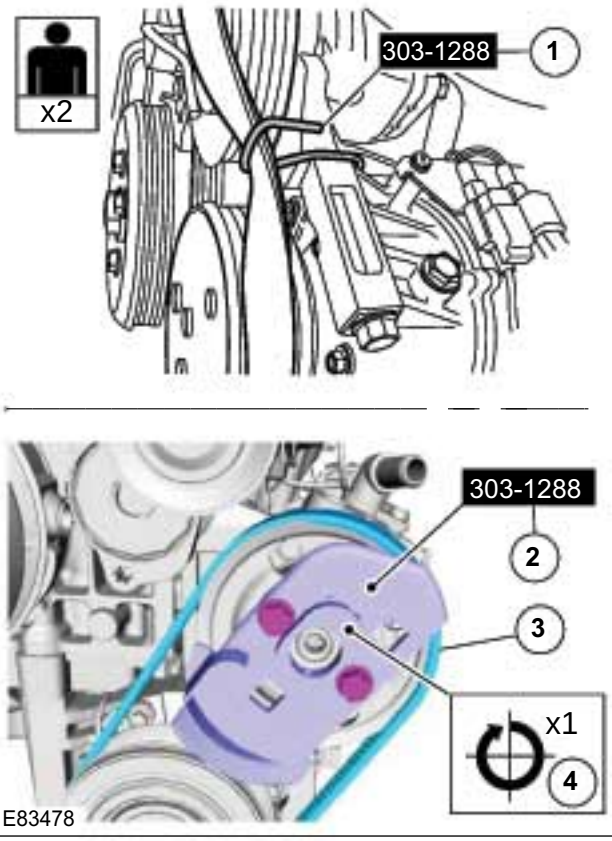

E83478

DESCRIPTION AND OPERATION

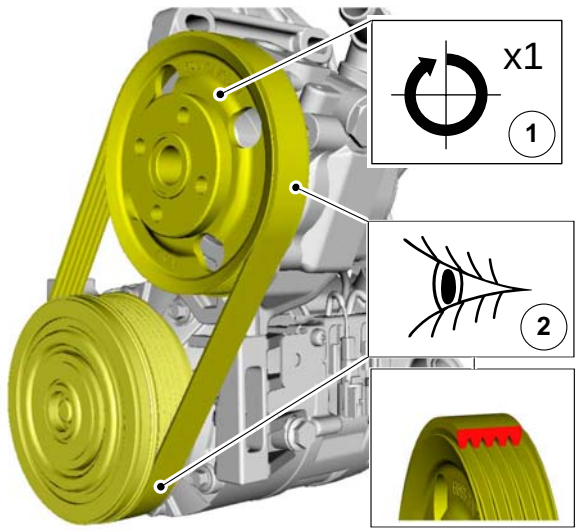

E92595

TAS Symbols

Symbols are used inside the graphics and in the text area to enhance the information display. The following paragraphs describe the various types and categories of symbols.

Prohibition symbols advise on prohibited actions to either avoid damage or health and safety related risks.

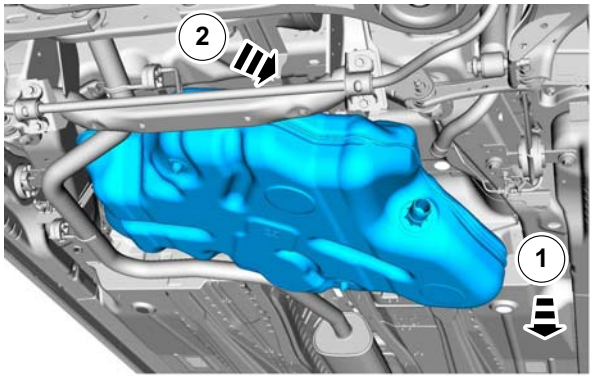

4.

E85026

DESCRIPTION AND OPERATION

Health and Safety symbols recommend the use of particular protection equipment to avoid or at least reduce the risk or severity of possible injuries.

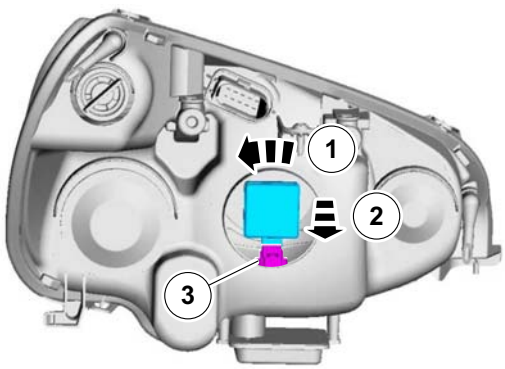

2.

E85027

Warning symbols are used to indicate potential risks resulting from a certain component or area.

DESCRIPTION AND OPERATION

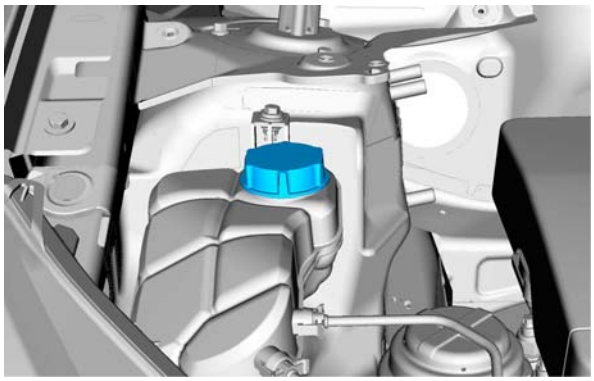

3.

E85028

Instruction symbols are used to apply sealer, lubricant, weight, tape or cleaning detergent to a component.

DESCRIPTION AND OPERATION

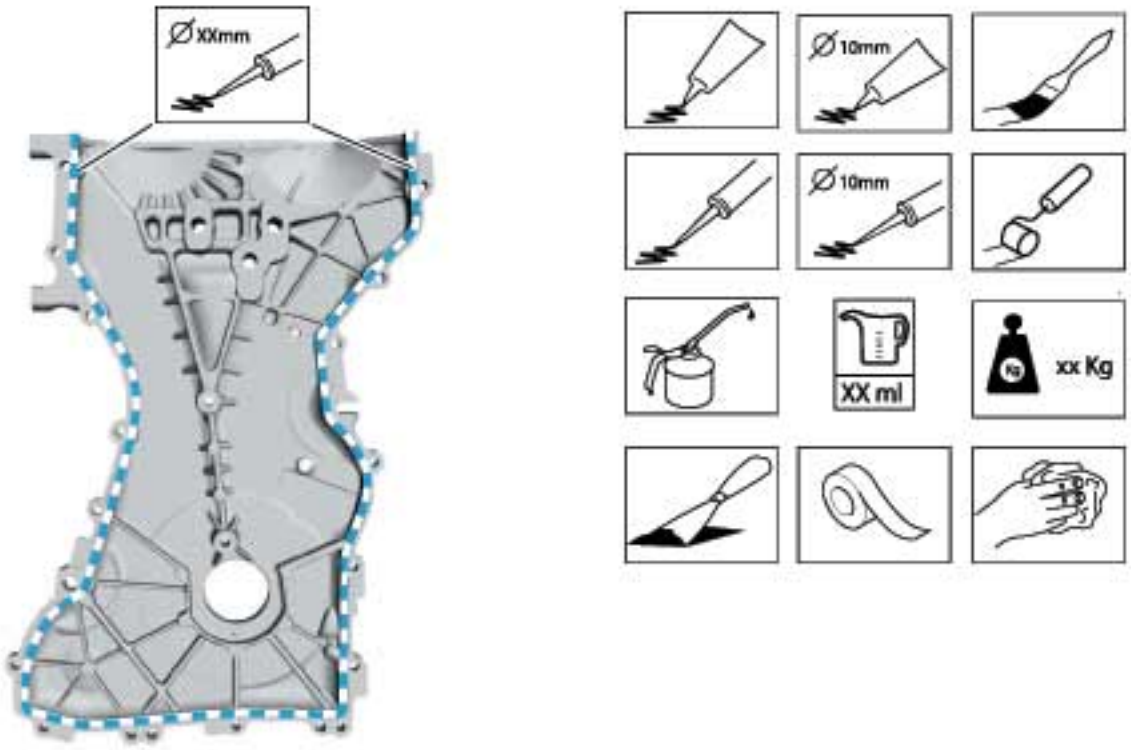

E84834

Location symbols are used to show the location of a component or system within the vehicle.

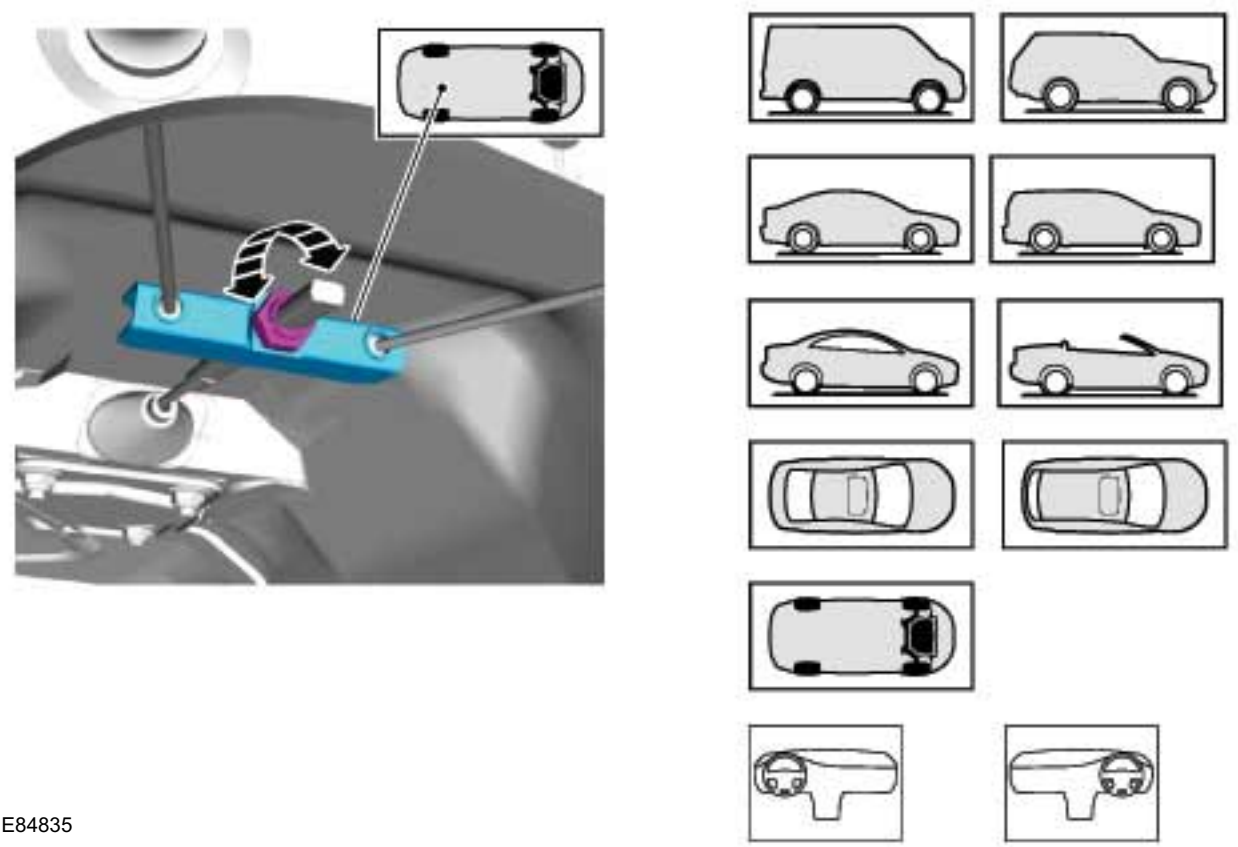

E84835

DESCRIPTION AND OPERATION

Gearshift lever or selector lever position symbols are used to show which gearshift lever or selector lever position is to be set.

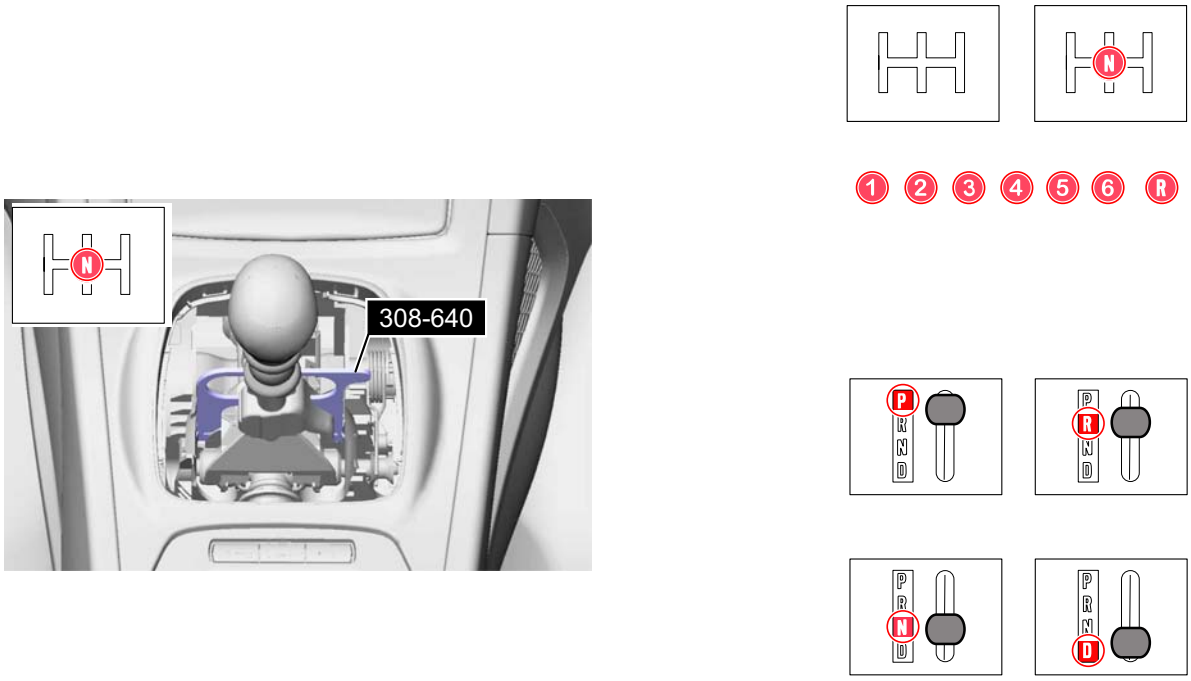

E84836

Pointer symbols are used to draw the attention to components and give special instructions such as a required sequence or number of components. The number of components is reflected by the value inside the luty arrow. A sequence number is located inside the circle. Numbers inside circles are also used to allocate special information such as tightening torques or chemicals to a particular component.

DESCRIPTION AND OPERATION

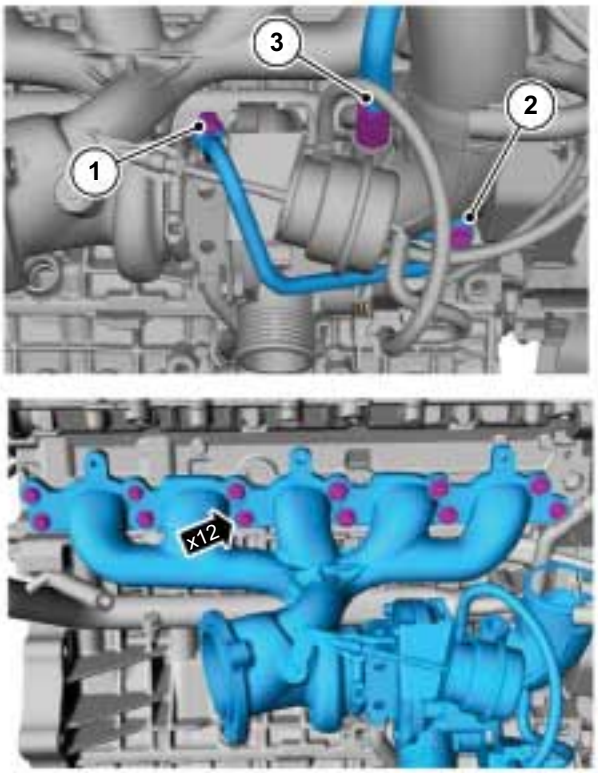

E84837

TO BE UPDATED LATER

Movement arrows are used to show three dimensional or rotational movements. These movements can include specific values inside the symbol if required.

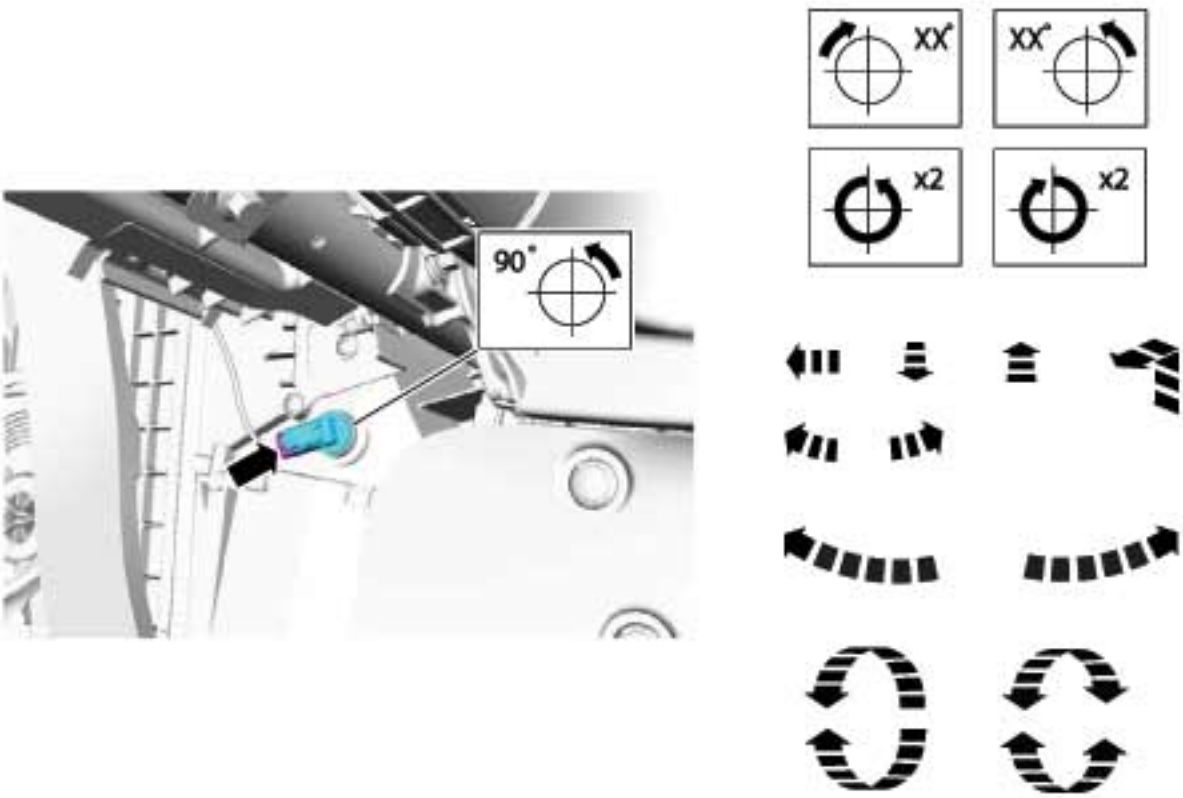

E84838

DESCRIPTION AND OPERATION

Standard tool symbols recommend the use of certain standard tools. These tools can include dimension values if required.

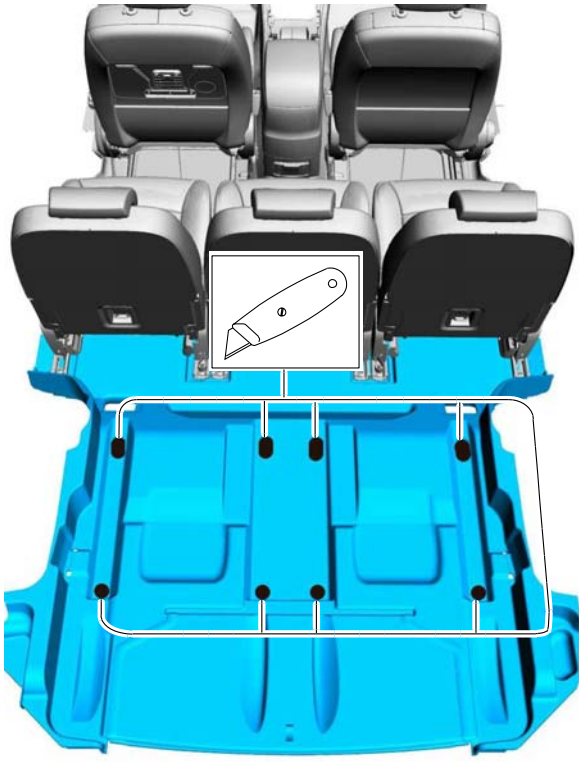

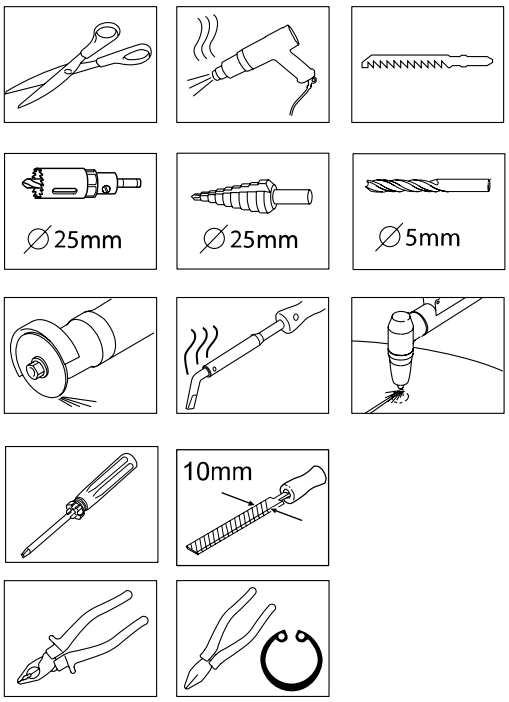

E84839

The following graphic illustrates a set of symbols that are used to provide detailed information on where to apply a material.

DESCRIPTION AND OPERATION

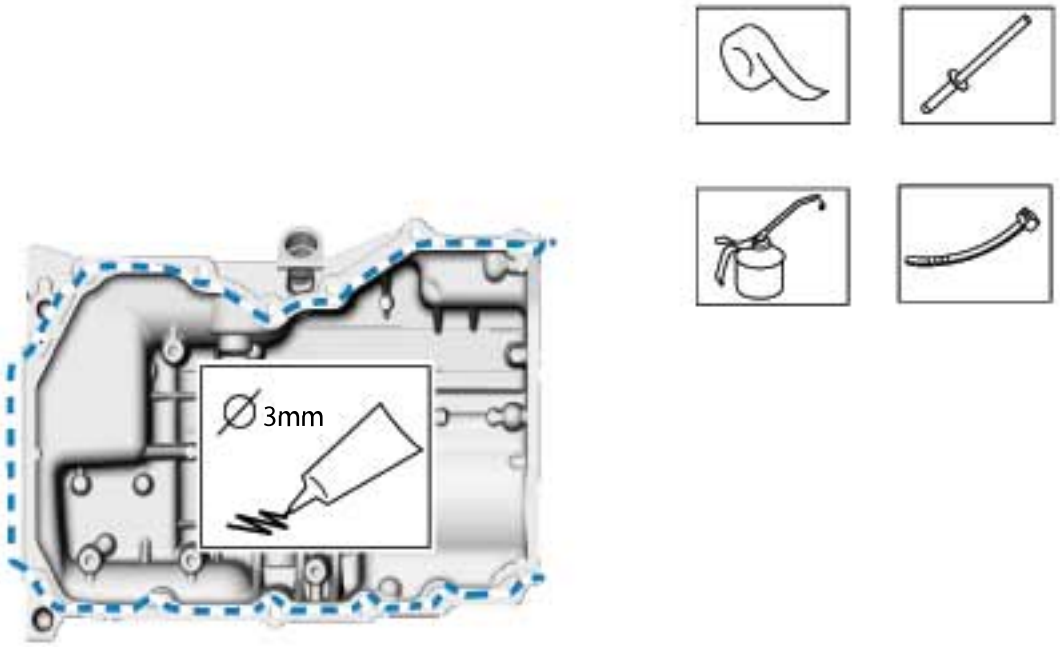

E84840

Measurement symbols provide detailed information on where to carry out a specific measurement.

These symbols can include specific values if required.

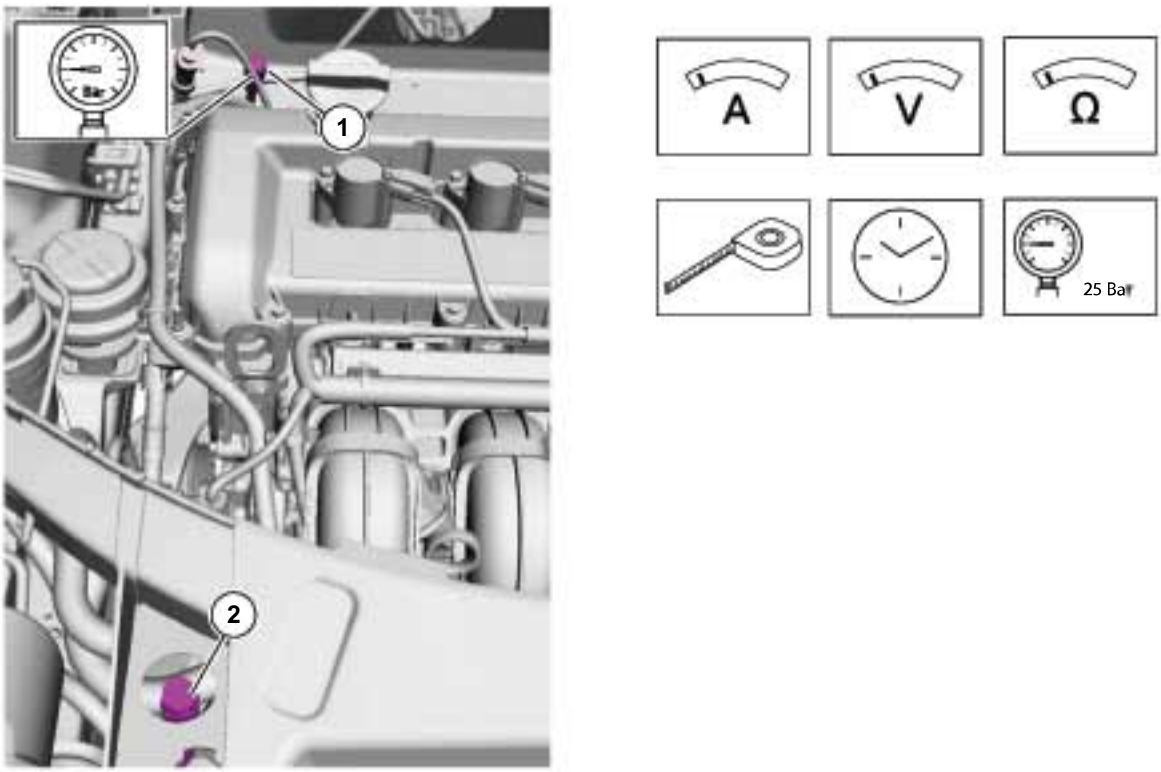

E84841

DESCRIPTION AND OPERATION

Special Tools and Torque Figure(s)

Special tools will be shown with the tool number in the illustration. The special tool number(s), general equipment, material(s) and torque figure(s) used for the procedure step will be shown in the text column.

How to Use This Manual - Diagnosis and Testing procedures

This manual covers diagnosis and testing, service and repair procedures.

This manual is structured into groups and sections, with specific system sections collected together under their relevant group.

A group covers a specific portion of the vehicle. The manual is divided into five groups, General Information, Chassis, Powertrain, Electrical and Body and Paint. The number of the group is the first number of a section number.

Pages at the start of the manual list all sections available. Each section has a contents list detailing Specifications, Description and Operation, Diagnosis and Testing, In Vehicle Repairs, Disassembly and Assembly, Removal and Installation.

If components need to be removed or disassembled in sequence, the sequence will be identified numerically in a graphic and the corresponding text will be numbered accordingly.

All left and right-hand references to the vehicle are taken from a position sitting in the driver seat looking forward.

All left and right-hand references to the engine are taken from a position at the flywheel looking towards the front camshaft pulley.

Where appropriate, instructions will be given for the use of the diagnostic tool.

Inspection and Verification

Visual Inspection Charts, Symptom Charts and other information charts (such as diagnostic routines) or supplement test procedures with technical specifications will navigate the user to a specific test procedure.

Symptom Chart

The symptom chart indicates symptoms, sources and actions to address a condition.

Pinpoint Tests

For electrical systems, pinpoint test steps are used to identify the source of a concern in a logical, step-by-step manner. pinpoint tests have two columns: CONDITIONS and DETAILS/RESULTS/ACTIONS.

The CONDITIONS column is used exclusively for graphics and icons (with or without captions) and the DETAILS/RESULTS/ACTIONS column provides direction to another test step or specific corrective actions.

The boxed numbers indicate the order in which the described action is to be performed.

Component Tests

A component test is used when a component is tested in multiple pinpoint tests, or if a procedure is too complicated to be formatted within a single page of the pinpoint test.

Graphics

Test graphics show the measurement or test to be performed in a test step.

A representative tester graphic is used for voltmeters and ohmmeters.

If multiple measurements are made in a single graphic, the test leads are drawn with a solid line until the test lead splits to indicate the multiple measurements, at which point dashed lines are used.

Breakout box-type testers are represented by a double circle test pin. Test pins are labeled with the pin number.

DESCRIPTION AND OPERATION

Symbols Glossary

Symbols are used inside the graphics and in the text area to enhance the information display.

Movement Symbols

Movement symbols provide detailed information to a required component movement. These component movements can be rotational or 1-3 dimensional movements.

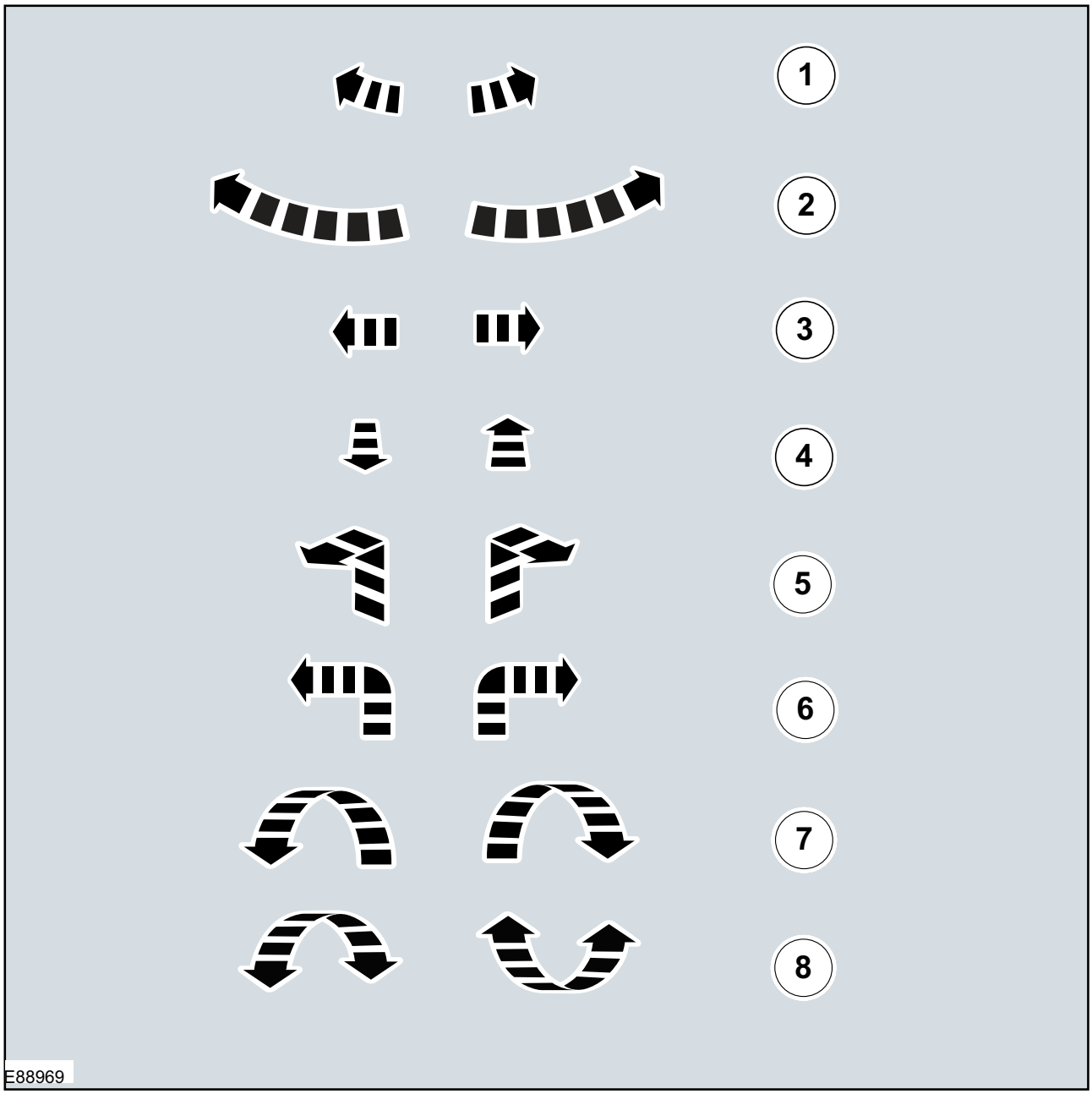

DESCRIPTION AND OPERATION

Item	Description
1	Minor component movement clockwise/counterclockwise
2	Major component movement clockwise/counterclockwise
3	Component movement to the left/right/up/down
4	Component movement towards/away
5	3 dimensional component movement

Item	Description
6	2 dimensional component movement
7	3 dimensional component rotation
8	3 dimensional component cycling

Turn Symbols

Turn symbols are used to provide further information on the direction or angle of component turns.

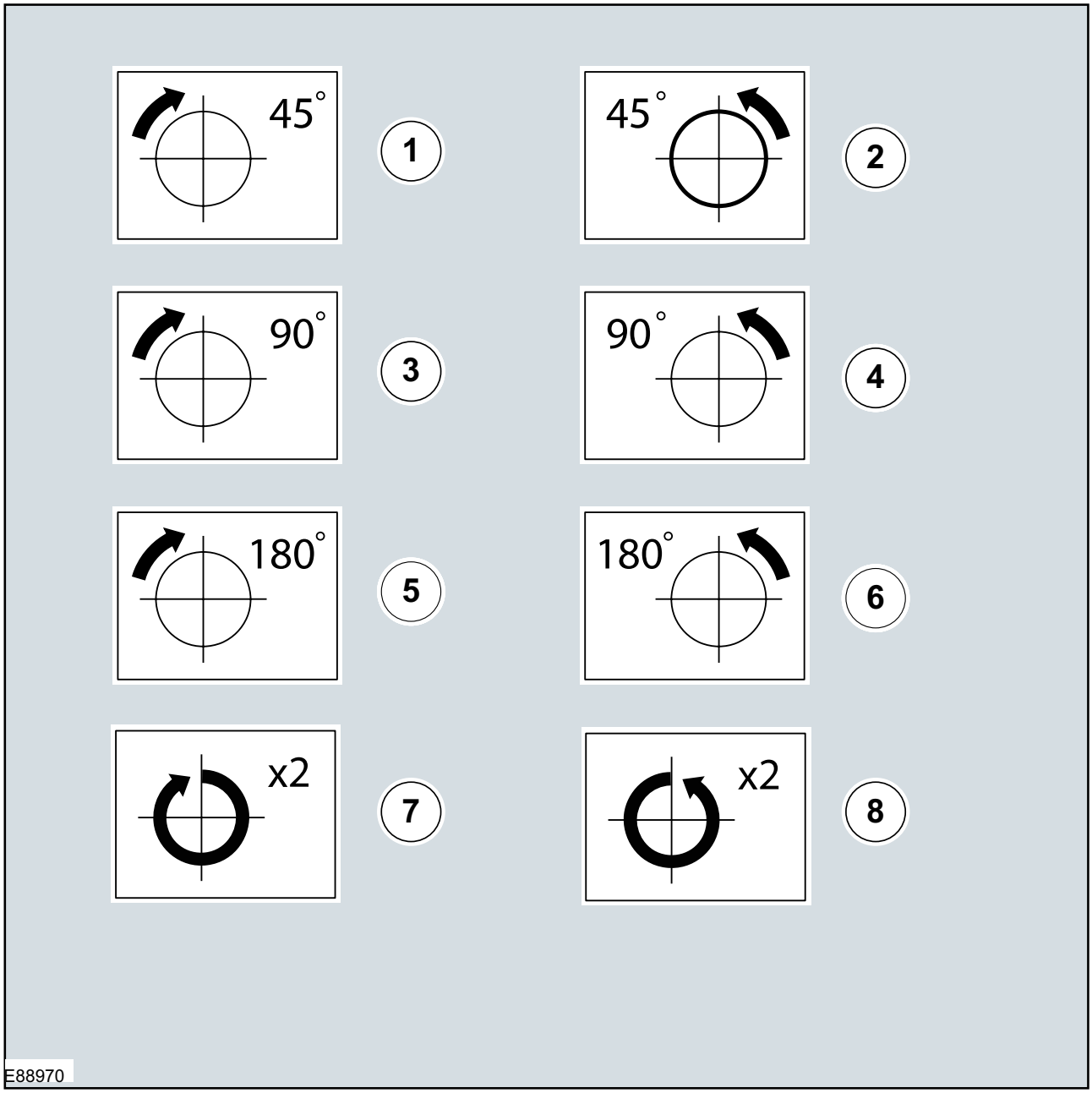

DESCRIPTION AND OPERATION

Item	Description
1	Turn the component clockwise through 45°
2	Turn the component counterclockwise through 45°
3	Turn the component clockwise through 90°
4	Turn the component counterclockwise through 90°
5	Turn the component clockwise through 180°

Item	Description
6	Turn the component counterclockwise through 180°
7	Turn the component clockwise through 2 complete turns
8	Turn the component counterclockwise through 2 complete turns

Steering Wheel Symbols

Steering wheel symbols are used to provide further information to a required steering wheel position or steering column lock status.

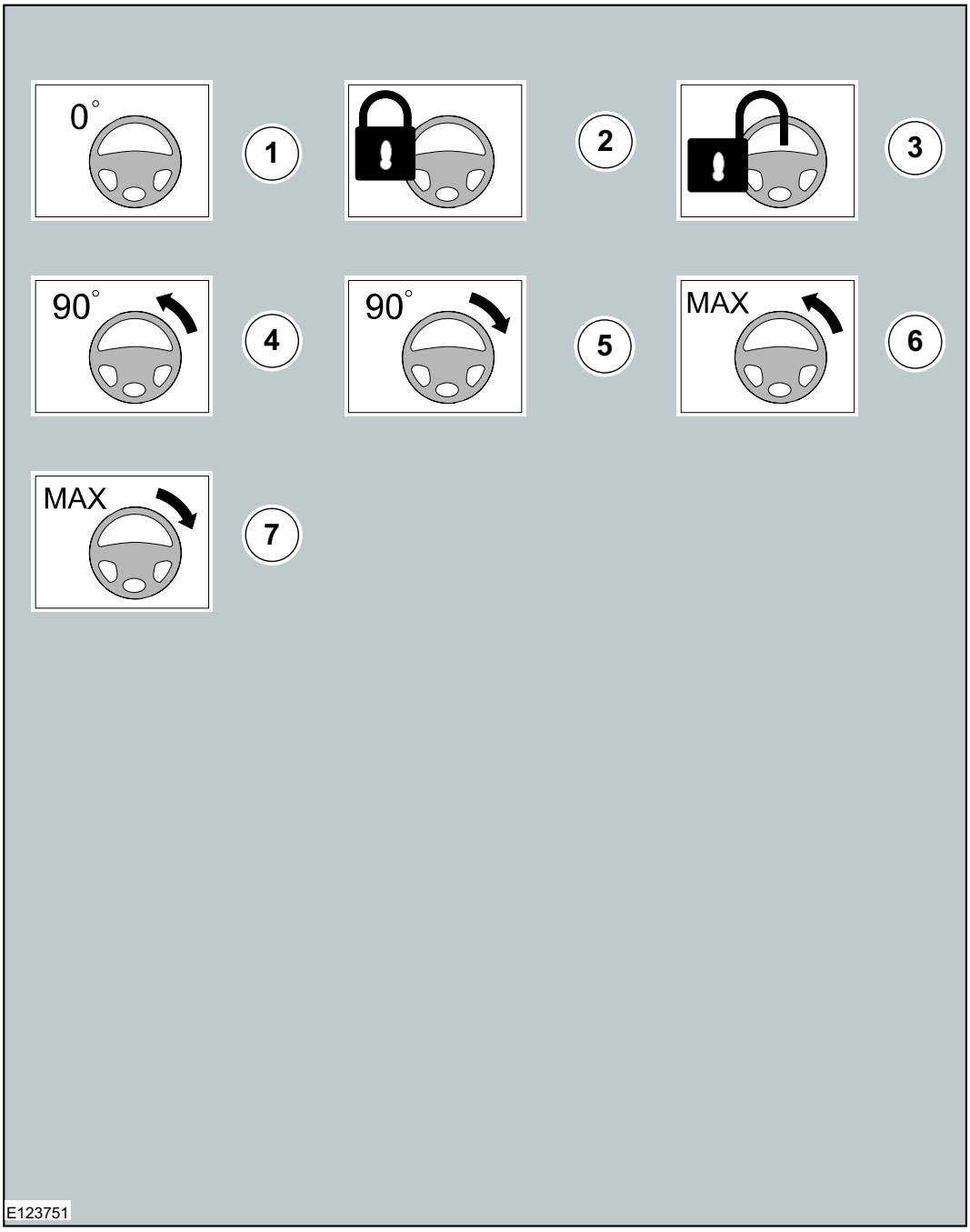

DESCRIPTION AND OPERATION

Item	Description
1	Steering wheel in straight ahead position
2	Steering column lock locked
3	Steering column lock unlocked
4	Turn the steering wheel to the 90° left position

Item	Description
5	Turn the steering wheel to the 90° right position
6	Turn the steering wheel to the left-hand end position
7	Turn the steering wheel to the right-hand end position

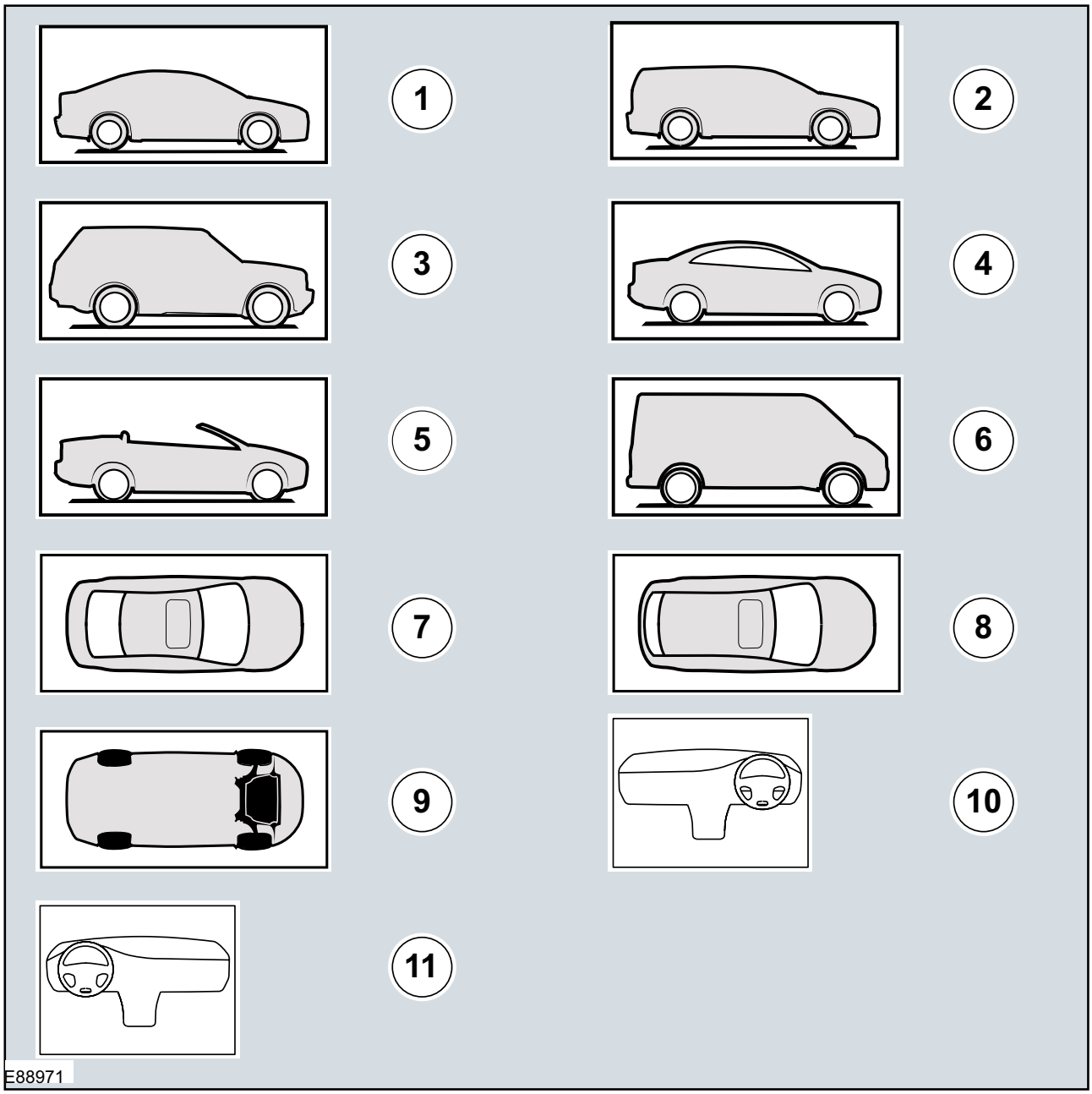

Item	Description
1	3, 4, 5-door body style
2	Wagon body style

Item	Description
3	Sports utility vehicle body style
4	Coupe body style

DESCRIPTION AND OPERATION

Item	Description
5	Convertible body style
6	Van body style
7	3, 4, 5-door body style - Top View
8	Wagon body style - Top View
9	Underview

Item	Description
10	Right-hand drive (RHD) vehicle
11	Left-hand drive (LHD) vehicle

Gearshift lever and selector lever position symbols

Gearshift lever and selector lever position symbols are used to show the lever position that is required to be selected to carry out a procedure step.

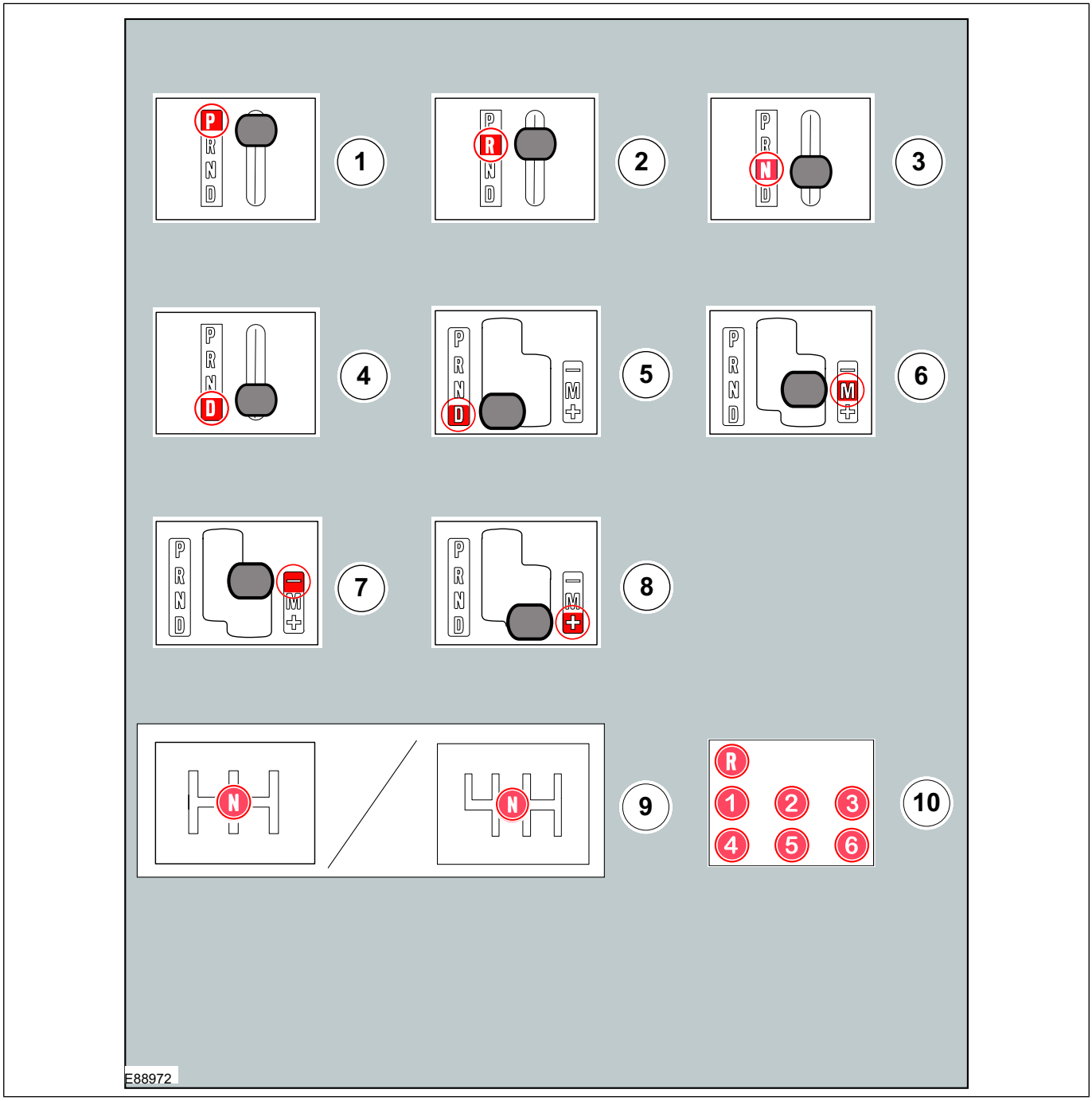

DESCRIPTION AND OPERATION

Item	Description
1	Set the selector lever to the park (P) position
2	Set the selector lever to the reverse (R) position
3	Set the selector lever to the neutral (N) position
4	Set the selector lever to the drive (D) position
5	Set the selector lever with manual shift pattern to the park (D) position
6	Set the selector lever with manual shift pattern to the manual (M) position

Item	Description
7	Set the selector lever with manual shift pattern to the shift down (-) position
8	Set the selector lever with manual shift pattern to the shift up (+) position
9	Set the gearshift lever to the neutral (N) position
10	Further gearshift lever positions that may appear in illustrations

Screwdriver symbols

The screwdriver symbols are used to show which screwdriver bit is recommended to carry out a procedure step.

DESCRIPTION AND OPERATION

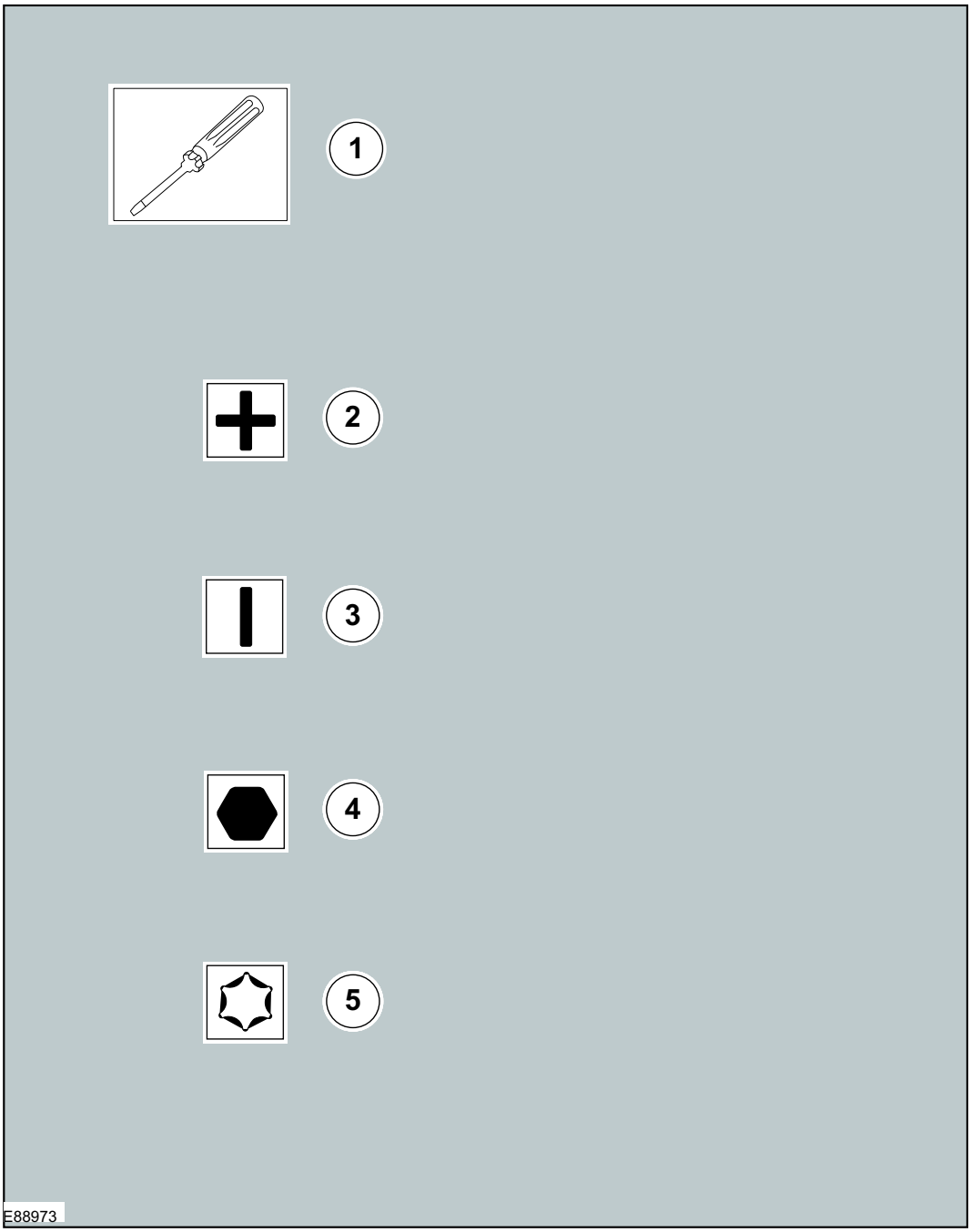

Item	Description
1	Screwdriver
2	Cross bladed screwdriver
3	Flat bladed screwdriver

Item	Description
4	Hexagonal screwdriver
5	TORX screwdriver

Pliers symbols

The pliers symbols are used to show which pliers is recommended to carry out a procedure step.

DESCRIPTION AND OPERATION

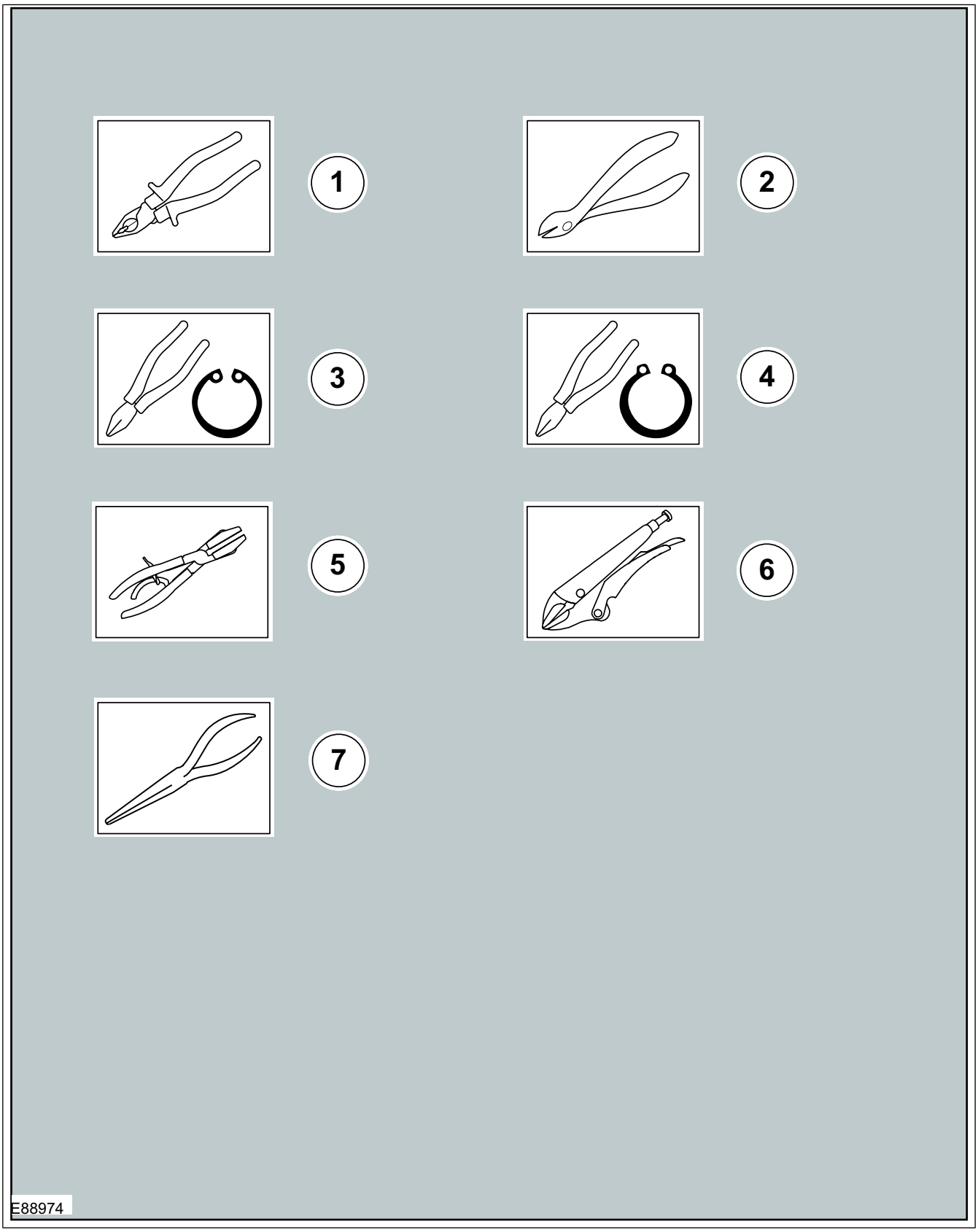

Item	Description
1	Combination pliers
2	Side cutter pliers

Item	Description
3	Securing ring pliers - inner
4	Securing ring pliers - outer

DESCRIPTION AND OPERATION

Item	Description
5	Hose clamp pliers
6	Locking pliers
7	Long nose pliers

Drill symbols

The drill symbols are used to show which type and size of drill bit is recommended to carry out a procedure step.

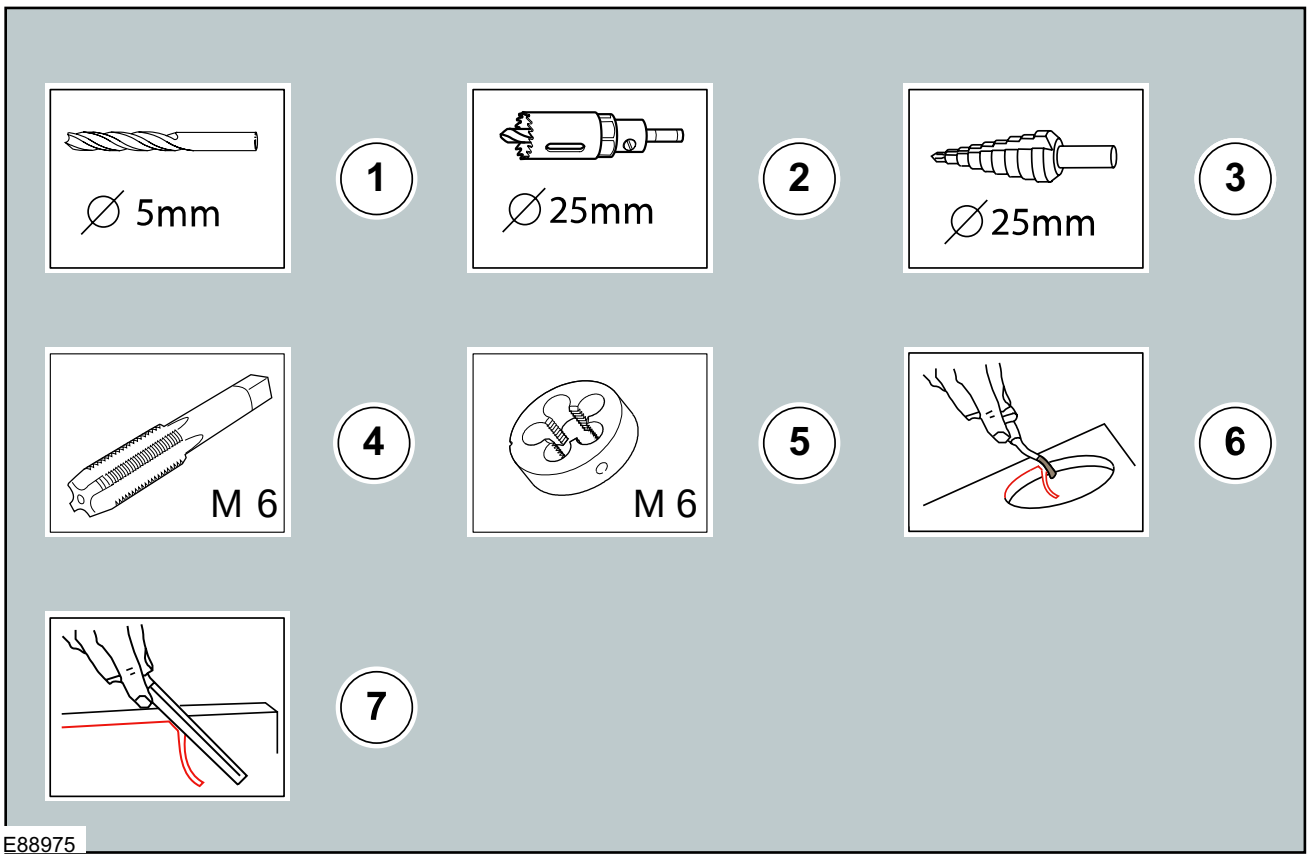

Item	Description
1	Drill bit with a specified diameter
2	Hole saw with a specified diameter
3	Stepped drill bit with a specified diameter
4	Tap with a specified diameter
5	Die with a specified diameter

Item	Description
6	Scraper for circular holes
7	Scraper for straight edges

Cutting tool symbols

The cutting tool symbols are used to show which type of cutting tool is recommended to carry out a procedure step.

DESCRIPTION AND OPERATION

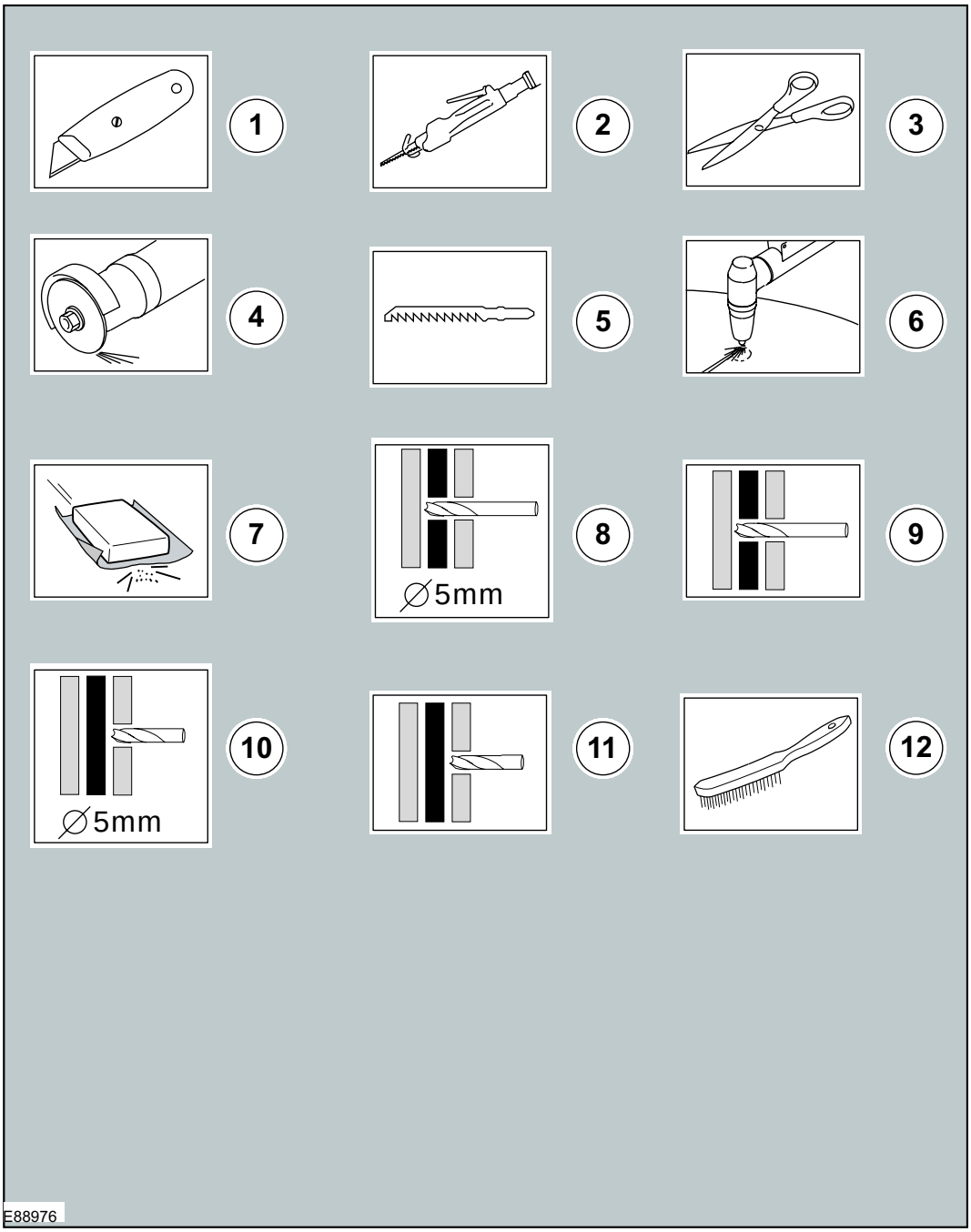

Item	Description
1	Cutting knife
2	Air body saw
3	Scissors
4	Grinder
5	Jig saw
6	Plasma cutter
7	Sanding Paper

Item	Description
8	Drill through the shown number of body panel layers with a specified diameter
9	Drill through the shown number of body panel layers with a suitable diameter
10	Drill through 1 body panel layer with a specified diameter
11	Drill through 1 body panel layer with a suitable diameter
12	Wire brush

DESCRIPTION AND OPERATION

Apply Chemical or load symbols

The apply chemical or load symbols are used to show where to apply which type of chemical or load to carry out a procedure step.

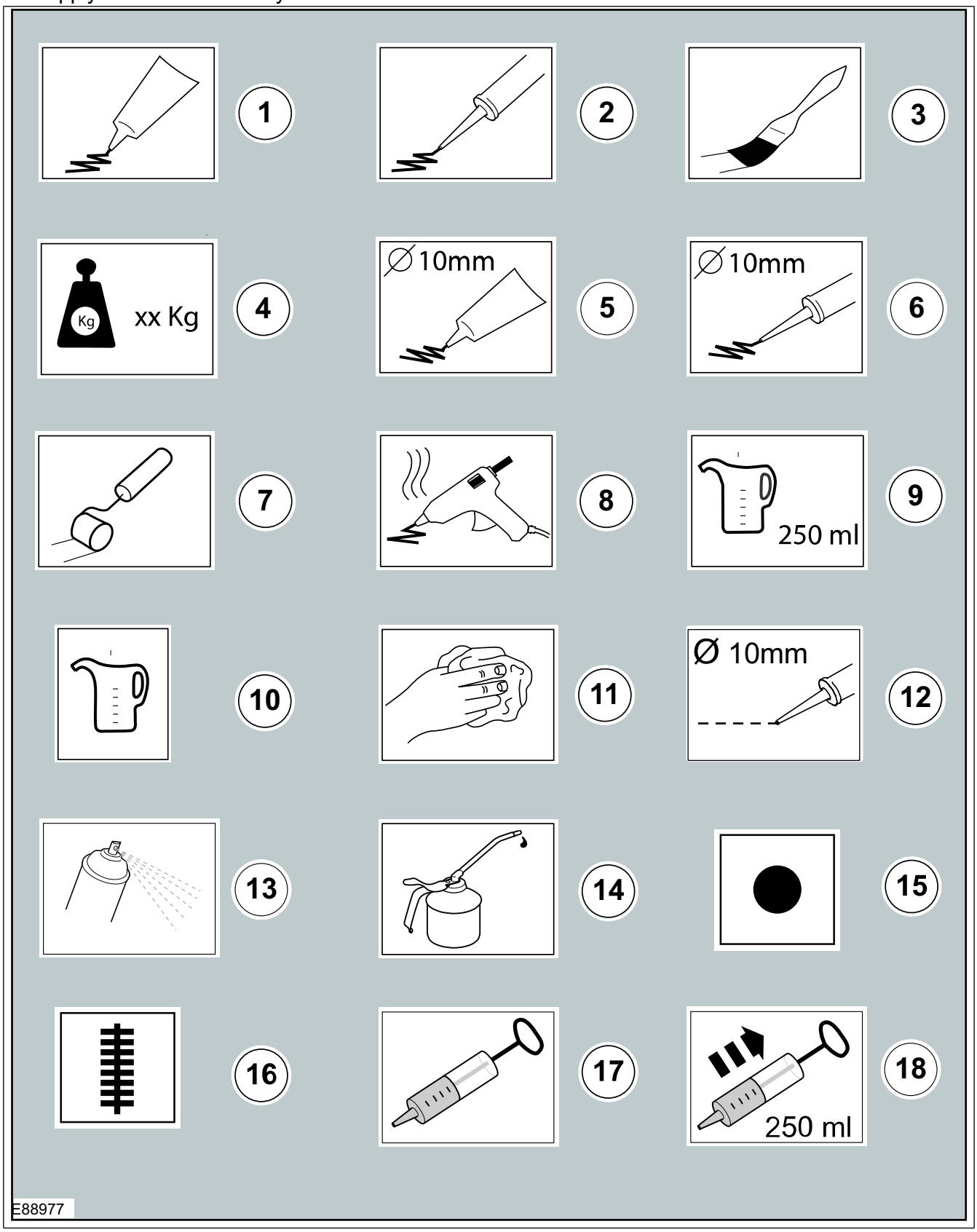

DESCRIPTION AND OPERATION

Item	Description
1	Apply the substance from the specified tube
2	Apply the substance from the specified cartridge
3	Apply the specified chemical with a brush
4	Apply the specified load to the specified component
5	Apply a bead with a specific diameter from the specified tube
6	Apply a bead with a specific diameter from the specified cartridge
7	Apply the specified chemical with a roller
8	Apply hot glue to the specified component
9	Apply the specified amount of fluid from the fluid can
10	Apply fluid from the fluid can
11	Clean the specified component with the specified material

Item	Description
12	Apply a broken bead from the specified tube
13	Apply the specified chemical from a spray can
14	Apply the specified lubricant to the specified component
15	Apply spot welds to the specified component
16	Apply a continuous weld to the specified component
17	Handle the fluid using a syringe
18	Extract the specified amount of fluid using a syringe

Measurement symbols

The measurement symbols are used to show where to measure which type of measurement to carry out a procedure step.

DESCRIPTION AND OPERATION

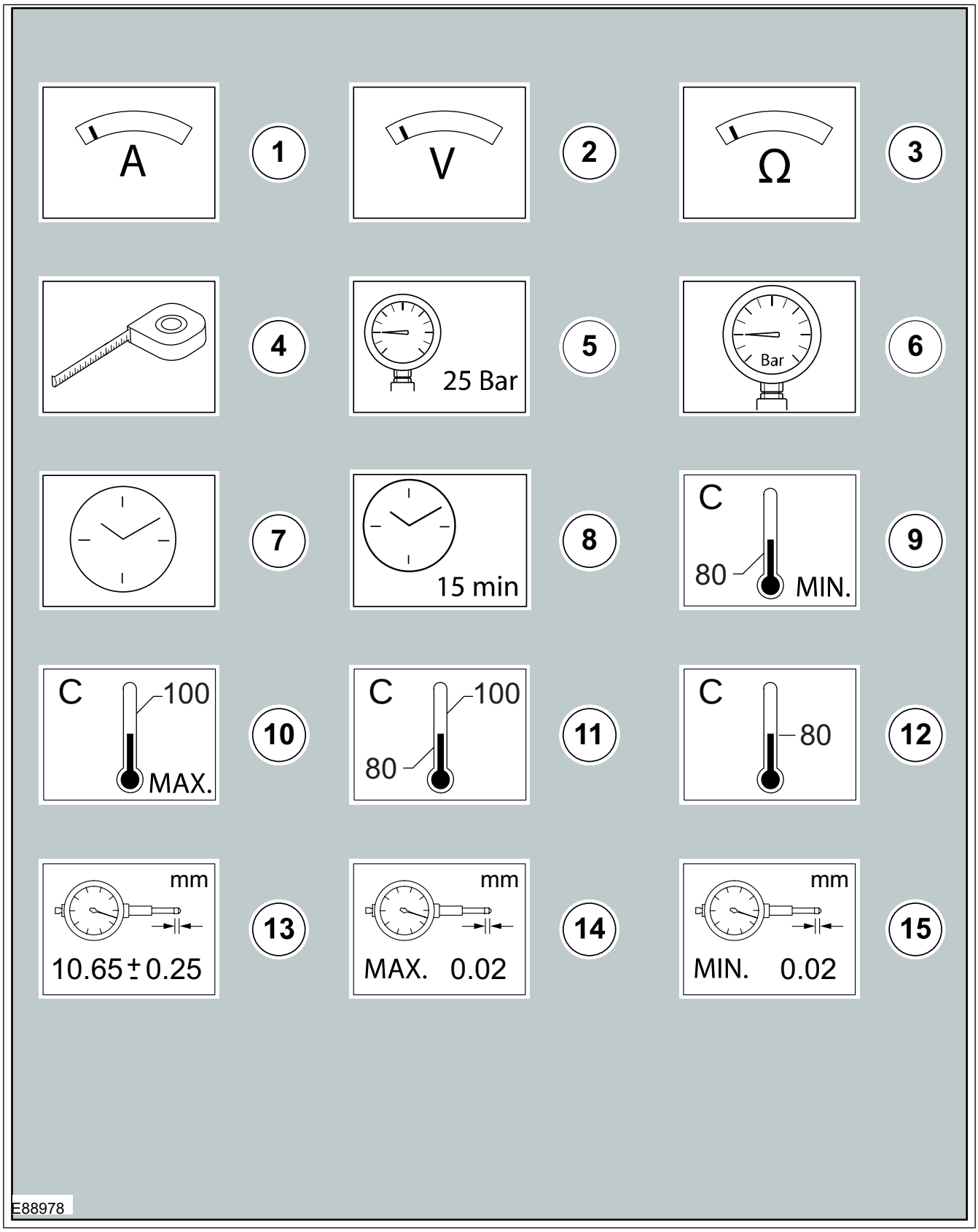

DESCRIPTION AND OPERATION

Item	Description
1	Measure the current using a digital multimeter
2	Measure the voltage using a digital multimeter
3	Measure the resistance using a digital multimeter
4	Measure the length/distance
5	Check that the specified pressure is available using a suitable pressure gauge
6	Measure the pressure at the specified port using a suitable pressure gauge
7	Measure the time using a suitable stopwatch
8	Wait for the specified period of time
9	The specified task requires the specified minimum temperature

Item	Description
10	The specified task requires the specified maximum temperature not to be exceeded
11	The specified task requires the specified temperature range
12	The specified task requires the specified temperature
13	Measure and check for the specified value using a dial indicator gauge
14	Measure and check for the specified MAX value using a dial indicator gauge
15	Measure and check for the specified MIN value using a dial indicator gauge

General equipment symbols

The general equipment symbols are used to show where to use which type of general equipment to carry out a procedure step.

DESCRIPTION AND OPERATION

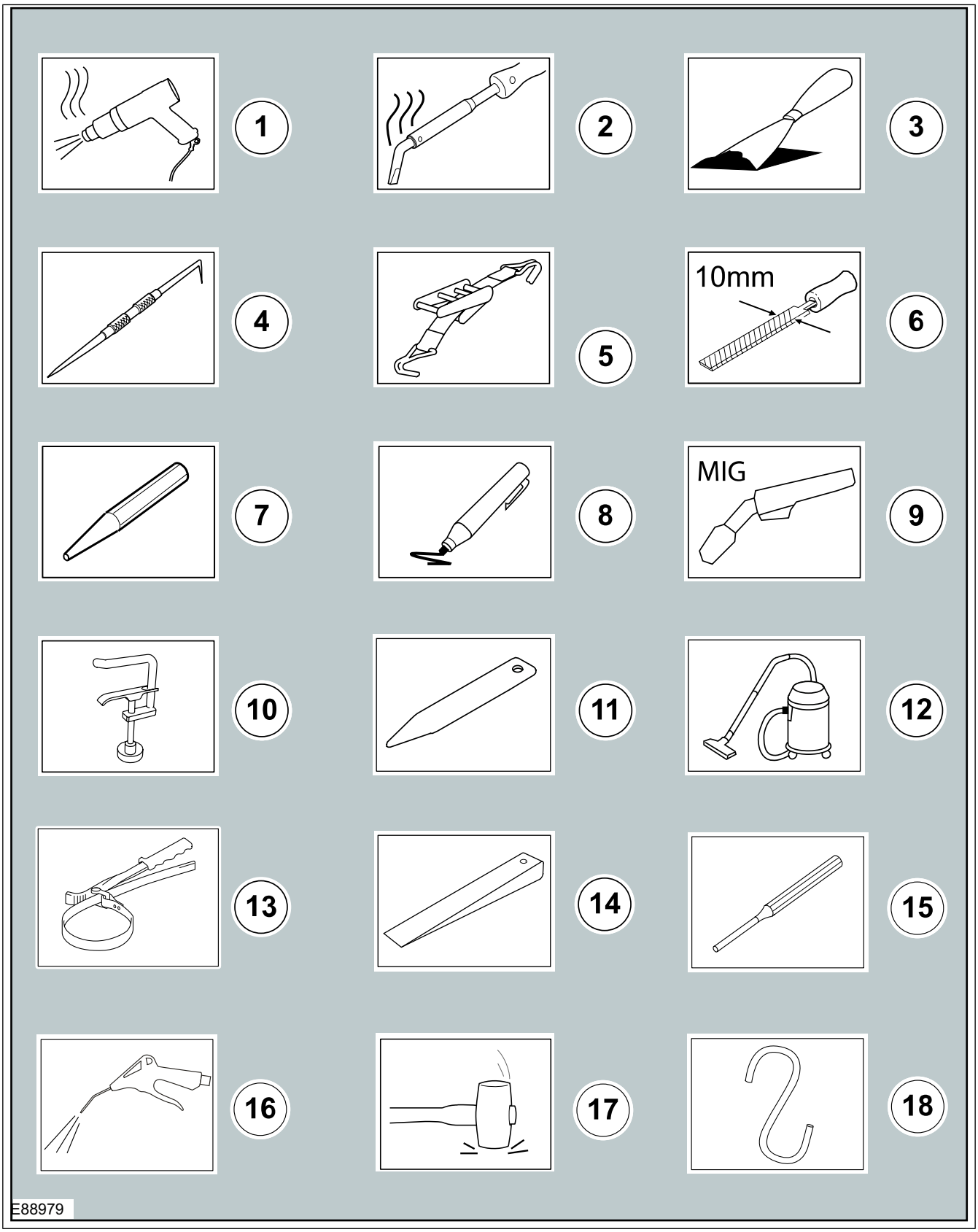

Item	Description
1	Hot air gun
2	Soldering iron

Item	Description
3	Scraper
4	Scriber

DESCRIPTION AND OPERATION

Item	Description
5	Securing strap
6	File with a specified size
7	Center punch
8	Marker
9	Metal inert gas (MIG) welding equipment
10	Hose clamp
11	Interior trim remover
12	Vacuum cleaner
13	Strap wrench

Item	Description
14	Wedge
15	Pin Punch
16	Air blow gun
17	Mallet
18	Relocate and support the component

Material symbols

The material symbols are used to show where to use which type of material to carry out a procedure step.

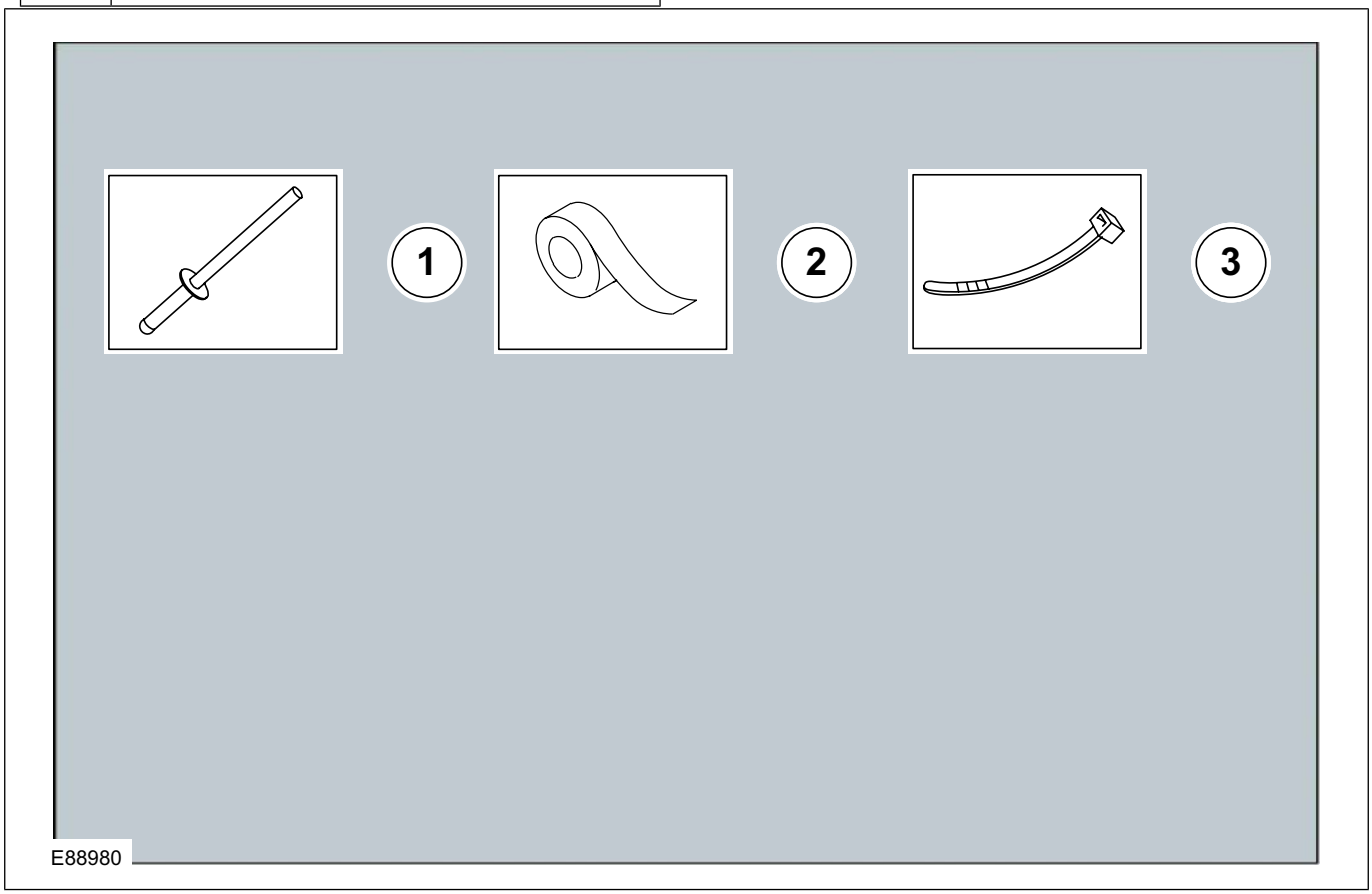

Item	Description
1	Remove/Install the specified blind rivet
2	Apply tape to the specified component/area
3	Remove/Install the specified cable tie

Miscellaneous symbols

These symbols provide further information that is required to carry out a procedure step.

DESCRIPTION AND OPERATION

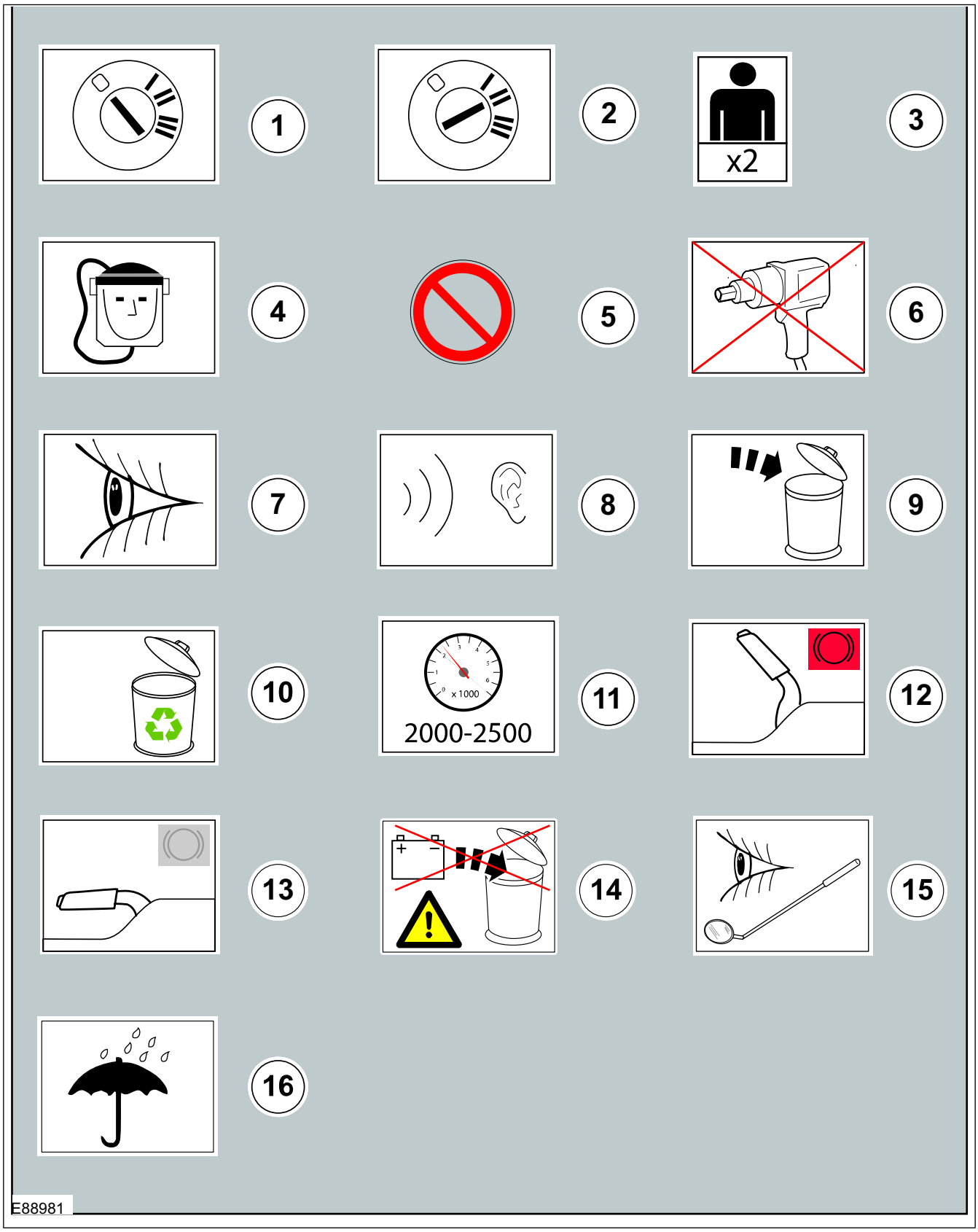

Item	Description
1	Set the ignition switch to the 0 position
2	Set the ignition switch to the II position

Item	Description
3	The procedure step requires the aid of the specified number of supporting technicians

DESCRIPTION AND OPERATION

Item	Description
4	Self contained breathing apparatus
5	General prohibition used in combination with another symbol
6	Do not use power tools
7	Visual check
8	Noise check
9	Dispose the specified component
10	Replaced by item 9 (Dispose the specified component)
11	Set the engine speed to the specified value

Item	Description
12	Fully apply the parking brake lever
13	Fully release the parking brake lever
14	Do not dispose of batteries into the waste bin
15	Visual check using a mirror
16	Area/component must be dry

Mandatory Protective equipment - Health and safety symbols

The protective equipment symbols advise to use a mandatory protective equipment to avoid or at least reduce possible health and safety risks.

DESCRIPTION AND OPERATION

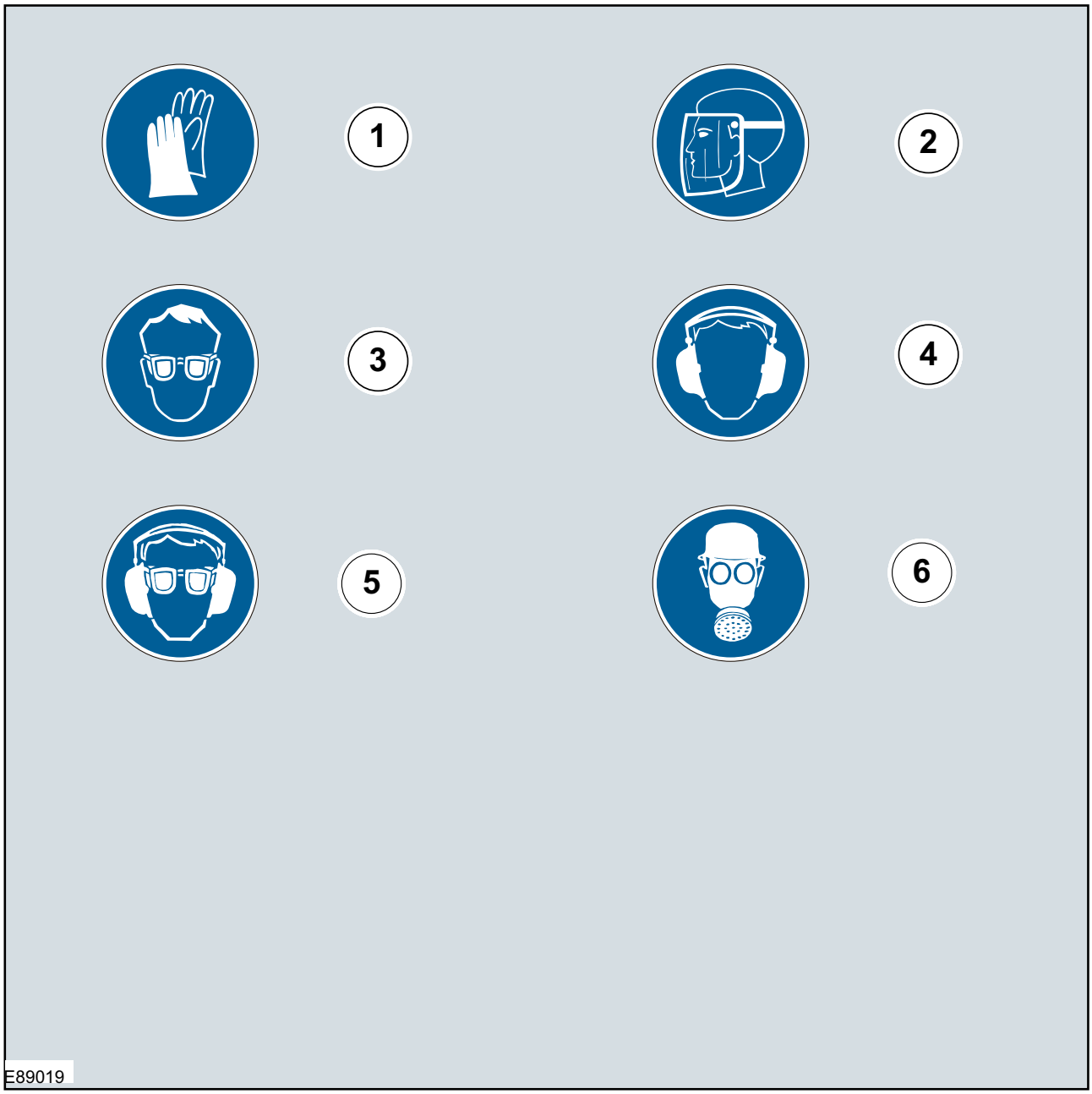

Item	Description
1	Wear protective gloves
2	Wear face guard
3	Wear safety goggles
4	Wear ear protectors
5	Wear safety goggles and ear protectors
6	Wear a respirator

Prohibition - Health and safety symbols and component damage

The prohibition symbols are used to prohibit the specified actions to avoid or at least reduce possible component damage and health and safety risks.

DESCRIPTION AND OPERATION

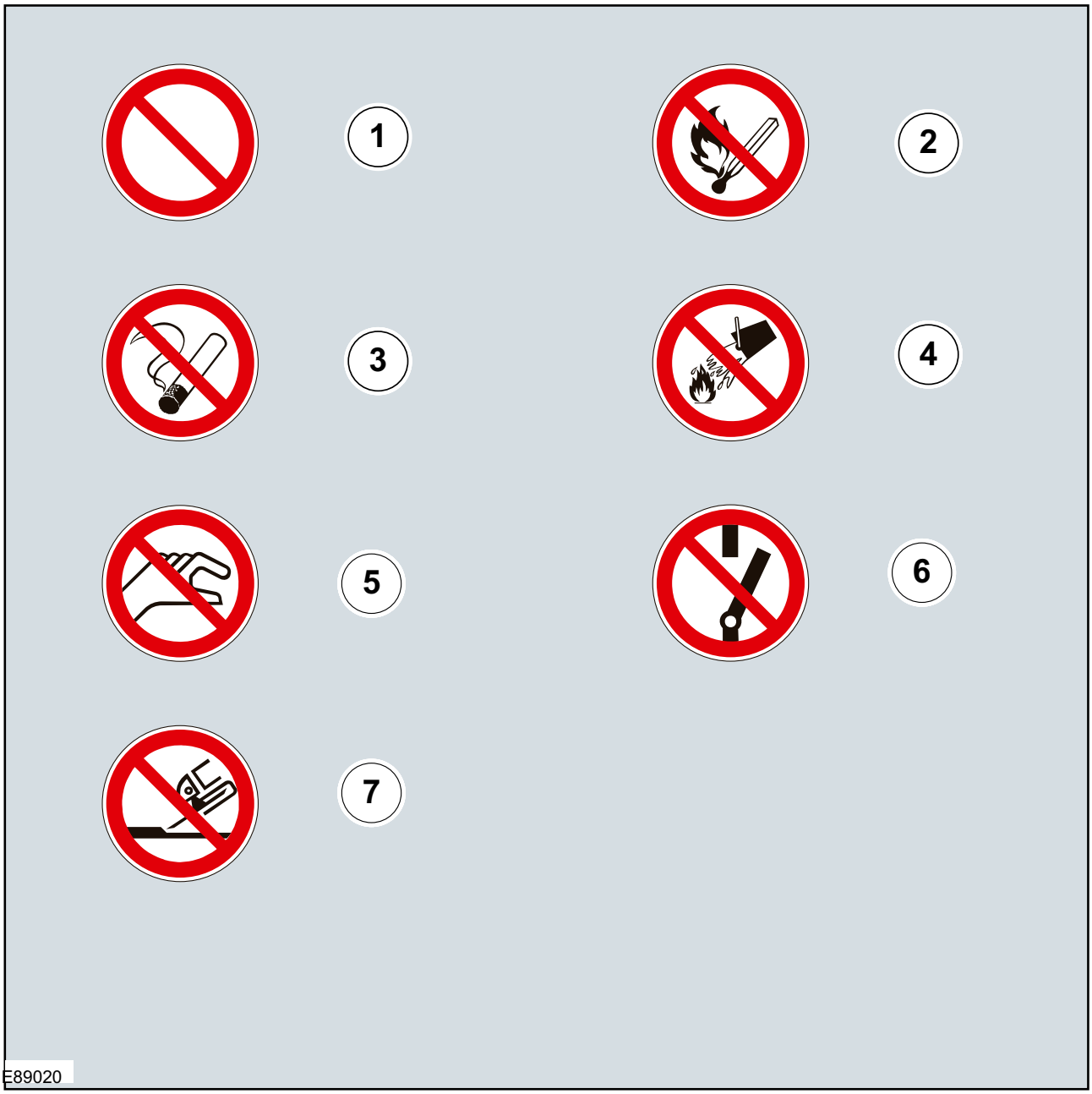

Item	Description
1	General prohibition symbol
2	No naked flames
3	No smoking
4	No water
5	Do not touch

Item	Description
6	Do not switch
7	No grinding

Warning symbols - Health and safety and component damage

The warning symbols are used to advise on hazardous conditions to avoid or at least reduce possible component damage and health and safety risks.

DESCRIPTION AND OPERATION

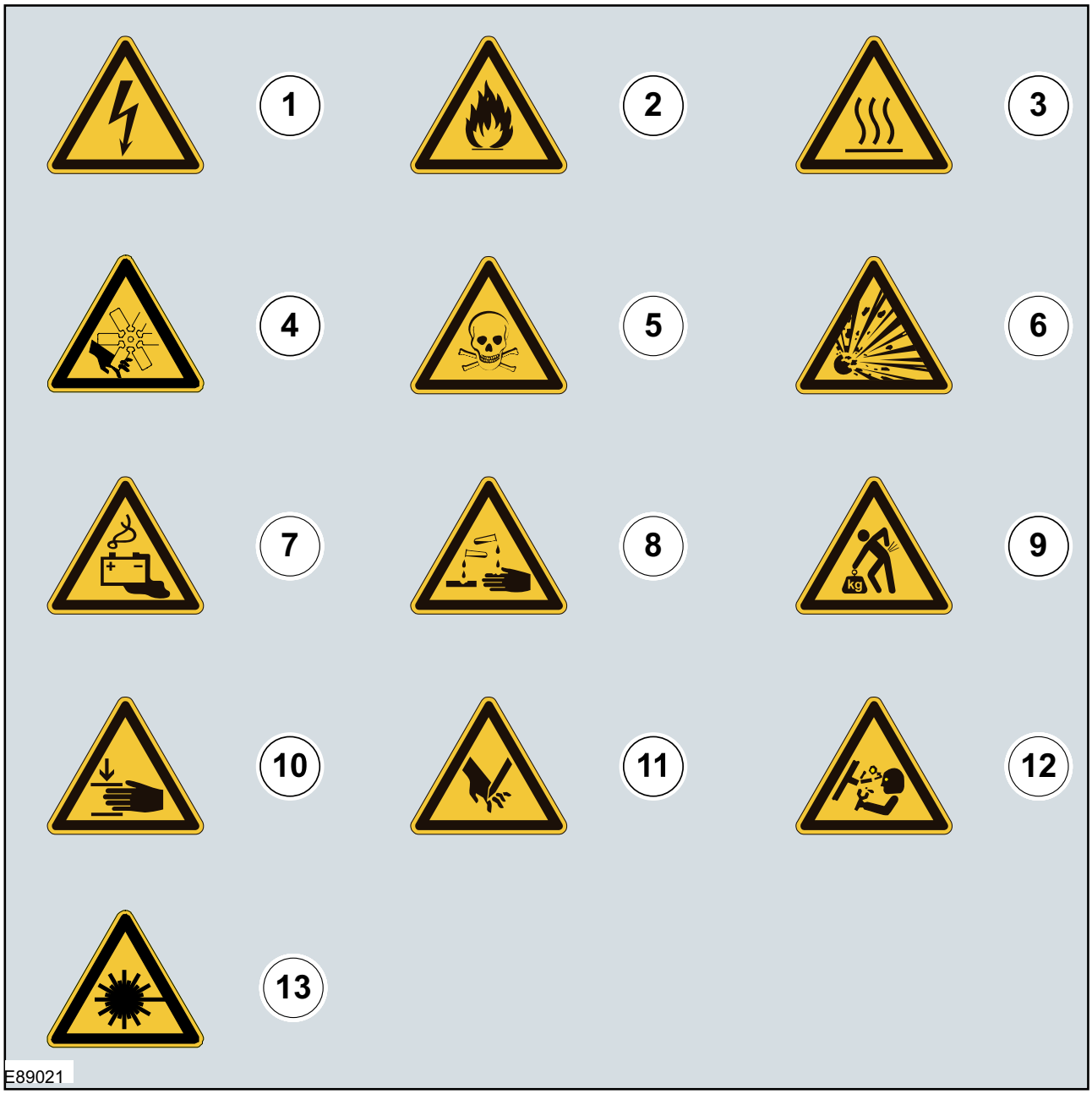

Item	Description
1	Hazardous voltage/Electrical shock/Electrocution
2	Fire Hazard/Highly flammable
3	Burn hazard/Hot surface
4	Automatic start-up
5	Toxic
6	Explosive material
7	Battery hazard

Item	Description
8	Corrosive material
9	Lifting hazard
10	Hand crush/Force from above
11	Cutting of fingers or hand
12	Pressure hazard
13	Invisible laser radiation. Do not view directly with optical instruments (magnifiers). Class 1M laser product

DESCRIPTION AND OPERATION

Control Diagram symbols - Description and Operation procedures

These symbols provide further information on the type of connectivity, direction of flow or type of data bus of a system.

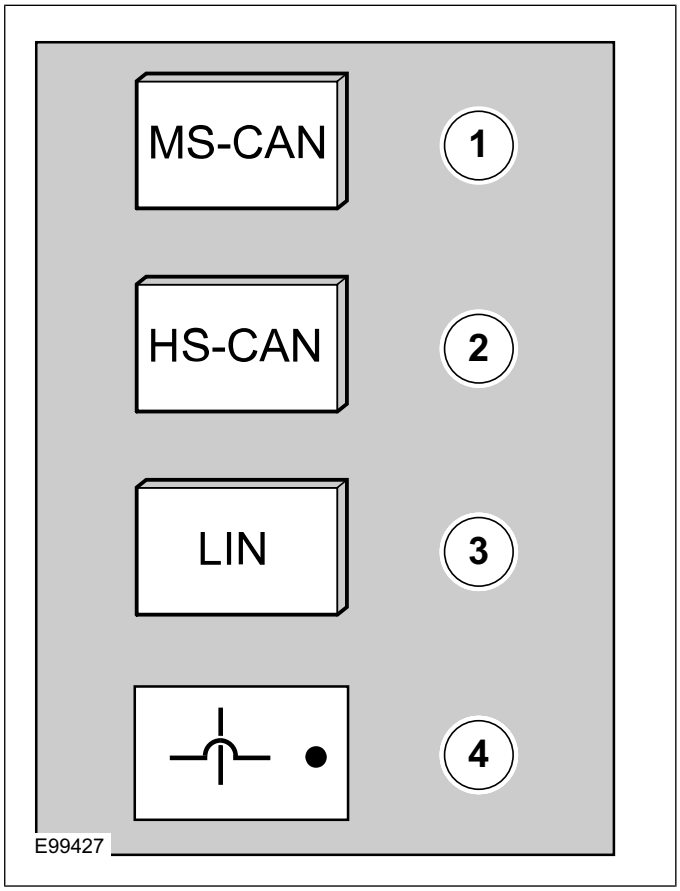

Item	Description
1	Mid-speed Controller Area Network (CAN)
2	High-speed Controller Area Network (CAN)
3	Local Interconnect Network (LIN)
4	Wires crossing not connected

DESCRIPTION AND OPERATION

Health and Safety Precautions

Introduction

Many of the procedures associated with vehicle maintenance and repair involve physical hazards or other risks to health. This subsection lists, alphabetically, some of these hazardous operations and the materials and equipment associated with them. Precautions necessary to avoid these hazards are identified.

The list is not exhaustive and all operations and procedures, and the handling of materials, should be carried out with health and safety in mind.

Before using any product the Materials Safety Data Sheet supplied by the manufacturer or supplier should be consulted.

Acids and Alkalis

See also Battery Acids.

For example caustic soda, sulphuric acid.

Used in batteries and cleaning materials.

Irritant and corrosive to the skin, eyes, nose and throat. Cause burns. Can destroy ordinary protective clothing.

Avoid splashes to the skin, eyes and clothing. Wear suitable protective impervious apron, gloves and goggles. Do not breath mists.

Make sure access to eye wash bottles, shower and soap are readily available for splashing accidents.

Display Eye Hazard sign.

Air Bags

See also Fire, Chemical Materials.

Highly flammable, explosive – observe No Smoking policy.

Used as a safety restraint system mounted in the steering wheel and passenger side of the instrument panel.

The inflator contains a high-energetic propellant which, when ignited, produces a VERY HOT GAS (2500°C).

The gas generant used in air bags is Sodium Azide. This material is hermetically sealed in the module and is completely consumed during deployment. No attempt should be made to open an air bag inflator as this will lead to the risk of exposure to Sodium Azide. If a gas generator is ruptured, full protective clothing should be worn when dealing with the spillage.

After normal deployment, gloves and safety goggles must be worn during the handling process.

Deployed air bags should be disposed of in a plastic bag in accordance with local regulations at an approved chemical waste site.

Following any direct contact with gas generant.

- wash affected areas thoroughly with water.
- seek medical assistance if necessary.

Air Bags - Do's

- Do store modules in an upright position.
- Do keep modules dry.
- Do carry modules with the cover side pointing away from the body.
- Do place modules with their cover side upwards.
- Do carefully inspect modules for damage.
- Do stand to one side when connecting modules.
- Do make sure all test equipment is properly calibrated and maintained.
- Do wash hands after handling deployed air bags.

Air Bags - Do Nots

- Do not store highly flammable material together with modules or gas generators.
- Do not store gas generators at temperatures exceeding 80°C.
- Do not store modules upside down.
- Do not attempt to open a gas generator housing.
- Do not expose gas generators to open flame or sources of heat.
- Do not place anything on top of a module cover.
- Do not use damaged modules.
- Do not touch a fired module or gas generator for at least 10 minutes.
- Do not use any electrical probes on the wiring circuit.

Air Conditioning Refrigerant

See also Chlorofluorocarbon, Chemical Materials

Highly flammable, combustible – observe No Smoking policy.

DESCRIPTION AND OPERATION

Skin contact may result in frostbite.

Instructions given by the manufacturer must be followed. Avoid naked lights, wear suitable protective gloves and goggles.

If refrigerant comes into contact with the skin or eyes, immediately rinse the affected areas with water. Eyes should also be rinsed with an appropriate irrigation solution and should not be rubbed. SEEK MEDICAL ASSISTANCE IF NECESSARY.

Air Conditioning Refrigerant - Do Nots

- Do not expose refrigerant bottles to sunlight or heat.
- Do not stand refrigerant bottles upright; when filling, hold them with the valve downwards.
- Do not expose refrigerant bottles to frost.
- Do not drop refrigerant bottles.
- Do not vent refrigerant to atmosphere under any circumstance.
- Do not mix refrigerants, for example R12 (Freon) and R134a.

Adhesives and Sealers

See also Fire, Chemical Materials.

Highly flammable, flammable, combustible – observe No Smoking policy.

Generally should be stored in No Smoking areas. Cleanliness and tidiness in use should be observed, for example disposable paper covering benches; should be dispensed from applicators where possible; containers, including secondary containers, should be labeled appropriately.

Solvent-based Adhesives/Sealers - See Solvents

Follow manufacturers instructions.

Water-based Adhesives/Sealers

Those based on polymer emulsions and rubber latexes may contain small amounts of volatile toxic and harmful chemicals. Skin and eye contact should be avoided and adequate ventilation provided during use.

Hot Melt Adhesives

In the solid state, they are safe. In the molten state they may cause burns and health hazards may arise from the inhalation of toxic fumes.

Use appropriate protective clothing and a thermostatically controlled heater with a thermal cut-out and adequate extraction.

Resin-based Adhesives/Sealers, for example Epoxide and Formaldehyde Resin-based

Mixing should be carried out in well ventilated areas, as harmful or toxic volatile chemicals may be released.

Skin contact with uncured resins and hardeners can result in irritation, dermatitis, and absorption of toxic or harmful chemicals through the skin. Splashes can damage the eyes.

Provide adequate ventilation and avoid skin and eye contact.

Anaerobic, Cyanoacrylate (super-glues) and other Acrylic Adhesives

Many are irritant, sensitizing or harmful to the skin and respiratory tract. Some are eye irritants.

Skin and eye contact should be avoided and the manufacturers instructions followed.

Cyanoacrylate adhesives (super-glues) MUST NOT contact the skin or eyes. If skin or eye tissue is bonded, cover with a clean moist pad and SEEK IMMEDIATE MEDICAL ATTENTION. Do not attempt to pull tissue apart. Use in well ventilated areas as vapors can cause irritation to the nose and eyes.

For two-pack systems see Resin-based and Isocyanate Adhesives/Sealers.

Isocyanate (Polyurethane) Adhesives/Sealers

See also Resin-based Adhesives.

Individuals suffering from asthma or respiratory allergies should not work with or near these materials as sensitivity reactions can occur.

Over exposure is irritating to the eyes and respiratory system. Excessive concentrations may produce effects on the nervous system including

DESCRIPTION AND OPERATION

drowsiness. In extreme cases, loss of consciousness may result. Long term exposure to vapor concentrations may result in adverse health effects.

Prolonged contact with the skin may have a defatting effect which may lead to skin irritation and in some cases, dermatitis.

Splashes entering the eye will cause discomfort and possible damage.

Any spraying should preferably be carried out in exhaust ventilated booths, removing vapors and spray droplets from the breathing zone.

Wear appropriate gloves, eye and respiratory protection.

Antifreeze

See also Fire, Solvents.

For example isopropanol, ethylene glycol, methanol.

Highly flammable, flammable, combustible.

Used in vehicle coolant systems, brake air pressure systems, screenwash solutions.

Vapors may be given off from coolant antifreeze (glycol) when heated. Avoid breathing these vapors.

Antifreeze may be absorbed through the skin in toxic or harmful quantities. Antifreeze, if swallowed, can be fatal and MEDICAL ATTENTION SHOULD BE SOUGHT IMMEDIATELY.

These products must not be used in any cooling or industrial water system that is connected or linked to general, food preparation or drinking water supplies.

Asbestos

See also Warning Symbols on Vehicles at the end of this subsection.

Breathing asbestos dust may cause lung damage or, in some cases, cancer.

Used in brake and clutch linings, transmission brake bands and gaskets.

The use of drum cleaning units, vacuum cleaning or damp wiping is preferred.

Asbestos dust waste should be dampened, placed in a sealed container and marked for safe disposal. If any cutting or drilling is attempted on materials containing asbestos the item should be dampened and only hand tools or low speed power tools used.

Battery Acids

See also Acids and Alkalis.

Gases released during charging are explosive. Never use naked flames or allow sparks near charging or recently charged batteries.

Make sure there is adequate ventilation.

Brake and Clutch Linings and Pads

See Asbestos.

Brake Fluids (Polyalkylene Glycols)

See also Fire.

Splashes to the skin and eyes are slightly irritating. Avoid skin and eye contact as far as possible. Inhalation vapor hazards do not arise at ambient temperatures because of the very low vapor pressure.

Brazing

See Welding.

Chemical Materials

See also Legal Aspects.

Chemical materials such as solvents, sealers, adhesives, paints, resin foams, battery acids, antifreeze, brake fluids, fuels, oils and grease should always be used with caution and stored and handled with care. They may be toxic, harmful, corrosive, irritant or highly flammable and give rise to hazardous fumes and dusts.

The effects of excessive exposure to chemicals may be immediate or delayed; briefly experienced or permanent; cumulative; superficial; life threatening; or may reduce life expectancy.

Chemical Materials - Do's

– Do carefully read and observe hazard and precaution warnings given on material containers (labels) and in any accompanying leaflets, posters or other instructions. Material

DESCRIPTION AND OPERATION

health and safety data sheets can be obtained from manufacturers.

- Do remove chemical materials from the skin and clothing as soon as practicable after soiling. Change heavily soiled clothing and have it cleaned.
- Do organize work practices and protective clothing to avoid soiling of the skin and eyes; breathing vapors, aerosols, dusts or fumes; inadequate container labeling; fire and explosion hazards.
- Do wash before job breaks, before eating, smoking, drinking or using toilet facilities when handling chemical materials.
- Do keep work areas clean, uncluttered and free of spills.
- Do store chemical materials according to national and local regulations.
- Do keep chemical materials out of the reach of children.

Chemical Materials - Do Nots

- Do not mix chemical materials except under the manufacturers instructions; some chemicals can form other toxic or harmful chemicals, give off toxic or harmful fumes or become explosive when mixed together.
- Do not spray chemical materials, particularly those based on solvents, in confined spaces, for example when people are inside a vehicle.
- Do not apply heat or flame to chemical materials except under the manufacturers instructions. Some are highly flammable and some may release toxic or harmful fumes.
- Do not leave containers open. Fumes given off can build up to toxic, harmful or explosive concentrations. Some fumes are heavier than air and will accumulate in confined areas such as pits.
- Do not transfer chemical materials to unlabelled containers.
- Do not clean hands or clothing with chemicals. Chemicals, particularly solvents and fuels, will dry the skin and may cause irritation leading to dermatitis or be absorbed through the skin in toxic or harmful quantities.
- Do not use emptied containers for other materials except when they have been cleaned under supervised conditions.
- Do not sniff or smell chemical materials. Brief exposure to high concentrations of fumes can be toxic or harmful.

Chlorofluorocarbons (CFC)

There is concern in the scientific community that CFCs and Halons are depleting the upper ozone layer which filters out harmful ultraviolet radiation. Decreased filtration of ultraviolet radiation may result in increases in skin cancer, cataracts and immune system suppression in humans, as well as decreased productivity of crops and aquatic systems.

CFCs are used primarily as refrigerants in vehicle air conditioning systems and as aerosol propellants. Halons are used as fire extinguishants.

Clutch Fluids

See Brake fluids.

Clutch Linings and Pads

See Asbestos.

Corrosion Protection Materials

See also Solvents, Fire.

Highly flammable, flammable – observe No Smoking policy.

These materials are varied and the manufacturers instructions must be followed. They may contain solvents, resins or petroleum products. Skin and eye contact should be avoided. They should only be sprayed in conditions of adequate ventilation and not in confined spaces.

Cutting

See Welding.

Dewaxing

See Solvents and Fuels (Kerosene).

DESCRIPTION AND OPERATION

Dusts

Powder, dusts or clouds may be irritant, harmful or toxic. Avoid breathing dusts from powdery chemical materials or those arising from dry abrasion operations. Wear respiratory protection if ventilation is inadequate.

Fine dusts of combustible material can present an explosion hazard. Avoid explosive limits and sources of ignition.

Electric Shock

Electric shock can result from the use of faulty electrical equipment or from the misuse of equipment in good condition.

Make sure that electrical equipment is maintained in good condition and frequently tested. Faulty equipment should be labeled and preferably removed from the workstation.

Make sure that flexes, cables, plugs and sockets are not frayed, kinked, cut, cracked or otherwise damaged.

Make sure that electrical equipment and flexes do not come into contact with water.

Make sure that electrical equipment is protected by the correct rated fuse.

Never misuse electrical equipment and never use equipment that is in any way faulty. The results could be fatal.

Make sure that the cables of mobile electrical equipment cannot get trapped and damaged, such as in a vehicle hoist.

Make sure that the designated electrical workers are trained in basic First Aid.

In cases of electrocution:

- switch off the power supply before approaching the victim.
- if this is not possible push or drag the victim from the source of electricity using dry non-conductive material.
- commence resuscitation if trained to do so.
- SUMMON MEDICAL ASSISTANCE.

Engine Oils

See Lubricants and Grease.

Exhaust Fumes

These contain asphyxiating, harmful and toxic chemicals and particles such as carbon oxides, nitrogen oxides, aldehydes, lead and aromatic hydrocarbons. Engines should be run only under conditions of adequate exhaust extraction or general ventilation and not in confined spaces.

Gasoline (petrol) engine

There may not be adequate warning of odor or of irritation before toxic or harmful effects arise. These may be immediate or delayed.

Diesel engine

Soot, discomfort and irritation usually give adequate warning of hazardous fume concentrations.

Fibre Insulation

See also Dusts.

Used in noise and sound insulation.

The fibrous nature of surfaces and cut edges can cause skin irritation. This is usually a physical and not a chemical effect.

Precautions should be taken to avoid excessive skin contact through careful organization of work practices and the use of gloves.

Fire

See also Welding, Foams, Legal Aspects.

Many of the materials found on or associated with the repair of vehicles are highly flammable. Some give off toxic or harmful fumes if burnt.

Observe strict fire safety when storing and handling flammable materials or solvents, particularly near electrical equipment or welding processes.

Make sure, before using electrical or welding equipment, that there is no fire hazard present.

Have a suitable fire extinguisher available when using welding or heating equipment.

DESCRIPTION AND OPERATION

First Aid

Apart from meeting any legal requirements it is desirable for someone in the workshop to be trained in First Aid procedures.

Splashes in the eye should be flushed carefully with clean water for at least ten minutes.

Soiled skin should be washed with soap and water.

In case of cold burns, from alternative fuels, place affected area in cool to cold water.

Individuals affected by inhalation of gases and fumes should be removed to fresh air immediately. If effects persist, consult a doctor.

If liquids are swallowed inadvertently, consult a doctor giving him the information on the container or label. Do not induce vomiting unless this action is indicated on the label.

Fluoroelastomer

See Viton.

Foams - Polyurethane

See also Fire.

Used in sound and noise insulation. Cured foams used in seat and trim cushioning.

Follow manufacturers instructions.

Unreacted components are irritating and may be harmful to the skin and eyes. Wear gloves and goggles.

Individuals with chronic respiratory diseases, asthma, bronchial medical problems, or histories of allergic diseases should not work in or near uncured materials.

The components, vapors or spray mists can cause direct irritation, sensitivity reactions and may be toxic or harmful.

Vapors and spray mists must not be inhaled. These materials must be applied with adequate ventilation and respiratory protection. Do not remove the respirator immediately after spraying; wait until the vapors/mists have cleared.

Burning of the uncured components and the cured foams can generate toxic and harmful fumes. Smoking, naked flames or the use of electrical equipment during foaming operations and until vapors/mists have cleared should not be allowed. Any heat cutting of cured foams or partially cured foams should be conducted with extraction ventilation. See also the vehicle Body Repair Manual.

Freon

See Air Conditioning Refrigerant.

Fuels

See also, Fire, Legal Aspects, Chemicals and Solvents.

Avoid skin contact with fuel where possible. Should contact occur, wash the affected skin with soap and water.

Gasoline (Petrol)

Highly flammable - observe No Smoking policy.

Swallowing can result in mouth and throat irritation and absorption from the stomach can result in drowsiness and unconsciousness. Small amounts can be fatal to children. Aspiration of liquid into the lungs, through vomiting, is a very serious hazard.

Gasoline dries the skin and can cause irritation and dermatitis on prolonged or repeated contact. Liquid in the eye causes severe smarting.

Motor gasoline may contain appreciable quantities of benzene, which is toxic upon inhalation, and the concentration of gasoline vapors must be kept very low. High concentrations will cause eye, nose and throat irritation, nausea, headache, depression and symptoms of drunkenness. Very high concentrations will result in rapid loss of consciousness.

Make sure there is adequate ventilation when handling and using gasoline. Great care must be taken to avoid the serious consequences of inhalation in the event of vapor build up arising from spillages in confined spaces.

Special precautions apply to cleaning and maintenance operations on gasoline storage tanks.

Gasoline should not be used as a cleaning agent. It must not be siphoned by mouth. See First Aid.

Gas-oil (Diesel Fuel)

Combustible.

DESCRIPTION AND OPERATION

Gross or prolonged skin contact with high boiling point gas oils may also cause serious skin disorders including skin cancer.

Kerosene (Paraffin)

Used also as heating fuel, solvent and cleaning agent.

Flammable - observe No Smoking policy.

Irritation of the mouth and throat may result from swallowing. The main hazard from swallowing arises if liquid aspiration into the lungs occurs.

Liquid contact dries the skin and can cause irritation or dermatitis. Splashes in the eye may be slightly irritating.

In normal circumstances the low volatility does not give rise to harmful vapors. Exposure to mists and vapors from kerosene at elevated temperature should be avoided (mists may arise in dewaxing). Avoid skin and eye contact and make sure there is adequate ventilation.

Alternative Fuel

Highly flammable. Observe ``NO SMOKING'' signs.

Make sure there is adequate ventilation when working on alternative fuelled vehicles. Great care must be taken to avoid the serious consequences of inhalation in the event of vapor build up in confined spaces.

Inhalation in high concentrations may cause dizziness, headache, nausea and loss of co-ordination. Very high concentrations may result in loss of consciousness.

Contact with liquefied petroleum gas (LPG) or compressed natural gas (CNG) to the skin may cause cold burns and frost bite.

Long sleeved cotton overalls, steel toe capped safety boots and rubber neoprene gloves should be worn during removal and installation of LPG/CNG fuel system components.

LPG/CNG fuel leaks could cause a fire and be a hazard to health that can lead to personal injury, illness or even death.

If a leak is detected, under no circumstances attempt to seal the leak by tightening the union/connection until the fuel in the system or component is depressurized. Once tightened the system should be checked for integrity following the specified procedures.

If the fuel tank is to be removed for service or repair the fuel must be evacuated using dedicated equipment and following the specified procedures.

Gas Cylinders

See also Fire.

Gases such as oxygen, acetylene, argon and propane are normally stored in cylinders at pressures of up to 138 bar (2000 psi) and great care should be taken in handling these cylinders to avoid mechanical damage to them or to the valve gear attached. The contents of each cylinder should be clearly identified by appropriate markings.

Cylinders should be stored in well-ventilated enclosures, and protected from ice and snow, or direct sunlight. Fuel gases, for example acetylene and propane, should not be stored in close proximity to oxygen cylinders.

Care should be exercised to prevent leaks from gas cylinders and lines, and to avoid sources of ignition.

Only trained personnel should undertake work involving gas cylinders.

Gases

See Gas Cylinders.

Gaskets (Fluoroelastomer)

See Viton.

General Workshop Tools and Equipment

It is essential that all tools and equipment are maintained in good condition and that the correct safety equipment is used where required.

Never use tools or equipment for any purpose other than that for which they were designed. Never overload equipment such as hoists, jacks, axle and chassis stands or lifting slings. Damage caused by overloading is not always immediately apparent and may result in a fatal failure the next time that the equipment is used.

Do not use damaged or defective tools or equipment, particularly high-speed equipment such as grinding wheels. A damaged grinding wheel can

DESCRIPTION AND OPERATION

disintegrate without warning and cause serious injury.

Wear suitable eye protection when using grinding, chiseling or sand blasting equipment.

Wear a suitable breathing mask when using abrasive blasting equipment, working with asbestos-based materials or using spraying equipment.

Make sure there is adequate ventilation to control dusts, mists and fumes.

High Pressure Air, Lubrication and Oil Test Equipment

See also Lubricants and Greases.

Always keep high-pressure equipment in good condition, and regularly maintained, particularly at joints and unions.

Never direct a high-pressure nozzle, for example diesel injector, at the skin as the fluid may penetrate to the underlying tissue, and cause serious injury.

Halon

See CFCs.

Legal Aspects

There are many laws and regulations relating to health and safety in the use and disposal of materials and equipment in a workshop.

For a safe working environment and to avoid environmental pollution, workshops should be familiar, in detail, with the many health and safety laws and regulations within their country, published by both national and local authorities.

Lubricants and Greases

Avoid all prolonged and repeated contact with mineral oils. All lubricants and greases may be irritating to the eyes and skin.

Transmission Fluids

Safety instructions

Certain Transmission and Power Steering fluids supplied to Ford may contain additives which have the potential to cause skin disease (dermatitis) to exposed persons. The dermatitis may be irritant or allergic in nature. Risks are higher where prolonged or repeated skin contact with a fluid may occur. These fluids are used for vehicle initial fill and service purposes. This sub-section is to:

- Inform Service personnel who may come into contact with these vehicle fluids (hazard communication).
- Summarise appropriate workplace control measures and personal protective equipment requirements.
- Draw attention to the existence of Material Safety Datasheets (MSDS's) for the fluids (available from Ford Customer Service Division). These MSDS's contain detailed information on hazards and appropriate controls.

Control measures

Workplace risk assessments made under national chemical control regulations should identify operations involving the fluids as potentially hazardous and specify workplace control and worker awareness measures. In such circumstances, the relevant Material Safety Datasheet (see the details specified below) which specifies hazards and control measures in detail should be made available for guidance.

Avoid unprotected skin contact with the fluids, and in particular, avoid prolonged or repeated skin contact. Work practices should be organised so as to minimise the potential for skin contact. This may include the use of drip trays, absorbents, correct fluid handling equipment (funnels etc), and workplace housekeeping measures such as the cleaning of contaminated surfaces.

Personnel engaged in operations where skin contact could occur (such as fluid draining or filling) should wear impervious gloves made from nitrile rubber, certified to a chemical protection standard, e.g. Europe Standard EN374. This glove type is widely available from reputable suppliers of gloves for chemical protection [including the manufacturers Ansell-Admont (Solvex Range), North Safety products (North Nitrile Latex Gloves range), and

DESCRIPTION AND OPERATION

Marigold Industrial (Blue Nitrile range)]. If gloves become torn or contaminated on the inside they should be replaced. Eye protection with safety glasses is appropriate. Use of an impervious apron and arm protectors may be necessary if more extensive exposure is possible. Use of skin barrier creams suitable for work with mineral oil products may offer some supplementary protection, but such barrier creams should not be used in place of protective clothing.

If accidental skin contact occurs with the fluids, wash the area thoroughly with soap or skin cleanser and water.

Accidental eye contact should be dealt with as per normal first aid practices, by flushing the eyes with an eye wash or clean cool water for 10 minutes, after which medical attention should be obtained.

Remove and launder clothing which becomes contaminated with the fluids. Do not place rags contaminated with fluid in clothing pockets.

Wash thoroughly after completing operations where skin exposure may have occurred.

It is important that personnel do not smoke, eat or drink whilst handling the fluids or affected transmissions. These measures are designed to limit the risk from accidental ingestion.

Label any decanted fluid properly/use an equivalent label to that on original product containers.

Clean up any spills promptly using an inert absorbent and wash down contaminated surfaces with detergent and water.

Dispose of any waste fluids safely as hazardous waste.

Safety Data Sheets

Safety Data Sheets, which detail specific material handling instructions and precautions are available from the respective national sales company, and via internet www.msds.ford.com.

Used Engine Oil

Prolonged and repeated contact with mineral oil will result in the removal of natural fats from the skin, leading to dryness, irritation and dermatitis. In addition, used engine oil contains potentially harmful contaminants, which may cause skin cancer. Adequate means of skin protection and washing facilities must be provided.

Do not employ used engine oils as lubricants or for any application where appreciable skin contact is likely to occur.

Environmental Precautions

Burning used engine oil in small space heaters or boilers can be recommended only for units of approved design. If in doubt check with the appropriate local authority and manufacturer of approved appliances.

Dispose of used oil and used oil filters through authorized waste disposal contractors or licensed waste disposal sites, or to the waste oil reclamation trade. If in doubt, contact the relevant local authority for advice on disposal facilities.

It is illegal to pour used oil on to the ground, down sewers or drains, or into watercourses.

Noise

Some operations may produce high noise levels, which could, in time, damage hearing. In these cases, suitable ear protection must be worn.

Noise Insulation Materials

See Foams, Fibre Insulation.

O-Rings (Fluoroelastomer)

See Viton.

Paints

See also Solvents, Chemical Materials.

Highly flammable, flammable - observe No Smoking policy

One Pack

Can contain harmful or toxic pigments, driers and other components as well as solvents. Spraying should be carried out only with adequate ventilation.

DESCRIPTION AND OPERATION

Two Pack

Can also contain harmful and toxic unreacted resins and resin hardening agents. The manufacturers instructions should be followed. See also Resin-based Adhesives and Isocyanate Adhesives and Sealers under Adhesives and Sealers.

Spraying should preferably be carried out in exhausted ventilated booths removing vapor and spray mists from the breathing zone. Individuals working in booths should wear appropriate respiratory protection. Those doing small-scale repair work in the open workshop should wear air-fed respirators.

Pressurized Equipment

See High Pressure Air, Lubrication and Oil Test Equipment.

Solder

Solders are mixtures of metals such that the melting point of the mixture is below that of the constituent metals (normally lead and tin). Solder application does not normally give rise to toxic lead fumes, provided a gas/air flame is used. Oxy-acetylene flames should not be used, as they are much hotter and will cause lead fumes to be produced.

Some fumes may be produced by the application of any flame to surfaces coated with grease, and inhalation of these should be avoided.

Removal of excess solder should be undertaken with care, to make sure that fine lead dust is not produced, which can give toxic effects if inhaled. Respiratory protection may be necessary.

Solder spillage and filings should be collected and removed promptly to prevent general air contamination by lead.

High standards of personal hygiene are necessary in order to avoid ingestion of lead or inhalation of solder dust from clothing.

Solvents

See also Chemical Materials, Fuels (Kerosene), Fire.

For example acetone, white spirit, toluene, xylene, trichloroethane.

Used in cleaning and dewaxing materials, paints, plastics, resins and thinners.

Some may be highly flammable or flammable.

Skin contact will degrease the skin and may result in irritation and dermatitis following repeated or prolonged contact. Some can be absorbed through the skin in toxic or harmful quantities.

Splashes in the eye may cause severe irritation and could lead to loss of vision.

Brief exposure of high concentrations of vapors or mists will cause eye and throat irritation, drowsiness, dizziness, headaches and, in the worst circumstances, unconsciousness.

Repeated or prolonged exposure to excessive but lower concentrations of vapors or mists, for which there might not be adequate warning indications, can cause more serious toxic or harmful effects.

Aspiration into the lungs, for example through vomiting, is the most serious consequence of swallowing.

Avoid splashes to the skin, eyes and clothing. Wear protective gloves, goggles and clothing if necessary.

Make sure there is good ventilation when in use, avoid breathing fumes, vapors and spray mists and keep containers tightly sealed. Do not use in confined spaces.

When spraying materials containing solvents, for example paints, adhesive, coatings, use extraction ventilation or personal respiratory protection in the absence of adequate general ventilation.

Do not apply heat or flame except under specific and detailed manufacturers instructions.

Sound Insulation

See Fibre Insulation, Foams.

Suspended Loads

CAUTION: Never improvise lifting tackle.

There is always a danger when loads are lifted or suspended. Never work under an unsupported, suspended or raised load, for example a suspended engine.

Always make sure that lifting equipment such as jacks, hoists, axle stands and slings are adequate and suitable for the job, in good condition and regularly maintained.

DESCRIPTION AND OPERATION

Transmission Brake Bands

See Asbestos.

Underseal

See Corrosion Protection.

Viton

In common with many other manufacturers vehicles, some components have O-rings, seals or gaskets, which contain a material known as `Viton'.

Viton is a fluoroelastomer, that is a synthetic rubber type material, which contains Fluorine. It is commonly used for O-rings, gaskets and seals of all types. Although Viton is the most well known fluoroelastomer, there are others, including Fluorel and Tecmoflon.

When used under design conditions fluoroelastomers are perfectly safe. If, however, they are exposed to temperatures in excess of 400°C, the material will not burn, but will decompose, and one of the products formed is hydrofluoric acid.

This acid is extremely corrosive and may be absorbed directly, through contact, into the general body system.

O-rings, seals or gaskets which have been exposed to very high temperatures will appear charred or as a black sticky substance.

DO NOT; under any circumstances touch them or the attached components.

Enquiries should be made to determine whether Viton or any other fluoroelastomer has been used in the affected O-ring, seal or gasket. If they are of natural rubber or nitrile there is no hazard. If in doubt, be cautious, as the material may be Viton or any fluoroelastomer.

If Viton or any other fluoroelastomers have been used, the affected area should be decontaminated before the commencement of work.

Disposable heavy duty plastic gloves should be worn at all times, and the affected area washed down using wire wool and a limewater (calcium hydroxide) solution to neutralize the acid before disposing of the decomposed Viton residue and final cleaning of the area. After use, the plastic gloves should be discarded carefully and safely.

Welding

See also Fire, Electric Shock, Gas Cylinders.

Welding processes include Resistance Welding (Spot Welding), Arc Welding and Gas Welding.

Resistance Welding

This process may cause particles of molten metal to be emitted at a high velocity, and the eyes and skin must be protected.

Arc Welding

This process emits a high level of ultra-violet radiation, which may cause arc-eye, and skin burns to the operator and to other persons nearby. Gas-shielded welding processes are particularly hazardous in this respect. Personal protection must be worn, and screens used to shield other people.

CONTACT LENS WEARERS ARE ADVISED TO REVERT TO ORDINARY SPECTACLES WHEN ARC WELDING as the arc spectrum is believed to emit microwaves which dry out the fluid between the lens and the eye. This may result in blindness when the lens is removed from the eye.

Metal spatter will also occur, and appropriate eye and skin protection is necessary.

The heat of the welding arc will produce fumes and gases from the metals being welded, the rods and from any applied coatings or contamination on the surfaces being worked on. These gases and fumes may be toxic and inhalation of these should be avoided. The use of extraction ventilation to remove the fumes from the working area may be necessary particularly in cases where the general ventilation is poor, or where considerable welding work is anticipated. In extreme cases or confined spaces where adequate ventilation cannot be provided, air-fed respirators may be necessary.

Gas Welding (and Cutting)

Oxy-acetylene torches may be used for welding and cutting, and special care must be taken to prevent leakage of these gases, with consequent risk of fire and explosion.

The process will produce metal spatter and eye and skin protection is necessary.

DESCRIPTION AND OPERATION

The flame is bright, and eye protection should be used, but the ultra-violet emission is much less than that from arc welding, and lighter filters may be used.

The process itself produces few toxic fumes, but such fumes and gases may be produced from coatings on the work, particularly during cutting away of damaged body parts, and inhalation of the fumes should be avoided.

In brazing, toxic fumes may be produced from the metals in the brazing rod, and a severe hazard may arise if brazing rods containing cadmium are used. In this event particular care must be taken to avoid inhalation of fumes and expert advice may be required.

SPECIAL PRECAUTIONS MUST BE TAKEN BEFORE ANY WELDING OR CUTTING TAKES PLACE ON VESSELS, WHICH HAVE CONTAINED COMBUSTIBLE MATERIALS, FOR EXAMPLE BOILING OR STEAMING OUT OF FUEL TANKS.

Warning Symbols on Vehicles

Decals showing warning symbols will be found on various vehicle components.

These decals must not be removed. The warnings are for the attention of owners/operators and persons carrying out service or repair operations on the vehicle.

The most commonly found decals are reproduced below together with an explanation of the warnings.

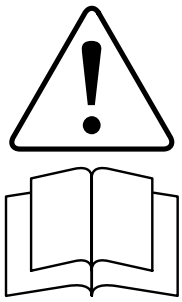

TIM101001

1. Components or assemblies displaying the caution triangle and open book symbol advise consultation of the relevant section of the owner literature before touching or attempting adjustments of any kind.

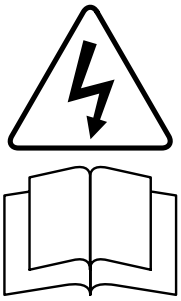

TIM01002

2. Components or assemblies displaying the warning triangle with the `electrified' arrow and open book symbol give warning of inherent high voltages. Never touch these with the engine running or the ignition switched on. See Electric Shock in this subsection.

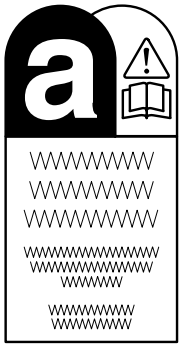

TIM0101003

3. Vehicles and replacement components which contain asbestos are identified by this symbol. See Asbestos in this subsection.

TIM0101004

4. Components or assemblies displaying this symbol give warning that the component contains a corrosive substance. See Acids and Alkalis in this subsection.

DESCRIPTION AND OPERATION

TIM0101005

5. Displaying the caution circle with a deleted lighted match symbol, caution against the use of naked lights or flames within the immediate vicinity due to the presence of highly flammable or explosive liquids or vapors. See Fire in this subsection.

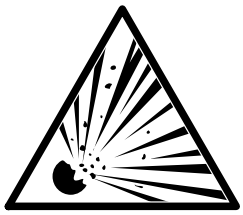

TIM0101006

6. Displaying this symbol (normally in conjunction with 5 above) warn of the presence of potentially explosive matter within the immediate vicinity.

TI0101008

7. Displaying this symbol warn that children should not be allowed in the immediate vicinity unsupervised.

White Spirit

See Solvents.

DESCRIPTION AND OPERATION

Standard Workshop Practices

Vehicle in Workshop

When working on a vehicle in the workshop always make sure that:

- the parking brake is applied or the wheels are securely chocked to prevent the vehicle moving forwards or backwards.
- the key is removed from key operated hood locks before any work is carried out around the front of the vehicle.
- if the engine is to be run, there is adequate ventilation, or an extraction hose to remove exhaust fumes.
- there is adequate room to raise the vehicle and remove the wheels, if necessary.
- fender covers are always fitted if any work is to be carried out in the engine compartment.
- the battery is disconnected if working on the engine, underneath the vehicle, or if the vehicle is raised.

CAUTION: When electric arc welding on a vehicle, always disconnect the generator wiring to prevent the possibility of a surge of current causing damage to the internal components of the generator.

- if using welding equipment on the vehicle, a suitable fire extinguisher is readily available.

Towing the Vehicle

WARNING: When the vehicle is being towed, the ignition switch must be in position II (steering lock released and warning lamps illuminated). Only then will the steering, turn signal lamps, horn and stop lamps be operational. Failure to follow these instructions may result in personal injury.

NOTE: The removable towing eye (if equipped), has a left-hand thread and must be fully tightened before towing can commence.

When towing is necessary, the vehicle towing eyes should be used. The rope must be securely fastened to the towing eyes and must also be attached to the other vehicle such that the rope will not foul the bodywork.

When a vehicle with automatic transmission is towed, the gear selector must be in position N (Neutral). Never tow a vehicle with automatic transmission at a speed greater than 30 mph (50 km/h) or for a distance greater than 30 miles (50 km). If it is necessary to tow the vehicle a greater distance, the drive wheels must be lifted clear off the ground.

Alternatively the vehicle can be transported on a low loader or a trailer.

Connecting a Slave Battery Using Jumper Cables

WARNING: If the slave battery has recently been charged and is gassing, cover the vent plugs or covers with a damp cloth to reduce the risk of explosion should arcing occur when connecting the jumper cables. Failure to follow these instructions may result in personal injury.

CAUTIONS:

A discharged battery condition may have been caused by an electrical short circuit. If this condition exists there will be an apparently live circuit on the vehicle even when all normal circuits are switched off. This can cause arcing when the jumper cables are connected.

While it is not recommended that the vehicle is jump started, it is recognized that this may occasionally be the only practical way to mobilize a vehicle. In such an instance, the discharged battery must be recharged immediately after jump starting to avoid permanent damage.

- Always make sure that the jumper cables are adequate for the task. Heavy duty cables must be used.
- Always make sure that the slave battery is of the same voltage as the vehicle battery. The batteries must be connected in parallel.
- Always make sure that switched electric circuits are switched off before connecting jumper cables. This reduces the risk of arcing occurring when the final connection is made.

DESCRIPTION AND OPERATION

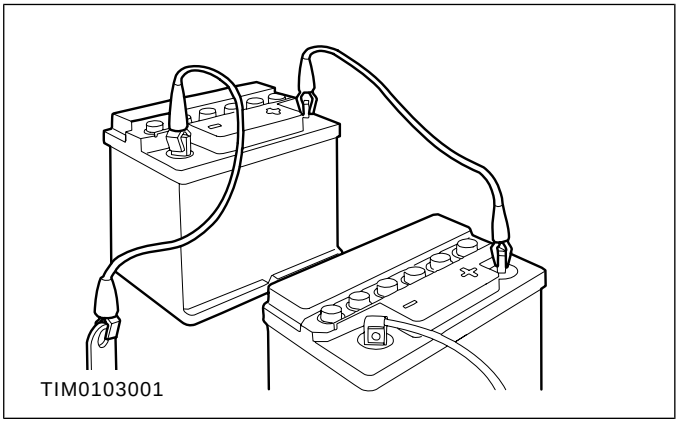

WARNING: Make sure that the ends of the jumper cables do not touch each other or ground against the vehicle body at any time while the cables are attached to the battery. A fully charged battery, if shorted through jumper cables, can discharge at a rate well above 1000 amps causing violent arcing and very rapid heating of the jumper cables and terminals, and can even cause the battery to explode. Failure to follow these instructions may result in personal injury.

Always connect the jumper cables in the following sequence:

– Slave battery positive first and then vehicle battery positive.
– Slave battery negative next and then vehicle ground at least 12 inches (300 mm) from the battery terminal, for example engine lifting eye.

Always reduce the engine speed to idle before disconnecting the jumper cables.

Before removing the jumper cables from the vehicle that had the discharged battery, switch on the heater blower (high) or the heated rear window, to reduce the voltage peak when the cables are removed.

Always disconnect the jumper cables in the reverse order to the connecting sequence and do not short the ends of the cables.

Do not rely on the generator to restore a discharged battery. For a generator to recharge a battery, it would take in excess of eight hours continuous driving with no additional loads placed on the battery.

Component Cleaning

To prevent the ingress of dirt, accumulations of loose dirt and greasy deposits should be removed before disconnecting or dismantling components or assemblies.

Components should be thoroughly cleaned before inspection prior to reassembly.

Cleaning Methods:

– Dry cleaning.
– Removal of loose dirt with soft or cable brushes.
– Scraping dirt off with a piece of metal or wood.
– Wiping off with a rag.

WARNING: Wear eye protection when cleaning vehicle components with compressed air, a steam cleaner or a power washer. Failure to follow this instruction may result in personal injury.

CAUTIONS:

Compressed air is sometimes 'wet' so use with caution, especially on hydraulic systems.

To prevent damage to the electrical connectors in the engine compartment, do not use a steam cleaner or a power washer to clean the engine compartment.

– Blowing dirt off with compressed air.
– Removal of dry dust using vacuum equipment. This method must always be used to remove friction lining material dust (asbestos particles).
– Steam cleaning.

WARNING: Most solvents require careful handling and some are harmful. Refer to Health and Safety Precautions and to the manufacturers literature for the relevant safety precautions. Failure to follow these instructions may result in personal injury.

Various solvents are available which are suitable for component cleaning. Some components, such as brake hydraulic parts and electrical assemblies should be cleaned only with recommended solvents — refer to Solvents, Sealers and Adhesives or to the section of the manual relevant to the component.

Calibration of Essential Measuring Equipment

WARNING: Equipment, which requires regular calibration, must be calibrated in accordance with the manufacturers

DESCRIPTION AND OPERATION

instructions. Failure to follow this instruction may result in personal injury or damage to components.

It is of fundamental importance that certain essential equipment, for example torque wrenches, multimeters, exhaust gas analyzers or rolling roads, are regularly calibrated in accordance with the manufacturers instructions.

DESCRIPTION AND OPERATION

Solvents, Sealants and Adhesives

Introduction

WARNING: Always handle all solvents, sealers and adhesives with extreme care. Some contain chemicals or give off fumes which can be dangerous to health. Always follow the manufacturers instructions. If in doubt about any substance, particularly a solvent, DO NOT use it.

CAUTION: If in doubt about the suitability of any proprietary solvent or sealer for a particular application, contact the manufacturer of the product for information regarding storage, handling and application.

The Health and Safety Precautions subsection refers to some commonly used chemicals and materials, hazards associated with their use, and safety measures to be taken.

DESCRIPTION AND OPERATION

Road/Roller Testing

Road or roller testing may be carried out for various reasons and a procedure detailing pre-test checks, engine starting and stopping, pre-driving checks, on-test checks and final checks to be completed on completion of the test is given below.

Unless complete vehicle performance is being checked, the full road test procedure need not be carried out. Instead, those items particularly relevant to the system(s) being checked can be extracted.

Pre-Test Checks

WARNING: If the brake system hydraulic fluid level is low, pedal travel is excessive or a hydraulic leak is found, do not attempt to road test the vehicle until the reason for the low fluid level, excessive pedal travel or hydraulic leak is found and rectified.

It is suggested that pre-test checks and functional tests of those systems and circuits which affect the safe and legal operations of the vehicle, such as brakes, lights and steering, should always be carried out before the road or roller test.

With the ignition switched off, check:

- the engine oil level.
- the engine coolant level.
- the tires, for correct pressure, compatible types and tread patterns, and wear within limits.
- that there is sufficient fuel in the tank to complete the test.
- all around the engine, transmission and under the vehicle for oil, coolant, hydraulic and fuel leaks. Make a note of any apparent leaks and wipe off the surrounding areas to make it easier to identify the extent of the leak on completion of the test.

Starting the Engine

NOTE: On initial drive away from cold and within the first 1.5 km (1 mile), do not depress the accelerator pedal beyond half travel until the vehicle has attained a minimum speed of 25 km/h (15 miles/h). Never operate at high engine speed or with the accelerator pedal at full travel whilst the engine is cold.

With the ignition switched off, check:

- that the parking brake is applied.
- that the gear lever is in the neutral position.
- that all instrument gauges (except fuel gauge) read zero.

With the ignition switched on, check:

- that the ignition controlled warning lamps are illuminated.
- that the engine temperature gauge registers a reading compatible with the engine temperature.
- that the fuel gauge registers a reading appropriate to the fuel level in the tank.
- the operation of the parking brake warning lamp and fluid level warning indicator.

Road or Roller Testing

CAUTION: If road testing, check the brake operation while still traveling at low speed before continuing with the test. If the brakes pull to one side, or appear to be otherwise faulty, do not continue with the road test until the fault has been found and rectified.

During the road or roller test, check:

- that the clutch pedal operation is not stiff or heavy.
- that the initial gear engagement is smooth and there is no evidence of clutch drag.
- that the parking brake control operates smoothly and releases quickly and completely.
- that the clutch takes up the drive smoothly, without slip or judder.
- that gear changing is smooth with no abnormal noises or vibrations from the transmission.
- the engine power output is satisfactory, full power is achieved, acceleration is smooth and pedal operation is not stiff or heavy, and engine speed returns to idle correctly.
- there is no excessive or abnormally colored smoke from the engine under normal driving, heavy load or overrun conditions.
- that steering operation, including power steering (if equipped), is smooth, accurate, not excessively heavy or with excessive free play or vibration.
- that the steering does not pull to one side and self centers smoothly after cornering.

DESCRIPTION AND OPERATION

- that the speedometer, coolant temperature gauge and tachometer (if equipped) register the correct readings and operate correctly.
- that the switches and controls operate smoothly and positively, warning and indicator lamps operate correctly and the direction indicator control self cancels when the steering is returned to the straight ahead position.
- that the heating and ventilation systems operate correctly and effectively.
- the brake operation and efficiency.
- oil, coolant, hydraulic, air and fuel leaks.
- abnormal temperature of any moving components or assemblies, for example wheel hubs, transmission and axle, which might indicate over tightness or lack of lubrication.

Brake Testing

WARNING: When brake testing, avoid breathing the fumes from hot brakes, this may contain asbestos dust which is hazardous to health. Failure to follow this instruction may result in personal injury.

For additional information, refer to: Health and Safety Precautions (100-00 General Information, Description and Operation).

CAUTIONS:

Avoid brake testing on busy roads where it may cause inconvenience or danger to other road users.

Brake testing which includes heavy brake applications should not be carried out with new brake pads/discs or linings/drums until the components have bedded-in. New brake friction components will not reach full efficiency until the bedding-in process is complete.

Test the brakes at several speeds within the normal operating range using both light and heavy pedal pressure. Note any tendency to snatch, pull or drag, and any undue delay in application or release.

Allow the vehicle to coast and note any tendency to pull to one side, or evidence that the brakes are binding.

After stopping the vehicle (not immediately after a period of heavy braking), carefully check the brake temperature. A brake disc or brake drum that feels hot or is appreciably hotter than the others, indicates that the brake is binding.

After completion of the test, check for:

DESCRIPTION AND OPERATION

Air Conditioning (A/C) System Health and Safety Precautions

WARNINGS:

- **Only qualified technicians are allowed to work on air conditioning (A/C) systems.**
- **Air conditioning (A/C) system components can become particularly hot or cold.**
- **Make sure that the air conditioning (A/C) system is at ambient temperature before carrying out any repair.**
- **When handling refrigerants, always wear protective goggles and gloves made of fluoroelastomer. Leather or fabric gloves are not suitable.**
- **SKIN CONTACT: If liquid refrigerant comes into contact with the skin, it produces severe frostbite. Immediately flush affected areas with plenty of cold running water for 15 minutes. Seek medical attention.**
- **EYE CONTACT: If refrigerant comes into contact with the eyes, immediately flush the eyes with plenty of running water for 15 minutes. Seek medical attention.**
- **INHALED: Toxic gases generated when refrigerant is heated are hazardous to health. The gases have an irritating smell and can cause lung damage. The symptoms can continue for a long time after having been in contact with the gases. The gases can cause lung damage even if the amount of gas in the air is too small to smell.**
- **Refrigerant is flammable and explosive.**
- **Make sure that refrigerant bottles are not exposed to temperatures greater than 45°C.**
- **Make sure that the local regulations regarding work on air conditioning (A/C) systems are adhered to.**
- **Make sure that refrigerant bottles are closed properly.**
- **Gaseous refrigerant has a higher density than air. There is a danger of suffocation when working close to the ground or in workshop pits.**
- **Provide adequate ventilation when handling refrigerant.**
- **Never release refrigerant into the atmosphere.**
- **Only use special tools, equipment and lubricants that are approved for the type of refrigerant being used.**
- **Always follow the manufacturer's instructions for the correct servicing unit operating procedure.**

CAUTIONS:

- **Do not mix refrigerant oils for different types of refrigerant.**
- **Never mix different types of refrigerant or equipment intended for them.**
- **Only use refrigerant in gas form when filling the system through the low-pressure connection.**
- **Only use refrigerant in liquid form when filling the system through the high-pressure connection.**
- **Refrigerant attacks certain plastics. Only use seals suitable for refrigerant.**
- **If the air conditioning (A/C) compressor is damaged, the fixed orifice tube can become blocked with metal particles.**
- **Any sort of blockage in the refrigerant circuit will damage the air conditioning (A/C) compressor irreparably.**
- **If the air conditioning (A/C) system has been opened for a period greater than 2 hours, a new receiver drier must be installed and the evacuating time to be increased by a minimum of 2 hours.**

NOTE: New air conditioning (A/C) compressors are delivered prefilled.

NOTE: Refrigerant oil in new air conditioning (A/C) compressors can contain Teflon, visible as white particles, which will not harm the system.

DESCRIPTION AND OPERATION

Battery and Battery Charging Health and Safety Precautions

WARNINGS:

Batteries contain sulphuric acid, avoid contact with skin, eyes or clothing. Wear safety goggles when working near the battery to protect against possible splashing of the acid solution.

EYE CONTACT: If acid comes into contact with the eyes, flush immediately with plenty of running water for a minimum of 15 minutes. Seek immediate medical attention.

SKIN CONTACT: If acid comes into contact with the skin, flush immediately with plenty of running water for a minimum of 15 minutes. Seek immediate medical attention.

SWALLOWED: If acid is swallowed, rinse the mouth with plenty of water and then drink plenty of water or milk. Do not induce vomiting. Seek immediate medical attention.

Batteries normally produce explosive gases. Do not allow naked flames, sparks or lighted substances to come near the battery.

When charging the battery shield your face and wear safety goggles. Provide adequate ventilation.

CAUTION: Boost charging with excessive current or voltage above 16 volts will damage the battery.

DESCRIPTION AND OPERATION

Brake System Health and Safety Precautions

WARNINGS:

EYE CONTACT: Brake fluid contains polyglycol ethers and polyglycols. Avoid contact with the eyes. Wash hands thoroughly after handling. If brake fluid comes into contact with the eyes, flush the eyes with plenty of cold running water for 15 minutes. Seek medical attention for any persistent eye irritation or abnormality.

SWALLOWED: Brake fluid contains polyglycol ethers and polyglycols. If swallowed, drink plenty of water. Seek immediate medical attention.

INHALED: Dust from friction materials can be harmful if inhaled.

Only use new specified brake fluid from airtight containers.

CAUTION: If brake fluid is spilled on the paintwork, the affected area must be immediately washed down with cold water.

DESCRIPTION AND OPERATION

Steering System Health and Safety Precautions

WARNINGS:

When handling the power steering fluid, always wear protective goggles and gloves made of nitril.

EYE CONTACT: Power steering fluid contains long chain alkyl amine thiophosphate. Avoid contact with the eyes. Wash hands thoroughly after handling. If power steering fluid comes into contact with the eyes, flush the eyes with plenty of cold running water for 15 minutes. Seek medical attention for any persistent eye irritation or abnormality.

SKIN CONTACT: If power steering fluid comes into contact with the skin, remove contaminated clothing. Wash affected areas of skin with soap and water. Seek medical attention for any persistent skin irritation or abnormality.

INHALED: If oil mist is inhaled, move a victim to fresh air. Keep a victim warm and at rest. Seek immediate medical attention in cases of throat irritation or coughing.

SWALLOWED: Power steering fluid contains long chain alkyl amine thiophosphate. If swallowed, drink plenty of water. Seek immediate medical attention.

CAUTION: If the power steering fluid is spilled on the paintwork, the affected area must be immediately washed down with cold water.

DESCRIPTION AND OPERATION

Engine Cooling System Health and Safety Precautions

WARNINGS:

- **Extreme care must be exercised when handling hot fluids. Always wash off spilled fluids from affected areas of skin immediately.**
- **Vapors may be given off from antifreeze when heated. Avoid breathing these vapors.**
- **SKIN CONTACT: Antifreeze may be absorbed through the skin in toxic or harmful quantities.**
- **SWALLOWED: If antifreeze is swallowed, drink plenty of water, induce vomiting. Seek immediate medical attention.**
- **Antifreeze must not be used in any cooling or industrial water system that is connected or linked to general water supplies.**

DESCRIPTION AND OPERATION

Petrol and Petrol-Ethanol Fuel Systems Health and Safety Precautions

WARNINGS:

- **Fuel may not give adequate warning before toxic or harmful effects arise.**
- **Exposure to fuel can be harmful and can cause severe health damage or death.**
- **Extreme care must be exercised when handling hot fluids. Always wash off spilled fluids from affected areas of skin immediately.**
- **Highly flammable mixtures are always present and may ignite when working on fuel systems. Do not allow naked flames, sparks or lighted substances to come near fuel related components.**
- **Fuel must not be used as a cleaning agent.**
- **Keep fuel containers tightly closed, out of direct sunlight and in a cool area. Keep away from heat sources, ignition sources and oxidizing agents.**
- **SKIN CONTACT: Excessive or prolonged skin contact with diesel fuel may cause serious skin disorders including skin cancer.**
- **SKIN CONTACT: Fuel is mildly irritating to the skin and may cause dermatitis due to defatting effect. Remove contaminated clothing. Wash affected areas of skin with soap and water. Seek medical attention for any persistent skin irritation or abnormality. Wash contaminated clothing before reuse.**
- **EYE CONTACT: Fuel is mildly irritating to the eyes. Flush with plenty of running water, blinking as often as possible. Do not force the eyelid open. Seek medical attention for any persistent eye irritation or abnormality.**
- **SWALLOWED: Fuel is moderately toxic and tends to foam on vomiting. If drawn into the lungs, inflammation may develop. Do not induce vomiting. If spontaneous vomiting occurs place the victim in a forward position to reduce the risk of fuel being drawn into the lungs. Give nothing by mouth. If breathing but unconscious, place in the recovery position. If breathing has stopped, apply artificial respiration. Seek immediate medical attention.**
- **INHALED: Fuel is toxic to the respiratory and other body systems. Exposure may result in various symptoms including drowsiness, unconsciousness or severe health damage. Move a victim to fresh air. Keep a victim warm and at rest. If unconscious, place in the recovery position. If not breathing, apply artificial respiration. Give cardiac massage if necessary. Seek immediate medical attention.**

CAUTIONS:

- **Fuel injection equipment is manufactured to very precise tolerances and fine clearances. It is essential that absolute cleanliness is observed when working with these components.**
- **Make sure that the workshop area in which the vehicle is being worked on is as clean and as dust free as possible.**

DESCRIPTION AND OPERATION

Diesel Fuel System Health and Safety Precautions

WARNINGS:

- **Fuel may not give adequate warning before toxic or harmful effects arise.**
- **Exposure to fuel can be harmful and can cause severe health damage or death.**
- **Provide adequate ventilation when working on fuel systems.**
- **Extreme care must be exercised when handling hot fluids. Always wash off spilled fluids from affected areas of skin immediately.**
- **Fuel must not be used as a cleaning agent.**
- **Keep fuel containers tightly closed, out of direct sunlight and in a cool area. Keep away from heat sources, ignition sources and oxidizing agents.**
- **SKIN CONTACT: Fuel is mildly irritating to the skin and may cause dermatitis due to defatting effect. Remove contaminated clothing. Wash affected areas of skin with soap and water. Seek medical attention for any persistent skin irritation or abnormality. Wash contaminated clothing before reuse.**
- **SKIN CONTACT: Excessive or prolonged skin contact with diesel fuel may cause serious skin disorders including skin cancer.**
- **EYE CONTACT: Fuel is mildly irritating to the eyes. Flush with plenty of running water, blinking as often as possible. Do not force the eyelid open. Seek medical attention for any persistent eye irritation or abnormality.**
- **SWALLOWED: Fuel is moderately toxic and tends to foam on vomiting. If drawn into the lungs, inflammation may develop. Do not induce vomiting. If spontaneous vomiting occurs place the victim in a forward position to reduce the risk of fuel being drawn into the lungs. Give nothing by mouth. If breathing but unconscious, place in the recovery position. If breathing has stopped, apply artificial respiration. Seek immediate medical attention.**
- **INHALED: Fuel is toxic to the respiratory and other body systems. Exposure may result in various symptoms including drowsiness, unconsciousness or severe health damage. Move a victim to fresh air. Keep a victim warm and at rest. If unconscious, place in the recovery position. If not breathing, apply artificial respiration. Give cardiac massage if necessary. Seek immediate medical attention.**

CAUTIONS:

- **Fuel injection equipment is manufactured to very precise tolerances and fine clearances. It is essential that absolute cleanliness is observed when working with these components.**
- **Make sure that the workshop area in which the vehicle is being worked on is as clean and as dust free as possible.**
- **Make sure that non-plated tools are used.**
- **Tools must be cleaned using a new brush and fresh suitable evaporative cleaning agent.**
- **Make sure to use a steel topped workbench covered with clean, lint-free, non-flocking material.**
- **Make sure that all parts removed from the vehicle are placed on the lint-free, non-flocking material.**
- **Make sure that any protective clothing worn is clean and made from lint-free, non-flocking material.**
- **Make sure to wear non-powdered latex type gloves.**
- **Make sure to protect all electrical components and connectors with lint-free non-flocking material before using the suitable evaporative cleaning agent.**

NOTE: Soot, discomfort and irritation usually give adequate warning of hazardous fume concentrations.

DESCRIPTION AND OPERATION

Liquefied Petroleum Gas (LPG) Fuel Systems Health and Safety Precautions

WARNING: Only fully trained technicians, who are conversant with local regulations, are to work on gas fuel systems.

Make sure that all components of the liquefied petroleum gas (LPG) fuel system are labeled with the ECE R 67.01 approval label.

Highly flammable. Observe "NO SMOKING" signs.

Fuel may not giie adequate warning before toxic or harmful effects arise.

Exposure to fuel can be harmful and can cause severe health damage or death.

Only work on a vehicle in a designated area, that is well ventilated and with access restricted to authorized personnel.

If the smell of gas fuel is present, immediately advise all persons in the area to take preventative actions to prevent explosion or fire and evacuate the area.

Make sure that the area is ventilated and that no smell of gas fuel is present before returning to the area.

Long sleeved cotton overalls and rubber neoprene gloves must be worn during removal and installation of gas fuel system components.

EYE CONTACT: If liquefied petroleum gas (LPG) comes into contact with the eyes, immediately flush the eyes with plenty of running water for 15 minutes. Seek immediate medical attention.

INHALED: If liquefied petroleum gas (LPG) is inhaled, move a victim to fresh air. Keep a victim warm and at rest. If breathing stops, provide artificial respiration. Seek immediate medical attention.

SKIN CONTACT: If liquefied petroleum gas (LPG) comes into contact with the skin, it produces severe frostbite. Immediately flush affected areas with plenty of cold running water. Seek immediate medical attention.

If possible always close the gas fuel tank valve and run the engine on gas fuel until it automatically switches to petrol prior to taking the vehicle into the workshop area.

Make sure that the gas fuel system pressure has been released before starting work on the gas fuel circuit.

Do not use compressed air to force gas fuel out of the fuel tank.

Keep fuel containers tightly closed, out of direct sunlight and in a cool area. Keep away from heat sources, ignition sources and oxidizing agents.

The gas fuel tank must be removed prior to moving the vehicle into paint drying ovens above 40°C.

Situations, such as extremely hot days, may cause the gas fuel system to vent off.

Install new warning labels to the original locations.

CAUTION: Fuel injection equipment is manufactured to very precise tolerances and fine clearances. It is essential that absolute cleanliness is observed when working with these components.

Make sure that the workshop area in which the vehicle is being worked on is as clean and as dust free as possible.

DESCRIPTION AND OPERATION

Compressed Natural Gas (CNG) Fuel Systems Health and Safety Precautions

WARNINGS:

Highly flammable and explosive mixtures are always present and may ignite when working on fuel systems. Do not allow naked flames, sparks or lighted substances to come near fuel related components.

Only qualified technicians are allowed to work on CNG (compressed natural gas) systems.

Make sure that all components of the CNG fuel system are labeled with the ECE R 110 approval label.

Fuel may not give adequate warning before toxic or harmful effects arise.

Exposure to fuel can be harmful and can cause severe health damage or death.

EYE CONTACT: If CNG comes into contact with the eyes, immediately flush the eyes with plenty of running water for 15 minutes. Seek immediate medical attention.

INHALED: If CNG is inhaled, move a victim to fresh air. Keep a victim warm and at rest. If breathing stops, provide artificial respiration. Seek immediate medical attention.

SKIN CONTACT: If CNG comes into contact with the skin, it produces severe frostbite. Immediately flush affected areas with plenty of cold running water. Seek immediate medical attention.

Provide adequate ventilation when working on fuel systems.

Keep fuel containers tightly closed, out of direct sunlight and in a cool area. Keep away from heat sources, ignition sources and oxidizing agents.

DESCRIPTION AND OPERATION

Supplemental Restraint System (SRS) Health and Safety Precautions

WARNINGS:

- **Only qualified technicians are allowed to work on pyrotechnic components.**
- **INHALED: Exposure to pyrotechnic residue may cause low blood pressure, severe headache, irritation of mucous membranes, fainting, shortness of breath or rapid pulse. Move a victim to fresh air. Seek immediate medical attention.**
- **EYE CONTACT: Exposure to unburned pyrotechnic residue may cause irritation, burning and etching of the eyes. Flush immediately with plenty of cold running water for at least 15 minutes. Seek immediate medical attention.**
- **EYE CONTACT: Exposure to burned pyrotechnic residue may cause irritation, burning and etching of the eyes. Flush immediately with diluted boric acid solution. Seek immediate medical attention.**
- **SKIN CONTACT: Unburned pyrotechnic residue may be rapidly absorbed through the skin in toxic quantities. Wash immediately with plenty of soap and water. Seek medical attention.**
- **SKIN CONTACT: Burned pyrotechnic residue may be rapidly absorbed through the skin in toxic quantities. Wash with plenty of water. Do not use soap. Seek medical attention.**
- **SWALLOWED: Unburned pyrotechnic residue is extremely toxic. If conscious drink plenty of water then induce vomiting. Seek immediate medical attention. If unconscious, or in convulsions do not attempt to induce vomiting or give anything by mouth. Seek immediate medical attention.**
- **SWALLOWED: Burned pyrotechnic residue is extremely toxic. Drink plenty of water and seek immediate medical attention.**
- **The deployment key must only be accessible to authorized personnel.**
- **Make sure that the deployment key remains removed from the deployment equipment except during deployment.**
- **If permenantly disabling or enabling the passenger air bag a new seat belt for vehicles without or with a passenger air bag must be installed.**
- **Undeployed pyrotechnic components must not be deployed in the vehicle.**
- **Pyrotechnic components must be deployed following local regulations.**
- **Check thoroughly that no loose objects can be spread during the deployment of pyrotechnic components.**
- **Pyrotechnic components must be transported following local regulations.**
- **Never carry out any electrical measurement on disconnected, undeployed pyrotechnic components.**
- **Pyrotechnic components must not be disassembled.**
- **Pyrotechnic components are not interchangeable between vehicles.**
- **Always carry a live air bag module away from the body with the air bag or trim cover pointing upwards.**
- **Live air bag modules must be placed in a suitable cage when removed from the vehicle. The air bag or trim cover must be facing upwards.**
- **Do not install a rearward facing child safety seat to the passenger seat with an activated passenger air bag.**

CAUTIONS:

- **Pyrotechnic components must not be subjected to temperatures higher than 110°C.**
- **Never install aftermarket accessories to the vehicle on or adjacent to the supplemental restraint system module.**

DESCRIPTION AND OPERATION

Window Glass Health and Safety Precautions

WARNINGS:

Cured polyurethane (PU) adhesive can degrade if subjected to high temperatures. Isocyanide compounds can be released when grinding or welding in close proximity to cured PU adhesive.

SKIN CONTACT: Prolonged exposure to polyurethane (PU) adhesive may cause skin irritation. If PU adhesive comes into contact with the skin, remove any contaminated clothing. Immediately wash the skin with soap and water. Seek medical attention for any persistent skin irritation or abnormality.

EYE CONTACT: Polyurethane (PU) adhesive may cause severe irritation or damage. If PU adhesive comes into contact with the eyes, immediately flush eyes with plenty of running water for at least 15 minutes. Seek immediate medical attention.

SWALLOWED: If polyurethane (PU) adhesive is swallowed, flush the mouth thoroughly. Do not induce vomiting. Provide rest, warmth and fresh air. Seek immediate medical attention.

INHALED: Persons having a respiratory allergy may have an allergic reaction when handling polyurethane (PU) adhesive.

INHALED: Polyurethane (PU) adhesive can cause asthma like symptoms. Isocyanate vapor from primer or PU adhesive can cause allergies in the respiratory tract.

INHALED: If polyurethane (PU) adhesive fumes are inhaled, move victim to fresh air. Provide oxygen if necessary. If breathing stops, provide artificial respiration. Keep a victim warm and at rest. Seek immediate medical attention.

CAUTIONS:

Make sure that the direct glazing for bonded glass cutting blades are changed where the cutting depth changes to avoid damage to the body and trim panels.

During the curing period of the PU adhesive, the door windows must be left open to avoid a build up of pressure when the doors are opened and closed.

SECTION 100-01 Identification Codes

VEHICLE APPLICATION: 2011.50 Ranger

CONTENTS PAGE

DESCRIPTION AND OPERATION

Identification Codes..... 100-01-2
Vehicle Identification Number..... 100-01-3
Vehicle Identification Number..... 100-01-5
Vehicle Identification Number..... 100-01-8
Vehicle Identification Number..... 100-01-10

DESCRIPTION AND OPERATION

Identification Codes

NOTE: The vehicle identification number (VIN) can be identified by an asterisk (*) at its start and finish.

The vehicle identification number (VIN) is stamped on RH side of ladder frame of the vehicle . The VIN plate is located on the inside of the LH fender body panel, near to PCM (powertrain control module). The code is stamped during production to enable the precise details of the vehicle build specification to be established.

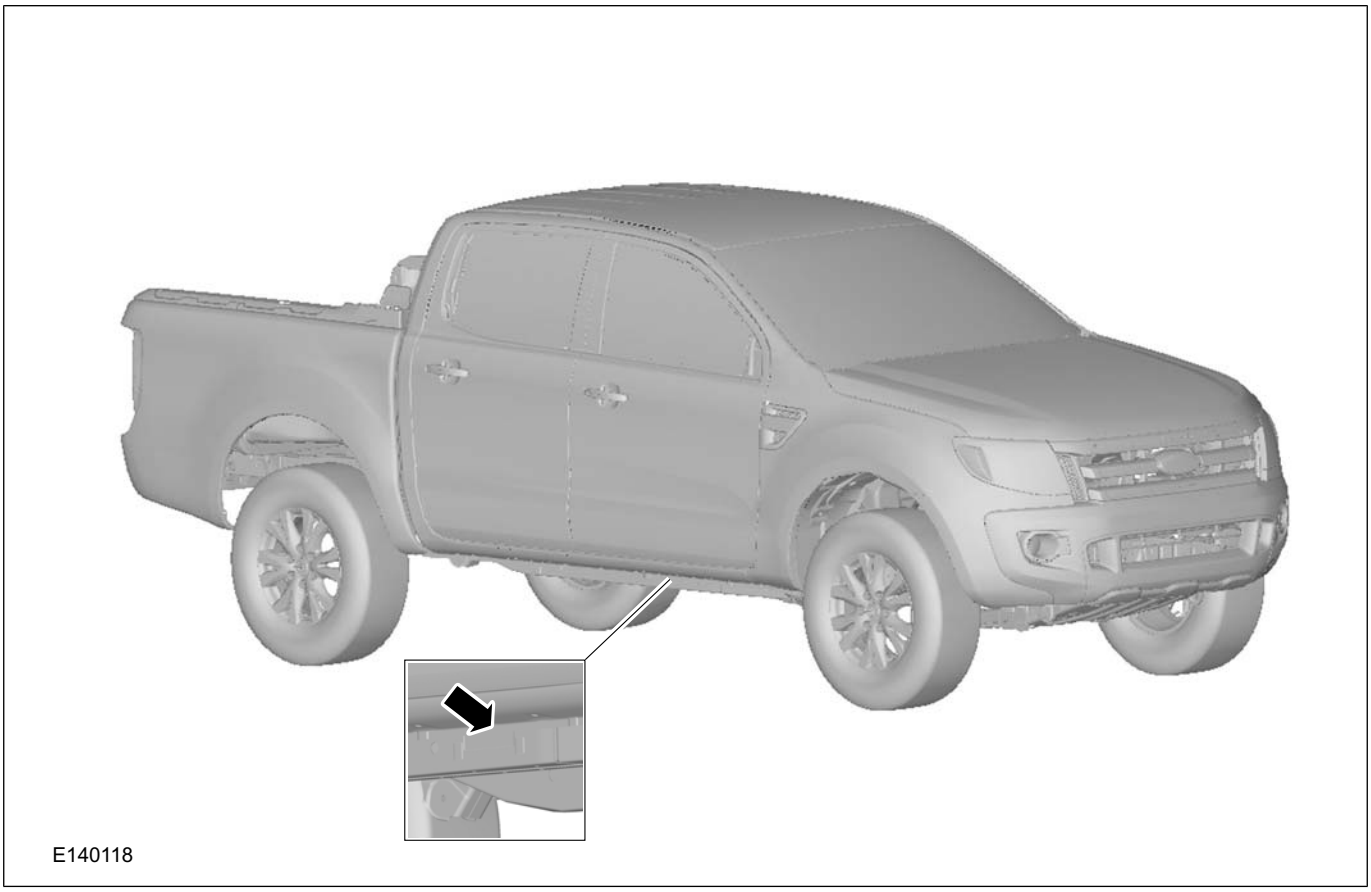

Unique VIN - Manufactured in FMSA

- Market List for VIN Structure 'A'

Afghanistan, Albania, Algeria, Andorra, Angola, Cape Verde Islands, Anguilla, Antigua, Armenia, Aruba, Austria, Azerbaijan, Bahamas, Barbados, Belarus, Belgium, Luxembourg, Belize, Benin, Bonaire, Bosnia & Herzegovina, Botswana, British Virgin Isl, Bulgaria, Burkina Faso, Burundi, Cameroon, Cayman Islands, Costa Rica, Croatia, Curacao, Cyprus, Czech Republic, Democratic Republic of Congo, Denmark , Iceland, Faroe Islands, Dominica islands, Dominica Rep, Egypt, El Salvador, Equatorial Guinea, Eritrea, Ethiopia, Finland, Estonia, Latvia, Lithuania, France, Monaco, Martinique, French Guiana, Gabon, Gambia, Georgia, Germany, Ghana, Gibraltar, Greece, Grenada, Guadeloupe, Guinea-Bissau, Guyana, Haiti, Honduras, HungaryIreland, Italy, San Marino, Vatican City, Ivory Coast, Kazakhstan, Kenya, Kyrgyzstan, Liberia, Libya, Macedonia, Madagascar, Malawi, Mali, Malta, Mauritania, Mauritius, Moldova, Montenegro, Morocco, Mozambique, N. Antilles, Namibia, Netherlands, Nicaragua, Nigeria, Norway, Pakistan, Panama, Poland, Portugal, Rep. of Rwanda Republic of Congo, Republic of Guinea, Romania, Reunion Isl, Russia, Senegal, Serbia, Seychelles, Sierra Leone, Slovakia, Slovenia, Spain, Canary Island, St. Kitts, St. Lucia, St. Maarten, St. Vincent, Sudan, Suriname, Sweden, Switzerland, Liechtenstein, Tajikistan, Tanzania, Togo, Trinidad & Tobago, Tunisia, Turkey, Northern Cyprus, Turkmenistan, Uganda, Ukraine, United Kingdom, Uzbekistan, Zambia, Zimbabwe.

DESCRIPTION AND OPERATION

Vehicle Identification Number

*	1	2	3	4	5	6	7	8	9	10	11	12	13	14	15	16	17	*
Start Marking	World Mfr. Index			Body Type	Constant Figure	Constant Figure	Product Source	Assembly Plant	Model Line	Body Type	Year of Manufacture	Month of Manufacture	Vehicle Sequence Number					End Marking
*	6	F	P	N/G/P/4/6/5	X	X	M	J	P	N/G/P/4/6/5	B/C/D/E/F	#	1	2	3	4	5	*
				Vehicle Descriptor Selection (VDS)						Vehicle Indicator Section(VIS)								

Variable
Vehicle Identification Number: Character 1 to 17

E139898

Item	Description
1-3	VIN Positions 1, 2 and 3 — World Manufacturer Identifier
4	VIN Position 4 — Body type
5	VIN Positions 5 — Constant figure
6	VIN Position 6 — Constant figure
7	VIN Position 7 — Product source

Item	Description
8	VIN Position 8 — Assembly plant
9	VIN Position 9 — Model line
10	VIN Position 10 — Body type
11	VIN Position 11 — Year of Manufacture
12	VIN Position 12 — Month of Manufacture
13-17	VIN Positions 13-17 — Vehicle Sequence Number

VIN Positions 1, 2 and 3 — World Manufacturer Identifier

Code	World Manufacturer
6FP	Ranger

VIN Positions 4 — Body Type

Code	Body Type
N	Regular cab
G	RAP cab
P	Double cab
4	Regular cab - chassis
6	RAP cab - chassis
5	Double cab - chassis

VIN Positions 5 — Constant Figure

Code	Constant Figure
X	

DESCRIPTION AND OPERATION

VIN Positions 6 — Constant Figure

Code	Constant Figure
X	

VIN Position 7— Product Source

Code	Product Source
M	Ford Motor Company of Southern Africa

VIN Position 8 — Assembly Plant

Code	Assembly Plant
J	Silverton Assembly Plant

VIN Position 9 — Model Line

Code	Check Digit
P	Ranger

VIN Position 10 — Body Type

Code	Body Type
N	Regular cab
G	RAP cab
P	Double cab
4	Regular cab - chassis
6	RAP cab - chassis
5	Double cab - chassis

VIN Position 11 — Year of Manufacture

Code	Year of Manufacture
B	2011
C	2012
D	2013
E	2014
F	2015

VIN Position 12 — Month of Manufacture

Month	2011	2012	2013	2014	2015
Jan	C	B	J	L	C
Feb	K	R	U	Y	K
Mar	D	A	M	S	D
Apr	E	G	P	T	E
May	L	C	B	J	L
Jun	Y	K	R	U	Y
July	S	D	A	M	S

DESCRIPTION AND OPERATION

Month	2011	2012	2013	2014	2015
Aug	T	E	G	P	T
Sep	J	L	C	B	J
Oct	U	Y	K	R	U
Nov	M	S	D	A	M
Dec	P	T	E	G	P

VIN Positions 13 to 17 — Vehicle Sequence Number

Five digit number.

NOTE: The vehicle identification number (VIN) can be identified by an asterisk (*) at its start and finish.

Vehicle Identification Number

*	1	2	3	4	5	6	7	8	9	10	11	12	13	14	15	16	17	*
Start Marking	World Mfr. Index			Brake, Gross Weight Rating	Model Line	Series	Engine Type	Body Type	Check Digit	Model Year	Assembly Plant	Month of Manufacture	Vehicle Sequence Number					End Marking
*	A	F	A		P	#	L/A/E/R/M	N/G/P/4/6/5	#	B/C/D/E/F	J	#	1	2	3	4	5	*
				Vehicle Descriptor Selection (VDS)						Vehicle Indicator Section(VIS)								

Variable
Vehicle Identification Number: Character 1 to 17

E139899

Item	Description
1-3	VIN Positions 1, 2 and 3 — World Manufacturer Identifier
4	VIN Position 4 — Brake, Gross Weight Rating
5	VIN Positions 5 — Model line
6	VIN Position 6 — Series
7	VIN Position 7 — Engine Type

Item	Description
8	VIN Position 8 — Body Type
9	VIN Position 9 — Check Digit
10	VIN Position 10 — Model Year
11	VIN Position 11 — Year of Manufacture
12	VIN Position 12 — Month of Manufacture
13-17	VIN Positions 13-17 — Vehicle Sequence Number

VIN Positions 1, 2 and 3 — World Manufacturer Identifier

Code	World Manufacturer
AFA	Ranger

- Market List for VIN Structure 'B'

Bahrain, Guatemala, Iraq, Jamaica, Jordan, Kuwait, Lebanon, Oman, Qatar, Saudi Arabia, Syria, UAE, Yemen.

DESCRIPTION AND OPERATION

VIN Positions 4 — Brake, Gross Weight Rating

Code	Brake, Gross Weight Rating
E	Hydraulic brake, GVM 2722-3175 kg
F	Hydraulic brake, GVM 3176-3629 kg

VIN Positions 5 — Model line

Code	Model line
P	Ranger

VIN Positions 6 — Series

Code	Series
1	Base
2	XL
3	XLS
4	XLT
5	Wildtrak
6	Titanium
7	Limited

VIN Position 7— Engine Type

Code	Engine Type
L	I4 2.5L Petrol
A	I4 2.2L Diesel low power
E	I4 2.2L Diesel mid power
R	I4 2.2L Diesel High power
M	I4 3.2L Diesel

VIN Position 8 — Body Type

Code	Body Type
N	Regular cab
G	RAP cab
P	Double cab
4	Regular cab - chassis
6	RAP cab - chassis
5	Double cab - chassis

VIN Position 9 — Check Digit

Code	Check Digit
#	

DESCRIPTION AND OPERATION

VIN Position 10 — Model Year

Code	Body Type
N	Regular cab
G	RAP cab
P	Double cab
4	Regular cab - chassis
6	RAP cab - chassis
5	Double cab - chassis

VIN Position 11 — Assembly Plant

Code	Assembly Plant
J	Silverton Assembly Plant

VIN Position 12 — Month of Manufacture

Month	2011	2012	2013	2014	2015
Jan	C	B	J	L	C
Feb	K	R	U	Y	K
Mar	D	A	M	S	D
Apr	E	G	P	T	E
May	L	C	B	J	L
Jun	Y	K	R	U	Y
July	S	D	A	M	S
Aug	T	E	G	P	T
Sep	J	L	C	B	J
Oct	U	Y	K	R	U
Nov	M	S	D	A	M
Dec	P	T	E	G	P

VIN Positions 13 to 17 — Vehicle Sequence Number

Five digit number.

The vehicle identification number (VIN) is stamped in to the floor panel below the driver side front seat. The code is stamped during production to enable the precise details of the vehicle build specification to be established.

NOTE: The vehicle identification number (VIN) can be identified by an asterisk (*) at its start and finish.

- Market List for VIN Structure 'C'

South Africa only.

DESCRIPTION AND OPERATION

Vehicle Identification Number

*	1	2	3	4	5	6	7	8	9	10	11	12	13	14	15	16	17	*
Start Marking	World Mfr. Index			Body Type	Constant Figure	Constant Figure	Product Source	Assembly Plant	Model Line	Body Type	Year of Manufacture	Month of Manufacture	Vehicle Sequence Number					End Marking
*	A	F	A	N/G/P/4/6/5	X	X	M	J	P	N/G/P/4/6/5	B/C/D/E/F	#	1	2	3	4	5	*
				Vehicle Descriptor Selection (VDS)						Vehicle Indicator Section(VIS)								

Variable
Vehicle Identification Number: Character 1 to 17

E139900

Item	Description
1-3	VIN Positions 1, 2 and 3 — World Manufacturer Identifier
4	VIN Position 4 — Body type
5	VIN Positions 5 — Constant figure
6	VIN Position 6 — Constant figure
7	VIN Position 7 — Product source

Item	Description
8	VIN Position 8 — Assembly plant
9	VIN Position 9 — Model line
10	VIN Position 10 — Body type
11	VIN Position 11 — Year of Manufacture
12	VIN Position 12 — Month of Manufacture
13-17	VIN Positions 13-17 — Vehicle Sequence Number

VIN Positions 1, 2 and 3 — World Manufacturer Identifier

Code	World Manufacturer
AFA	Ranger

VIN Positions 4 — Body Type

Code	Body Type
N	Regular cab
G	RAP cab
P	Double cab
4	Regular cab - chassis
6	RAP cab - chassis
5	Double cab - chassis

VIN Positions 5 — Constant Figure

Code	Constant Figure
X	

DESCRIPTION AND OPERATION

VIN Positions 6 — Constant Figure

Code	Constant Figure
X	

VIN Position 7— Product Source

Code	Product Source
M	Ford Motor Company of Southern Africa

VIN Position 8 — Assembly Plant

Code	Assembly Plant
J	Silverton Assembly Plant

VIN Position 9 — Model Line

Code	Check Digit
P	Ranger

VIN Position 10 — Body Type

Code	Body Type
N	Regular cab
G	RAP cab
P	Double cab
4	Regular cab - chassis
6	RAP cab - chassis
5	Double cab - chassis

VIN Position 11 — Year of Manufacture

Code	Year of Manufacture
B	2011
C	2012
D	2013
E	2014
F	2015

VIN Position 12 — Month of Manufacture

Month	2011	2012	2013	2014	2015
Jan	C	B	J	L	C
Feb	K	R	U	Y	K
Mar	D	A	M	S	D
Apr	E	G	P	T	E
May	L	C	B	J	L
Jun	Y	K	R	U	Y
July	S	D	A	M	S

DESCRIPTION AND OPERATION

Month	2011	2012	2013	2014	2015
Aug	T	E	G	P	T
Sep	J	L	C	B	J
Oct	U	Y	K	R	U
Nov	M	S	D	A	M
Dec	P	T	E	G	P

VIN Positions 13 to 17 — Vehicle Sequence Number

Five digit number.

Unique VIN - Manufactured in AutoAlliance Thailand (AAT)

Vehicle Identification Number

*	1	2	3	4	5	6	7	8	9	10	11	12	13	14	15	16	17	*
Start Marking	World Mfr. Index			Body Type	Constant Figure	Constant Figure	Product Source	Assembly Plant	Model Line	Body Type	Year of Manufacture	Month of Manufacture	Vehicle Sequence Number					End Marking
*	A	F	A	N/G/P/4/6/5	X	X	M	J	P	N/G/P/4/6/5	B/C/D/E/F	#	1	2	3	4	5	*
				Vehicle Descriptor Selection (VDS)						Vehicle Indicator Section(VIS)								

Variable
Vehicle Identification Number: Character 1 to 17

E139900

Item	Description
1-3	VIN Positions 1, 2 and 3 — World Manufacturer Identifier
4	VIN Position 4 — Air bag
5	VIN Positions 5 — Production source
6	VIN Position 6 — Body style
7	VIN Position 7 — GVM

Item	Description
8	VIN Position 8 — Engine type
9	VIN Position 9 — Constant Value
10	VIN Position 10 — Production Year / Model year
11	VIN Position 11 — Plant
12-17	VIN Positions 12-17 — Serial Number

VIN Positions 1, 2 and 3 — World Manufacturer Identifier

Code	World Manufacturer
MNA	Australia(RHD),Newzeland(RHD)
MNB	Thailand (RHD),RHD Markets - Indonesia, Malaysia,Bangladesh, Brunei, Fiji, Singapore, Sri Lanka, Papua New Guinea,Hong Kong, Samoa
MNC	LHD Markets - Philippines, Vietnam,Cambodia, New Caledonia, Wallis & Vanuatu, Palau, Micronesia, French Polynesia, Mongolia, Laos

DESCRIPTION AND OPERATION

VIN Positions 4 — Air bag

Code	Air bag
B	Seat belts only
D	Driver air bag
L	Driver airbag + passenger airbag
U	Driver airbag + passenger airbag + Side airbags + Side Curtain Airbags
W	Driver airbag + passenger airbag+ Side Curtain Airbags

VIN Positions 5 — Production source

Code	Production source
M	Thailand

VIN Positions 6 — Body style

Code	Body style
A	Regular cab-chassis
B	Regular cab
E	Double cab-chassis
F	Double cab
1	RAP cab-chassis
2	RAP cab

VIN Position 7— GVM

Code	GVM
E	2722 to ≤ 3175 kg
F	E >3175 to 3629 kg

VIN Position 8 — Engine type

Code	Engine type
3	I4 2.5l Petrol
0	I4 2.2l Diesel low power
2	I4 2.2l Diesel mid power
8	I4 2.2l Diesel high power
5	I5 3.2l Diesel

VIN Position 9 — Constant Value

Code	Constant Value
0	0

DESCRIPTION AND OPERATION

VIN Position 10 — Production Year/Model year

Code	Year	Production year for markets	Model year for markets
B	2011	**RHD:** Indonesia, Thailand, Australia, NewZealand **LHD:** Philippines	**RHD:** Malaysia, Bangladesh, Brunei, Fiji, Singapore, Sri Lanka, Papua New Guinea,Hong Kong, Samoa **LHD:** Vietnam, Cambodia, New Caledonia, Wallis & Vanuatu, Palau, Micronesia, French Polynesia, Mongolia, Laos
C	2012		
D	2013		
E	2014		
F	2015		

VIN Position 11 — Plant

Code	Plant
W	AutoAlliance Thailand

VIN Positions 12 to 17 — Serial Number

Six digit number (Last four must be numerical)

SECTION 100-02 Jacking and Lifting

VEHICLE APPLICATION: 2011.50 Ranger

CONTENTS PAGE

DESCRIPTION AND OPERATION

Jacking..... 100-02-2
Front..... 100-02-2
4X2..... 100-02-2
4X4..... 100-02-2
Rear..... 100-02-2
Lifting..... 100-02-3
Vehicle Lift Positions..... 100-02-3
Front..... 100-02-3
Rear..... 100-02-3
Safety Stand Positions..... 100-02-4
Front..... 100-02-4
Rear..... 100-02-4

DESCRIPTION AND OPERATION

Jacking

WARNING: Lifting a vehicle that is not stabilized is dangerous. The vehicle can slip off the lift and cause serious injury and/or vehicle damage. Make sure that the vehicle is on the lift horizontally by adjusting the height of the support at the end of the arm of the lift.

Use safety stands to support the vehicle after it has been lifted.

Front

4X2

Near the center of the crossmember.

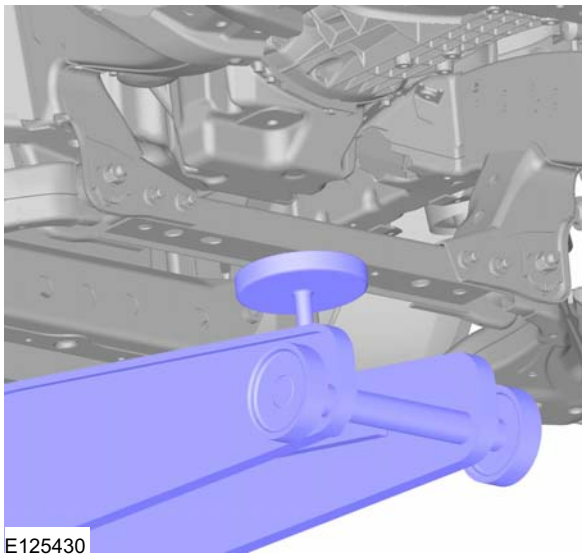
E125430

4X4

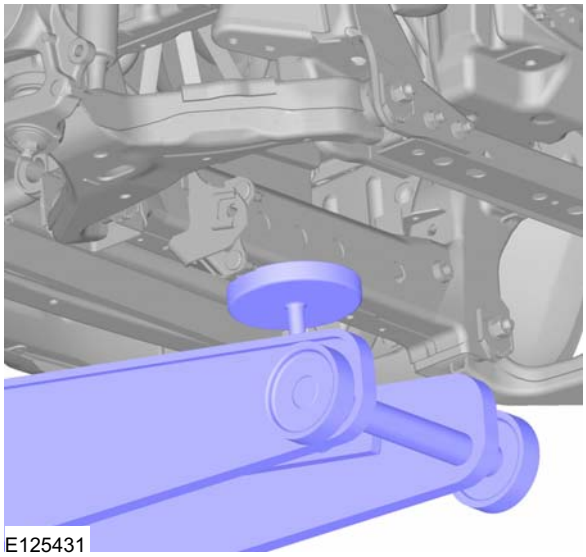
E125431

Rear

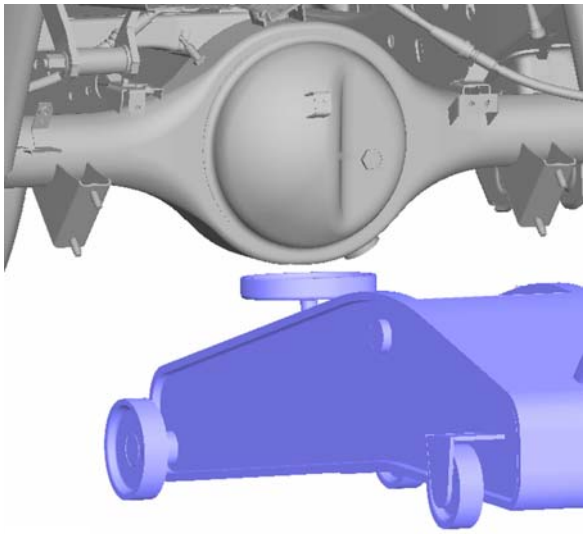
E125432

At the center of the rear differential.

DESCRIPTION AND OPERATION

Lifting

Vehicle Lift Positions

WARNING: Lifting a vehicle that is not stabilized is dangerous. The vehicle can slip off the lift and cause serious injury and/or vehicle damage. Make sure that the vehicle is on the lift horizontally by adjusting the height of the support at the end of the arm of the lift.

Use safety stands to support the vehicle after it has been lifted.

Front

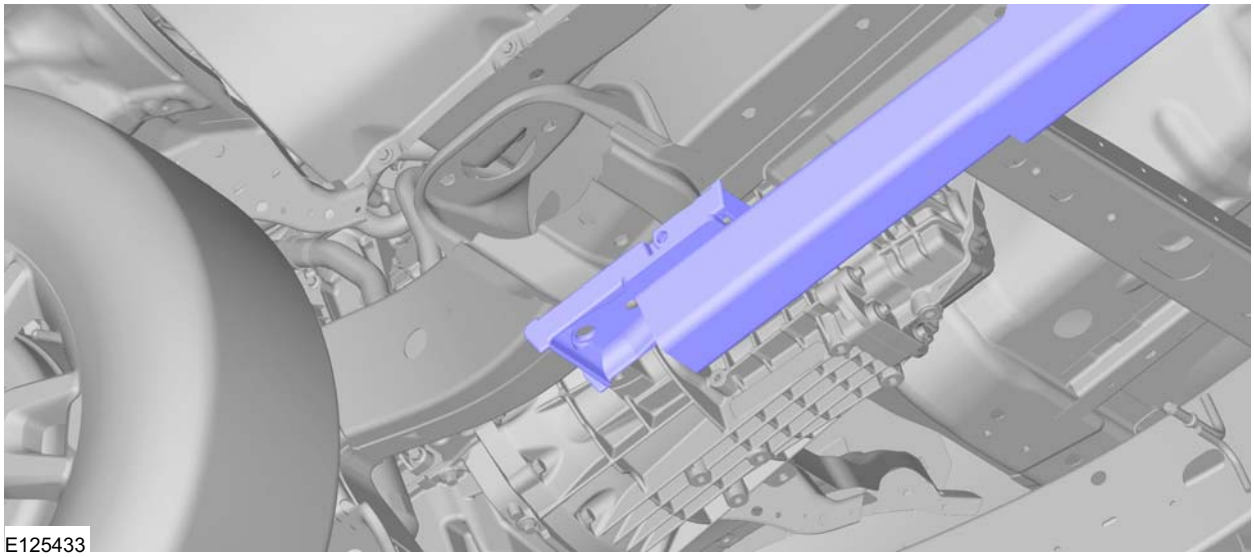
E125433

Rear

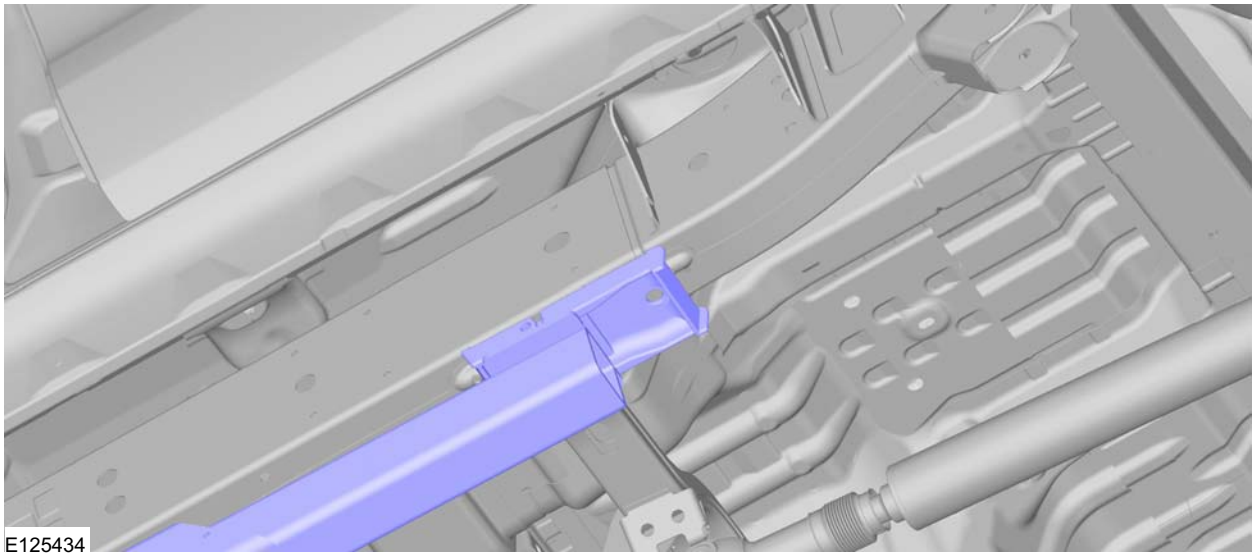
E125434

DESCRIPTION AND OPERATION

Safety Stand Positions

Front

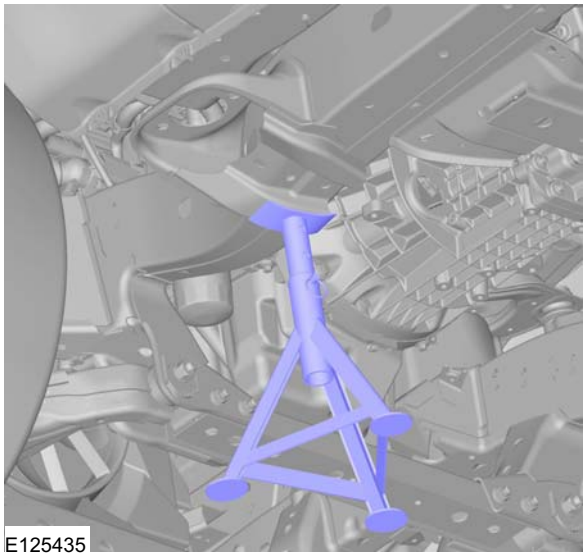
E125435

Rear

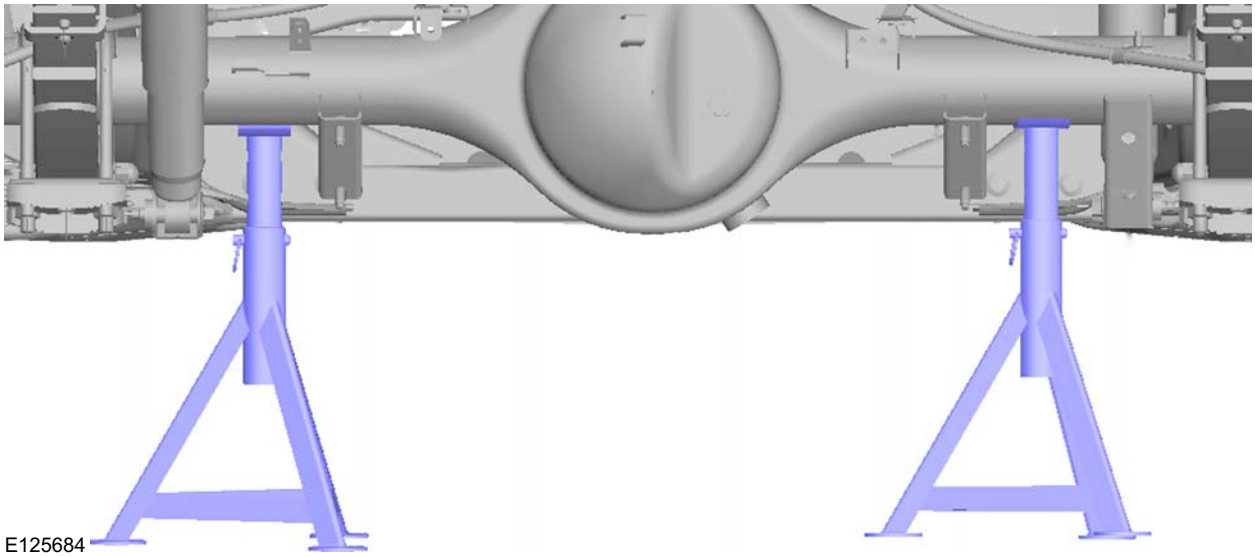
E125684

SECTION 100-04 Noise, Vibration and Harshness

VEHICLE APPLICATION: 2011.50 Ranger

CONTENTS PAGE

DESCRIPTION AND OPERATION

Noise, Vibration and Harshness (NVH)..... 100-04-2
Diagnostic Theory..... 100-04-2
Know the System..... 100-04-2
Know the History of the System..... 100-04-2
Know the History of the Condition..... 100-04-2
Know the Probability of Certain Conditions Developing..... 100-04-2
Do Not Cure the Symptom and Leave the Cause..... 100-04-2
Be Positive the Cause is Found..... 100-04-2
Diagnostic Charts..... 100-04-2

DESCRIPTION AND OPERATION

Noise, Vibration and Harshness (NVH)

Noise, vibration and harshness (NVH) is becoming more important as vehicles become more sophisticated and passenger comfort levels increase. This section is designed to aid in the diagnosis and testing and repair of NVH concerns.

- Noise is defined as sounds not associated with the operation of passenger compartment equipment that interface with customer satisfaction.
- Vibration is defined as impulses felt by the customer that are not caused by road surface changes.
- Harshness is a ride quality issue where the customer feels that the vehicle response to the road surface is sharply transmitted to the customer.

Diagnostic Theory

Diagnosis is more than just following a series of interrelated steps in order to find the solution to the specific condition. It is a way of looking at systems that are not functioning the way they should and finding out why. Also it is knowing how the system should work and whether it is working correctly.

There are basic rules for diagnosis. If these rules are followed, the cause of the condition is usually found the first time through the system.

Know the System

- Know how the parts go together.
- Know how the system operates as well as its limits and what happens when the system goes wrong.
- Sometimes this means checking the system against one that is known to be working correctly.

Know the History of the System

A clue in any one of these areas may save time:

- How old or new is the system?
- What kind of treatment has it had?
- Has it been serviced in the past in such a manner that might relate to the present condition?
- What is the service history?

Know the History of the Condition

- Did it start suddenly or appear gradually?
- Was it related to some other occurrence such as a collision or previous part replacement?
- Know how the condition made itself known; it may be an important clue to the cause.

Know the Probability of Certain Conditions Developing

- Look for the simple rather than the complex.
- For example:
  - Electrical conditions usually occur at connections rather than components.
  - An engine no-start is more likely to be caused by a loose wire or small adjustment rather than a sheared-off camshaft.
- Know the difference between impossible and improbable. Certain failures in a system can be improbable but still happen.
- New parts are just that, new. It does not mean they are always good functioning parts.

Do Not Cure the Symptom and Leave the Cause

Lowering the pressure in a front tire may correct the condition of a vehicle leaning to one side, but it does not correct the original condition.

Be Positive the Cause is Found

- Double check findings.
- What caused a worn component?
- A loose transmission or engine mount could indicate that other mounts are also loose.

Diagnostic Charts

Charts are a simple way of expressing the relationship between basic logic and a physical system of components. They help discover the cause of a condition in the least time. Diagnostic charts combine many areas of diagnosis into one visual display:

DESCRIPTION AND OPERATION

- Probability of certain things occurring in a system.
- Speed of checking certain components or functions before others.
- Simplicity of performing certain tests before others.
- Elimination of checking huge portions of a system by performing simple tests.
- Certainty of narrowing down the search to a small portion before performing in-depth testing.

The fastest way to find a condition is to work with the tools that are available. This means working with proven diagnostic charts and the correct special equipment for the system.

ENGINEERING SPECIFICATION

ESAB39-1255-AA

NAME : **VEHICLE SUSPENSION & ALIGNMENT - Ranger (P375) & BT50 (J26E)**

SERVICE SPECIFICATIONS

Curb Condition : **Service equipment (caster sweep)**, No Occupants, fuel full and other fluids full

PRODUCTION SPECIFICATION P375 (T6) NEW RANGER FMCSA NCA MACHINE				FRONT							REAR			
				LH CASTER*	RH CASTER*	CAMBER	TOE / WHL**	TOTAL TOE***	RIDE HEIGHT FORD (P375)	RIDE HEIGHT MAZDA (J26E)	CAMBER	TOE / WHL	RIDE HEIGHT FORD (P375)	RIDE HEIGHT MAZDA (J26E)
MODEL	4x2 LR	REG	Nominal	+2.88°	+2.88°	+0.00°	+0.00°	+0.00°			0.00°	0.00°		
			Tol.	±0.75°		±0.75°	±0.15°	±0.30°						
		RAP/ DBL	Nominal	+3.00°	+3.00°	+0.00°	+0.00°	+0.00°			0.00°	0.00°		
			Tol.	±0.75°		±0.75°	±0.15°	±0.30°						
	4x2HR/ 4x4	RHD	Nominal	+3.07°	+2.57°	+0.00°	+0.00°	+0.00°			0.00°	0.00°		
			Tol.	±0.75°		±0.75°	+0.00°	+0.00°						
		LHD	Nominal	+2.57°	+3.07°	+0.00°	+0.00°	+0.00°			0.00°	0.00°		
			Tol.	±0.75°		±0.75°	±0.15°	±0.30°						
Side to Side Difference****			Nominal	4x2LR : 0° 4x2 / 4x4 RHD: +0.50° LHD: -0.50°		0.00°						0.00°		
			Tol.	±0.75°		±0.75°						±0.30°		
Steering Axis Incl.			Reference	4x2 LR : 12.36° , 4x2HR/4x4 : 11.10°										
Turns Lock to Lock			Reference	4x2 LR : 3.49 , 4x2HR/4x4 : 3.29										
Maximum Steering Angle			Inner	4x2 LR : 41.4° ±3° , 4x2HR/4x4 : 38.0° ±3°										
			Outer	4x2 LR : 35.5° ±3° , 4x2HR/4x4 : 33.0° ±3°										
Clear Vision			Max	3°										

* Production measures true caster via inclinometer tool. Audit and Service measures approx caster via caster sweep method.
** Difference in toe adjuster length max 3mm, refer to figure 6
*** Toe compensated by thrust angle, for clear vision purposes (requirement : 4 wheel alignment)
**** Camber difference = Cross camber =Left front camber – Right front camber
Caster difference = Cross caster= Left front caster – Right front caster
Rear toe difference = Thrust angle = (Left rear toe toe – Right rear toe)/2
t/b With plant fitment of any towbar

GROUP 2

Chassis

SECTION TITLE PAGE

Suspension
Wheel Alignment Specifications
Suspension System - General Information....204-00
Front Suspension....204-01
Rear Suspension....204-02
Wheels and Tires....204-04

Driveline
Driveshaft....205-01
Rear Drive Axle/Differential....205-02
Front Drive Axle/Differential....205-03
Front Drive Halfshafts....205-04
Rear Drive Halfshafts....205-05

Brake System
Brake System - General Information....206-00
Drum Brake....206-02
Front Disc Brake....206-03
Parking Brake and Actuation....206-05
Hydraulic Brake Actuation....206-06
Power Brake Actuation....206-07
Anti-Lock Control....206-09A
Anti-Lock Control - Traction Control....206-09B

Steering System
Steering System - General Information....211-00
Power Steering....211-02
Steering Linkage....211-03
Steering Column....211-04
Steering Column Switches....211-05

SECTION 204-00 Suspension System - General Information

VEHICLE APPLICATION: 2011.50 Ranger

CONTENTS PAGE

GENERAL PROCEDURES

Camber and Caster Adjustment..... 204-00-2
Front Toe Adjustment..... (14 117 3) 204-00-3

GENERAL PROCEDURES

Camber and Caster Adjustment

NOTE: Make sure that the tire pressures are to specification and that the vehicle is unladen.

1. **Using alignment equipment and the manufacturer's instructions, measure the front caster and camber.**
2. **Loosen the upper arm nut.**

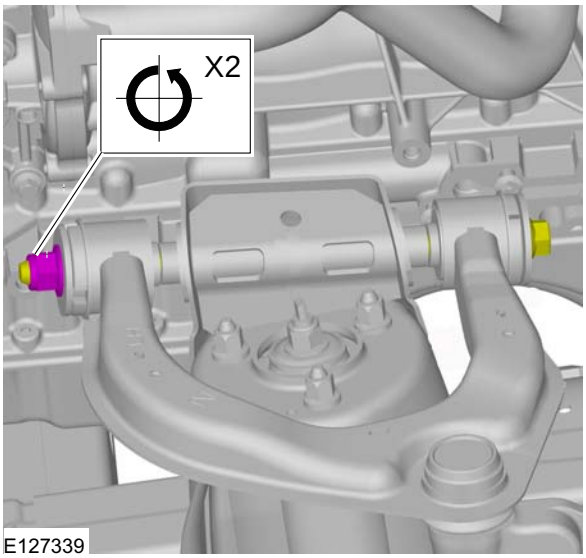

E127339

3. **Loosen the lower arm bolt(s) and adjust the caster and camber settings according to manufacturer's instructions.**
4. **NOTE: Make sure that the weight of the vehicle is on the wheels and that the caster and camber settings are not disturbed while tightening the bolt(s).**

   After adjustment, tighten the upper arm shaft bolt and lower arm bolts to the specified torque .

   1. Tightening torque of upper arm bolt : 86 Nm .
   2. Tightening torque of Lower arm bolt : 270 Nm
5. **Confirm the front wheel alignment as in the specification.**

1. If not within the specification, adjust the front wheel alignment again.

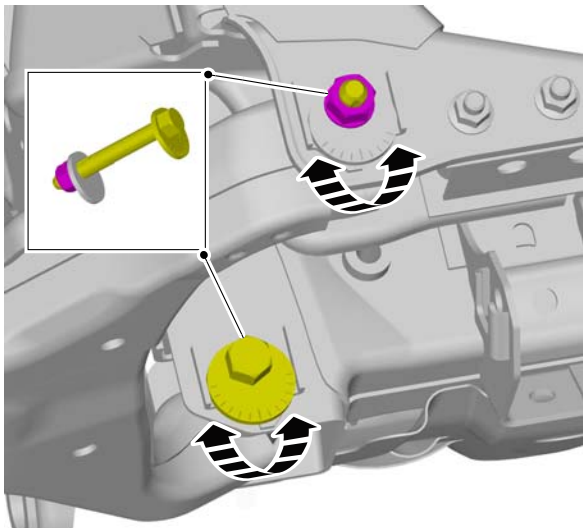
E127342

GENERAL PROCEDURES

Front Toe Adjustment(14 117 3)

General Equipment

Wheel alignment system

NOTE: Make sure that the vehicle is standing on a level surface.

NOTE: Make sure that the tire pressures are to specification and that the vehicle is unladen.

1.

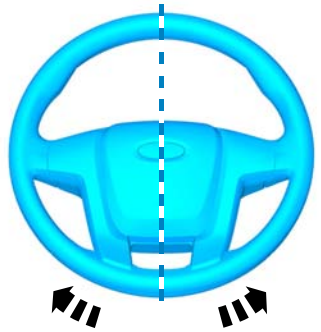

E125822

CAUTION: Make sure that the steering wheel lock is engaged.

NOTE: Make sure that the road wheels are in the straight ahead position.

2. Loosen the locknut of the tie-rod end.

3. Turn the tie rods by the same amount in the opposite direction.

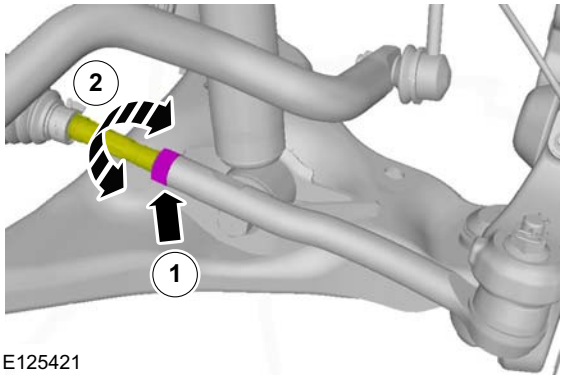

E125421

4. NOTE: One turn of the tie rod (both sides) changes the toe-in by about approx. 30 mm (1.18 in).

NOTE: The left and right tie rods are both right threaded. To increase the toe-in, turn the right tie rod toward the front of the vehicle and the left tie rod equally toward the rear.

Tighten the tie-rod end locknuts.

- 73 Nm

SECTION 204-01 Front Suspension

VEHICLE APPLICATION: 2011.50 Ranger

CONTENTS PAGE

DESCRIPTION AND OPERATION

Front Suspension..... 204-01-2

REMOVAL AND INSTALLATION

Front Wheel Bearing..... (14 411 0; 14 411 4; 14 412 0; 14 414 4; 14 416 4) 204-01-4
Wheel Knuckle — 2WD..... (14 343 0) 204-01-8
Wheel Knuckle — 4WD..... (14 343 0) 204-01-11
Front Shock Absorber..... 204-01-15
Lower Arm..... (14 706 0; 14 707 0; 14 709 0) 204-01-17
Upper Arm..... 204-01-18

DESCRIPTION AND OPERATION

Front Suspension

4X2

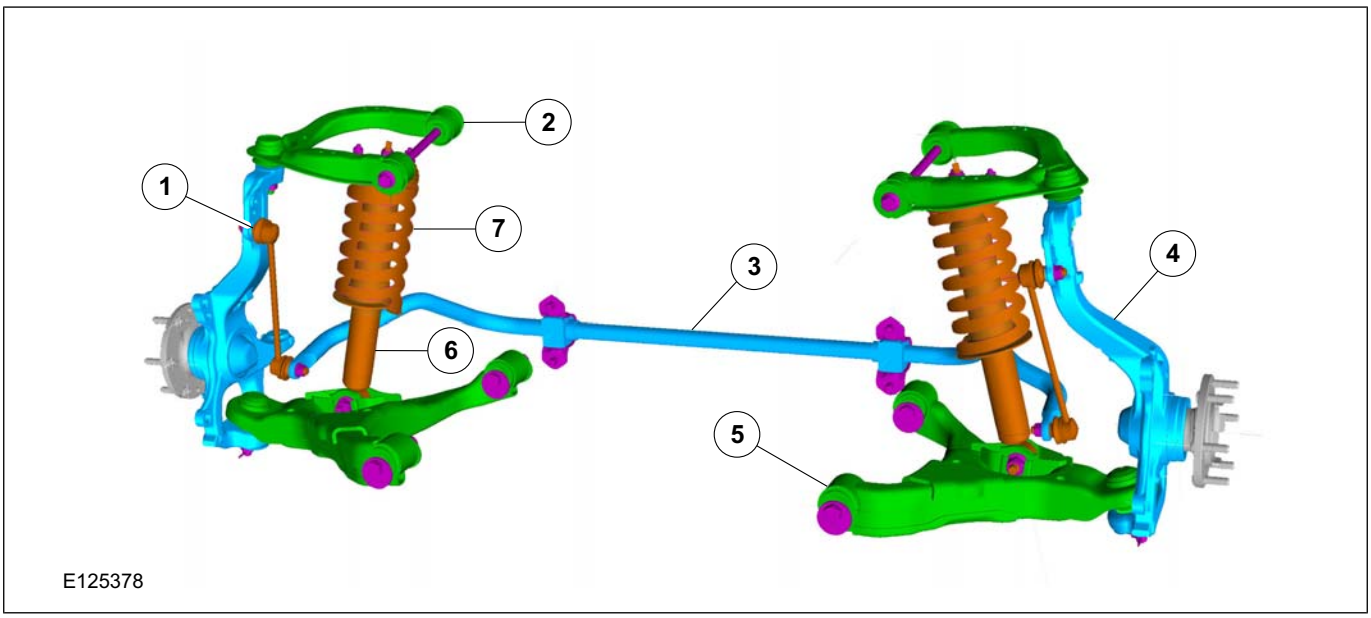

Item	Description
1	Stabilizer bar link
2	Upper arm
3	Stabilizer bar

Item	Description
4	Knuckle
5	Lower arm
6	Shock absorber unit
7	Suspension unit

4X2 Hi-Rider

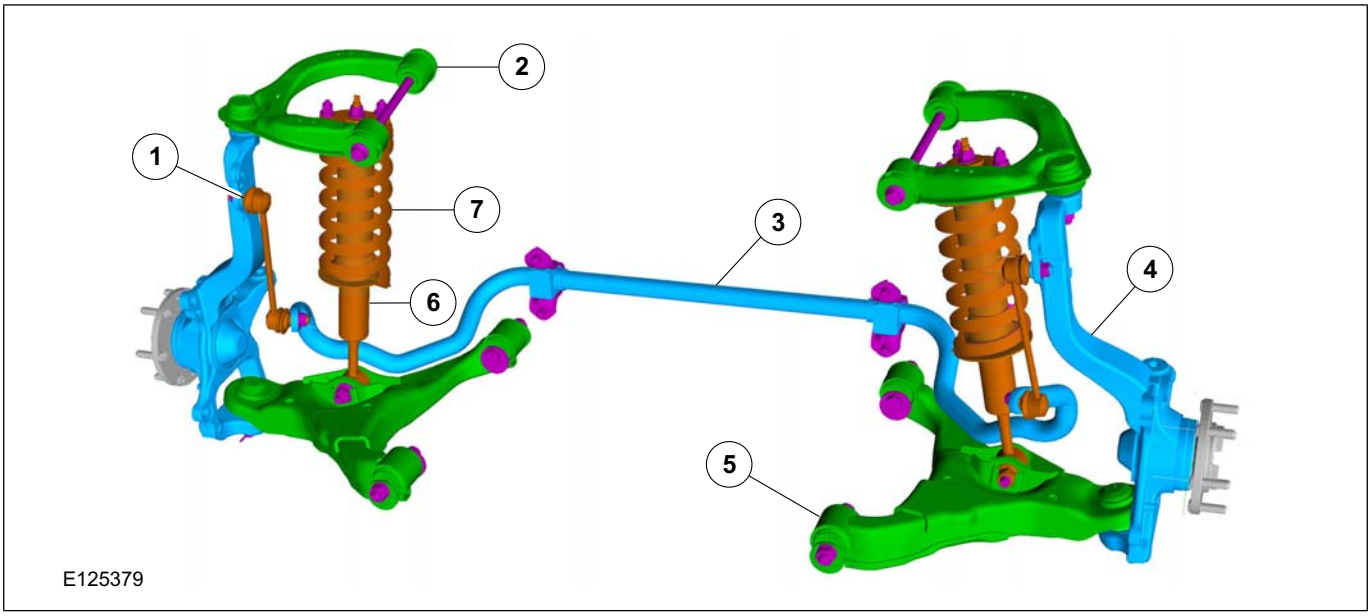

Item	Description
1	Stabilizer bar link
2	Upper arm

Item	Description
3	Stabilizer bar
4	Knuckle

DESCRIPTION AND OPERATION

Item	Description
5	Lower arm

Item	Description
6	Shock absorber unit
7	Suspension unit

4X4

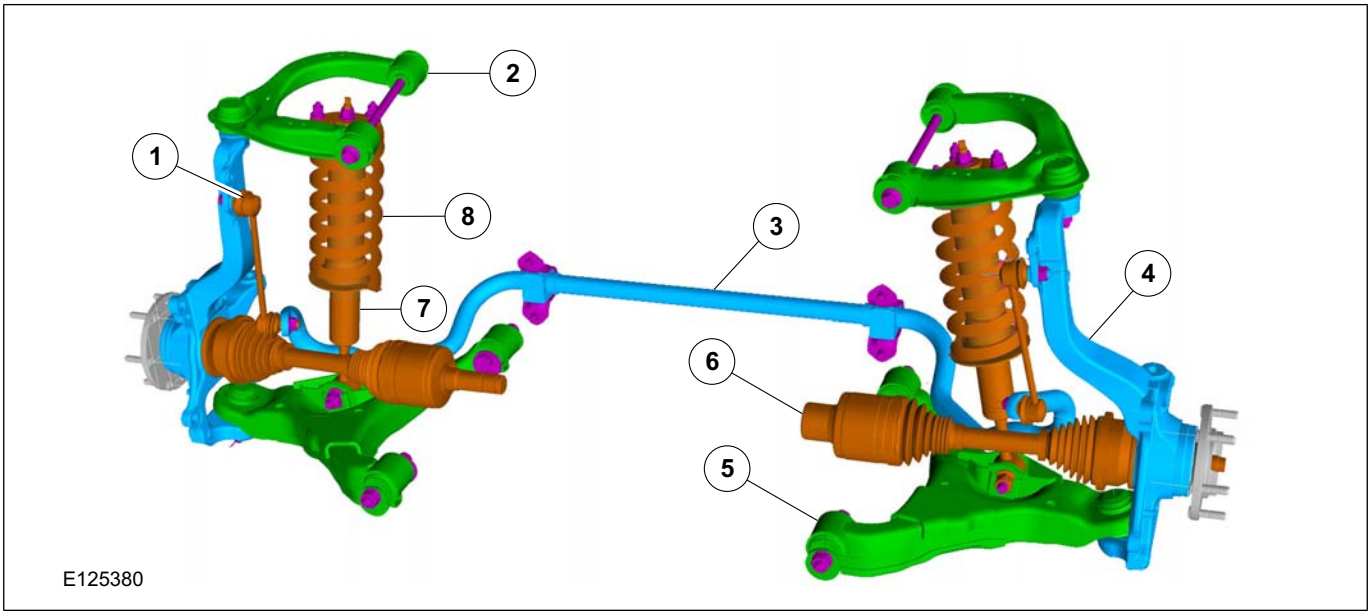

Item	Description
1	Stabilizer bar link
2	Upper arm
3	Stabilizer bar
4	Knuckle
5	Lower arm
6	Half Shafts
7	Shock absorber unit
8	Suspension unit

REMOVAL AND INSTALLATION

Front Wheel Bearing(14 411 0; 14 411 4; 14 412 0; 14 414 4; 14 416 4)

Special Tool(s) / General Equipment

204-348/3 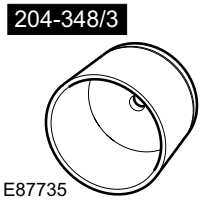 E87735	204-348/3 Remover/Installer, Wheel Hub/Wheel Bearing
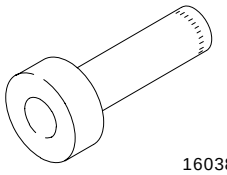 16038	308-095 Installer, Input Shaft Bearing
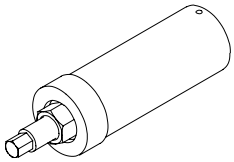 E49064	308-604 Installer, Output Drive Flange Seal
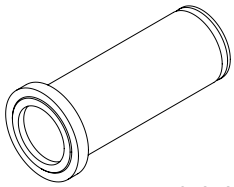 E65343	308-643 Installer, Input Shaft Seal
Hydraulic Press	

Removal

NOTE: Removal steps in this procedure may contain installation details.

1. Refer to: Health and Safety Precautions (100-00 General Information, Description and Operation).

4x2

2. Refer to: Wheel Knuckle - 2WD (204-01 Front Suspension, Removal and Installation).

3.

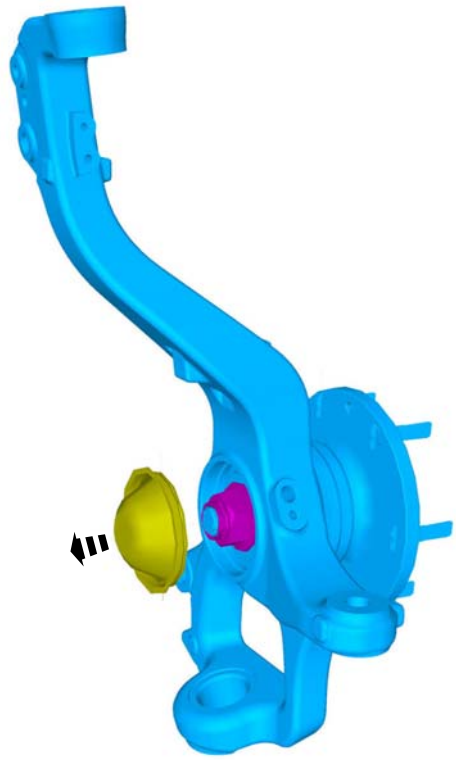

E125411

REMOVAL AND INSTALLATION

4x4

4. Refer to: Wheel Knuckle - 4WD (204-01 Front Suspension, Removal and Installation).

All vehicles

5. Special Tool(s): 204-348/3
General Equipment: Hydraulic Press

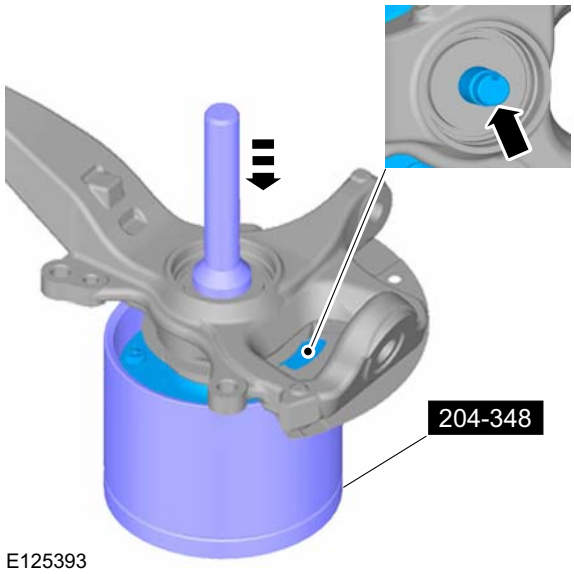

E125393

6. General Equipment: Hydraulic Press

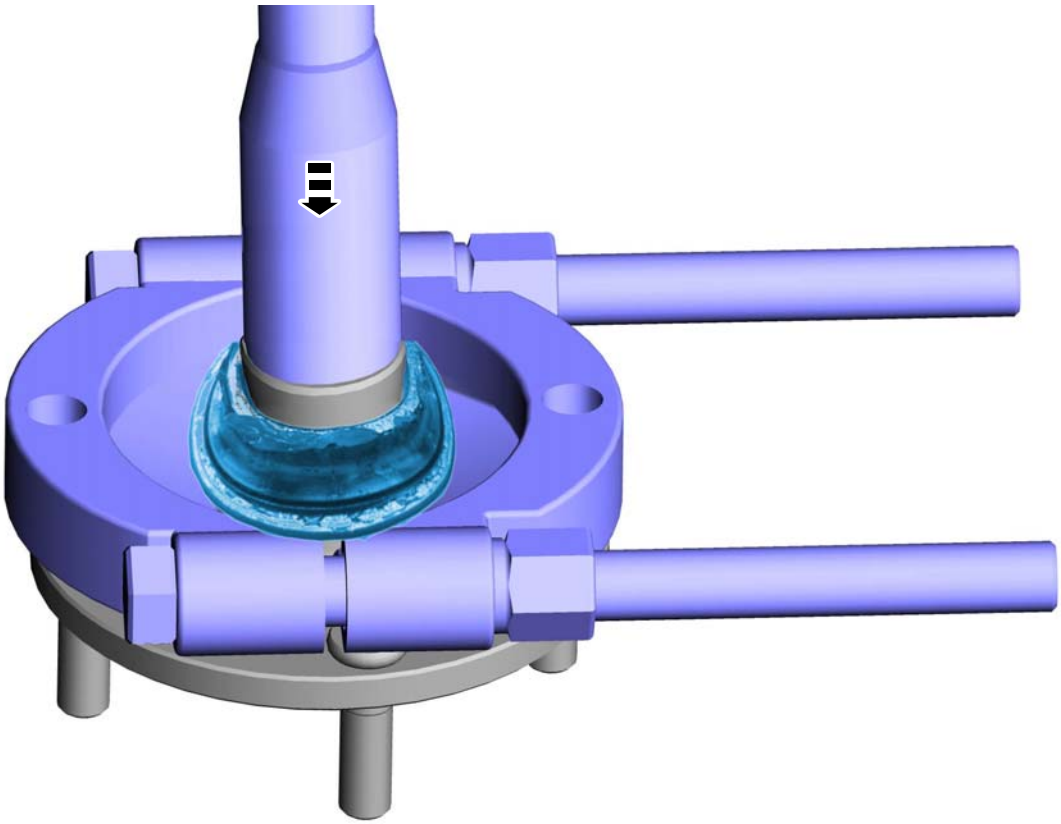
E105012

REMOVAL AND INSTALLATION

7.

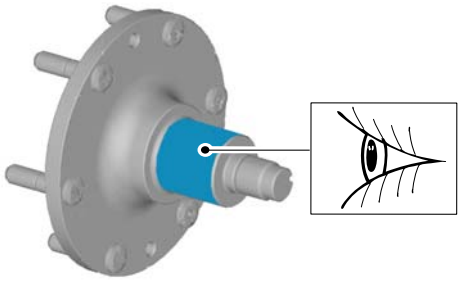

E125394

8.

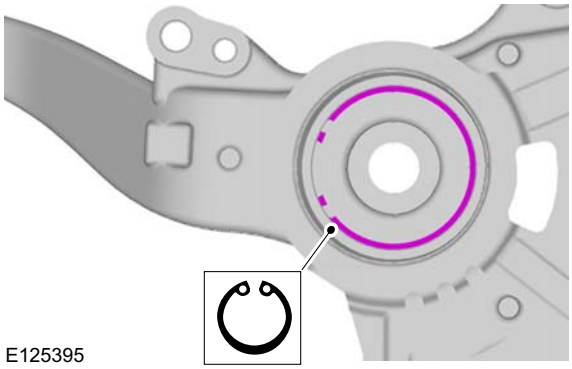

E125395

9. Special Tool(s): 204-348/3, 308-643
General Equipment: Hydraulic Press

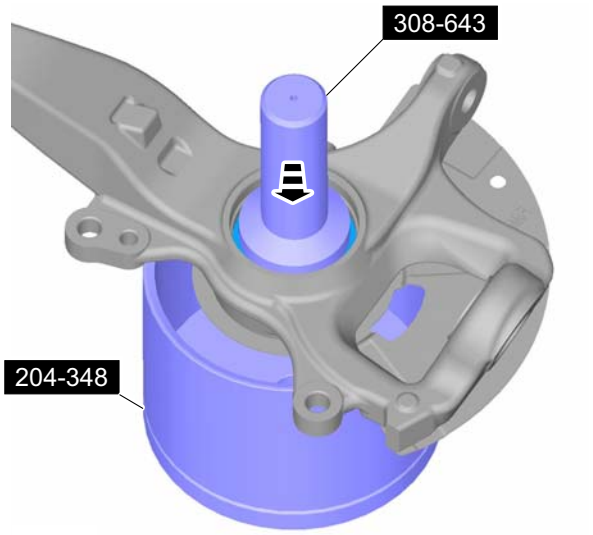

E125396

Installation

1. NOTE: Make sure that the sensor ring is correctly located.

- 1. Old Front wheel bearing. 2. New Front wheel bearing.
- Press and install the new wheel bearing.

  Special Tool(s): 308-095, 308-604
  General Equipment: Hydraulic Press

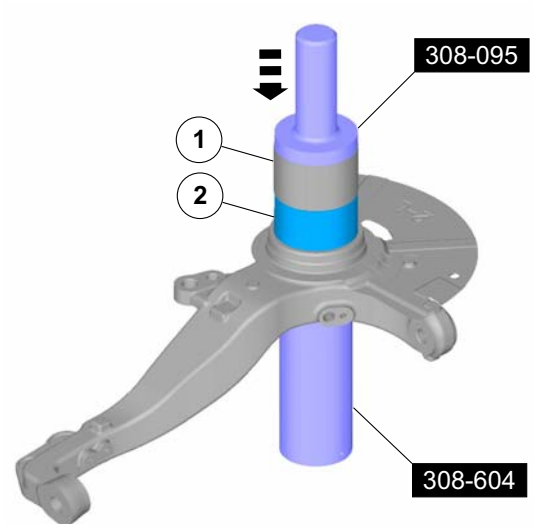

E125397

2.

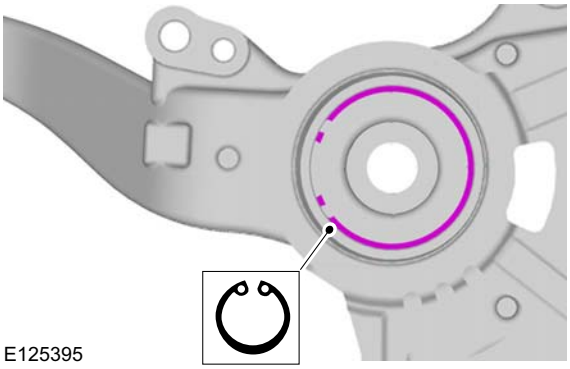

E125395

REMOVAL AND INSTALLATION

3. Special Tool(s): 308-643
General Equipment: Hydraulic Press

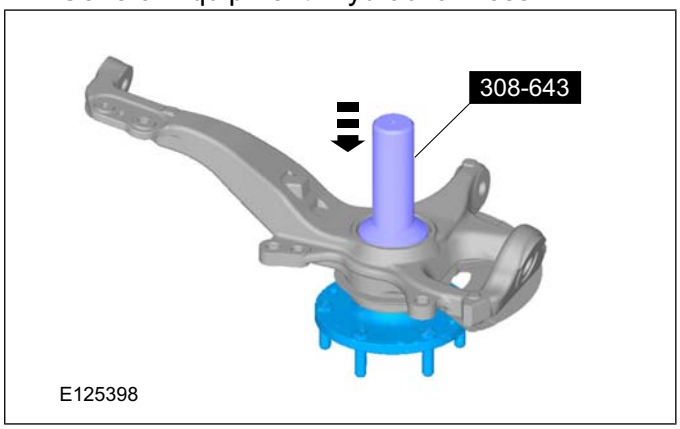

REMOVAL AND INSTALLATION

Wheel Knuckle — 2WD(14 343 0)

Special Tool(s)

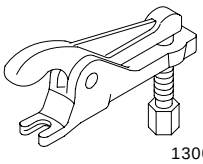 13005	211-020 Separator, Ball Joint
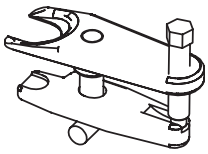 E139377	49-T028-3A0 Remover, Ball Joint Puller Set

Removal

NOTE: Removal steps in this procedure may contain installation details.

1. **CAUTIONS:**

   Suspension fasteners are critical parts because they affect performance of vital components and systems and their failure can result in major service expense. A new part with the same part number or an equivalent part must be installed, if installation is necessary. Do not use a part of lesser quality or substitute design. Torque values must be used as specified during reassembly to make sure of correct retention of these parts.

   Performing the following procedures without first removing the ABS wheel-speed sensor may possibly cause an open circuit in the harness if it is pulled by mistake. Before performing the following procedures, remove the ABS wheel-speed sensor (axle side) and fix it to an appropriate place where the sensor will not be pulled by mistake while the vehicle is being serviced.

   Refer to: Health and Safety Precautions (100-00 General Information, Description and Operation).

2. Refer to: Wheel and Tire (204-04 Wheels and Tires, Removal and Installation).

3. Torque: 7 Nm

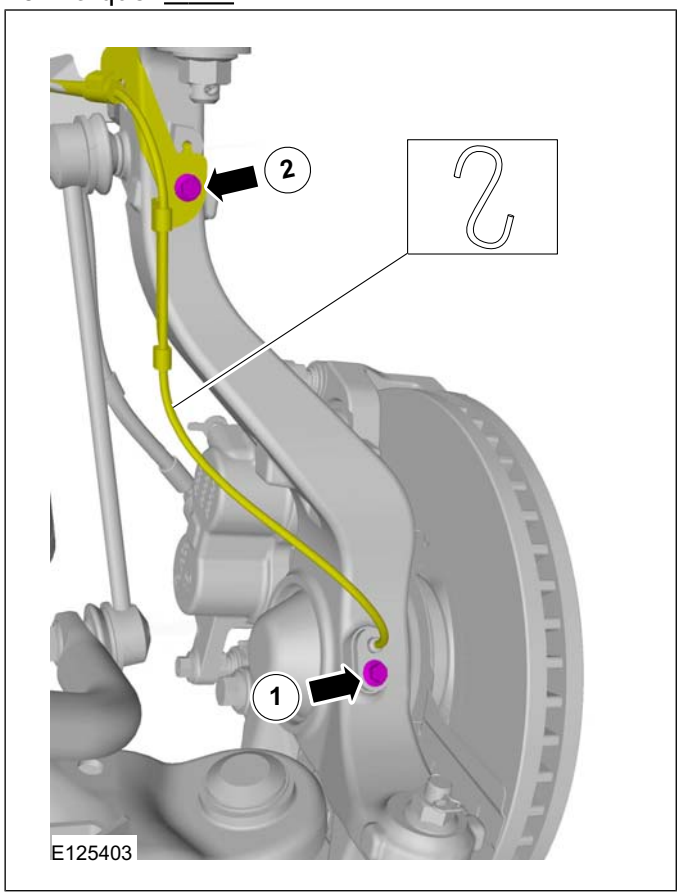

4. **WARNING: Make sure that no load is placed on the brake hose.**

   Refer to: Brake Disc (206-03 Front Disc Brake, Removal and Installation).

5. **WARNING: Make sure that a new nut is installed.**

REMOVAL AND INSTALLATION

CAUTION: Make sure that ball joint does not rotate.

Torque: 125 Nm

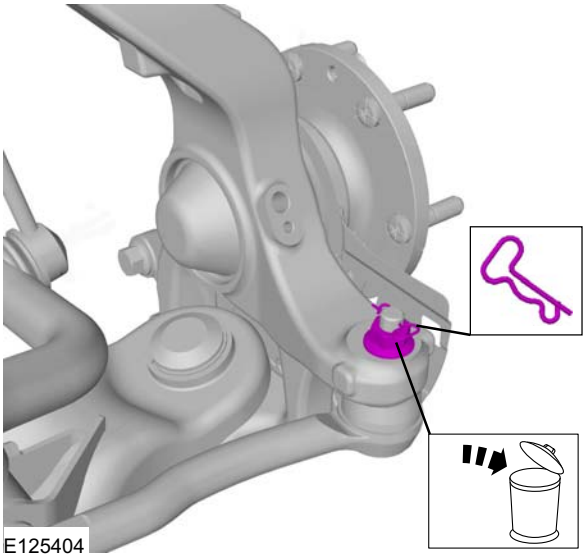

6. **CAUTIONS:**

Do not use a hammer to separate the tie rod from the wheel knuckle or damage to the wheel knuckle can result.

Do not damage the tie-rod boot while installing the special tool.

Leave the tie-rod end retaining nut in place to protect the ball joint stud.

Protect the ball joint seal using a soft cloth to prevent damage.

Special Tool(s): 211-020

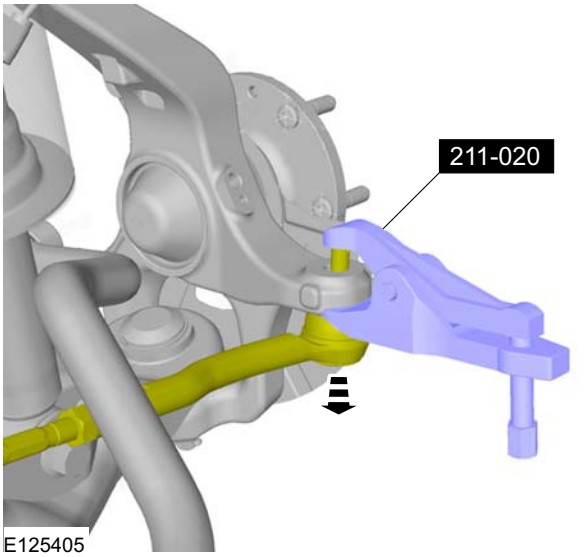

7. **WARNING: Make sure that a new nut is installed.**

CAUTIONS:

Use suitable packing material to prevent damage to the component.

Make sure that the ball joint ball does not rotate.

1. Torque: 14 Nm
2. Torque: 80 Nm
3. Torque: 65 Nm

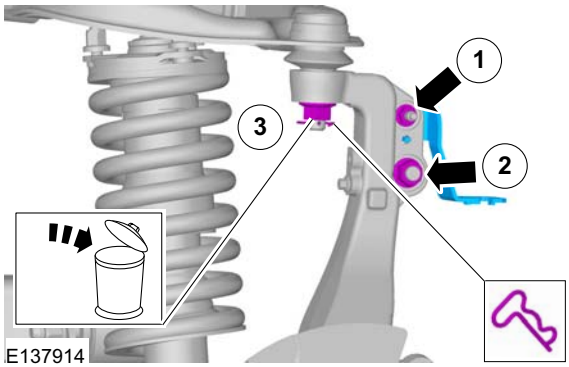

8. **CAUTIONS:**

Protect the ball joint seal using a soft cloth to prevent damage.

Do not damage the ball joint boot while installing the special tool.

Protect the ball joint seal using a soft cloth to prevent damage.

Special Tool(s): 49-T028-3A0

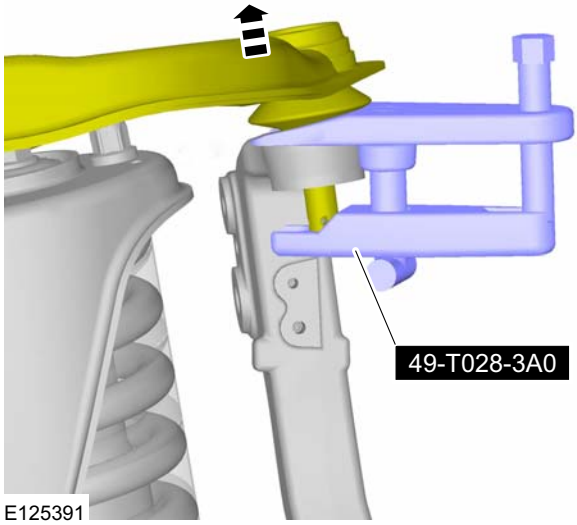

REMOVAL AND INSTALLATION

9. **WARNING: Make sure that a new nut is installed.**

   NOTE: Make sure that the wheel knuckle is correctly secured.

   Torque: 175 Nm

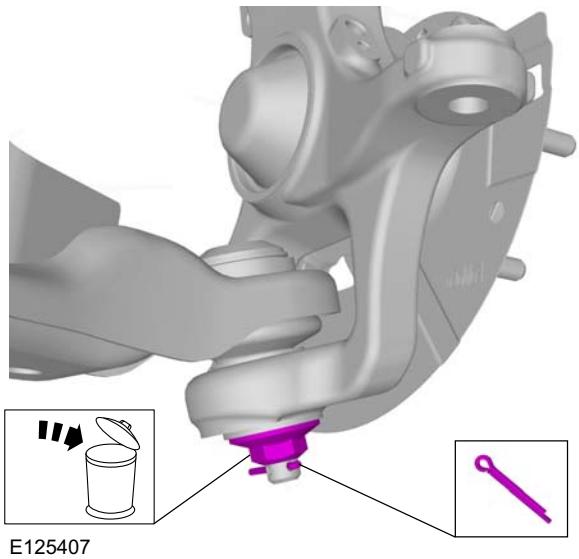
E125407

10. **CAUTIONS:**

    Do not use a hammer to separate the ball joint from the wheel knuckle or damage to the wheel knuckle can result.

    Do not damage the ball joint boot while installing the special tool.

    Special Tool(s): 49-T028-3A0

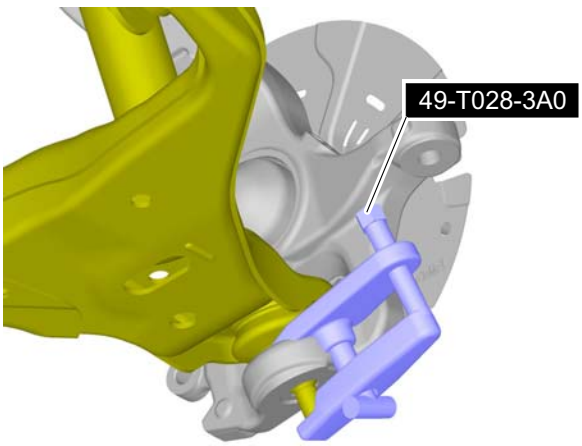

E125412

11. **NOTE:** This step is only necessary when installing a new component.

    Refer to: Front Wheel Bearing (204-01 Front Suspension, Removal and Installation).

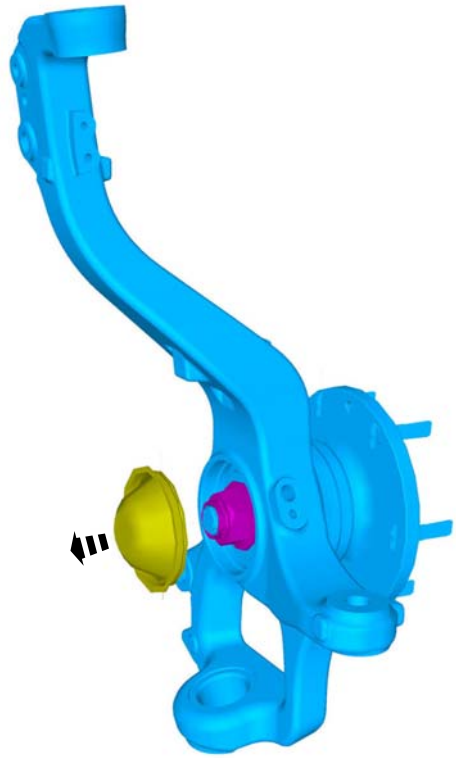
E125411

Installation

1. To install, reverse the removal procedure.
2. Refer to: Front Toe Adjustment (204-00 Suspension System - General Information, General Procedures).

REMOVAL AND INSTALLATION

Wheel Knuckle — 4WD(14 343 0)

Special Tool(s) / General Equipment

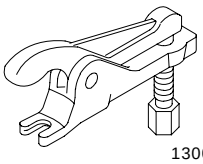 13006	211-020 Separator, Ball Joint
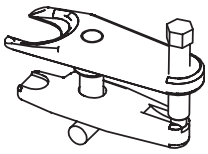 E139377	49-T028-3A0 Remover, Ball Joint Puller Set
Puller	
Two Leg Puller	

Removal

NOTE: Removal steps in this procedure may contain installation details.

1. **CAUTIONS:**

   Suspension fasteners are critical parts because they affect performance of vital components and systems and their failure can result in major service expense. A new part with the same part number or an equivalent part must be installed, if installation is necessary. Do not use a part of lesser quality or substitute design. Torque values must be used as specified during reassembly to make sure of correct retention of these parts.

   Performing the following procedures without first removing the ABS wheel-speed sensor may possibly cause an open circuit in the harness if it is pulled by mistake. Before performing the following procedures, remove the ABS wheel-speed sensor (axle side) and fix it to an appropriate place where the sensor will not be pulled by mistake while the vehicle is being serviced.

   Refer to: Health and Safety Precautions (100-00 General Information, Description and Operation).

2.

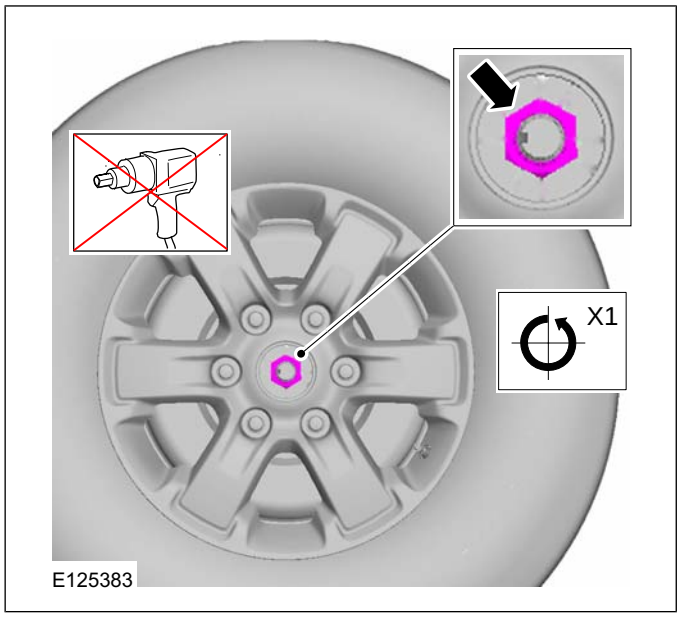

3. Refer to: Wheel and Tire (204-04 Wheels and Tires, Removal and Installation).

4. **CAUTION: If the outer constant velocity (CV) joint boot is damaged a new halfshaft must be installed.**

   Torque: 275 Nm

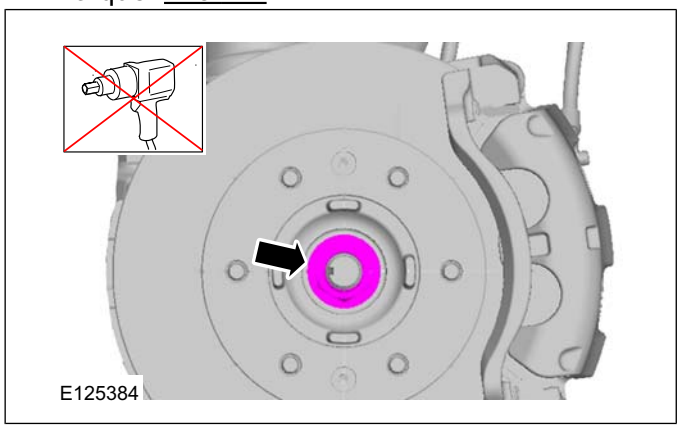

REMOVAL AND INSTALLATION

5. Torque: 7 Nm

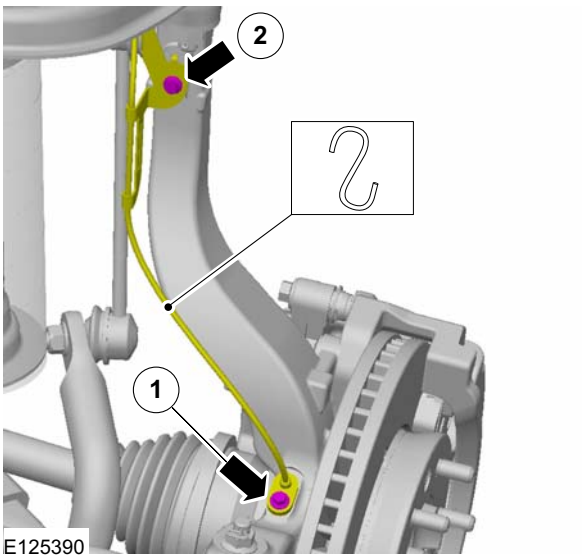

6. **WARNING: Make sure that no load is placed on the brake hose.**

   Refer to: Brake Disc (206-03 Front Disc Brake, Removal and Installation).

7. **CAUTION: Make sure that the ball joint ball does not rotate.**

   Torque: 125 Nm

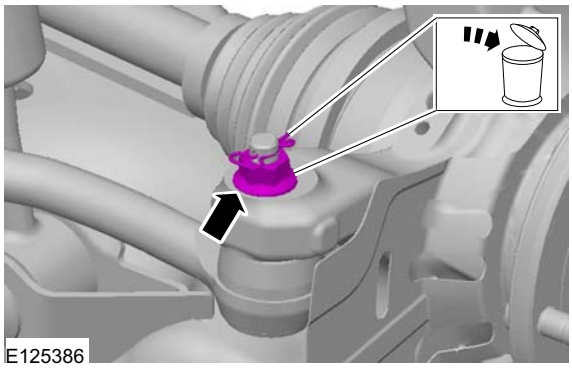

8. **CAUTIONS:**

   Do not use a hammer to separate the tie rod from the wheel knuckle or damage to the wheel knuckle can result.

   Do not damage the tie-rod boot while installing the special tool.

   Leave the tie-rod end retaining nut in place to protect the ball joint stud.

   Protect the ball joint seal using a soft cloth to prevent damage.

   Special Tool(s): 211-020

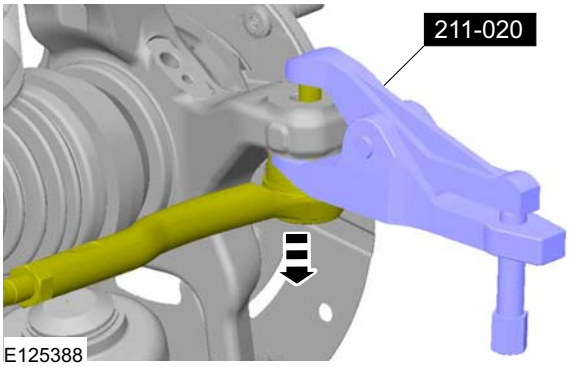

9. **WARNING: Make sure that a new nut is installed.**

   CAUTIONS:

   Use suitable packing material to prevent damage to the component.

   Make sure that the ball joint ball does not rotate.

   1. Torque: 14 Nm
   2. Torque: 80 Nm
   3. Torque: 65 Nm

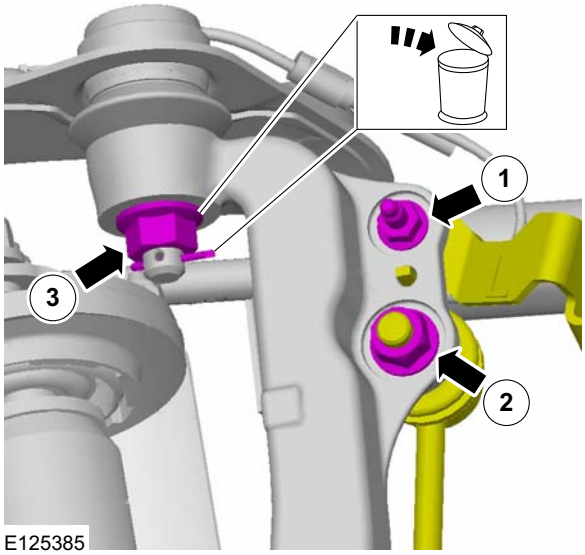

10. **CAUTIONS:**

    Do not use a hammer to separate the ball joint from the wheel knuckle or damage to the wheel knuckle can result.

    Do not damage the ball joint boot while installing the special tool.

REMOVAL AND INSTALLATION

Protect the ball joint seal using a soft cloth to prevent damage.

Special Tool(s): 49-T028-3A0
General Equipment: Two Leg Puller

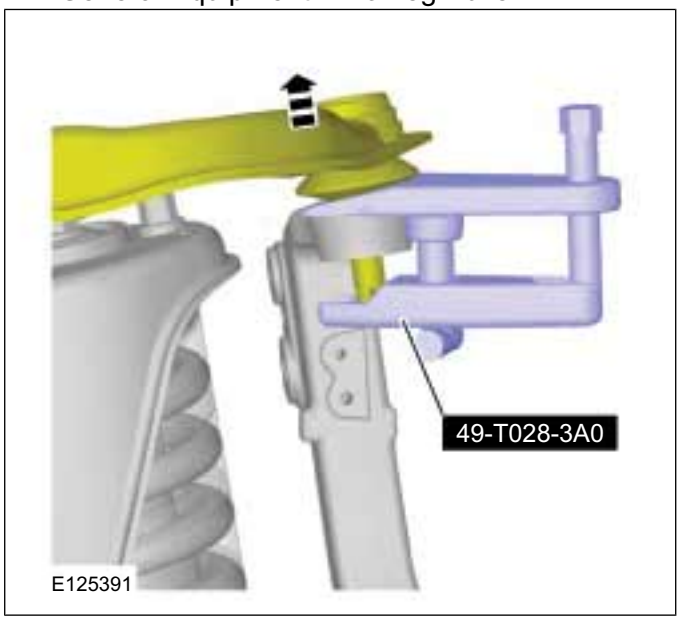

11. **NOTE:** Make sure that the wheel knuckle and halfshaft are correctly secured.

Torque: 175 Nm

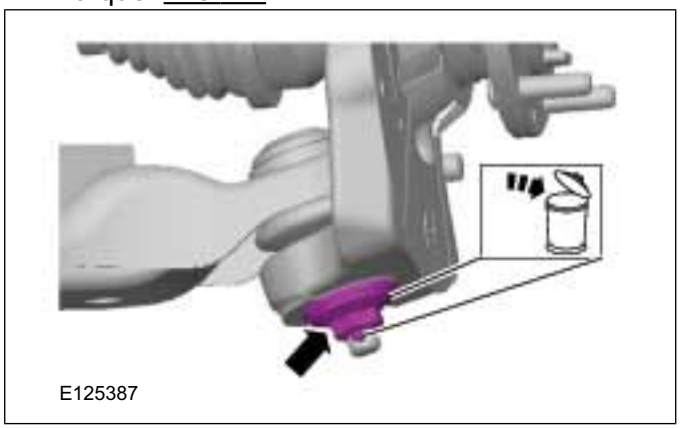

12. **CAUTIONS:**

Do not use a hammer to separate the ball joint from the wheel knuckle or damage to the wheel knuckle can result.

Do not damage the ball joint boot while installing the special tool.

Special Tool(s): 49-T028-3A0

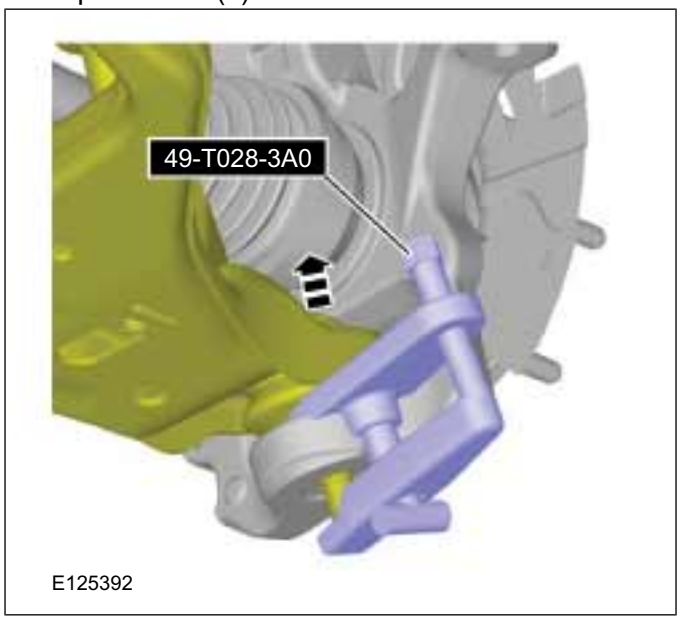

13. **CAUTION: Do not use a hammer to separate the outboard CV joint from the hub. Damage to the threads and internal CV joint components can result.**

Using the special tool, press the outboard CV joint until it is loose in the hub.

General Equipment: Puller

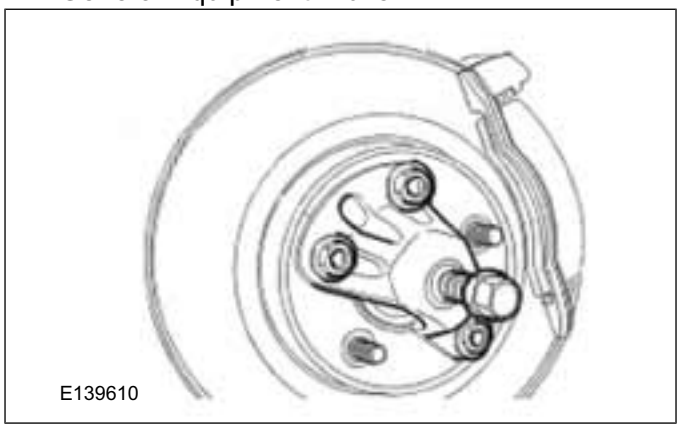

REMOVAL AND INSTALLATION

14. **CAUTION: Do not damage the axle shaft oil seal or the machined sealing surface on the outboard CV joint housing.**

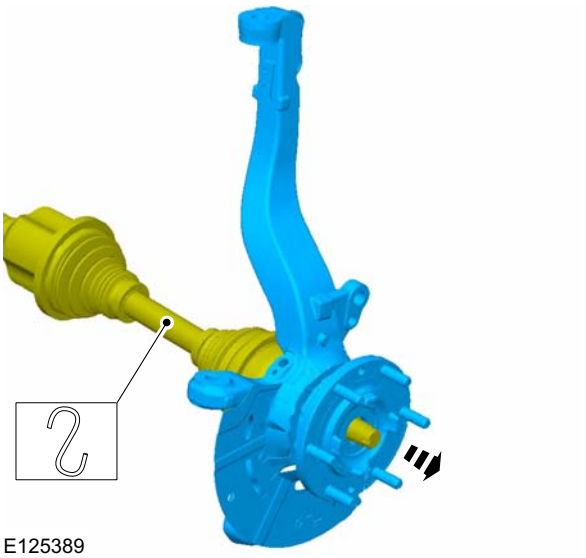

Installation

1. **WARNINGS:**

   Install a new lower arm ball joint retaining nut. Failure to follow this instruction may result in personal injury.

   Install a new tie-rod end retaining nut. Failure to follow this instruction may result in personal injury.

   CAUTION: Make sure that the ball joint ball does not rotate.

   NOTE: The dust cover does not need to be removed unless it is being replaced. Mark the dust cover and steering knuckle for proper installation.

   Refer to: Front Toe Adjustment (204-00 Suspension System - General Information, General Procedures).

2. To install, reverse the removal procedure.

REMOVAL AND INSTALLATION

Front Shock Absorber

Removal

WARNING: All vehicles are equipped with gas-pressurized shock absorbers which will extend unassisted. Do not apply heat or flame to the shock absorbers during removal or component servicing. Failure to follow these instructions may result in personal injury.

CAUTION: Suspension fasteners are critical parts because they affect performance of vital components and systems and their failure can result in major service expense. A new part with the same part number or an equivalent part must be installed, if installation is necessary. Do not use a part of lesser quality or substitute design. Torque values must be used as specified during reassembly to make sure of correct retention of these parts.

NOTE: Removal steps in this procedure may contain installation details.

1. Refer to: Health and Safety Precautions (100-00 General Information, Description and Operation).
   Refer to: Wheel and Tire (204-04 Wheels and Tires, Removal and Installation).
2. 1. Torque: 30 Nm
   2. Torque: 250 Nm

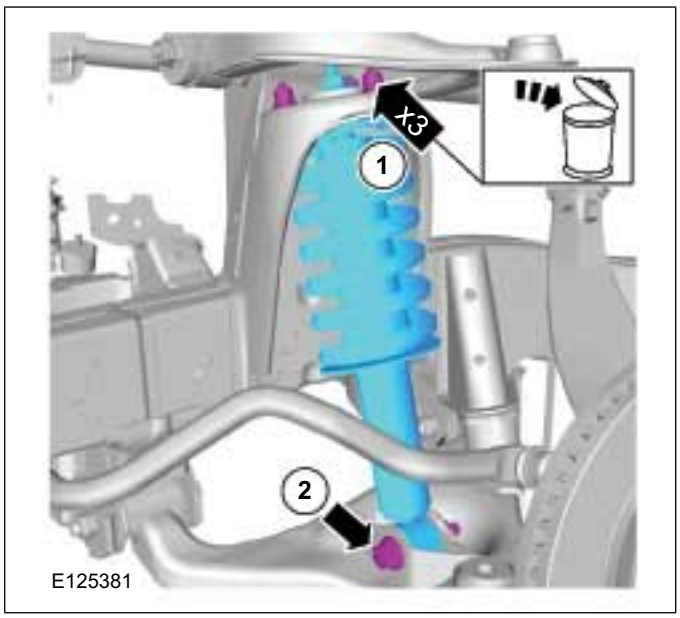

3. Using a suitable jack support the lower control arm near the lower ball joint.
4. Torque: 80 Nm

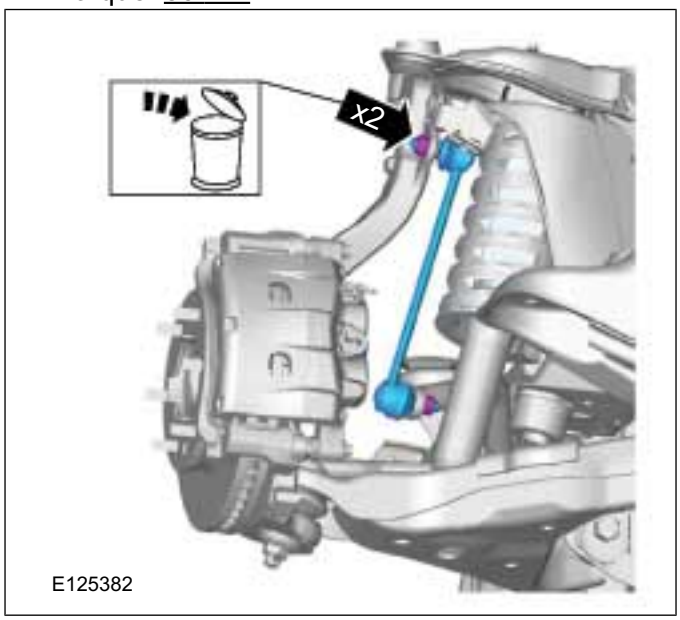

5. Lower the jack support to lower the control arm.
6.

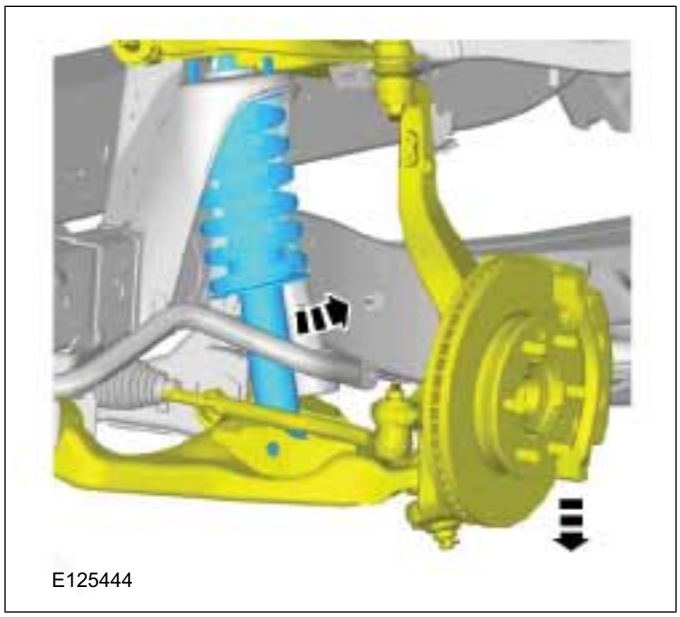

Installation

CAUTION: Before tightening any suspension bushing fasteners, use a suitable jack to raise the suspension.

REMOVAL AND INSTALLATION

1. To install, reverse the removal procedure.

REMOVAL AND INSTALLATION

Lower Arm(14 706 0; 14 707 0; 14 709 0)

General Equipment

Two Leg Puller

Removal

CAUTION: Suspension fasteners are critical parts because they affect performance of vital components and systems and their failure can result in major service expense. A new part with the same part number or an equivalent part must be installed, if installation is necessary. Do not use a part of lesser quality or substitute design. Torque values must be used as specified during reassembly to make sure of correct retention of these parts.

NOTE: Removal steps in this procedure may contain installation details.

1. Refer to: Health and Safety Precautions (100-00 General Information, Description and Operation).
   Refer to: Wheel and Tire (204-04 Wheels and Tires, Removal and Installation).
2. 1. Torque: 85 Nm
   2. Torque: 57 Nm
   3. Torque: 67 Nm

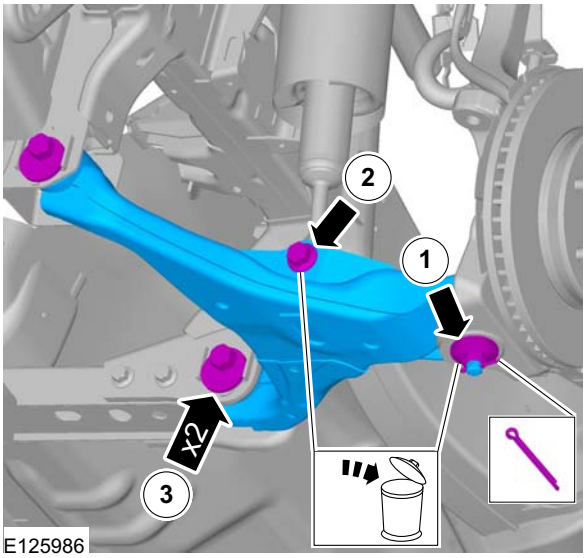

3. **CAUTIONS:**

   Do not damage the ball joint boot while installing the special tool.

   Do not use a hammer to separate the ball joint from the wheel knuckle or damage to the wheel knuckle can result.

   Make sure that the wheel knuckle is correctly secured.

General Equipment: Two Leg Puller

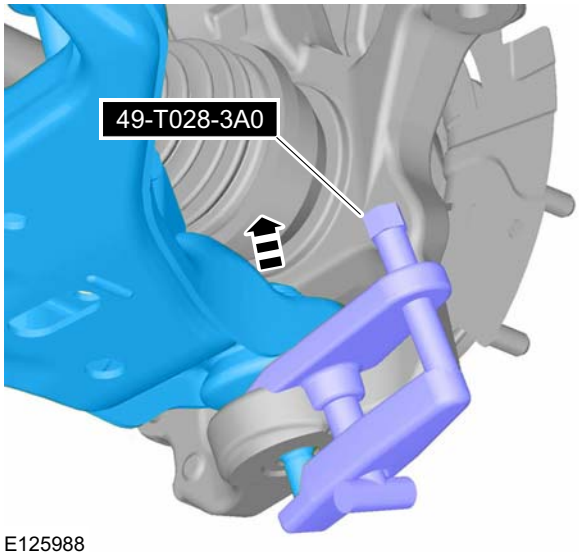

Installation

CAUTION: Before tightening any suspension bushing fasteners, use a suitable jack to raise the suspension.

1. To install, reverse the removal procedure.

REMOVAL AND INSTALLATION

Upper Arm

Special Tool(s) / General Equipment

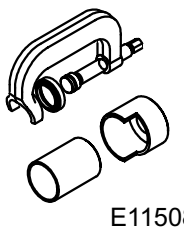 E115081	204-288A Remover/Installer, Ball Joint

Special Tool(s) / General Equipment

Two Leg Puller

Removal

CAUTION: Suspension fasteners are critical parts because they affect performance of vital components and systems and their failure can result in major service expense. A new part with the same part number or an equivalent part must be installed, if installation is necessary. Do not use a part of lesser quality or substitute design. Torque values must be used as specified during reassembly to make sure of correct retention of these parts.

NOTE: Removal steps in this procedure may contain installation details.

1. Refer to: Health and Safety Precautions (100-00 General Information, Description and Operation).
   Refer to: Wheel and Tire (204-04 Wheels and Tires, Removal and Installation).
2. Refer to: Front Wheel Speed Sensor (206-09 Anti-Lock Control, Removal and Installation).
3. Torque: 70 Nm

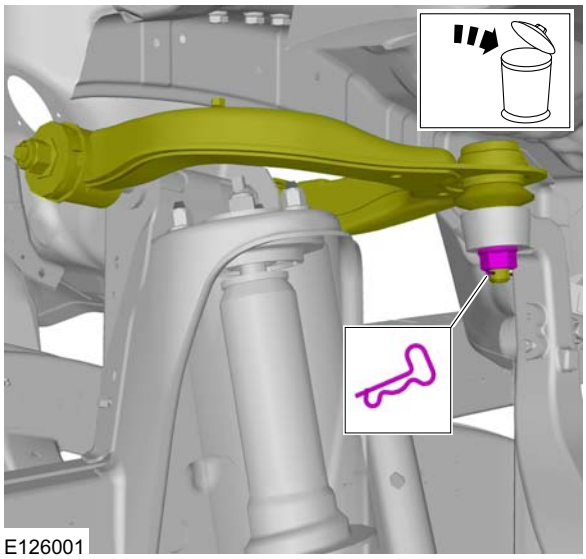
E126001

4. **CAUTIONS:**

   Do not use a hammer to separate the ball joint from the wheel knuckle or damage to the wheel knuckle can result.

   Do not damage the ball joint boot while installing the special tool.

REMOVAL AND INSTALLATION

Make sure that the knuckle assembly is secured secured with suitable retaining straps.

Remove the Special Tool(s): 204-288A
General Equipment: Two Leg Puller

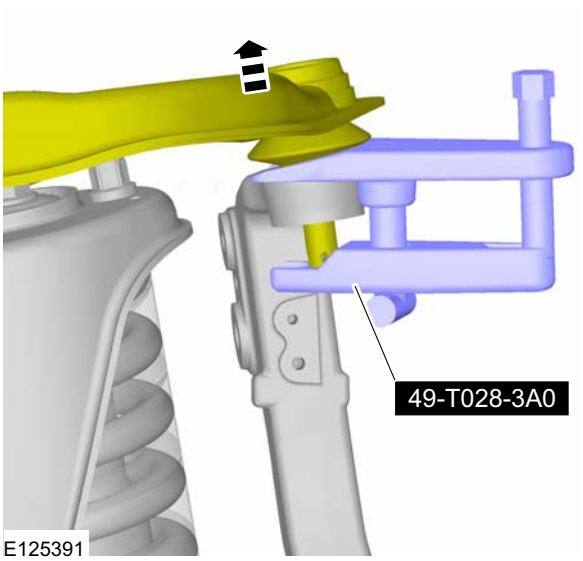

5. Torque: 80 Nm

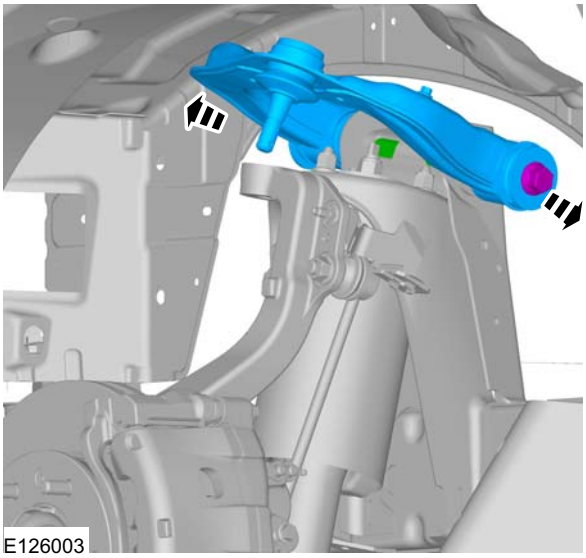

Installation

CAUTION: Before tightening any suspension bushing fasteners, use a suitable jack to raise the suspension.

1. To install, reverse the removal procedure.

SECTION 204-02 Rear Suspension

VEHICLE APPLICATION: 2011.50 Ranger

CONTENTS PAGE

DESCRIPTION AND OPERATION

Rear Suspension..... 204-02-2

REMOVAL AND INSTALLATION

Spring..... (15 621 0) 204-02-4
Rear Shock Absorber..... (15 791 0) 204-02-6

DESCRIPTION AND OPERATION

Rear Suspension

4x2

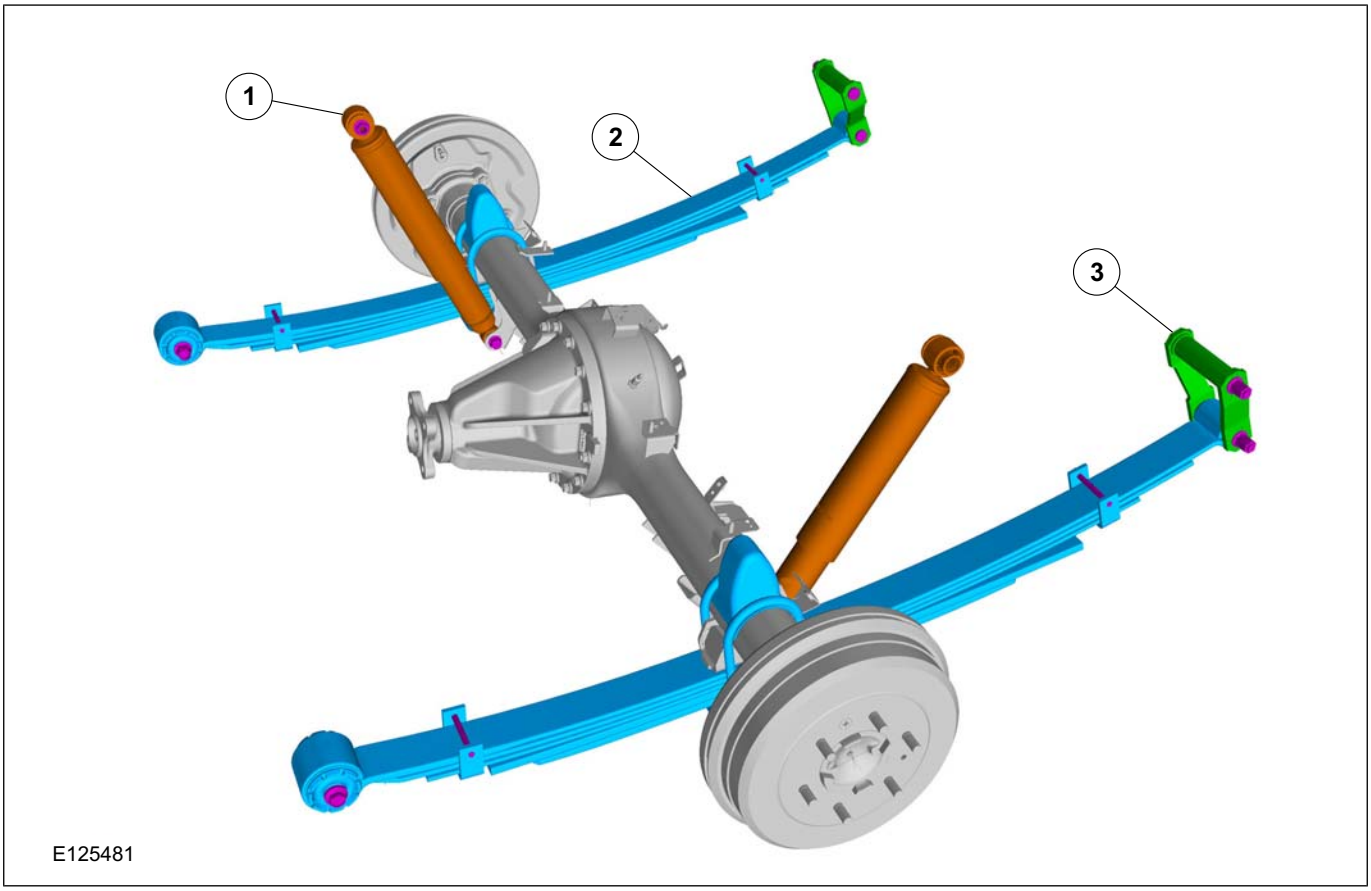

Item	Description
1	Shock absorber
2	Leaf Spring
3	Shackle Assembly

DESCRIPTION AND OPERATION

Hi-Rider and 4x4

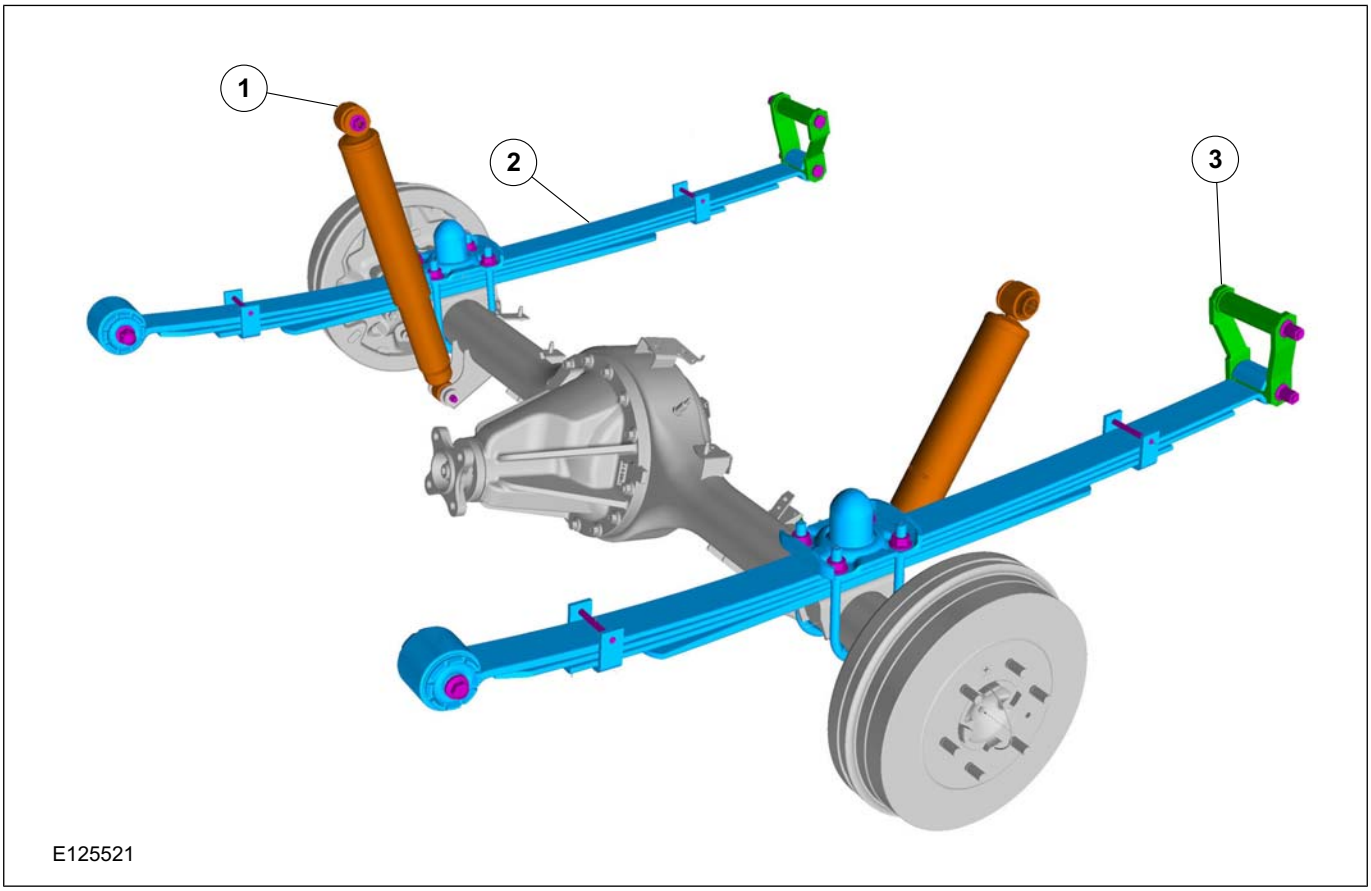

Item	Description
1	Shock absorber
2	Leaf Spring
3	Shackle Assembly

REMOVAL AND INSTALLATION

Spring(15 621 0)

Removal

CAUTION: Suspension fasteners are critical parts because they affect performance of vital components and systems and their failure can result in major service expense. A new part with the same part number or an equivalent part must be installed, if installation is necessary. Do not use a part of lesser quality or substitute design. Torque values must be used as specified during reassembly to make sure of correct retention of these parts.

NOTE: Removal steps in this procedure may contain installation details.

1. Refer to: Lifting (100-02 Jacking and Lifting, Description and Operation).

4x2

2. Torque: 120 Nm

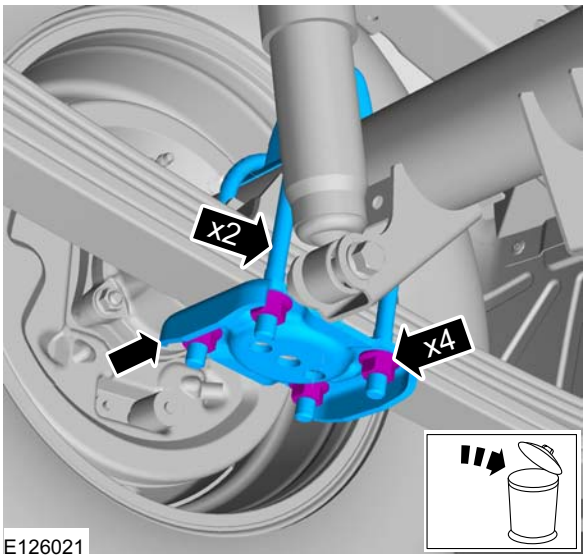

E126021

4x4

3. Torque: 120 Nm

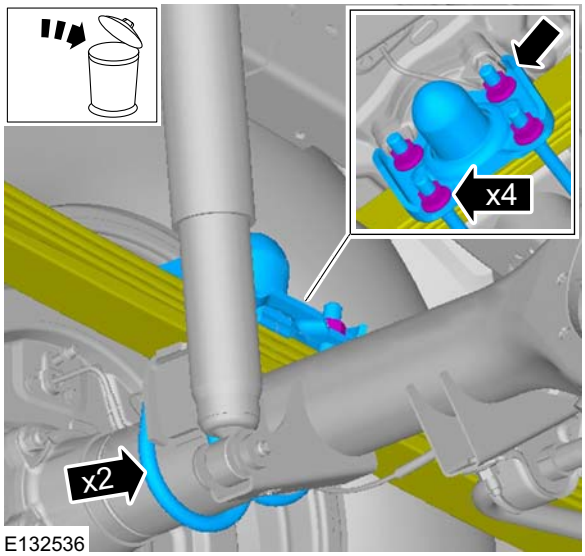

E132536

All vehicles

4. Torque: 162 Nm

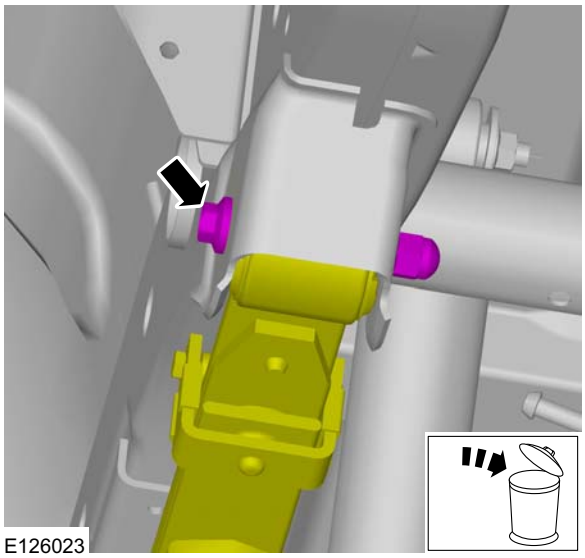
E126023

REMOVAL AND INSTALLATION

5. **NOTE:** Note the position of the bracket.

   Torque: 103 Nm

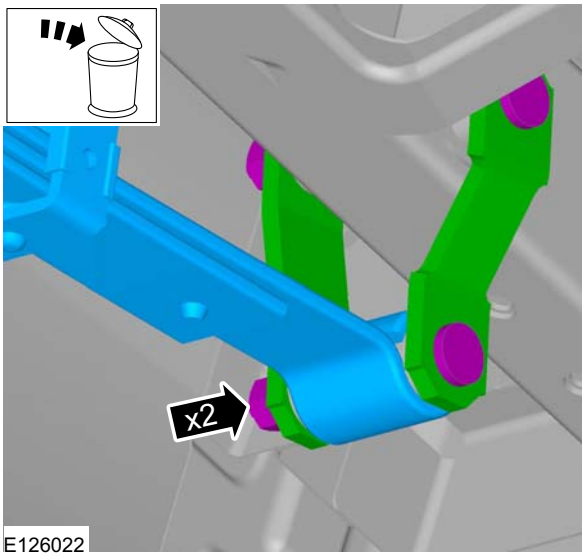

Installation

CAUTION: Install new spring locknuts and U-bolt nuts.

NOTE: Final tightening of the rear suspension components should be carried out when the vehicle weight is on the road wheels.

1. To install, reverse the removal procedure.

REMOVAL AND INSTALLATION

Rear Shock Absorber(15 791 0)

Removal

CAUTION: Suspension fasteners are critical parts because they affect performance of vital components and systems and their failure can result in major service expense. A new part with the same part number or an equivalent part must be installed, if installation is necessary. Do not use a part of lesser quality or substitute design. Torque values must be used as specified during reassembly to make sure of correct retention of these parts.

NOTE: Removal steps in this procedure may contain installation details.

1. Torque:
- 1. Torque: 47 Nm
- 2. Torque: 47 Nm

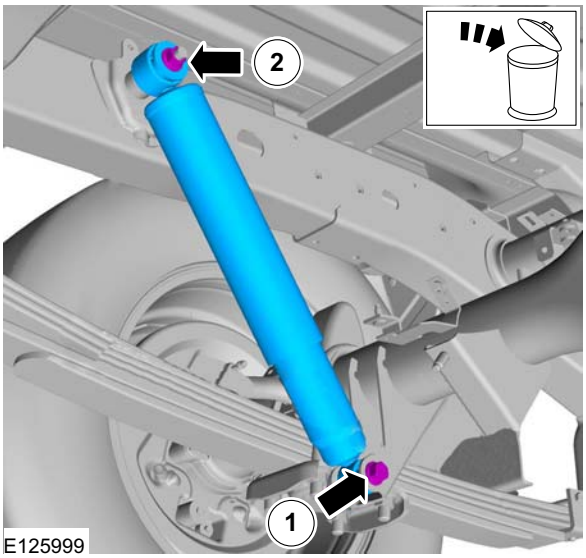

Installation

1. **NOTE:** Do not fully tighten the shock absorber lower mounting bolt. The final tightening should be carried out when the vehicle weight is on the road wheels.

2. To install, reverse the removal procedure.

SECTION 204-04 Wheels and Tires

VEHICLE APPLICATION: 2011.50 Ranger

CONTENTS PAGE

REMOVAL AND INSTALLATION

Wheel and Tire..... 204-04-2

REMOVAL AND INSTALLATION

Wheel and Tire

Removal

CAUTIONS:

Do not use heat to loosen a seized wheel nut.

Do not use power tools on locking wheel nuts.

1. Loosen

1.

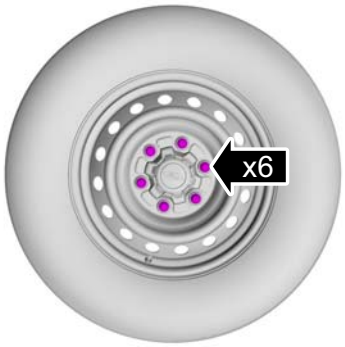

E126033

2. For additional information, refer to: Jacking (100-02 Jacking and Lifting, Description and Operation) / Lifting (100-02 Jacking and Lifting, Description and Operation).

3.

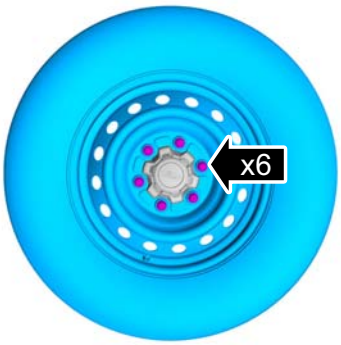

E126034

Installation

1. **WARNING: Make sure that the mating faces are clean and free of corrosion and foreign material**

NOTE: Only tighten the nuts finger tight at this stage.

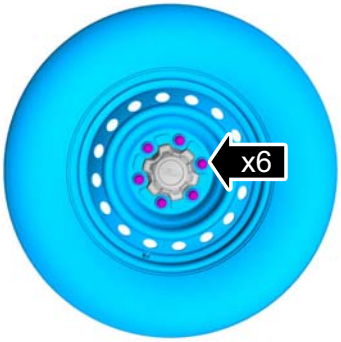

E126034

2. Lower the vehicle.

3. When installing the wheels and tires, tighten the wheel nuts in a criss-cross pattern to the following tightening torque.

- Tightening torque 88.2—117.6 Nm {9.00—11.99 Kgf·m, 65.06—86.73 ft·lbf}.

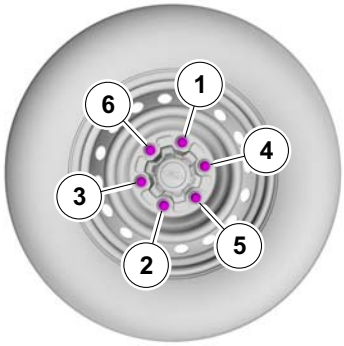

E126035

SECTION 205-01 Driveshaft

VEHICLE APPLICATION: 2011.50 Ranger

CONTENTS PAGE

DESCRIPTION AND OPERATION

Driveshaft..... 205-01-2

REMOVAL AND INSTALLATION

Driveshaft — 2WD..... (15 514 0) 205-01-3
Driveshaft — 4WD..... (15 514 0) 205-01-4
Front Driveshaft — 4WD..... 205-01-5

DESCRIPTION AND OPERATION

Driveshaft

4x2

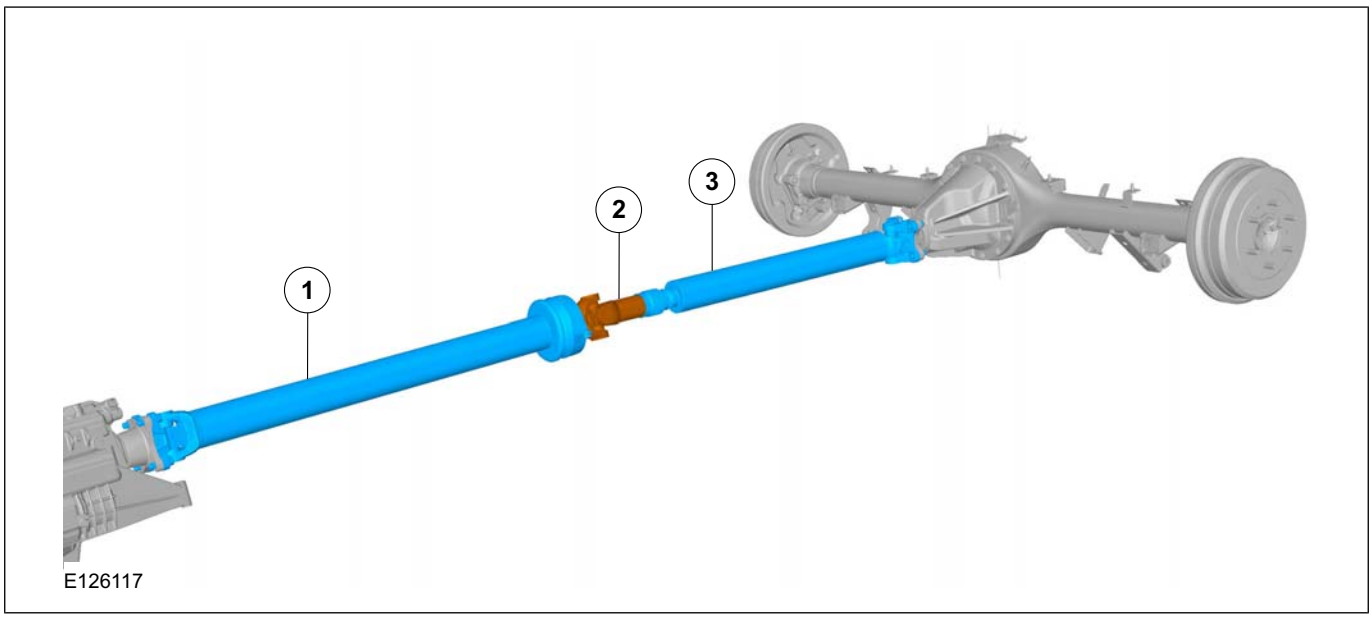

Item	Description
1	Coupling shaft
2	Universal joint
3	Rear propeller shaft

4x4

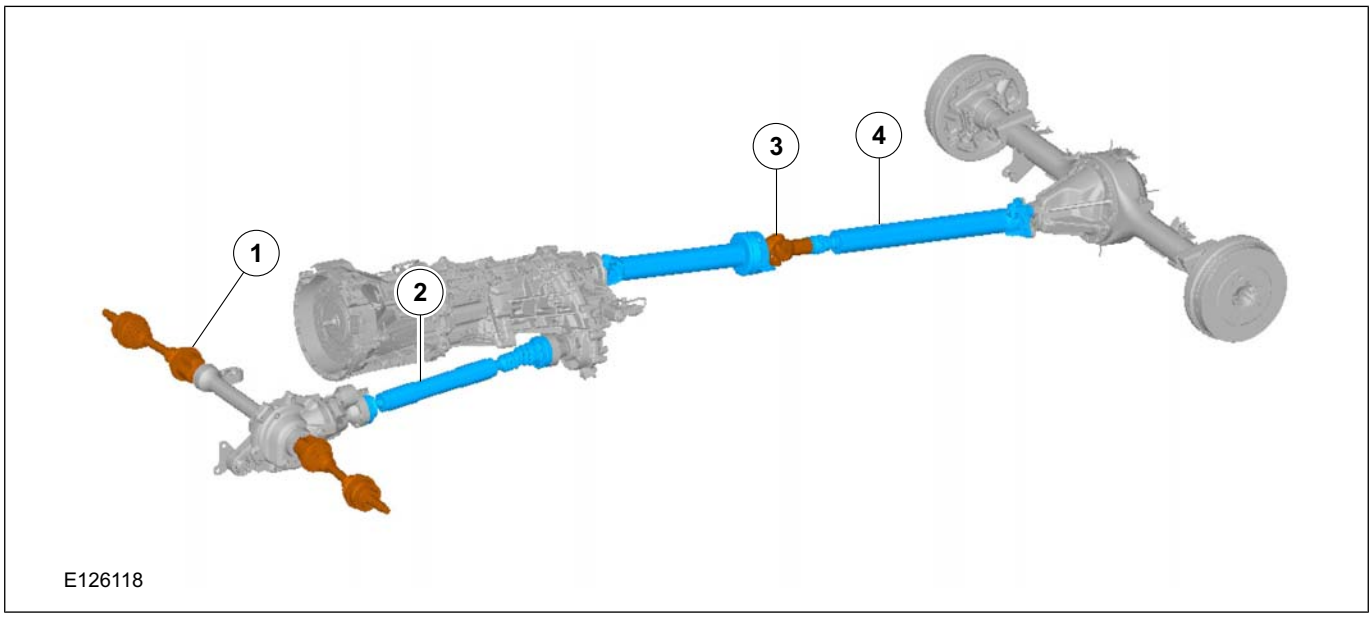

Item	Description
1	Front half shafts
2	Front propeller shaft

Item	Description
3	Universal joint
4	Rear propeller shaft

REMOVAL AND INSTALLATION

Driveshaft — 2WD(15 514 0)

Removal

WARNING: The normal operating temperature of the exhaust system is very high. Never attempt to remove any part of the system until it has cooled. Be especially careful when working around the catalytic converters. The temperature of the converter rises to a high level after only a few minutes of engine operation. Failure to follow these instructions may result in personal injury.

NOTE: Removal steps in this procedure may contain installation details.

1. Refer to: Lifting (100-02 Jacking and Lifting, Description and Operation).
2. **CAUTION: Do not reuse the bolts, install new bolts or damage to the vehicle may occur.**

   Torque: 140 Nm

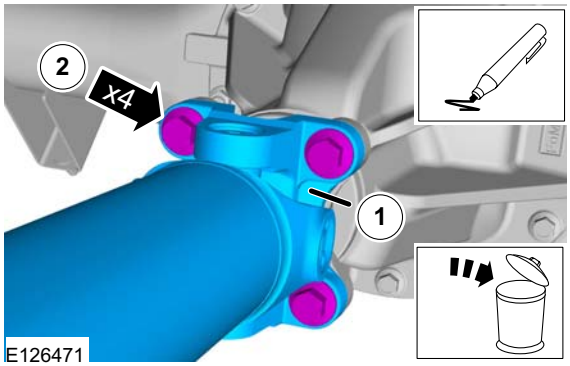

3. **CAUTION: Do not reuse the bolts, install new bolts or damage to the vehicle may occur.**

   Torque: 140 Nm

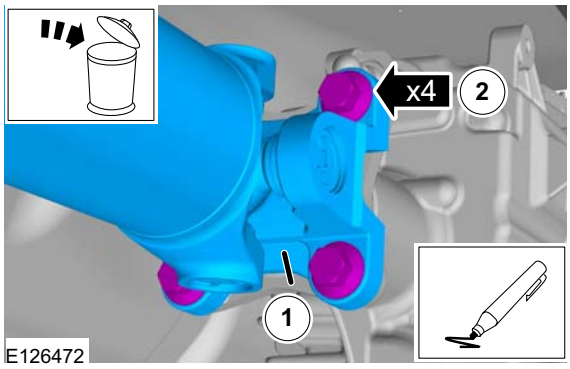

4. Torque: 50 Nm

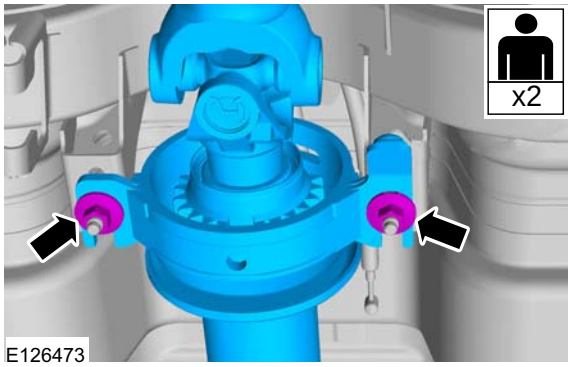

Installation

1. To install, reverse the removal procedure.

REMOVAL AND INSTALLATION

Driveshaft — 4WD(15 514 0)

Removal

WARNING: The normal operating temperature of the exhaust system is very high. Never attempt to remove any part of the system until it has cooled. Be especially careful when working around the catalytic converters. The temperature of the converter rises to a high level after only a few minutes of engine operation. Failure to follow these instructions may result in personal injury.

NOTE: Removal steps in this procedure may contain installation details.

1. Refer to: Lifting (100-02 Jacking and Lifting, Description and Operation).
2. **CAUTION: Do not reuse the bolts, install new bolts or damage to the vehicle may occur.**

   Torque: 140 Nm

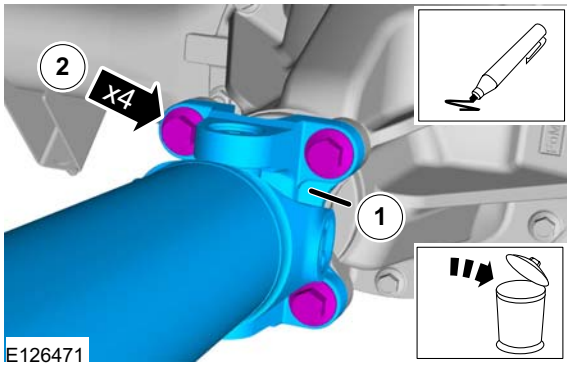

3. **CAUTION: Do not reuse the bolts, install new bolts or damage to the vehicle may occur.**

   Torque: 140 Nm

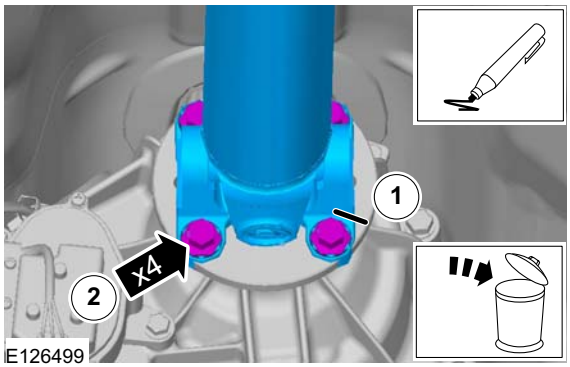

4. Torque: 50 Nm

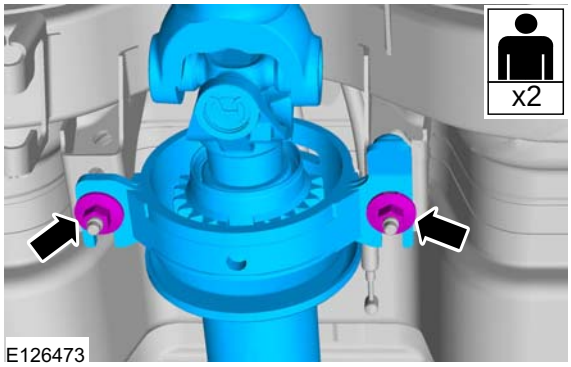

Installation

1. To install, reverse the removal procedure.

REMOVAL AND INSTALLATION

Front Driveshaft — 4WD

Removal

CAUTIONS:

Always disconnect the front driveshaft from the transfer case first. Otherwise, the weight of the driveshaft can pinch the boot between the driveshaft and the constant velocity (CV) joint flange which can cause the boot to tear.

It is possible to fit the driveshaft incorrectly. Note the orientation before removal.

NOTE: A small amount of oil may weep from the driveshaft joints during storage. The loss of this oil will not affect the operation or durability of the joint.

NOTE: Removal steps in this procedure may contain installation details.

1. **WARNING: Do not work on or under a vehicle supported only by a jack. Always support the vehicle on safety stands.**

   Refer to: Lifting (100-02 Jacking and Lifting, Description and Operation).

2. **CAUTIONS:**

   To avoid damage to the joint or gaiter, do not allow the driveshaft to hang.

   Do not reuse the bolts, install new bolts or damage to the vehicle may occur.

NOTE: Lock the driveshaft before removing the bolts to avoid slipping.

Torque: 15 Nm

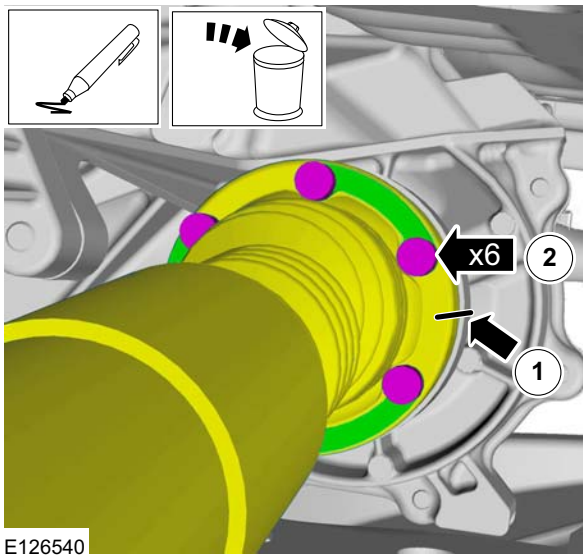

E126540

3. **CAUTIONS:**

   To avoid damage to the joint or gaiter, do not allow the driveshaft to hang.

   Do not reuse the bolts, install new bolts or damage to the vehicle may occur.

REMOVAL AND INSTALLATION

NOTE: Lock the driveshaft before removing the bolts to avoid slipping.

Torque: 15 Nm

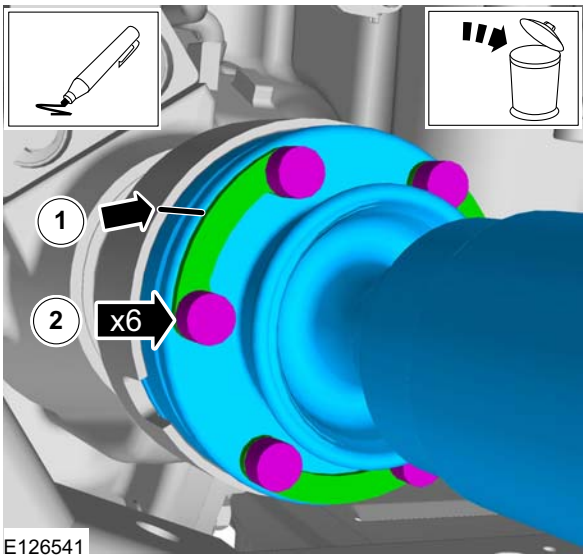

Installation

1. To install, reverse the removal procedure.

SECTION 205-02 Rear Drive Axle/Differential

VEHICLE APPLICATION: 2011.50 Ranger

CONTENTS PAGE

DESCRIPTION AND OPERATION

Rear Drive Axle and Differential..... 205-02-2

GENERAL PROCEDURES

Differential Draining and Filling..... 205-02-4

REMOVAL AND INSTALLATION

Axle Assembly — 2WD..... 205-02-5
Axle Assembly — 4WD..... 205-02-9
Differential Carrier..... 205-02-12

DESCRIPTION AND OPERATION

Rear Drive Axle and Differential

Hi-Rider 4x2

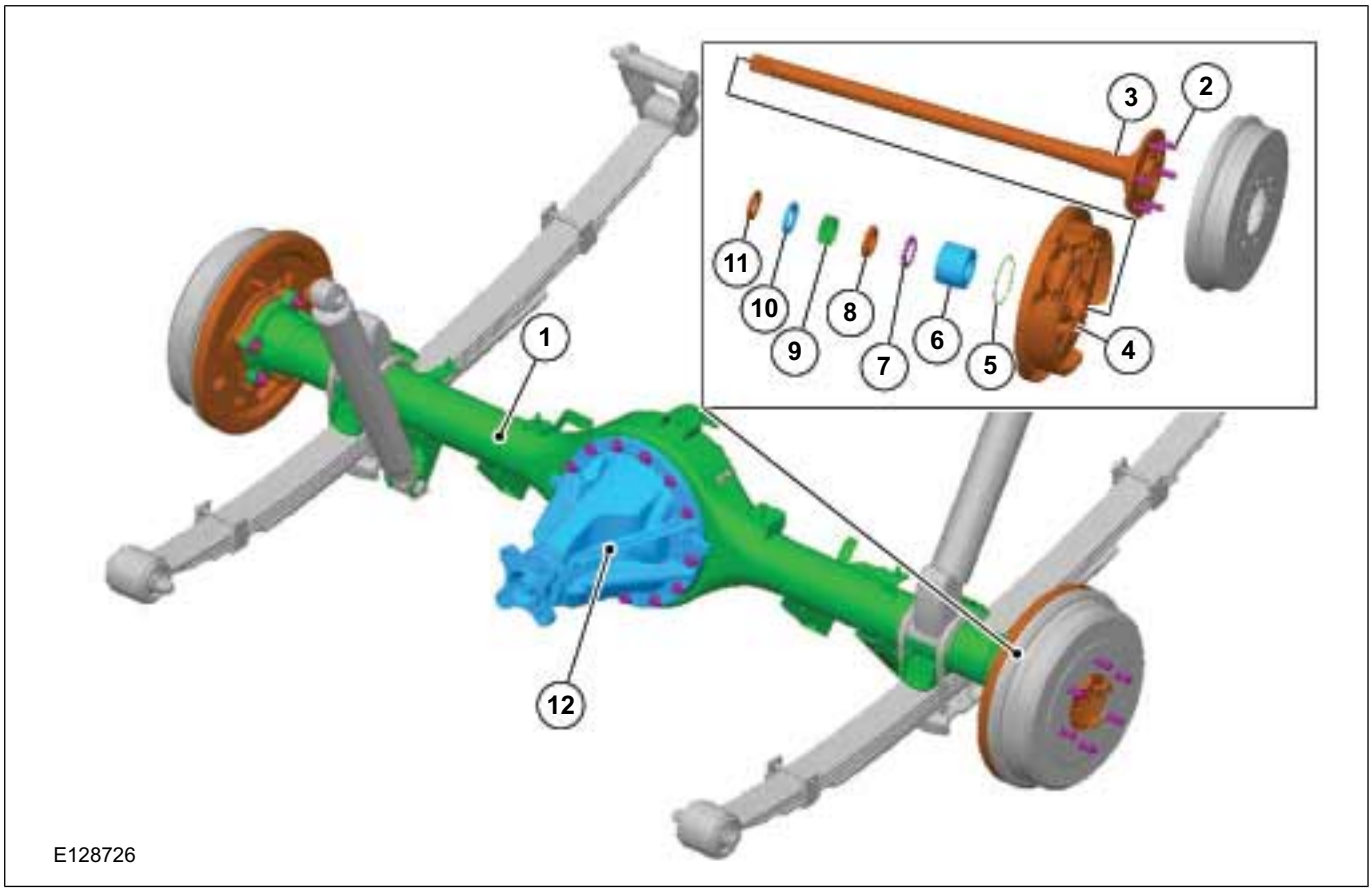

Item	Description
1	Axle housing
2	Wheel stud
3	Axle shaft
4	Brake shoe and wheel cylinder
5	O ring
6	Bearing assembly
7	Lock washer

Item	Description
8	Bearing retainer nut
9	Tone wheel ring
10	Axle shaft guide
11	Oil seal
12	Rear differential

Hi-Rider 4x4

DESCRIPTION AND OPERATION

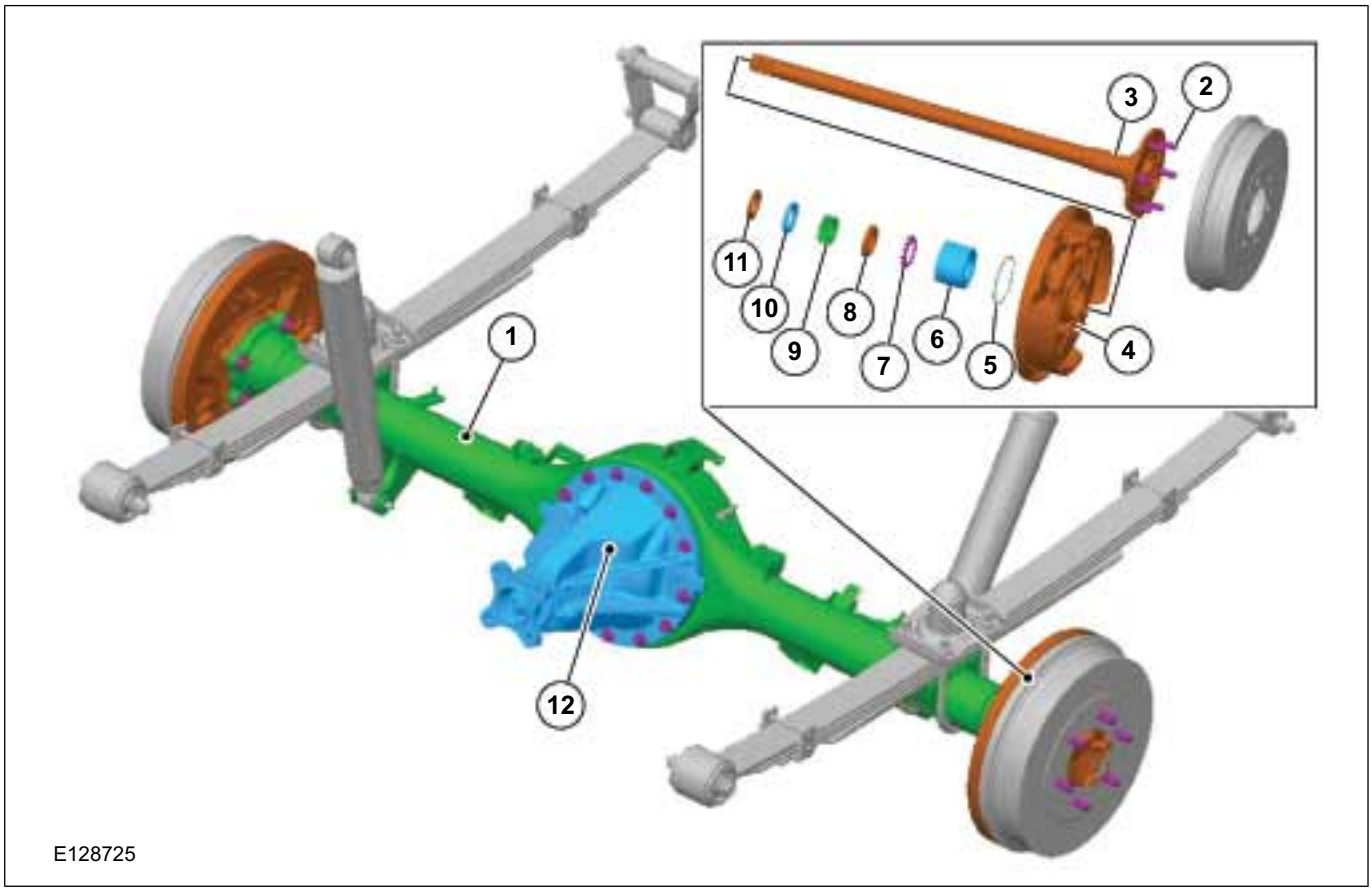

Item	Description
1	Axle housing
2	Wheel stud
3	Axle shaft
4	Brake shoe and wheel cylinder
5	O ring
6	Bearing assembly
7	Lock washer
8	Bearing retainer nut
9	Tone wheel ring
10	Axle shaft guide
11	Oil seal
12	Rear differential

GENERAL PROCEDURES

Differential Draining and Filling

1. **For additional information, refer to: Lifting (100-02 Jacking and Lifting, Description and Operation).**
2. **Remove the oil-fill plug.**

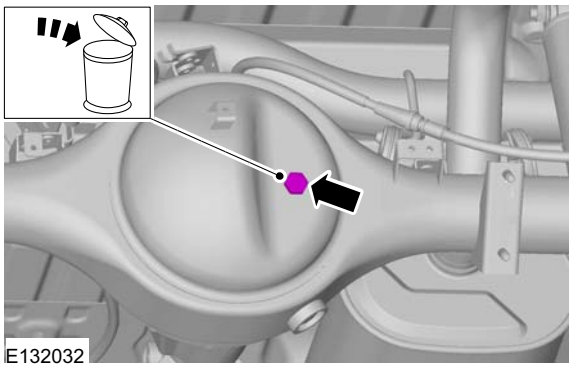
E132032

3. **Remove the drain plug and drain the oil.**

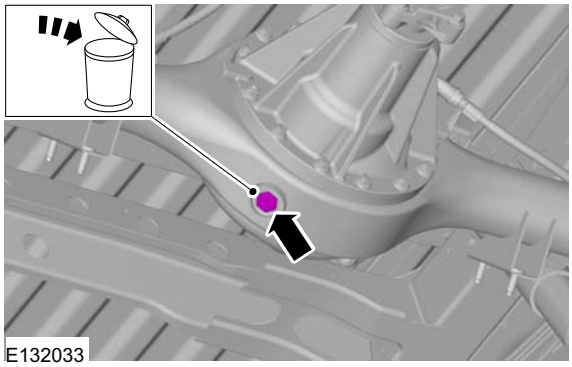
E132033

4. **Install the drain plug with a new washer and tighten.**
   - Tightening torque 45 Nm.

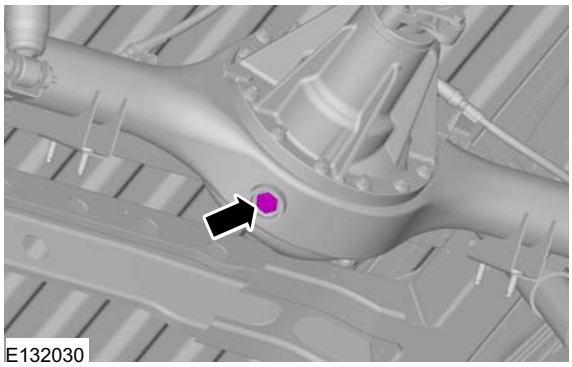
E132030

5. **Fill up with the specified rear axle oil to the lower edge of the filler hole.**
   - Rear differential oil [standard differential & LSD] Type: API service GL-5 Viscosity: SAE 90 Oil capacity (approx. quantity): 2.85—3.05 L.
6. **After adding the oil, perform the oil level inspection.**
7. **Install the oil-fill plug with a new washer and tighten.**
   - Tightening torque 45 Nm.

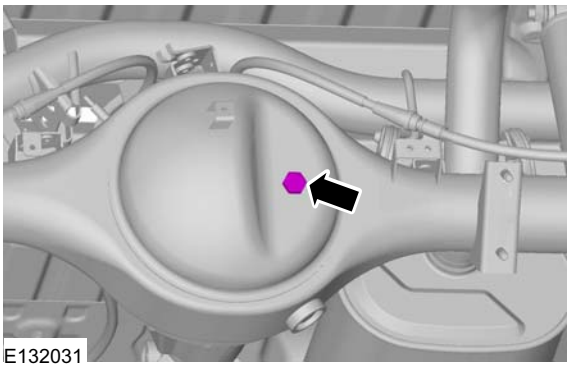
E132031

REMOVAL AND INSTALLATION

Axle Assembly — 2WD

General Equipment

Trolley Jack

Removal

NOTE: Removal steps in this procedure may contain installation details.

1. Refer to: Wheel and Tire (204-04 Wheels and Tires, Removal and Installation).
2. Refer to: Lifting (100-02 Jacking and Lifting, Description and Operation).
3.

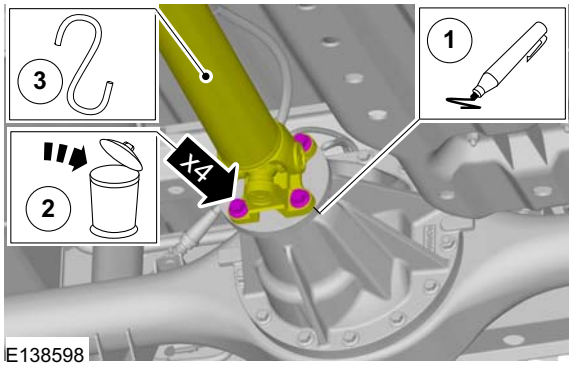

4. 1. **WARNING: Be prepared to collect escaping fluid.**

   CAUTIONS:

   If the fluid is spilled on the paintwork, the affected area must be immediately washed down with cold water.

   Make sure that all openings are sealed with new blanking caps.

   Torque: 19 Nm
   2. Torque: 7 Nm

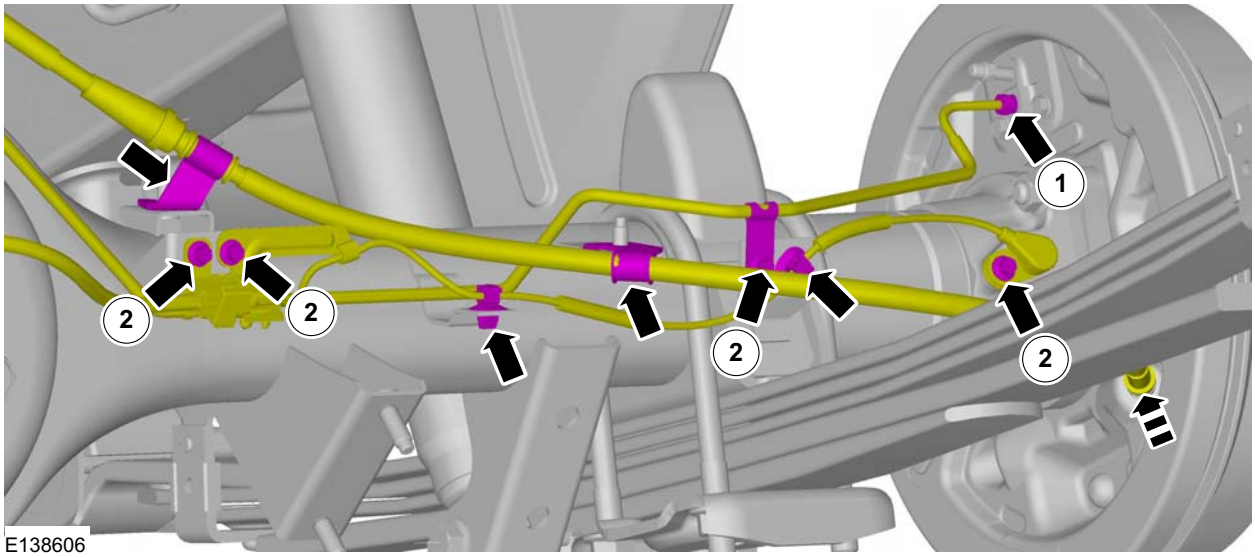

REMOVAL AND INSTALLATION

5. 1. **WARNING: Be prepared to collect escaping fluid.**

   CAUTIONS:

   If the fluid is spilled on the paintwork, the affected area must be immediately washed down with cold water.

   Make sure that all openings are sealed with new blanking caps.

   Torque: 19 Nm
   2. Torque: 7 Nm

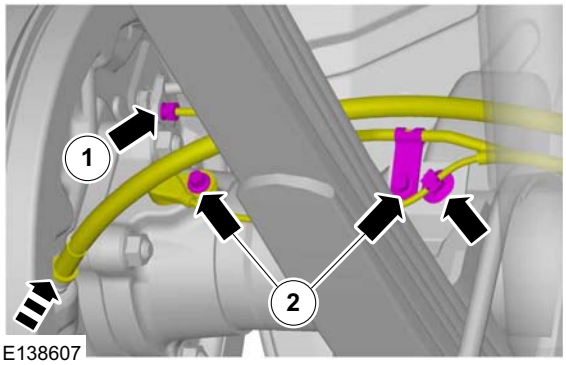

E138607

6. 1. Torque: 14 Nm
   2. Torque: 7 Nm
   3. Torque: 25 Nm

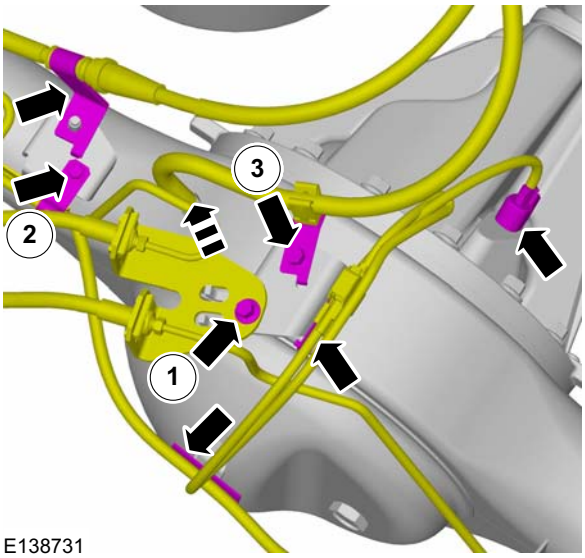

E138731

7. **CAUTION: Make sure that new bolts are installed.**

   General Equipment: Trolley Jack
   Torque: 48 Nm

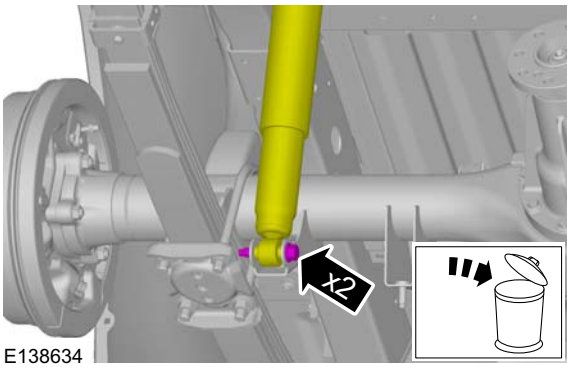

E138634

8. General Equipment: Trolley Jack

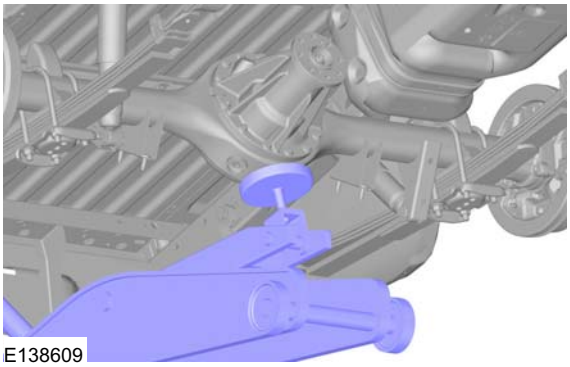
E138609

9. On both sides.

REMOVAL AND INSTALLATION

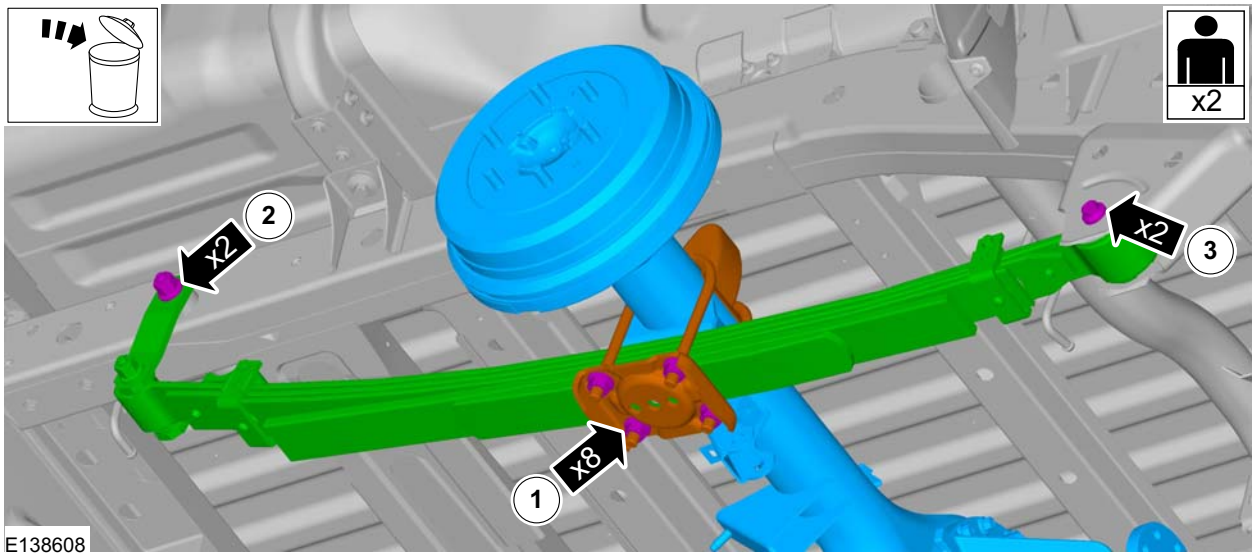

Installation

On both sides.

1. **CAUTION: Make sure that new bolts are installed.**
   1. On both sides.
      Torque: 170 Nm
   2. On both sides.
      Torque: 50 Nm
   3. **NOTE:** Hand tighten the nuts at this stage.

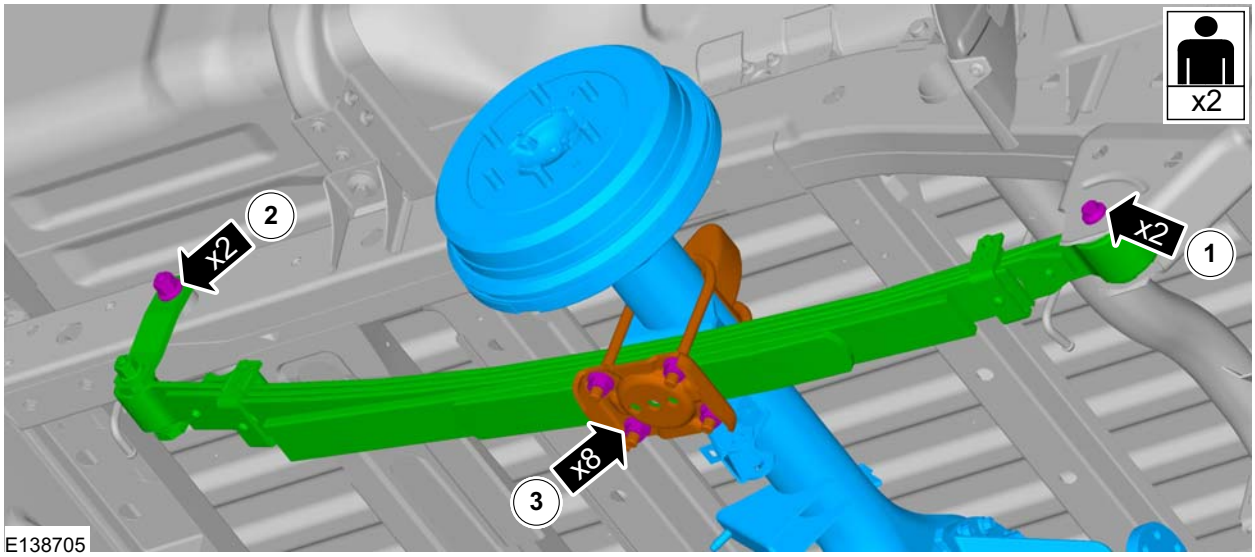

2. To install, reverse the removal procedure.

REMOVAL AND INSTALLATION

3. **CAUTION: Make sure that new bolts are installed.**
   Torque: 135 Nm

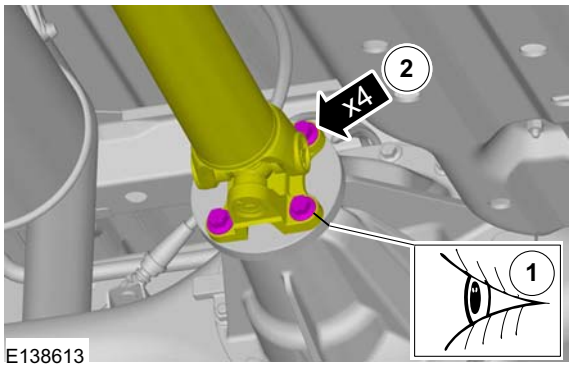

4. On both sides.
   Torque:
   - Stage 1: 25 Nm
   - Stage 2: 50 Nm
   - Stage 3: 75 Nm
   - Stage 4: 100 Nm
   - Stage 5: 105 Nm

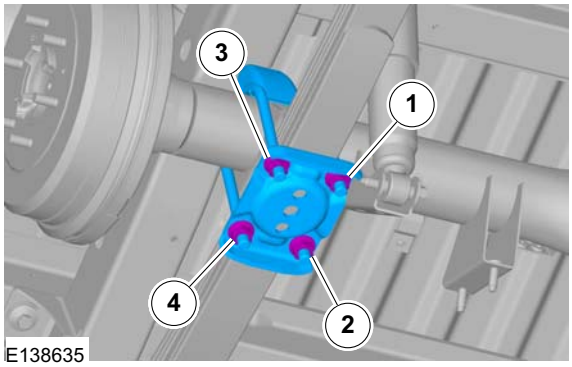

5. Refer to: Brake System Bleeding (206-00 Brake System - General Information, General Procedures).
   Refer to: Brake System Pressure Bleeding (206-00 Brake System - General Information, General Procedures).

6. Refer to: Wheel and Tire (204-04 Wheels and Tires, Removal and Installation).

REMOVAL AND INSTALLATION

Axle Assembly — 4WD

General Equipment

Trolley Jack

Removal

NOTE: Removal steps in this procedure may contain installation details.

1. Refer to: Wheel and Tire (204-04 Wheels and Tires, Removal and Installation).
2. Refer to: Lifting (100-02 Jacking and Lifting, Description and Operation).
3.

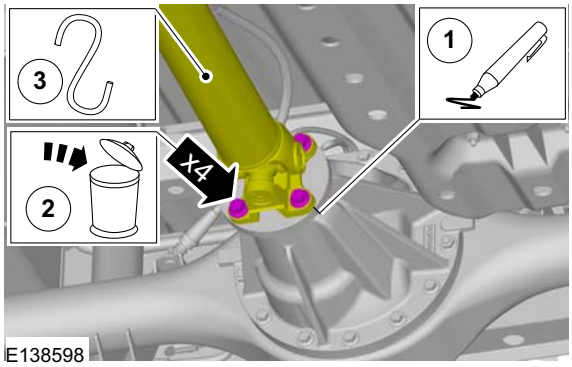

4. 1. **WARNING: Be prepared to collect escaping fluid.**

   CAUTIONS:

   If the fluid is spilled on the paintwork, the affected area must be immediately washed down with cold water.

   Make sure that all openings are sealed with new blanking caps.

   Torque: 19 Nm
   2. Torque: 7 Nm

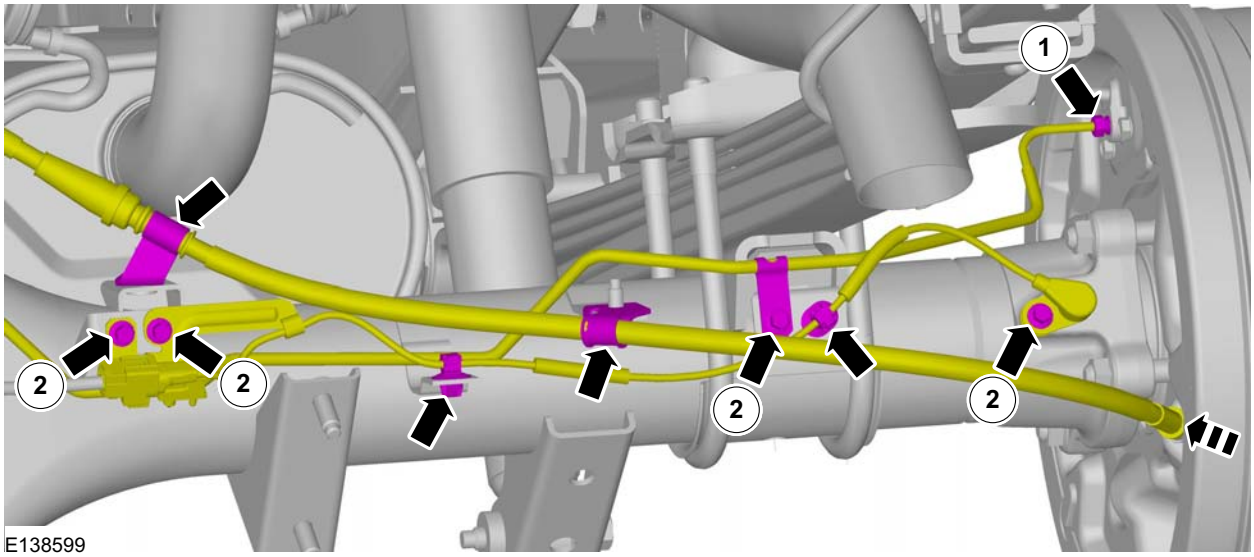

REMOVAL AND INSTALLATION

5. 1. Torque: 19 Nm
2. Torque: 7 Nm

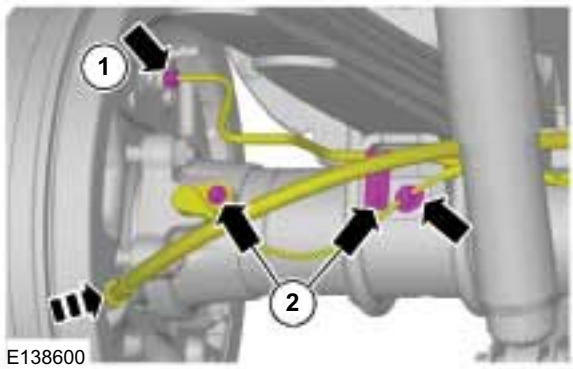

6. Torque: 7 Nm

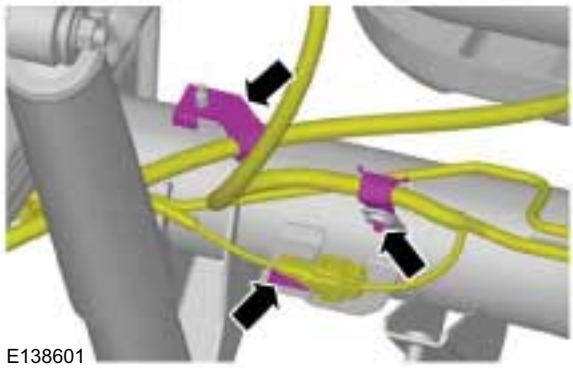

7. 1. Torque: 14 Nm
2. Torque: 7 Nm
3. Torque: 25 Nm

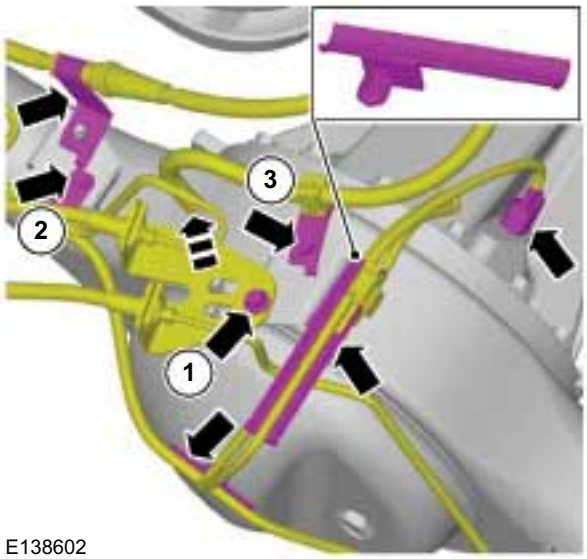

8. ⚠ **CAUTION: Make sure that new bolts are installed.**

On both sides.
Torque: 48 Nm

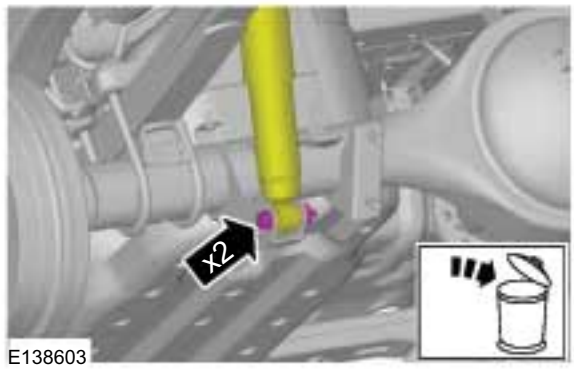

9. General Equipment: Trolley Jack

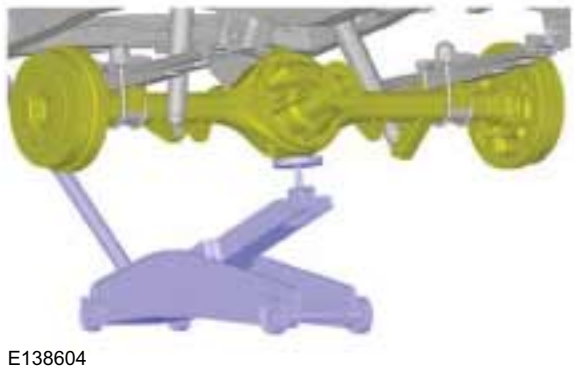

10. On both sides.
General Equipment: Trolley Jack

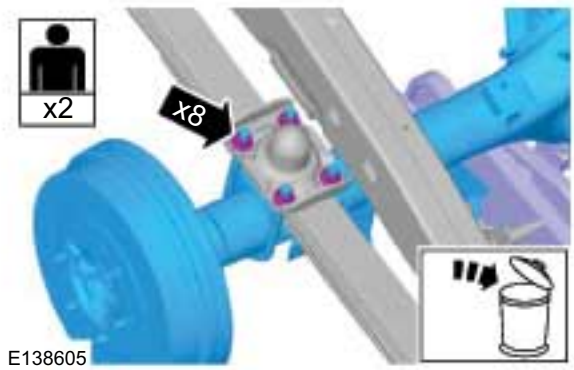

Installation

1. ⚠ **CAUTION: Make sure that new bolts are installed.**

NOTE: Hand tighten the nut at this stage.

REMOVAL AND INSTALLATION

On both sides.

General Equipment: Trolley Jack

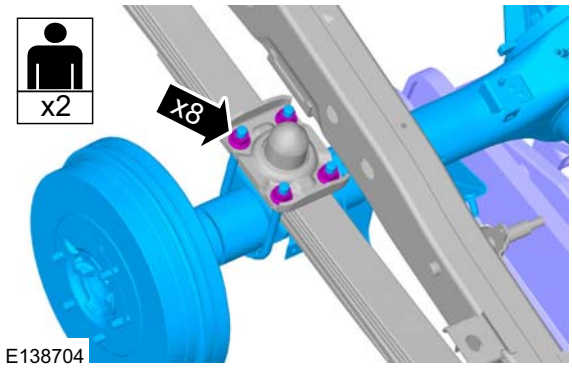

2. To install, reverse the removal procedure.

3. **CAUTION: Make sure that new bolts are installed.**

   Torque: 135 Nm

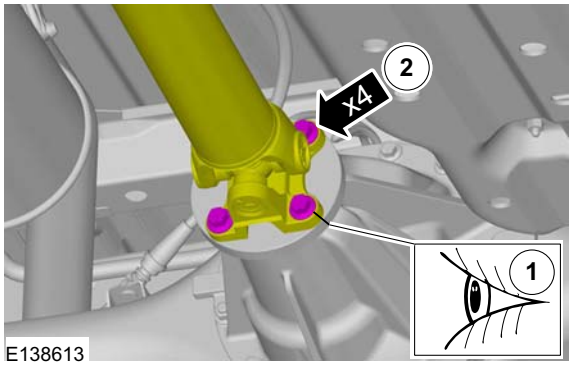

4. On both sides.

   Torque:
   - Stage 1: 25 Nm
   - Stage 2: 50 Nm
   - Stage 3: 75 Nm
   - Stage 4: 100 Nm
   - Stage 5: 105 Nm

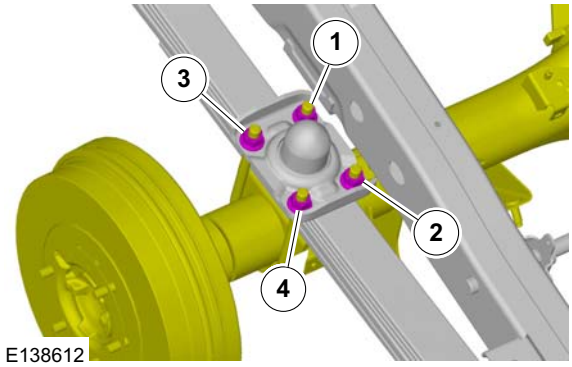

5. Refer to: Brake System Bleeding (206-00 Brake System - General Information, General Procedures).

   Refer to: Brake System Pressure Bleeding (206-00 Brake System - General Information, General Procedures).

6. Refer to: Wheel and Tire (204-04 Wheels and Tires, Removal and Installation).

REMOVAL AND INSTALLATION

Differential Carrier

Removal

NOTE: Removal steps in this procedure may contain installation details.

1. **CAUTIONS:**

   Clean away the old sealant before applying the new sealant.

   Install the differential carrier 10 min. after applying sealant.

   Allow the sealant to set at least 30 min. after installation before filling the differential with the specified oil.

   Drain the rear differential oil.

   Refer to: Differential Draining and Filling (205-03 Front Drive Axle/Differential, General Procedures).

2. **NOTE:** The driveshaft flange fits tightly on the pinion flange pilot. Never hammer on the driveshaft or any of its components to disconnect the driveshaft flange from the pinion flange or damage to the component may occur.

   Refer to: Driveshaft - 2WD (205-01 Driveshaft, Removal and Installation).
   Refer to: Driveshaft - 4WD (205-01 Driveshaft, Removal and Installation).

3. Refer to: Rear Halfshaft (205-05 Rear Drive Halfshafts, Removal and Installation).

4. Torque: 60 Nm

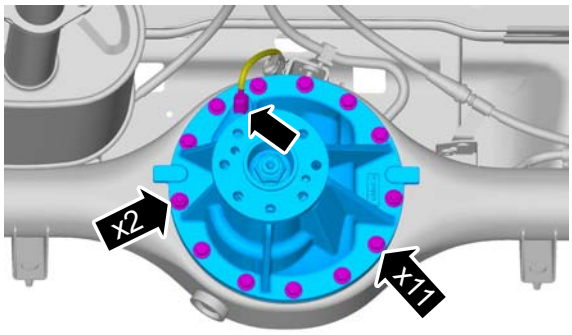

E132048

5. Torque: 105 Nm

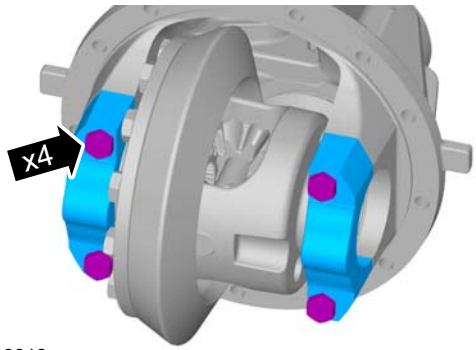

E138818

6.

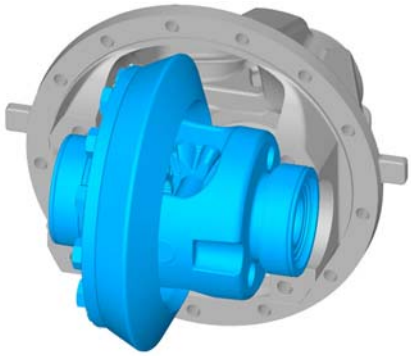
E138819

Installation

1. To install, reverse the removal procedure.

2. Fill the rear differential oil.

   Refer to: Differential Draining and Filling (205-03 Front Drive Axle/Differential, General Procedures).

SECTION 205-03 Front Drive Axle/Differential

VEHICLE APPLICATION: 2011.50 Ranger

CONTENTS PAGE

DESCRIPTION AND OPERATION

Front Drive Axle and Differential..... 205-03-2
4x4 Hi-rider..... 205-03-2

GENERAL PROCEDURES

Differential Draining and Filling..... 205-03-3

REMOVAL AND INSTALLATION

Axle Assembly..... 205-03-5

DESCRIPTION AND OPERATION

Front Drive Axle and Differential

4x4 Hi-rider

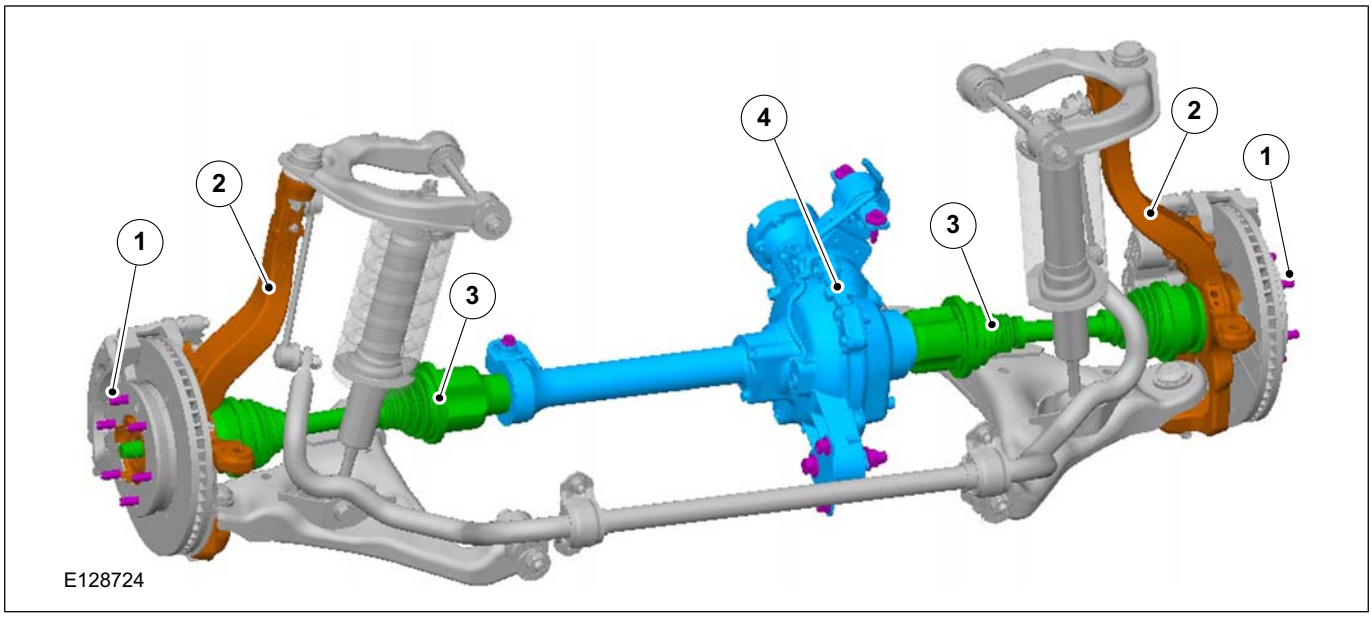

Item	Description
1	Wheel hub bolt
2	Wheel hub, steering knuckle
3	Front half shafts
4	Front differential

GENERAL PROCEDURES

Differential Draining and Filling

1. **For additional information, refer to: Lifting (100-02 Jacking and Lifting, Description and Operation).**
2.
   - Tightening torque 30 Nm.

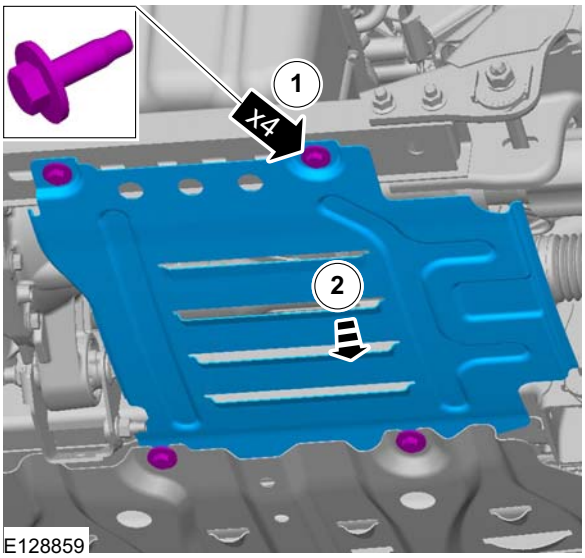

E128859

3. **Position the vehicle on level ground.**
4. **Remove the oil-fill plug.**

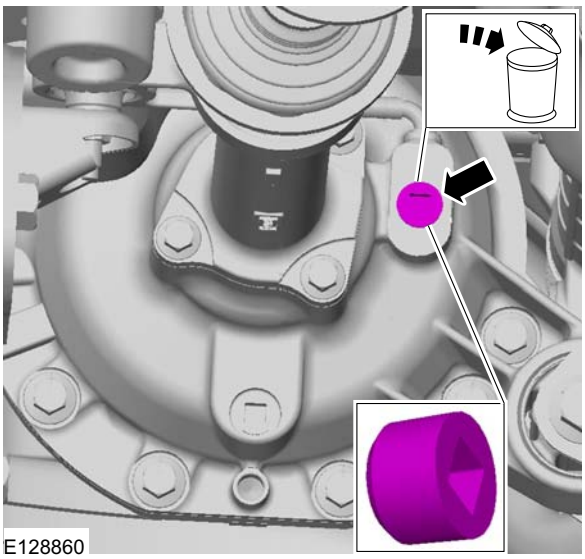
E128860

5. **Remove the drain plug and drain the oil.**

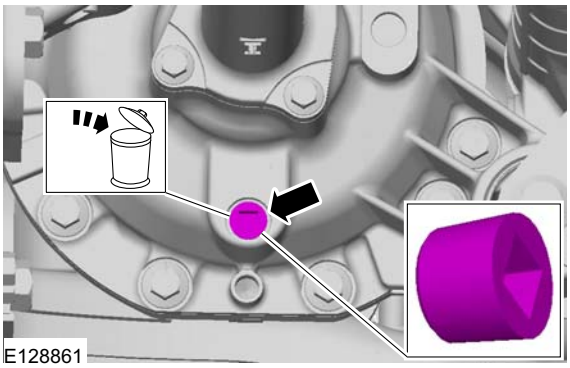
E128861

6. **Install a new drain plug and tighten.**
   - Tightening torque 30 Nm.

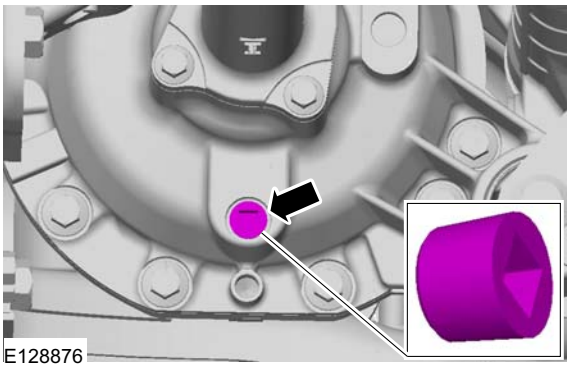
E128876

7. **Add the specified oil through the oil-fill plug hole.**
   - Front differential oil spec: WSP-M2C197-A and fill to 1.275L +/-0.10L.
8. **After adding the oil, perform the oil level inspection.**
9. **Install a new oil-fill plug and tighten.**

GENERAL PROCEDURES

- Tightening torque 30 Nm.

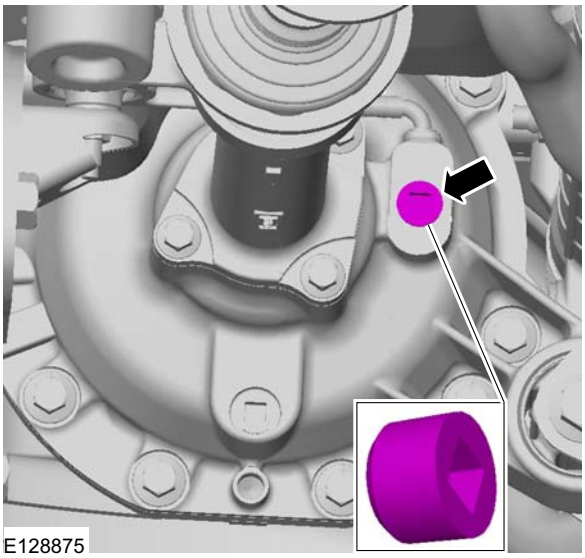

REMOVAL AND INSTALLATION

Axle Assembly

General Equipment

Transmission Jack

Removal

NOTE: Removal steps in this procedure may contain installation details.

1. Refer to: Lifting (100-02 Jacking and Lifting, Description and Operation).
2. Refer to: Differential Draining and Filling (205-03 Front Drive Axle/Differential, General Procedures).
3. Refer to: Front Driveshaft - 4WD (205-01 Driveshaft, Removal and Installation).
4. Refer to: Front Halfshaft LH (205-04 Front Drive Halfshafts, Removal and Installation).
   Refer to: Front Halfshaft RH (205-04 Front Drive Halfshafts, Removal and Installation).
5. Torque: 90 Nm

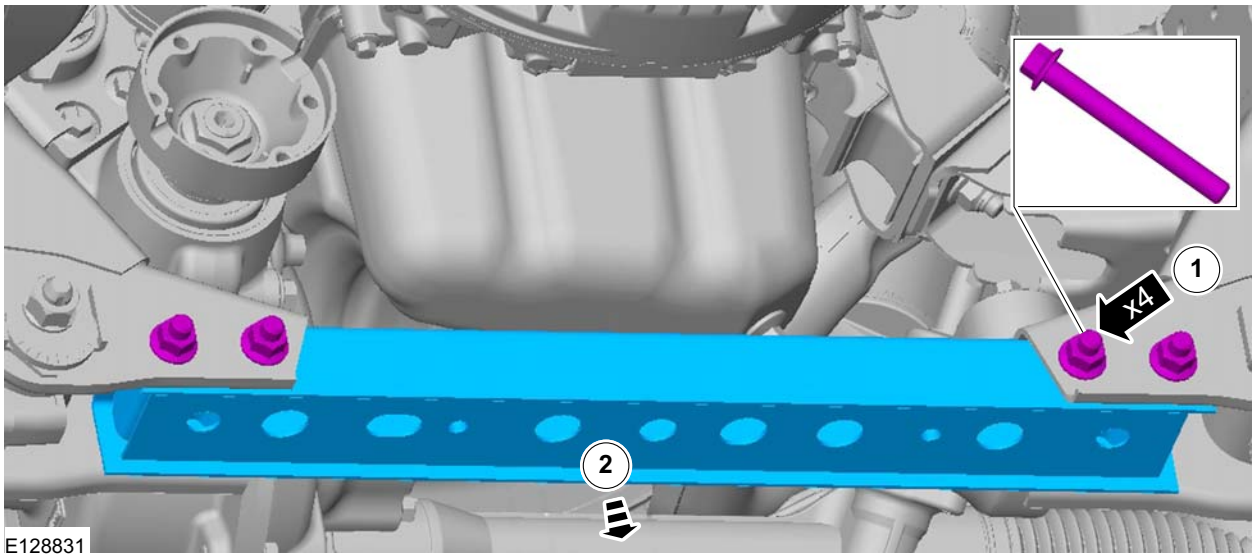

6. **WARNING: Make sure that a new bolt and nut is installed.**

NOTE: Position a suitable transmission jack under the front axle. Securely strap the jack to the axle.

- General Equipment: Transmission Jack

1. Torque: 70 Nm
2. Torque: 300 Nm
3. Torque: 125 Nm

REMOVAL AND INSTALLATION

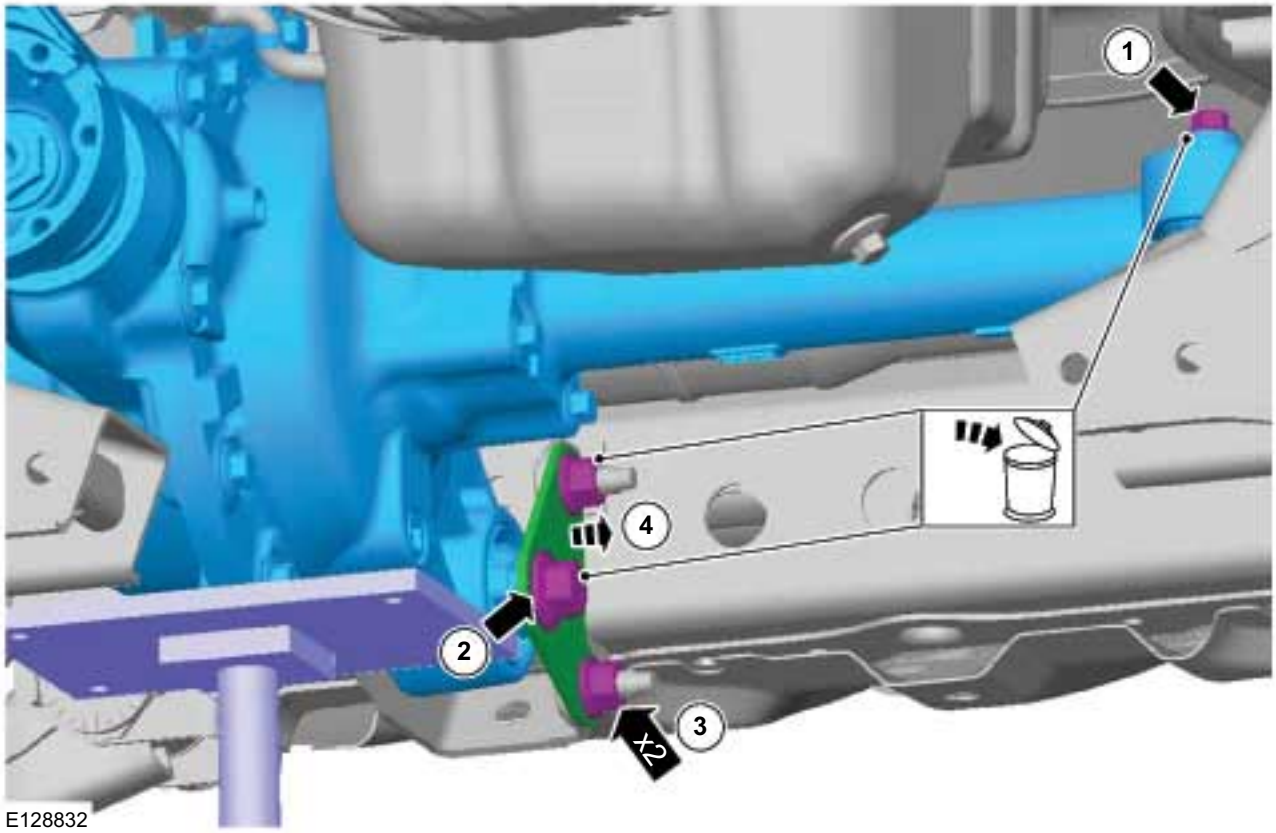

7. **WARNING: Make sure that a new bolt and nut is installed.**

   Torque: 48 Nm

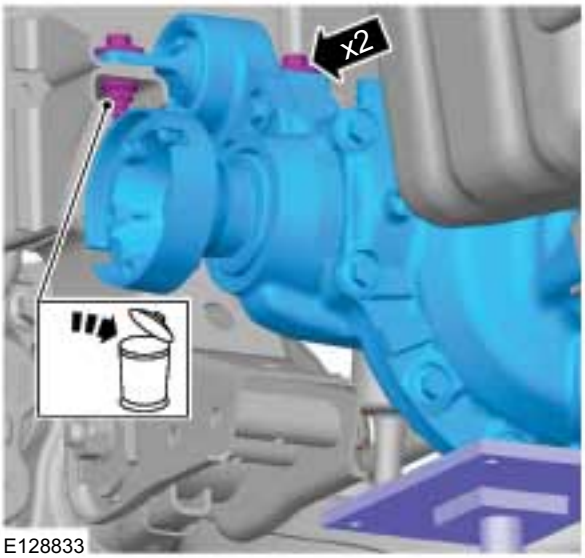

8. **NOTE:** Lower the axle to gain access to the axle vent hose.

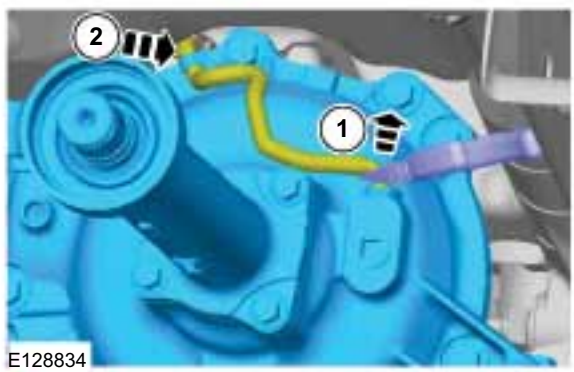

Installation

1. To install, reverse the removal procedure.

SECTION 205-04 Front Drive Halfshafts

VEHICLE APPLICATION: 2011.50 Ranger

CONTENTS PAGE

REMOVAL AND INSTALLATION

Front Halfshaft LH..... (14 320 0) 205-04-2
Front Halfshaft RH..... (14 321 0) 205-04-4
Inner Constant Velocity (CV) Joint Boot..... (14 336 0) 205-04-6
Outer Constant Velocity (CV) Joint Boot..... (14 338 0) 205-04-9

REMOVAL AND INSTALLATION

Front Halfshaft LH(14 320 0)

Special Tool(s)

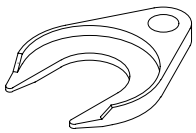 16092	204-226 Remover, Halfshaft
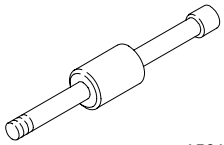 15011	205-047 Slide Hammer
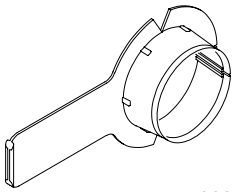 E47098	205-775 Protector, Halfshaft Seal

1. Refer to: Health and Safety Precautions (100-00 General Information, Description and Operation).
2. Refer to: Wheel Knuckle - 4WD (204-01 Front Suspension, Removal and Installation).
3. Special Tool(s): 205-047, 204-226

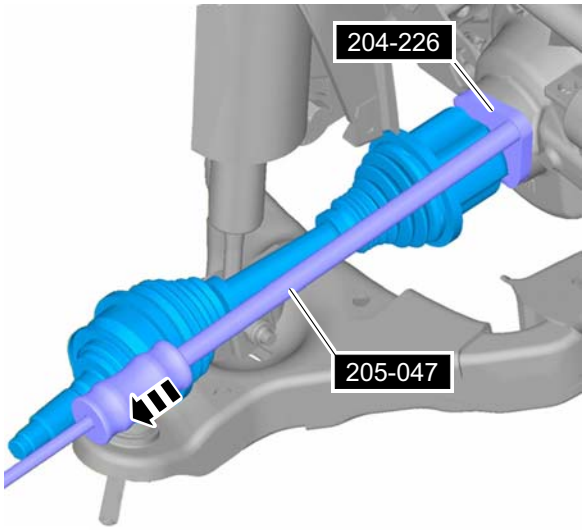

E129046

Removal

CAUTIONS:

Suspension fasteners are critical parts because they affect performance of vital components and systems and their failure can result in major service expense. A new part with the same part number or an equivalent part must be installed, if installation is necessary. Do not use a part of lesser quality or substitute design. Torque values must be used as specified during reassembly to make sure of correct retention of these parts.

Never pick up or hold the halfshaft by the inboard or outboard CV joint only.

NOTE: Removal steps in this procedure may contain installation details.

Installation

1. **NOTE:** Install a new retainer ring every time the halfshaft is removed.

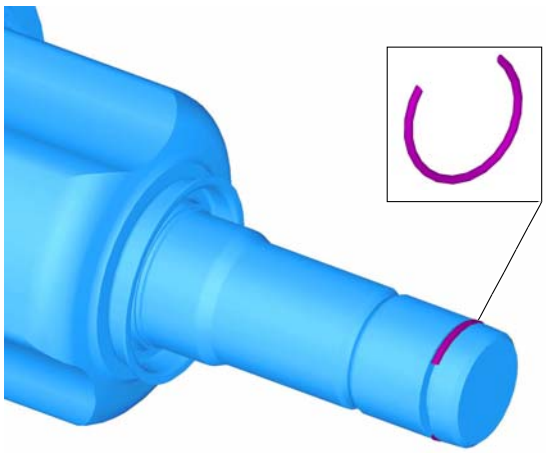
E128951

REMOVAL AND INSTALLATION

2. Special Tool(s): 205-775

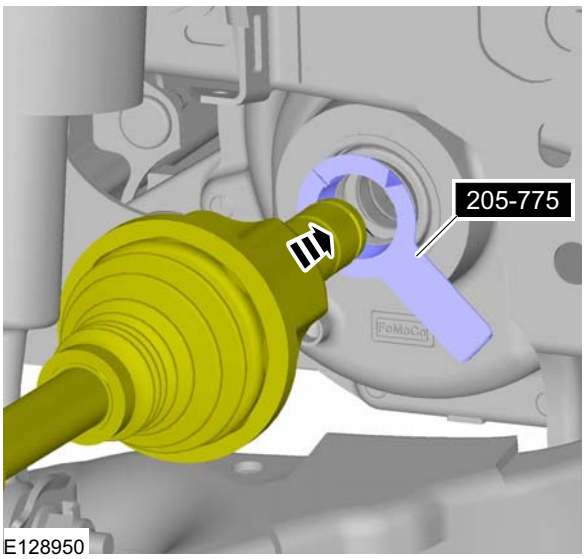

3. ⚠ **CAUTION: Make sure that a new halfshaft retaining nut is installed.**

Torque: 275 Nm

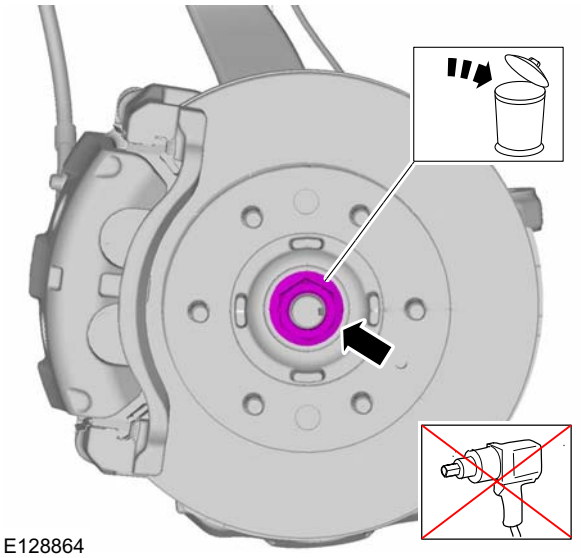

4. Refer to: Wheel Knuckle - 4WD (204-01 Front Suspension, Removal and Installation).

REMOVAL AND INSTALLATION

Front Halfshaft RH(14 321 0)

Removal

CAUTIONS:

Suspension fasteners are critical parts because they affect performance of vital components and systems and their failure can result in major service expense. A new part with the same part number or an equivalent part must be installed, if installation is necessary. Do not use a part of lesser quality or substitute design. Torque values must be used as specified during reassembly to make sure of correct retention of these parts.

Never pick up or hold the halfshaft by the inboard or outboard CV joint only.

NOTE: Removal steps in this procedure may contain installation details.

1. Refer to: Health and Safety Precautions (100-00 General Information, Description and Operation).
2. Refer to: Wheel Knuckle - 4WD (204-01 Front Suspension, Removal and Installation).
3. **CAUTION: Do not damage the axle shaft oil seal, the machined sealing surface on the inboard CV joint housing or the axle shaft splines.**

   NOTE: A ring retainer retains the inboard CV joint housing to the differential side gear in the axle.

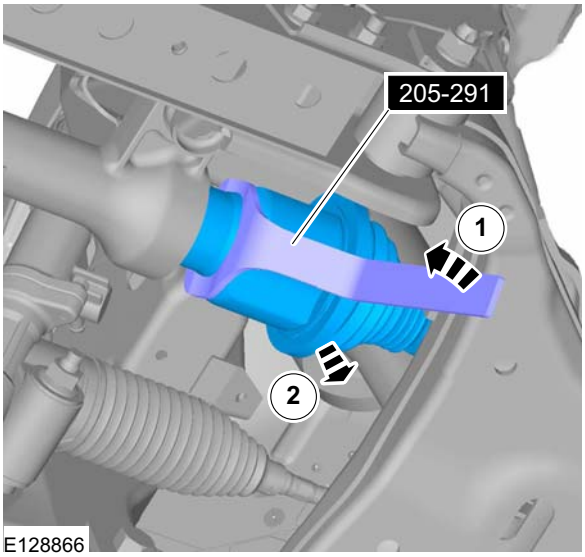

E128866

4.

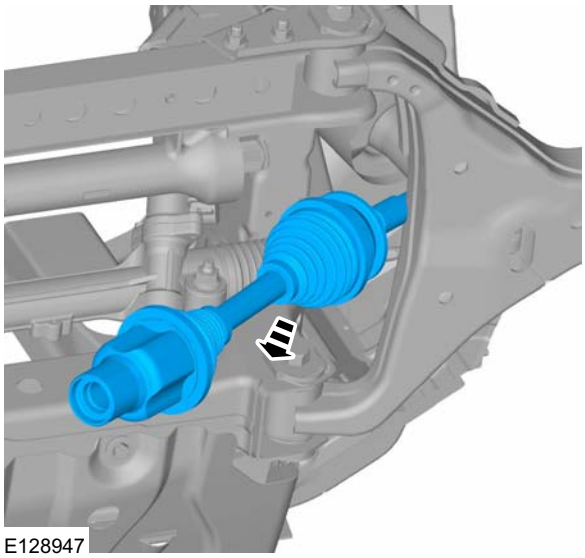
E128947

Installation

1. **CAUTION: Install a new retainer every time the halfshaft is removed.**

   NOTE: Start one end of the retainer in the groove and work it over the halfshaft and into the groove to prevent the retainer from over expanding.

   1. Ring retainer.

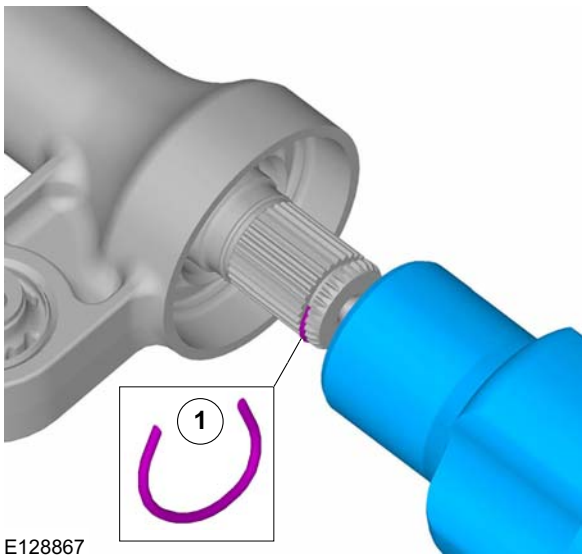

E128867

REMOVAL AND INSTALLATION

2. **CAUTION: Make sure that a new halfshaft retaining nut is installed.**

   Torque: 275 Nm

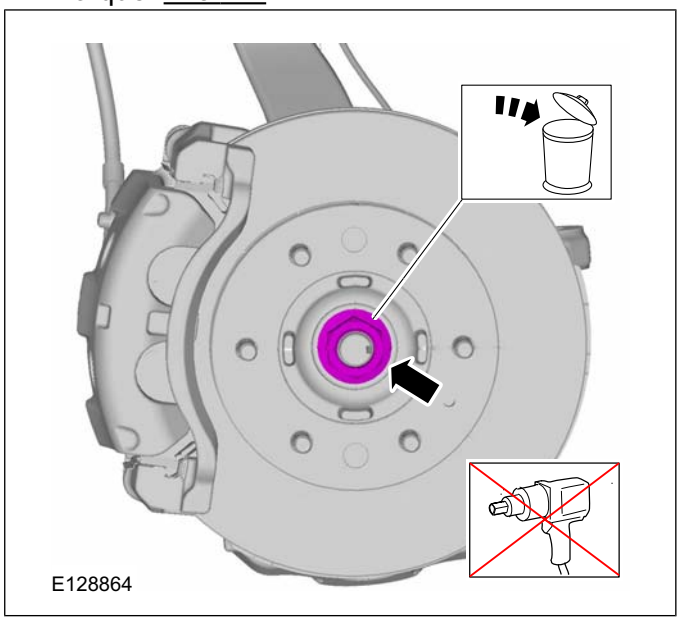

3. Refer to: Wheel Knuckle - 4WD (204-01 Front Suspension, Removal and Installation).

REMOVAL AND INSTALLATION

Inner Constant Velocity (CV) Joint Boot(14 336 0)

Special Tool(s) / General Equipment

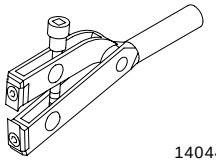 14044	204-169 Clamping Tool, Boot Retaining Clamp
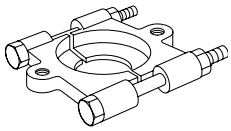 TI15091	205-310 Remover, Bearing/Gear
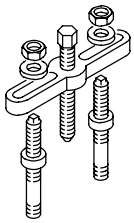 15092	205-311 Remover, Bearing/Gear
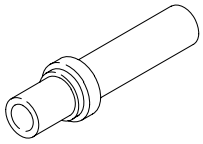 16016	308-046 Installer, Transmission Extension Housing Bushing/Seal
Vise	
Vise Jaw Protectors	

Materials	
Name	**Specification**
Grease FD-R	WSS-M1C259-A1 / 3M5J-M1C259-AA

Removal

NOTE: Removal steps in this procedure may contain installation details.

1. Refer to: Front Halfshaft LH (205-04 Front Drive Halfshafts, Removal and Installation).
   Refer to: Front Halfshaft RH (205-04 Front Drive Halfshafts, Removal and Installation).

2. ⚠ **CAUTION: Use vise jaw protectors.**

   General Equipment: Vise
   General Equipment: Vise Jaw Protectors

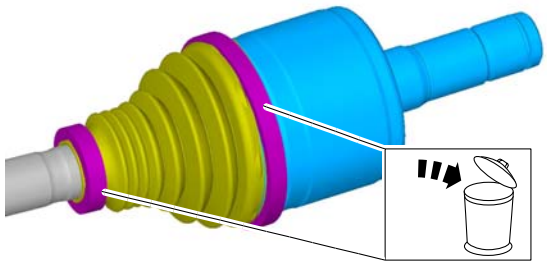
E139200

3. General Equipment: Vise
   General Equipment: Vise Jaw Protectors

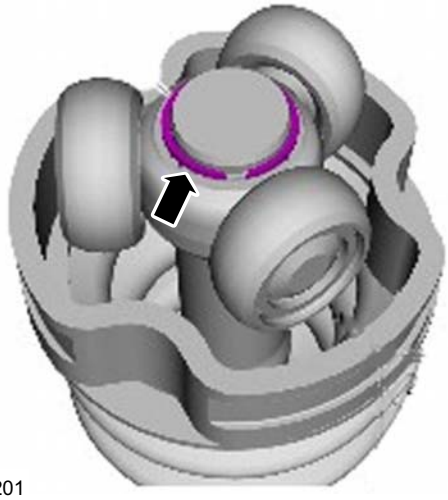
E139201

4. ⚠ **CAUTION: Use vise jaw protectors.**

REMOVAL AND INSTALLATION

Discard the CV joint boot .

Install the Special Tool(s): 205-310, 205-311
General Equipment: Vise
General Equipment: Vise Jaw Protectors

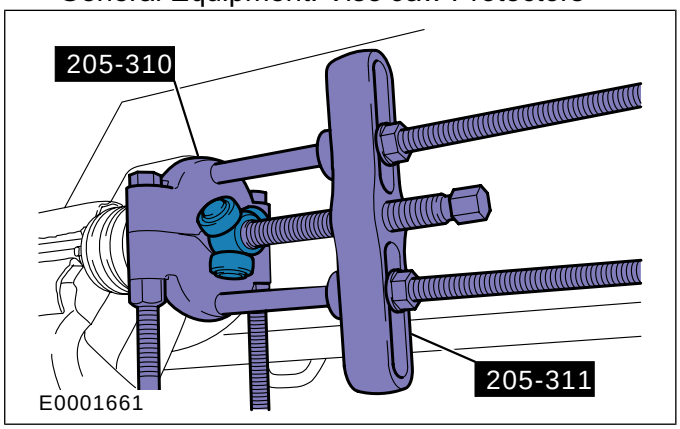

Installation

1. **CAUTION: Use vise jaw protectors.**

   NOTE: Make sure that a new inner constant velocity (CV) joint boot is installed.

   General Equipment: Vise
   General Equipment: Vise Jaw Protectors

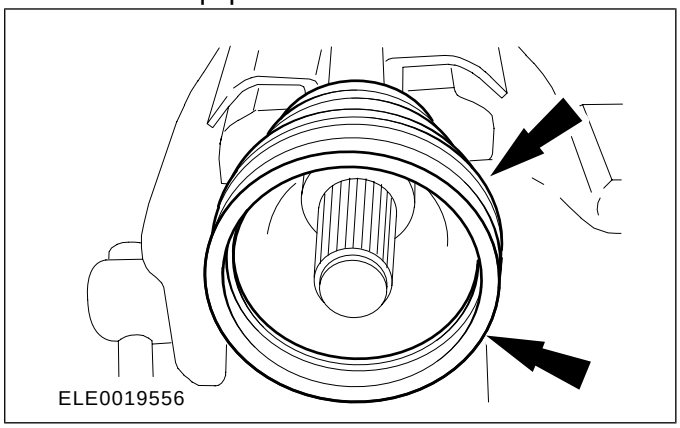

2. **NOTE:** Install a new CV joint boot retaining clamp.

   Special Tool(s): 204-169
   General Equipment: Vise
   General Equipment: Vise Jaw Protectors
   Torque: 21 Nm

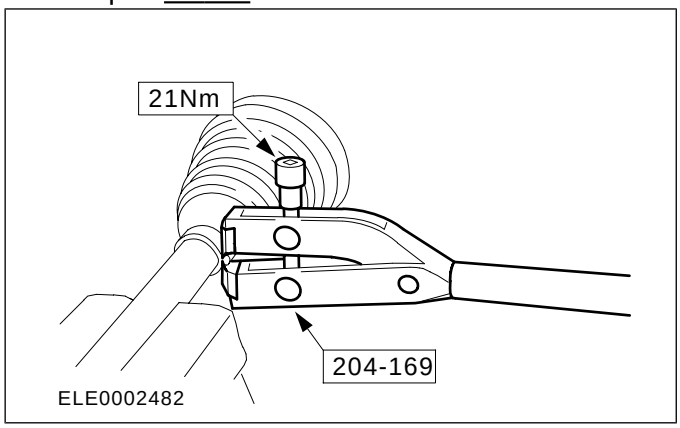

3. **CAUTION: Do not damage the CV joint bearings.**

   Special Tool(s): 308-046
   General Equipment: Vise
   General Equipment: Vise Jaw Protectors

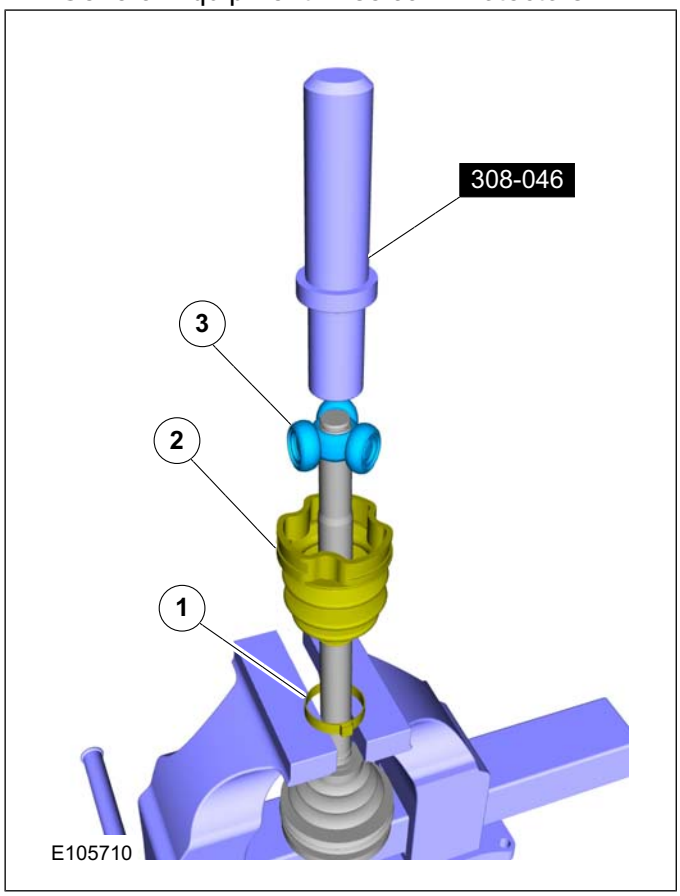

4. **CAUTION: The total amount of grease in the CV joint must not exceed 160**

REMOVAL AND INSTALLATION

grams for 85 PS vehicles and 255 grams for 110/130 PS vehicles.

NOTE: Make sure that a new component is installed.

Material: Grease FD-R (WSS-M1C259-A1 / 3M5J-M1C259-AA) grease

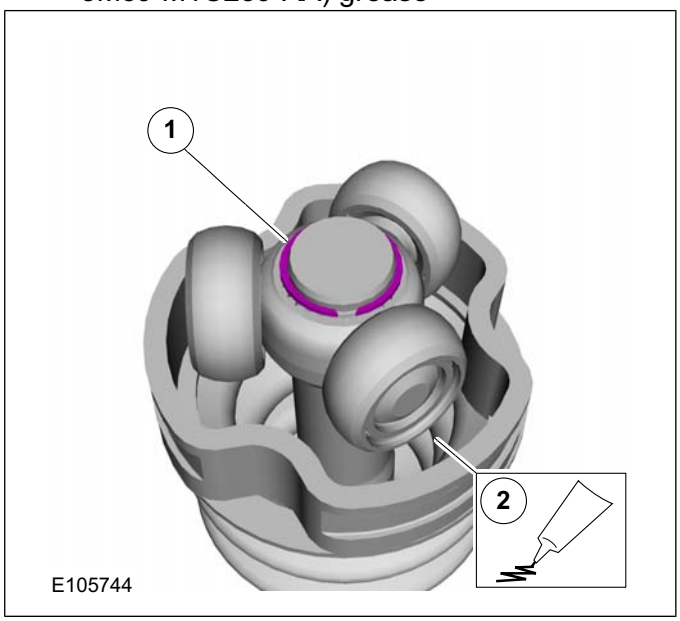

5. With the CV joint housing installed, measure the distance from the inner end of the CV joint boot to the outer end. The distance needs to be 90 mm.

   General Equipment: Vise
   General Equipment: Vise Jaw Protectors

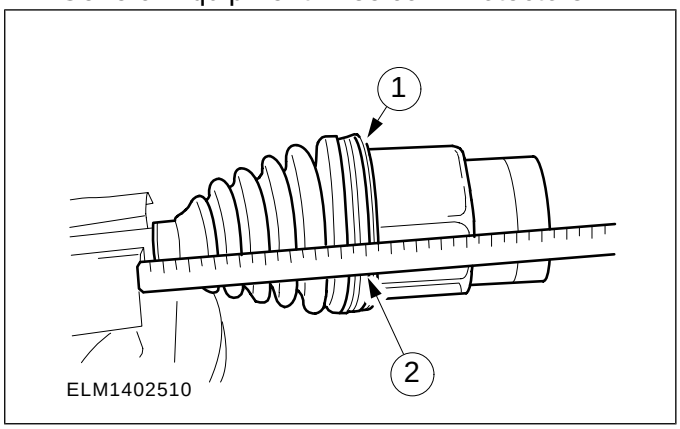

6. **NOTE:** Install a new CV joint boot retaining clamp.

   NOTE: Do not move the CV joint housing. Make sure that the CV joint boot is installed at the measured position.

   Special Tool(s): 204-169
   General Equipment: Vise
   General Equipment: Vise Jaw Protectors
   Torque: 21 Nm

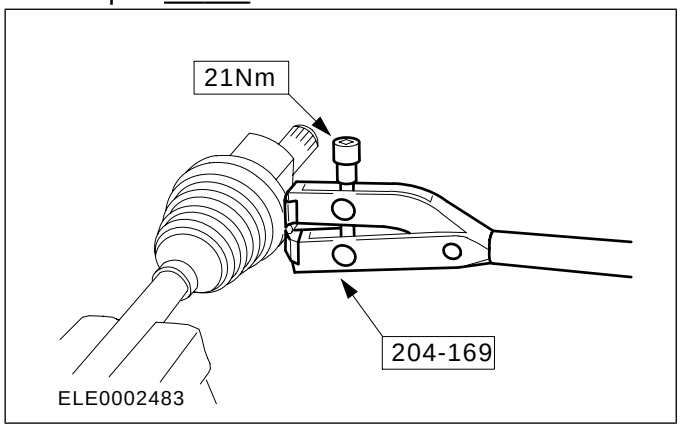

7. Refer to: Front Halfshaft LH (205-04 Front Drive Halfshafts, Removal and Installation).
   Refer to: Front Halfshaft RH (205-04 Front Drive Halfshafts, Removal and Installation).

REMOVAL AND INSTALLATION

Outer Constant Velocity (CV) Joint Boot(14 338 0)

Special Tool(s) / General Equipment

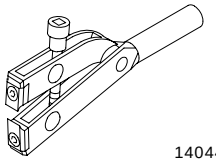 14044	204-169 Clamping Tool, Boot Retaining Clamp
Vise	
Vise Jaw Protectors	

Materials	
Name	**Specification**
Grease FD-R	WSS-M1C259-A1 / 3M5J-M1C259-AA

Removal

CAUTION: The outer CV joint is a press fit. Do not disassemble. Failure to follow this instruction may result in damage to the outer CV joint.

NOTE: Removal steps in this procedure may contain installation details.

1. Refer to: Inner Constant Velocity (CV) Joint Boot (205-04 Front Drive Halfshafts, Removal and Installation).
2. **CAUTION: Use vise jaw protectors.**

   Discard the CV joint boot.

   General Equipment: Vise
   General Equipment: Vise Jaw Protectors

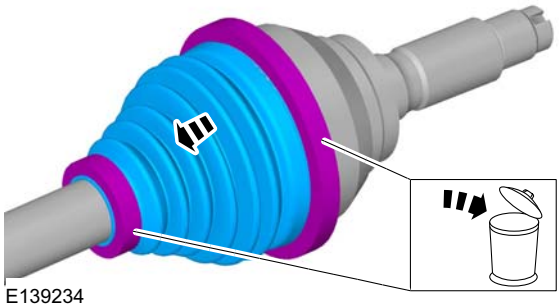
E139234

Installation

1. **CAUTION: The total amount of grease in the CV joint must not exceed 165 grams for 85 PS vehicles and 250 grams for 110/130 PS vehicles.**

   NOTE: Make sure that a new component is installed.

   General Equipment: Vise
   General Equipment: Vise Jaw Protectors
   Material: Grease FD-R (WSS-M1C259-A1 / 3M5J-M1C259-AA) grease

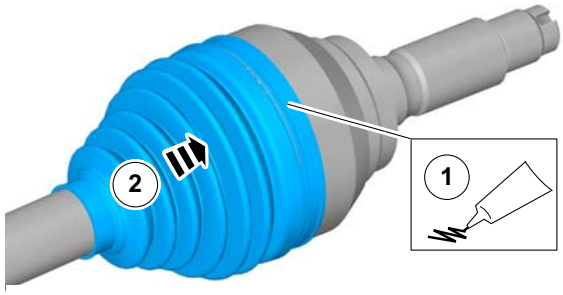

E139235

2. **NOTE:** Install a new CV joint boot retaining clamp.

   Special Tool(s): 204-169
   General Equipment: Vise
   General Equipment: Vise Jaw Protectors
   Torque: 21 Nm

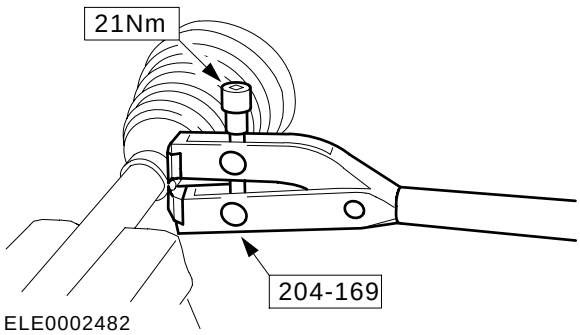

ELE0002482

3. **NOTE:** Install a new CV joint boot retaining clamp.

REMOVAL AND INSTALLATION

NOTE: Do not move the CV joint housing. Make sure that the CV joint boot is installed at the measured position.

Special Tool(s): 204-169
General Equipment: Vise
General Equipment: Vise Jaw Protectors
Torque: 21 Nm

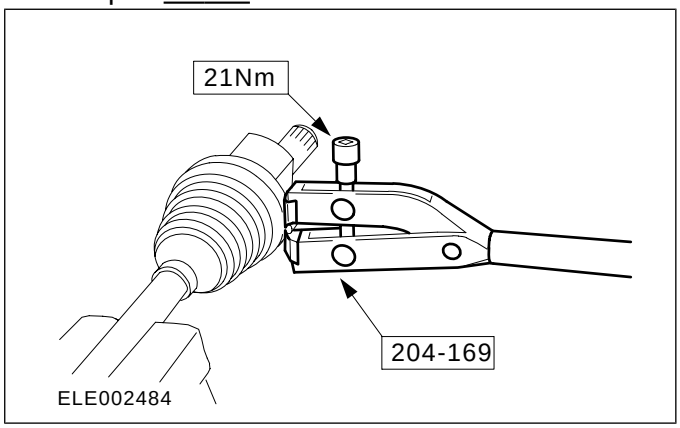

4. Refer to: Inner Constant Velocity (CV) Joint Boot (205-04 Front Drive Halfshafts, Removal and Installation).

SECTION 205-05 Rear Drive Halfshafts

VEHICLE APPLICATION: 2011.50 Ranger

CONTENTS PAGE

REMOVAL AND INSTALLATION

Rear Halfshaft..... 205-05-2

REMOVAL AND INSTALLATION

Rear Halfshaft

Special Tool(s) / General Equipment

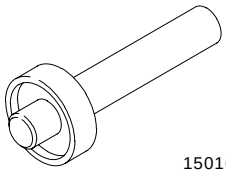 15016	205-052 Installer, Rear Wheel Hub Bearing/Seal
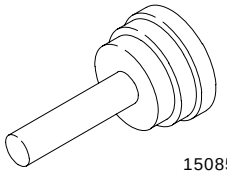 15085	205-296 Installer, Wheel Hub Bearing Cone/Seal
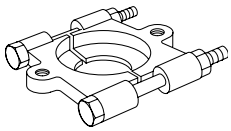 TI15091	205-310 Remover, Bearing/Gear

Special Tool(s) / General Equipment

IMAGE NOT AVAILABLE	205-311-05 Adapter for 205-311
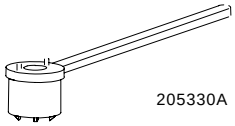 205330A	205-330A Wrench, Axle Shaft Nut
Hydraulic Press	
Vise	

Materials	
Name	**Specification**
Contact Grease	WSB-M1C239-A / YS5J-M1C239-AA

Removal

REMOVAL AND INSTALLATION

1. Refer to: Lifting (100-02 Jacking and Lifting, Description and Operation).
2. Refer to: Wheel and Tire (204-04 Wheels and Tires, Removal and Installation).
3. Refer to: Wheel Cylinder (206-02 Drum Brake, Removal and Installation).
   Refer to: Brake Shoes (206-02 Drum Brake, Removal and Installation).
4.

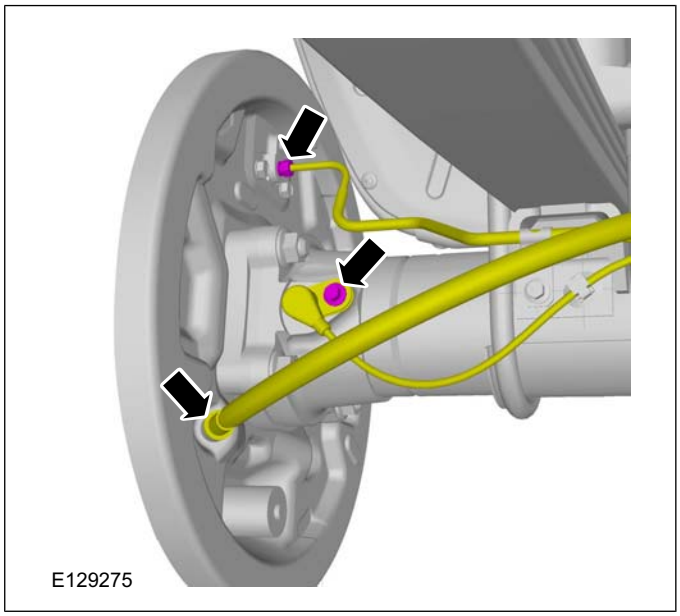
E129275

5. **CAUTION: Be careful not to damage the oil seal while pulling out the axle shaft.**
   Torque: 108 Nm

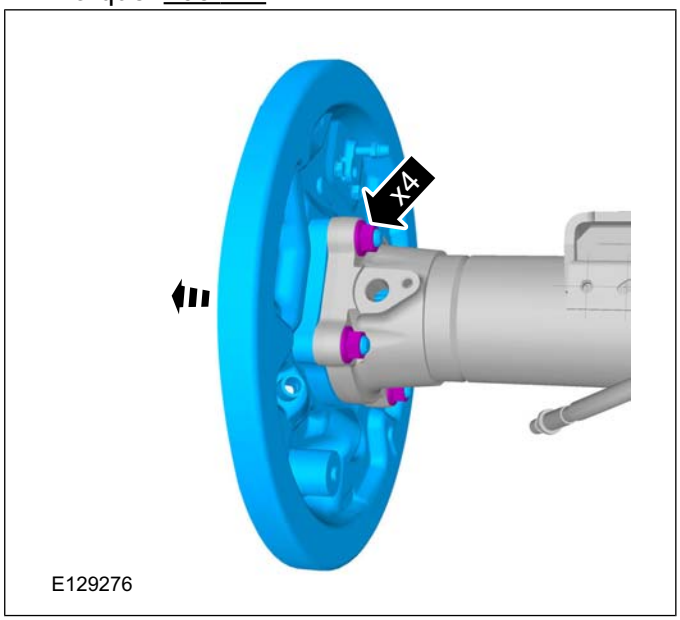

E129276

6.

CAUTION: Because the ABS sensor rotor and rear wheel hub edge are almost flush even if the axle shaft is moved as far as it will go, be careful not to damage the rear wheel hub when grinding.

General Equipment: Vise

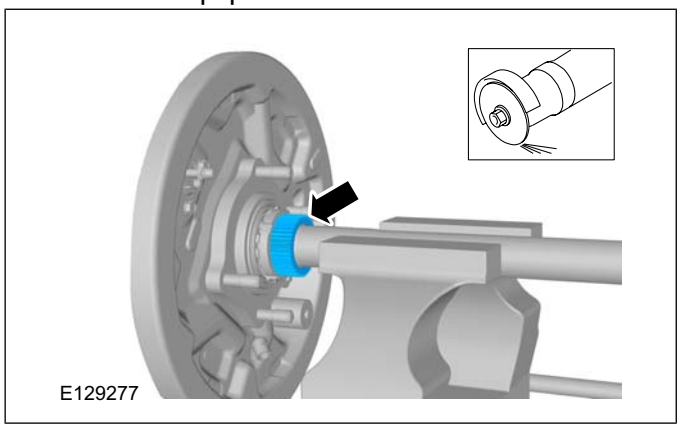
E129277

7. Special Tool(s): 205-330A
   General Equipment: Vise

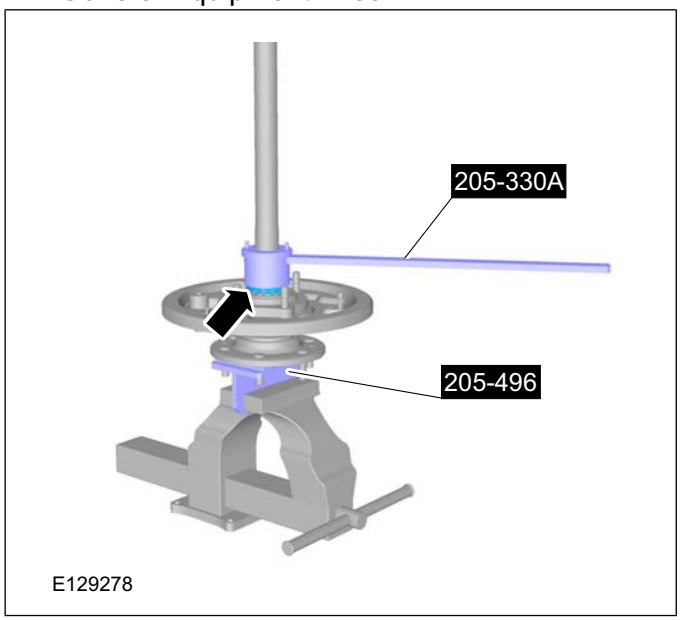

E129278

8.

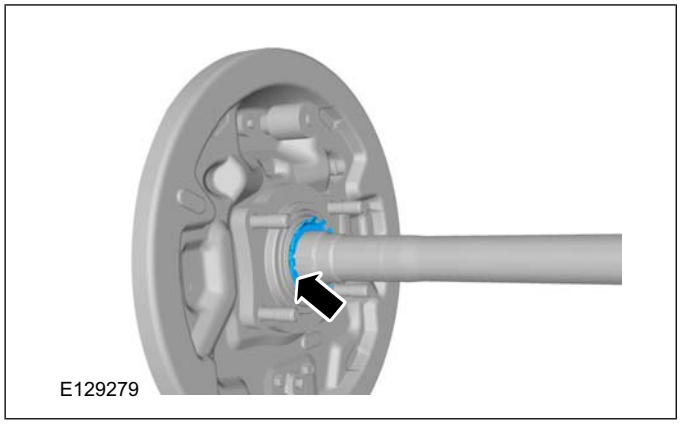
E129279

REMOVAL AND INSTALLATION

9. Special Tool(s): 205-310
   General Equipment: Hydraulic Press

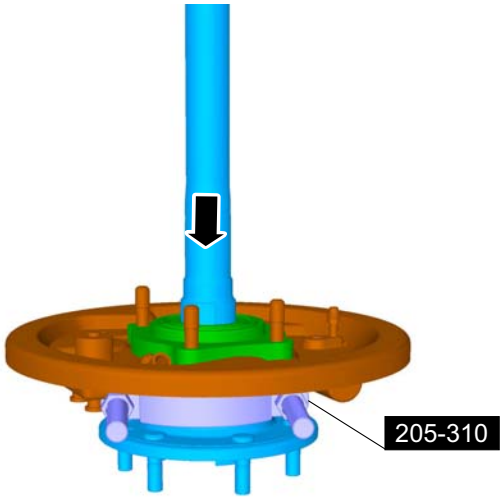

E128118

10. General Equipment: Hydraulic Press

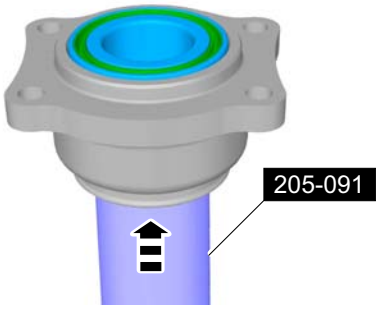

E129280

11.

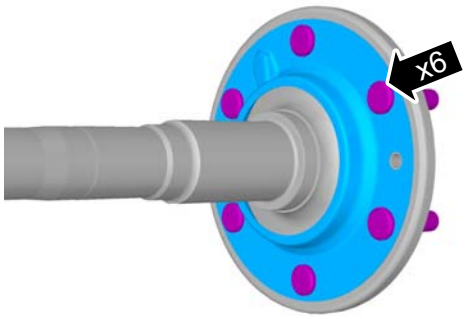

E129291

12.

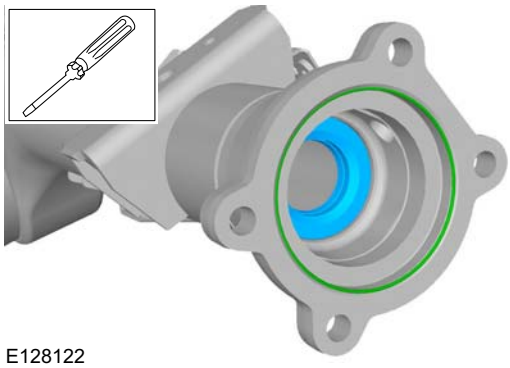

E128122

Installation

1. Special Tool(s): 205-296
   Material: Contact Grease (WSB-M1C239-A / YS5J-M1C239-AA) grease

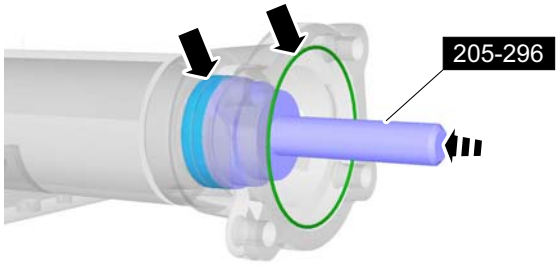

E129248

2.

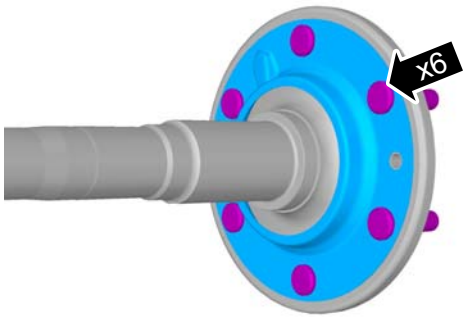

E129291

REMOVAL AND INSTALLATION

3. Special Tool(s): 205-052

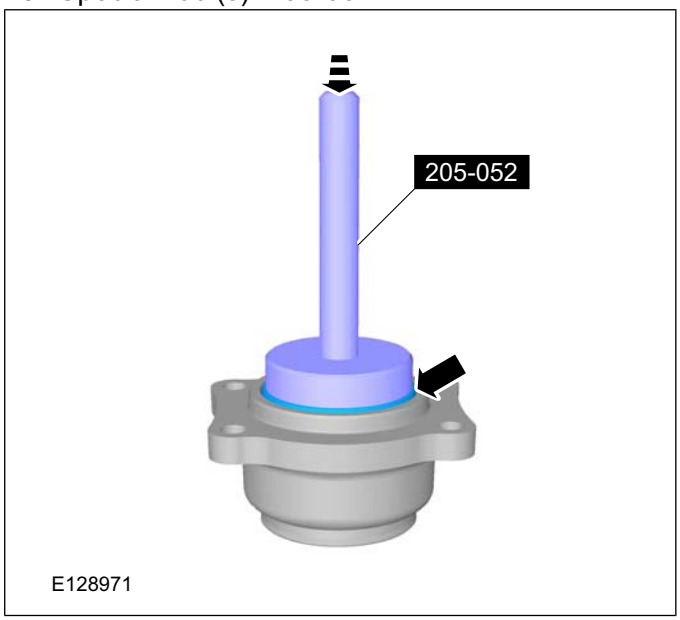

4. General Equipment: Hydraulic Press

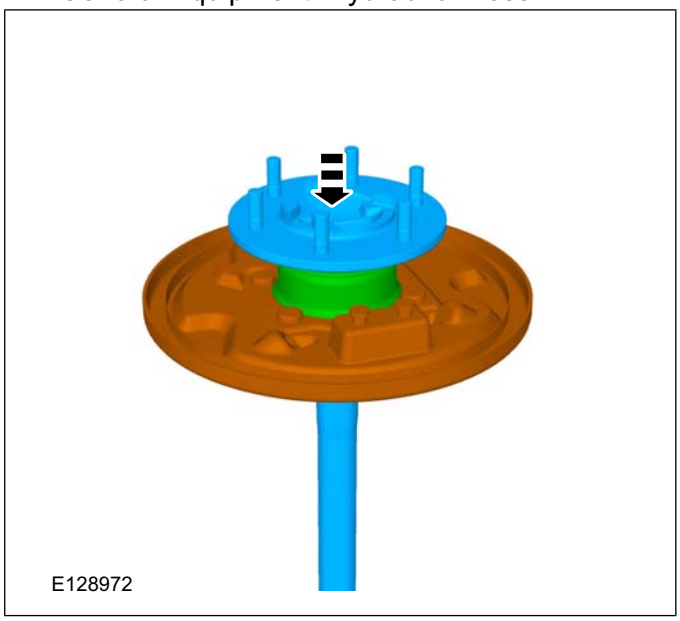

5.

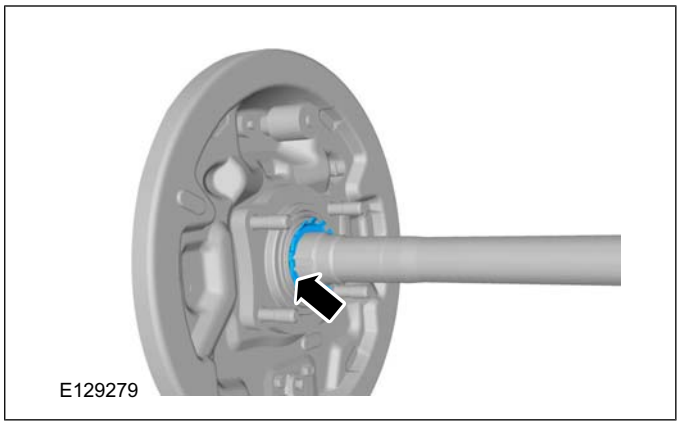

6. Special Tool(s): 205-330A
Torque: 275 Nm

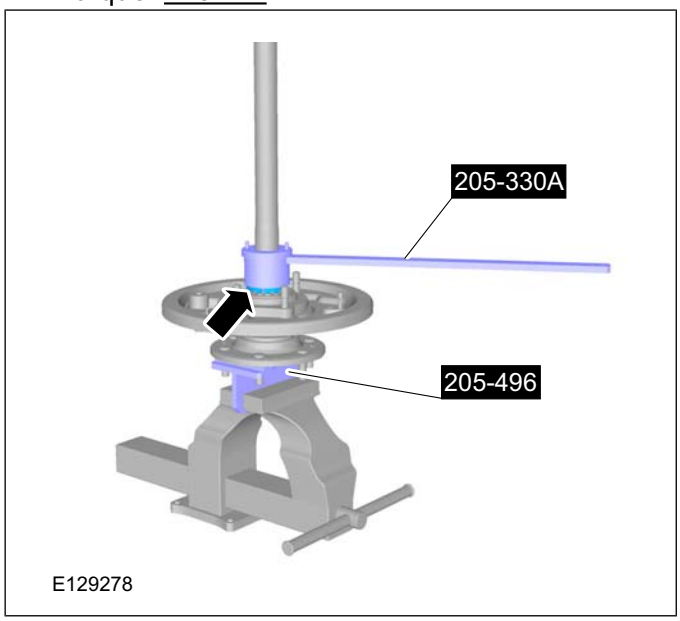

7. Special Tool(s): 205-311-05

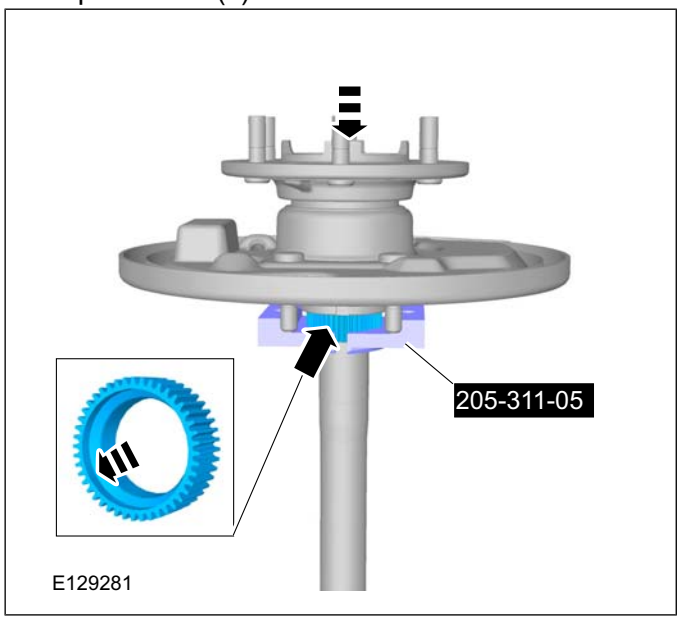

REMOVAL AND INSTALLATION

8. **CAUTION: Be careful not to damage the oil seal while installing the axle shaft.**

   Torque: 108 Nm

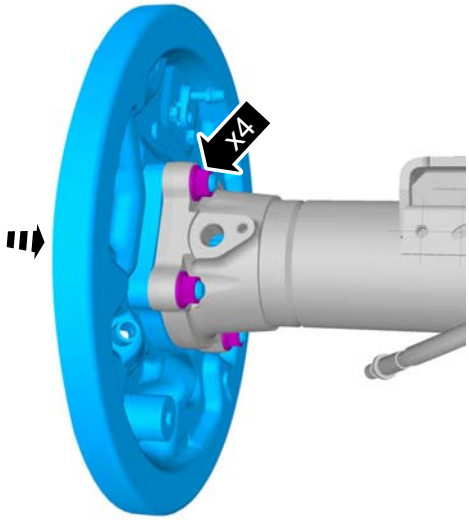

E129282

9.

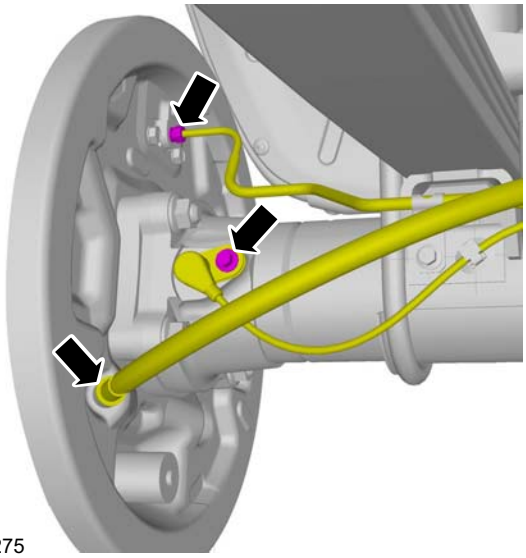

E129275

10. Refer to: Wheel Cylinder (206-02 Drum Brake, Removal and Installation).
    Refer to: Brake Shoes (206-02 Drum Brake, Removal and Installation).

11. Refer to: Wheel and Tire (204-04 Wheels and Tires, Removal and Installation).

SECTION 206-00 Brake System - General Information

VEHICLE APPLICATION: 2011.50 Ranger

CONTENTS PAGE

SPECIFICATIONS

Specifications..... 206-00-2

GENERAL PROCEDURES

Brake Load Sensor Proportioning Valve Adjustment..... (12 136 0) 206-00-3
Front Brake Disc Runout Check..... 206-00-4
Brake System Leak Check..... 206-00-6
Brake System Bleeding..... (12 141 0) 206-00-7
Brake System Pressure Bleeding..... (12 141 0) 206-00-8

SPECIFICATIONS

BRAKE TECHNICAL DATA

ITEM	SPECIFICATION
Brake fluid type	SAE J1703, FMVSS 116 DOT-3
Brake pedal height	214—219 mm {8.43—8.62 in}
Standard pedal play	3.0—8.0 mm {0.12—0.31 in}
Standard pedal-to-floor clearance	105 mm {4.14 in} or more
Power brake unit fluid pressure when pedal depressed at 200 N {20 kgf, 45 lbf}	At 0 kPa {0 mmHg, 0 inHg}: 237 kPa or more
Power brake unit fluid pressure when pedal depressed at 200 N {20 kgf, 45 lbf}	At 67 kPa {500 mmHg, 20 inHg}:8.75 kpa or more
Minimum front disc pad thickness	1.5 mm min
Minimum front disc plate thickness	30 mm
Minimum front disc plate thickness after machining using a brake lathe on-vehicle	30.8 mm
Front disc plate runout limit	0.05 mm {0.002 in} max
Minimum rear brake lining thickness	1.0 mm {0.04 in}
Maximum rear brake drum diameter	4x2 (except Hi-Rider): 271.5 mm {10.68 in} Hi-Rider, 4x4: 296.5 mm {11.67 in}
Parking brake lever stroke when pulled at 98 N {10 kgf, 22 lbf}	3—6 notches

Load sensing proportioning valve (LSPV) fluid pressure

Type	Front wheel cylinder fluid pressure (kPa)	Rear wheel cylinder (kPa)
4x2 (except Hi-Rider)	4,900	1,950-2,470
	9,800	3,070-3,910
Hi-Rider, 4x4 & 4x2	4,900	1,820-2,320
	9,800	2,950-3,750

GENERAL PROCEDURES

Brake Load Sensor Proportioning Valve Adjustment(12 136 0)

1. **Place the unloaded vehicle on level ground. Unloaded: Fuel tank is full. Jack and tools are in designated position.**
2. **A change of 5 mm (0.20 in) in dimension L results in a change of the following.**

Type	Change (kPa {kgf/cm2, psl})
4x2 (except Hi-Rider) Without 4W-ABS	625 (8.7, 123)
Hi-Rider, 4x4 Without 4W-ABS	510 (11, 154)

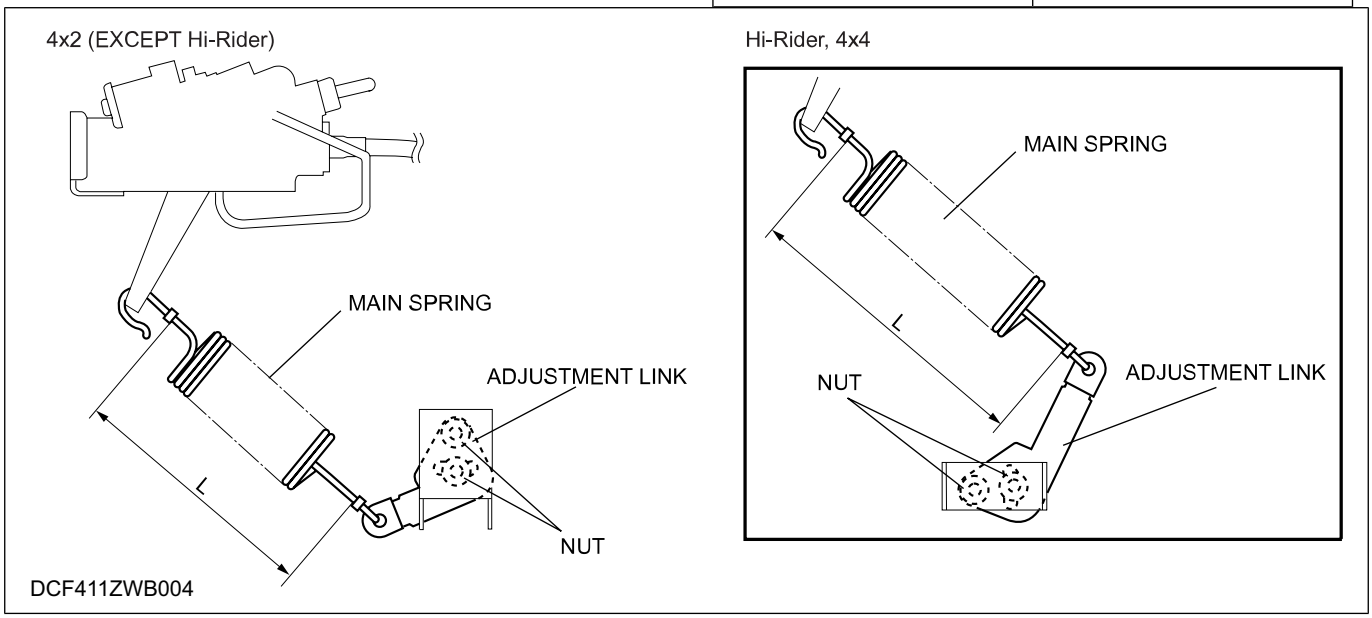

3. **Adjust main spring dimension L between the LSPV and the adjustment link loosening and repositioning the LSPV.**

   · Decrease dimension L if the fluid pressure is low.

   · Increase dimension L if the fluid pressure is high.

4. **If not as specified, replace the LSPV as a component.**

Specification Dimension L

Type	Dimension x (mm {in})
4x2 (except Hi-Rider) Without 4W-ABS	166.0—173.0 (5.808—6.082)
Hi-Rider, 4x4 Without 4W-ABS	184.5—191.5 (6.910—7.185)

5. **Tightening the nut.**

   Specification 11.4—15.6 Nm (1.90—2.59 kgfm, 13.8—18.7 ftlbf).

6. **After adjustment, recheck the fluid pressure.**

GENERAL PROCEDURES

Front Brake Disc Runout Check

Special Tool(s) / General Equipment

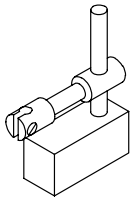 15008	205-044 Holding Fixture, Dial Indicator Gauge
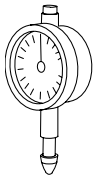 15046	205-069 Dial Indicator Gauge (Metric)
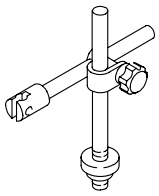 15022A	205-070 Holding Fixture, Dial Indicator Gauge
Calliper Gauge	

Activation

1. Refer to: Wheel and Tire (204-04 Wheels and Tires, Removal and Installation).

2.

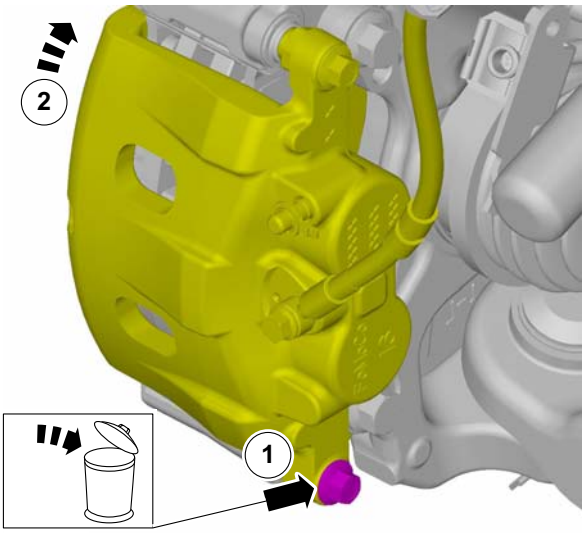

E125507

3. **NOTE:** The total dial indicator gauge reading should not exceed specification.

   Special Tool(s): 205-069, 205-070, 205-044

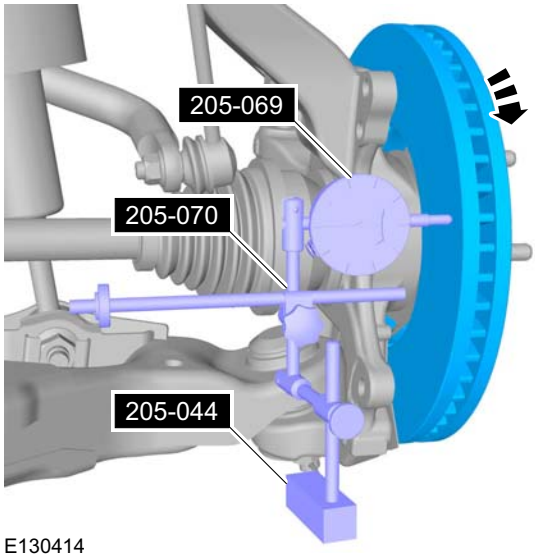

E130414

4. **NOTE:** The total dial indicator gauge reading should not exceed specification.

   Special Tool(s): 205-069, 205-070, 205-044

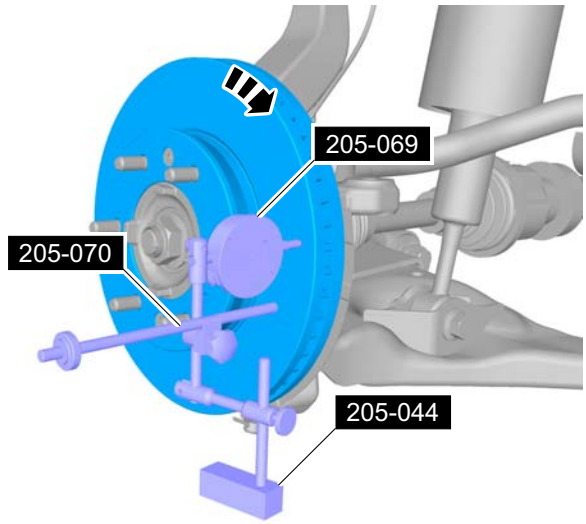

E130415

5. **NOTE:** If any of the measurements exceed the run out specification of 0.05 mm or the brake disc thickness variation is more than 0.018 mm, a new brake disc must be installed and the brake disc runout re-checked.

   Using a suitable micrometer, measure the brake disc thickness at eight positions, 45 degrees

GENERAL PROCEDURES

apart and approximately 10 mm from the outer edge of the brake disc.

General Equipment: Calliper Gauge

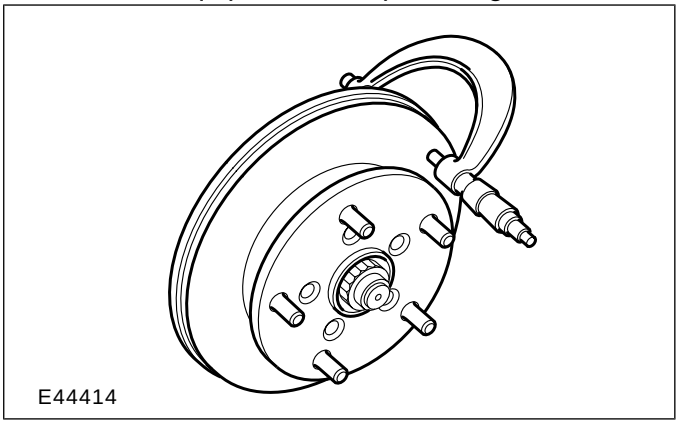

GENERAL PROCEDURES

Brake System Leak Check

Check

1. NOTE: Brake fluid is water soluble and it is possible that all evidence of fluid leakage has been washed off if the vehicle has been operated in rain or snow.

   Check the brake fluid level. Add brake fluid as necessary.

2. Apply the brakes several times and make sure the pedal feel is not spongy. If necessary, bleed the brake system.

   For additional information, refer to Brake System Bleeding in this section.

3. Check the brake fluid level and verify that the fluid level is actually dropping.

4. NOTE: If the brake fluid level drops and no external leak is evident, check for a brake master cylinder bore end seal leak.

   Locate and correct the external leak.

GENERAL PROCEDURES

Brake System Bleeding(12 141 0)

General Equipment

Worldwide Diagnostic System (WDS)

Bleeding

All Vehicles

WARNING: Brake fluid contains polyglycol ethers and polyglycols. Avoid contact with the eyes. Wash hands thoroughly after handling. If brake fluid contacts the eyes, flush the eyes for 15 minutes with cold running water. Get medical attention if irritation persists. If taken internally, drink water and induce vomiting. Get medical attention immediately. Failure to follow these instructions may result in personal injury.

CAUTION: If brake fluid is spilt on the paintwork, the affected area must be immediately washed down with cold water.

NOTE: Make sure that the vehicle is standing on a level surface.

NOTE: The system consists of separate circuits for each front and diagonally opposite rear wheel. Each circuit can be bled independently.

1. **CAUTION: The brake fluid reservoir must remain full with new, clean brake fluid at all times during bleeding.**

   Install the bleed tube to the bleed nipple.
2. **Immerse the end of the bleed tube in a bleed jar containing a small quantity of approved brake fluid.**
3. **Position the bleed jar base at least 300 mm above the bleed nipple to maintain fluid pressure and prevent air leaking past the threads of the bleed nipple.**
4. **Loosen the rear left bleed nipple by one-half turn.**
5. **Operate the brake pedal fully (pumping brake fluid and air into the bleed jar) and allow the brake pedal to return to the rest position.**
6. **NOTE: Rear brakes only.**

   Rapidly operate the parking brake control several times.
7. **Fill the brake fluid reservoir to the MAX mark.**
8. **Continue operating the brake pedal until air-free fluid is being pumped into the bleed jar.**
9. **With the brake pedal fully depressed tighten the bleed nipple.**
10. **CAUTION: Make sure that the bleed nipple cap is installed after bleeding the brake line(s). This will prevent corrosion to the bleed nipple. Failure to follow this instruction may result in the bleed nipple becoming seized.**

    Repeat the procedure for the remaining brake lines in the following order:

    1. Front left.
    2. Front right.
    3. Rear right.

Vehicles with anti-lock brakes

11. **NOTE: This step is only necessary when changing the brake fluid to remove the used brake fluid from the hydraulic control unit (HCU).**

    Using WDS, bleed the brake system.

GENERAL PROCEDURES

Brake System Pressure Bleeding(12 141 0)

General Equipment

Worldwide Diagnostic System (WDS)
Brake/clutch system pressure bleeder/filler

Bleeding

All vehicles

WARNING: Brake fluid contains polyglycol ethers and polyglycols. Avoid contact with the eyes. Wash hands thoroughly after handling. If brake fluid contacts the eyes, flush the eyes for 15 minutes with cold running water. Get medical attention if irritation persists. If taken internally, drink water and induce vomiting. Get medical attention immediately. Failure to follow these instructions may result in personal injury.

CAUTION: If brake fluid is spilt on the paintwork, the affected area must be immediately washed down with cold water.

NOTE: Make sure that the vehicle is standing on a level surface.

NOTE: The system consists of separate circuits for each front and diagonally opposite rear wheel. Each circuit can be bled independently.

1. **Fill the brake fluid reservoir to the MAX mark.**
2. **CAUTIONS:**

   Make sure that the pressure within the brake system does not exceed 1 bar.

   Make sure that the pressure bleeding equipment is filled with new brake fluid to the correct specification.

   Using the brake/clutch system pressure bleeder/filler, pressure bleed the system in accordance with the manufacturer's instructions in the following order:

   1. Rear left.
      - Rapidly operate the parking brake control several times.
   2. Front left.
   3. Front right.
   4. Rear right.
      - Rapidly operate the parking brake control several times.

CAUTION: Make sure that the bleed nipple cap is installed after bleeding the brake line(s). This will prevent corrosion to the bleed nipple. Failure to follow this instruction may result in the bleed nipple becoming seized.

3. **Fill the brake fluid reservoir to the MAX mark as necessary.**

Vehicles with anti-lock brakes

4. **NOTE: This step is only necessary when changing the brake fluid to remove the used brake fluid from the hydraulic control unit (HCU).**

   Using WDS, bleed the brake system.

SECTION 206-02 Drum Brake

VEHICLE APPLICATION: 2011.50 Ranger

CONTENTS PAGE

REMOVAL AND INSTALLATION

Wheel Cylinder..... 206-02-2
Brake Shoes..... 206-02-3

REMOVAL AND INSTALLATION

Wheel Cylinder

Removal

NOTE: Removal steps in this procedure may contain installation details.

1. Refer to: Brake System Health and Safety Precautions (100-00 General Information, Description and Operation).
2. Refer to: Brake Shoes (206-02 Drum Brake, Removal and Installation).
3. 1. Torque: 19 Nm
   2. Torque: 13 Nm

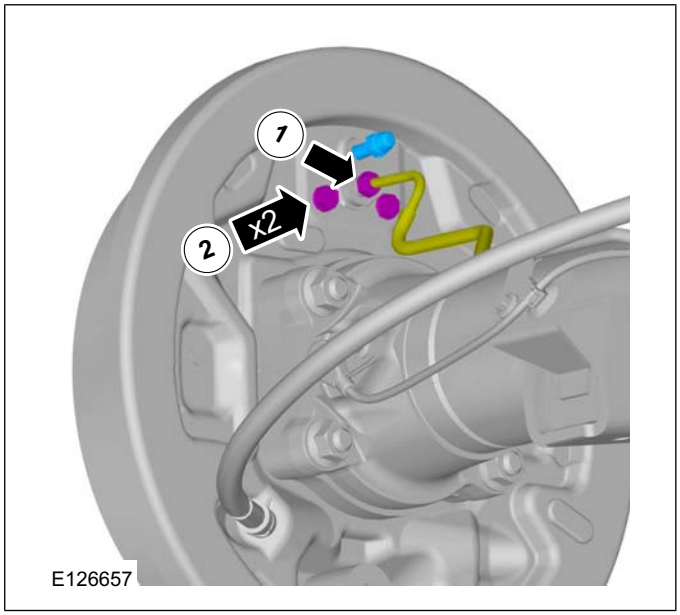

Installation

1. To install, reverse the removal procedure.
2. Refer to: Brake System Bleeding (206-00 Brake System - General Information, General Procedures).

REMOVAL AND INSTALLATION

Brake Shoes

Removal

NOTE: Removal steps in this procedure may contain installation details.

1.

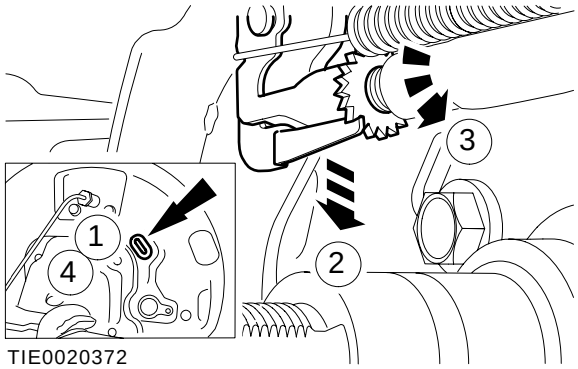

2. Refer to: Wheel and Tire (204-04 Wheels and Tires, Removal and Installation).

3.

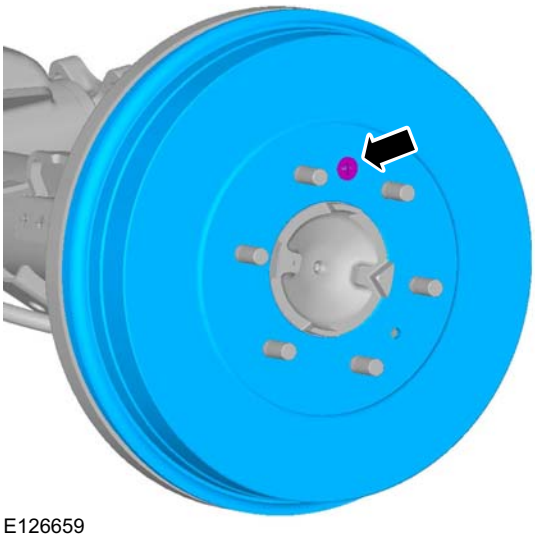

4.

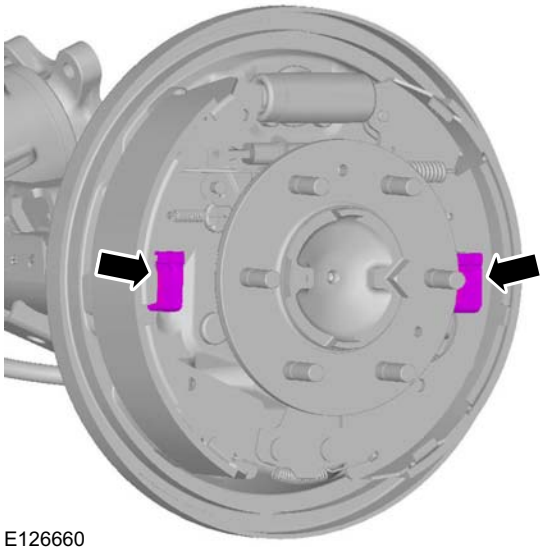

5.

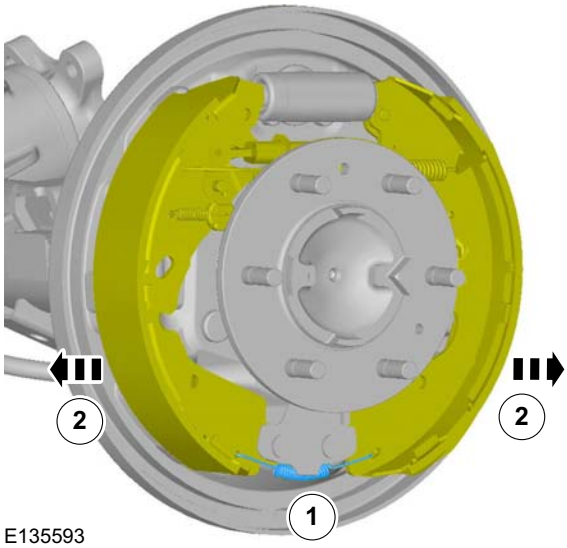

6. Hold the wheel cylinder pistons in place with a plastic band before removal of shoes.

REMOVAL AND INSTALLATION

7. ⚠ **CAUTION: Do not damage the wheel cylinder boots.**

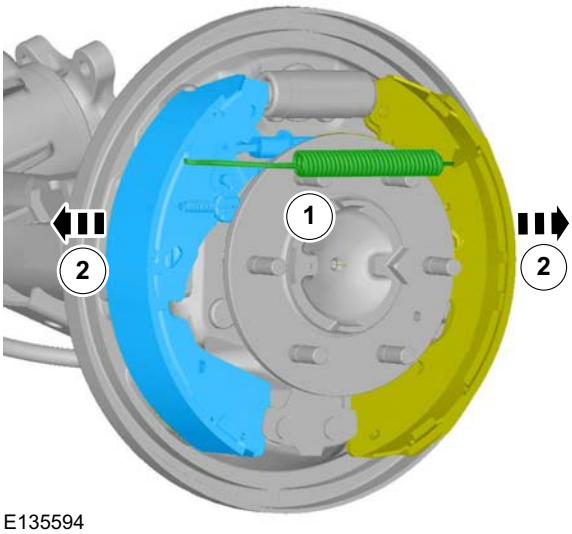

E135594

8.

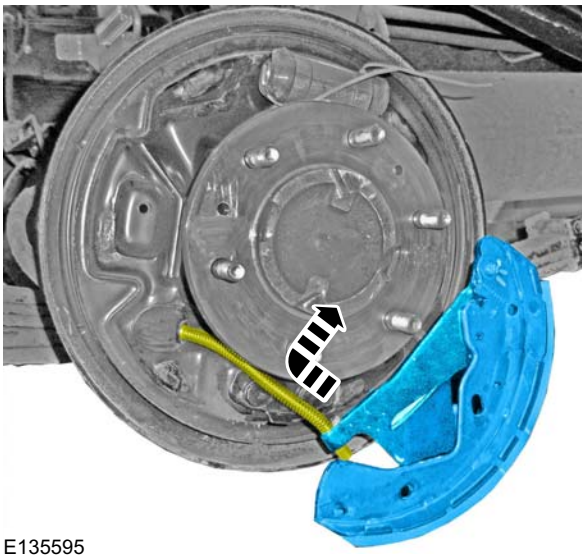
E135595

Installation

1.

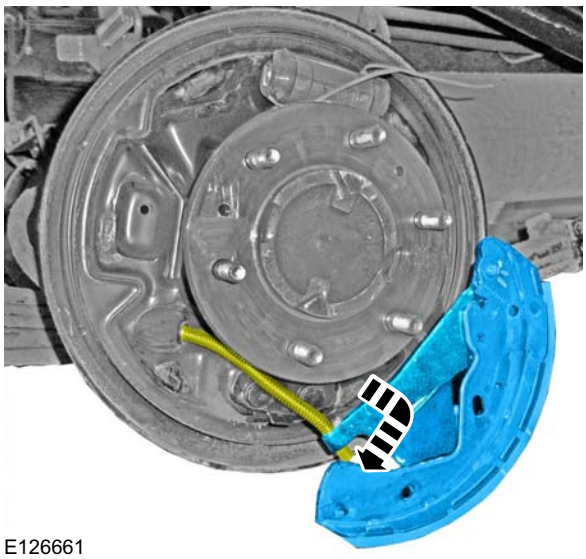
E126661

2.

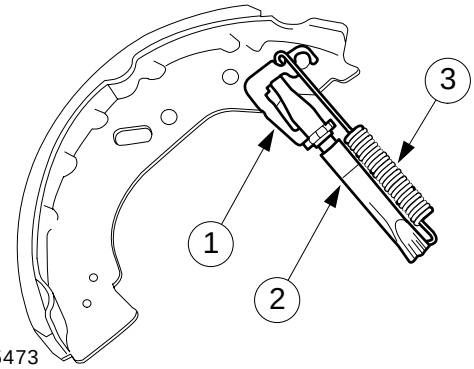

TIE0005473

3. Turn the adjuster on the adjustment strut to adjust the brake shoe until the outer diameter of the brake shoe is as specified.

   Refer to: Specifications (206-00 Brake System - General Information, Specifications).

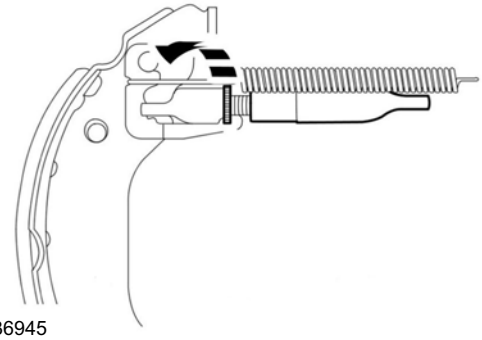
E136945

REMOVAL AND INSTALLATION

4. To install, reverse the removal procedure.
5. Refer to: Wheel and Tire (204-04 Wheels and Tires, Removal and Installation).
6. Depress the brake pedal to adjust the brake shoes.

SECTION 206-03 Front Disc Brake

VEHICLE APPLICATION: 2011.50 Ranger

CONTENTS PAGE

REMOVAL AND INSTALLATION

Brake Pads..... (12 234 0) 206-03-2
Brake Caliper..... (12 243 0) 206-03-4
Brake Disc..... (12 223 0) 206-03-5

REMOVAL AND INSTALLATION

Brake Pads(12 234 0)

Special Tool(s)

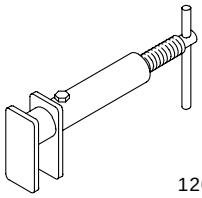 12014	206-005 Retractor, Brake Caliper Piston

Materials	
Name	**Specification**
Brake Fluid - Super DOT4	WSS-M6C57-A2

Removal

NOTE: Removal steps in this procedure may contain installation details.

1. **WARNINGS:**

   Use of any other than approved DOT 4 motor vehicle brake fluid will cause permanent damage to brake components and will render the brakes inoperative. Failure to follow these instructions may result in personal injury.

   Brake fluid contains polyglycol ethers and polyglycols. Avoid contact with eyes. Wash hands thoroughly after handling. If brake fluid contacts eyes, flush eyes with running water for 15 minutes. Get medical attention if irritation persists. If taken internally, drink water and induce vomiting. Get medical attention immediately. Failure to follow these instructions may result in personal injury.

   CAUTIONS:

   Brake fluid is harmful to painted and plastic surfaces. If brake fluid is spilled onto a painted or plastic surface, immediately wash it with water.

   If brake fluid is spilt on the paintwork, the affected area must be immediately washed down with cold water.

   Refer to: Brake System Health and Safety Precautions (100-00 General Information, Description and Operation).

2. Refer to: Wheel and Tire (204-04 Wheels and Tires, Removal and Installation).

3. **WARNING: Make sure that no load is placed on the brake hose.**

   CAUTION: Do not pry in the brake caliper sight hole to retract the pistons as this can damage the pistons and boots.

   Torque: 52 Nm

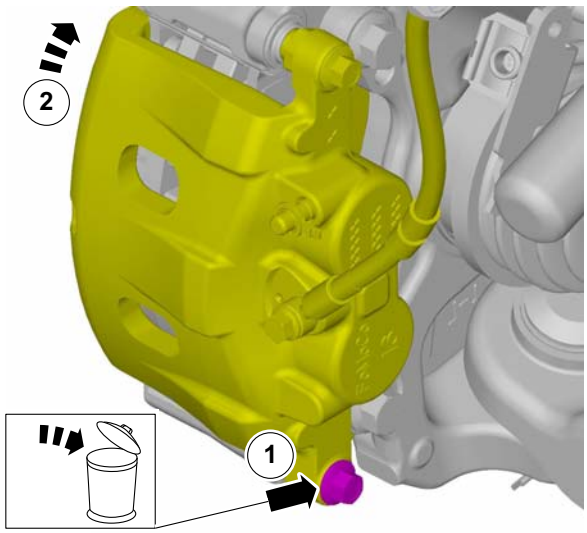

E125507

4. **NOTE:** Note the position of the brake pads to aid installation.

   NOTE: One brake disc pad kit contains the pads and pad clips required for both sides.

REMOVAL AND INSTALLATION

Rotate the brake caliper upwards

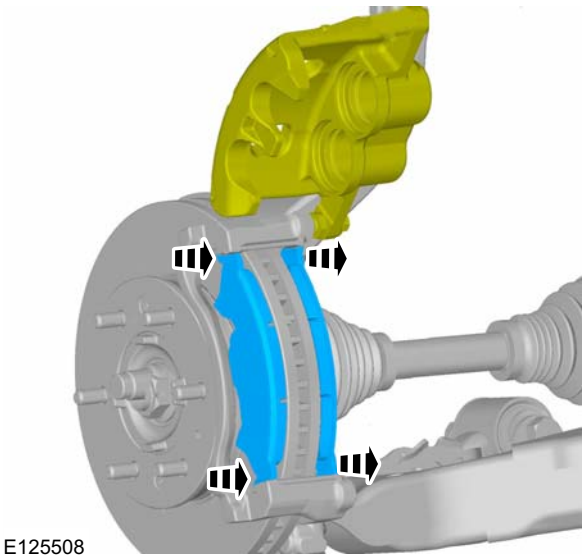

5. **CAUTION: When the brake caliper piston is retracted into the piston housing, brake fluid will be displaced into the brake fluid reservoir.**

   NOTE: Make sure the brake pad contact points are clean and free from contamination.

   NOTE: Remove the adhesive foil from the rear of the brake pad.

   Special Tool(s): 206-005

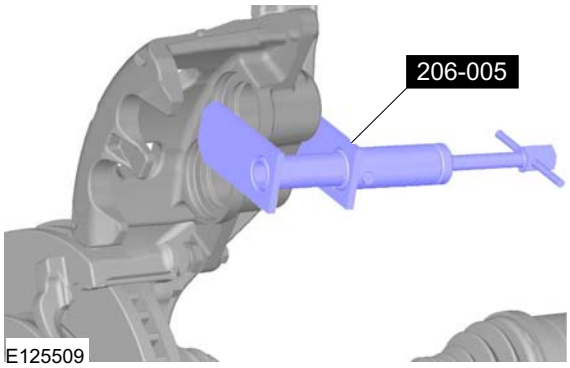

Installation

1. **CAUTIONS:**

   Make sure that the mating faces are clean and free of foreign material and that no grease is applied to the brake pad guides.

   Do not allow grease, oil, brake fluid or other contaminants to contact the pad lining material. Do not install contaminated pads.

   Protect the piston and boots when pushing the caliper piston into the caliper piston bores.

2. To install, reverse the removal procedure.

3. **CAUTION: The fluid level must remain between the MAX and MIN marks.**

   NOTE: Depress the brake pedal, check the brake fluid level in the brake fluid reservoir and top up as necessary with brake fluid.

   Material: Brake Fluid - Super DOT4 (WSS-M6C57-A2) brake fluid

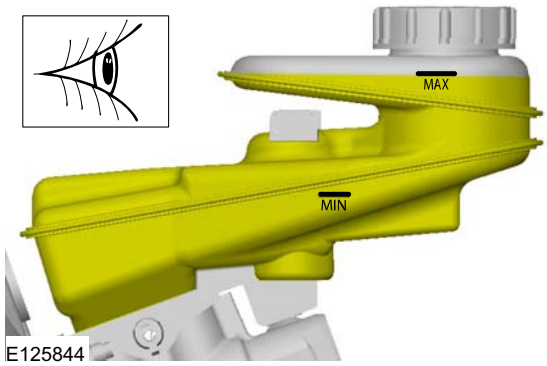

REMOVAL AND INSTALLATION

Brake Caliper(12 243 0)

Removal

NOTE: Removal steps in this procedure may contain installation details.

1. Refer to: Brake System Health and Safety Precautions (100-00 General Information, Description and Operation).
   Refer to: Wheel and Tire (204-04 Wheels and Tires, Removal and Installation).
2. **WARNING: Be prepared to collect escaping fluids.**

   NOTE: Use suitable paper to absorb any escaping fluid.

   NOTE: Make sure that the brake fluid level does not drop below the min mark.

   1. Torque: 27 Nm
   2. Torque: 115 Nm

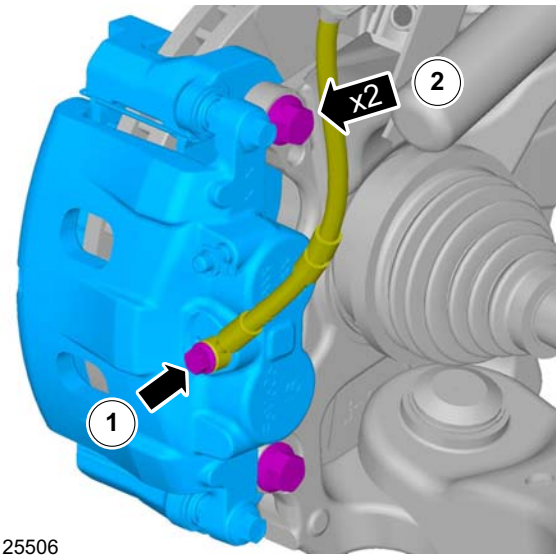

E125506

Installation

1. To install , reverse the removal procedure.
2. **NOTE:** Make sure that replace the new packings for flexible hose.

   Refer to: Brake System Bleeding (206-00 Brake System - General Information, General Procedures).

REMOVAL AND INSTALLATION

Brake Disc(12 223 0)

Removal

NOTE: Removal steps in this procedure may contain installation details.

1. Refer to: Brake System Health and Safety Precautions (100-00 General Information, Description and Operation).
2. Refer to: Wheel and Tire (204-04 Wheels and Tires, Removal and Installation).
3. Torque: 115 Nm

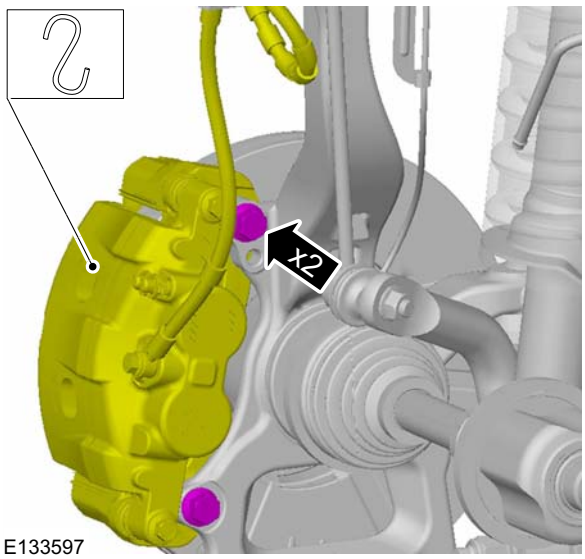

E133597

4. Torque: 12 Nm

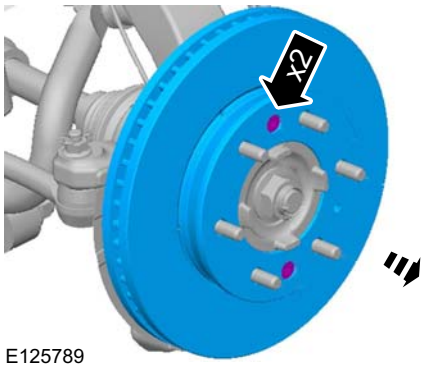

E125789

Installation

1. To install, reverse the removal procedure.

SECTION 206-05 Parking Brake and Actuation

VEHICLE APPLICATION: 2011.50 Ranger

CONTENTS PAGE

DESCRIPTION AND OPERATION

Parking Brake..... 206-05-2

GENERAL PROCEDURES

Parking Brake Cable Adjustment..... (12 662 0) 206-05-3

REMOVAL AND INSTALLATION

Parking Brake Control..... (12 664 0) 206-05-4
Parking Brake Front Cable..... 206-05-5
Parking Brake Rear Cables..... 206-05-6

DESCRIPTION AND OPERATION

Parking Brake

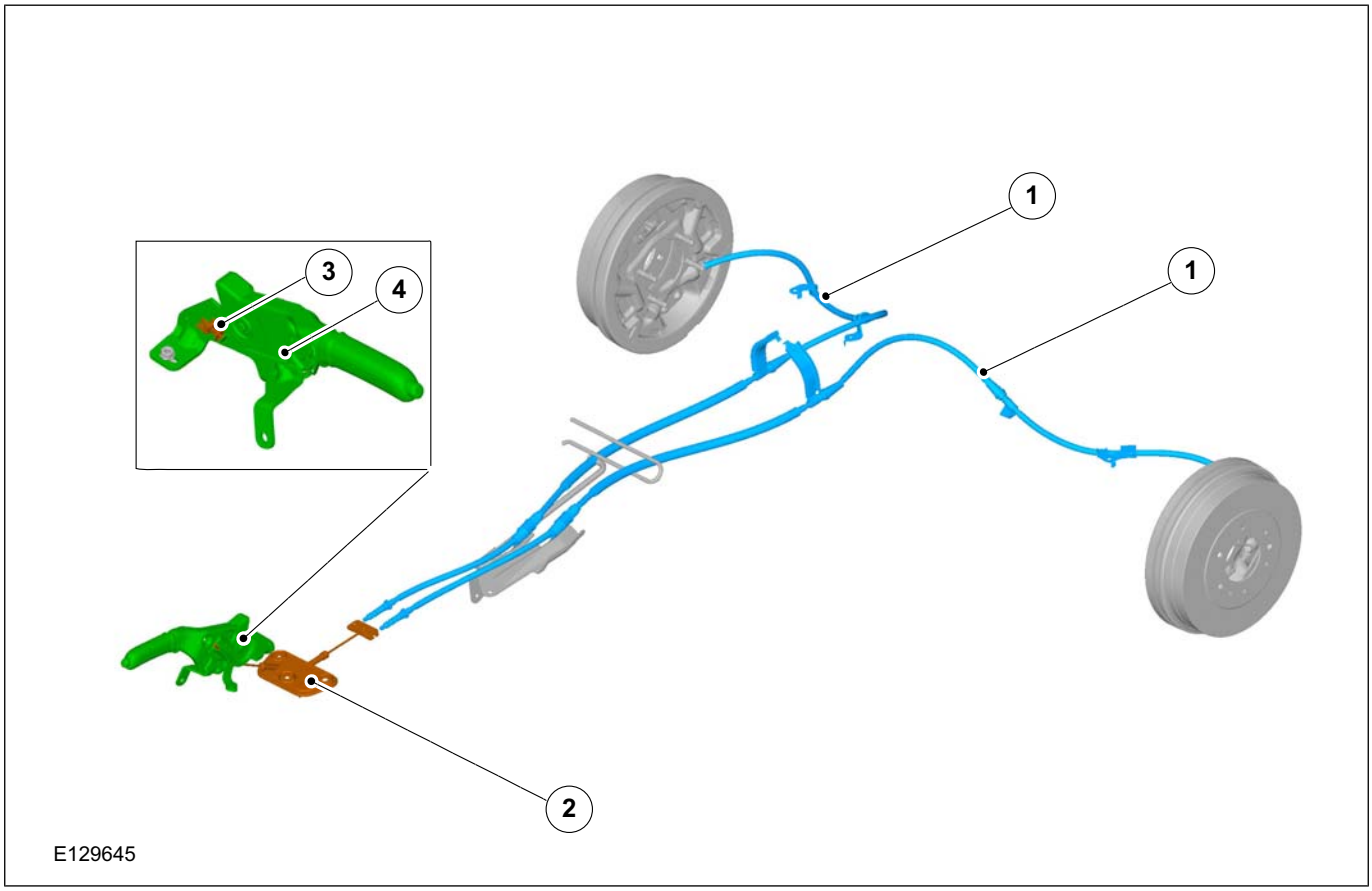

Item	Description
1	Parking brake rear cables
2	Parking brake front cable
3	Parking brake switch
4	Parking brake lever assembly

GENERAL PROCEDURES

Parking Brake Cable Adjustment(12 662 0)

1. **Before adjustment, depress the brake pedal several times while the vehicle is moving in reverse.**
2. **Pull the parking lever two to three times and turn the adjustment nut until the stroke reaches within range.**
   - Parking brake lever stroke when pulled at 98 N (10 kgf, 22 lbf) 3-6 notches.

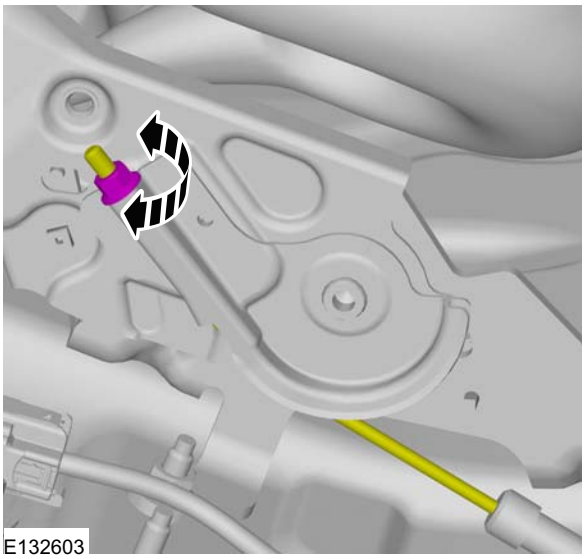

3. **After adjustment, pull the parking brake lever one notch and verify that the parking brake warning light illuminates.**
4. **Verify that the rear brakes do not drag.**

REMOVAL AND INSTALLATION

Parking Brake Control(12 664 0)

Removal

NOTE: Removal steps in this procedure may contain installation details.

1. Refer to: Brake System Health and Safety Precautions (100-00 General Information, Description and Operation).
2. Refer to: Floor Console - Single Cab (501-12 Instrument Panel and Console, Removal and Installation).
   Refer to: Floor Console - Double Cab (501-12 Instrument Panel and Console, Removal and Installation).
3.

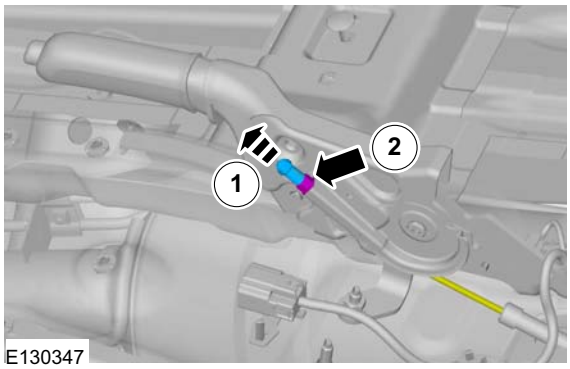

E130347

4. Torque: 22 Nm

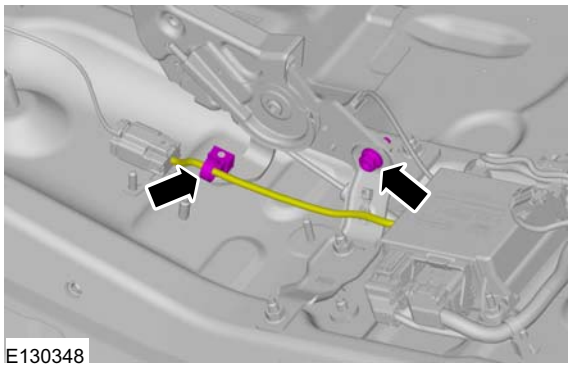
E130348

5. Torque: 22 Nm

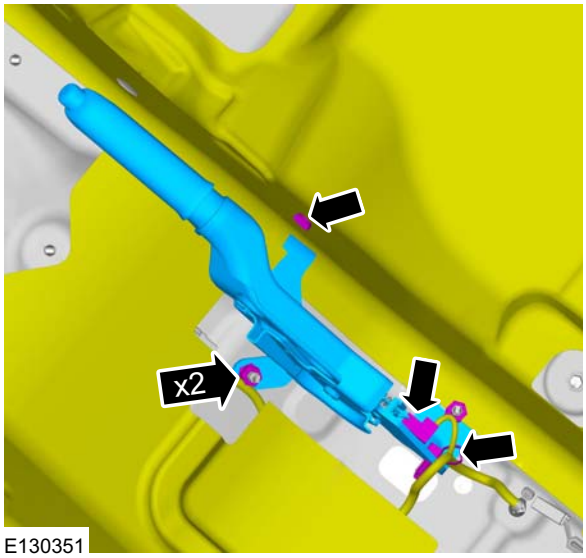

E130351

Installation

1. To install, reverse the removal procedure.
2. Refer to: Parking Brake Cable Adjustment (206-05 Parking Brake and Actuation, General Procedures).

REMOVAL AND INSTALLATION

Parking Brake Front Cable

Removal

NOTE: Removal steps in this procedure may contain installation details.

1. Refer to: Floor Console - Single Cab (501-12 Instrument Panel and Console, Removal and Installation).
   Refer to: Floor Console - Double Cab (501-12 Instrument Panel and Console, Removal and Installation).

2.

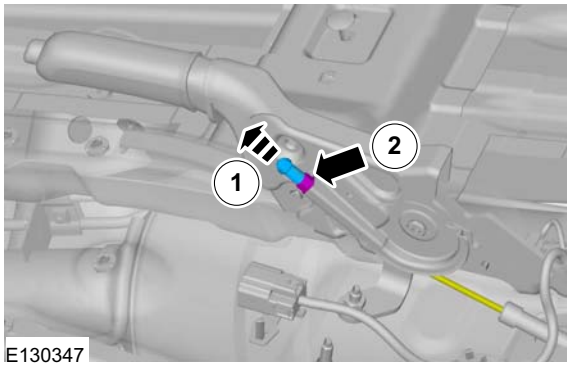

E130347

3. Torque: 18 Nm

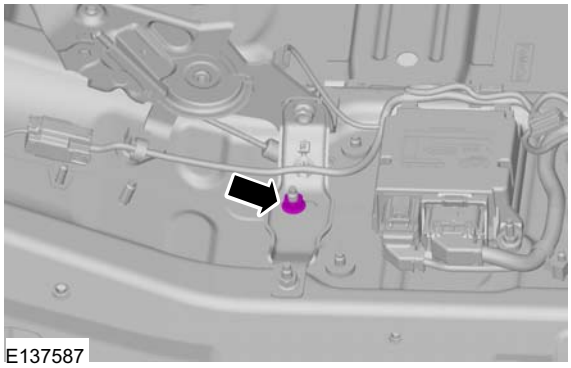
E137587

4. Refer to: Lifting (100-02 Jacking and Lifting, Description and Operation).

5.

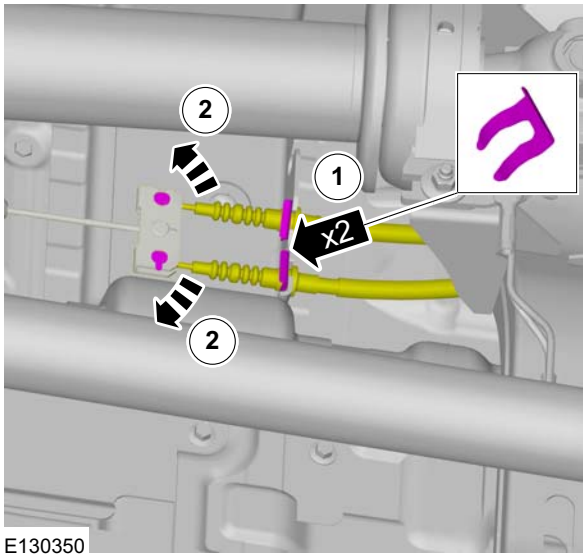

E130350

6. Torque: 18 Nm

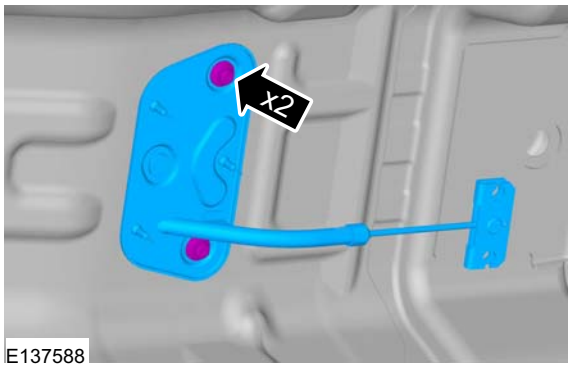

E137588

Installation

1. To install, reverse the removal procedure.
2. Refer to: Parking Brake Cable Adjustment (206-05 Parking Brake and Actuation, General Procedures).

REMOVAL AND INSTALLATION

Parking Brake Rear Cables

Removal

NOTE: Removal steps in this procedure may contain installation details.

1. Refer to: Brake Shoes (206-02 Drum Brake, Removal and Installation).

2.

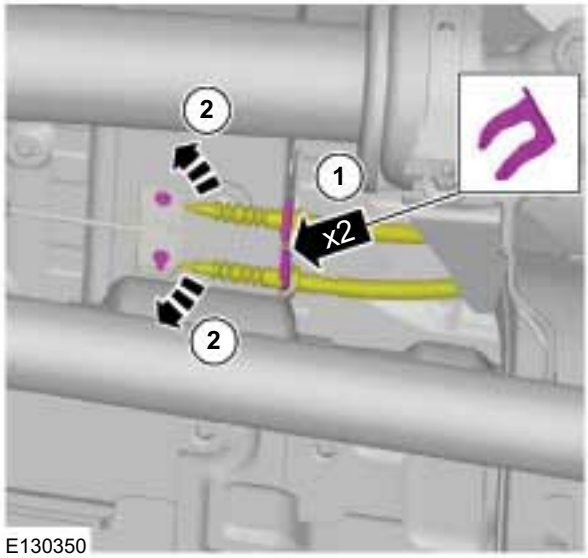

E130350

3. Torque: 17 Nm

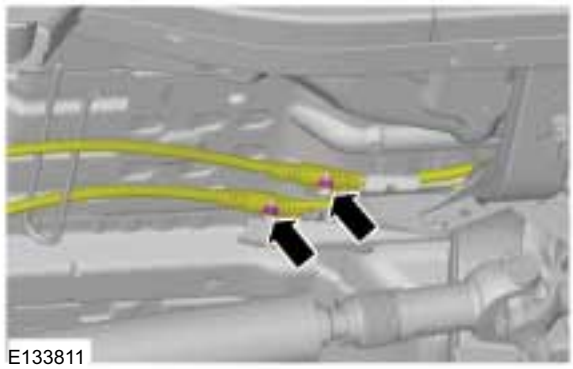
E133811

4. Torque: 17 Nm

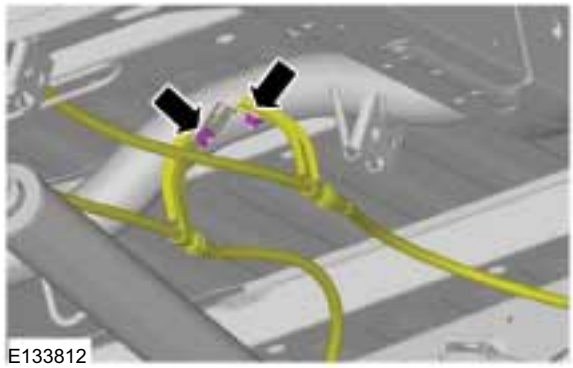
E133812

5. Torque: 17 Nm

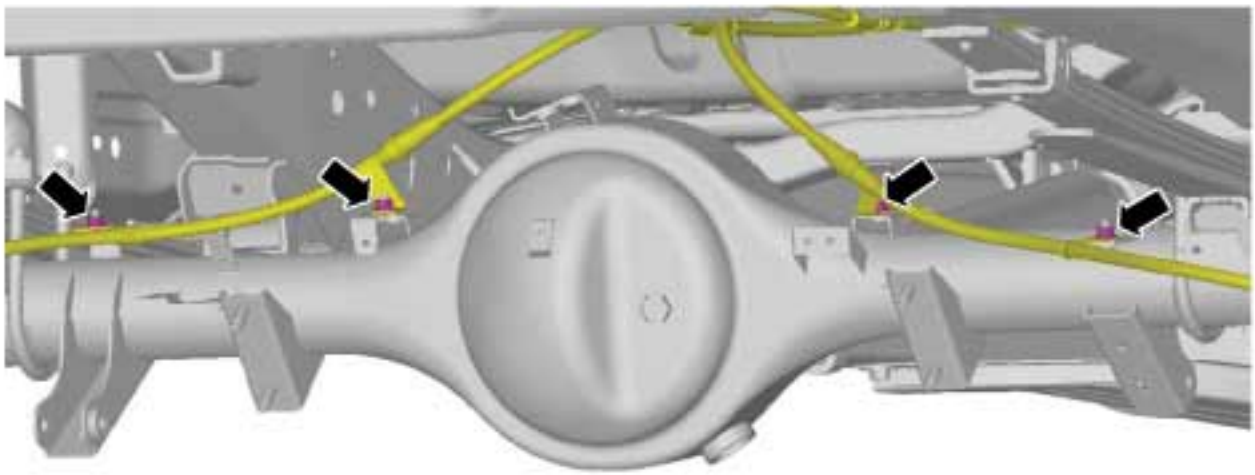
E133813

REMOVAL AND INSTALLATION

6. On both sides.

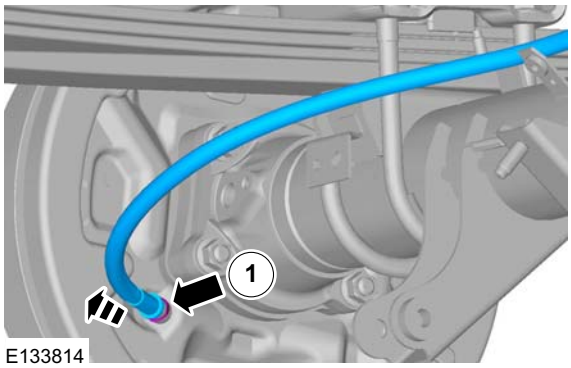

Installation

1. To install, reverse the removal procedure.

2. Refer to: Parking Brake Cable Adjustment (206-05 Parking Brake and Actuation, General Procedures).

SECTION 206-06 Hydraulic Brake Actuation

VEHICLE APPLICATION: 2011.50 Ranger

CONTENTS PAGE

DESCRIPTION AND OPERATION

Hydraulic Brake Actuation..... 206-06-2

REMOVAL AND INSTALLATION

Brake Master Cylinder — LHD 4WD/LHD RWD..... (12 343 0) 206-06-3
Brake Master Cylinder — RHD 4WD/RHD RWD..... (12 343 0) 206-06-5
Brake Pedal and Bracket..... 206-06-7

DESCRIPTION AND OPERATION

Hydraulic Brake Actuation

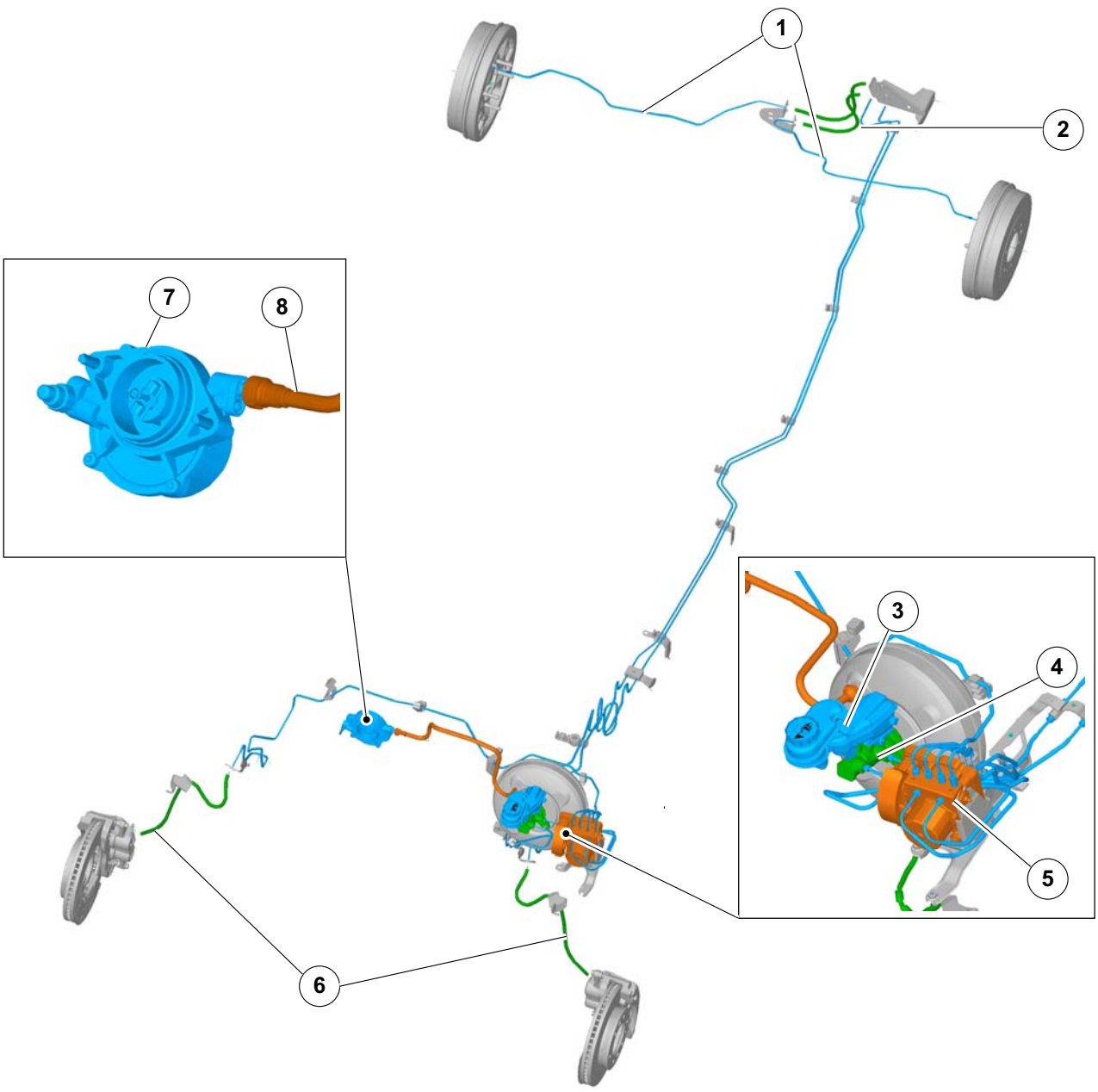

Item	Description
1	Rear Brake tubes
2	Rear brake flexible hoses
3	Brake fluid reservoir
4	Brake Master cylinder
5	Hydraulic control unit (HCU)
6	Front Brake flexible hoses

Item	Description
7	Vacuum pump
8	Vacuum hose

REMOVAL AND INSTALLATION

Brake Master Cylinder — LHD 4WD/LHD RWD(12 343 0)

Removal

NOTE: Removal steps in this procedure may contain installation details.

1. Refer to: Health and Safety Precautions (100-00 General Information, Description and Operation).

2.

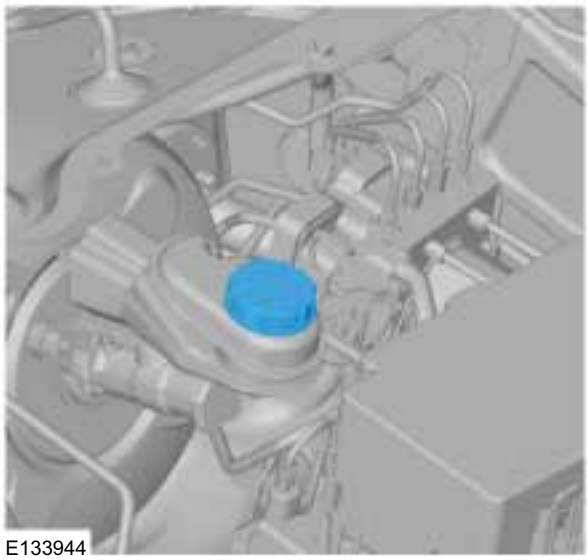
E133944

3. 1. Connect one end of a suitable piece of clear plastic pipe to the brake caliper bleed nipple and place the other end into a suitable container.
2. Loosen the bleed nipple.
3. Depress the brake pedal until no more brake fluid comes through the bleed nipple.
4. Tighten the bleed nipple.
5. Repeat the draining procedure on the opposite side brake caliper.

4.

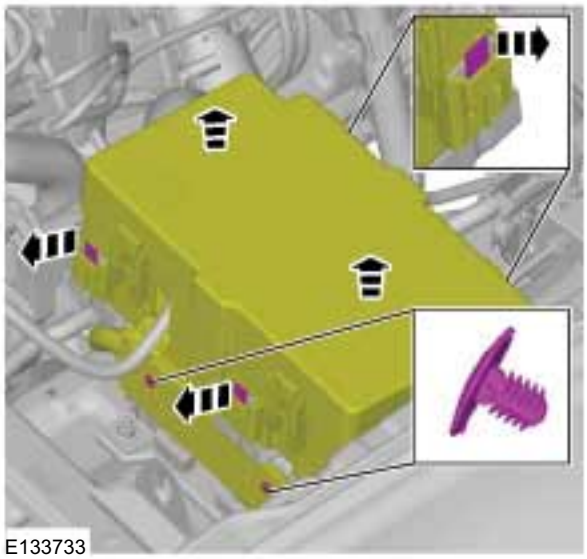
E133733

5.

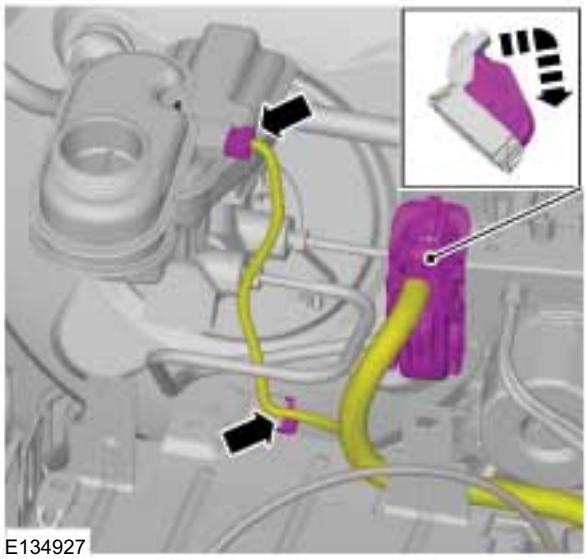
E134927

REMOVAL AND INSTALLATION

Vehicles with manual transmission

6.

WARNING: Be prepared to collect escaping fluids.

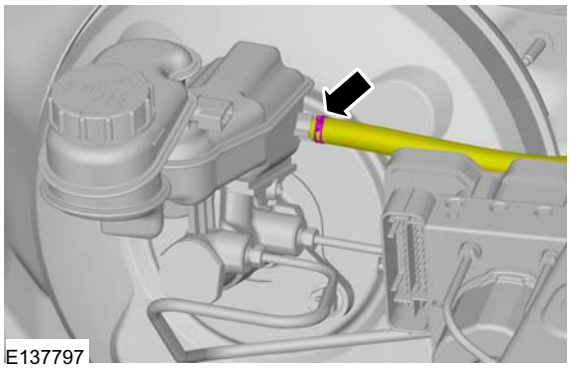
E137797

All vehicles

7. Torque: 17 Nm

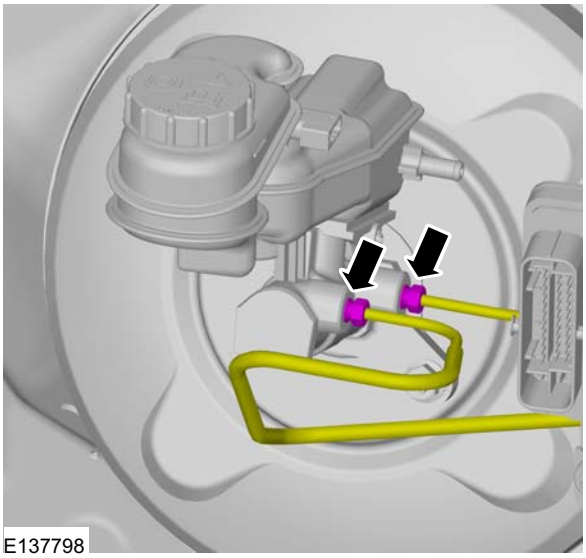
E137798

8. CAUTIONS:

Make sure that all openings are sealed.

Take extra care when handling the components.

NOTE: Depress the brake pedal 3 to 4 times to release the vacuum from brake booster.

Torque: 13 Nm

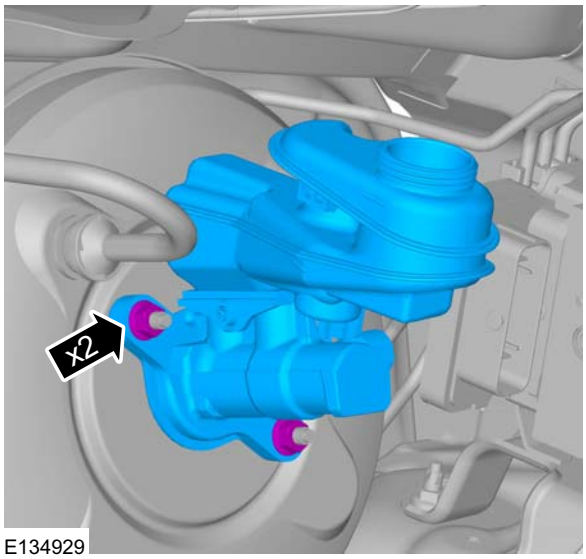

E134929

Installation

1. Refer to: Brake System Bleeding (206-00 Brake System - General Information, General Procedures).
   Refer to: Brake System Pressure Bleeding (206-00 Brake System - General Information, General Procedures).
2. To install, reverse the removal procedure.

Vehicles with manual transmission

3. Refer to: Clutch System Bleeding - Vehicles With: MT82 (308-00 Manual Transmission/Transaxle and Clutch - General Information, General Procedures).
   Refer to: Clutch System Bleeding - Vehicles With: MT-75 (308-00 Manual Transmission/Transaxle and Clutch - General Information, General Procedures).

REMOVAL AND INSTALLATION

Brake Master Cylinder — RHD 4WD/RHD RWD(12 343 0)

Removal

NOTE: Removal steps in this procedure may contain installation details.

1. Refer to: Health and Safety Precautions (100-00 General Information, Description and Operation).

2.
1. Connect one end of a suitable piece of clear plastic pipe to the brake caliper bleed nipple and place the other end into a suitable container.
2. Loosen the bleed nipple.
3. Depress the brake pedal until no more brake fluid comes through the bleed nipple.
4. Tighten the bleed nipple.
5. Repeat the draining procedure on the opposite side brake caliper.

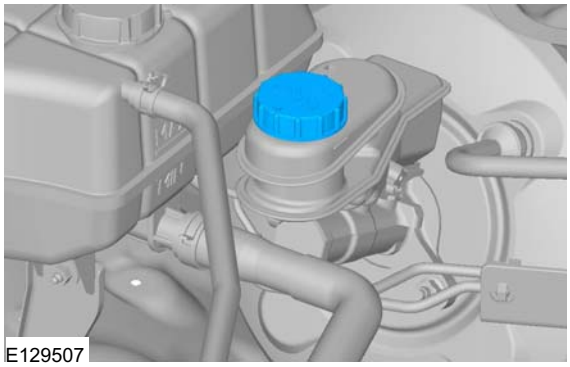
E129507

3.
1. Torque: 6 Nm
2. Torque: 6 Nm

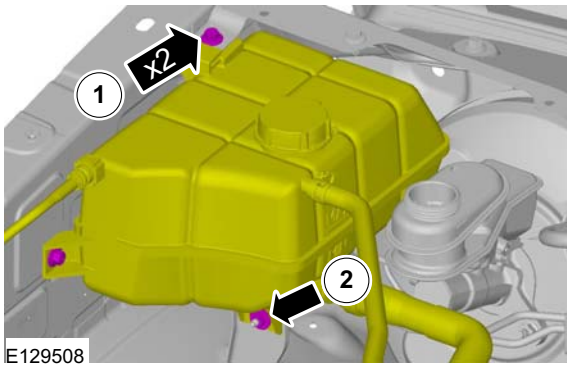

E129508

4.

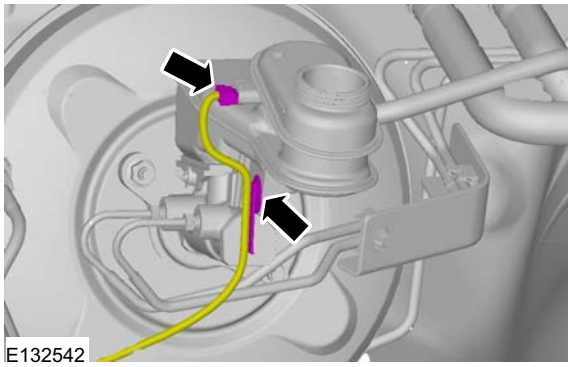
E132542

Vehicles with manual transmission

5.

WARNING: Be prepared to collect escaping fluids.

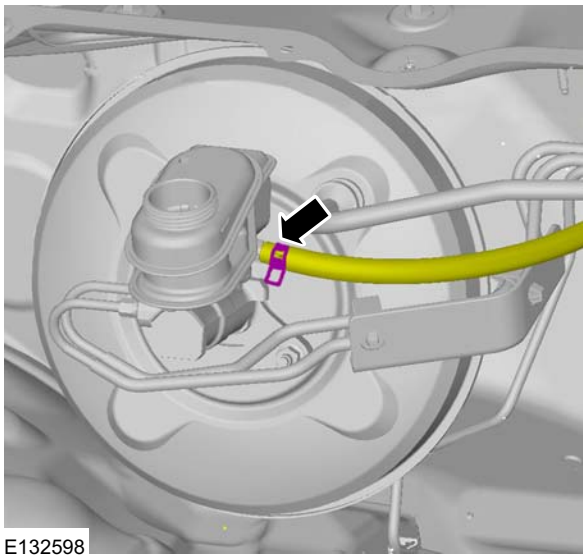
E132598

All vehicles

6.

WARNING: Be prepared to collect escaping fluids.

CAUTIONS:

Make sure that all openings are sealed.

Take extra care when handling the components.

REMOVAL AND INSTALLATION

NOTE: Depress the brake pedal 3 or 4 times to release the vacuum from brake booster.

1. Torque: 17 Nm
2. Torque: 13 Nm

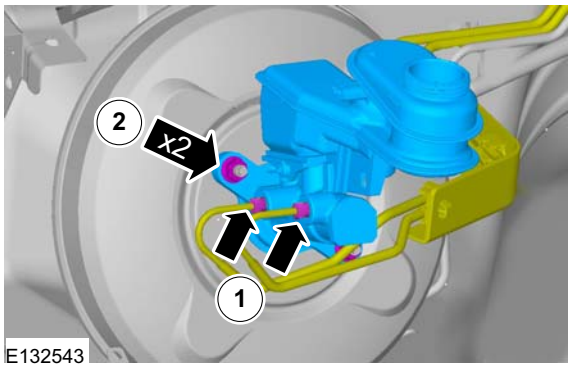

Installation

1. To install, reverse the removal procedure.

Refer to: Brake System Bleeding (206-00 Brake System - General Information, General Procedures).
Refer to: Brake System Pressure Bleeding (206-00 Brake System - General Information, General Procedures).

Vehicles with manual transmission

2. Refer to: Clutch System Bleeding - Vehicles With: MT-75 (308-00 Manual Transmission/Transaxle and Clutch - General Information, General Procedures).
Refer to: Clutch System Bleeding - Vehicles With: MT82 (308-00 Manual Transmission/Transaxle and Clutch - General Information, General Procedures).

REMOVAL AND INSTALLATION

Brake Pedal and Bracket

Removal

NOTE: Removal steps in this procedure may contain installation details.

1. Refer to: Brake Booster - RHD 4WD/RHD RWD (206-07 Power Brake Actuation, Removal and Installation).
   Refer to: Brake Booster - LHD 4WD/LHD RWD (206-07 Power Brake Actuation, Removal and Installation).

2.

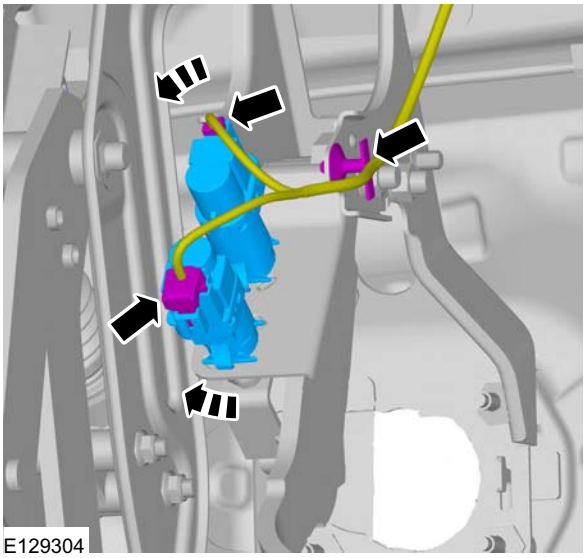
E129304

3. Torque : 15 Nm

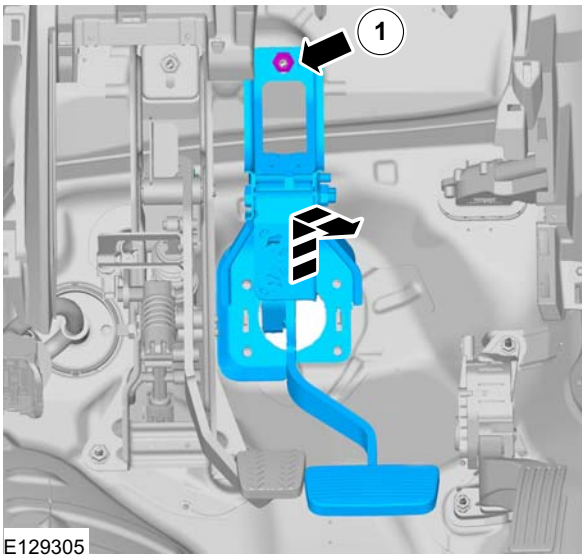

E129305

Installation

1. ⚠ **CAUTION: Make sure that the brake booster push rod is correctly located.**
   To install, reverse the removal procedure.

SECTION 206-07 Power Brake Actuation

VEHICLE APPLICATION: 2011.50 Ranger

CONTENTS PAGE

REMOVAL AND INSTALLATION

Brake Booster — LHD 4WD/LHD RWD..... (12 451 0) 206-07-2
Brake Booster — RHD 4WD/RHD RWD..... (12 451 0) 206-07-4
Brake Vacuum Pump — 2.2L Duratorq-TDCi (88kW/120PS) - Puma/2.2L Duratorq-TDCi (96kW/130PS) - Puma/2.2L Duratorq-TDCi (110kW/150PS) - Puma..... (12 414 0) 206-07-5
Brake Vacuum Pump — 3.2L Duratorq-TDCi (148kW/200PS) - Puma..... (12 414 0) 206-07-7

REMOVAL AND INSTALLATION

Brake Booster — LHD 4WD/LHD RWD(12 451 0)

Removal

NOTE: Removal steps in this procedure may contain installation details.

1. Refer to: Brake System Health and Safety Precautions (100-00 General Information, Description and Operation).
2. Refer to: Battery Disconnect and Connect (414-01 Battery, Mounting and Cables, General Procedures).

Vehicles with 2.5L engine

3. Torque: 25 Nm

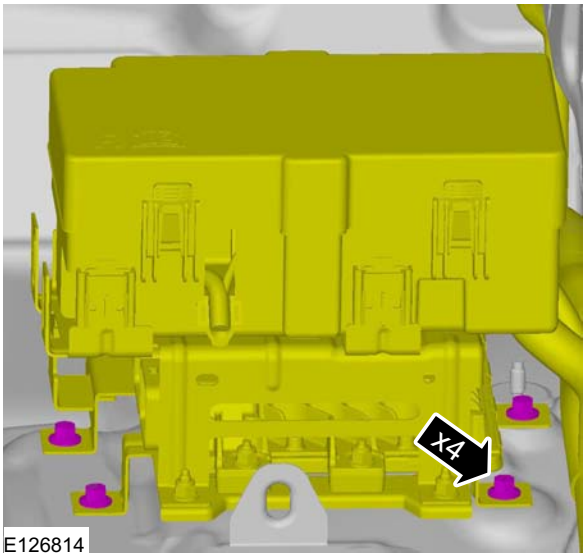

E126814

Vehicles with diesel engine

4. Refer to: Hydraulic Control Unit (HCU) - LHD 4WD/LHD RWD (206-09 Anti-Lock Control, Removal and Installation).
5. Torque: 25 Nm

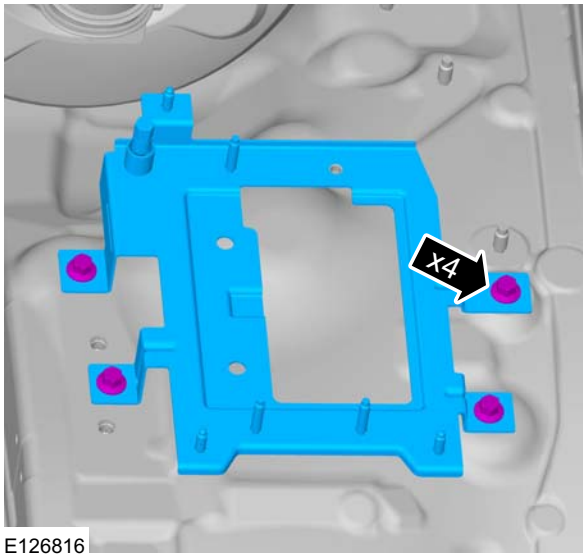

E126816

All vehicles

6. Refer to: Brake Master Cylinder - LHD 4WD/LHD RWD (206-06 Hydraulic Brake Actuation, Removal and Installation).
7. 2. Torque: 15 Nm

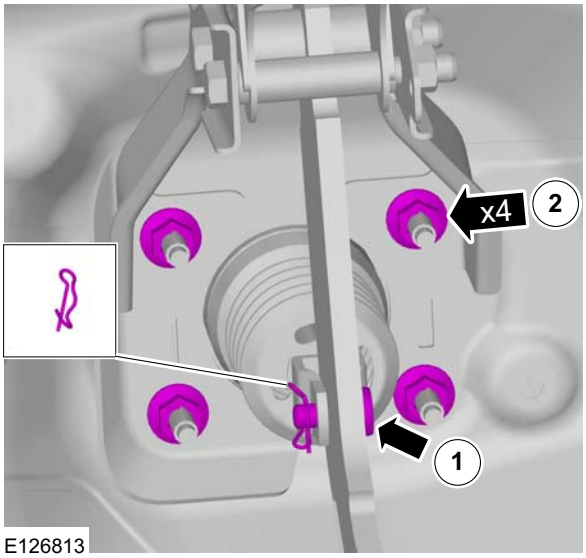

E126813

REMOVAL AND INSTALLATION

8.

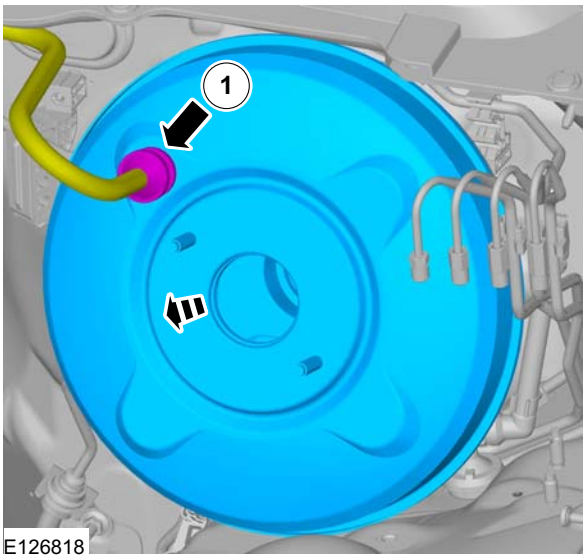

Installation

CAUTION: Make sure that the brake booster pushrod is correctly located.

1. To install, reverse the removal procedure.

REMOVAL AND INSTALLATION

Brake Booster — RHD 4WD/RHD RWD(12 451 0)

Removal

NOTE: Removal steps in this procedure may contain installation details.

1. Refer to: Brake System Health and Safety Precautions (100-00 General Information, Description and Operation).
2. Refer to: Brake Master Cylinder - RHD 4WD/RHD RWD (206-06 Hydraulic Brake Actuation, Removal and Installation).
3. Torque: 15 Nm

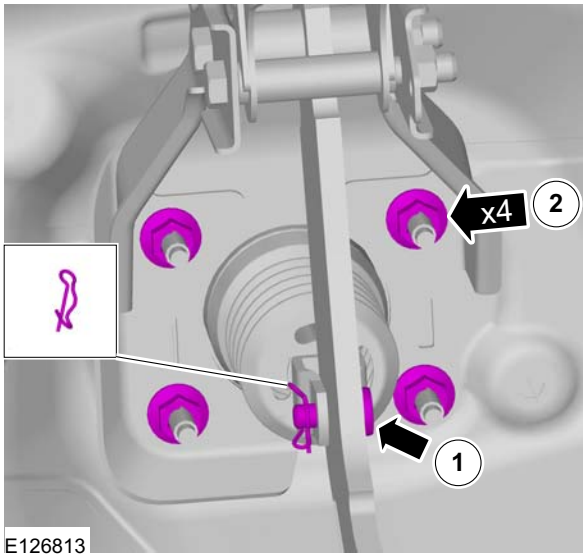

4.

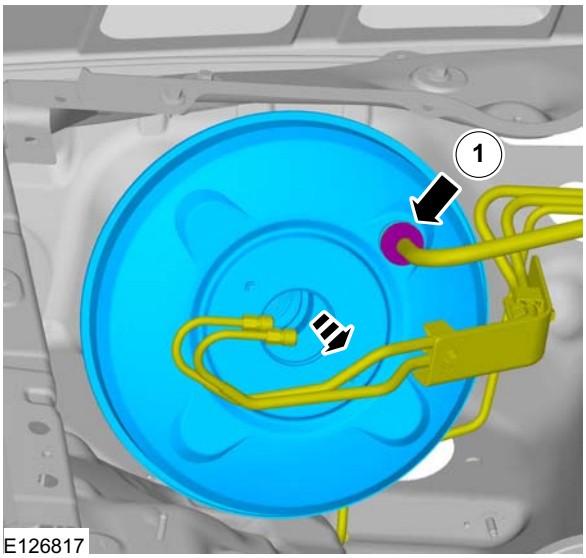

Installation

CAUTION: Make sure that the brake booster pushrod is correctly located.

1. To install , reverse the removal procedure.

REMOVAL AND INSTALLATION

Brake Vacuum Pump — 2.2L Duratorq-TDCi (88kW/120PS) - Puma/2.2L Duratorq-TDCi (96kW/130PS) - Puma/2.2L Duratorq-TDCi (110kW/150PS) - Puma(12 414 0)

Removal

NOTE: Removal steps in this procedure may contain installation details.

1. Refer to: Brake System Health and Safety Precautions (100-00 General Information, Description and Operation).
2. Refer to: Cowl Panel Grille (501-02 Front End Body Panels, Removal and Installation).
3. Torque: 10 Nm

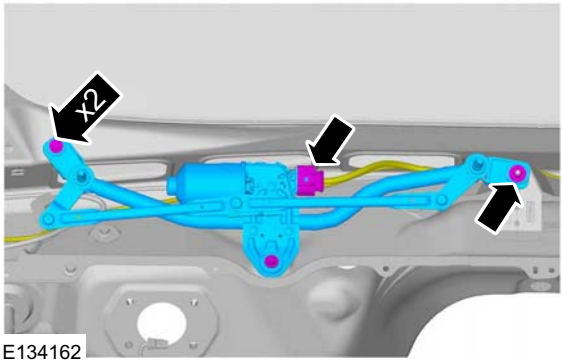

E134162

4. On both sides

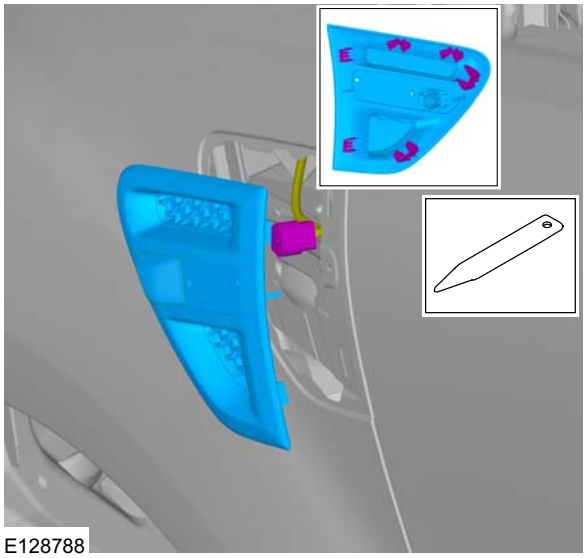
E128788

5. Torque: 10 Nm

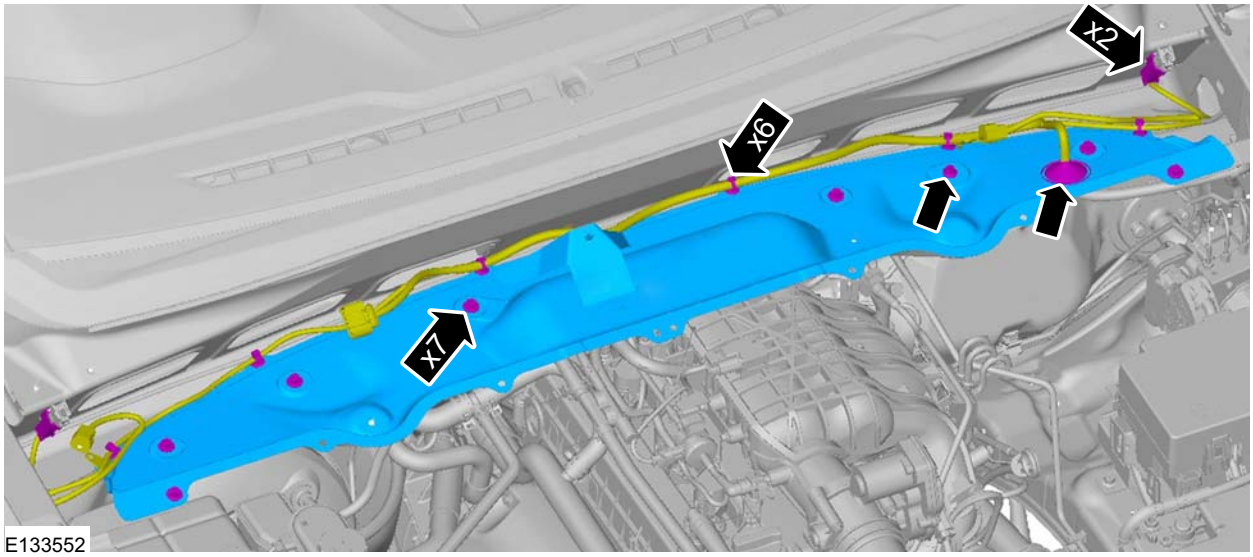

E133552

REMOVAL AND INSTALLATION

6.

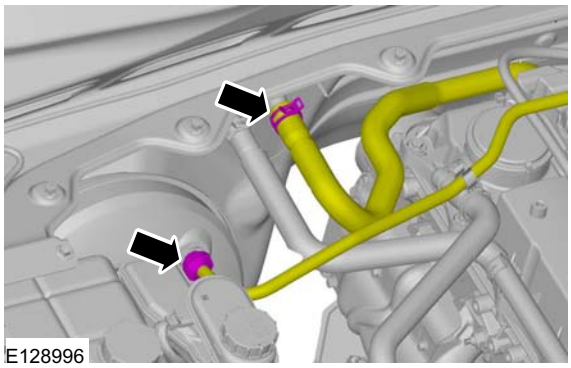

Vehicles with fixed vane turbocharger

7.

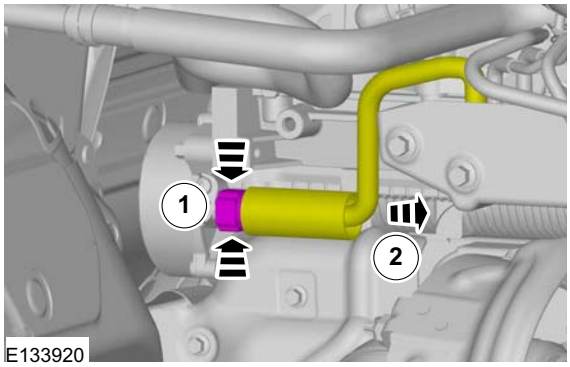

All vehicles

8. Torque: 9 Nm

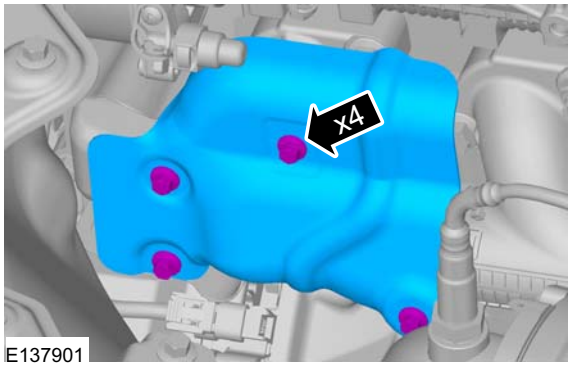

9. Torque: 22 Nm

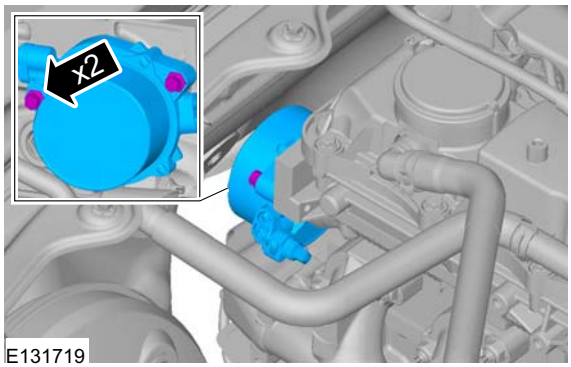

10.

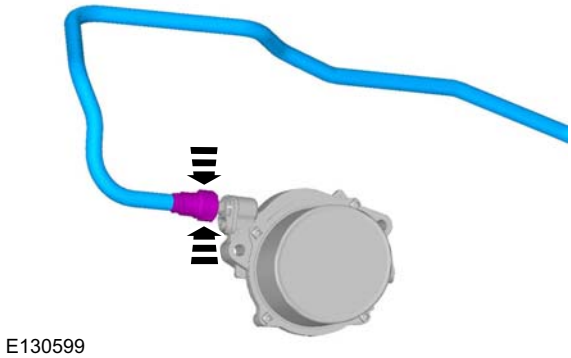

Installation

1. **CAUTION: Make sure that the couplings are aligned.**

   To install, reverse the removal procedure.

REMOVAL AND INSTALLATION

Brake Vacuum Pump — 3.2L Duratorq-TDCi (148kW/200PS) - Puma(12 414 0)

Removal

NOTE: Removal steps in this procedure may contain installation details.

1. Refer to: Brake System Health and Safety Precautions (100-00 General Information, Description and Operation).
2. Refer to: Cowl Panel Grille (501-02 Front End Body Panels, Removal and Installation).
3. Torque: 10 Nm

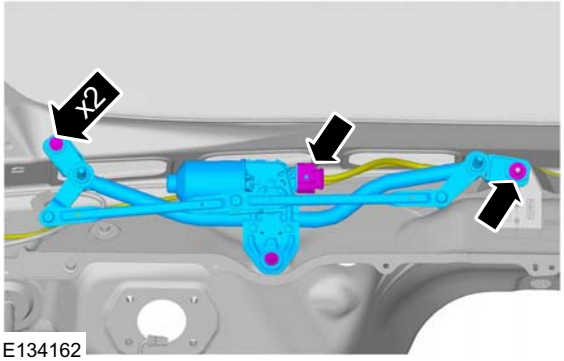

E134162

4. On both sides

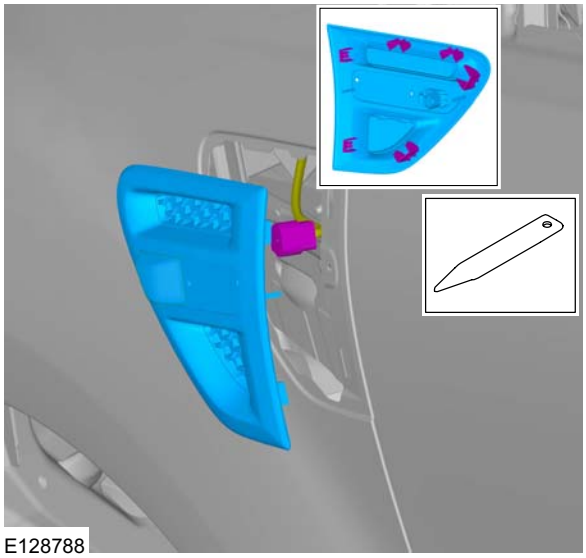
E128788

5. Torque: 10 Nm

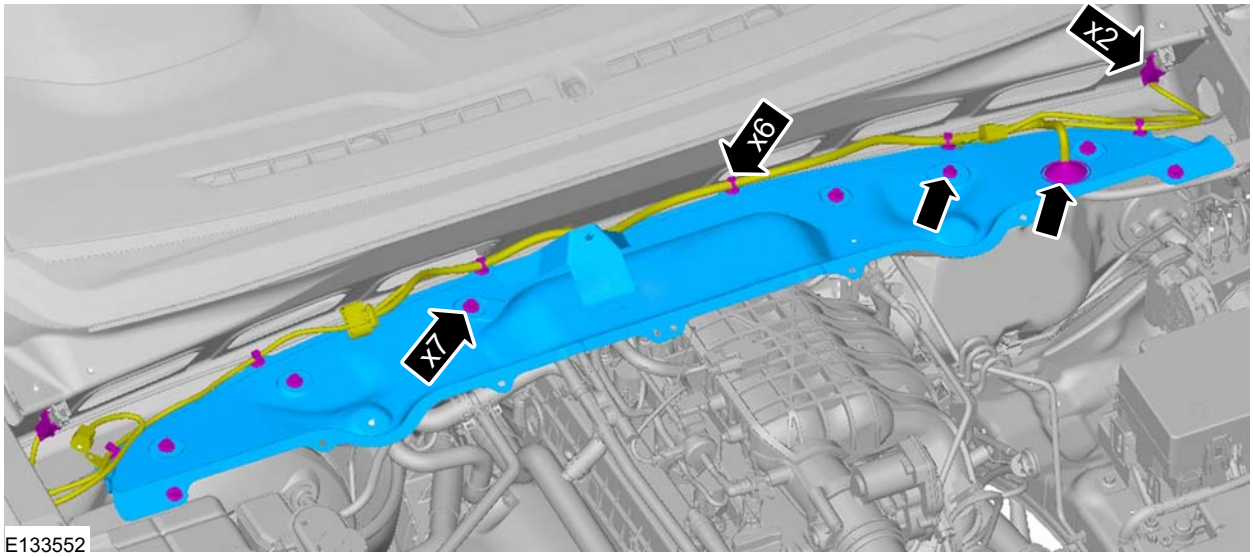

E133552

REMOVAL AND INSTALLATION

6.

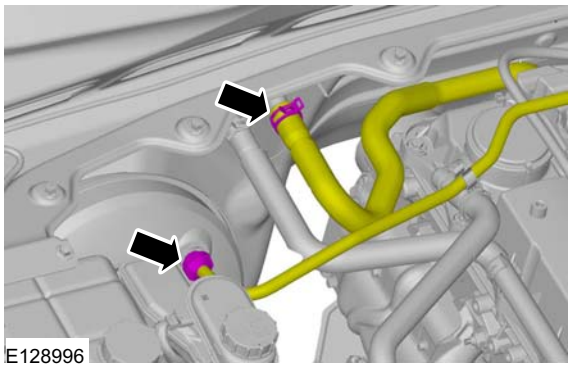

7. Torque: 9 Nm

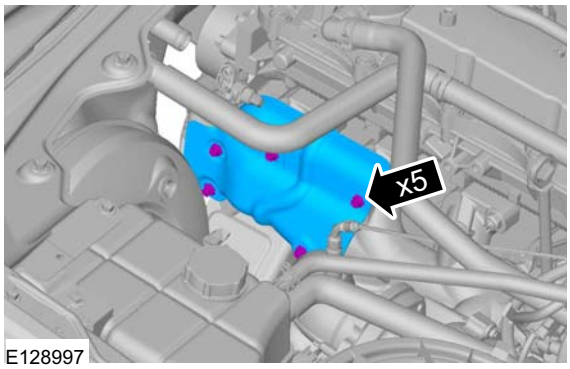

8. Torque: 22 Nm

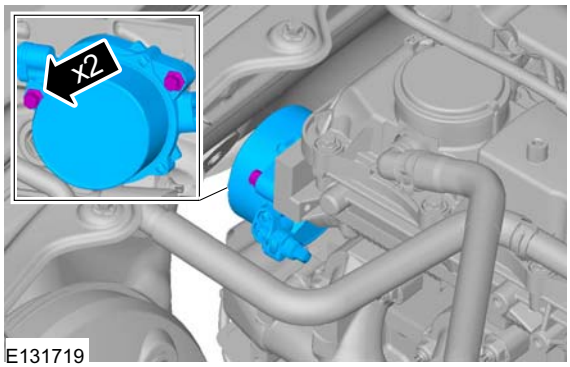

9.

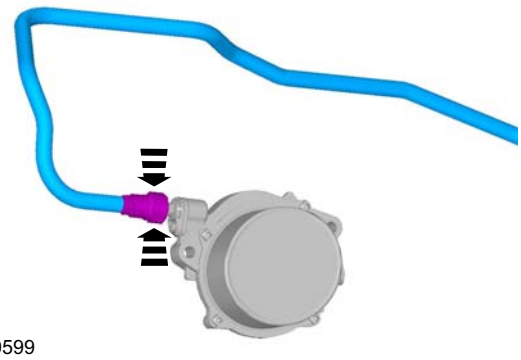

Installation

1. ⚠ **CAUTION: Make sure that the couplings are aligned.**

   To install, reverse the removal procedure.

SECTION 206-09A Anti-Lock Control

VEHICLE APPLICATION: 2011.50 Ranger

CONTENTS PAGE

DESCRIPTION AND OPERATION

Anti-Lock Control..... 206-09A-2

REMOVAL AND INSTALLATION

Hydraulic Control Unit (HCU) — LHD 4WD/LHD RWD..... 206-09A-3
Hydraulic Control Unit (HCU) — RHD 4WD/RHD RWD..... 206-09A-6
Front Wheel Speed Sensor..... (12 784 0) 206-09A-8
Rear Wheel Speed Sensor..... (12 785 0) 206-09A-9

DESCRIPTION AND OPERATION

Anti-Lock Control

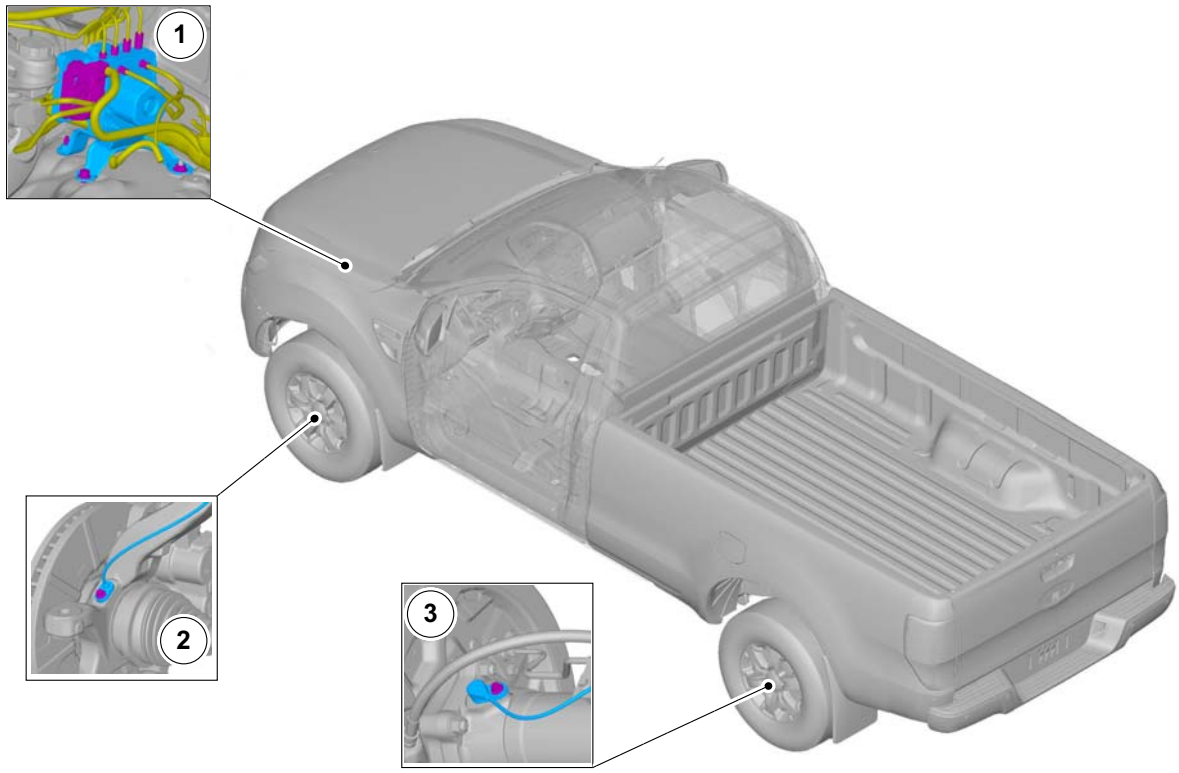

E136985

Item	Description
1	Hydraulic Control Unit (HCU)
2	Front Wheel Speed Sensor
3	Rear Wheel Speed Sensor

REMOVAL AND INSTALLATION

Hydraulic Control Unit (HCU) — LHD 4WD/LHD RWD

Removal

NOTE: Removal steps in this procedure may contain installation details.

1. Refer to: Brake System Health and Safety Precautions (100-00 General Information, Description and Operation).

2.

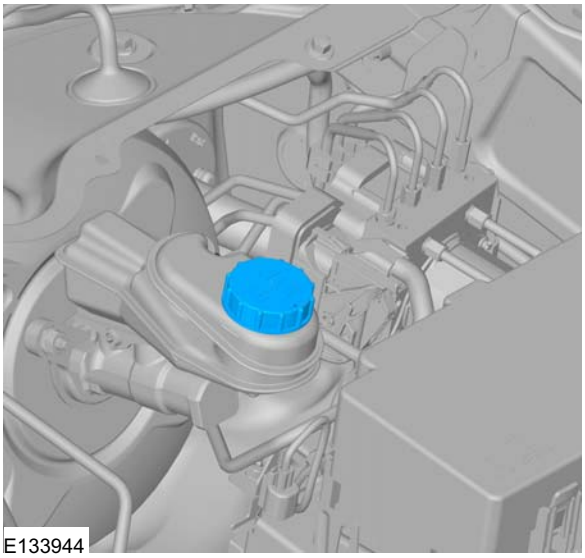

3.
1. Connect one end of a suitable piece of clear plastic pipe to the brake caliper bleed nipple and place the other end into a suitable container.
2. Loosen the bleed nipple.
3. Depress the brake pedal until all the brake fluid is drained from the brake fluid reservoir.
4. Tighten the bleed nipple.
5. Repeat the draining procedure on the opposite side brake caliper and rear brake wheel cylinder.

4.

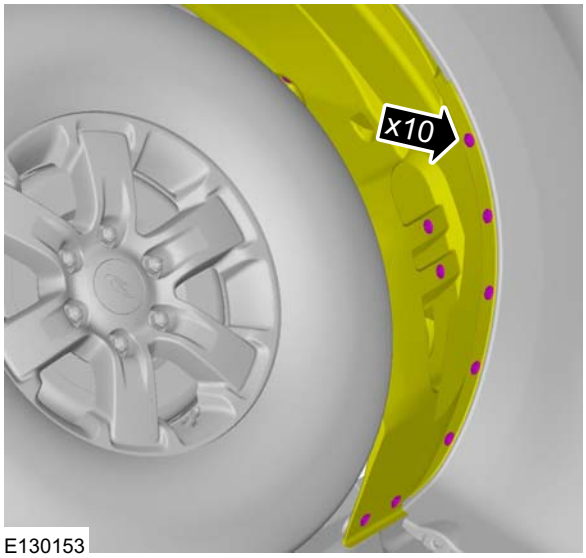

REMOVAL AND INSTALLATION

5. Refer to: Powertrain Control Module (PCM) (303-14 Electronic Engine Controls - 2.5L Duratec-HE (122kW/165PS) - MI4, Removal and Installation).
   Refer to: Powertrain Control Module (PCM) (303-14 Electronic Engine Controls - 2.2L Duratorq-TDCi (88kW/120PS) - Puma/2.2L Duratorq-TDCi (96kW/130PS) - Puma/2.2L Duratorq-TDCi (110kW/150PS) - Puma/3.2L Duratorq-TDCi (148kW/200PS) - Puma, Removal and Installation).
6. **CAUTION: Make sure that all openings are sealed.**
   3. Torque: 18 Nm

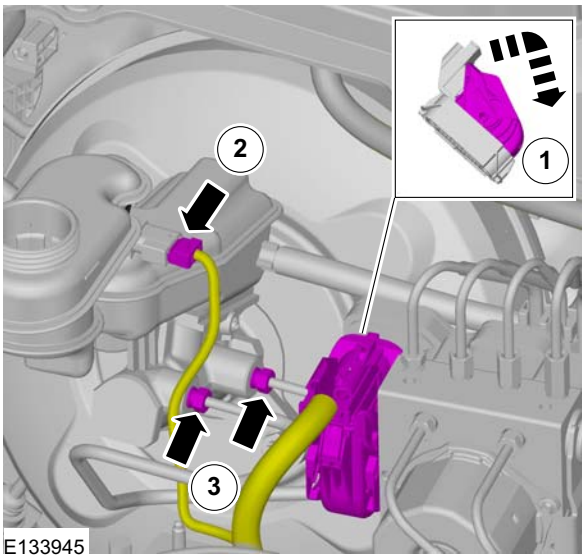

7. 1. Torque: 18 Nm
   2. Torque: 25 Nm
   3. Torque: 25 Nm
   4. Torque: 25 Nm

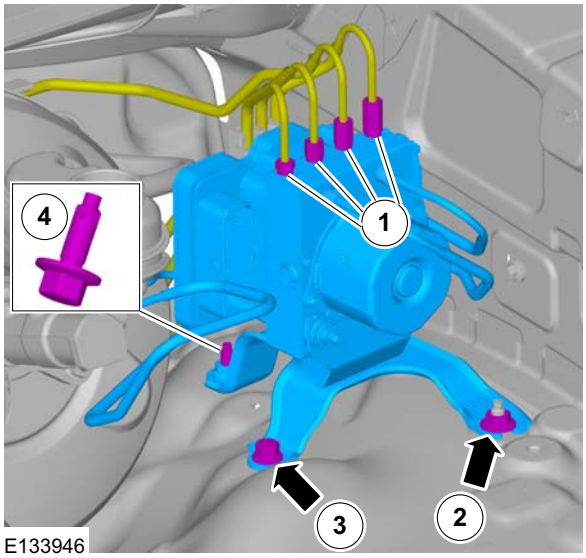

8. **NOTE:** Make sure that all openings are sealed.
   Torque: 18 Nm

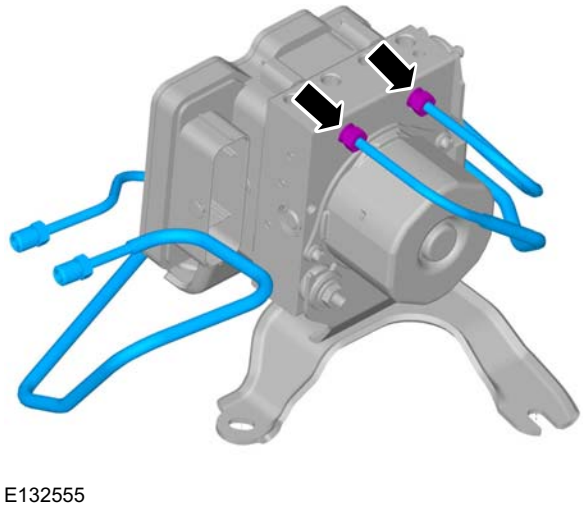

REMOVAL AND INSTALLATION

9. Torque: 9 Nm

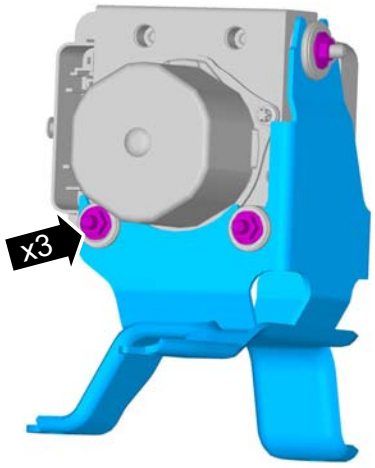

E130156

Installation

1. CAUTIONS:

If accidentally dropped or knocked install a new hydraulic control unit (HCU) and module assembly.

The blanking caps/plugs must not be removed until the brake tubes are ready to be connected.

To install, reverse the removal procedure.

2. Refer to: Brake System Bleeding (206-00 Brake System - General Information, General Procedures).
Refer to: Brake System Pressure Bleeding (206-00 Brake System - General Information, General Procedures).

REMOVAL AND INSTALLATION

Hydraulic Control Unit (HCU) — RHD 4WD/RHD RWD

Removal

NOTE: Removal steps in this procedure may contain installation details.

1. Refer to: Brake System Health and Safety Precautions (100-00 General Information, Description and Operation).

2.

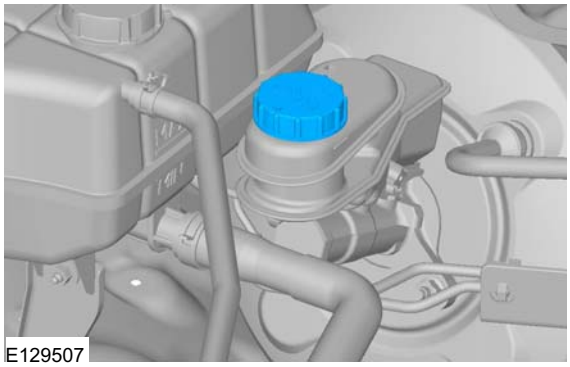

3.
1. Connect one end of a suitable piece of clear plastic pipe to the brake caliper bleed nipple and place the other end into a suitable container.
2. Loosen the bleed nipple.
3. Depress the brake pedal until all the brake fluid is drained from the brake fluid reservoir.
4. Tighten the bleed nipple.
5. Repeat the draining procedure on the opposite side brake caliper and rear brake wheel cylinder.

4.

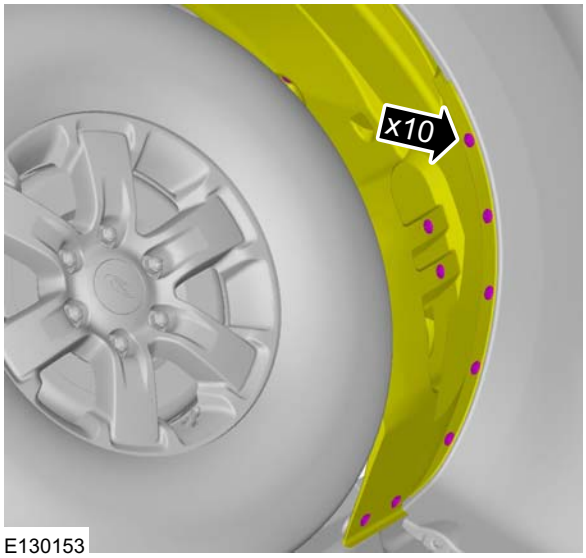

REMOVAL AND INSTALLATION

5. **CAUTION: Make sure that all openings are sealed.**

   Torque: 18 Nm

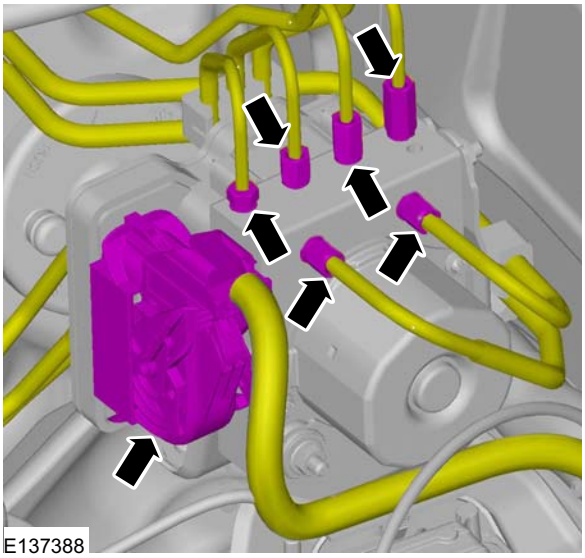

6. **CAUTION: Make sure that all openings are sealed.**

   Torque: 25 Nm

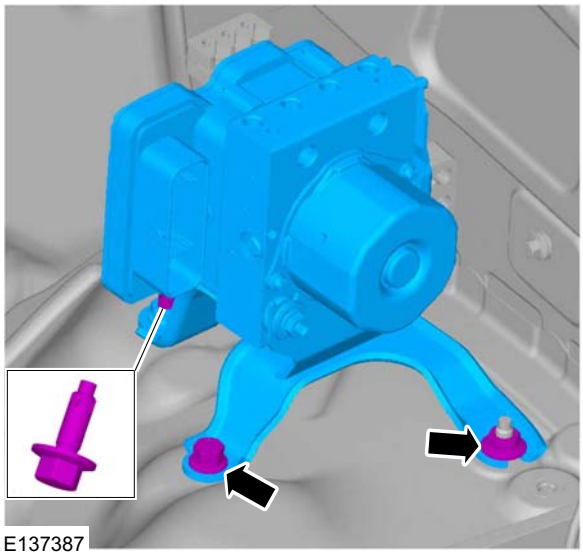

7. Torque: 9 Nm

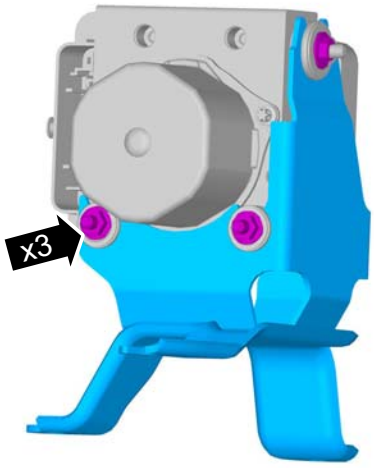

Installation

1. **CAUTIONS:**

   If accidentally dropped or knocked install a new hydraulic control unit (HCU) and module assembly.

   The blanking caps/plugs must not be removed until the brake tubes are ready to be connected.

   To install, reverse the removal procedure.

2. Refer to: Brake System Bleeding (206-00 Brake System - General Information, General Procedures).
   Refer to: Brake System Pressure Bleeding (206-00 Brake System - General Information, General Procedures).

REMOVAL AND INSTALLATION

Front Wheel Speed Sensor(12 784 0)

Removal

NOTE: Removal steps in this procedure may contain installation details.

1. Refer to: Battery Disconnect and Connect (414-01 Battery, Mounting and Cables, General Procedures).
2. **NOTE:** Note the position of the component before removal.

   Torque: 7 Nm

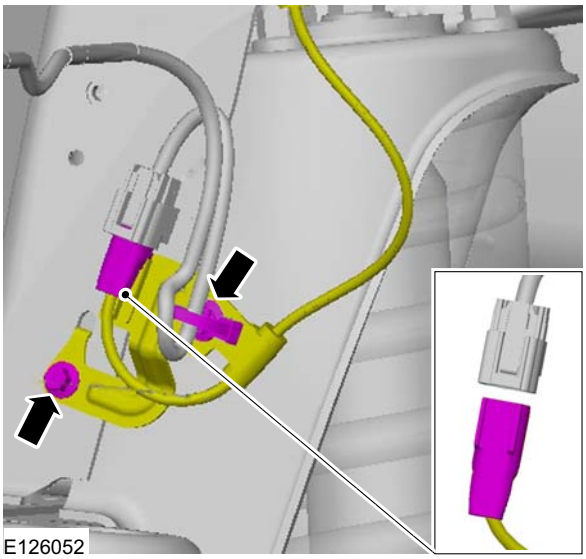
E126052

3. **NOTE:** Note the position of the component before removal.

   Torque: 7 Nm

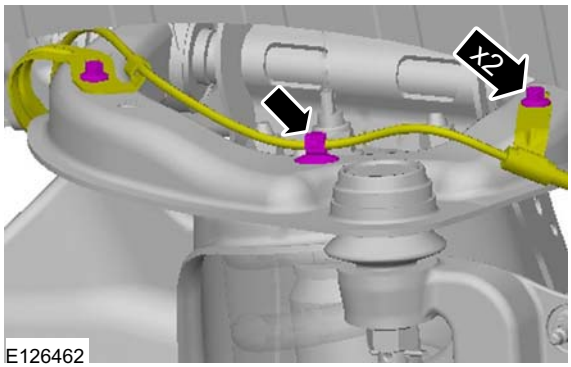

E126462

4. **NOTE:** Note the position of the component before removal.

   Torque: 7 Nm

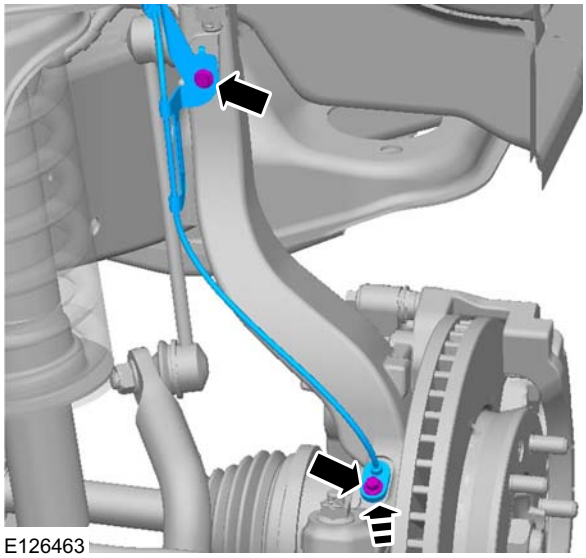
E126463

Installation

1. **CAUTIONS:**

   ⚠ **Make sure that the area around the component is clean and free of foreign material.**

   ⚠ **Make sure that this component is installed to the noted removal position.**

   NOTE: Apply grease to O-ring of wheel speed sensor before installation.

   To install, reverse the removal procedure.

REMOVAL AND INSTALLATION

Rear Wheel Speed Sensor(12 785 0)

Removal

NOTE: Removal steps in this procedure may contain installation details.

1. Refer to: Battery Disconnect and Connect (414-01 Battery, Mounting and Cables, General Procedures).
2. 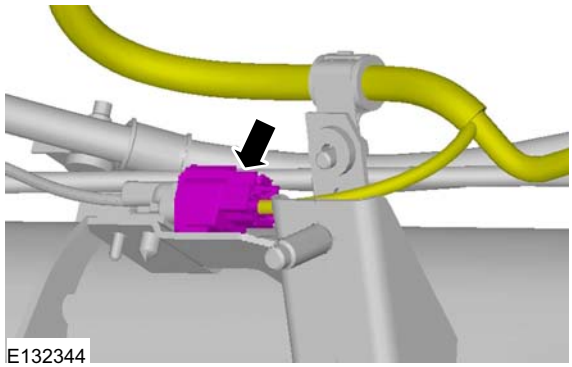

3. Torque: 6 Nm

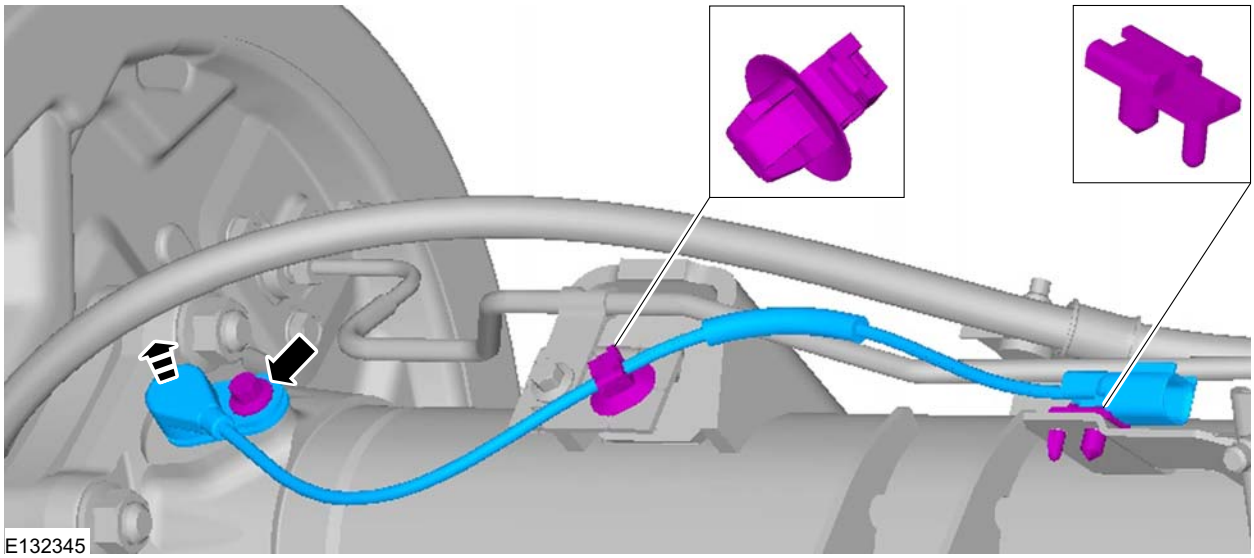

Installation

1. To install, reverse the removal procedure.

SECTION 206-09B Anti-Lock Control - Traction Control

VEHICLE APPLICATION: 2011.50 Ranger

CONTENTS PAGE

DESCRIPTION AND OPERATION

Anti-Lock Control - Traction Control..... 206-09B-2

DESCRIPTION AND OPERATION

Anti-Lock Control - Traction Control

The traction control system is integrated into the anti-lock brake system and uses the same wheel speed sensors and hydraulic control unit (HCU).

The HCU has additional internal solenoid valves and a self priming pump incorporated to enable brake pressure increases without pressure in the master cylinder.

Brake Traction Control System (BTCS)

Brake traction control uses controlled braking of the spinning driving wheel when there is a variation in traction at the driven wheels.

The BTCS assists traction in a pull away from rest situation and can become active at road speeds . When the BTCS is active the driver is made aware of the fact by the flashes of a warning indicator located in the instrument cluster.

The spinning wheel is braked by the anti-lock braking system (ABS) which transfers a greater proportion of the engine torque, via the differential, to the other driven wheel, thereby increasing the utilization of the available traction.

To prevent the risk of stalling the engine, the BTCS reads engine speed data from the high speed CAN bus. If this data is faulted or not available, the BTCS will not function and the warning will be permanently on.

There is no driver disable switch for BTCS, BTCS is turned off when the ESP Off switch is pushed at 2WD mode in 2WD and 4WD vehicle. And, BTCS is not turned off even if the ESP Off switch is pushed when the mode is 4WD Hi and 4WD Lo in 4WD vehicle. Also, BTCS is always off regardless of ON/OFF of the ESP Off switch when ELRD(electronic Locking Rear Differential) is on.

ESP has the logic of the brake fade detection named BTM(Brake Temperature Mode). This logic presumes the temperature of the brake pad, and prohibits BTCS when state of the brake fade(overheat). And, it lights up the ESP warning indicator. When the brake gets cold, ESP warning indicator is turned off. And, it returns to the state that BTCS can be operated again. As a result, the thermal destruction of the base brake is prevented.

SECTION 211-00 Steering System - General Information

VEHICLE APPLICATION: 2011.50 Ranger

CONTENTS PAGE

DESCRIPTION AND OPERATION

Steering System..... 211-00-2

GENERAL PROCEDURES

Power Steering System Flushing..... 211-00-3
Power Steering System Bleeding..... 211-00-5
Power Steering System Filling..... 211-00-7

DESCRIPTION AND OPERATION

Steering System

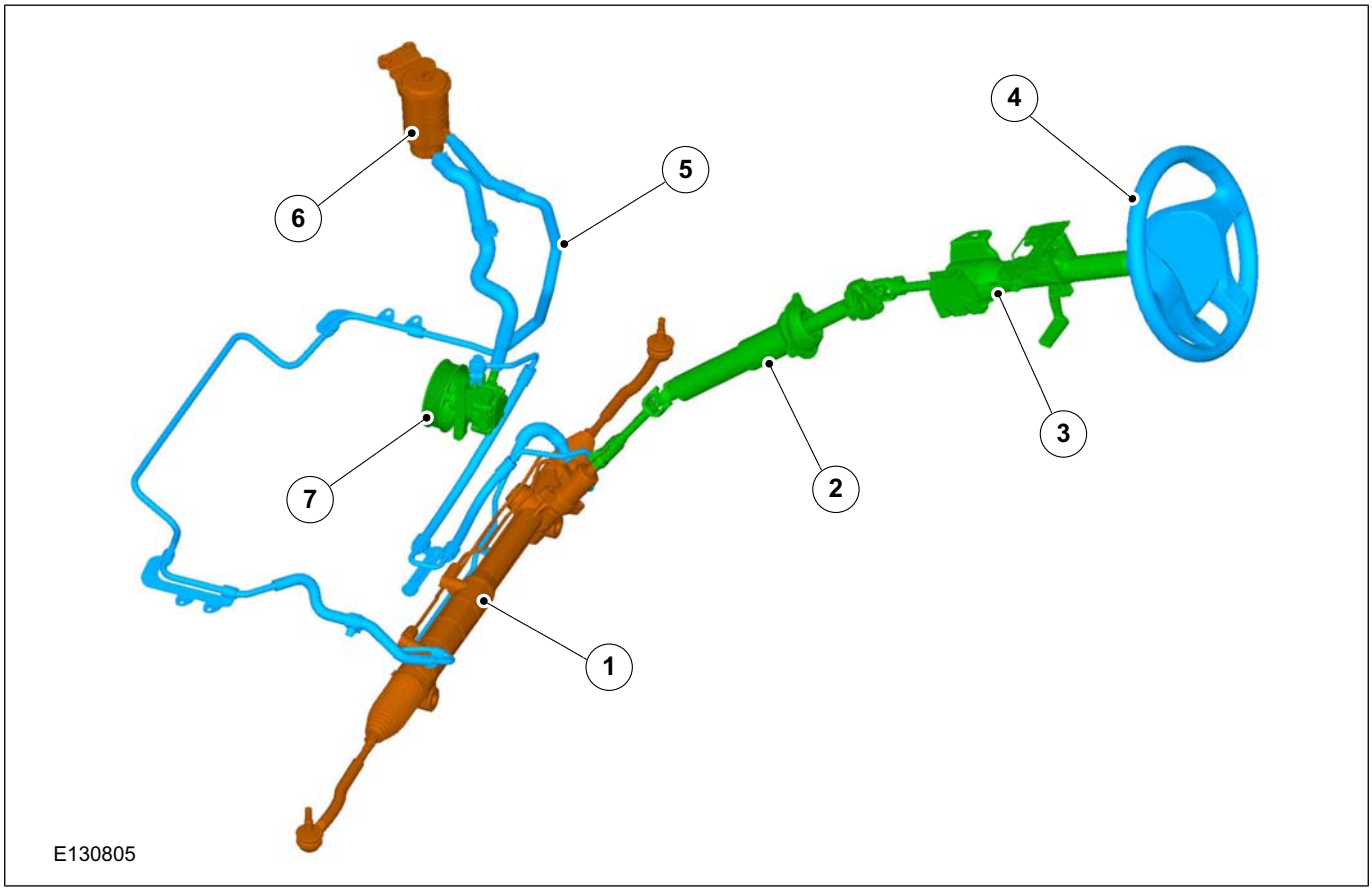

Item	Description
1	Steering gear and linkage
2	Steering shaft
3	Steering column
4	Steering wheel
5	Power steering lines
6	Power steering fluid reservoir
7	Power steering pump

GENERAL PROCEDURES

Power Steering System Flushing

Activation

CAUTION: Do not mix fluid types. Any mixture or any unapproved fluid may lead to seal deterioration and leaks. A leak may ultimately cause loss of fluid, which may result in a loss of power steering assist.

1.

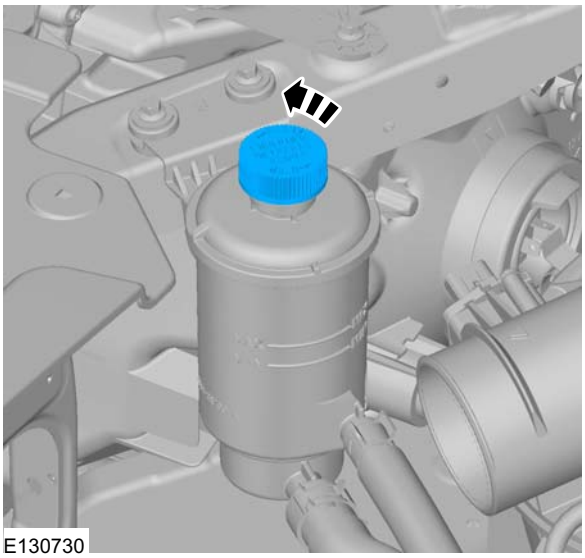
E130730

2. Using a suitable suction device, remove the power steering fluid from the reservoir.

3. Remove the clamp from the hose and allow the remaining fluid to drain out of the reservoir.

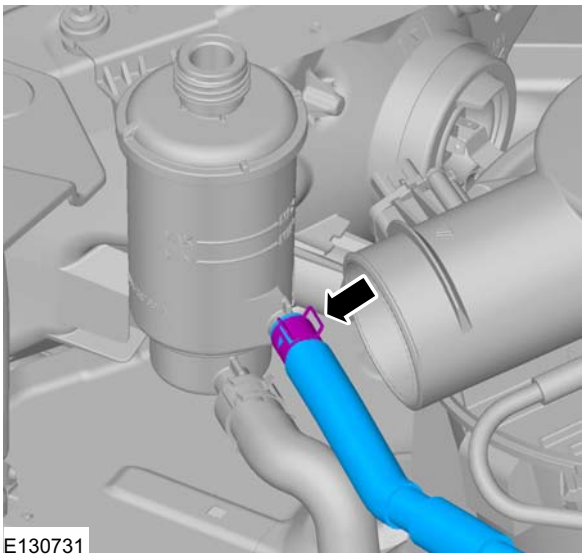
E130731

4. Plug the power steering fluid reservoir inlet port.

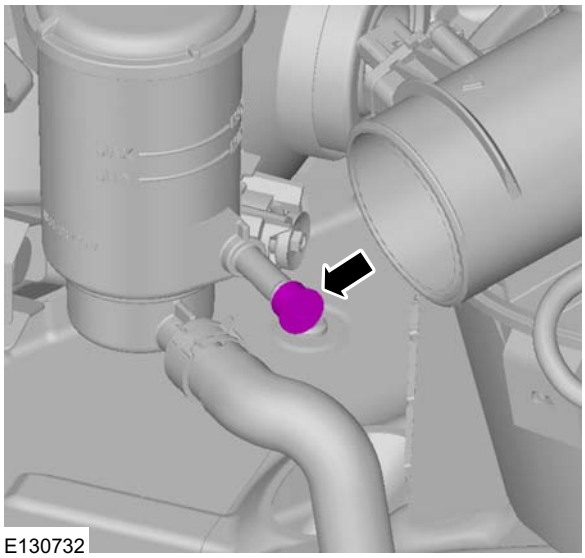
E130732

5. Attach an extension hose to the return hose.

6. **NOTE:** Do not reuse the power steering fluid that has been flushed from the power steering system.

   Place the open end of the extension hose into a suitable container.

7. If equipped with Hydro-Boost®, apply the brake pedal 4 times.

8. **NOTE:** Do not overfill the reservoir.

   Fill the reservoir as needed with the specified fluid.

9. **CAUTION: Do not allow the power steering pump to run completely dry of power steering fluid. Damage to the power steering pump may occur.**

   Start the engine and let it idle, simultaneously turn the steering wheel to lock and then immediately turn the ignition switch to the OFF position.

10. **CAUTION: Avoid turning the steering wheel without the engine running as this may cause air to be pulled into the steering gear.**

    NOTE: Do not overfill the reservoir.

    Fill the reservoir as needed with the specified fluid.

GENERAL PROCEDURES

11. Repeat Steps 8 and 9, turning the steering wheel in the opposite direction each time, until the fluid exiting the power steering fluid return hose is clean and clear of foreign material.

12. Remove the extension hose from the return hose.

13. Remove the plug from the fluid reservoir inlet port.

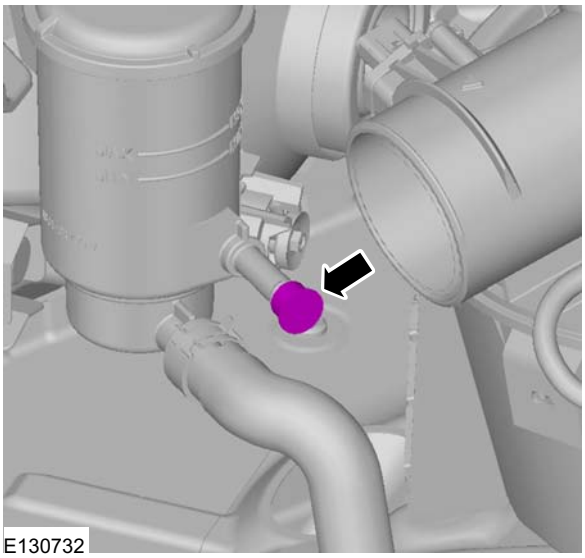
E130732

14. Install the clamp and connect the power steering return hose to the reservoir.

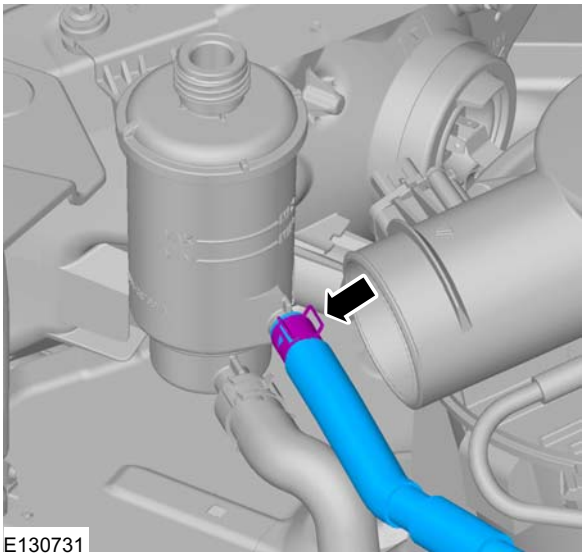
E130731

15. **NOTE:** If, after correctly filling the power steering system, there is power steering noise accompanied by evidence of aerated fluid and there are no fluid leaks, it may be necessary to bleed the power steering system.

Refer to: Power Steering System Filling (211-00 Steering System - General Information, General Procedures).
Refer to: Power Steering System Bleeding (211-00 Steering System - General Information, General Procedures).

GENERAL PROCEDURES

Power Steering System Bleeding

Special Tool(s)

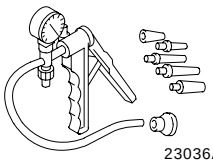 23036A	416-D001 Hand Vacuum Pump/Pressure Pump

Activation

CAUTION: If the air is not purged from the power steering system correctly, premature power steering pump failure may result. The condition may occur on pre-delivery vehicles with evidence of aerated fluid or on vehicles that have had steering component repairs.

NOTE: When filling the power steering fluid reservoir, make sure that the power steering fluid is clean and not agitated prior to use. The power steering fluid should be poured slowly into the reservoir to minimize the possibility of aeration.

16. **NOTE:** Make sure that the power steering fluid in the power steering fluid reservoir does not fall below the MIN mark, as air could enter the system.

    Remove the power steering reservoir cap. Check the fluid.

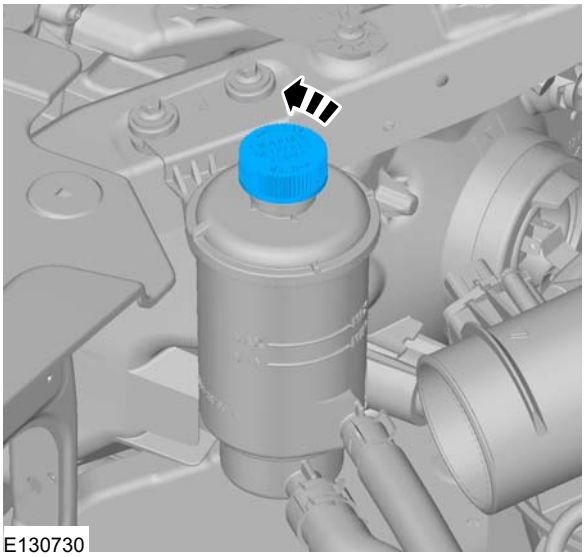
E130730

17. Raise and support the vehicle making sure that the road wheels are just clear of the floor.

    Refer to: Lifting (100-02 Jacking and Lifting, Description and Operation).

18. Special Tool(s): 416-D001

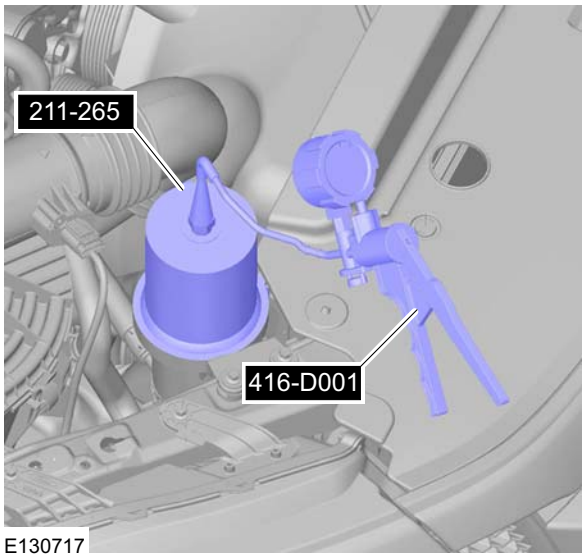

E130717

19. Start the engine and let it idle.

20. Using the Vacuum Pump Kit, apply vacuum and maintain the maximum vacuum of 68-85 kPa (20-25 in-Hg).

21. If the vacuum decreases by more than 5cm-Hg in 5 minutes,check the power steering system for leaks .

22. If equipped with Hydro-Boost®, apply the brake pedal 4 times.

23. **CAUTION: Do not hold the steering wheel against the stops for more than 5 seconds. Damage to the power steering pump may occur.**

    Cycle the steering wheel fully from stop-to-stop 10 times.

24. Stop the engine.

25. Release the vacuum and remove the Vacuum Pump Kit.

26. **NOTE:** Do not overfill the reservoir.

    Fill the power steering fluid reservoir to the MAX mark with the appropriate power steering fluid.

27. Start the engine and let it idle.

GENERAL PROCEDURES

28. Install the Vacuum Pump Kit. Apply and maintain the maximum vacuum of 68-85 kPa (20-25 in-Hg).

    Special Tool(s): 416-D001

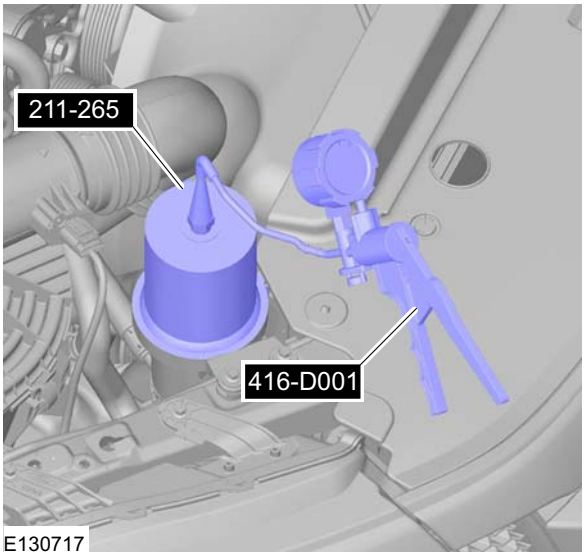

E130717

29. **CAUTION: Do not hold the steering wheel against the stops for more than 5 seconds. Damage to the power steering pump may occur.**

    Cycle the steering wheel fully from stop-to-stop 10 times.

30. Stop the engine, release the vacuum and remove the Vacuum Pump Kit.

31. **NOTE:** Do not overfill the reservoir.

    Fill the power steering fluid reservoir to the MAX mark with the appropriate power steering fluid.

32. **CAUTION: Do not hold the steering wheel against the stops for more than 5 seconds. Damage to the power steering pump may occur.**

    NOTE: The points where fluid leakage may occur are indicated in the figure.

    Visually inspect the power steering system for leaks. Start the engine and let it idle, turn the steering wheel from lock to lock. If excessive noise is apparent, repeat the power steering bleeding procedure.

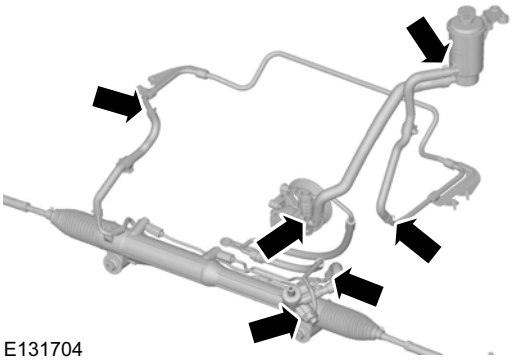
E131704

GENERAL PROCEDURES

Power Steering System Filling

Special Tool(s)

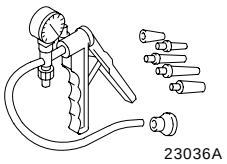 23036A	416-D001 Hand Vacuum Pump/Pressure Pump

Activation

NOTE: When filling the power steering fluid reservoir, make sure that the power steering fluid is clean and not agitated prior to use. The power steering fluid should be poured slowly into the reservoir to minimize the possibility of aeration.

33.

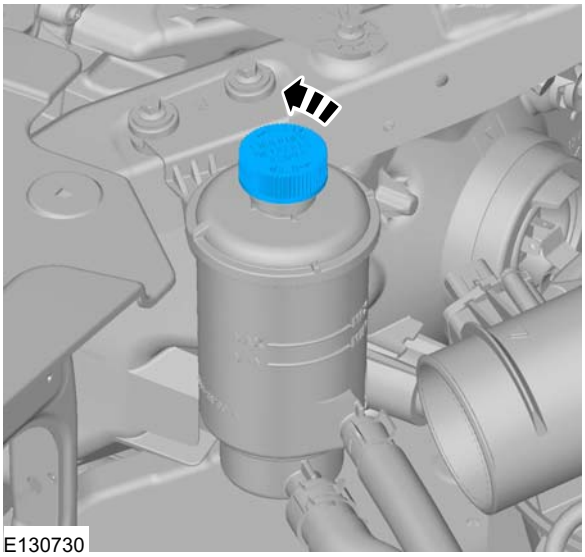
E130730

34. **NOTE:** Make sure that the power steering fluid in the power steering fluid reservoir does not fall below the MIN mark, as air could enter the system.

    Fill the reservoir as needed with the specified fluid.

35. Raise and support the vehicle making sure that the road wheels are just clear of the floor.

    Refer to: Lifting (100-02 Jacking and Lifting, Description and Operation).

36. Special Tool(s): 416-D001

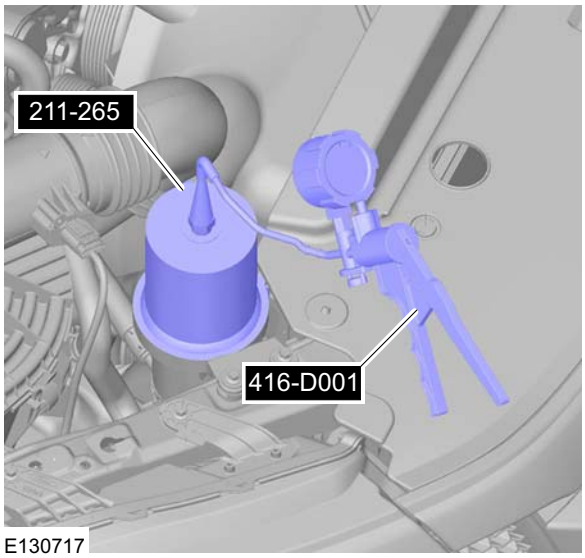

E130717

37. Using the Vacuum Pump Kit, apply vacuum and maintain the maximum vacuum of 68-85 kPa (20-25 in-Hg).

38. If the vacuum decreases by more than 5cm-Hg in 5 minutes,check the power steering system for leaks .

39. Remove the Power Steering Evacuation Cap and Vacuum Pump Kit.

40. **NOTE:** Do not overfill the reservoir.

    Fill the power steering fluid reservoir to the MAX mark with the appropriate power steering fluid.

GENERAL PROCEDURES

41. Install the Vacuum Pump Kit. Apply and maintain the maximum vacuum of 68-85 kPa (20-25 in-Hg).

    Special Tool(s): 416-D001

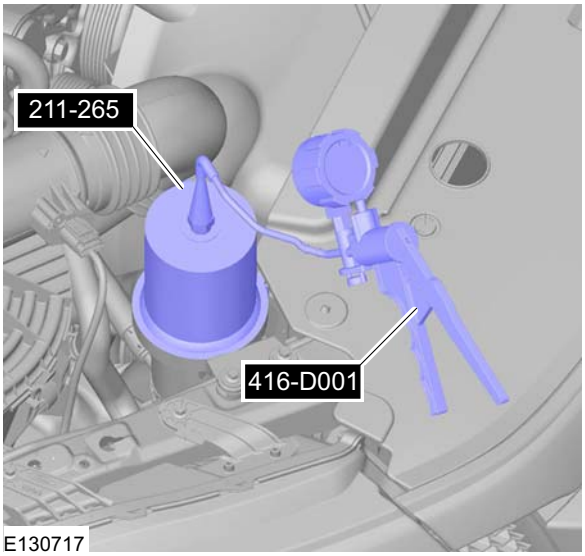

E130717

42. Start the engine and let it idle.

43. **CAUTION: Do not hold the steering wheel against the stops for more than 5 seconds. Damage to the power steering pump may occur.**

    NOTE: There will be a slight drop in the power steering fluid level in the reservoir when the engine is started.

    Cycle the steering wheel fully from stop-to-stop 10 times.

44. Stop the engine, release the vacuum and remove the Vacuum Pump Kit.

45. **NOTE:** Do not overfill the reservoir.

    Fill the power steering fluid reservoir to the MAX mark with the appropriate power steering fluid.

SECTION 211-02 Power Steering

VEHICLE APPLICATION: 2011.50 Ranger

CONTENTS PAGE

REMOVAL AND INSTALLATION

Power Steering Pump — 2.5L Duratec-HE (122kW/165PS) - MI4.....	(13 434 0)	211-02-2
Power Steering Pump — 2.2L Duratorq-TDCi (88kW/120PS) - Puma/2.2L Duratorq-TDCi (96kW/130PS) - Puma/2.2L Duratorq-TDCi (110kW/150PS) - Puma.....	(13 434 0)	211-02-3
Power Steering Pump — 3.2L Duratorq-TDCi (148kW/200PS) - Puma.....	(13 434 0)	211-02-5
Steering Gear.....	(13 116 0)	211-02-7
Power Steering Pump to Steering Gear Pressure Line — 2.5L Duratec-HE (122kW/165PS) - MI4.....	(13 440 0; 13 443 0)	211-02-13
Power Steering Pump to Steering Gear Pressure Line — 2.2L Duratorq-TDCi (88kW/120PS) - Puma/2.2L Duratorq-TDCi (96kW/130PS) - Puma/2.2L Duratorq-TDCi (110kW/150PS) - Puma/3.2L Duratorq-TDCi (148kW/200PS) - Puma.....	(13 440 0; 13 443 0)	211-02-15

REMOVAL AND INSTALLATION

Power Steering Pump — 2.5L Duratec-HE (122kW/165PS) - MI4(13 434 0)

Removal

NOTE: Removal steps in this procedure may contain installation details.

1. Refer to: Accessory Drive Belt (303-05 Accessory Drive - 2.5L Duratec-HE (122kW/165PS) - MI4, Removal and Installation).
2. Refer to: Battery Disconnect and Connect (414-01 Battery, Mounting and Cables, General Procedures).
3. **WARNING: Be prepared to collect escaping fluids.**

   CAUTION: Make sure that all openings are sealed.

   Torque: 35 Nm

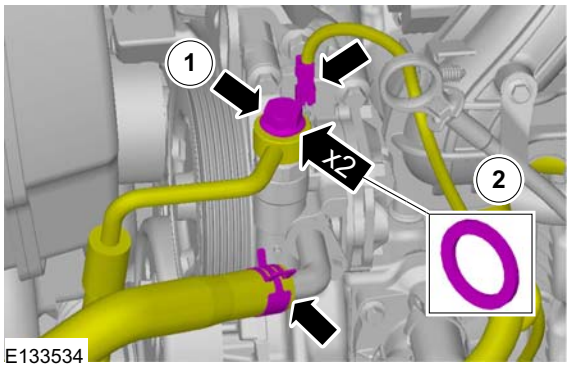

4. Torque: 20 Nm

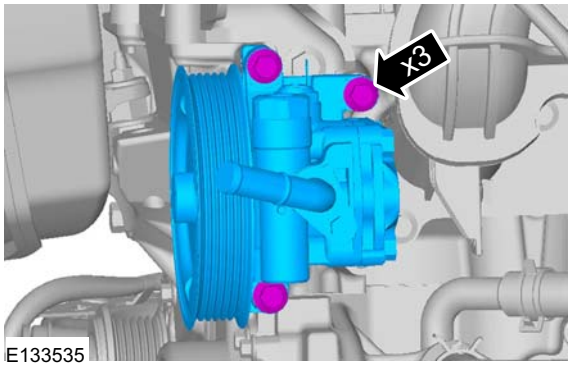

Installation

1. To install, reverse the removal procedure.
2. Fill the power steering system.

   Refer to: Power Steering System Filling (211-00 Steering System - General Information, General Procedures).
3. Bleed the power steering system.

   Refer to: Power Steering System Bleeding (211-00 Steering System - General Information, General Procedures).

REMOVAL AND INSTALLATION

Power Steering Pump — 2.2L Duratorq-TDCi (88kW/120PS) - Puma/2.2L Duratorq-TDCi (96kW/130PS) - Puma/2.2L Duratorq-TDCi (110kW/150PS) - Puma(13 434 0)

Removal

CAUTION: While repairing the power steering system, care should be taken to prevent the entry of foreign material or failure of the power steering components may result.

NOTE: Removal steps in this procedure may contain installation details.

1. Refer to: Steering System Health and Safety Precautions (100-00 General Information, Description and Operation).
2. Refer to: Battery Disconnect and Connect (414-01 Battery, Mounting and Cables, General Procedures).
3. Refer to: Accessory Drive Belt - 2.2L Duratorq-TDCi (88kW/120PS) - Puma/2.2L Duratorq-TDCi (96kW/130PS) - Puma/2.2L Duratorq-TDCi (110kW/150PS) - Puma/3.2L Duratorq-TDCi (148kW/200PS) - Puma (303-05 Accessory Drive - 2.2L Duratorq-TDCi (88kW/120PS) - Puma/2.2L Duratorq-TDCi (96kW/130PS) - Puma/2.2L Duratorq-TDCi (110kW/150PS) - Puma/3.2L Duratorq-TDCi (148kW/200PS) - Puma, Removal and Installation).
4. Refer to: Lifting (100-02 Jacking and Lifting, Description and Operation).
5. Torque: 30 Nm

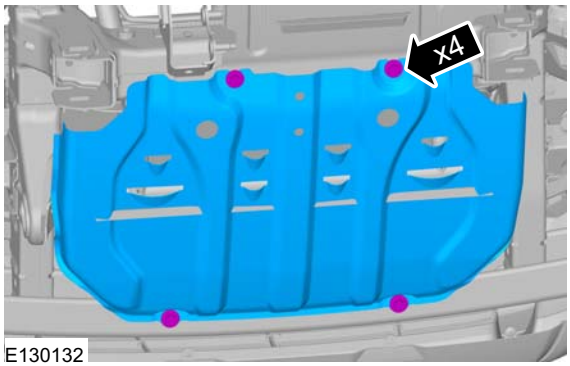

E130132

6. Remove front RH side wheel only.

   Refer to: Wheel and Tire (204-04 Wheels and Tires, Removal and Installation).
7.

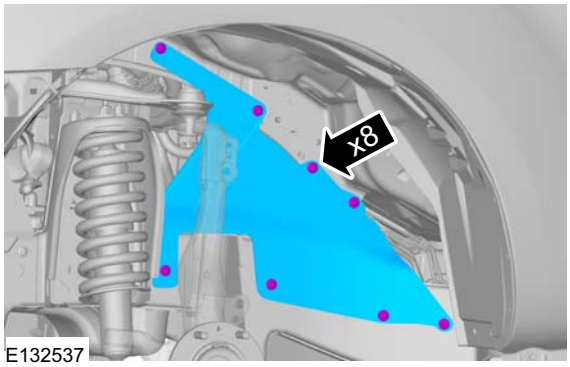

E132537

8. **CAUTION: Cap the power steering line to prevent fluid loss or dirt ingress.**

   Torque: 7 Nm

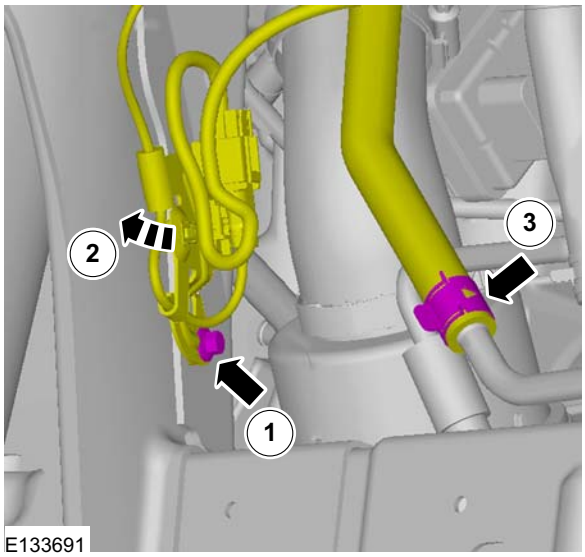

E133691

9. **WARNING: Be prepared to collect escaping fluid.**

REMOVAL AND INSTALLATION

CAUTION: Cap the power steering line to prevent fluid loss or dirt ingress.

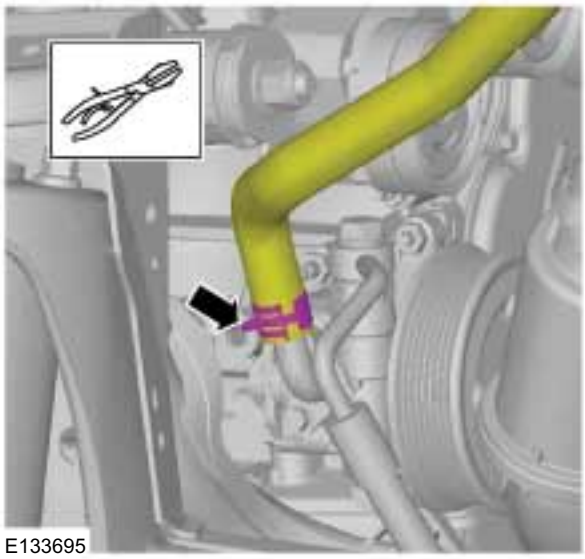

10. **CAUTION: Make sure that all openings are sealed with new blanking caps.**
Torque: 35 Nm

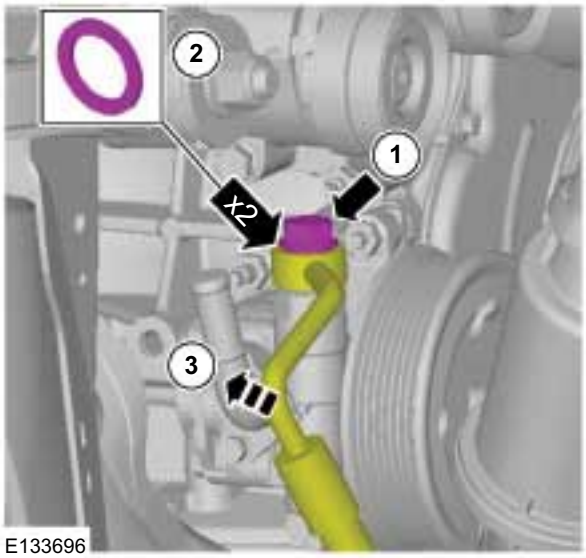

11. 1. Torque: 20 Nm
2. Torque: 20 Nm
3. Torque: 10 Nm

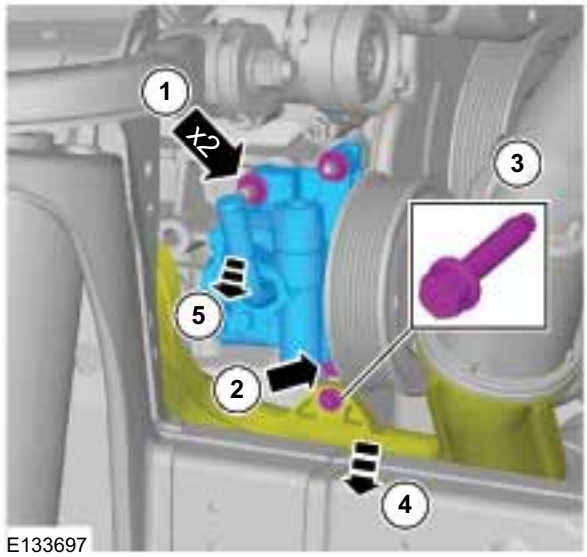

Installation

1. **NOTE:** Make sure that the high pressure line is located correctely.

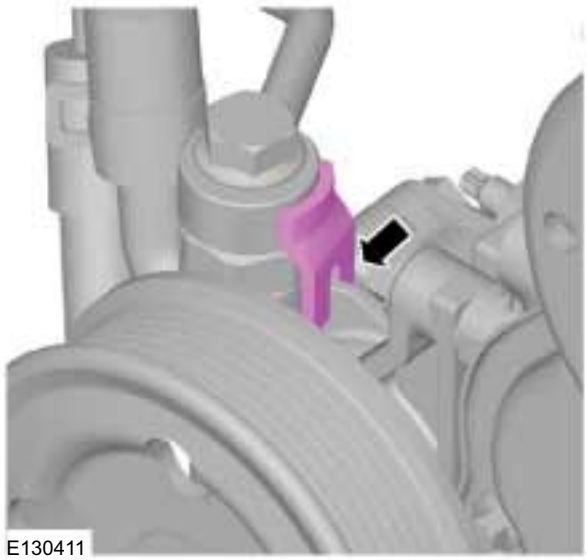

2. To install, reverse the removal procedure.
3. Refer to: Power Steering System Filling (211-00 Steering System - General Information, General Procedures).
4. Refer to: Power Steering System Bleeding (211-00 Steering System - General Information, General Procedures).

REMOVAL AND INSTALLATION

Power Steering Pump — 3.2L Duratorq-TDCi (148kW/200PS) - Puma(13 434 0)

Removal

CAUTION: While repairing the power steering system, care should be taken to prevent the entry of foreign material or failure of the power steering components may result.

NOTE: Removal steps in this procedure may contain installation details.

1. Refer to: Steering System Health and Safety Precautions (100-00 General Information, Description and Operation).
2. Refer to: Battery Disconnect and Connect (414-01 Battery, Mounting and Cables, General Procedures).
3. Refer to: Accessory Drive Belt - 2.2L Duratorq-TDCi (88kW/120PS) - Puma/2.2L Duratorq-TDCi (96kW/130PS) - Puma/2.2L Duratorq-TDCi (110kW/150PS) - Puma/3.2L Duratorq-TDCi (148kW/200PS) - Puma (303-05 Accessory Drive - 2.2L Duratorq-TDCi (88kW/120PS) - Puma/2.2L Duratorq-TDCi (96kW/130PS) - Puma/2.2L Duratorq-TDCi (110kW/150PS) - Puma/3.2L Duratorq-TDCi (148kW/200PS) - Puma, Removal and Installation).
4. Refer to: Lifting (100-02 Jacking and Lifting, Description and Operation).
5. Torque: 25 Nm

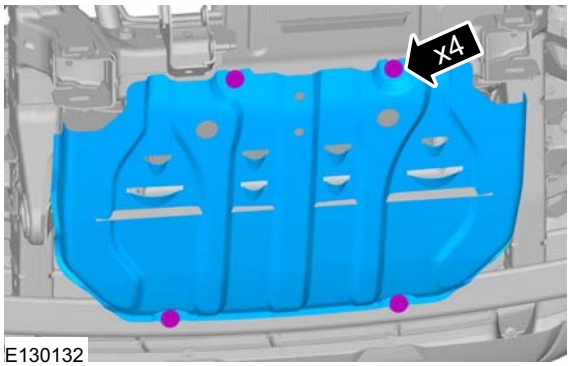

6. Remove front RH side wheel only.

   Refer to: Wheel and Tire (204-04 Wheels and Tires, Removal and Installation).

7.

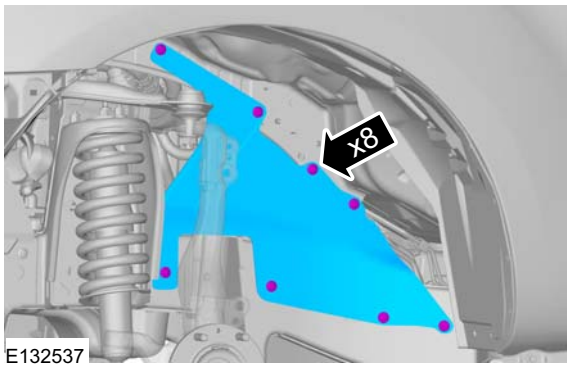

8. **CAUTION: Cap the power steering line to prevent fluid loss or dirt ingress.**

   Torque: 7 Nm

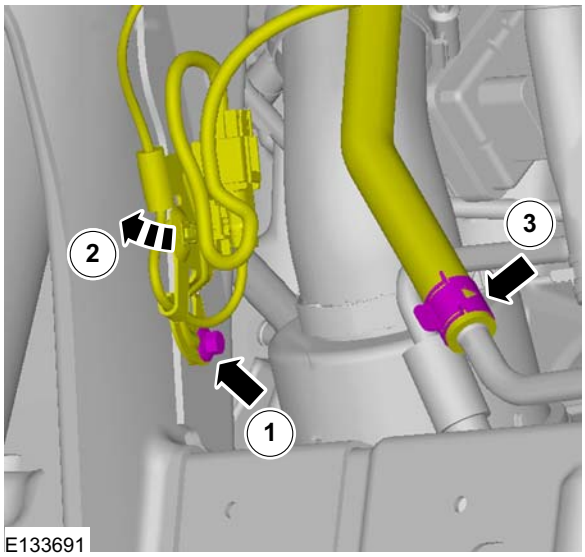

9. **WARNING: Be prepared to collect escaping fluid.**

REMOVAL AND INSTALLATION

CAUTION: Cap the power steering line to prevent fluid loss or dirt ingress.

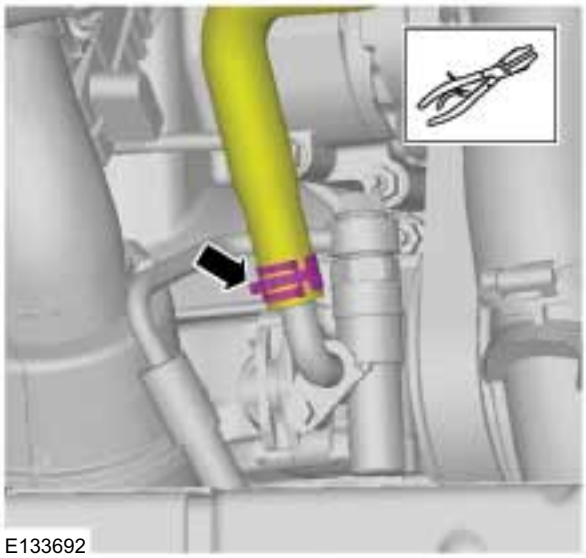

10. **CAUTION: Make sure that all openings are sealed with new blanking caps.**
Torque: 35 Nm

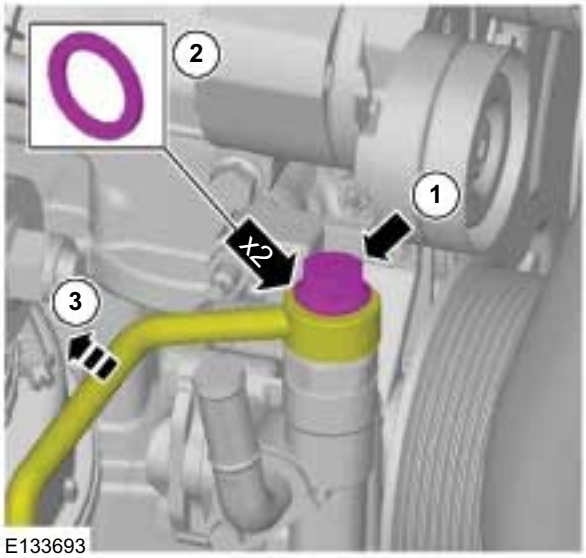

11. 1. Torque: 20 Nm
2. Torque: 20 Nm
3. Torque: 10 Nm

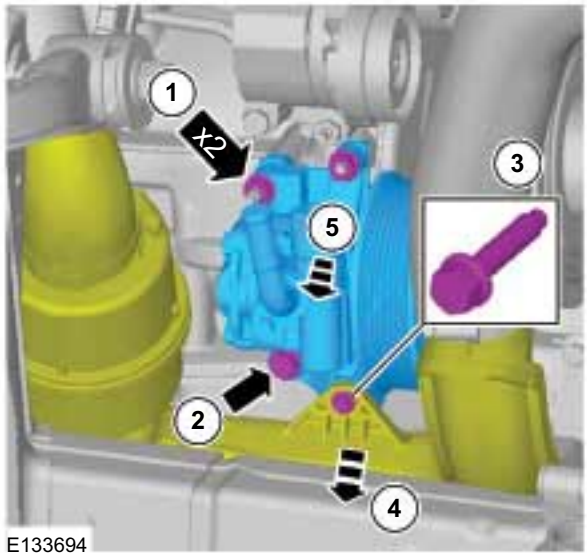

Installation

1. **NOTE:** Make sure that the high pressure line is located correctely.

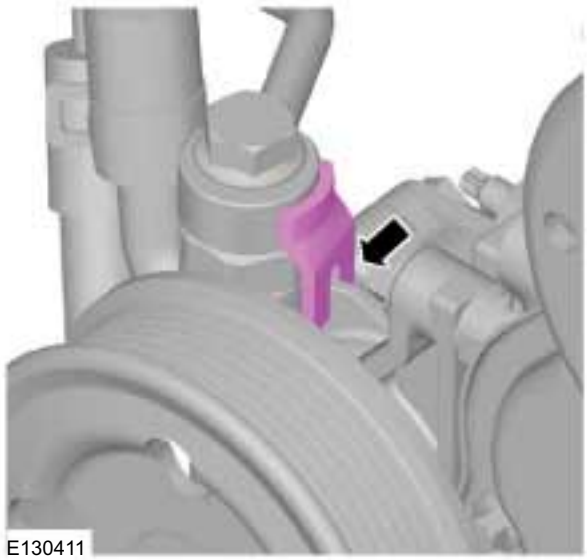

2. To install, reverse the removal procedure.
3. Refer to: Power Steering System Filling (211-00 Steering System - General Information, General Procedures).
4. Refer to: Power Steering System Bleeding (211-00 Steering System - General Information, General Procedures).

REMOVAL AND INSTALLATION

Steering Gear(13 116 0)

Special Tool(s)

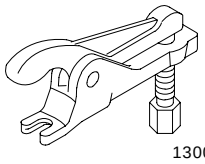 13006	211-020 Separator, Ball Joint

Removal

CAUTION: Suspension fasteners are critical parts because they affect performance of vital components and systems and their failure can result in major service expense. A new part with the same part number or an equivalent part must be installed, if installation is necessary. Do not use a part of lesser quality or substitute design. Torque values must be used as specified during reassembly to make sure of correct retention of these parts.

NOTE: Removal steps in this procedure may contain installation details.

1. Refer to: Steering System Health and Safety Precautions (100-00 General Information, Description and Operation).
2. Refer to: Battery Disconnect and Connect (414-01 Battery, Mounting and Cables, General Procedures).
3. **NOTE:** Make sure that the road wheels are in the straight ahead position.

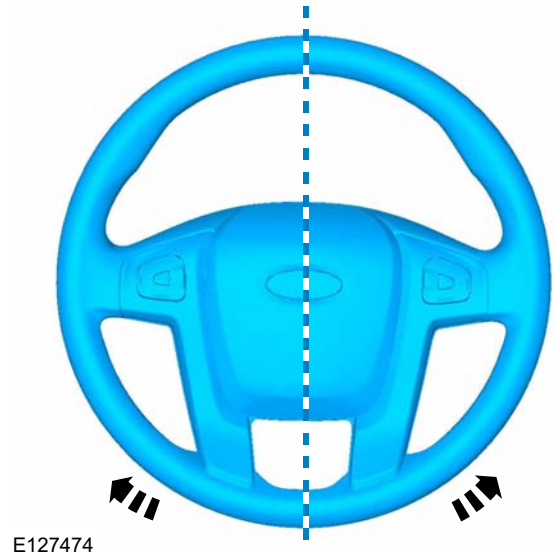
E127474

4. Remove both front wheels.

   Refer to: Wheel and Tire (204-04 Wheels and Tires, Removal and Installation).

REMOVAL AND INSTALLATION

5. Refer to: Lifting (100-02 Jacking and Lifting, Description and Operation).

4x4

6. Torque: 30 Nm

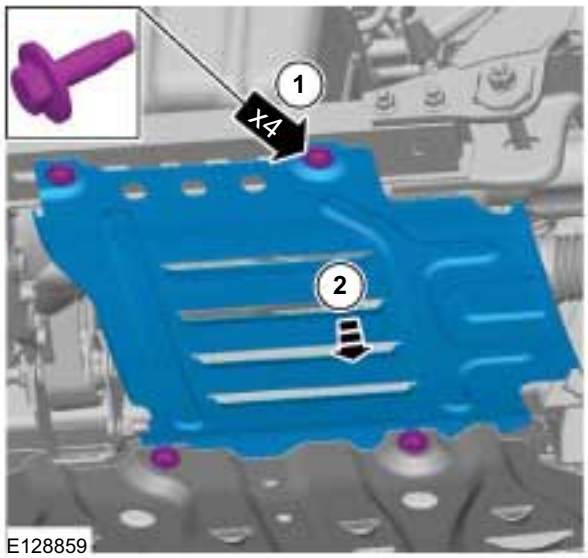

7. Torque: 30 Nm

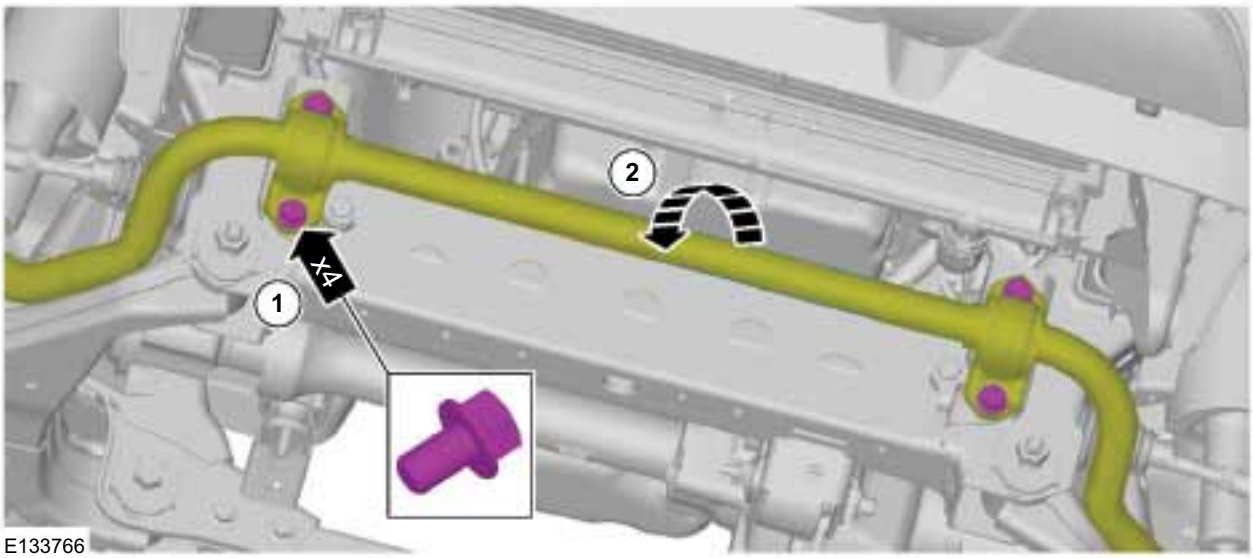

All vehicles

8. **NOTE:** Make sure that the ball joint ball does not rotate.

On both sides.
Torque: 63 Nm

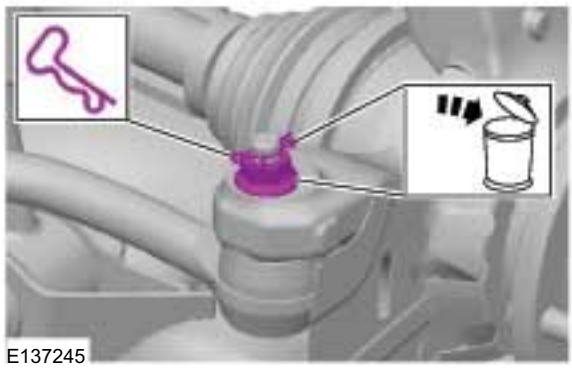

REMOVAL AND INSTALLATION

9. **CAUTION: Do not use a hammer to separate the tie rod from the wheel knuckle or damage to the wheel knuckle can result.**

   On both sides.

   Special Tool(s): 211-020

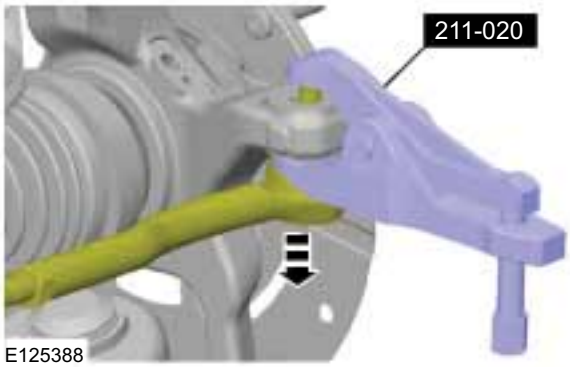

10. **WARNING: Be prepared to collect escaping fluid.**

    CAUTION: Cap the power steering line and steering gear body to prevent fluid loss or dirt ingress.

    1. Torque: 15 Nm
    2. Torque: 35 Nm

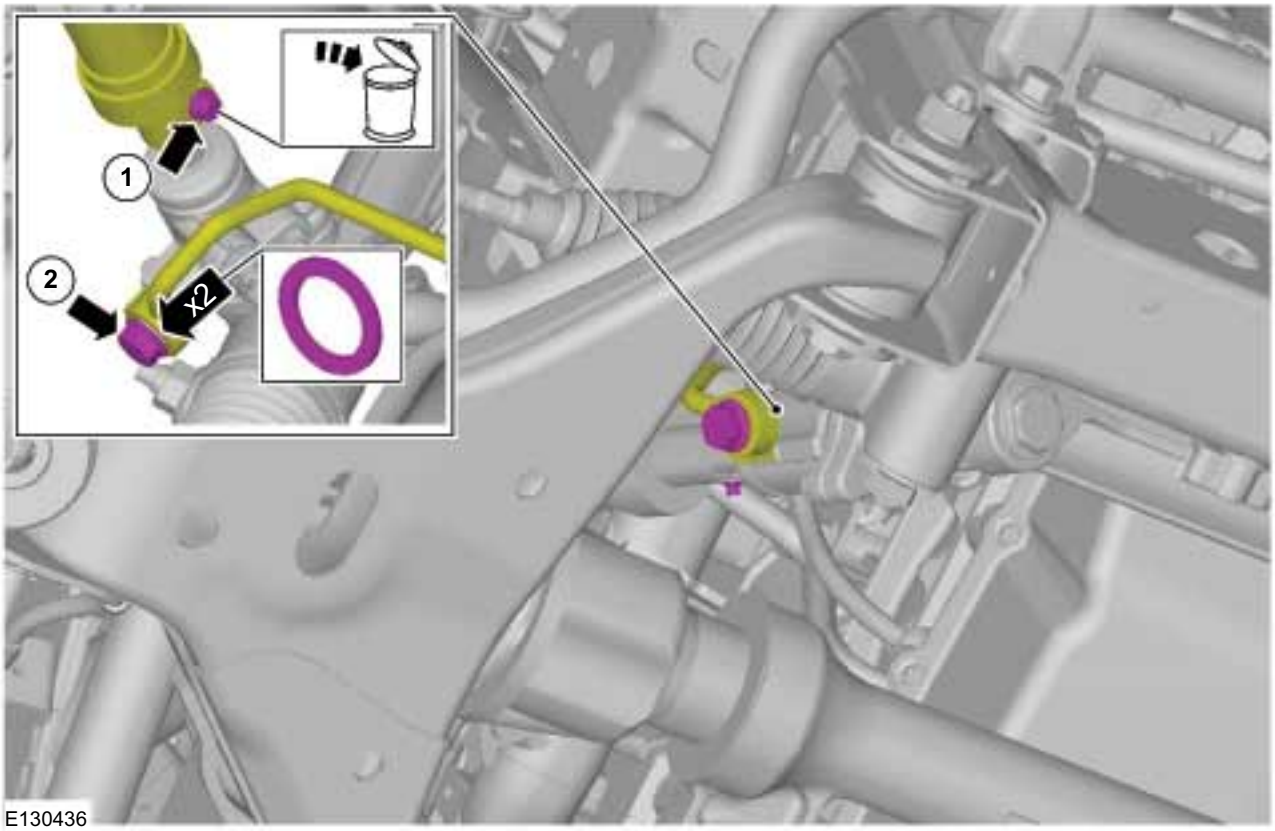

REMOVAL AND INSTALLATION

11.

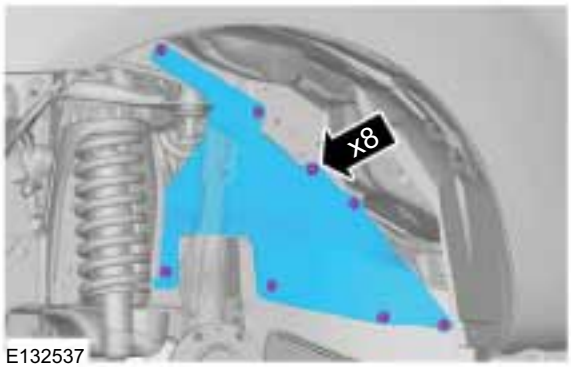

12. ⚠ **CAUTION: Cap the power steering line to prevent fluid loss or dirt ingress.**

Torque: 7 Nm

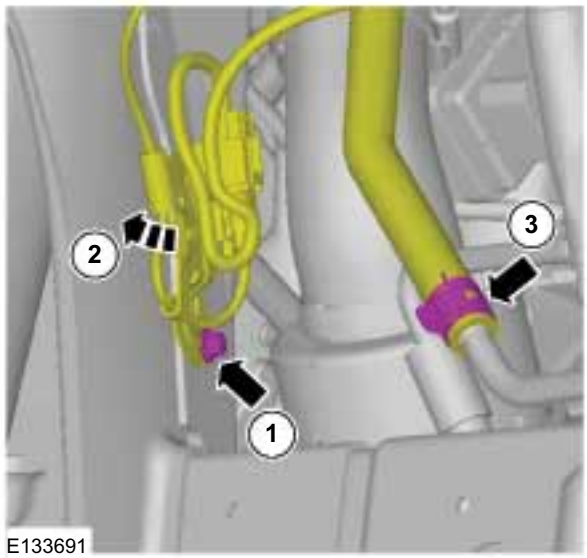

Vehicles with diesel engine

13. Torque: 10 Nm

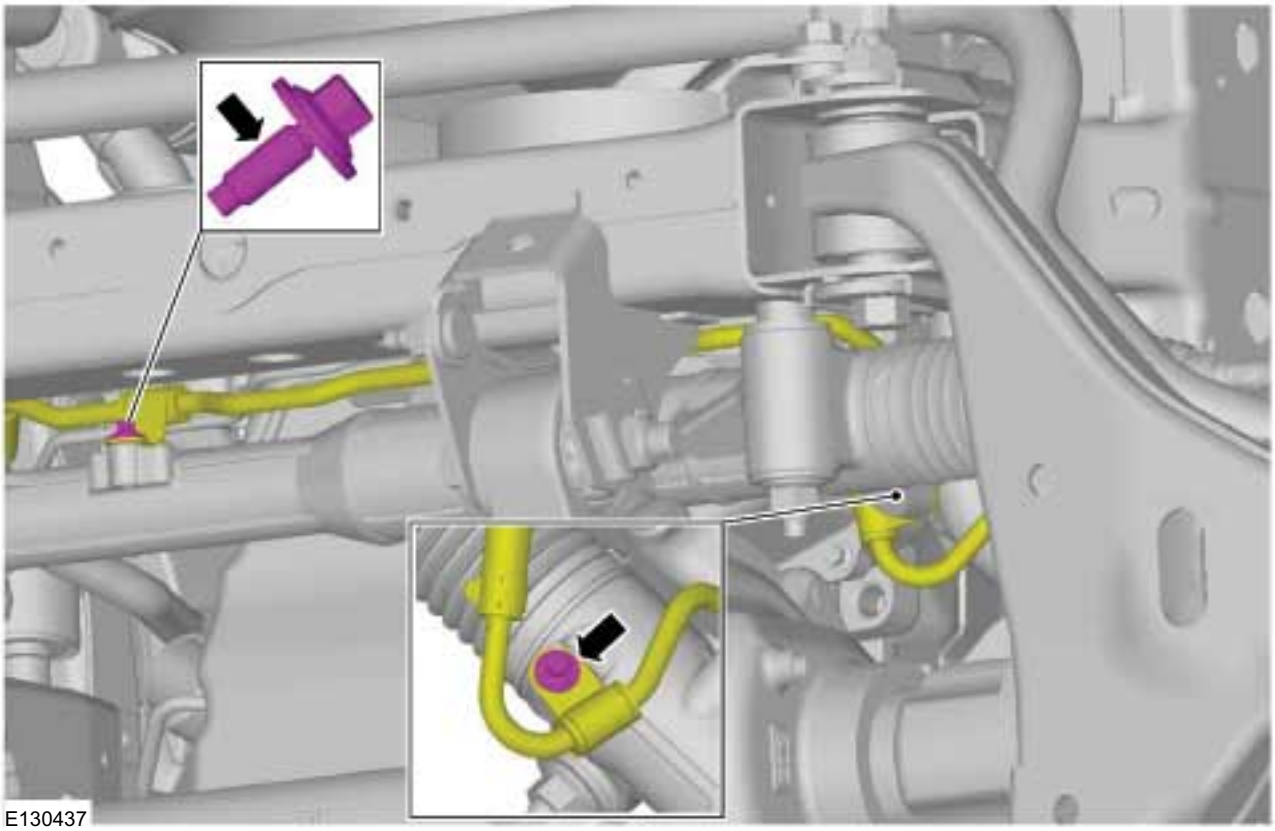

All vehicles

14. Torque: 150 Nm

REMOVAL AND INSTALLATION

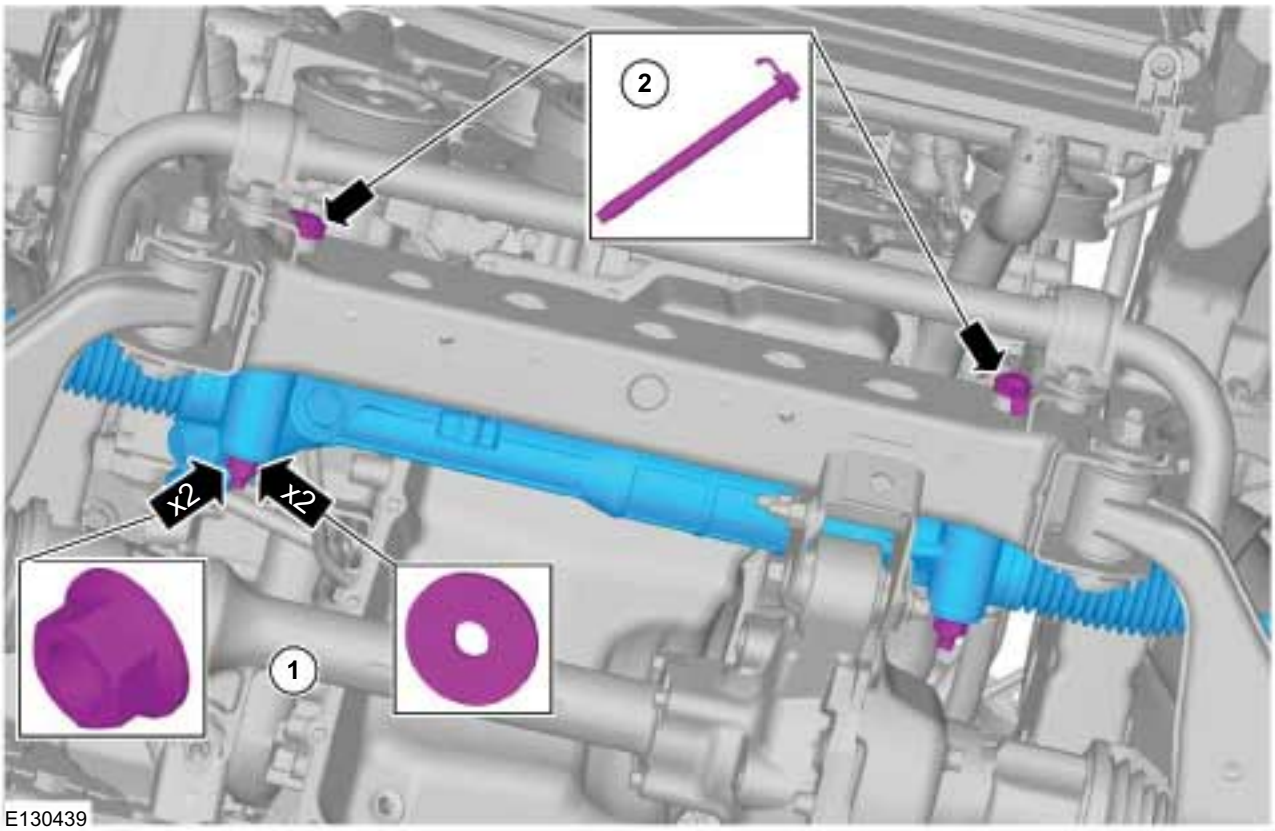

15.

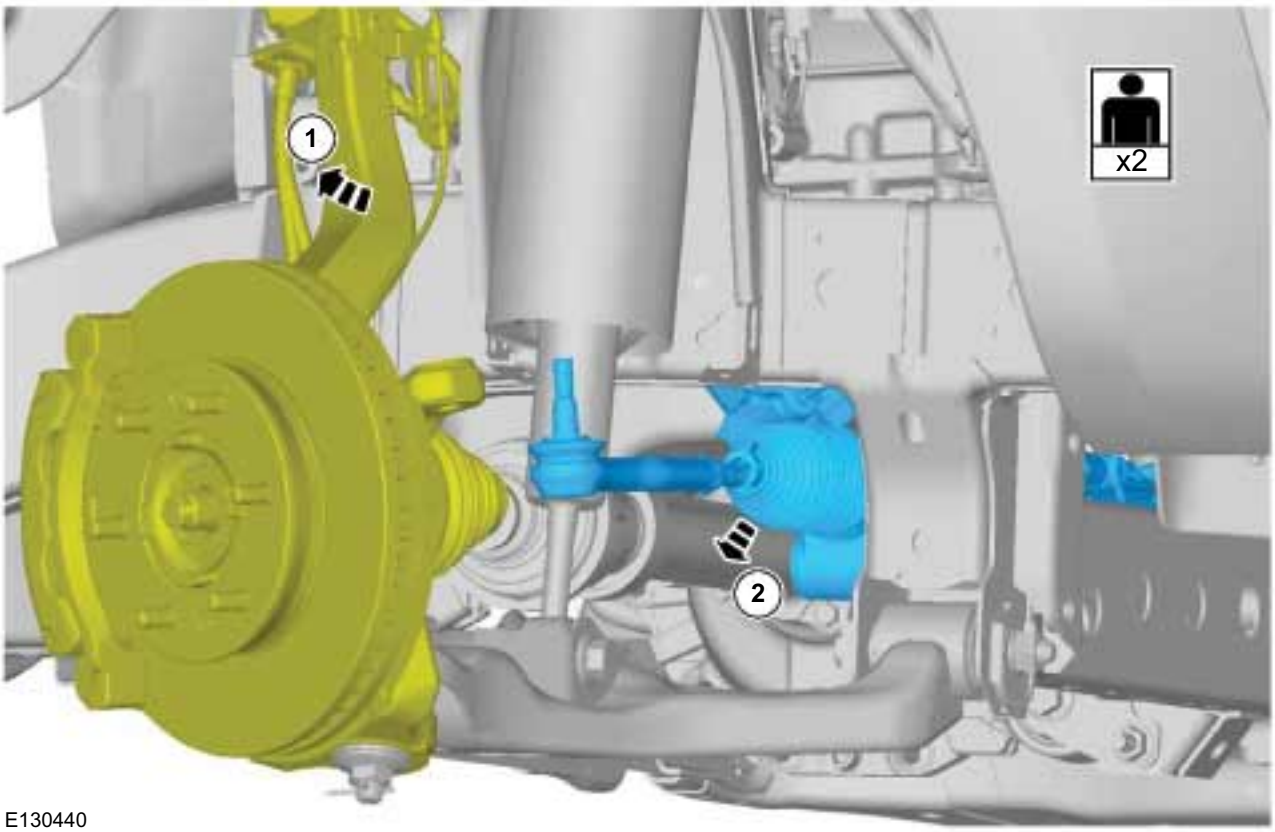

REMOVAL AND INSTALLATION

Installation

1. To install, reverse the removal procedure.
2. **NOTE:** Make sure that the high pressure pipe line is located correctely.

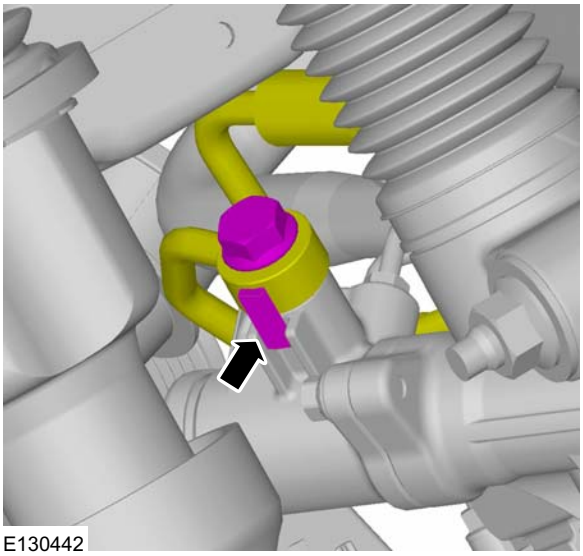

3. Refer to: Power Steering System Filling (211-00 Steering System - General Information, General Procedures).
4. Refer to: Power Steering System Bleeding (211-00 Steering System - General Information, General Procedures).

REMOVAL AND INSTALLATION

Power Steering Pump to Steering Gear Pressure Line — 2.5L Duratec-HE (122kW/165PS) - MI4(13 440 0; 13 443 0)

Removal

CAUTION: While repairing the power steering system, care should be taken to prevent the entry of foreign material or failure of the power steering components may result.

NOTE: Removal steps in this procedure may contain installation details.

1. Refer to: Steering System Health and Safety Precautions (100-00 General Information, Description and Operation).
2. Refer to: Battery Disconnect and Connect (414-01 Battery, Mounting and Cables, General Procedures).
3. Refer to: Lifting (100-02 Jacking and Lifting, Description and Operation).
4. Torque: 30 Nm

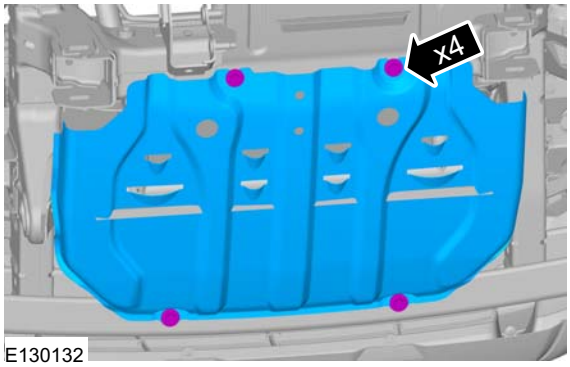

5. Torque: 30 Nm

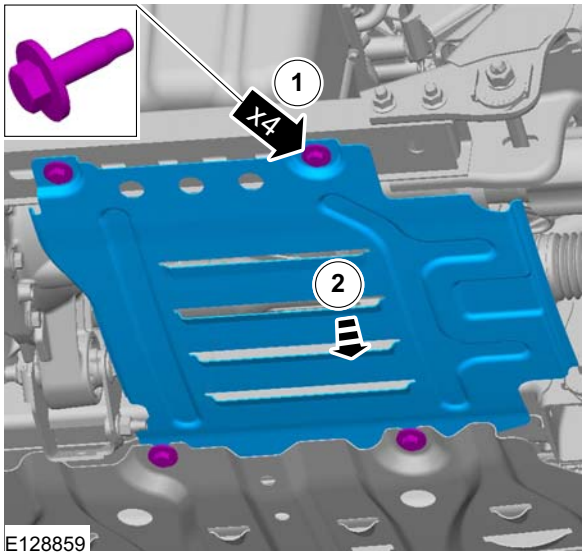

Left-hand drive vehicles

6. **WARNING: Be prepared to collect escaping fluid.**

   CAUTION: Cap the steering gear body to prevent fluid loss or dirt ingress.

   Torque: 35 Nm

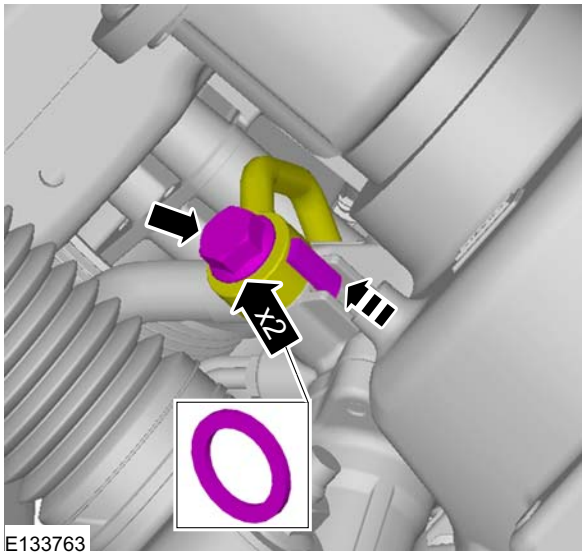

REMOVAL AND INSTALLATION

7. Torque: 10 Nm

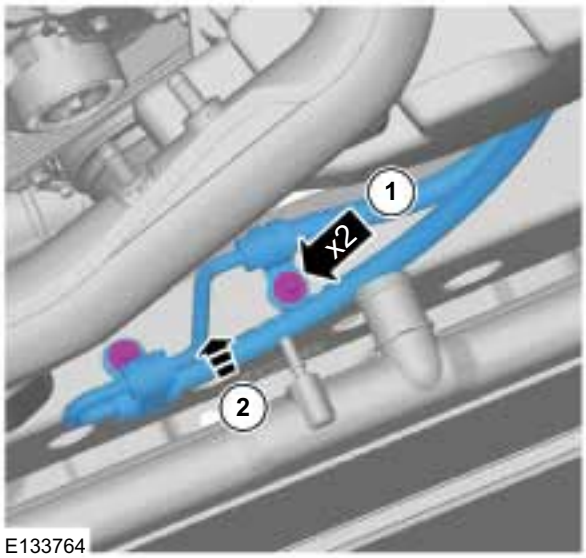

E133764

Right-hand drive vehicles

8. **WARNING: Be prepared to collect escaping fluid.**

   CAUTION: Cap the steering gear body to prevent fluid loss or dirt ingress.

   Torque: 35 Nm

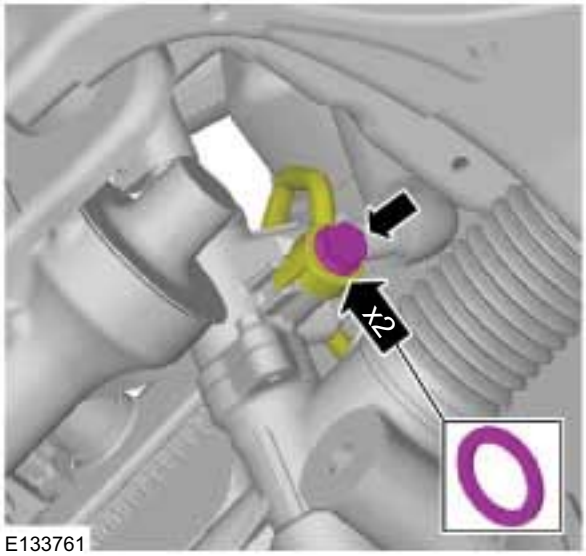

E133761

9. Torque: 10 Nm

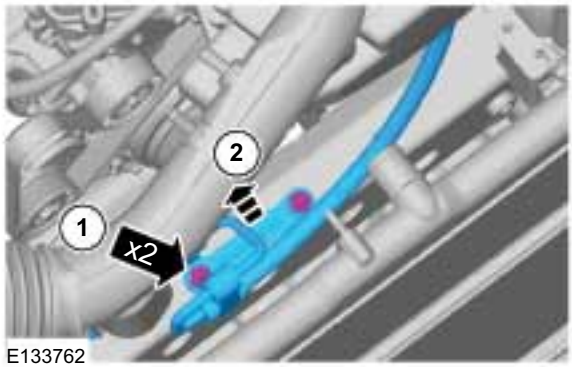

E133762

All vehicles

10. **CAUTION: Cap the power steering line to prevent fluid loss or dirt ingress.**

    Torque: 35 Nm

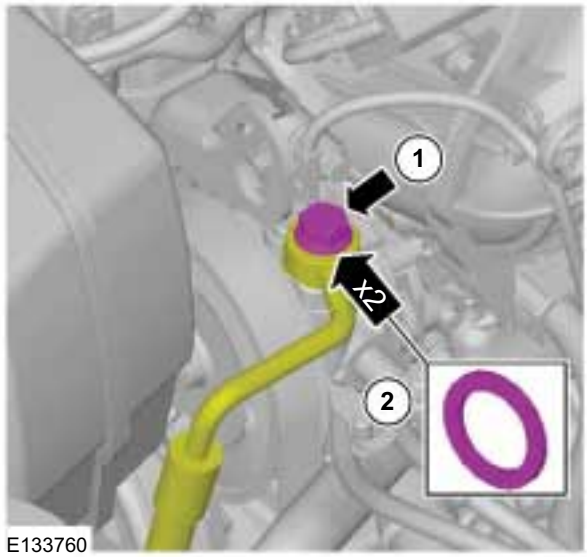

E133760

Installation

1. To install, reverse the removal procedure.
2. Refer to: Power Steering System Filling (211-00 Steering System - General Information, General Procedures).
3. Refer to: Power Steering System Bleeding (211-00 Steering System - General Information, General Procedures).

REMOVAL AND INSTALLATION

Power Steering Pump to Steering Gear Pressure Line — 2.2L Duratorq-TDCi (88kW/120PS) - Puma/2.2L Duratorq-TDCi (96kW/130PS) - Puma/2.2L Duratorq-TDCi (110kW/150PS) - Puma/3.2L Duratorq-TDCi (148kW/200PS) - Puma(13 440 0; 13 443 0)

Removal

CAUTION: While repairing the power steering system, care should be taken to prevent the entry of foreign material or failure of the power steering components may result.

NOTE: Removal steps in this procedure may contain installation details.

1. Refer to: Steering System Health and Safety Precautions (100-00 General Information, Description and Operation).
2. Refer to: Battery Disconnect and Connect (414-01 Battery, Mounting and Cables, General Procedures).
3. Refer to: Lifting (100-02 Jacking and Lifting, Description and Operation).
4. Torque: 30 Nm

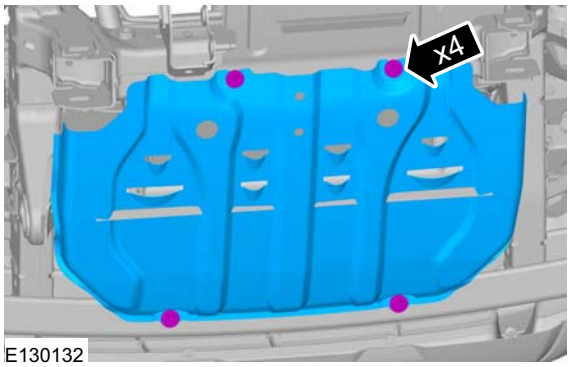

E130132

5. Torque: 30 Nm

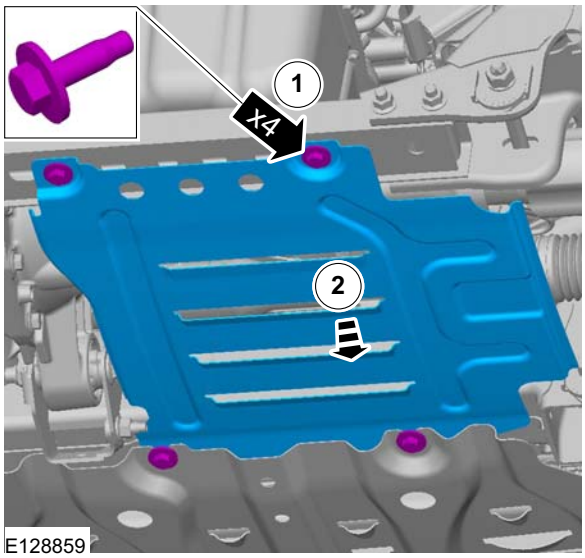

E128859

6. Remove front RH side wheel only.

   Refer to: Wheel and Tire (204-04 Wheels and Tires, Removal and Installation).

7.

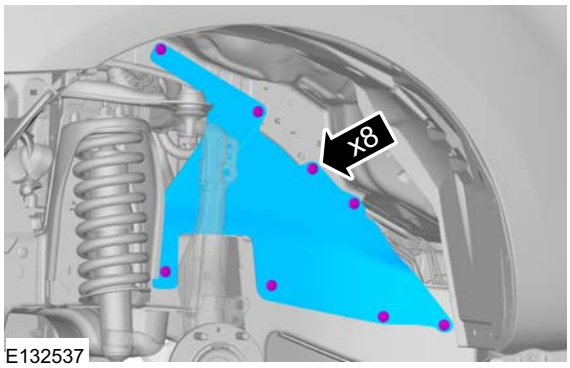

E132537

REMOVAL AND INSTALLATION

8. Torque: 7 Nm

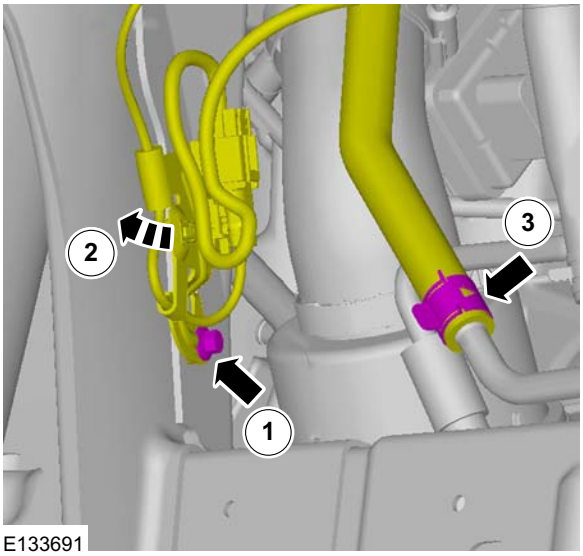

9. **CAUTION: Cap the power steering line to prevent fluid loss or dirt ingress.**

Torque: 35 Nm

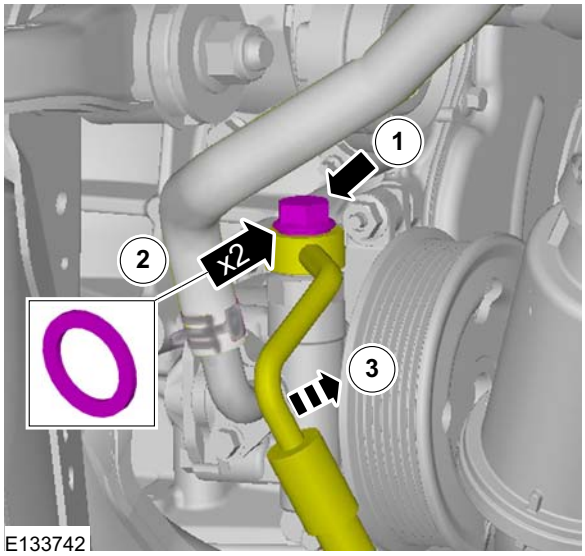

Right-hand drive vehicles

10. **WARNING: Be prepared to collect escaping fluid.**

CAUTION: Cap the steering gear body to prevent fluid loss or dirt ingress.

1. Torque: 10 Nm
2. Torque: 35 Nm

REMOVAL AND INSTALLATION

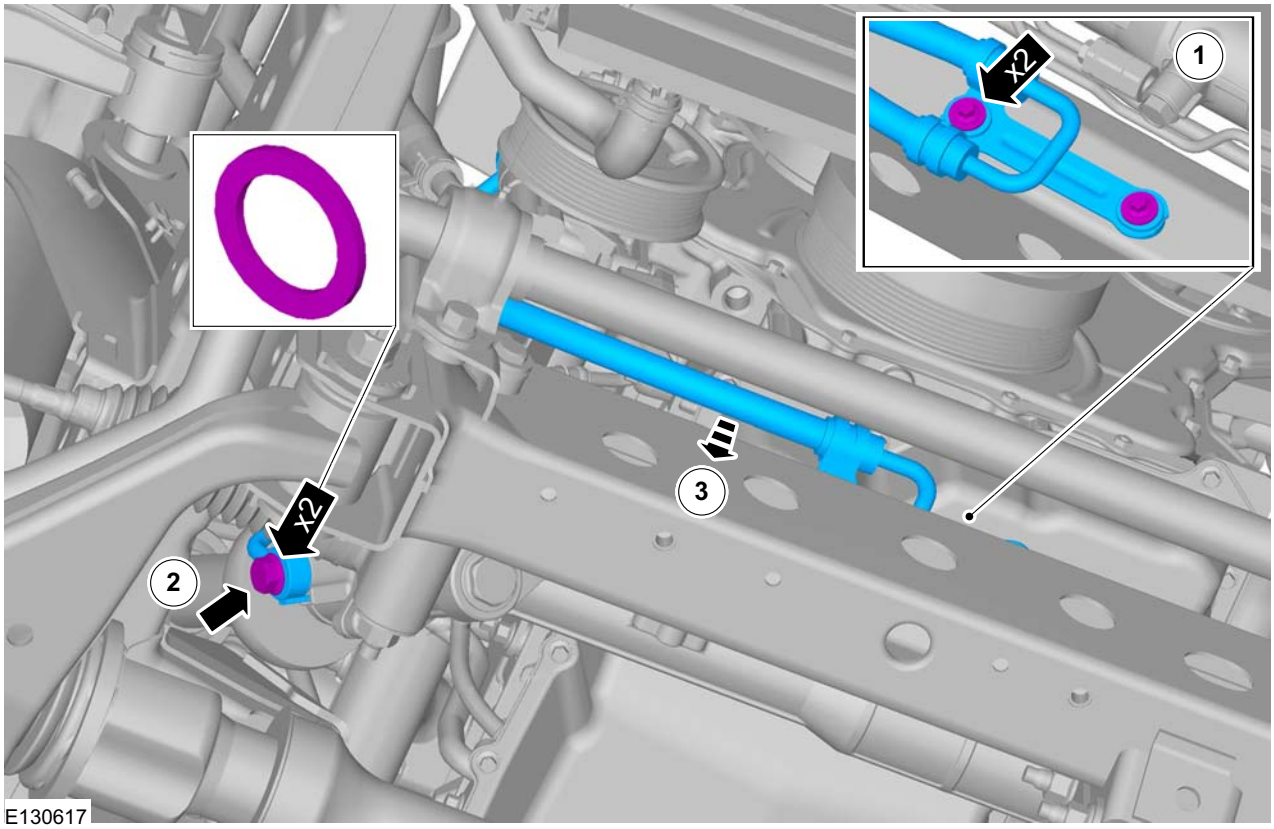

Left-hand drive vehicles

11. **WARNING: Be prepared to collect escaping fluid.**

CAUTION: Cap the steering gear body to prevent fluid loss or dirt ingress.

1. Torque: 35 Nm
2. Torque: 10 Nm

REMOVAL AND INSTALLATION

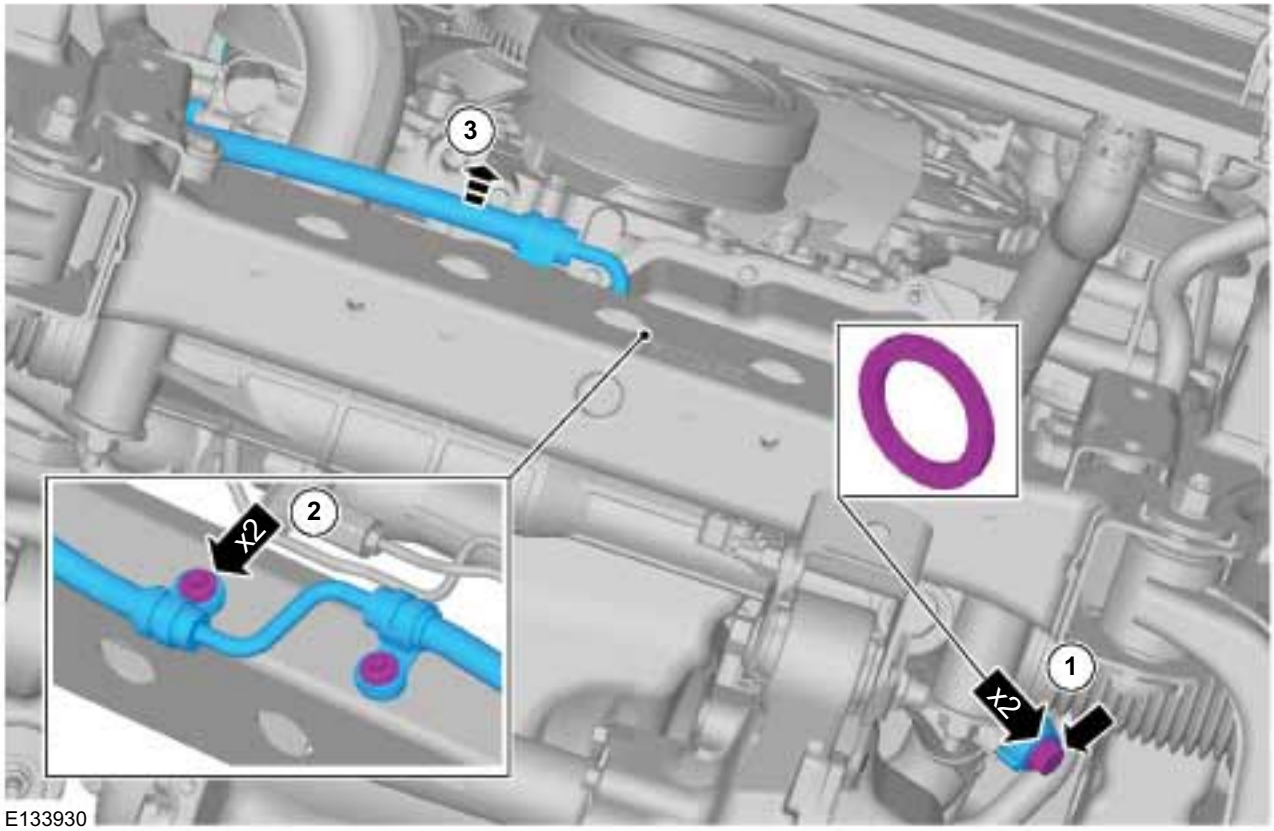

Installation

1. To install, reverse the removal procedure.
2. Refer to: Power Steering System Filling (211-00 Steering System - General Information, General Procedures).
3. Refer to: Power Steering System Bleeding (211-00 Steering System - General Information, General Procedures).

SECTION 211-03 Steering Linkage

VEHICLE APPLICATION: 2011.50 Ranger

CONTENTS PAGE

REMOVAL AND INSTALLATION

Tie Rod..... (13 263 0) 211-03-2
Tie Rod End..... (13 273 0) 211-03-5

REMOVAL AND INSTALLATION

Tie Rod(13 263 0)

Special Tool(s) / General Equipment

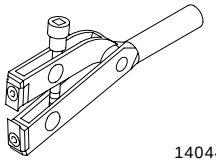 14044	204-169 Clamping Tool, Boot Retaining Clamp
Flat Headed Screw Driver	
Vise	
Vise Jaw Protectors	

Materials	
Name	**Specification**
Silicone Grease	ESE-M1C171-A / 2S5J-M1C171-AA

Removal

NOTE: Removal steps in this procedure may contain installation details.

1. Refer to: Battery Disconnect and Connect (414-01 Battery, Mounting and Cables, General Procedures).
   Refer to: Steering System Health and Safety Precautions (100-00 General Information, Description and Operation).
2. Refer to: Steering Gear (211-02 Power Steering, Removal and Installation).
3. On both sides.

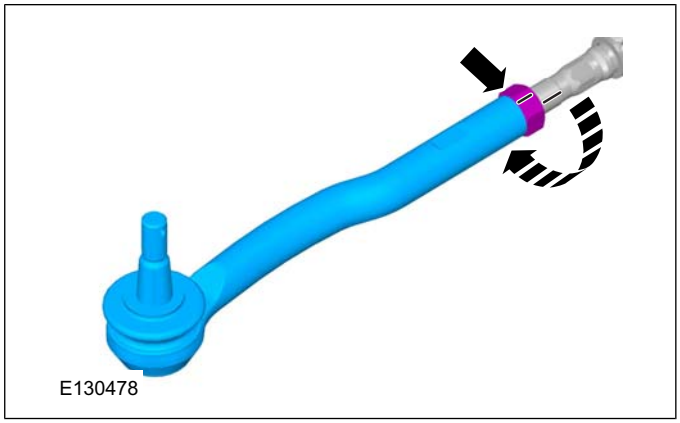
E130478

4. **NOTE:** Note the position of component before removal.

   On both sides.

   General Equipment: Flat Headed Screw Driver

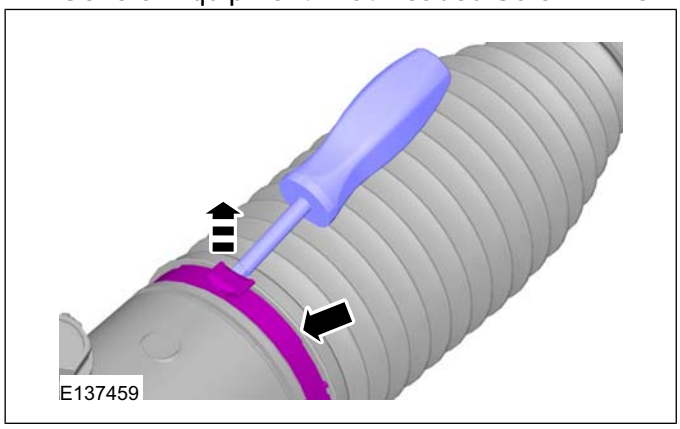
E137459

5. **NOTE:** Note the position of component before removal.

   On both sides.

   Special Tool(s): 204-169

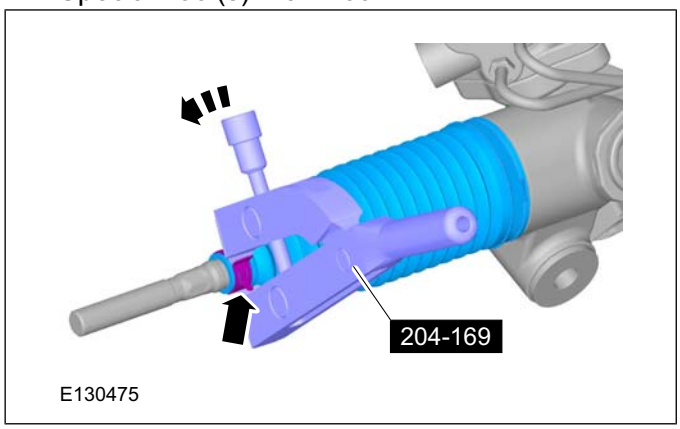

E130475

6. **CAUTION: Use vise jaw protectors.**

   Rotate the steering gear pinion to expose the steering rack.

   General Equipment: Vise
   General Equipment: Vise Jaw Protectors

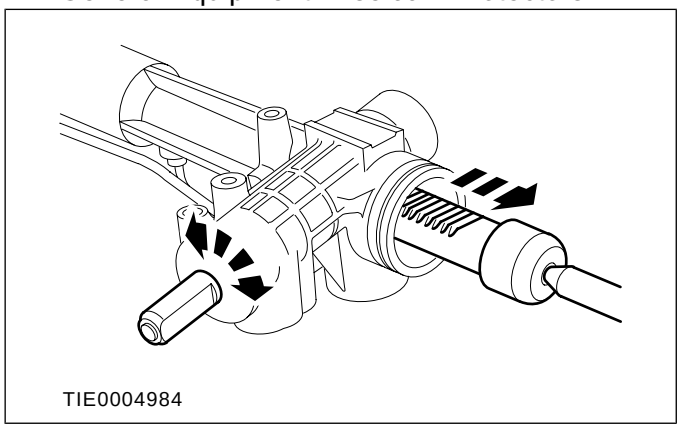
TIE0004984

REMOVAL AND INSTALLATION

7. **CAUTIONS:**

   Do not clamp the steering rack on exposed hydraulic sealing surfaces.

   Use vise jaw protectors.

   General Equipment: Vise
   General Equipment: Vise Jaw Protectors

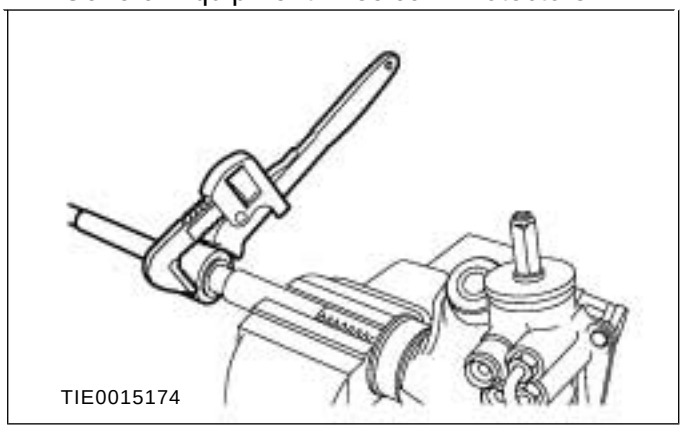

Installation

1. To install, reverse the removal procedure.
2. **CAUTION: Use vise jaw protectors.**

   General Equipment: Vise
   General Equipment: Vise Jaw Protectors
   Torque: 120 Nm

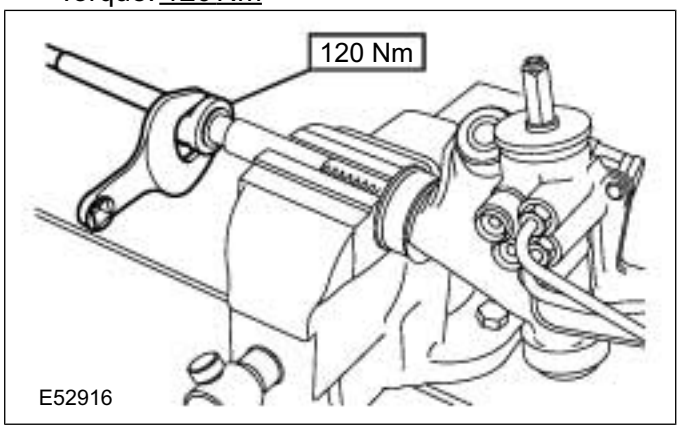

3. Material: Silicone Grease (ESE-M1C171-A / 2S5J-M1C171-AA) grease

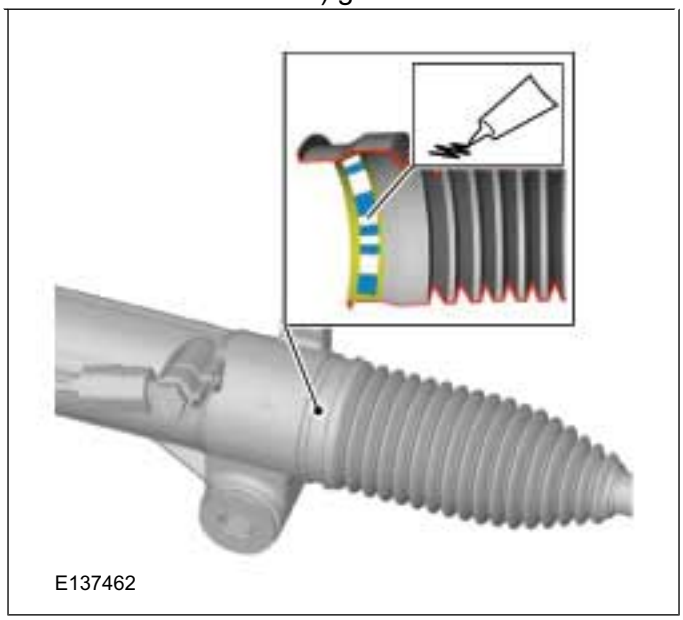

4. **NOTE:** Make sure that a new clamp is installed.

   Special Tool(s): 204-169

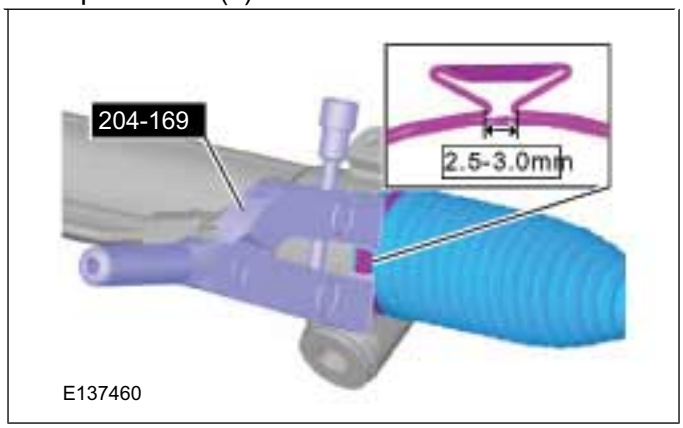

5. **NOTE:** Make sure that a new clamp is installed.

   On both sides.

   Special Tool(s): 204-169

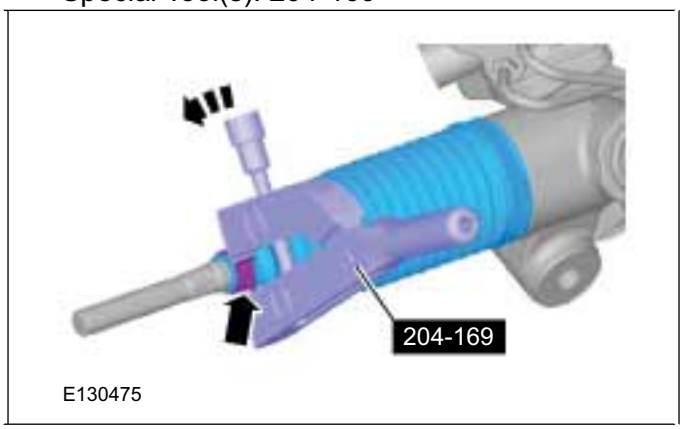

REMOVAL AND INSTALLATION

6.

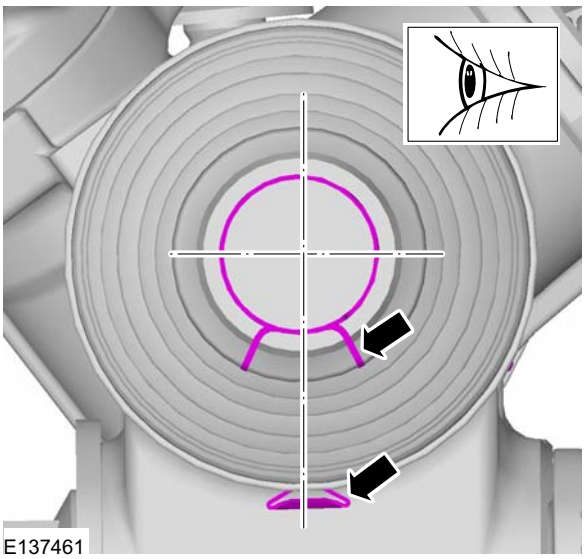

7. NOTE: Make sure that the installation marks are aligned.

On both sides.
Torque: 80 Nm

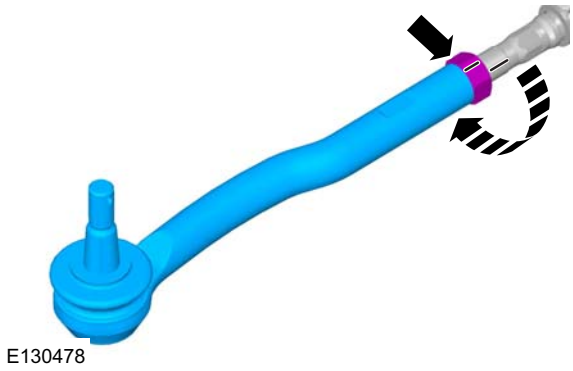

8. Refer to: Front Toe Adjustment (204-00 Suspension System - General Information, General Procedures).

REMOVAL AND INSTALLATION

Tie Rod End(13 273 0)

Special Tool(s)

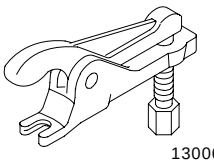 13006	211-020 Separator, Ball Joint

Removal

CAUTION: Suspension fasteners are critical parts because they affect performance of vital components and systems and their failure can result in major service expense. A new part with the same part number or an equivalent part must be installed, if installation is necessary. Do not use a part of lesser quality or substitute design. Torque values must be used as specified during reassembly to make sure of correct retention of these parts.

NOTE: Removal steps in this procedure may contain installation details.

1. Refer to: Battery Disconnect and Connect (414-01 Battery, Mounting and Cables, General Procedures).
   Refer to: Steering System Health and Safety Precautions (100-00 General Information, Description and Operation).
2. Refer to: Wheel and Tire (204-04 Wheels and Tires, Removal and Installation).
3. **CAUTION: Make sure that the ball joint ball does not rotate.**
   Torque: 63 Nm

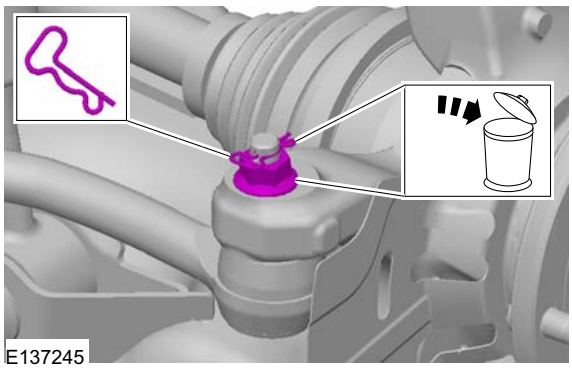

4. **CAUTION: Do not use a hammer to separate the tie rod from the wheel knuckle or damage to the wheel knuckle can result.**
   Special Tool(s): 211-020

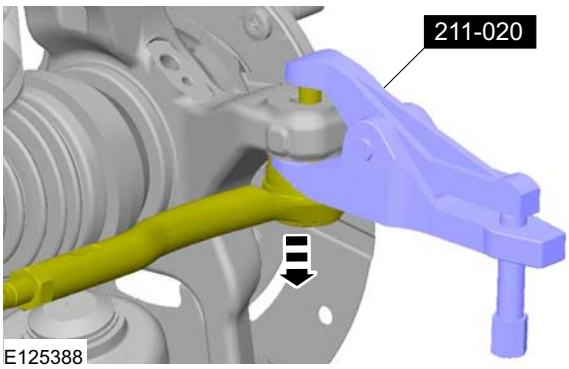

5. **NOTE:** Make sure that the installation marks are aligned.
   Torque: 80 Nm

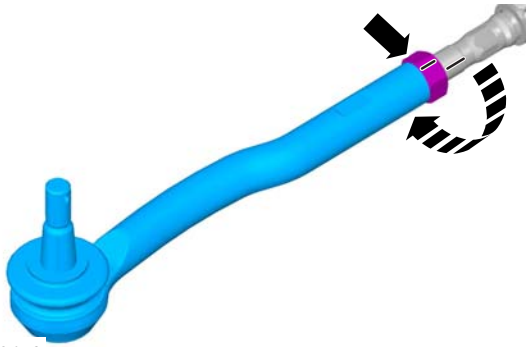

Installation

1. To install, reverse the removal procedure.
2. Refer to: Front Toe Adjustment (204-00 Suspension System - General Information, General Procedures).

SECTION 211-04 Steering Column

VEHICLE APPLICATION: 2011.50 Ranger

CONTENTS PAGE

REMOVAL AND INSTALLATION

Steering Wheel..... (13 524 0) 211-04-2
Steering Column..... (13 542 0) 211-04-3

REMOVAL AND INSTALLATION

Steering Wheel(13 524 0)

General Equipment

Adhesive Tape

Removal

CAUTION: Make sure that the steering wheel lock is engaged.

NOTE: Removal steps in this procedure may contain installation details.

1.

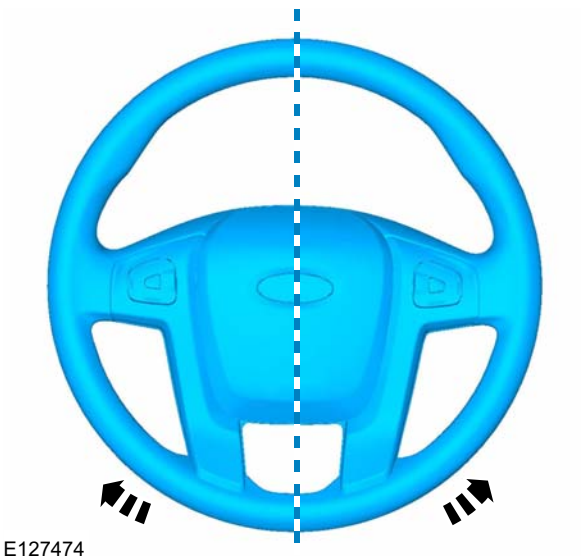

2. Refer to: Driver Air Bag Module (501-20 Supplemental Restraint System, Removal and Installation).

3. Torque: 40 Nm

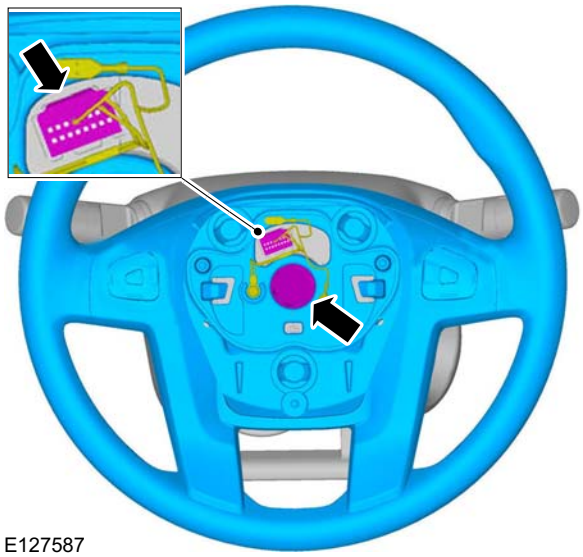

CAUTION: Make sure that the clockspring rotor does not rotate.

4. General Equipment: Adhesive Tape

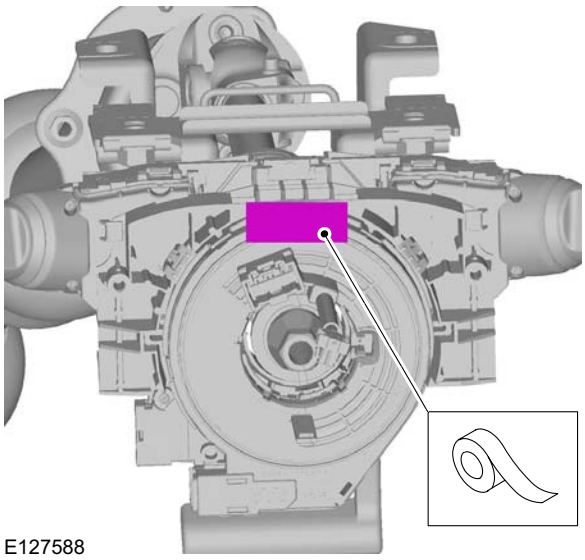

Installation

1. To install, reverse the removal procedure.

REMOVAL AND INSTALLATION

Steering Column(13 542 0)

General Equipment

Ford Diagnostic Equipment

Removal

NOTE: Removal steps in this procedure may contain installation details.

1. Refer to: Steering System Health and Safety Precautions (100-00 General Information, Description and Operation).
2. Refer to: Ignition Switch (211-05 Steering Column Switches, Removal and Installation).
3. Refer to: Steering Wheel (211-04 Steering Column, Removal and Installation).
4.

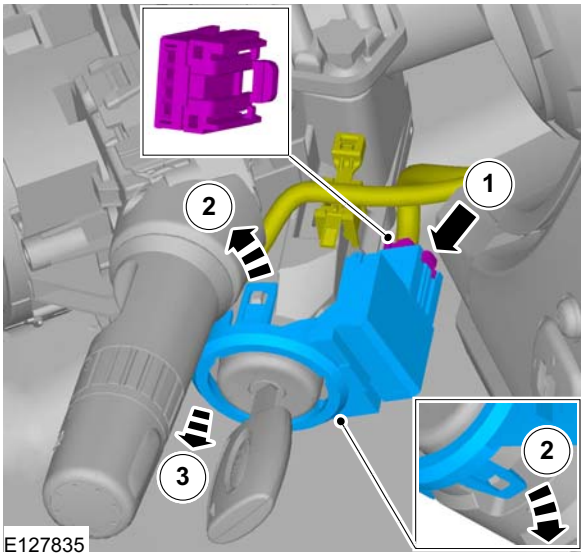

5. **NOTE:** This step is only necessary when installing a new component.

   Torque: 25 Nm

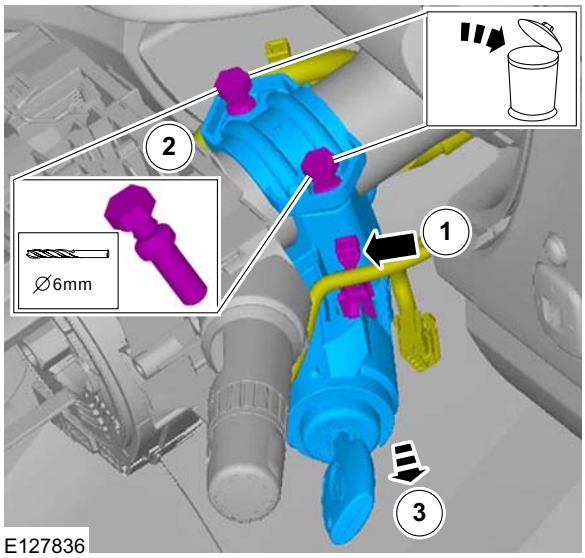

6. Torque: 7 Nm

REMOVAL AND INSTALLATION

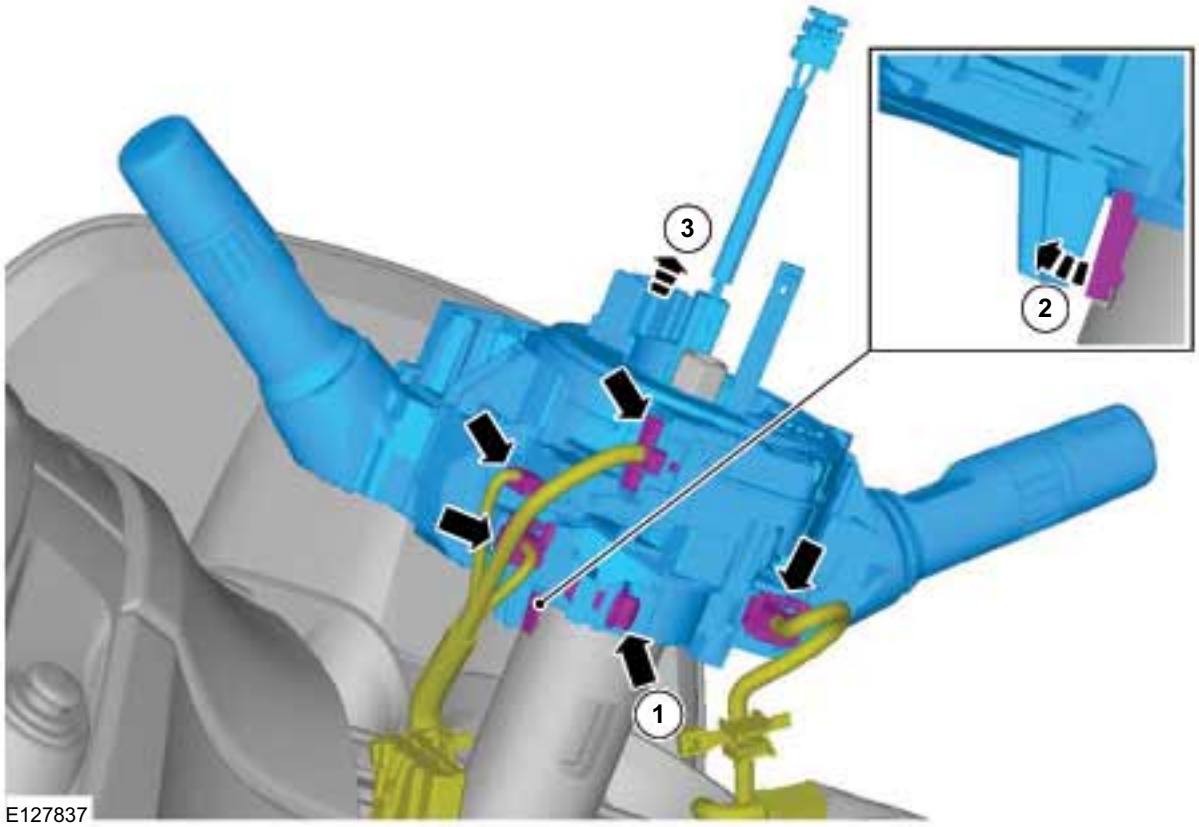

Vehicles with driver lower air bag

7. Refer to: Driver Lower Air Bag Module (501-20 Supplemental Restraint System, Removal and Installation).

Vehicles without driver lower air bag

8.

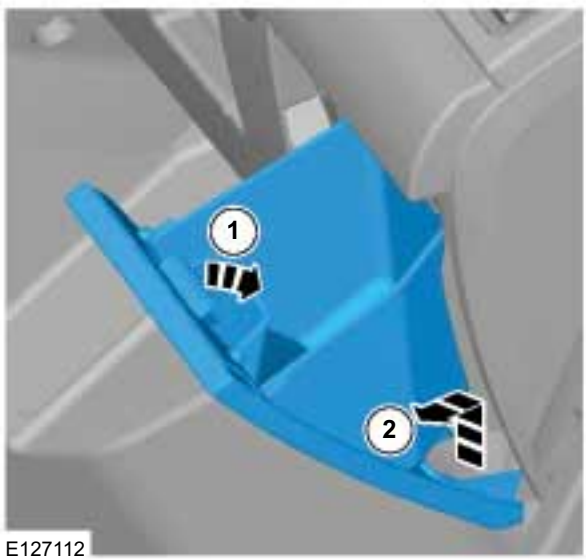

9.

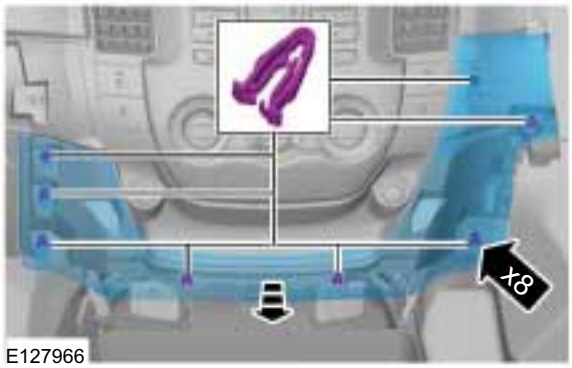

REMOVAL AND INSTALLATION

10. Torque: 2.5 Nm

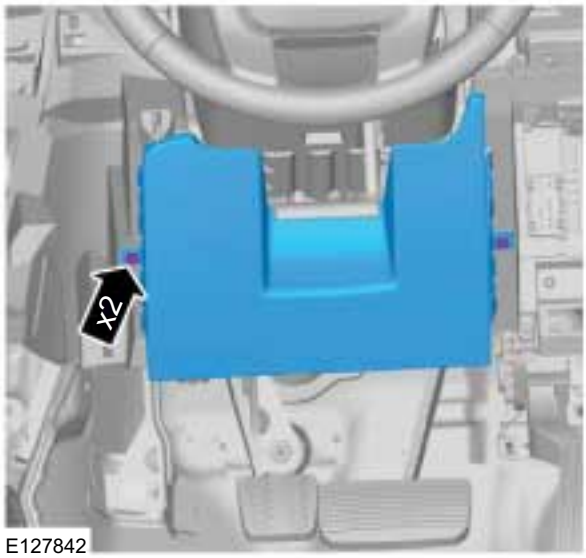

E127842

All vehicles

11. **NOTE:** Make sure that the nuts are not tightened with tilt lever released in position during installation.
    1. Torque: 22 Nm
    2. Torque: 15 Nm

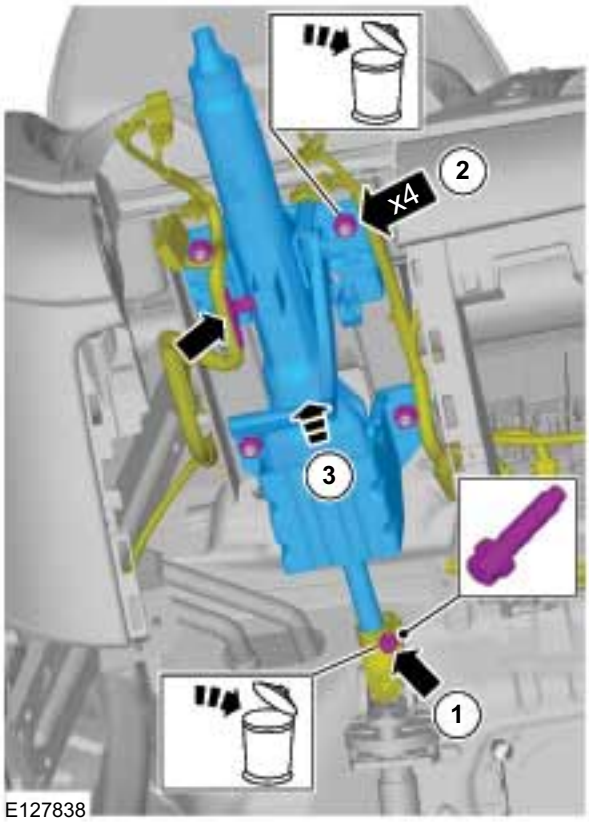

E127838

12. Refer to: Lifting (100-02 Jacking and Lifting, Description and Operation).
13. 1. If necessary.
    Torque: 23 Nm
    2. Torque: 23 Nm

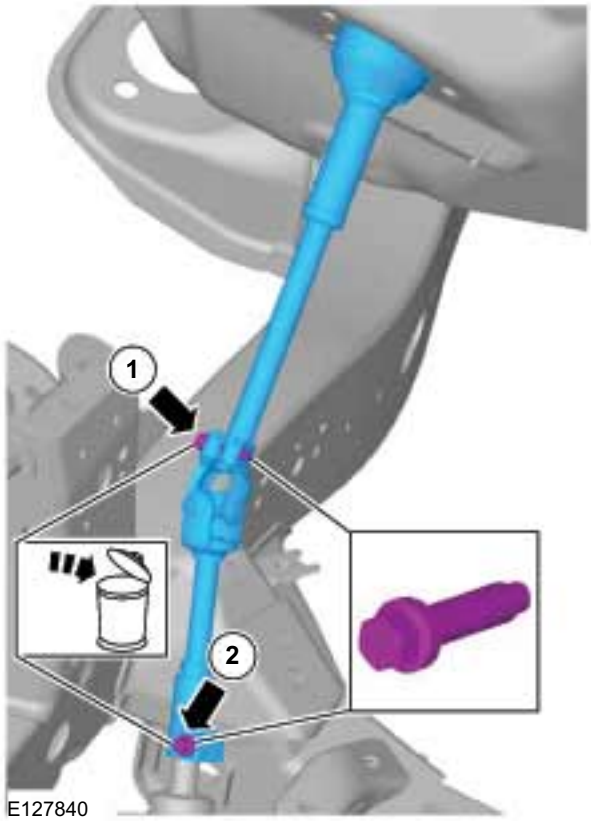

E127840

REMOVAL AND INSTALLATION

14. **NOTE:** Make sure that the plastic caps are removed.

    Torque: 7 Nm

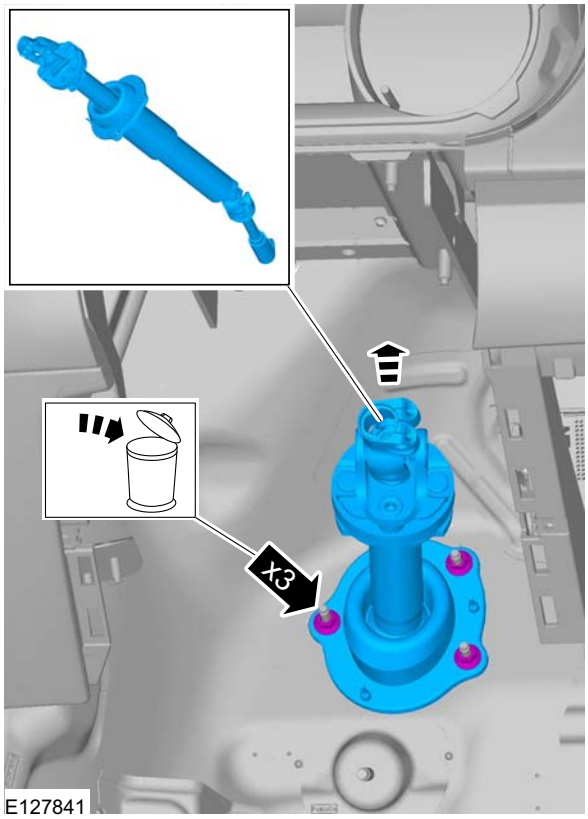

NOTE: Do not shorten the shaft until the groove is covered. Replace it, if the shaft has been shortened.

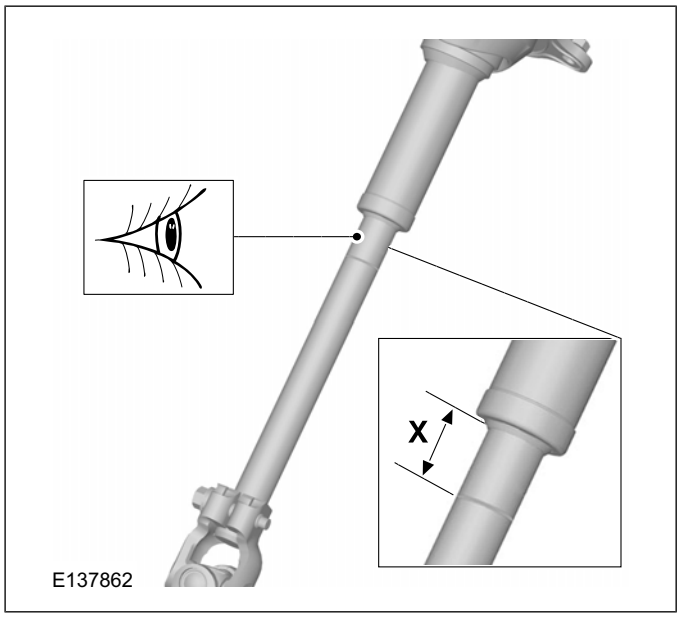

3. Refer to: Clockspring Adjustment (501-20 Supplemental Restraint System, General Procedures).

4. Configure the steering column module.

   General Equipment: Ford Diagnostic Equipment

Installation

1. To install, reverse the removal procedure.

2. ⚠ **CAUTION: Take extra care not to shorten the shaft.**

SECTION 211-05 Steering Column Switches

VEHICLE APPLICATION: 2011.50 Ranger

CONTENTS PAGE

REMOVAL AND INSTALLATION

Ignition Switch..... (33 616 0) 211-05-2
Steering Column Multifunction Switch..... (33 612 0) 211-05-4
Steering Column Multifunction Switch LH..... 211-05-5
Steering Column Multifunction Switch RH..... 211-05-7
Steering Column Lock and Ignition Switch Housing..... 211-05-9

REMOVAL AND INSTALLATION

Ignition Switch(33 616 0)

Removal

NOTE: Removal steps in this procedure may contain installation details.

1. Refer to: Battery Disconnect and Connect (414-01 Battery, Mounting and Cables, General Procedures).

2.

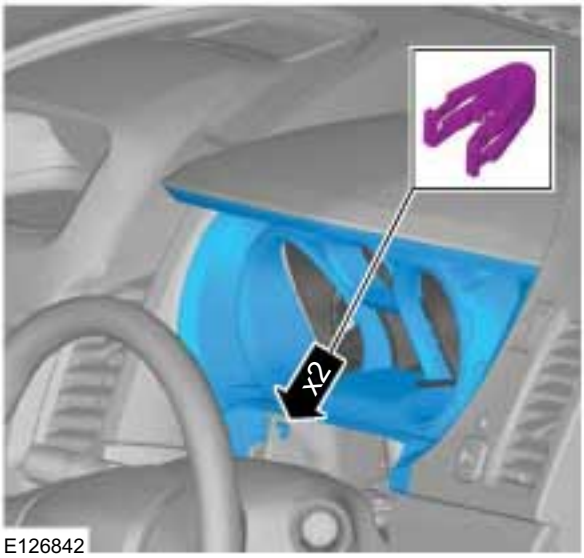

E126842

3.

E127542

4.

E128174

5.

E128175

REMOVAL AND INSTALLATION

6.

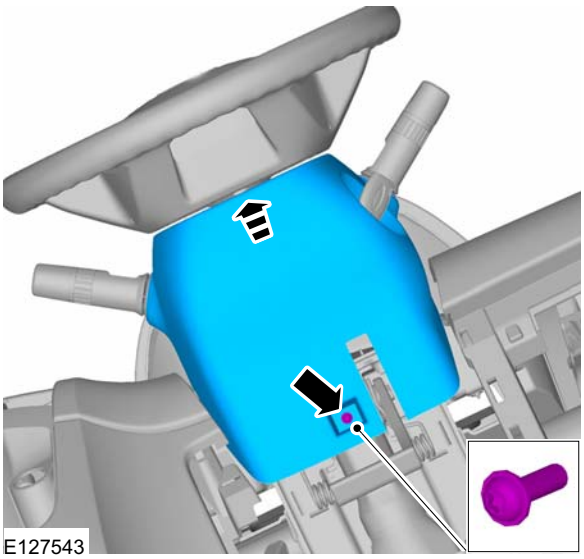

8.

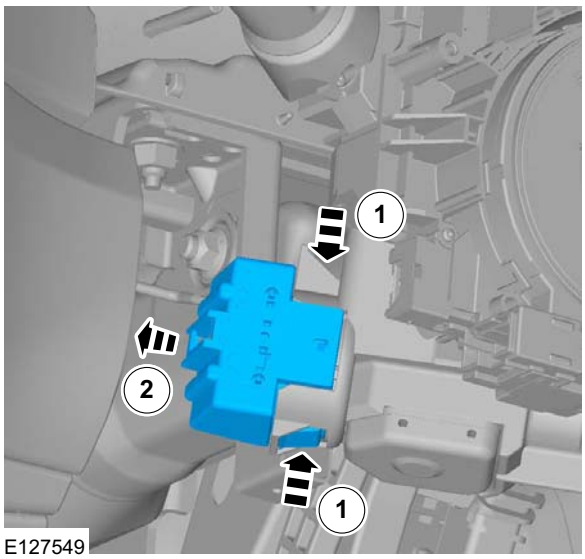

7.

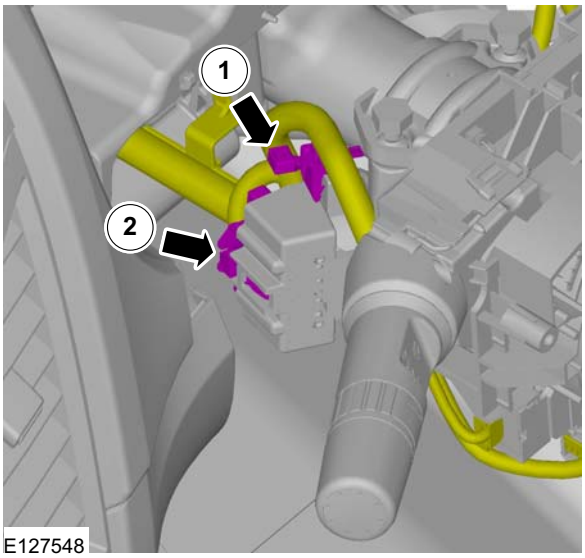

Installation

1. To install, reverse the removal procedure.

REMOVAL AND INSTALLATION

Steering Column Multifunction Switch(33 612 0)

Removal

NOTE: Removal steps in this procedure may contain installation details.

1. Refer to: Clockspring (501-20 Supplemental Restraint System, Removal and Installation).
2. 1. Torque: 7 Nm

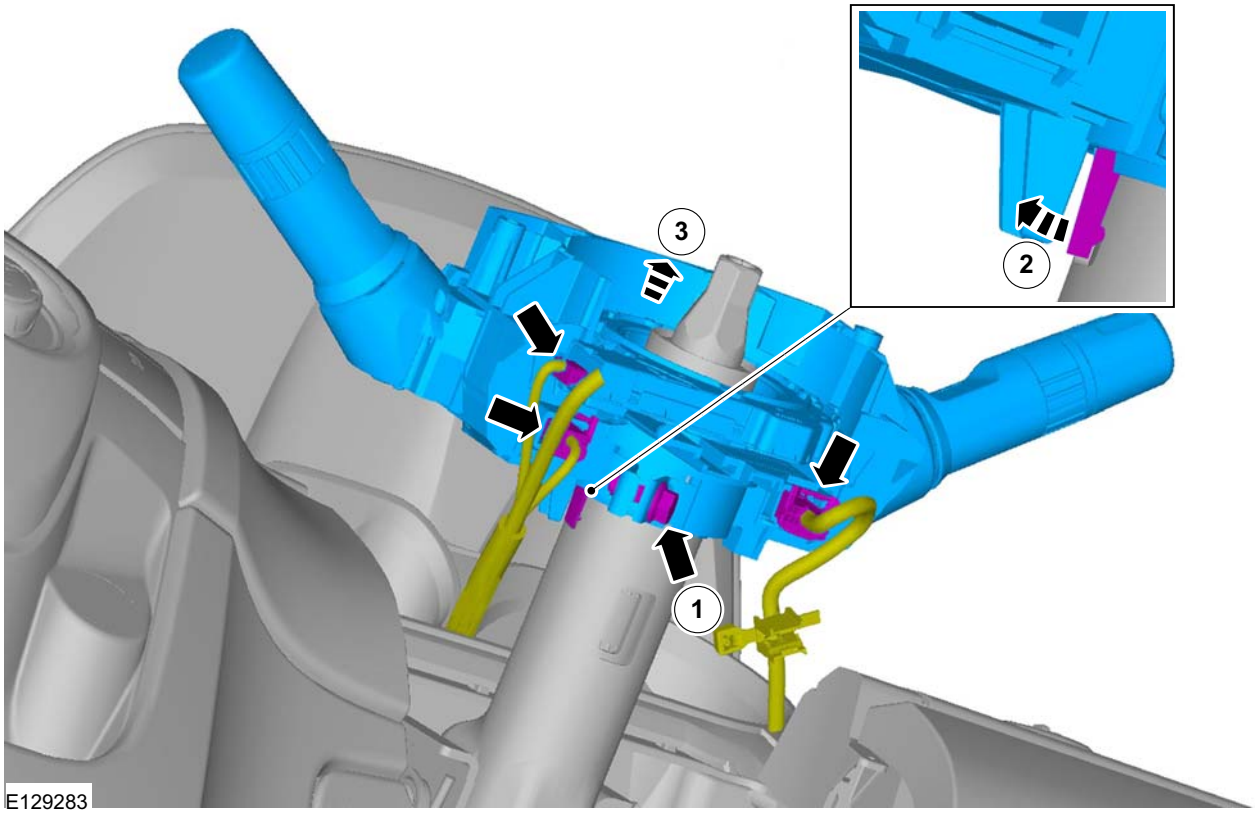

Installation

1. To install, reverse the removal procedure.

REMOVAL AND INSTALLATION

Steering Column Multifunction Switch LH

Removal

NOTE: Removal steps in this procedure may contain installation details.

1. Refer to: Battery Disconnect and Connect (414-01 Battery, Mounting and Cables, General Procedures).

2.

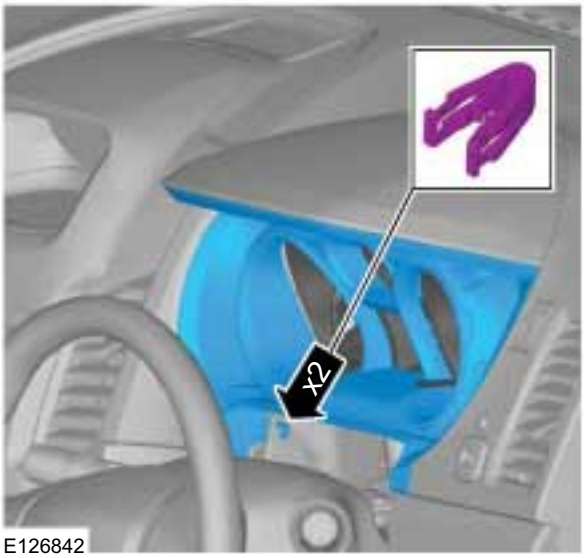

E126842

3.

E127542

4. Torque: 1.5 Nm

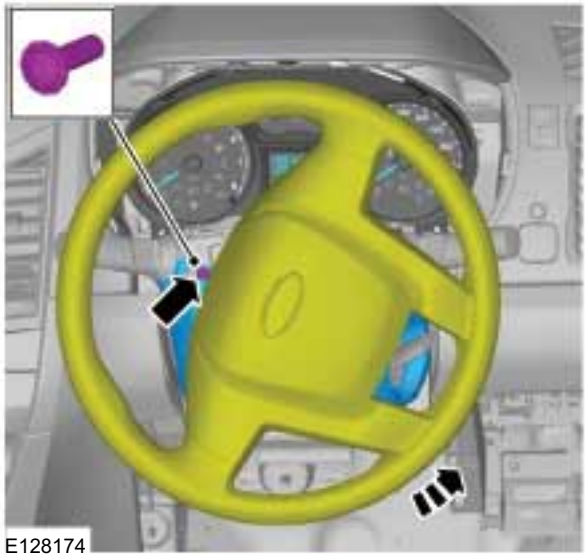
E128174

5. Torque: 1.5 Nm

E128175

REMOVAL AND INSTALLATION

6. Torque: 2.5 Nm

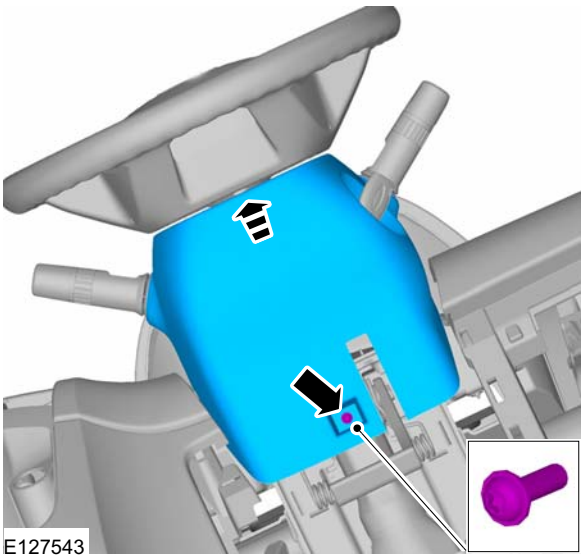

7.

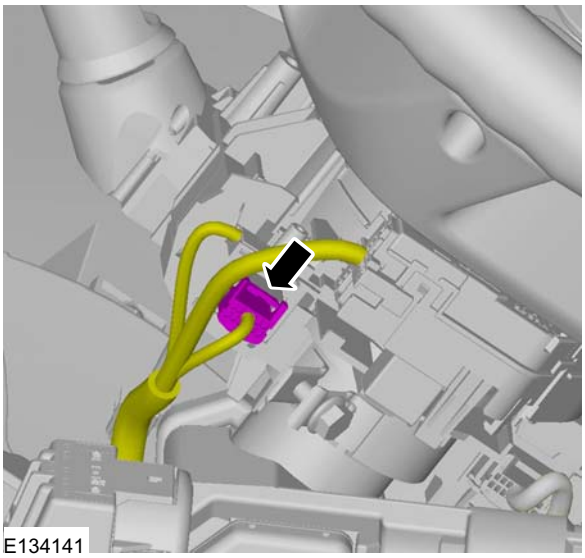

8.

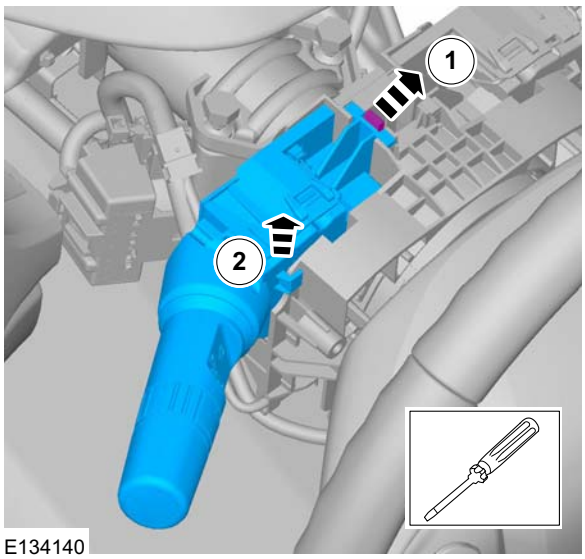

Installation

1. To install, reverse the removal procedure.

REMOVAL AND INSTALLATION

Steering Column Multifunction Switch RH

Removal

NOTE: Removal steps in this procedure may contain installation details.

1. Refer to: Battery Disconnect and Connect (414-01 Battery, Mounting and Cables, General Procedures).

2.

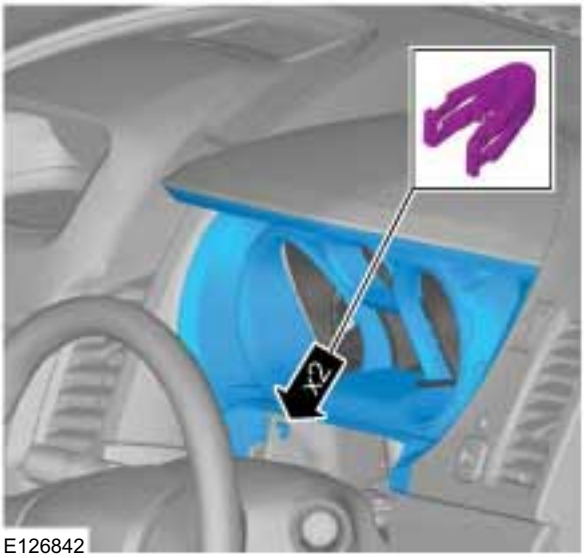
E126842

3.

E127542

4. Torque: 1.5 Nm

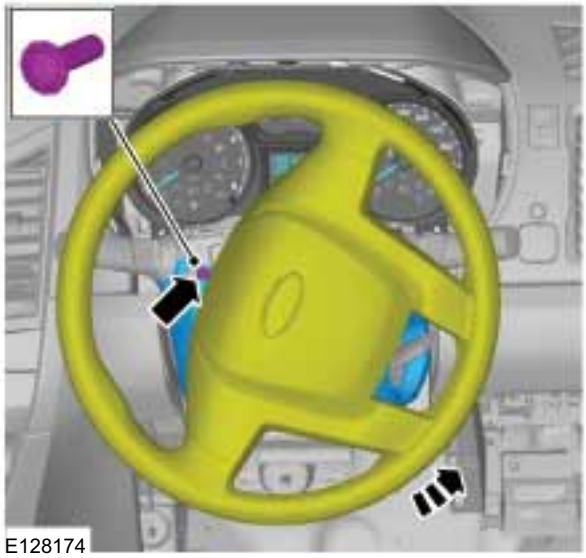
E128174

5. Torque: 1.5 Nm

E128175

REMOVAL AND INSTALLATION

6. Torque: 2.5 Nm

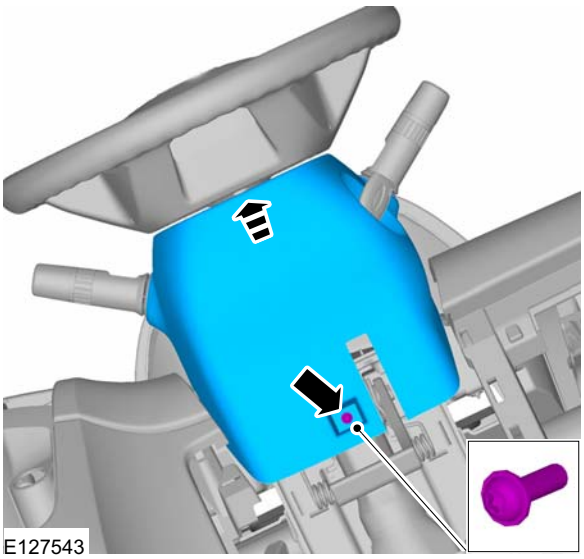

7.

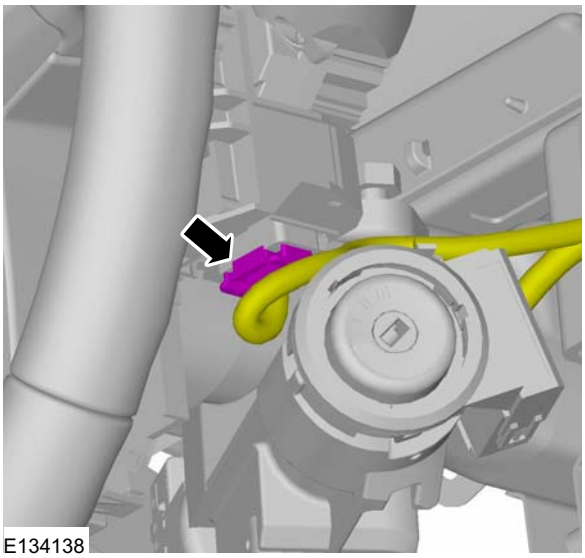

8.

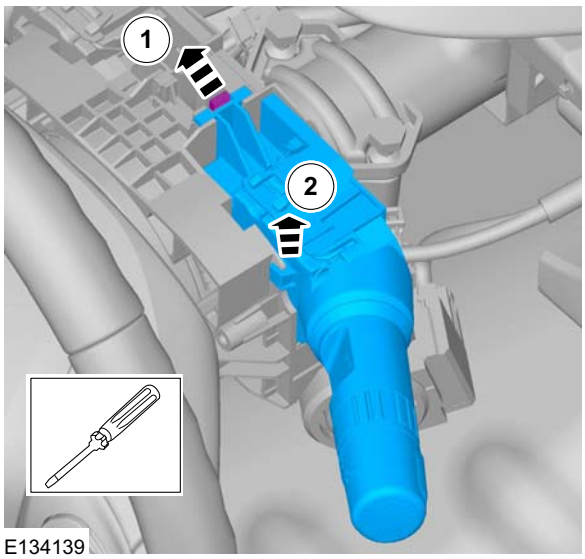

Installation

1. To install, reverse the removal procedure.

REMOVAL AND INSTALLATION

Steering Column Lock and Ignition Switch Housing

General Equipment

Punch

Removal

NOTE: Removal steps in this procedure may contain installation details.

1. Refer to: Battery Disconnect and Connect (414-01 Battery, Mounting and Cables, General Procedures).
   Refer to: Steering System Health and Safety Precautions (100-00 General Information, Description and Operation).
2. Refer to: Ignition Switch (211-05 Steering Column Switches, Removal and Installation).
3.

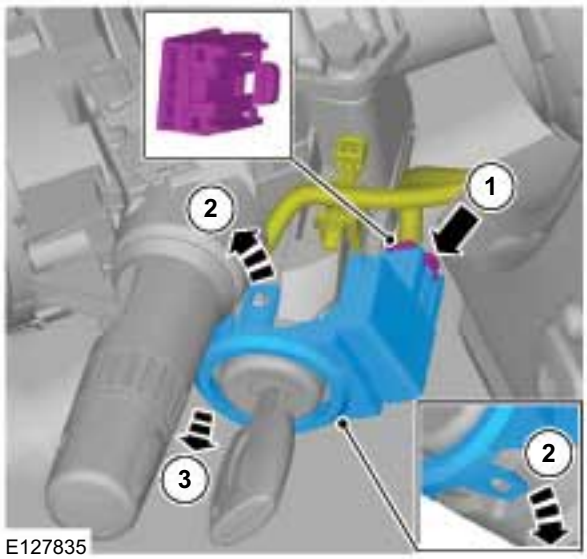

E127835

4. **NOTE:** This step is only necessary when installing a new component.
   Torque: 30 Nm

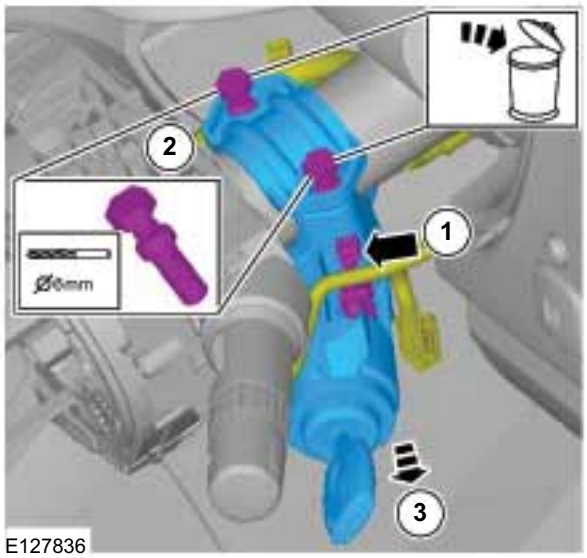

E127836

5. Turn the ignition key to position I.
   General Equipment: Punch

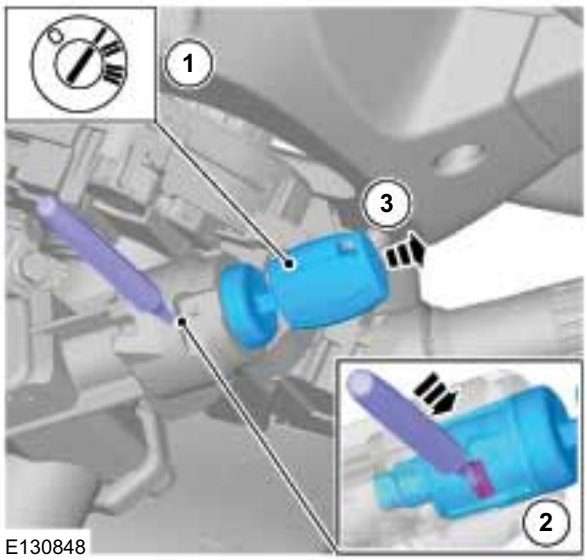

E130848

Installation

1. To install, reverse the removal procedure.

GROUP

3

Powertrain

SECTION TITLE PAGE

Engine

Engine System - General Information....303-00
Engine2.5L Duratec-HE (122kW/165PS) - MI4....303-01A
Engine2.2L Duratorq-TDCi (88kW/120PS) - Puma/2.2L Duratorq-TDCi (96kW/130PS) - Puma/2.2L Duratorq-TDCi (110kW/150PS) - Puma....303-01B
Engine3.2L Duratorq-TDCi (148kW/200PS) - Puma....303-01C
Engine Cooling2.2L Duratorq-TDCi (88kW/120PS) - Puma/2.2L Duratorq-TDCi (96kW/130PS) - Puma/2.2L Duratorq-TDCi (110kW/150PS) - Puma....303-03A
Engine Cooling3.2L Duratorq-TDCi (148kW/200PS) - Puma....303-03B
Engine Cooling....303-03C
Fuel Charging and Controls2.5L Duratec-HE (122kW/165PS) - MI4....303-04A
Fuel Charging and Controls2.2L Duratorq-TDCi (88kW/120PS) - Puma/2.2L Duratorq-TDCi (96kW/130PS) - Puma/2.2L Duratorq-TDCi (110kW/150PS) - Puma....303-04B
Fuel Charging and Controls3.2L Duratorq-TDCi (148kW/200PS) - Puma....303-04C
Fuel Charging and Controls - Turbocharger....303-04D
Accessory Drive2.5L Duratec-HE (122kW/165PS) - MI4....303-05A
Accessory Drive2.2L Duratorq-TDCi (88kW/120PS) - Puma/2.2L Duratorq-TDCi (96kW/130PS) - Puma/2.2L Duratorq-TDCi (110kW/150PS) - Puma/3.2L Duratorq-TDCi (148kW/200PS) - Puma....303-05B
Starting System2.5L Duratec-HE (122kW/165PS) - MI4....303-06A
Starting System2.2L Duratorq-TDCi (88kW/120PS) - Puma/2.2L Duratorq-TDCi (96kW/130PS) - Puma/2.2L Duratorq-TDCi (110kW/150PS) - Puma/3.2L Duratorq-TDCi (148kW/200PS) - Puma....303-06B
Engine Ignition2.5L Duratec-HE (122kW/165PS) - MI4....303-07A
Glow Plug System2.2L Duratorq-TDCi (88kW/120PS) - Puma/2.2L Duratorq-TDCi (96kW/130PS) - Puma/2.2L Duratorq-TDCi (110kW/150PS) - Puma....303-07B
Glow Plug System3.2L Duratorq-TDCi (148kW/200PS) - Puma....303-07C
Engine Emission Control2.2L Duratorq-TDCi (88kW/120PS) - Puma/2.2L Duratorq-TDCi (96kW/130PS) - Puma/2.2L Duratorq-TDCi (110kW/150PS) - Puma/3.2L Duratorq-TDCi (148kW/200PS) - Puma....303-08A
Engine Emission Control....303-08B
Intake Air Distribution and Filtering2.5L Duratec-HE (122kW/165PS) - MI4....303-12A
Intake Air Distribution and Filtering2.2L Duratorq-TDCi (88kW/120PS) - Puma/2.2L Duratorq-TDCi (96kW/130PS) - Puma/2.2L Duratorq-TDCi (110kW/150PS) - Puma/3.2L Duratorq-TDCi (148kW/200PS) - Puma....303-12B
Evaporative Emissions....303-13
Electronic Engine Controls2.5L Duratec-HE (122kW/165PS) - MI4....303-14A
Electronic Engine Controls2.2L Duratorq-TDCi (88kW/120PS) - Puma/2.2L Duratorq-TDCi (96kW/130PS) - Puma/2.2L Duratorq-TDCi (110kW/150PS) - Puma/3.2L Duratorq-TDCi (148kW/200PS) - Puma....303-14B

Automatic Transmission/Transaxle

Automatic Transmission/TransaxleVehicles With: 6-Speed Automatic Transaxle - 6R80....307-01
Transmission/Transaxle Cooling....307-02
Automatic Transmission/Transaxle External Controls....307-05

Manual Transmission/Transaxle, Clutch and Transfer Case

Manual Transmission/Transaxle and Clutch - General Information....308-00
ClutchVehicles With: 5-Speed Manual Transmission - MT75....308-01A
ClutchVehicles With: 6-Speed Manual Transmission - MT82....308-01B
Clutch ControlsVehicles With: 5-Speed Manual Transmission - MT75....308-02A
Clutch ControlsVehicles With: 6-Speed Manual Transmission - MT82....308-02B
Manual Transmission/TransaxleVehicles With: 5-Speed Manual Transmission - MT75....308-03A
Manual Transmission/TransaxleVehicles With: 6-Speed Manual Transmission - MT82....308-03B
Manual Transmission/Transaxle External ControlsVehicles With: MT-75....308-06A
Manual Transmission/Transaxle External ControlsVehicles With: MT82....308-06B
Transfer CaseVehicles With: 5-Speed Manual Transmission - MT75/6-Speed Manual Transmission - MT82....308-07A
Transfer CaseVehicles With: 6-Speed Automatic Transaxle - 6R80....308-07B

Exhaust System

Exhaust System2.5L Duratec-HE (122kW/165PS) - MI4....309-00A
Exhaust System2.2L Duratorq-TDCi (88kW/120PS) - Puma/2.2L Duratorq-TDCi (96kW/130PS) - Puma/2.2L Duratorq-TDCi (110kW/150PS) - Puma/3.2L Duratorq-TDCi (148kW/200PS) - Puma....309-00B

Fuel System - General Information

Fuel System - General Information2.5L Duratec-HE (122kW/165PS) - MI4....310-00A
Fuel System - General Information2.2L Duratorq-TDCi (88kW/120PS) - Puma/2.2L Duratorq-TDCi (96kW/130PS) - Puma/2.2L Duratorq-TDCi (110kW/150PS) - Puma/3.2L Duratorq-TDCi (148kW/200PS) - Puma....310-00B
Fuel Tank and Lines....310-01A
Fuel Tank and Lines2.2L Duratorq-TDCi (88kW/120PS) - Puma/2.2L Duratorq-TDCi (96kW/130PS) - Puma/2.2L Duratorq-TDCi (110kW/150PS) - Puma/3.2L Duratorq-TDCi (148kW/200PS) - Puma....310-01B
Acceleration Control....310-02

SECTION 303-00 Engine System - General Information

VEHICLE APPLICATION: 2011.50 Ranger

CONTENTS PAGE

GENERAL PROCEDURES

Camshaft Bearing Journal Diameter..... 303-00-2
Camshaft Bearing Journal Clearance..... 303-00-3
Camshaft End Play..... 303-00-4
Camshaft Surface Inspection..... 303-00-5
Camshaft Lobe Lift..... 303-00-6
Crankshaft Main Bearing Journal Clearance..... 303-00-7
Crankshaft Main Bearing Journal Diameter..... 303-00-8
Crankshaft End Play..... 303-00-9
Cylinder Bore Taper..... 303-00-10
Piston Inspection..... 303-00-11
Piston Pin to Bore Diameter..... 303-00-12
Piston Diameter..... 303-00-13
Piston Ring End Gap..... 303-00-14
Piston Ring-to-Groove Clearance..... 303-00-15
Piston Pin Diameter..... 303-00-16
Connecting Rod Large End Bore..... 303-00-17
Valve Stem Diameter..... 303-00-18
Valve Seat Inspection..... 303-00-19
Flywheel Inspection..... 303-00-20
Flywheel Clutch Surface Inspection..... 303-00-21
Cylinder Head Distortion..... 303-00-22
Cylinder Block Distortion..... 303-00-23
Exhaust Manifold Cleaning and Inspection..... 303-00-24
Bearing Inspection..... 303-00-25

GENERAL PROCEDURES

Camshaft Bearing Journal Diameter

1. **Determine the diameter of the camshaft journals.**
   - Using a micrometer measure the diameter at 90 degrees intervals to determine if the journals are out-of-round.
   - Measure at two different points on the journal to determine if there is any tapering.
   - If the measurements are out of the specified range, install a new camshaft.

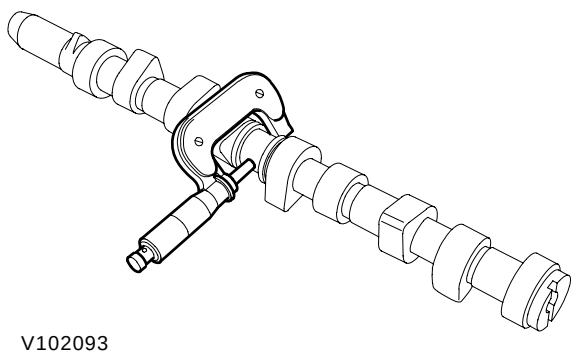

GENERAL PROCEDURES

Camshaft Bearing Journal Clearance

1. **NOTE: Make sure that the following stages are followed exactly. The tappets or followers must be removed to carry out this measurement.**

NOTE: Make sure that the camshaft is to specification.

NOTE: The bearing caps and journals should be free from engine oil and dirt.

Position on a width of plastigage on the bearing cap.

- Insert the camshaft, without lubrication, into the cylinder head.
- Position a plastigage strip, which should be equal to the width of the bearing cap, on the bearing journal.

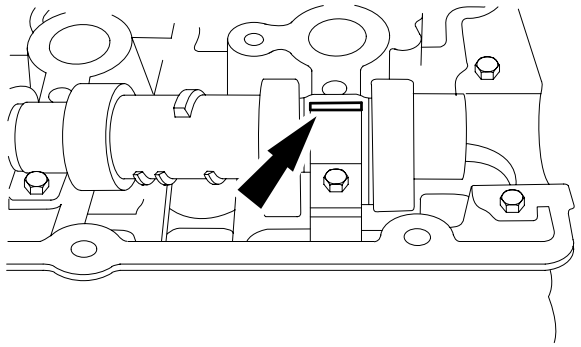

ELE0000649

2. **Following the tightening specification, install the camshaft bearing caps. Refer to the corresponding Section 303-01.**
3. **NOTE: Do not strike the bearing caps.**

   Remove the camshaft bearing caps, refer to the corresponding Section 303-01.
4. **Using the Plastigage, read off the measurement.**
   - Compare the width of plastigage with the plastigage scale.
   - The value that is read off is the bearing clearance.

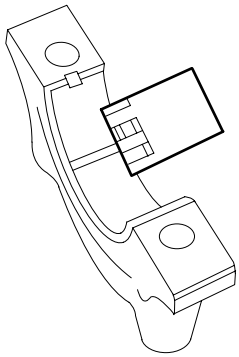

ELE0000597

GENERAL PROCEDURES

Camshaft End Play

1. **NOTE: Make sure that the camshaft is to specification.**

   Using a Dial Indicator Gauge, measure the end play.

   - Slide the camshaft in both directions. Read and note the maximum and minimum values on the Dial Indicator Gauge.
     - End play = maximum value minus minimum value
   - If the measurement is out of specification, install new components.

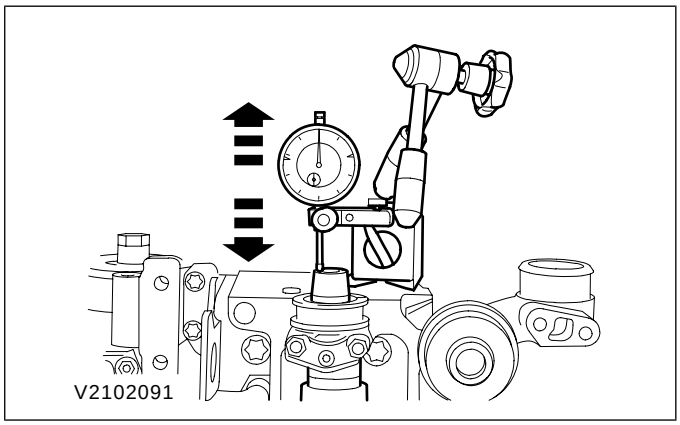

GENERAL PROCEDURES

Camshaft Surface Inspection

1. **Inspect the camshaft lobes for pitting or damage in the active area. Minor pitting is acceptable outside the active area.**

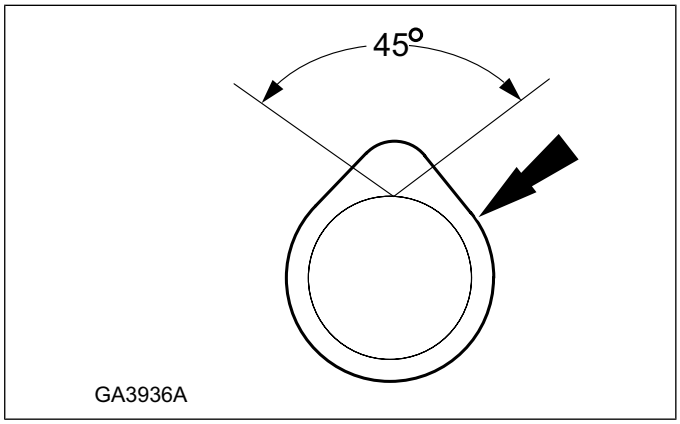

GENERAL PROCEDURES

Camshaft Lobe Lift

1. Determine the cam lift.

- Using a micrometer measure the cam in two directions.
- The difference between the two measurements is the cam lift.

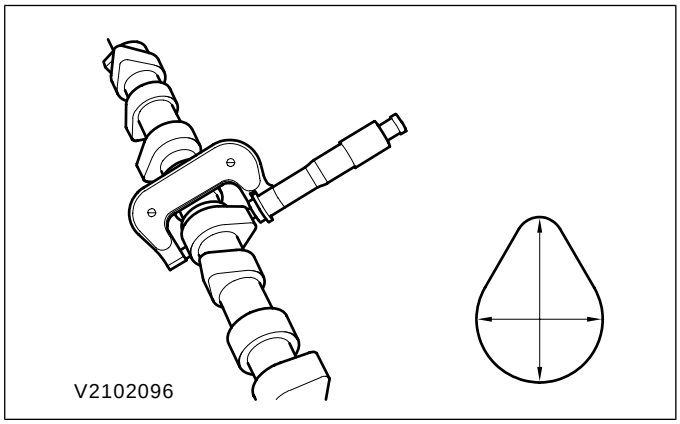

GENERAL PROCEDURES

Crankshaft Main Bearing Journal Clearance

1. **Information not available at time of going to press.**

GENERAL PROCEDURES

Crankshaft Main Bearing Journal Diameter

General Equipment

Micrometer

1. **Measure the diameter of the main bearing journals and the big-end bearing journals.**
   - Repeat the measurement with the micrometer offset by 90°, in order to determine any eccentricity which may be present.
   - Measure the journal at two different positions to determine any conicity which may be present.

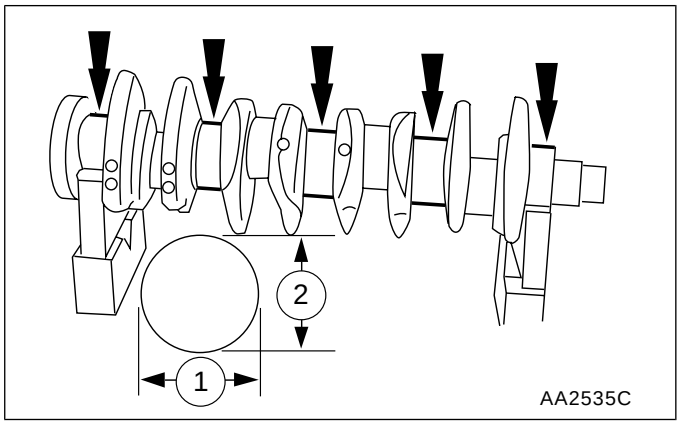

GENERAL PROCEDURES

Crankshaft End Play

General Equipment

Dial indicator
Dial indicator fixture

1. Determine the end float

- Place on the dial indicator and bracket .
- Determine the end float by raising the crankshaft with the aid of a screwdriver.
- If necessary, correct the end float by using new thrust half washers.

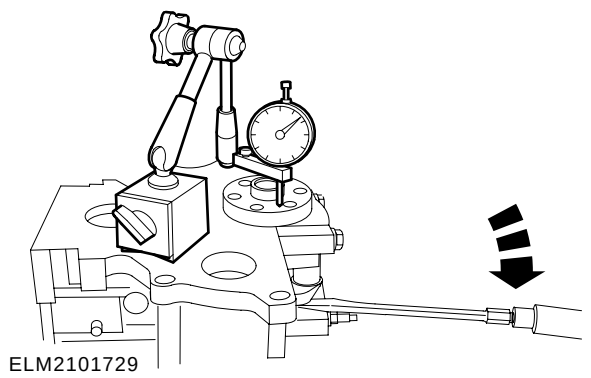

GENERAL PROCEDURES

Cylinder Bore Taper

1. **NOTE: The main bearing caps or lower crankcase must be in place and tightened to the specified torque; however, the bearing shells should not be installed.**

   Measure the cylinder bore with an internal micrometer.

   - Carry out the measurements in different directions and at different heights to determine if there is any out-of-roundness or tapering.
   - If the measurement is out of the specified range, install a new block or hone out the cylinder block (if aplicable/allowed).

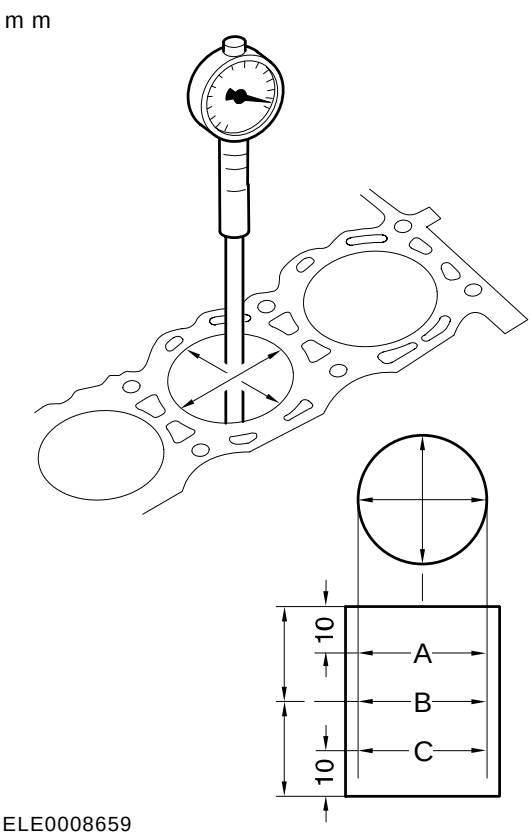

GENERAL PROCEDURES

Piston Inspection

1. **CAUTION: Do not use any aggressive cleaning fluid or a wire brush to clean the piston.**

   Carry out a visual inspection.

   - Clean the piston skirt, pin bush, ring grooves and crown and check for wear or cracks.
   - If there are signs of wear on the piston skirt, check whether the connecting rod is twisted or bent.

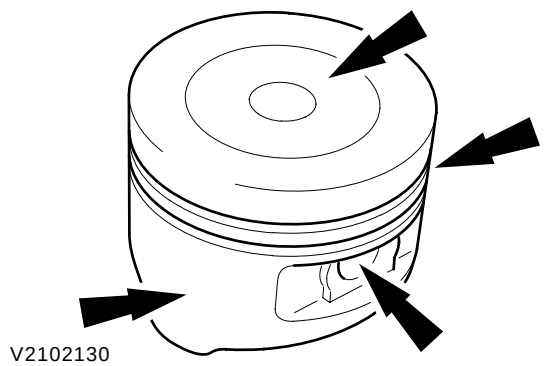

GENERAL PROCEDURES

Piston Pin to Bore Diameter

1. **NOTE: The piston and piston pin form a matched pair. Do not mix up the components.**

   Measure the diameter of the piston pin bore.

   - Measure the diameter in two directions.
   - If the values are not to specification, install both a new piston and a new piston pin.

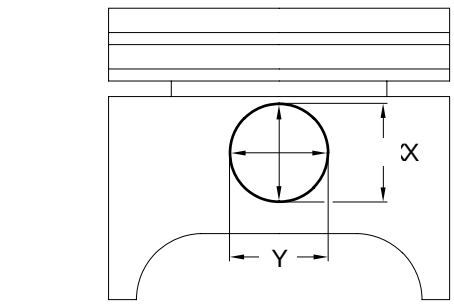

V2102132

GENERAL PROCEDURES

Piston Diameter

General Equipment

Micrometer

1. **NOTE: Mark the piston to make sure the piston is installed correctly.**

   Using a Micrometer measure the piston diameter.

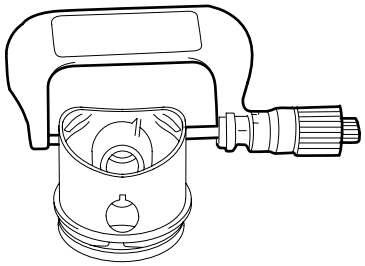

IAV2102103

GENERAL PROCEDURES

Piston Ring End Gap

1. **CAUTION: Do not mix up the piston rings. Install the piston rings in the same position and location.**

   Take the piston ring and use a piston without rings to push the piston ring about 30 mm into the cylinder bore.

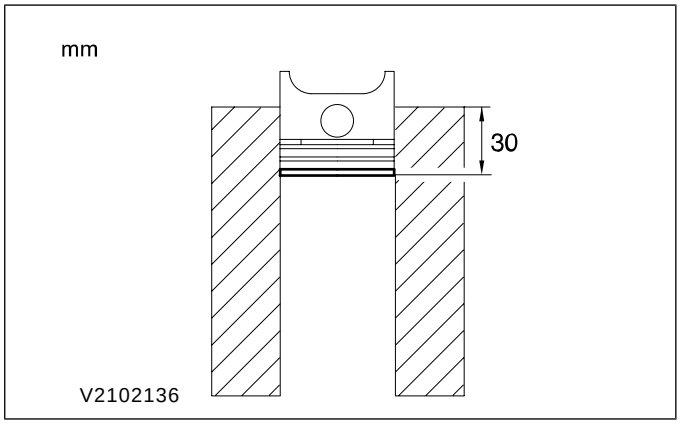

2. **Using the Feeler Gauge, measure the piston ring gap.**

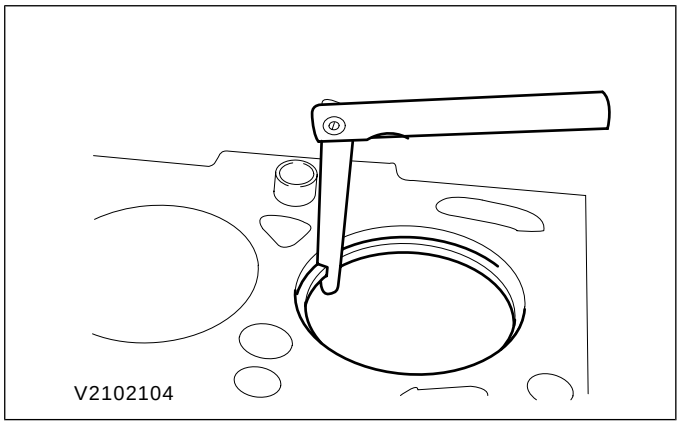

GENERAL PROCEDURES

Piston Ring-to-Groove Clearance

General Equipment

Feeler Gauge

1. **NOTE: The piston ring must protrude from the piston groove. To determine the piston ring clearance, insert the Feeler Gauge right to the back of the groove, behind the wear ridge.**

   Using the Feeler Gauge , measure the piston ring clearance.

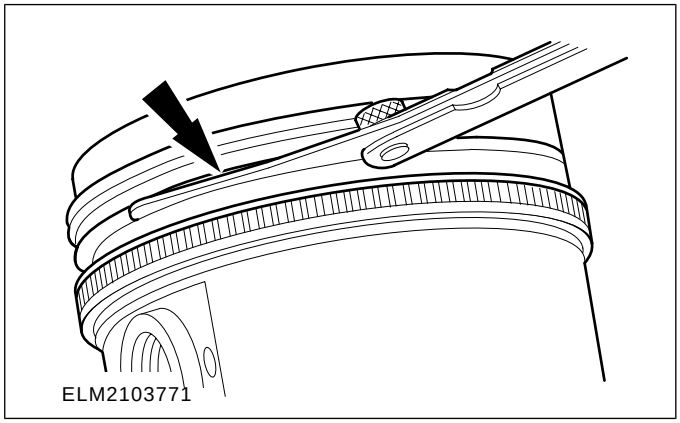

GENERAL PROCEDURES

Piston Pin Diameter

1. **NOTE: The piston and piston pin are a matched pair. Do not mix up the components.**

   Measure the piston pin diameter.

   - Measure the diameter in two directions.
   - If the values are not to specification, install a new piston and a new piston pin.

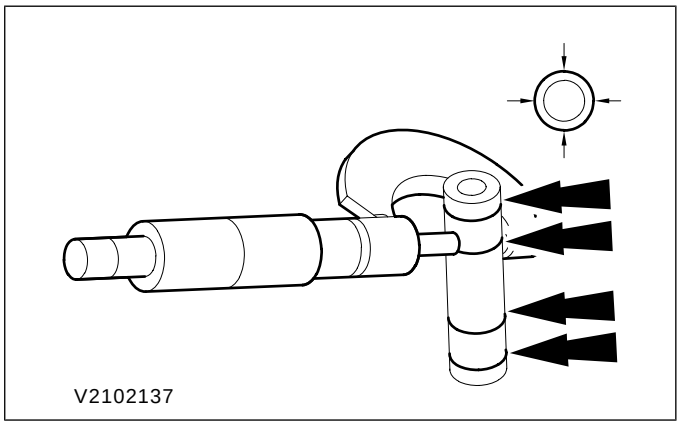

GENERAL PROCEDURES

Connecting Rod Large End Bore

1. **Measure the bearing bore in two directions. The difference is the connecting rod bore out-of-round. Verify the out-of-round and the bearing bore is within specification.**

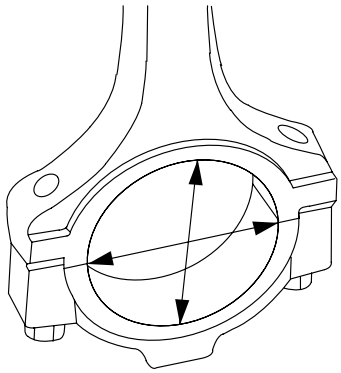

GENERAL PROCEDURES

Valve Stem Diameter

1. **Using a micrometer measure the diameter of the valve stems.**
   - If the measurements are not to specification, install a new valve.

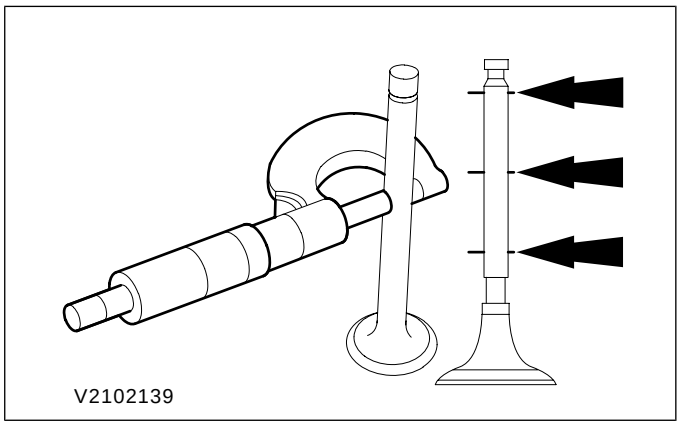

GENERAL PROCEDURES

Valve Seat Inspection

General Equipment

Valve seat width scale

1. Measure the width of the valve seat.

- Measure the valve seat width using the Valve seat width scale.
- If the value is not to specification rework the valve seat.

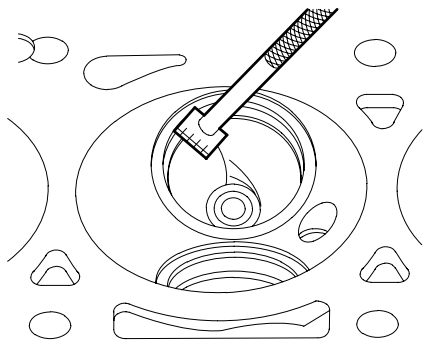

IAV2102141

GENERAL PROCEDURES

Flywheel Inspection

1. **Inspect the flywheel. If there is evidence of the following, install a new flywheel.**
   1. Cracks.
   2. Worn ring gear teeth.
   3. Chipped or cracked ring gear teeth.

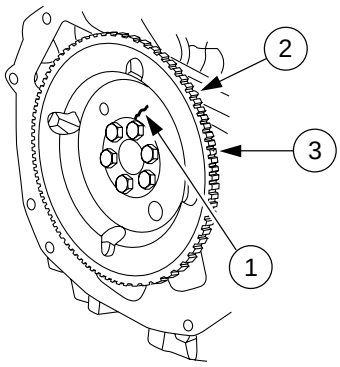

GA3930A

GENERAL PROCEDURES

Flywheel Clutch Surface Inspection

1. Check the flywheel for:

- burning
- grooves
- cracks
- Renew the flywheel if necessary.

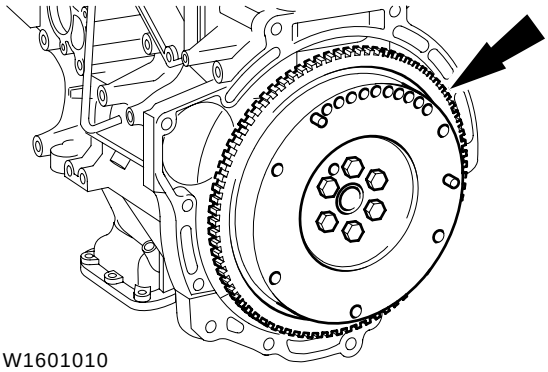

GENERAL PROCEDURES

Cylinder Head Distortion

General Equipment

Feeler gauge
Straight edge

1. **Using a straight edge and feeler gauge, measure the cylinder head distortion.**
   - Measure the mating face distortion.
   - Refer to Specifications in the appropriate engine section.

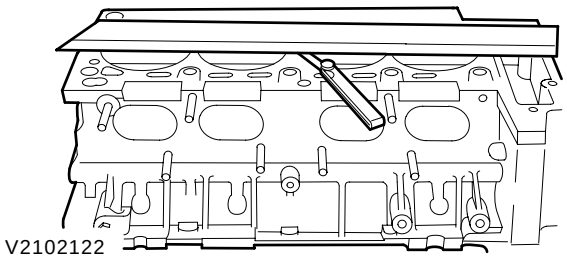

GENERAL PROCEDURES

Cylinder Block Distortion

1. **Using a Straight Edge and a Feeler Gauge, measure the cylinder block/cylinder head distortion.**
   - Measure the mating face distortion.
   - If the value is not to specification rework the mating face (if allowed).

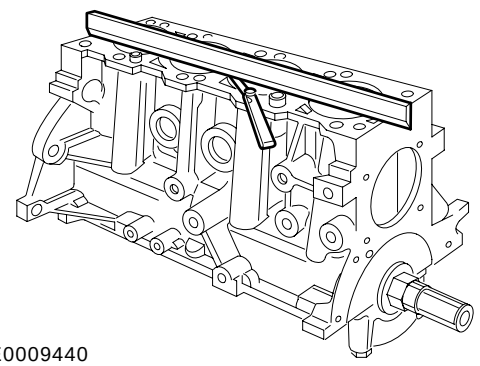

ELE0009440

GENERAL PROCEDURES

Exhaust Manifold Cleaning and Inspection

1. **Inspect the cylinder head joining flanges of the exhaust manifold for evidence of exhaust gas leaks.**
2. **Inspect the exhaust manifold for cracks, damaged gasket surfaces, or other damage that would make it unfit for further use.**

GENERAL PROCEDURES

Bearing Inspection

1. Inspect bearings for the following defects.

1. Cratering - fatigue failure
2. Spot polishing - incorrect seating.
3. Imbedded dirt engine oil.
4. Scratching - dirty engine oil.
5. Base exposed - poor lubrication.
6. Both edges worn - journal damaged.
7. One edge worn - journal tapered or bearing not seated.

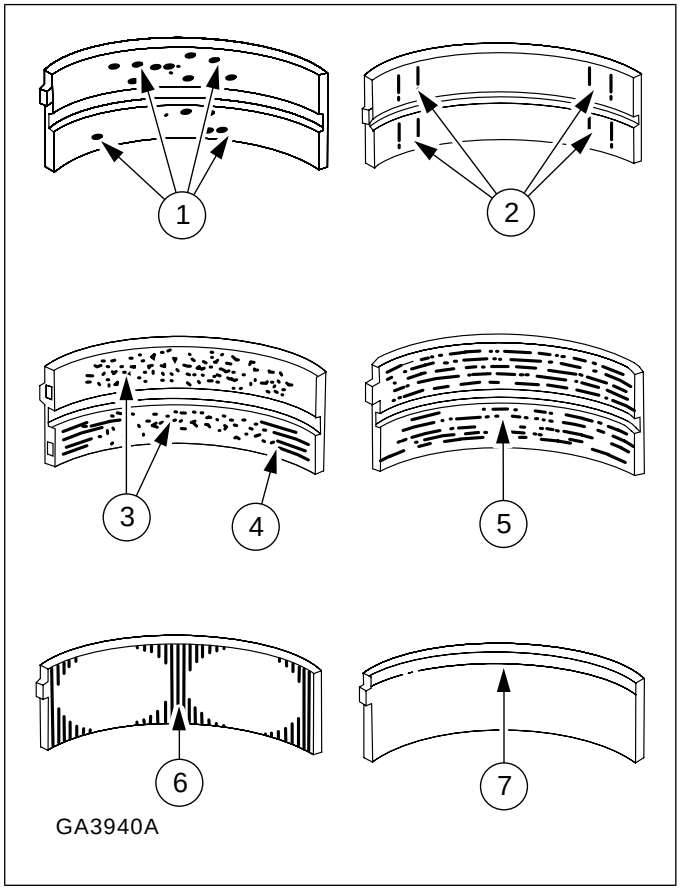

SECTION 303-01A Engine — 2.5L Duratec-HE (122kW/165PS) - MI4

VEHICLE APPLICATION: 2011.50 Ranger

CONTENTS PAGE

PAGE 1 OF 2

SPECIFICATIONS

Specifications..... 303-01A-3
Engine oil..... 303-01A-3

DESCRIPTION AND OPERATION

Engine (Overview)..... 303-01A-7
General View..... 303-01A-7
Variable camshaft timing (VCT)..... 303-01A-9
Power and torque curve 303-01A-10
Valves and valve seats..... 303-01A-11
Lubrication System..... 303-01A-11
Engine (Component Location)..... 303-01A-12

GENERAL PROCEDURES

Valve Clearance Adjustment..... 303-01A-15
Balance Shaft Backlash..... 303-01A-21

REMOVAL AND INSTALLATION

Camshafts..... (21 284 0) 303-01A-27
Crankshaft Front Seal..... (21 467 0) 303-01A-32
Crankshaft Pulley..... (21 572 0) 303-01A-33
Crankshaft Rear Seal..... (21 468 4) 303-01A-38
Cylinder Head..... (21 163 0) 303-01A-40
Engine Front Cover..... 303-01A-43
Exhaust Manifold..... (21 187 0) 303-01A-46
Intake Manifold..... (21 183 0) 303-01A-48
Timing Chain..... (21 314 0) 303-01A-51
Oil Pan..... (21 154 0) 303-01A-53
Oil Pump..... (21 714 0) 303-01A-56
Valve Cover..... (21 141 0) 303-01A-57
Valve Stem Seals..... (21 238 0) 303-01A-60

REMOVAL

Engine — Vehicles With: 5-Speed Manual Transmission - MT75..... (21 132 0; 21 132 6; 21 132 7) 303-01A-61
Engine Accessories..... (21 139 4) 303-01A-68

DISASSEMBLY

Engine..... (21 134 8) 303-01A-75

PAGE 2 OF 2

DISASSEMBLY AND ASSEMBLY OF SUBASSEMBLIES

Cylinder Head..... (21 165 6) 303-01A-83

ASSEMBLY

Engine..... (21 134 8) 303-01A-85

INSTALLATION

Engine — Vehicles With: 5-Speed Manual Transmission - MT75..... (21 132 0; 21 132 6; 21 132 7) 303-01A-102
Engine Accessories..... (21 139 4) 303-01A-109

SPECIFICATIONS

Engine data

Description	Specification
Engine code	GBVAF EV,GBVAL EV,GBVAK EV
Firing order	1-3-4-2
Emission level	Stage IV
Displacement	2.5L
No. of cylinders	4
Bore	89 mm
Stroke	100 mm
Cubic capacity	2488.5 cm³
Compression ratio	9.7 : 1
Number of main bearings	5
Camshaft drive	Chain
Oil pressure (hot @ 2,000 rpm)	200-268 kPa (29-39 psi)
Engine weight (without accessory drive components and flexplate or flywheel)	203.8 kg

Engine oil

Viscosity / ambient temperature	Type	Specification
Recommended engine oil		
SAE 5W-30 / below -20°C to over +40°C	Castrol Engine Oil	WSS M2C930-A / WSS M2C929-A
Alternative engine oils (for top-up only)		
SAE 10W-40 / -20°C to over +40°C	Ford Formula XR+	ACEA A3/B3
SAE 5W-40 / below -20°C to over +40°C	Ford Formula S	ACEA A3/B3

Cylinder block

Description	mm
Cylinder bore diameter	89.0 - 89.03 mm
Cylinder bore maximum out-of-round	0.008 mm
Main bearing bore diameter	57.018 - 57.040 mm
Head gasket surface flatness	0.1 mm/general and 0.05 mm/200 x 200

Piston

Description	mm
Diameter (1)	88.965 - 88.975 mm
Diameter (2)	88.975 - 88.985 mm
Diameter (3)	88.985 - 88.995 mm

SPECIFICATIONS

Description	mm
Piston-to-bore clearance	0.025 - 0.045 mm
Ring groove width - top	1.203 - 1.205 mm
Ring groove width - 2nd	1.202 - 1.204 mm
Ring groove width - oil	2.501 - 2.503 mm
Piston skirt coating thickness	0.008 - 0.016 mm

Piston pin

Description	mm
Diameter	19.995 - 20.0 mm
Length	54.7 - 55.0 mm

Valve

Description	mm and degree
Valve head diameter - intake	34.85 - 35.15 mm
Valve head diameter - exhaust	29.85 - 30.15 mm
Valve stem diameter - intake	5.470 - 5.485 mm
Valve stem diameter - exhaust	5.465 - 5.480 mm
Valve stem-to-guide clearance - intake	0.0027 mm
Valve stem-to-guide clearance - exhaust	0.0029 mm
Valve face runout	0.05 mm
Valve face angle	45 degrees

Valve spring - compression pressure

Description	kg and mm
Intake and exhaust (installed)	17.5 kg
Intake (valve open) 8.9 mm of lift	44 kg
Exhaust (valve open) 7.4 mm of lift	42 kg
Free length	44.92 mm
Assembled height	37.9 mm

Cylinder head

Description	mm and degree
Cylinder head flatness	0.08 maximum overall, a maximum of 0.05 mm within 150 mm
Valve lift @ zero lash (exhaust)	7.7 mm
Valve lift @ zero lash (intake)	8.8 mm
Valve guide diameter	5.509 - 5.539 mm
Valve seat width - intake/exhaust	0.99 - 1.84 mm
Valve seat angle	45 degrees

SPECIFICATIONS

Description	mm and degree
Valve seat runout	0.075 mm
Valve lash adjuster bore diameter	31.00 - 31.03 mm
Cam bore diameter	25.015 - 25.040 mm

Crankshaft

Description	mm
Main bearing journal diameter	51.978 - 52.002 mm
Production repair	51.730 - 51.750 mm
Main bearing clearance	0.016 - 0.047 mm
Connecting rod journal diameter	51.978 - 52.002 mm
Production repair	51.730 - 51.750 mm
End play	0.220 - 0.450 mm

Rings

Description	mm
Width - top	1.17 - 1.185 mm
Width - 2nd	1.197 - 1.199 mm
Width - oil	2.38 - 2.45 mm
Ring gap (in bore) - top	0.16 - 0.31 mm
Ring gap (in bore) - 2nd	0.31 - 0.46 mm
Ring gap (in bore) - oil	0.2 - 0.7 mm

Valve tappet

Description	mm
Diameter	30.97 - 30.98 mm
Tappet-to-valve clearance -intake	0.22 - 0.28 mm
Tappet-to-valve clearance -exhaust	0.27 - 0.33 mm
Tappet-to-bore clearance	0.02 - 0.06 mm

Camshaft

Description	mm
Intake camshaft lobe lift	8.24999 mm
Exhaust camshaft lobe lift	7.80007 mm
Runout (1)a	0.03 mm
Thrust clearance	0.09 - 0.24 mm
Journal diameter	24.96 - 24.98 mm
Journal-to-bore clearance	0.035 - 0.080 mm
a - No. 3 journal - supported by No. 1 and No. 5 journals.	

SPECIFICATIONS

Connecting rod

Description	mm
Bearing clearance	0.027 - 0.052 mm
Bearing thickness	1.496 - 1.520 mm
Crank bore diameter	55.023 - 55.047 mm
Pin bore diameter	20.965 - 20.985 mm
Length (center-to-center)	151.8 mm
Side clearance	1.95 - 3.05 mm
Axial clearance	0.14 - 0.36 mm

DESCRIPTION AND OPERATION

Engine – Overview

General View

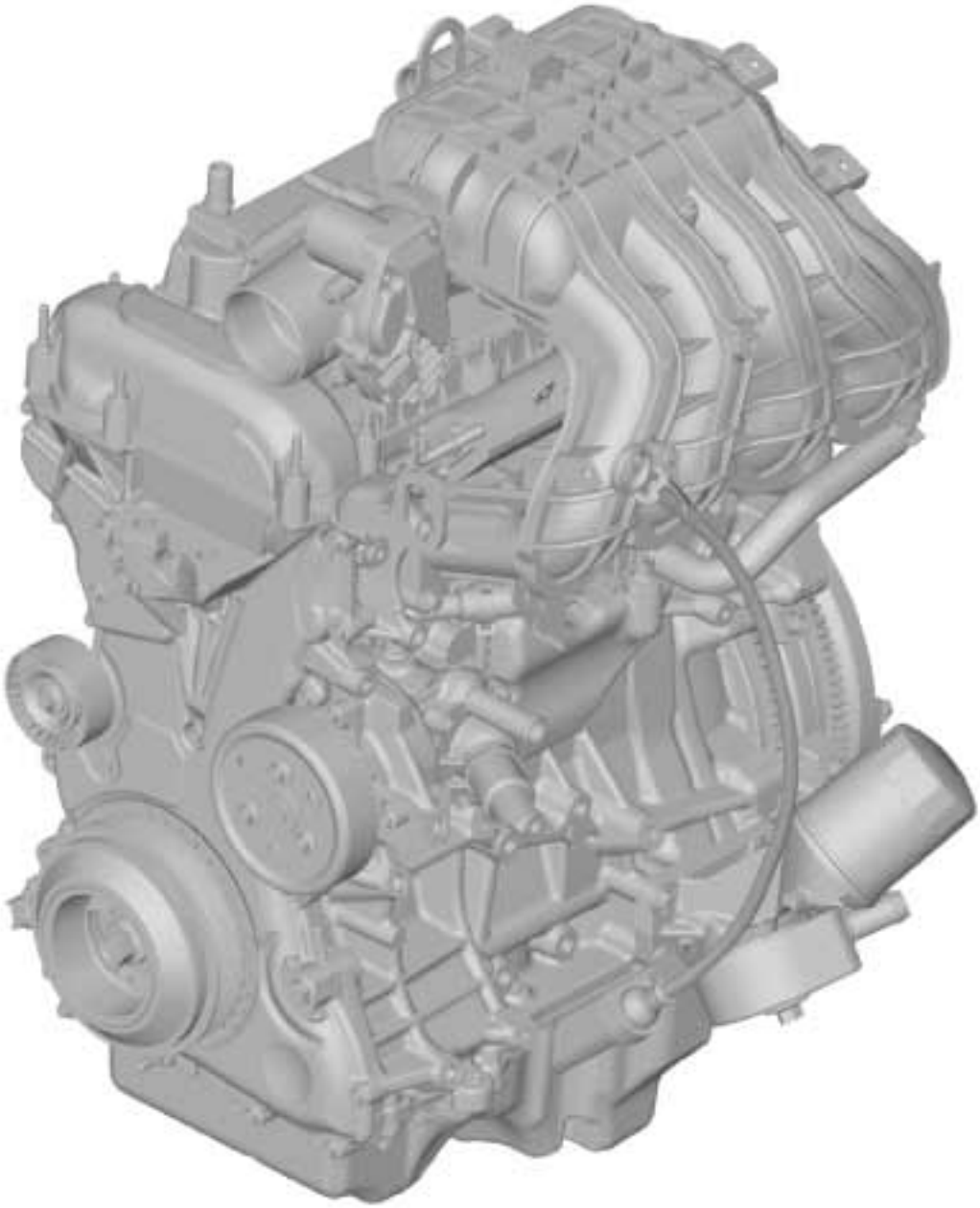

E131455

DESCRIPTION AND OPERATION

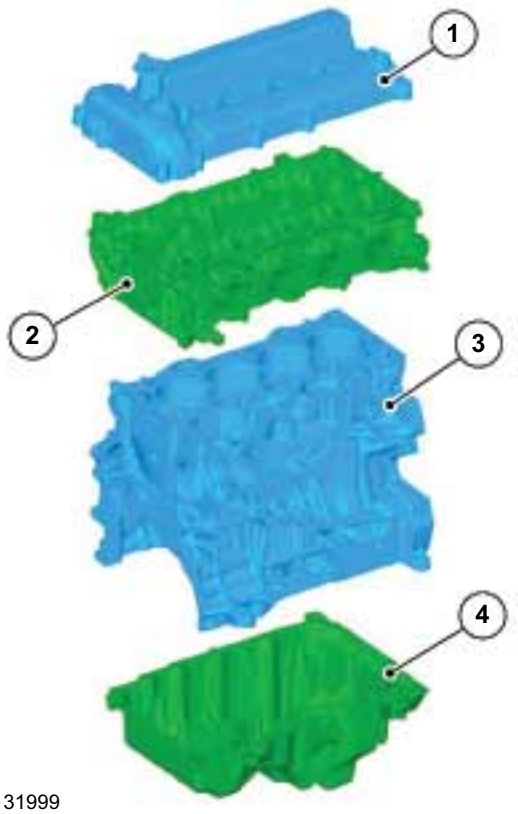

E131999

Item	Description
1	Valve cover
2	Cylinder head
3	Cylinder block
4	Oil pan

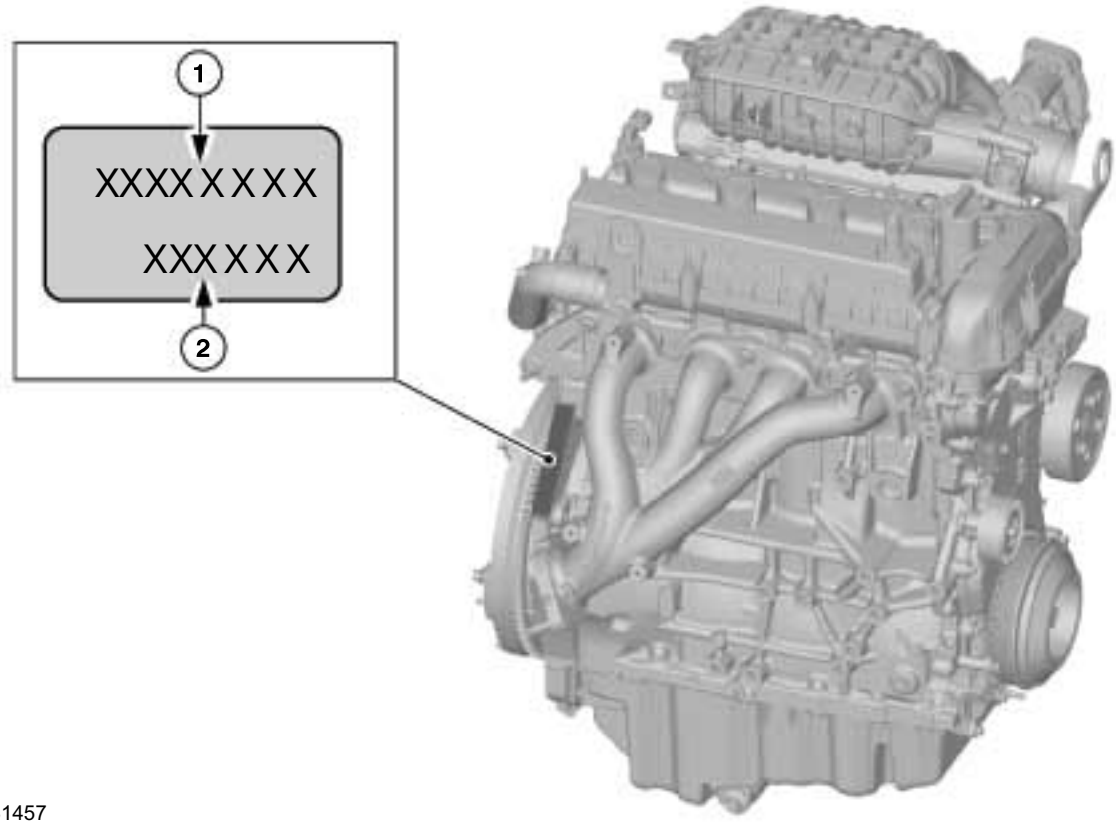

E131457

DESCRIPTION AND OPERATION

Item	Description
1	Engine code

Item	Description
2	Engine serial number

Variable camshaft timing (VCT)

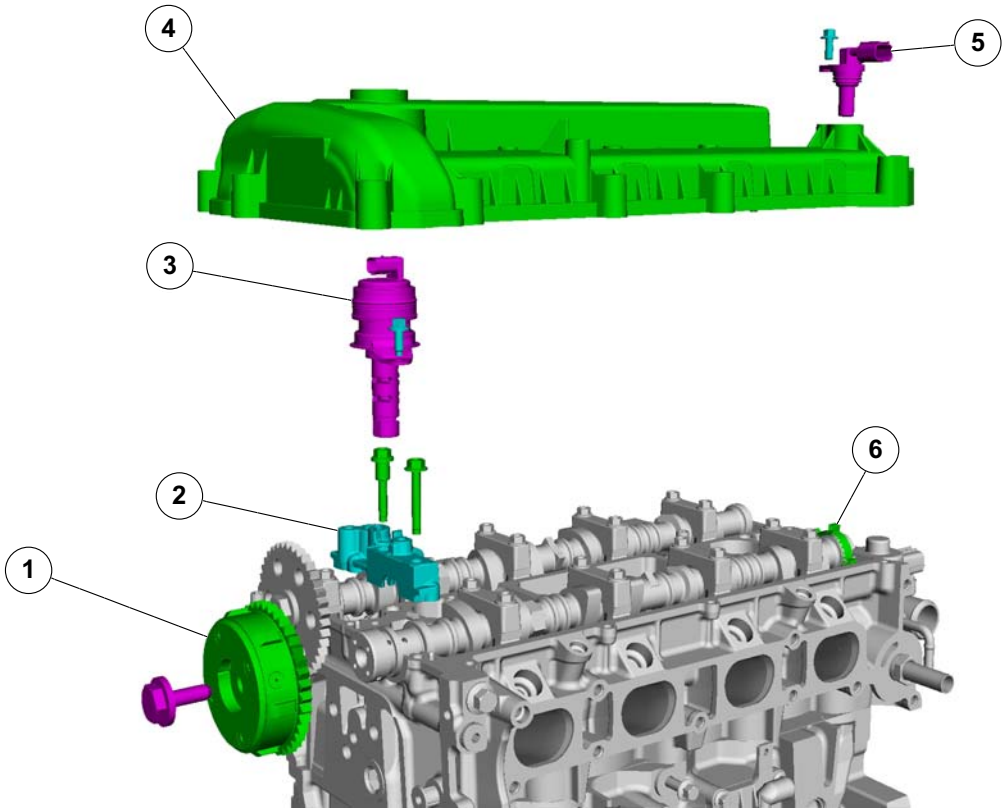

Item	Description
1	Control unit - variable camshaft timing
2	Camshaft bearing cap
3	VCT oil control solenoid

Item	Description
4	Valve cover
5	Camshaft Position Sensor
6	Camshaft sensor ring

This system is an electronically controlled camshaft adjuster that allows variable timing for the inlet camshaft.

The valves are driven by a timing chain which drives the inlet camshaft timing control unit. This unit drives the associated camshafts. The timing chain is tensioned using a conventional timing chain tensioner.

The inlet camshaft is fitted with a sensor ring for the active camshaft position (CMP) sensor.

This CMP sensor is mounted inside the valve cover.

Timing chain replacement does not require the variable camshaft timing control unit to be disconnected.

To ensure trouble-free operation of the variable camshaft timing system and optimum engine performance, it is essential to adhere precisely to the valve timing adjustment procedure.

A special tool is needed to fix the camshafts in the adjustment position.

Remember that this special tool must not be used to keep the camshaft from rotating when mounting the camshaft sprocket. They may only be kept from rotating by using the hexagon, which has been specially provided for this purpose.

Advantages of variable camshaft timing (VCT).

- Lower fuel consumption due to improved volumetric efficiency

DESCRIPTION AND OPERATION

- Enhanced engine power and torque
- Improved idling characteristics

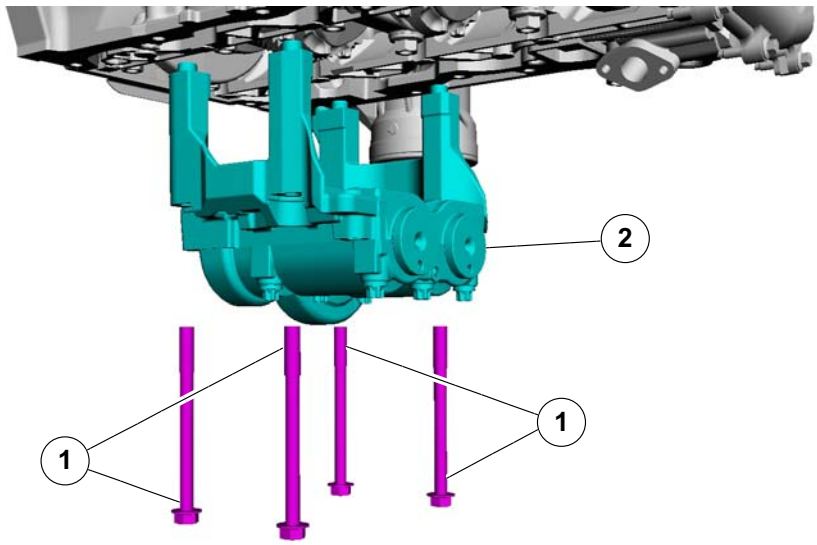

E83476

Item	Description
1	Bolts - Balancer shafts
2	Balancer shaft unit

Power and torque curve

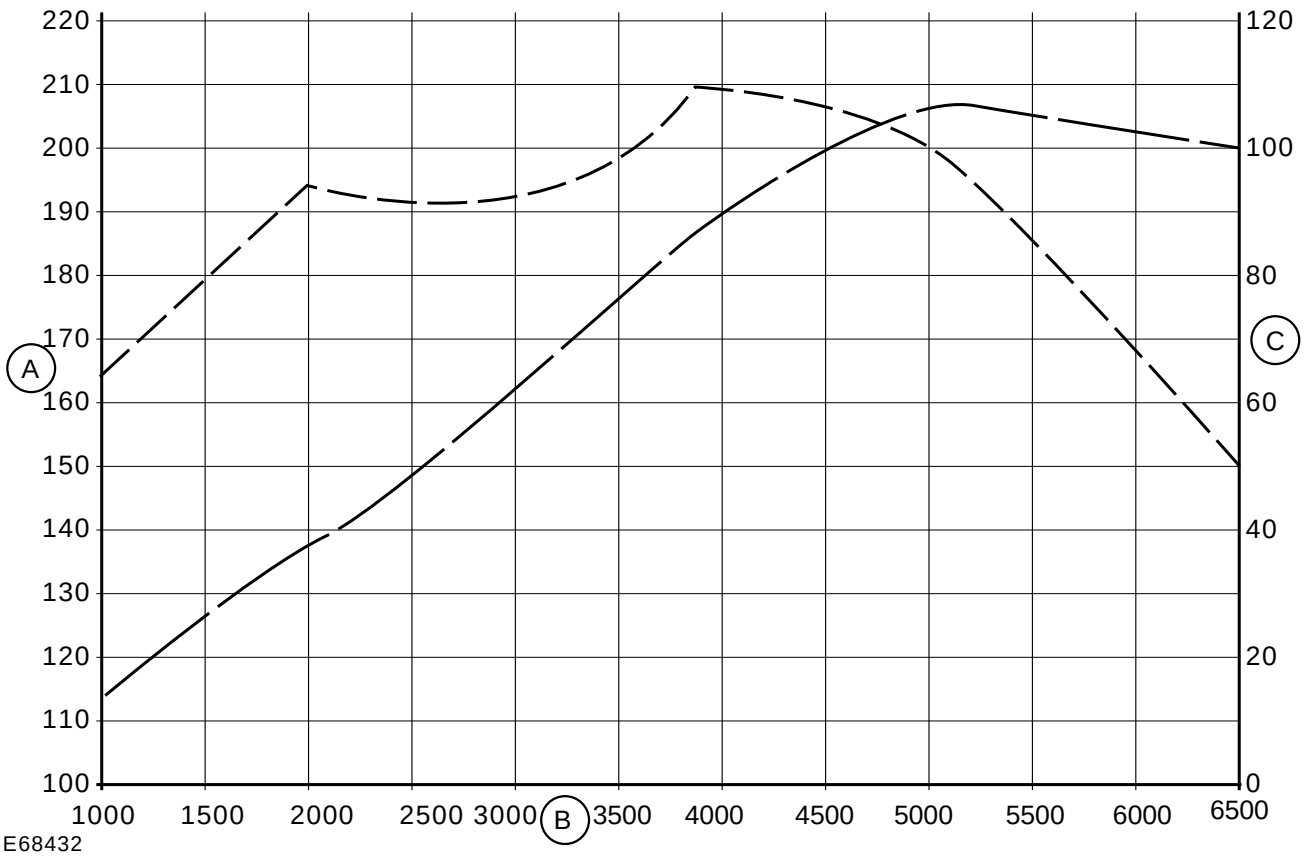

E68432

DESCRIPTION AND OPERATION

Item	Description
A	Torque (Nm)
B	Engine speed (rpm)

Item	Description
C	Power output (kW)

Service note:

The valve clearance of the engine only needs to be monitored if the engine is converted to operation using alternative fuel (every 60,000 km).

Conversion of the engine to operation with alternative fuel requires no modification to the engine as the valve seats are reinforced as standard. All that is required is an adaptation of the fuel system.

Valves and valve seats

The engines for petrol operation and gas operation are basically identical. Because gas is a dry fuel and combusts at a higher temperature, the valve train is under higher stress. The adaptations described below are therefore necessary.

Because of the higher stress involved in gas operation:

- The inlet and exhaust valves are made of a harder material.
- The inlet and exhaust valve seats and the valve stems are made of a harder material.
- The valve clearances must be checked more frequently and corrected if necessary.

Lubrication System

The engine lubrication system operates as follows:

- Oil is drawn into the oil pump through the oil pump screen cover and tube in the sump of the oil pan.
- Oil is pumped through the oil filter on the right front side of the cylinder block.
- Oil enters the main gallery where it is distributed to the crankshaft main journals and to the cylinder head.
- From the main journals, the oil is routed through cross-drilled passages in the crankshaft to lubricate the connecting rod bearings. Controlled leakage through the crankshaft main bearings and connecting rod bearings is slung radially outward to cool and lubricate the cylinder walls as well as the entire connecting rod, piston and piston ring assembly.

DESCRIPTION AND OPERATION

Engine – Component Location

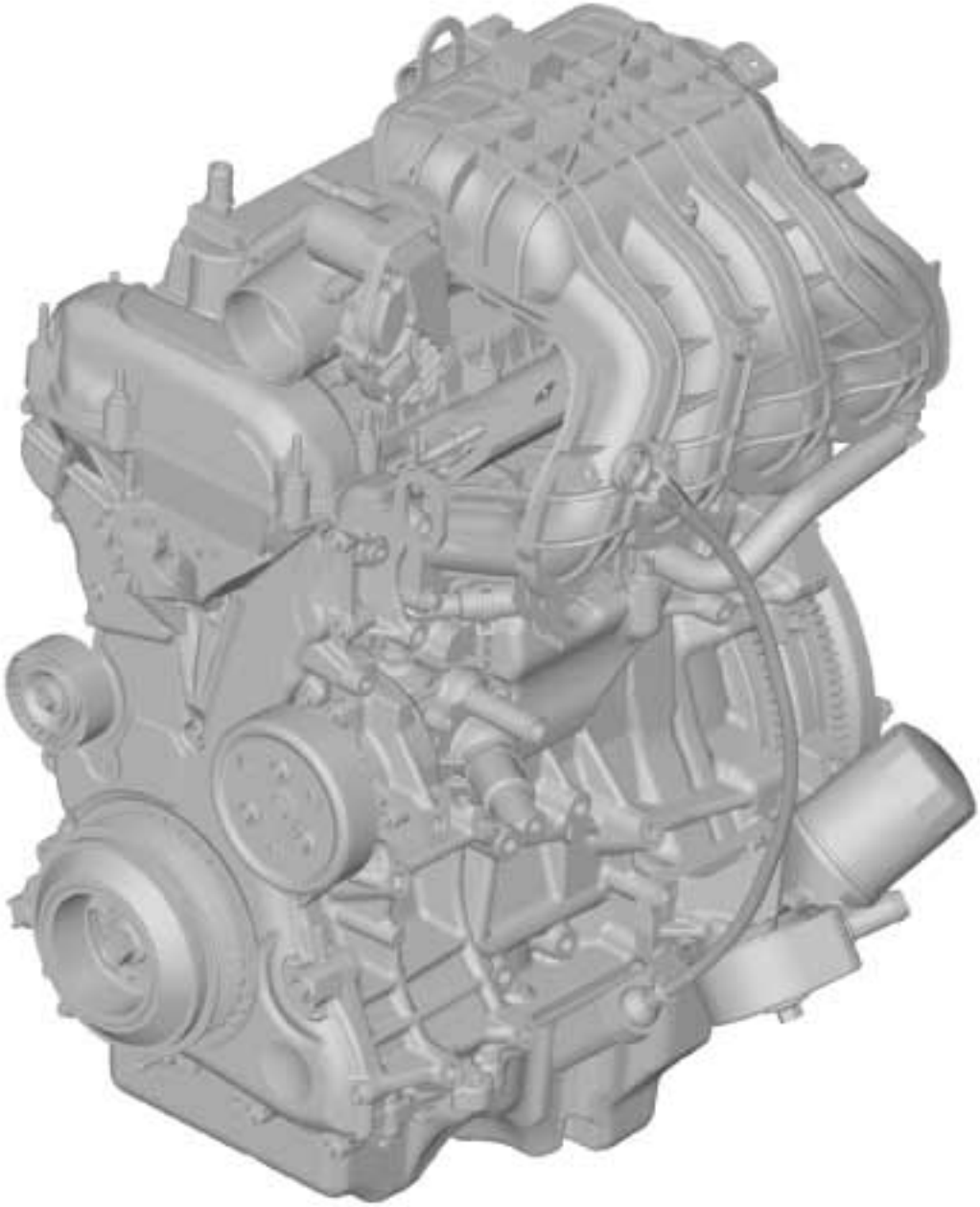

E131455

DESCRIPTION AND OPERATION

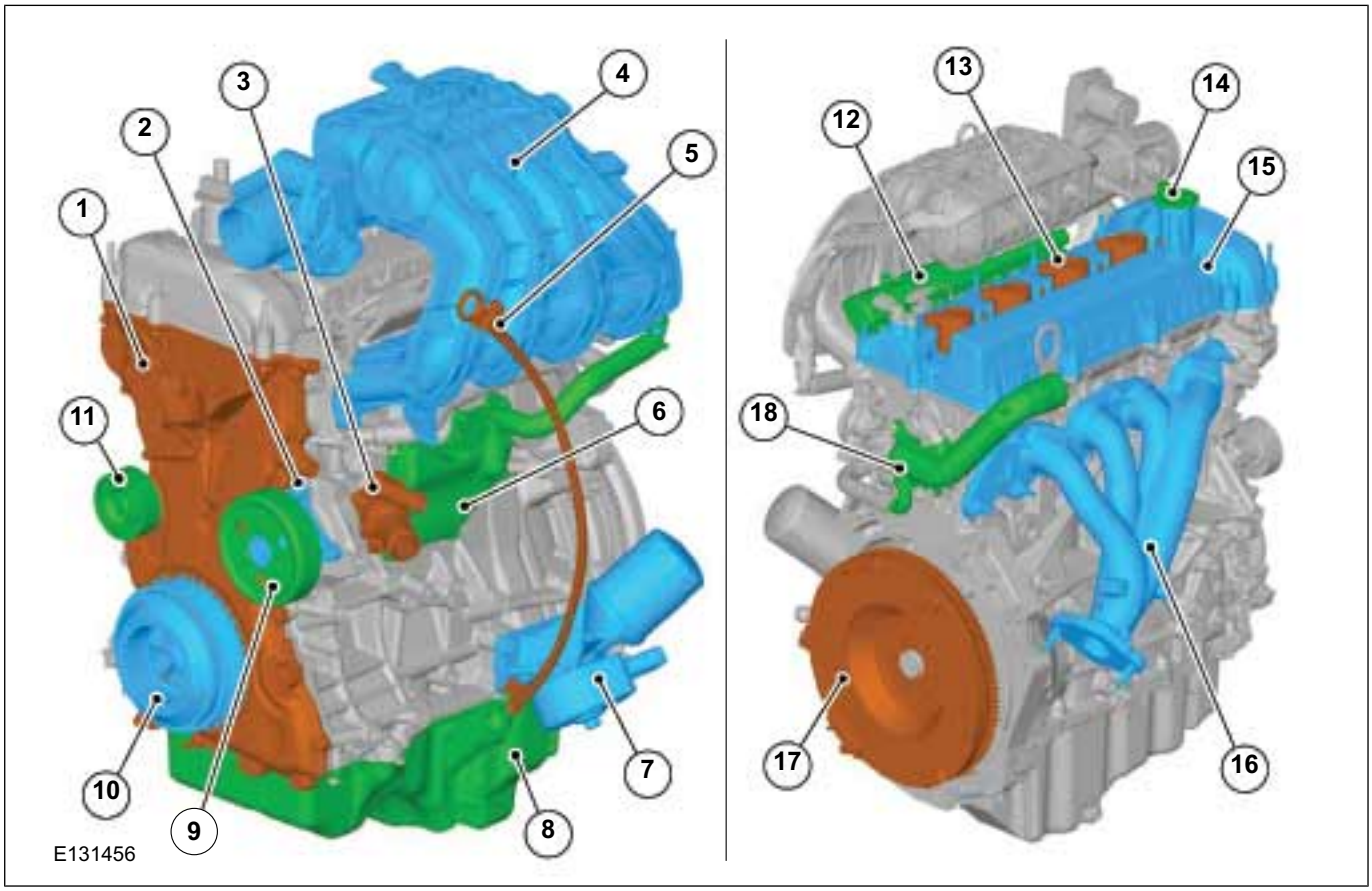

Item	Description
1	Engine front cover
2	Coolant pump
3	Thermostat
4	Intake manifold
5	Oil level indicator
6	Crankcase ventilation oil separator
7	Oil filter and cooler
8	Oil pan
9	Coolant pump pulley

Item	Description
10	Cranksahft pulley
11	Accessory drive belt idler pulley
12	Fuel rail
13	Ignition coils
14	Oil filler cap
15	Valve cover
16	Exhaust manifold
17	Flywheel
18	Water outlet connector

DESCRIPTION AND OPERATION

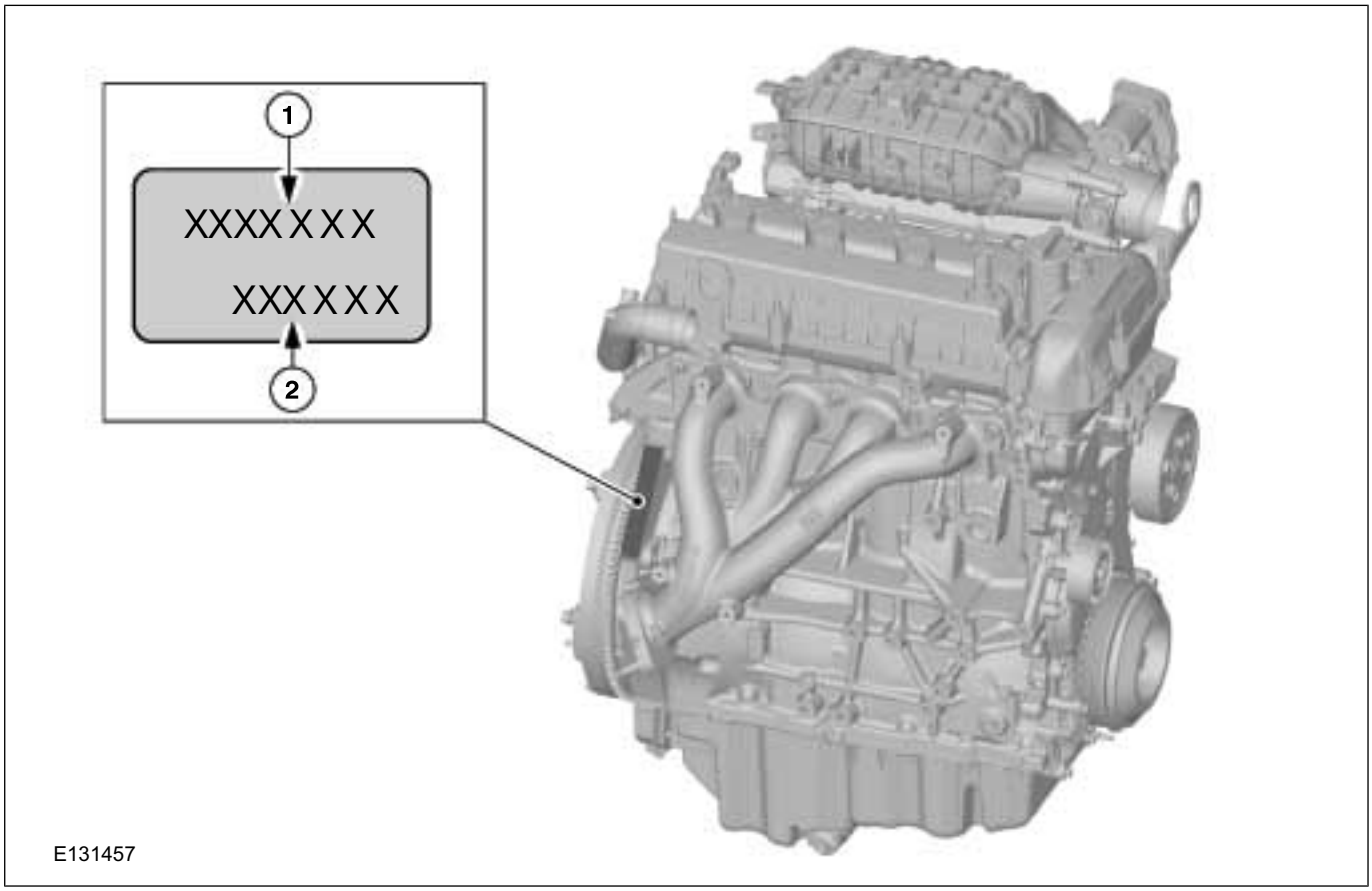

Item	Description
1	Engine code
2	Engine serial number

GENERAL PROCEDURES

Valve Clearance Adjustment

Special Tool(s) / General Equipment

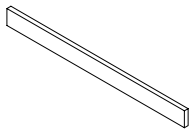 E134673	303-465 Tool, Camshaft Align Timing
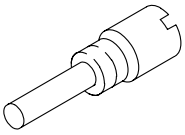 PZ21210	303-507 Timing Peg, Crankshaft TDC
2 mm Punch	

Materials	
Name	**Specification**
Hypoid Oil 85W-90	SQ-M2C9002-AA / A72SX-19K261-CA
Thread Locking MS	WSK-M2G349-A7 / 2U7J-M2G349-AA

1. Refer to: Accessory Drive Belt (303-05 Accessory Drive - 2.5L Duratec-HE (122kW/165PS) - MI4, Removal and Installation).

2. Refer to: Valve Cover (303-01 Engine - 2.5L Duratec-HE (122kW/165PS) - MI4, Removal and Installation).

3. **CAUTION: Only rotate the crankshaft clockwise.**

   NOTE: Before removing the camshafts, measure the clearance of each valve at base circle, with the lobe pointed away from the tappet. Failure to measure all clearances prior to removing the camshafts will necessitate repeated removal and installation and wasted labor time.

   NOTE: If the valve clearance is less than 0.2mm, adjust the valves to the maximum clearance.

   Rotate the crankshaft until the cam pair of the cylinder to be adjusted are pointing upwards.

   Using a suitable feeler gauge, measure the valve clearance.

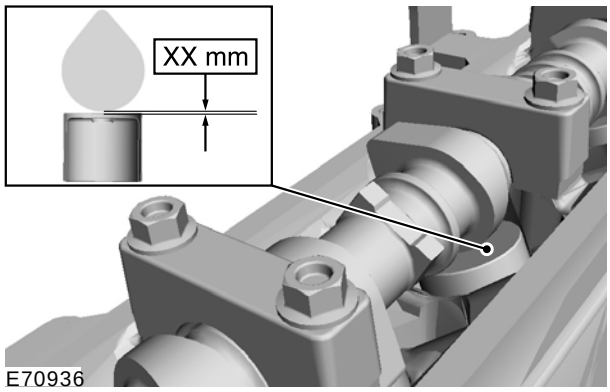

4. Make a note of each cylinder number with the corresponding valve clearance.

5. Compare the measured valve clearance(s) with the specifications.

   Refer to: Specifications (303-01 Engine - 2.5L Duratec-HE (122kW/165PS) - MI4, Specifications).

6. **NOTE:** Only carry out the following steps when the valve clearance(s) require adjustment.

7. **WARNING: Only rotate the crankshaft clockwise.**

   Turn the crankshaft until no. 1 piston is at about 45° before TDC.

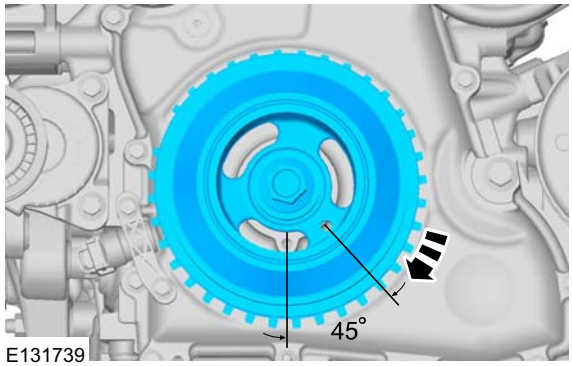

8. **CAUTION: The Camshaft Alignment Plate is for camshaft alignment only. Using this tool to prevent engine rotation can result in engine damage.**

   NOTE: The camshaft timing slots are offset. If the Camshaft Alignment Plate cannot be installed, rotate the crankshaft one complete

GENERAL PROCEDURES

revolution clockwise to correctly position the camshafts.

Special Tool(s): 303-465

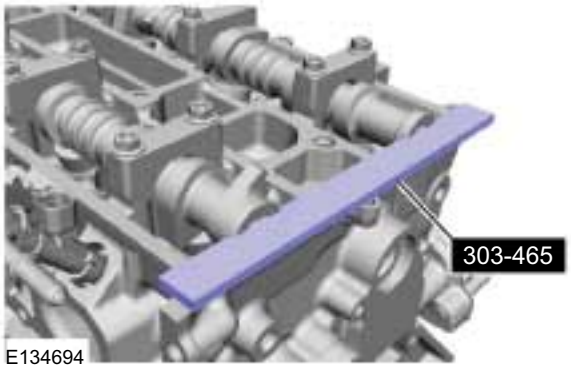

E134694

9.

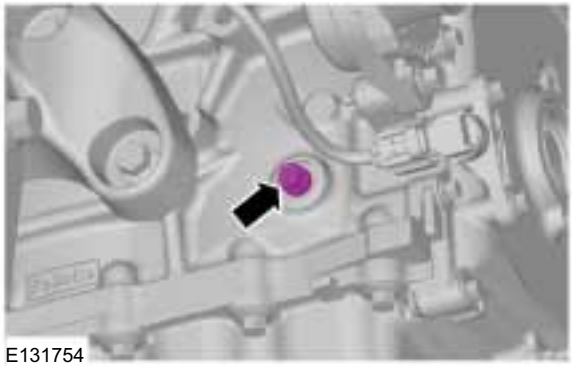
E131754

10. Special Tool(s): 303-507

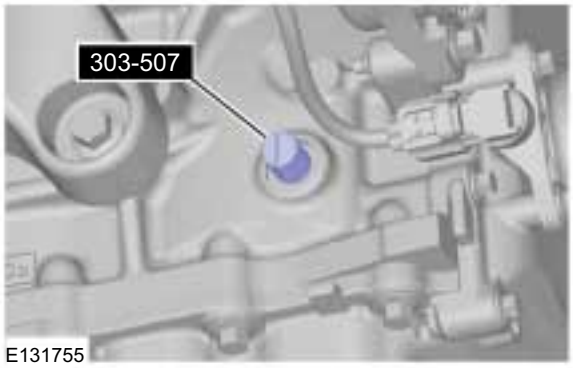

E131755

11. **NOTE:** Only tighten the bolt finger tight at this stage.

- Bolt M6 x 18 mm

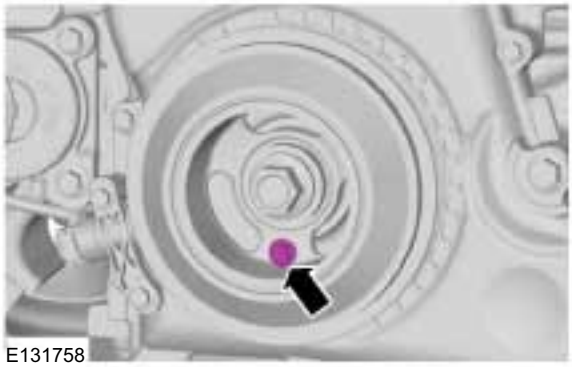
E131758

12.

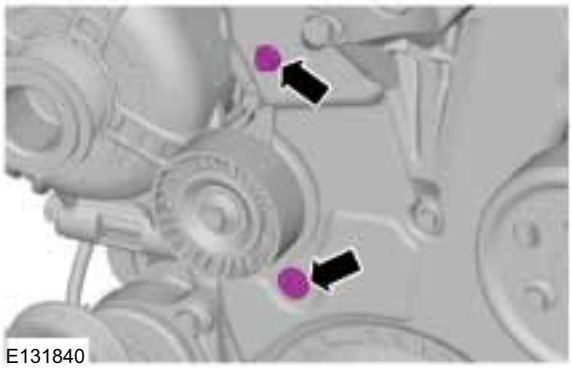
E131840

13. Reposition the camshaft alignment plate to the slot on the rear of the intake camshaft only.

Special Tool(s): 303-465

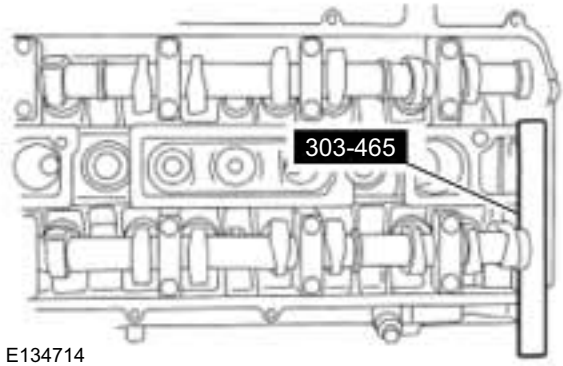

E134714

14. **CAUTION: Releasing the ratcheting mechanism in the timing chain tensioner allows the plunger to collapse and create slack in the timing chain. Installing an M6 x 30 mm bolt into the upper front cover timing hole will hold the tensioner arm in a retracted position**

GENERAL PROCEDURES

and allow enough slack in the timing chain for removal of the exhaust camshaft gear.

1. **NOTE:**

   General Equipment: 2 mm Punch

3. Bolt M6 x 25 mm

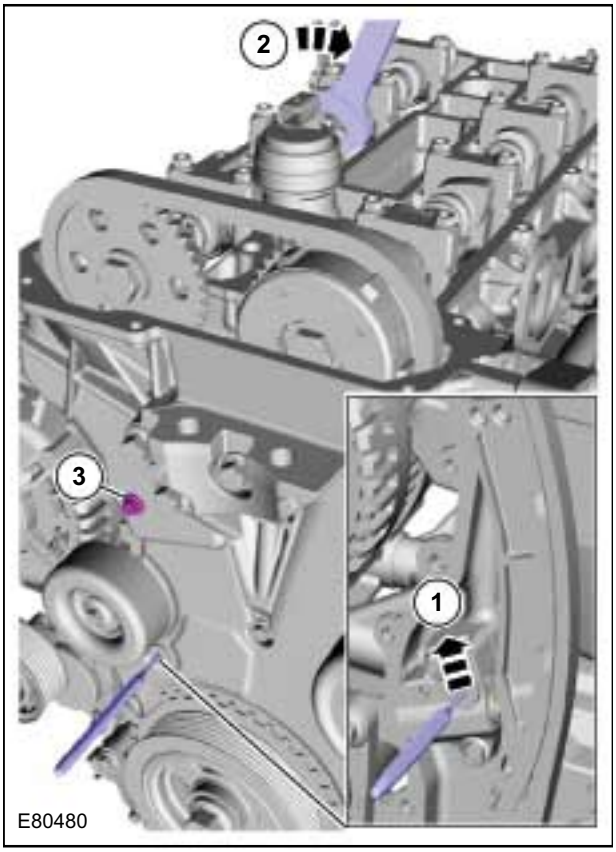

15. **CAUTION: Counterhold the camshaft at the hexagon with a wrench to prevent the camshaft from rotating.**

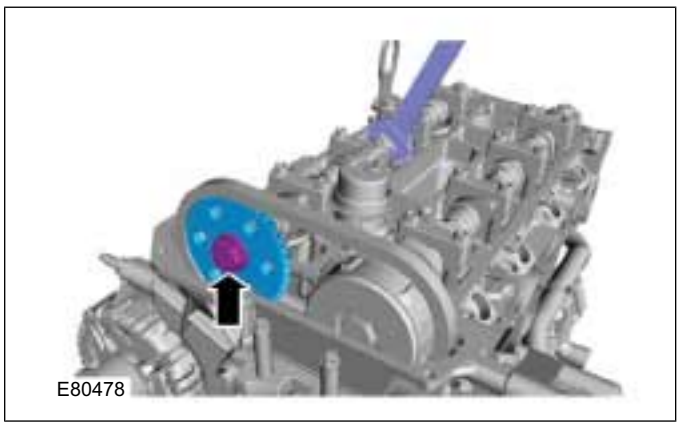

16. Remove the Special Tool(s): 303-465

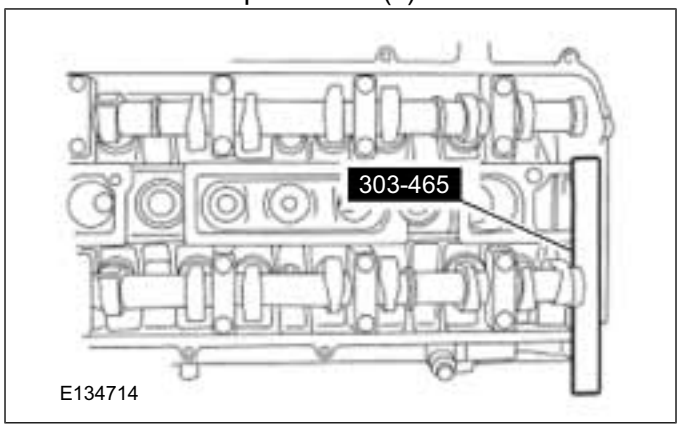

17. Remove the timing chain from the intake camshaft drive gear.

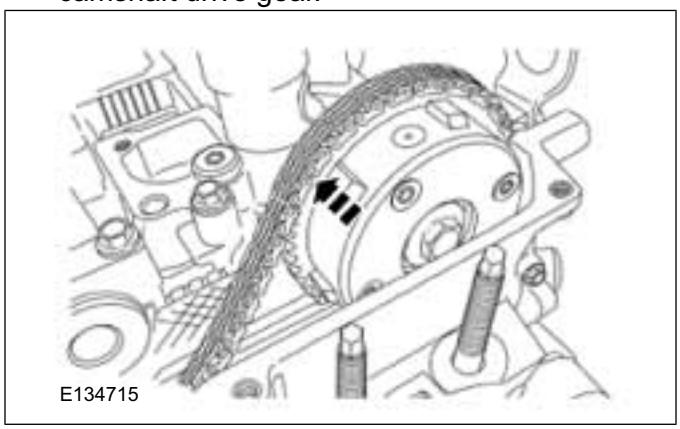

18. Mark the position of the camshaft lobes on the No. 1 cylinder for installation reference.

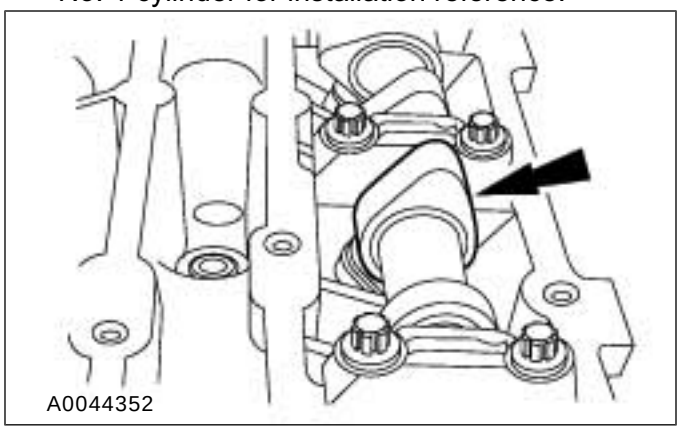

19. **CAUTION: Failure to follow the camshaft loosening procedure can result in damage to the camshafts.**

GENERAL PROCEDURES

NOTE: Mark the location and orientation of each camshaft bearing cap.

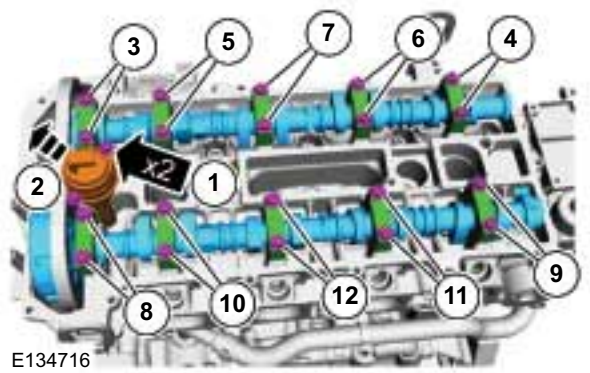

20. • Remove the valve tappet and read the thickness from the underside.

21. **NOTE:** The number on the valve tappet only reflects the digits that follow the decimal. For example, a tappet with the number 0.650 has the thickness of 3.650 mm.

NOTE: The nominal clearance is: intake: 0.25 mm (0.0095 in). exhaust: 0.30 mm (0.0115 in).

NOTE: The acceptable clearances after being fully installed are: intake: 0.22-0.28 mm (0.008-0.011 in). exhaust: 0.27-0.33 mm (0.010-0.013 in).

- Calculate the required thickness of the valve tappet with the following formula: **X = S + M - V**
- Required thickness of tappet = **X**
- Thickness of currently fitted tappet = **S**
- Measurement of existing valve clearance (actual value) = **M**
- Desired valve clearance = **V**

22. Install the correct valve tappet.

23. ⚠ **CAUTION: Make sure that the camshafts and camshaft bearing caps are installed in their original locations.**

NOTE: Lubricate the camshaft journals and bearing caps with clean engine oil.

Coat the camshaft bearing caps with oil and install the camshafts approximately at valve overlap position cylinder No. 4.

Material: Hypoid Oil 85W-90 (SQ-M2C9002-AA / A72SX-19K261-CA) transmission fluid
Torque:
- Stage 1: 7 Nm
- Stage 2: 16 Nm

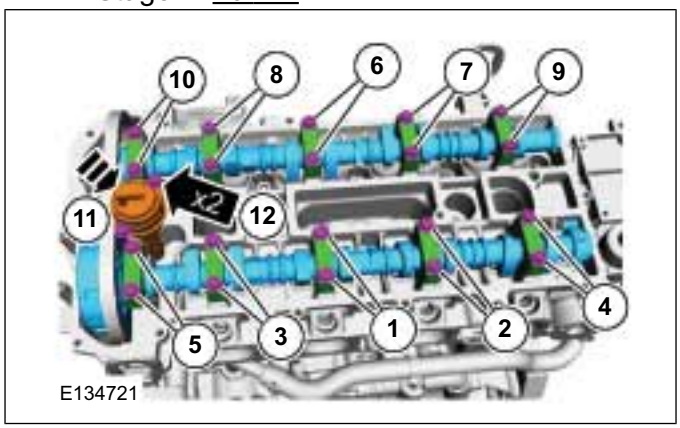

24. Special Tool(s): 303-465

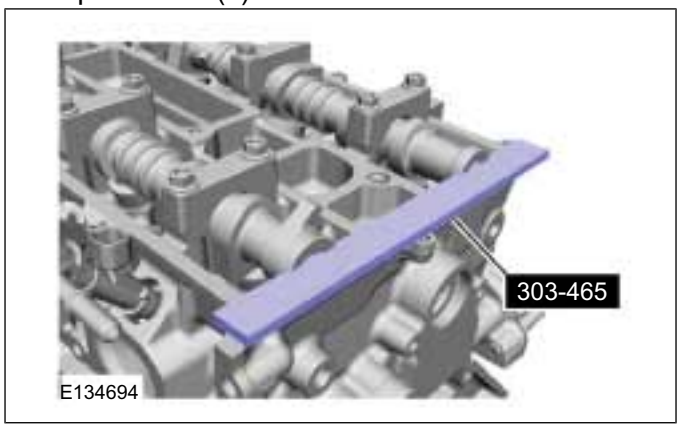

25. Install the timing chain on the intake camshaft drive gear.

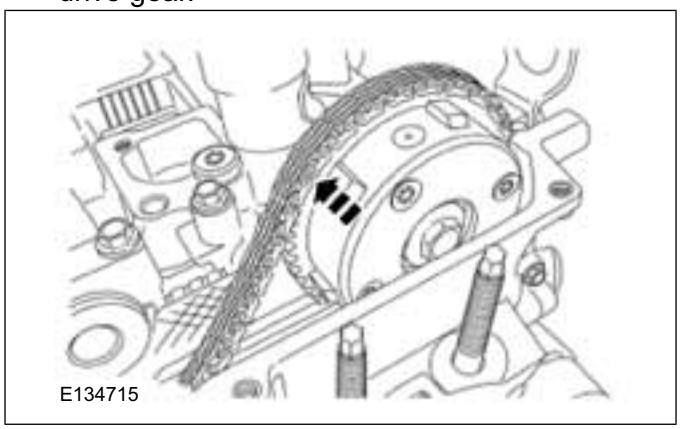

26. **NOTE:** Only tighten the bolt finger tight at this stage.

GENERAL PROCEDURES

NOTE: Make sure that the camshaft sprockets can rotate on the camshafts.

NOTE: The timing chain must be correctly engaged on the teeth of the crankshaft timing sprocket and the intake camshaft drive gear in order to install the exhaust camshaft drive gear onto the exhaust camshaft.

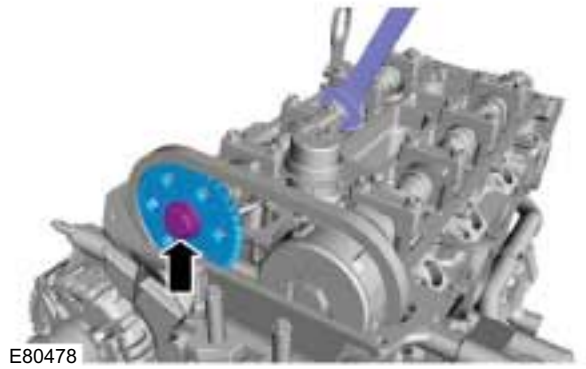
E80478

27. **NOTE:** Releasing the tensioner arm will remove the slack from the timing chain.

Remove the bolt M6 x 30mm.

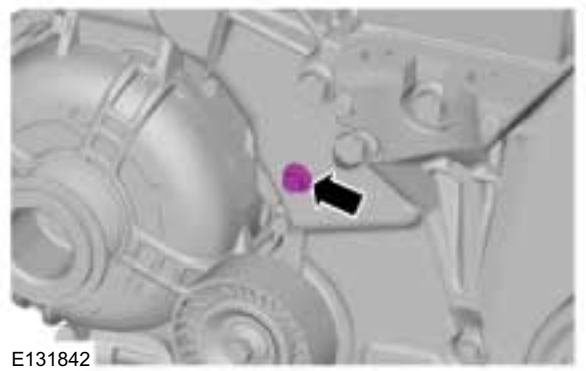
E131842

28. **CAUTION: Counterhold the camshaft at the hexagon with a wrench to prevent the camshaft from rotating.**

Torque: 72 Nm

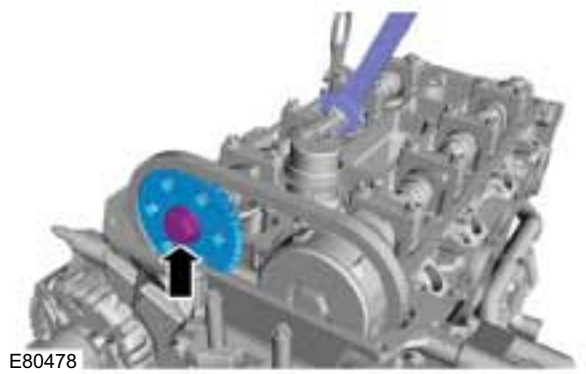
E80478

29. Remove the Special Tool(s): 303-465

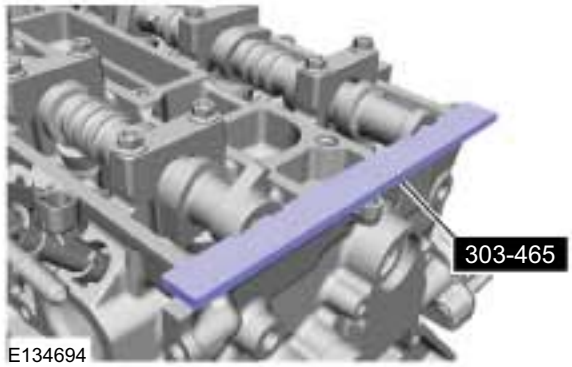

E134694

30. Remove the bolt M6 x 18 mm.

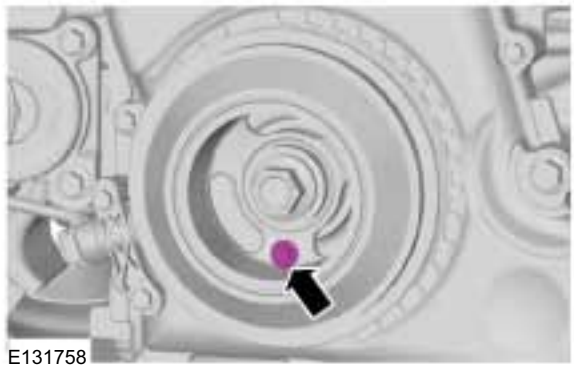
E131758

31. Remove the Special Tool(s): 303-507

E131755

GENERAL PROCEDURES

32. • Material: Thread Locking MS (WSK-M2G349-A7 / 2U7J-M2G349-AA) adhesive
    1. Torque: 10 Nm
    2. Torque: 12 Nm

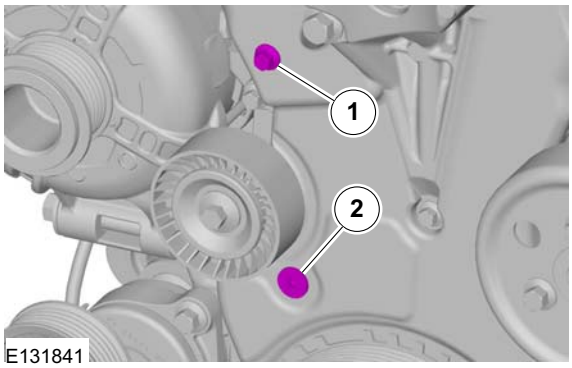

33. Torque: 20 Nm

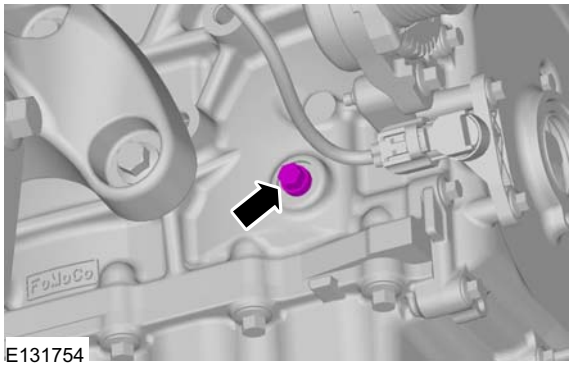

34. **CAUTION: Only rotate the crankshaft clockwise.**

    Check that the valve clearance on all cylinders meets the specified tolerances.

35. If necessary, repeat the steps until the valve clearance on each cylinder meets the specified tolerance.

36. Refer to: Valve Cover (303-01 Engine - 2.5L Duratec-HE (122kW/165PS) - MI4, Removal and Installation).

37. Refer to: Accessory Drive Belt (303-05 Accessory Drive - 2.5L Duratec-HE (122kW/165PS) - MI4, Removal and Installation).

GENERAL PROCEDURES

Balance Shaft Backlash

Special Tool(s)

E139373	100-002 Holding Fixture with Dial Indicator Gauge
PZ21210	303-507 Timing Peg, Crankshaft TDC

Adjustment

38. Remove the timing peg bolt.

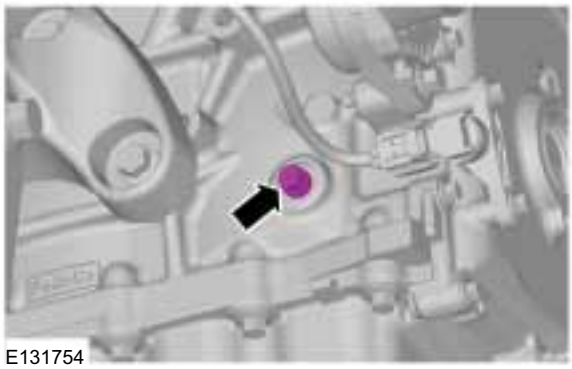
E131754

39. Install the crankshaft TDC timing peg and rotate the crankshaft slowly clockwise until the crankshaft balance weight is up against the crankshaft TDC timing peg. The engine is now at TDC.

Special Tool(s): 303-507

E131755

40. Mark the balancer unit and shafts on the top for reference that the balancer unit is at TDC.

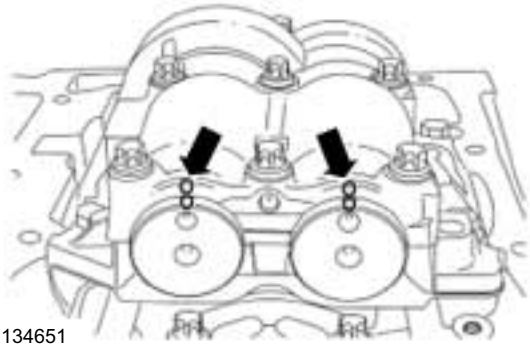
E134651

41. **NOTE:** Due to the precision interior construction of the balancer unit, it should not be disassembled.

Remove the 4 bolts and the balancer unit.

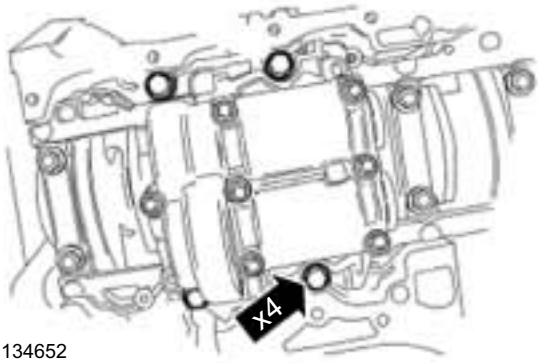

E134652

42. Remove the adjustment shims from the seat faces of the balancer unit.

GENERAL PROCEDURES

43. **NOTE:** Visually inspect the balancer unit gear for damage and verify that the shaft turns smoothly. If there is any damage or malfunction, replace the balancer unit.

    Install the master adjustment shims (No. 50) on the seat faces of the balancer unit.

44. With the balancer unit shaft marks at the TDC position, slowly install the balancer unit to the cylinder block to avoid interference between the crankshaft drive gear and the balancer unit driven gear.

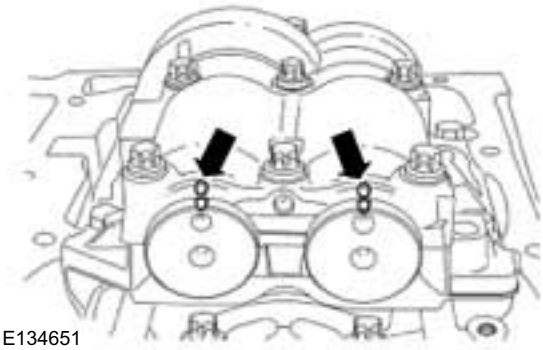

45. Install the balancer unit bolts.
    Torque:
    - Stage 1: 25 Nm
    - Stage 2: 50 Nm

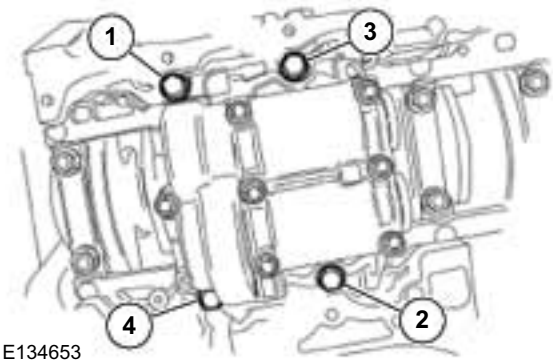

46. Rotate the crankshaft to confirm that there are no meshing problems between the balancer unit gear and the crankshaft gear.

    Remove the Special Tool(s): 303-507

47. Install the crankshaft TDC timing peg and rotate the crankshaft slowly clockwise until the crankshaft balance weight is up against the crankshaft TDC timing peg.

    Remove the Special Tool(s): 303-507

48. **NOTE:** Measure the backlash and verify that it is within specified range at all of the following 6 positions: 10 degrees, 30 degrees, 100 degrees, 190 degrees, 210 degrees and 280 degrees. It will be necessary to reset the measuring equipment between measurements.

    NOTE: The measurement must be taken with the Dial Indicator Gauge with Holding Fixture, a 5-mm Allen wrench and worm clamp set up as shown. Mark the Allen wrench with a file 80 mm (3.149 in) above the driven gear shaft center. Make sure the worm clamp and Allen wrench are not touching the balance shaft housing.

    NOTE: For an accurate measurement while measuring the gear backlash, insert a screwdriver as shown into the crankshaft No. 1 crankweight area and set both the rotation and

GENERAL PROCEDURES

the thrust direction with the screwdriver, using a prying action as shown.

- Position the dial indicator gauge with holding fixture (1) on the Allen wrench 80 mm (3.149 in) above the driven gear shaft center (2) on the balancer unit.

  Special Tool(s): 100-002
- Rotate the crankshaft clockwise and measure the backlash at all of the following 6 positions: 10 degrees, 30 degrees, 100 degrees, 190 degrees, 210 degrees and 280 degrees.

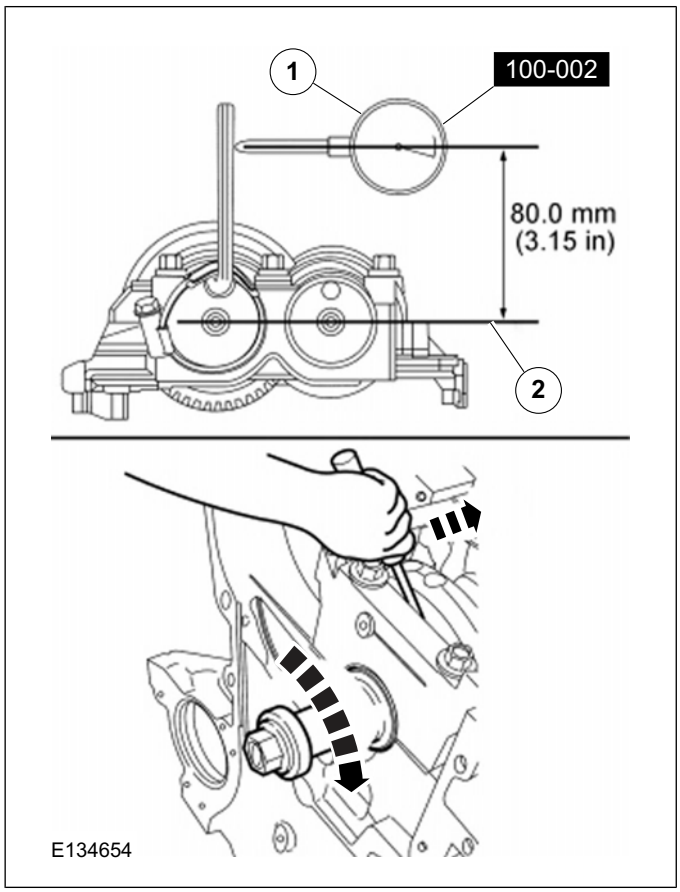

49. **NOTE:** If maximum backlash exceeds 0.101 mm (0.003 in), install a new balancer unit.
    - Remove the balancer unit from the cylinder block.
    - Install the selected adjustment shims on the seat faces of the balancer unit.

GENERAL PROCEDURES

ADJUSTMENT SHIM SELECTION TABLE

Backlash mm (in)	Selection shim (No.)	Shim thicness mm (in)
0.516-0.528 (0.0203-0.0207)	15	1.15 (0.0452)
0.502-0.514 (0.0197-0.0202)	16	1.16 (0.0456)
0.489-0.500 (0.0192-0.0196)	17	1.17 (0.0460)
0.475-0.487 (0.0187-0.0191)	18	1.18 (0.0464)
0.462-0.473 (0.0181-0.0186)	19	1.19 (0.0468)
0.448-0.460 (0.0176-0.0181)	20	1.20 (0.0472)
0.435-0.446 (0.0171-0.0175)	21	1.21 (0.0476)
0.421-0.433 (0.0165-0.0170)	22	1.22 (0.0480)
0.408-0.419 (0.0160-0.0164)	23	1.23 (0.0484)
0.394-0.406 (0.0155-0.0159)	24	1.24 (0.0488)
0.381-0.392 (0.0150-0.0154)	25	1.25 (0.492)
0.367-0.379 (0.0144-0.0149)	26	1.26 (0.0496)
0.354-0.365 (0.0139-0.0143)	27	1.27 (0.0499)
0.340-0.352 (0.0133-0.0138)	28	1.28 (0.0503)
0.327-0.338 (0.0128-0.0133)	29	1.29 (0.0507)
0.313-0.325 (0.0123-0.0127)	30	1.30 (0.0511)
0.300-0.311 (0.0118-0.0122)	31	1.31 (0.0515)
0.286-0.298 (0.0112-0.0117)	32	1.32 (0.0519)
0.272-0.284 (0.0107-0.0111)	33	1.33 (0.0523)
0.259-0.271 (0.0101-0.0106)	34	1.34 (0.0527)

Backlash mm (in)	Selection shim (No.)	Shim thicness mm (in)
0.245-0.257 (0.0096-0.0101)	35	1.35 (0.0531)
0.232-.0243 (0.0091-0.0095)	36	1.36 (0.535)
0.218-0.230 (0.0085-0.0090)	37	1.37 (0.539)
0.205-.0216 (0.0080-0.0085)	38	1.38 (0.0543)
0.191-0.203 (0.0075-0.0079)	39	1.39 (0.0547)
0.178-0.189 (0.0070-0.0074)	40	1.40 (0.0551)
0.164-0.176 (0.0064-0.0069)	41	1.41 (0.0555)
0.151-0.162 (0.0059-0.0063)	42	1.42 (0.0559)
0.137-0.149 (0.0053-0.0058)	43	1.43 (0.0562)
0.124-0.135 (0.0048-0.0053)	44	1.44 (0.0566)
0.110-0.122 (0.0043-0.0048)	45	1.45 (0.0570)
0.097-0.108 (0.0038-0.0042)	46	1.46 (0.0574)
0.083-0.095 (0.0032-0.0037)	47	1.47 (0.0578)
0.070-0.081 (0.0027-0.0031)	48	1.48 (0.0582)
0.056-0.068 (0.0022-0.0026)	49	1.49 (0.0586)
0.043-0.054 (0.0016-0.0021)	50 (master)	1.50 (0.0590)
0.029-0.041 (0.0011-0.0016)	51	1.51 (0.0594)
0.015-0.027 (0.0005-0.0010)	52	1.52 (0.0598)
0.002-0.014 (0.00007-0.0005)	53	1.53 (0.0602)
0.000-0.000 (0.0000-0.0000)	54	1.54 (0.0606)

E134655

50. Install the crankshaft TDC timing peg and rotate the crankshaft slowly clockwise until the crankshaft balance weight is up against the

GENERAL PROCEDURES

crankshaft TDC timing peg. The engine is now at TDC.

Special Tool(s): 303-507

E131755

51. With the balancer unit shaft marks in the TDC position, slowly install the balancer unit to the cylinder block to avoid interference between the crankshaft drive gear and the balancer unit driven gear.

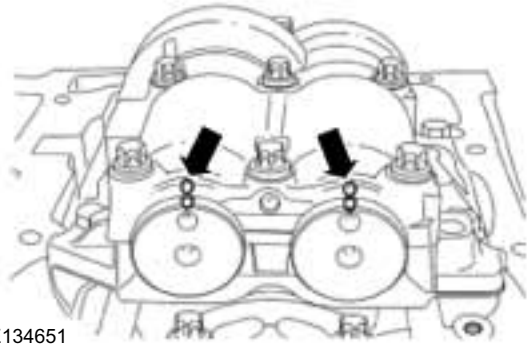
E134651

52. Install the balancer unit bolts.
Torque:
- Stage 1: 25 Nm
- Stage 2: 50 Nm

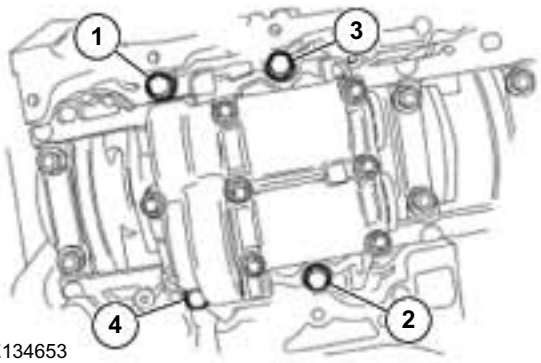

E134653

53. Remove the Special Tool(s): 303-507

E131755

54. Install the timing peg bolt.
Torque: 20 Nm

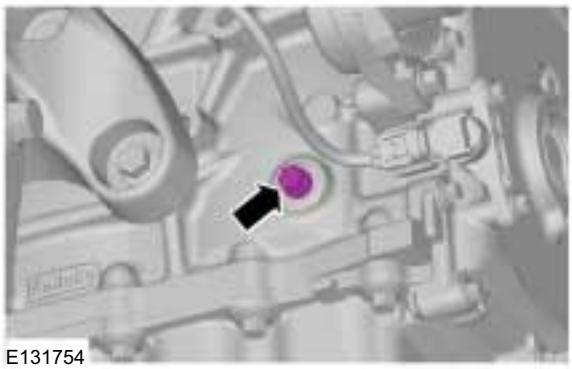
E131754

55. **NOTE:** Remeasure the backlash and verify that it is within specified range at all of the following 6 positions: 10 degrees, 30 degrees, 100 degrees, 190 degrees, 210 degrees and 280 degrees. It will be necessary to reset the measuring equipment between measurements.

NOTE: The measurement must be taken with the dial indicator gauge with holding fixture, a 5-mm allen wrench and worm clamp set up as shown. Mark the Allen wrench with a file 80 mm (3.149 in) above the driven gear shaft center. Make sure the worm clamp and allen wrench are not touching the balance shaft housing.

NOTE: For an accurate measurement while measuring the gear backlash, insert a screwdriver as shown into the crankshaft No. 1 crankweight area and set both the rotation and the thrust direction with the screwdriver, using a prying action as shown.

- Position the dial indicator gauge with holding fixture (1) on the allen wrench 80 mm (3.149

GENERAL PROCEDURES

in) above the driven gear shaft center (2) on the balancer unit.

Special Tool(s): 100-002

- Rotate the crankshaft clockwise and measure the backlash at all of the following 6 positions: 10 degrees, 30 degrees, 100 degrees, 190 degrees, 210 degrees and 280 degrees.
- If the backlash exceeds the specified range of 0.005 to 0.101 mm (0.00019 to 0.0039 in), install a new balancer unit and repeat the procedure.

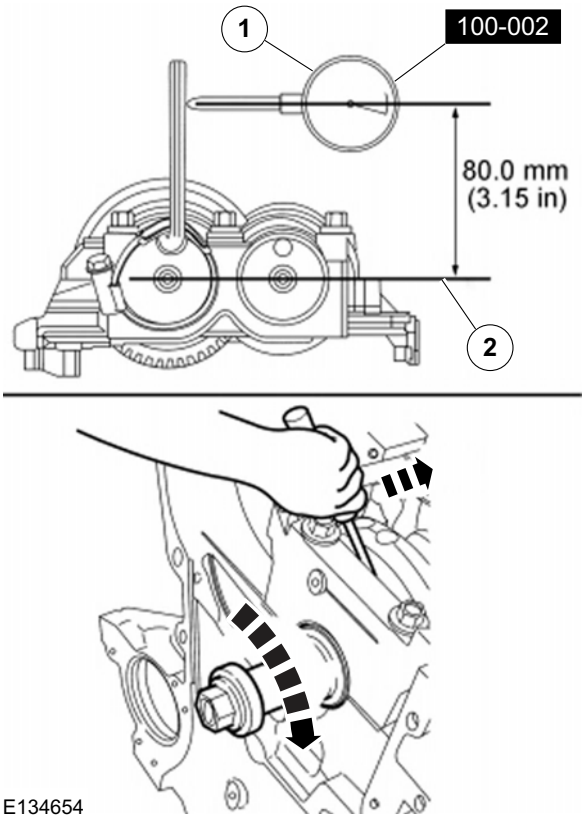

REMOVAL AND INSTALLATION

Camshafts(21 284 0)

Special Tool(s) / General Equipment

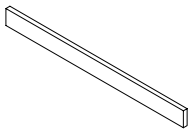 E134673	303-465 Tool, Camshaft Align Timing
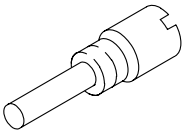 PZ21210	303-507 Timing Peg, Crankshaft TDC
2 mm Punch	

Materials	
Name	**Specification**
Hypoid Oil 85W-90	SQ-M2C9002-AA / A72SX-19K261-CA
Thread Locking MS	WSK-M2G349-A7 / 2U7J-M2G349-AA

Removal

NOTE: Removal steps in this procedure may contain installation details.

1. Refer to: Accessory Drive Belt (303-05 Accessory Drive - 2.5L Duratec-HE (122kW/165PS) - MI4, Removal and Installation).

2. **CAUTIONS:**

   During engine repair procedures, cleanliness is extremely important. Any foreign material (including any material created while cleaning gasket surfaces) that enters the oil passages, coolant passages or the oil pan can cause engine failure.

   Do not rotate the camshafts unless instructed to in this procedure. Rotating the camshafts or crankshaft with timing components loosened or removed can cause serious damage to the valves and pistons.

   Refer to: Valve Cover (303-01 Engine - 2.5L Duratec-HE (122kW/165PS) - MI4, Removal and Installation).

3. **WARNING: Only rotate the crankshaft clockwise.**

   Turn the crankshaft until no. 1 piston is at about 45° before TDC.

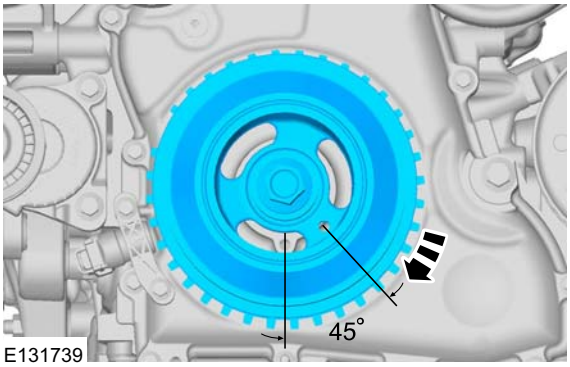

E131739

4. **CAUTION: The camshaft alignment plate is for camshaft alignment only. Using this tool to prevent engine rotation can result in engine damage.**

   NOTE: The camshaft timing slots are offset. If the camshaft alignment plate cannot be installed, rotate the crankshaft one complete revolution clockwise to correctly position the camshafts.

   Special Tool(s): 303-465

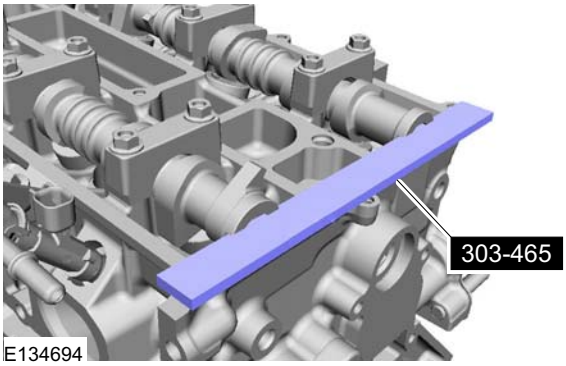

E134694

REMOVAL AND INSTALLATION

5.

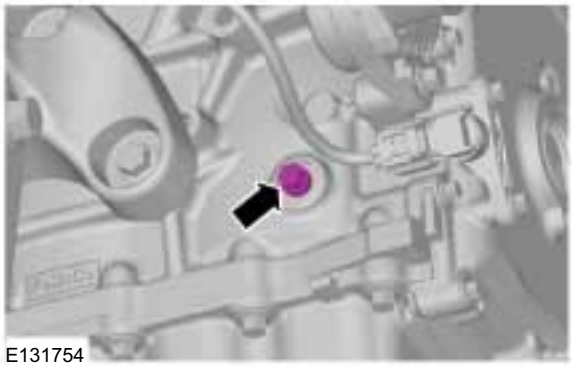

6. Special Tool(s): 303-507

7. **NOTE:** Only tighten the bolt finger tight at this stage.
   - Bolt M6 x 18 mm

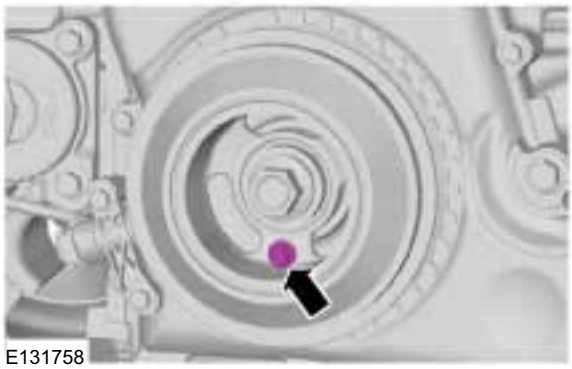

8.

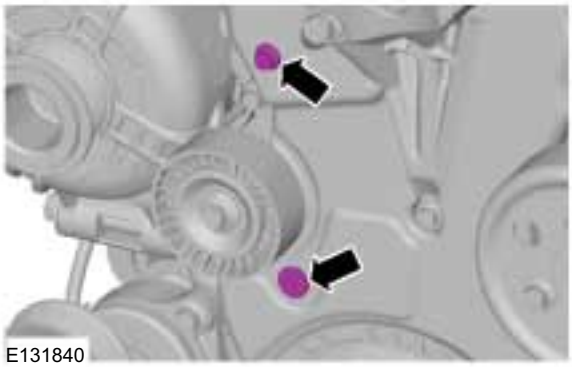

9. Reposition the camshaft alignment plate to the slot on the rear of the intake camshaft only.

   Special Tool(s): 303-465

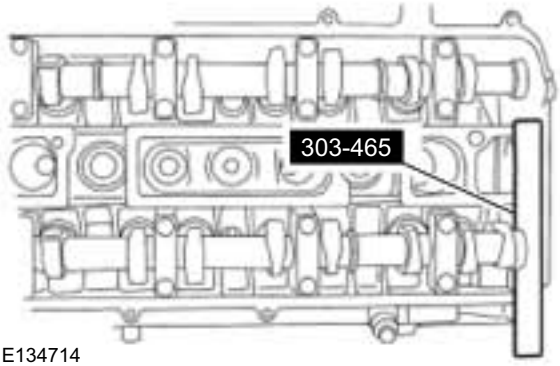

10. **CAUTION: Releasing the ratcheting mechanism in the timing chain tensioner allows the plunger to collapse and create slack in the timing chain. Installing an M6 x 30 mm bolt into the upper front cover timing hole will hold the tensioner arm in a retracted position and allow enough slack in the timing**

REMOVAL AND INSTALLATION

chain for removal of the exhaust camshaft gear.

1. General Equipment: 2 mm Punch
3. Bolt M6 x 25 mm

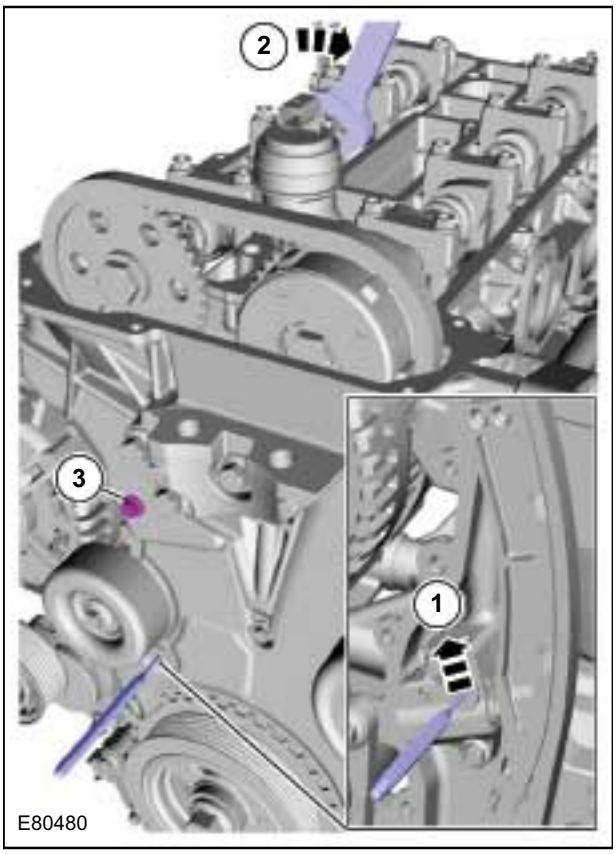

11. **CAUTION: Counterhold the camshaft at the hexagon with a wrench to prevent the camshaft from rotating.**

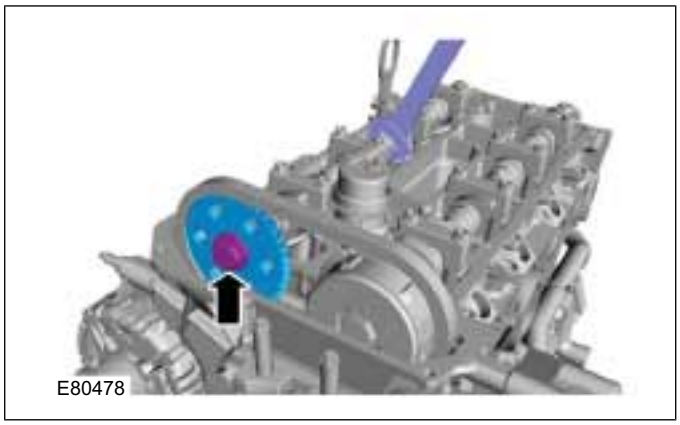

12. Remove the Special Tool(s): 303-465

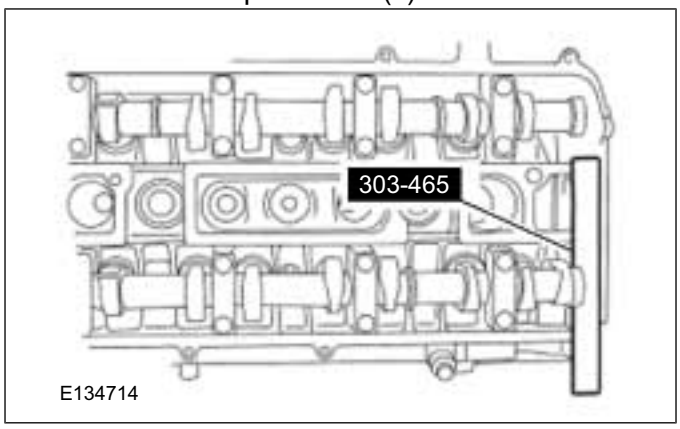

13. Remove the timing chain from the intake camshaft drive gear.

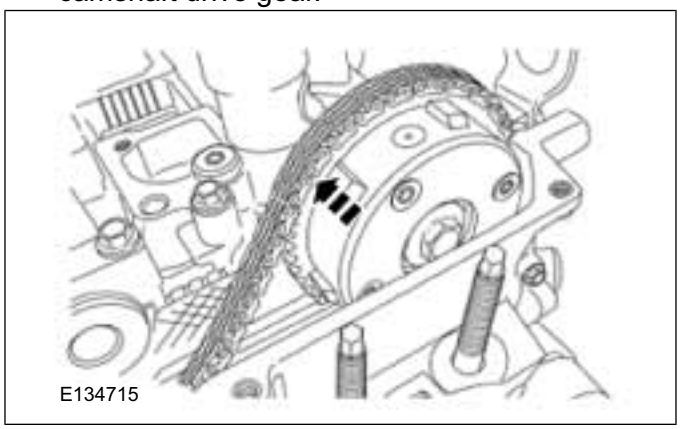

14. Mark the position of the camshaft lobes on the No. 1 cylinder for installation reference.

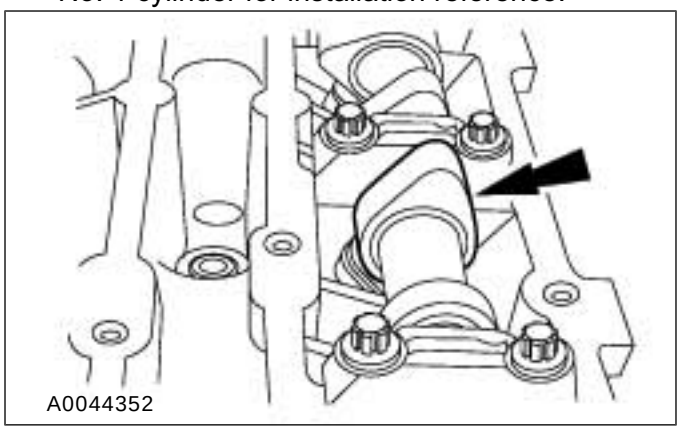

15. **CAUTION: Failure to follow the camshaft loosening procedure can result in damage to the camshafts.**

REMOVAL AND INSTALLATION

NOTE: Mark the location and orientation of each camshaft bearing cap.

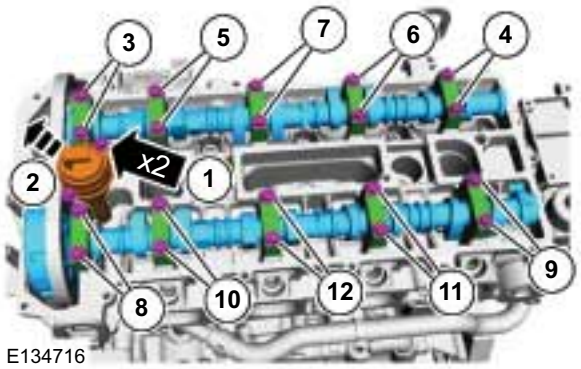

Installation

1. ⚠ **CAUTION: Make sure that the camshafts and camshaft bearing caps are installed in their original locations.**

   NOTE: Lubricate the camshaft journals and bearing caps with clean engine oil.

   Coat the camshaft bearing caps with oil and install the camshafts approximately at valve overlap position cylinder No. 4.

   Material: Hypoid Oil 85W-90 (SQ-M2C9002-AA / A72SX-19K261-CA) transmission fluid
   Torque:
   - Stage 1: 7 Nm
   - Stage 2: 16 Nm

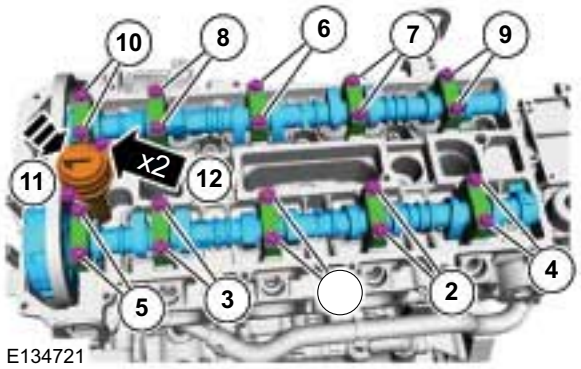

2. **NOTE:** This step is only necessary when installing a new component.

   Adjust the valve clearance.

   Refer to: Valve Clearance Adjustment (303-01 Engine - 2.5L Duratec-HE (122kW/165PS) - MI4, General Procedures).

3. Install the timing chain on the intake camshaft drive gear.

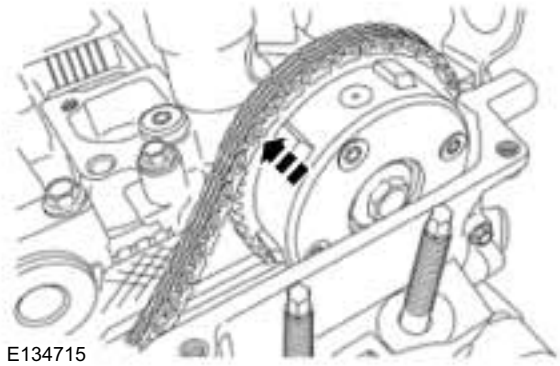

4. **NOTE:** Only tighten the bolt finger tight at this stage.

   NOTE: Make sure that the camshaft sprockets can rotate on the camshafts.

   NOTE: The timing chain must be correctly engaged on the teeth of the crankshaft timing sprocket and the intake camshaft drive gear in order to install the exhaust camshaft drive gear onto the exhaust camshaft.

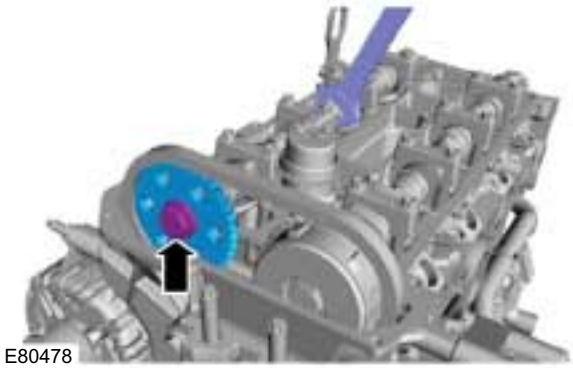

5. **NOTE:** Releasing the tensioner arm will remove the slack from the timing chain.

   Remove the bolt M6 x 30mm.

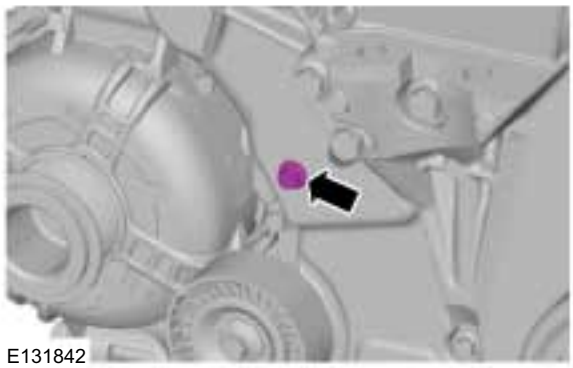

REMOVAL AND INSTALLATION

6. **CAUTION: Counterhold the camshaft at the hexagon with a wrench to prevent the camshaft from rotating.**

   Torque: 72 Nm

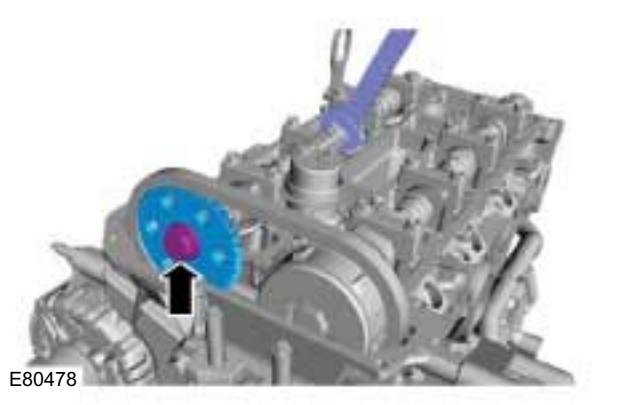

7. Remove the Special Tool(s): 303-465

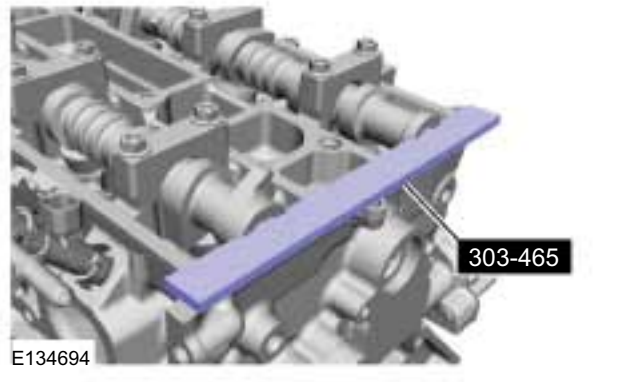

8. Remove the bolt M6 x 18 mm.

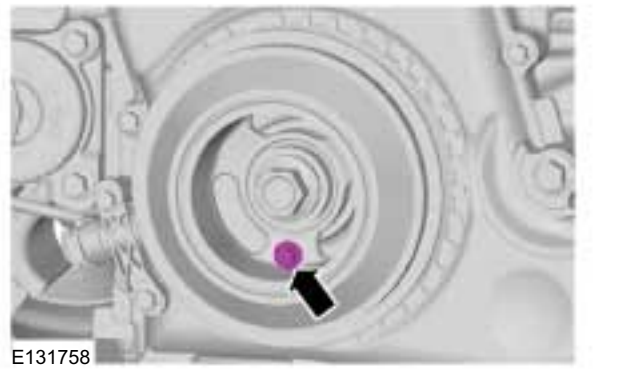

9. Remove the Special Tool(s): 303-507

10. • Material: Thread Locking MS (WSK-M2G349-A7 / 2U7J-M2G349-AA) adhesive
    1. Torque: 10 Nm
    2. Torque: 12 Nm

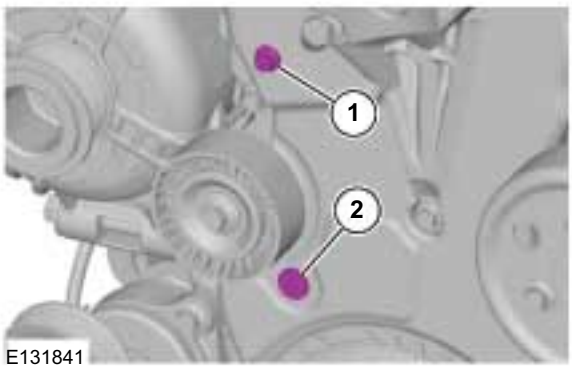

11. Torque: 20 Nm

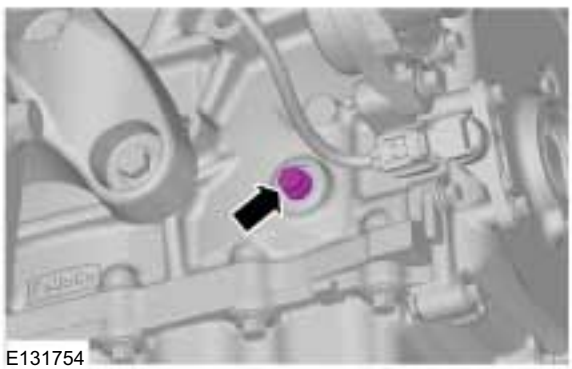

12. Refer to: Valve Cover (303-01 Engine - 2.5L Duratec-HE (122kW/165PS) - MI4, Removal and Installation).

13. Refer to: Accessory Drive Belt (303-05 Accessory Drive - 2.5L Duratec-HE (122kW/165PS) - MI4, Removal and Installation).

REMOVAL AND INSTALLATION

Crankshaft Front Seal(21 467 0)

Special Tool(s)

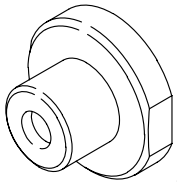 21148	303-318 Aligner/Installer, Crankshaft Front Seal
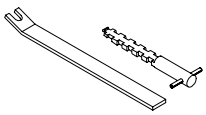 E134603	303-409 Remover Crankshaft Seal

Removal

NOTE: Removal steps in this procedure may contain installation details.

1. Refer to: Crankshaft Pulley (303-01 Engine - 2.5L Duratec-HE (122kW/165PS) - MI4, Removal and Installation).
2. Special Tool(s): 303-409

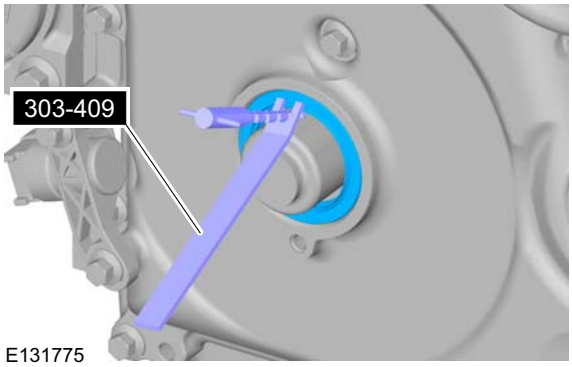

E131775

Installation

1. Special Tool(s): 303-318

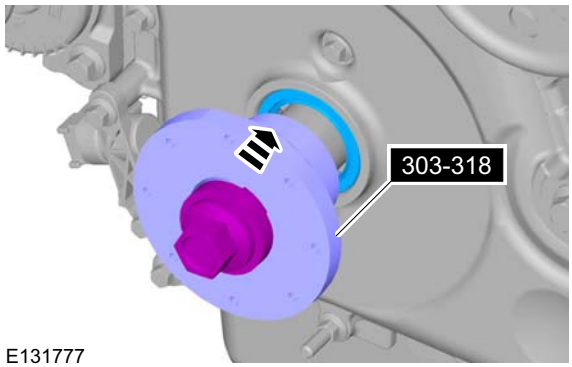

E131777

2. Remove the Special Tool(s): 303-318

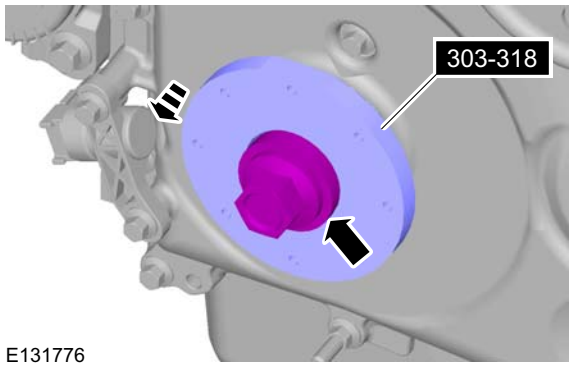

E131776

3. To install, reverse the removal procedure.

REMOVAL AND INSTALLATION

Crankshaft Pulley(21 572 0)

Special Tool(s)

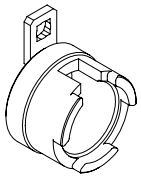 E134674	303-1416 Tool, Crank Damper Holding
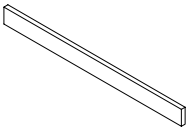 E134673	303-465 Tool, Camshaft Align Timing
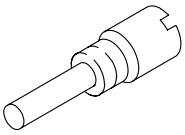 PZ21210	303-507 Timing Peg, Crankshaft TDC

Removal

NOTE: Removal steps in this procedure may contain installation details.

1. Refer to: Accessory Drive Belt (303-05 Accessory Drive - 2.5L Duratec-HE (122kW/165PS) - MI4, Removal and Installation).

2. **CAUTION: During engine repair procedures, cleanliness is extremely important. Any foreign material (including any material created while cleaning gasket surfaces) that enters the oil passages, coolant passages or the oil pan can cause engine failure.**

   Refer to: Valve Cover (303-01 Engine - 2.5L Duratec-HE (122kW/165PS) - MI4, Removal and Installation).

3. **WARNING: Only rotate the crankshaft clockwise.**

   Turn the crankshaft until no. 1 piston is at about 45° before TDC.

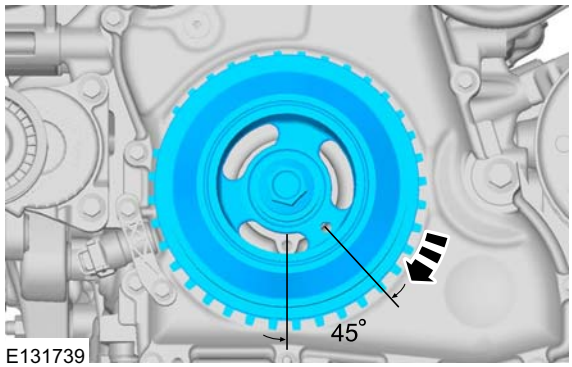

E131739

4. Special Tool(s): 303-1416

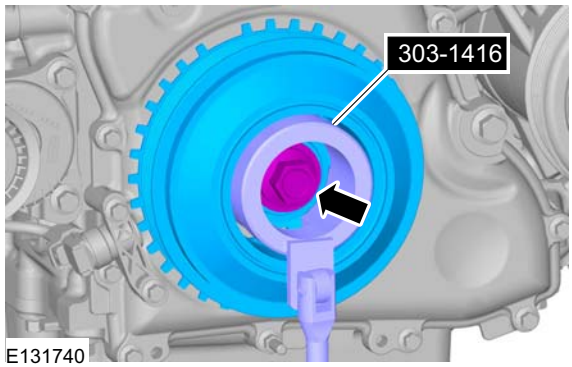

E131740

Installation

1. **WARNING: Only rotate the camshaft clockwise.**

   Turn the camshafts to cylinder no. 4 valve overlap position.

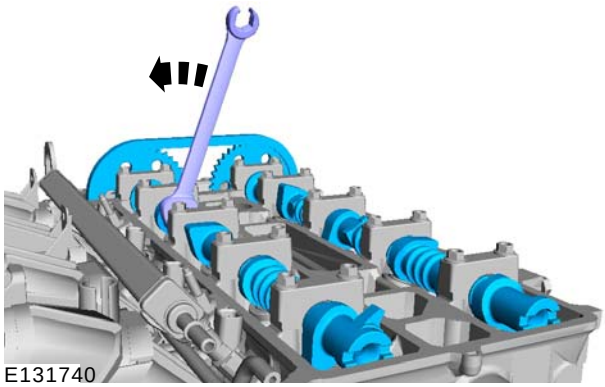
E131740

REMOVAL AND INSTALLATION

2. Special Tool(s): 303-465

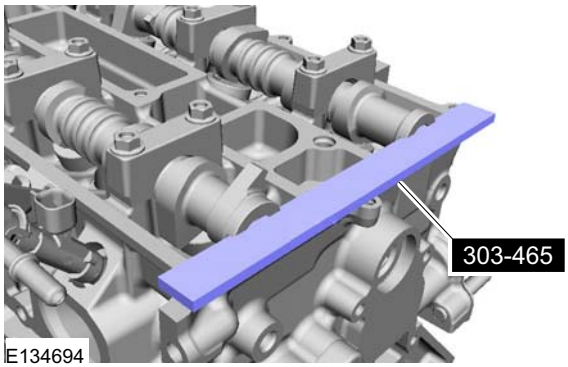

E134694

3.

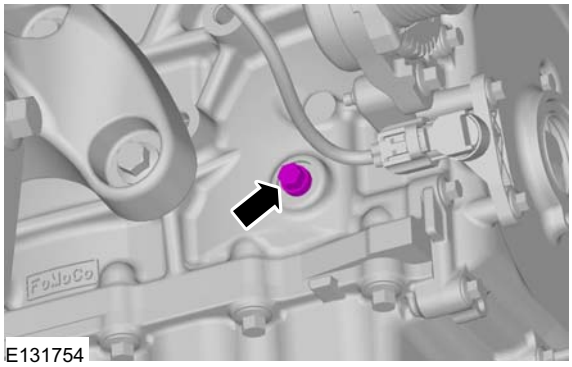
E131754

4. Special Tool(s): 303-507

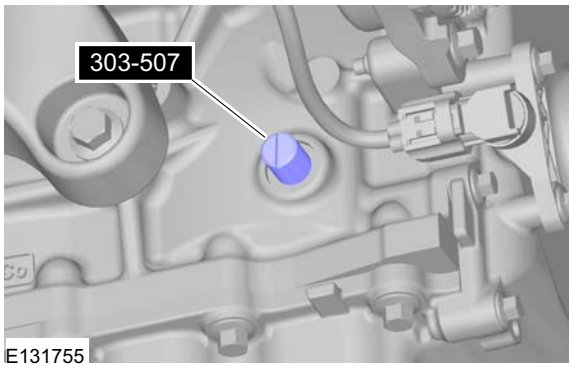

E131755

5. **WARNING: Only rotate the crankshaft clockwise.**

Turn the crankshaft until it stops against the special tool.

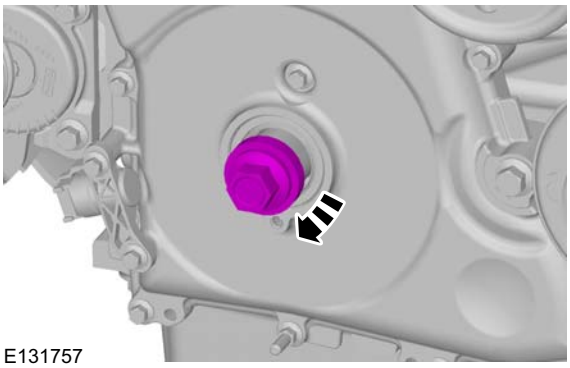
E131757

6.

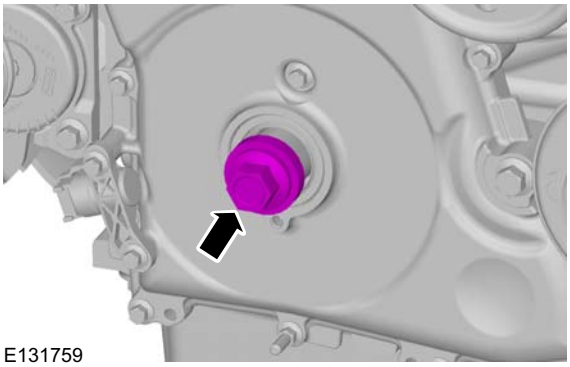
E131759

7. **NOTE:** Only tighten the bolt finger tight at this stage.

- Install the bolt M6 x 18 mm.

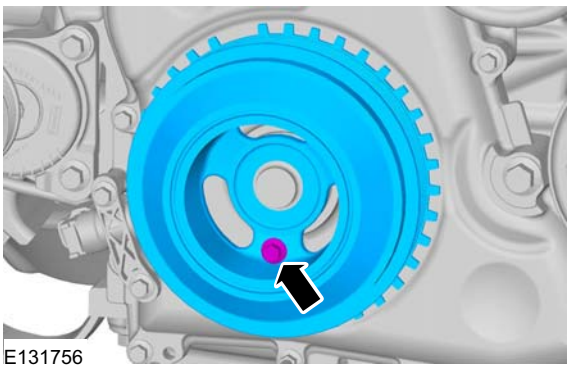
E131756

REMOVAL AND INSTALLATION

8. **CAUTION: Make sure that a new bolt is installed.**

   Special Tool(s): 303-1416
   Torque:
   - Stage 1: 100 Nm
   - Stage 2: 90°

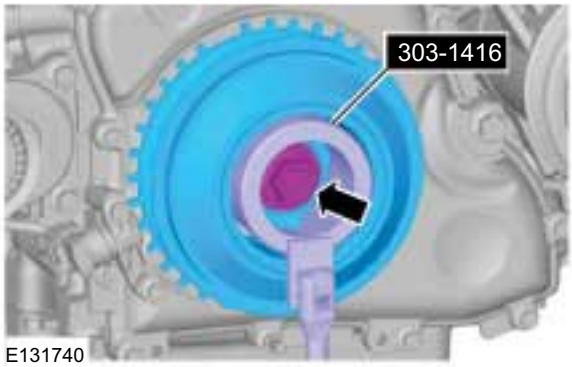

E131740

9. Remove the bolt M6 x 18 mm.

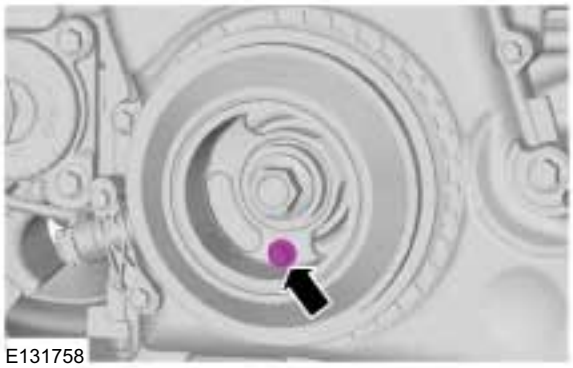
E131758

10. Remove the Special Tool(s): 303-465

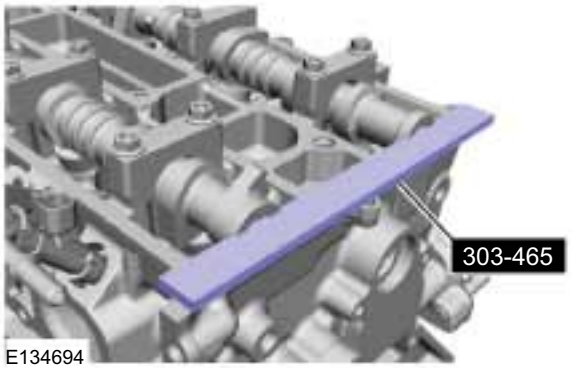

E134694

11. Remove the Special Tool(s): 303-507

E131755

12. **WARNING: Only rotate the crankshaft clockwise.**

    Turn the crankshaft one and three quarters of a turn until no. 1 piston is at about 45° before TDC.

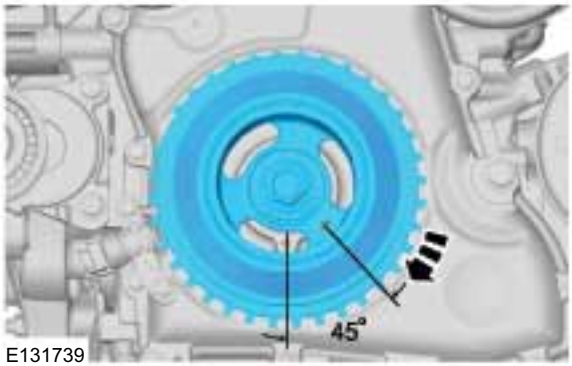

E131739

13. Install the crankshaft TDC timing peg.

    Special Tool(s): 303-507

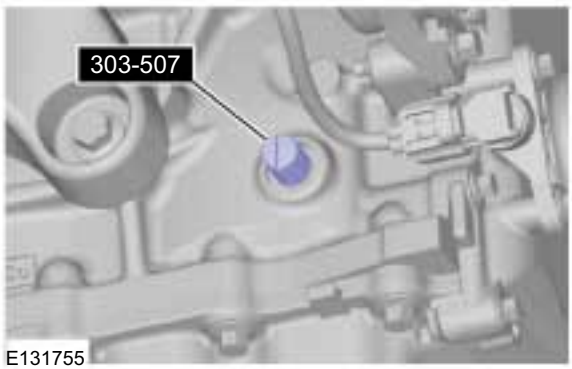

E131755

14. **WARNING: Only rotate the crankshaft clockwise.**

REMOVAL AND INSTALLATION

Turn the crankshaft until it stops against the special tool.

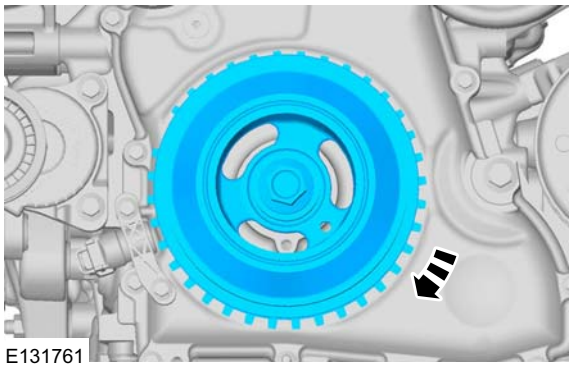
E131761

15. **NOTE:** Only tighten the bolt finger tight at this stage.

    NOTE: The bolt can only be installed if the valve timing is correct.

    - Install the bolt M6 x 18 mm.

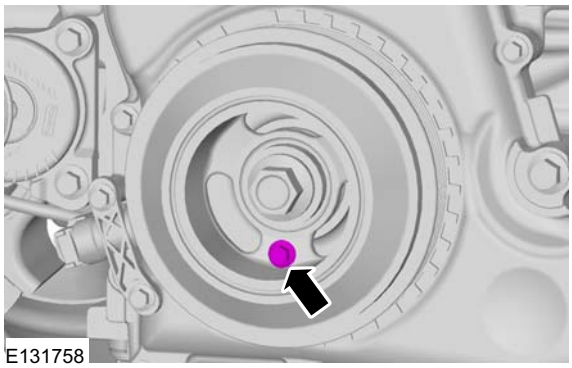
E131758

16. **NOTE:** The special tool may only be installed if the valve timings are correct.

    Special Tool(s): 303-465

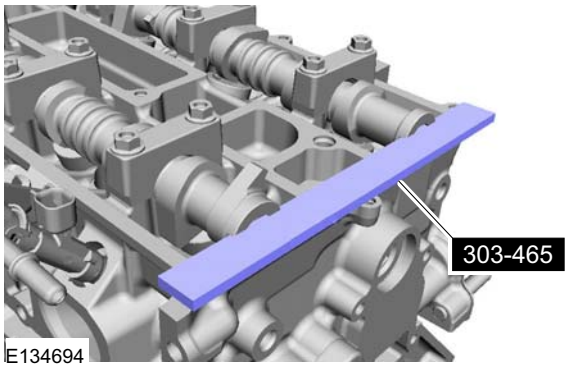

E134694

17. Remove the Special Tool(s): 303-465

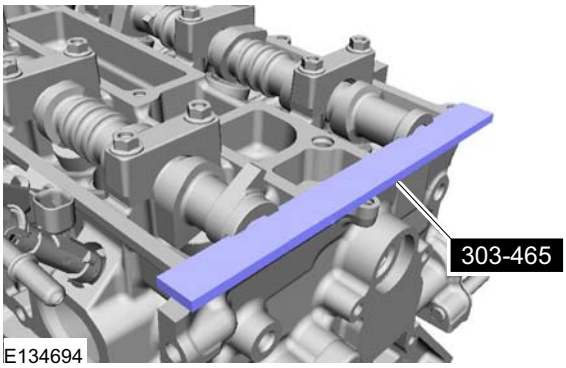

E134694

18. Remove the Special Tool(s): 303-507

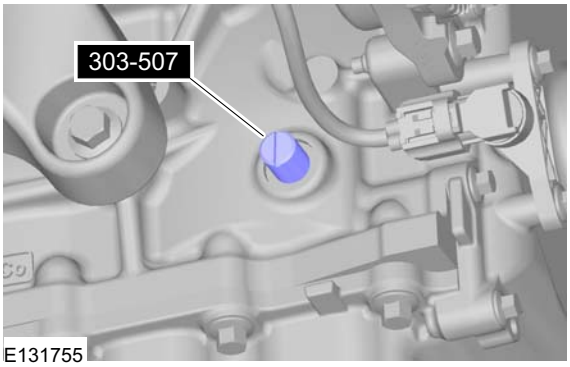

E131755

19. Remove the bolt M6 x 18 mm.

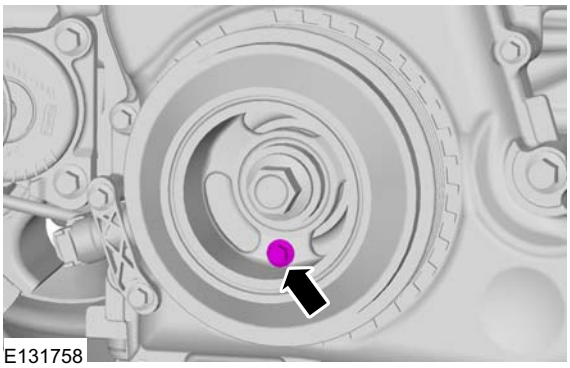
E131758

REMOVAL AND INSTALLATION

20. Torque: 20 Nm

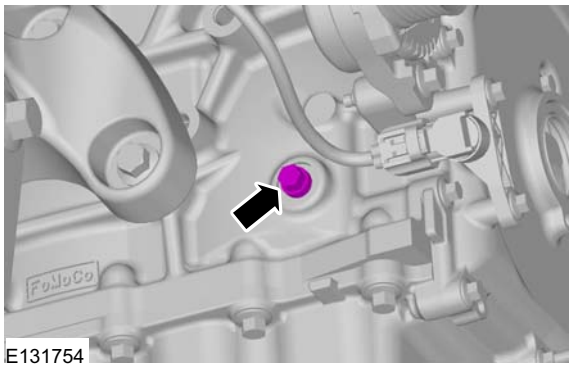

E131754

21. To install reverse the removal procedure.

REMOVAL AND INSTALLATION

Crankshaft Rear Seal(21 468 4)

Special Tool(s)

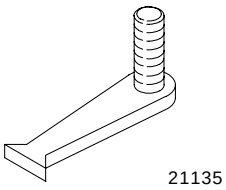 21135	303-254 Locking Tool, Flywheel
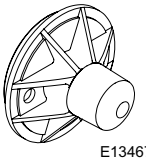 E134675	303-328 Replacer, Rear Oil Seal

Materials	
Name	**Specification**
Silicone Sealant LB	WSE-M4G323-A4 / 2U7J-M4G323-AA

Removal

NOTE: Removal steps in this procedure may contain installation details.

1. Refer to: Clutch Disc and Pressure Plate (308-01 Clutch - Vehicles With: 5-Speed Manual Transmission - MT75, Removal and Installation).
2. Discard the flywheel bolts.

   Special Tool(s): 303-254
   Torque:
   - Stage 1: 50 Nm
   - Stage 2: 80 Nm
   - Stage 3: 112 Nm

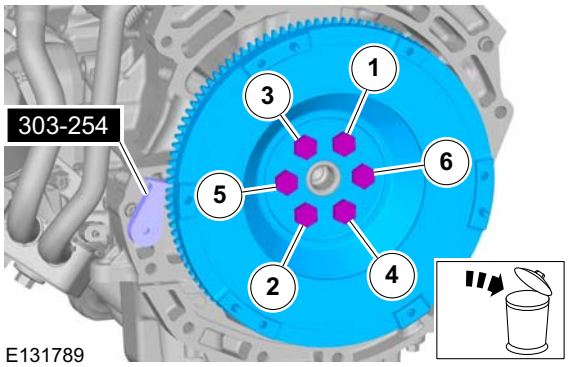

E131789

3. Refer to: Oil Pan (303-01 Engine - 2.5L Duratec-HE (122kW/165PS) - MI4, Removal and Installation).
4.

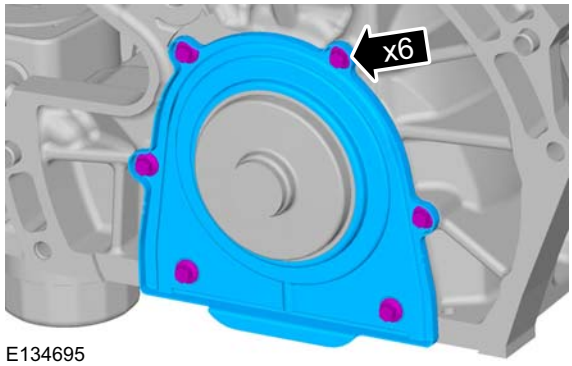

E134695

Installation

1. **CAUTION: Install the crankshaft rear seal carriers within five minutes of applying the sealer.**

   NOTE: Do not damage the mating faces.

   NOTE: Mating surface should not have traces of oil to improve the adhesion.

   Material: Silicone Sealant LB (WSE-M4G323-A4 / 2U7J-M4G323-AA) sealant

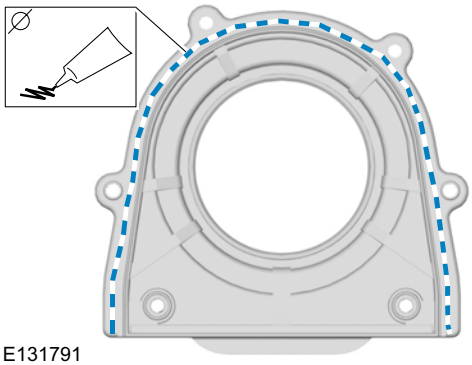
E131791

REMOVAL AND INSTALLATION

2. Using the crankshaft rear main oil seal installer, position the crankshaft rear oil seal with retainer plate onto the crankshaft.

   Special Tool(s): 303-328

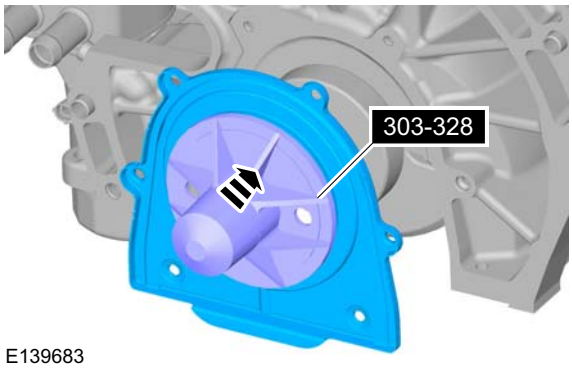

E139683

3. Special Tool(s): 303-328
   Torque: 10 Nm

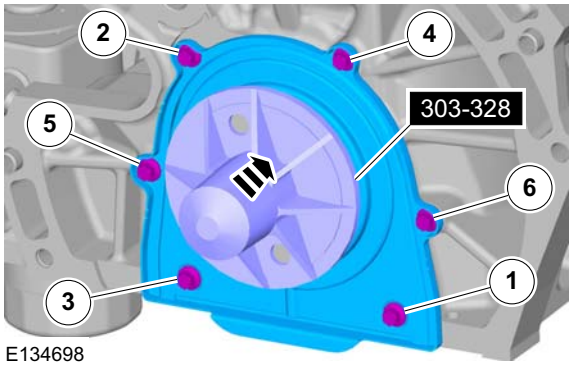

E134698

4. Remove the Special Tool(s): 303-328

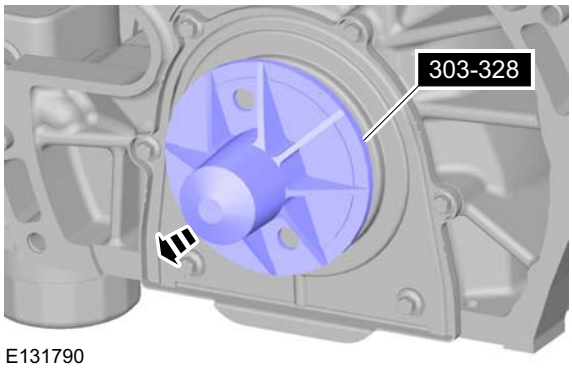

E131790

5. To install, reverse the removal procedure.

REMOVAL AND INSTALLATION

Cylinder Head(21 163 0)

Materials	
Name	**Specification**
Hypoid Oil 85W-90	SQ-M2C9002-AA / A72SX-19K261-CA

Removal

NOTE: Removal steps in this procedure may contain installation details.

1. Refer to: Cooling System Draining, Filling and Bleeding (303-03 Engine Cooling, General Procedures).
2. Refer to: Timing Chain (303-01 Engine - 2.5L Duratec-HE (122kW/165PS) - MI4, Removal and Installation).
3.

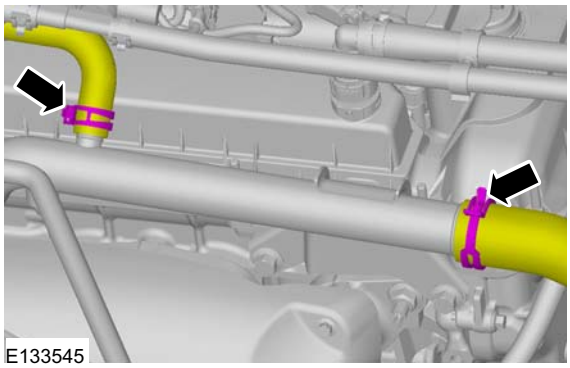
E133545

4.

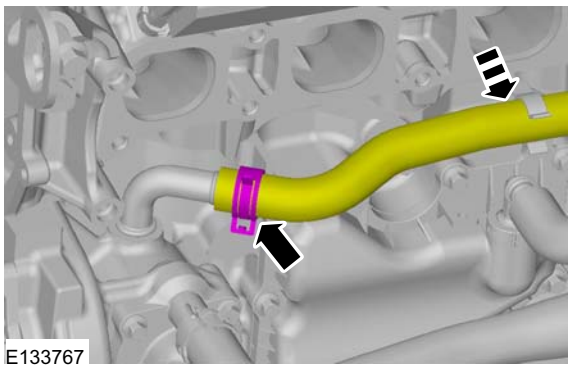
E133767

5. Torque: 10 Nm

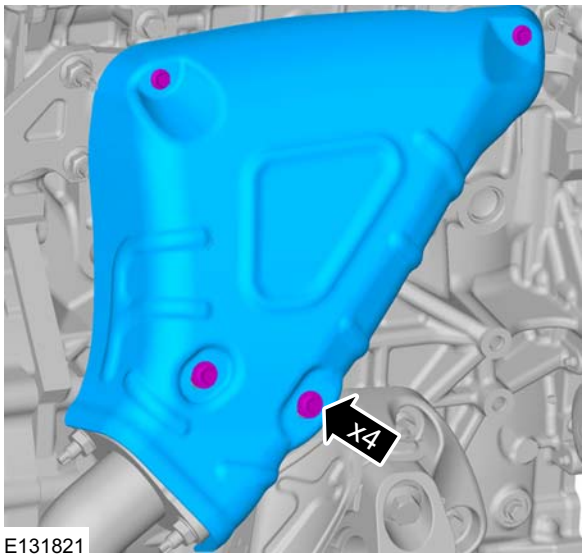

E131821

6. **CAUTIONS:**

Over bending the exhaust flexible pipe may cause damage resulting in failure.

Make sure that the catalytic converter is supported with suitable retaining straps.

NOTE: The gasket is to be reused unless damaged.

Torque: 48 Nm

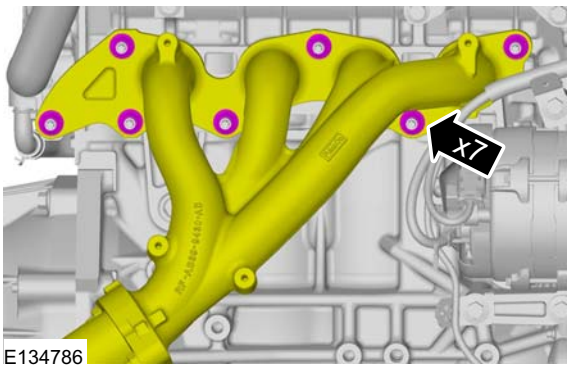

E134786

REMOVAL AND INSTALLATION

7. Torque: 48 Nm

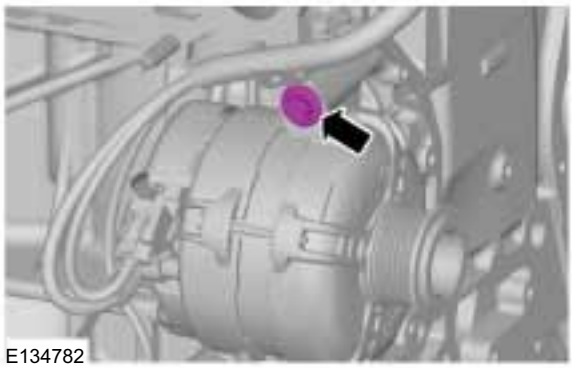
E134782

8.

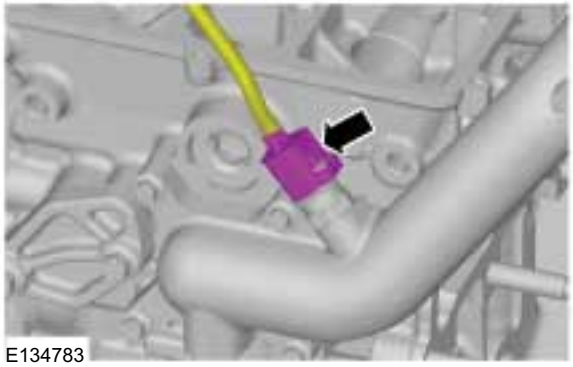
E134783

9. Torque: 23 Nm

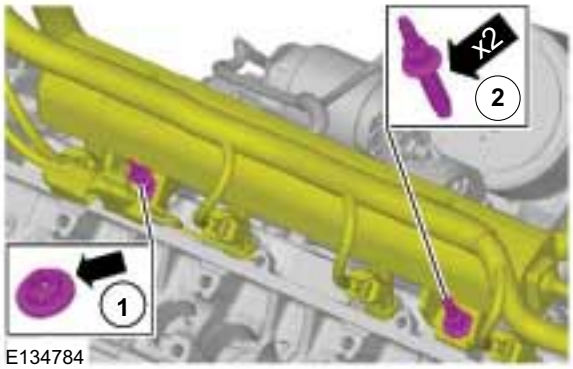

E134784

10. Mark the position of the camshaft lobes on the No. 1 cylinder for installation reference.

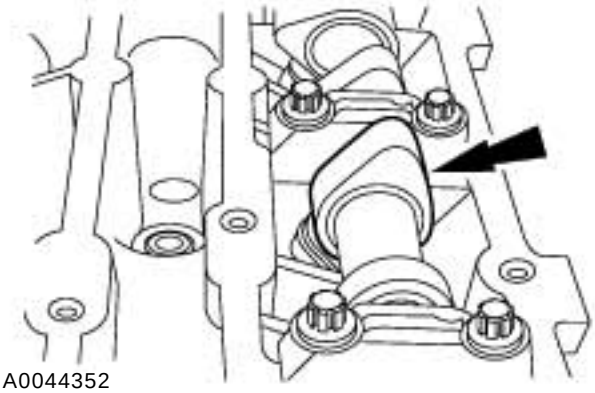
A0044352

11. CAUTIONS:

Failure to follow the camshaft loosening procedure can result in damage to the camshafts.

Note the position of each component before removal.

NOTE: Mark the location and orientation of each camshaft bearing cap.

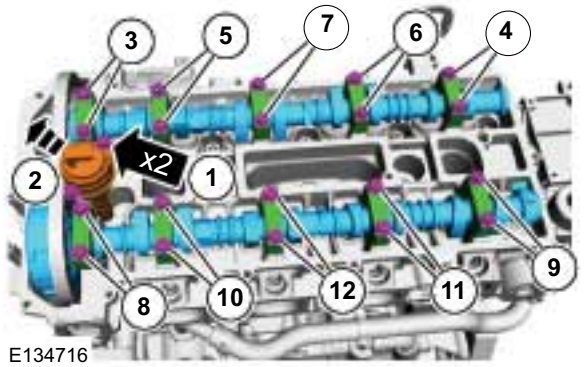

E134716

12. Discard the cylinder head bolts.

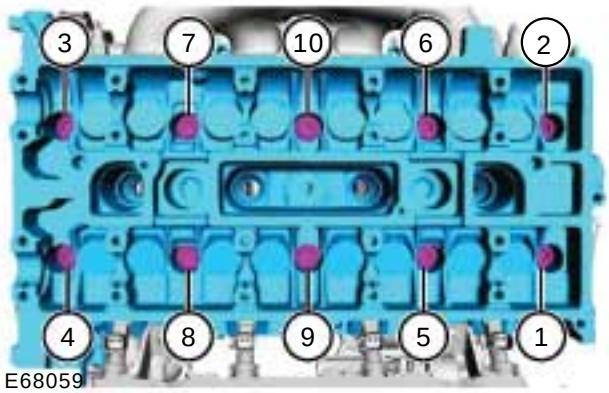

E68059

REMOVAL AND INSTALLATION

Installation

1. Install new cylinder head bolts.
   Torque:
   - Stage 1: 5 Nm
   - Stage 2: 15 Nm
   - Stage 3: 45 Nm
   - Stage 4: 90°
   - Stage 5: 90°

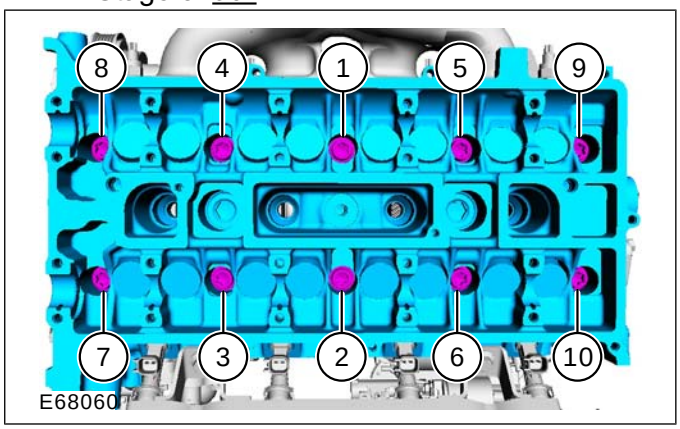

2. **CAUTION: Make sure that the camshafts and camshaft bearing caps are installed in their original locations.**

   Apply hypoid gear oil to the camshaft bearing caps. Install the camshafts approximately at valve overlap position cylinder No. 4.

   Material: Hypoid Oil 85W-90 (SQ-M2C9002-AA / A72SX-19K261-CA) transmission fluid
   Torque:
   - Stage 1: 7 Nm
   - Stage 2: 16 Nm

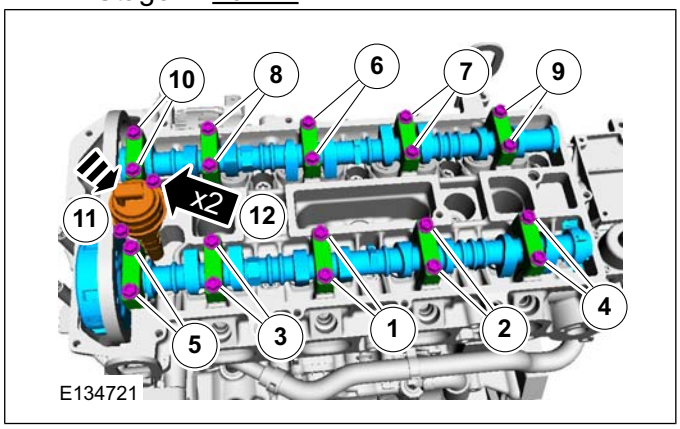

3. To install reverse the removal procedure.

REMOVAL AND INSTALLATION

Engine Front Cover

Special Tool(s)

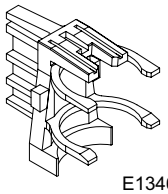 E134676	303-1417 Tool, Crank Sensor Alignment

Materials	
Name	**Specification**
Silicone Sealant LB	WSE-M4G323-A4 / 2U7J-M4G323-AA

Removal

NOTE: Removal steps in this procedure may contain installation details.

1. Loosen: 3 turn(s)

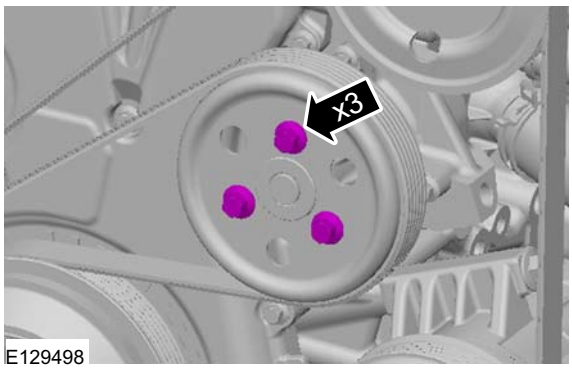

E129498

2.

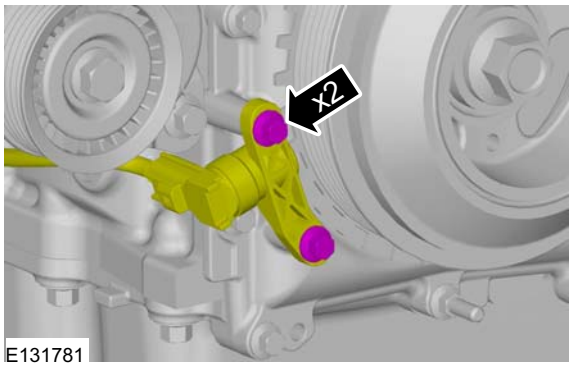

E131781

3. Refer to: Crankshaft Pulley (303-01 Engine - 2.5L Duratec-HE (122kW/165PS) - MI4, Removal and Installation).

4. Torque: 20 Nm

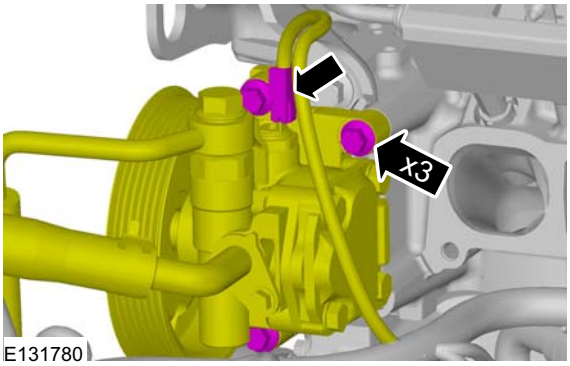

E131780

5. 1. Torque: 25 Nm
2. Torque: 20 Nm

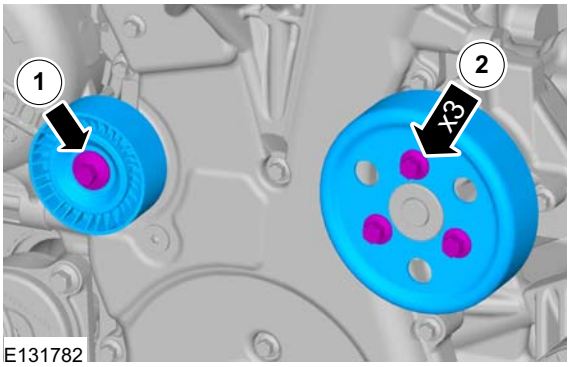

E131782

REMOVAL AND INSTALLATION

6.

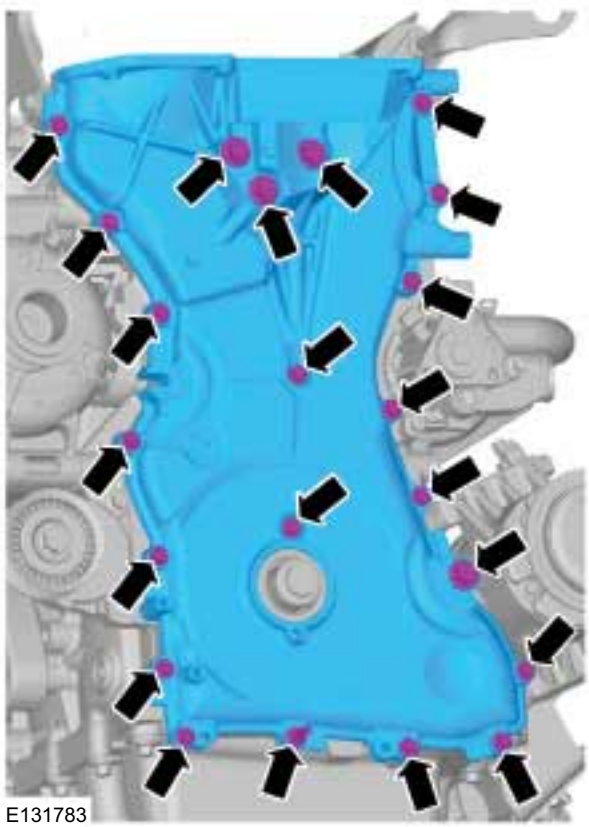

Apply sealant to the engine front cover (bead diameter: 3 mm).

Material: Silicone Sealant LB (WSE-M4G323-A4 / 2U7J-M4G323-AA) sealant

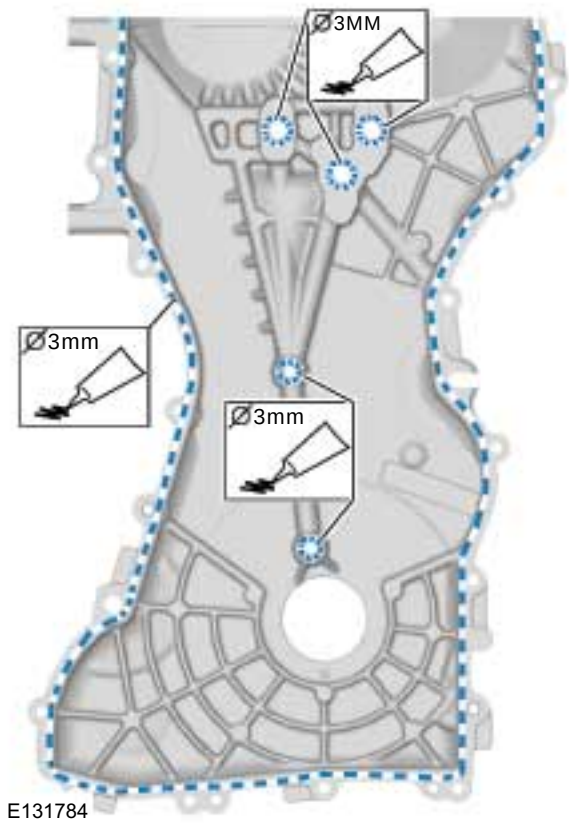

Installation

1. ⚠ **CAUTION: Install the engine front cover within five minutes of applying the sealer.**

   NOTE: Do not damage the mating faces.

   NOTE: Mating surface should not have traces of oil to improve the adhesion.

REMOVAL AND INSTALLATION

2. Torque:
   - 1 - 8 10 Nm
   - 9 48 Nm
   - 10 - 19 10 Nm
   - 20 - 22 48 Nm

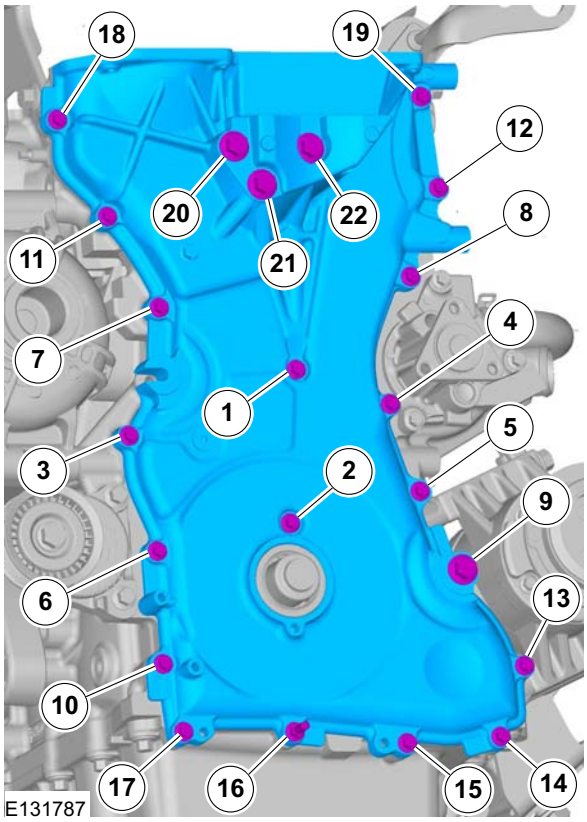

3. To install, reverse the removal procedure.

4. Special Tool(s): 303-1417

5. Torque: 7 Nm

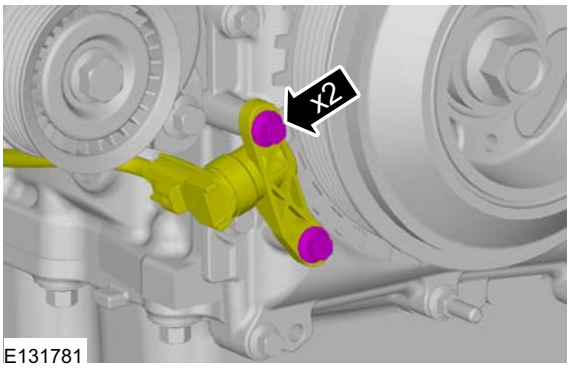

REMOVAL AND INSTALLATION

Exhaust Manifold(21 187 0)

Removal

NOTE: Removal steps in this procedure may contain installation details.

1. Refer to: Lifting (100-02 Jacking and Lifting, Description and Operation).
2. Torque: 10 Nm

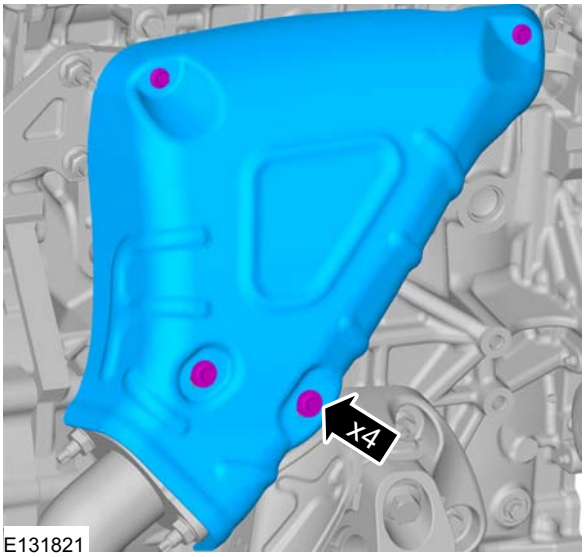

E131821

3. **CAUTION: Over bending the exhaust flexible pipe may cause damage resulting in failure.**

   NOTE: Securely strap the exhaust flexible pipe to the frame.

   1. Remove the exhaust pipe flange nuts. Torque: 48 Nm
   2. Remove the exhaust pipe flange studs. Torque: 25 Nm

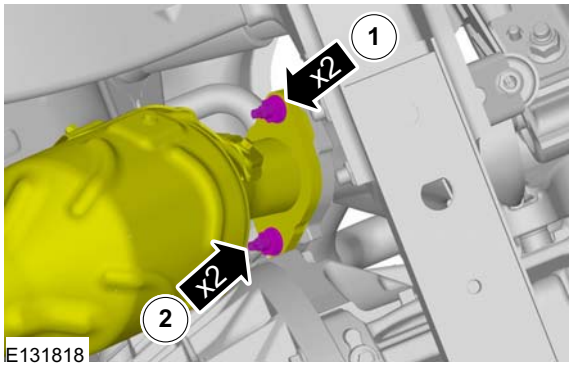

E131818

4.

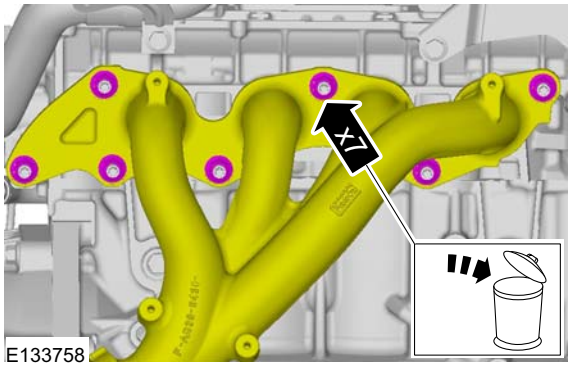

E133758

5.

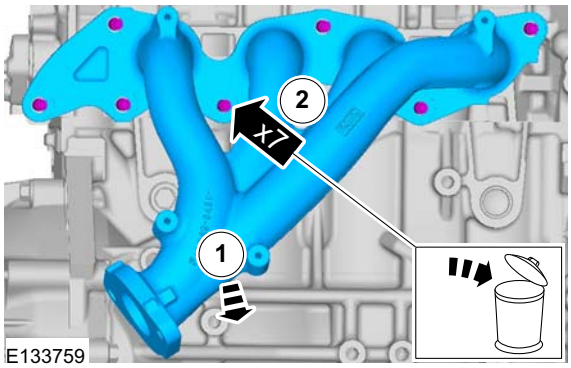

E133759

Installation

1. Torque: 17 Nm

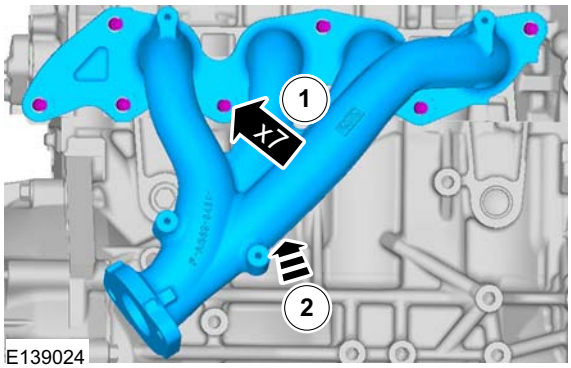

E139024

REMOVAL AND INSTALLATION

2. **NOTE:** Make sure that a new exhaust manifold gasket is installed.

   Torque: 55 Nm

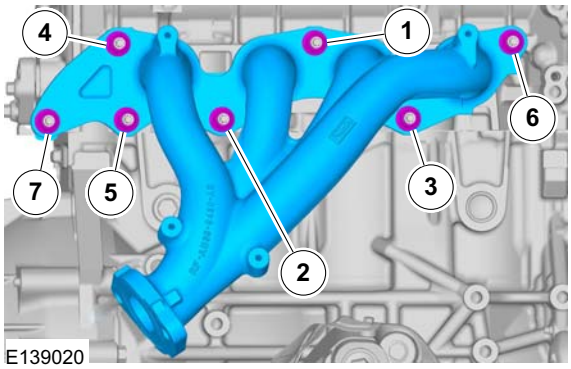

3. To install, reverse the removal procedure.

REMOVAL AND INSTALLATION

Intake Manifold(21 183 0)

Removal

NOTE: Removal steps in this procedure may contain installation details.

1. **WARNINGS:**

   Do not smoke, carry lighted tobacco or have an open flame of any type when working on or near any fuel-related component. Highly flammable mixtures are always present and may be ignited. Failure to follow these instructions may result in serious personal injury.

   Do not carry personal electronic devices such as cell phones, pagers or audio equipment of any type when working on or near any fuel-related component. Highly flammable mixtures are always present and may be ignited. Failure to follow these instructions may result in serious personal injury.

   Always disconnect the battery ground cable at the battery when working on an evaporative emission (EVAP) system or fuel-related component. Highly flammable mixtures are always present and may be ignited. Failure to follow these instructions may result in serious personal injury.

   Refer to: Battery Disconnect and Connect (414-01 Battery, Mounting and Cables, General Procedures).

2. Refer to: Lifting (100-02 Jacking and Lifting, Description and Operation).

3. Refer to: Throttle Body (303-04 Fuel Charging and Controls - 2.5L Duratec-HE (122kW/165PS) - MI4, Removal and Installation).

4. Refer to: Fuel System Pressure Release (310-00 Fuel System - General Information - 2.5L Duratec-HE (122kW/165PS) - MI4, General Procedures).

5. Torque: 10 Nm

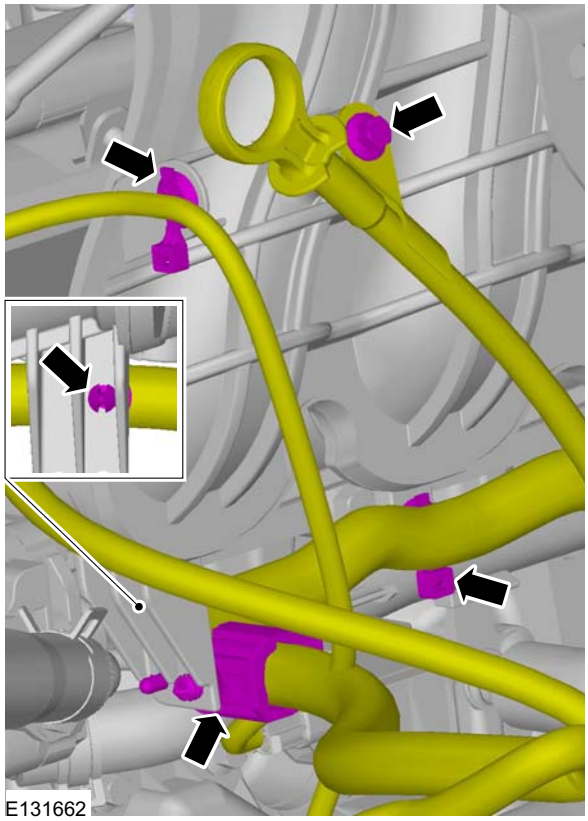

REMOVAL AND INSTALLATION

6. **NOTE:** Securely strap the fuel and breather tubes.

   Torque: 8 Nm

7.

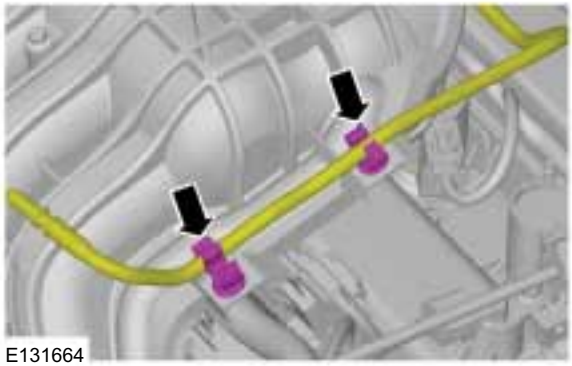

8.

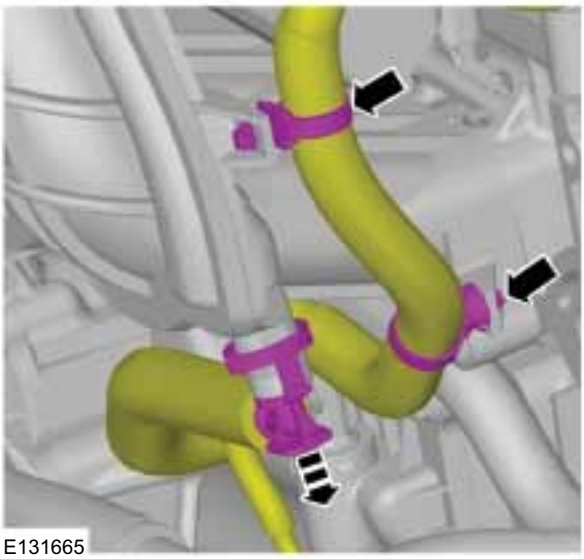

9. Torque: 11 Nm

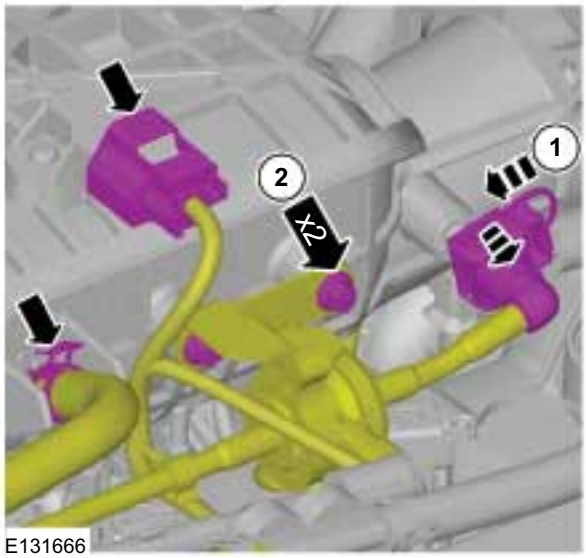

10. **NOTE:** The gasket is to be reused unless damage.

    Torque: 19 Nm

Installation

1. **NOTE:** Do not use metal scrapers, wire brushes, power abrasive discs or other abrasive means to clean the sealing surfaces. These tools can cause scratches and gouges which can make leak paths. Use a plastic scraping tool to remove all traces of the old intake manifold gaskets.

   NOTE: If the engine is repaired or replaced because of upper engine failure, typically including valve or piston damage, check the intake manifold for metal debris. If metal debris is found, install a new intake manifold. Failure to follow these instructions can result in engine damage.

   Clean the sealing surfaces and inspect the gaskets. Install new gaskets if necessary.

REMOVAL AND INSTALLATION

2. To install, reverse the removal procedure.
3. **NOTE:** Make sure that the pedals remain in the rest position.

   Turn the ignition key to position II and then wait one minute in order to initialise the throttle valve.
4. Turn the ignition key to the OFF position.

REMOVAL AND INSTALLATION

Timing Chain(21 314 0)

Special Tool(s) / General Equipment

17063	100-010 Remover, O-Ring Seal
E134673	303-465 Tool, Camshaft Align Timing
2 mm Punch	

Removal

NOTE: Removal steps in this procedure may contain installation details.

1. Refer to: Engine Front Cover (303-01 Engine - 2.5L Duratec-HE (122kW/165PS) - MI4, Removal and Installation).
2. 2. Special Tool(s): 100-010
   3. General Equipment: 2 mm Punch

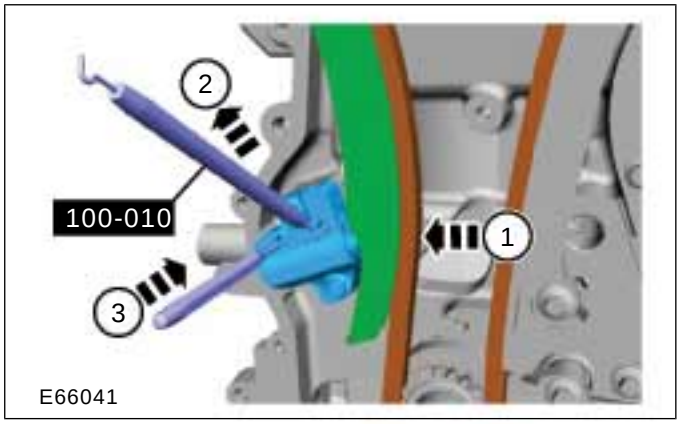

E66041

3.

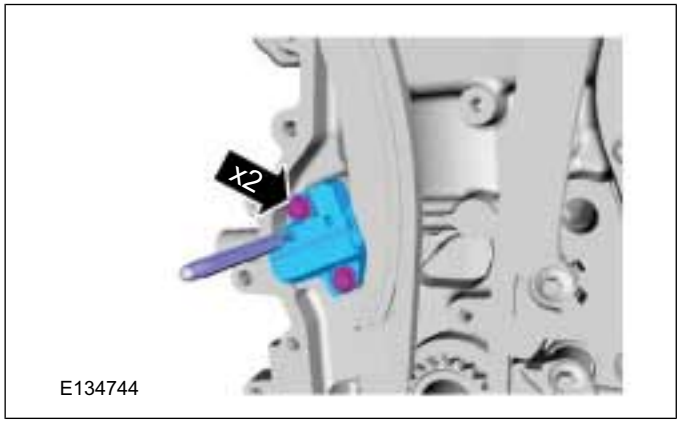

E134744

4. Remove the timing chain tensioner arm.

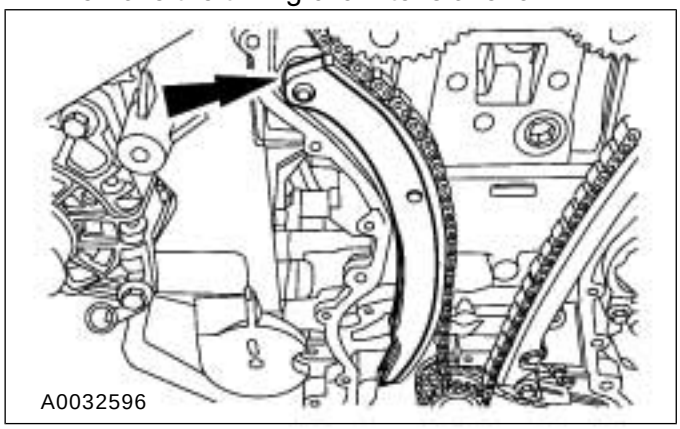
A0032596

5.

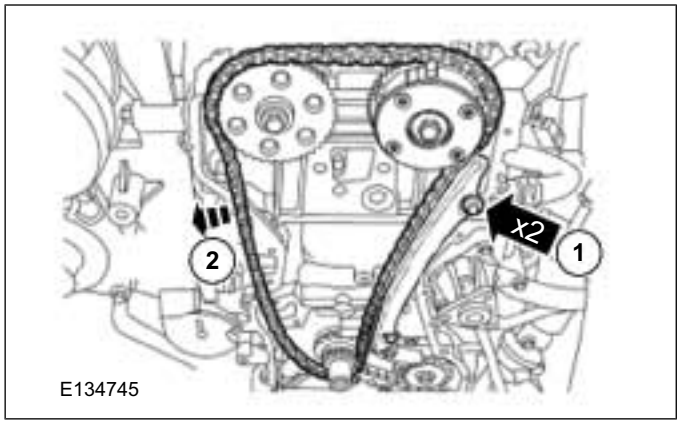

E134745

Installation

1. ⚠ **CAUTION: Only rotate the camshaft clockwise.**

REMOVAL AND INSTALLATION

Turn the camshafts to cylinder no. 4 valve overlap position.

Special Tool(s): 303-465

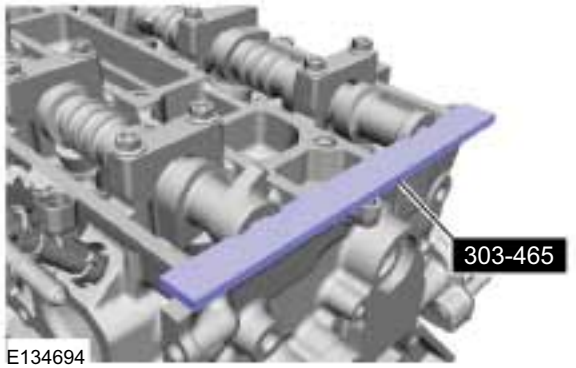

E134694

2. Torque: 10 Nm

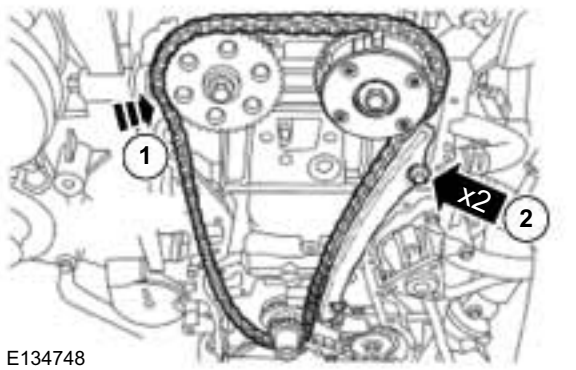

E134748

3.

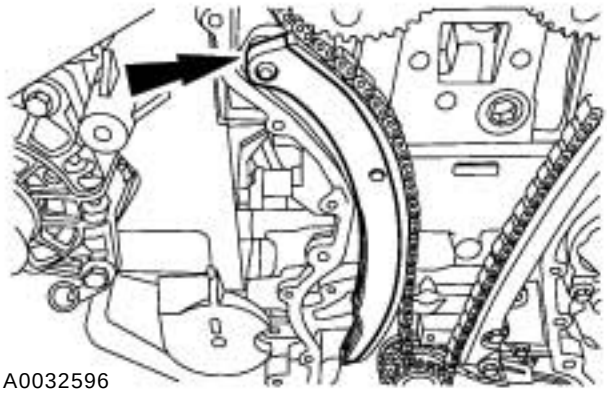
A0032596

4. Torque: 10 Nm

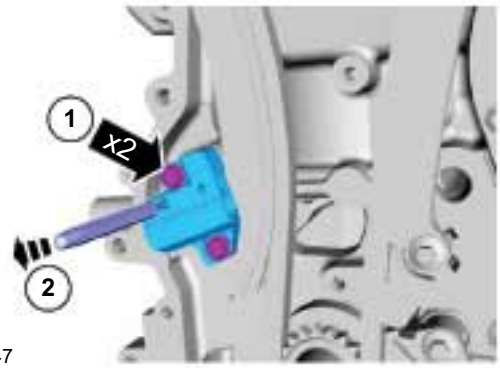

E134747

5. Refer to: Engine Front Cover (303-01 Engine - 2.5L Duratec-HE (122kW/165PS) - MI4, Removal and Installation).

REMOVAL AND INSTALLATION

Oil Pan(21 154 0)

Special Tool(s)

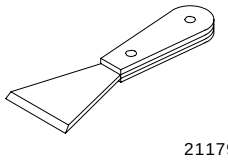 21179	303-428 Separator, Oil Pan

Materials	
Name	**Specification**
Silicone Sealant LB	WSE-M4G323-A4 / 2U7J-M4G323-AA

Removal

NOTE: Removal steps in this procedure may contain installation details.

1. Refer to: Health and Safety Precautions (100-00 General Information, Description and Operation).
2. Refer to: Lifting (100-02 Jacking and Lifting, Description and Operation).
3. Torque: 30 Nm

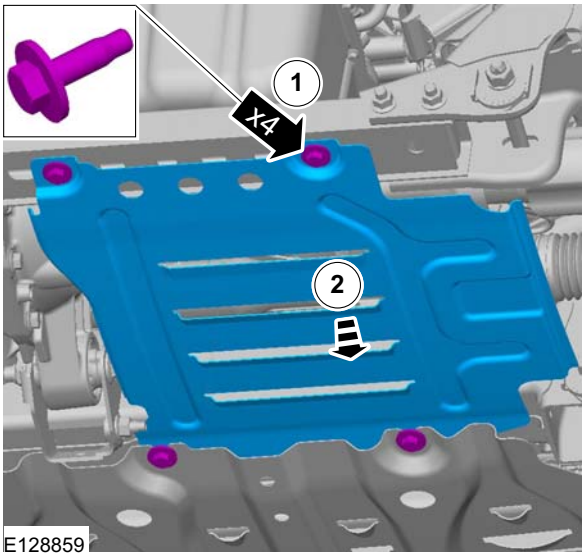

E128859

4. Torque: 90 Nm

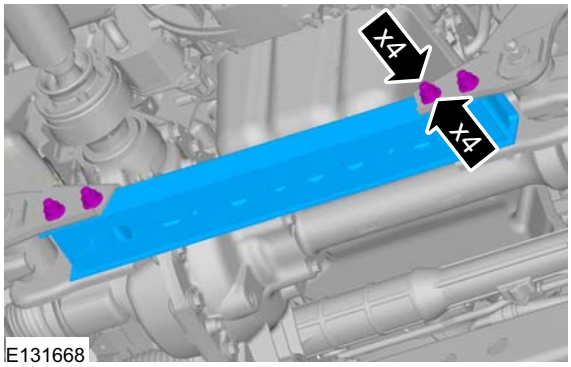

E131668

5. **WARNING: Be prepared to collect escaping fluids.**

   NOTE: The seal is to be reused unless damaged.

   Drain the oil into a suitable container.
   Torque: 28 Nm

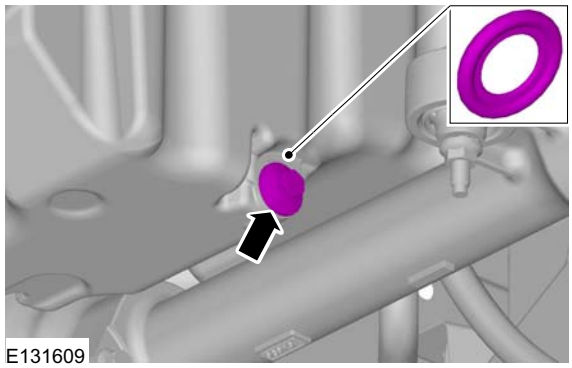
E131609

REMOVAL AND INSTALLATION

6. Torque: 10 Nm

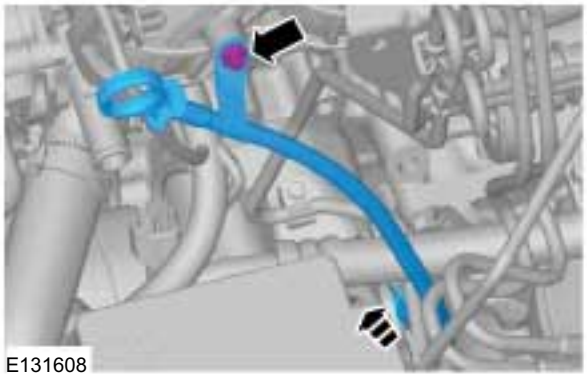

7. Refer to: Front Halfshaft RH (205-04 Front Drive Halfshafts, Removal and Installation).
8. 1. Torque: 70 Nm
   2. Torque: 40 Nm

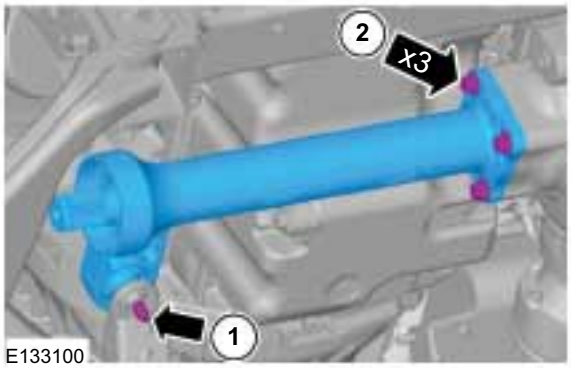

9. Torque: 48 Nm

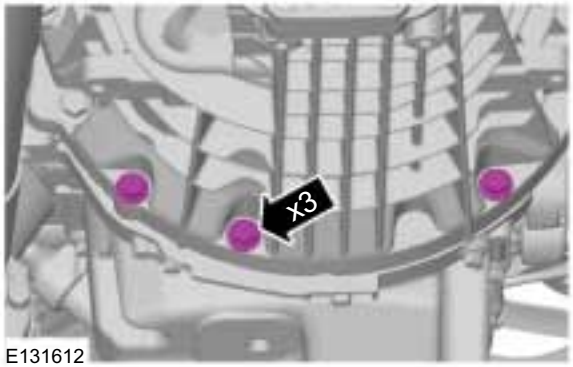

10. Torque: 10 Nm

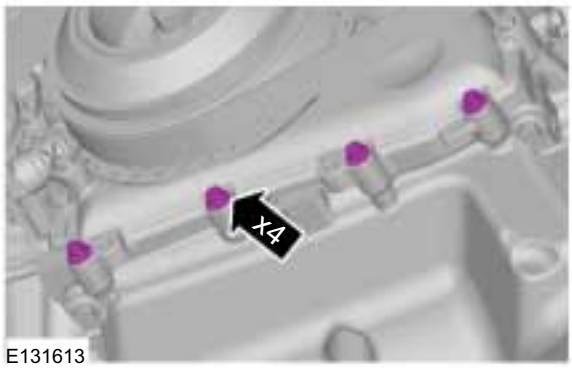

11. Special Tool(s): 303-428

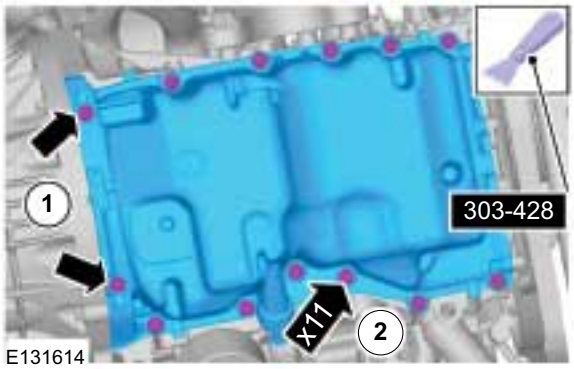

Installation

1. **CAUTION: Install the oil pan within five minutes of applying the sealer.**

   NOTE: Do not damage the mating faces.

   NOTE: Mating surface should not have traces of oil to improve the adhesion.

   Material: Silicone Sealant LB (WSE-M4G323-A4 / 2U7J-M4G323-AA) sealant

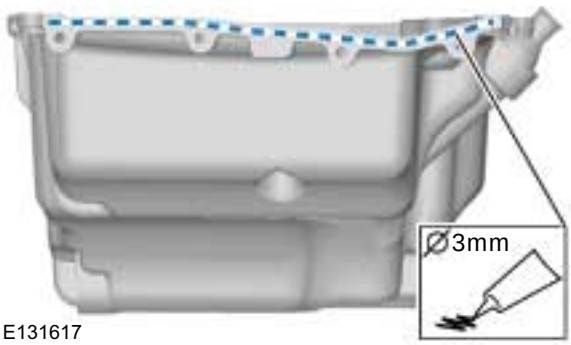

2. **CAUTION: Install the oil pan within five minutes of applying the sealer.**

REMOVAL AND INSTALLATION

NOTE: Do not damage the mating faces.

NOTE: Mating surface should not have traces of oil to improve the adhesion.

Material: Silicone Sealant LB (WSE-M4G323-A4 / 2U7J-M4G323-AA) sealant

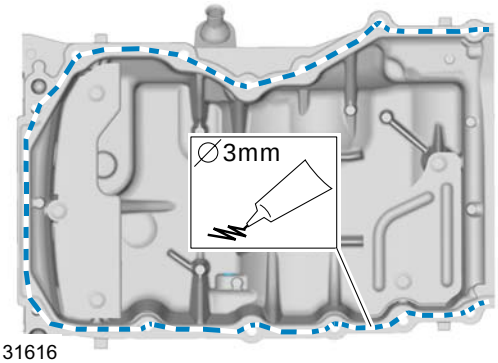

3. To install, reverse the removal procedure.

4. Install the oil pan.
   Torque: 25 Nm

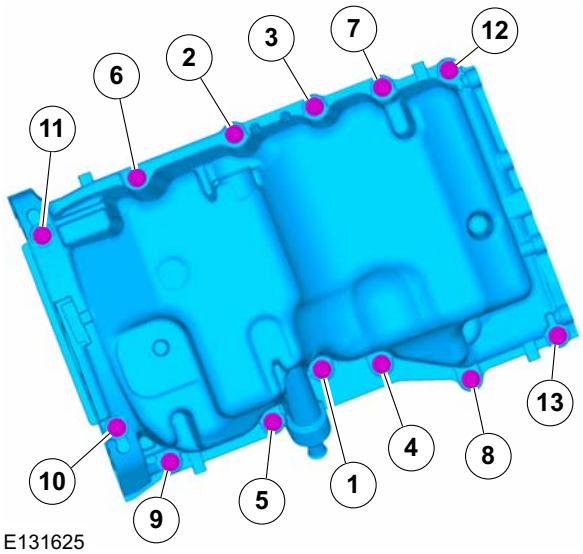

5. Fill the oil pan with clean engine oil.

   Refer to: Specifications (303-01 Engine - 2.5L Duratec-HE (122kW/165PS) - MI4, Specifications).

REMOVAL AND INSTALLATION

Oil Pump(21 714 0)

Removal

NOTE: Removal steps in this procedure may contain installation details.

1. Refer to: Timing Chain (303-01 Engine - 2.5L Duratec-HE (122kW/165PS) - MI4, Removal and Installation).
2. Refer to: Oil Pan (303-01 Engine - 2.5L Duratec-HE (122kW/165PS) - MI4, Removal and Installation).
3. **CAUTION: Make sure that a new friction washer is installed.**
   1. Torque: 10 Nm
   2. Torque: 25 Nm

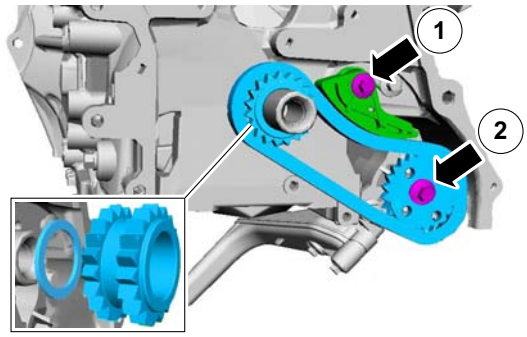

E134760

4. Remove the 2 bolts and the oil pump screen and pickup tube.
   Torque: 10 Nm
5. Torque:
   - Stage 1: 10 Nm
   - Stage 2: 20 Nm

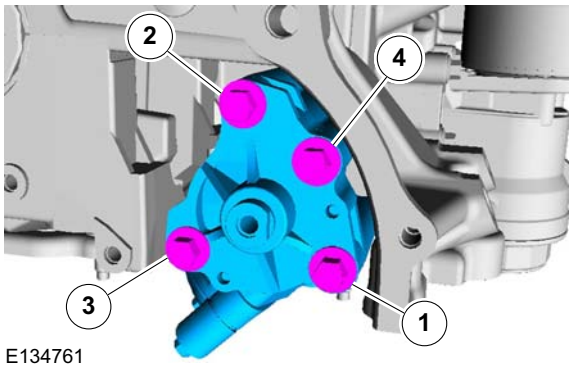

E134761

Installation

1. To install, reverse removal procedure.

REMOVAL AND INSTALLATION

Valve Cover(21 141 0)

Materials	
Name	**Specification**
Silicone Sealant LB	WSE-M4G323-A4 / 2U7J-M4G323-AA

Removal

NOTE: Removal steps in this procedure may contain installation details.

1. **WARNINGS:**

   Do not smoke, carry lighted tobacco or have an open flame of any type when working on or near any fuel-related component. Highly flammable mixtures are always present and may be ignited. Failure to follow these instructions may result in serious personal injury.

   Do not carry personal electronic devices such as cell phones, pagers or audio equipment of any type when working on or near any fuel-related component. Highly flammable mixtures are always present and may be ignited. Failure to follow these instructions may result in serious personal injury.

   Always disconnect the battery ground cable at the battery when working on an evaporative emission (EVAP) system or fuel-related component. Highly flammable mixtures are always present and may be ignited. Failure to follow these instructions may result in serious personal injury.

   Refer to: Battery Disconnect and Connect (414-01 Battery, Mounting and Cables, General Procedures).

2. Refer to: Lifting (100-02 Jacking and Lifting, Description and Operation).

3. Refer to: Fuel System Pressure Release (310-00 Fuel System - General Information - 2.5L Duratec-HE (122kW/165PS) - MI4, General Procedures).

4. Torque: 10 Nm

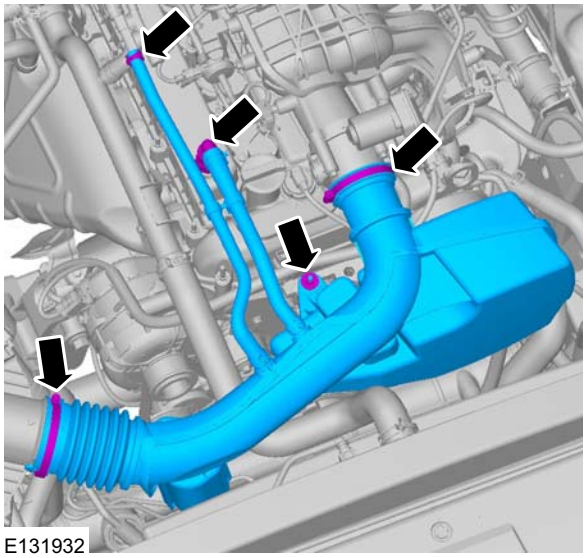
E131932

REMOVAL AND INSTALLATION

5. Torque: 10 Nm

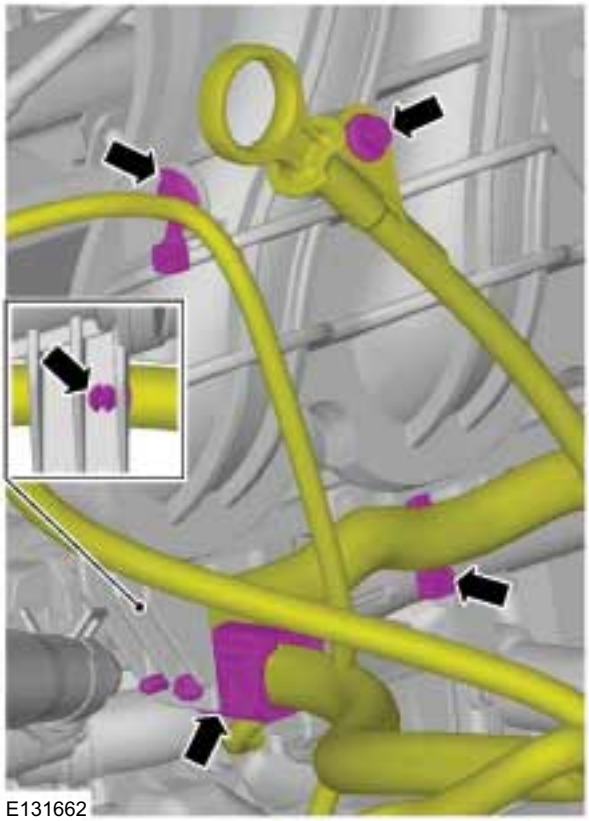
E131662

6. **NOTE:** Securely strap the fuel and breather tubes.

   Torque: 8 Nm

E131663

7.

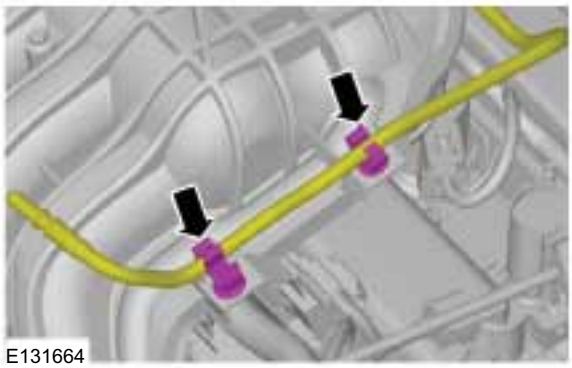
E131664

8.

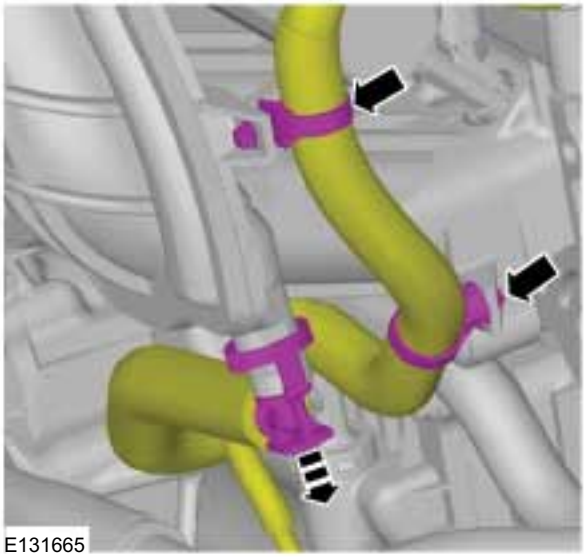
E131665

9. Torque: 11 Nm

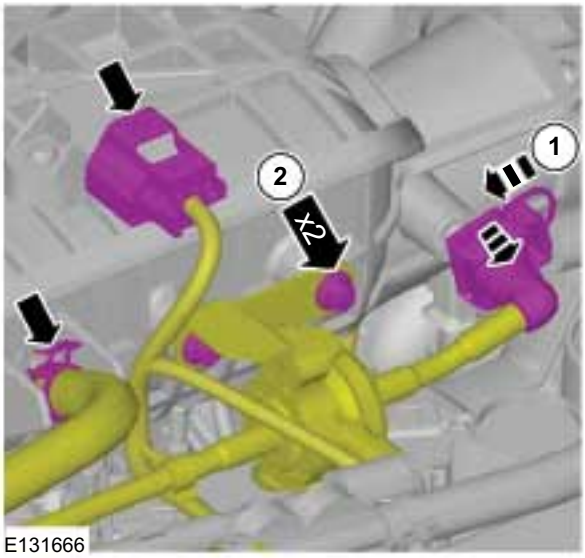

E131666

REMOVAL AND INSTALLATION

10. Torque: 19 Nm

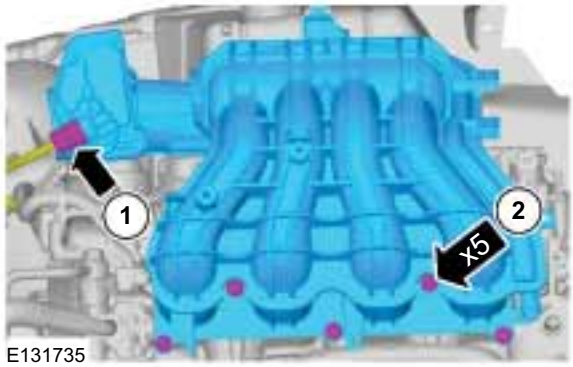

E131735

11.

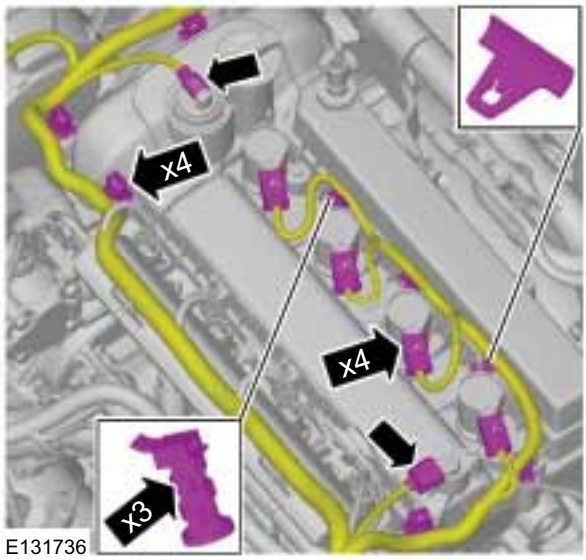

E131736

12. Torque: 8 Nm

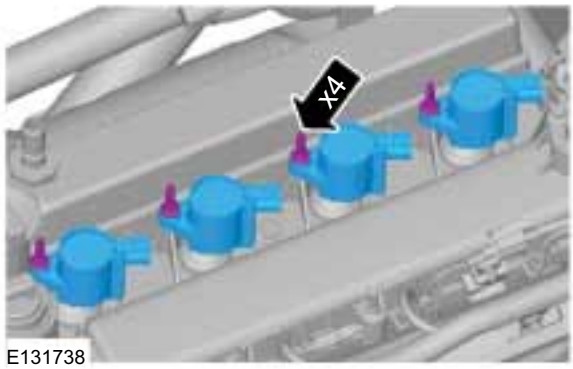

E131738

13.

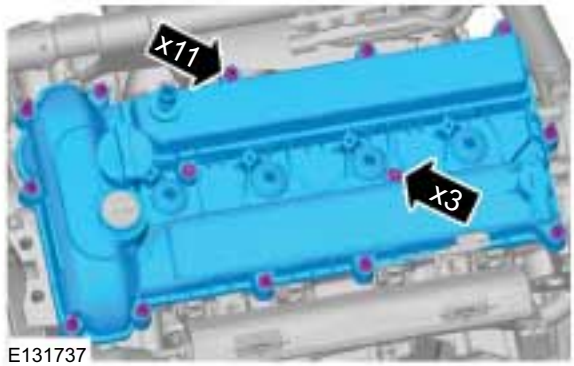

E131737

Installation

1. **NOTE:** The valve cover must be secured within 4 minutes of silicone gasket application. If the valve cover is not secured within 4 minutes, the sealant must be removed and the sealing area cleaned with metal surface prep.

   Material: Silicone Sealant LB (WSE-M4G323-A4 / 2U7J-M4G323-AA) sealant

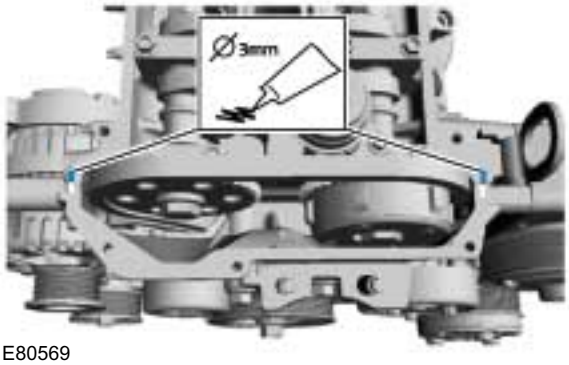

E80569

2. **NOTE:** The gasket is to be reused unless damaged.

   Torque: 10 Nm

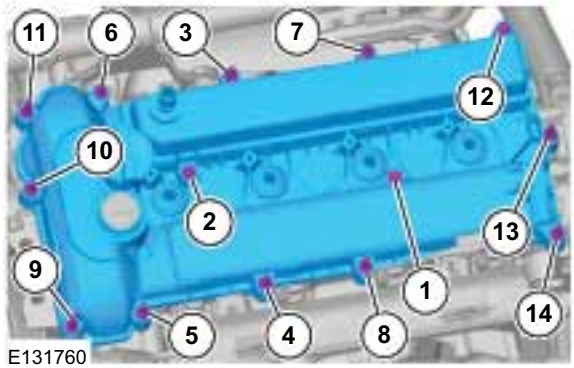

E131760

3. To install, reverse the removal procedure.

REMOVAL AND INSTALLATION

Valve Stem Seals(21 238 0)

Special Tool(s)

E62757	303-361B Compressor, Valve Spring
E62041	303-361B-06 Adapter for 303-361B
21156	303-362 Installer, Valve Stem Collets
21211	303-508 Pliers, Valve Stem Seal

Removal

NOTE: Removal steps in this procedure may contain installation details.

1. Refer to: Camshafts (303-01 Engine - 2.5L Duratec-HE (122kW/165PS) - MI4, Removal and Installation).
2. 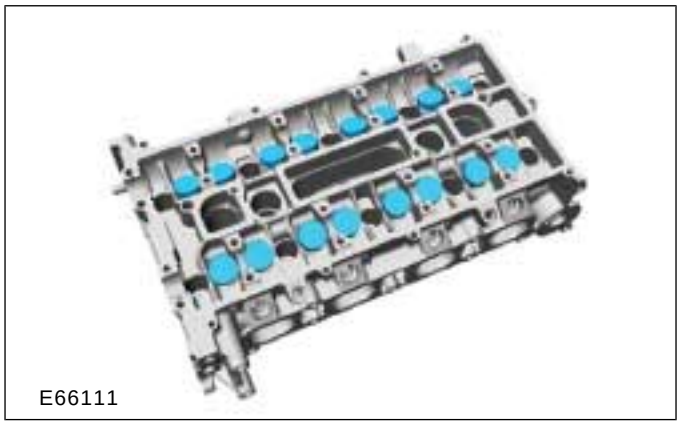

3. Special Tool(s): 303-361B, 303-361B-06, 303-362
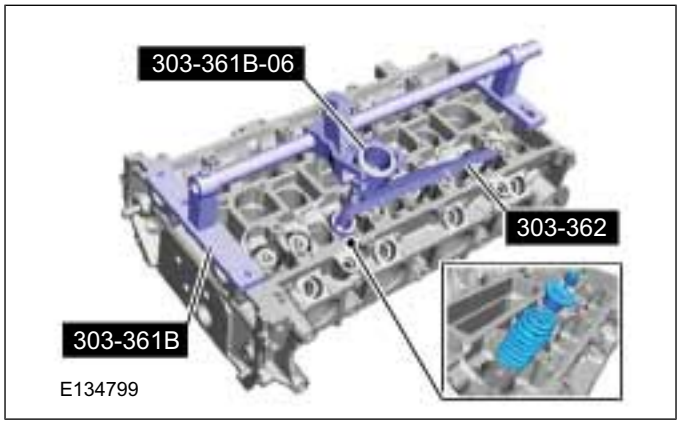

4. Special Tool(s): 303-508
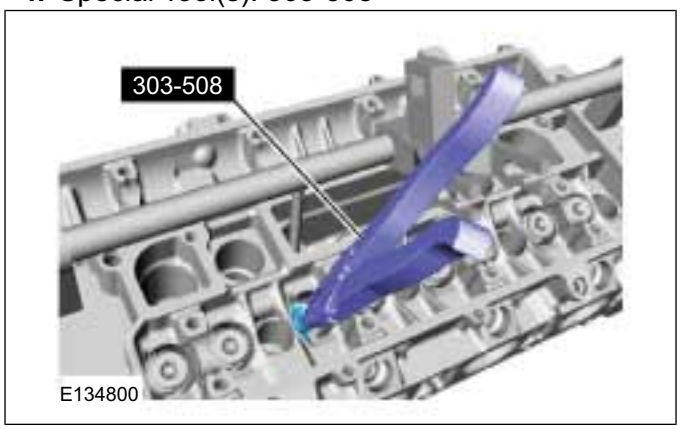

Installation

1. To install, reverse the removal procedure.

REMOVAL

Engine — Vehicles With: 5-Speed Manual Transmission - MT75(21 132 0; 21 132 6; 21 132 7)

Removal

Special Tool(s) / General Equipment

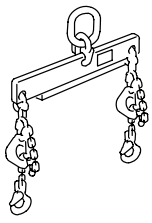 21068A	303-122 Lifting Bracket, Engine
Hydraulic Jib Crane	
Transmission Jack	

1. Refer to: Cooling System Draining, Filling and Bleeding (303-03 Engine Cooling, General Procedures).
2. Refer to: Battery Disconnect and Connect (414-01 Battery, Mounting and Cables, General Procedures).
3. Refer to: Lifting (100-02 Jacking and Lifting, Description and Operation).
4. Refer to: Starter Motor (303-06 Starting System - 2.5L Duratec-HE (122kW/165PS) - MI4, Removal and Installation).
5. Refer to: Air Conditioning (A/C) System Recovery, Evacuation and Charging (412-00 Climate Control System - General Information, General Procedures).
6. Refer to: Brake System Health and Safety Precautions (100-00 General Information, Description and Operation).
7. Refer to: Fuel System Pressure Release (310-00 Fuel System - General Information - 2.5L Duratec-HE (122kW/165PS) - MI4, General Procedures).
8.

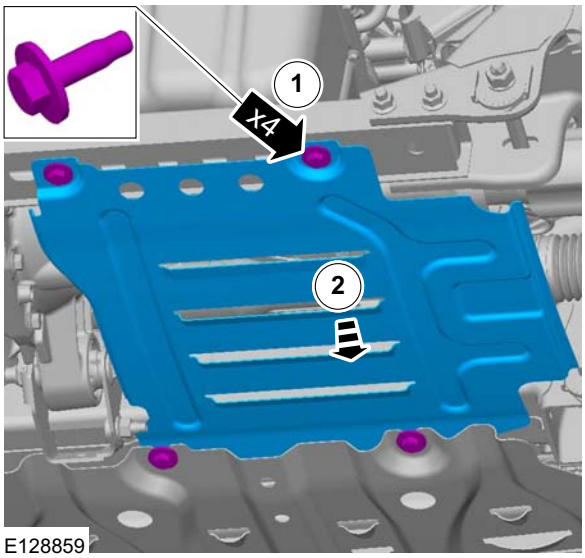

E128859

REMOVAL

9.

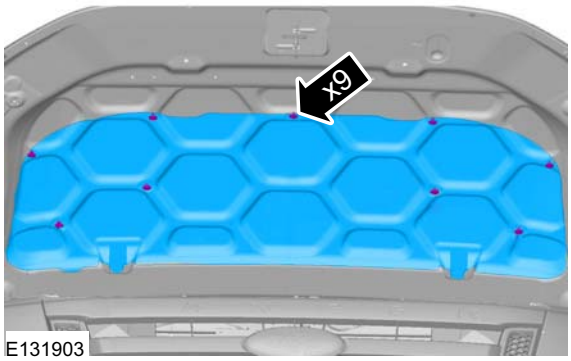

E131903

10.

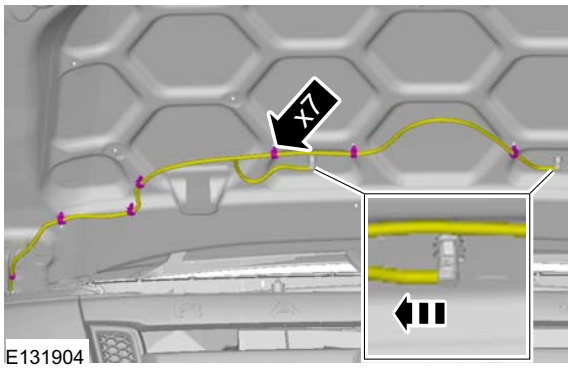

E131904

11.

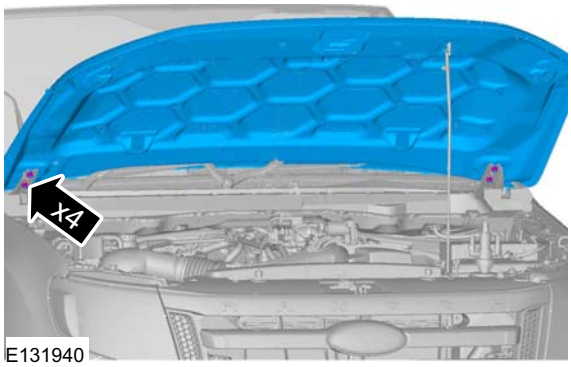

E131940

12. Refer to: Cowl Panel Grille (501-02 Front End Body Panels, Removal and Installation).

13.

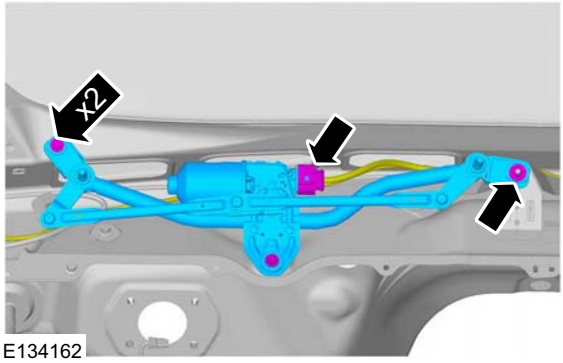

E134162

14. On both sides.

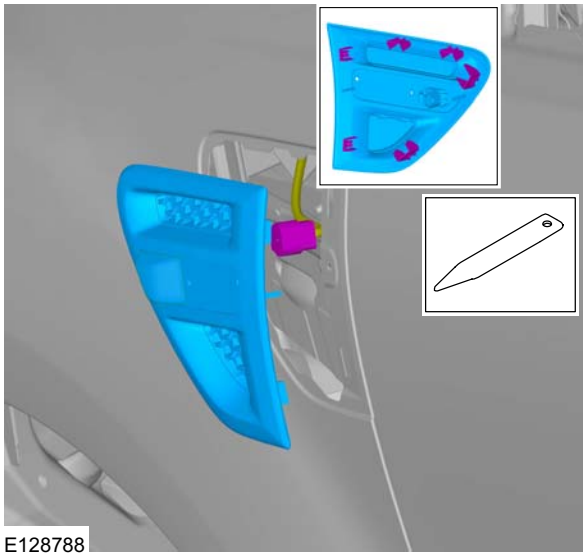
E128788

15.

REMOVAL

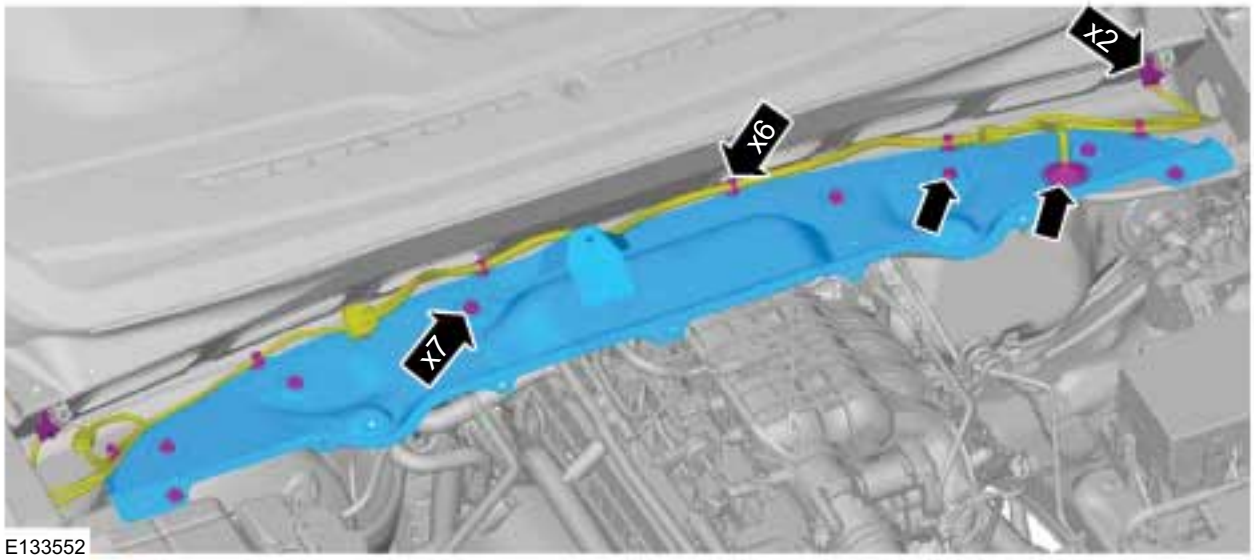

E133552

16.

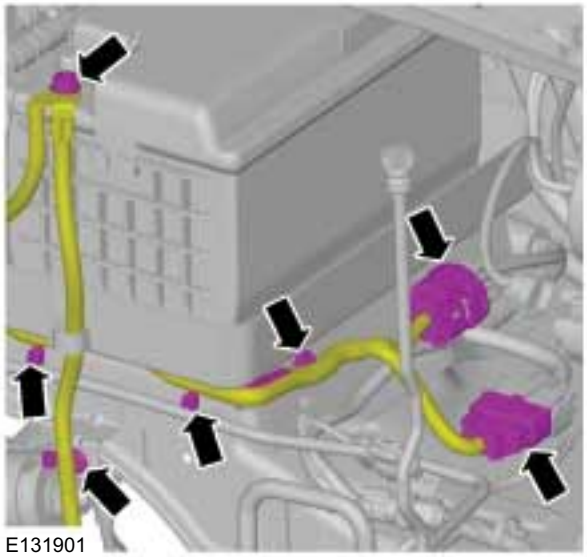
E131901

17.

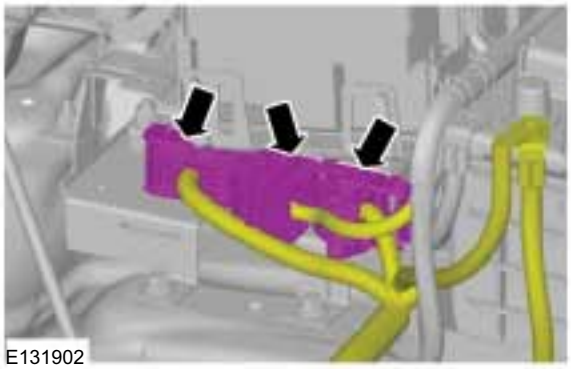
E131902

18.

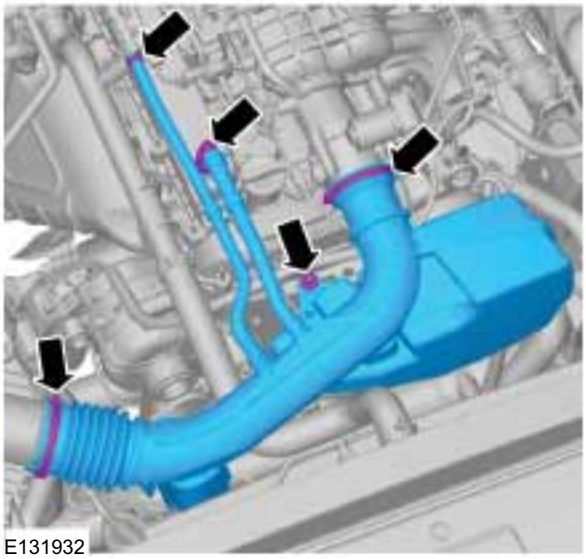
E131932

19.

REMOVAL

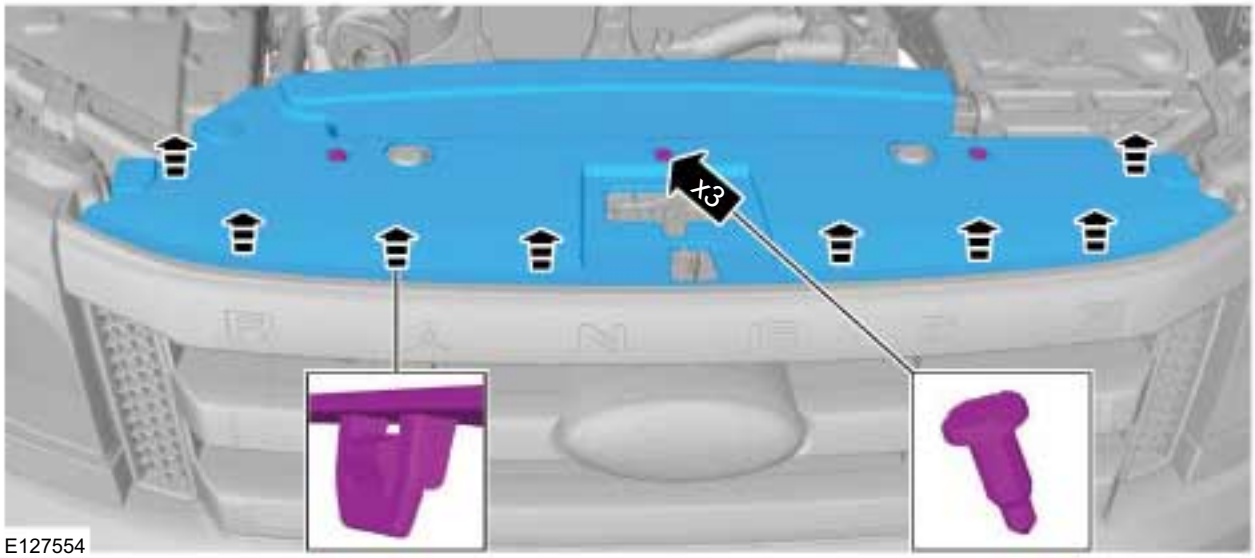

E127554

20.

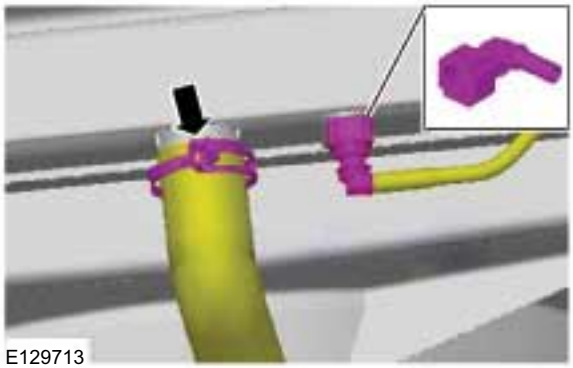
E129713

21.

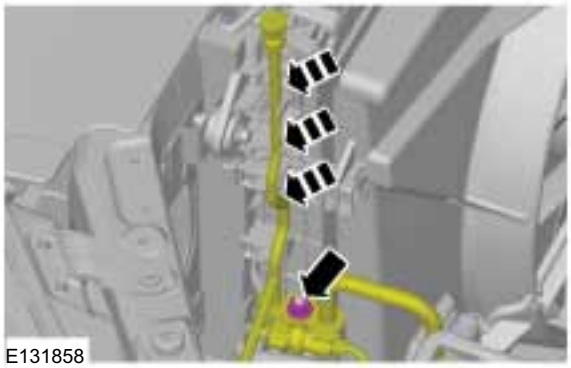
E131858

22.

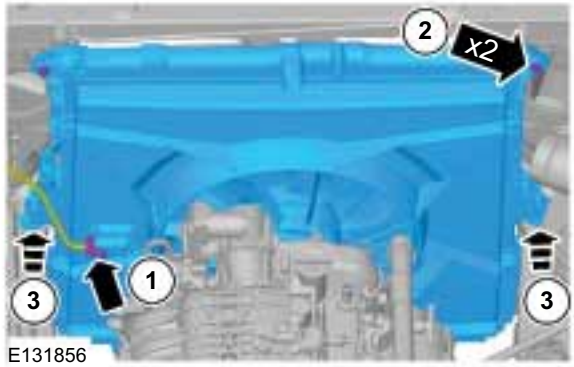

E131856

23. **WARNING: Be prepared to collect escaping fluids.**

CAUTION: Make sure that all openings are sealed.

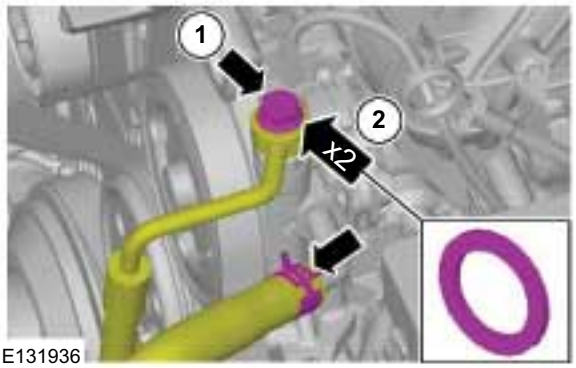

E131936

REMOVAL

24.

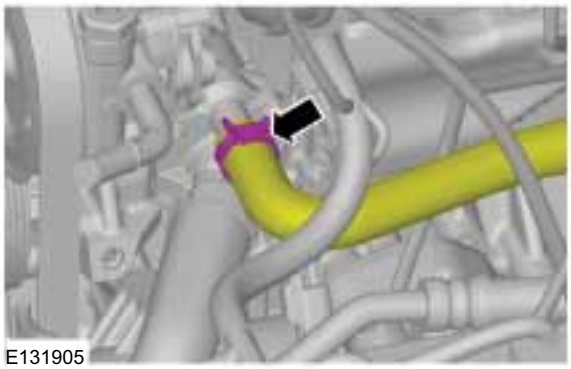
E131905

25.

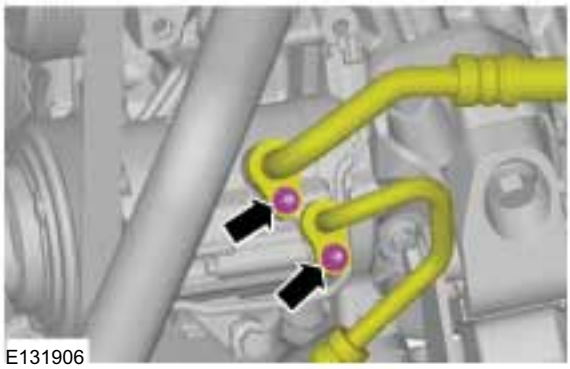
E131906

26.

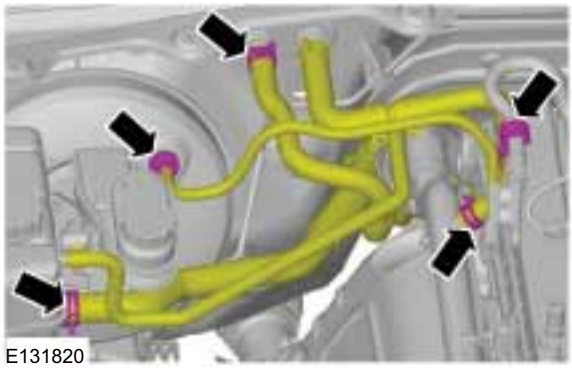
E131820

27.

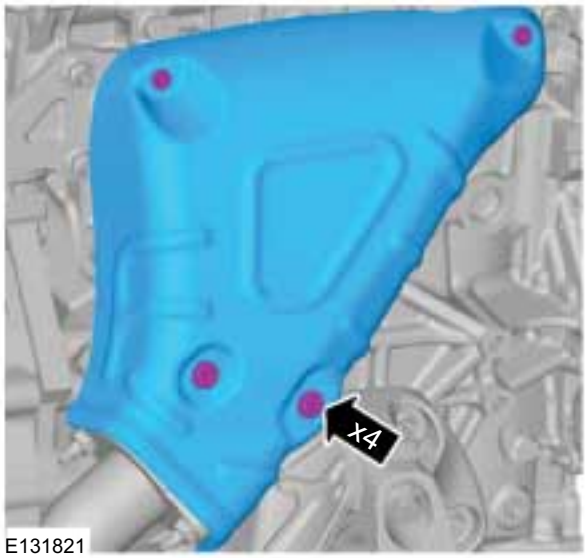

E131821

28. CAUTIONS:

- Over bending the exhaust flexible pipe may cause damage resulting in failure.
- Make sure that the catalytic converter is supported with suitable retaining straps.

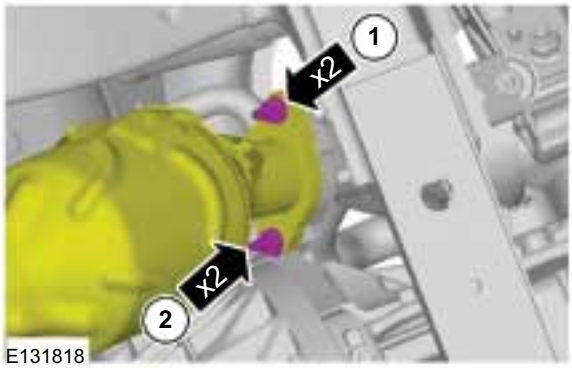

E131818

REMOVAL

29.

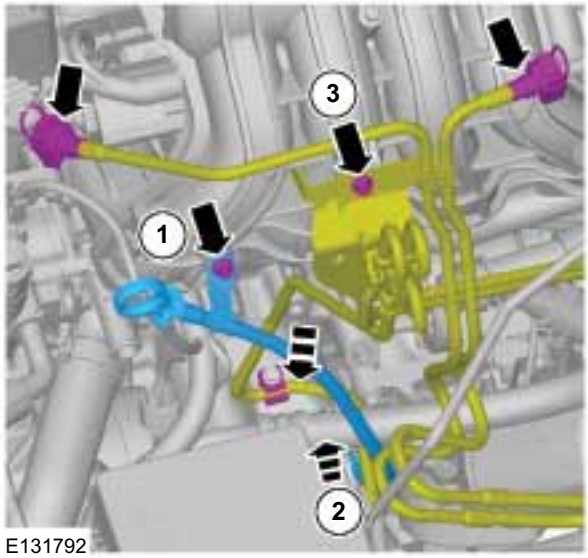

E131792

30.

E131969

31. **WARNING: Make sure that transmission assembly is on wooden blocks and secured with suitable retaining straps.**

CAUTION: Do not tilt the transmission. This may cause damage to the pilot bearing.

Tie and support the transmission to the chassie with a suitable strap.

General Equipment: Transmission Jack

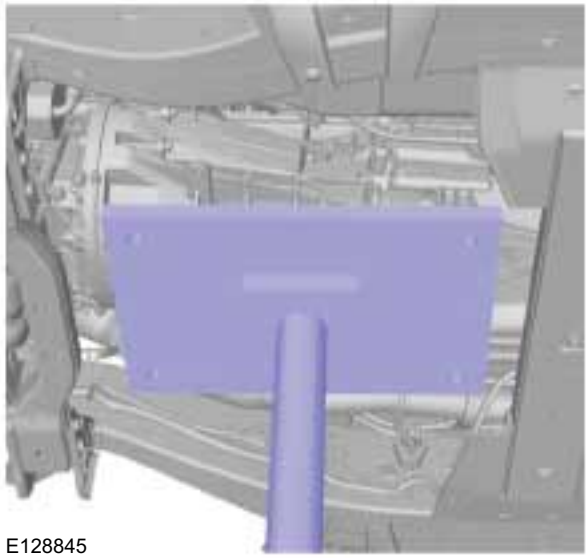
E128845

32.

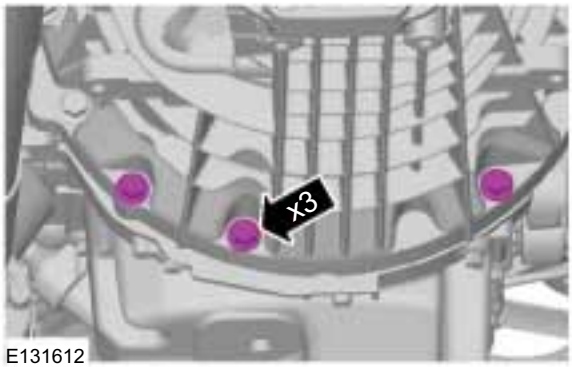

E131612

33.

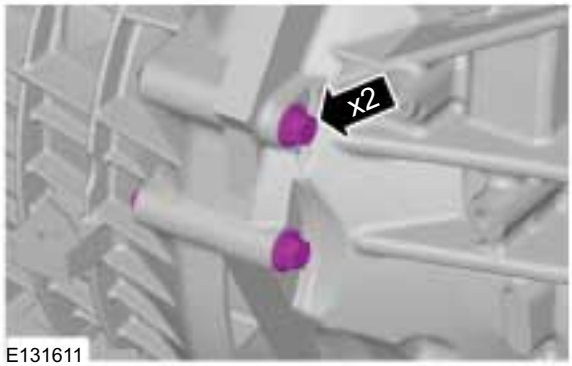

E131611

REMOVAL

34.

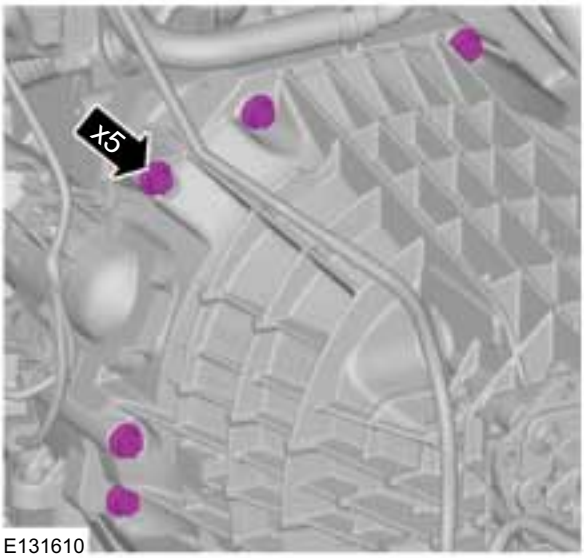

E131610

35.

E131935

36.

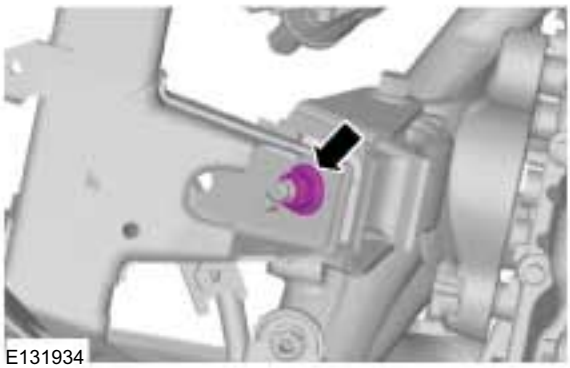
E131934

37.

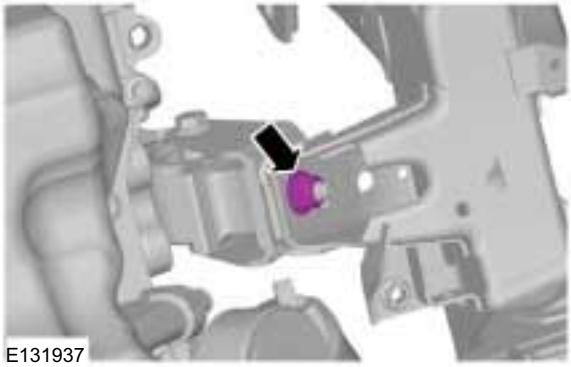
E131937

38. Special Tool(s): 303-122
General Equipment: Hydraulic Jib Crane

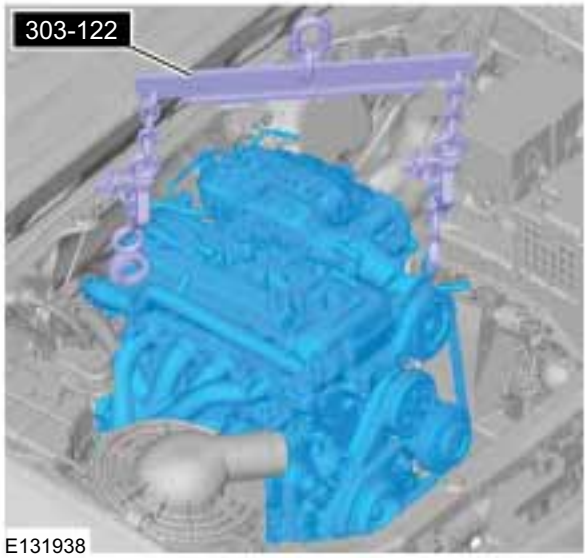

E131938

39.

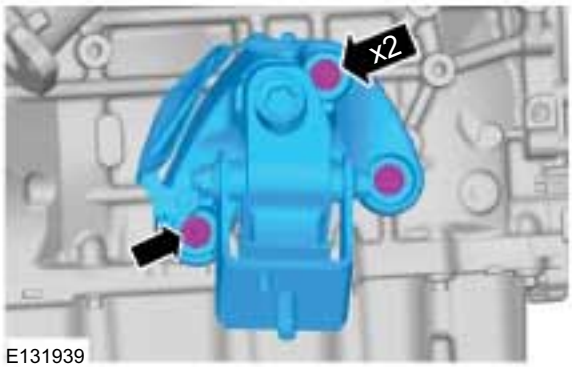

E131939

REMOVAL

Engine Accessories(21 139 4)

Removal

Special Tool(s) / General Equipment

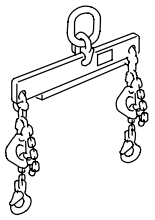 21068A	303-122 Lifting Bracket, Engine
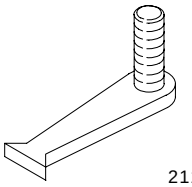 21135	303-254 Locking Tool, Flywheel
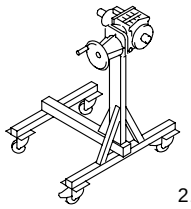 21187	303-435 Mounting Stand
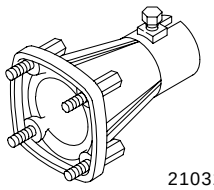 21031B	303-435-06 Mounting Bracket for 303-435
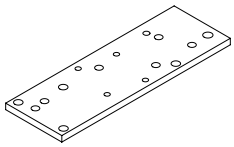 E62805	303-435-14B Mounting Plate for 303-435-06
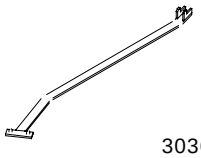 303676	303-676 Release Tool, Belt Tensioner
Hydraulic Jib Crane	

All vehicles

1. Special Tool(s): 303-122
   General Equipment: Hydraulic Jib Crane

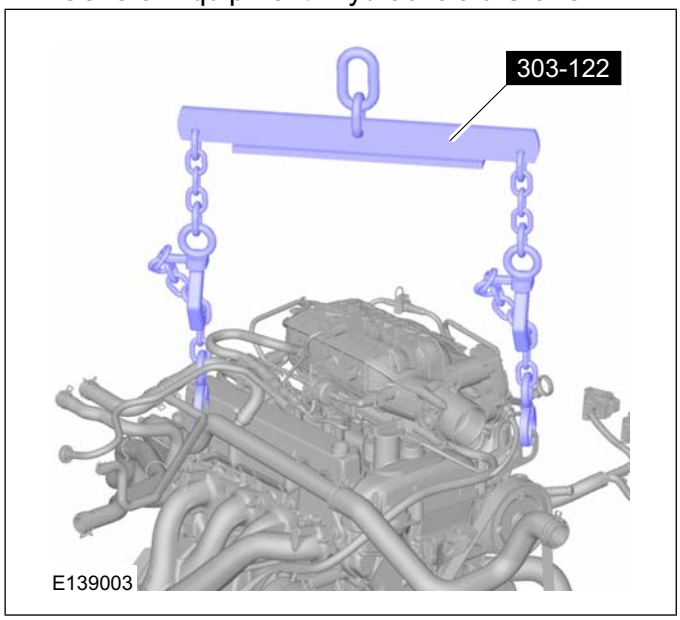

2. Special Tool(s): 303-435, 303-435-06, 303-435-14B

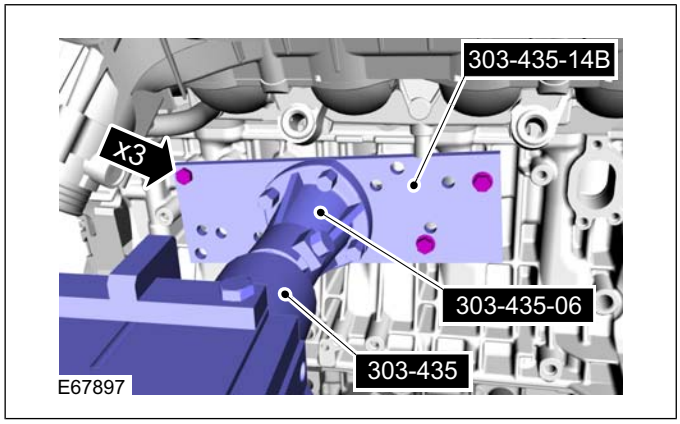

REMOVAL

3. Special Tool(s): 303-254

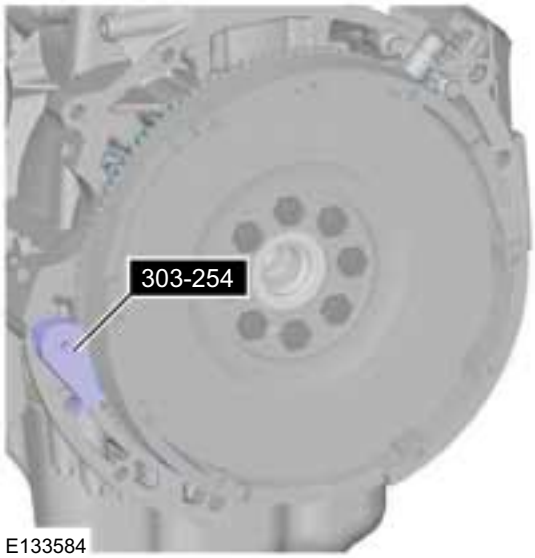

E133584

4. **CAUTION: Loosen the clutch pressure plate retaining bolts by two turns at a time in the sequence shown.**

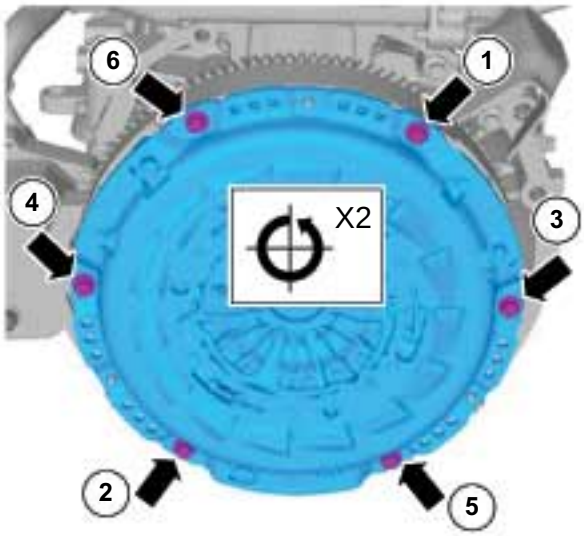

E129960

5. Discard the flywheel bolts.

   Special Tool(s): 303-254

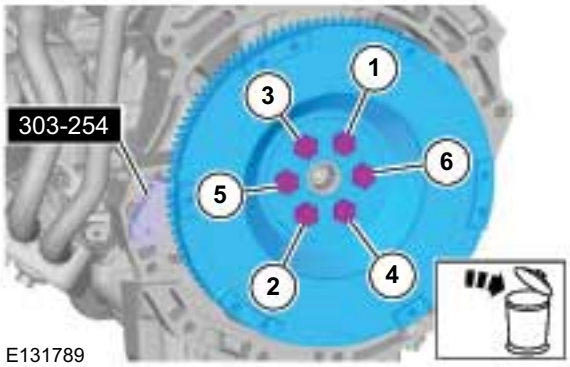

E131789

6. Loosen: 3 turn(s)

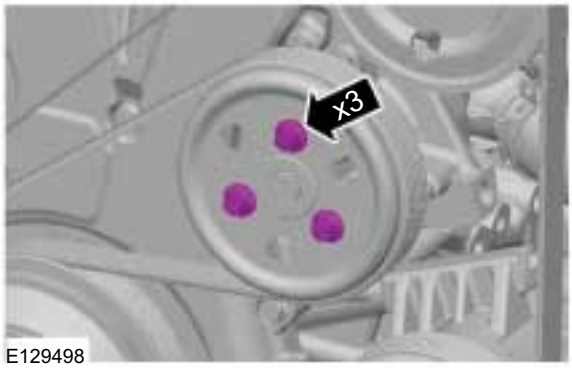

E129498

7. Rotate the accessory drive belt tensioner clockwise and remove the accessory drive belt.

   Special Tool(s): 303-676

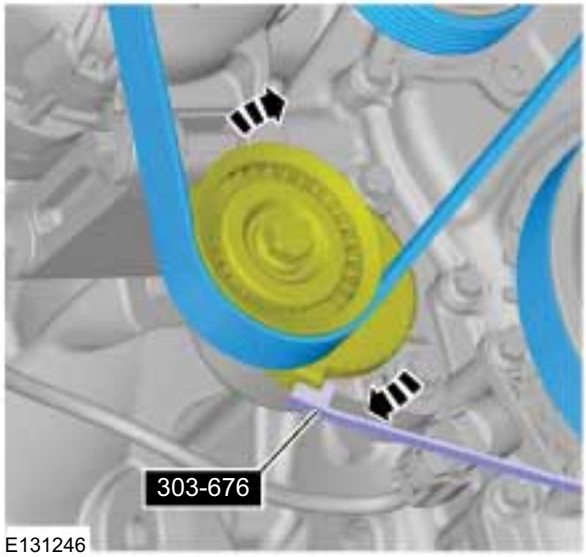

E131246

REMOVAL

8. **CAUTION: Take extra care not to damage the wiring harnesses.**

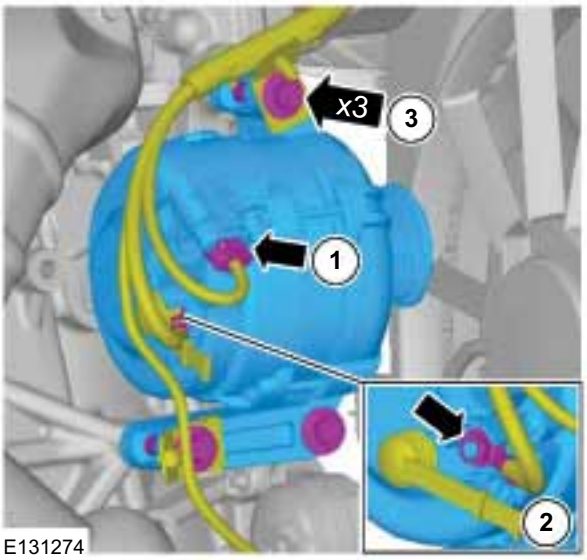

E131274

9.

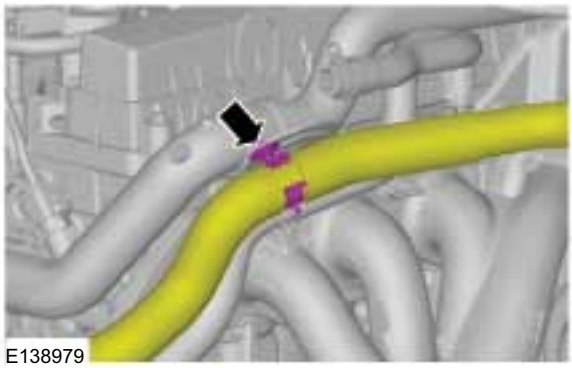
E138979

10. **NOTE:** Make sure that the hoses are installed to the noted removal position.

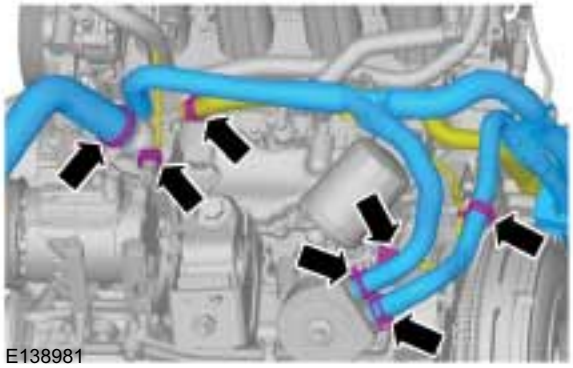
E138981

11. **NOTE:** Make sure that the hoses are installed to the noted removal position.

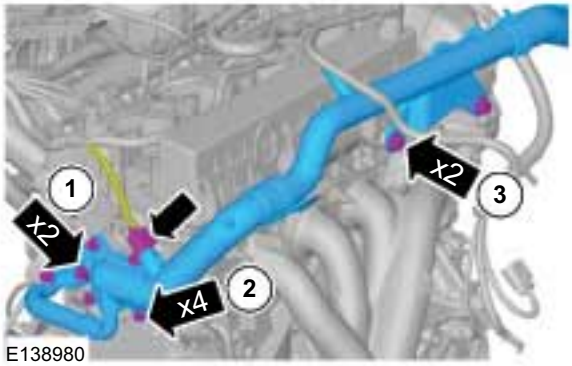

E138980

12.

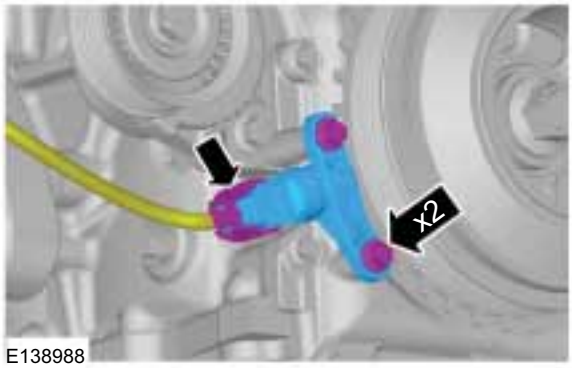

E138988

13.

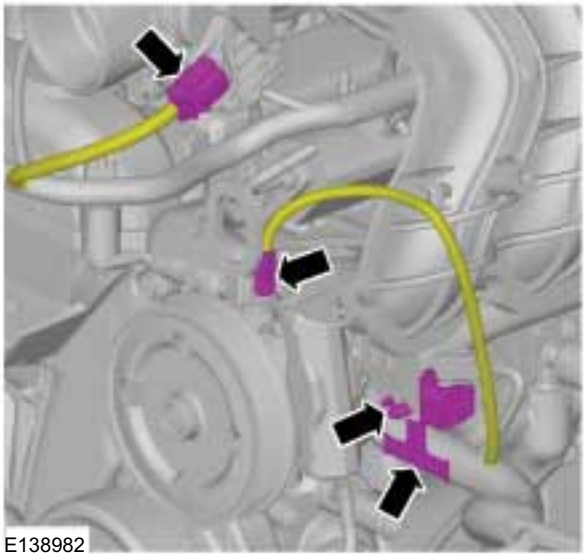
E138982

REMOVAL

14.

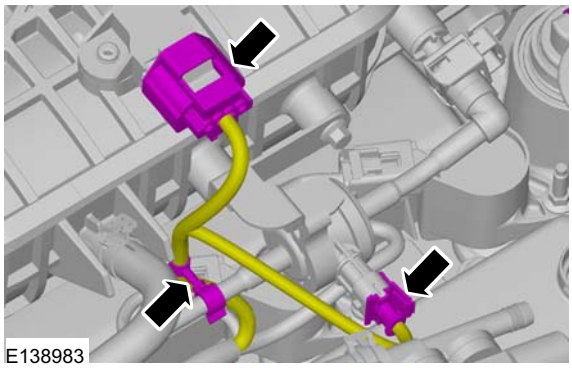

16.

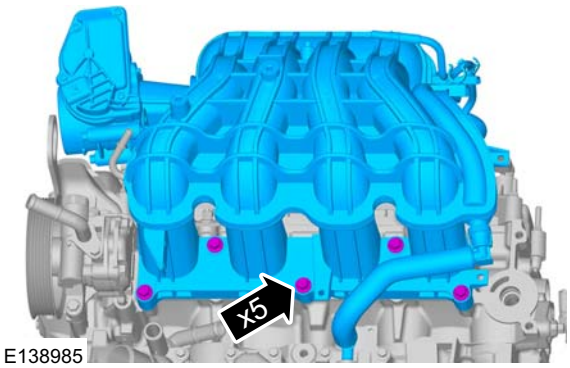

15.

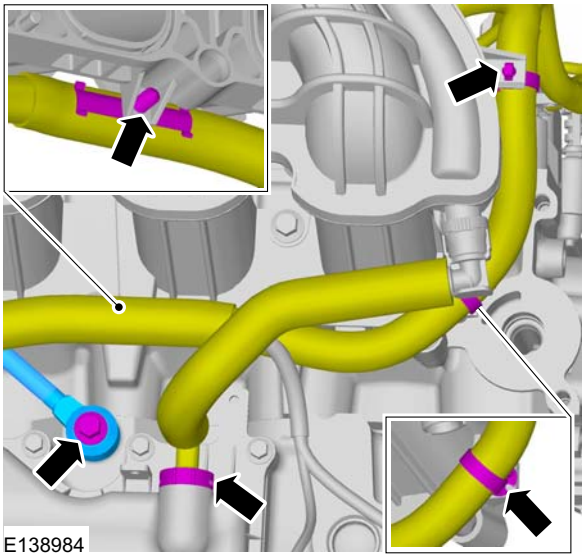

17.

REMOVAL

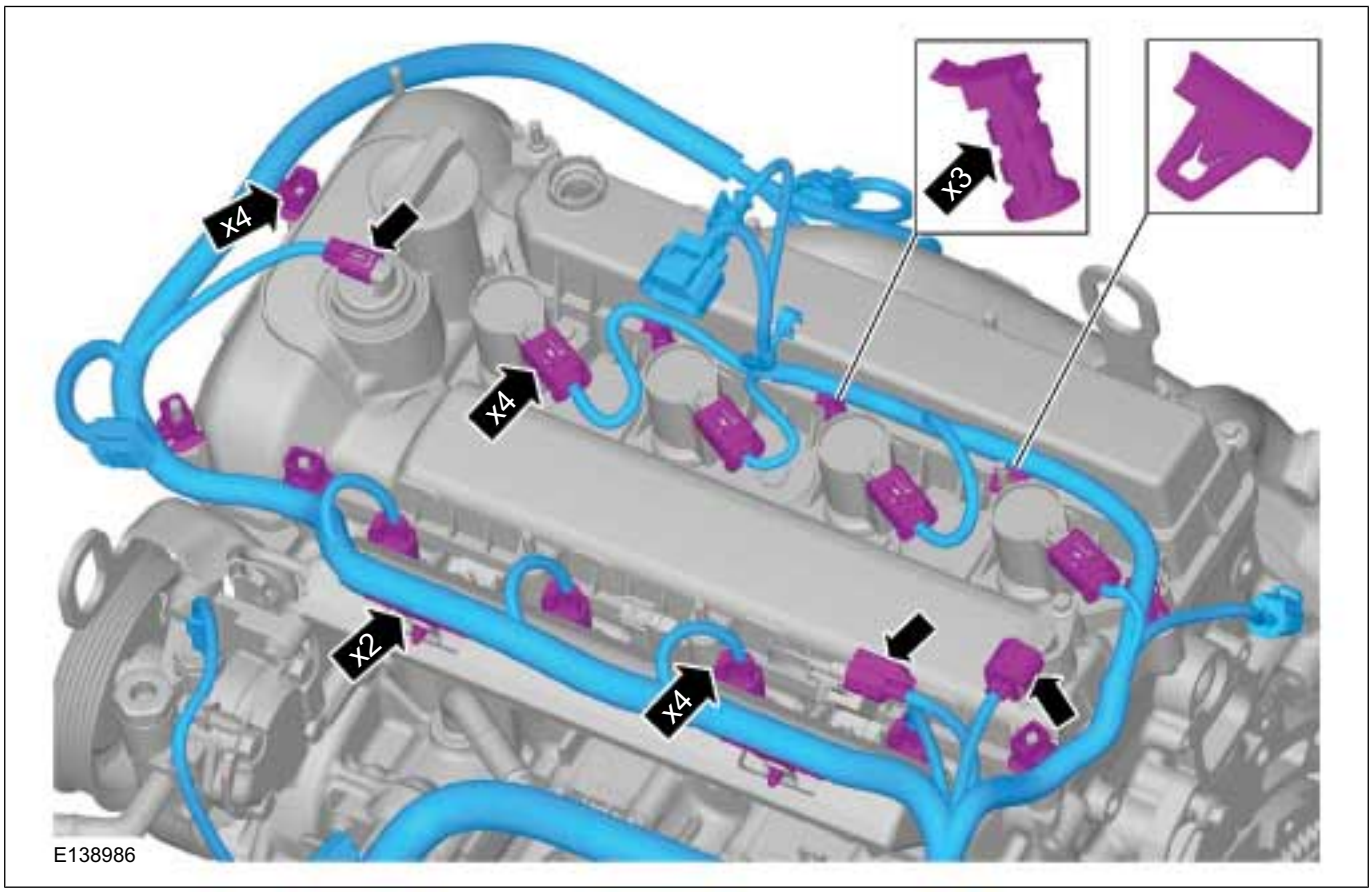

E138986

18.

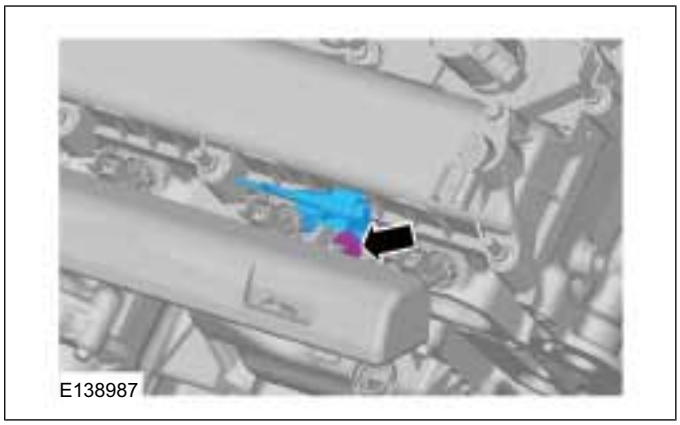
E138987

19.

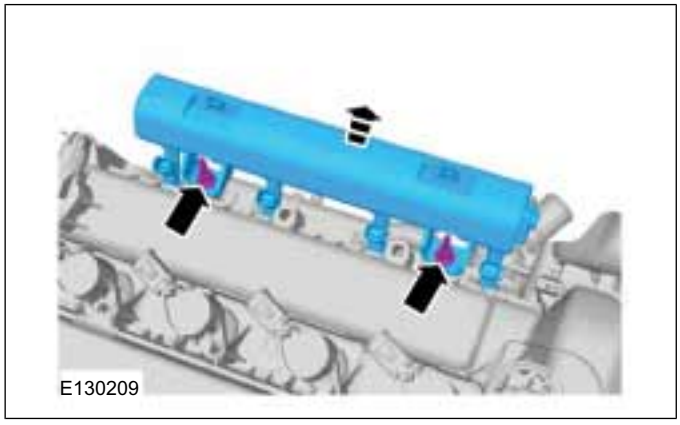
E130209

20.

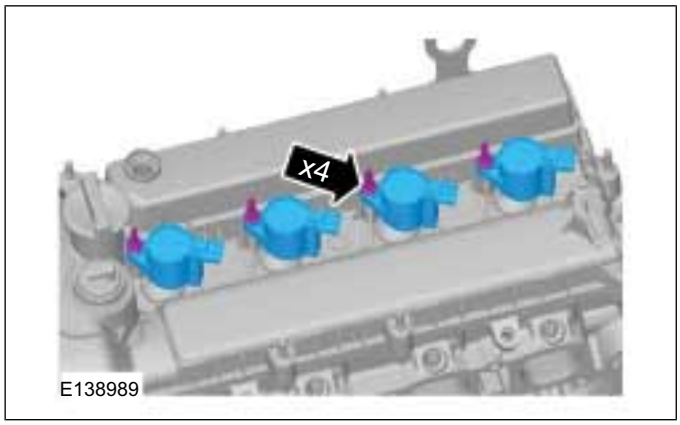

E138989

REMOVAL

21.

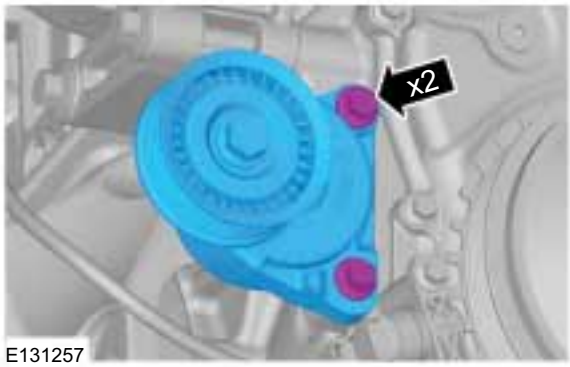

E131257

24.

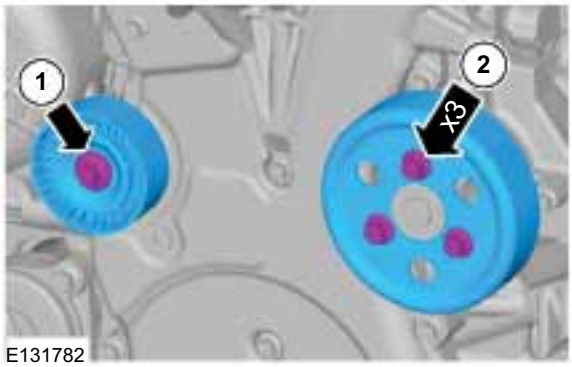

E131782

22.

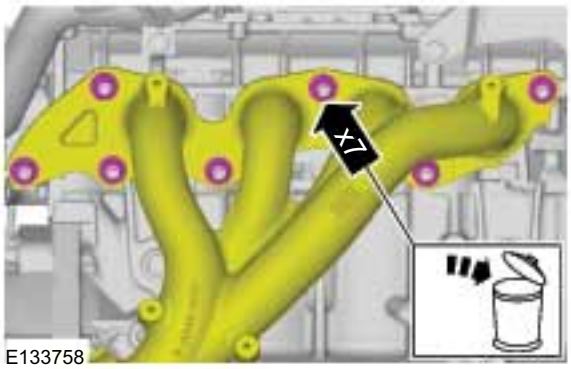

E133758

25.

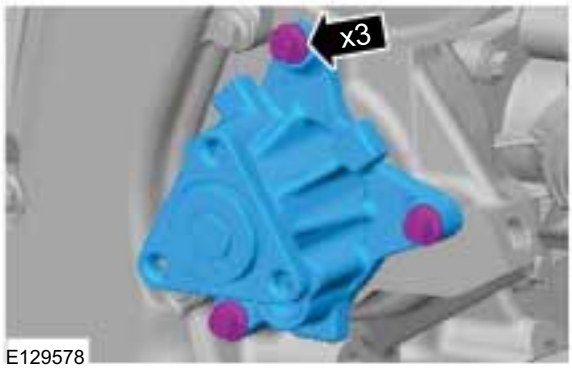

E129578

23.

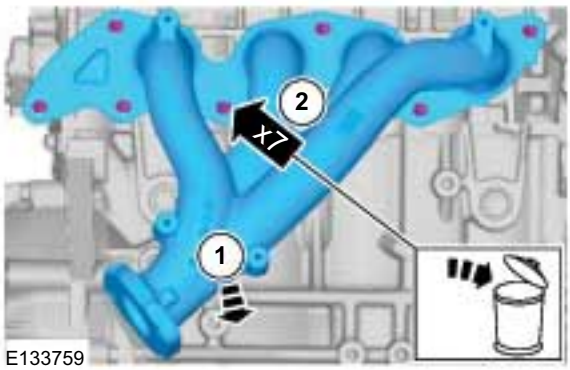

E133759

26.

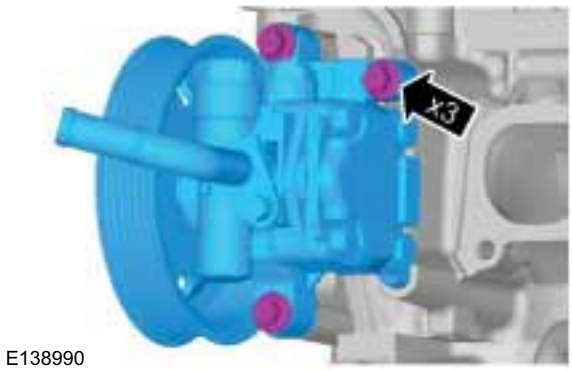

E138990

REMOVAL

27.

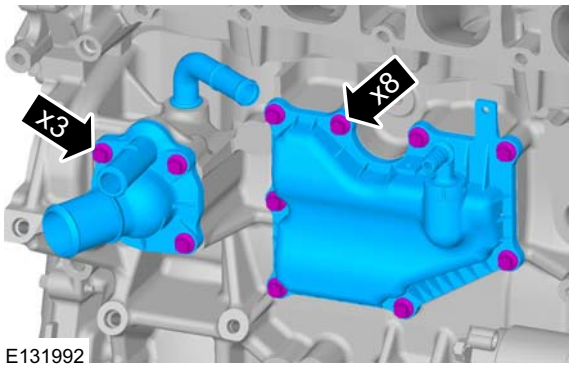

28.

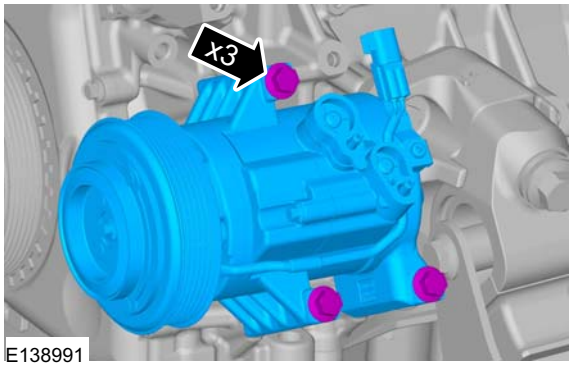

4x2

29.

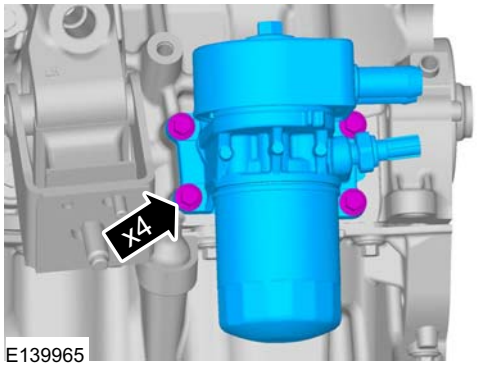

4x4

30.

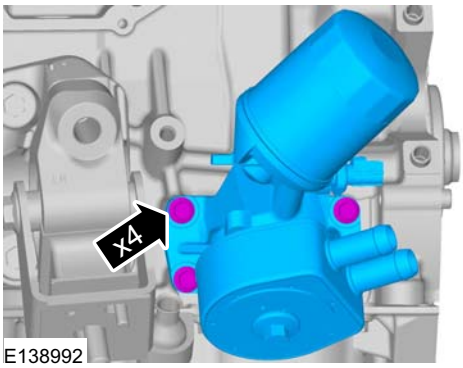

All vehicles

31.

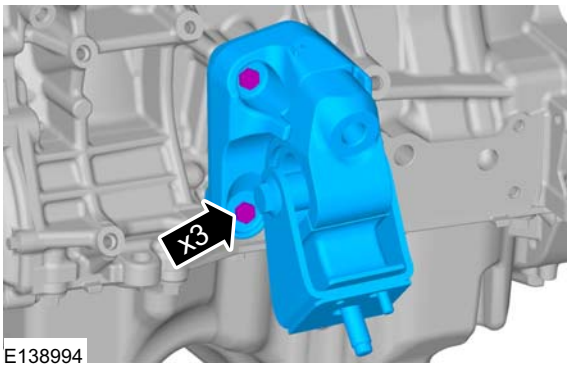

DISASSEMBLY

Engine(21 134 8)

Disassembly

Special Tool(s) / General Equipment

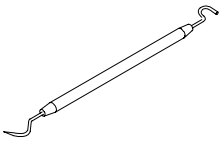 17063	100-010 Remover, O-Ring Seal
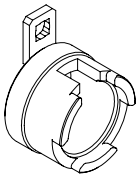 E134674	303-1416 Tool, Crank Damper Holding
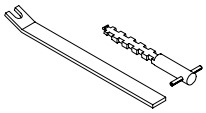 E134603	303-409 Remover Crankshaft Seal
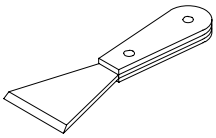 21179	303-428 Separator, Oil Pan
E139375	303-462 Installer, Connecting Rod
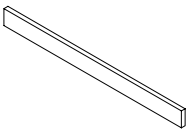 E134673	303-465 Tool, Camshaft Align Timing

Special Tool(s) / General Equipment

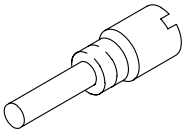 PZ21210	303-507 Timing Peg, Crankshaft TDC
2 mm Punch	

1.

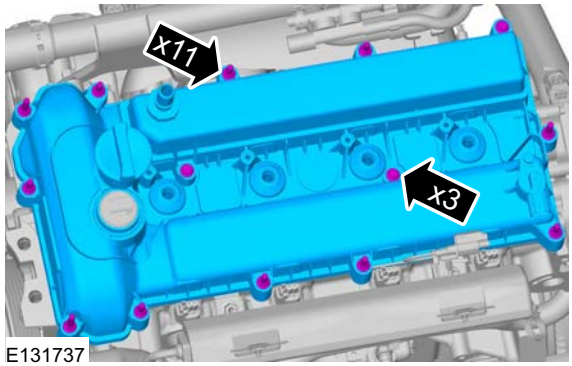

E131737

2. ⚠ **CAUTION: Only rotate the crankshaft clockwise.**

Rotate the crankshaft until piston No. 1 is approximately 45 degrees before top dead center (TDC).

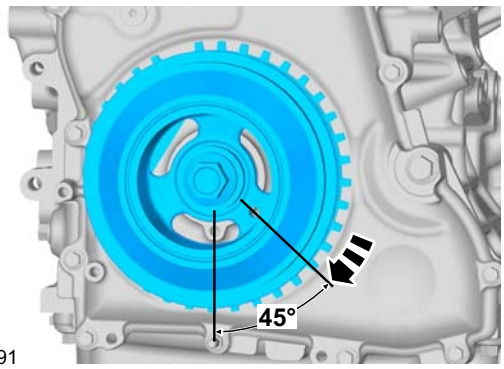

E131991

DISASSEMBLY

3. Special Tool(s): 303-465

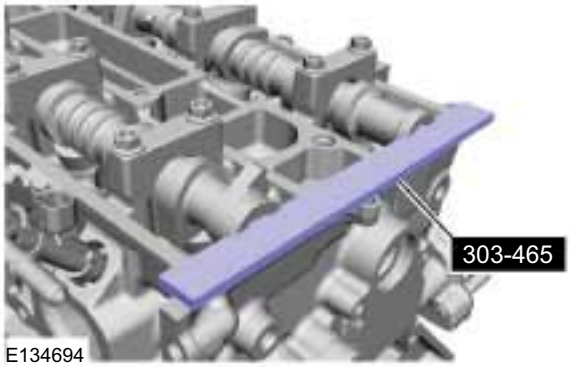

4.

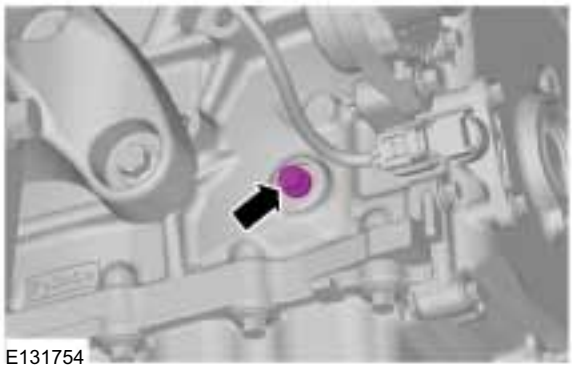

5. Special Tool(s): 303-507

6. Special Tool(s): 303-1416

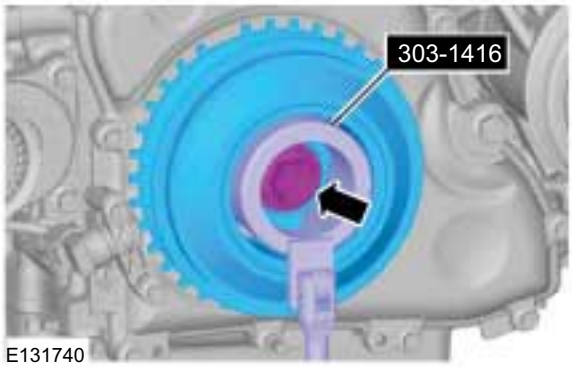

7. Special Tool(s): 303-409

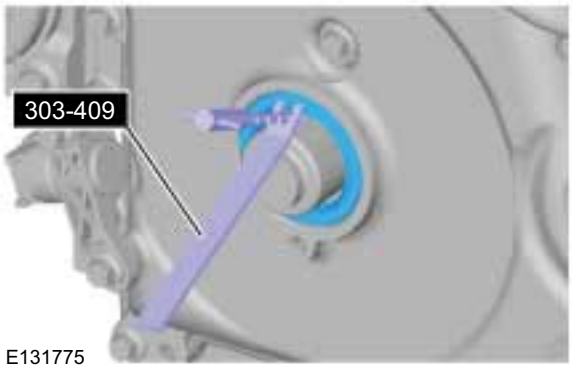

8. Discard the friction washer.

DISASSEMBLY

9.

10. Special Tool(s): 100-010
General Equipment: 2 mm Punch

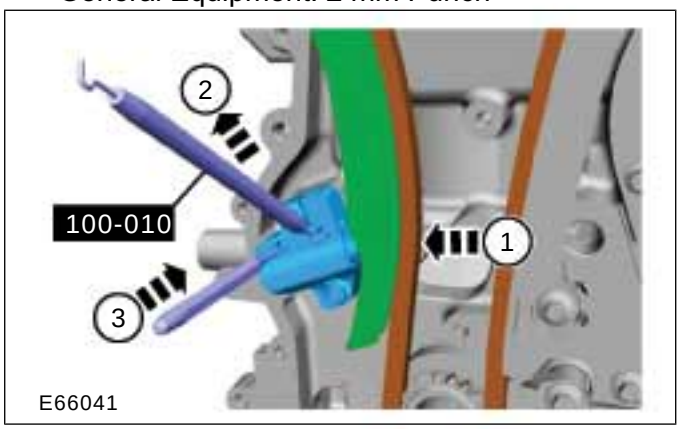

11.

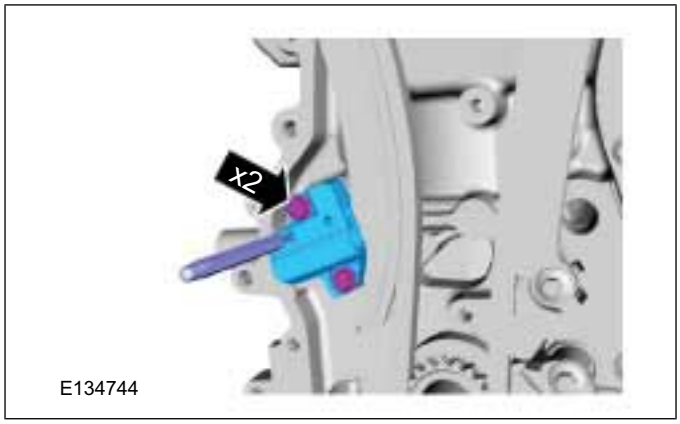

12. Remove the RH timing chain guide.

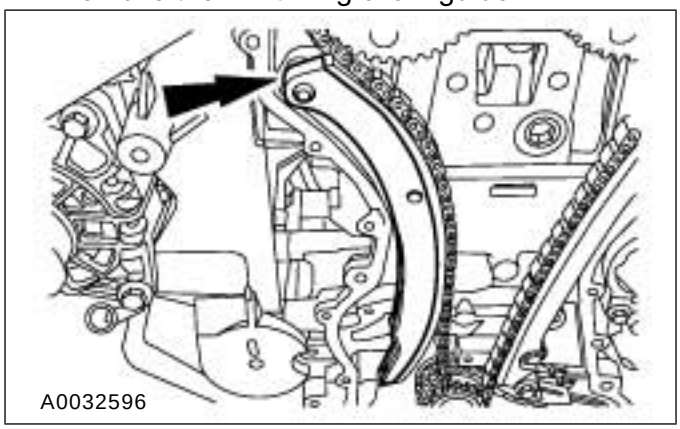

13. Remove the timing chain.

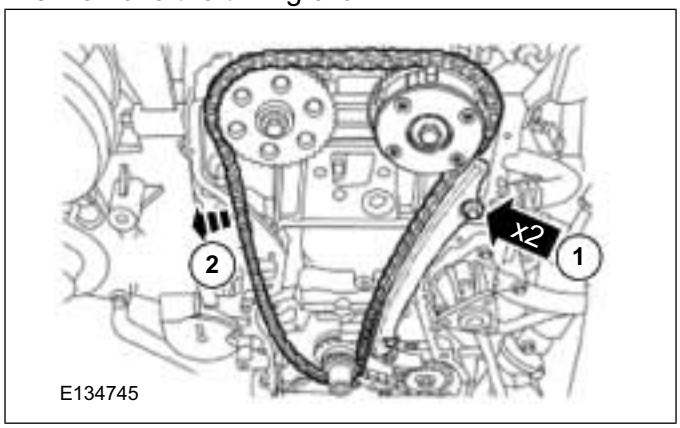

14. ⚠ **CAUTION: Use an open-ended wrench to hold the camshafts by the hexagon to prevent the camshafts from turning.**

DISASSEMBLY

Remove the bolt and the exhaust camshaft sprocket.

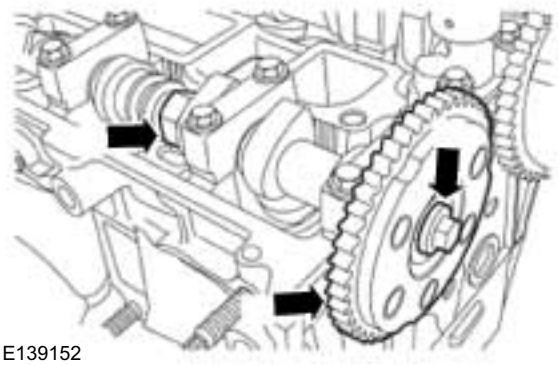
E139152

15. **CAUTION: Use an open-ended wrench to hold the camshafts by the hexagon to prevent the camshafts from turning.**

Remove the bolt and the camshaft phaser and sprocket.

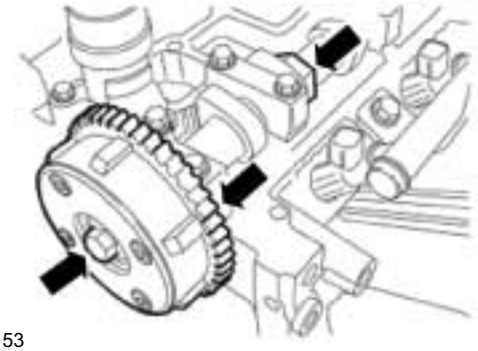
E139153

16. **CAUTION: Make sure that a new friction washer is installed.**

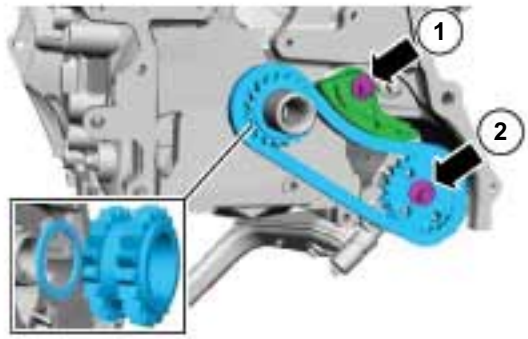

E134760

17. Mark the position of the camshaft lobes on the No. 1 cylinder for assembly reference.

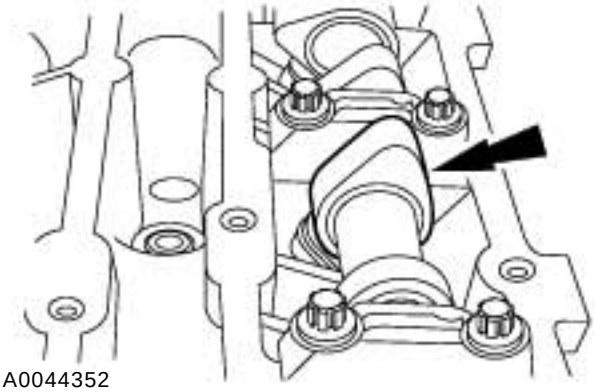
A0044352

18. Remove the bolt and the VCT solenoid.

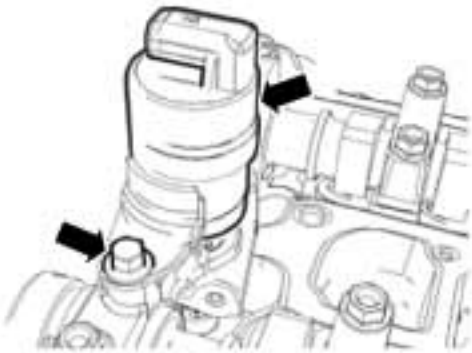
E139154

19. Remove the plug and the VCT system oil filter from the intake camshaft thrust cap.

20. **CAUTION: Failure to follow the camshaft loosening procedure can result in damage to the camshafts.**

DISASSEMBLY

NOTE: Mark the location and orientation of each camshaft bearing cap.

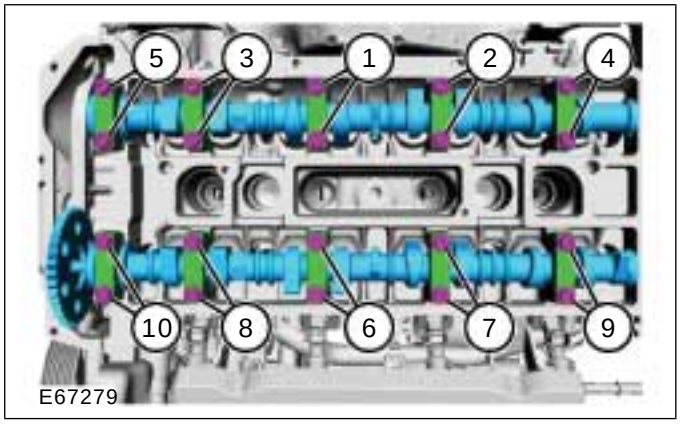

21. **NOTE:** If the camshafts and valve tappets are to be reused, mark the location of the valve tappets to make sure they are assembled in their original positions.

NOTE: The number on the valve tappets only reflects the digits that follow the decimal. For example, a tappet with the number 0.650 has the thickness of 3.650 mm.

Remove and inspect the valve tappets.

22. Discard the cylinder head bolts.

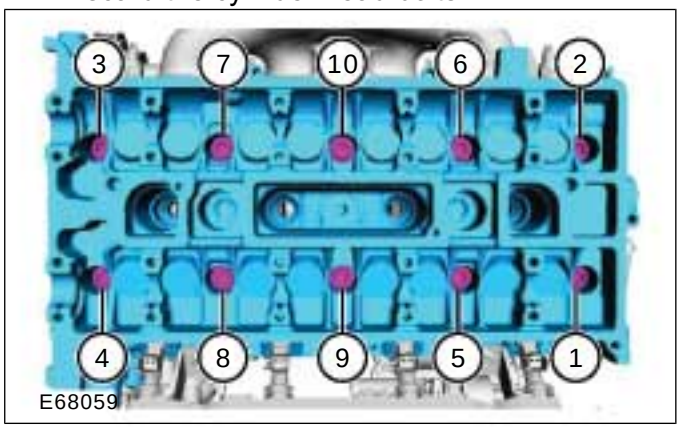

23. Support the cylinder head on a bench with the head gasket side up. Check the cylinder head distortion and the cylinder block distortion.

Refer to: Cylinder Head Distortion (303-00 Engine System - General Information, General Procedures).
Refer to: Cylinder Block Distortion (303-00 Engine System - General Information, General Procedures).

24. Remove the cylinder head alignment dowels.

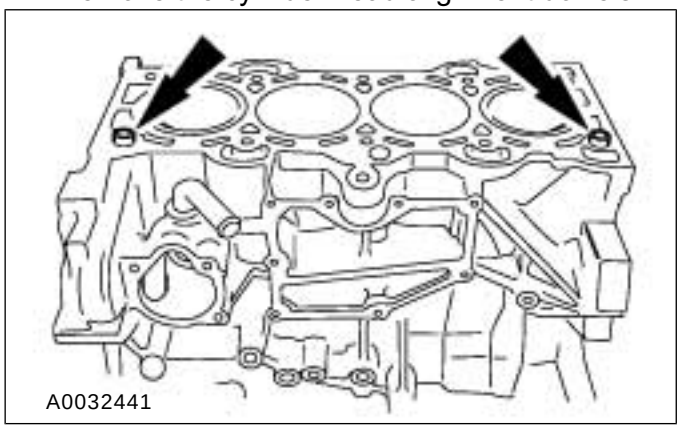

25. Special Tool(s): 303-428

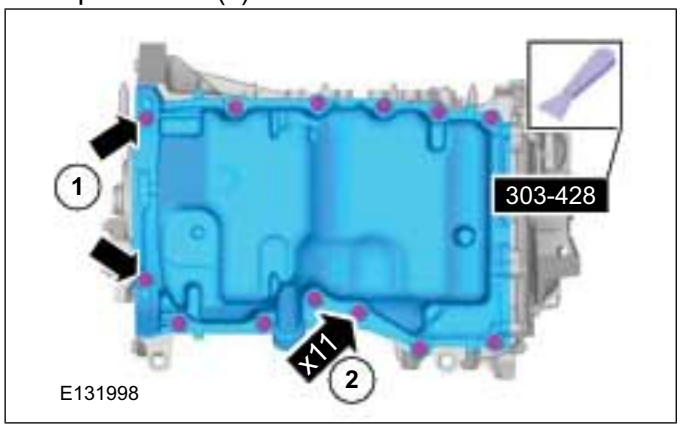

26.

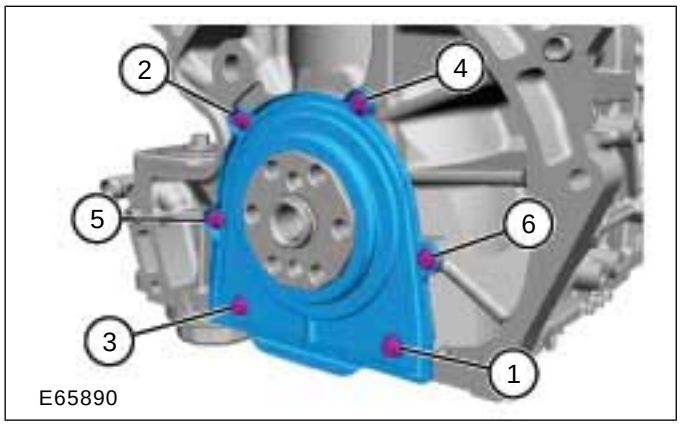

DISASSEMBLY

27. Remove the bolts, oil pump pickup tube and discard the gasket.

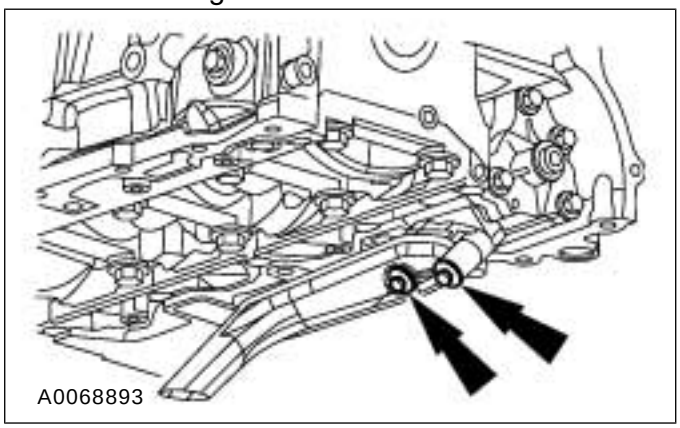

28.

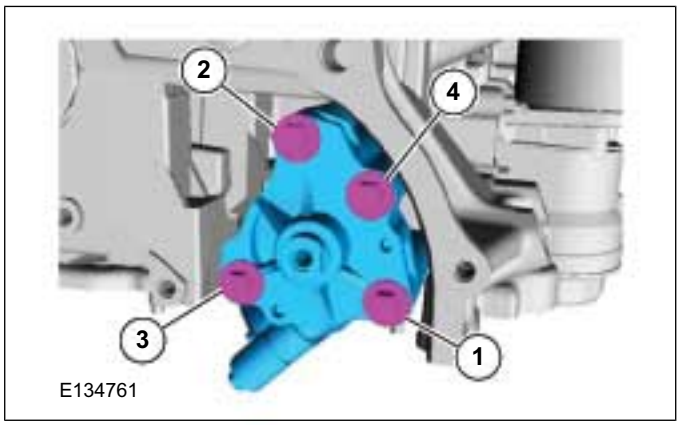

29. Rotate the crankshaft slowly clockwise until the crankshaft balance weight is up against the crankshaft TDC timing peg.

Special Tool(s): 303-507

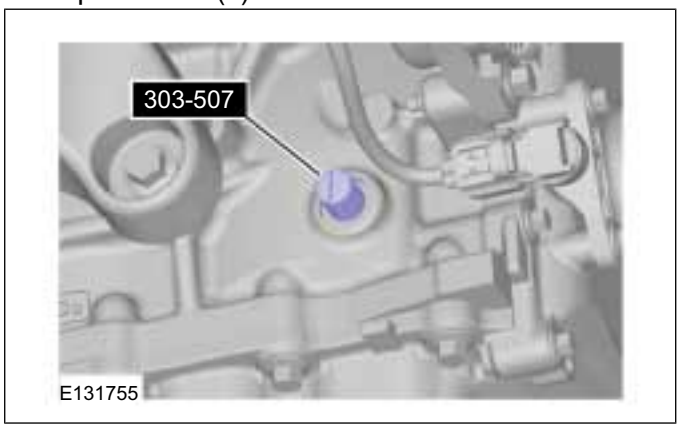

30. Mark the balancer unit front shafts on the top for reference that the balancer unit is at TDC.

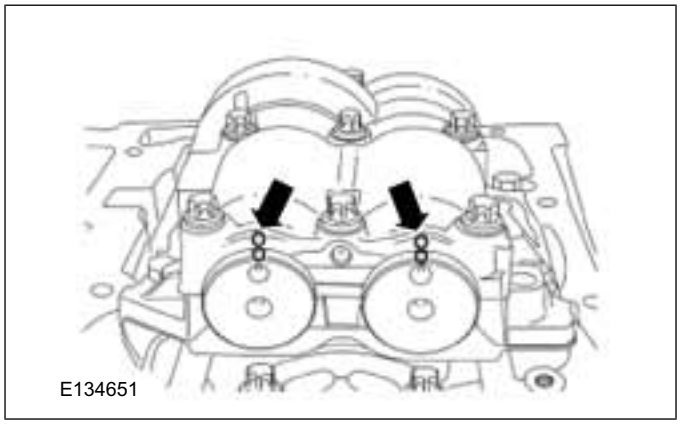

31. **NOTE:** Due to the precision interior construction of the balancer unit, it should not be disassembled.

Remove the 4 bolts and the balancer unit.

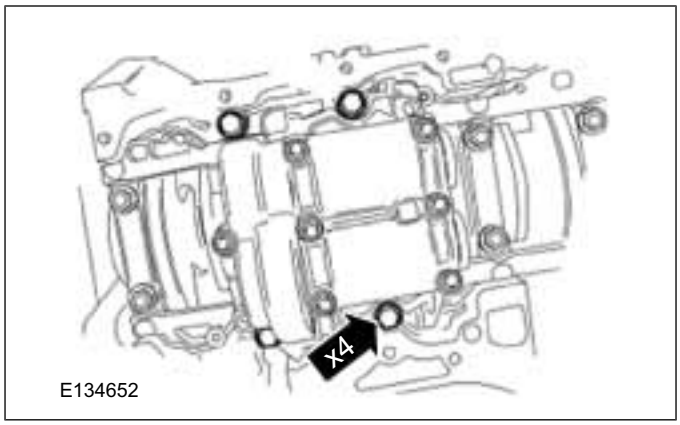

32. Remove the Special Tool(s): 303-507

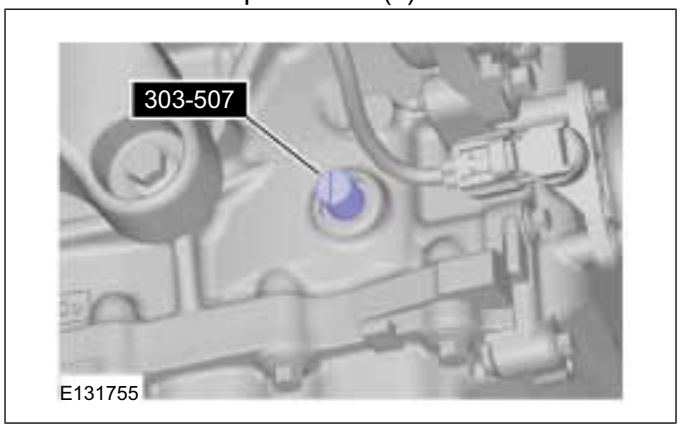

33. Before removing the pistons, inspect the top of the cylinder bores. If necessary, remove the ridge or carbon deposits from each cylinder using an abrasive pad or equivalent, following manufacturer's instructions.

34. **NOTE:** Clearly mark the connecting rods, connecting rod caps and connecting rod

DISASSEMBLY

bearings in numerical order for correct orientation for reassembly.

Remove the connecting rod cap bolts and cap.

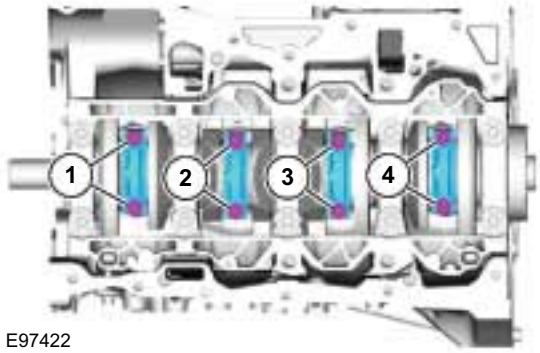

E97422

35. **CAUTION: Do not scratch the cylinder walls or crankshaft journals with the connecting rod.**

Using the connecting rod installer, remove the piston or rod assembly from the engine block.

Special Tool(s): 303-462

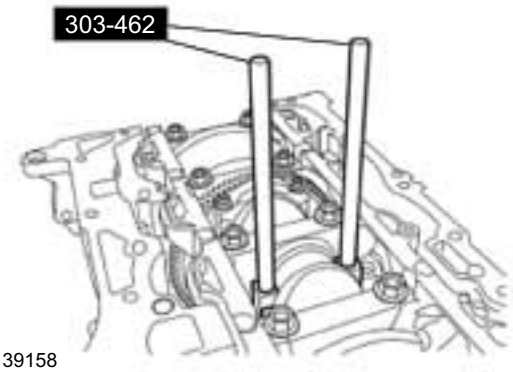

E139158

36. **NOTE:** Note the position of each component before removal.

E97390

37. Repeat the previous 2 steps until all the piston or rod assemblies are removed from the engine block.

38. • Remove the main bearing beam.
    • Discard the bolts.

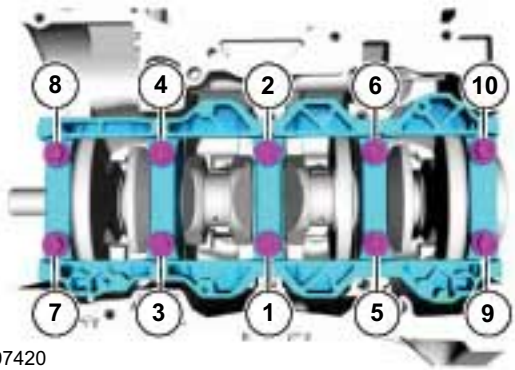

E97420

39. Remove the crankshaft from the engine block.

E97394

40. **NOTE:** If the main bearings are being reused, mark them in order for correct orientation and reassembly.

Remove the main bearings from the main bearing beam.

E97393

41. **NOTE:** If the main bearings are being reused, mark them in order for correct orientation and reassembly.

DISASSEMBLY

NOTE: The center bulkhead has the thrust bearing.

Remove the main bearings from the cylinder block.

E97395

42. **NOTE:** If the oil squirters are being reused, mark them in order for correct location during reassembly.

NOTE: The front bulkhead does not have an oil squirter.

Remove the 4 oil squirters.

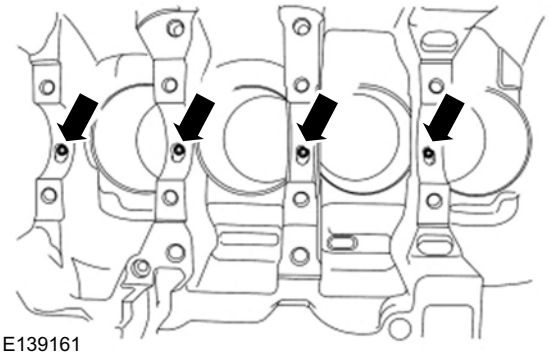
E139161

43. Inspect the cylinder block, main bearing beam, pistons and connecting rods.

Refer to: Piston Inspection (303-00 Engine System - General Information, General Procedures).
Refer to: Bearing Inspection (303-00 Engine System - General Information, General Procedures).
Refer to: Connecting Rod Large End Bore (303-00 Engine System - General Information, General Procedures).
Refer to: Cylinder Block Distortion (303-00 Engine System - General Information, General Procedures).

DISASSEMBLY AND ASSEMBLY OF SUBASSEMBLIES

Cylinder Head(21 165 6)

Special Tool(s)

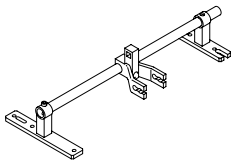 E62757	303-361B Compressor, Valve Spring
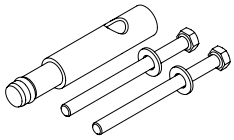 E62041	303-361B-06 Adapter for 303-361B
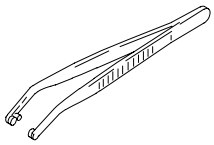 21156	303-362 Installer, Valve Stem Collets
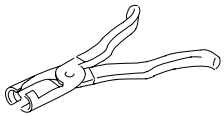 21211	303-508 Pliers, Valve Stem Seal

Disassembly

NOTE: Disassembly steps in this procedure may contain assembly details.

1. Refer to: Cylinder Head (303-01 Engine - 2.5L Duratec-HE (122kW/165PS) - MI4, Removal and Installation).
2. 1. Torque: 10 Nm
   2. Torque: 48 Nm

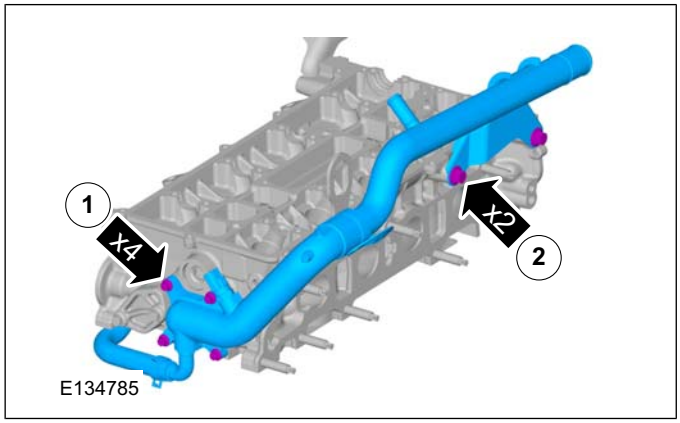

E134785

3. 1. Torque: 25 Nm
   2. Torque: 17 Nm
   3. Torque: 45 Nm

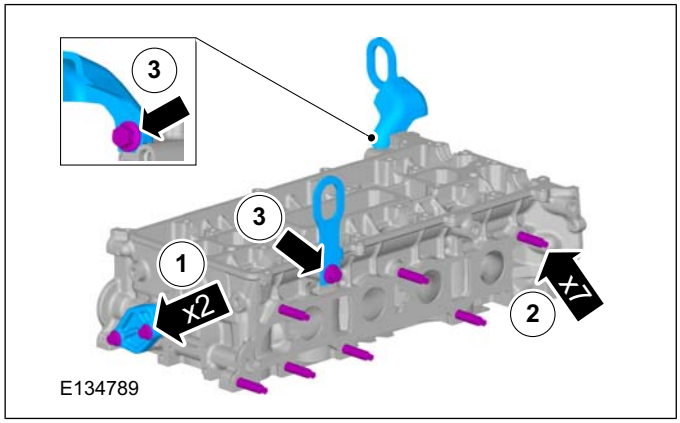

E134789

4.

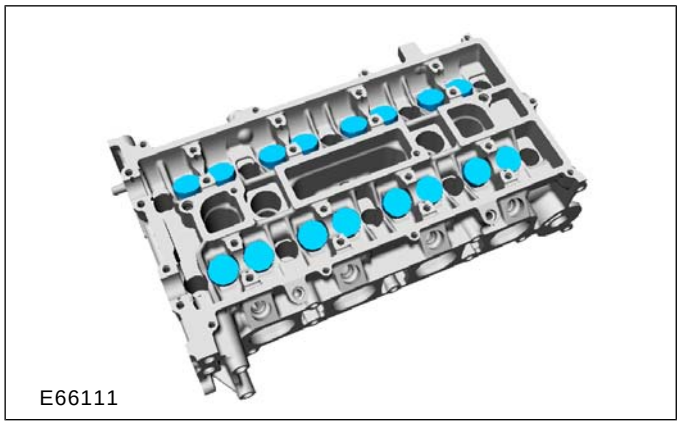
E66111

DISASSEMBLY AND ASSEMBLY OF SUBASSEMBLIES

5. Special Tool(s): 303-361B, 303-361B-06, 303-362

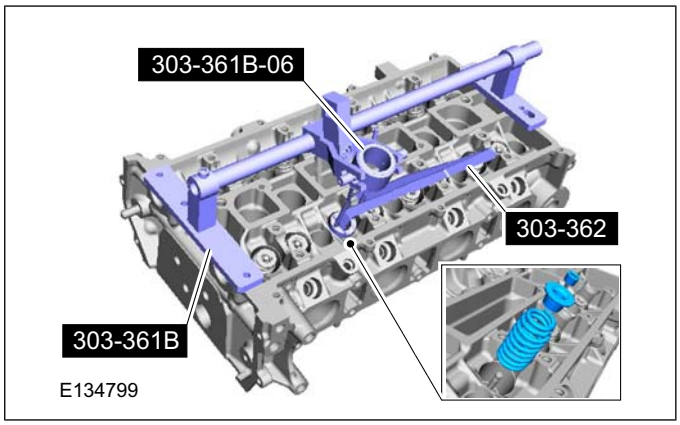

6. Special Tool(s): 303-508

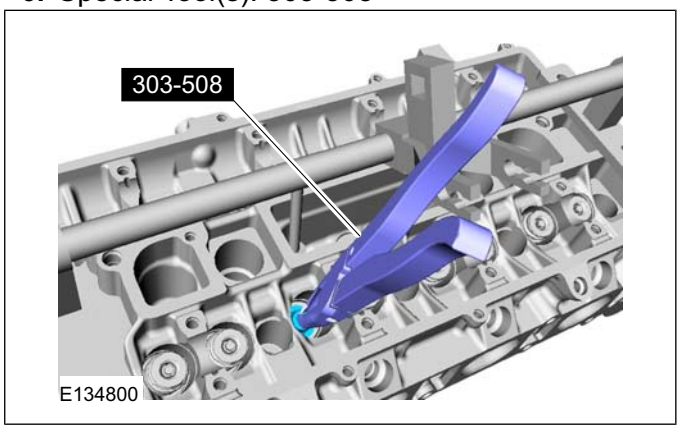

Assembly

7. To assemble, reverse the disassembly procedure.

ASSEMBLY

Engine(21 134 8)

Assembly

Special Tool(s)

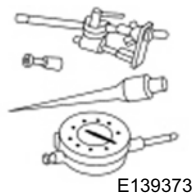 E139373	100-002 Holding Fixture with Dial Indicator Gauge
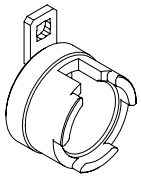 E134674	303-1416 Tool, Crank Damper Holding
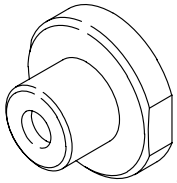 21148	303-318 Aligner/Installer, Crankshaft Front Seal
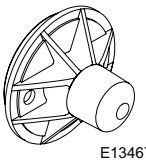 E134675	303-328 Replacer, Rear Oil Seal
E139375	303-462 Installer, Connecting Rod
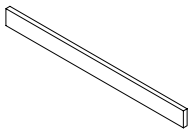 E134673	303-465 Tool, Camshaft Align Timing

Special Tool(s)

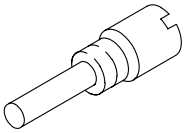 PZ21210	303-507 Timing Peg, Crankshaft TDC
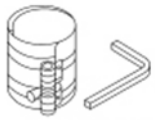 E139376	303-D032 Compressor, Piston Ring

Materials	
Name	**Specification**
Hypoid Oil 85W-90	SQ-M2C9002-AA / A72SX-19K261-CA
Silicone Sealant LB	WSE-M4G323-A4 / 2U7J-M4G323-AA

1. **CAUTIONS:**

Do not loosen or remove the crankshaft pulley bolt without first installing the special tools as instructed in this procedure. The crankshaft pulley and the crankshaft timing sprocket are not keyed to the crankshaft. The crankshaft, the crankshaft sprocket and the pulley are fitted together by friction, using diamond washers between the flange faces on each part. For that reason, the crankshaft sprocket is also unfastened if the pulley bolt is loosened. Before any repair requiring loosening or removal of the crankshaft pulley bolt, the crankshaft and camshafts must be locked in place by the special service tools, otherwise severe engine damage may occur.

During engine repair procedures, cleanliness is extremely important. All parts must be thoroughly cleaned and any foreign material, including any material created while cleaning gasket surfaces, that enters the oil passages,

ASSEMBLY

coolant passages or the oil pan, can cause engine failure.

NOTE: Assembly of the engine requires various inspections/measurements of the engine components (engine block, crankshaft, connecting rods, pistons and piston rings). These inspections/measurements will aid in determining if the engine components will require replacement.

2. **NOTE:** If the oil squirters are being reused, they must be installed in the same location as marked during disassembly.

   NOTE: The front bulkhead does not have an oil squirter.

   Install the 4 oil squirters.
   Torque: 4 Nm

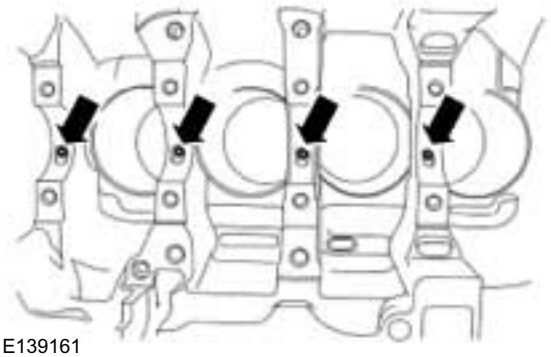
E139161

3. Measure each of the crankshaft main bearing journal diameters in at least 2 directions and record the smallest diameter for each journal.

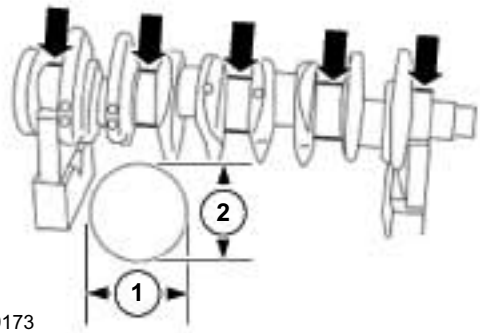

E139173

4. Position the main bearing beam in the engine block with the main bearing beam mounted flush with the rear face of the engine block.

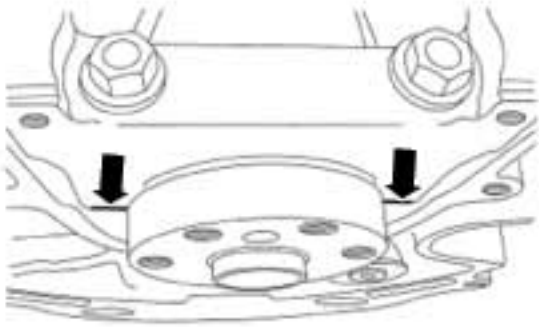
E139174

5. Using the original main bearing beam bolts, install and tighten the 10 main bearing beam bolts.
   Torque:
   - Stage 1: 5 Nm
   - Stage 2: 25 Nm
   - Stage 3: 90 °

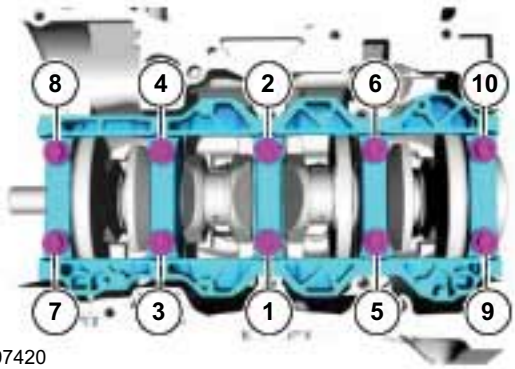

E97420

6. - Measure each crankshaft block main bearing bore diameter.
   - Remove the bolts and the main bearing beam.
   - Discard the main bearing beam bolts.

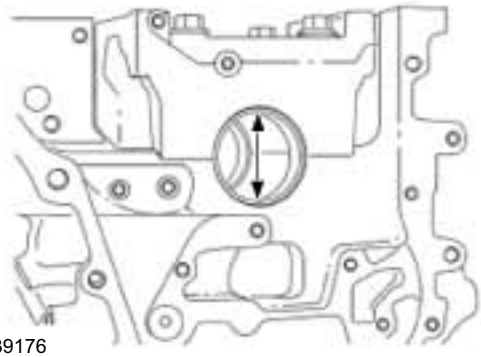
E139176

ASSEMBLY

7. Using the chart, select the crankshaft main bearings.

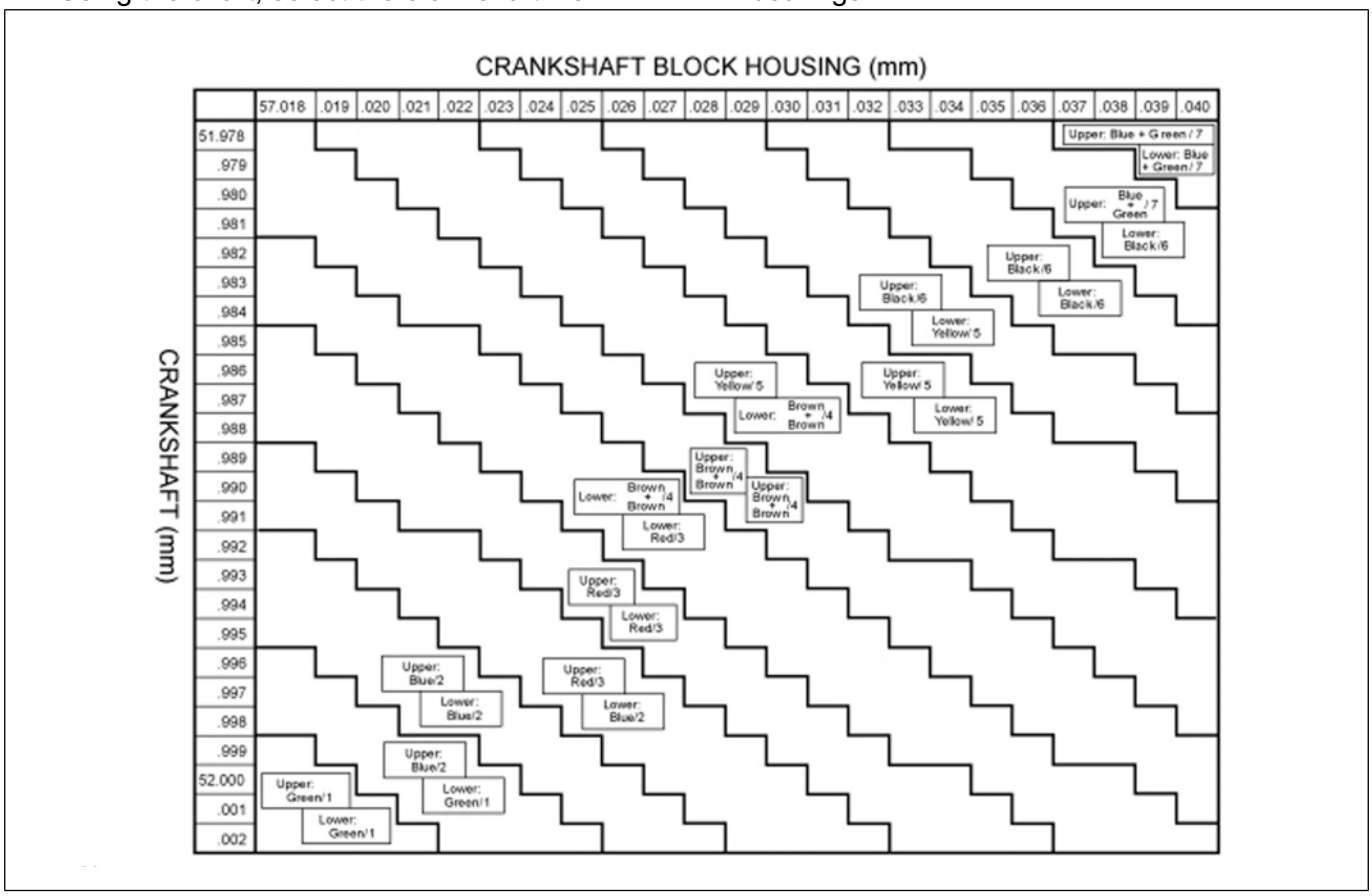

8. ⚠ **CAUTION: The rod cap installation must keep the same orientation as marked during disassembly or engine damage may occur.**

   Using the original connecting rod cap bolts, install the connecting caps and bolts.
   Torque:
   - Stage 1: 29 Nm
   - Stage 2: 90 °

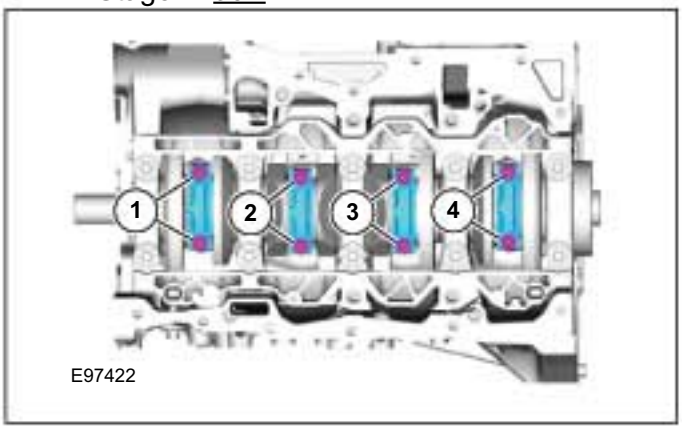

9. - Measure the connecting rod large end bore in 2 directions. Record the smallest measurement for each connecting rod.
   - Remove the bolts and the connecting rod cap.
   - Discard the connecting rod cap bolts.

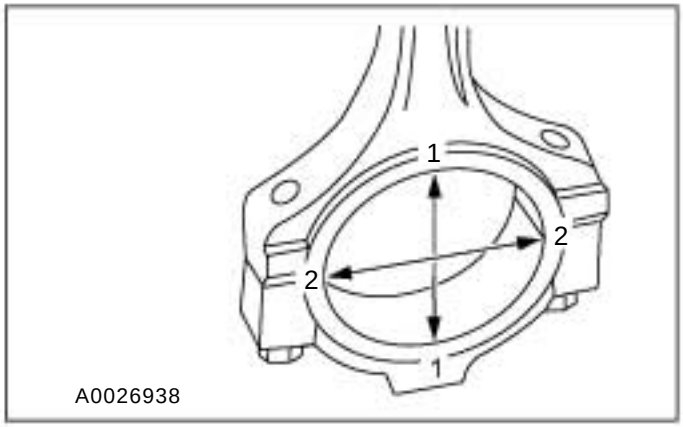

10. Measure each of the crankshaft connecting rod bearing journal diameters in at least 2 directions.

ASSEMBLY

Record the smallest measurement for each connecting rod journal.

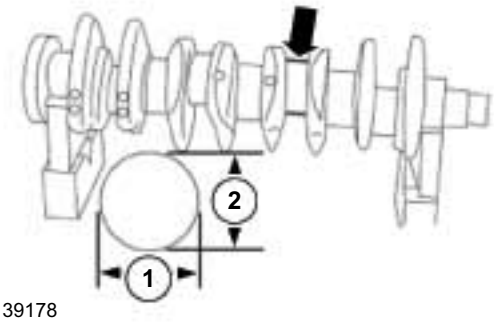

E139178

11. Using the chart, select the correct connecting rod bearings for each crankshaft connecting rod journal.

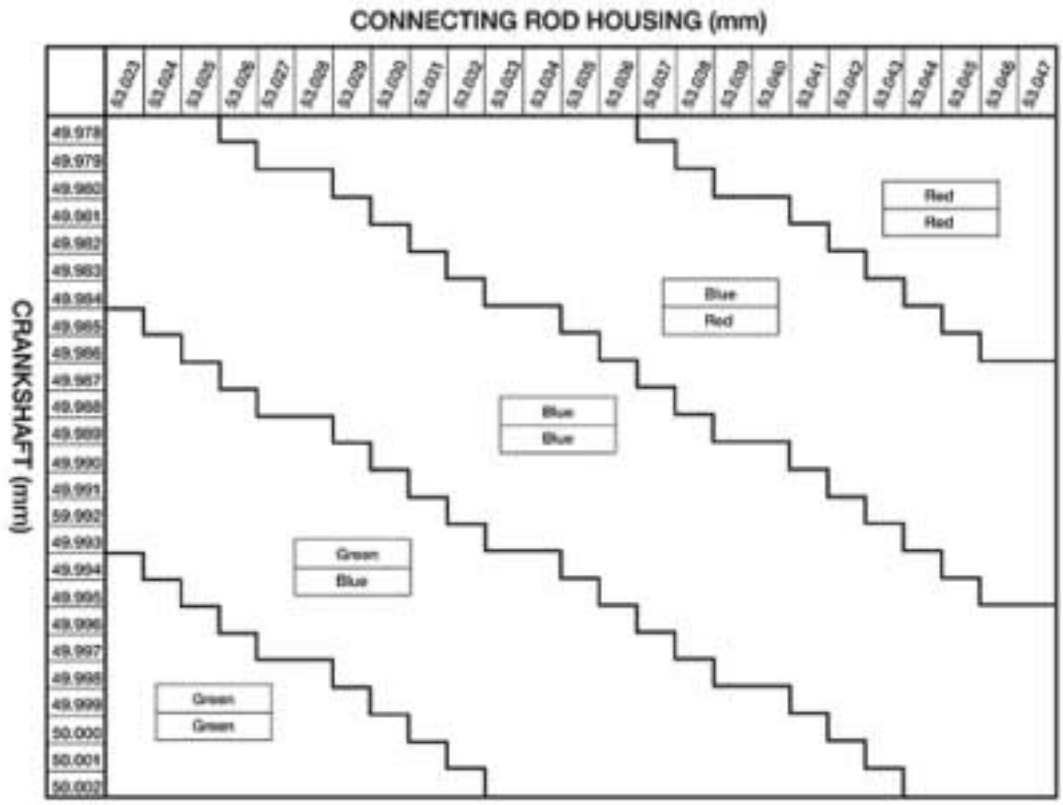

E139179

12. **NOTE:** Before assembling the cylinder block, all sealing surfaces must be free of chips, dirt, paint and foreign material. Also, make sure the coolant and oil passages are clear.

NOTE: If reusing the crankshaft main bearings, install them in their original positions and orientation as noted during disassembly.

NOTE: The center bulkhead is the thrust bearing.

NOTE: Make sure that these components are installed to the noted removal position.

ASSEMBLY

Lubricate the upper crankshaft main bearings with clean engine oil and install the 5 crankshaft main bearings in the cylinder block.

E97400

13. **NOTE:** If reusing the crankshaft main bearings, install them in their original positions and orientation as noted during disassembly.

Lubricate the crankshaft main bearings with clean engine oil and install the 5 crankshaft main bearings in the main bearing beam.

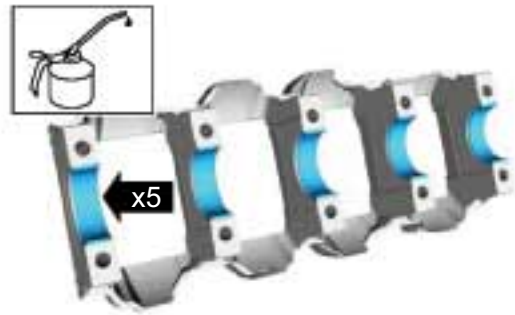

E97402

14. Lubricate journals on the crankshaft with clean engine oil.

15. Position the crankshaft in the cylinder block.

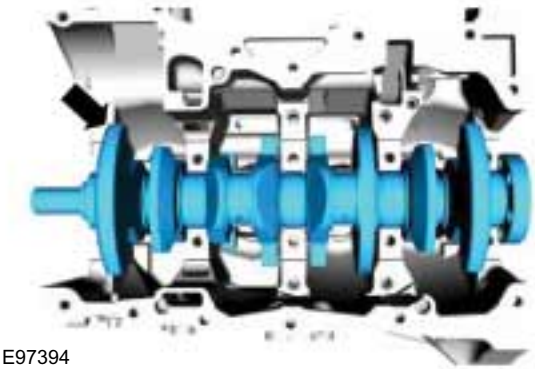
E97394

16. Lubricate the 10 main bearing beam side fit surfaces (front 2 shown) with clean engine oil.

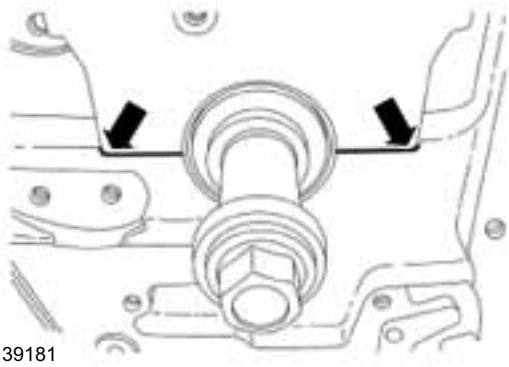
E139181

17. Lubricate the crankshaft bearing journals on the main bearing beam with clean engine oil. Then position the main bearing beam in the engine block with the main bearing beam mounted flush with the rear face of the engine block.

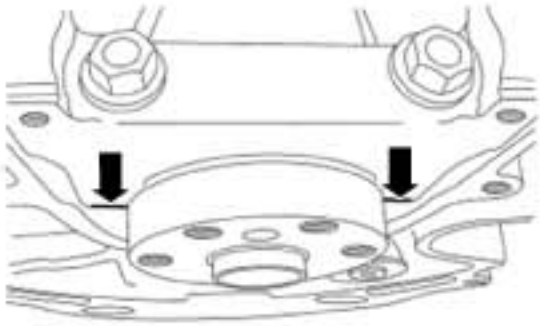
E139182

18. **CAUTION: Make sure that new bolts are installed.**

NOTE: Lubricate the main bearing beam bolts threads and under the bolt heads with clean engine oil.

NOTE: Position the crankshaft to the rear of the cylinder block, then position the crankshaft to

ASSEMBLY

the front of the cylinder block before tightening the main bearing beam bolts.

Torque:
- Stage 1: 5 Nm
- Stage 2: 25 Nm
- Stage 3: Loosen: 90°

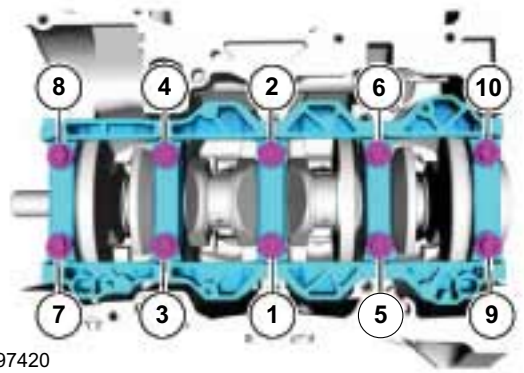

E97420

19. • Using the dial indicator gauge with holding fixture, measure crankshaft end play.

Special Tool(s): 100-002
- Position the crankshaft to the rear of the cylinder block.
- Zero the dial indicator gauge with holding fixture.
- Move the crankshaft to the front of the cylinder block. Note and record the crankshaft end play.
- Acceptable crankshaft end play is 0.22-0.43 mm (0.008-0.016 in). If the crankshaft end play exceeds the specified range, install new parts as necessary.

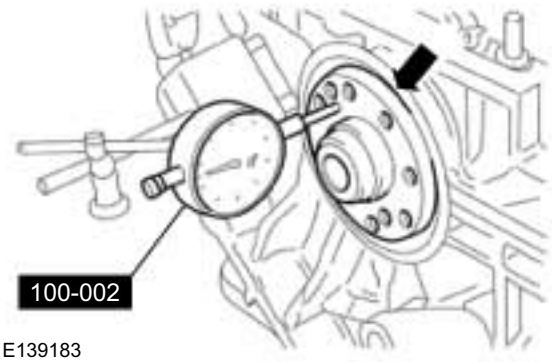

E139183

20. ⚠ **CAUTION: Be sure not to scratch the cylinder wall or crankshaft journal with the connecting rod. Push the piston down until the connecting rod bearing seats on the crankshaft journal.**

NOTE: Lubricate the pistons, piston rings, connecting rod bearings and the entire cylinder bores with clean engine oil.

NOTE: Make sure the piston arrow on top is facing toward the front of the engine.

- Using the piston ring compressor and the connecting rod installer, install the piston and connecting rod assemblies.

  Special Tool(s): 303-D032, 303-462
- When installing the pistons and connecting rod assemblies, the oil ring gaps must be positioned 60 degrees apart from each other and a minimum of 90 degrees from the expander gap.
- The position of the upper and lower compression ring gaps are not controlled for installation.

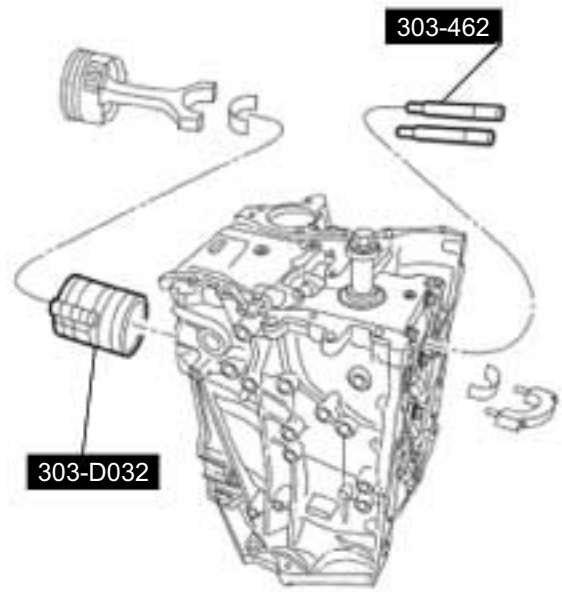

E139184

21. ⚠ **CAUTION: The rod cap installation must keep the same orientation as marked during disassembly or engine damage may occur.**

NOTE: Install connecting rod caps and bolts on the connecting rods for cylinders 1 and 4 first and tighten. Then rotate crankshaft 180 degrees and install connecting rod caps and bolts on

ASSEMBLY

connecting rods for cylinders 2 and 3 and tighten.

NOTE: After installation of each connecting rod cap, rotate the crankshaft to verify smooth operation.

Install the connecting rod caps and the new bolts.
Torque:
- Stage 1: 29 Nm
- Stage 2: 90 °

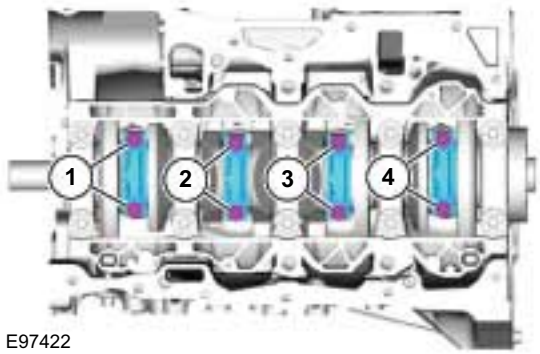

E97422

22. Install the crankshaft TDC timing peg and rotate the crankshaft slowly clockwise until the crankshaft balance weight is up against the crankshaft TDC timing peg. The engine is now at TDC.

Special Tool(s): 303-507

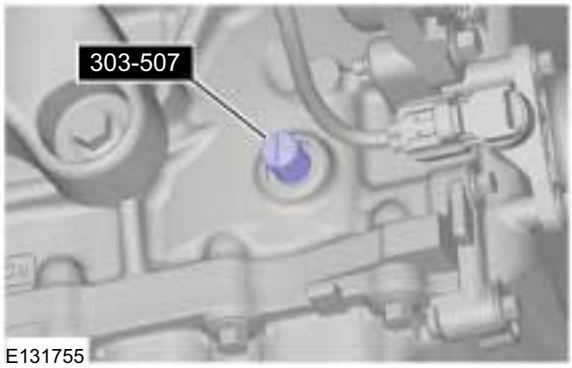

E131755

23. **NOTE:** Due to the precision interior construction of the balancer unit, it should not be disassembled.

NOTE: The original adjustment shims must be installed in their original positions.

NOTE: Confirm by visual inspection that there is no damage to the balancer unit gear and verify that the shaft turns smoothly. If there is any damage or malfunction, replace the balancer unit.

Install the adjustment shims in their original positions on the seat faces of the balancer unit.

24. With the balancer unit shaft marks in the TDC position, slowly install the balancer unit to the cylinder block to avoid interference between the crankshaft drive gear and the balancer unit driven gear.

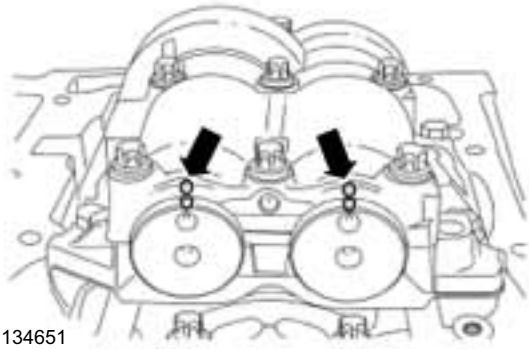
E134651

25. Install the balancer unit bolts.
Torque:
- Stage 1: 25 Nm
- Stage 2: 50 Nm

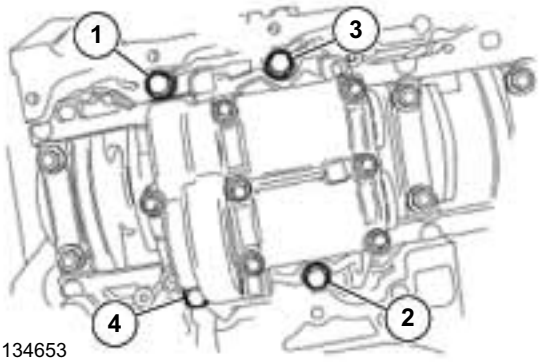

E134653

26. Remove the Special Tool(s): 303-507

E131755

ASSEMBLY

27. Rotate the crankshaft to confirm that there are no meshing problems between the balancer unit gear and the crankshaft gear.
28. • Install the crankshaft TDC timing peg and rotate the crankshaft slowly clockwise until the crankshaft balance weight is up against the crankshaft TDC timing peg.

    Special Tool(s): 303-507

29. Remove the Special Tool(s): 303-507

30. **NOTE:** Measure the backlash and verify that it is within specified range at all of the following 6 positions: 10 degrees, 30 degrees, 100 degrees, 190 degrees, 210 degrees and 280 degrees. It will be necessary to reset the measuring equipment between measurements.

    NOTE: The measurement must be taken with the dial indicator gauge with holding fixture, a 5 mm allen wrench and worm clamp set up as shown. Mark the allen wrench with a file 80 mm (3.149 in) above the driven gear shaft center. Make sure the worm clamp and allen wrench are not touching the balance shaft housing.

    NOTE: For an accurate measurement while measuring the gear backlash, insert a screwdriver as shown into the crankshaft No. 1 crankweight area and set both the rotation and the thrust direction with the screwdriver, using a prying action as shown.

    - Position the dial indicator gauge with holding fixture as shown. Measure the gear backlash.

      Special Tool(s): 100-002
    - Position the dial indicator gauge with holding fixture (1) on the allen wrench 80 mm (3.149 in) above the driven gear shaft center (2) on the balancer unit.
    - Rotate the crankshaft clockwise and measure the backlash at all of the following 6 positions: 10 degrees, 30 degrees, 100 degrees, 190 degrees, 210 degrees and 280 degrees.
    - Backlash specifications are 0.005 to 0.101 mm (0.00019 to 0.0039 in).
    - If the backlash exceeds the specified range, carry out the balance shaft backlash procedure.

      Refer to: Balance Shaft Backlash (303-01 Engine - 2.5L Duratec-HE (122kW/165PS) - MI4, General Procedures).

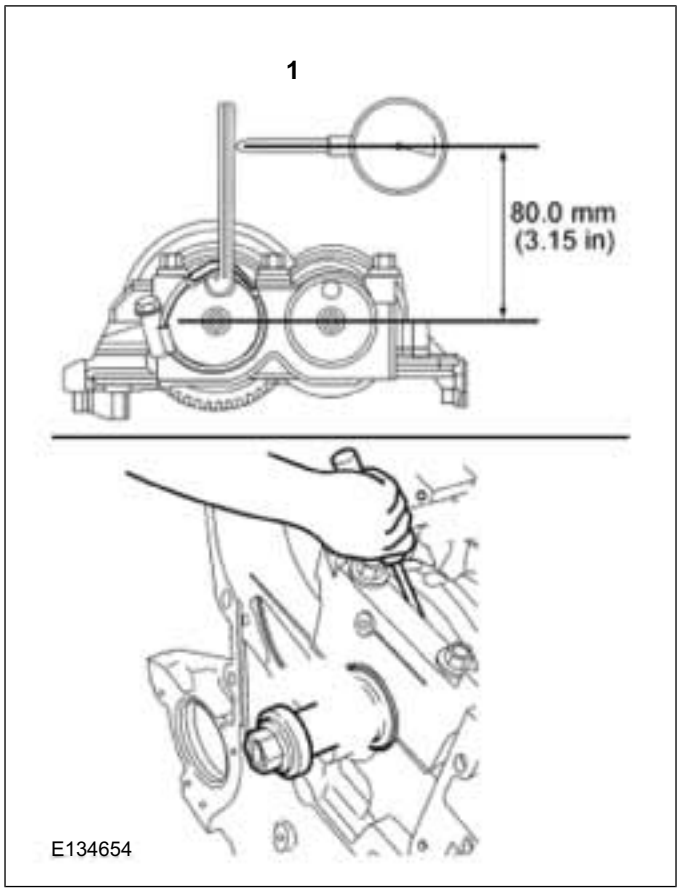

31. ⚠ **CAUTION: Failure to position the No. 1 piston at TDC can result in damage to the engine. Turn the engine in the normal direction of rotation only.**

ASSEMBLY

Turn the crankshaft clockwise to position the No. 1 piston at TDC.

32. **NOTE:** The crankshaft TDC timing peg will contact the crankshaft and prevent it from turning past TDC. However, the crankshaft can still be rotated in the counterclockwise direction. The crankshaft must remain at the TDC position until the timing drive components and crankshaft pulley are installed. Install the crankshaft TDC timing peg.

    Install the crankshaft TDC timing peg.

    Special Tool(s): 303-507

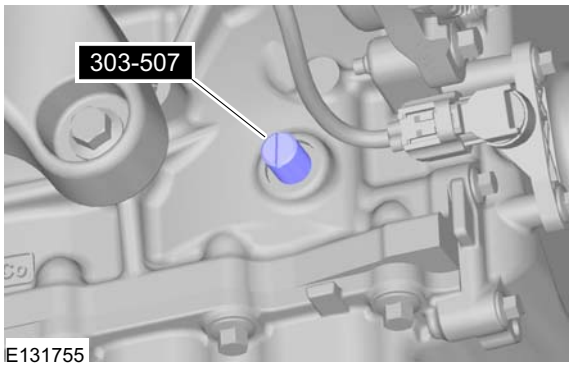

33. **NOTE:** Clean the oil pump and cylinder block mating surfaces with metal surface prep.

    Torque:
    - Stage 1: 10 Nm
    - Stage 2: 20 Nm

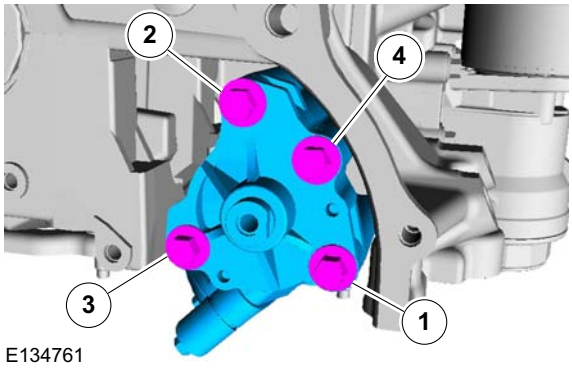

34. Install a new oil pump pickup tube gasket and the pickup tube.
    Torque: 10 Nm

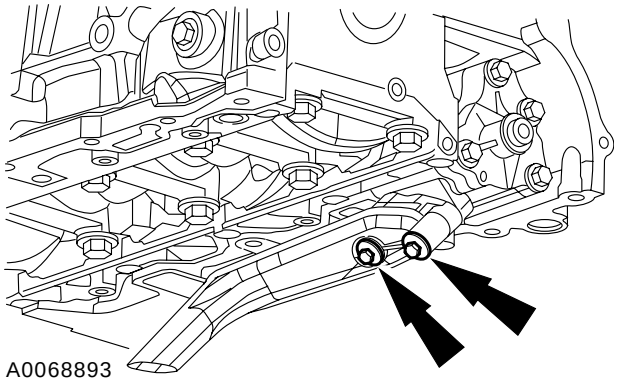

35. **CAUTION: Install the crankshaft rear seal carriers within five minutes of applying the sealer.**

    NOTE: Do not damage the mating faces.

    NOTE: Mating surface should not have traces of oil to improve the adhesion.

    Material: Silicone Sealant LB (WSE-M4G323-A4 / 2U7J-M4G323-AA) sealant

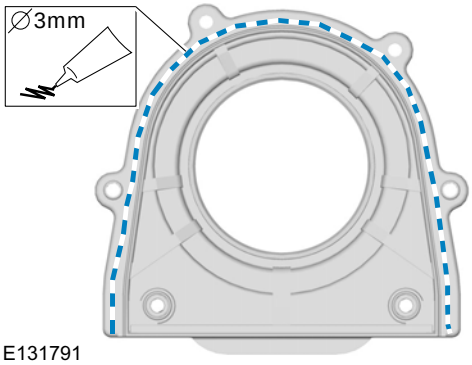

ASSEMBLY

36. **NOTE:** New crankshaft rear seal carriers are supplied with an alignment sleeve which must be removed after installation.

Special Tool(s): 303-328
Torque: 10 Nm

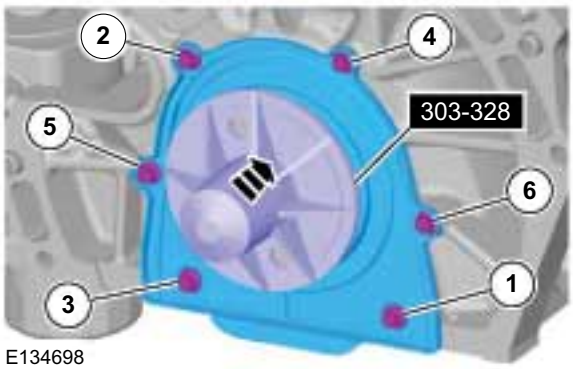

E134698

37. Remove the Special Tool(s): 303-328

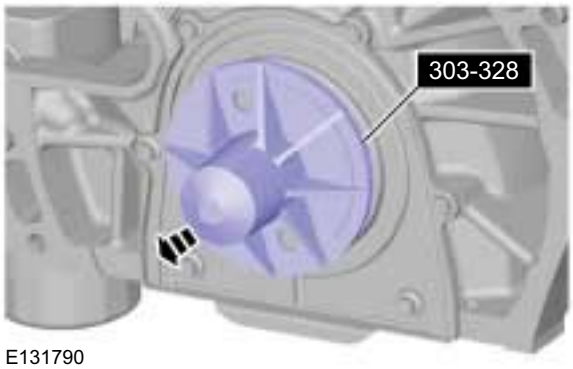

E131790

38. **CAUTION: Do not use metal scrapers, wire brushes, power abrasive discs or other abrasive means to clean the sealing surfaces. These tools cause scratches and gouges, which make leak paths. Use a plastic scraping tool to remove traces of sealant.**

Clean and inspect all mating surfaces.

39. Using a suitable straight edge, align the front surface of the oil pan flush with the front surface of the engine block.

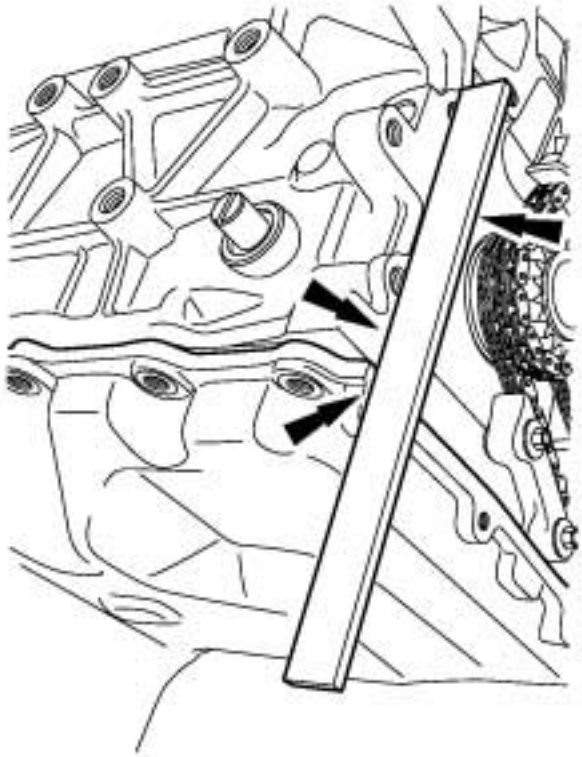
N0039349

40. **CAUTION: Install the oil pan within five minutes of applying the sealer.**

NOTE: Do not damage the mating faces.

NOTE: Mating surface should not have traces of oil to improve the adhesion.

Material: Silicone Sealant LB (WSE-M4G323-A4 / 2U7J-M4G323-AA) sealant

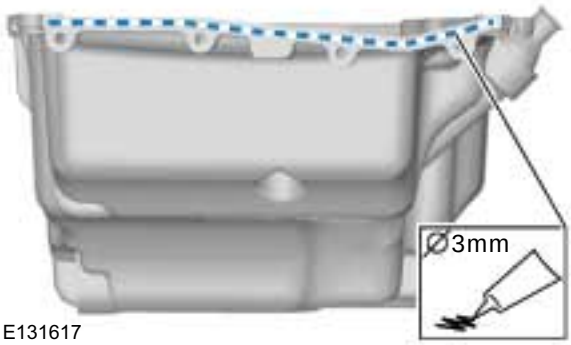

E131617

41. **CAUTION: Install the oil pan within five minutes of applying the sealer.**

NOTE: Do not damage the mating faces.

ASSEMBLY

NOTE: Mating surface should not have traces of oil to improve the adhesion.

Material: Silicone Sealant LB (WSE-M4G323-A4 / 2U7J-M4G323-AA) sealant

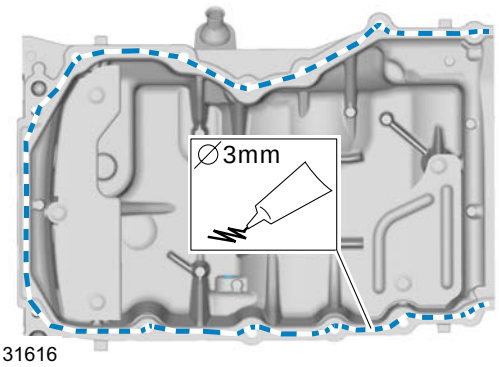

42. Install the oil pan.
Torque: 25 Nm

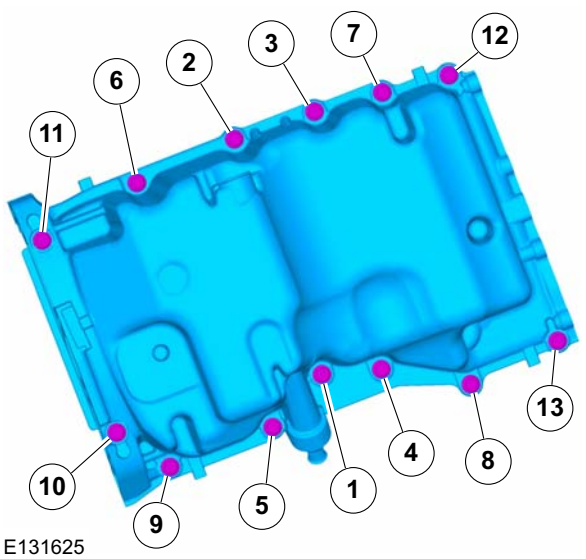

43. • Install the cylinder head alignment dowels.
• Dowels must be fully seated in the cylinder block.

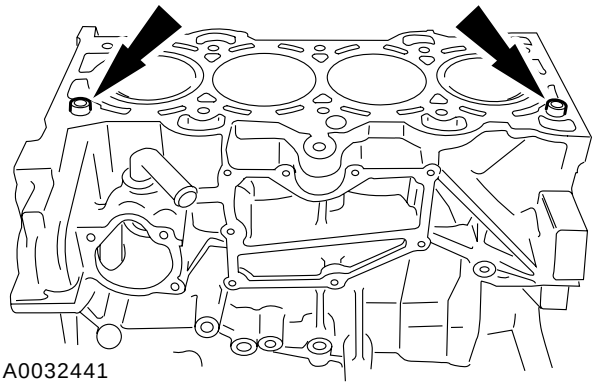

44. ⚠ **CAUTION: Do not use metal scrapers, wire brushes, power abrasive discs or other abrasive means to clean the sealing surfaces. These tools cause scratches and gouges that make leak paths. Use a plastic scraping tool to remove all traces of the head gasket.**

NOTE: Observe all warnings and cautions and follow all application directions contained on the packaging of the silicone gasket remover and the metal surface prep.

NOTE: If there is no residual gasket material present, metal surface prep can be used to clean and prepare the surfaces.

- Clean the cylinder head-to-cylinder block mating surface of both the cylinder head and the cylinder block in the following sequence.

1. Remove any large deposits of silicone or gasket material with a plastic scraper.
2. Apply silicone gasket remover, following package directions, and allow to set for several minutes.
3. Remove the silicone gasket remover with a plastic scraper. A second application of silicone gasket remover may be required if residual traces of silicone or gasket material remain.
4. Apply metal surface prep, following package directions, to remove any traces of oil or coolant, and to prepare the surfaces to bond with the new gasket. Do not attempt to make the metal shiny. Some staining of the metal surfaces is normal.

45. Apply silicone gasket and sealant to the locations shown.

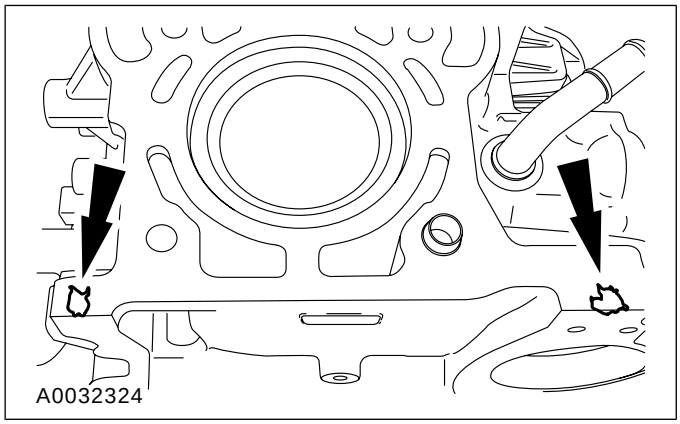

ASSEMBLY

46. Install a new head gasket.

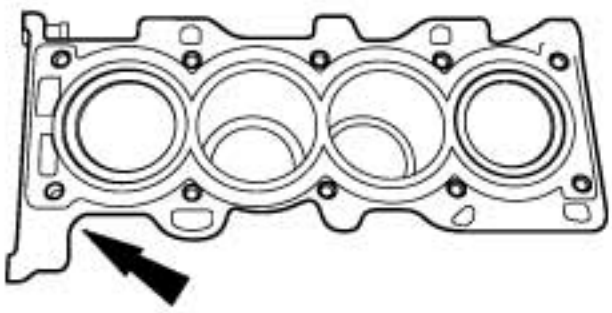
A0087577

47. **CAUTION: Make sure that new bolts are installed.**

NOTE: The cylinder head bolts are torque-to-yield and must not be reused.

NOTE: Lubricate the bolts with clean engine oil prior to installation.

Torque:
- Stage 1: 5 Nm
- Stage 2: 15 Nm
- Stage 3: 45 Nm
- Stage 4: Loosen: 90°
- Stage 5: Loosen: 90°

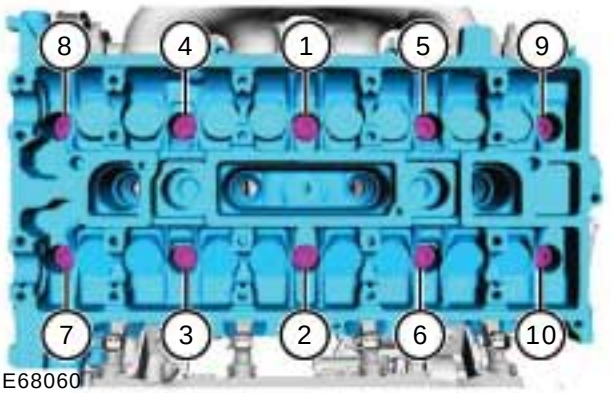

E68060

48. **NOTE:** Coat the valve tappets with clean engine oil prior to installation.

Install the valve tappets.

49. **CAUTION: Make sure that the camshafts and camshaft bearing caps are installed in their original locations.**

NOTE: Lubricate the camshaft journals and bearing caps with clean engine oil.

Install the camshafts approximately at valve overlap position cylinder No. 4 and tighten the camshaft bearing cap bolts one at a time until finger-tight.

Material: Hypoid Oil 85W-90 (SQ-M2C9002-AA / A72SX-19K261-CA) transmission fluid

Torque:
- Stage 1: 7 Nm
- Stage 2: 16 Nm

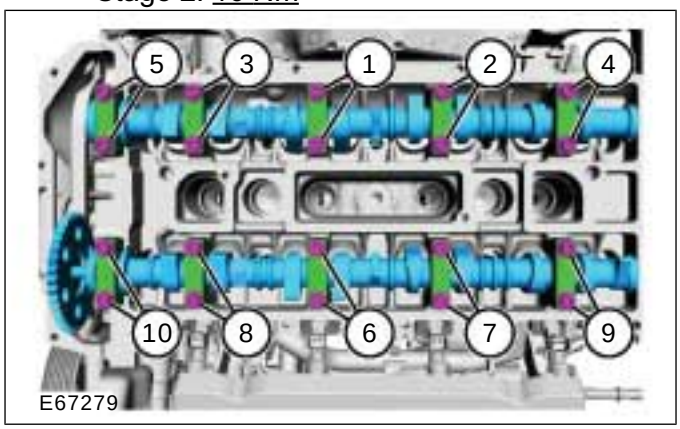

E67279

50. Install the variable camshaft timing (VCT) system oil filter and the plug in the intake camshaft thrust cap.
Torque: 17 Nm

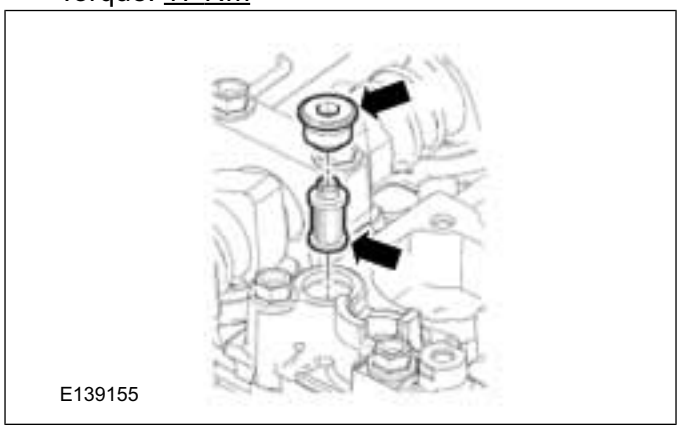
E139155

51. Install the VCT solenoid and the bolt.
Torque: 10 Nm

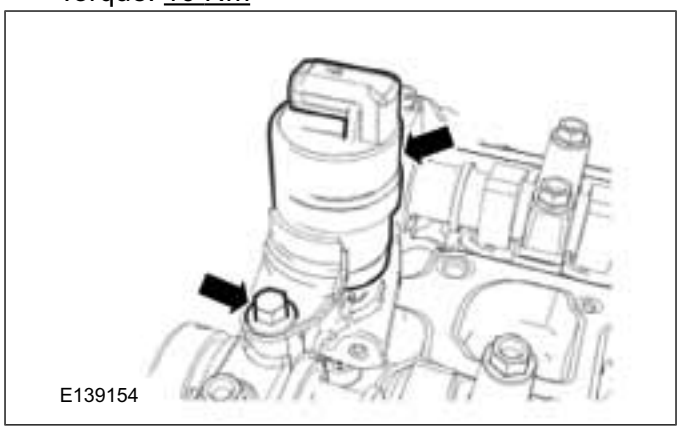
E139154

ASSEMBLY

52. **NOTE:** Install a new crankshaft sprocket diamond washer on both sides of the crankshaft sprocket.
    - Install the crankshaft sprocket, new crankshaft sprocket diamond washers, oil pump chain and oil pump sprocket.
    - The crankshaft sprocket flange must be facing away from the engine block.

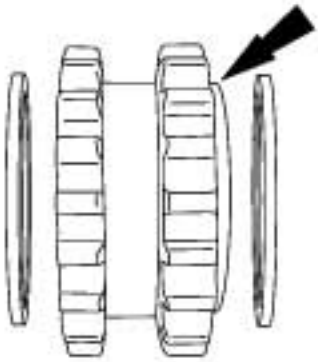
A0083166

53. ⚠ **CAUTION: Make sure that a new friction washer is installed.**
    1. Torque: 10 Nm
    2. Torque: 25 Nm

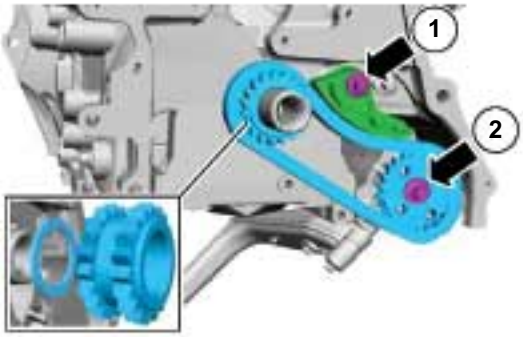

E134760

54. Special Tool(s): 303-465

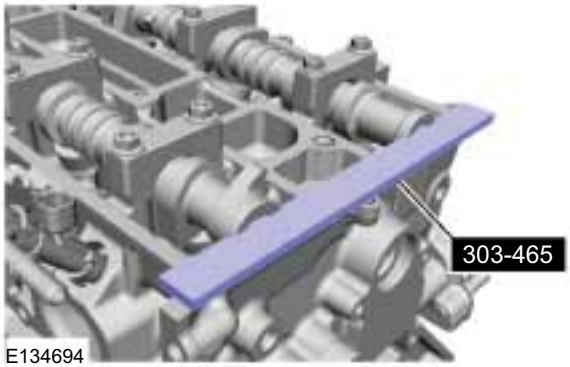

E134694

55. **NOTE:** Hand tighten the bolts at this stage.

Install the camshaft sprockets and the bolts.

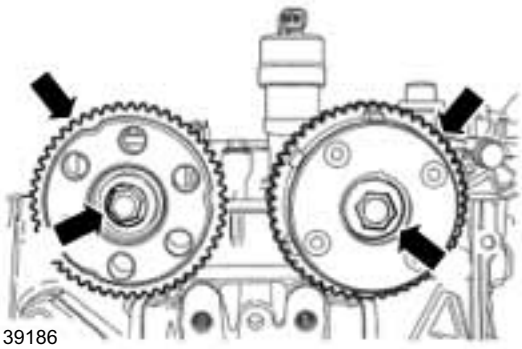
E139186

56. Install the timing chain guide and the bolts.
    Torque: 10 Nm

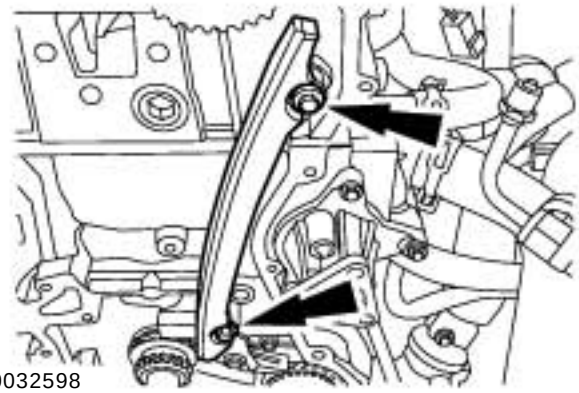
A0032598

57. Install the timing chain.

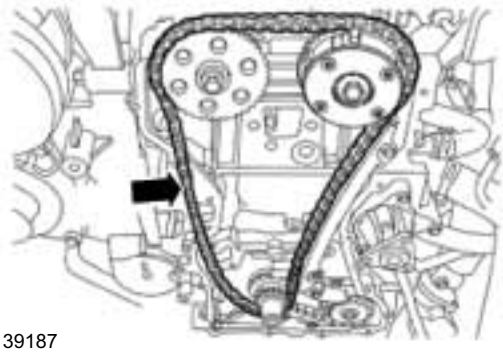
E139187

58. **NOTE:** If the timing chain tensioner plunger and ratchet assembly are not pinned in the compressed position, follow the next 4 steps.

ASSEMBLY

Install the timing chain guide.

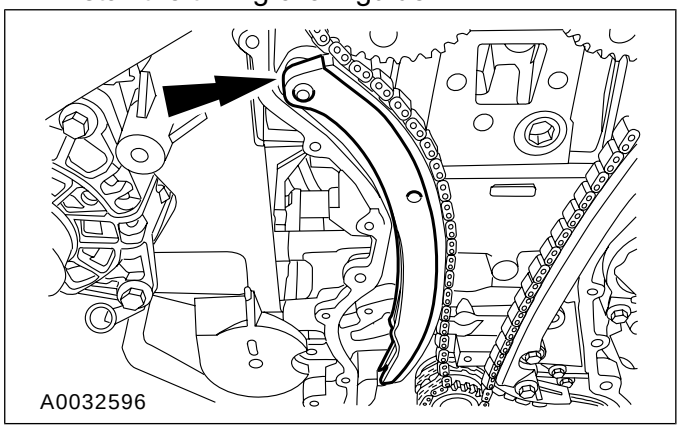

59. **CAUTION: Do not compress the ratchet assembly. This will damage the ratchet assembly.**

Using the edge of a vise, compress the timing chain tensioner plunger.

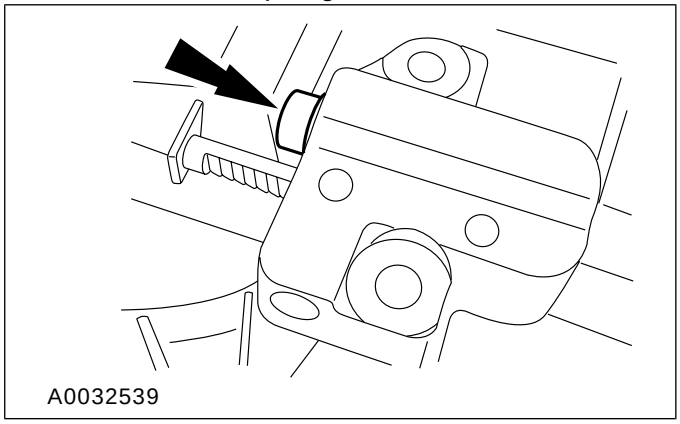

60. Using a small pick, push back and hold the ratchet mechanism.

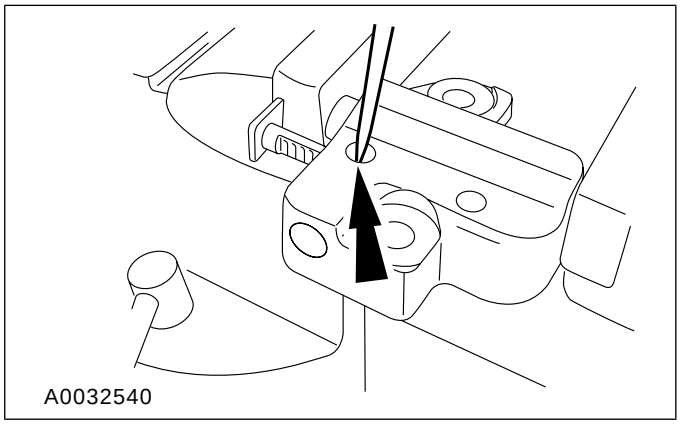

61. While holding the ratchet mechanism, push the ratchet arm back into the tensioner housing.

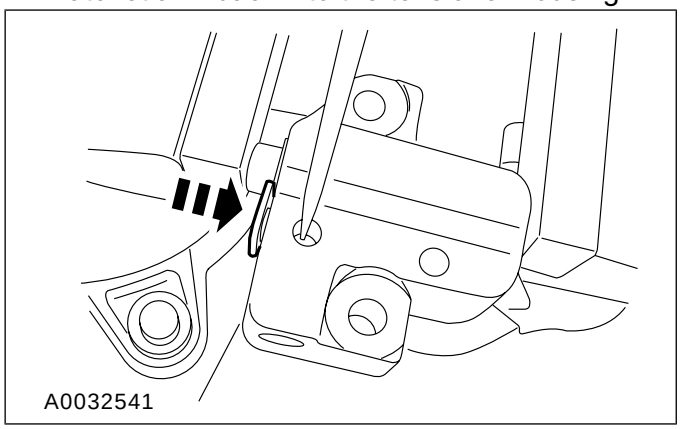

62. Install a paper clip into the hole in the tensioner housing to hold the ratchet assembly and the plunger in during installation.

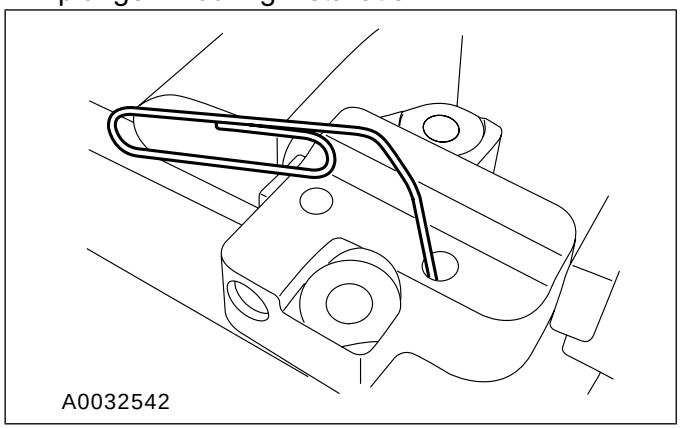

63. Install the timing chain tensioner and the bolts.
Torque: 10 Nm

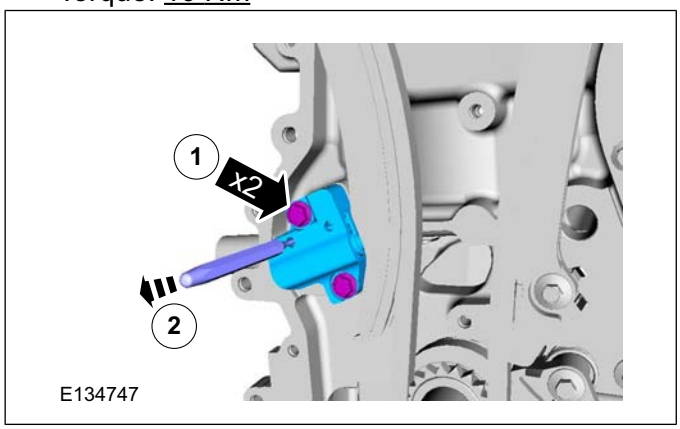

ASSEMBLY

64. **CAUTION: Use an open-ended wrench to hold the camshafts by the hexagon to prevent the camshafts from turning.**

Torque: 72 Nm

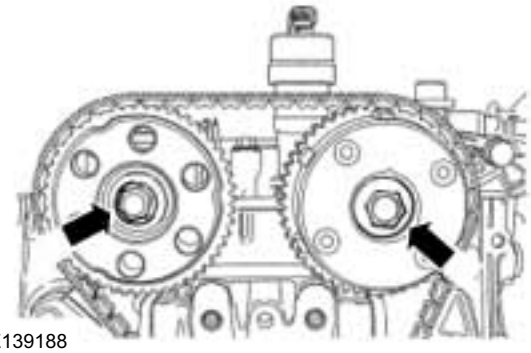

65. **CAUTION: Install the engine front cover within five minutes of applying the sealer.**

NOTE: The engine front cover must be installed and the bolts tightened within 4 minutes of applying the silicone gasket and sealant.

Material: Silicone Sealant LB (WSE-M4G323-A4 / 2U7J-M4G323-AA) sealant

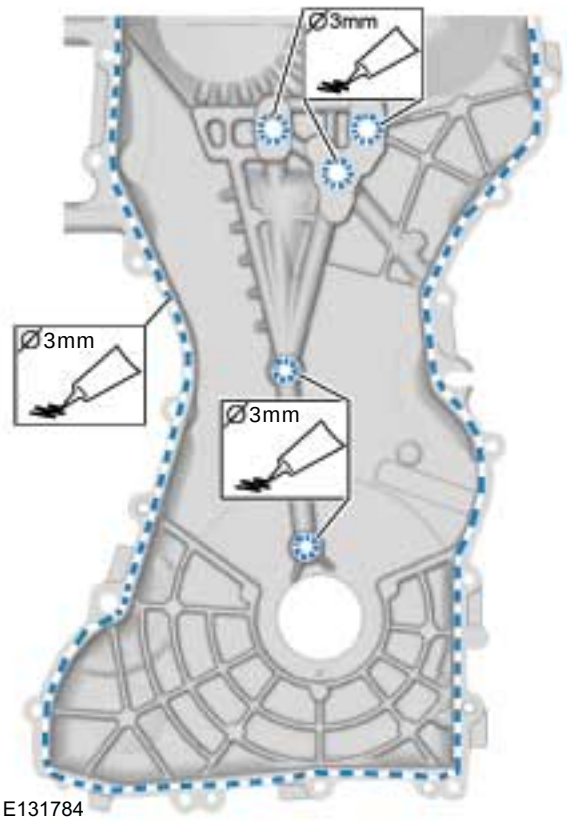

66. Torque:
- 1 - 8 10 Nm
- 9 48 Nm
- 10 - 19 10 Nm
- 20 - 22 48 Nm

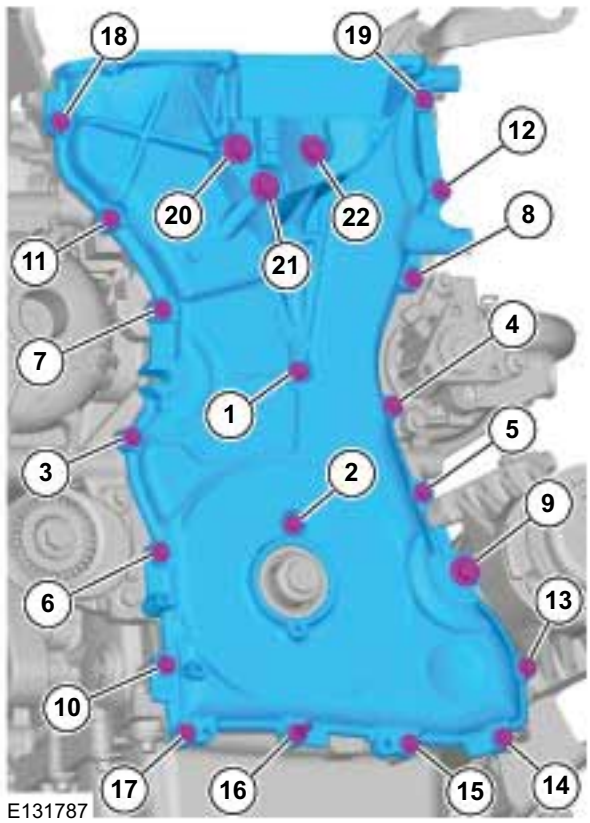

67. **CAUTION: Make sure that a new friction washer is installed.**

ASSEMBLY

68. Special Tool(s): 303-318
Torque: 50 Nm

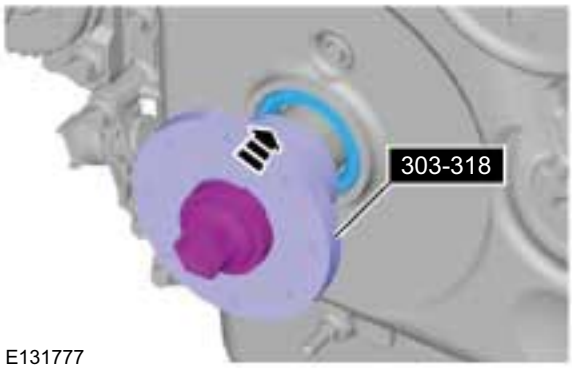

E131777

69. Remove the Special Tool(s): 303-318

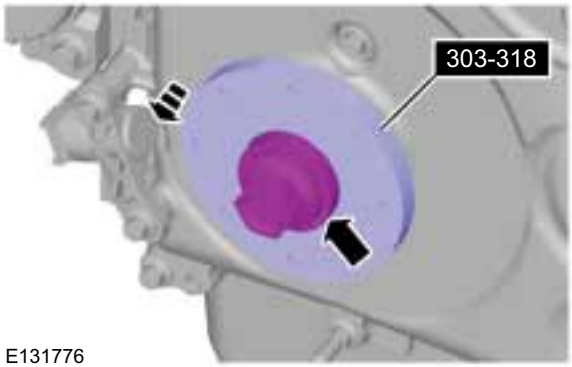

E131776

70. **NOTE:** Hand tighten the bolt at this stage.
- Bolt M6 x 18 mm

E131756

71. ⚠ **CAUTION: Make sure that a new bolt is installed.**

Special Tool(s): 303-1416
Torque:
- Stage 1: 100 Nm
- Stage 2: 90°

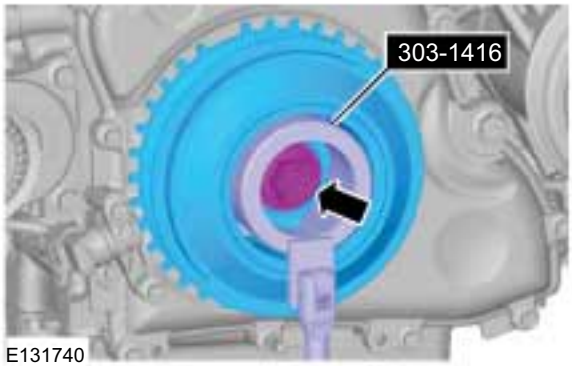

E131740

72. Remove the 6 mm x 18 mm bolt.

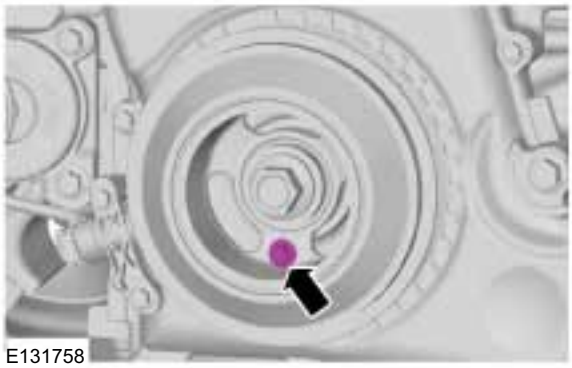
E131758

73. Remove the Special Tool(s): 303-507

E131755

ASSEMBLY

74. Install the engine plug bolt.
Torque: 20 Nm

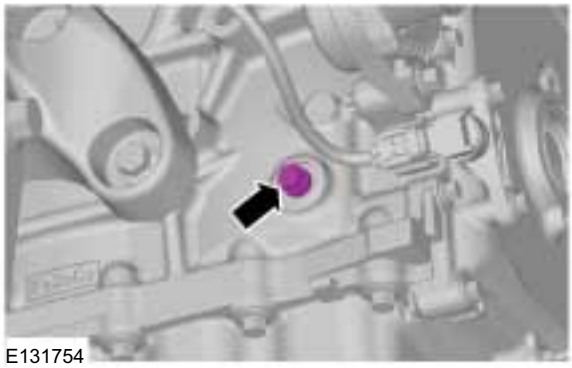
E131754

75. Remove the Special Tool(s): 303-465

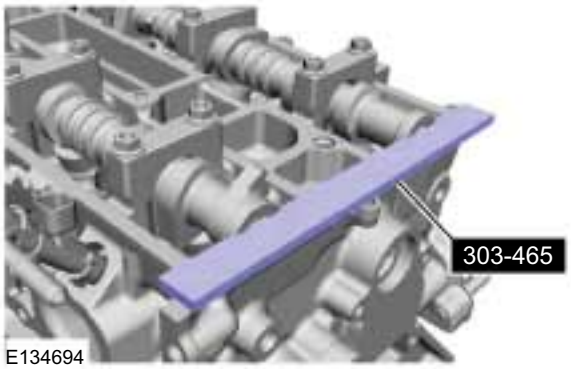

E134694

76. **NOTE:** The valve cover must be secured within 4 minutes of silicone gasket application. If the valve cover is not secured within 4 minutes, the sealant must be removed and the sealing area cleaned with metal surface prep.

Material: Silicone Sealant LB (WSE-M4G323-A4 / 2U7J-M4G323-AA) sealant

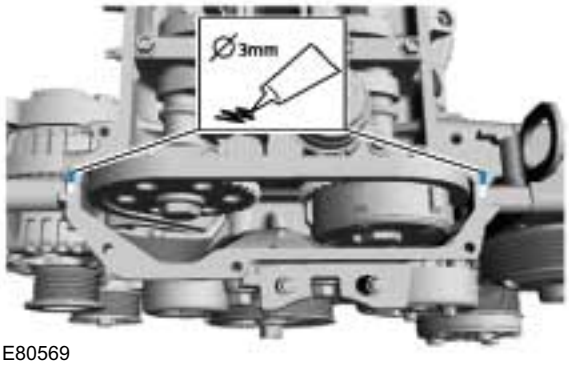

E80569

77. **NOTE:** The gasket is to be reused unless damaged.

Torque: 10 Nm

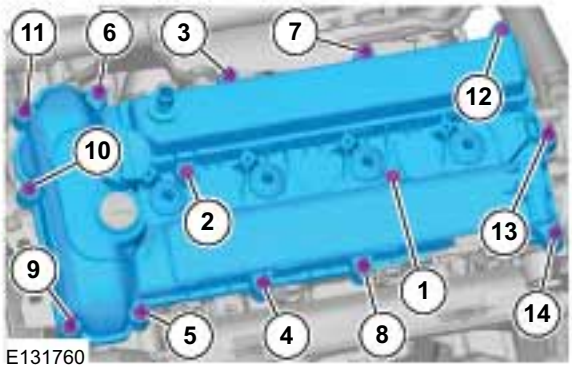

E131760

INSTALLATION

Engine — Vehicles With: 5-Speed Manual Transmission - MT75(21 132 0; 21 132 6; 21 132 7)

Installation

Special Tool(s) / General Equipment

21068A	303-122 Lifting Bracket, Engine
Hydraulic Jib Crane	

1. Special Tool(s): 303-122
   General Equipment: Hydraulic Jib Crane

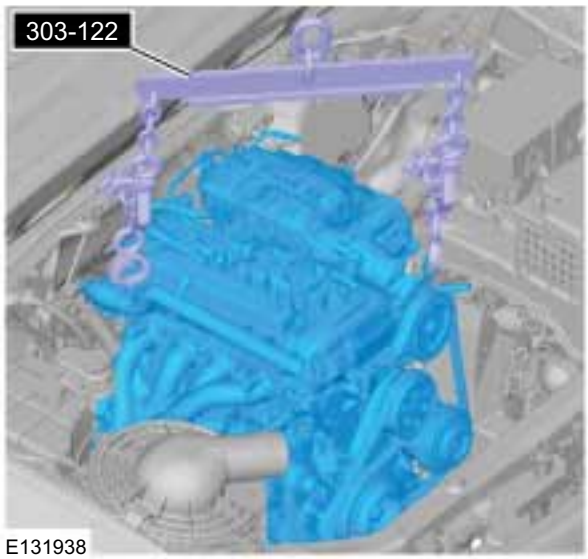

E131938

2. **NOTE:** Hand tighten the nut at this stage.

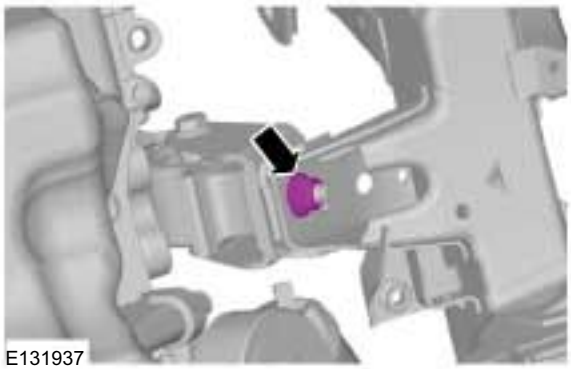
E131937

3. **NOTE:** Hand tighten the bolts at this stage.

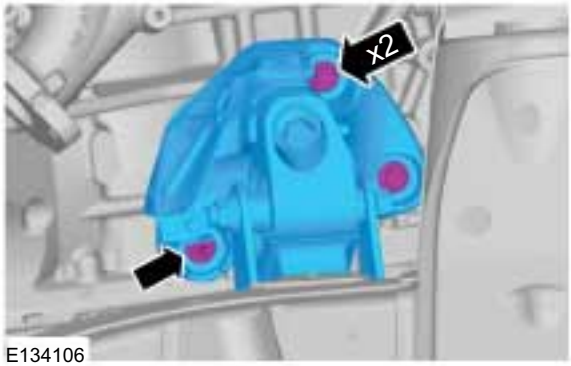

E134106

4. **NOTE:** Hand tighten the nut at this stage.

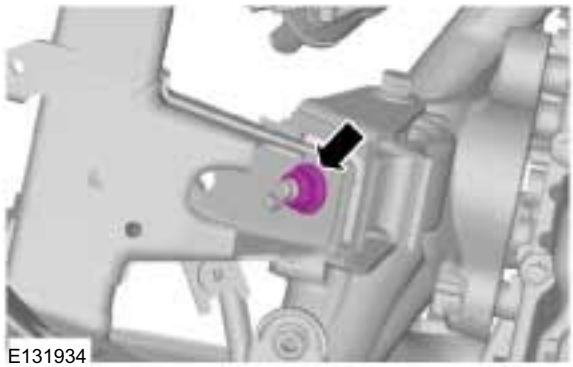
E131934

5. Initially hand tighten the bolts.
   Torque: 48 Nm

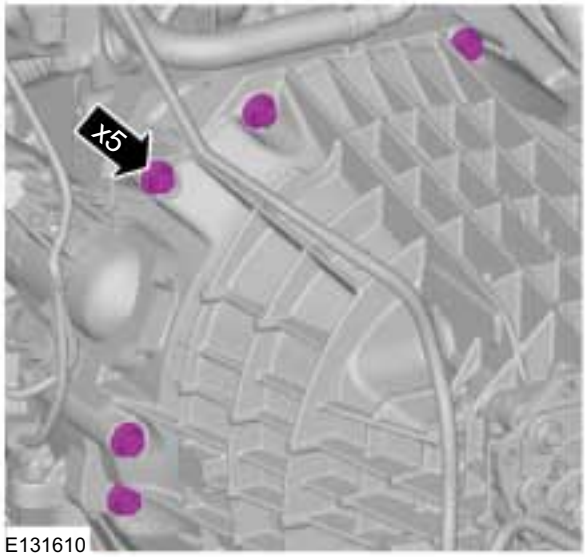

E131610

INSTALLATION

6. Initially hand tighten the bolts.
   Torque: 48 Nm

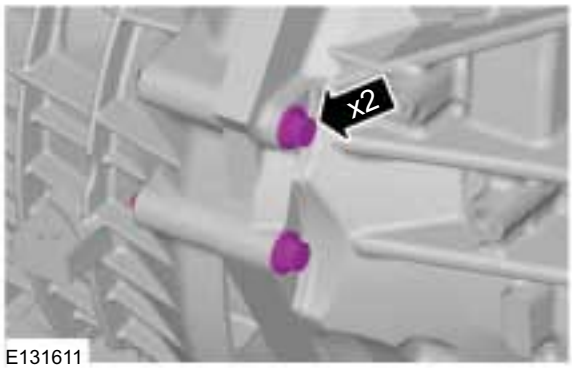

E131611

7. Initially hand tighten the bolts.
   Torque: 48 Nm

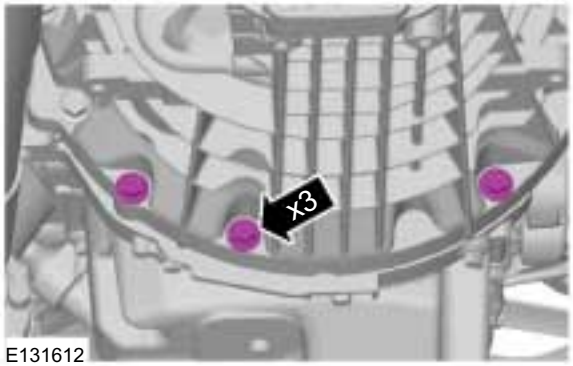

E131612

8. Torque: 80 Nm

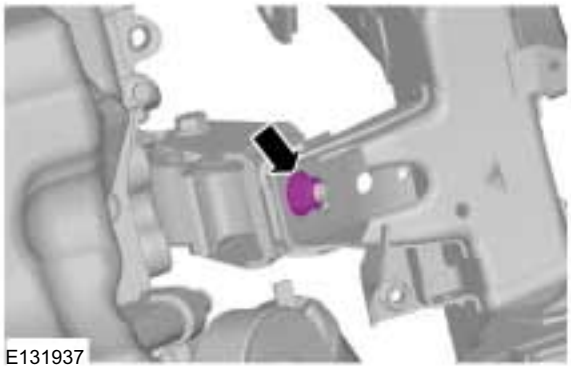
E131937

9. Torque: 48 Nm

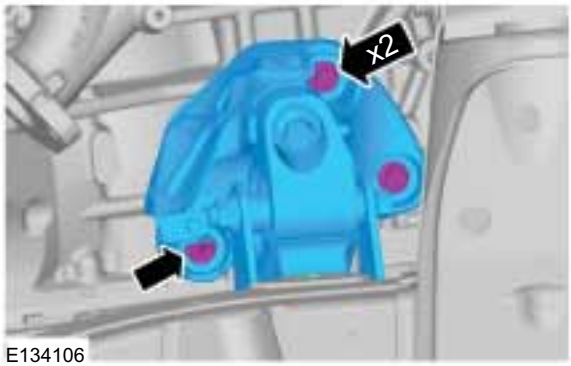

E134106

10. Torque: 80 Nm

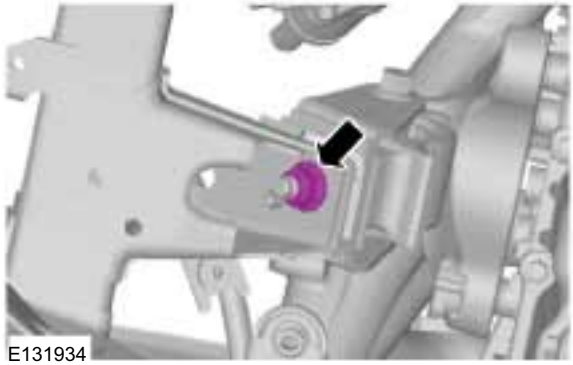
E131934

11. Remove the Special Tool(s): 303-122
    General Equipment: Hydraulic Jib Crane

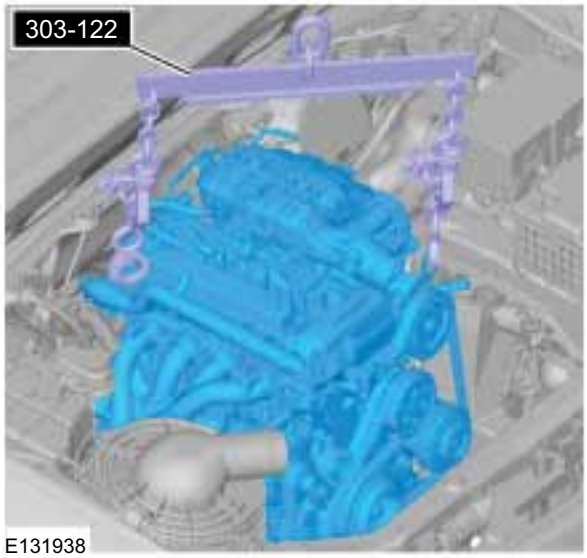

E131938

INSTALLATION

12. Torque: 30 Nm

13.

14. 1. Torque: 10 Nm
    3. Torque: 10 Nm

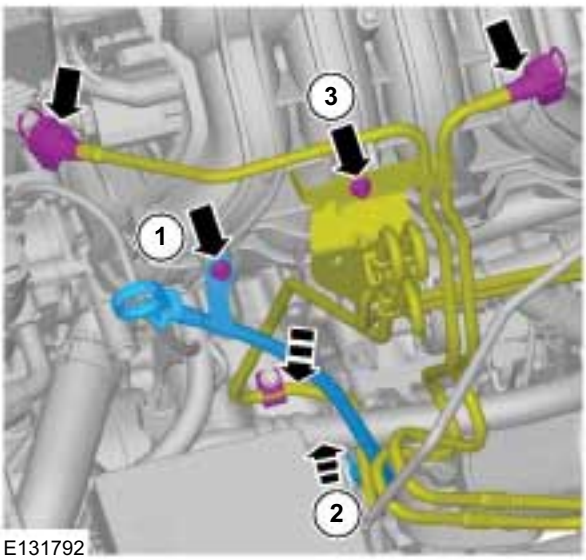

15. ⚠ **CAUTION: Over bending the exhaust flexible pipe may cause damage resulting in failure.**
    1. Install the exhaust flexible pipe flange nuts. Torque: 48 Nm
    2. Install the exhaust flexible pipe flange studs. Torque: 25 Nm

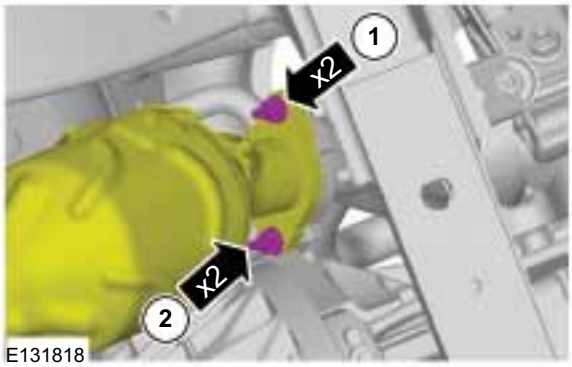

16. Torque: 10 Nm

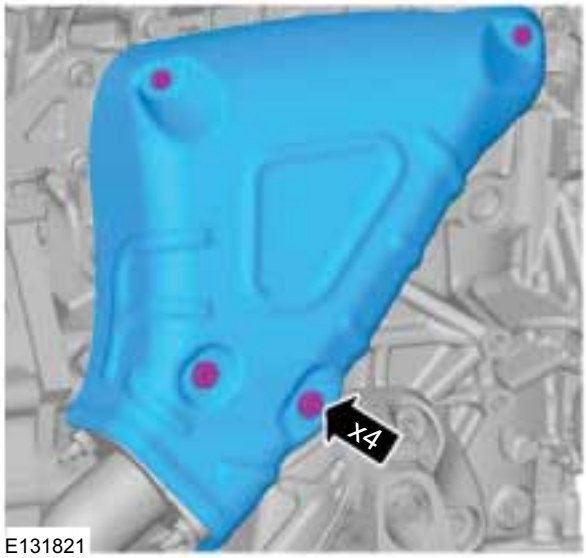

17.

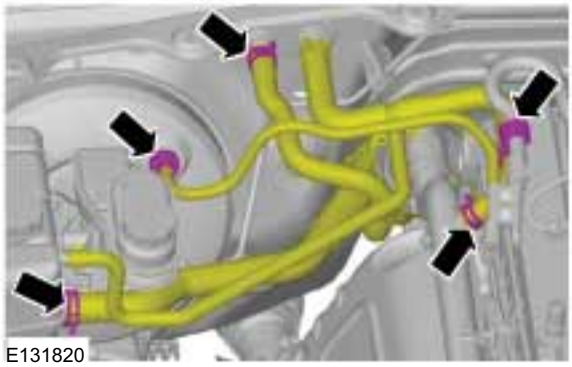

INSTALLATION

18. Torque: 11 Nm

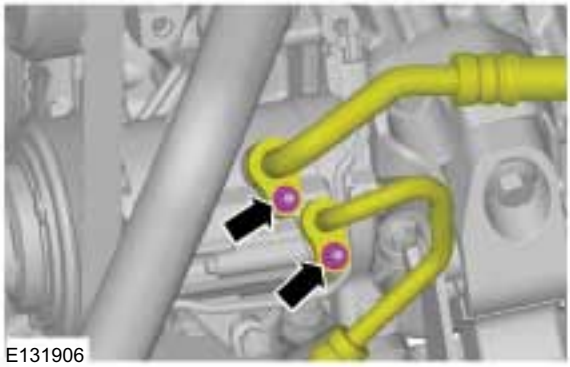

19.

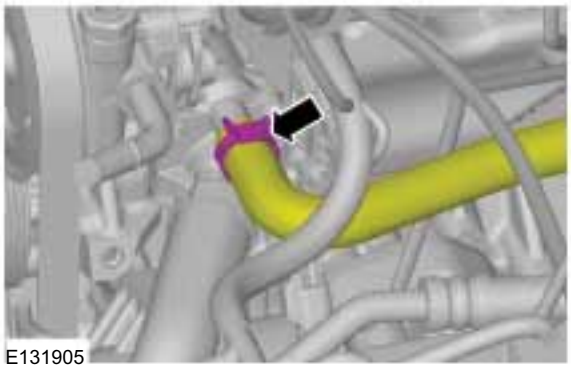

20. Torque: 35 Nm

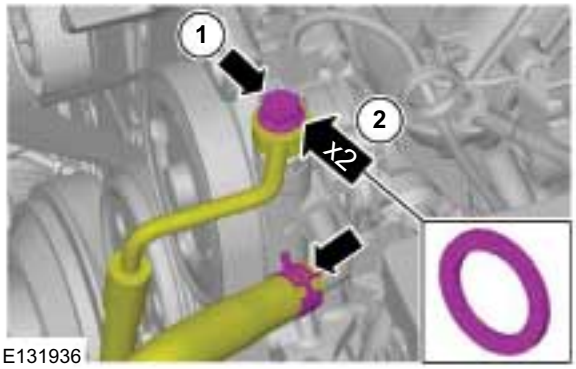

21. Torque: 20 Nm

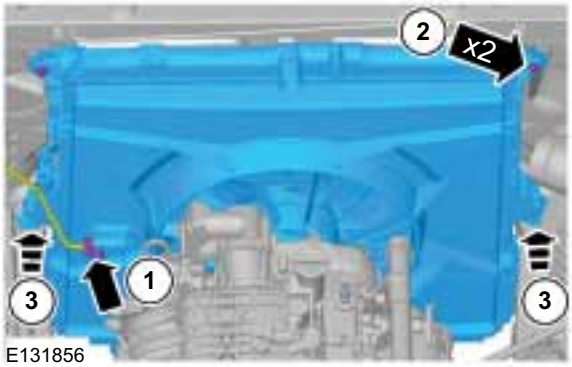

22. Torque: 23 Nm

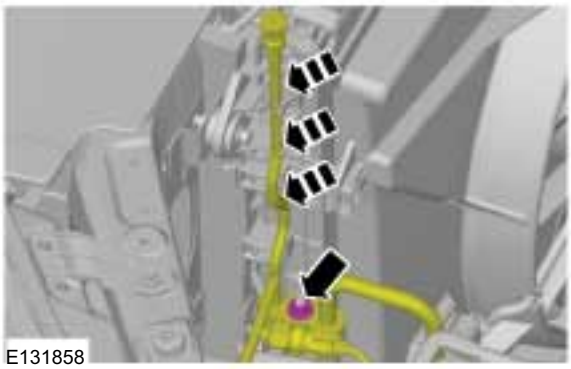

23.

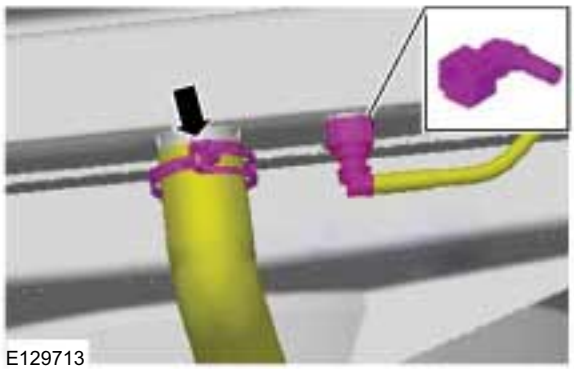

24.

INSTALLATION

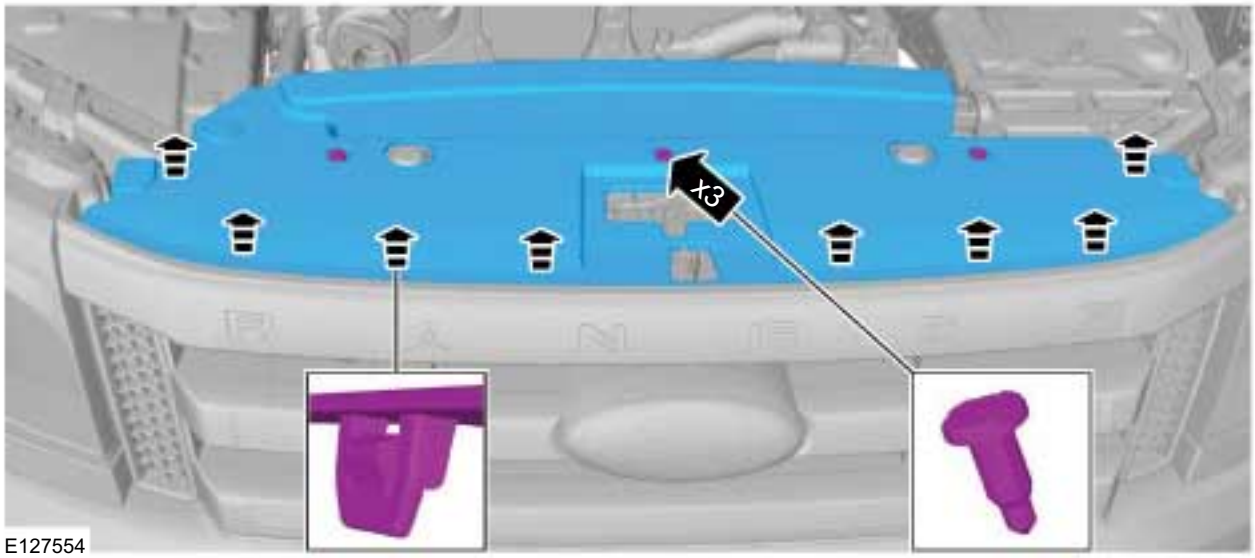

E127554

25. Torque: 11 Nm

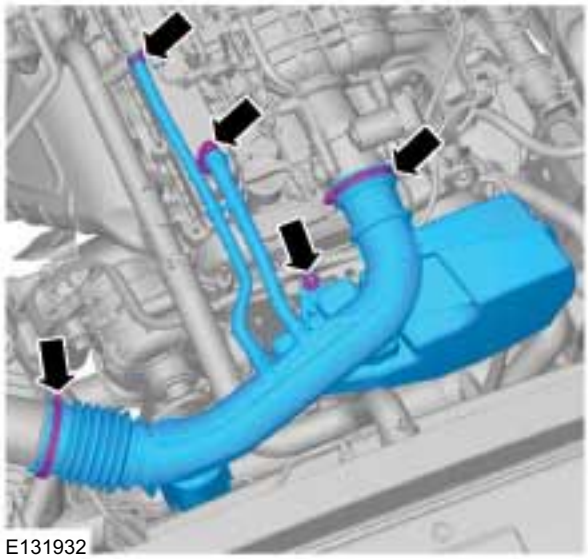
E131932

26.

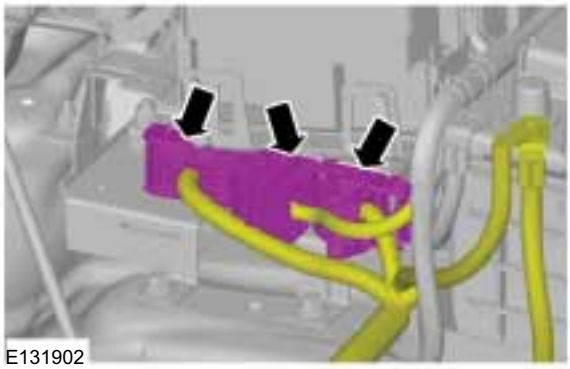
E131902

27. Torque: 10 Nm

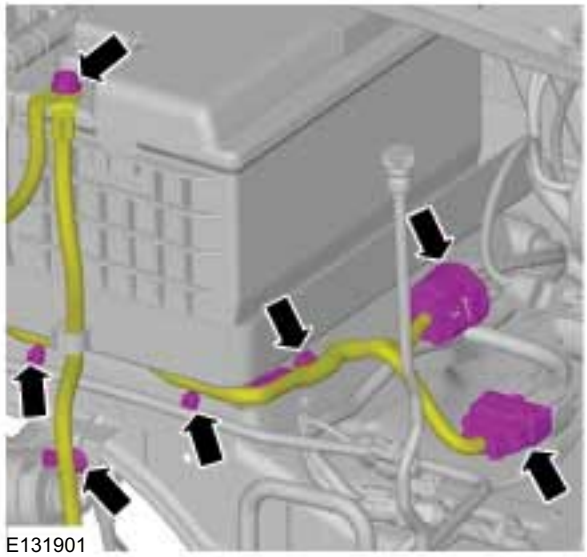
E131901

28. Torque: 14 Nm

INSTALLATION

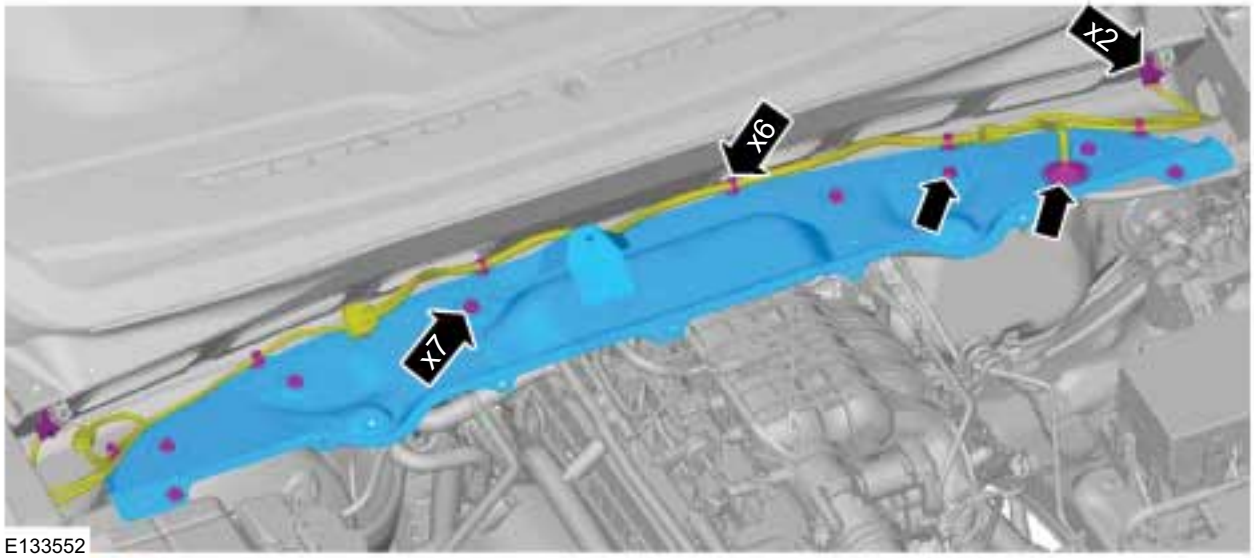

E133552

29. On both sides.

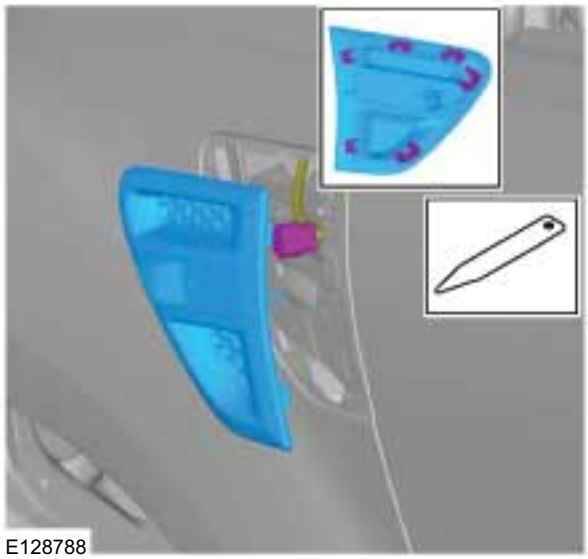
E128788

30. Torque: 11 Nm

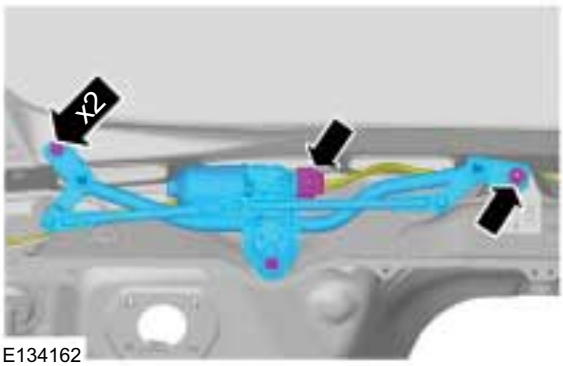

E134162

31. Refer to: Cowl Panel Grille (501-02 Front End Body Panels, Removal and Installation).

32. Torque: 30 Nm

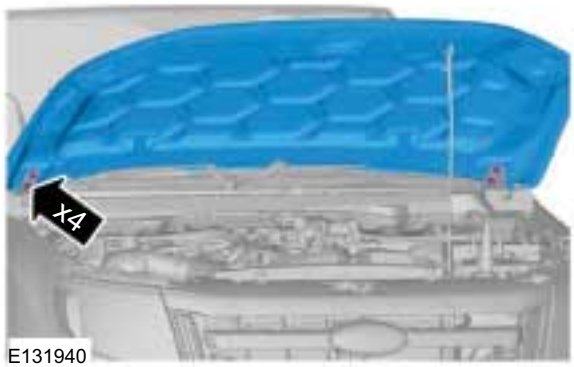

E131940

33.

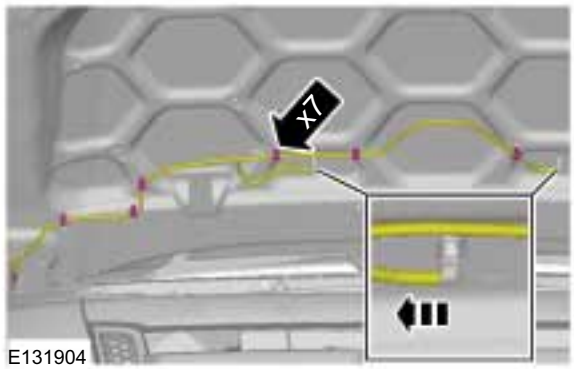

E131904

INSTALLATION

34.

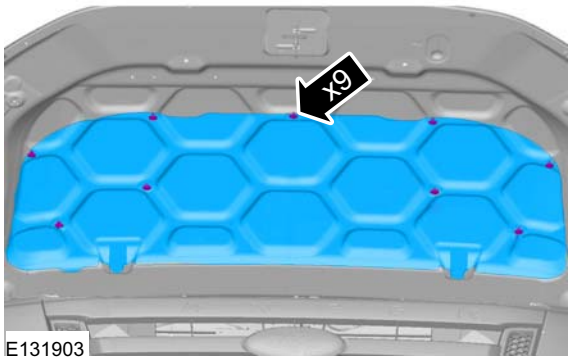

E131903

35. Torque: 30 Nm

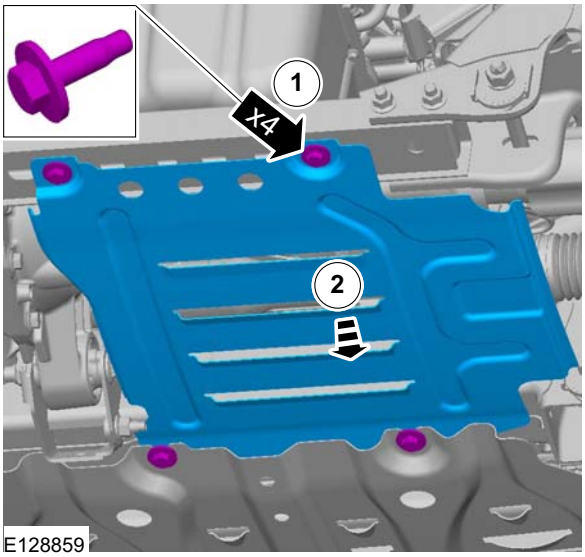

E128859

36. Refer to: Fuel System Pressure Release (310-00 Fuel System - General Information - 2.5L Duratec-HE (122kW/165PS) - MI4, General Procedures).

37. Refer to: Brake System Health and Safety Precautions (100-00 General Information, Description and Operation).

38. Refer to: Air Conditioning (A/C) System Recovery, Evacuation and Charging (412-00 Climate Control System - General Information, General Procedures).

39. Refer to: Starter Motor (303-06 Starting System - 2.5L Duratec-HE (122kW/165PS) - MI4, Removal and Installation).

40. Refer to: Lifting (100-02 Jacking and Lifting, Description and Operation).

41. Refer to: Battery Disconnect and Connect (414-01 Battery, Mounting and Cables, General Procedures).

42. Refer to: Cooling System Draining, Filling and Bleeding (303-03 Engine Cooling, General Procedures).

INSTALLATION

Engine Accessories(21 139 4)

Installation

Special Tool(s) / General Equipment

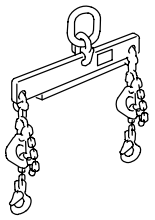 21068A	303-122 Lifting Bracket, Engine
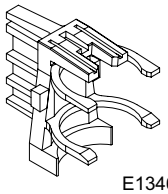 E134676	303-1417 Tool, Crank Sensor Alignment
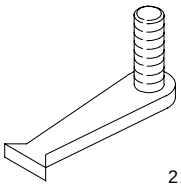 21135	303-254 Locking Tool, Flywheel
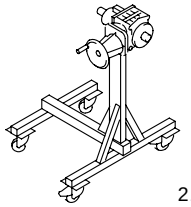 21187	303-435 Mounting Stand
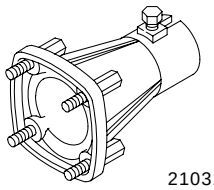 21031B	303-435-06 Mounting Bracket for 303-435
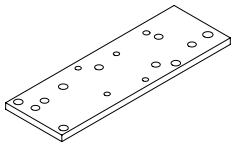 E62805	303-435-14B Mounting Plate for 303-435-06

Special Tool(s) / General Equipment

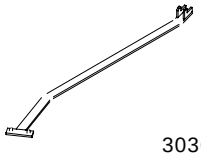 303676	303-676 Release Tool, Belt Tensioner
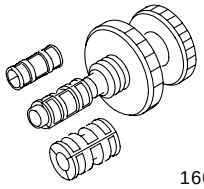 16067	308-204 Aligner, Clutch Disc
Hydraulic Jib Crane	

All vehicles

1. Torque: 48 Nm

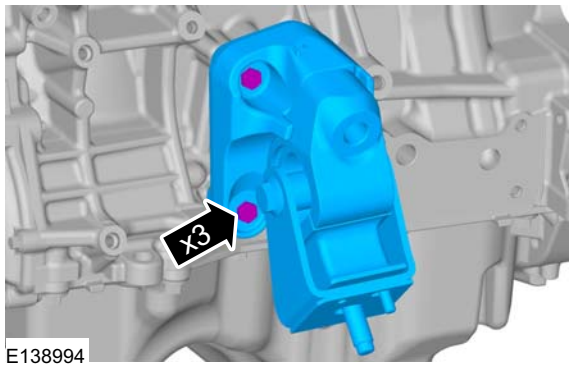

E138994

4x4

2. Torque: 25 Nm

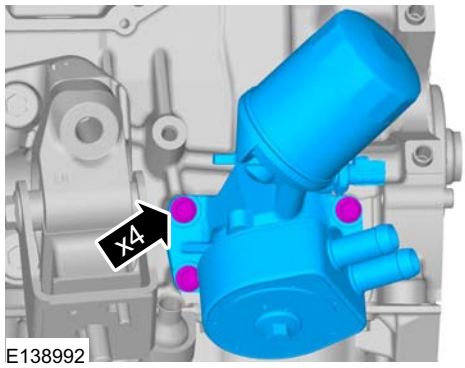

E138992

INSTALLATION

4x2

3. Torque: 25 Nm

E139965

All vehicles

4. Torque: 25 Nm

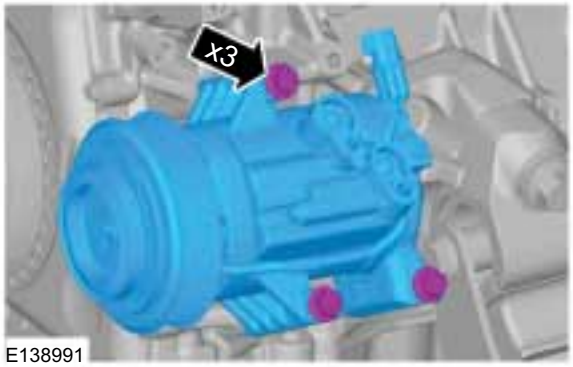

E138991

5. **NOTE:** The gasket is to be reused unless damaged.

   Torque: 10 Nm

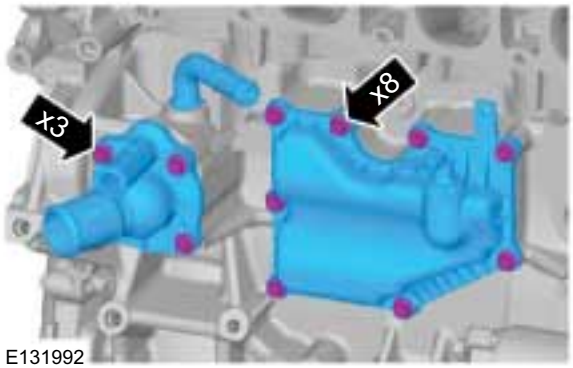

E131992

6. Torque: 23 Nm

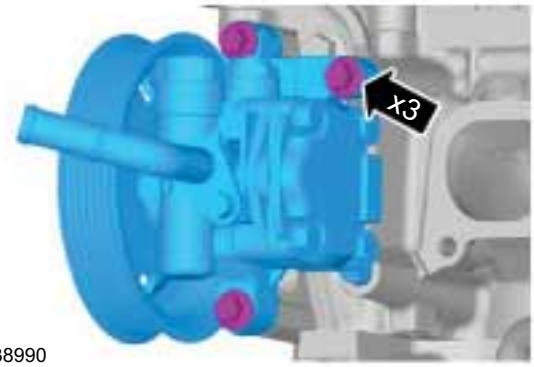

E138990

7. **NOTE:** Make sure that the mating faces are clean and free of foreign material.

   Torque: 10 Nm

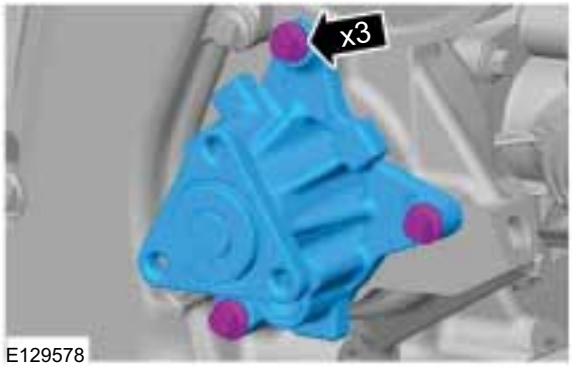

E129578

8. 1. Torque: 25 Nm
   2. **NOTE:** Install all the bolts finger tight before final tightening.

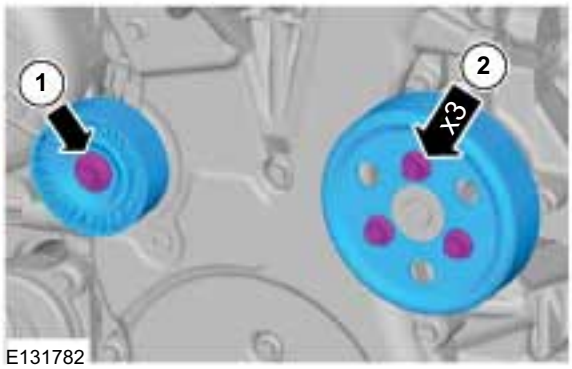

E131782

INSTALLATION

9. Torque: 17 Nm

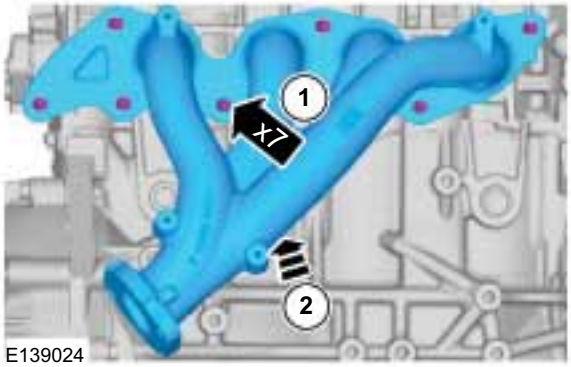

E139024

10. **NOTE:** Make sure that a new exhaust manifold gasket is installed.

Torque: 55 Nm

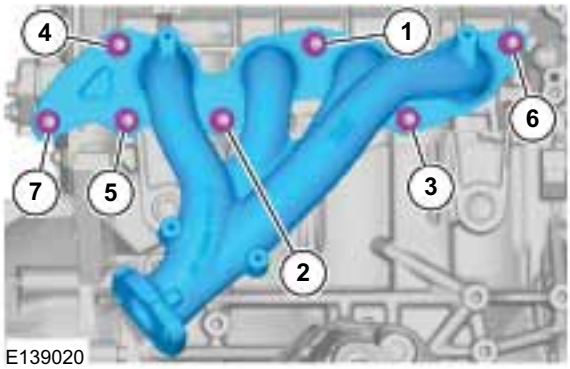

E139020

11. **NOTE:** The accessory drive belt tensioner must be replaced as a complete unit.

Torque: 25 Nm

E131257

12. Torque: 8 Nm

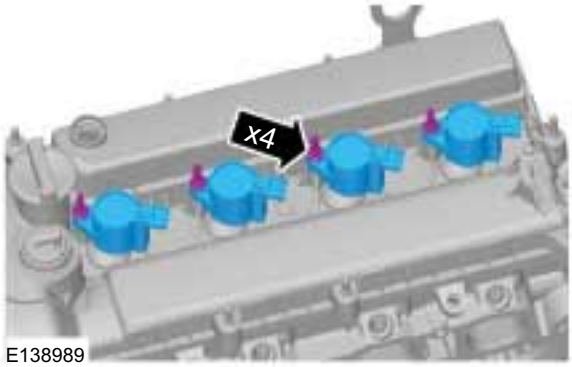

E138989

13. Torque: 23 Nm

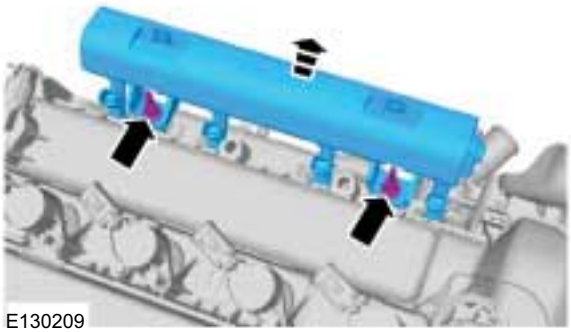
E130209

14. Torque: 10 Nm

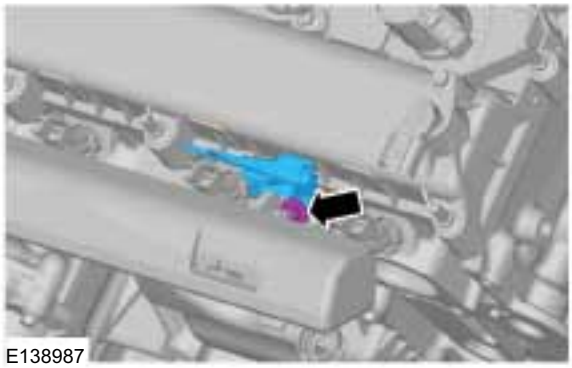
E138987

15.

INSTALLATION

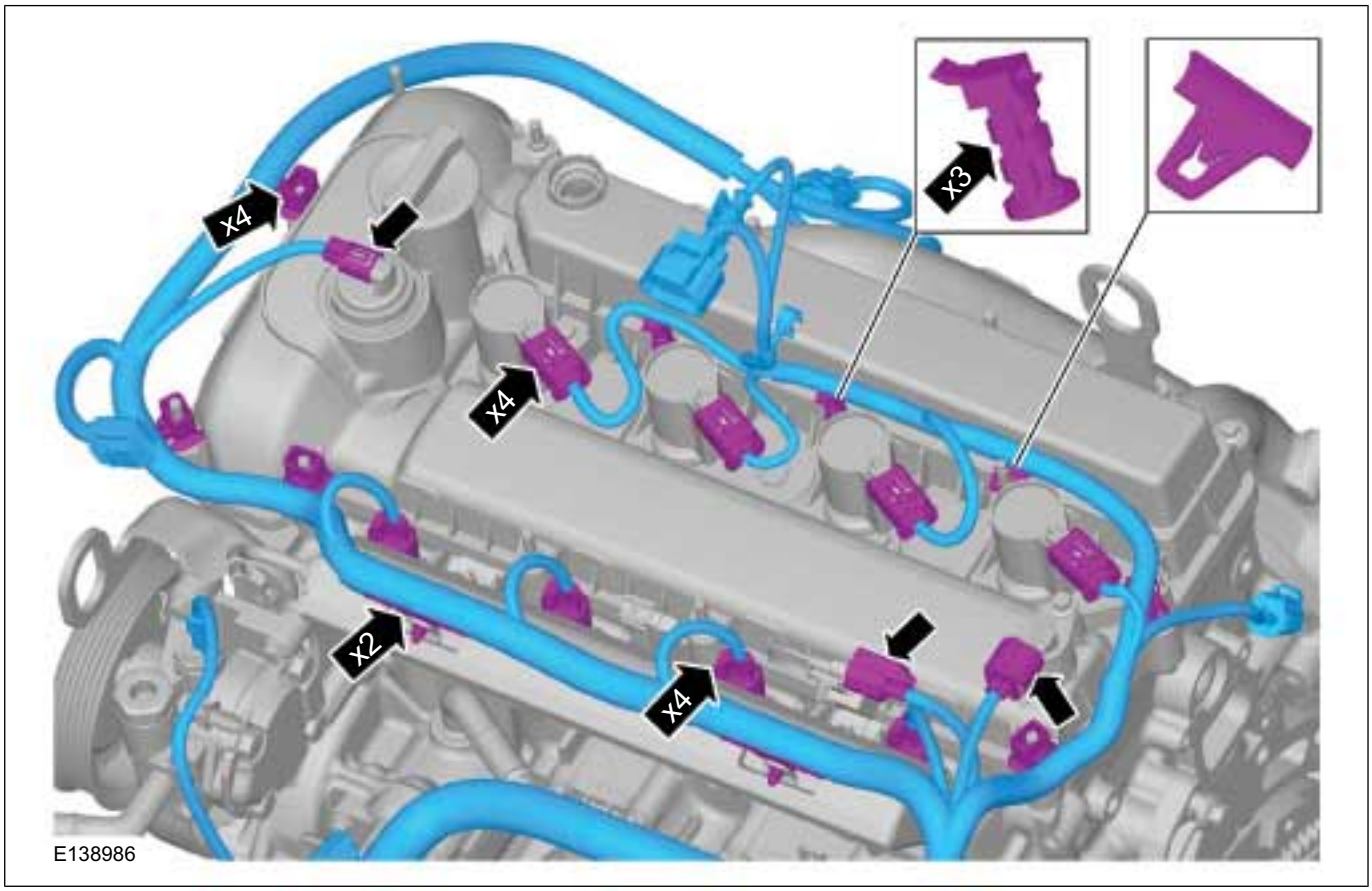

16. **NOTE:** Do not use metal scrapers, wire brushes, power abrasive discs or other abrasive means to clean the sealing surfaces. These tools can cause scratches and gouges which can make leak paths. Use a plastic scraping tool to remove all traces of the old intake manifold gaskets.

    NOTE: If the engine is repaired or replaced because of upper engine failure, typically including valve or piston damage, check the intake manifold for metal debris. If metal debris is found, install a new intake manifold. Failure to follow these instructions can result in engine damage.

    NOTE: The gasket is to be reused unless damage.

    Clean the sealing surfaces and inspect the gaskets. Install new gaskets if necessary.
    Torque: 19 Nm

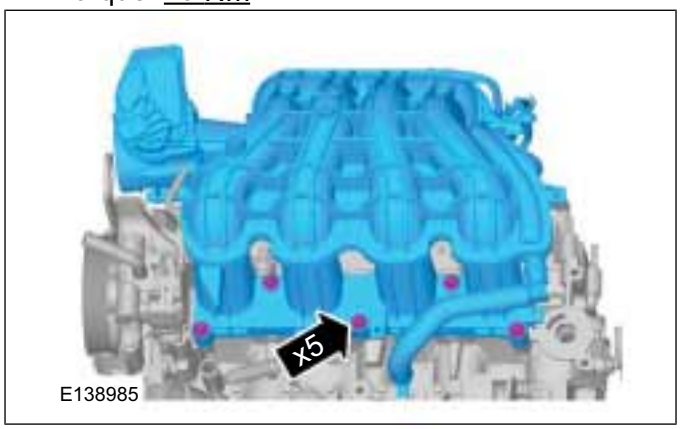

INSTALLATION

17. Torque: 20 Nm

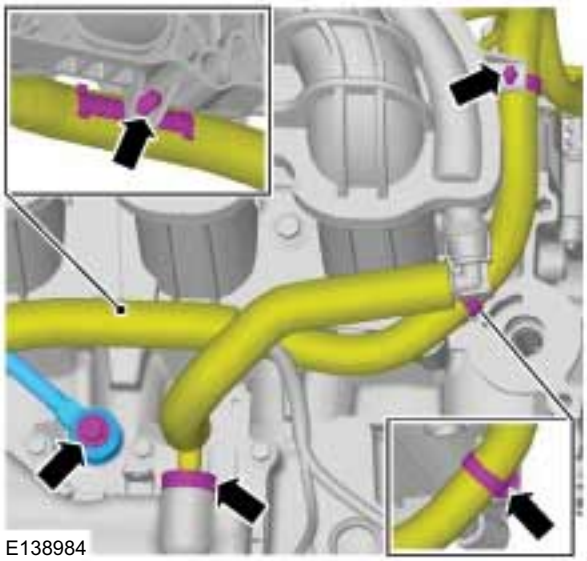

18.

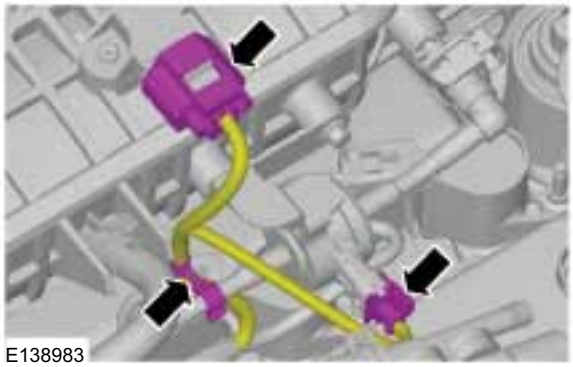

19.

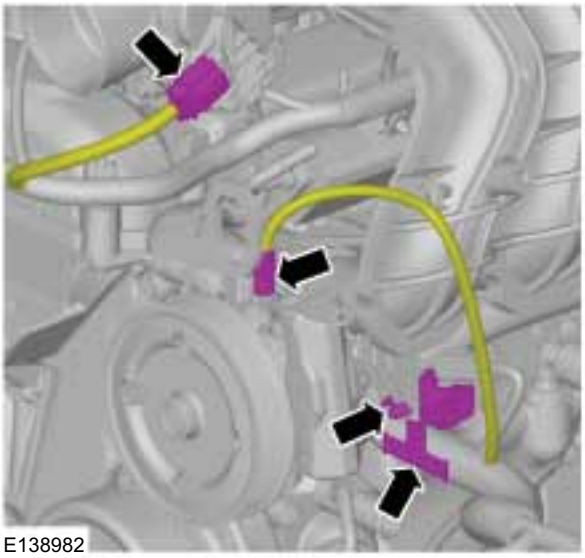

20. Special Tool(s): 303-1417

21. Torque: 7 Nm

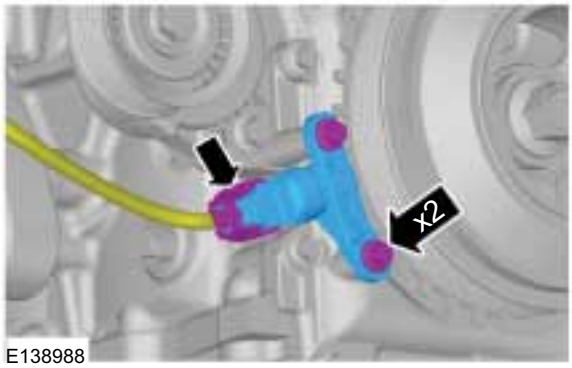

22. **NOTE:** The gasket is to be reused unless damaged.

1. Torque: 25 Nm
2. Torque: 10 Nm
3. Torque: 48 Nm

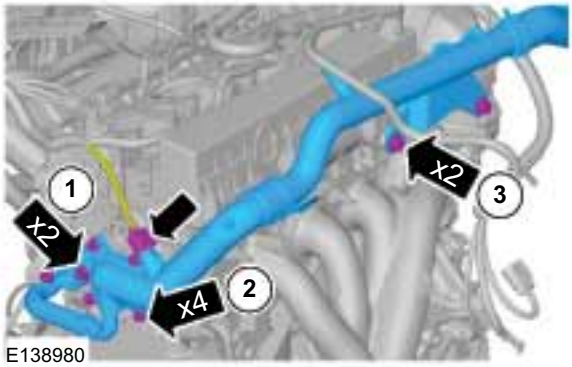

INSTALLATION

23.

E138981

24.

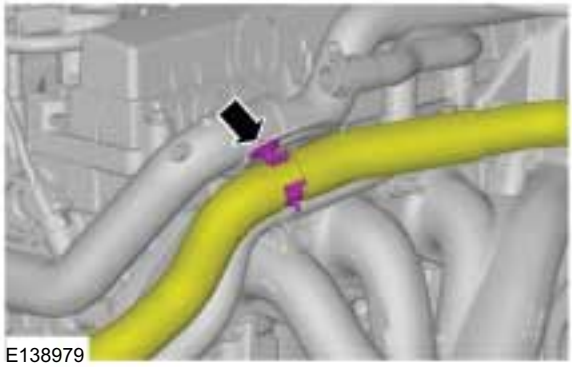
E138979

25. ⚠ **CAUTION: Take extra care not to damage the wiring harnesses.**
1. Torque: 48 Nm
2. Torque: 48 Nm
3. Torque: 48 Nm
4. Torque: 15 Nm

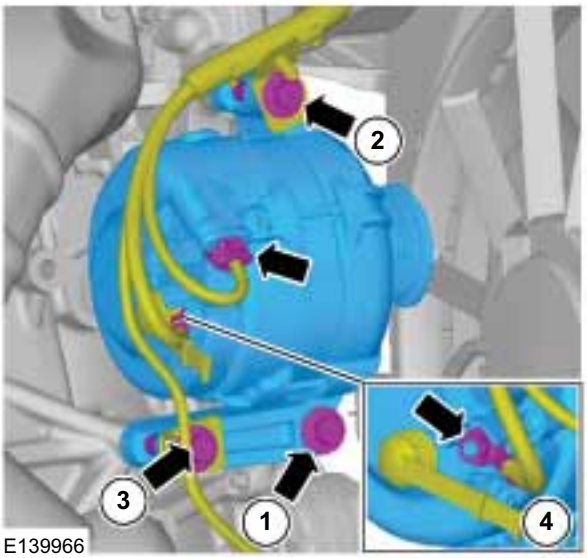

E139966

26. Rotate the accessory drive belt tensioner clockwise and install the accessory drive belt.

Special Tool(s): 303-676

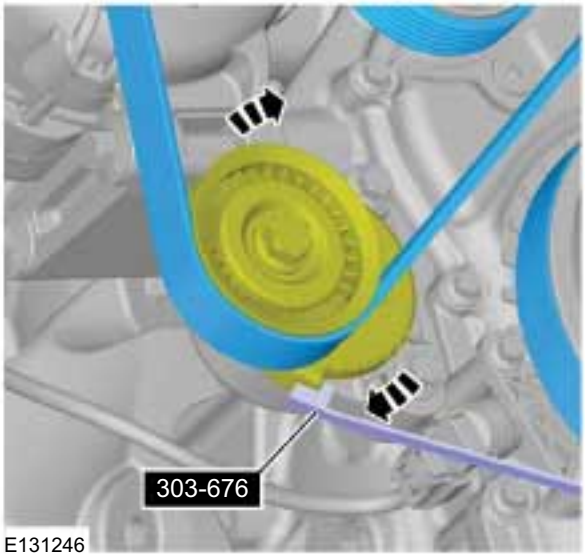

E131246

27. Torque: 20 Nm

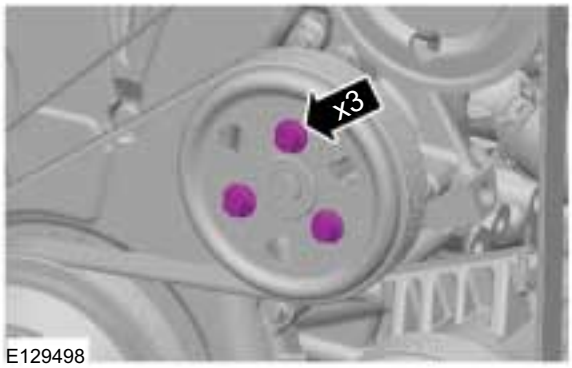

E129498

28. Special Tool(s): 303-254
Torque:
- Stage 1: 50 Nm
- Stage 2: 80 Nm
- Stage 3: 112 Nm

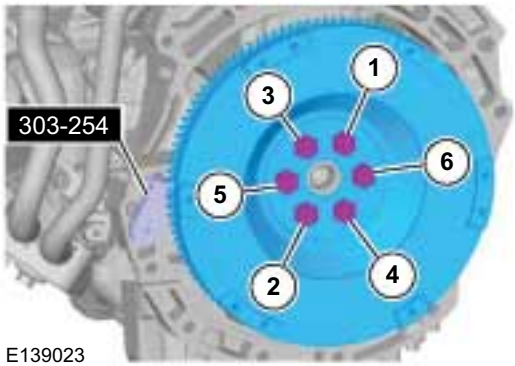

E139023

INSTALLATION

29. **NOTE:** The cone on the special tool must only be tightened finger tight to prevent damage to the clutch disc.

Special Tool(s): 308-204

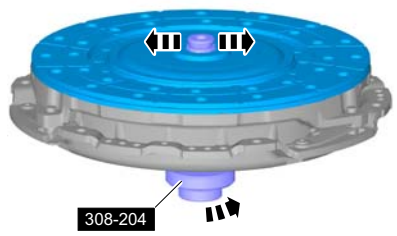

E129961

30. **NOTE:** Check the pilot bearing for damage. Replace it, if necessary.

Refer to: Pilot Bearing - 2.5L Duratec-HE (122kW/165PS) - MI4 (308-01 Clutch - Vehicles With: 5-Speed Manual Transmission - MT75, Removal and Installation).

31. **NOTE:** Only tighten the bolt finger tight at this stage.

Special Tool(s): 308-204

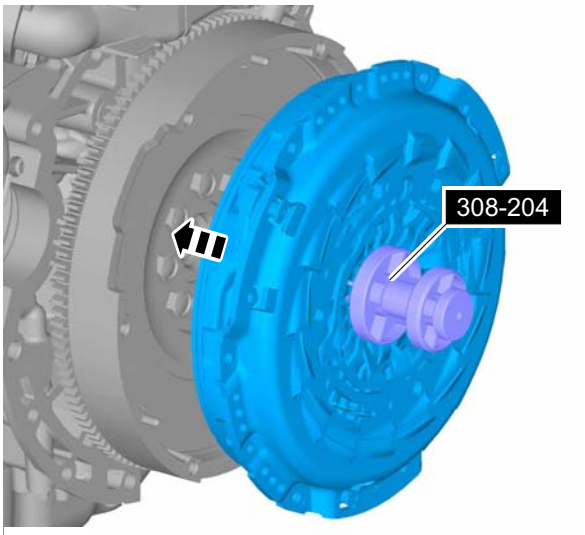

E129962

32. Special Tool(s): 308-204
Torque: 30 Nm

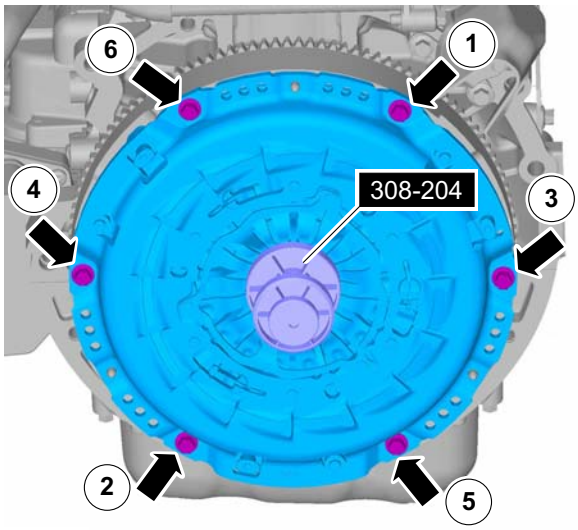

E129963

33. Remove the Special Tool(s): 308-204

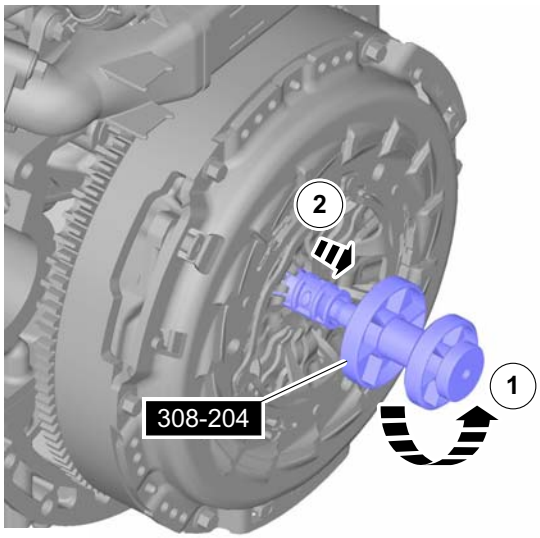

E129984

INSTALLATION

34. Remove the Special Tool(s): 303-254

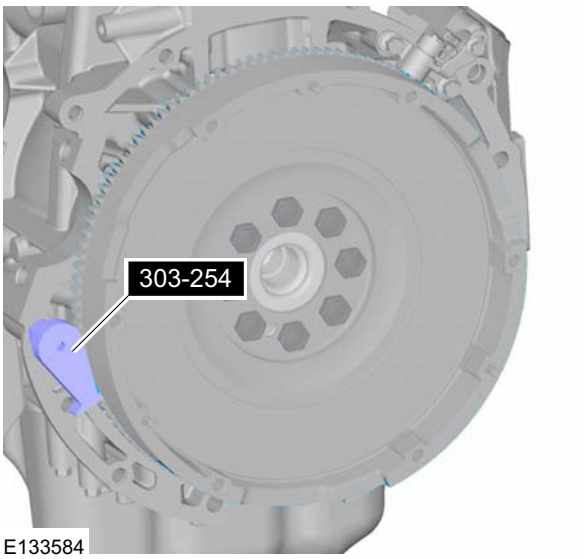

35. Special Tool(s): 303-122
General Equipment: Hydraulic Jib Crane

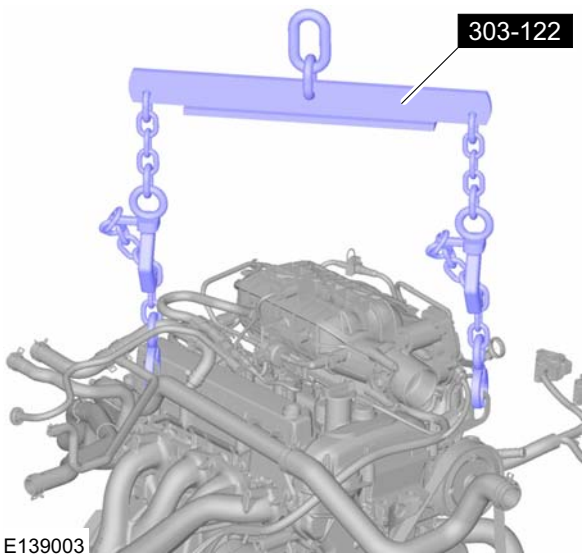

36. Remove the Special Tool(s): 303-435, 303-435-06, 303-435-14B

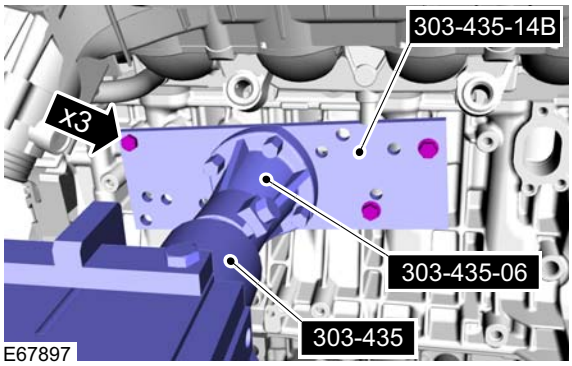

SECTION 303-01B Engine — 2.2L Duratorq-TDCi (88kW/120PS) - Puma/2.2L Duratorq-TDCi (96kW/130PS) - Puma/2.2L Duratorq-TDCi (110kW/150PS) - Puma

VEHICLE APPLICATION: 2011.50 Ranger

CONTENTS PAGE

PAGE 1 OF 2

SPECIFICATIONS

Specifications..... 303-01B-3
Engine Data — 120 PS..... 303-01B-3
Engine Data — 125 PS..... 303-01B-3
Engine Data — 150 PS..... 303-01B-3
Engine Oil Capacity..... 303-01B-4
Cylinder Block Dimensions..... 303-01B-4
Piston Dimensions..... 303-01B-4
Crankshaft Dimensions..... 303-01B-4
Connecting Rod Dimensions..... 303-01B-5
Piston Pin Dimensions..... 303-01B-5
Camshaft Dimensions..... 303-01B-5
Valve Dimensions..... 303-01B-5
Cylinder Head Dimensions..... 303-01B-5
Oil Pressure Specifications..... 303-01B-5

DESCRIPTION AND OPERATION

Engine (Overview)..... 303-01B-7
General..... 303-01B-7
Features..... 303-01B-7
Fuel system..... 303-01B-7
Engine management..... 303-01B-7
Engine-emission control 303-01B-7
Diagnosis 303-01B-7
Specification 303-01B-7
Overview of the main engine components..... 303-01B-9
Engine..... 303-01B-10

REMOVAL AND INSTALLATION

Camshafts..... (21 284 0) 303-01B-13
Crankshaft Front Seal..... (21 467 0) 303-01B-17
Crankshaft Rear Seal..... (21 468 4) 303-01B-20
Cylinder Head..... (21 163 0) 303-01B-23
Exhaust Manifold..... (21 187 0) 303-01B-26
Intake Manifold..... (21 183 0) 303-01B-27
Timing Cover..... (21 146 0) 303-01B-29
Oil Pan..... (21 154 0) 303-01B-34
Oil Pump..... (21 714 0) 303-01B-39
Valves..... 303-01B-42
Valve Cover..... (21 141 0) 303-01B-44
Valve Stem Seals..... (21 238 0) 303-01B-46
Valve Springs..... 303-01B-47

PAGE 2 OF 2

REMOVAL

Engine — Vehicles With: 5-Speed Manual Transmission - MT75..... (21 132 0; 21 132 6; 21 132 7) 303-01B-49
Engine — Vehicles With: 6-Speed Manual Transmission - MT82..... (21 132 0; 21 132 6; 21 132 7) 303-01B-58
Engine — Vehicles With: 6-Speed Automatic Transaxle - 6R80..... (21 132 0; 21 132 6; 21 132 7) 303-01B-67
Engine Accessories..... (21 139 4) 303-01B-77

DISASSEMBLY

Engine..... (21 134 8) 303-01B-89

DISASSEMBLY AND ASSEMBLY OF SUBASSEMBLIES

Cylinder Head..... (21 165 6) 303-01B-95

ASSEMBLY

Engine..... (21 134 8) 303-01B-96

INSTALLATION

Engine — Vehicles With: 5-Speed Manual Transmission - MT75..... (21 132 0; 21 132 6; 21 132 7) 303-01B-110
Engine — Vehicles With: 6-Speed Manual Transmission - MT82..... (21 132 0; 21 132 6; 21 132 7) 303-01B-119
Engine — Vehicles With: 6-Speed Automatic Transaxle - 6R80..... (21 132 0; 21 132 6; 21 132 7) 303-01B-128
Engine Accessories..... (21 139 4) 303-01B-138

SPECIFICATIONS

Engine Data — 120 PS

Description	
Code	GBVAJPF
Firing order	1-3-4-2
Bore diameter	86 mm
Stroke	94.6 mm
Displacement	2198 cc
Compression ratio	
compression pressure value	
Power output at _ rpm	88 kW (120 PS)
Torque between 1500 to 2200 rpm	Nm
Idle speed	rpm

Engine Data — 125 PS

Description	
Code	GBVAJQW
Firing order	1-3-4-2
Bore diameter	86 mm
Stroke	94.6 mm
Displacement	2198 cc
Compression ratio	
compression pressure value	
Power output at _ rpm	92 kW (125 PS)
Torque between 1500 to 2200 rpm	Nm
Idle speed	rpm

Engine Data — 150 PS

Description	
Code	GBVAJQJ
Firing order	1-3-4-2
Bore diameter	86 mm
Stroke	94.6 mm
Displacement	2198 cc
Compression ratio	
compression pressure value	
Power output at _ rpm	110 kW (150 PS)
Torque between 1500 to 2200 rpm	Nm
Idle speed	rpm

SPECIFICATIONS

Engine Oil Capacity

Description	Liters
Initial fill including oil filter	8.89
Service fill including oil filter	8.55

Cylinder Block Dimensions

Description	mm
Cylinder bore diameter — Class A	86.000-86.010
Cylinder bore diameter — Class B	86.010-86.020
Cylinder bore diameter — Class C	86.020-86.030
Main bearing shells 1 to 4 inner diameter — bearings installed	65.003-65.030
Main bearing shell 5 inner diameter — bearings installed	70.004-70.033
Main bearings 1 to 4 radial clearance	0.033-0.080
Main bearing 5 radial clearance	0.034-0.083
Main bearings 1 to 4 parent bore diameter — vertical measurement	69.504-64.520
Main bearing 5 parent bore diameter — vertical measurement	74.504-74.520
Main bearings 1 to 4 parent bore diameter — horizontal measurement	69.502-69.525
Main bearing 5 parent bore diameter — horizontal measurement	74.502-74.525

Piston Dimensions

Description	mm
Piston diameter — Class A	85.94-85.95
Piston diameter — Class B	85.95-85.96
Piston diameter — Class C	85.96-85.97
Piston clearance in cylinder	0.05-0.07
Piston ring end gaps	
— upper compression ring	0.25-0.50
— lower compression ring	0.50-0.75
— oil control ring	0.25-0.50
Piston ring gap position: The piston ring gaps must be distributed evenly around the circumference of the piston. This also applies to the oil control ring elements. Align the piston ring gaps at 120 degrees to each other.	

Crankshaft Dimensions

Description	mm
Main bearing journal end float	0.090-0.305
Main bearing journals 1 to 4 diameter	64.950-64.970
Main bearing journal 5 diameter	69.950-69.970
Connecting rod bearing journal diameter	52.980-53.000

SPECIFICATIONS

Connecting Rod Dimensions

Description	mm
Large end bore diameter	55.096-56.015
Small end bore diameter	30.010-30.018
Connecting rod bearing shell inner diameter — bearings installed	53.017-53.043
Connecting rod bearing radial clearance	0.034-0.100
Connecting rod bearing axial clearance	0.100-0.320

Piston Pin Dimensions

Description	mm
Piston pin length	66.700
Piston pin diameter	30.000
Piston pin slide clearance	0.002-0.012

Camshaft Dimensions

Description	mm
Camshaft end float	0.014-0.20
Camshaft bearing journal diameter	26.450
Camshaft bearing clearance — radial measurement	0.065

Valve Dimensions

Description	mm
Valve stem to valve guide clearance — intake valve	0.045
Valve stem to valve guide clearance — exhaust valve	0.055

Cylinder Head Dimensions

Description	mm
Maximum distortion — measured longitudinally and diagonally	0.10
Peak to valley height of mating surface	0.02
Thickness of cylinder head gasket with piston protrusion of 0.430 - 0.520 mm	1.1
Thickness of cylinder head gasket with piston protrusion of 0.521 - 0.570 mm	1.15(two hole/teeth)
Thickness of cylinder head gasket with piston protrusion of 0.571 - 0.620 mm	1.2(three holes/teeth)

Oil Pressure Specifications

Description	bar
Minimum oil pressure at idle speed	1.25
Minimum oil pressure at 2000 rpm	2.0

SPECIFICATIONS

Lubricants, Fluids, Sealers and Adhesives

Item	Specification
Ford Formula E SAE 5W-30 engine oil	WSS-M2C913-c
Sealer — oil pan, camshaft carrier and engine front cover	WSE-M4G323-A4

DESCRIPTION AND OPERATION

Engine – Overview

General

- The 2.2L Duratorq-TDCi (Puma) Diesel is available in three different power output versions: 88 kW (120 PS), 92 kW (125 PS) and 110 kW (150 PS).
- The 88 kW (120 PS) version has fixed vane turbocharger with a wastegate is used.
- The 92 kW (125 PS) version is available with fixed type and adjustable guide vane type also.
- The 110 kW (150 PS) version has a turbocharger with electrically adjustable guide vane geometry as well as fuel injectors with an increased flow rate.

Features

- 4-cylinder turbodiesel in-line engine with two overhead camshafts and 16 valve technology
- Cast iron cylinder block with cast-in cylinder liners
- Ladder frame for extending the cylinder block
- Two-part cylinder head made from aluminium
- Exhaust camshaft driven by a timing belt
- Intake camshaft driven via a timing chain (driven by the exhaust camshaft)
- Valves actuated by roller cam followers with hydraulic tappets
- Variable-geometry turbocharger for optimum cylinder charging

Fuel system

- Bosch common rail system with maximum fuel pump pressure of 1600 bar (also up to 1800 bar for a limited time)
- Fuel injectors with piezo technology
- Oil temperature sensor as an input variable for calculating the oil quality

Engine management

- Bosch PCM (powertrain control module) EDC16CP39
- Fuel metering valve, fuel pressure regulator and fuel pressure sensor for efficient regulation of the fuel pressure
- Actuator motor-controlled EGR (exhaust gas recirculation) valve

Engine-emission control

- Meets EURO 5
- Actuator motor-controlled EGR valve
- Intake manifold flap with position sensor
- Broadband Lambda probe for correcting the injection volume and for optimizing the EGR
- Coated DPF (diesel particulate filter) to minimize rust particle emissions

Diagnosis

- Via the DLC (data link connector)with IDS (Integrated Diagnostic System)

Specification

Torque and power output:

DESCRIPTION AND OPERATION

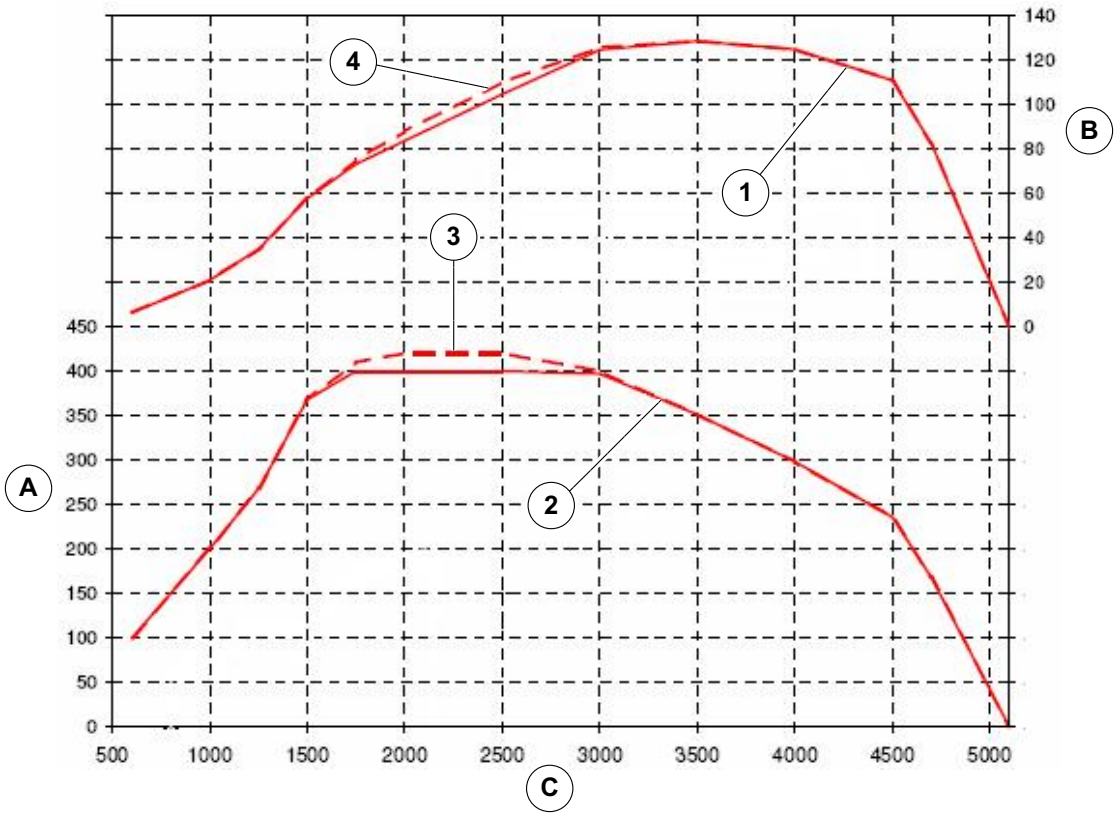

E99773

Item	Description
A	Torque (nm)
B	Power output(Kw)
c	Engine speed
1	Power output curve

Item	Description
2	Engine speed curve
3	Torque during the overtorque function
4	Power output during the overtorque function

DESCRIPTION AND OPERATION

Overview of the main engine components

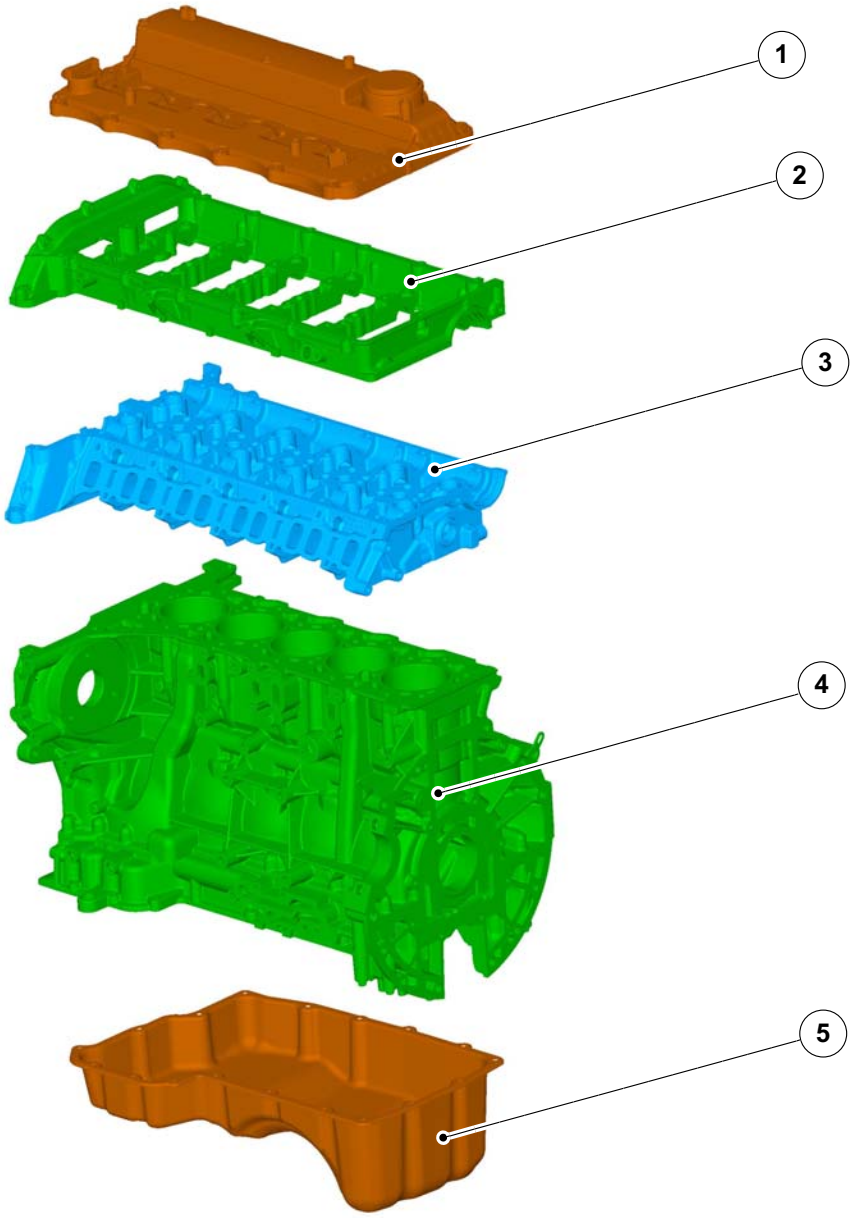

E131683

Item	Description
1	Valve cover
2	Cylinder head - upper part
3	Cylinder head - lower part

Item	Description
4	Cylinder block
5	Oil pan extension
6	Oil sump

DESCRIPTION AND OPERATION

Engine

Engine -component location

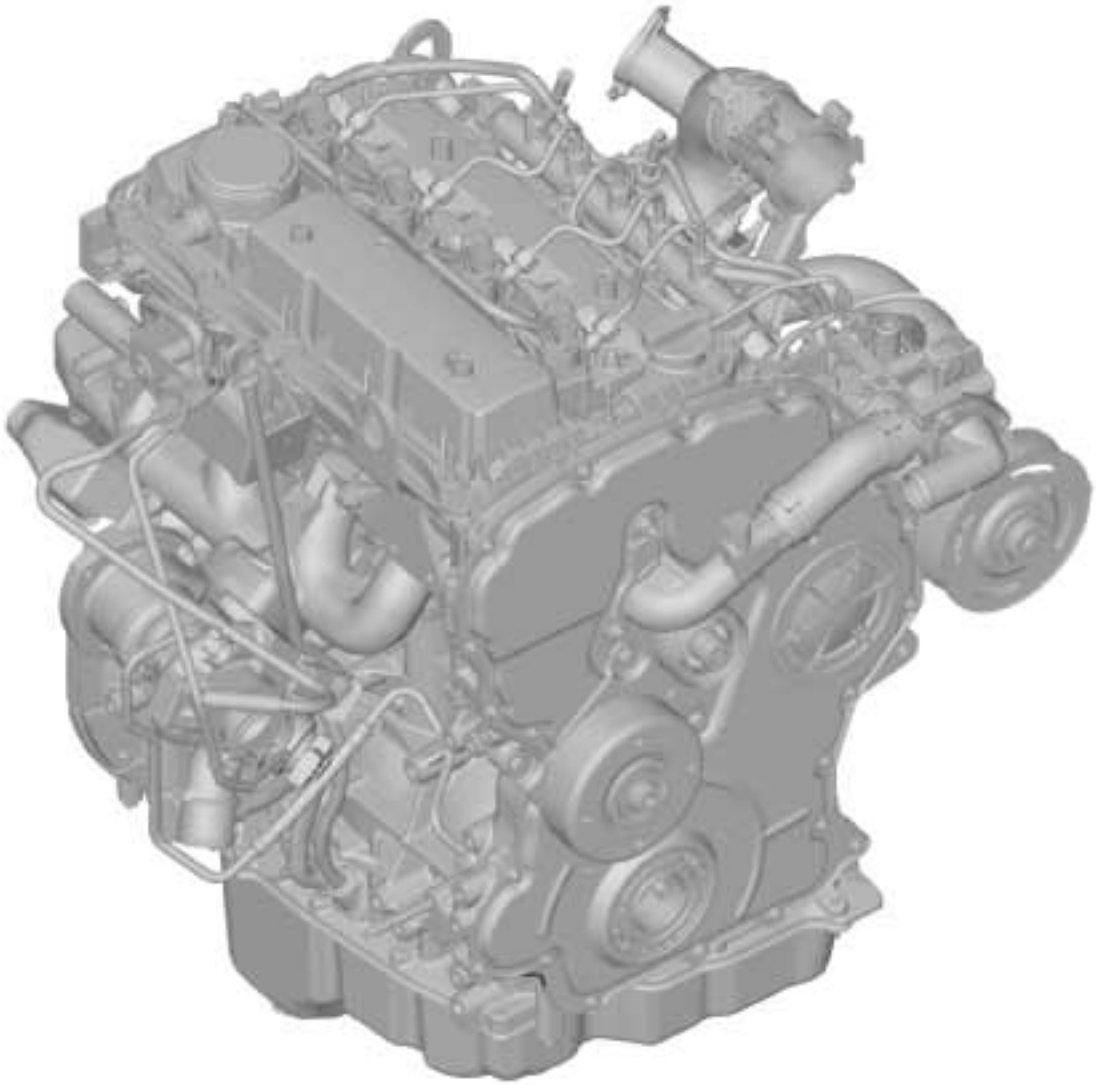

E131389

DESCRIPTION AND OPERATION

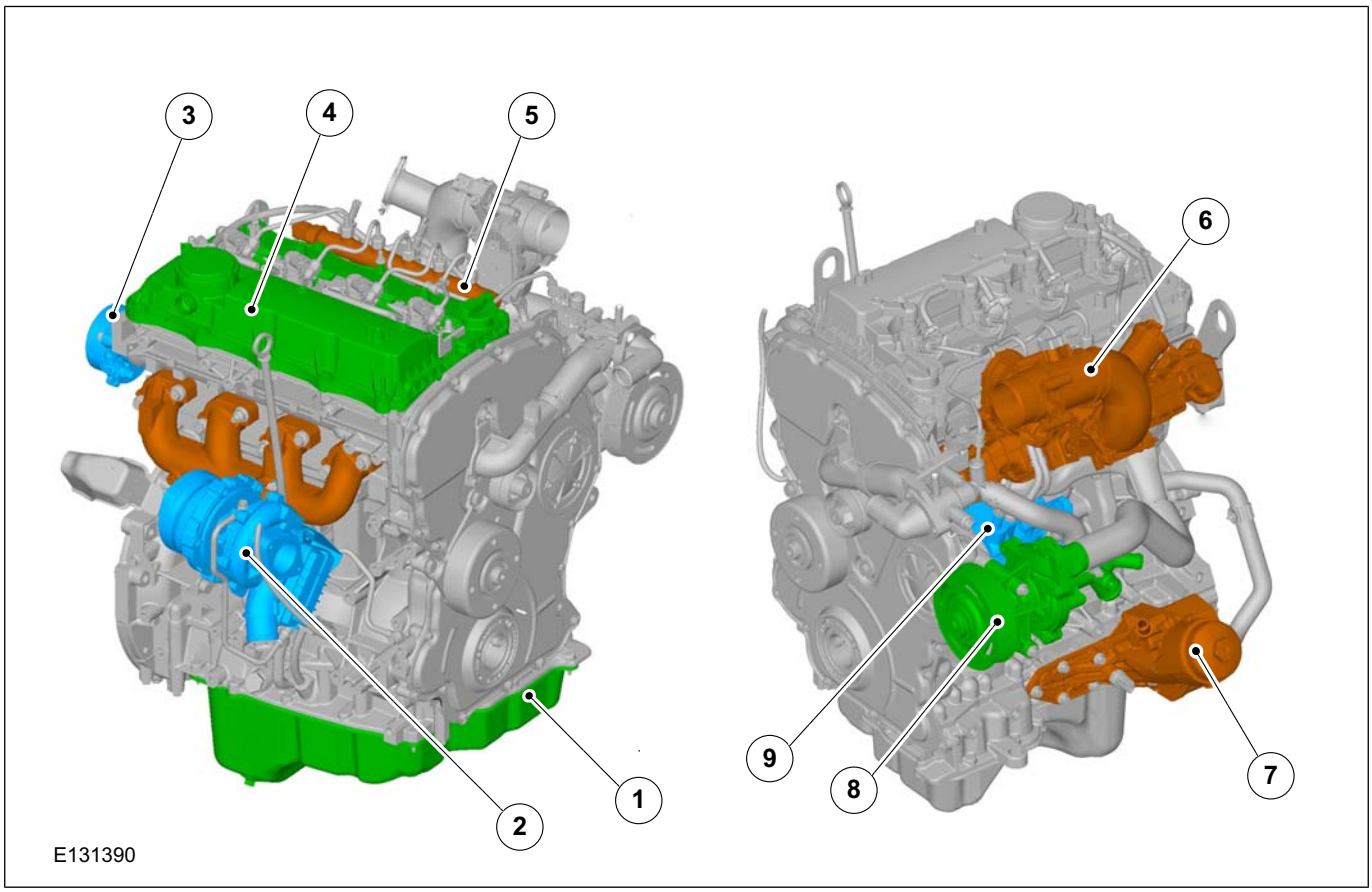

1.

Item	Description
1	Oil sump
2	Turbocharger
3	vacuum pump
4	Valve cover

Item	Description
5	Fuel injection rail
6	Intake manifold
7	Oil cooler
8	Coolant pump
9	Fuel pump

DESCRIPTION AND OPERATION

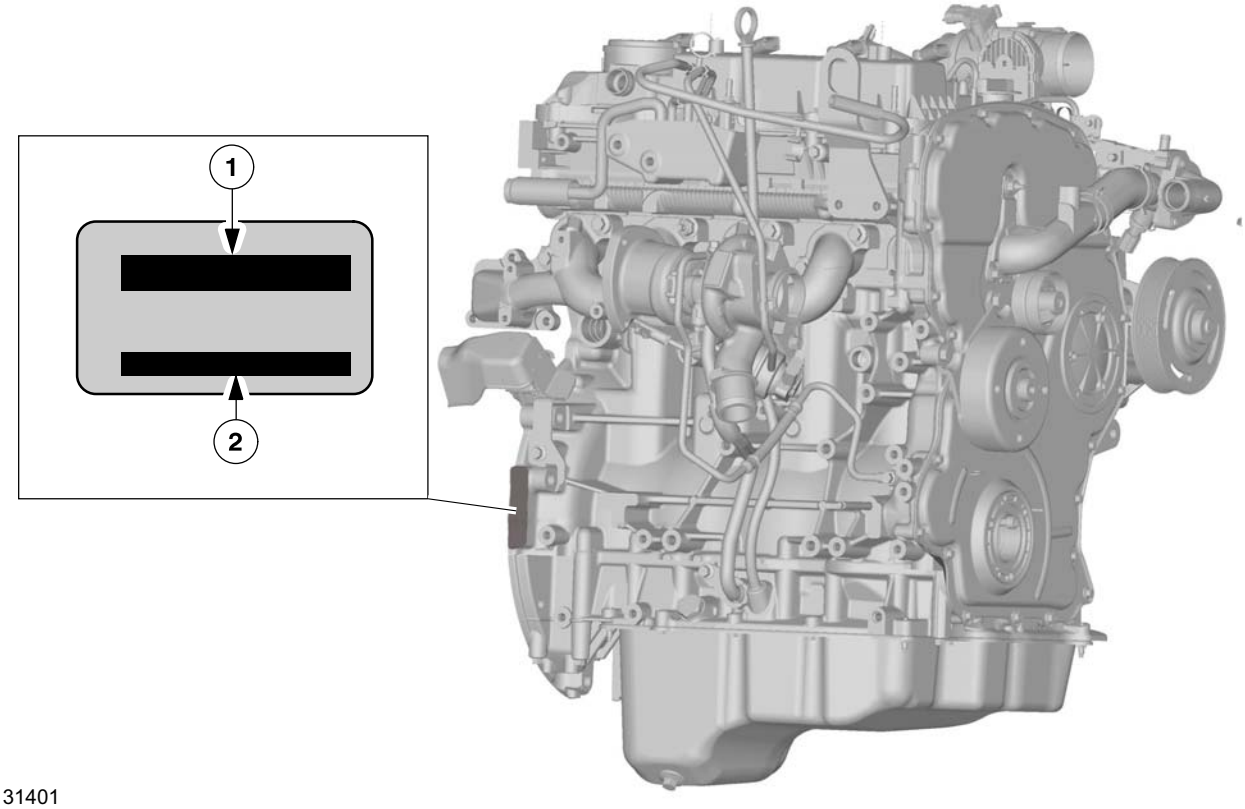

E131401

2.

Item	Description
1	Engine code
2	Engine serial number

REMOVAL AND INSTALLATION

Camshafts(21 284 0)

Special Tool(s) / General Equipment

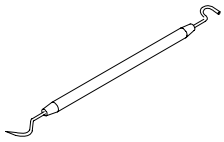 E131853	100-010 Remover, O-Ring Seal
E131853	303-1562 Timing Tool
2 mm Punch	
6 mm Drill Bit	

Removal

WARNING: Do not smoke or carry lighted tobacco or open flame of any type when working on or near any fuel related components. Highly flammable mixtures are always present and may ignite. Failure to follow these instructions may result in personal injury.

NOTE: Removal steps in this procedure may contain installation details.

1. Refer to: Fuel Rail (303-04 Fuel Charging and Controls - 2.2L Duratorq-TDCi (88kW/120PS) - Puma/2.2L Duratorq-TDCi (96kW/130PS) - Puma/2.2L Duratorq-TDCi (110kW/150PS) - Puma, Removal and Installation).
2. Refer to: Valve Cover (303-01 Engine - 2.2L Duratorq-TDCi (88kW/120PS) - Puma/2.2L Duratorq-TDCi (96kW/130PS) - Puma/2.2L Duratorq-TDCi (110kW/150PS) - Puma, Removal and Installation).
3. Refer to: Timing Cover (303-01 Engine - 2.2L Duratorq-TDCi (88kW/120PS) - Puma/2.2L Duratorq-TDCi (96kW/130PS) - Puma/2.2L Duratorq-TDCi (110kW/150PS) - Puma, Removal and Installation).
4. Refer to: Brake Vacuum Pump - 2.2L Duratorq-TDCi (88kW/120PS) - Puma/2.2L Duratorq-TDCi (96kW/130PS) - Puma/2.2L Duratorq-TDCi (110kW/150PS) - Puma (206-07 Power Brake Actuation, Removal and Installation).
5. Special Tool(s): 100-010
   General Equipment: 2 mm Punch

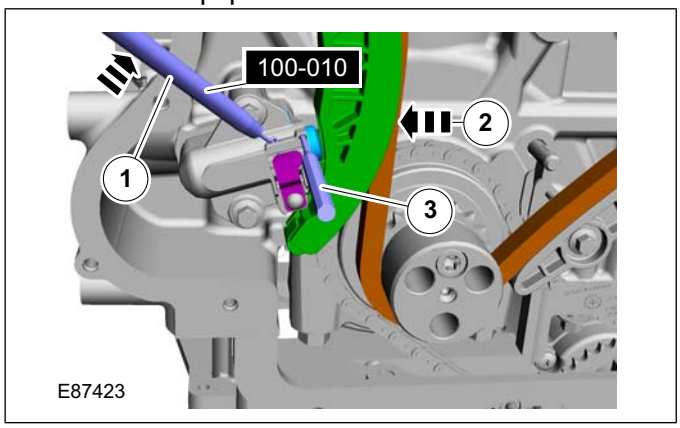

E87423

6. General Equipment: 2 mm Punch

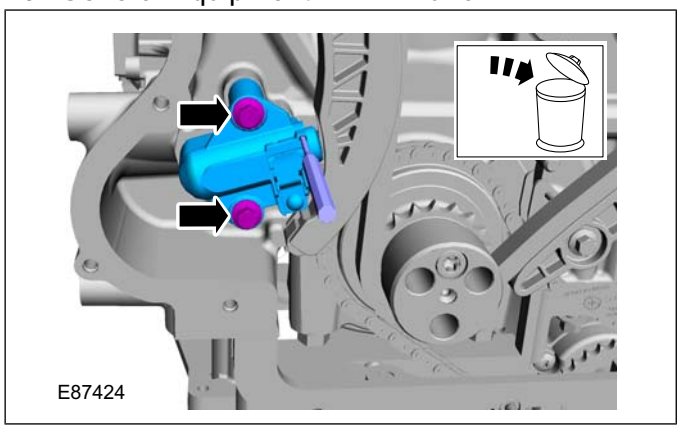
E87424

REMOVAL AND INSTALLATION

7.

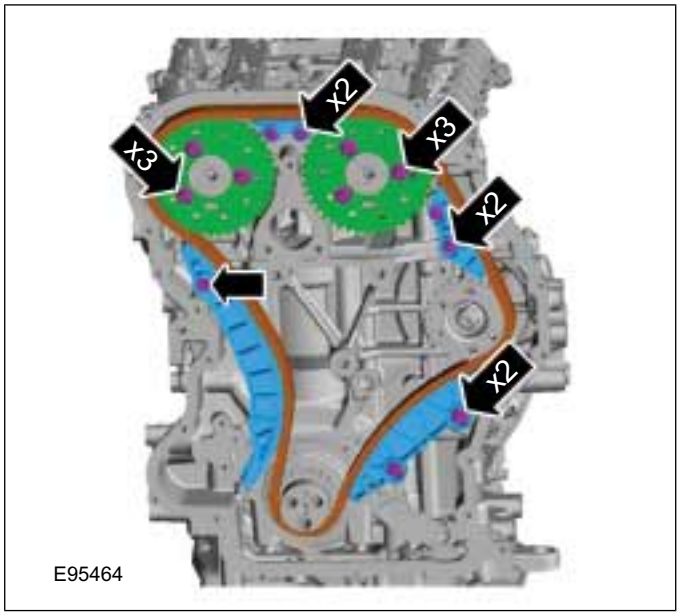

8.

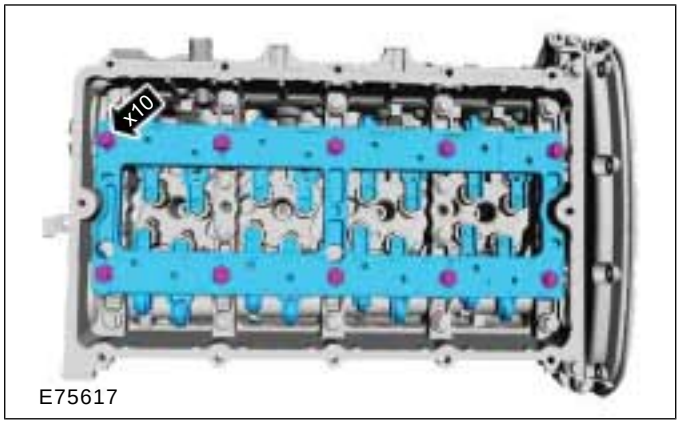

9. ⚠ **CAUTION: Remove the camshaft carrier bolts in the sequence shown.**

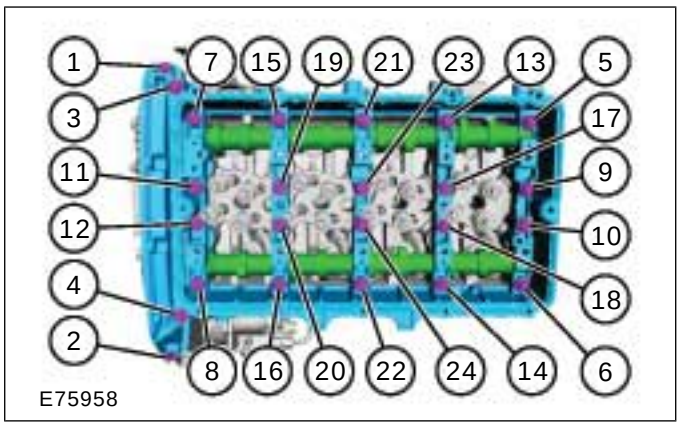

1.
- Bolts 1 to 22
  Torque: 23 Nm
- Bolts 23 to 25
  Torque: 10 Nm

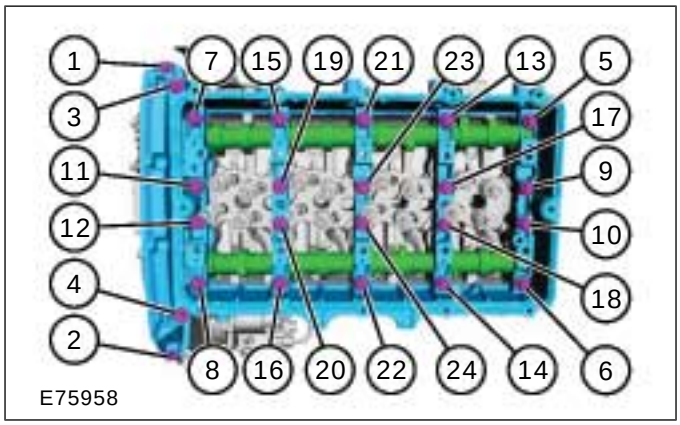

2. Torque:
- Stage 1: 10 Nm
- Stage 2: 30°

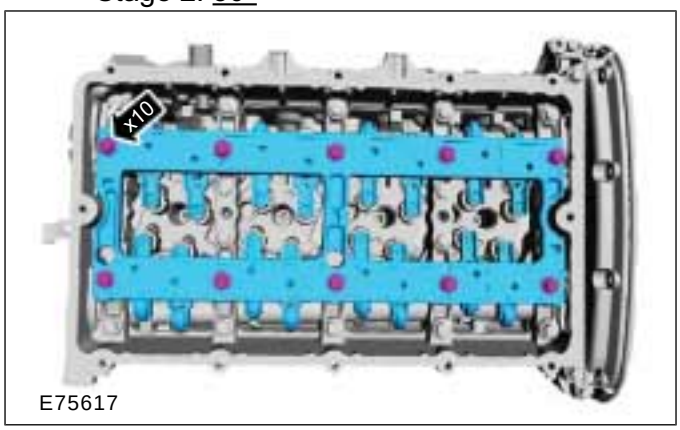

3. Install the Special Tool(s): 303-1562

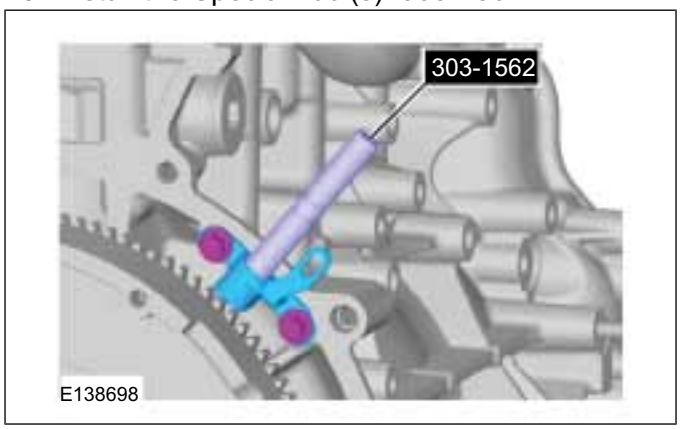

Installation

NOTE: Clean the mating faces of the camshaft carrier and the cylinder head.

REMOVAL AND INSTALLATION

4. **NOTE:** Make sure that the installation marks are aligned.

   General Equipment: 6 mm Drill Bit
   Torque: 33 Nm

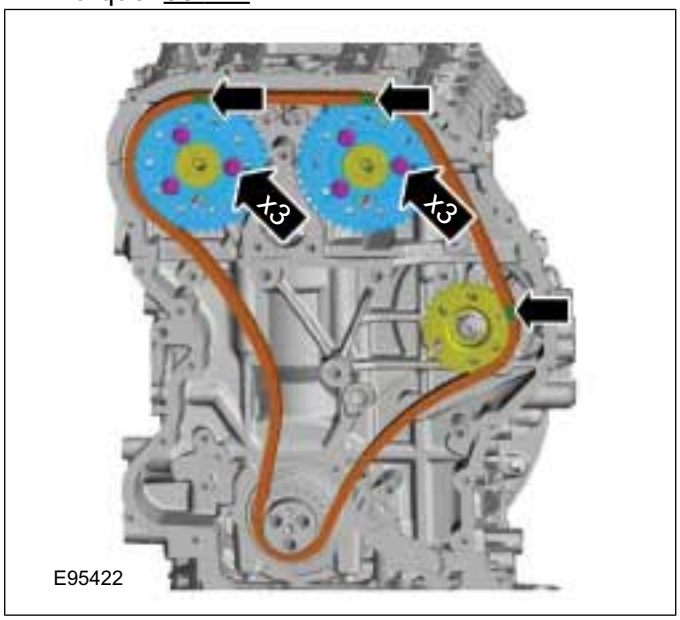

5. Remove the 6 mm drill bits.
6. 1. Torque: 15 Nm
   2. Torque: 40 Nm
   3. Torque: 40 Nm

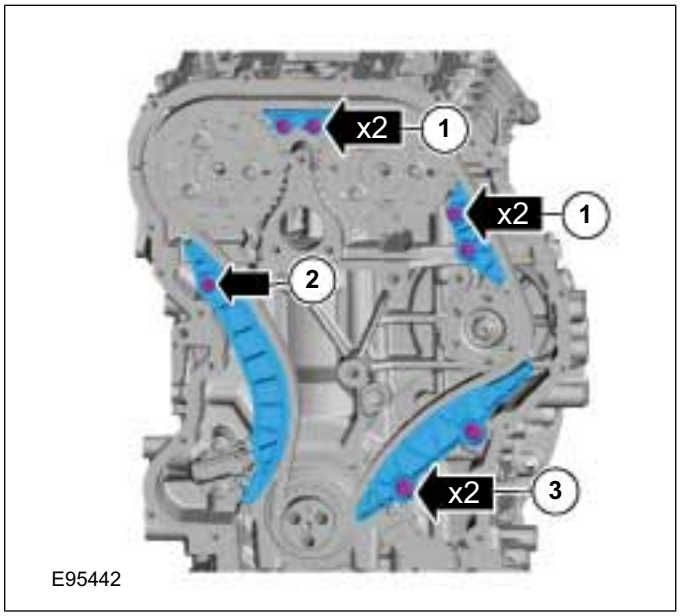

7. **NOTE:** Make sure that a new component is installed.

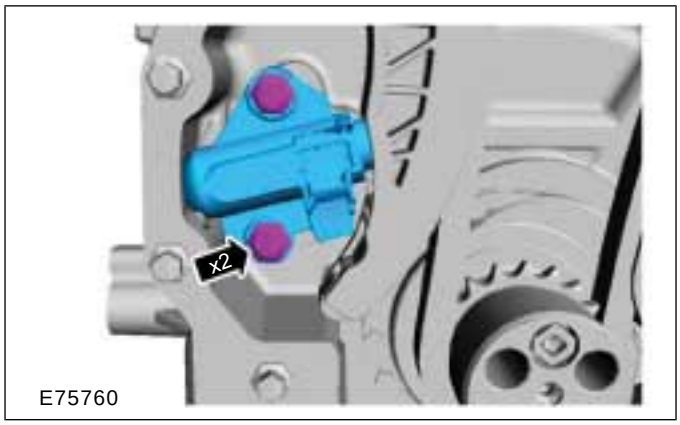

8. Remove the Special Tool(s): 303-1562

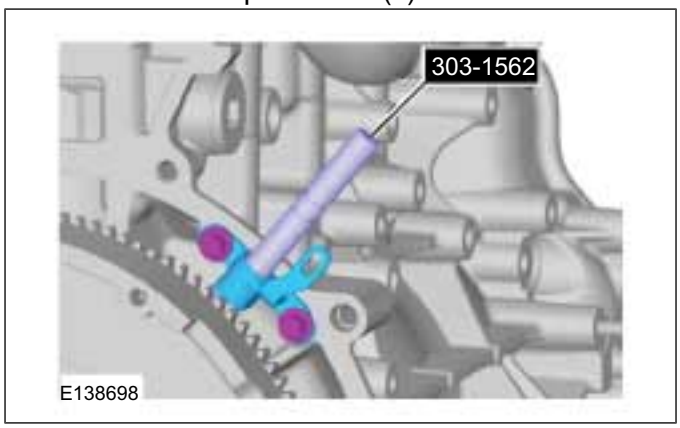

9. Rotate the engine two revolutions.
10. Install the Special Tool(s): 303-1562

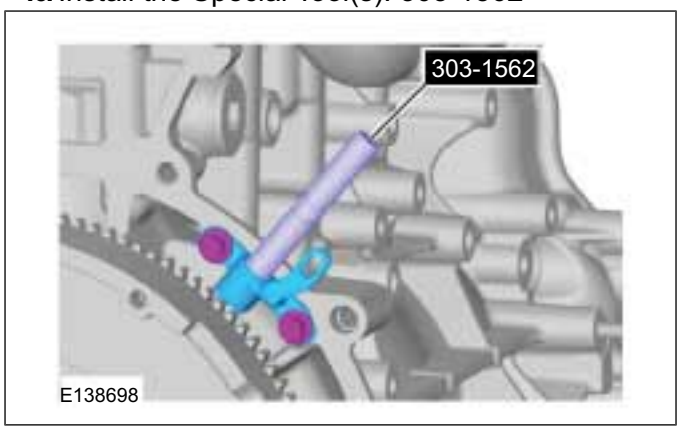

REMOVAL AND INSTALLATION

11. Check the valve timing by inserting the drill bits. If the drill bits cannot be inserted repeat the timing steps.

    General Equipment: 6 mm Drill Bit

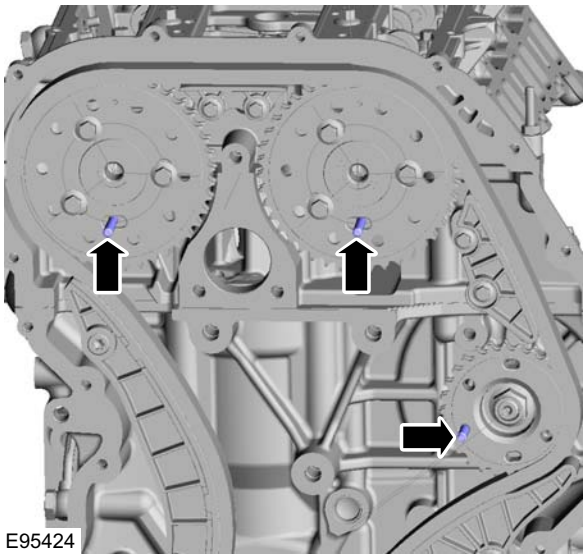

12. Remove the 6 mm drill bits.

13. Remove the Special Tool(s): 303-1562

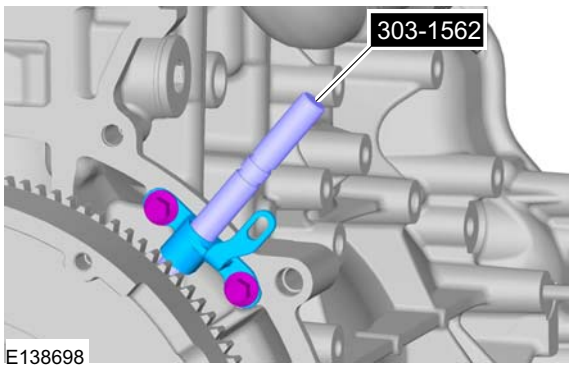

14. Refer to: Brake Vacuum Pump - 2.2L Duratorq-TDCi (88kW/120PS) - Puma/2.2L Duratorq-TDCi (96kW/130PS) - Puma/2.2L Duratorq-TDCi (110kW/150PS) - Puma (206-07 Power Brake Actuation, Removal and Installation).

15. Refer to: Timing Cover (303-01 Engine - 2.2L Duratorq-TDCi (88kW/120PS) - Puma/2.2L Duratorq-TDCi (96kW/130PS) - Puma/2.2L Duratorq-TDCi (110kW/150PS) - Puma, Removal and Installation).

16. Refer to: Valve Cover (303-01 Engine - 2.2L Duratorq-TDCi (88kW/120PS) - Puma/2.2L Duratorq-TDCi (96kW/130PS) - Puma/2.2L Duratorq-TDCi (110kW/150PS) - Puma, Removal and Installation).

17. Refer to: Fuel Rail (303-04 Fuel Charging and Controls - 2.2L Duratorq-TDCi (88kW/120PS) - Puma/2.2L Duratorq-TDCi (96kW/130PS) - Puma/2.2L Duratorq-TDCi (110kW/150PS) - Puma, Removal and Installation).

REMOVAL AND INSTALLATION

Crankshaft Front Seal(21 467 0)

Special Tool(s)

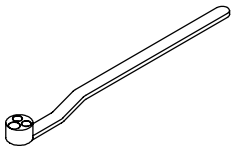 E87614	303-1310 Holding Wrench, Crankshaft
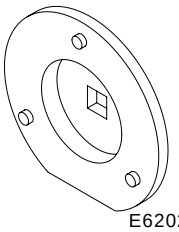 E62024	303-679A Remover/Installer, Engine Front Cover Inspection Plate

Removal

NOTE: Removal steps in this procedure may contain installation details.

1. Refer to: Cooling Fan Motor and Shroud (303-03 Engine Cooling - 2.2L Duratorq-TDCi (88kW/120PS) - Puma/2.2L Duratorq-TDCi (96kW/130PS) - Puma/2.2L Duratorq-TDCi (110kW/150PS) - Puma, Removal and Installation).

2. 1. Do not completely loosen the crankshaft pulley bolts.

Special Tool(s): 303-1310

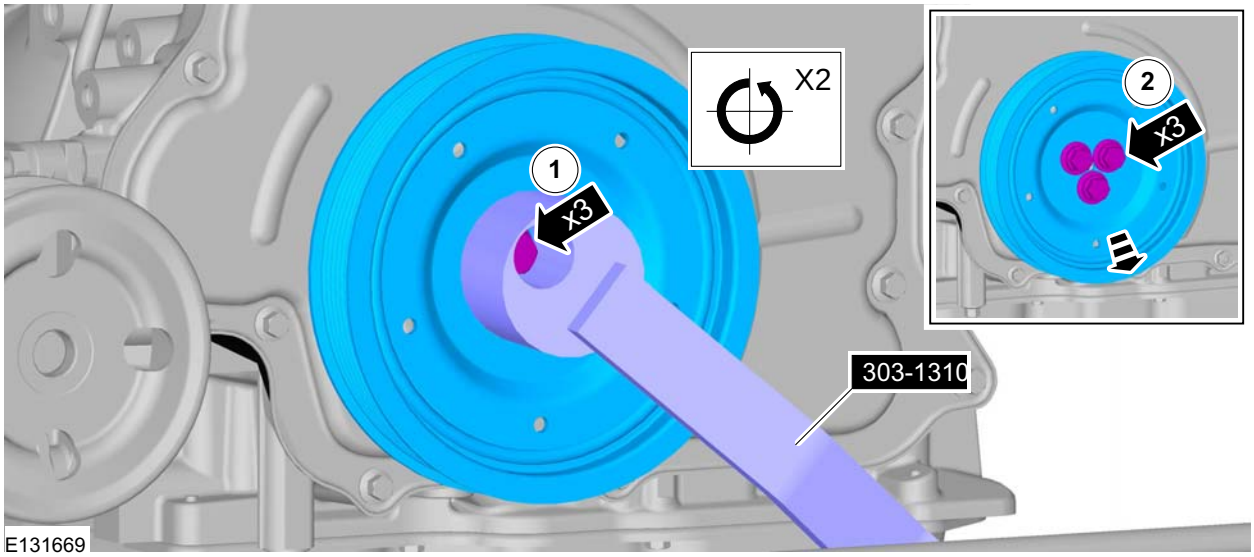

3. Special Tool(s): 303-679A

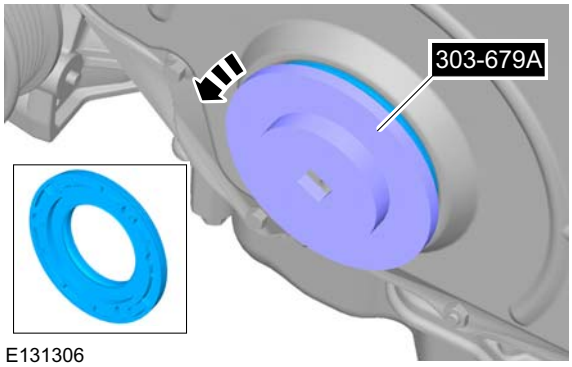

REMOVAL AND INSTALLATION

Installation

1. **NOTE:** Make sure that mounting face is clean and lubricated.

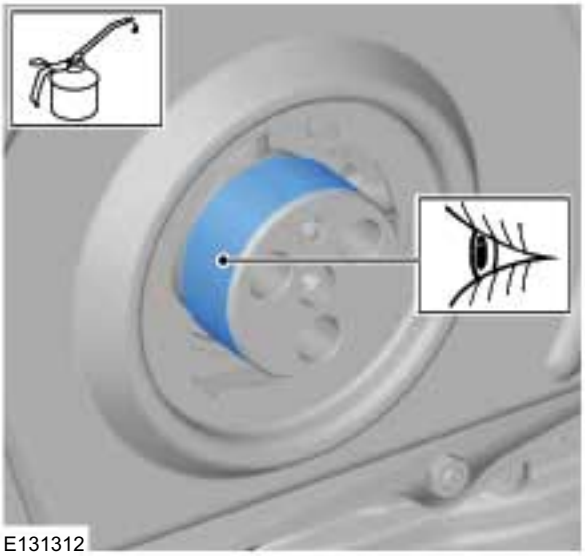

2. **CAUTION: A new crankshaft seal carrier is supplied with an alignment sleeve that must not be removed until the crankshaft seal if fully installed. Failure to follow this instruction may result in damage to the crankshaft.**

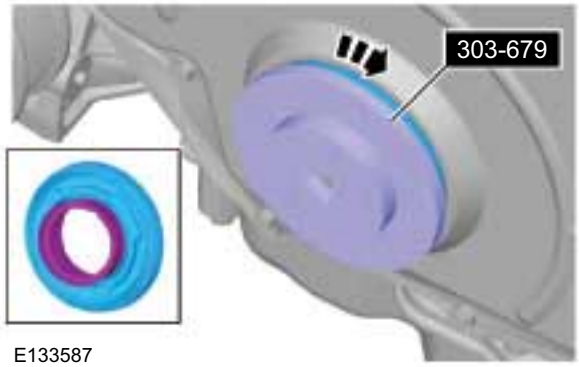

3.

4. **NOTE:** Initially hand tighten the fastners.

   Torque:
   - Stage 1: 45 Nm
   - Stage 2: 120°

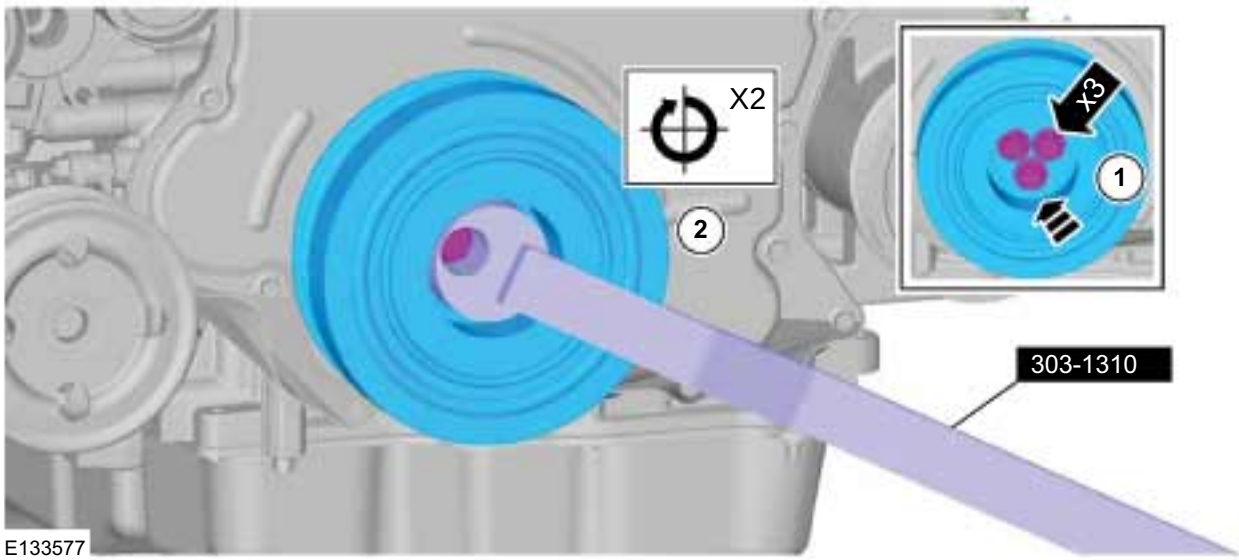

303-01B-19

REMOVAL AND INSTALLATION

5. Refer to: Cooling Fan Motor and Shroud (303-03 Engine Cooling - 2.2L Duratorq-TDCi (88kW/120PS) - Puma/2.2L Duratorq-TDCi (96kW/130PS) - Puma/2.2L Duratorq-TDCi (110kW/150PS) - Puma, Removal and Installation).

REMOVAL AND INSTALLATION

Crankshaft Rear Seal(21 468 4)

Special Tool(s)

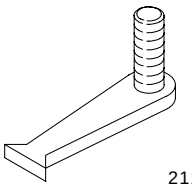 21135	303-254 Locking Tool, Flywheel

Materials	
Name	**Specification**
Silicone Sealant LB	WSE-M4G323-A4 / 2U7J-M4G323-AA

Removal

NOTE: Removal steps in this procedure may contain installation details.

Vehicles with automatic transmission

1. Refer to: Transmission - 2WD (307-01 Automatic Transmission/Transaxle - Vehicles With: 6-Speed Automatic Transaxle - 6R80, Removal).
   Refer to: Transmission - 4WD (307-01 Automatic Transmission/Transaxle - Vehicles With: 6-Speed Automatic Transaxle - 6R80, Removal).

Vehicles with manual transmission

2. Refer to: Clutch Disc and Pressure Plate (308-01 Clutch - Vehicles With: 5-Speed Manual Transmission - MT75, Removal and Installation).
   Refer to: Clutch Disc and Pressure Plate (308-01 Clutch - Vehicles With: 6-Speed Manual Transmission - MT82, Removal and Installation).

All vehicles

3. Special Tool(s): 303-254

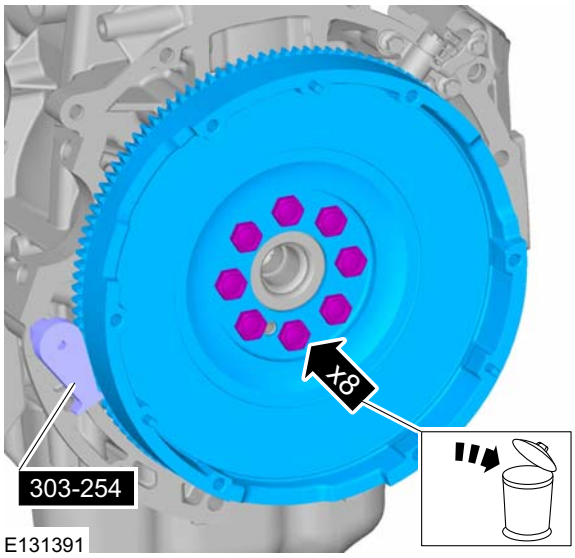

REMOVAL AND INSTALLATION

4.

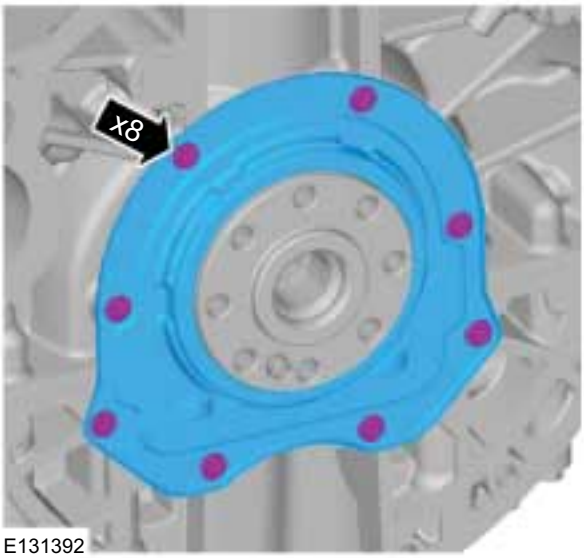

E131392

Installation

All vehicles

1.

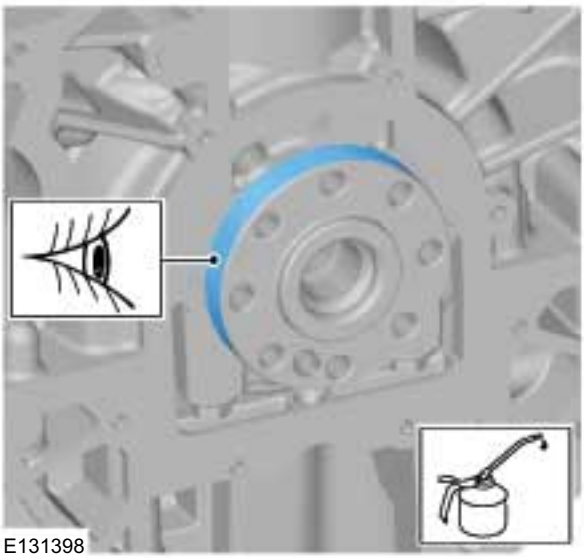
E131398

2. NOTE: Install new crankshaft rear seal carrier with in five minutes after applying the recomended sealent.

Material: Silicone Sealant LB (WSE-M4G323-A4 / 2U7J-M4G323-AA) sealant

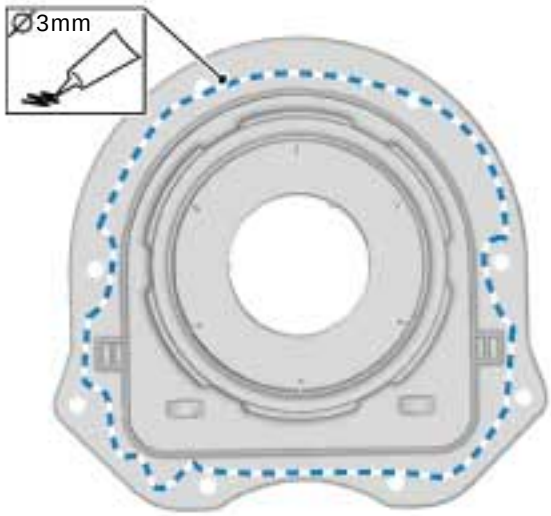

E131393

3. CAUTION: A new crankshaft rear seal carrier is supplied with an alignment sleeve that must not be removed until the crankshaft rear seal is fully installed. Failure to follow this instruction may result in damage to the vehicle.

Hand tighten the bolts at this stage.

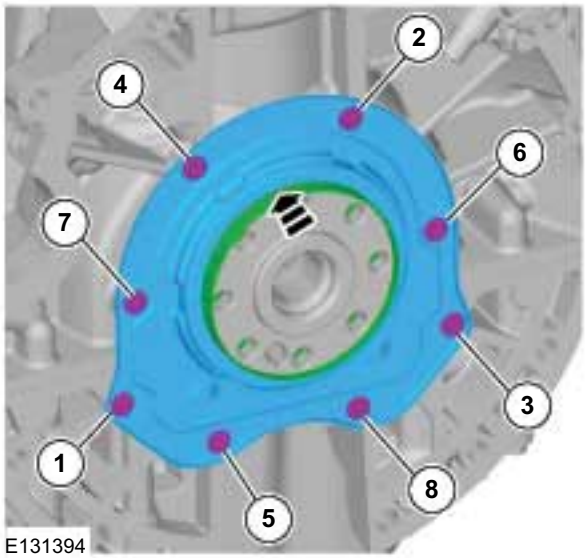

E131394

REMOVAL AND INSTALLATION

4. **NOTE:** New crankshaft seal carriers are supplied with an alignment sleeve which must be removed after installation.

   Torque: 10 Nm

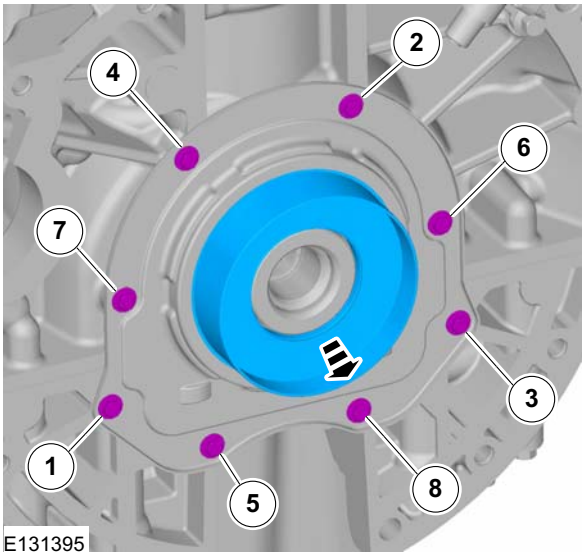

5. **NOTE:** Make sure that flywheel is in full contact with flywheel flange before installing the flywheel bolts.

   Hand tighten the bolts at this stage.

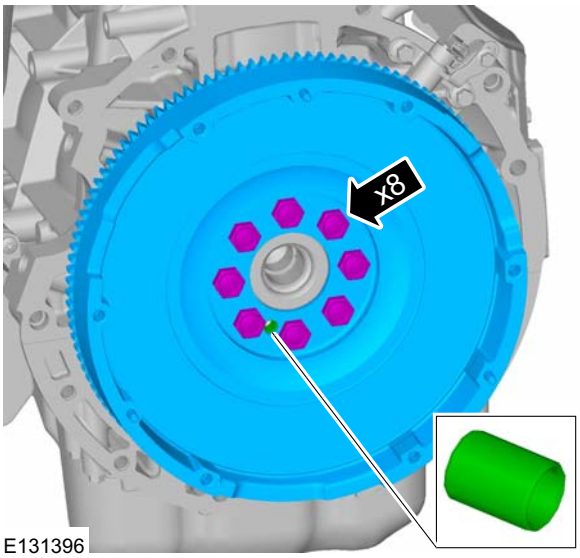

6. Torque:
   - Stage 1: 15 Nm
   - Stage 2: 30 Nm
   - Stage 3: 75 Nm
   - Stage 4: 45°

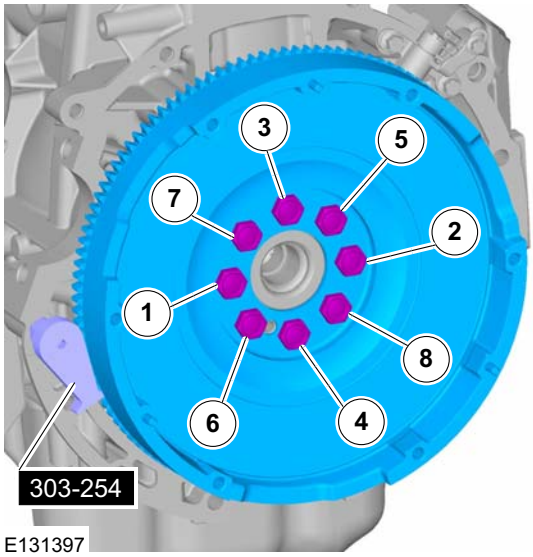

Vehicles with manual transmission

7. Refer to: Clutch Disc and Pressure Plate (308-01 Clutch - Vehicles With: 5-Speed Manual Transmission - MT75, Removal and Installation).
   Refer to: Clutch Disc and Pressure Plate (308-01 Clutch - Vehicles With: 6-Speed Manual Transmission - MT82, Removal and Installation).

Vehicles with automatic transmission

8. Refer to: Transmission - 2WD (307-01 Automatic Transmission/Transaxle - Vehicles With: 6-Speed Automatic Transaxle - 6R80, Installation).
   Refer to: Transmission - 4WD (307-01 Automatic Transmission/Transaxle - Vehicles With: 6-Speed Automatic Transaxle - 6R80, Installation).

REMOVAL AND INSTALLATION

Cylinder Head(21 163 0)

Special Tool(s)

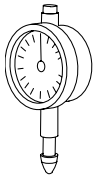 15046	205-069 Dial Indicator Gauge (Metric)
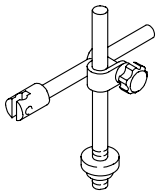 15022A	205-070 Holding Fixture, Dial Indicator Gauge
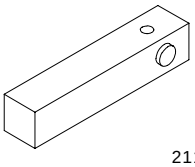 21183A	303-432 Holding Fixture, Dial Indicator Gauge (Cylinder Liner Protrusion)

Removal

NOTE: Removal steps in this procedure may contain installation details.

All vehicles

1. Refer to: Intake Manifold (303-01 Engine - 2.2L Duratorq-TDCi (88kW/120PS) - Puma/2.2L Duratorq-TDCi (96kW/130PS) - Puma/2.2L Duratorq-TDCi (110kW/150PS) - Puma, Removal and Installation).

2.

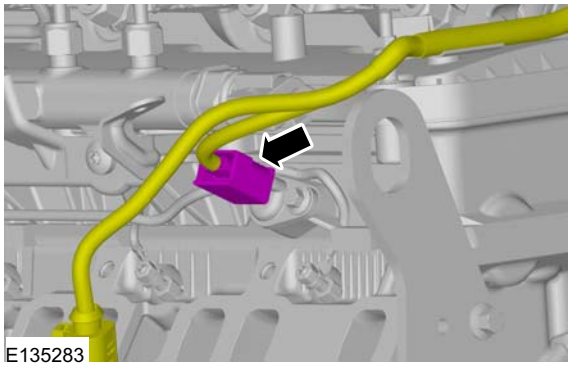

3. Torque: 3 Nm

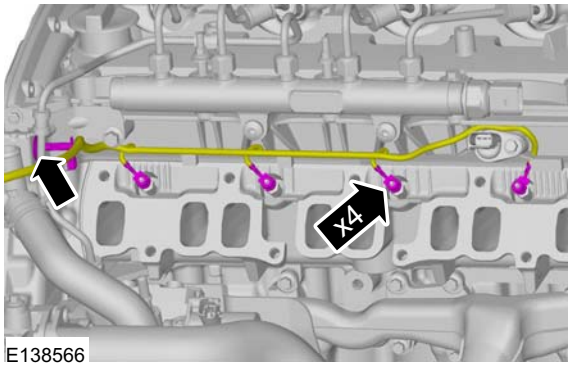

Vehicles with fixed vane turbocharger

4. 1. Torque: 10 Nm
2. Torque: 12 Nm

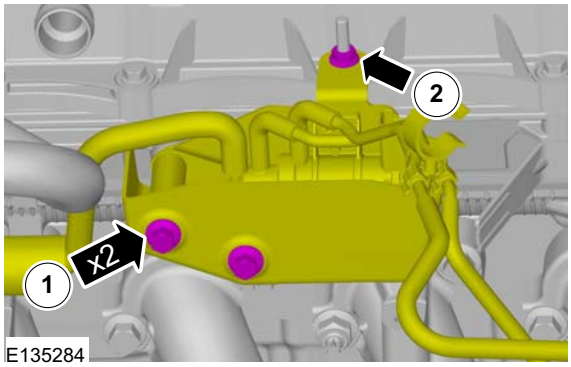

REMOVAL AND INSTALLATION

All vehicles

5. Refer to: Exhaust Gas Recirculation (EGR) Valve - 2.2L Duratorq-TDCi (88kW/120PS) - Puma/2.2L Duratorq-TDCi (96kW/130PS) - Puma/2.2L Duratorq-TDCi (110kW/150PS) - Puma (303-08 Engine Emission Control - 2.2L Duratorq-TDCi (88kW/120PS) - Puma/2.2L Duratorq-TDCi (96kW/130PS) - Puma/2.2L Duratorq-TDCi (110kW/150PS) - Puma/3.2L Duratorq-TDCi (148kW/200PS) - Puma, Removal and Installation).

6. Refer to: Exhaust Manifold (303-01 Engine - 2.2L Duratorq-TDCi (88kW/120PS) - Puma/2.2L Duratorq-TDCi (96kW/130PS) - Puma/2.2L Duratorq-TDCi (110kW/150PS) - Puma, Removal and Installation).

7. Refer to: Camshafts (303-01 Engine - 2.2L Duratorq-TDCi (88kW/120PS) - Puma/2.2L Duratorq-TDCi (96kW/130PS) - Puma/2.2L Duratorq-TDCi (110kW/150PS) - Puma, Removal and Installation).

8.

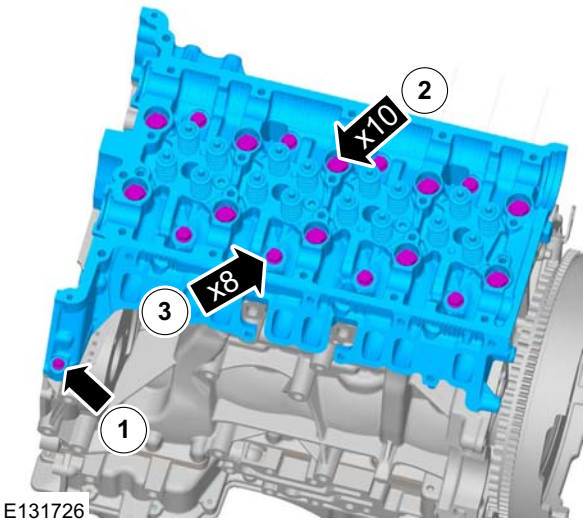

E131726

Installation

1. **WARNING: Do not use metal scrapers, wire brushes, power abrasive discs or other abrasive means to clean the sealing surfaces. These tools cause scratches and gouges that make leak paths. Use a plastic scraping tool to remove all traces of the head gasket.**

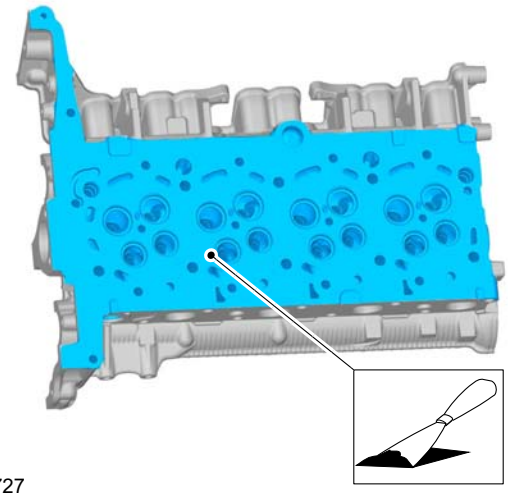
E131727

2. **NOTE:** Measure the piston protrusion of each cylinder at top dead center (TDC)

   Measure the distance between the piston crown and the cylinder block at the points indicated.

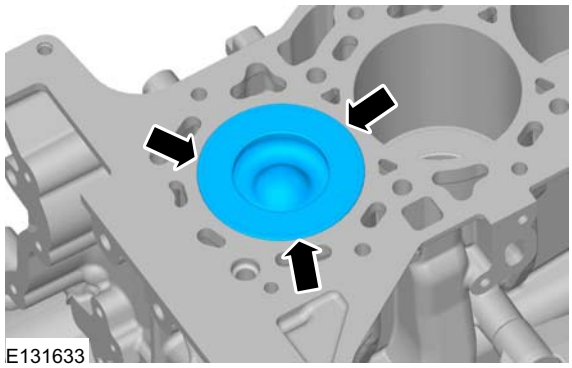
E131633

3. **NOTE:** The largest measurement determines the choice of the cylinder head gasket.

   Special Tool(s): 303-432, 205-070, 205-069

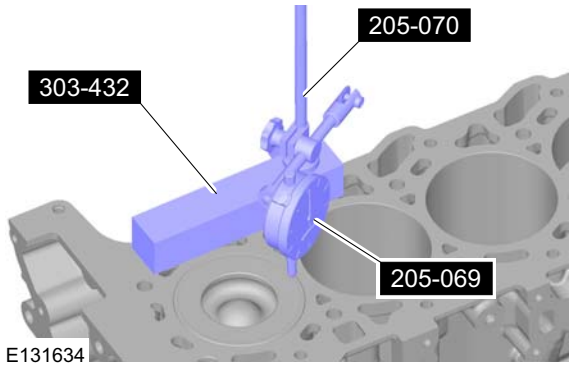

E131634

REMOVAL AND INSTALLATION

4. **NOTE:** Make sure that new component is installed.

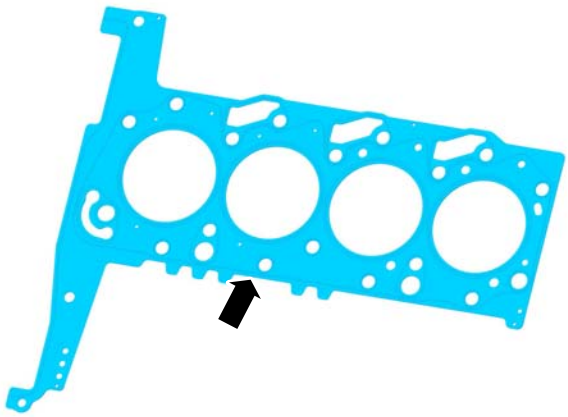

E131728

5.

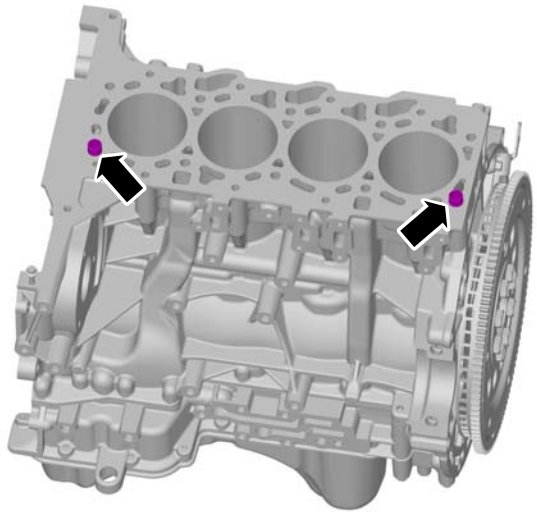

E139847

6. ⚠ **CAUTION: Make sure that new cylinder head bolts are installed.**

Torque:
- Stage 1: 1 -10 10 Nm
- Stage 2: 11-18 5 Nm
- Stage 3: 1-10 20 Nm
- Stage 4: 11-18 10 Nm
- Stage 5: 1-10 40 Nm
- Stage 6: 11-18 20 Nm
- Stage 7: 1-10 180°
- Stage 8: 11-18 180°

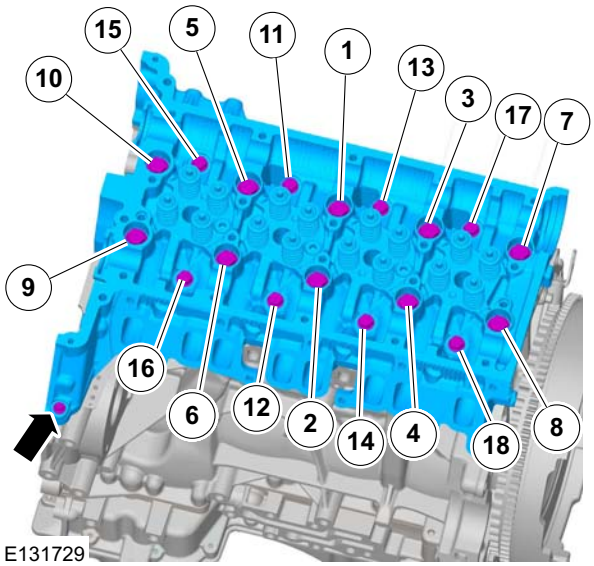

E131729

7. To install, reverse the removal procedure.

REMOVAL AND INSTALLATION

Exhaust Manifold(21 187 0)

Removal

NOTE: Removal steps in this procedure may contain installation details.

1.

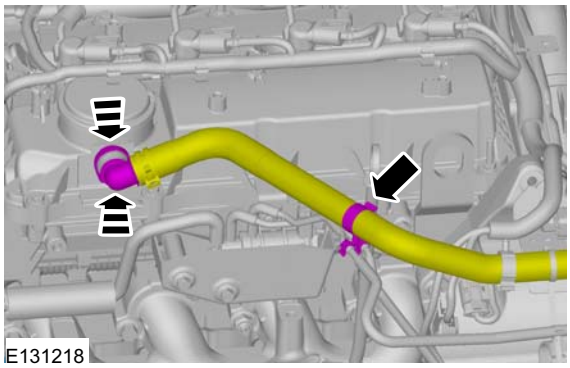

2. Refer to: Turbocharger - 2.2L Duratorq-TDCi (88kW/120PS) - Puma/2.2L Duratorq-TDCi (96kW/130PS) - Puma/2.2L Duratorq-TDCi (110kW/150PS) - Puma, LHD 4WD/LHD RWD (303-04 Fuel Charging and Controls - Turbocharger, Removal and Installation).
Refer to: Generator - 2.2L Duratorq-TDCi (88kW/120PS) - Puma/2.2L Duratorq-TDCi (96kW/130PS) - Puma/2.2L Duratorq-TDCi (110kW/150PS) - Puma (414-02 Generator and Regulator, Removal and Installation).
Refer to: Turbocharger - 2.2L Duratorq-TDCi (88kW/120PS) - Puma/2.2L Duratorq-TDCi (96kW/130PS) - Puma/2.2L Duratorq-TDCi (110kW/150PS) - Puma, RHD 4WD/RHD RWD (303-04 Fuel Charging and Controls - Turbocharger, Removal and Installation).

3.
1. Torque: 25 Nm
2. Torque: 23 Nm
3. Torque: 9 Nm

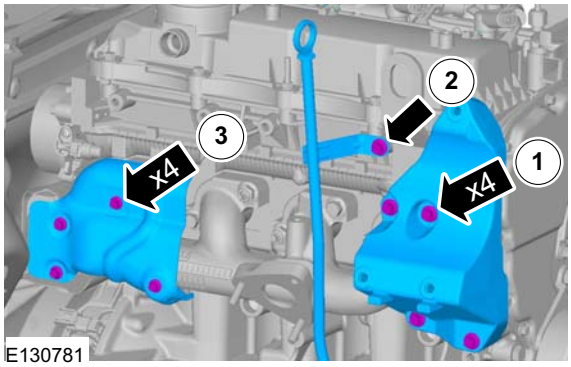

4.
1. Torque: 55 Nm
2. Torque: 40 Nm
3. Torque: 15 Nm

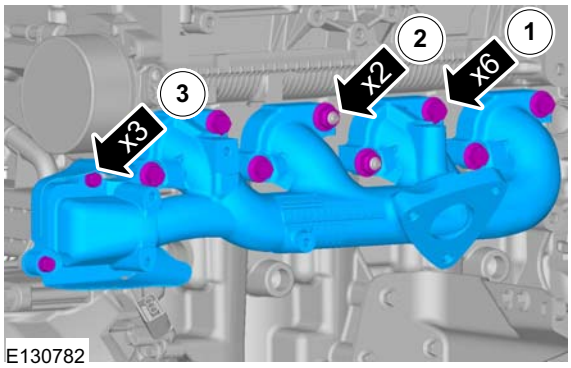

5.

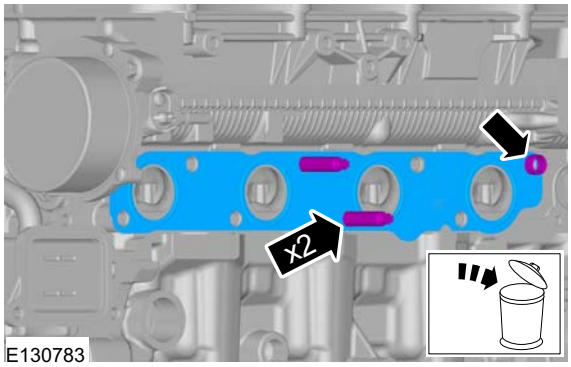

Installation

NOTE: Install new exhaust manifold studs, bolts, nuts, gaskets and O-ring seals.

1. To install , reverse the removal procedure.

REMOVAL AND INSTALLATION

Intake Manifold(21 183 0)

Removal

WARNINGS:

Do not smoke or carry lighted tobacco or open flame of any type when working on or near any fuel related components. Highly flammable mixtures are always present and may ignite. Failure to follow these instructions may result in personal injury.

Do not carry out any repairs to the fuel injection system with the engine running. The fuel pressure within the system is approximately 1600 bars. Failure to follow this instruction may result in personal injury.

Wait at least one minute after the engine stops before commencing any repair to the fuel injection system. Failure to follow this instruction may result in personal injury.

NOTE: Removal steps in this procedure may contain installation details.

1.

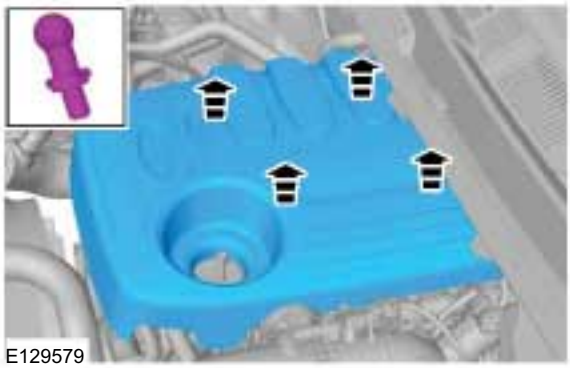
E129579

2.

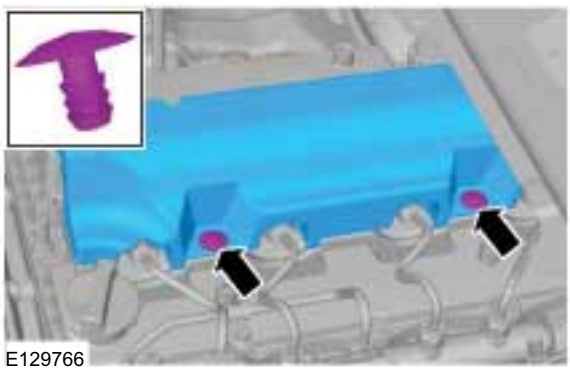
E129766

3. Refer to: Battery Disconnect and Connect (414-01 Battery, Mounting and Cables, General Procedures).

4.

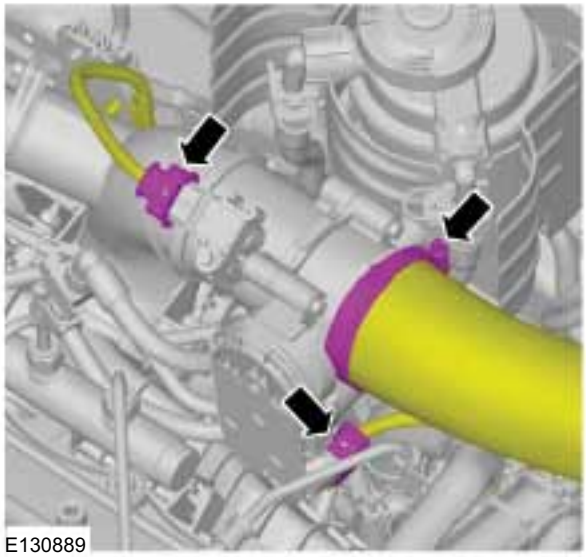
E130889

5. Torque: 11 Nm

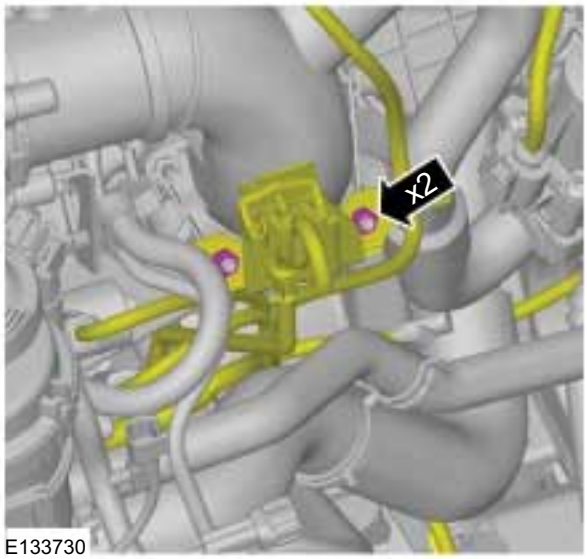

E133730

REMOVAL AND INSTALLATION

6. Refer to: Exhaust Gas Recirculation (EGR) Valve - 2.2L Duratorq-TDCi (88kW/120PS) - Puma/2.2L Duratorq-TDCi (96kW/130PS) - Puma/2.2L Duratorq-TDCi (110kW/150PS) - Puma (303-08 Engine Emission Control - 2.2L Duratorq-TDCi (88kW/120PS) - Puma/2.2L Duratorq-TDCi (96kW/130PS) - Puma/2.2L Duratorq-TDCi (110kW/150PS) - Puma/3.2L Duratorq-TDCi (148kW/200PS) - Puma, Removal and Installation).
7. 2. Torque: 10 Nm
   3. Torque: 15 Nm

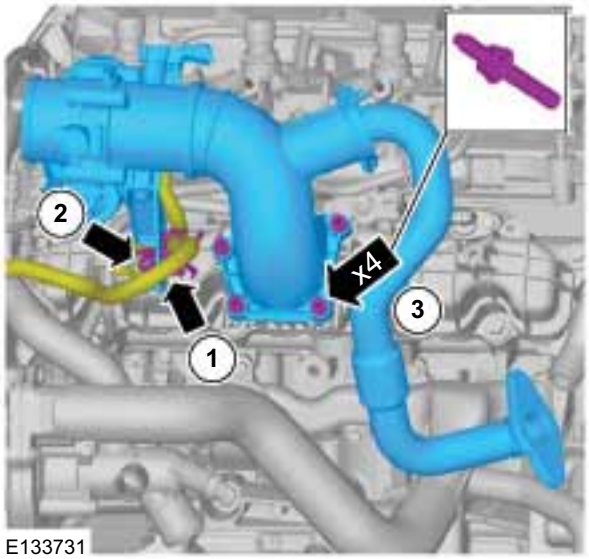

E133731

8.

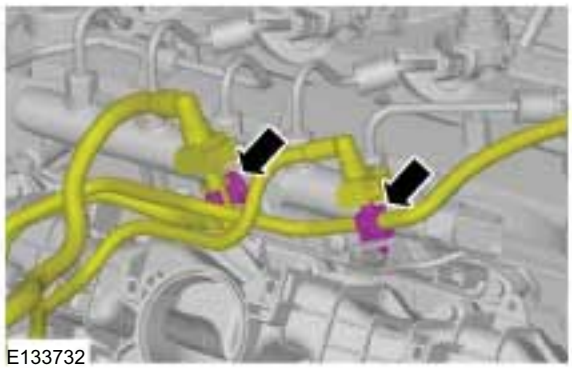
E133732

9. Torque: 25 Nm

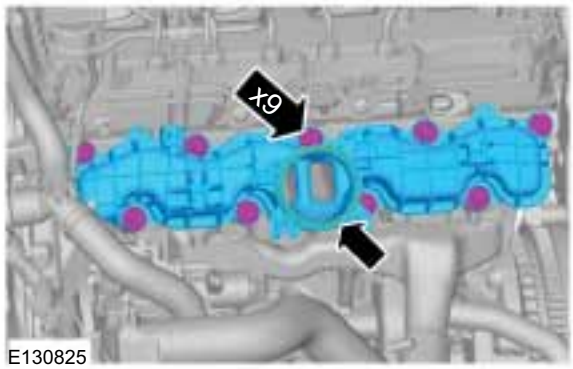

E130825

Installation

1. **NOTE:** Inspect the intake manifold gaskets, Install new intake manifold gaskets if necessary.

   To install, reverse the removal procedure.

REMOVAL AND INSTALLATION

Timing Cover(21 146 0)

Special Tool(s)

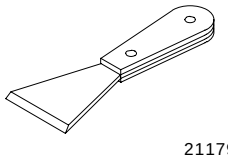 21179	303-428 Separator, Oil Pan
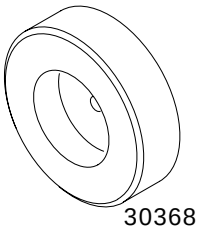 303682	303-682 Aligner, Engine Front Cover

Materials	
Name	**Specification**
Silicone Sealant LB	WSE-M4G323-A4 / 2U7J-M4G323-AA

Removal

NOTE: Removal steps in this procedure may contain installation details.

1. Refer to: Battery Disconnect and Connect (414-01 Battery, Mounting and Cables, General Procedures).
2. Refer to: Cooling Fan Motor and Shroud (303-03 Engine Cooling - 2.2L Duratorq-TDCi (88kW/120PS) - Puma/2.2L Duratorq-TDCi (96kW/130PS) - Puma/2.2L Duratorq-TDCi (110kW/150PS) - Puma, Removal and Installation).
3. Refer to: Generator - 2.2L Duratorq-TDCi (88kW/120PS) - Puma/2.2L Duratorq-TDCi (96kW/130PS) - Puma/2.2L Duratorq-TDCi (110kW/150PS) - Puma (414-02 Generator and Regulator, Removal and Installation).
4. Torque: 25 Nm

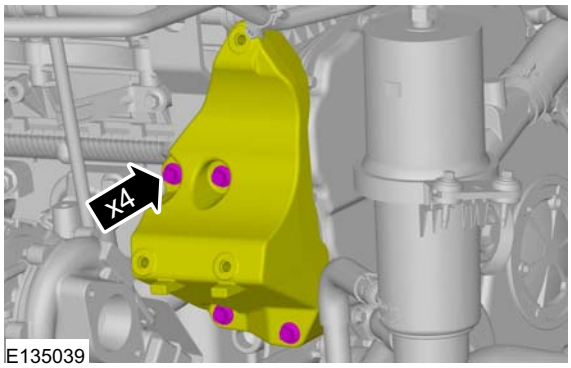

E135039

5. 1. Torque: 48 Nm
   2. Torque: 23 Nm

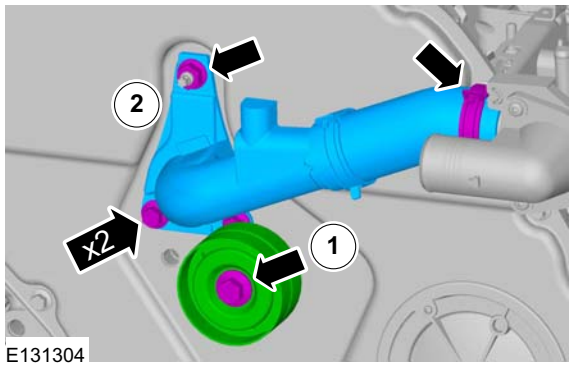

E131304

REMOVAL AND INSTALLATION

6. Torque: 48 Nm

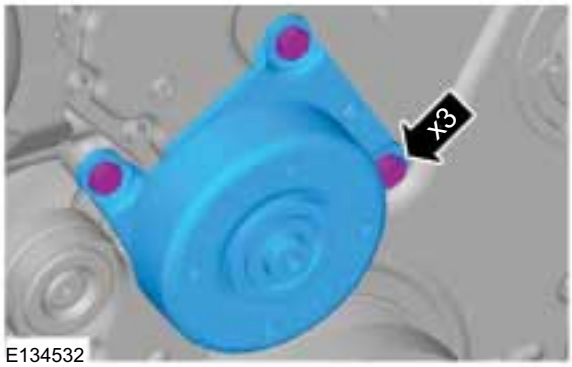

E134532

7. Refer to: Lifting (100-02 Jacking and Lifting, Description and Operation).

8. Torque: 30 Nm

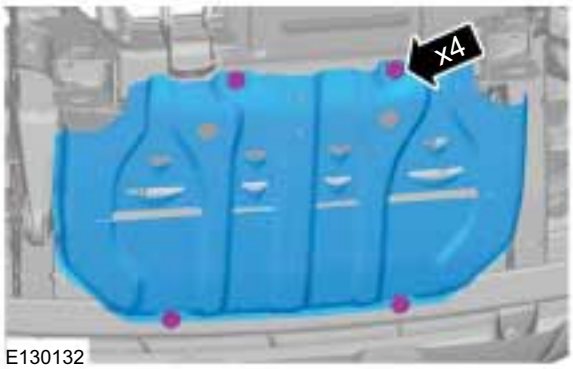

E130132

9. **NOTE:** Remove front RH wheel only.

   Refer to: Wheel and Tire (204-04 Wheels and Tires, Removal and Installation).

10.

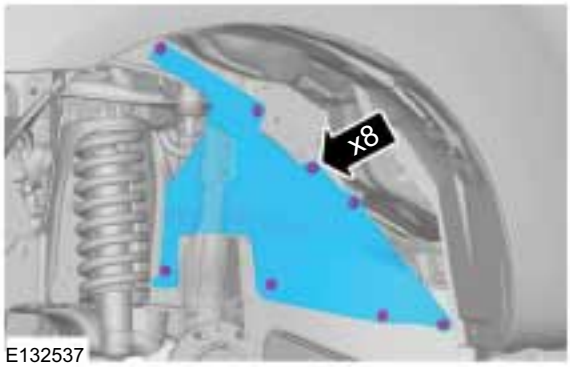

E132537

11. **CAUTION: Cap the power steering line to prevent fluid loss or dirt ingress.**

    Torque: 7 Nm

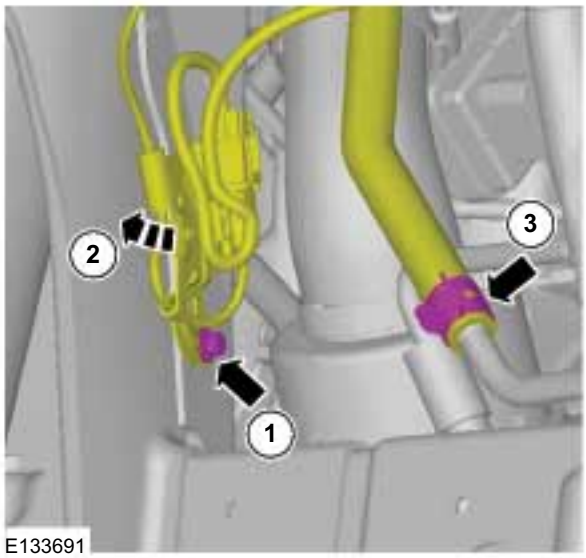

E133691

12.

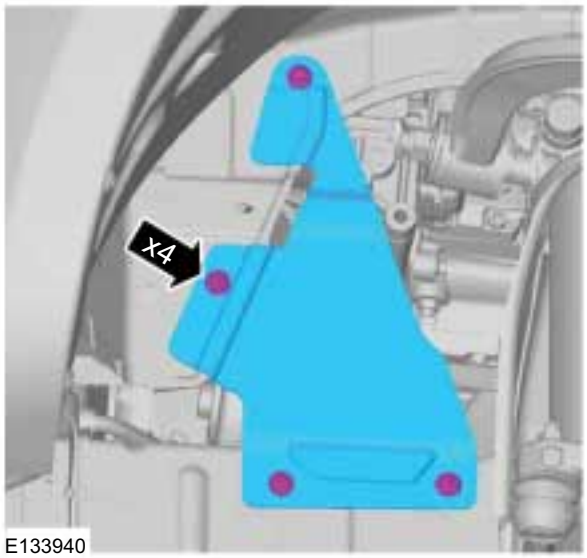

E133940

303-01B-31

REMOVAL AND INSTALLATION

13. 1. Torque: 20 Nm
2. Torque: 20 Nm
3. Torque: 18 Nm

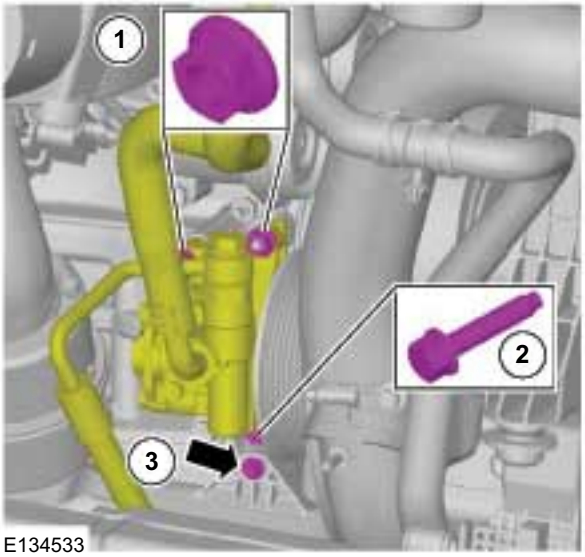

E134533

14. Torque: 22 Nm

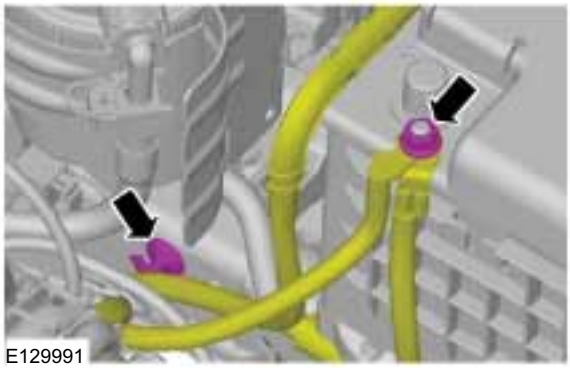
E129991

15.

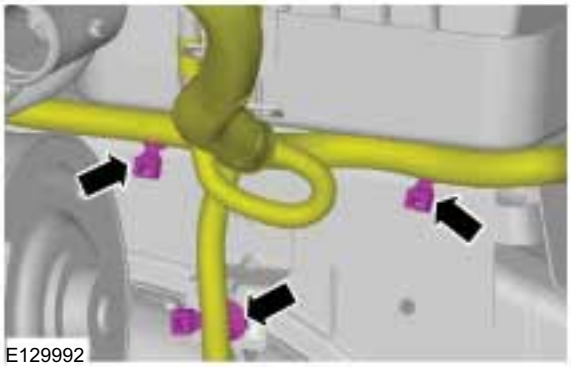
E129992

16. 2. Torque: 23 Nm
4. Torque: 23 Nm

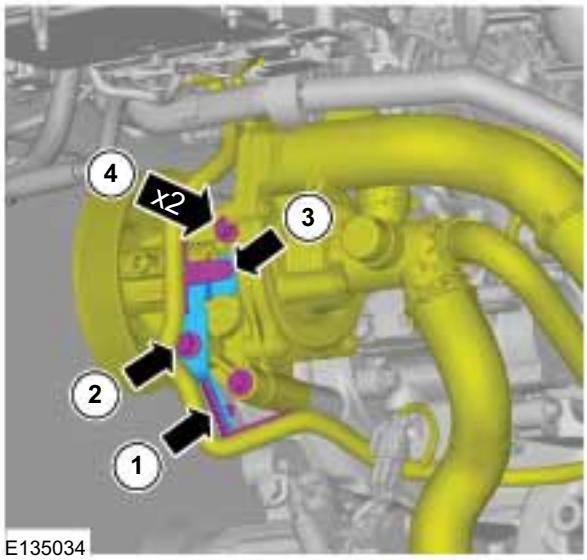

E135034

17. Torque: 23 Nm

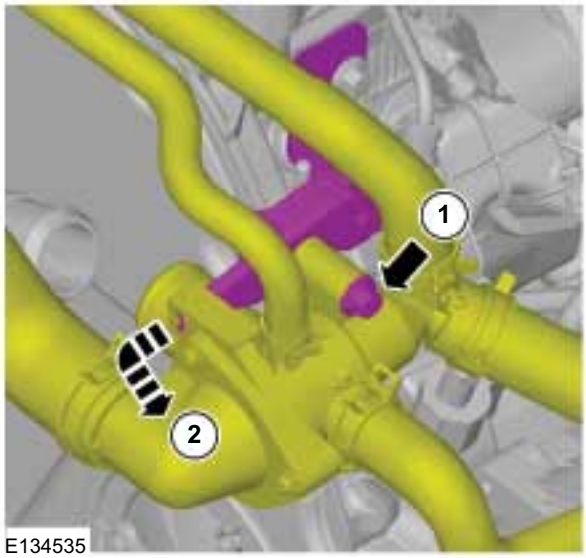

E134535

303-01B-32

REMOVAL AND INSTALLATION

18. Refer to: Crankshaft Front Seal (303-01 Engine - 2.2L Duratorq-TDCi (88kW/120PS) - Puma/2.2L Duratorq-TDCi (96kW/130PS) - Puma/2.2L Duratorq-TDCi (110kW/150PS) - Puma, Removal and Installation).

19. Special Tool(s): 303-428

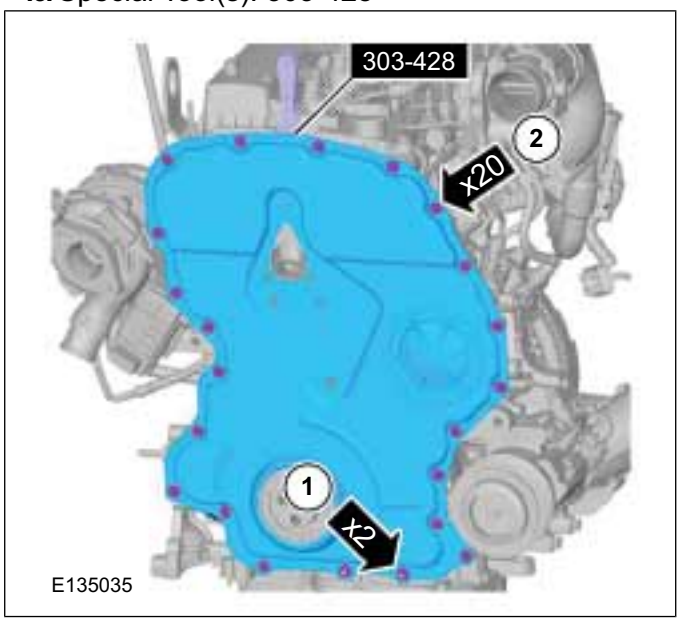

Installation

1. **CAUTION: Install timing cover with in five minutes of applying the sealent.**

NOTE: Do not damage the mating surfaces.

Material: Silicone Sealant LB (WSE-M4G323-A4 / 2U7J-M4G323-AA) sealant

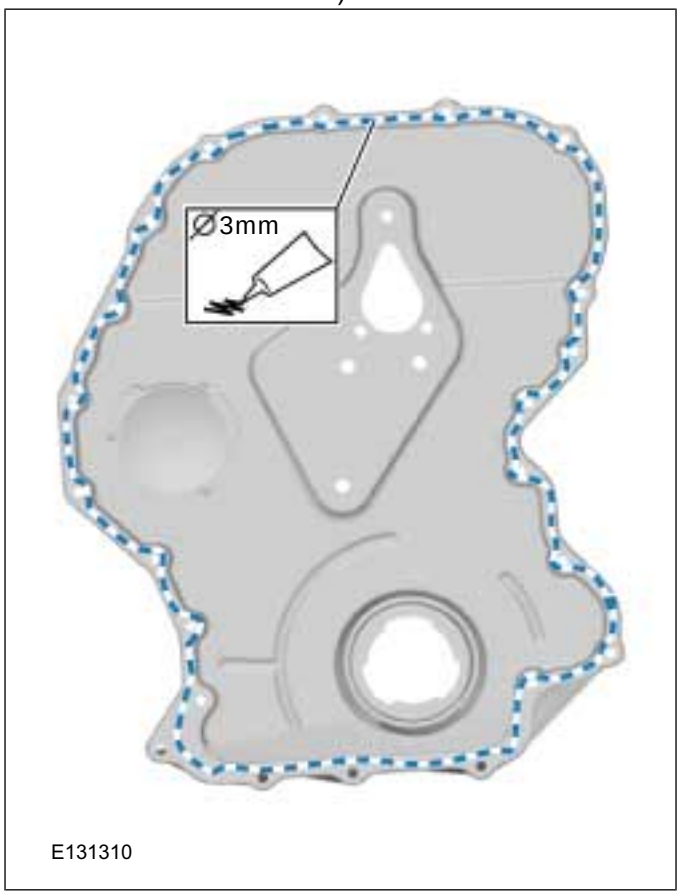

REMOVAL AND INSTALLATION

2. 1. Special Tool(s): 303-682
Torque: 14 Nm
2. Torque: 10 Nm

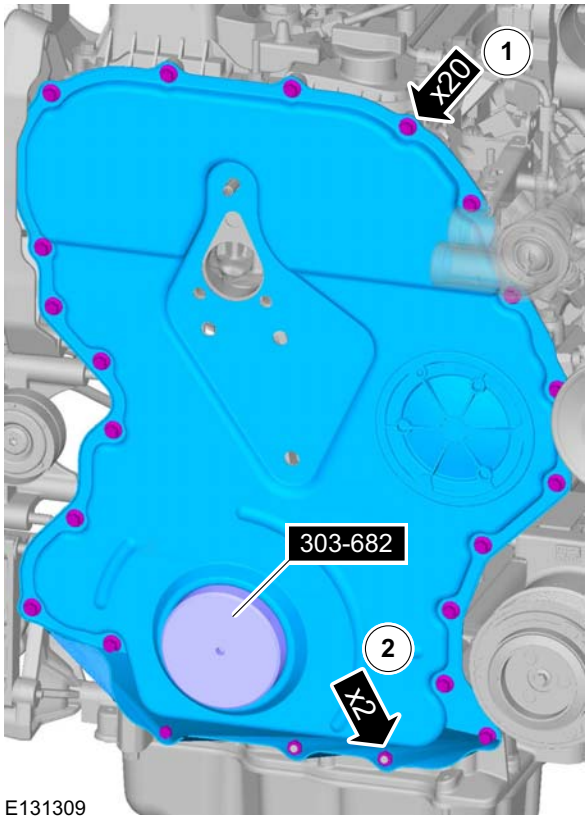

3. To install, reverse the removal procedure.

REMOVAL AND INSTALLATION

Oil Pan(21 154 0)

Special Tool(s)

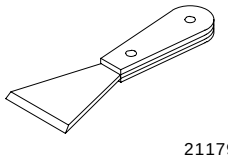 21179	303-428 Separator, Oil Pan

Materials	
Name	**Specification**
Silicone Sealant LB	WSE-M4G323-A4 / 2U7J-M4G323-AA

Removal

NOTE: Removal steps in this procedure may contain installation details.

1. Refer to: Engine Cooling System Health and Safety Precautions (100-00 General Information, Description and Operation).
2. Refer to: Battery Disconnect and Connect (414-01 Battery, Mounting and Cables, General Procedures).
3. Refer to: Lifting (100-02 Jacking and Lifting, Description and Operation).

4x4

4. Torque: 30 Nm

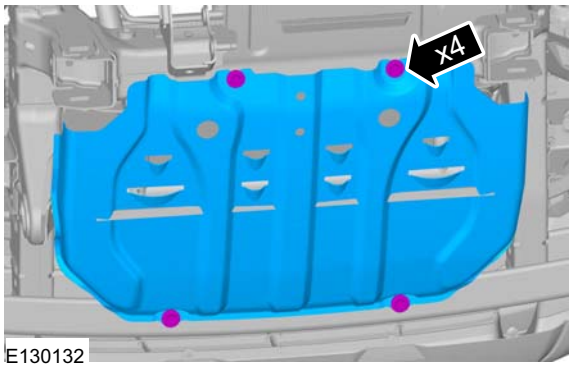

E130132

All vehicles

5. Torque: 30 Nm

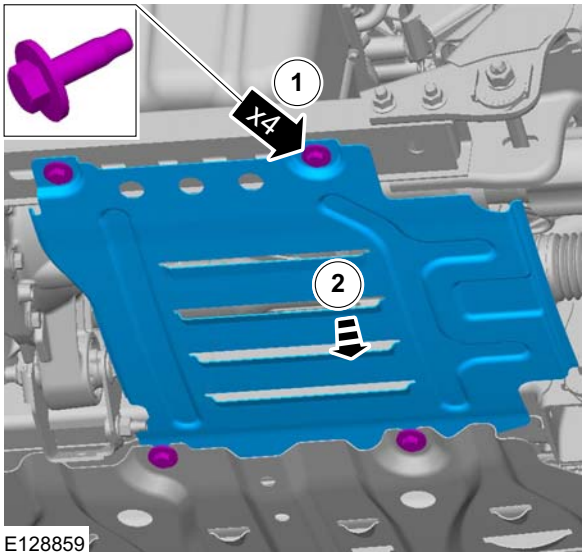

E128859

6. Torque: 90 Nm

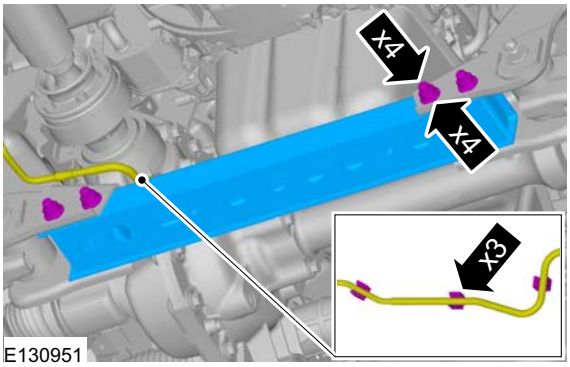

E130951

4x4

7. Torque: 30 Nm

REMOVAL AND INSTALLATION

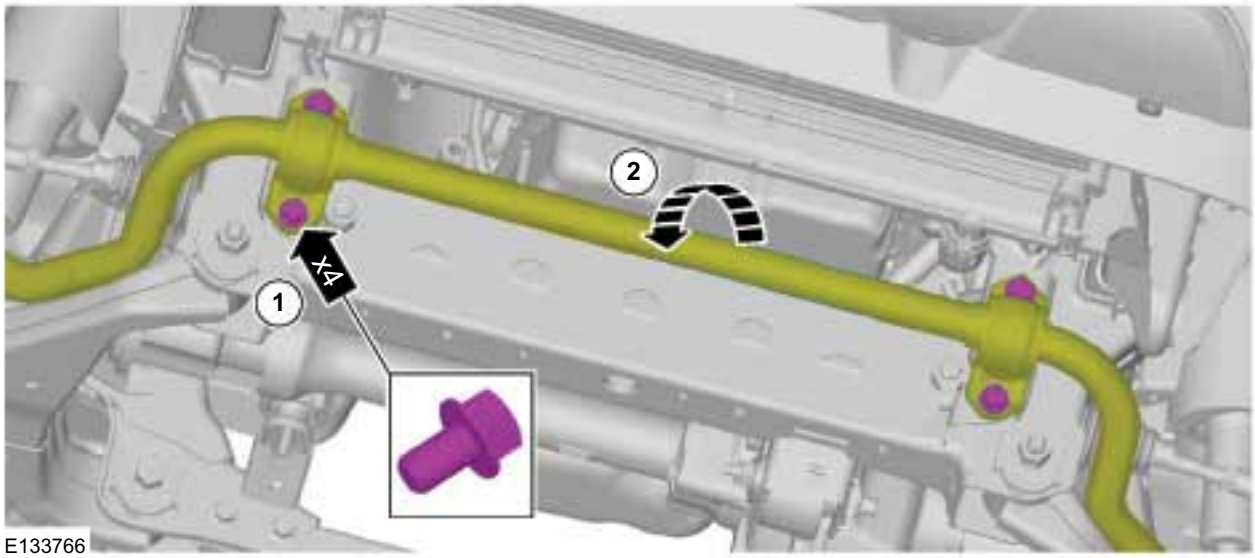

All vehicles

8. 1. Torque: 23 Nm
2. Torque: 150 Nm

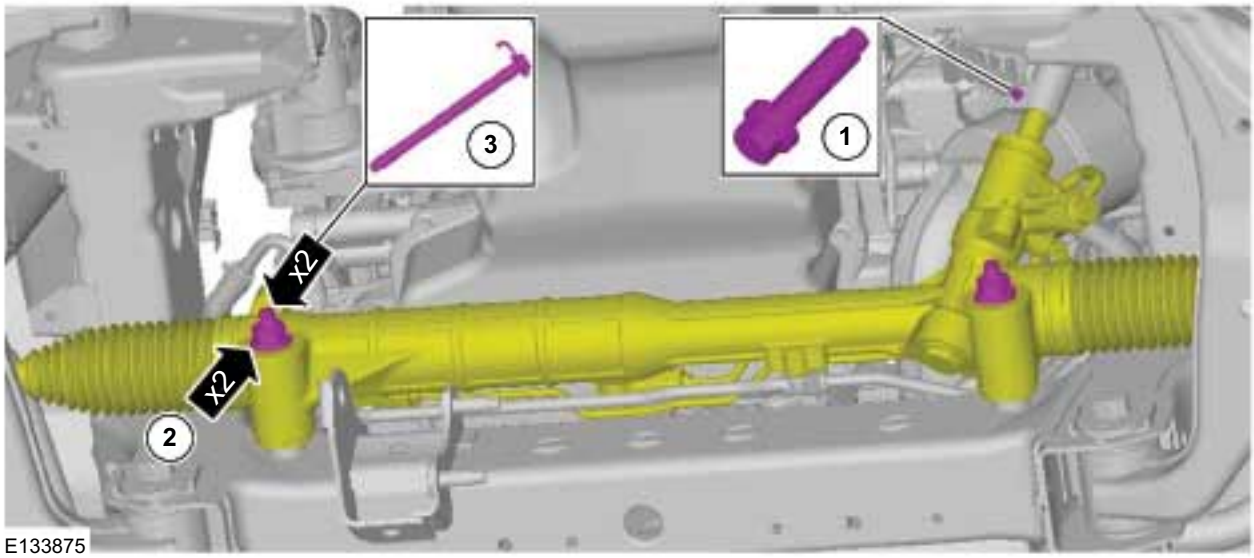

9. **NOTE:** Be prepared to collect escaping fluid.

NOTE: Inspect the oil pan drain plug seal for damage. Install a new drain plug and seal if required.

REMOVAL AND INSTALLATION

Drain the oil into a suitable container.
Torque: 39 Nm

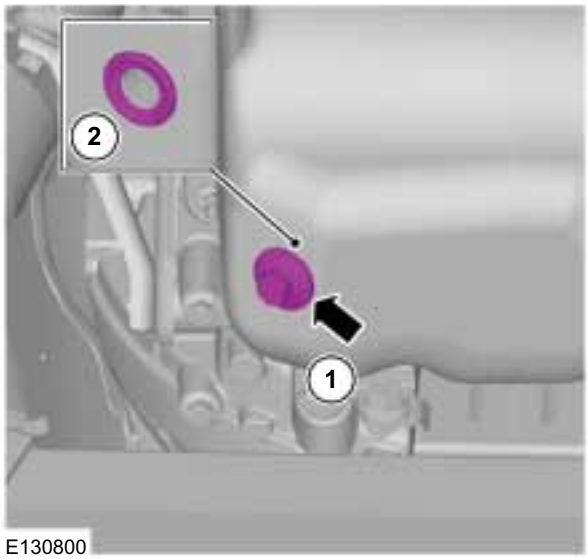

E130800

10. Special Tool(s): 303-428

E133877

4x4

11. Torque: 10 Nm

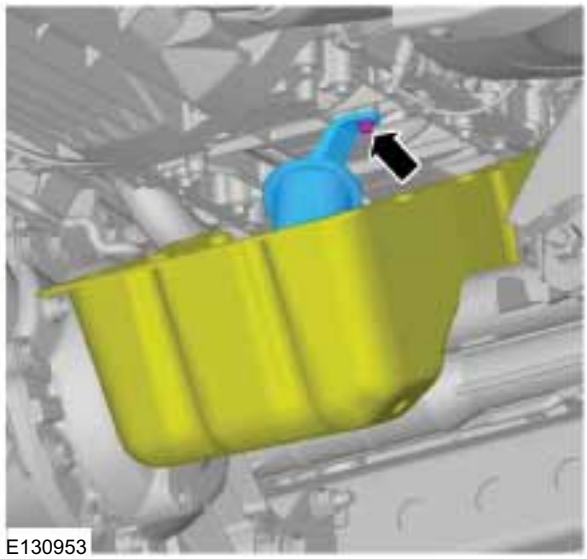
E130953

12. Torque: 10 Nm

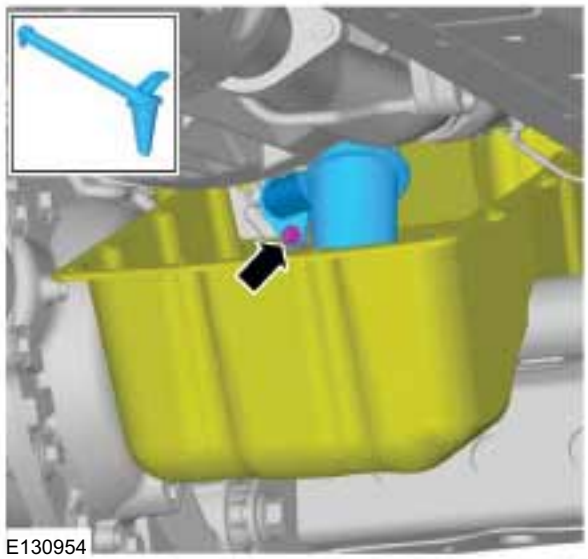
E130954

REMOVAL AND INSTALLATION

13.

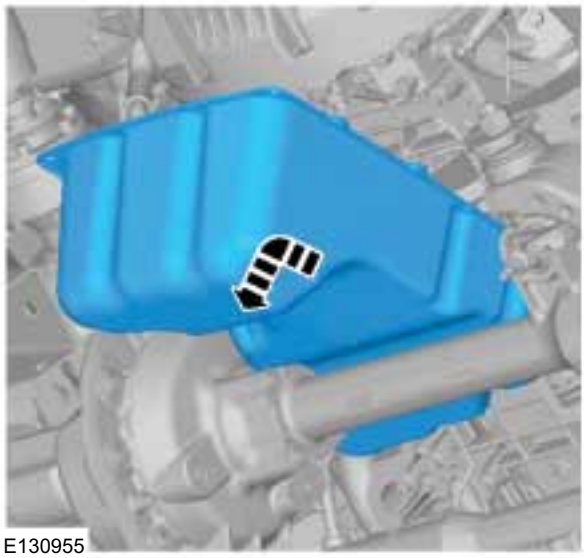
E130955

All vehicles

14.

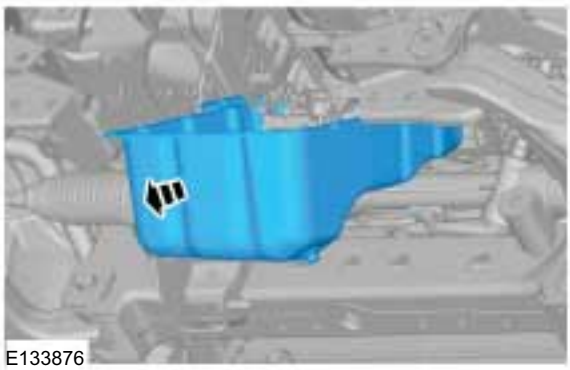
E133876

Installation

1. **WARNING: Take extra care not to damage the mating faces.**

E133927

2. **CAUTION: Install the oil pan within five minutes of applying the sealer.**

NOTE: Take extra care not to damage the mating faces.

Material: Silicone Sealant LB (WSE-M4G323-A4 / 2U7J-M4G323-AA) sealant

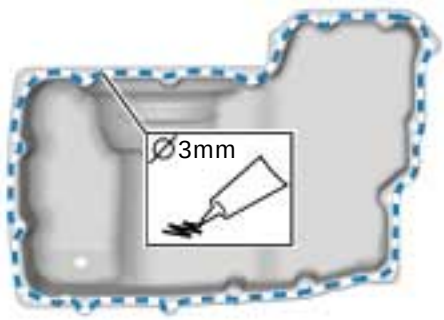

E130956

REMOVAL AND INSTALLATION

3. Torque:
   - Stage 1: 7 Nm
   - Stage 2: 14 Nm

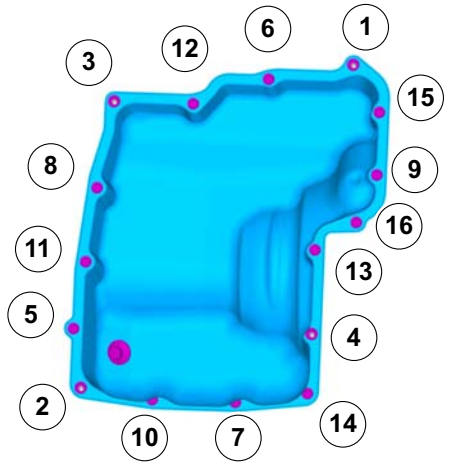

E133897

4. To install, reverse the removal procedure.

5. Fill the engine with clean engine oil.

   Refer to: Specifications (303-01 Engine - 2.2L Duratorq-TDCi (88kW/120PS) - Puma/2.2L Duratorq-TDCi (96kW/130PS) - Puma/2.2L Duratorq-TDCi (110kW/150PS) - Puma, Specifications).

REMOVAL AND INSTALLATION

Oil Pump(21 714 0)

Special Tool(s)

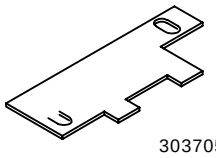 303705	303-705 Aligner, Oil Pump

Removal

NOTE: Removal steps in this procedure may contain installation details.

All vehicles

1. Refer to: Oil Pan (303-01 Engine - 2.2L Duratorq-TDCi (88kW/120PS) - Puma/2.2L Duratorq-TDCi (96kW/130PS) - Puma/2.2L Duratorq-TDCi (110kW/150PS) - Puma, Removal and Installation).

4x2

2.

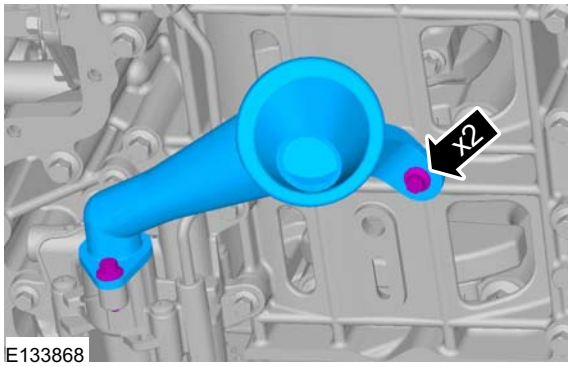

E133868

All vehicles

3. **WARNING: Be prepared to collect escaping fluids.**

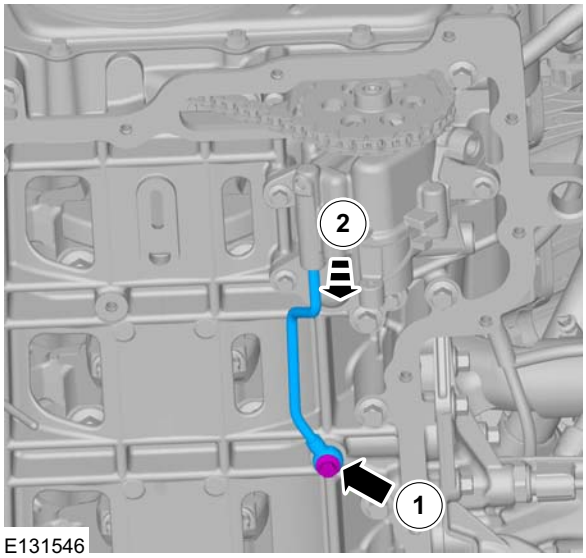

E131546

4. **NOTE:** The profile of the special tool must be in contact with the oil pump sprocket.

   Install the Special Tool(s): 303-705

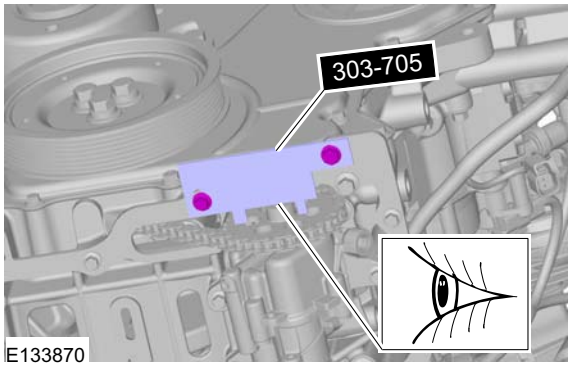

E133870

REMOVAL AND INSTALLATION

5. **NOTE:** Do not completely loosen the bolts at this stage.

   Special Tool(s): 303-705

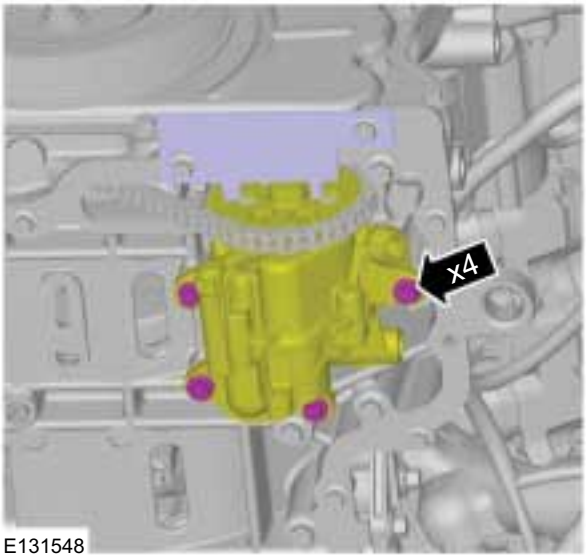

E131548

6. Special Tool(s): 303-705

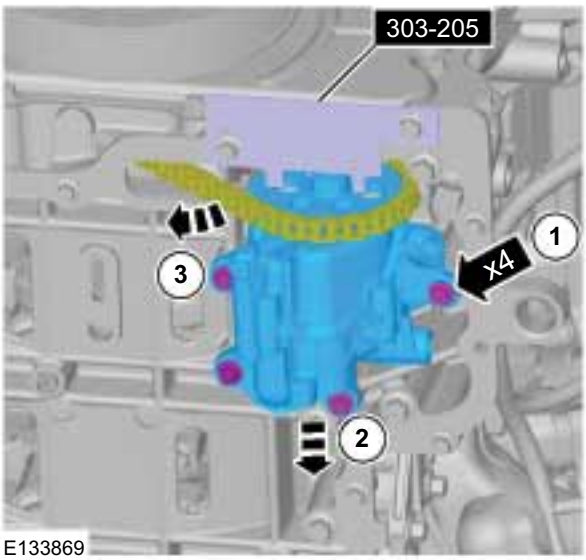

E133869

Installation

1. **NOTE:** The profile of the special tool must be in contact with the oil pump sprocket.

   Special Tool(s): 303-705

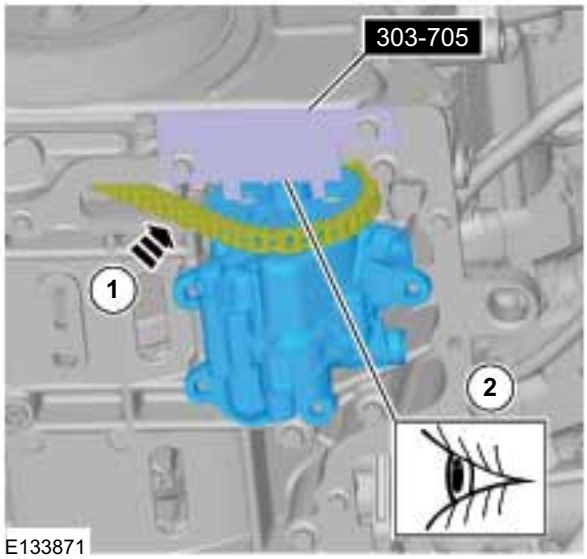

E133871

2. **NOTE:** Hand tighten the bolts at this stage.

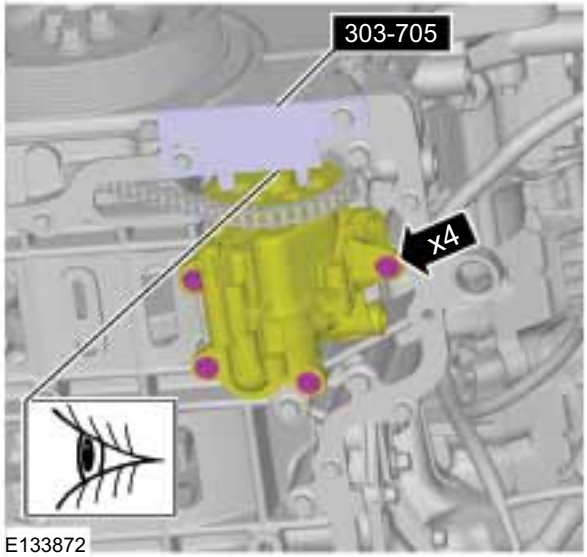

E133872

REMOVAL AND INSTALLATION

3. 1. Torque: 10 Nm

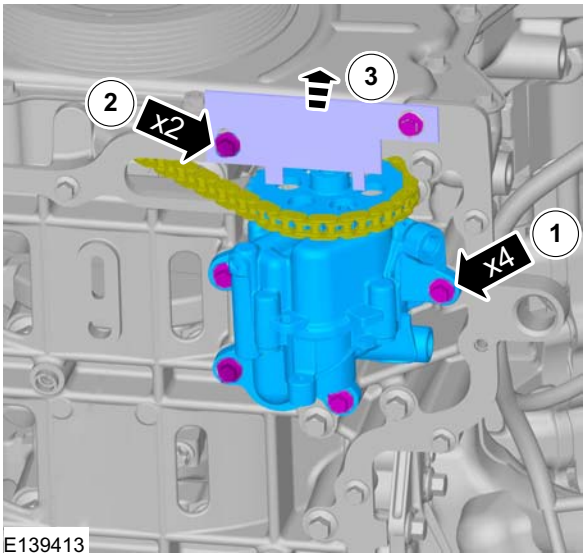

E139413

4. Torque: 13 Nm

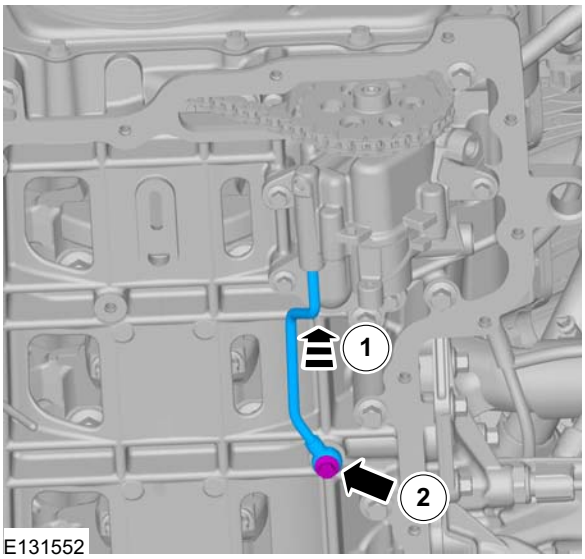

E131552

4x2

5. Torque: 10 Nm

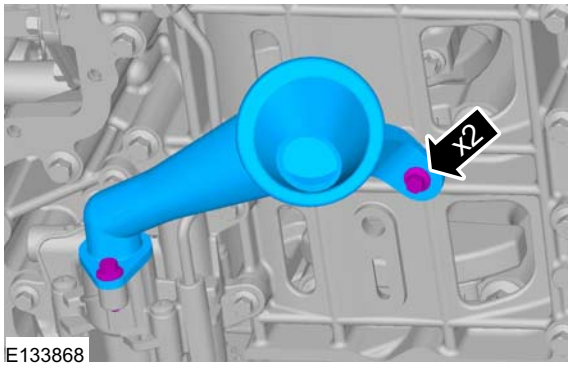

E133868

All vehicles

6. Refer to: Oil Pan (303-01 Engine - 2.2L Duratorq-TDCi (88kW/120PS) - Puma/2.2L Duratorq-TDCi (96kW/130PS) - Puma/2.2L Duratorq-TDCi (110kW/150PS) - Puma, Removal and Installation).

REMOVAL AND INSTALLATION

Valves

Special Tool(s)

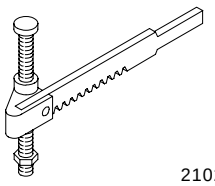 21024	303-060 Compressor, Valve Spring
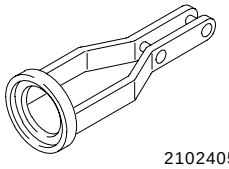 2102405	303-060-05 Adapter for 303-060

Special Tool(s)

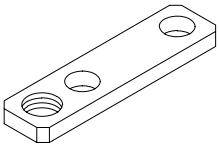	303-060-07 Adapter for 303-060
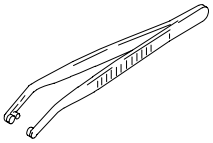 21156	303-362 Installer, Valve Stem Collets

Removal

NOTE: Removal steps in this procedure may contain installation details.

1. Refer to: Cylinder Head (303-01 Engine - 2.2L Duratorq-TDCi (88kW/120PS) - Puma/2.2L Duratorq-TDCi (96kW/130PS) - Puma/2.2L Duratorq-TDCi (110kW/150PS) - Puma, Removal and Installation).
2. **NOTE:** Position a socket on the valve spring seat and gently strike it with a hammer.

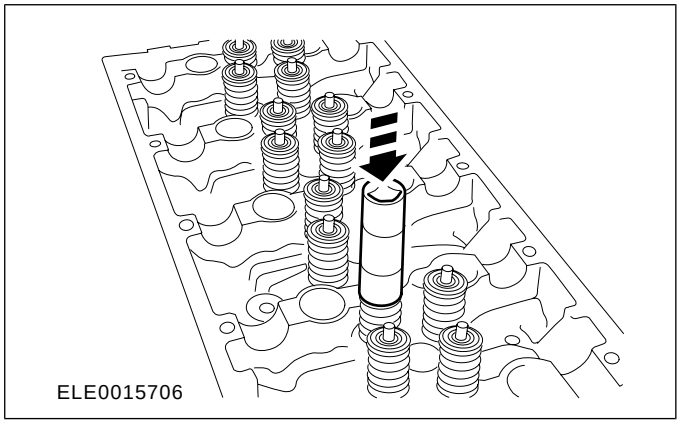

3. Special Tool(s): 303-060, 303-060-05, 303-060-07, 303-362

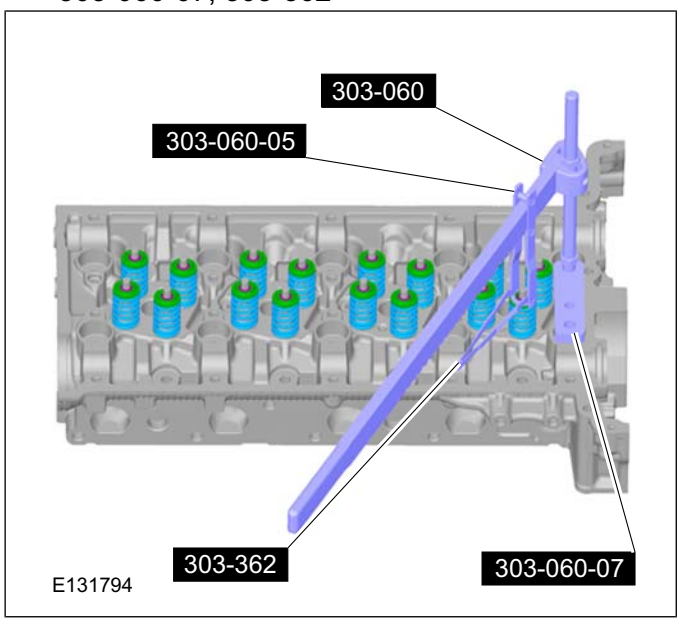

REMOVAL AND INSTALLATION

4.

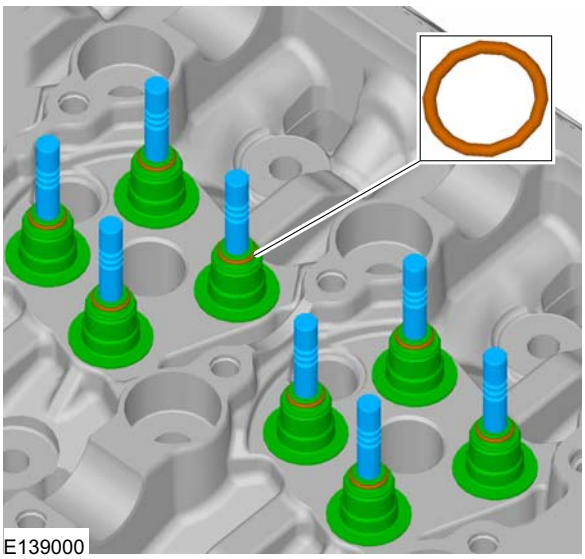

Installation

1. To install, reverse the removal procedure.

REMOVAL AND INSTALLATION

Valve Cover(21 141 0)

Removal

NOTE: Removal steps in this procedure may contain installation details.

All vehicles

1.

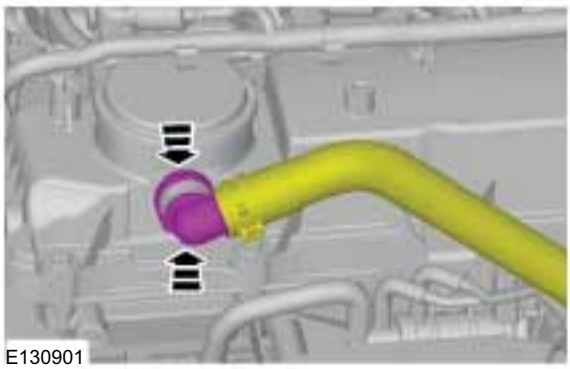

Vehicles with fixed vane turbocharger

2.

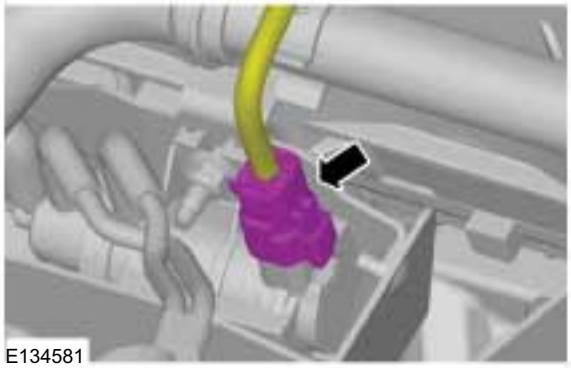

3. 1. Torque: 10 Nm
2. Torque: 23 Nm

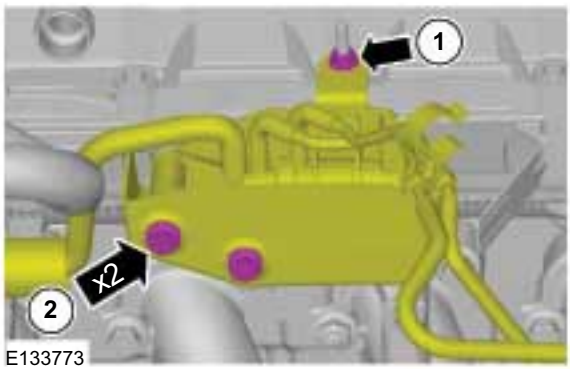

All vehicles

4. Refer to: Fuel Injectors (303-04 Fuel Charging and Controls - 2.2L Duratorq-TDCi (88kW/120PS) - Puma/2.2L Duratorq-TDCi (96kW/130PS) - Puma/2.2L Duratorq-TDCi (110kW/150PS) - Puma, Removal and Installation).

5. 1. Torque:
- Stage 1: 5 Nm
- Stage 2: 35 Nm

2. Torque: 10 Nm

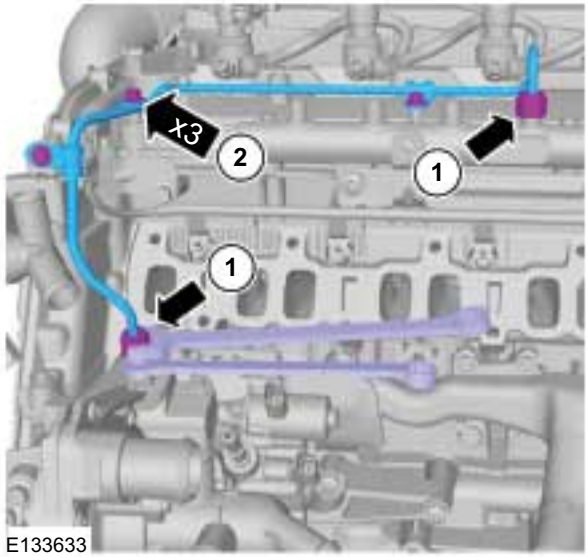

6.

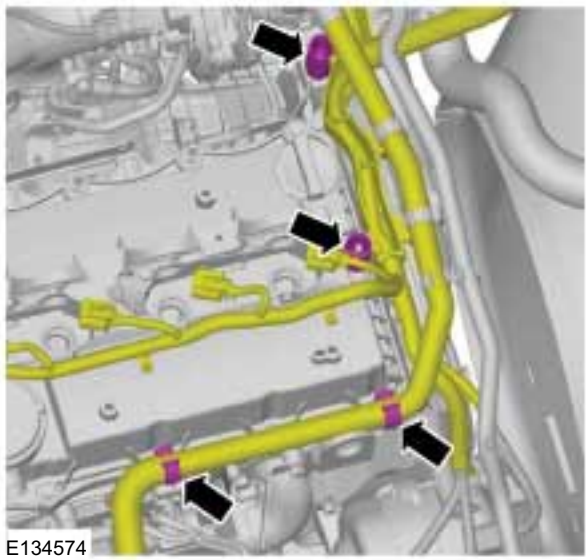

REMOVAL AND INSTALLATION

7. Torque: 10 Nm

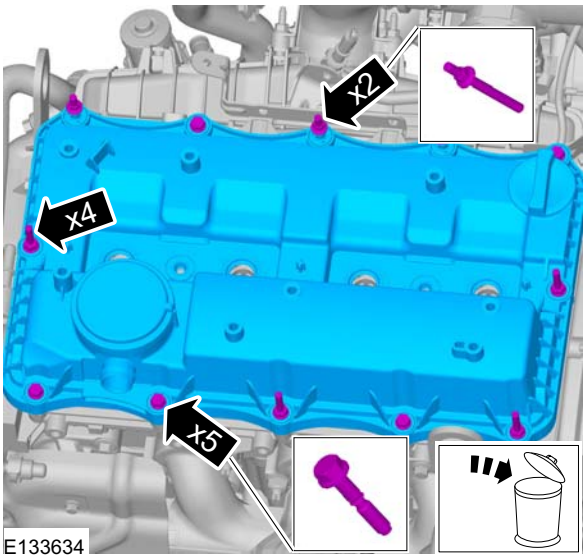

8.

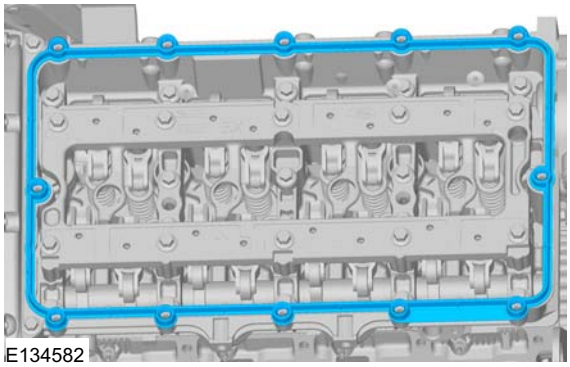

Installation

NOTE: Install a new valve cover gasket as necessary.

1. To install, reverse the removal procedure.

REMOVAL AND INSTALLATION

Valve Stem Seals(21 238 0)

Special Tool(s)

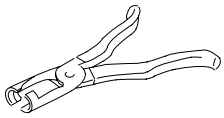 21165	303-390 Pliers, Valve Stem Seal

Removal

1. Refer to: Valve Springs (303-01 Engine - 2.2L Duratorq-TDCi (88kW/120PS) - Puma/2.2L Duratorq-TDCi (96kW/130PS) - Puma/2.2L Duratorq-TDCi (110kW/150PS) - Puma, Removal and Installation).
2. Special Tool(s): 303-390

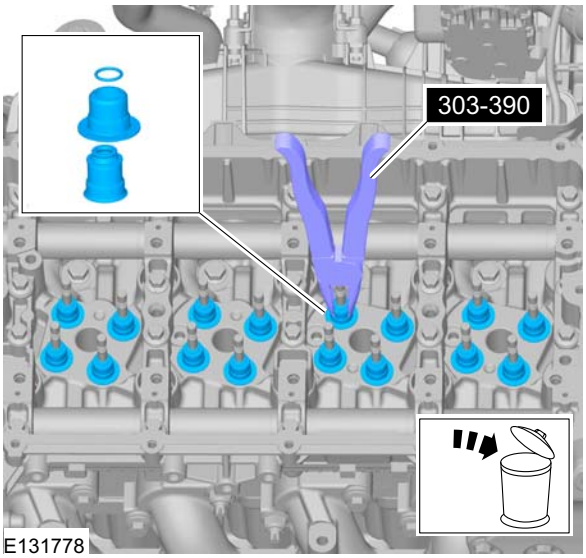

Installation

1. To install, reverse the removal procedure.

REMOVAL AND INSTALLATION

Valve Springs

Special Tool(s)

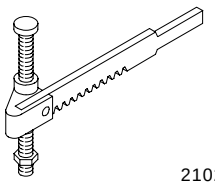 21024	303-060 Compressor, Valve Spring
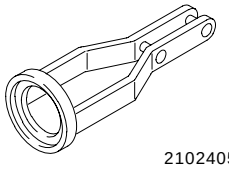 2102405	303-060-05 Adapter for 303-060

Special Tool(s)

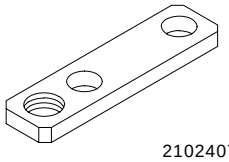 2102407	303-060-07 Adapter for 303-060
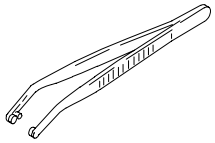 21156	303-362 Installer, Valve Stem Collets

Removal

NOTE: Removal steps in this procedure may contain installation details.

1. Refer to: Valve Cover (303-01 Engine - 2.2L Duratorq-TDCi (88kW/120PS) - Puma/2.2L Duratorq-TDCi (96kW/130PS) - Puma/2.2L Duratorq-TDCi (110kW/150PS) - Puma, Removal and Installation).

2.

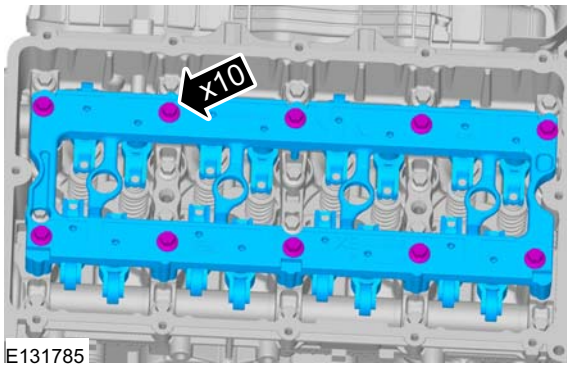

E131785

3. Position the appropriate piston at top dead center (TDC).

4. Using the special tools, remove the valve collets.

   Special Tool(s): 303-060, 303-060-05, 303-060-07, 303-362

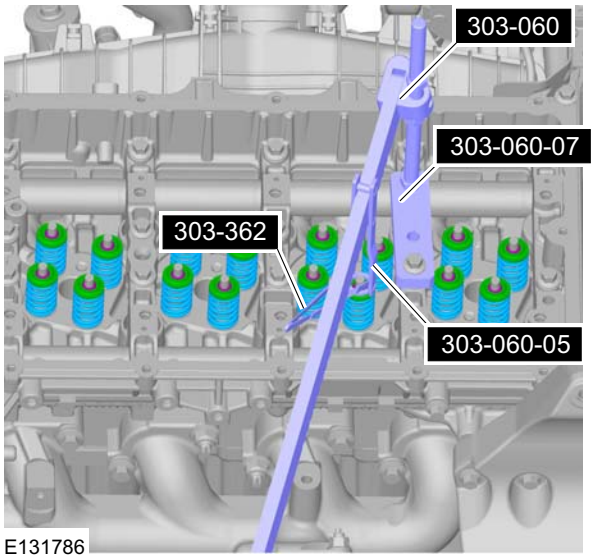

E131786

REMOVAL AND INSTALLATION

Installation

1.

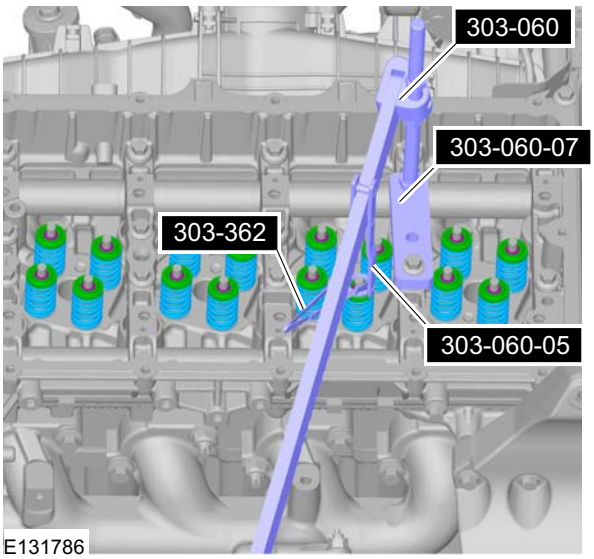

2. Torque:
- Stage 1: 10 Nm
- Stage 2: 30°

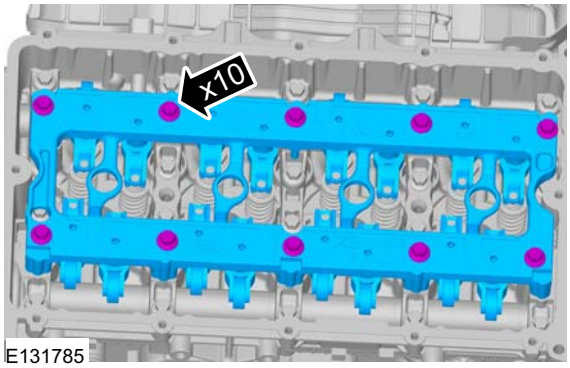

3. Refer to: Valve Cover (303-01 Engine - 2.2L Duratorq-TDCi (88kW/120PS) - Puma/2.2L Duratorq-TDCi (96kW/130PS) - Puma/2.2L Duratorq-TDCi (110kW/150PS) - Puma, Removal and Installation).

REMOVAL

Engine — Vehicles With: 5-Speed Manual Transmission - MT75(21 132 0; 21 132 6; 21 132 7)

Removal

Special Tool(s) / General Equipment

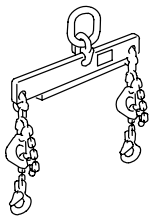 21068A	303-122 Lifting Bracket, Engine
Transmission Jack	

1. Refer to: Health and Safety Precautions (100-00 General Information, Description and Operation).
2. Refer to: Battery Disconnect and Connect (414-01 Battery, Mounting and Cables, General Procedures).
3. Refer to: Cooling System Draining, Filling and Bleeding - 2.2L Duratorq-TDCi (88kW/120PS) - Puma/2.2L Duratorq-TDCi (96kW/130PS) - Puma/2.2L Duratorq-TDCi (110kW/150PS) - Puma/3.2L Duratorq-TDCi (148kW/200PS) - Puma (303-03 Engine Cooling - 3.2L Duratorq-TDCi (148kW/200PS) - Puma, General Procedures).
4. Refer to: Air Conditioning (A/C) System Recovery, Evacuation and Charging (412-00 Climate Control System - General Information, General Procedures).
5. Refer to: Lifting (100-02 Jacking and Lifting, Description and Operation).
6.

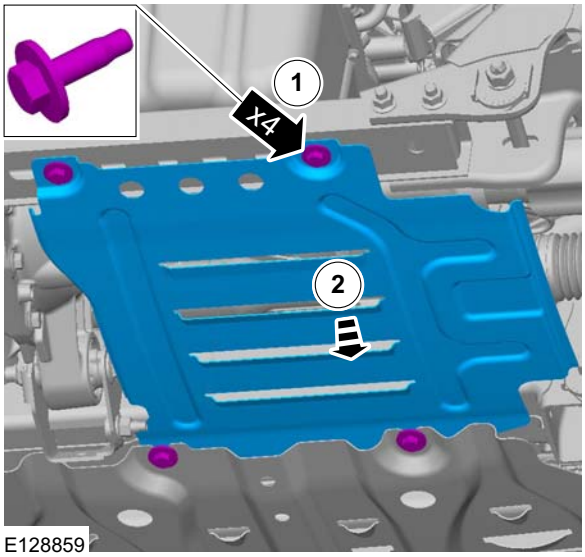

E128859

303-01B-50

REMOVAL

7.

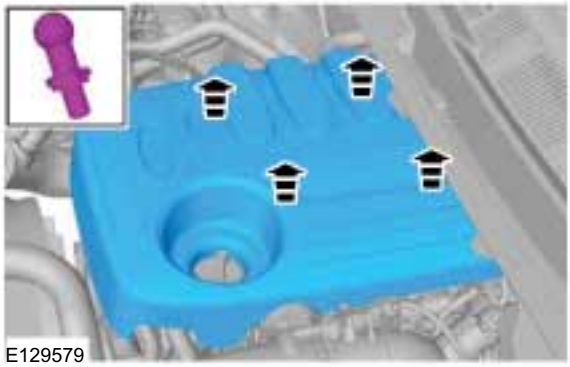

8.

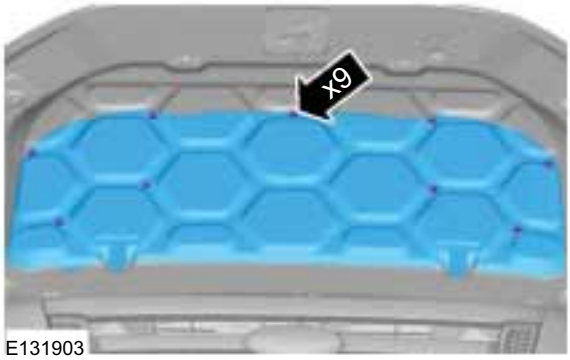

9.

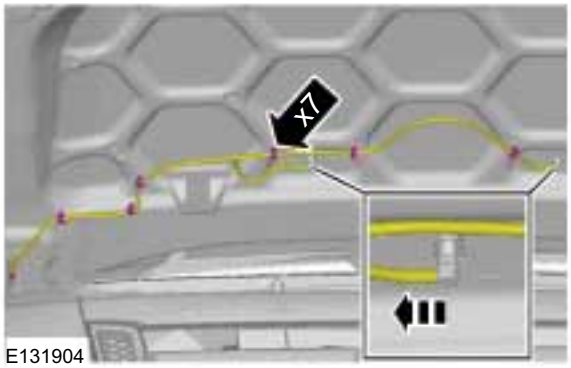

10.

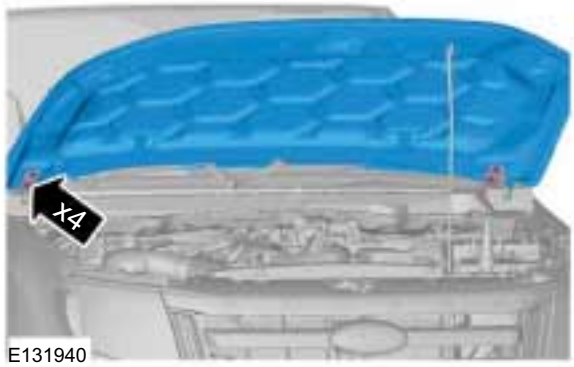

11. Refer to: Cowl Panel Grille (501-02 Front End Body Panels, Removal and Installation).

12.

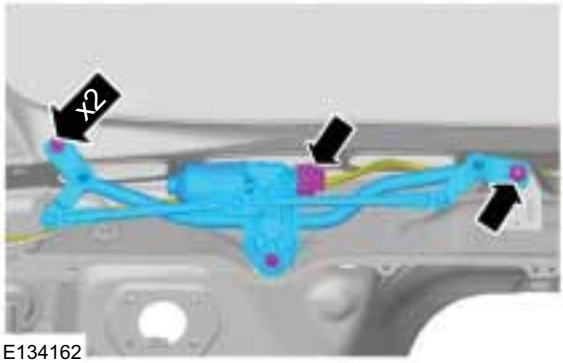

13. On both sides.

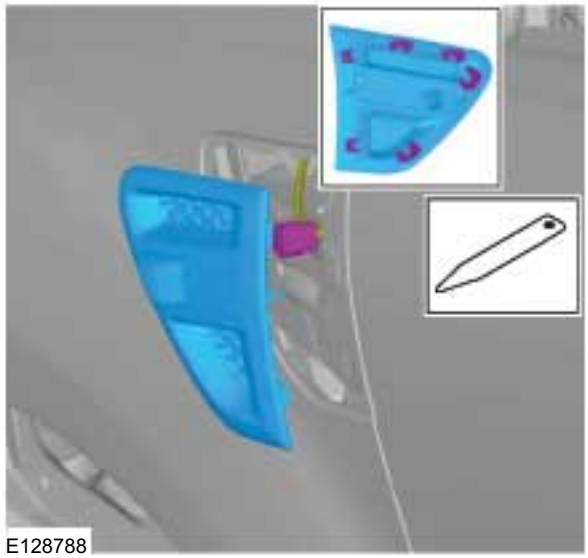

14.

REMOVAL

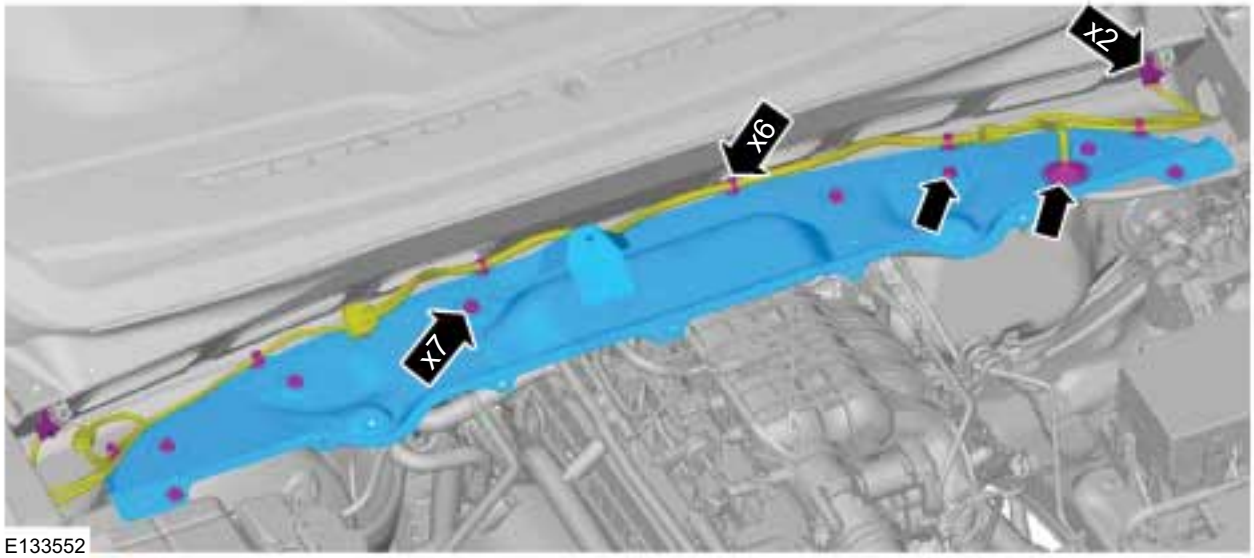

E133552

15.

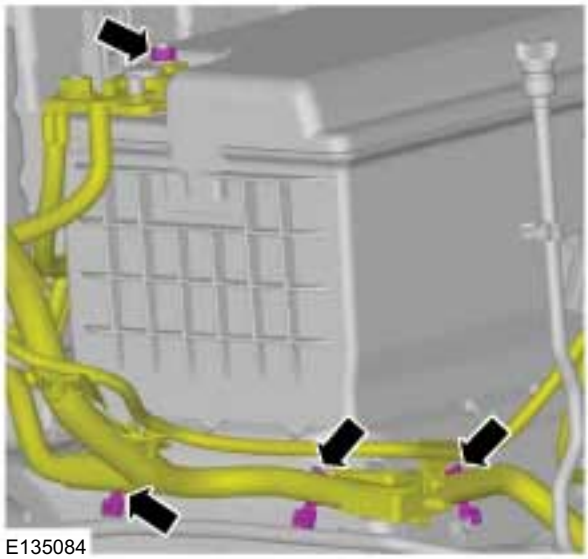
E135084

16.

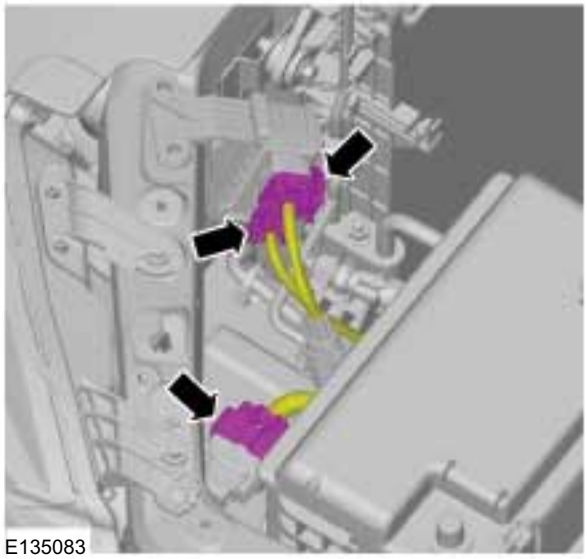
E135083

REMOVAL

17. Refer to: Battery (414-01 Battery, Mounting and Cables, Removal and Installation).

18. Refer to: Battery Tray (414-01 Battery, Mounting and Cables, Removal and Installation).

19. Refer to: Powertrain Control Module (PCM) (303-14 Electronic Engine Controls - 2.5L Duratec-HE (122kW/165PS) - MI4, Removal and Installation).
Refer to: Powertrain Control Module (PCM) (303-14 Electronic Engine Controls - 2.2L Duratorq-TDCi (88kW/120PS) - Puma/2.2L Duratorq-TDCi (96kW/130PS) - Puma/2.2L Duratorq-TDCi (110kW/150PS) - Puma/3.2L Duratorq-TDCi (148kW/200PS) - Puma, Removal and Installation).

20.

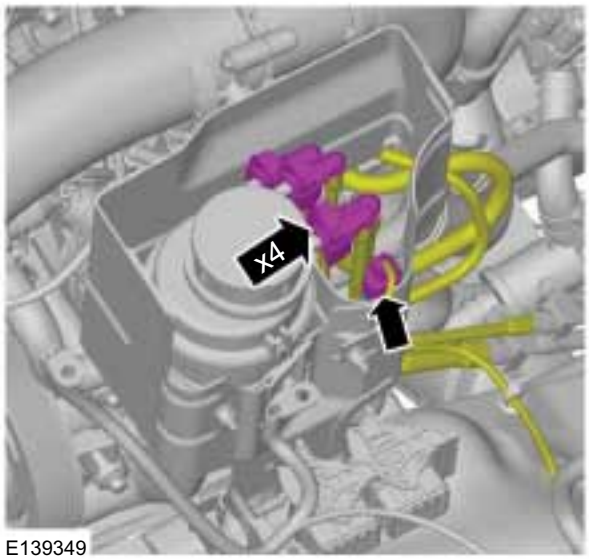

E139349

21.

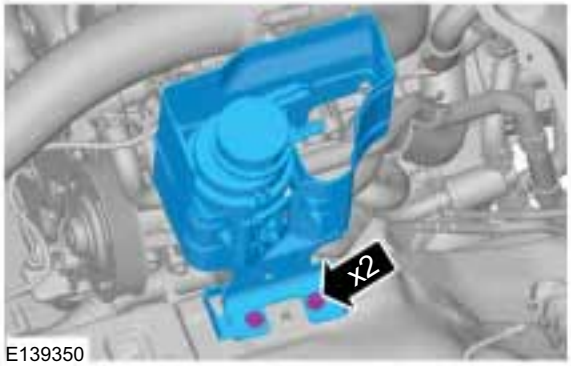

E139350

22.

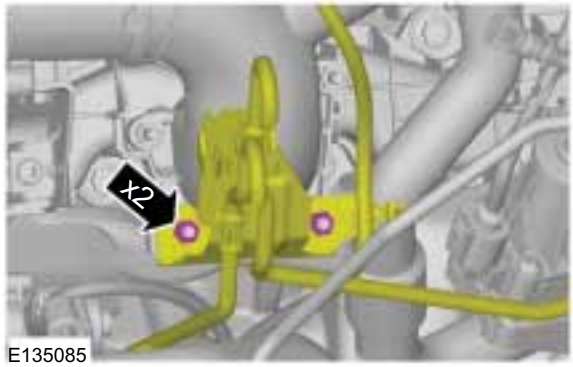

E135085

23.

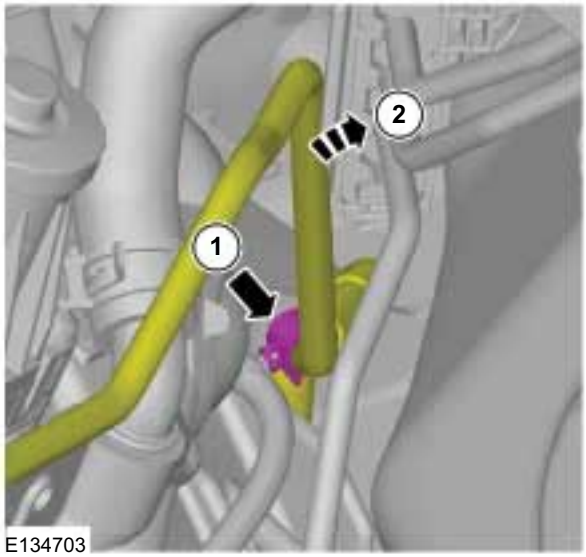

E134703

24.

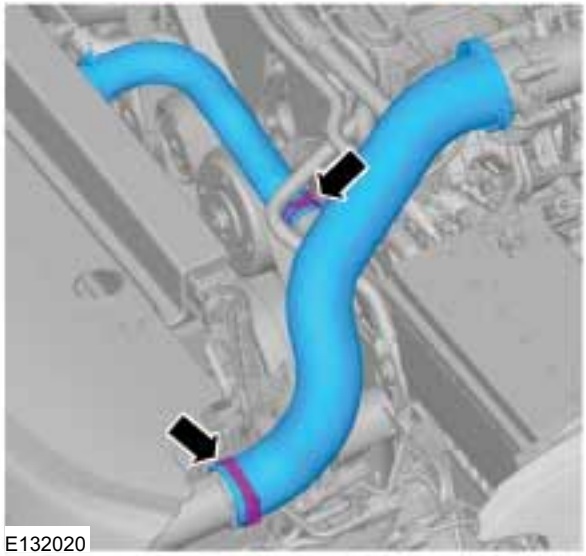
E132020

REMOVAL

25. Refer to: Cooling Fan Motor and Shroud (303-03 Engine Cooling - 2.2L Duratorq-TDCi (88kW/120PS) - Puma/2.2L Duratorq-TDCi (96kW/130PS) - Puma/2.2L Duratorq-TDCi (110kW/150PS) - Puma, Removal and Installation).

26. Refer to: Radiator (303-03 Engine Cooling - 2.2L Duratorq-TDCi (88kW/120PS) - Puma/2.2L Duratorq-TDCi (96kW/130PS) - Puma/2.2L Duratorq-TDCi (110kW/150PS) - Puma, Removal and Installation).

27. Refer to: Condenser - 2.2L Duratorq-TDCi (88kW/120PS) - Puma/2.2L Duratorq-TDCi (96kW/130PS) - Puma/2.2L Duratorq-TDCi (110kW/150PS) - Puma/3.2L Duratorq-TDCi (148kW/200PS) - Puma (412-01 Climate Control, Removal and Installation).

28.

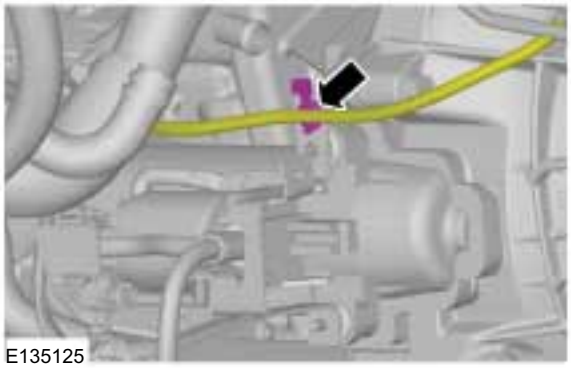
E135125

29. Refer to: Starter Motor - 2.2L Duratorq-TDCi (88kW/120PS) - Puma/2.2L Duratorq-TDCi (96kW/130PS) - Puma/2.2L Duratorq-TDCi (110kW/150PS) - Puma (303-06 Starting System - 2.2L Duratorq-TDCi (88kW/120PS) - Puma/2.2L Duratorq-TDCi (96kW/130PS) - Puma/2.2L Duratorq-TDCi (110kW/150PS) - Puma/3.2L Duratorq-TDCi (148kW/200PS) - Puma, Removal and Installation).

30.

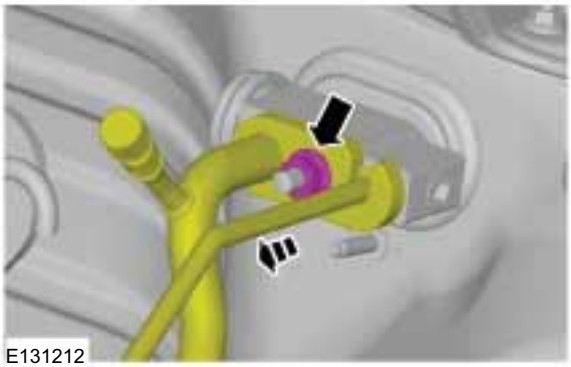
E131212

31.

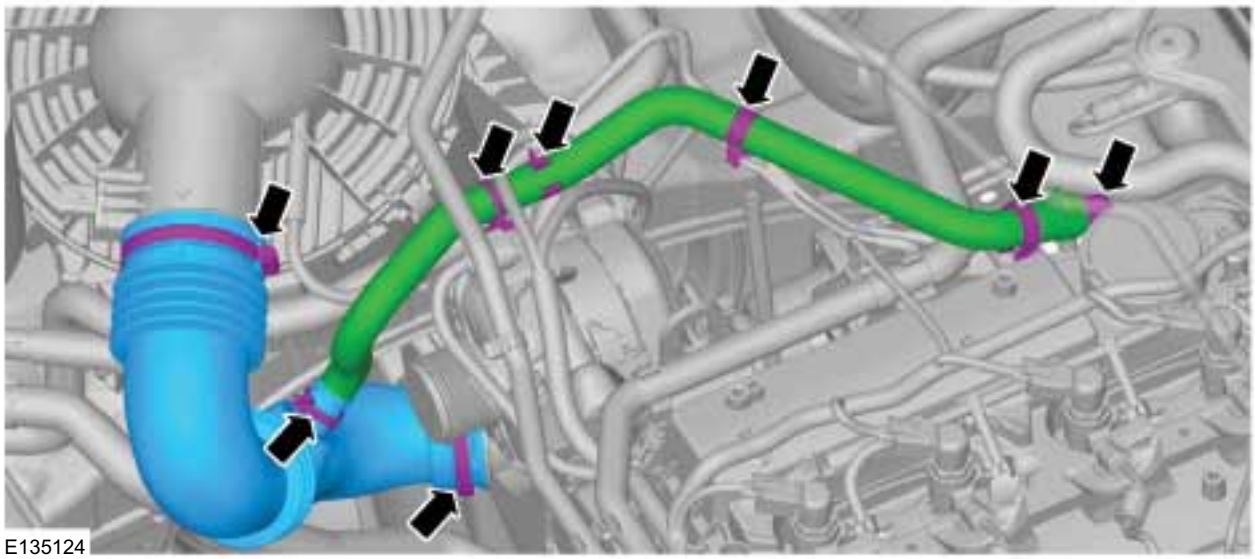
E135124

REMOVAL

32. Refer to: Air Cleaner - 2.2L Duratorq-TDCi (88kW/120PS) - Puma/2.2L Duratorq-TDCi (96kW/130PS) - Puma/2.2L Duratorq-TDCi (110kW/150PS) - Puma (303-12 Intake Air Distribution and Filtering - 2.2L Duratorq-TDCi (88kW/120PS) - Puma/2.2L Duratorq-TDCi (96kW/130PS) - Puma/2.2L Duratorq-TDCi (110kW/150PS) - Puma/3.2L Duratorq-TDCi (148kW/200PS) - Puma, Removal and Installation).

33. **NOTE:** Make sure that all openings are sealed.

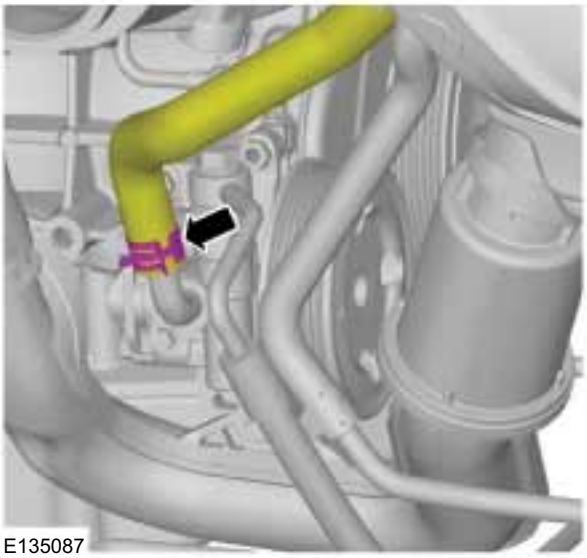
E135087

34. ⚠ **CAUTION: Cap the power steering line to prevent fluid loss or dirt ingress.**

NOTE: The washers can be reused unless damaged.

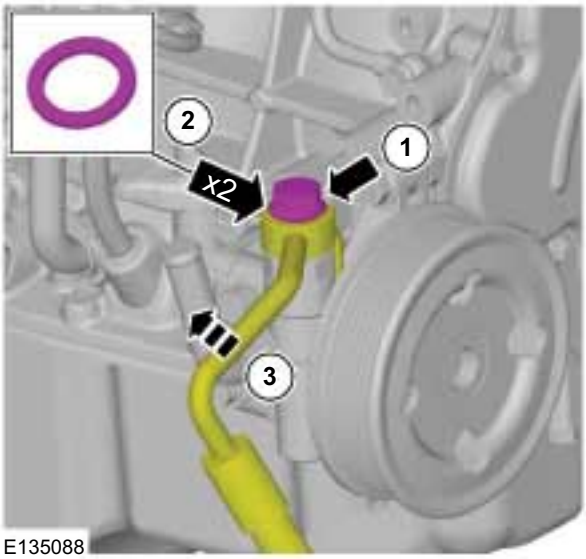

E135088

35.

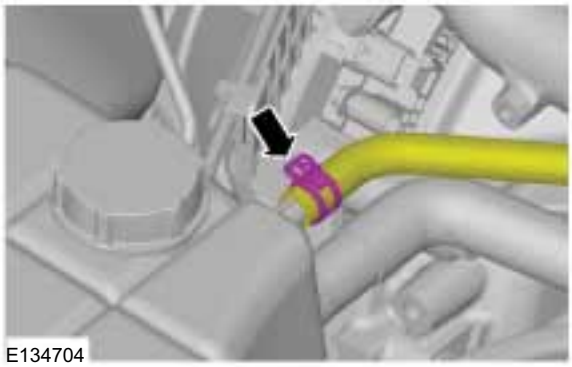
E134704

36.

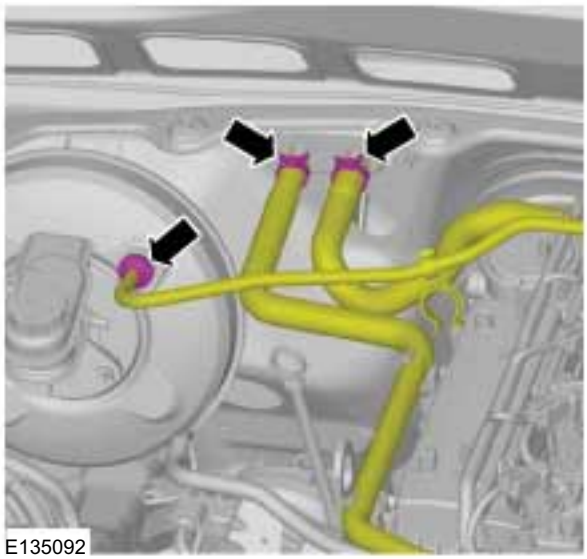
E135092

37.

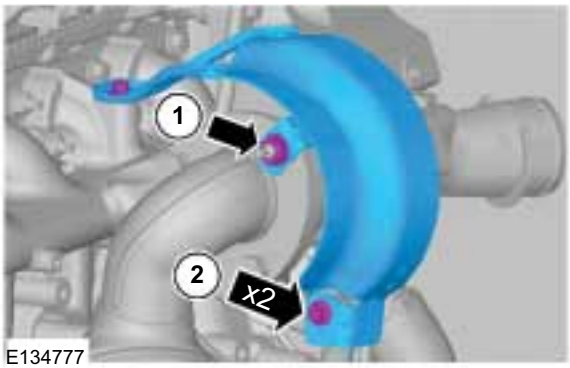

E134777

REMOVAL

38. Refer to: Catalytic Converter (309-00 Exhaust System - 2.2L Duratorq-TDCi (88kW/120PS) - Puma/2.2L Duratorq-TDCi (96kW/130PS) - Puma/2.2L Duratorq-TDCi (110kW/150PS) - Puma/3.2L Duratorq-TDCi (148kW/200PS) - Puma, Removal and Installation).

39.

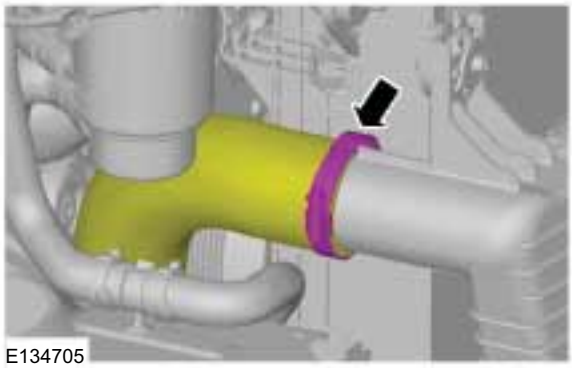
E134705

40.

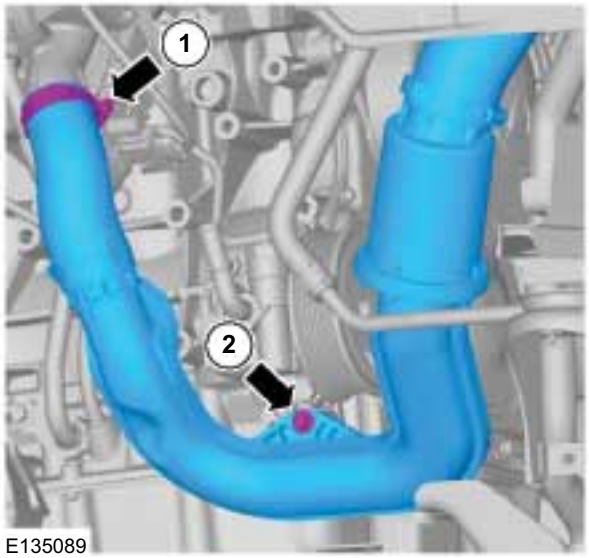

E135089

41.

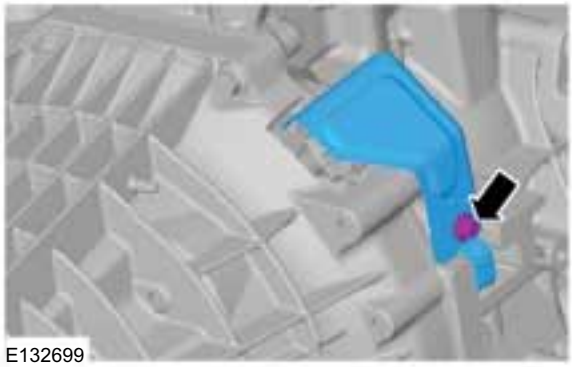
E132699

42.

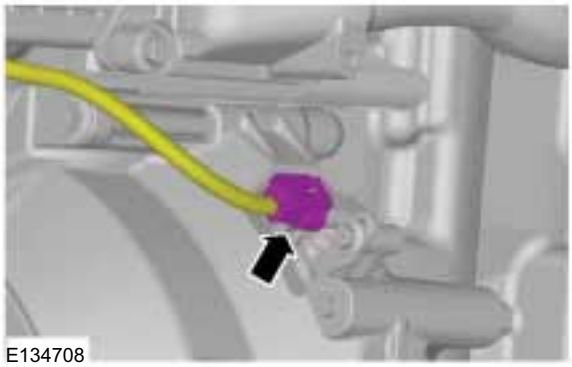
E134708

43.

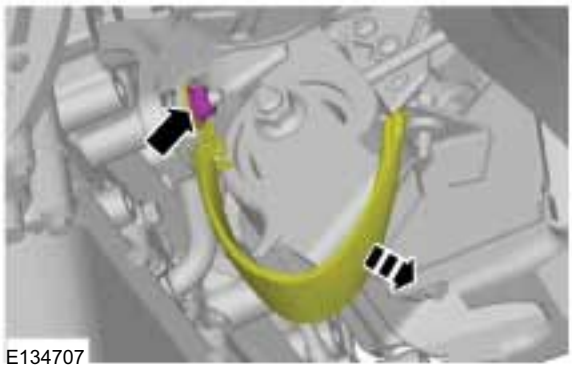
E134707

44. **WARNING: Make sure that transmission assembly is on wooden blocks and secured with suitable retaining straps.**

CAUTION: Do not tilt the transmission.This may cause damage to the pilot bearing.

REMOVAL

Tie and support the transmission to the chassie with a suitable strap.

General Equipment: Transmission Jack

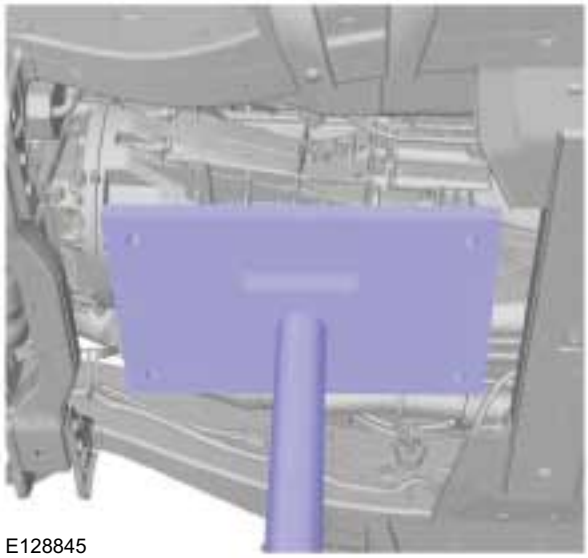
E128845

45.

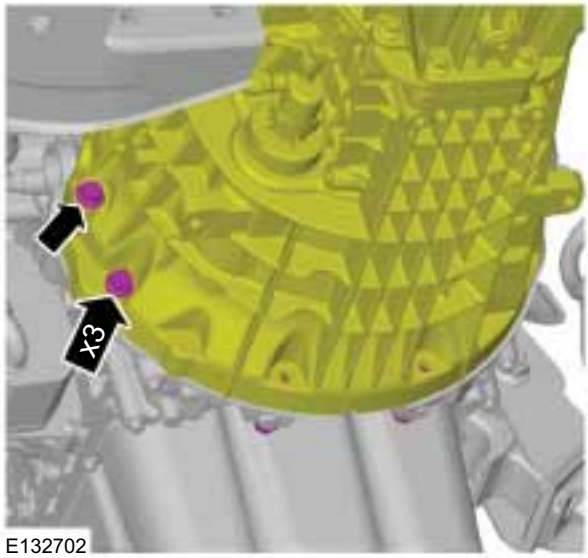

E132702

46.

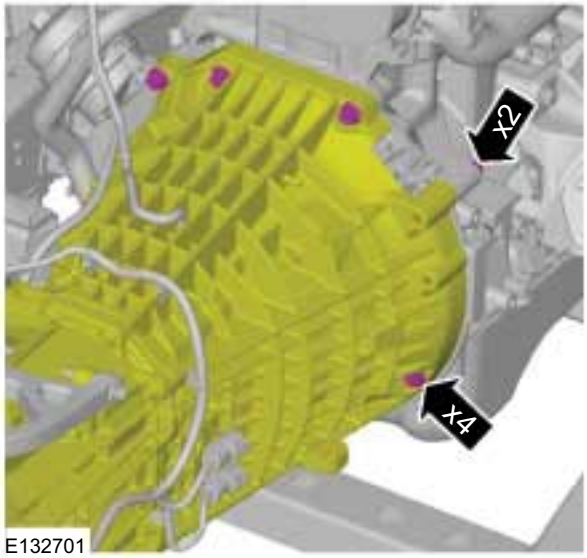

E132701

47. On both sides.

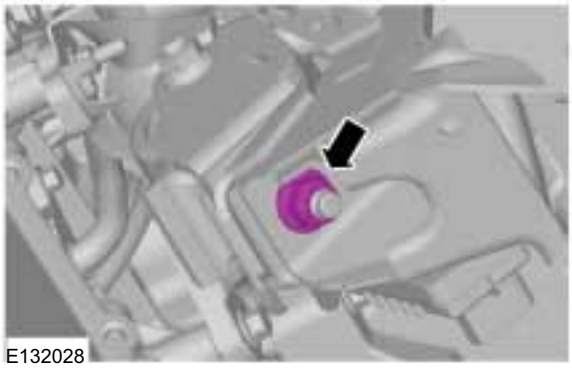
E132028

48. Special Tool(s): 303-122

E68699

REMOVAL

49.

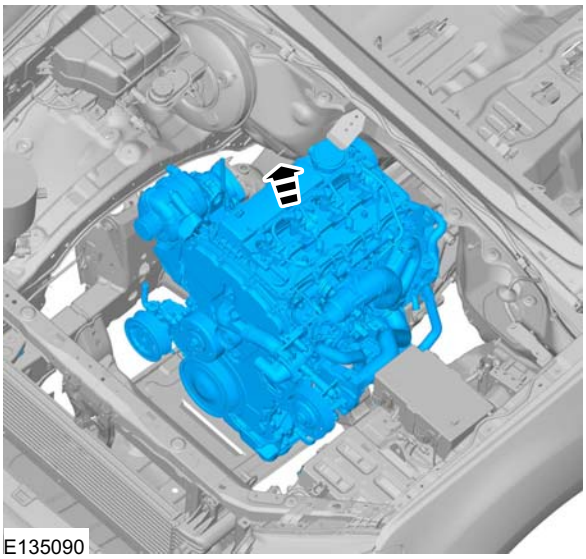
E135090

50.

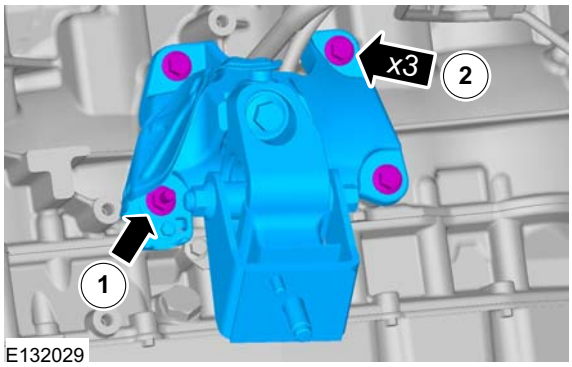

E132029

REMOVAL

Engine — Vehicles With: 6-Speed Manual Transmission - MT82(21 132 0; 21 132 6; 21 132 7)

Removal

Special Tool(s) / General Equipment

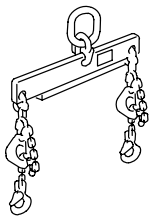 21068A	303-122 Lifting Bracket, Engine
Transmission Jack	

1. Refer to: Health and Safety Precautions (100-00 General Information, Description and Operation).
2. Refer to: Battery Disconnect and Connect (414-01 Battery, Mounting and Cables, General Procedures).
3. Refer to: Cooling System Draining, Filling and Bleeding - 2.2L Duratorq-TDCi (88kW/120PS) - Puma/2.2L Duratorq-TDCi (96kW/130PS) - Puma/2.2L Duratorq-TDCi (110kW/150PS) - Puma/3.2L Duratorq-TDCi (148kW/200PS) - Puma (303-03 Engine Cooling - 3.2L Duratorq-TDCi (148kW/200PS) - Puma, General Procedures).
4. Refer to: Air Conditioning (A/C) System Recovery, Evacuation and Charging (412-00 Climate Control System - General Information, General Procedures).
5. Refer to: Lifting (100-02 Jacking and Lifting, Description and Operation).
6.

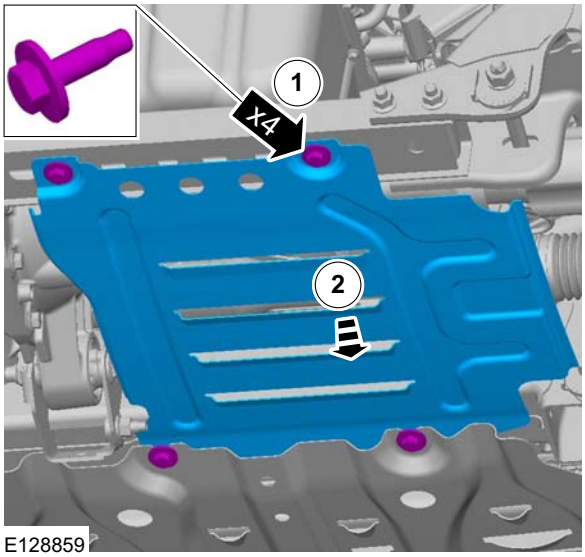

E128859

REMOVAL

7.

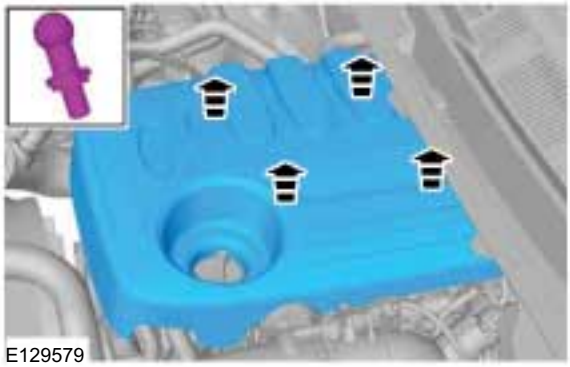

8.

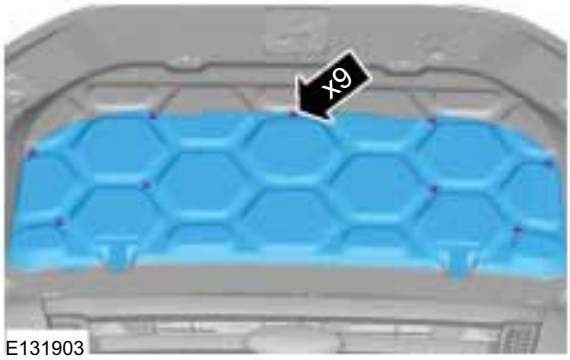

9.

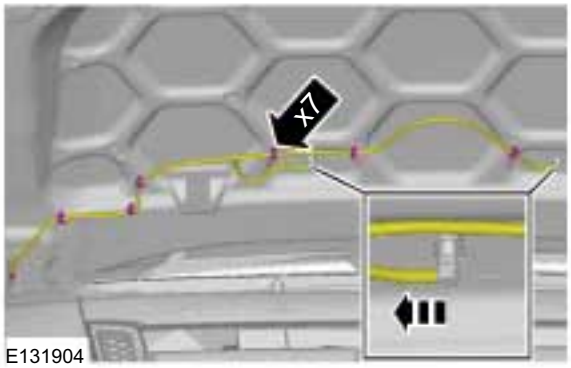

10.

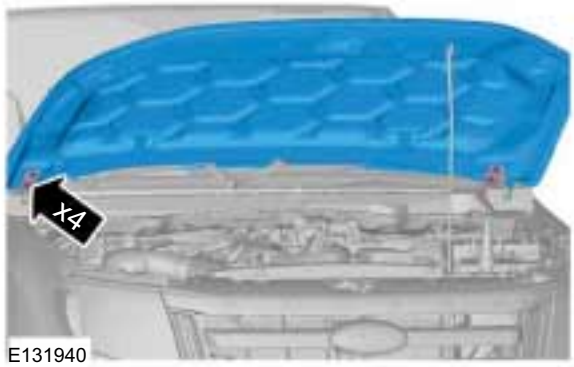

11. Refer to: Cowl Panel Grille (501-02 Front End Body Panels, Removal and Installation).

12.

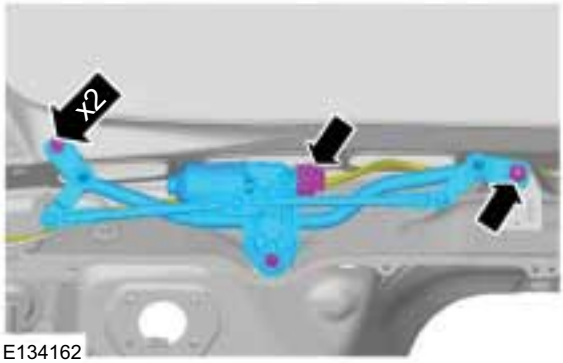

13. On both sides.

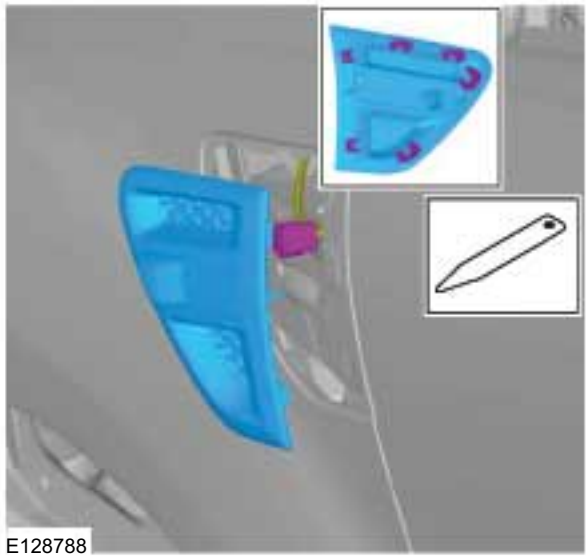

14.

REMOVAL

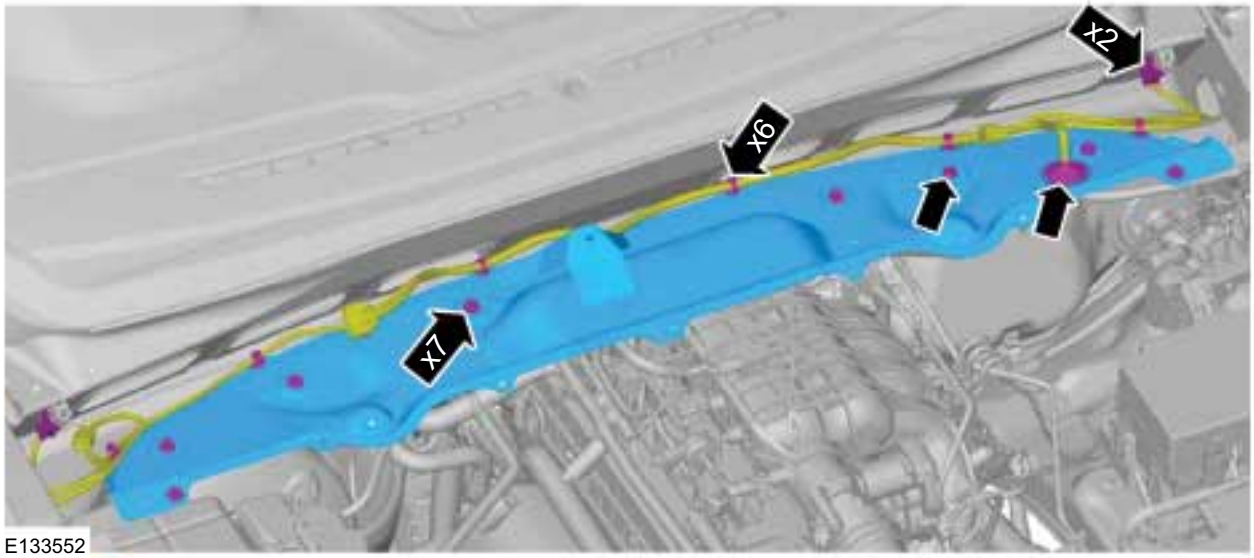

E133552

15.

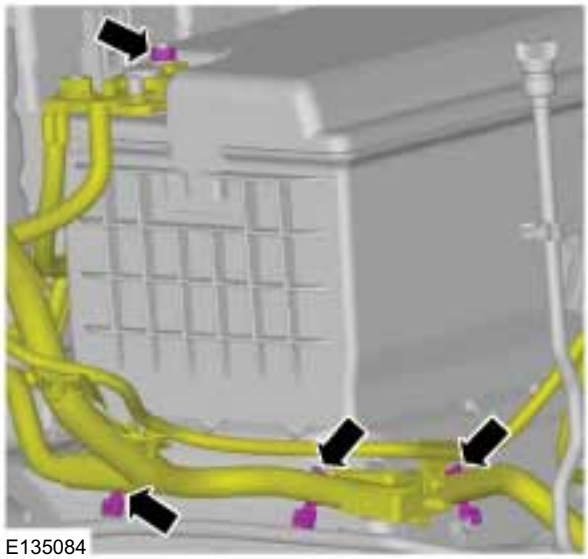
E135084

16.

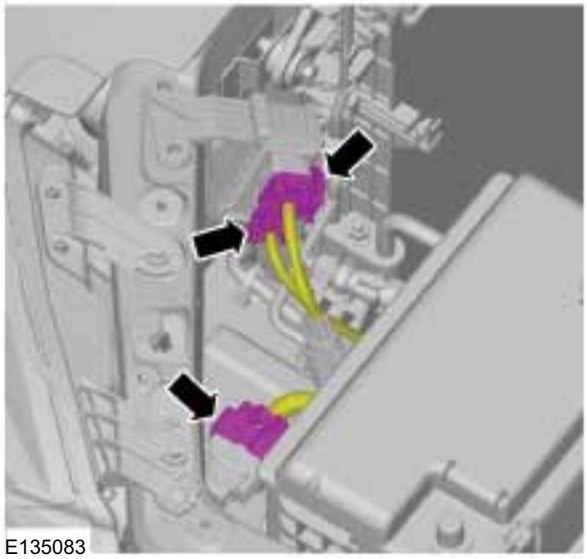
E135083

REMOVAL

17. Refer to: Battery (414-01 Battery, Mounting and Cables, Removal and Installation).

18. Refer to: Battery Tray (414-01 Battery, Mounting and Cables, Removal and Installation).

19. Refer to: Powertrain Control Module (PCM) (303-14 Electronic Engine Controls - 2.5L Duratec-HE (122kW/165PS) - MI4, Removal and Installation).
Refer to: Powertrain Control Module (PCM) (303-14 Electronic Engine Controls - 2.2L Duratorq-TDCi (88kW/120PS) - Puma/2.2L Duratorq-TDCi (96kW/130PS) - Puma/2.2L Duratorq-TDCi (110kW/150PS) - Puma/3.2L Duratorq-TDCi (148kW/200PS) - Puma, Removal and Installation).

20.

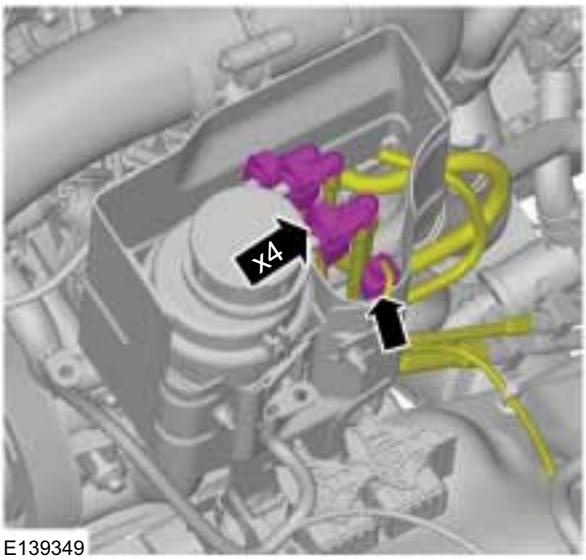

E139349

21.

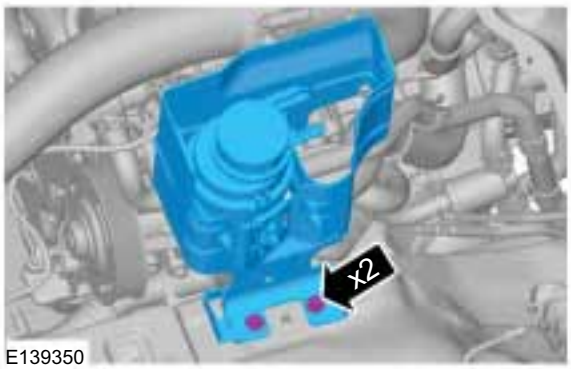

E139350

22.

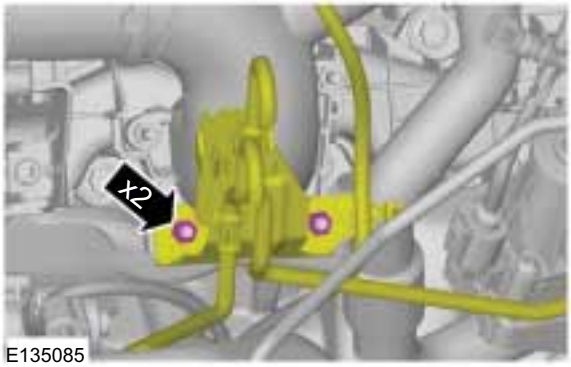

E135085

23.

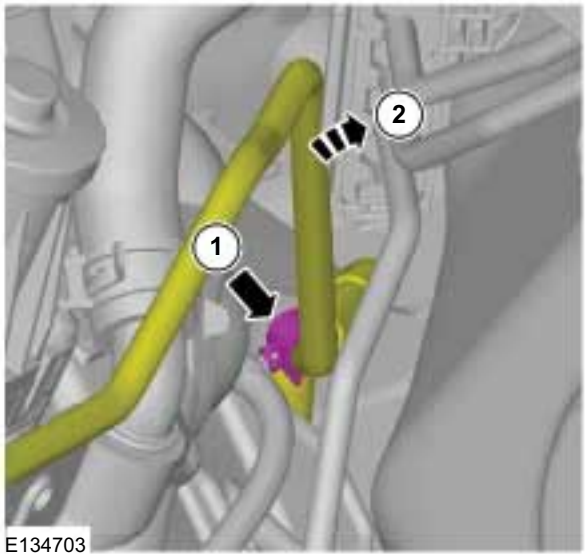

E134703

24.

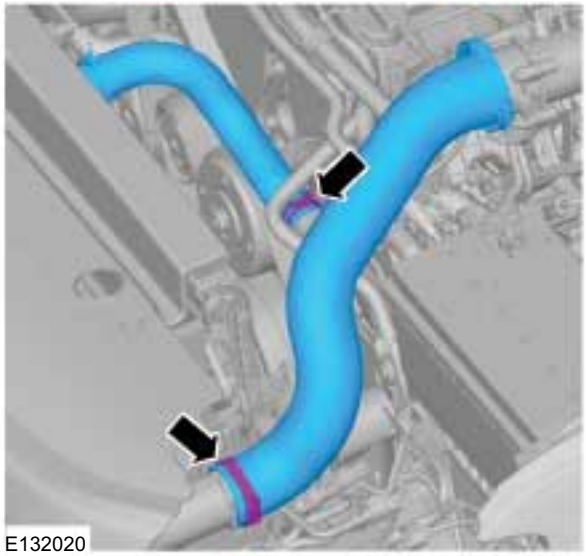
E132020

REMOVAL

25. Refer to: Cooling Fan Motor and Shroud (303-03 Engine Cooling - 2.2L Duratorq-TDCi (88kW/120PS) - Puma/2.2L Duratorq-TDCi (96kW/130PS) - Puma/2.2L Duratorq-TDCi (110kW/150PS) - Puma, Removal and Installation).

26. Refer to: Radiator (303-03 Engine Cooling - 2.2L Duratorq-TDCi (88kW/120PS) - Puma/2.2L Duratorq-TDCi (96kW/130PS) - Puma/2.2L Duratorq-TDCi (110kW/150PS) - Puma, Removal and Installation).

27. Refer to: Condenser - 2.2L Duratorq-TDCi (88kW/120PS) - Puma/2.2L Duratorq-TDCi (96kW/130PS) - Puma/2.2L Duratorq-TDCi (110kW/150PS) - Puma/3.2L Duratorq-TDCi (148kW/200PS) - Puma (412-01 Climate Control, Removal and Installation).

28.

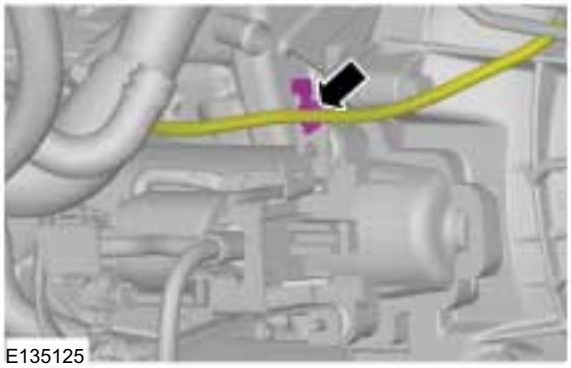
E135125

29. Refer to: Starter Motor - 2.2L Duratorq-TDCi (88kW/120PS) - Puma/2.2L Duratorq-TDCi (96kW/130PS) - Puma/2.2L Duratorq-TDCi (110kW/150PS) - Puma (303-06 Starting System - 2.2L Duratorq-TDCi (88kW/120PS) - Puma/2.2L Duratorq-TDCi (96kW/130PS) - Puma/2.2L Duratorq-TDCi (110kW/150PS) - Puma/3.2L Duratorq-TDCi (148kW/200PS) - Puma, Removal and Installation).

30.

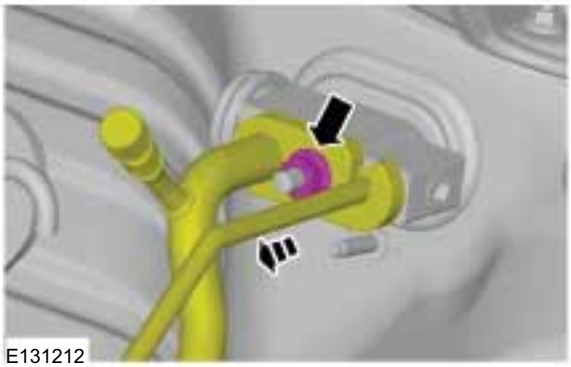
E131212

31.

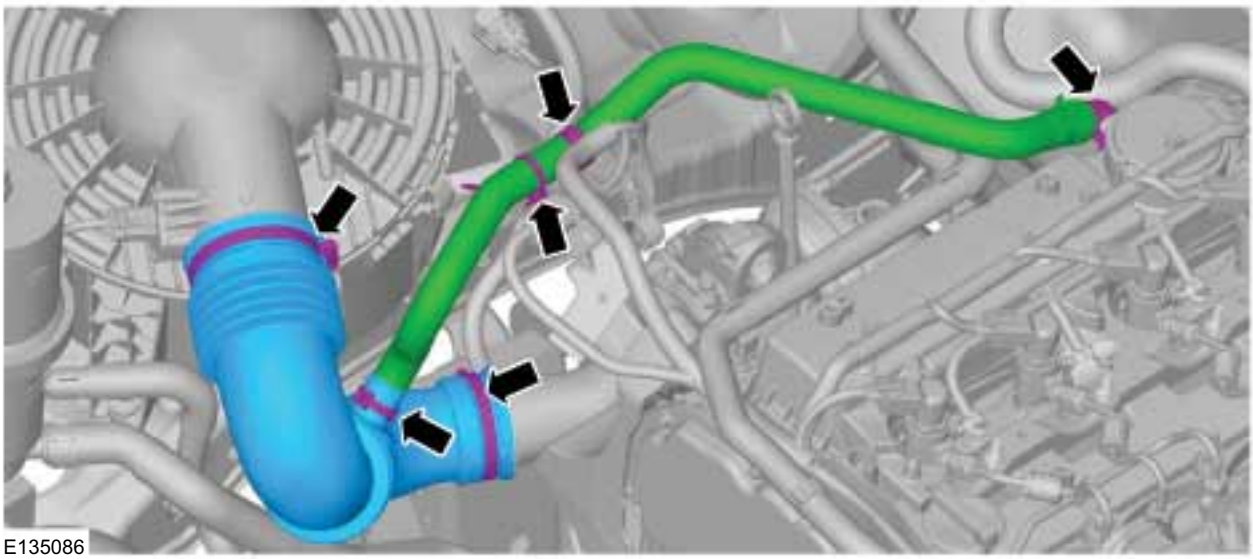
E135086

REMOVAL

32. Refer to: Air Cleaner - 2.2L Duratorq-TDCi (88kW/120PS) - Puma/2.2L Duratorq-TDCi (96kW/130PS) - Puma/2.2L Duratorq-TDCi (110kW/150PS) - Puma (303-12 Intake Air Distribution and Filtering - 2.2L Duratorq-TDCi (88kW/120PS) - Puma/2.2L Duratorq-TDCi (96kW/130PS) - Puma/2.2L Duratorq-TDCi (110kW/150PS) - Puma/3.2L Duratorq-TDCi (148kW/200PS) - Puma, Removal and Installation).

33. **NOTE:** Make sure that all openings are sealed.

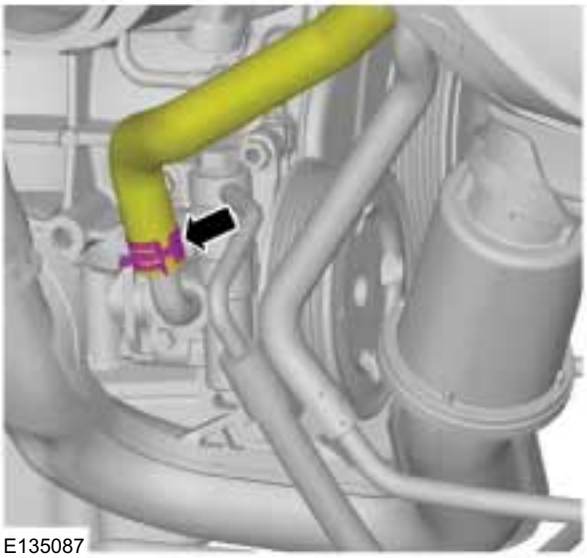
E135087

34. ⚠ **CAUTION: Cap the power steering line to prevent fluid loss or dirt ingress.**

NOTE: The washers can be reused unless damaged.

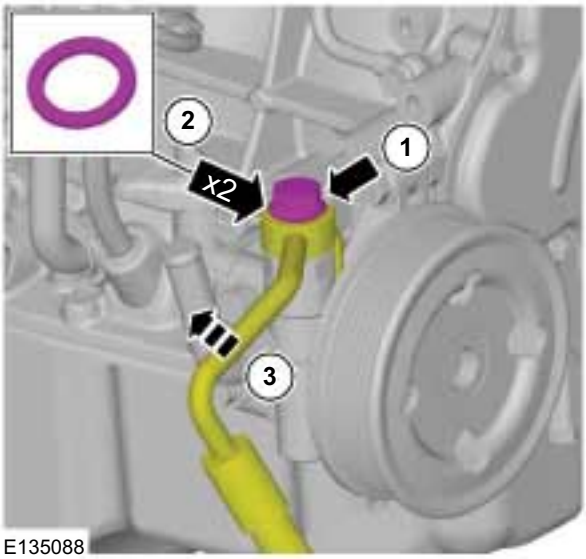

E135088

35.

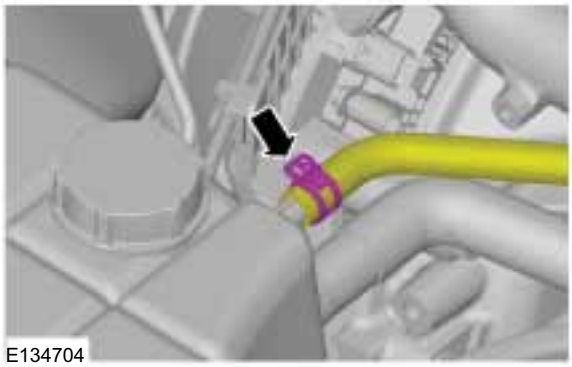
E134704

36.

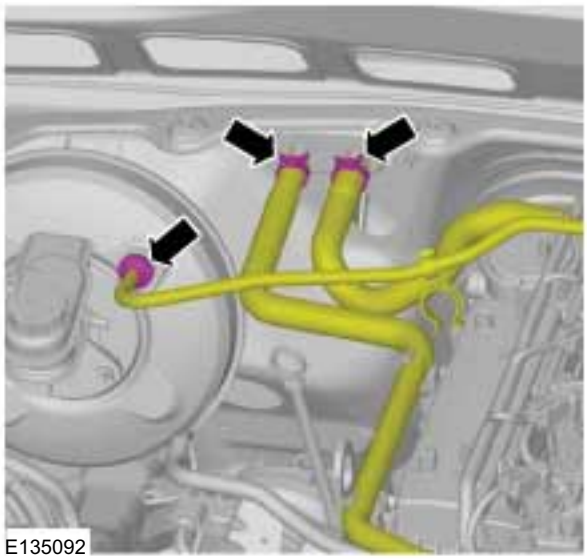
E135092

37.

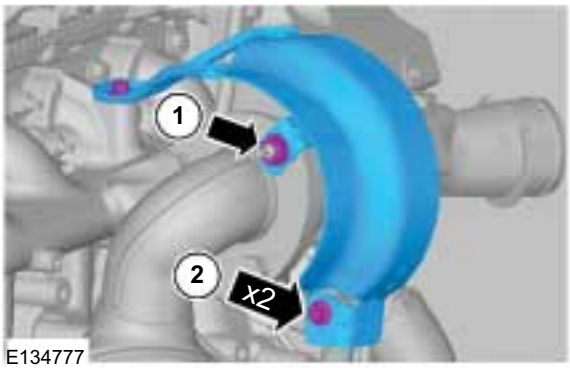

E134777

REMOVAL

38. Refer to: Catalytic Converter (309-00 Exhaust System - 2.2L Duratorq-TDCi (88kW/120PS) - Puma/2.2L Duratorq-TDCi (96kW/130PS) - Puma/2.2L Duratorq-TDCi (110kW/150PS) - Puma/3.2L Duratorq-TDCi (148kW/200PS) - Puma, Removal and Installation).

39.

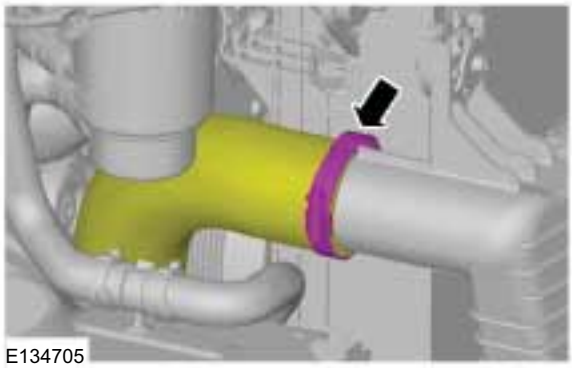
E134705

40.

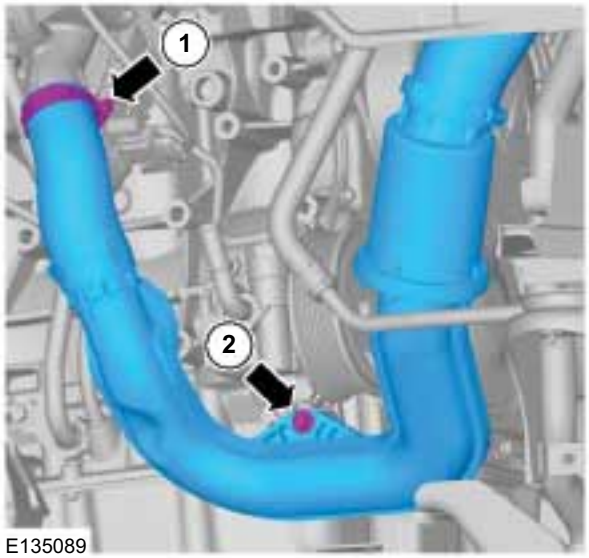

E135089

41.

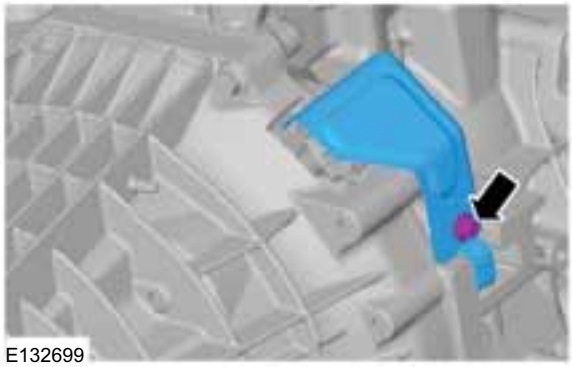
E132699

42.

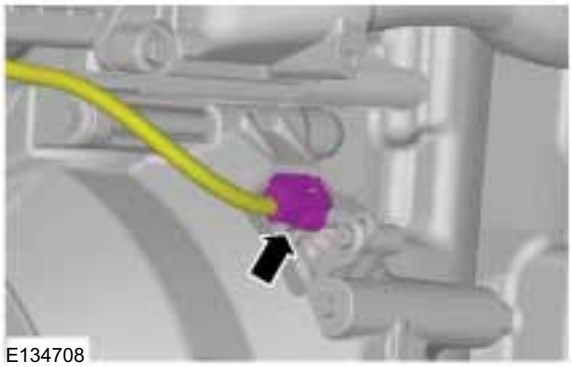
E134708

43.

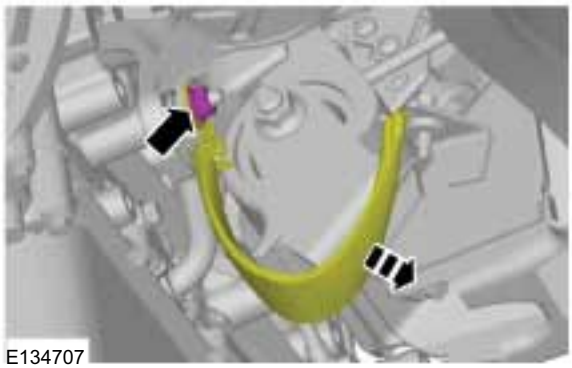
E134707

44. **WARNING: Make sure that transmission assembly is on wooden blocks and secured with suitable retaining straps.**

CAUTION: Do not tilt the transmission.This may cause damage to the pilot bearing.

REMOVAL

Tie and support the transmission to the chassis with a suitable strap.

General Equipment: Transmission Jack

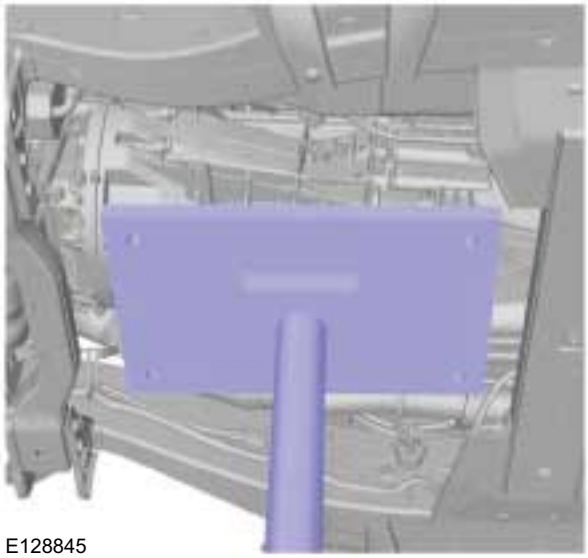
E128845

45.

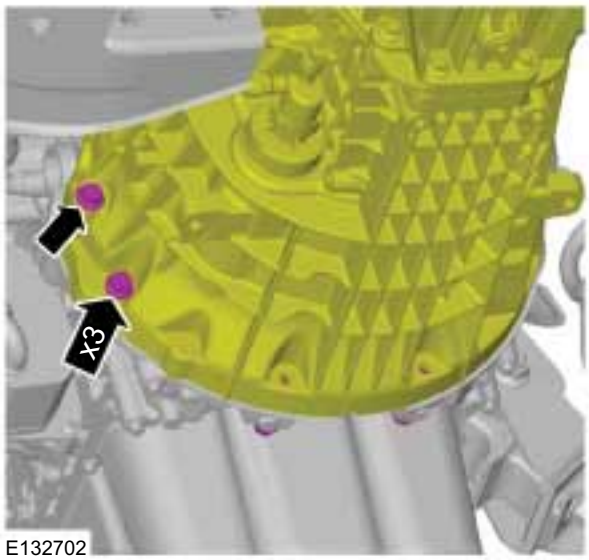

E132702

46.

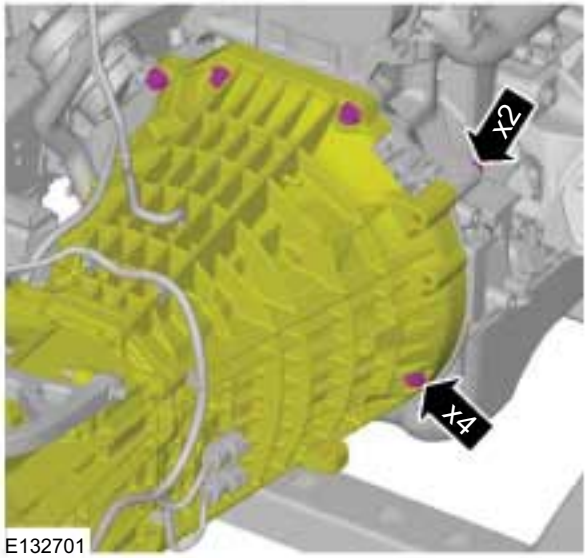

E132701

47. On both sides.

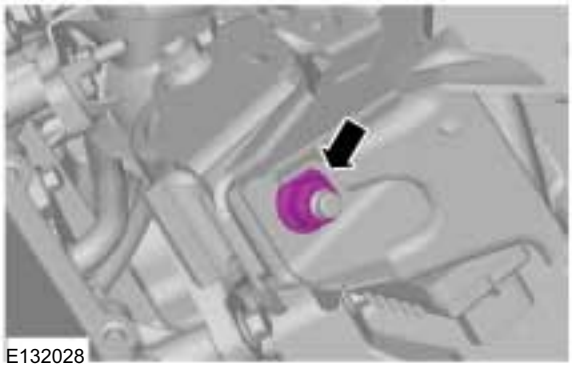
E132028

48. Special Tool(s): 303-122

E68699

REMOVAL

49.

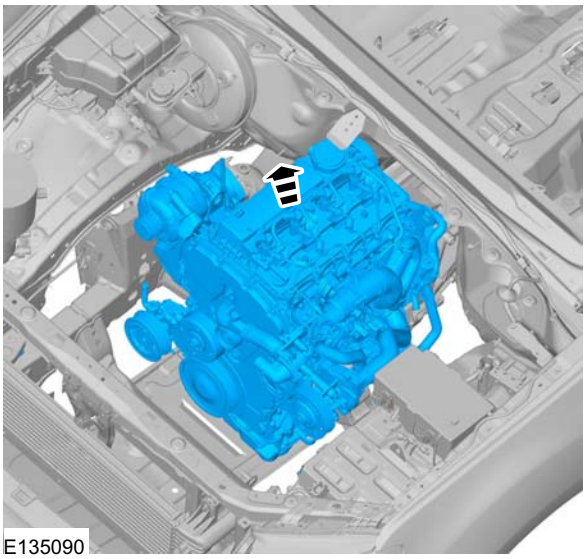

50.

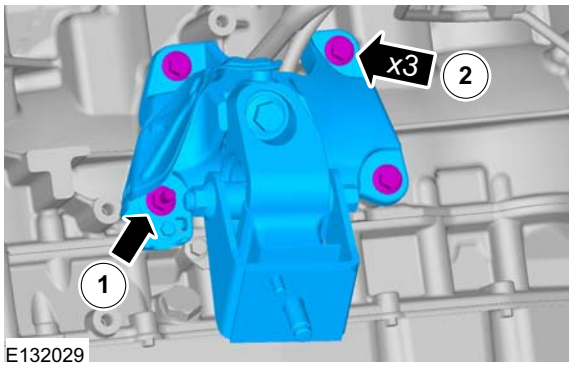

REMOVAL

Engine — Vehicles With: 6-Speed Automatic Transaxle - 6R80(21 132 0; 21 132 6; 21 132 7)

Removal

Special Tool(s) / General Equipment

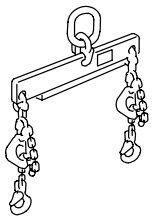 21068A	303-122 Lifting Bracket, Engine
Transmission Jack	

1. Refer to: Health and Safety Precautions (100-00 General Information, Description and Operation).
2. Refer to: Battery Disconnect and Connect (414-01 Battery, Mounting and Cables, General Procedures).
3. Refer to: Cooling System Draining, Filling and Bleeding - 2.2L Duratorq-TDCi (88kW/120PS) - Puma/2.2L Duratorq-TDCi (96kW/130PS) - Puma/2.2L Duratorq-TDCi (110kW/150PS) - Puma/3.2L Duratorq-TDCi (148kW/200PS) - Puma (303-03 Engine Cooling - 3.2L Duratorq-TDCi (148kW/200PS) - Puma, General Procedures).
4. Refer to: Air Conditioning (A/C) System Recovery, Evacuation and Charging (412-00 Climate Control System - General Information, General Procedures).
5. Refer to: Lifting (100-02 Jacking and Lifting, Description and Operation).
6.

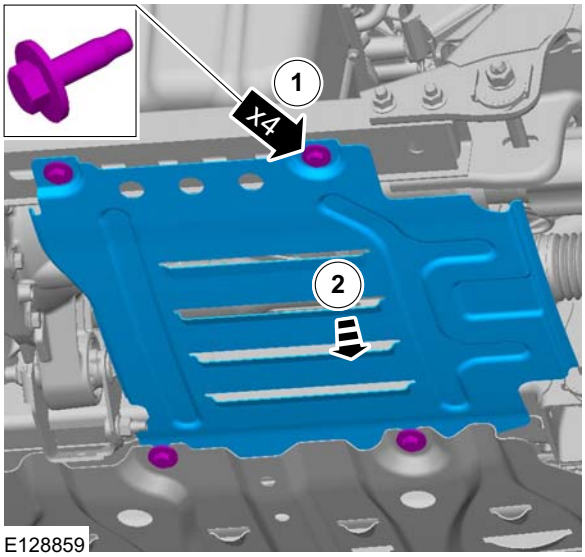

E128859

REMOVAL

7.

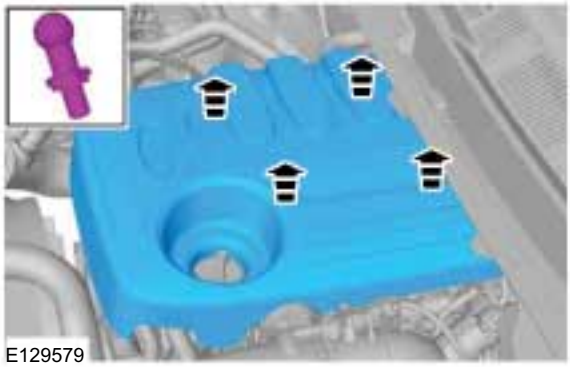

8.

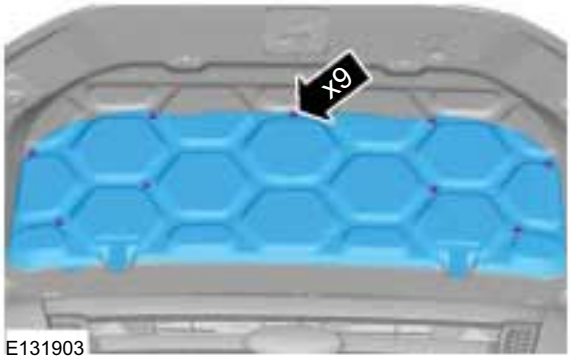

9.

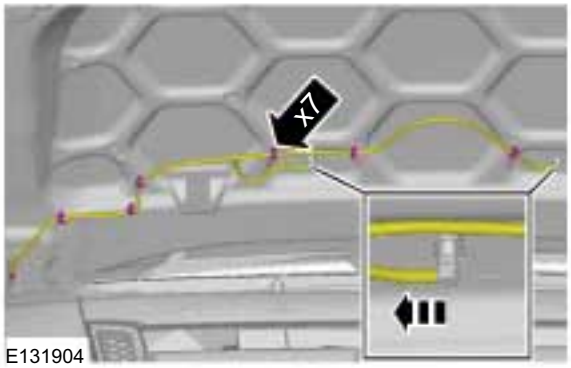

10.

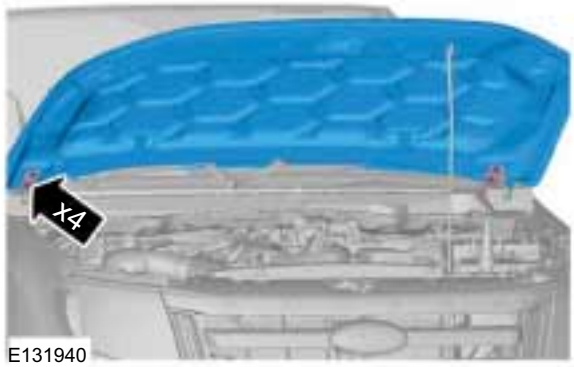

11. Refer to: Cowl Panel Grille (501-02 Front End Body Panels, Removal and Installation).

12.

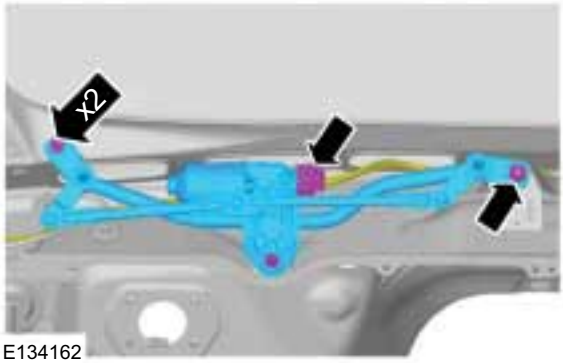

13. On both sides.

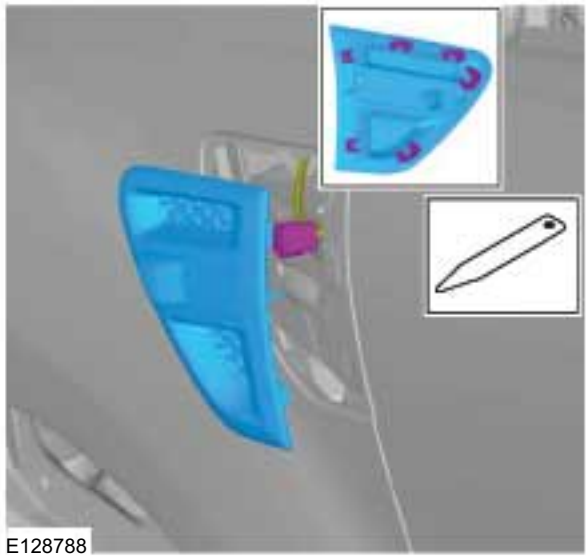

14.

REMOVAL

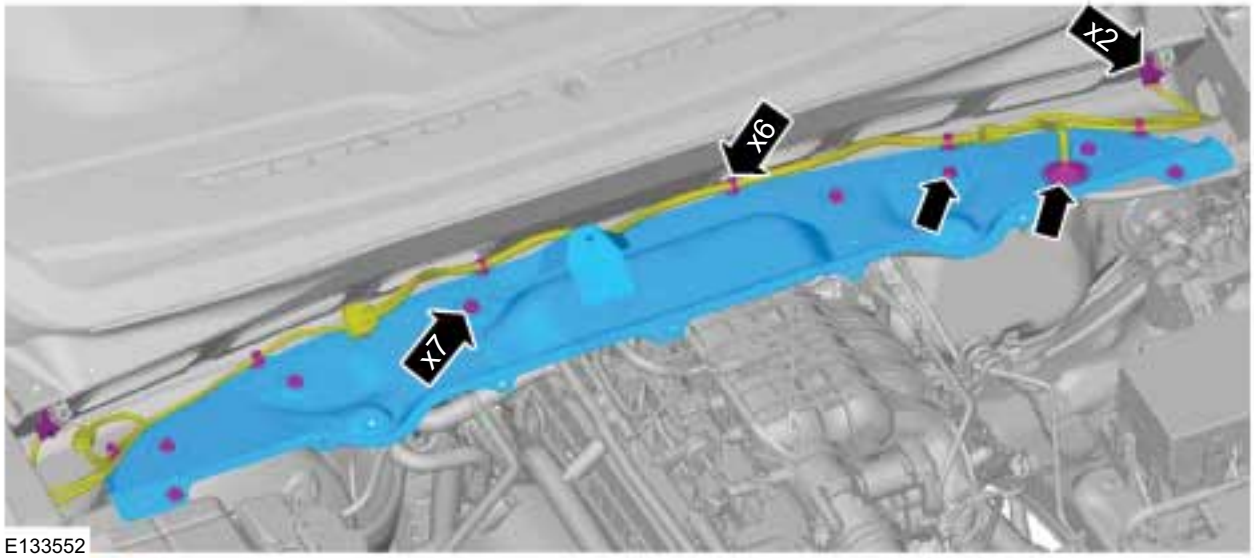

E133552

15.

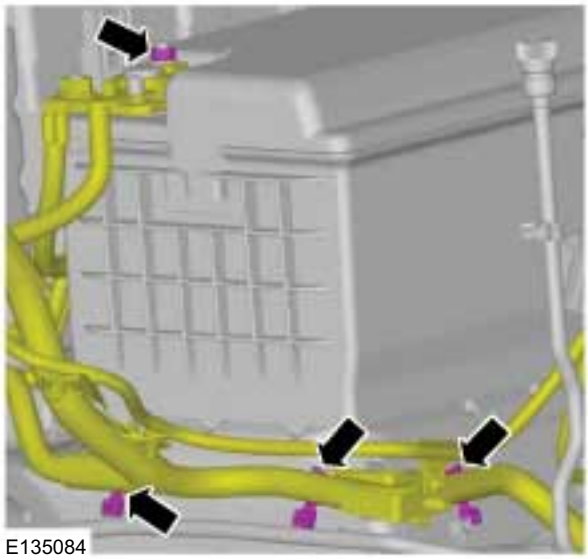
E135084

16.

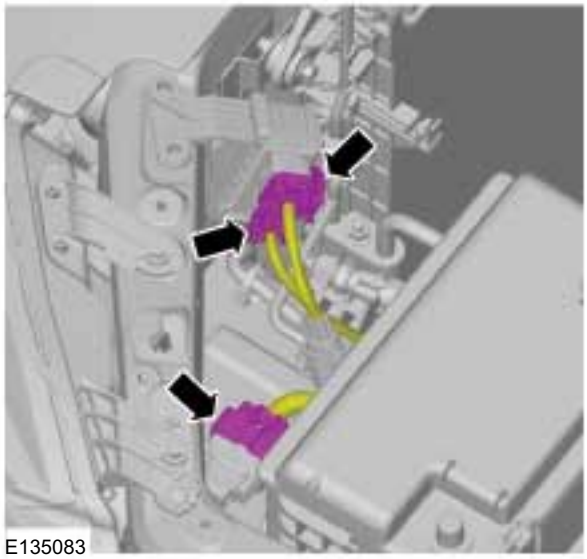
E135083

REMOVAL

17. Refer to: Battery (414-01 Battery, Mounting and Cables, Removal and Installation).

18. Refer to: Battery Tray (414-01 Battery, Mounting and Cables, Removal and Installation).

19. Refer to: Powertrain Control Module (PCM) (303-14 Electronic Engine Controls - 2.2L Duratorq-TDCi (88kW/120PS) - Puma/2.2L Duratorq-TDCi (96kW/130PS) - Puma/2.2L Duratorq-TDCi (110kW/150PS) - Puma/3.2L Duratorq-TDCi (148kW/200PS) - Puma, Removal and Installation).

20.

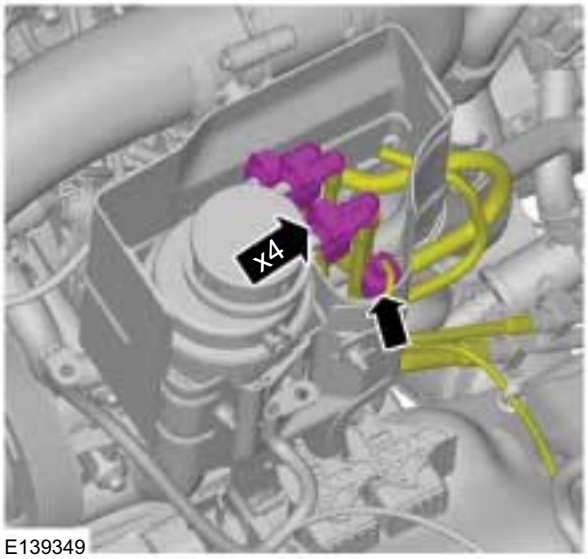

E139349

21.

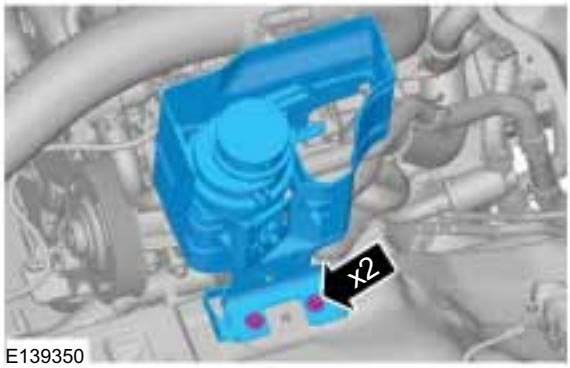

E139350

22.

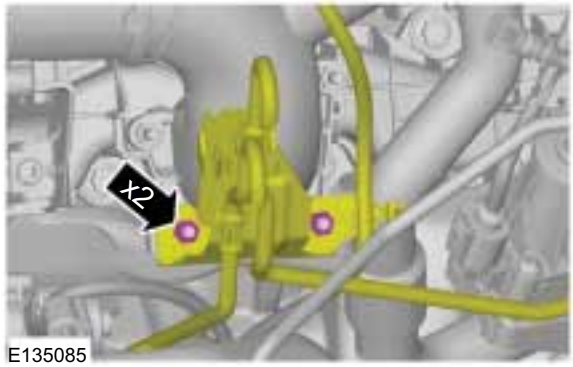

E135085

23.

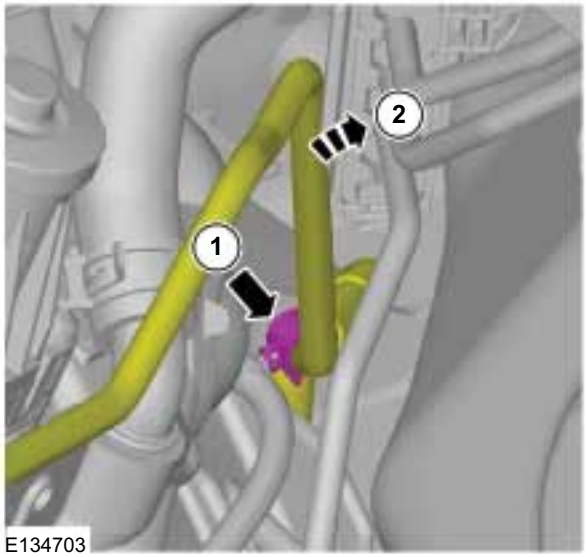

E134703

24.

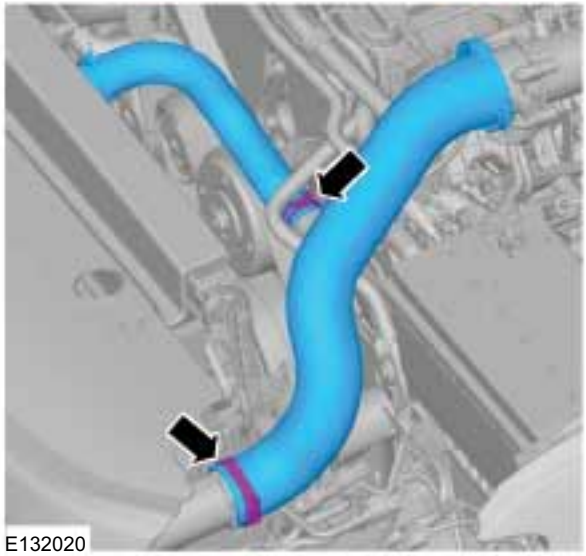
E132020

REMOVAL

25. Refer to: Cooling Fan Motor and Shroud (303-03 Engine Cooling - 2.2L Duratorq-TDCi (88kW/120PS) - Puma/2.2L Duratorq-TDCi (96kW/130PS) - Puma/2.2L Duratorq-TDCi (110kW/150PS) - Puma, Removal and Installation).

26. Refer to: Radiator (303-03 Engine Cooling - 2.2L Duratorq-TDCi (88kW/120PS) - Puma/2.2L Duratorq-TDCi (96kW/130PS) - Puma/2.2L Duratorq-TDCi (110kW/150PS) - Puma, Removal and Installation).

27. Refer to: Condenser - 2.2L Duratorq-TDCi (88kW/120PS) - Puma/2.2L Duratorq-TDCi (96kW/130PS) - Puma/2.2L Duratorq-TDCi (110kW/150PS) - Puma/3.2L Duratorq-TDCi (148kW/200PS) - Puma (412-01 Climate Control, Removal and Installation).

28.

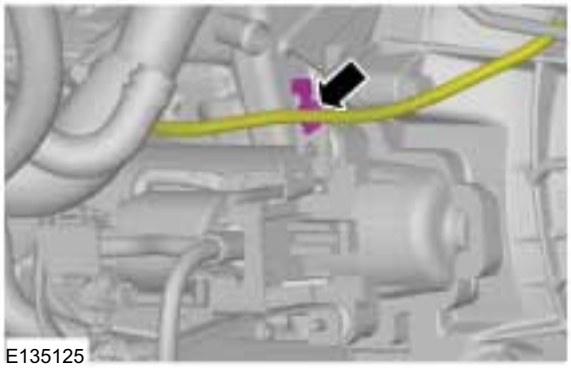
E135125

29. Refer to: Starter Motor - 2.2L Duratorq-TDCi (88kW/120PS) - Puma/2.2L Duratorq-TDCi (96kW/130PS) - Puma/2.2L Duratorq-TDCi (110kW/150PS) - Puma (303-06 Starting System - 2.2L Duratorq-TDCi (88kW/120PS) - Puma/2.2L Duratorq-TDCi (96kW/130PS) - Puma/2.2L Duratorq-TDCi (110kW/150PS) - Puma/3.2L Duratorq-TDCi (148kW/200PS) - Puma, Removal and Installation).

30. Refer to: Transmission Fluid Cooler (307-02 Transmission/Transaxle Cooling, Removal and Installation).

31.

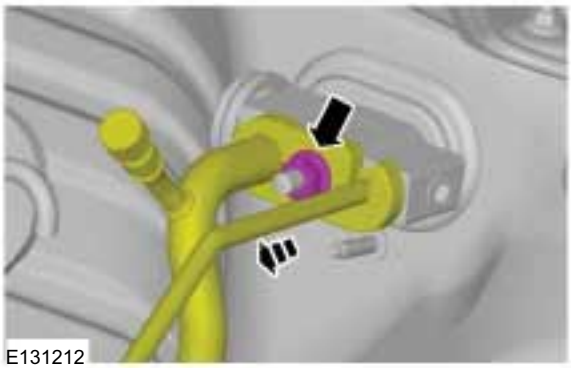
E131212

32.

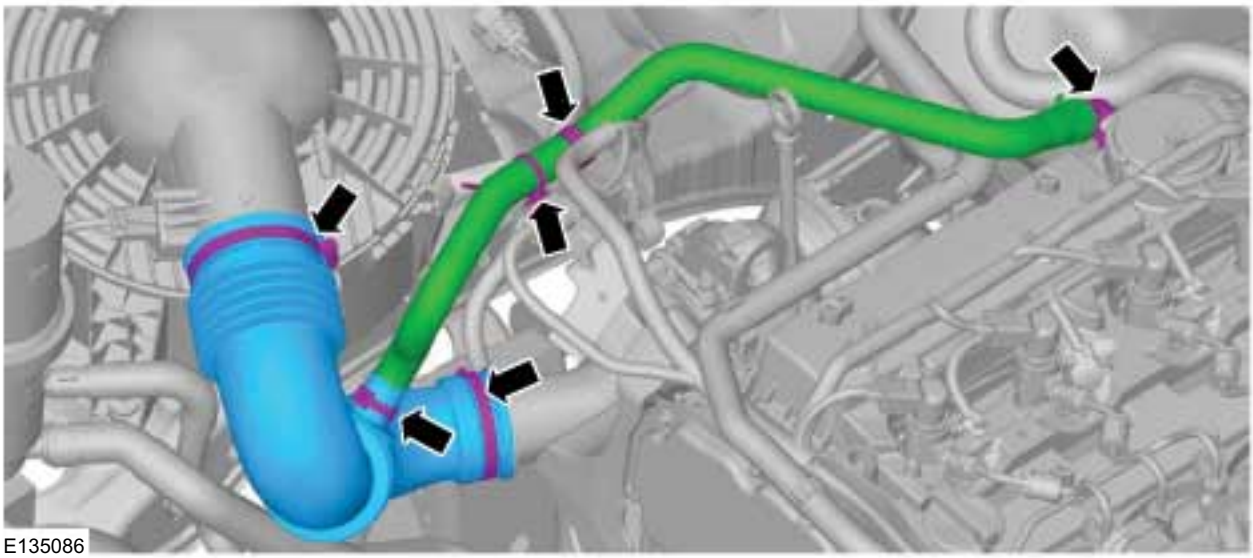
E135086

REMOVAL

33. Refer to: Air Cleaner - 2.2L Duratorq-TDCi (88kW/120PS) - Puma/2.2L Duratorq-TDCi (96kW/130PS) - Puma/2.2L Duratorq-TDCi (110kW/150PS) - Puma (303-12 Intake Air Distribution and Filtering - 2.2L Duratorq-TDCi (88kW/120PS) - Puma/2.2L Duratorq-TDCi (96kW/130PS) - Puma/2.2L Duratorq-TDCi (110kW/150PS) - Puma/3.2L Duratorq-TDCi (148kW/200PS) - Puma, Removal and Installation).

34. **NOTE:** Make sure that all openings are sealed.

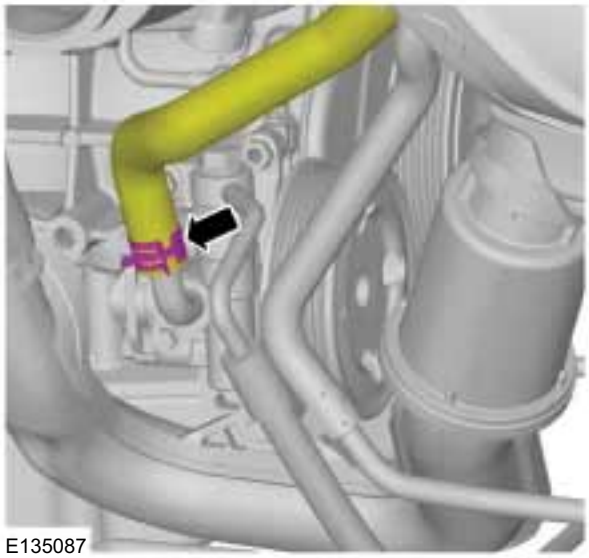
E135087

35. ⚠ **CAUTION: Cap the power steering line to prevent fluid loss or dirt ingress.**

NOTE: The washers can be reused unless damaged.

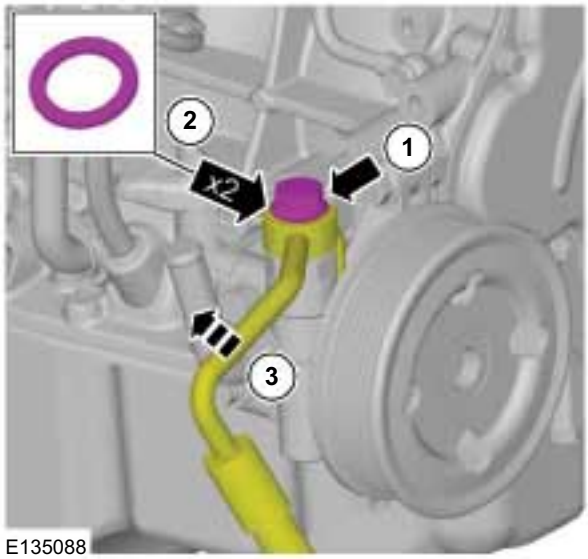

E135088

36.

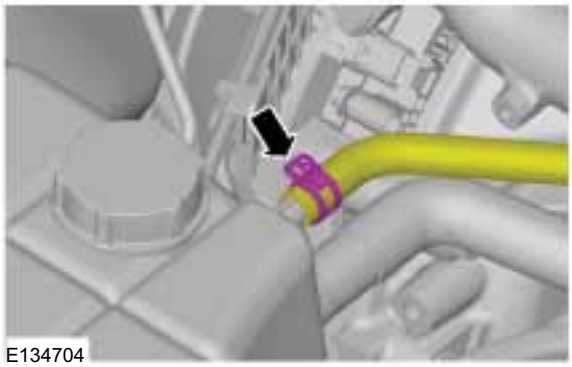
E134704

37.

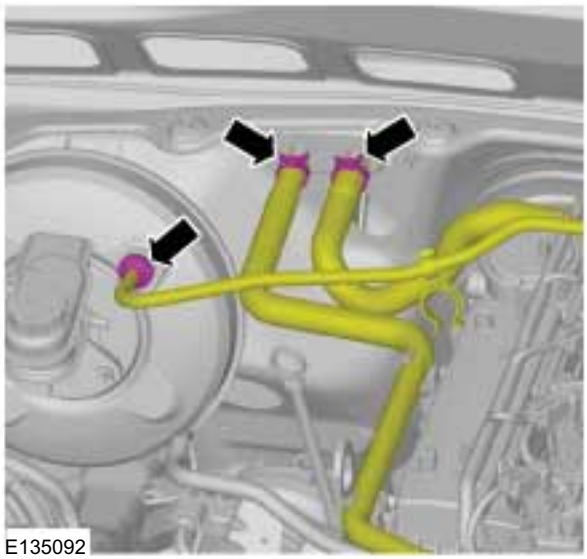
E135092

38.

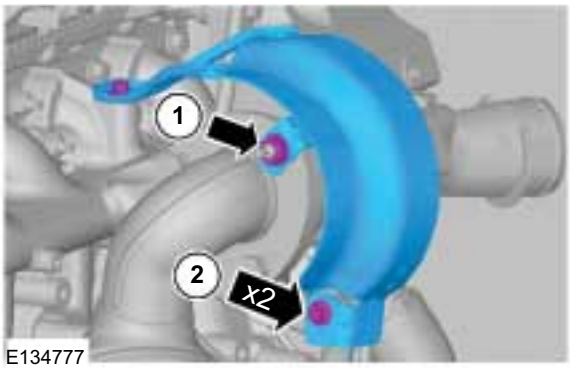

E134777

REMOVAL

39. Refer to: Catalytic Converter (309-00 Exhaust System - 2.2L Duratorq-TDCi (88kW/120PS) - Puma/2.2L Duratorq-TDCi (96kW/130PS) - Puma/2.2L Duratorq-TDCi (110kW/150PS) - Puma/3.2L Duratorq-TDCi (148kW/200PS) - Puma, Removal and Installation).

40.

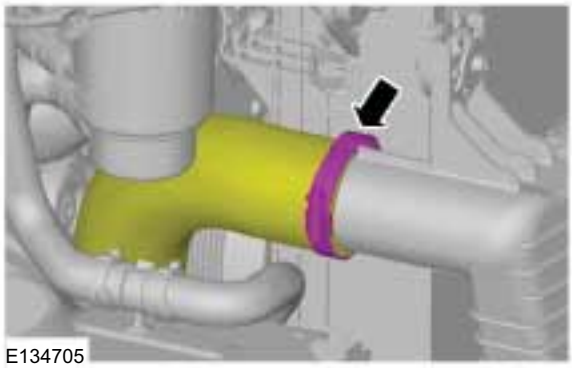
E134705

41.

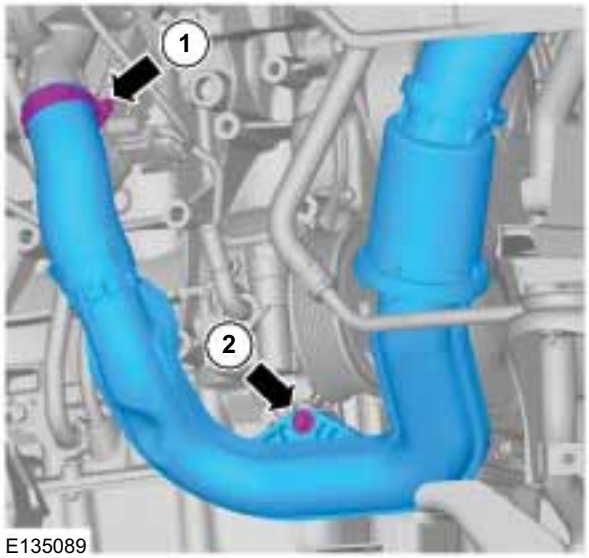

E135089

42.

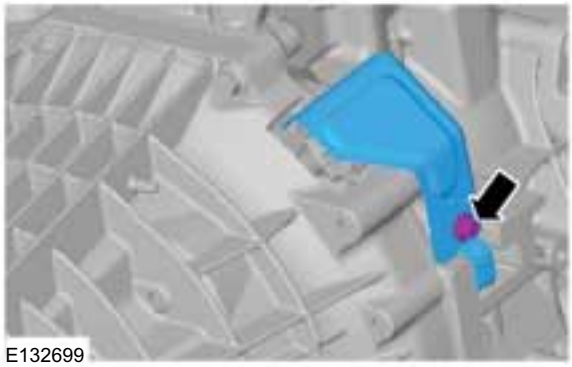
E132699

43.

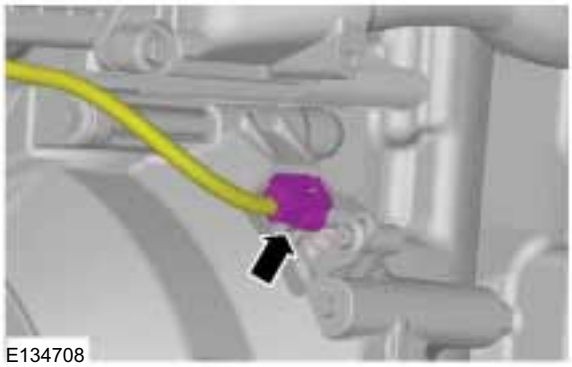
E134708

44.

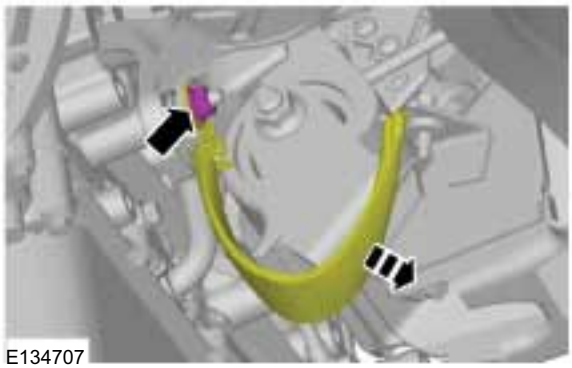
E134707

45. **WARNING: Make sure that transmission assembly is on wooden blocks and secured with suitable retaining straps.**

CAUTION: Do not tilt the transmission. This may cause damage to the pilot bearing.

REMOVAL

Tie and support the transmission to the chassis with a suitable strap.

General Equipment: Transmission Jack

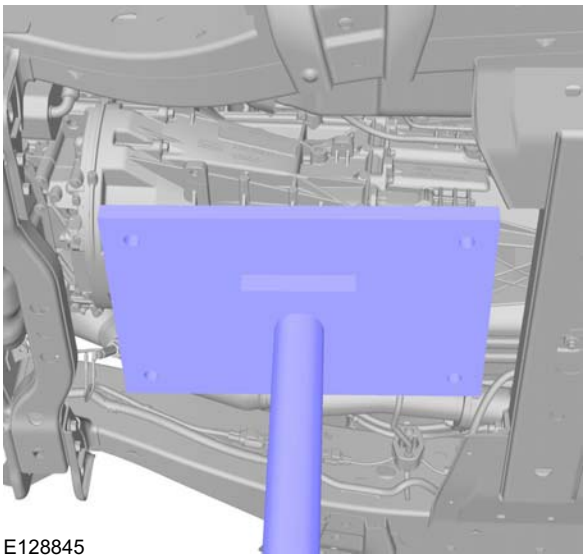

E128845

46.

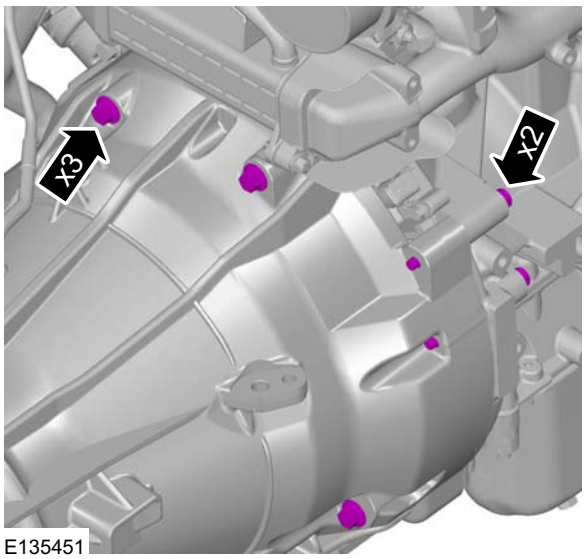

E135451

47.

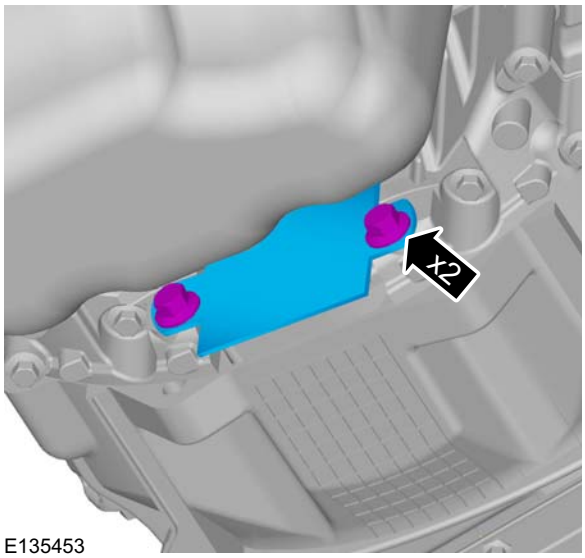

E135453

48.

REMOVAL

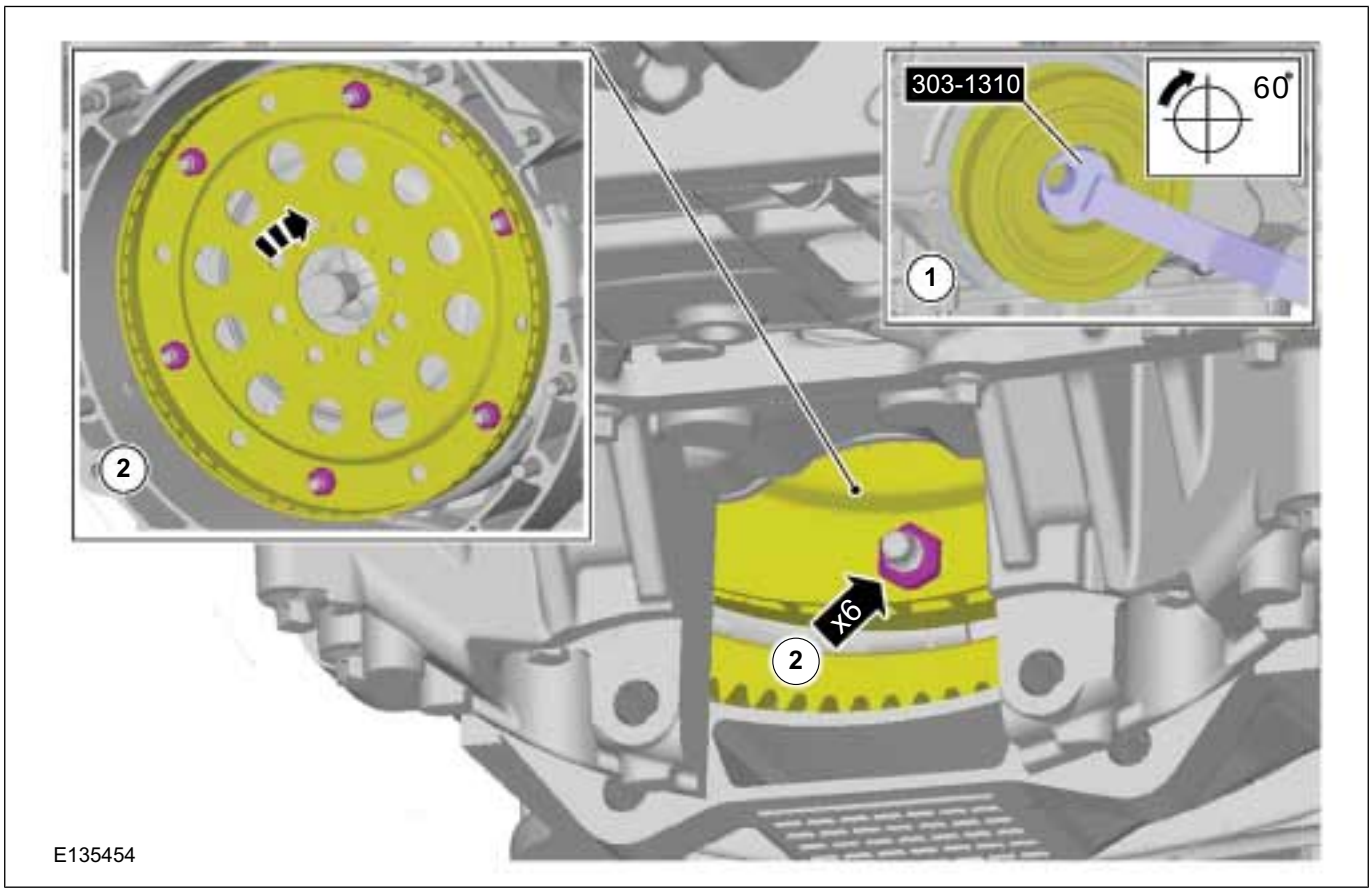

49.

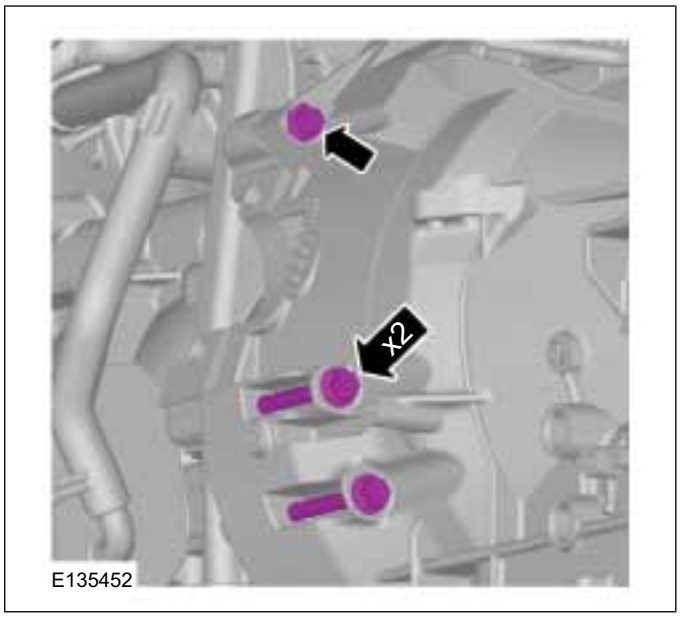

50. On both sides.

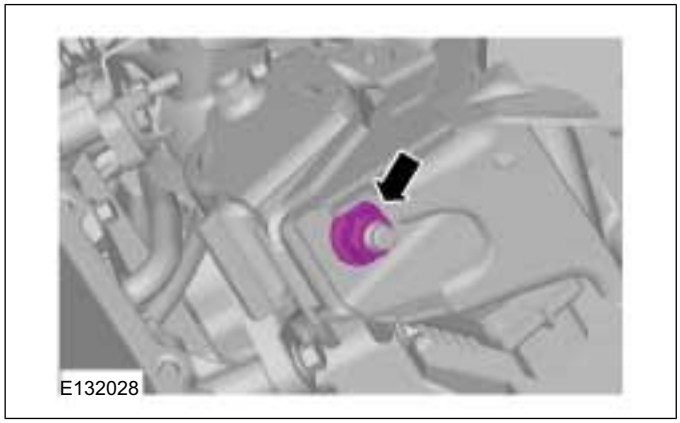

51. Special Tool(s): 303-122

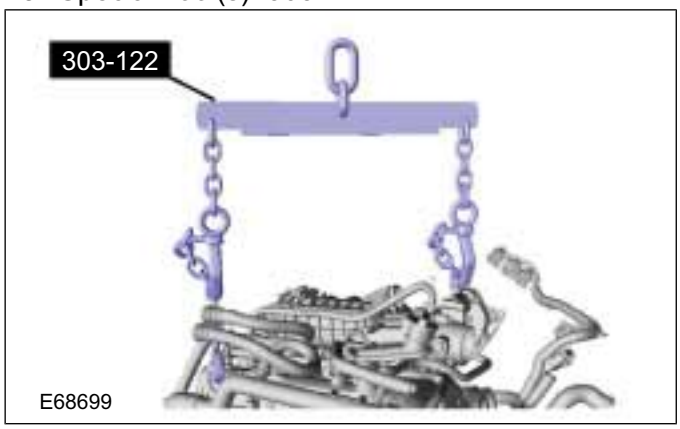

REMOVAL

52.

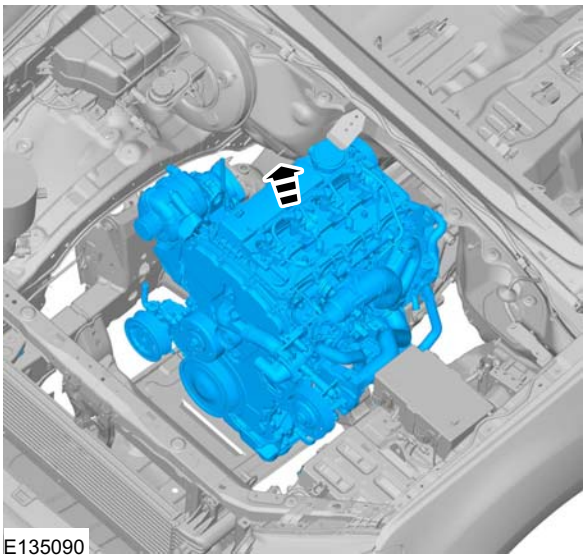
E135090

53.

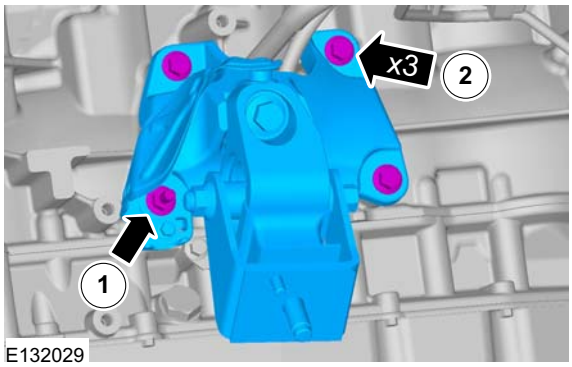

E132029

REMOVAL

Engine Accessories(21 139 4)

Removal

Special Tool(s) / General Equipment

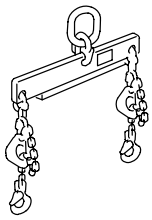 21068A	303-122 Lifting Bracket, Engine
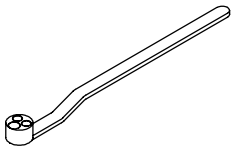 E87614	303-1310 Holding Wrench, Crankshaft
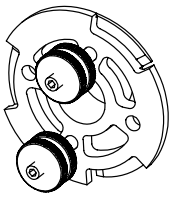 E75376	303-1317 Locking Tool, Fuel Injection Pump Sprocket
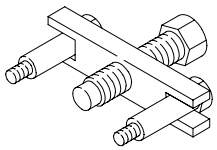 21132	303-249 Remover, Crankshaft Timing Pulley
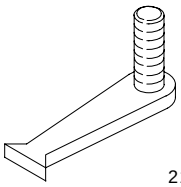 21135	303-254 Locking Tool, Flywheel
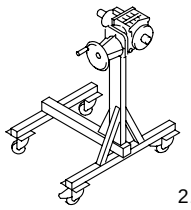 21187	303-435 Mounting Stand

Special Tool(s) / General Equipment

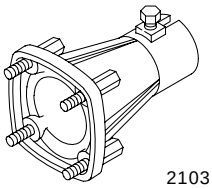 21031B	303-435-06 Mounting Bracket for 303-435
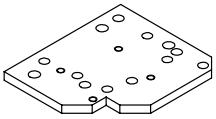 E68386	303-435-11B Mounting Plate for 303-435-06
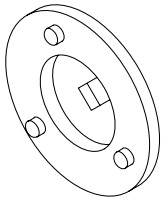	303-679 Remover/Installer, Engine Front Cover Inspection Plate
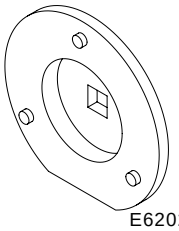 E62024	303-679A Remover/Installer, Engine Front Cover Inspection Plate
1/2 Inch Square Drive Breaker Bar	
Dowel with a Diameter of 6 mm	

1. Install the Special Tool(s): 303-122

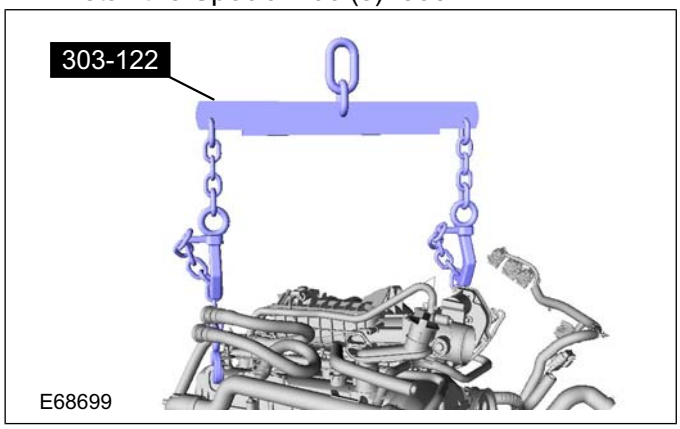

E68699

REMOVAL

2.

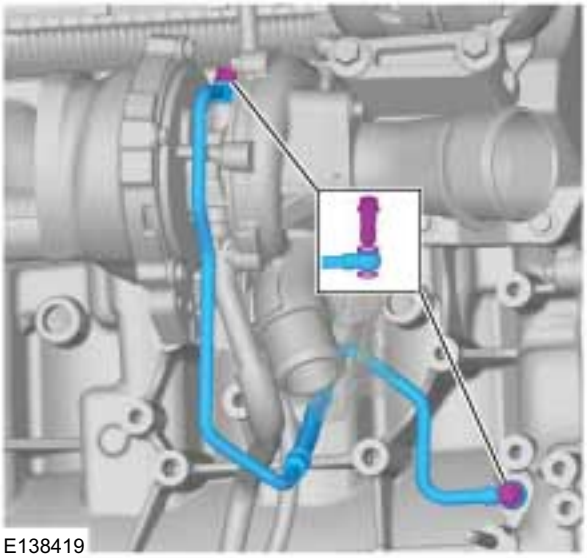

5.

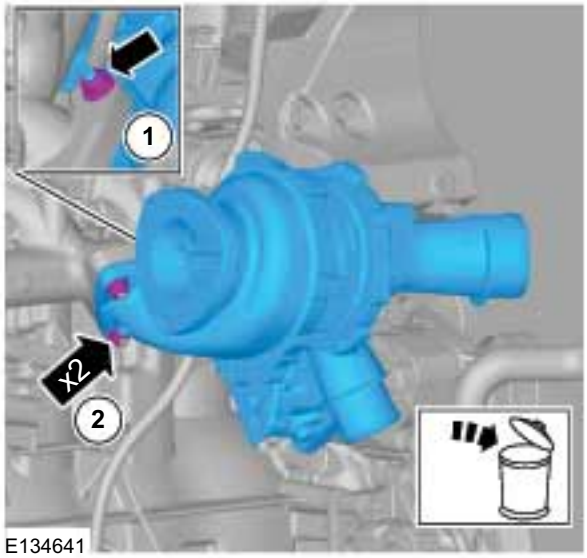

3.

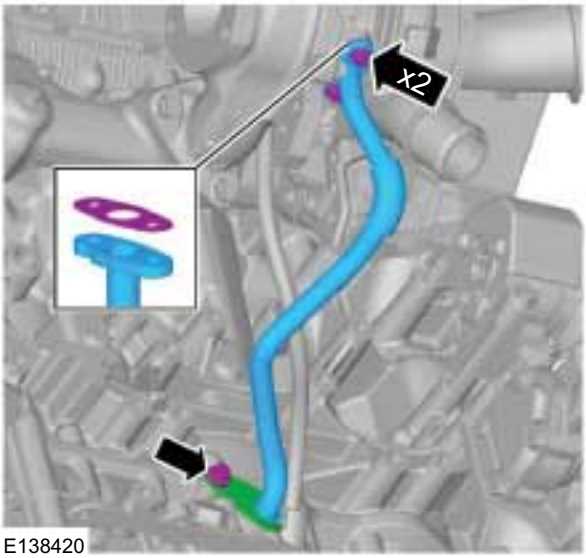

6.

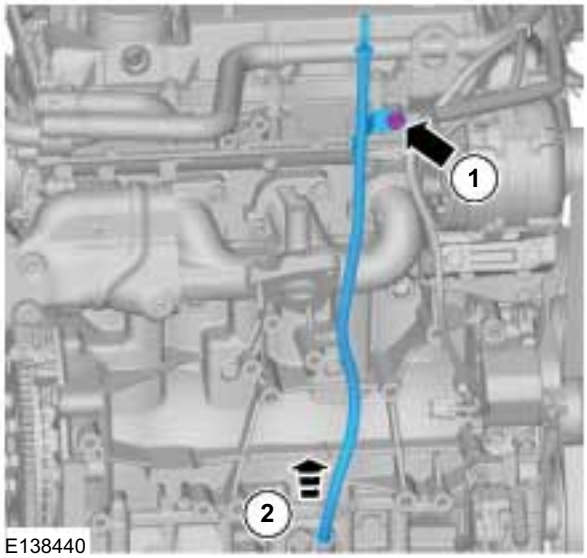

4.

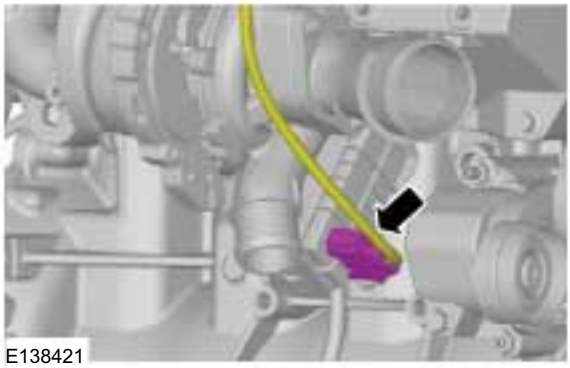

7. Install the Special Tool(s): 303-435-11B

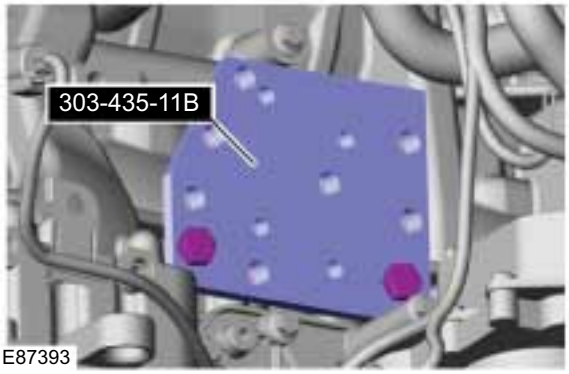

REMOVAL

8. Install the Special Tool(s): 303-435, 303-435-06

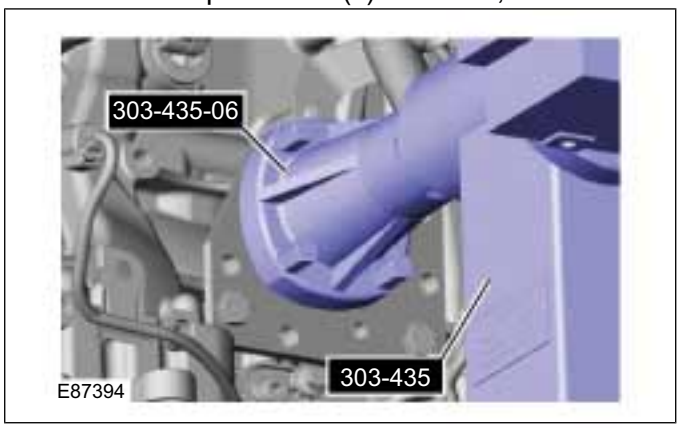

9. Remove the Special Tool(s): 303-122

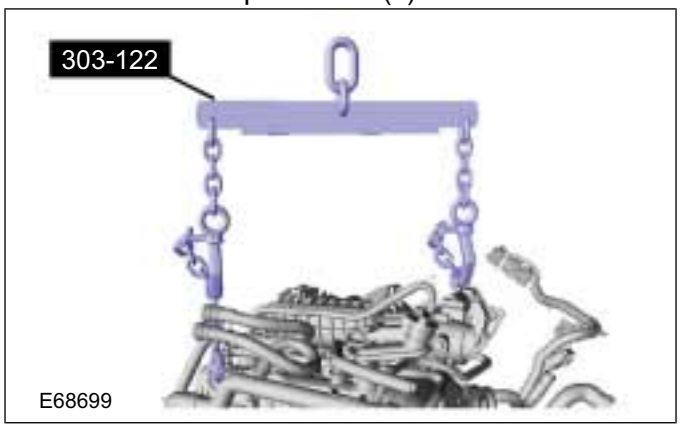

10. General Equipment: 1/2 Inch Square Drive Breaker Bar
General Equipment: Dowel with a Diameter of 6 mm

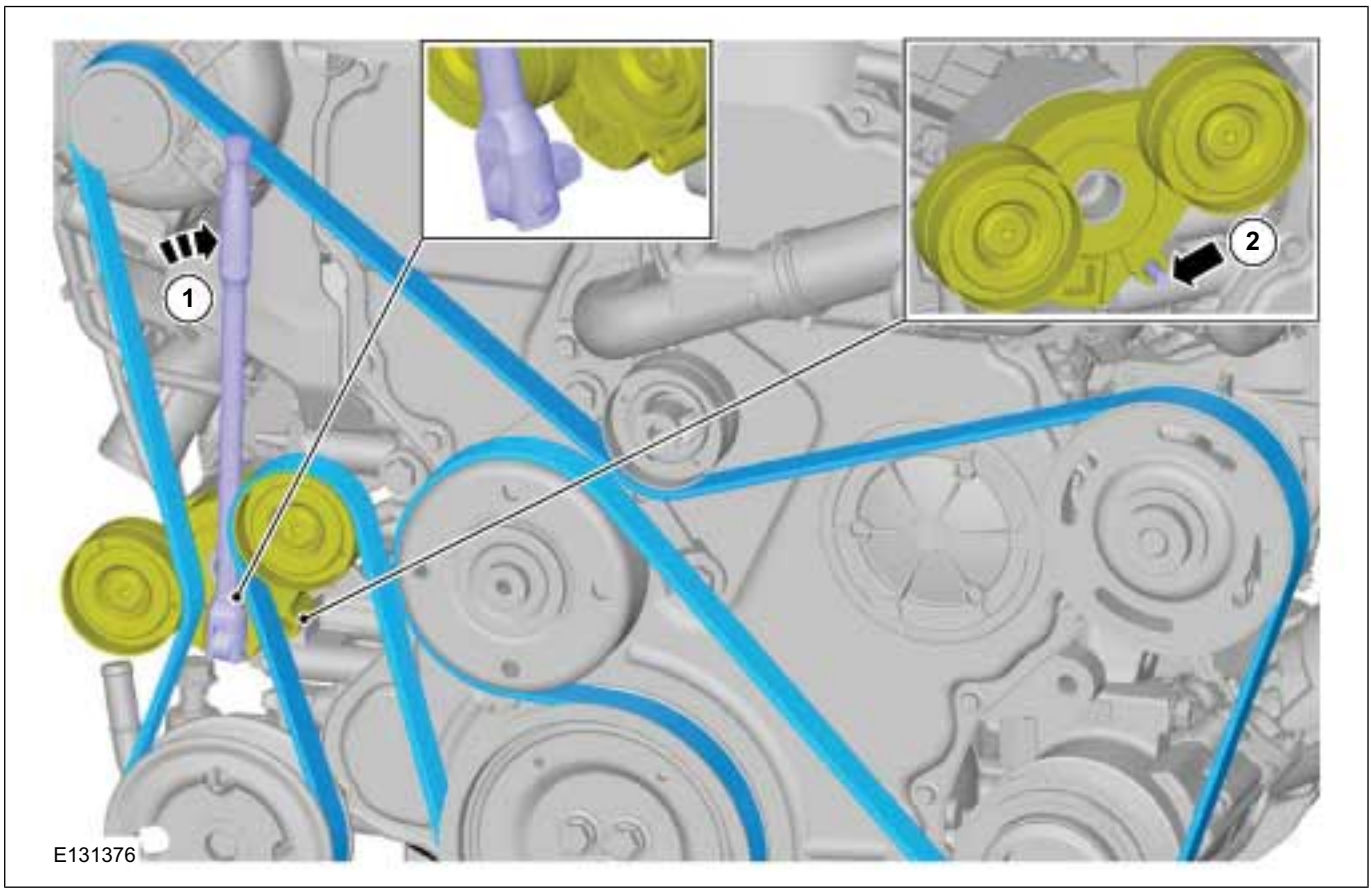

REMOVAL

11. CAUTION: Take extra care not to damage the wiring harnesses.

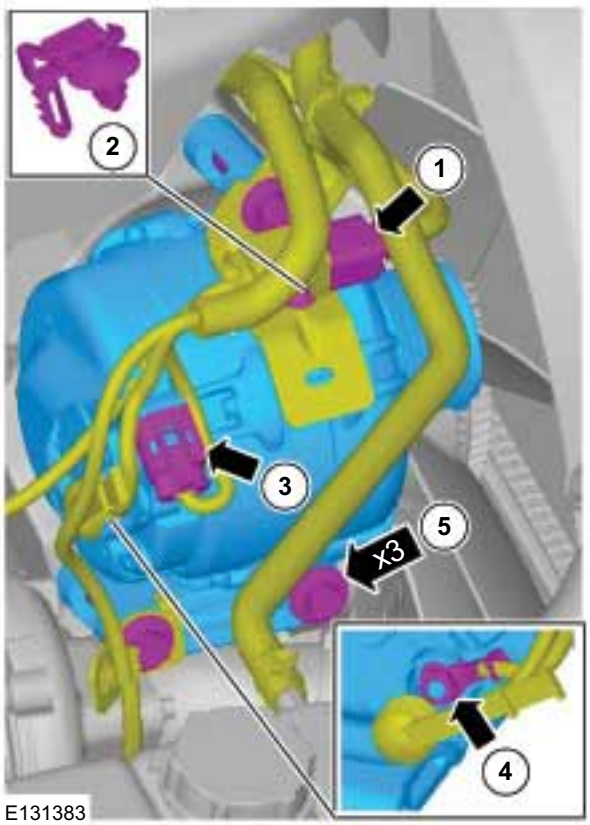

E131383

12.

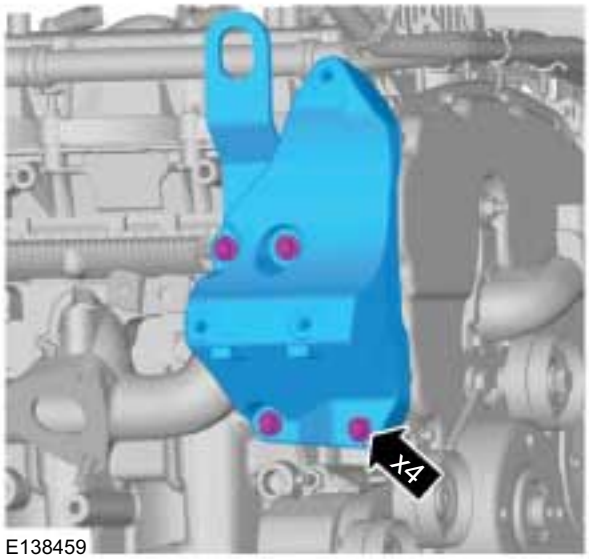

E138459

13.

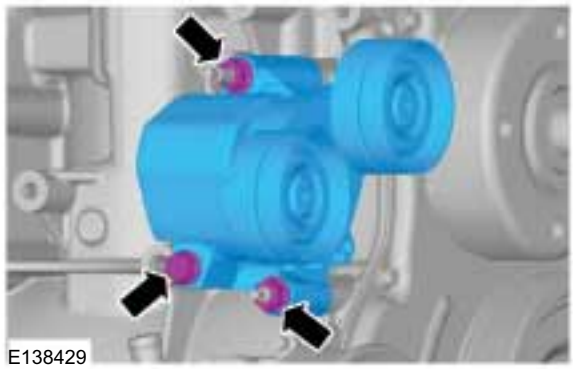
E138429

14.

E138430

15.

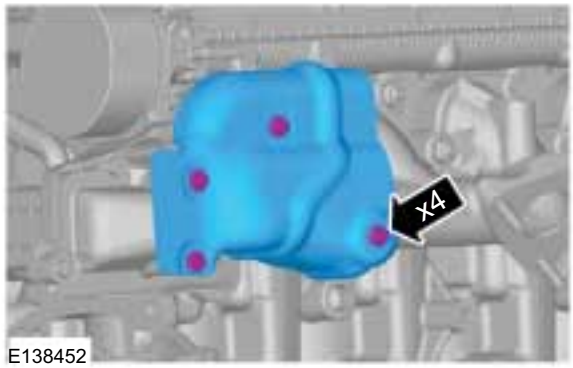

E138452

REMOVAL

16.

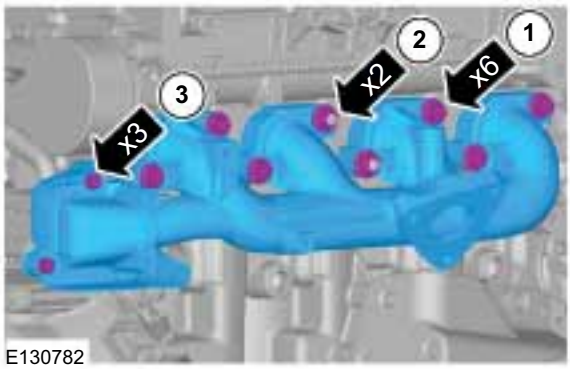

E130782

17. **NOTE:** The gasket is to be reused unless damaged.

NOTE: The studs are to be reused unless damaged.

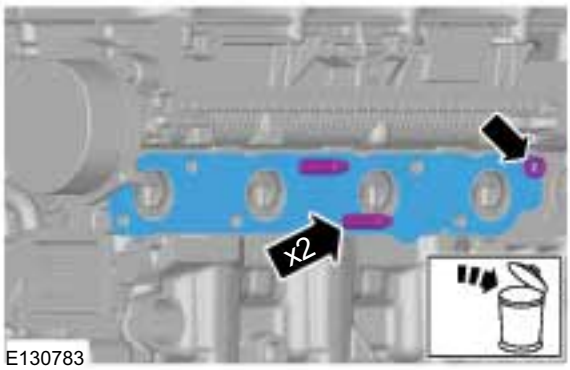

E130783

18.

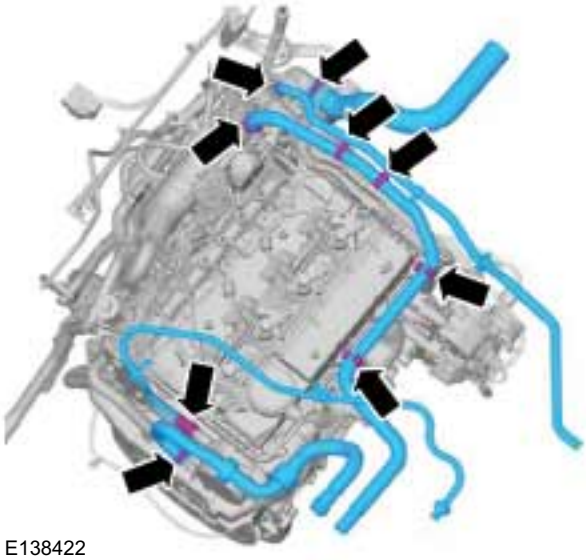
E138422

19.

E135272

20.

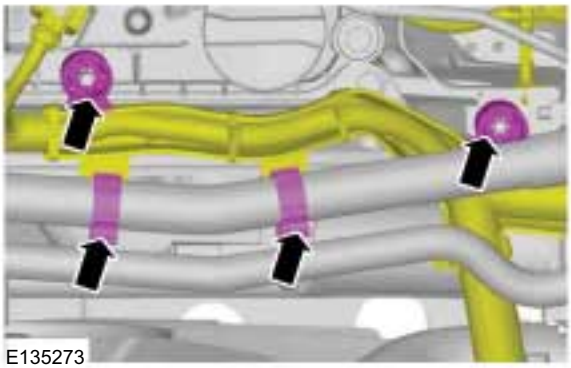
E135273

21.

303-01B-82

REMOVAL

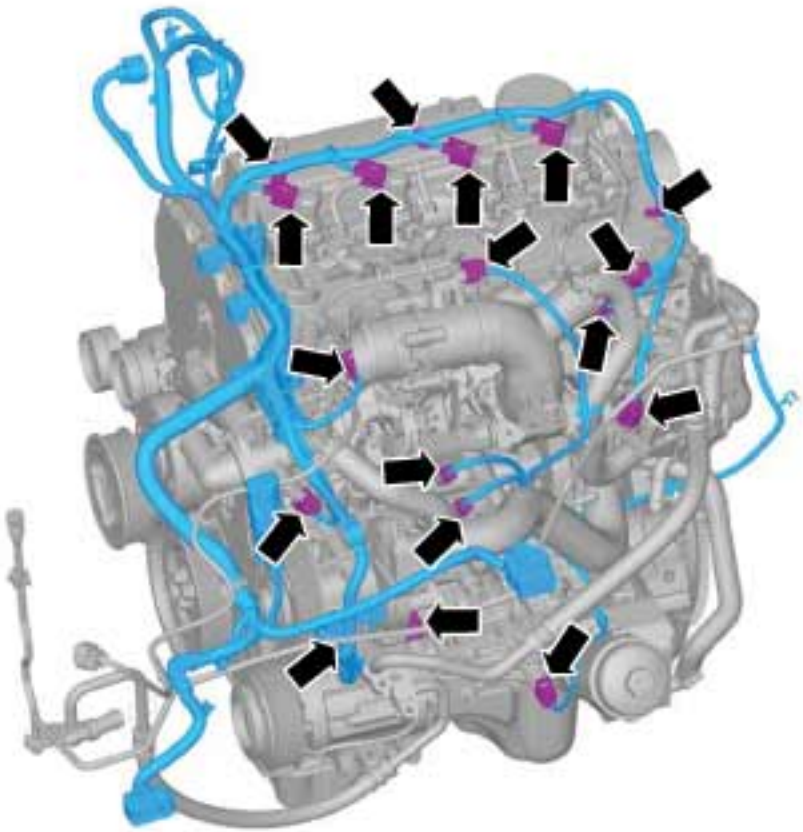

22.

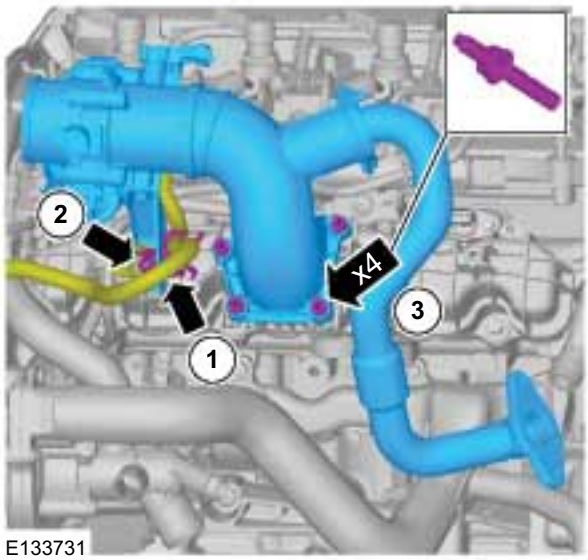

23. CAUTION: Make sure that all openings are sealed. Use new blanking caps.

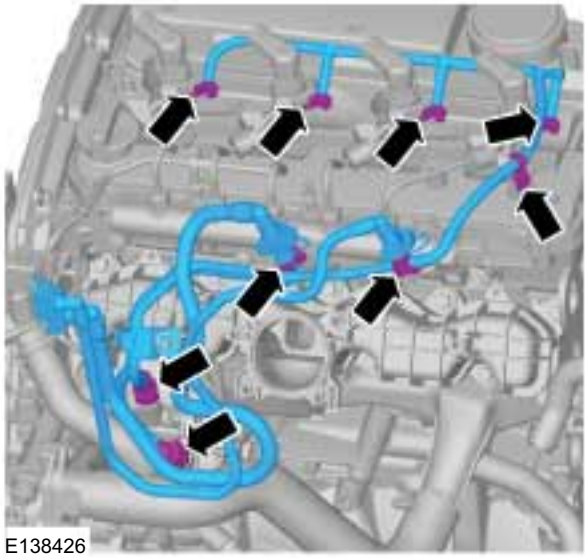

303-01B-83

REMOVAL

24.

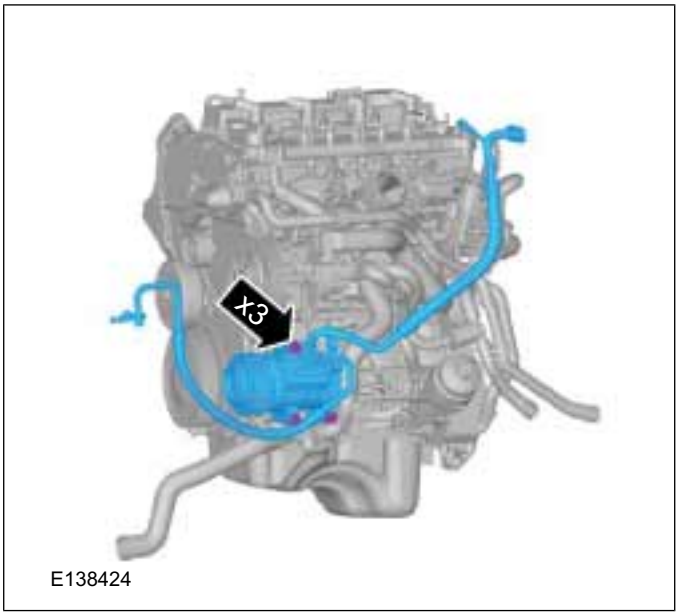

E138424

25.

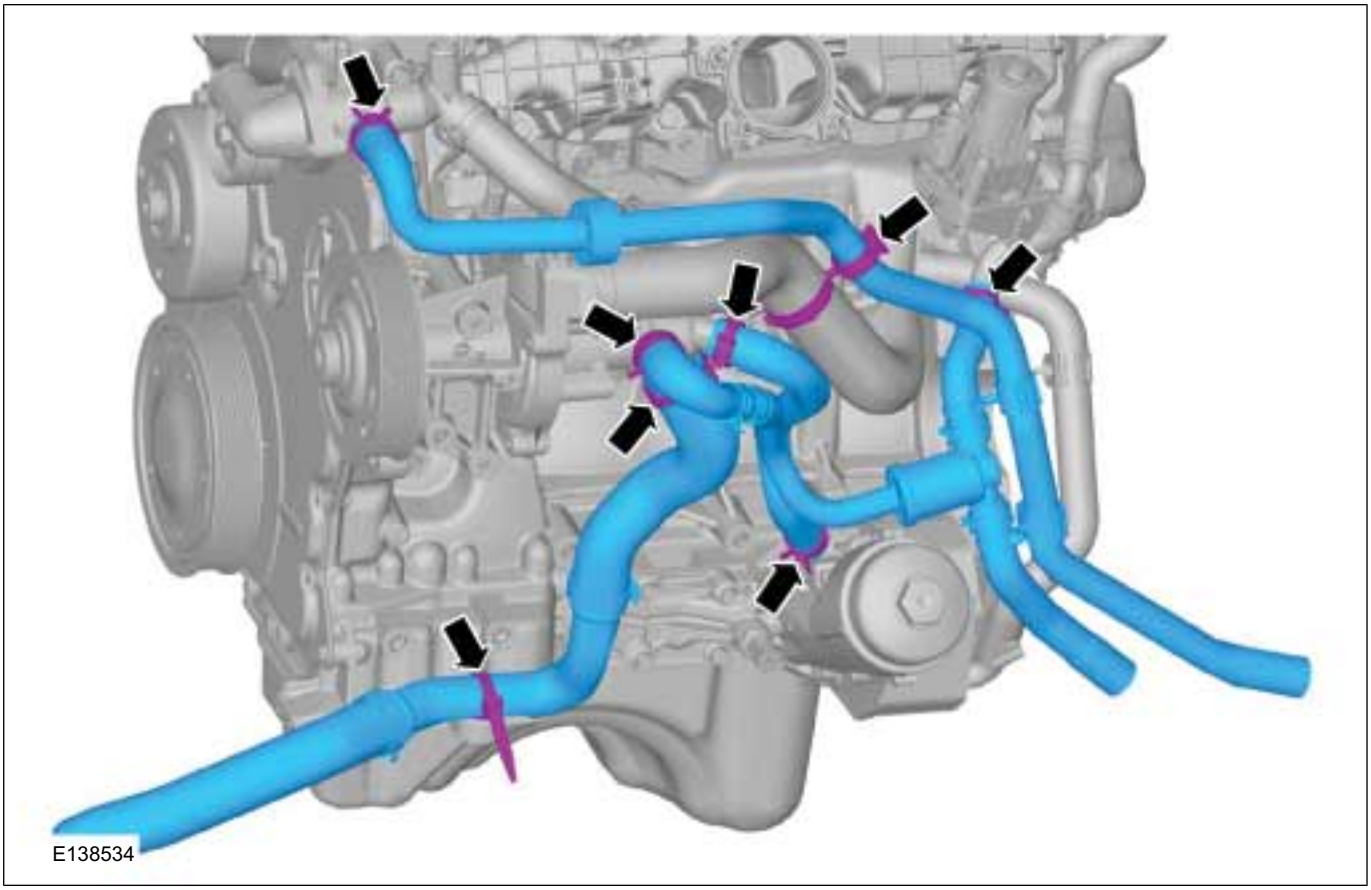
E138534

REMOVAL

26.

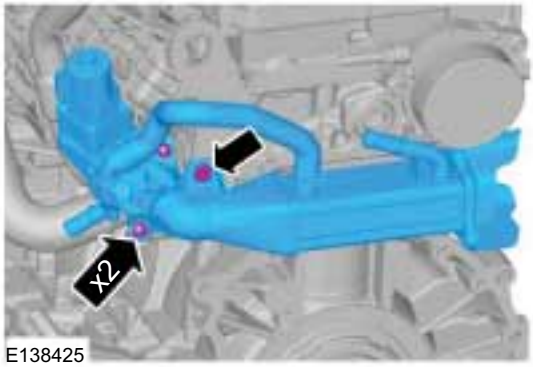

E138425

27.

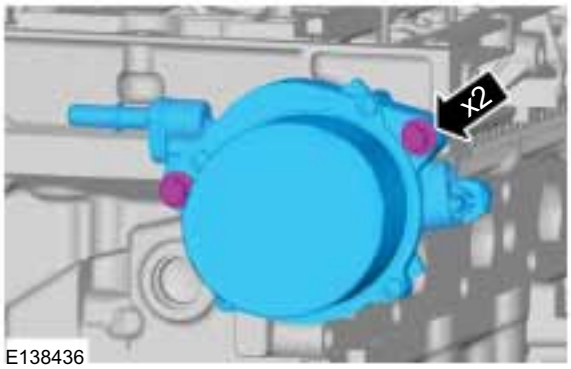

E138436

28.

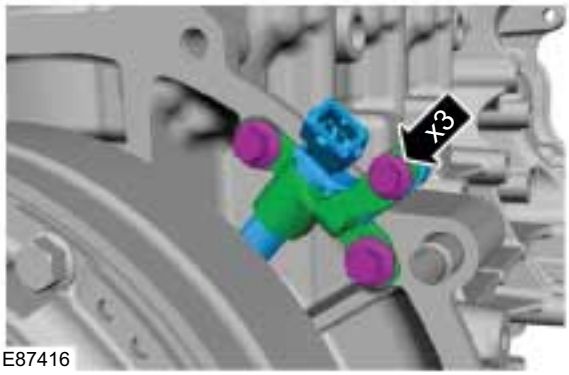

E87416

29. NOTE: Do not loosen the bolts more than 2 turns.

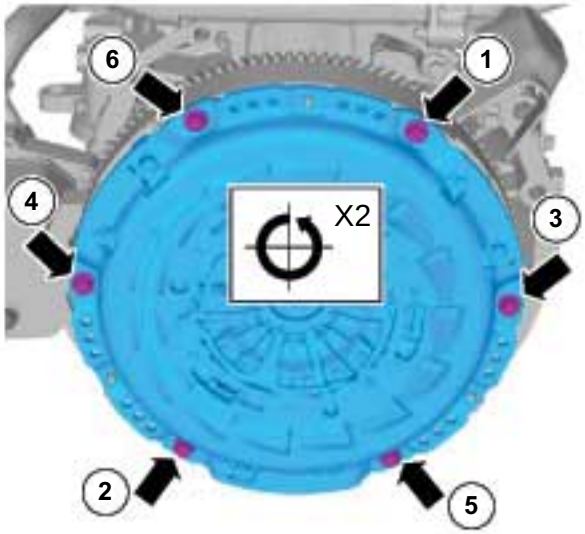

E129960

30. Special Tool(s): 303-254

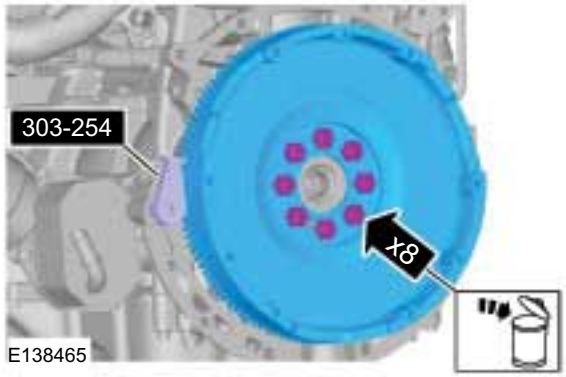

E138465

31.

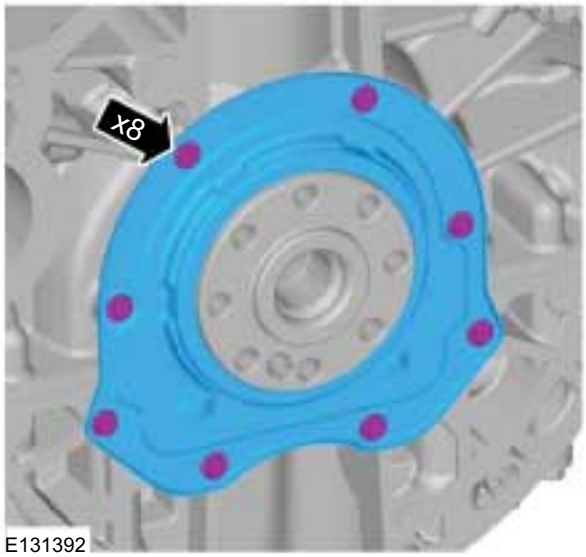

E131392

REMOVAL

32.

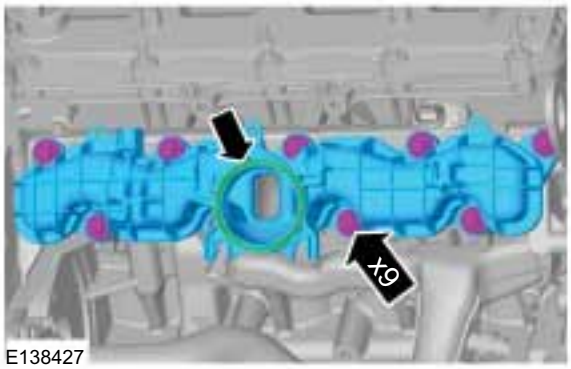

E138427

35.

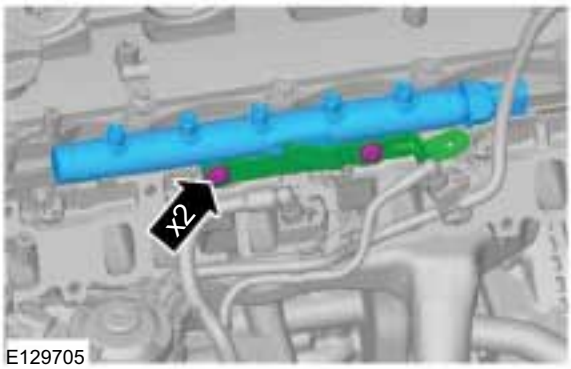

E129705

33.

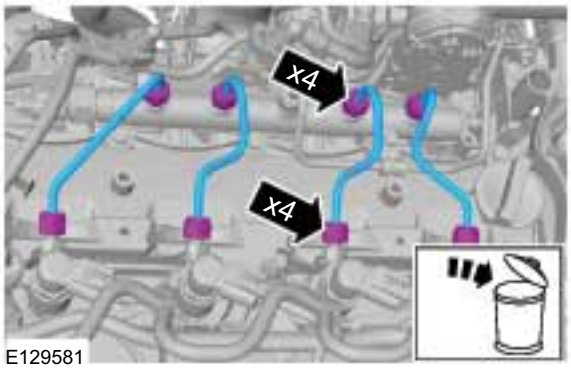

E129581

36.

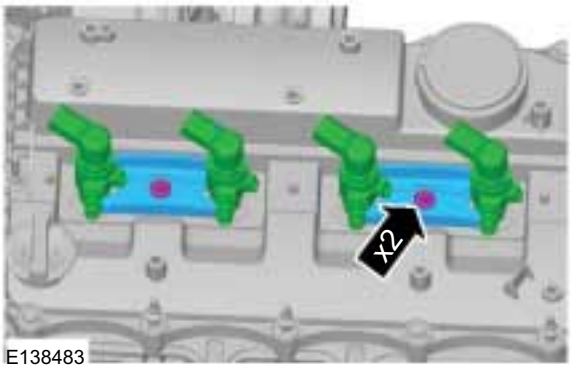

E138483

34. CAUTIONS:

- Make sure that the fuel line remains in contact at both ends until both unions nuts have been unscrewed and the area around the joints thoroughly cleaned.
- Make sure that the high-pressure fuel supply line remains in contact with both the fuel pump and the fuel rail until both unions have been detached and cleaned.
- Make sure that all openings are sealed. Use new blanking caps.

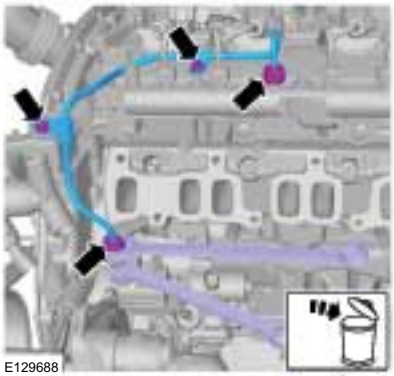
E129688

37.

E129584

REMOVAL

38.

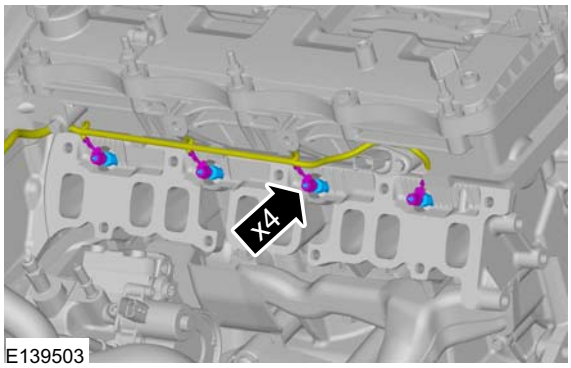

E139503

39.

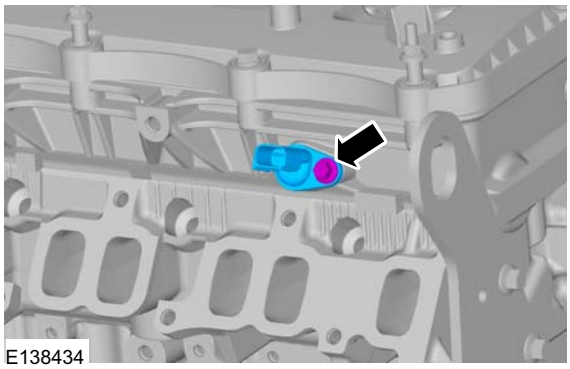
E138434

40. Special Tool(s): 303-679

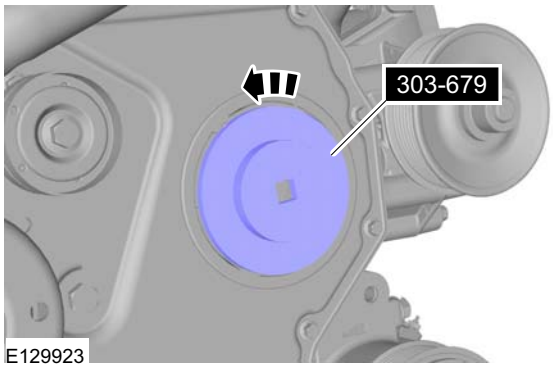

E129923

41.

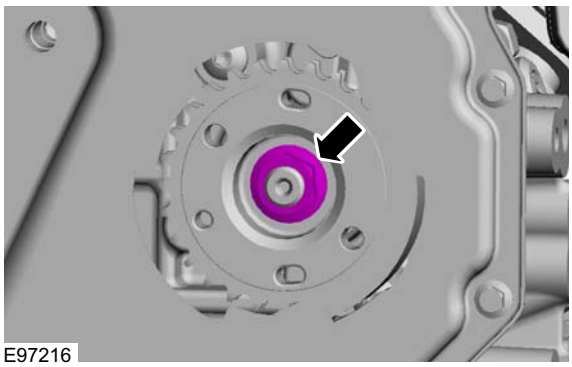
E97216

42. Install the Special Tool(s): 303-1317

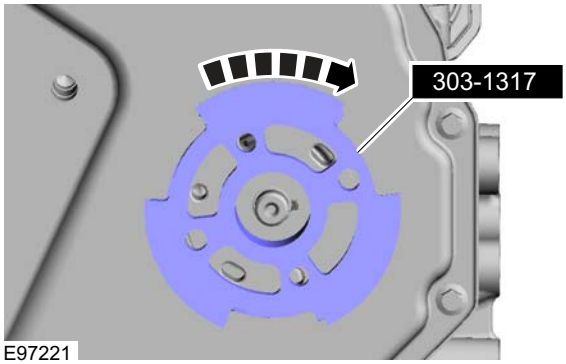

E97221

43.

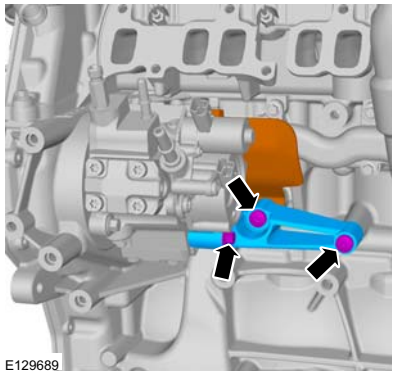
E129689

REMOVAL

44. Special Tool(s): 303-1317, 303-249

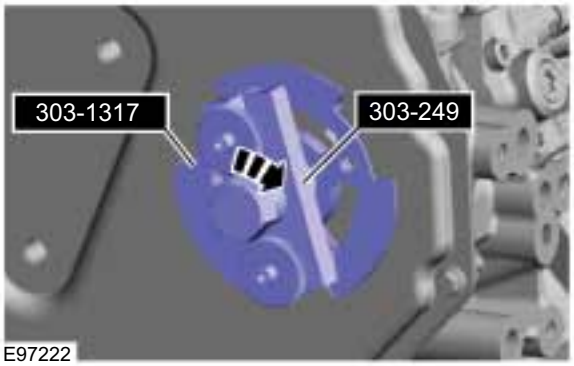

E97222

45.

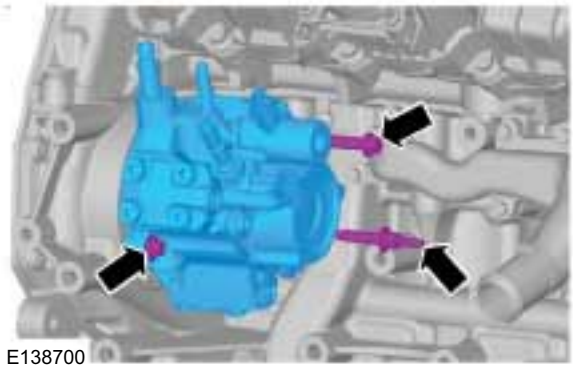
E138700

46.

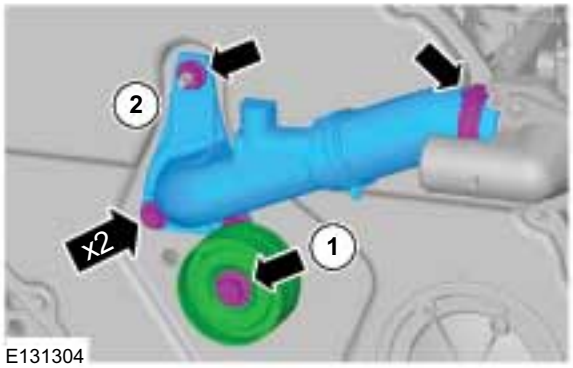

E131304

47.

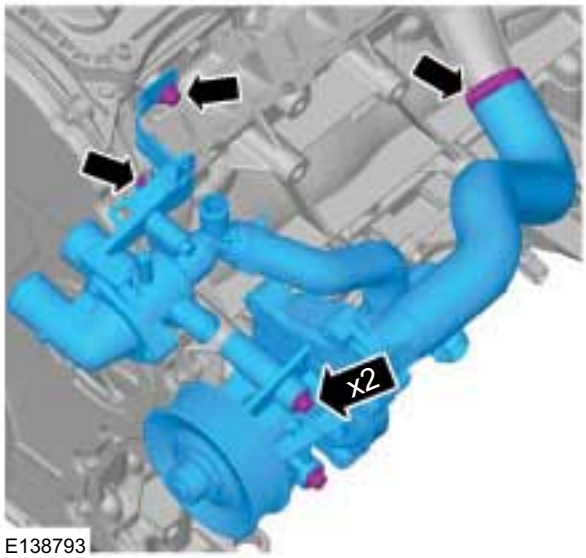

E138793

48.

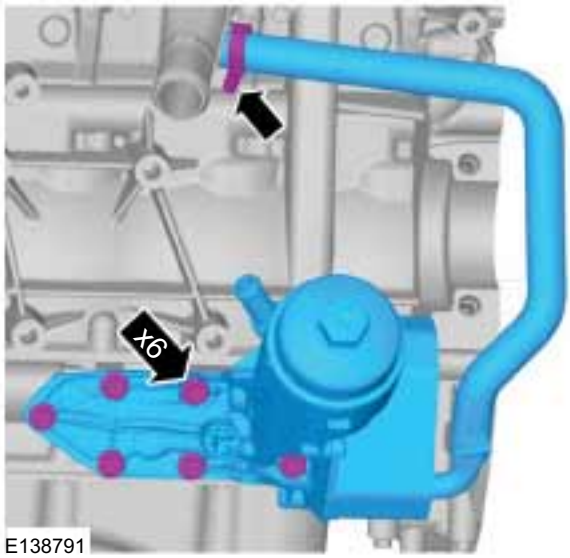

E138791

49.

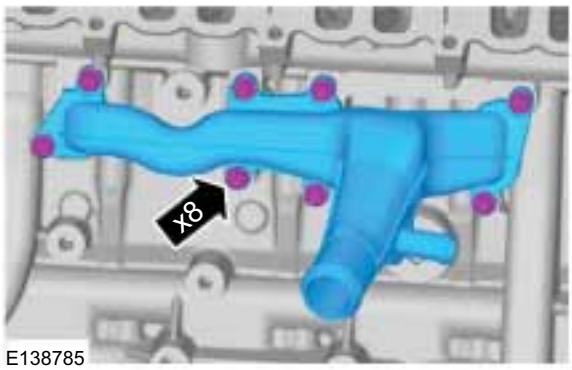

E138785

303-01B-88

REMOVAL

50.

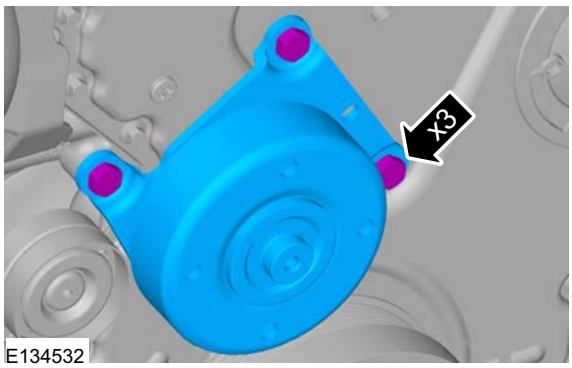

E134532

51. Special Tool(s): 303-1310

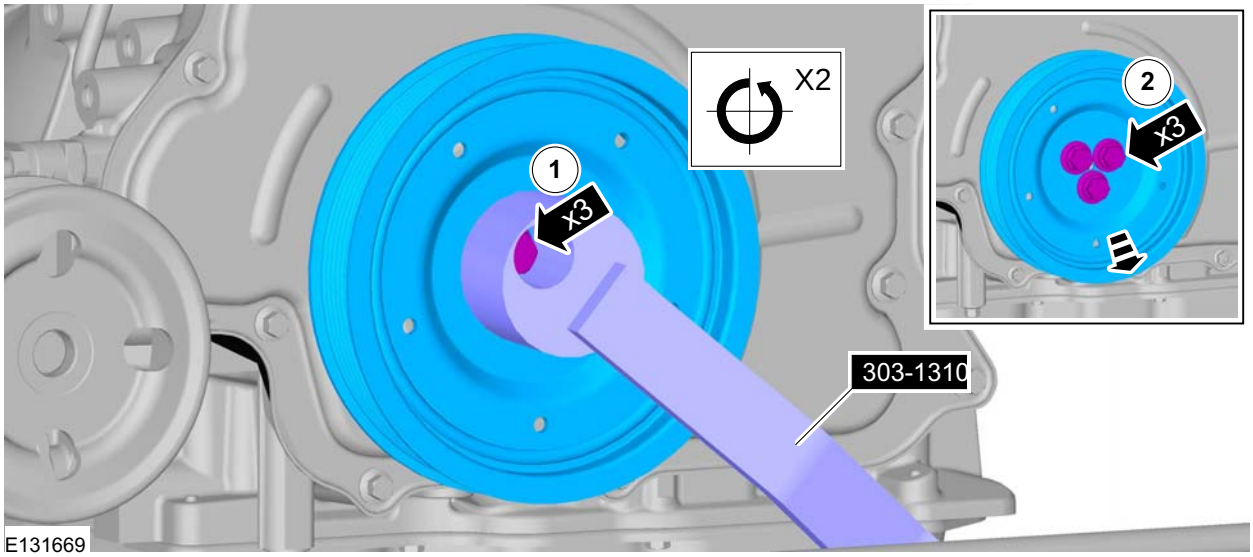

E131669

52. Special Tool(s): 303-679A

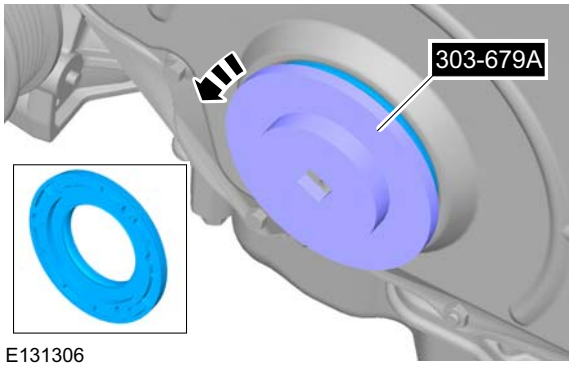

E131306

DISASSEMBLY

Engine(21 134 8)

Disassembly

Special Tool(s) / General Equipment

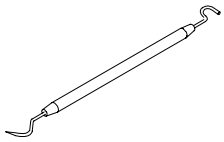 17063	100-010 Remover, O-Ring Seal
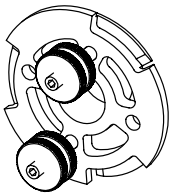 E75376	303-1317 Locking Tool, Fuel Injection Pump Sprocket
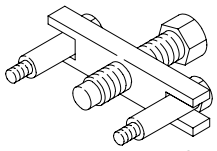 21132	303-249 Remover, Crankshaft Timing Pulley
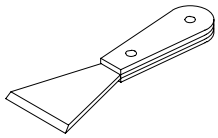 21179	303-428 Separator, Oil Pan
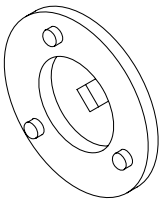 303679	303-679 Remover/Installer, Engine Front Cover Inspection Plate
2 mm Punch	

1. Torque: 25 Nm

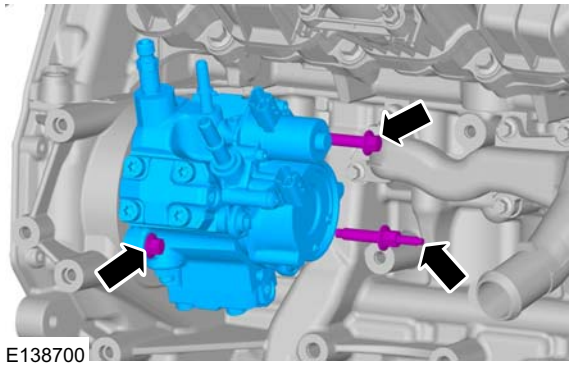
E138700

2. Remove the Special Tool(s): 303-249

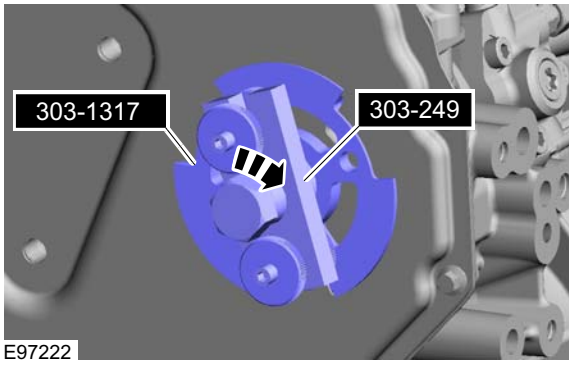

E97222

3. **NOTE:** Make sure that a new component is installed.

   Torque: 45 Nm

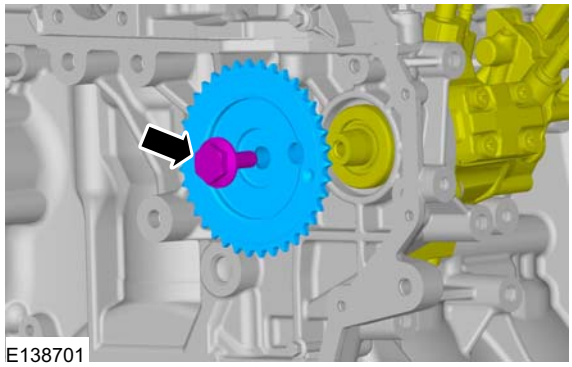
E138701

DISASSEMBLY

4. Torque: 22 Nm

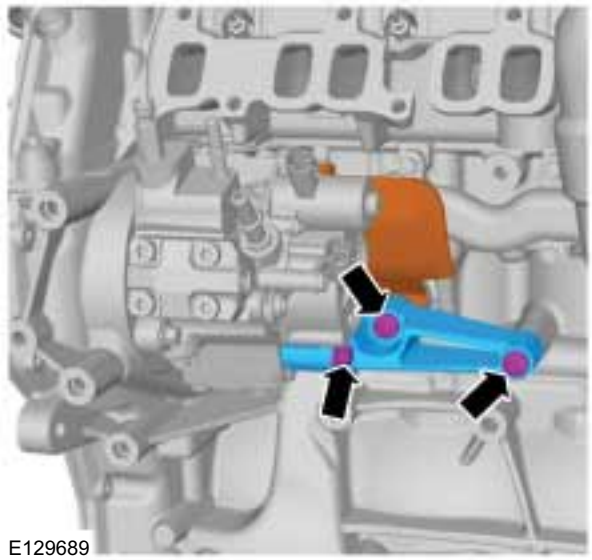

5. Remove the Special Tool(s): 303-1317

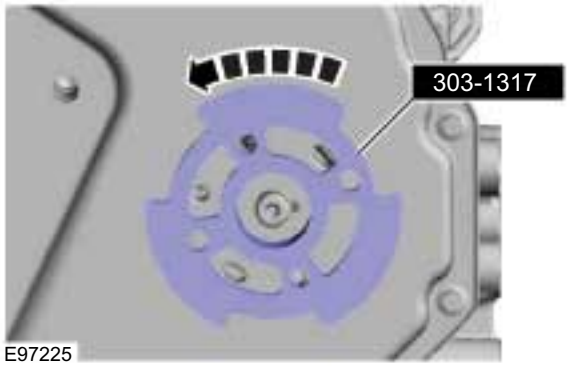

6. Remove the Special Tool(s): 303-679

7.

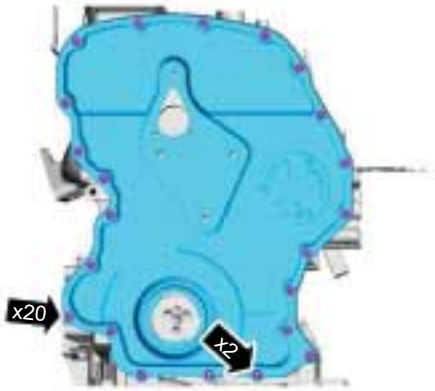

8. Special Tool(s): 303-428

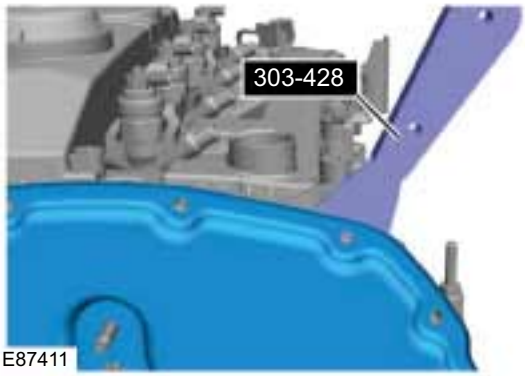

9.

DISASSEMBLY

10. Special Tool(s): 100-010
General Equipment: 2 mm Punch

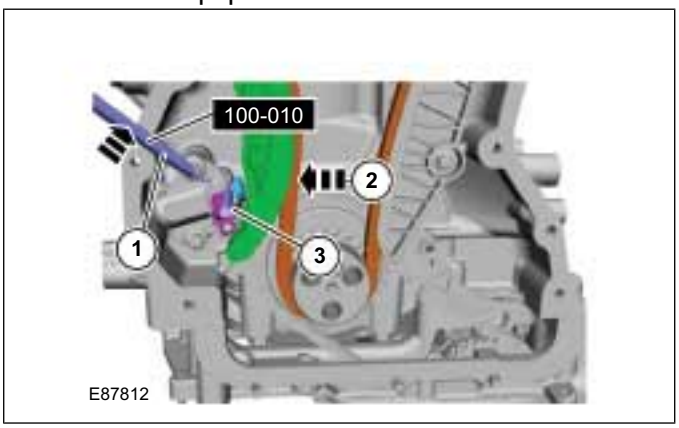

11. Remove and discard the timing chain tensioner.
General Equipment: 2 mm Punch

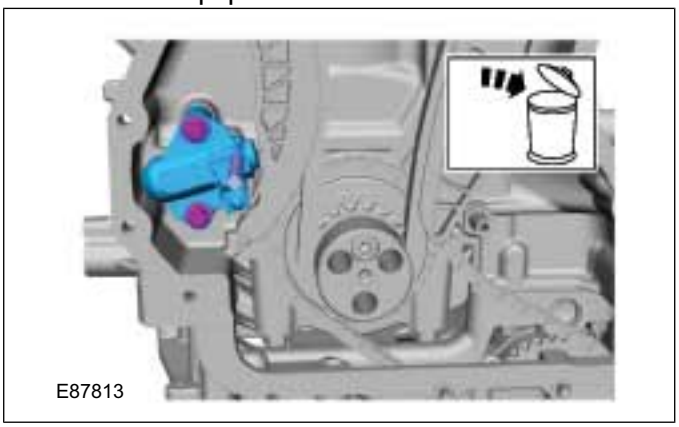

12.

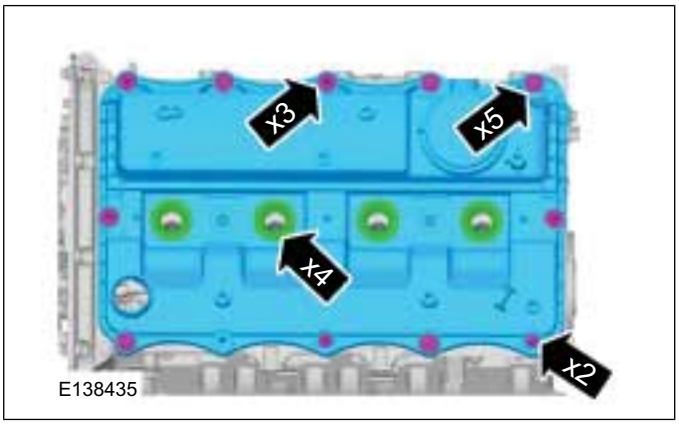

13.

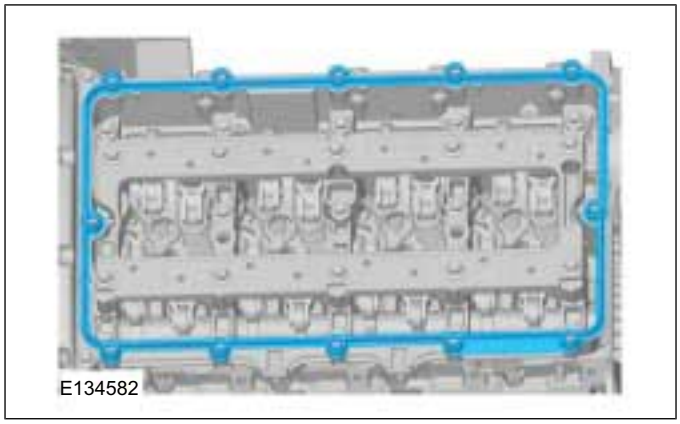

14.

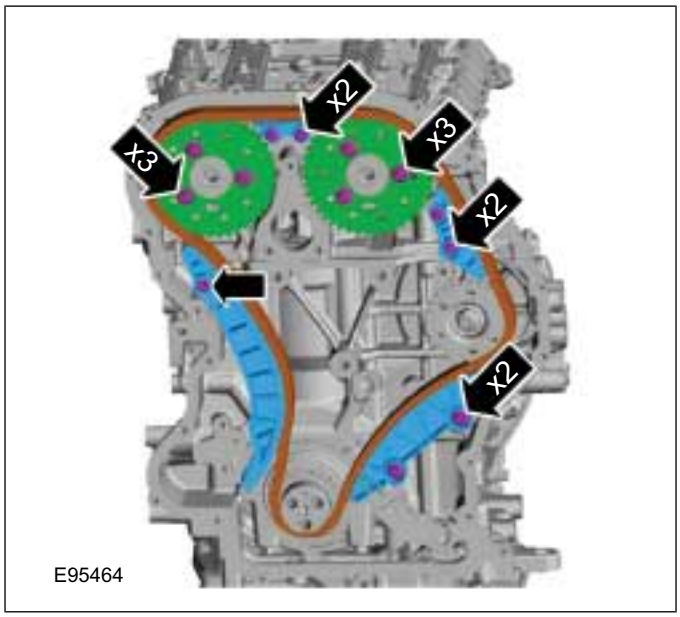

15.

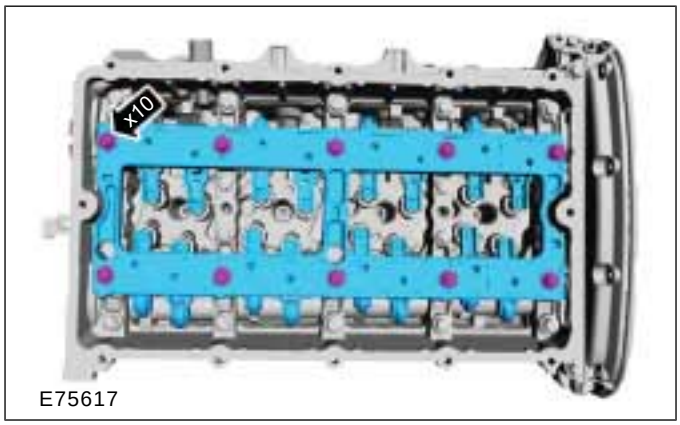

DISASSEMBLY

16.

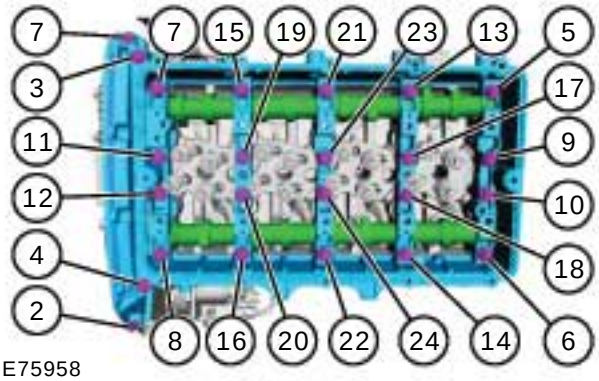

E75958

17.

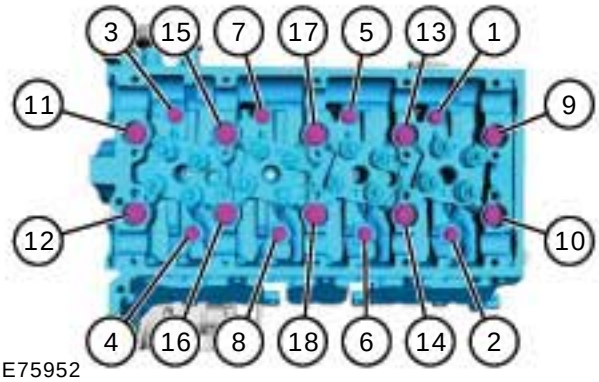

E75952

18. **WARNING: Be prepared to collect escaping fluid.**

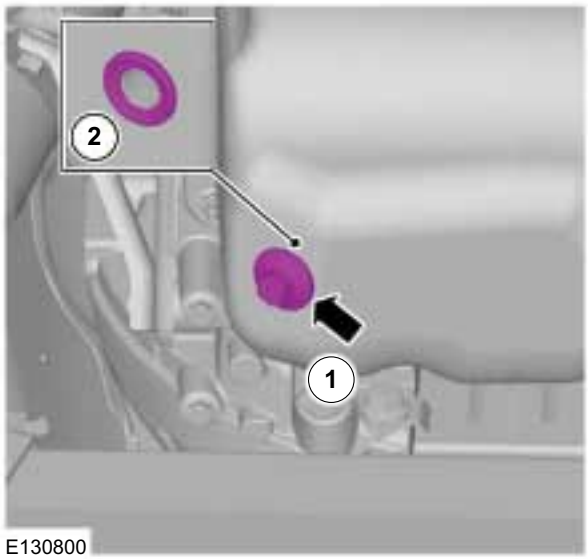

E130800

19. Special Tool(s): 303-428

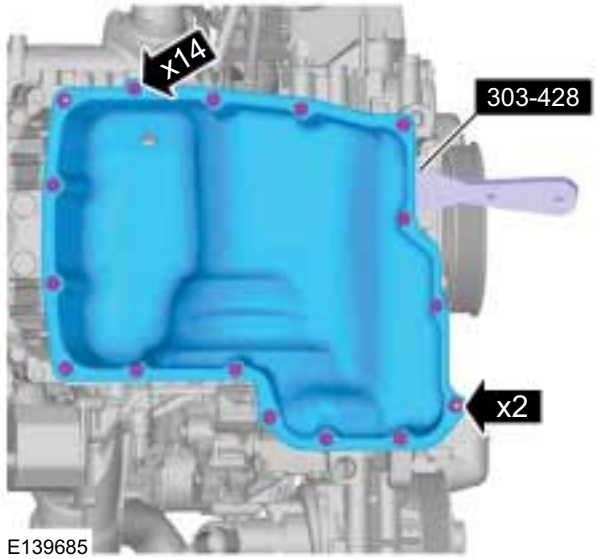

E139685

20.

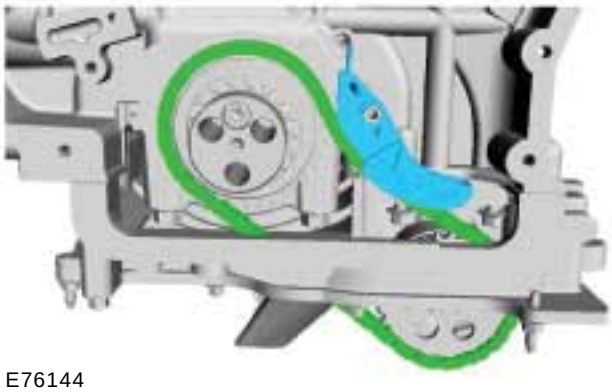
E76144

21.

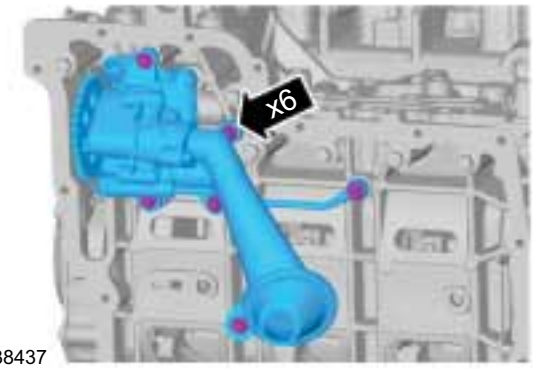

E138437

DISASSEMBLY

22.

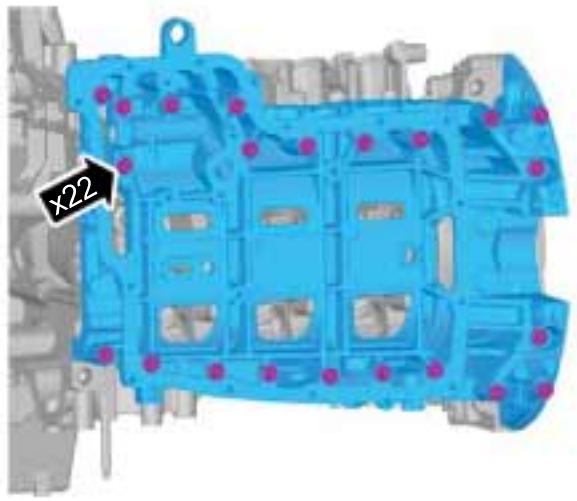

E138703

23.

E87419

24. **NOTE:** Note the position of each component before removal.

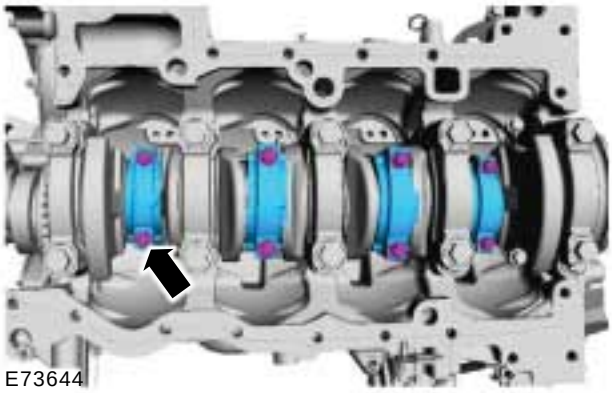
E73644

25. **NOTE:** Note the position of each component before removal.

E77286

26.

E76386

27. **NOTE:** Note the position of each component before removal.

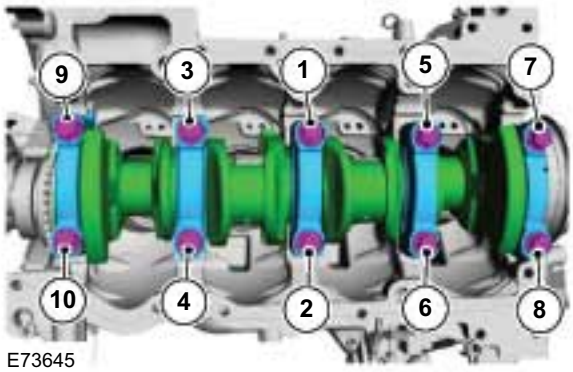

E73645

DISASSEMBLY

28. **NOTE:** Note the position of each component before removal.

E77266

29. **NOTE:** Note the position of each component before removal.

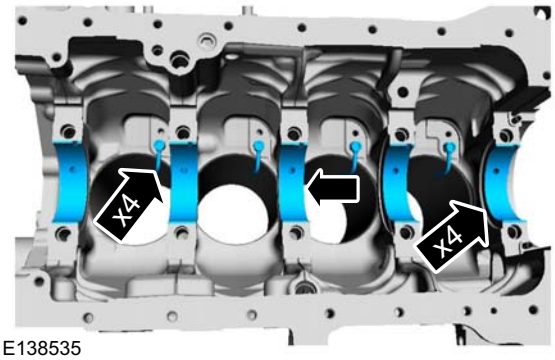

E138535

DISASSEMBLY AND ASSEMBLY OF SUBASSEMBLIES

Cylinder Head(21 165 6)

Disassembly

1. **For additional information, refer to: Valves (303-01 Engine - 2.2L Duratorq-TDCi (88kW/120PS) - Puma/2.2L Duratorq-TDCi (96kW/130PS) - Puma/2.2L Duratorq-TDCi (110kW/150PS) - Puma, Removal and Installation).**
2. **Torque : 13 Nm**

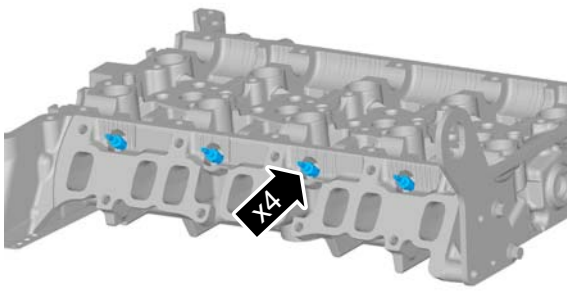

E139759

3. **Torque : 23 Nm**

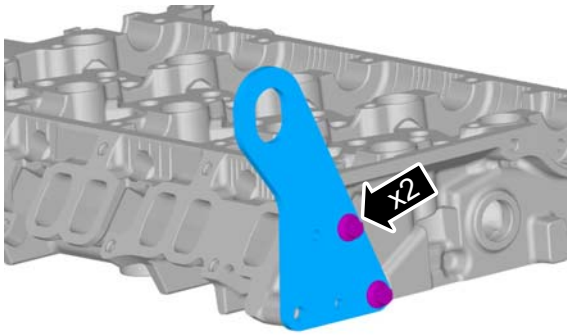

E138008

Assembly

1. **To assemble, reverse the disassembly procedure.**

ASSEMBLY

Engine(21 134 8)

Assembly

Special Tool(s) / General Equipment

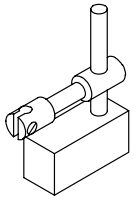 15008	205-044 Holding Fixture, Dial Indicator Gauge
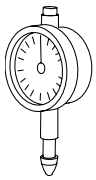 15046	205-069 Dial Indicator Gauge (Metric)
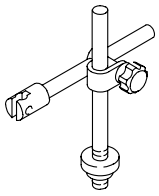 15022A	205-070 Holding Fixture, Dial Indicator Gauge
E131853	303-1562 Timing Tool
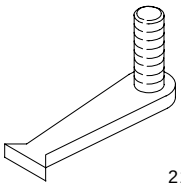 21135	303-254 Locking Tool, Flywheel
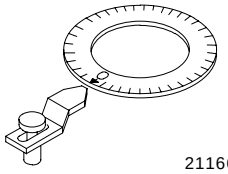 21166	303-391 Setting Gauge, Crankshaft

Special Tool(s) / General Equipment

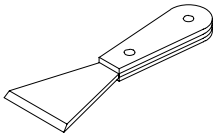 21179	303-428 Separator, Oil Pan
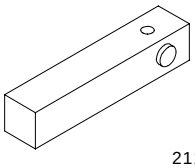 21183	303-432 Holding Fixture, Dial Indicator Gauge (Cylinder Liner Protrusion)
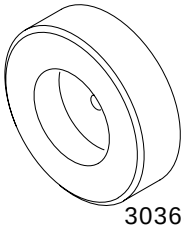 303682	303-682 Aligner, Engine Front Cover
6 mm Drill Bit	
Piston Ring Compressor	
Round-Ended Steel Rule	

Materials

Name	Specification
Engine Oil - 5W-30	WSS-M2C913-C
Silicone Sealant LB	WSE-M4G323-A4 / 2U7J-M4G323-AA

ASSEMBLY

1. **NOTE:** Make sure that these components are installed to the noted removal position.

   Material: Engine Oil - 5W-30 (WSS-M2C913-C) engine oil
   Torque: 10 Nm

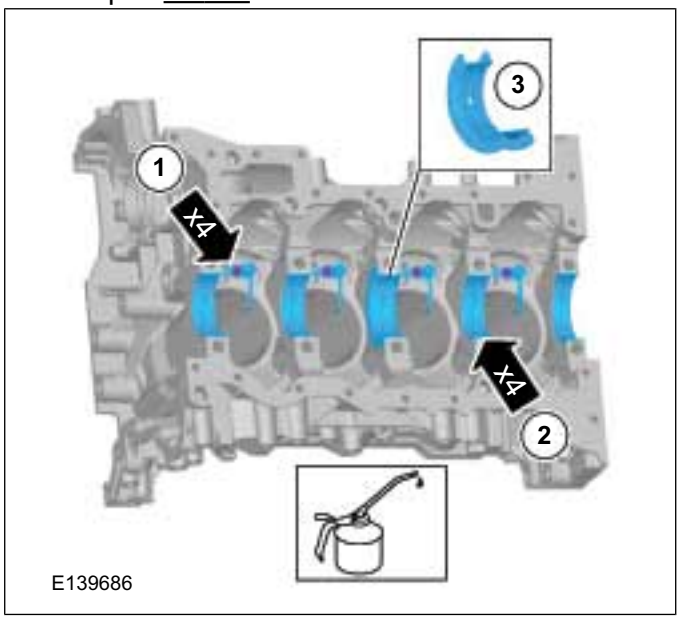

2. **NOTE:** Make sure that these components are installed to the noted removal position.

   Material: Engine Oil - 5W-30 (WSS-M2C913-C) engine oil

3. **NOTE:** Make sure that these components are installed to the noted removal position.

   NOTE: Install all the bolts finger tight before final tightening.

   Torque:
   - Stage 1: 15 Nm
   - Stage 2: 20 Nm
   - Stage 3: 35 Nm
   - Stage 4: 80 Nm
   - Stage 5: 90°

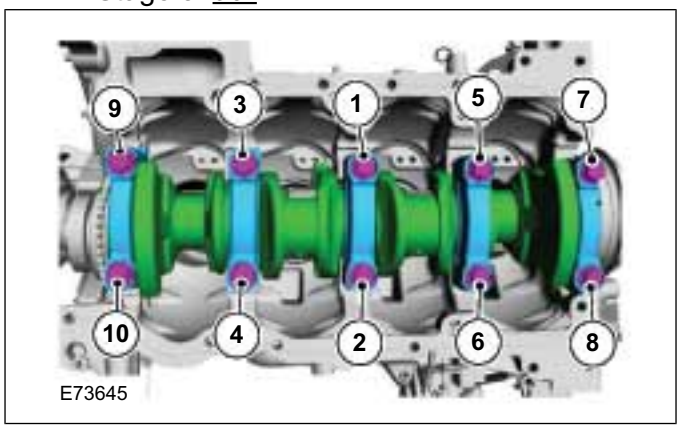

4. General Equipment: Piston Ring Compressor
   Material: Engine Oil - 5W-30 (WSS-M2C913-C) engine oil

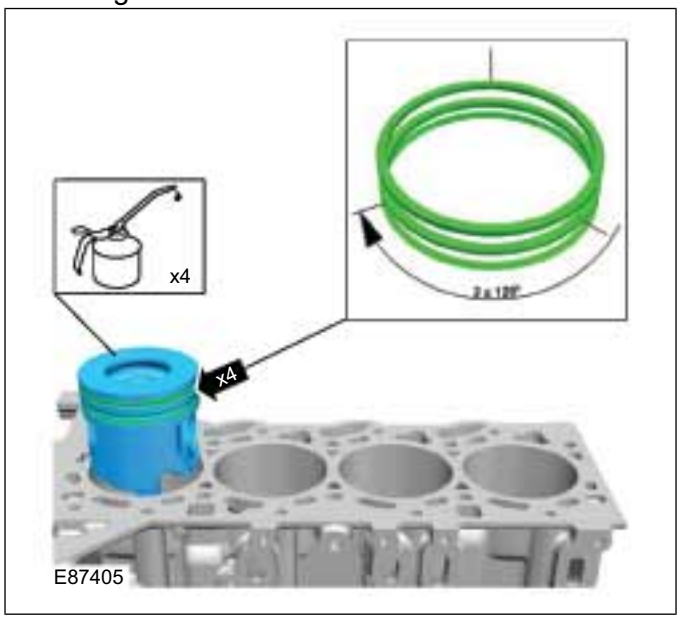

ASSEMBLY

5. **NOTE:** Make sure that these components are installed to the noted removal position.

   Material: Engine Oil - 5W-30 (WSS-M2C913-C) engine oil

E85147

6. **NOTE:** Make sure that these components are installed to the noted removal position.

   NOTE: Install all the bolts finger tight before final tightening.

   Torque:
   - Stage 1: 25 Nm
   - Stage 2: 60 Nm
   - Stage 3: 90°

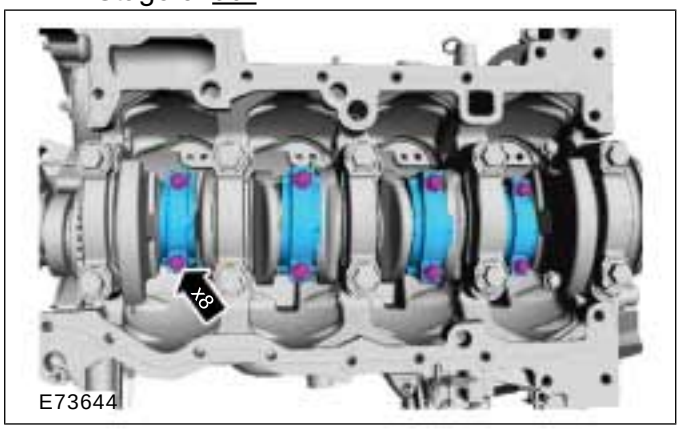

E73644

7.

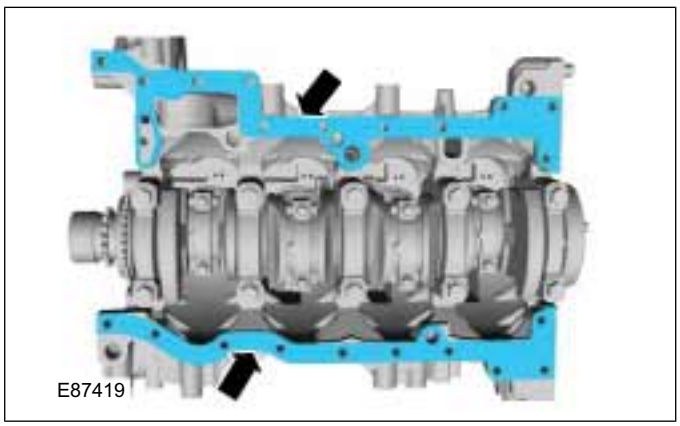
E87419

8. **NOTE:** Only tighten the bolts finger tight at this stage.

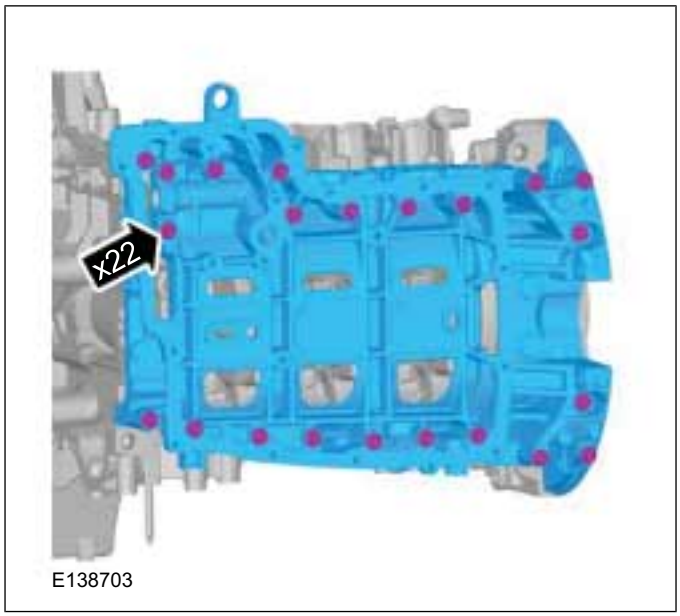

E138703

9. The ladder frame and the cylinder block must be aligned so that the side clearance does not exceed 0.05 mm overlap to 0.05 mm gap.

   Special Tool(s): 303-432

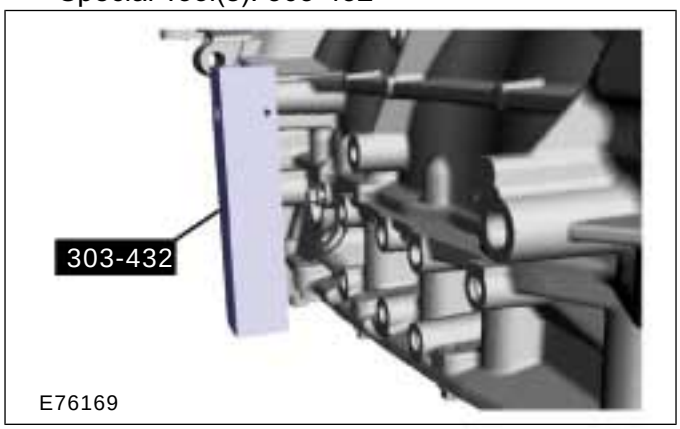

E76169

ASSEMBLY

10. The ladder frame and the cylinder block must be aligned so that the rear clearance does not exceed 0.01 mm overlap to 0.2 mm gap.

General Equipment: Round-Ended Steel Rule

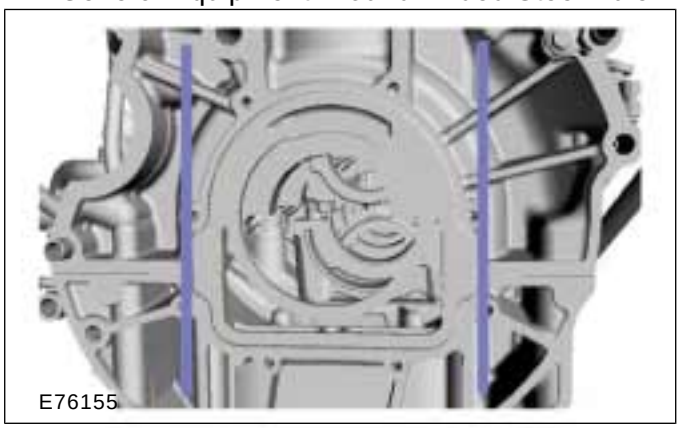

11. Torque: 23 Nm

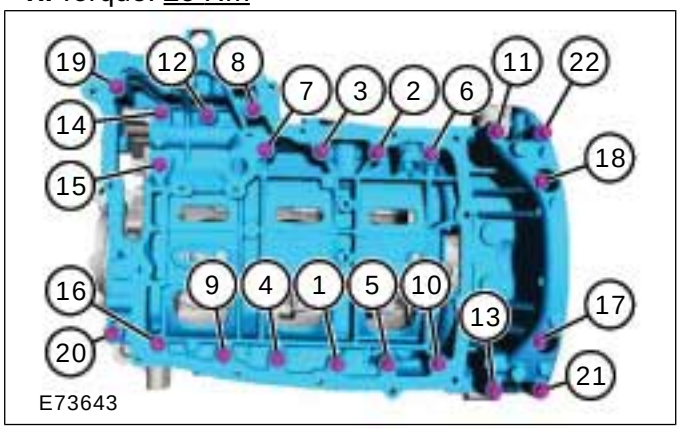

12. **NOTE:** Only tighten the bolts finger tight at this stage.

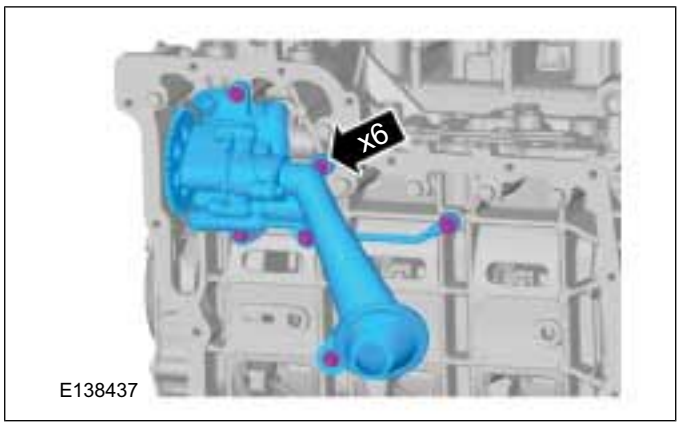

13. Take a reference measurement from the front face of the crankshaft sprocket.

Special Tool(s): 205-044, 205-069

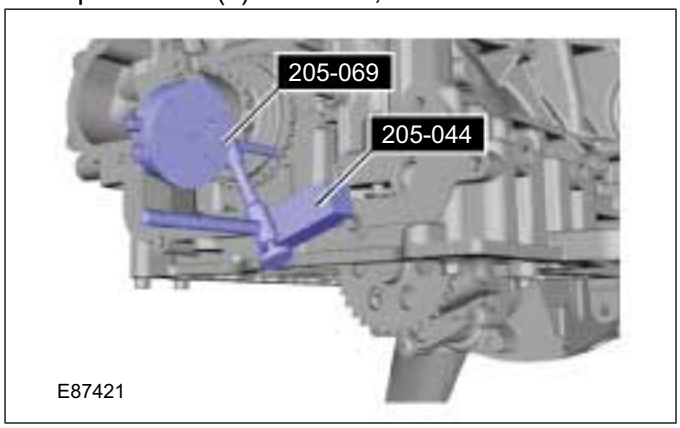

14. Take measurements at two different points on the oil pump sprocket and align the oil pump sprocket.

Special Tool(s): 205-044, 205-069

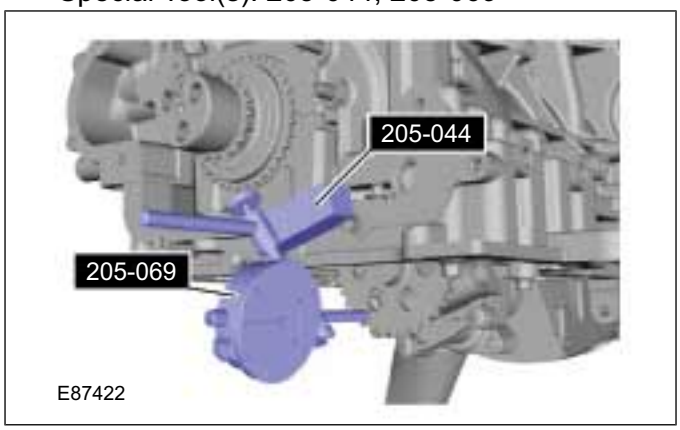

15. Torque: 10 Nm

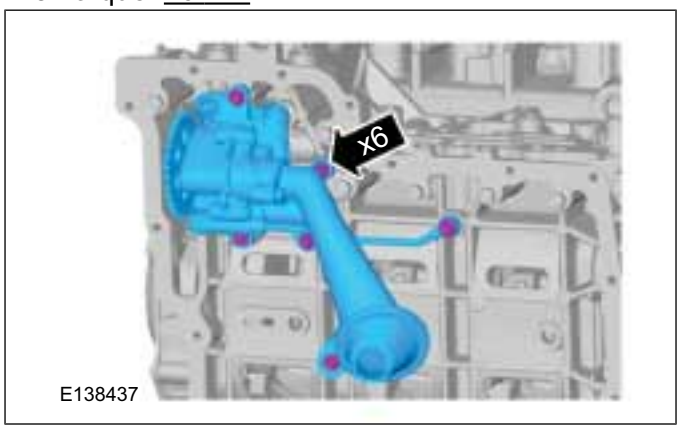

ASSEMBLY

16.

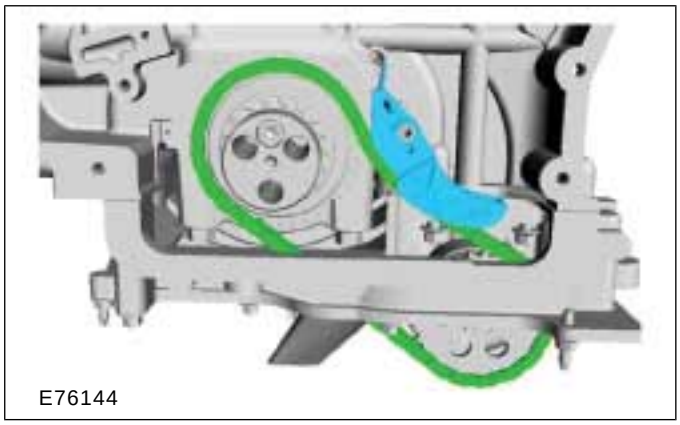

17. **NOTE:** A new crankshaft rear seal carrier is supplied with an alignment sleeve that must not be removed until the crankshaft rear seal is fully installed. Failure to follow this instruction may result in damage to the vehicle.

- Clean the area on the engine before installing a new crankshaft rear seal carrier.
- Check the two foam pads are located as shown on the ladder frame gasket.

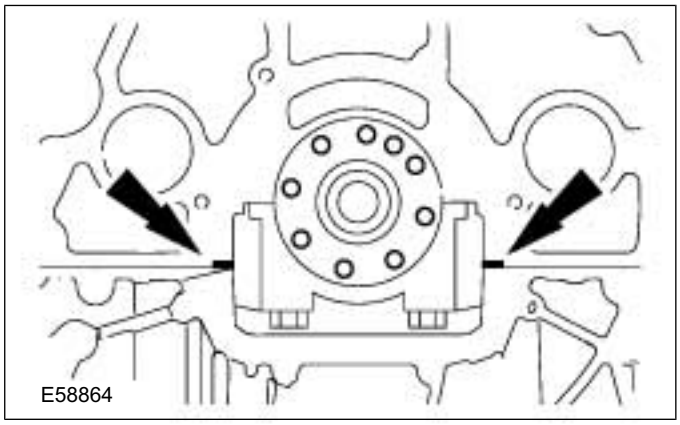

18.

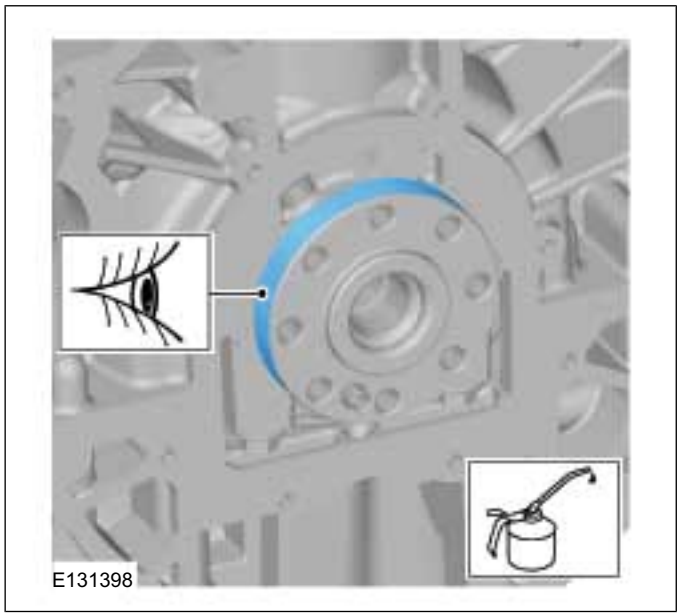

19. **NOTE:** Install new crankshaft rear seal carrier with in five minutes after applying the recomended sealent.

Material: Silicone Sealant LB (WSE-M4G323-A4 / 2U7J-M4G323-AA) sealant

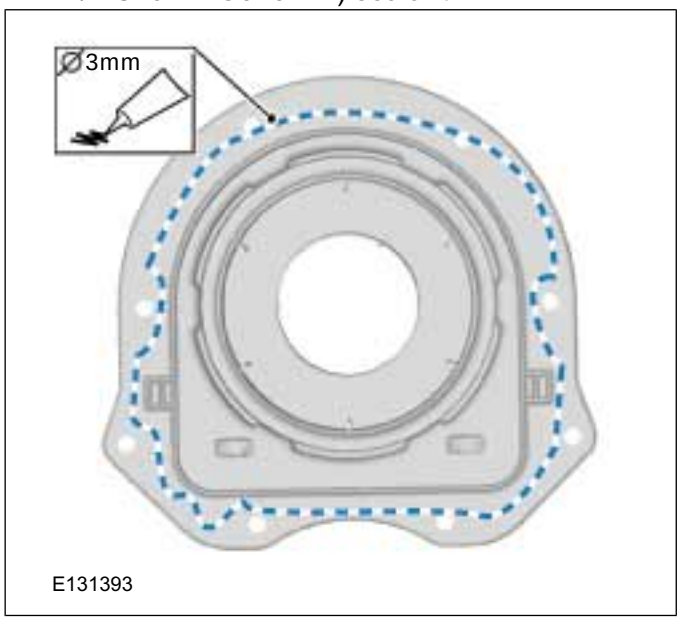

20. **CAUTION: A new crankshaft rear seal carrier is supplied with an alignment sleeve that must not be removed until the crankshaft rear seal is fully installed. Failure to follow this instruction may result in damage to the vehicle.**

ASSEMBLY

NOTE: Initially hand tighten the fasteners.

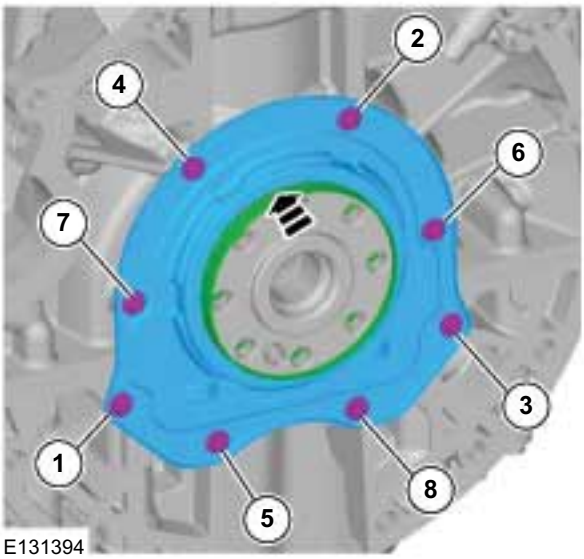

E131394

21. **NOTE:** New crankshaft seal carriers are supplied with an alignment sleeve which must be removed after installation.

Torque: 20 Nm

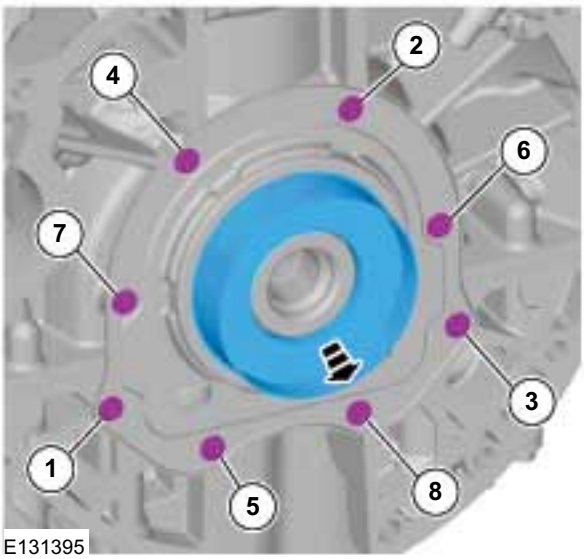

E131395

22. **NOTE:** Make sure that flywheel is in full contact with flywheel flange before installing the flywheel bolts.

NOTE: Only tighten the bolts finger tight at this stage.

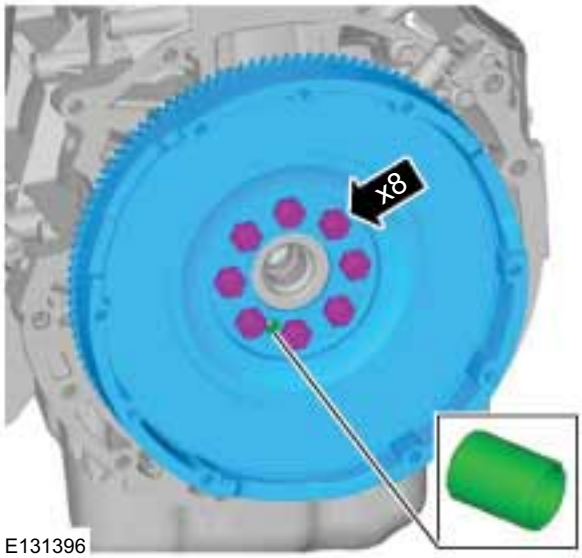

E131396

23. **CAUTION: Make sure that the flywheel is in full contact with the crankshaft flange before installing the flywheel bolts.**

Special Tool(s): 303-254
Torque:
- Stage 1: 15 Nm
- Stage 2: 30 Nm
- Stage 3: 75 Nm
- Stage 4: 45°

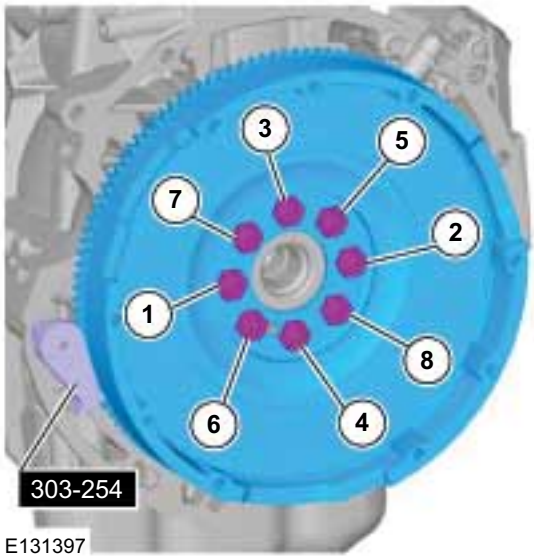

E131397

ASSEMBLY

24. Special Tool(s): 205-069, 205-070

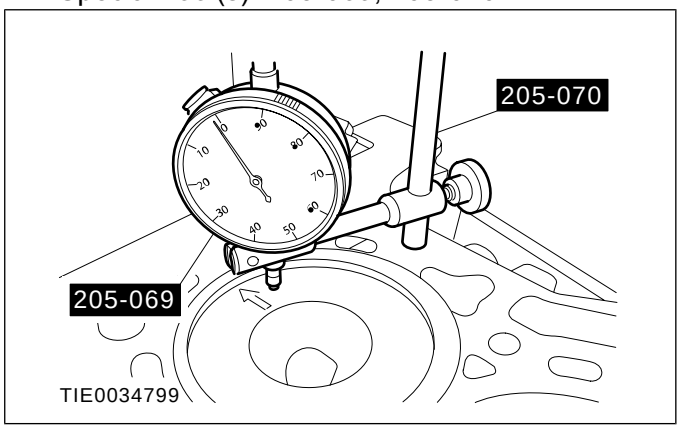

25. NOTE: Do not fully tighten the crankshaft position sensor bracket retaining bolts at this stage.

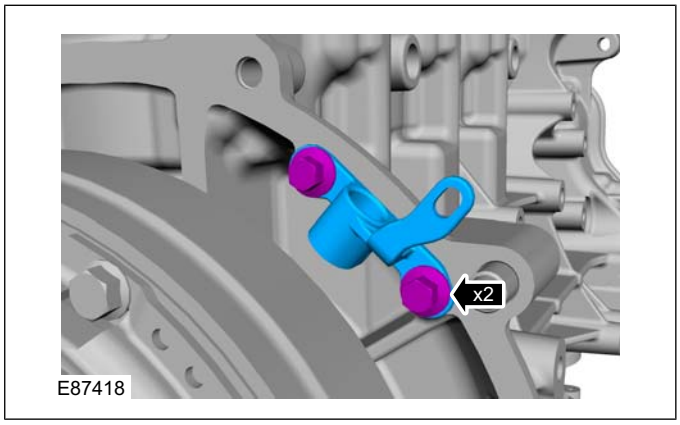

26. NOTE: After installation do not move the special tool.

Special Tool(s): 303-391

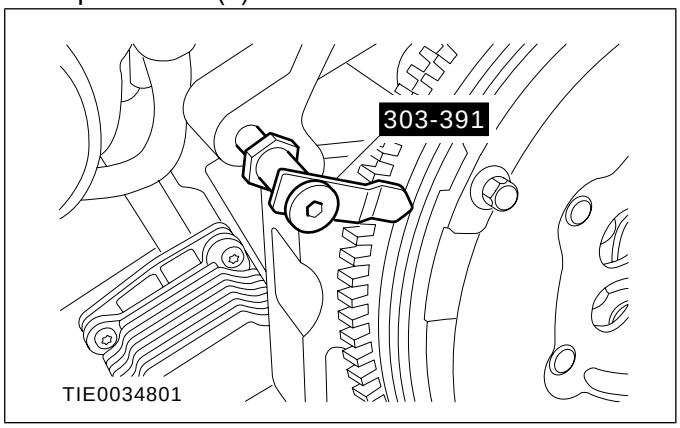

27. Rotate the crankshaft until piston No. one is approximately 10 mm before top dead center (TDC).

Special Tool(s): 205-069, 205-070

28. Zero the dial indicator gauge.

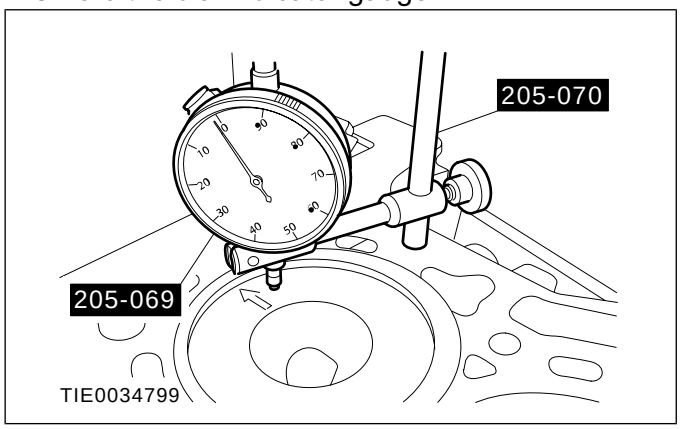

29. Mark the position on the flywheel primary mass.

Special Tool(s): 303-391

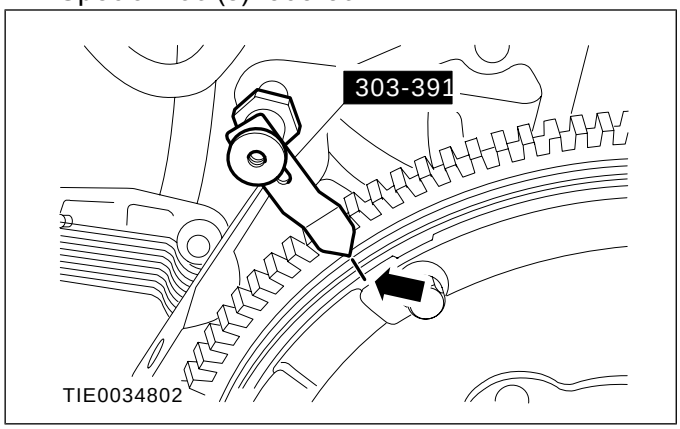

30. NOTE: Rotate the crankshaft counterclockwise.

1. Rotate the crankshaft until the piston No. one achieves zero on the dial indicator gauge.
2. Mark the position on the flywheel primary mass.

   Special Tool(s): 303-391

31. Repeat the previous steps to make sure that the marking is correct.

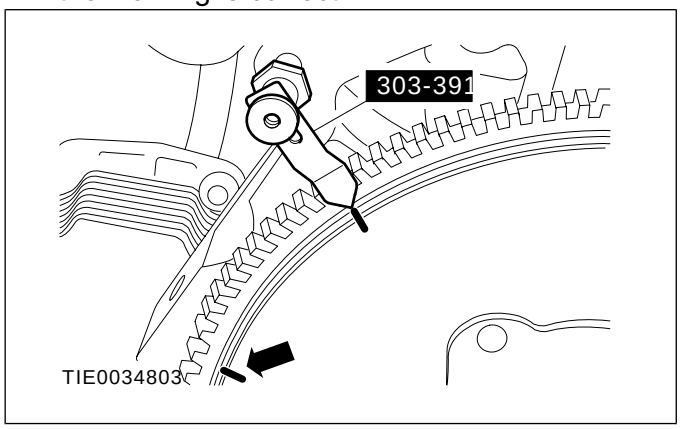

32. NOTE: The middle of the markings is TDC.

ASSEMBLY

Measure the distance between the two marks.

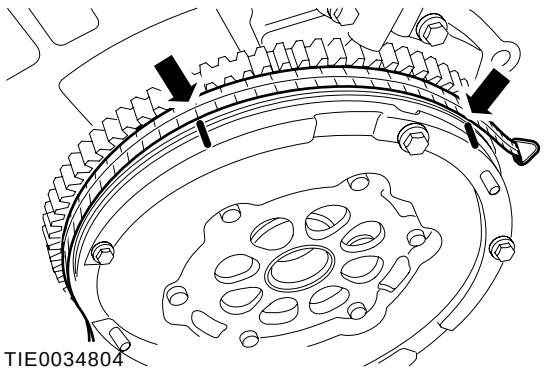

33. Divide the amount by two and mark the position TDC on the flywheel primary mass.

34. Measure the circumference of the flywheel primary mass.

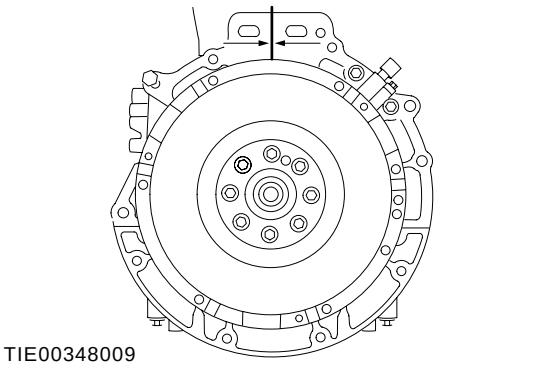

35. Multiply the circumference by 0.1388 and mark the calculated amount on the flywheel primary mass by measuring from TDC counterclockwise.

36. 1. First mark.
    2. Second mark.
    3. Determined TDC.
    4. Determined 50 degrees before top dead center (BTDC).

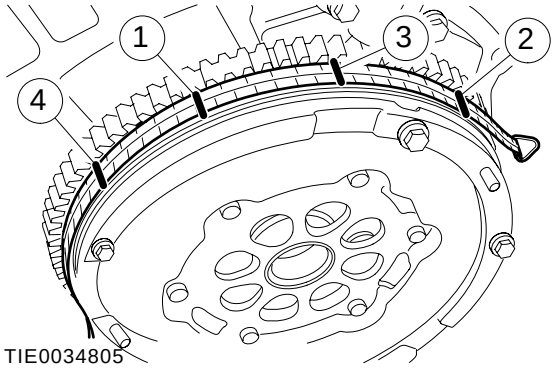

37. **CAUTION: Do not turn the crankshaft when the special tool is fully located into the flywheel. Failure to follow this instruction will cause damage to the CKP sensor hole.**

NOTE: Rotate the crankshaft in the normal direction of rotation to the mark of the calculated 50 degrees BTDC.

NOTE: Make sure that the special tool is fully located in the flywheel so that the engine cannot be rotated in either direction.

Special Tool(s): 303-1562

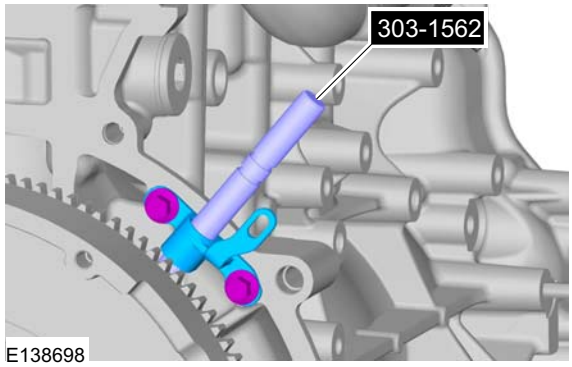

38. Remove the Special Tool(s): 303-1562
Torque: 25 Nm

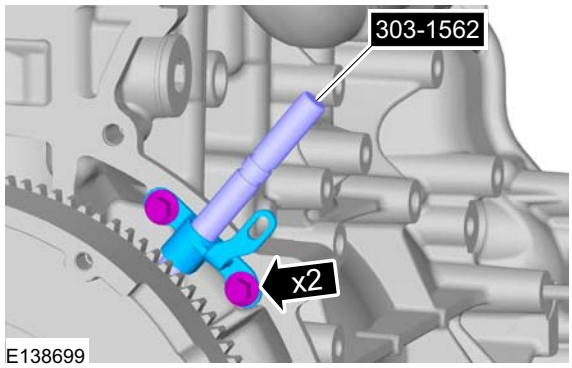

39. **WARNING: Do not use metal scrapers, wire brushes, power abrasive discs or other abrasive means to clean the sealing surfaces. These tools cause scratches and gouges that make leak**

ASSEMBLY

paths. Use a plastic scraping tool to remove all traces of the head gasket.

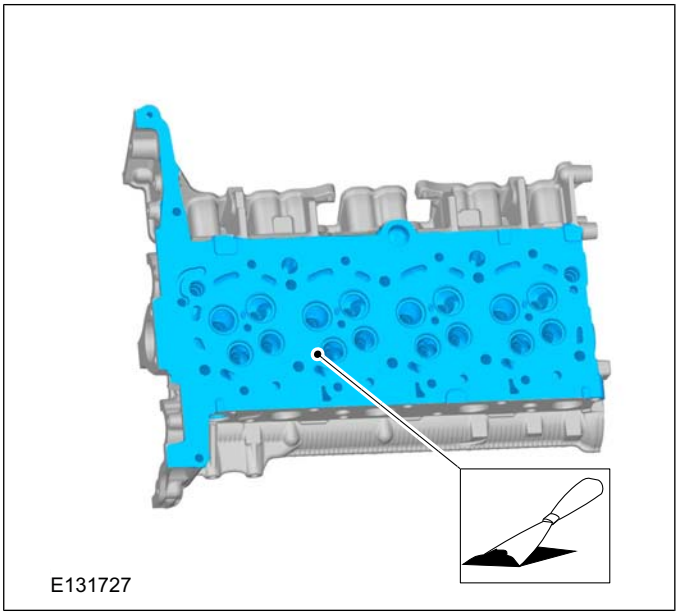

40. **NOTE:** Measure the piston protrusion of each cylinder at top dead center (TDC).

Measure the distance between the piston crown and the cylinder block at the points indicated.

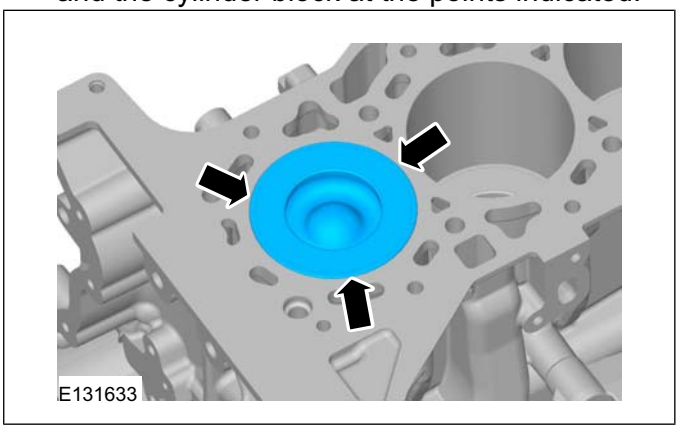

41. **NOTE:** The largest measurement determines the choice of the cylinder head gasket.

- Using the special tools, measure the piston protrusion.

  Special Tool(s): 205-070, 205-069, 303-432

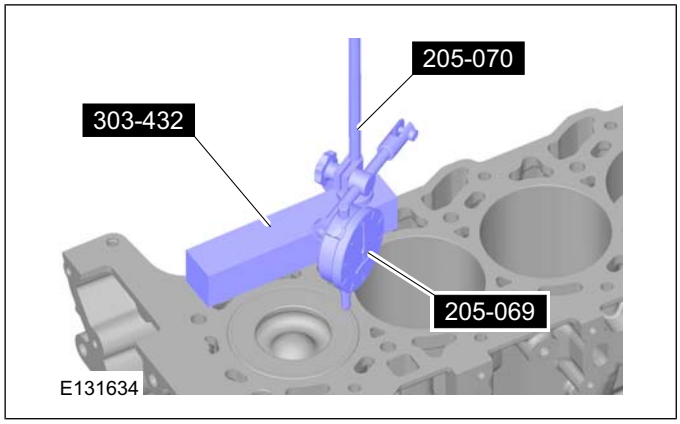

42. Determine the cylinder head gasket.

Refer to: Specifications (303-01 Engine - 2.2L Duratorq-TDCi (88kW/120PS) - Puma/2.2L Duratorq-TDCi (96kW/130PS) - Puma/2.2L Duratorq-TDCi (110kW/150PS) - Puma, Specifications).

43. **NOTE:** Make sure that a new component is installed.

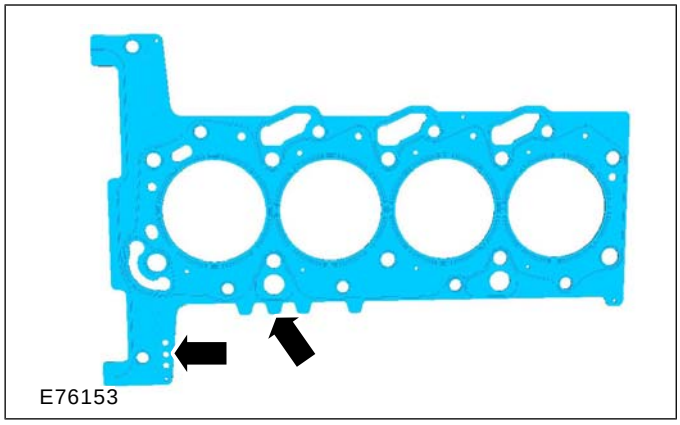

ASSEMBLY

44.

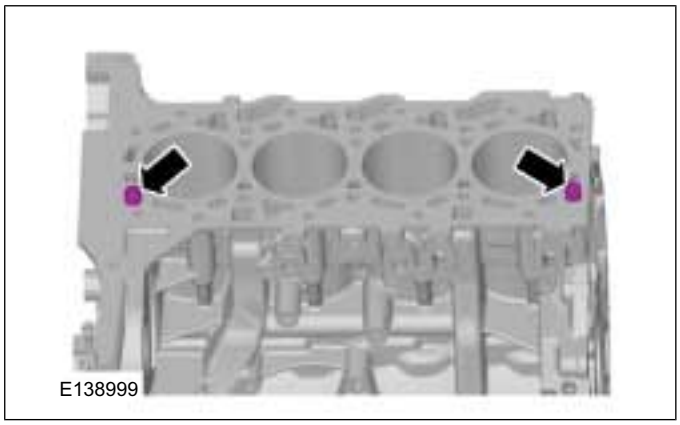

45. NOTE: Install all the bolts finger tight before final tightening.

Torque:
- Bolts 1 to 10 10 Nm
- Bolts 11 to 18 5 Nm
- Bolts 1 to 10 20 Nm
- Bolts 11 to 18 10 Nm
- Bolts 1 to 10 40 Nm
- Bolts 11 to 18 20 Nm
- Bolts 1 to 10 180°
- Bolts 11 to 18 180°

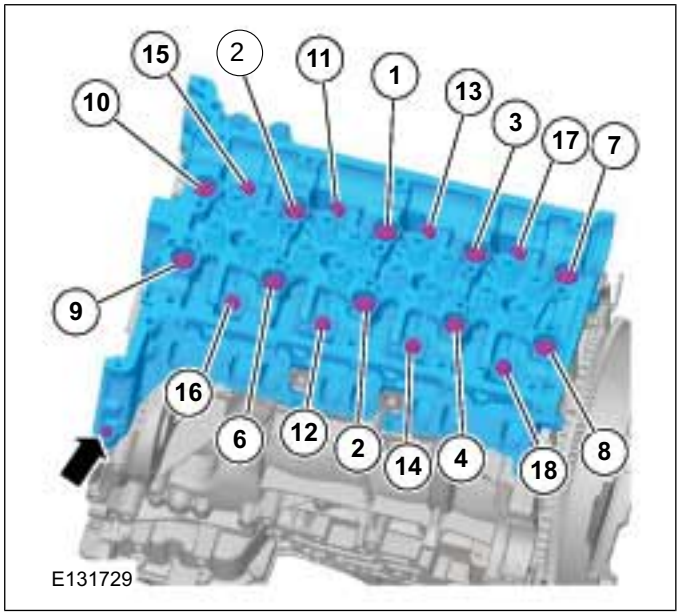

46. Material: Silicone Sealant LB (WSE-M4G323-A4 / 2U7J-M4G323-AA) sealant

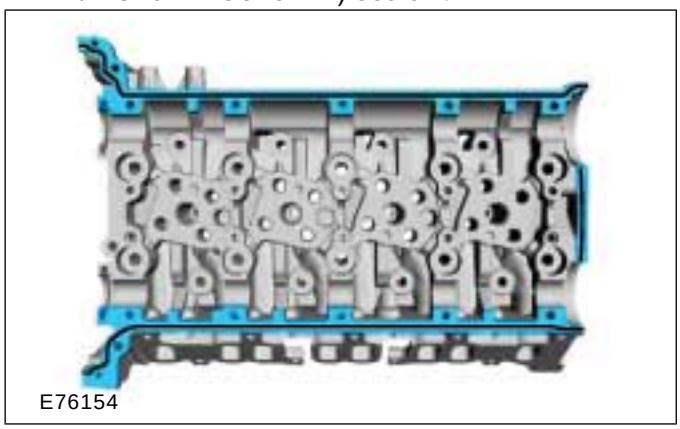

47. Torque:
- Bolts 1 to 22
  - Stage 1: 5 Nm
  - Stage 2: 23 Nm
- Bolts 23 to 24
  - Stage 1: 5 Nm
  - Stage 2: 10 Nm

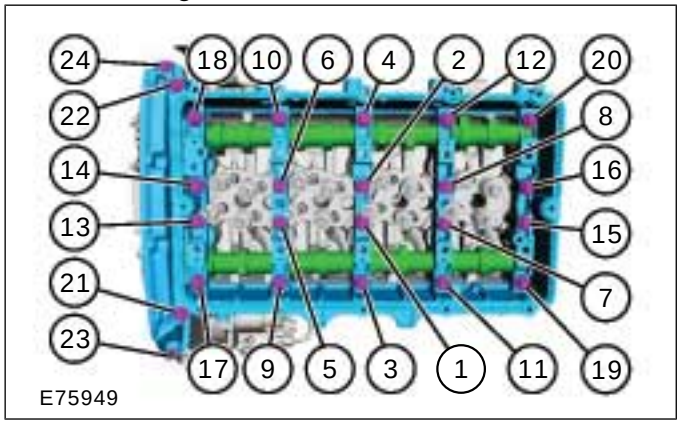

48. Torque:
- Stage 1: 10 Nm
- Stage 2: 30°

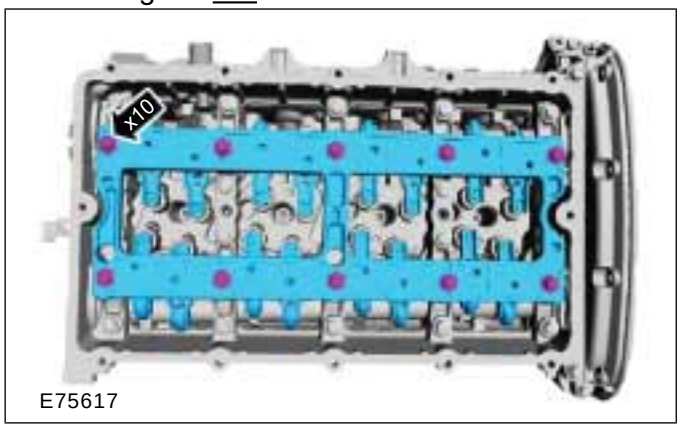

ASSEMBLY

49. Special Tool(s): 303-1562

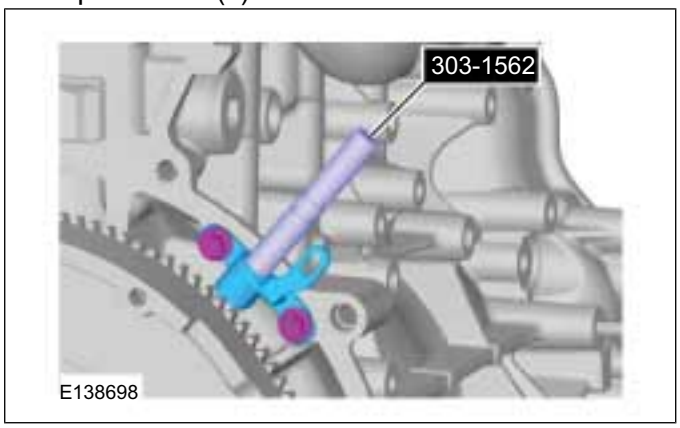

50. **NOTE:** Make sure that the installation marks are aligned.

General Equipment: 6 mm Drill Bit
Torque: 33 Nm

51. Remove the 6 mm drill bits.

52. **CAUTION: Make sure that new bolts are installed.**

1. Torque: 15 Nm
2. Torque: 40 Nm

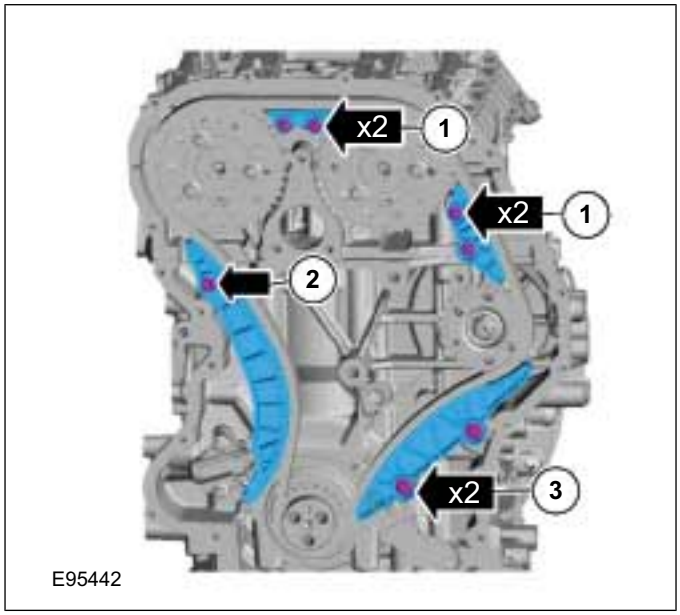

53. **NOTE:** Make sure that a new component is installed.

Torque: 15 Nm

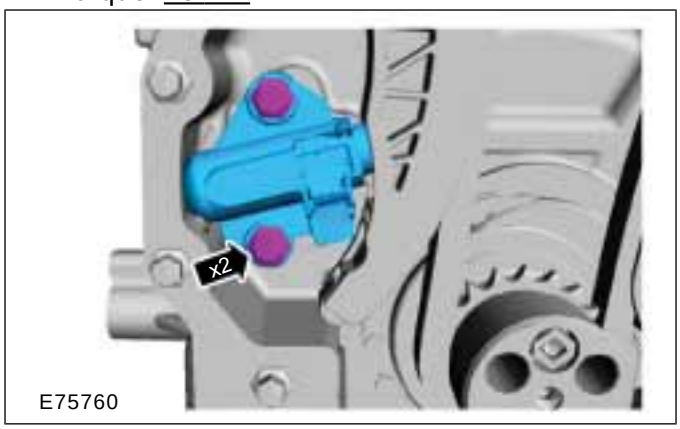

54. Remove the Special Tool(s): 303-1562

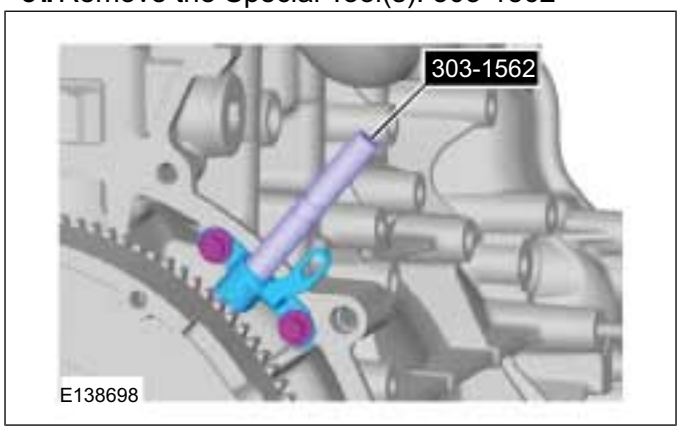

ASSEMBLY

55. Rotate the engine two revolutions.

56. Special Tool(s): 303-1562

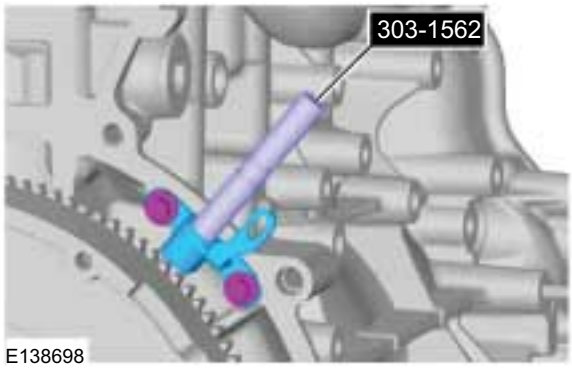

E138698

57. Check the position of the timing marks and correct if necessary.

58. Remove the 6 mm drill bits.

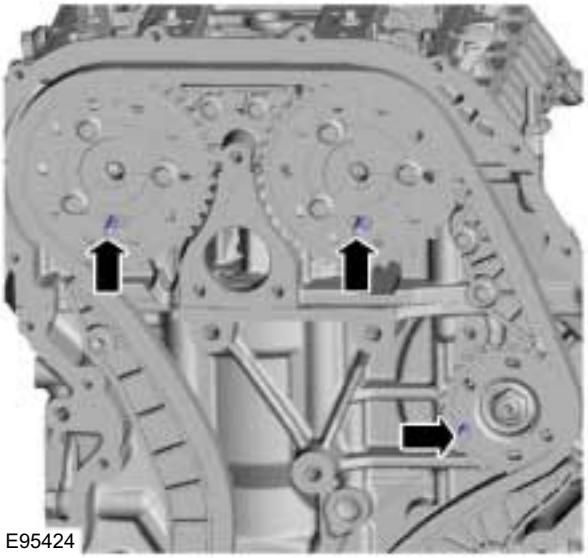
E95424

59. Remove the Special Tool(s): 303-1562

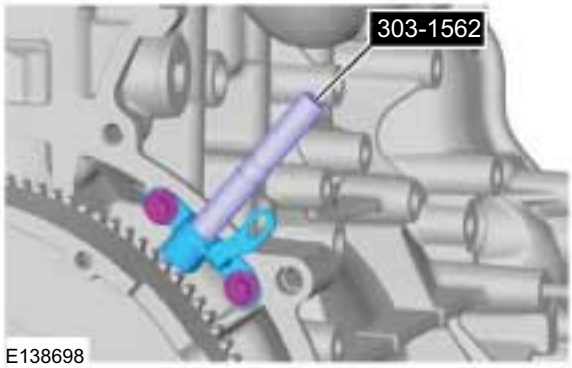

E138698

60.

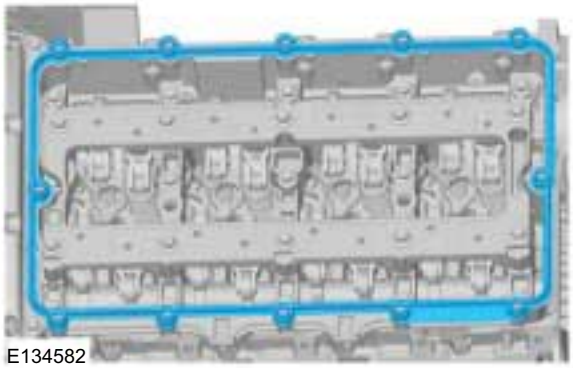
E134582

61. Torque: 10 Nm

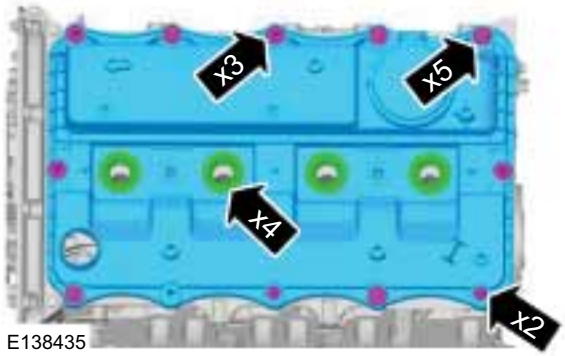

E138435

62. **NOTE:** Make sure that a new component is installed.

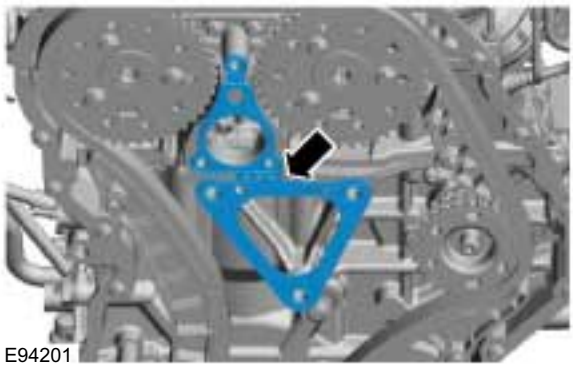
E94201

63. **NOTE:** The component must be installed within 5 minutes of applying the sealant.

ASSEMBLY

NOTE: Make sure that a new component is installed.

Material: Silicone Sealant LB (WSE-M4G323-A4 / 2U7J-M4G323-AA) sealant

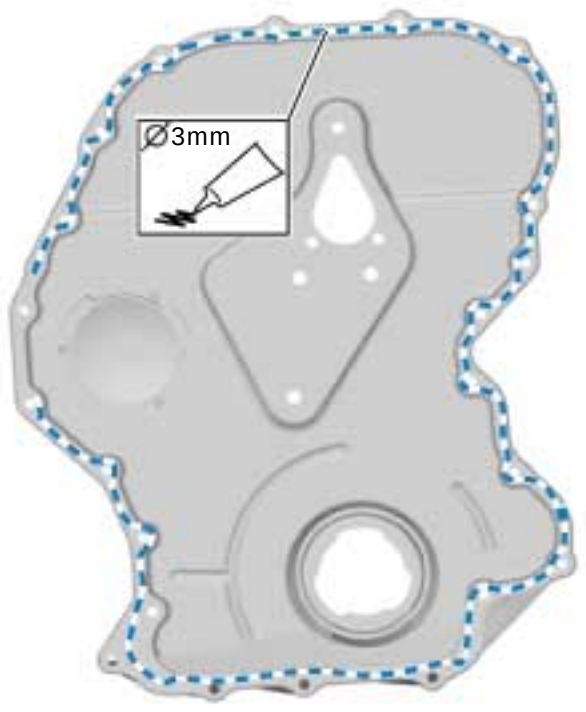

E131310

64. Special Tool(s): 303-682
Torque:
- 1 10 Nm
- 2 11 Nm

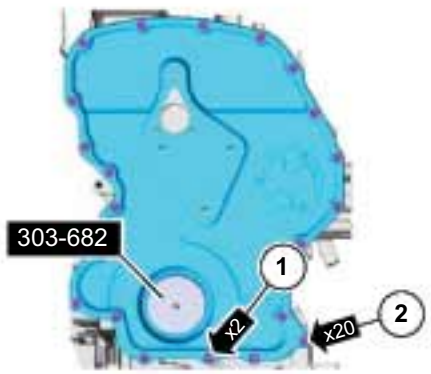

E87427

65. **NOTE:** Do not damage the mating faces.

Special Tool(s): 303-428

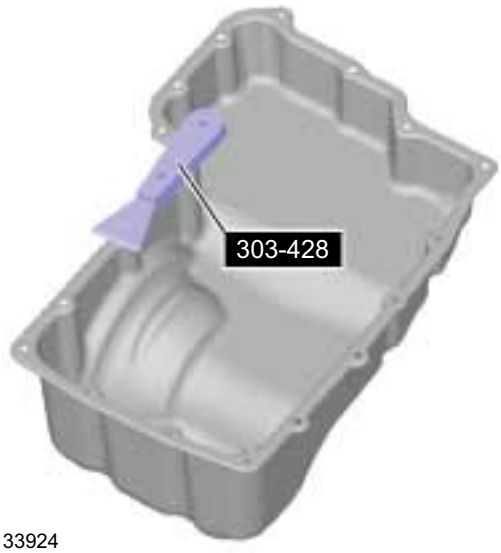

E133924

66. **CAUTION: Install the oil pan within five minutes of applying the sealer.**

NOTE: Do not damage the mating faces.

Material: Silicone Sealant LB (WSE-M4G323-A4 / 2U7J-M4G323-AA) sealant

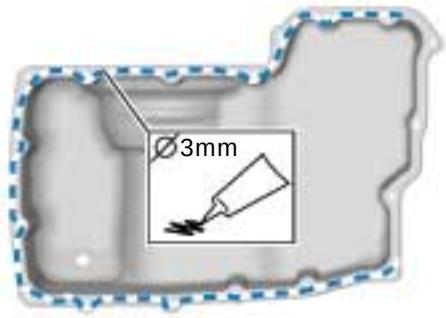

E130956

ASSEMBLY

67. Torque:
- Stage 1: 7 Nm
- Stage 2: 14 Nm

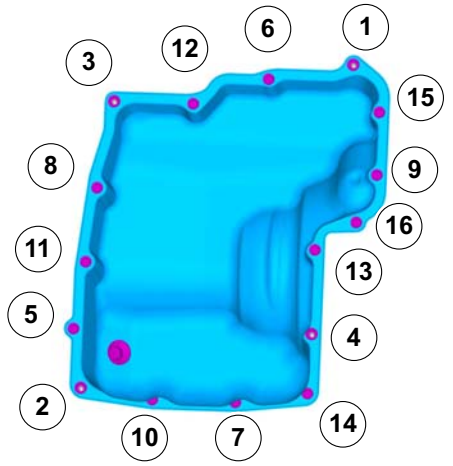

E133897

INSTALLATION

Engine — Vehicles With: 5-Speed Manual Transmission - MT75(21 132 0; 21 132 6; 21 132 7)

Installation

Special Tool(s)

21068A	303-122 Lifting Bracket, Engine

1. Refer to: Health and Safety Precautions (100-00 General Information, Description and Operation).

2. Special Tool(s): 303-122

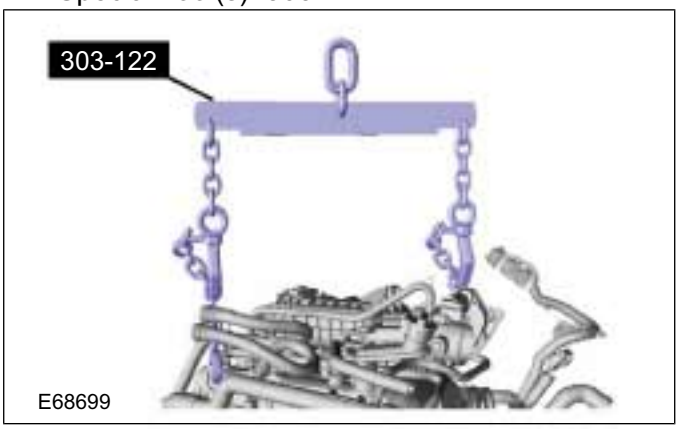

E68699

3.

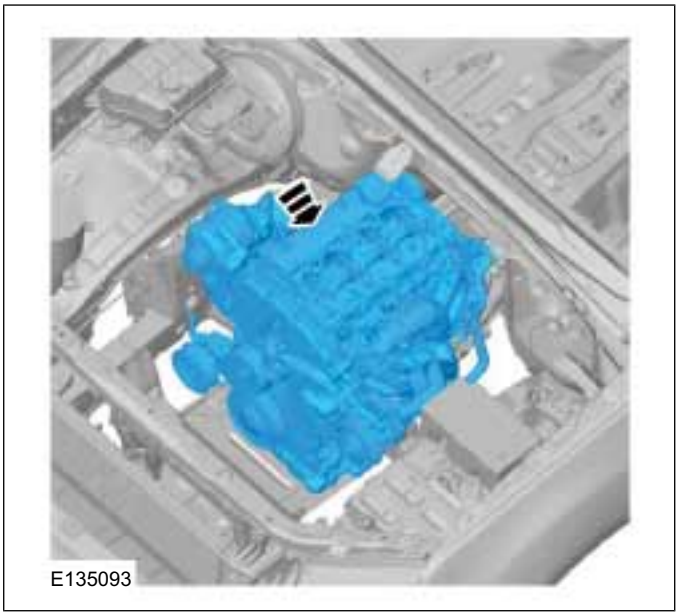
E135093

4. **NOTE:** Hand tighten the nut at this stage.

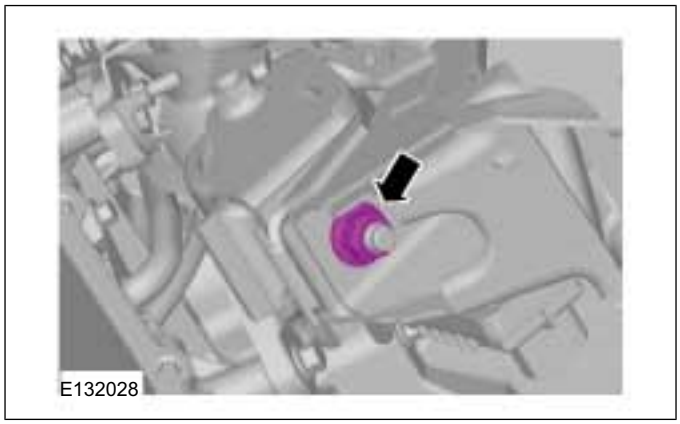
E132028

5. **NOTE:** Hand tighten the nut at this stage.

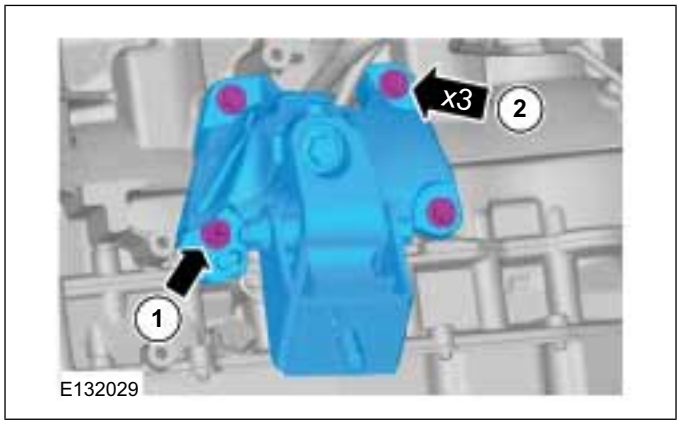

E132029

6. **NOTE:** Hand tighten the nut at this stage.

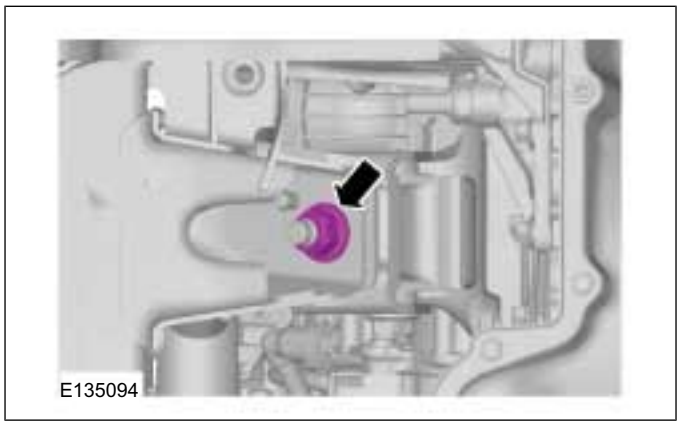
E135094

INSTALLATION

7. Initially hand tighten the fasteners.
   Torque: 48 Nm

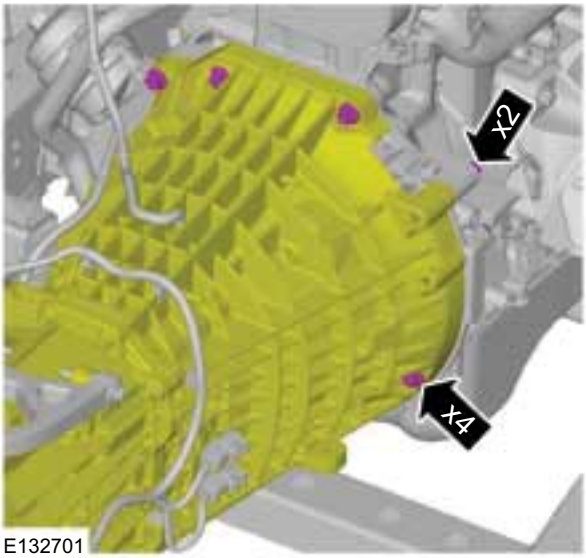

E132701

8. Initially hand tighten the fasteners.
   Torque: 48 Nm

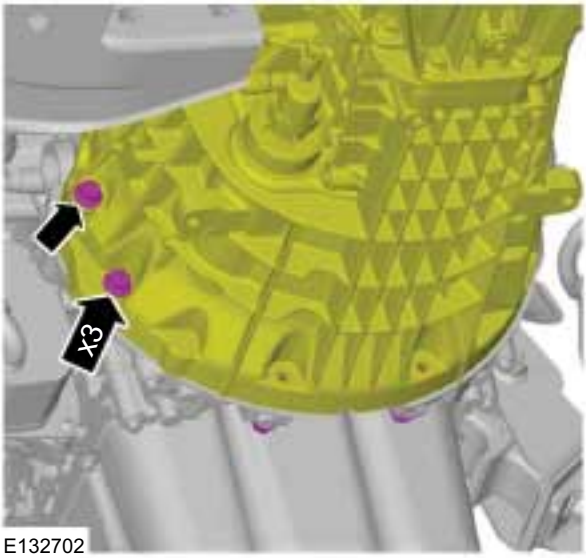

E132702

9. Torque: 80 Nm

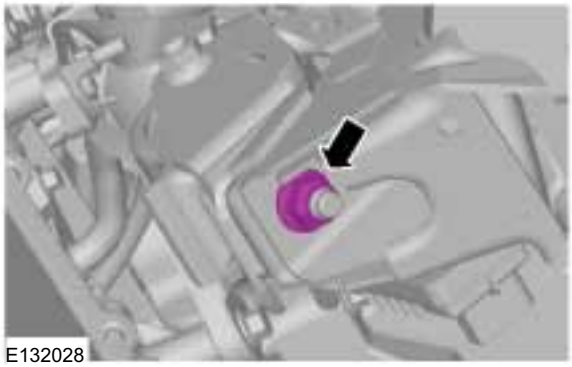
E132028

10. 1. Torque: 48 Nm
    2. Torque: 48 Nm

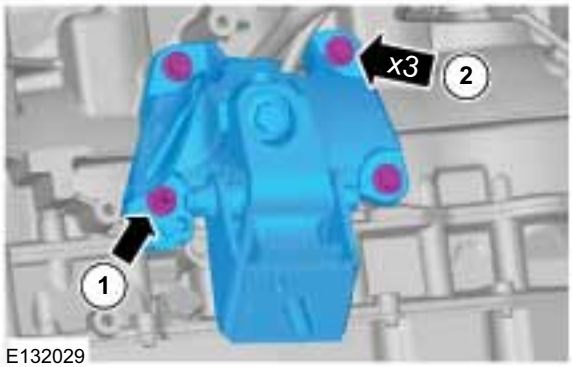

E132029

11. Torque: 80 Nm

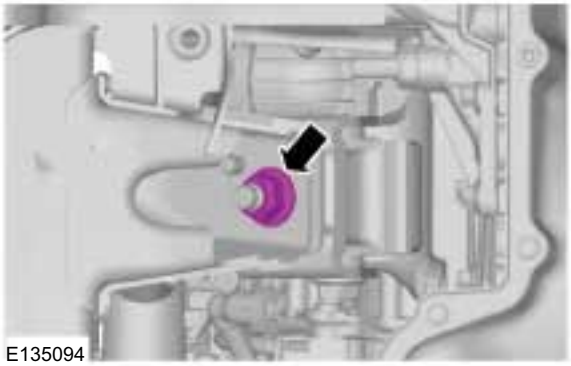
E135094

12. Remove the Special Tool(s): 303-122

E68699

INSTALLATION

13. Torque: 13 Nm

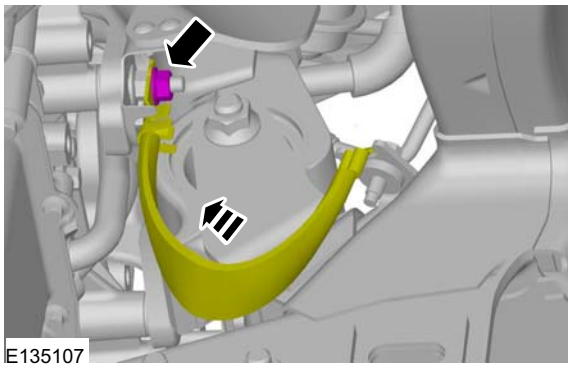
E135107

14.

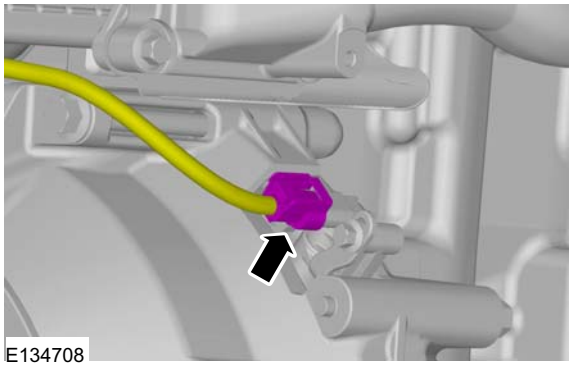
E134708

15. Torque: 22 Nm

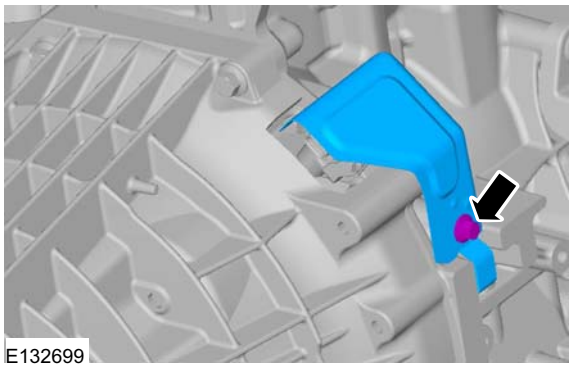
E132699

16.

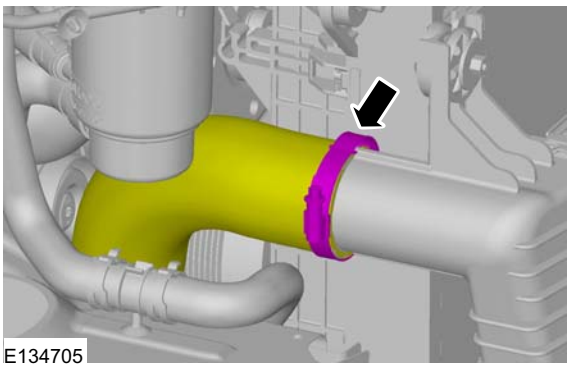
E134705

17. 2. Torque: 10 Nm

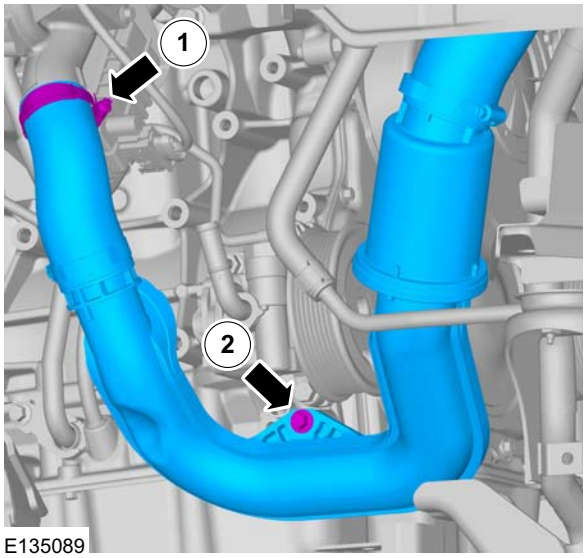

E135089

INSTALLATION

18. Refer to: Catalytic Converter (309-00 Exhaust System - 2.2L Duratorq-TDCi (88kW/120PS) - Puma/2.2L Duratorq-TDCi (96kW/130PS) - Puma/2.2L Duratorq-TDCi (110kW/150PS) - Puma/3.2L Duratorq-TDCi (148kW/200PS) - Puma, Removal and Installation).

19. 1. Torque: 47 Nm
    2. Torque: 22 Nm

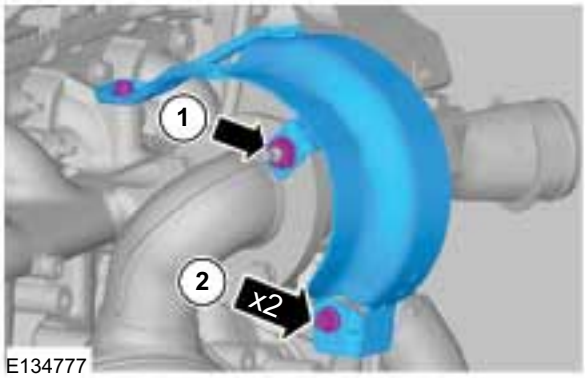

E134777

20.

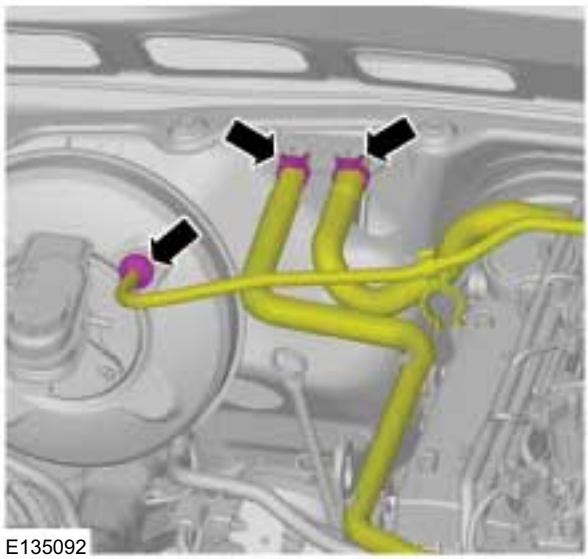
E135092

21.

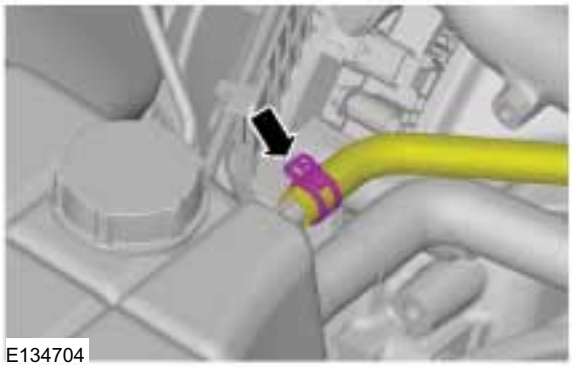
E134704

22. **NOTE:** The washers can be reused unless damaged.
    3. Torque: 35 Nm

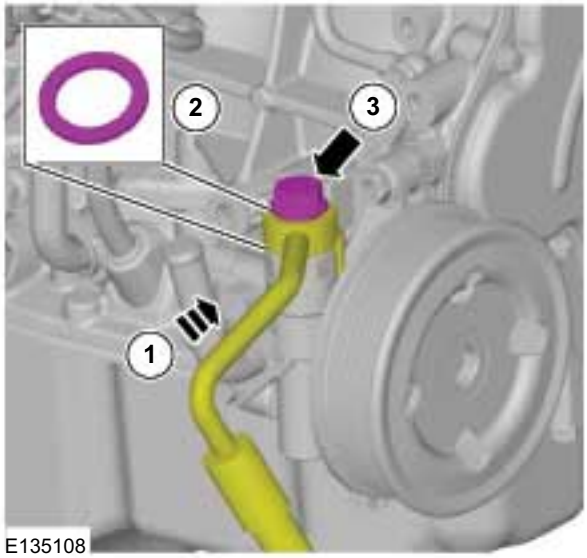

E135108

23.

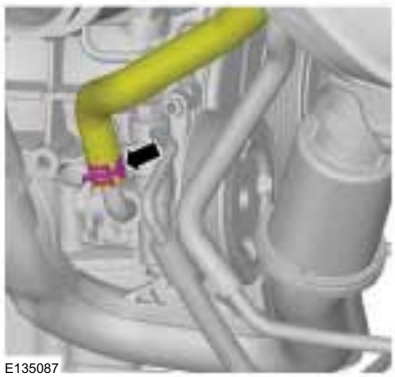
E135087

INSTALLATION

24. Torque: 22 Nm

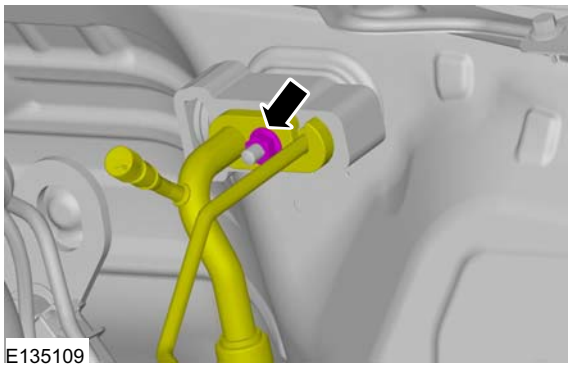
E135109

25. Refer to: Starter Motor - 2.2L Duratorq-TDCi (88kW/120PS) - Puma/2.2L Duratorq-TDCi (96kW/130PS) - Puma/2.2L Duratorq-TDCi (110kW/150PS) - Puma (303-06 Starting System - 2.2L Duratorq-TDCi (88kW/120PS) - Puma/2.2L Duratorq-TDCi (96kW/130PS) - Puma/2.2L Duratorq-TDCi (110kW/150PS) - Puma/3.2L Duratorq-TDCi (148kW/200PS) - Puma, Removal and Installation).

26.

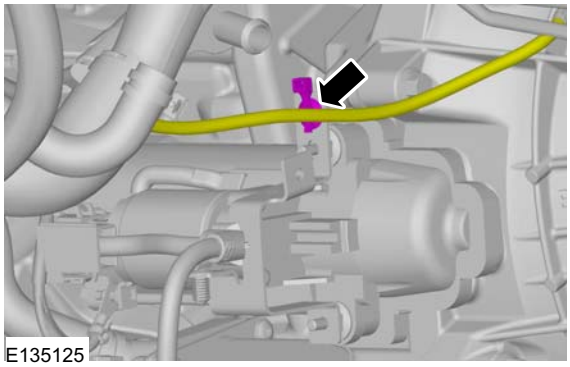
E135125

27. Refer to: Condenser - 2.2L Duratorq-TDCi (88kW/120PS) - Puma/2.2L Duratorq-TDCi (96kW/130PS) - Puma/2.2L Duratorq-TDCi (110kW/150PS) - Puma/3.2L Duratorq-TDCi (148kW/200PS) - Puma (412-01 Climate Control, Removal and Installation).

28. Refer to: Radiator (303-03 Engine Cooling - 2.2L Duratorq-TDCi (88kW/120PS) - Puma/2.2L Duratorq-TDCi (96kW/130PS) - Puma/2.2L Duratorq-TDCi (110kW/150PS) - Puma, Removal and Installation).

29. Refer to: Cooling Fan Motor and Shroud (303-03 Engine Cooling - 2.2L Duratorq-TDCi (88kW/120PS) - Puma/2.2L Duratorq-TDCi (96kW/130PS) - Puma/2.2L Duratorq-TDCi (110kW/150PS) - Puma, Removal and Installation).

30. Refer to: Air Cleaner - 2.2L Duratorq-TDCi (88kW/120PS) - Puma/2.2L Duratorq-TDCi (96kW/130PS) - Puma/2.2L Duratorq-TDCi (110kW/150PS) - Puma (303-12 Intake Air Distribution and Filtering - 2.2L Duratorq-TDCi (88kW/120PS) - Puma/2.2L Duratorq-TDCi (96kW/130PS) - Puma/2.2L Duratorq-TDCi (110kW/150PS) - Puma/3.2L Duratorq-TDCi (148kW/200PS) - Puma, Removal and Installation).

31.

303-01B-115

INSTALLATION

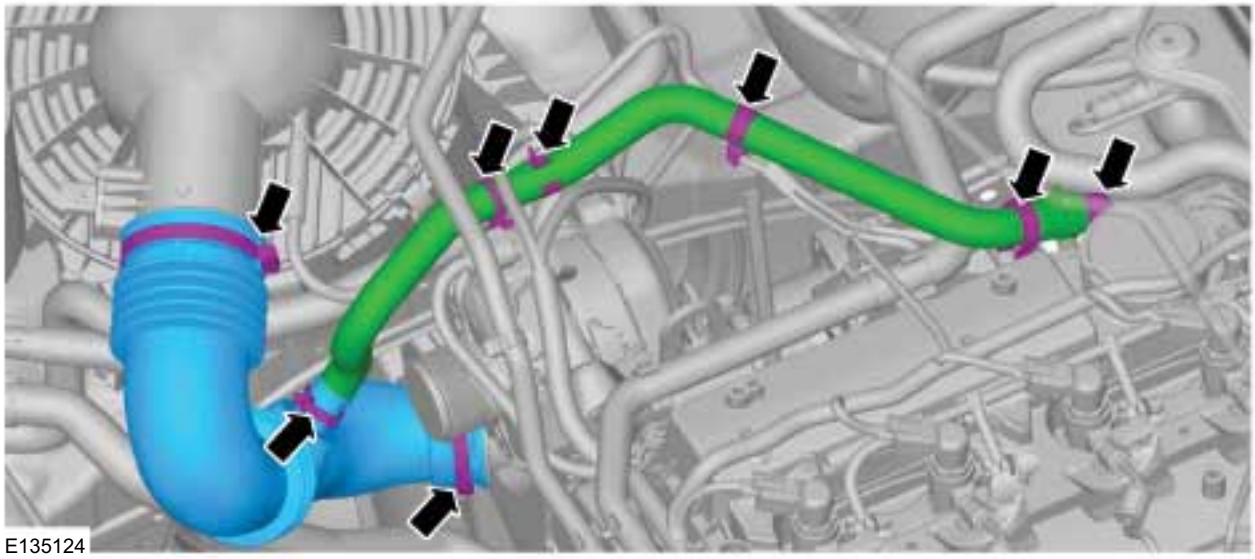

32.

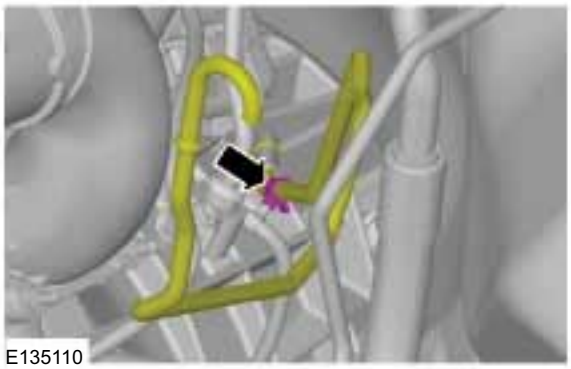

33. Torque: 10 Nm

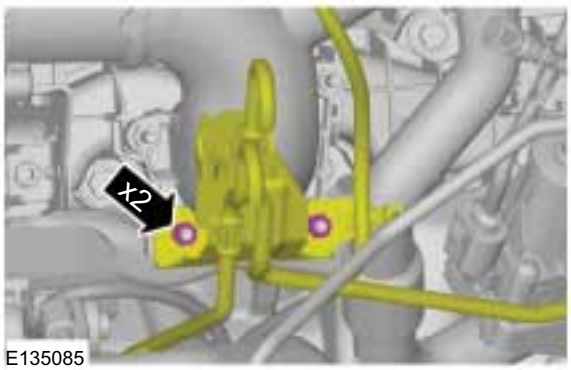

34. Torque: 18 Nm

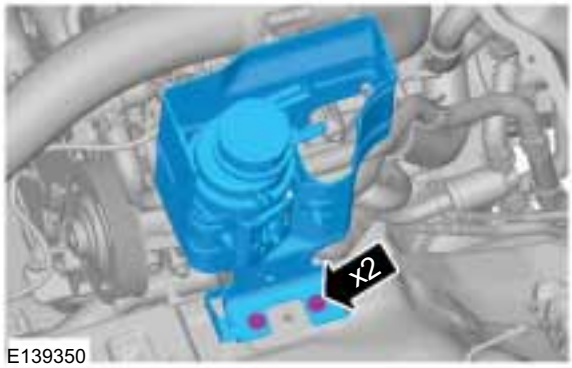

35. Torque: 5 Nm

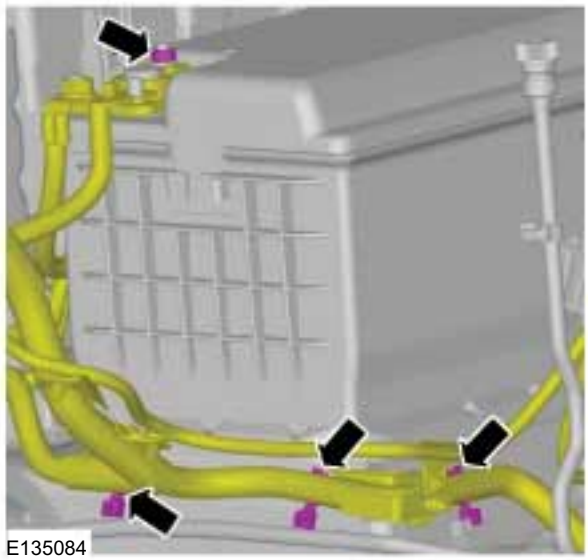

INSTALLATION

36.

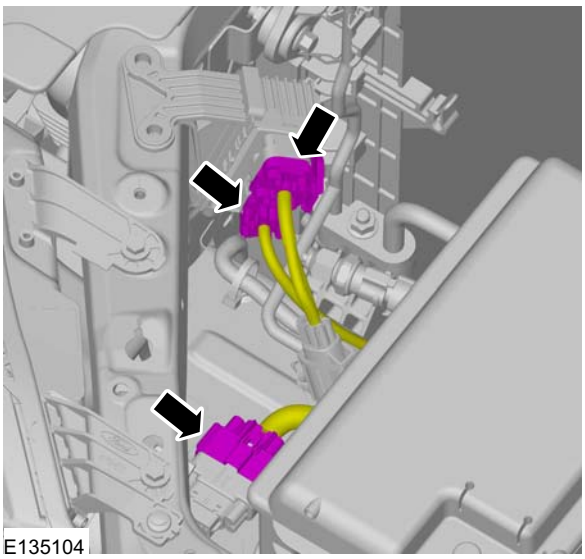
E135104

37.

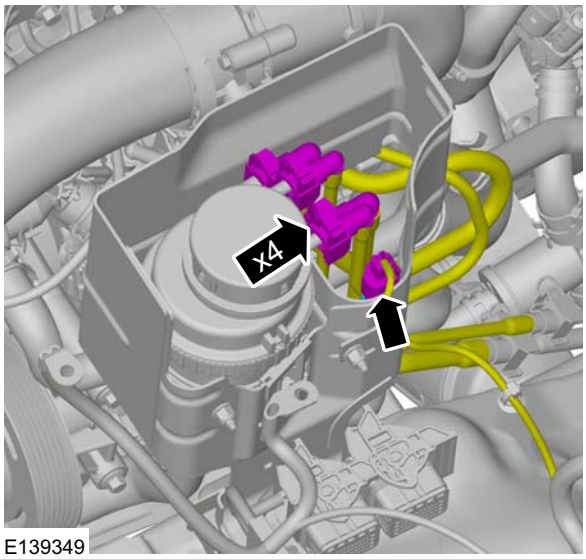

E139349

38. Refer to: Powertrain Control Module (PCM) (303-14 Electronic Engine Controls - 2.5L Duratec-HE (122kW/165PS) - MI4, Removal and Installation).
Refer to: Powertrain Control Module (PCM) (303-14 Electronic Engine Controls - 2.2L Duratorq-TDCi (88kW/120PS) - Puma/2.2L Duratorq-TDCi (96kW/130PS) - Puma/2.2L Duratorq-TDCi (110kW/150PS) - Puma/3.2L Duratorq-TDCi (148kW/200PS) - Puma, Removal and Installation).

39. Refer to: Battery Tray (414-01 Battery, Mounting and Cables, Removal and Installation).

40. Refer to: Battery (414-01 Battery, Mounting and Cables, Removal and Installation).

41. Torque: 10 Nm

INSTALLATION

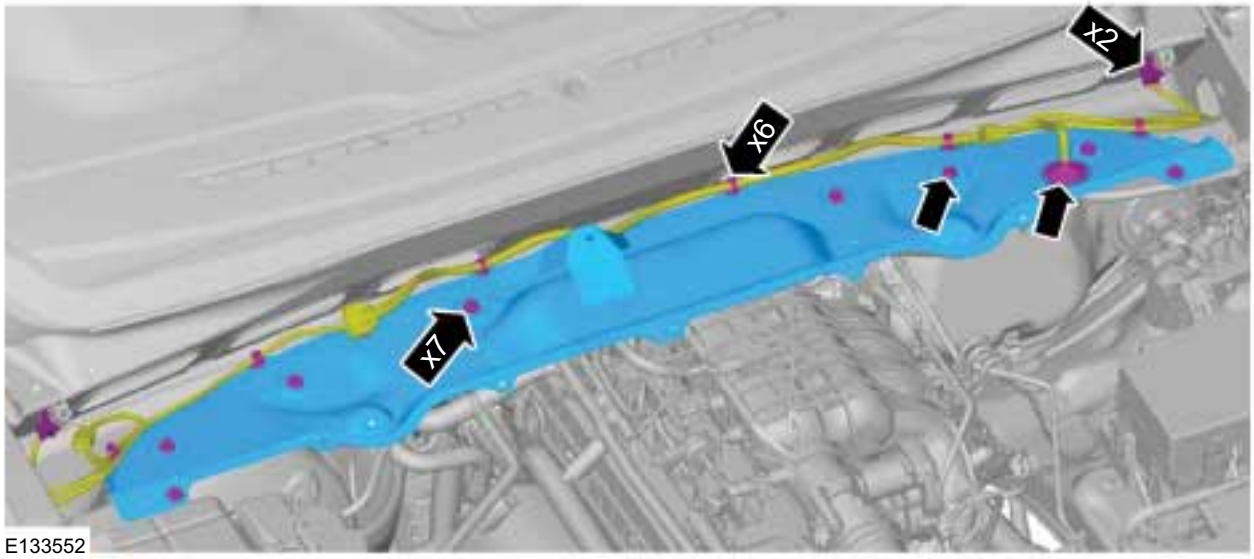

E133552

42. On both sides.

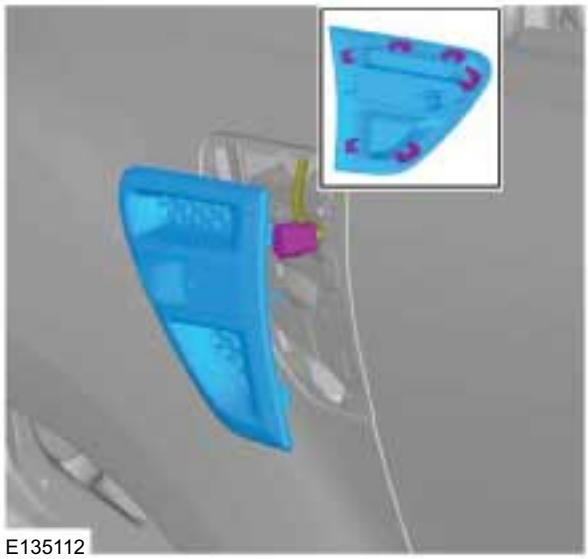
E135112

43. Torque: 10 Nm

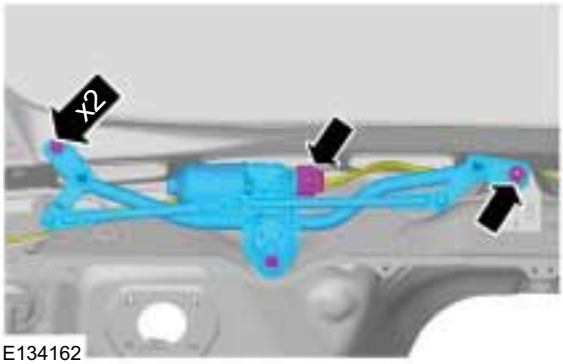

E134162

44. Refer to: Cowl Panel Grille (501-02 Front End Body Panels, Removal and Installation).

45. Torque: 25 Nm

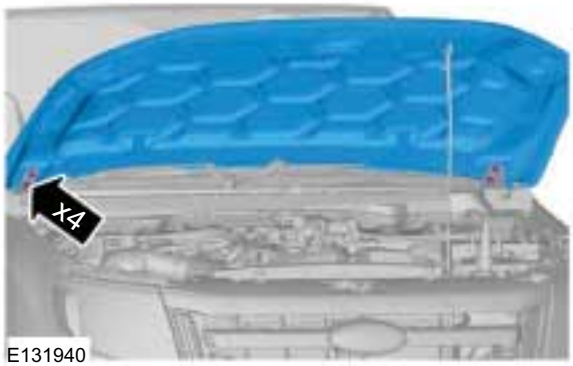

E131940

46.

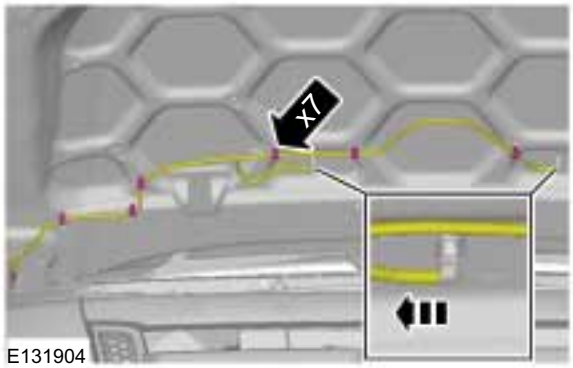

E131904

INSTALLATION

47.

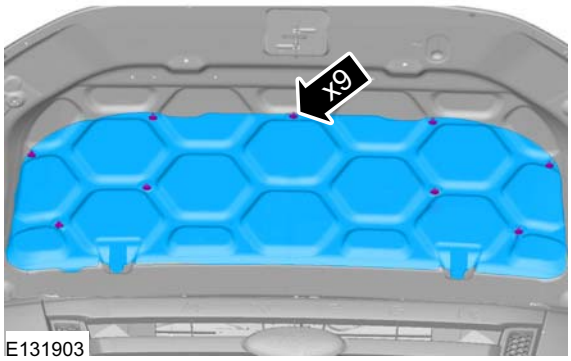

E131903

48.

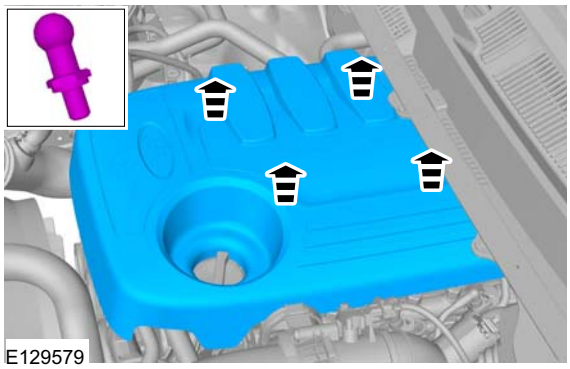
E129579

49. Torque: 30 Nm

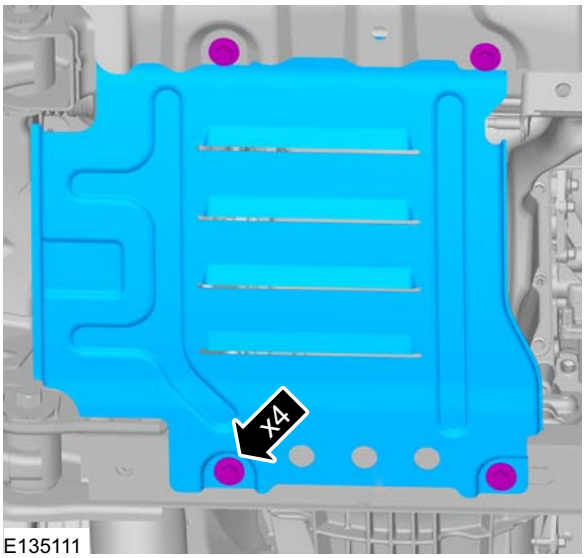

E135111

50. Refer to: Air Conditioning (A/C) System Recovery, Evacuation and Charging (412-00 Climate Control System - General Information, General Procedures).

51. Refer to: Cooling System Draining, Filling and Bleeding - 2.2L Duratorq-TDCi (88kW/120PS) - Puma/2.2L Duratorq-TDCi (96kW/130PS) - Puma/2.2L Duratorq-TDCi (110kW/150PS) - Puma/3.2L Duratorq-TDCi (148kW/200PS) - Puma (303-03 Engine Cooling - 3.2L Duratorq-TDCi (148kW/200PS) - Puma, General Procedures).

52. Refer to: Battery Disconnect and Connect (414-01 Battery, Mounting and Cables, General Procedures).

INSTALLATION

Engine — Vehicles With: 6-Speed Manual Transmission - MT82(21 132 0; 21 132 6; 21 132 7)

Installation

Special Tool(s)

21068A	303-122 Lifting Bracket, Engine

1. Refer to: Health and Safety Precautions (100-00 General Information, Description and Operation).

2. Special Tool(s): 303-122

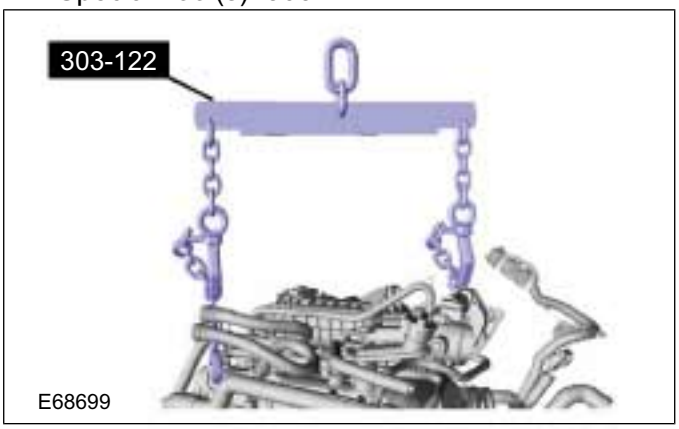

E68699

3.

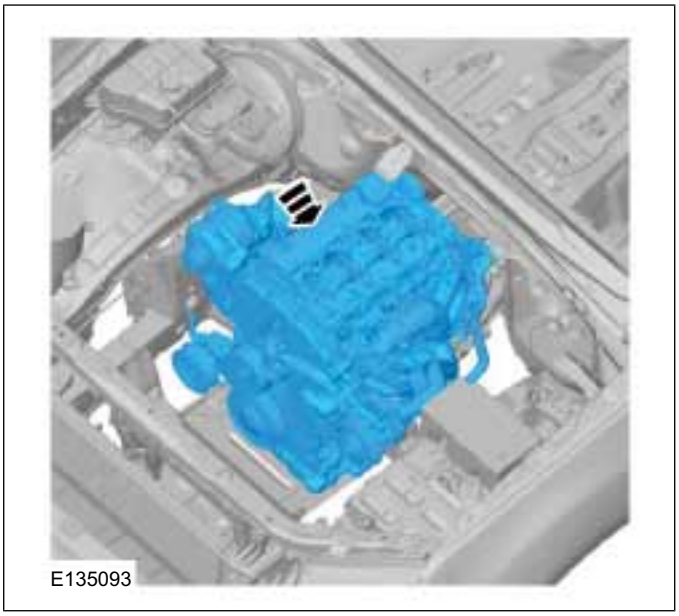
E135093

4. **NOTE:** Hand tighten the nut at this stage.

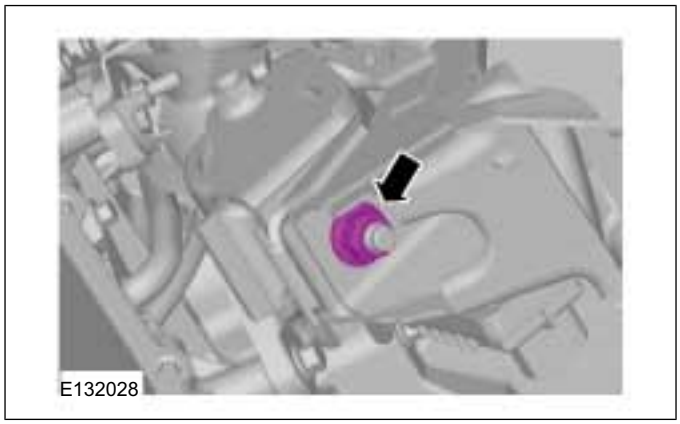
E132028

5. **NOTE:** Hand tighten the nut at this stage.

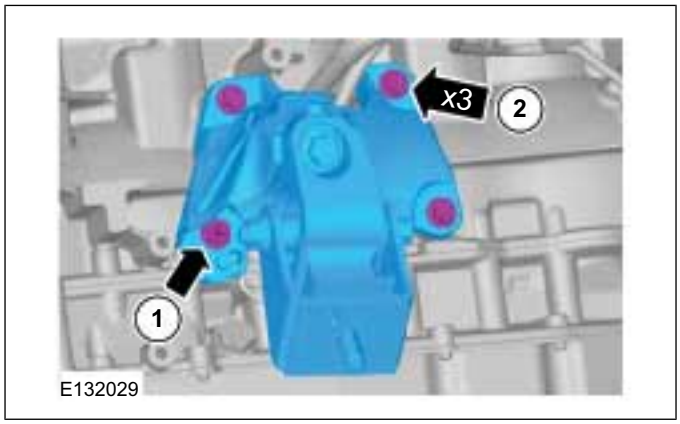

E132029

6. **NOTE:** Hand tighten the nut at this stage.

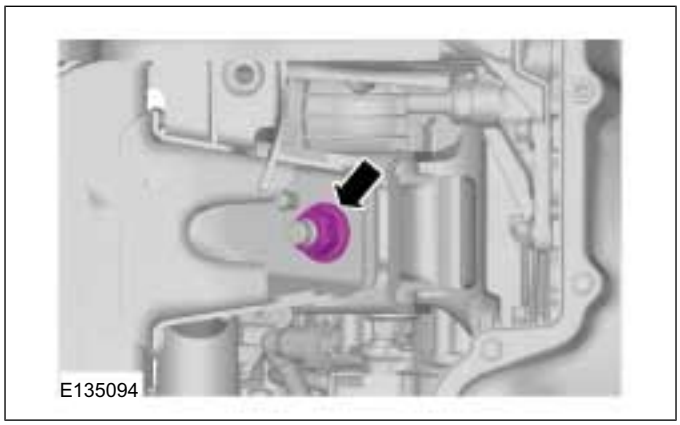
E135094

INSTALLATION

7. Initially hand tighten the fasteners.
   Torque: 48 Nm

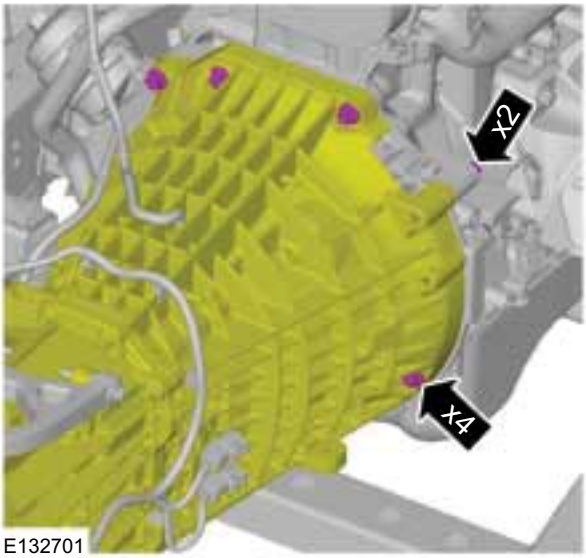

E132701

8. Initially hand tighten the fasteners.
   Torque: 48 Nm

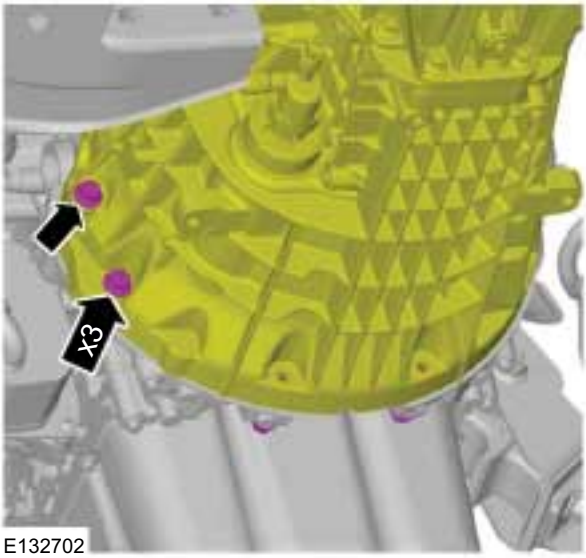

E132702

9. Torque: 80 Nm

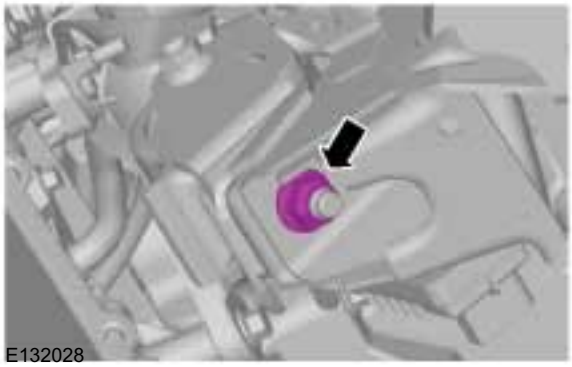
E132028

10. 1. Torque: 48 Nm
    2. Torque: 48 Nm

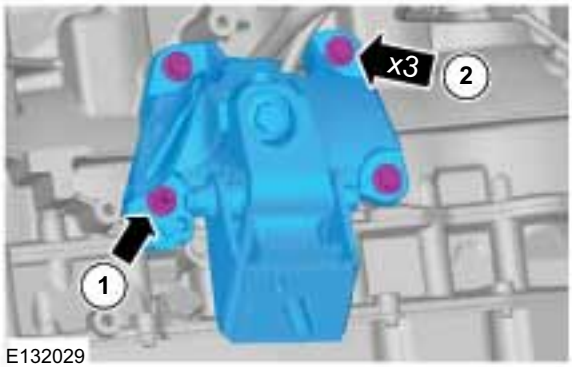

E132029

11. Torque: 80 Nm

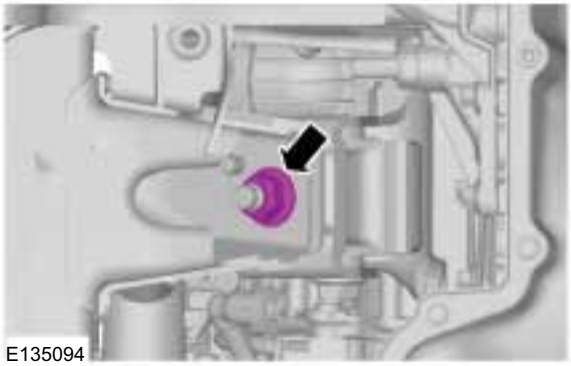
E135094

12. Remove the Special Tool(s): 303-122

E68699

INSTALLATION

13. Torque: 13 Nm

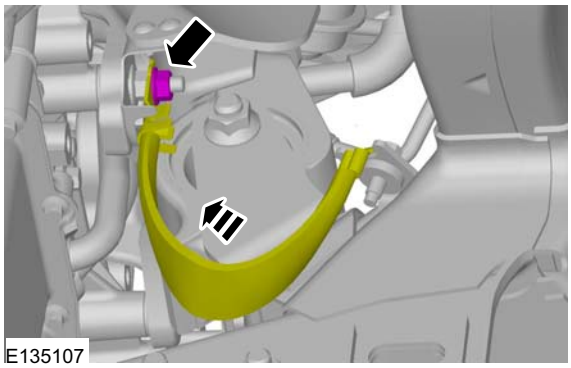
E135107

14.

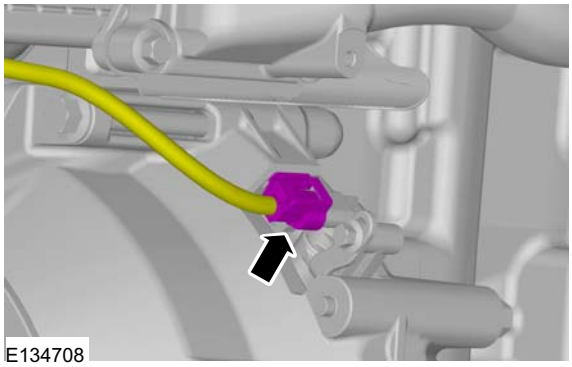
E134708

15. Torque: 22 Nm

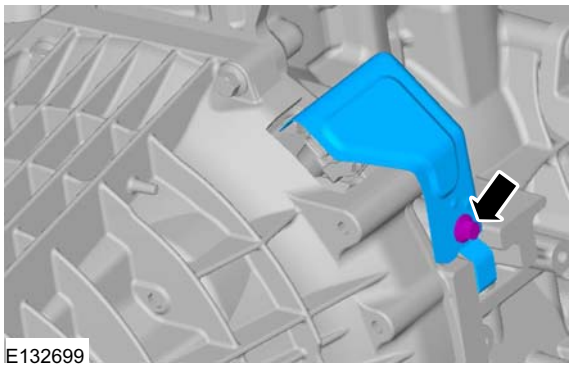
E132699

16.

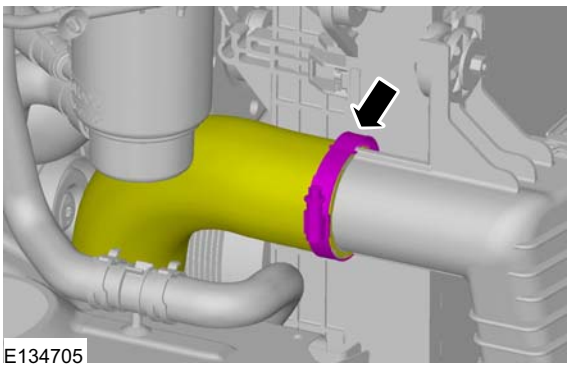
E134705

17. 2. Torque: 10 Nm

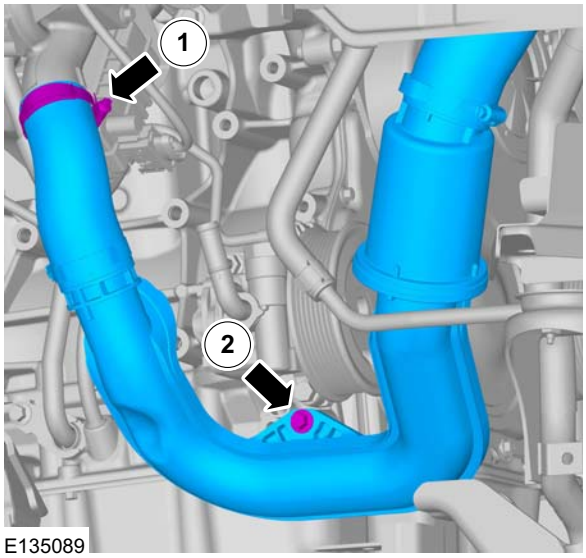

E135089

INSTALLATION

18. Refer to: Catalytic Converter (309-00 Exhaust System - 2.2L Duratorq-TDCi (88kW/120PS) - Puma/2.2L Duratorq-TDCi (96kW/130PS) - Puma/2.2L Duratorq-TDCi (110kW/150PS) - Puma/3.2L Duratorq-TDCi (148kW/200PS) - Puma, Removal and Installation).

19. 1. Torque: 47 Nm
    2. Torque: 22 Nm

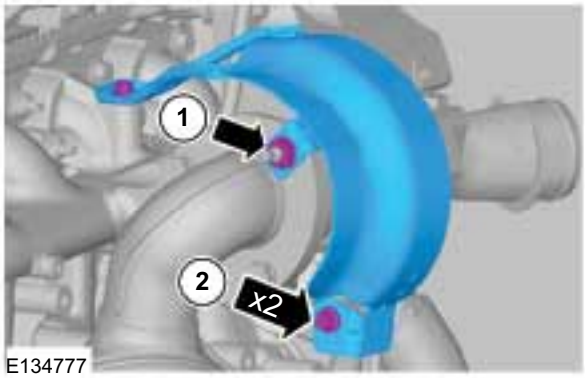

E134777

20.

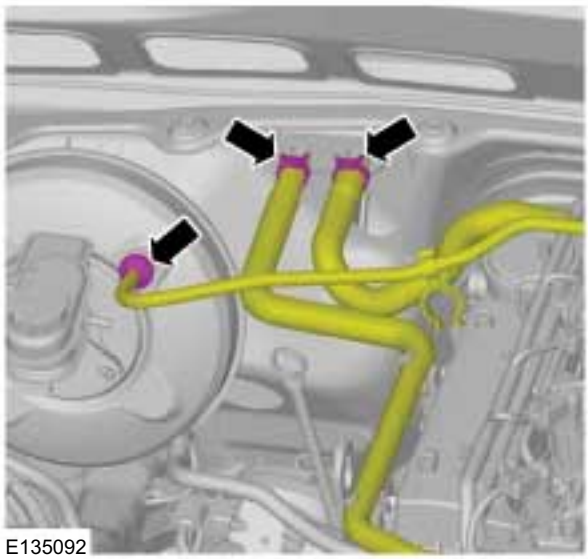
E135092

21.

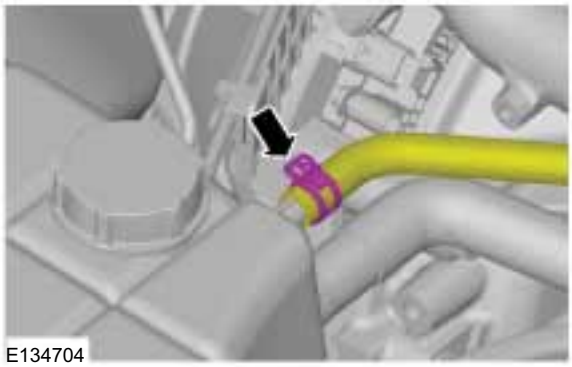
E134704

22. **NOTE:** The washers can be reused unless damaged.
    3. Torque: 35 Nm

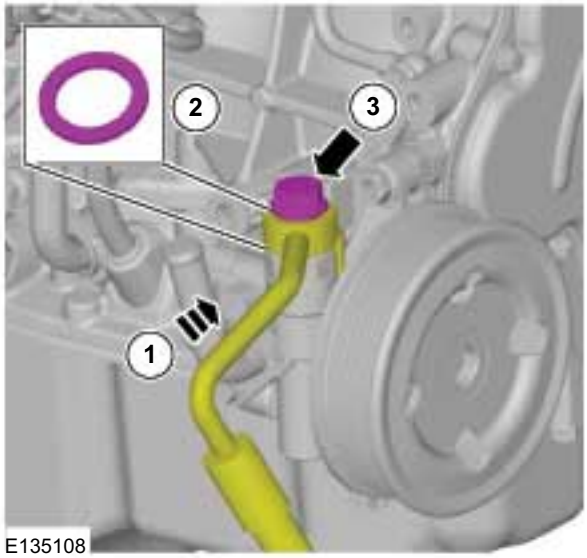

E135108

23.

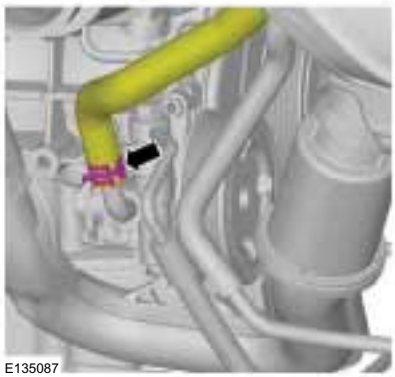
E135087

INSTALLATION

24. Torque: 22 Nm

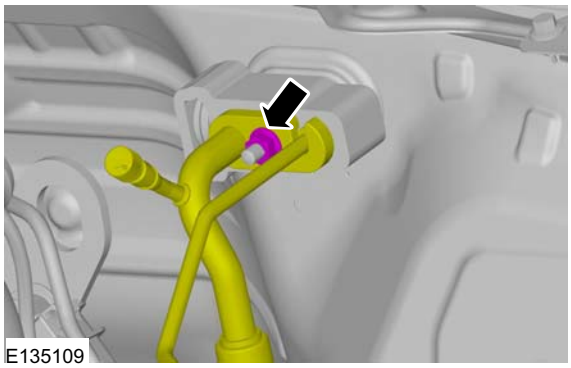
E135109

25. Refer to: Starter Motor - 2.2L Duratorq-TDCi (88kW/120PS) - Puma/2.2L Duratorq-TDCi (96kW/130PS) - Puma/2.2L Duratorq-TDCi (110kW/150PS) - Puma (303-06 Starting System - 2.2L Duratorq-TDCi (88kW/120PS) - Puma/2.2L Duratorq-TDCi (96kW/130PS) - Puma/2.2L Duratorq-TDCi (110kW/150PS) - Puma/3.2L Duratorq-TDCi (148kW/200PS) - Puma, Removal and Installation).

26.

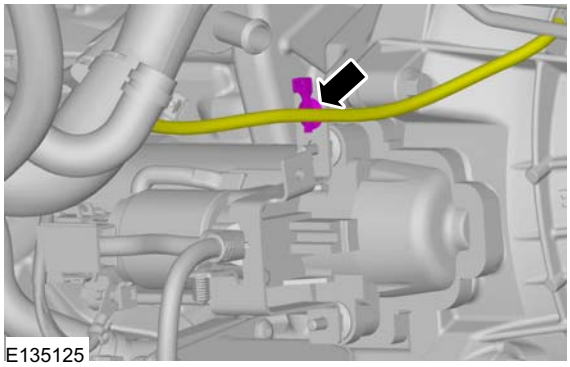
E135125

27. Refer to: Condenser - 2.2L Duratorq-TDCi (88kW/120PS) - Puma/2.2L Duratorq-TDCi (96kW/130PS) - Puma/2.2L Duratorq-TDCi (110kW/150PS) - Puma/3.2L Duratorq-TDCi (148kW/200PS) - Puma (412-01 Climate Control, Removal and Installation).

28. Refer to: Radiator (303-03 Engine Cooling - 2.2L Duratorq-TDCi (88kW/120PS) - Puma/2.2L Duratorq-TDCi (96kW/130PS) - Puma/2.2L Duratorq-TDCi (110kW/150PS) - Puma, Removal and Installation).

29. Refer to: Cooling Fan Motor and Shroud (303-03 Engine Cooling - 2.2L Duratorq-TDCi (88kW/120PS) - Puma/2.2L Duratorq-TDCi (96kW/130PS) - Puma/2.2L Duratorq-TDCi (110kW/150PS) - Puma, Removal and Installation).

30. Refer to: Air Cleaner - 2.2L Duratorq-TDCi (88kW/120PS) - Puma/2.2L Duratorq-TDCi (96kW/130PS) - Puma/2.2L Duratorq-TDCi (110kW/150PS) - Puma (303-12 Intake Air Distribution and Filtering - 2.2L Duratorq-TDCi (88kW/120PS) - Puma/2.2L Duratorq-TDCi (96kW/130PS) - Puma/2.2L Duratorq-TDCi (110kW/150PS) - Puma/3.2L Duratorq-TDCi (148kW/200PS) - Puma, Removal and Installation).

31.

INSTALLATION

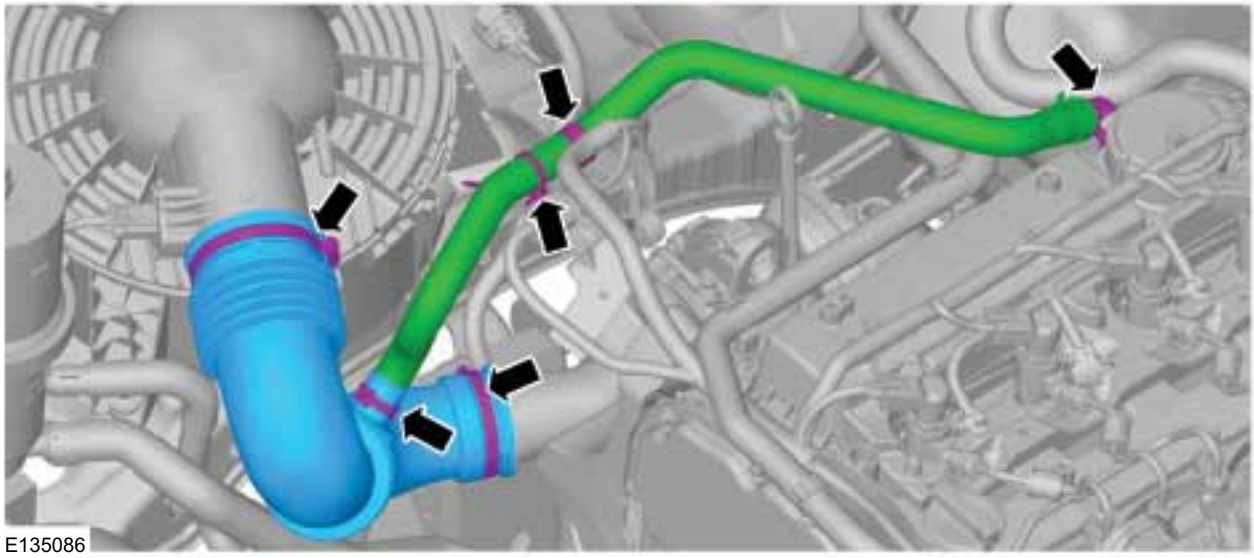
E135086

32.

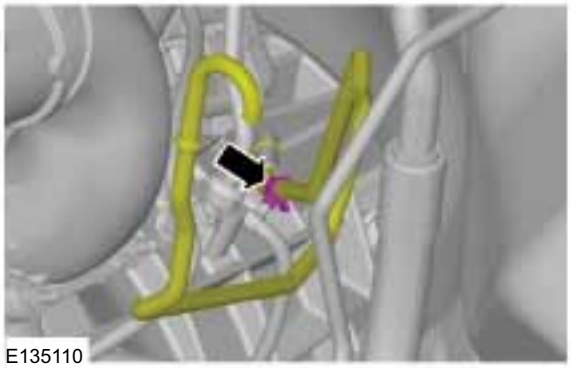
E135110

33. Torque: 10 Nm

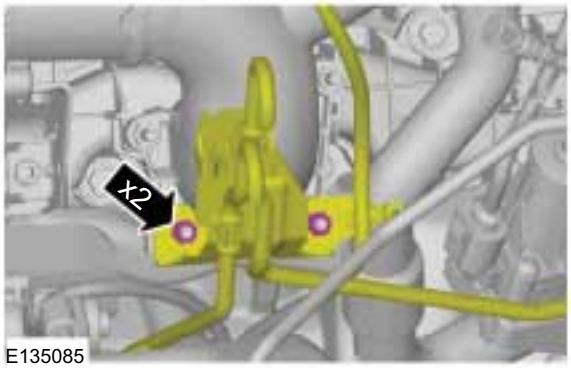

E135085

34. Torque: 18 Nm

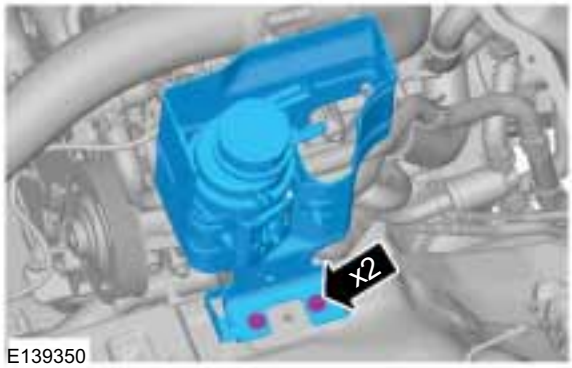

E139350

35. Torque: 5 Nm

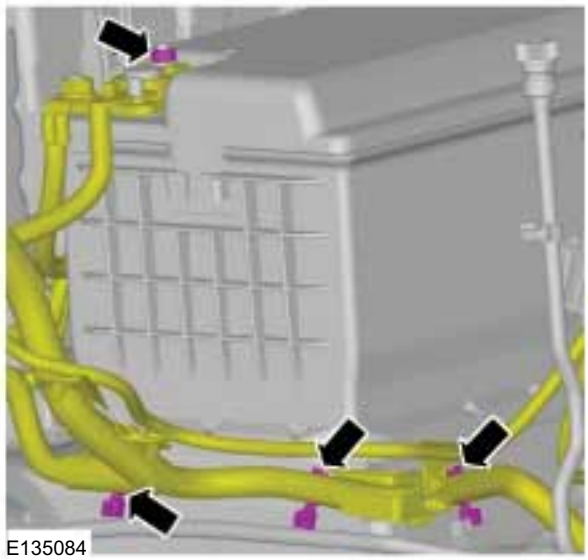
E135084

INSTALLATION

36.

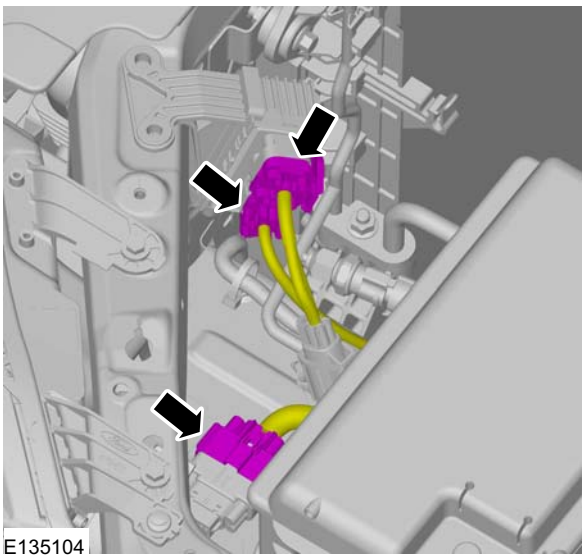

37.

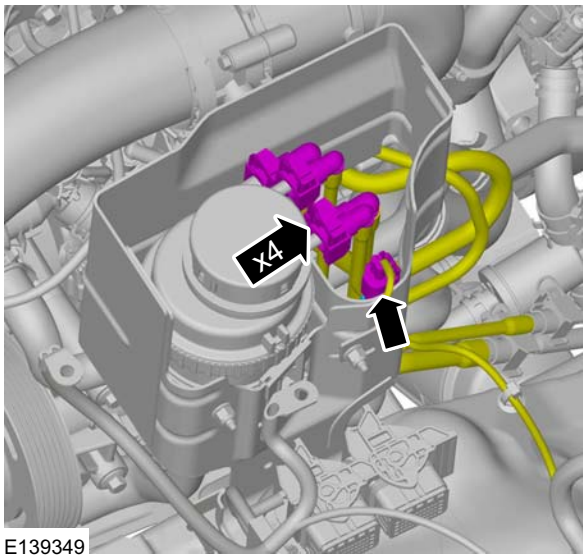

38. Refer to: Powertrain Control Module (PCM) (303-14 Electronic Engine Controls - 2.5L Duratec-HE (122kW/165PS) - MI4, Removal and Installation).
Refer to: Powertrain Control Module (PCM) (303-14 Electronic Engine Controls - 2.2L Duratorq-TDCi (88kW/120PS) - Puma/2.2L Duratorq-TDCi (96kW/130PS) - Puma/2.2L Duratorq-TDCi (110kW/150PS) - Puma/3.2L Duratorq-TDCi (148kW/200PS) - Puma, Removal and Installation).

39. Refer to: Battery Tray (414-01 Battery, Mounting and Cables, Removal and Installation).

40. Refer to: Battery (414-01 Battery, Mounting and Cables, Removal and Installation).

41. Torque: 10 Nm

INSTALLATION

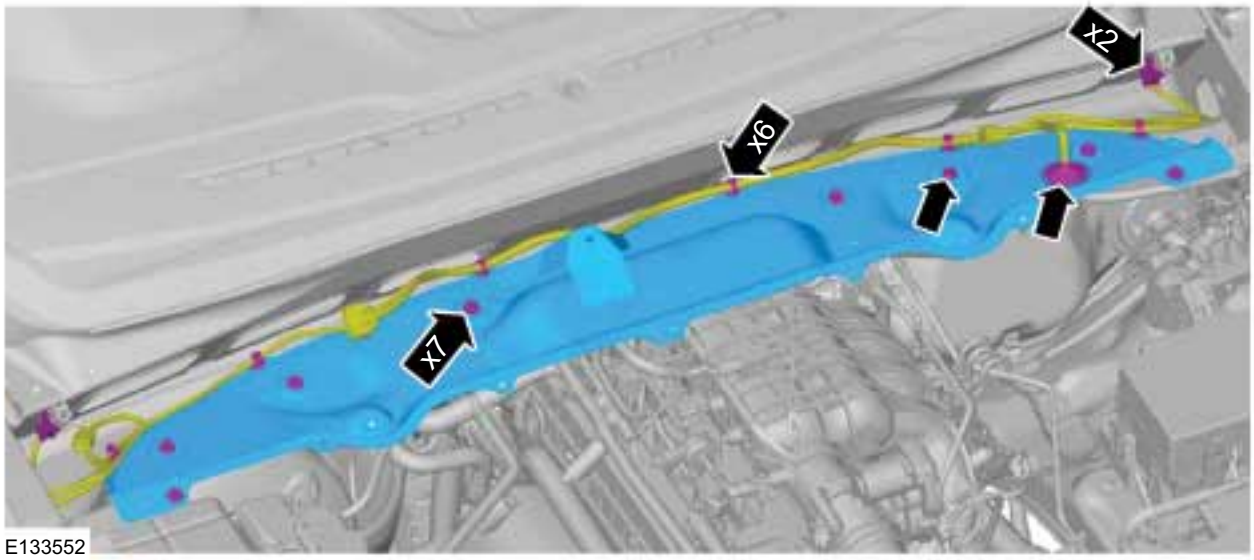

E133552

42. On both sides.

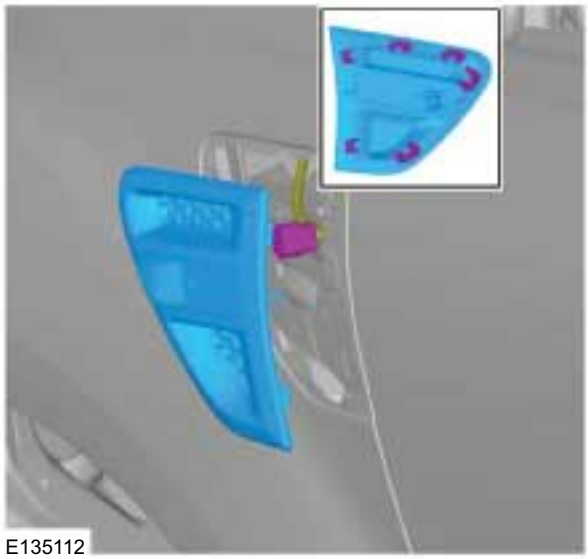
E135112

43. Torque: 10 Nm

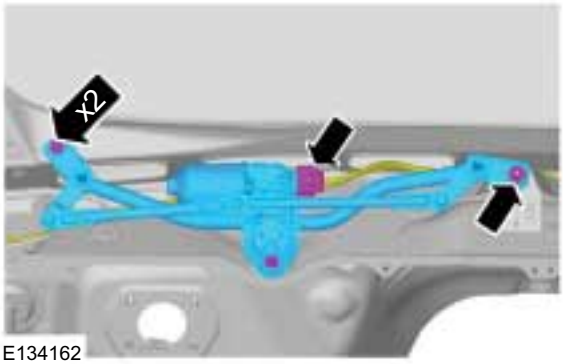

E134162

44. Refer to: Cowl Panel Grille (501-02 Front End Body Panels, Removal and Installation).

45. Torque: 25 Nm

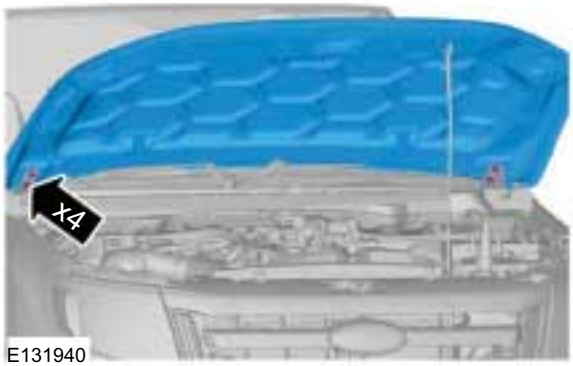

E131940

46.

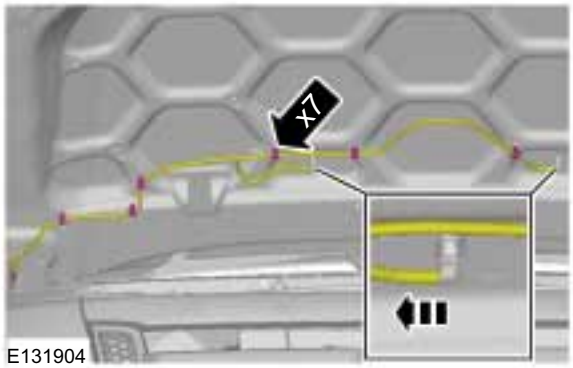

E131904

INSTALLATION

47.

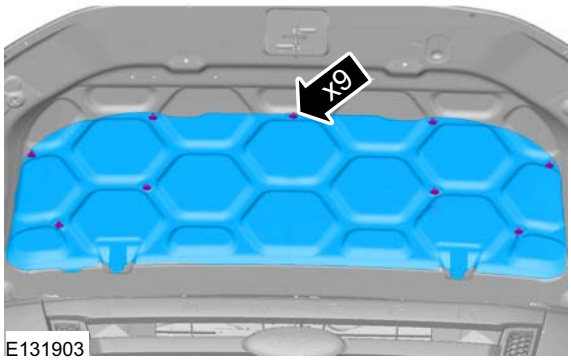

E131903

48.

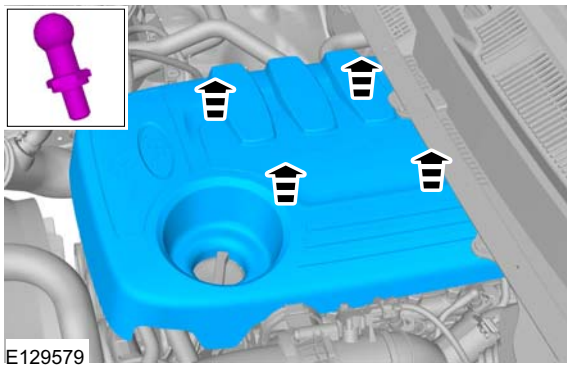
E129579

49. Torque: 30 Nm

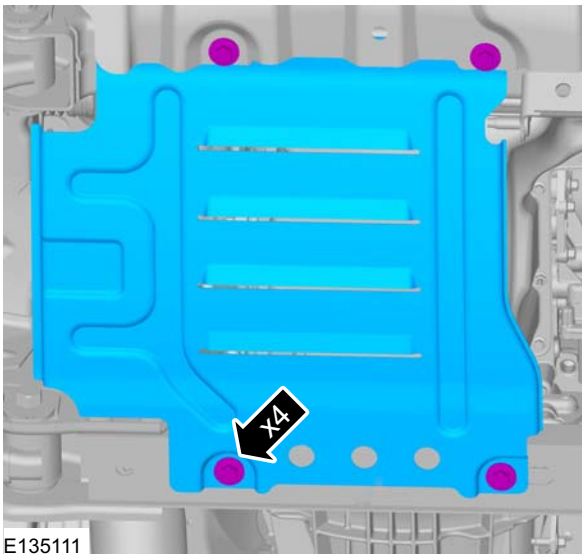

E135111

50. Refer to: Air Conditioning (A/C) System Recovery, Evacuation and Charging (412-00 Climate Control System - General Information, General Procedures).

51. Refer to: Cooling System Draining, Filling and Bleeding - 2.2L Duratorq-TDCi (88kW/120PS) - Puma/2.2L Duratorq-TDCi (96kW/130PS) - Puma/2.2L Duratorq-TDCi (110kW/150PS) - Puma/3.2L Duratorq-TDCi (148kW/200PS) - Puma (303-03 Engine Cooling - 3.2L Duratorq-TDCi (148kW/200PS) - Puma, General Procedures).

52. Refer to: Battery Disconnect and Connect (414-01 Battery, Mounting and Cables, General Procedures).

INSTALLATION

Engine — Vehicles With: 6-Speed Automatic Transaxle - 6R80(21 132 0; 21 132 6; 21 132 7)

Installation

Special Tool(s)

21068A	303-122 Lifting Bracket, Engine

1. Refer to: Health and Safety Precautions (100-00 General Information, Description and Operation).

2. Special Tool(s): 303-122

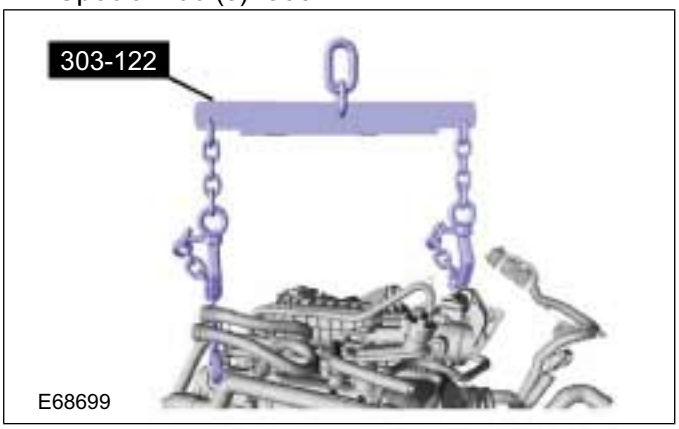

E68699

3.

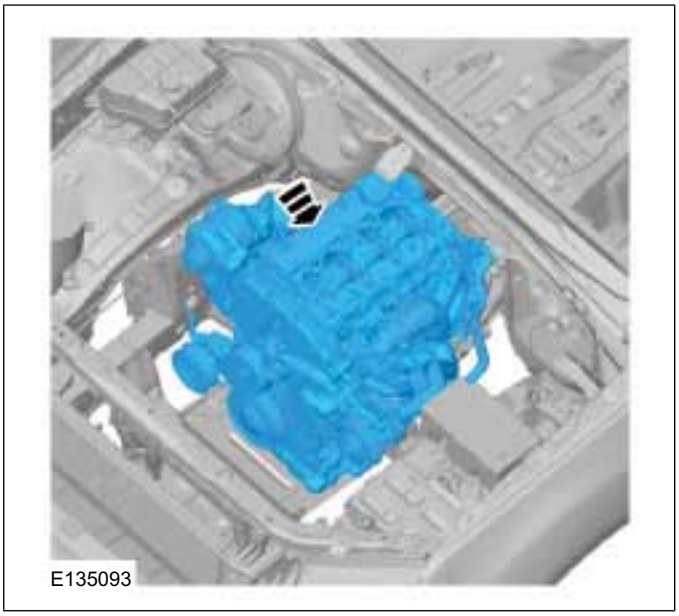
E135093

4. **NOTE:** Hand tighten the nut at this stage.

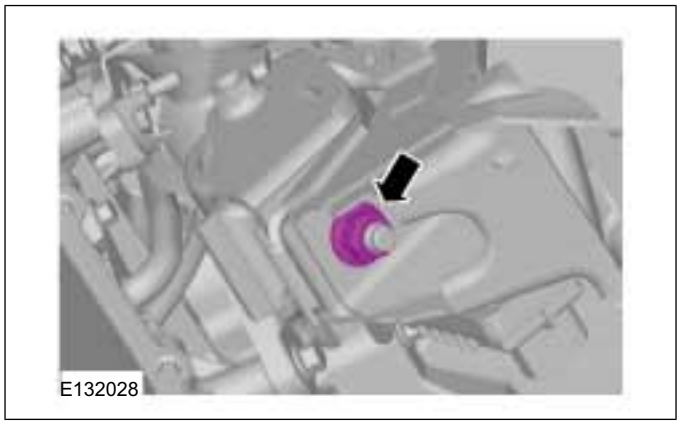
E132028

5. **NOTE:** Hand tighten the nut at this stage.

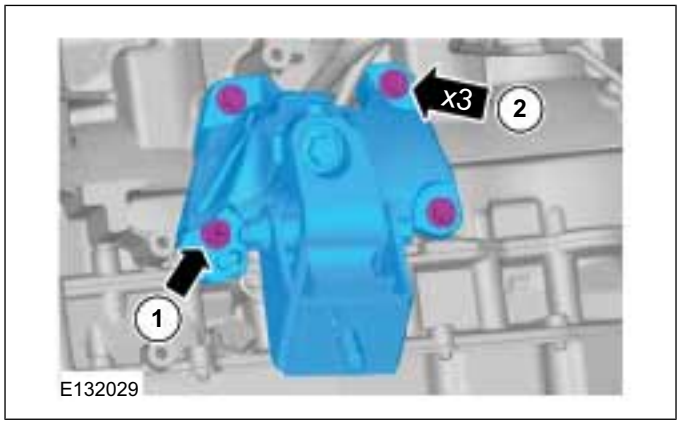

E132029

6. **NOTE:** Hand tighten the nut at this stage.

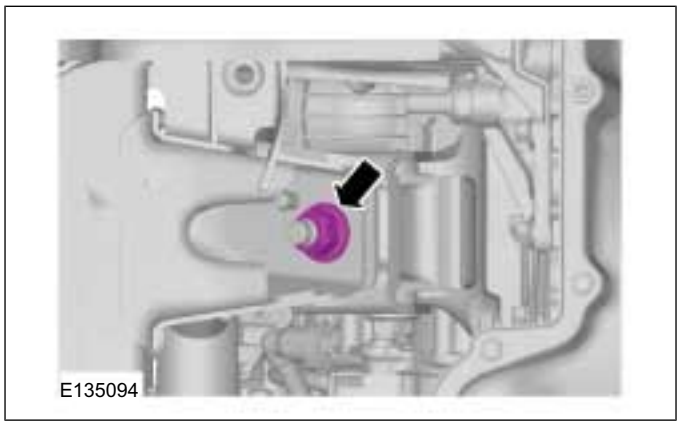
E135094

INSTALLATION

7. Initially hand tighten the fasteners.
   Torque: 48 Nm

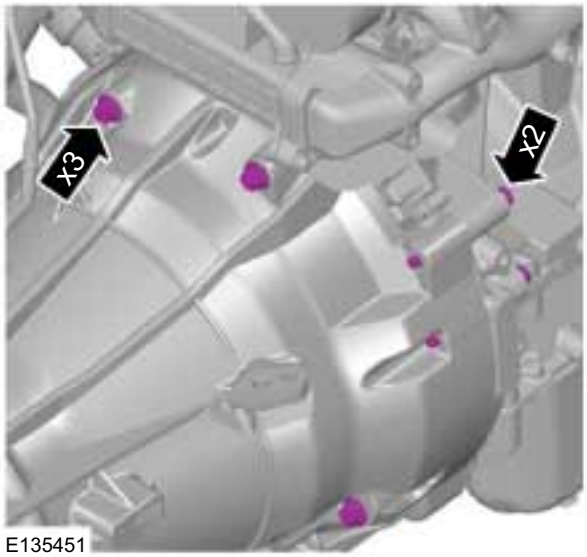

E135451

8. Initially hand tighten the fasteners.
   Torque: 48 Nm

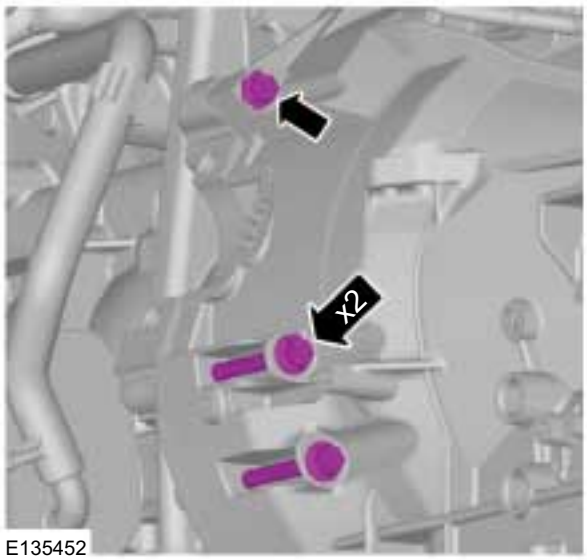

E135452

9. Torque: 80 Nm

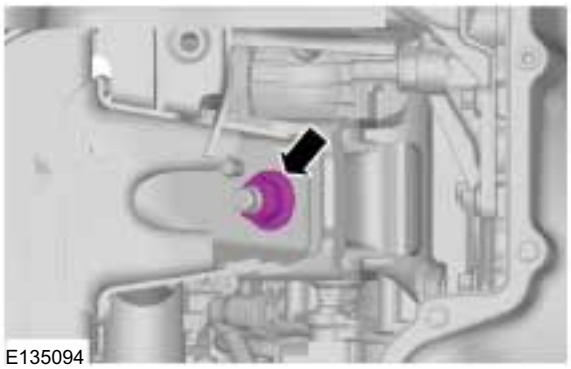
E135094

10. 1. Torque: 48 Nm
    2. Torque: 48 Nm

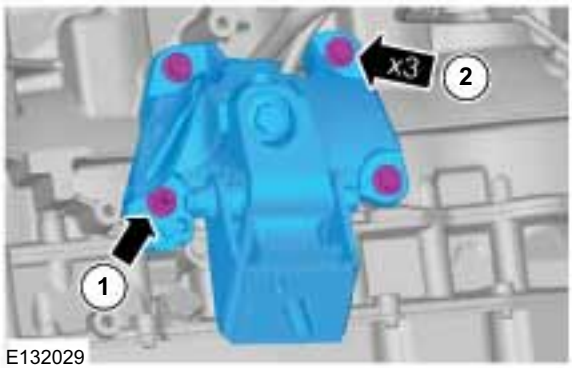

E132029

11. Torque: 80 Nm

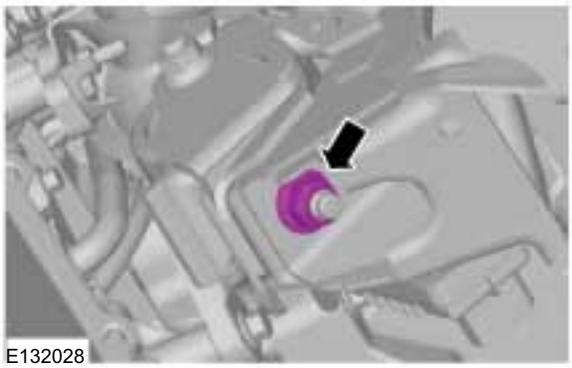
E132028

12. Remove the Special Tool(s): 303-122

E68699

INSTALLATION

13. Torque: 13 Nm

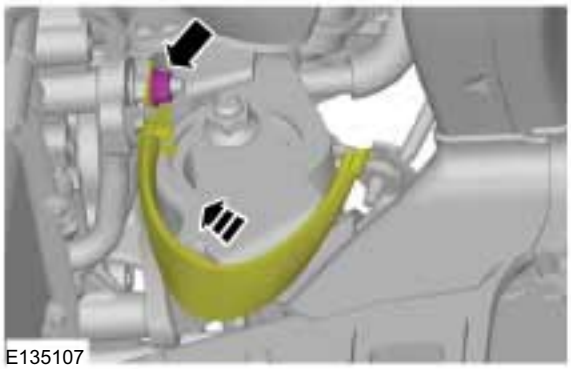

14. Torque: 40 Nm

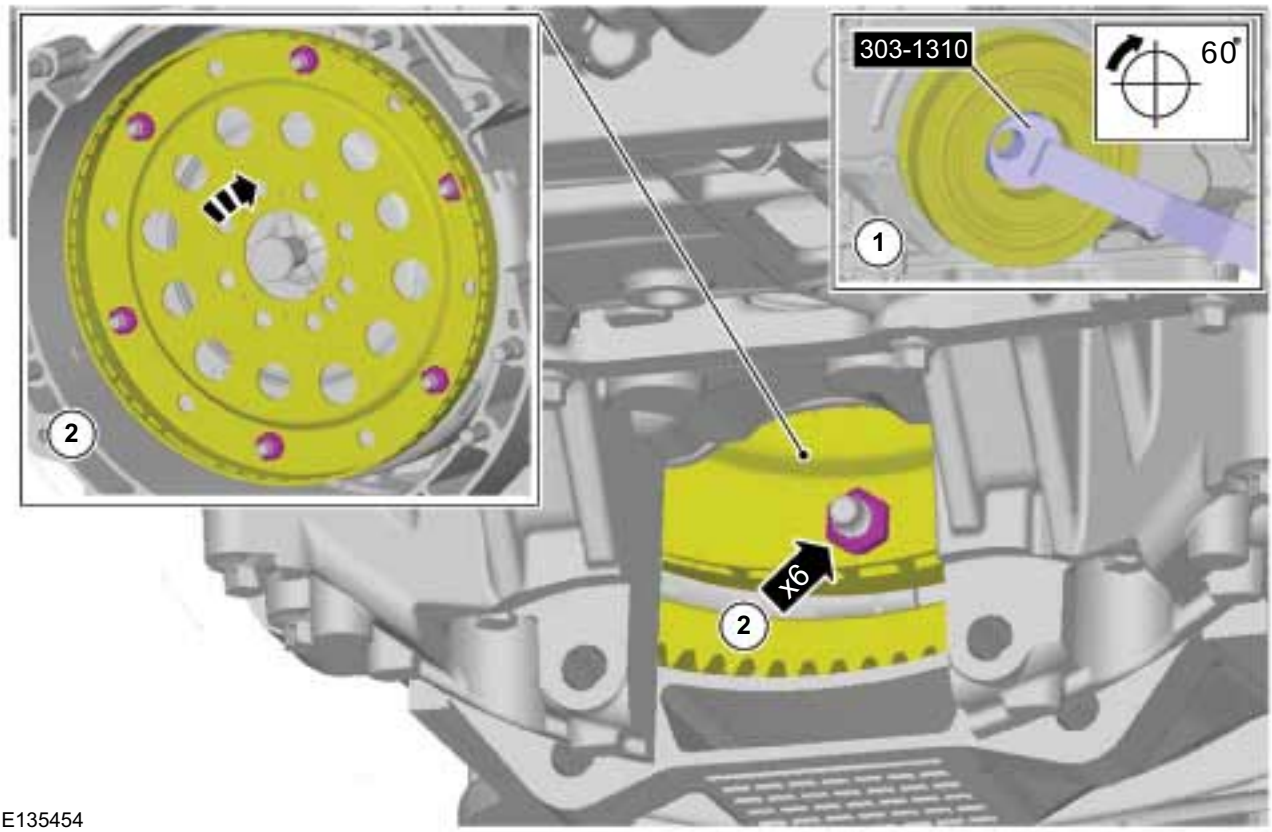

INSTALLATION

15. Torque: 22 Nm

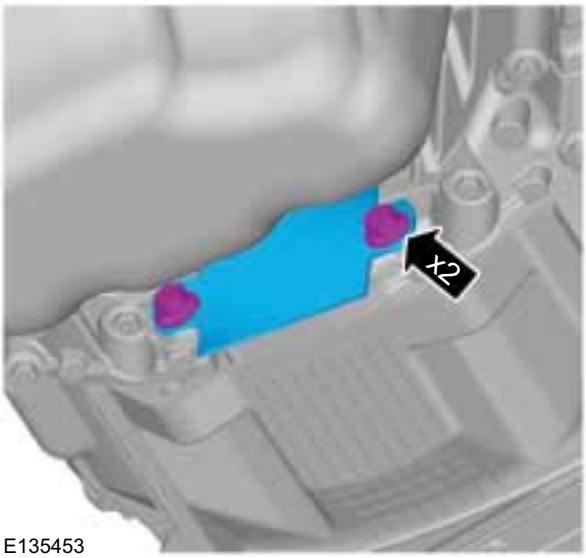

E135453

16.

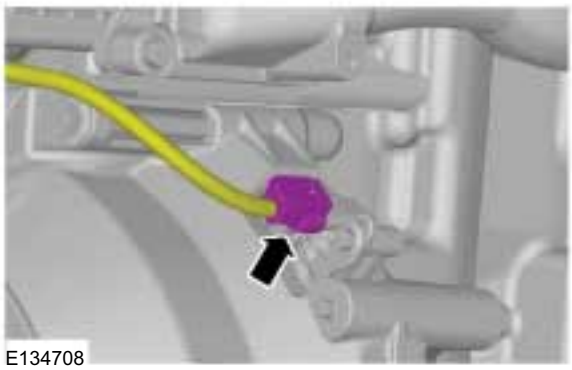
E134708

17. Torque: 22 Nm

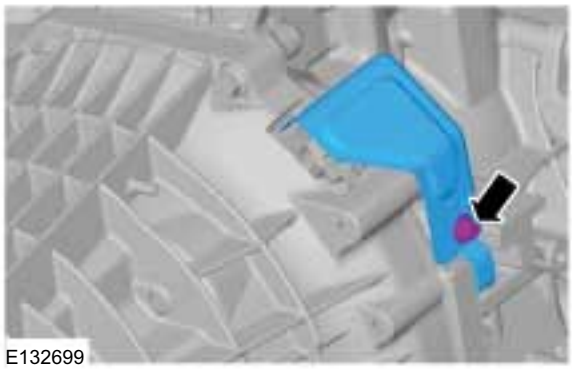
E132699

18.

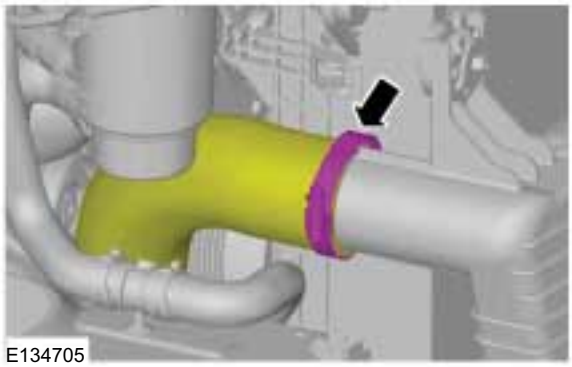
E134705

19. 2. Torque: 10 Nm

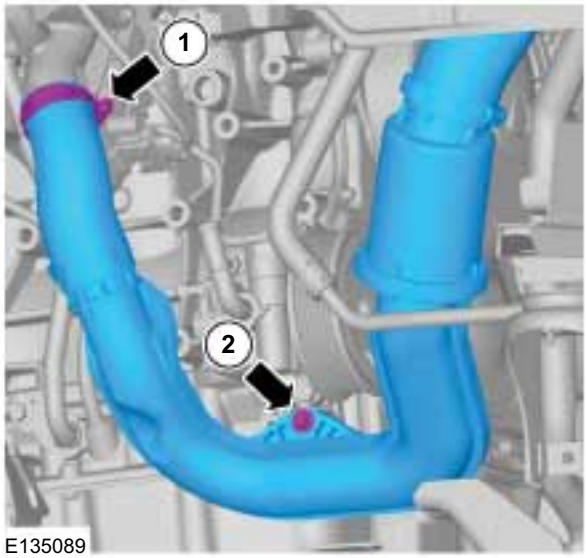

E135089

20. Refer to: Catalytic Converter (309-00 Exhaust System - 2.2L Duratorq-TDCi (88kW/120PS) - Puma/2.2L Duratorq-TDCi (96kW/130PS) - Puma/2.2L Duratorq-TDCi (110kW/150PS) - Puma/3.2L Duratorq-TDCi (148kW/200PS) - Puma, Removal and Installation).

21. 1. Torque: 47 Nm
2. Torque: 22 Nm

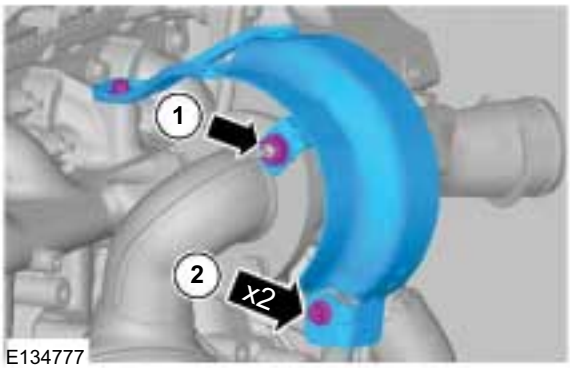

E134777

INSTALLATION

22.

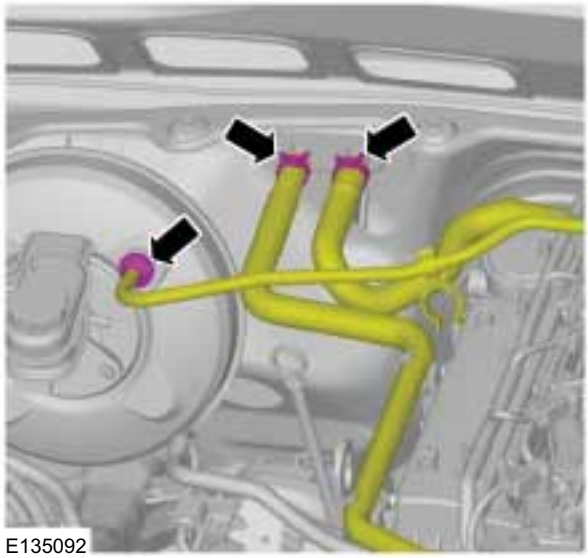
E135092

23.

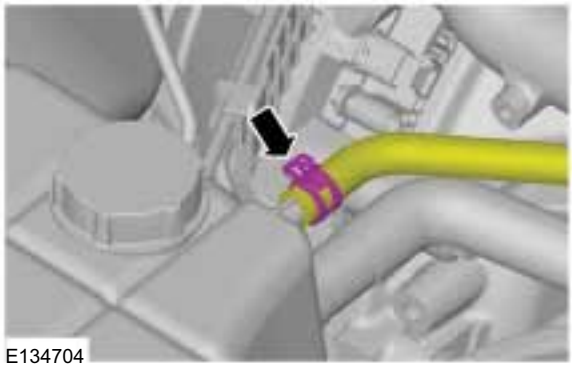
E134704

24. **NOTE:** The washers can be reused unless damaged.

3. Torque: 35 Nm

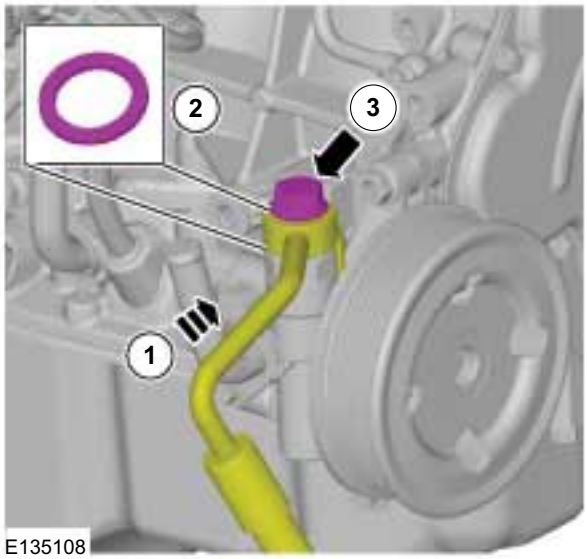

E135108

25.

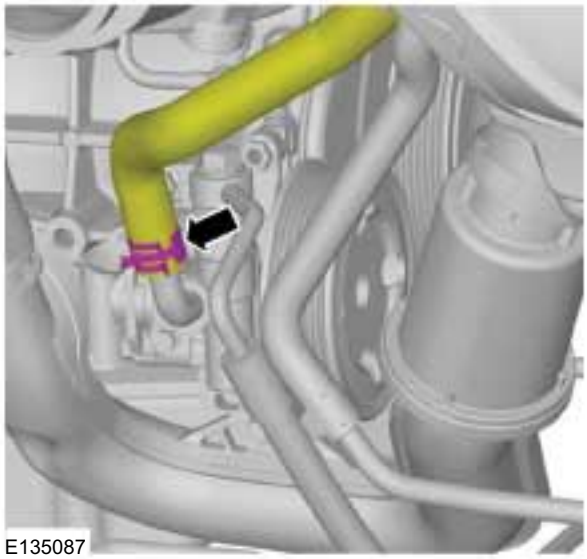
E135087

INSTALLATION

26. Torque: 22 Nm

E135109

27. Refer to: Starter Motor - 2.2L Duratorq-TDCi (88kW/120PS) - Puma/2.2L Duratorq-TDCi (96kW/130PS) - Puma/2.2L Duratorq-TDCi (110kW/150PS) - Puma (303-06 Starting System - 2.2L Duratorq-TDCi (88kW/120PS) - Puma/2.2L Duratorq-TDCi (96kW/130PS) - Puma/2.2L Duratorq-TDCi (110kW/150PS) - Puma/3.2L Duratorq-TDCi (148kW/200PS) - Puma, Removal and Installation).

28.

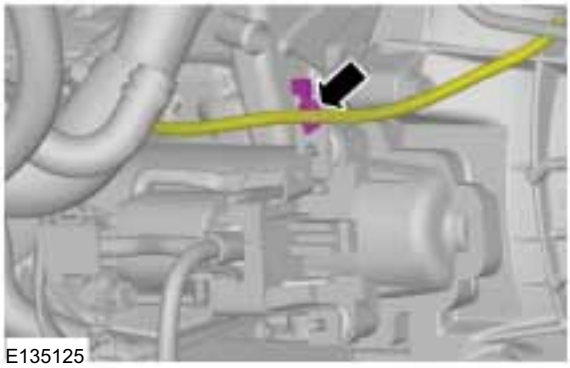
E135125

29. Refer to: Transmission Fluid Cooler (307-02 Transmission/Transaxle Cooling, Removal and Installation).

30. Refer to: Condenser - 2.2L Duratorq-TDCi (88kW/120PS) - Puma/2.2L Duratorq-TDCi (96kW/130PS) - Puma/2.2L Duratorq-TDCi (110kW/150PS) - Puma/3.2L Duratorq-TDCi (148kW/200PS) - Puma (412-01 Climate Control, Removal and Installation).

31. Refer to: Radiator (303-03 Engine Cooling - 2.2L Duratorq-TDCi (88kW/120PS) - Puma/2.2L Duratorq-TDCi (96kW/130PS) - Puma/2.2L Duratorq-TDCi (110kW/150PS) - Puma, Removal and Installation).

32. Refer to: Cooling Fan Motor and Shroud (303-03 Engine Cooling - 2.2L Duratorq-TDCi (88kW/120PS) - Puma/2.2L Duratorq-TDCi (96kW/130PS) - Puma/2.2L Duratorq-TDCi (110kW/150PS) - Puma, Removal and Installation).

33. Refer to: Air Cleaner - 2.2L Duratorq-TDCi (88kW/120PS) - Puma/2.2L Duratorq-TDCi (96kW/130PS) - Puma/2.2L Duratorq-TDCi (110kW/150PS) - Puma (303-12 Intake Air Distribution and Filtering - 2.2L Duratorq-TDCi (88kW/120PS) - Puma/2.2L Duratorq-TDCi (96kW/130PS) - Puma/2.2L Duratorq-TDCi (110kW/150PS) - Puma/3.2L Duratorq-TDCi (148kW/200PS) - Puma, Removal and Installation).

34.

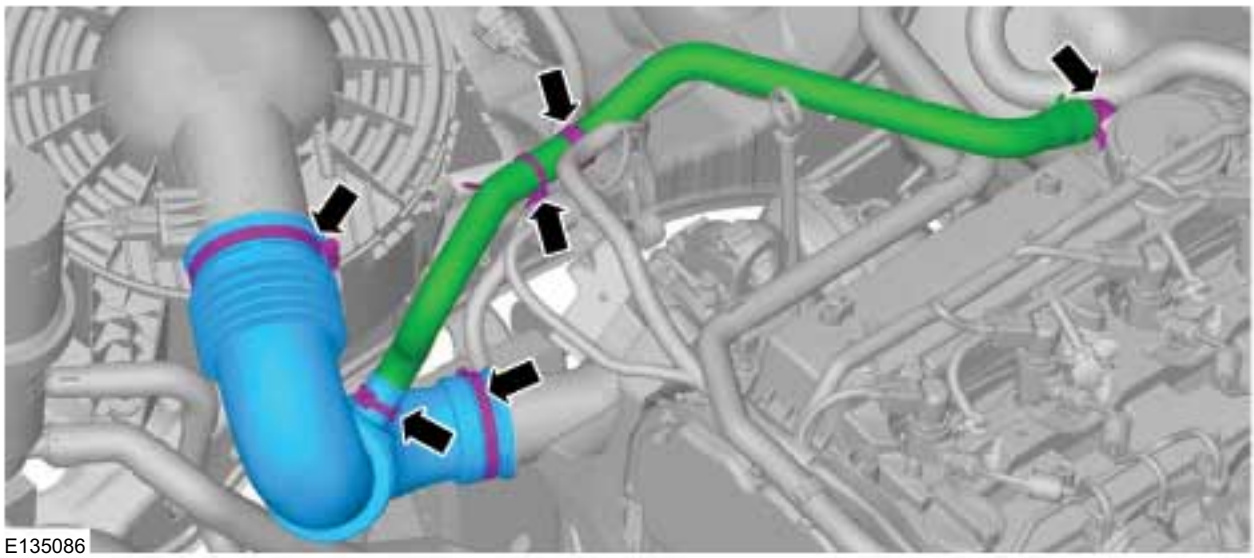
E135086

INSTALLATION

35.

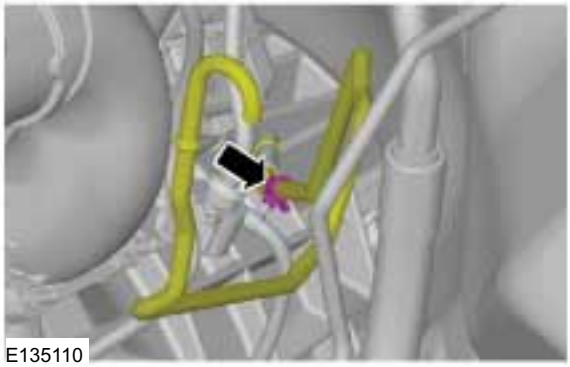

36. Torque: 10 Nm

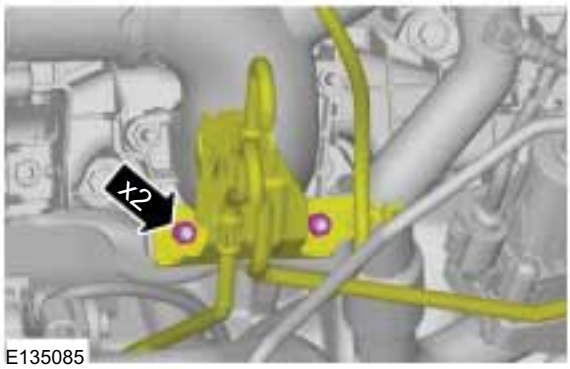

37. Torque: 18 Nm

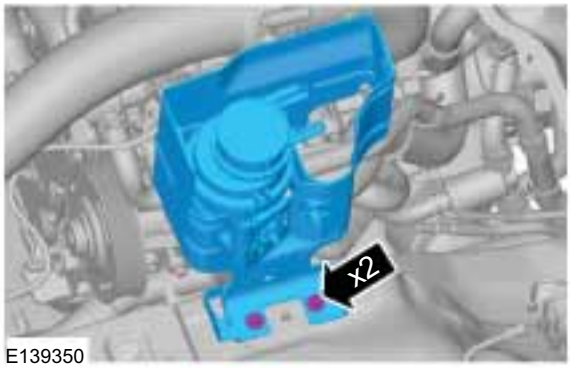

38. Torque: 5 Nm

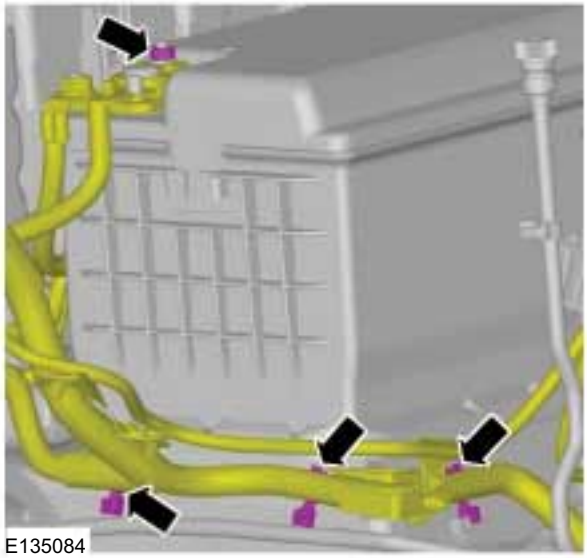

39.

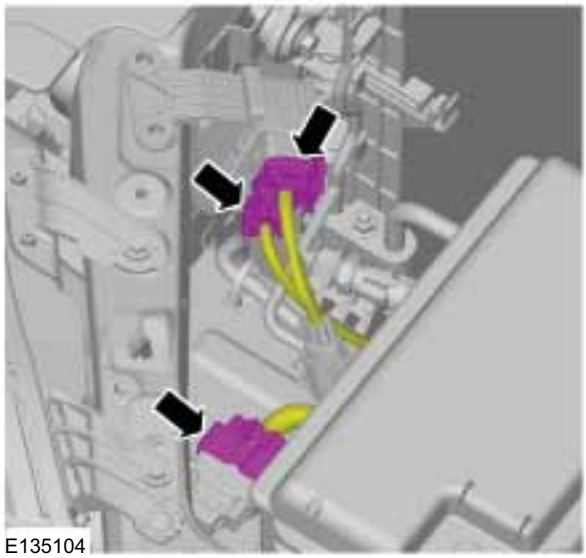

INSTALLATION

40.

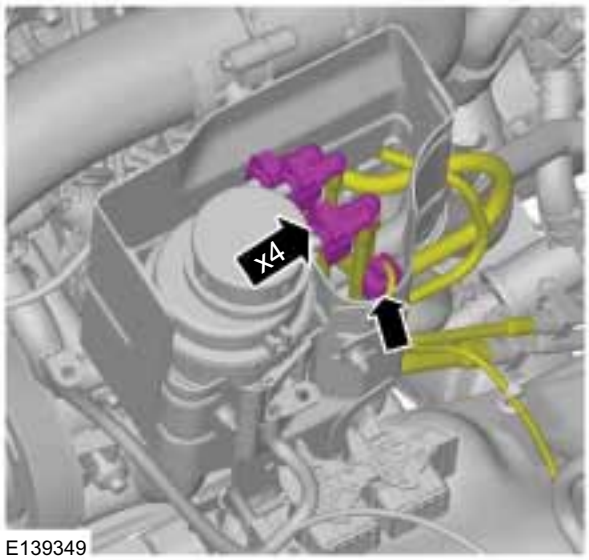

E139349

41. Refer to: Powertrain Control Module (PCM) (303-14 Electronic Engine Controls - 2.2L Duratorq-TDCi (88kW/120PS) - Puma/2.2L Duratorq-TDCi (96kW/130PS) - Puma/2.2L Duratorq-TDCi (110kW/150PS) - Puma/3.2L Duratorq-TDCi (148kW/200PS) - Puma, Removal and Installation).

42. Refer to: Battery Tray (414-01 Battery, Mounting and Cables, Removal and Installation).

43. Refer to: Battery (414-01 Battery, Mounting and Cables, Removal and Installation).

44. Torque: 10 Nm

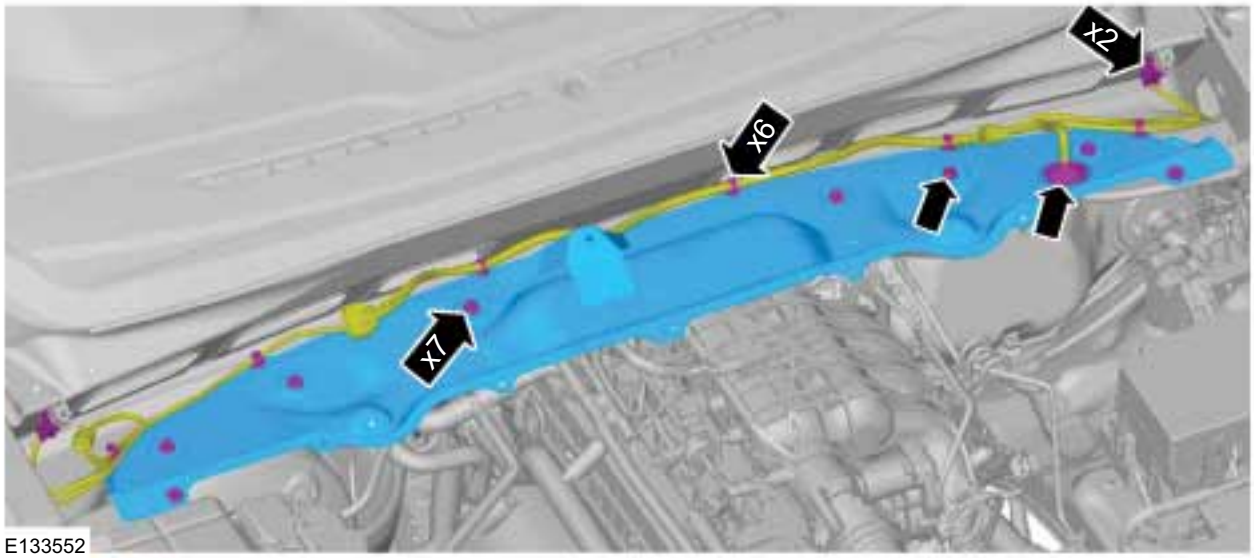

E133552

303-01B-136

INSTALLATION

45. On both sides.

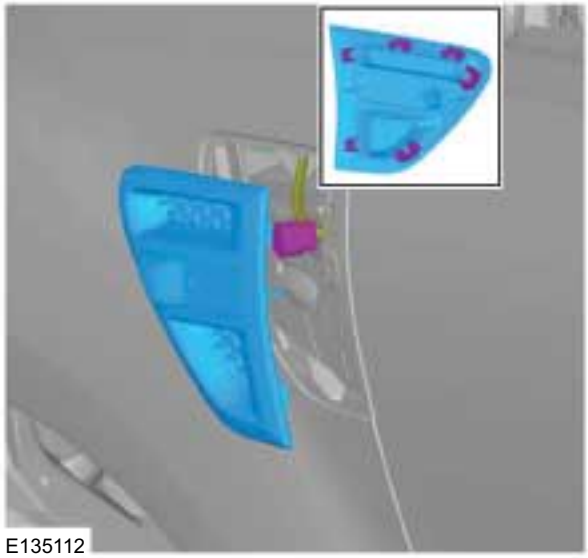
E135112

46. Torque: 10 Nm

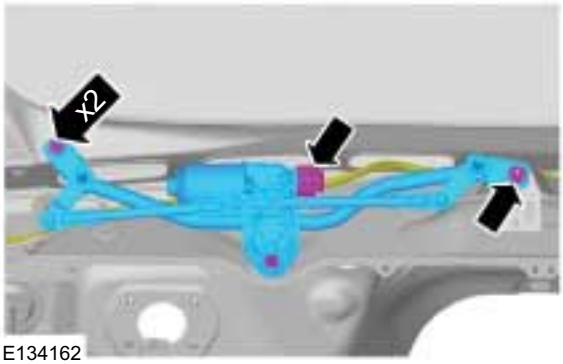

E134162

47. Refer to: Cowl Panel Grille (501-02 Front End Body Panels, Removal and Installation).

48. Torque: 25 Nm

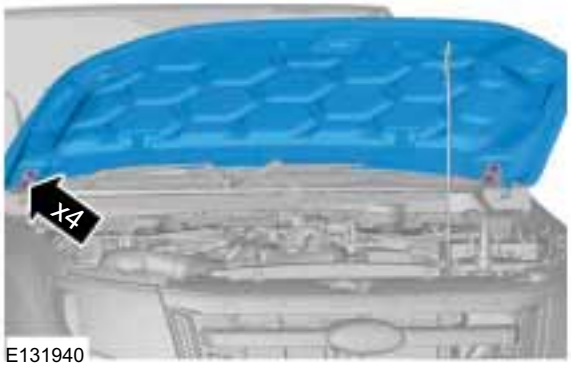

E131940

49.

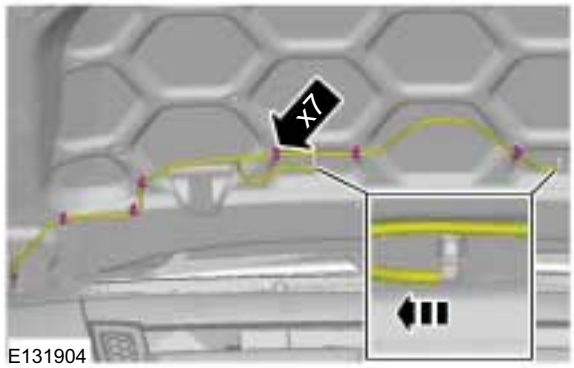

E131904

50.

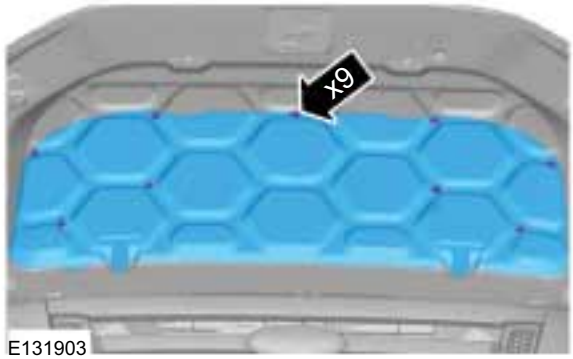

E131903

51.

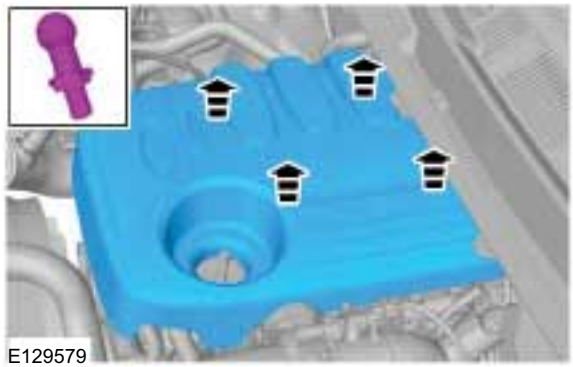
E129579

INSTALLATION

52. Refer to: Lifting (100-02 Jacking and Lifting, Description and Operation).

53. Torque: 30 Nm

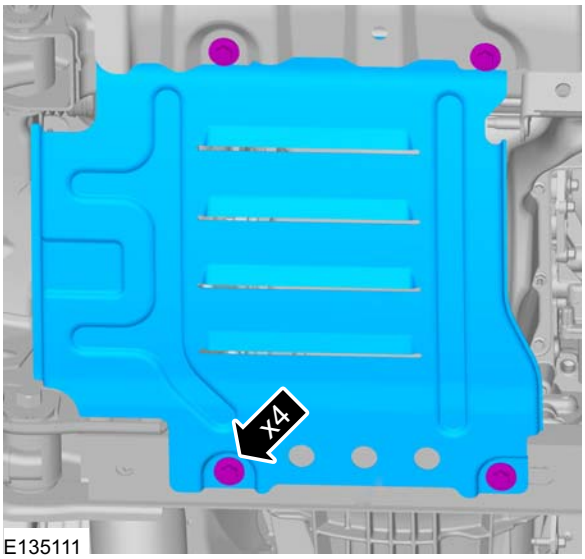

E135111

54. Refer to: Air Conditioning (A/C) System Recovery, Evacuation and Charging (412-00 Climate Control System - General Information, General Procedures).

55. Refer to: Cooling System Draining, Filling and Bleeding - 2.2L Duratorq-TDCi (88kW/120PS) - Puma/2.2L Duratorq-TDCi (96kW/130PS) - Puma/2.2L Duratorq-TDCi (110kW/150PS) - Puma/3.2L Duratorq-TDCi (148kW/200PS) - Puma (303-03 Engine Cooling - 3.2L Duratorq-TDCi (148kW/200PS) - Puma, General Procedures).

56. Refer to: Battery Disconnect and Connect (414-01 Battery, Mounting and Cables, General Procedures).

INSTALLATION

Engine Accessories(21 139 4)

Installation

Special Tool(s) / General Equipment

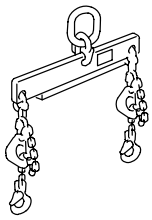 21068A	303-122 Lifting Bracket, Engine
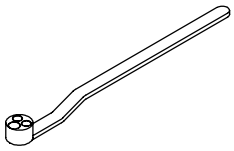 E87614	303-1310 Holding Wrench, Crankshaft
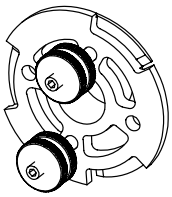 E75376	303-1317 Locking Tool, Fuel Injection Pump Sprocket
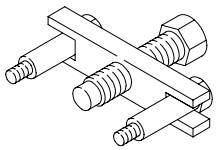 21132	303-249 Remover, Crankshaft Timing Pulley
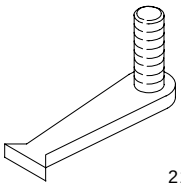 21135	303-254 Locking Tool, Flywheel
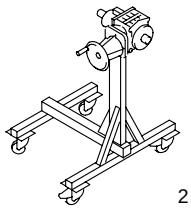 21187	303-435 Mounting Stand

Special Tool(s) / General Equipment

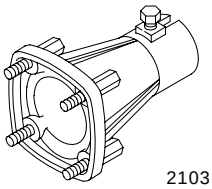 21031B	303-435-06 Mounting Bracket for 303-435
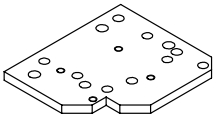 E68386	303-435-11B Mounting Plate for 303-435-06
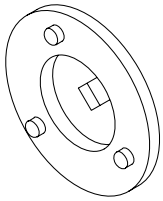 303679	303-679 Remover/Installer, Engine Front Cover Inspection Plate
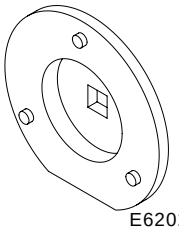 E62024	303-679A Remover/Installer, Engine Front Cover Inspection Plate
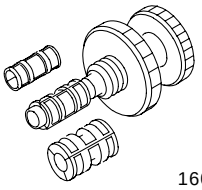 16067	308-204 Aligner, Clutch Disc
1/2 Inch Square Drive Breaker Bar	
Dowel with a Diameter of 6 mm	

Materials

Name	Specification
Silicone Sealant LB	WSE-M4G323-A4 / 2U7J-M4G323-AA

INSTALLATION

1.

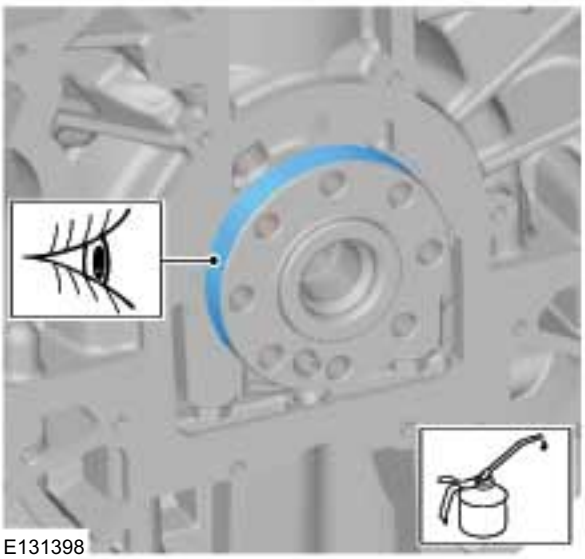

2. **NOTE:** Install the new crankshaft rear seal carrier within five minutes of applying the recommended sealant.

   Material: Silicone Sealant LB (WSE-M4G323-A4 / 2U7J-M4G323-AA) sealant

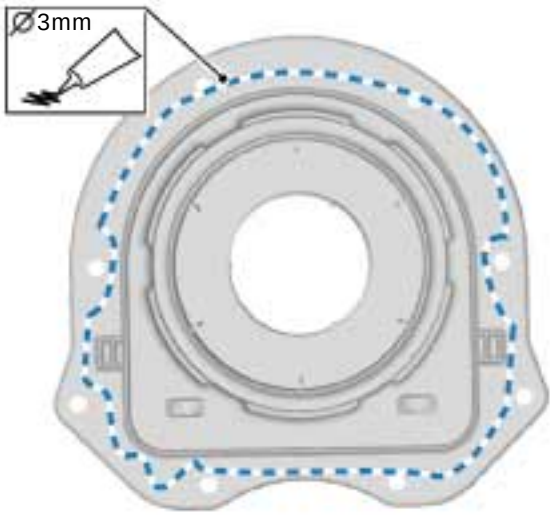

3. ⚠ **CAUTION: A new crankshaft rear seal carrier is supplied with an alignment sleeve that must not be removed until the crankshaft rear seal is fully installed. Failure to follow this instruction may result in damage to the vehicle.**

Initially hand tighten the fasteners.

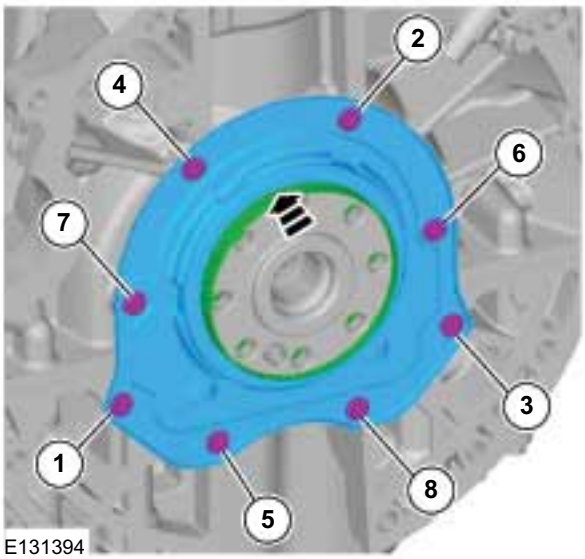

4. **NOTE:** New crankshaft rear seal carrier are supplied with an alignment sleeve which must be removed after installation.

   Torque: 10 Nm

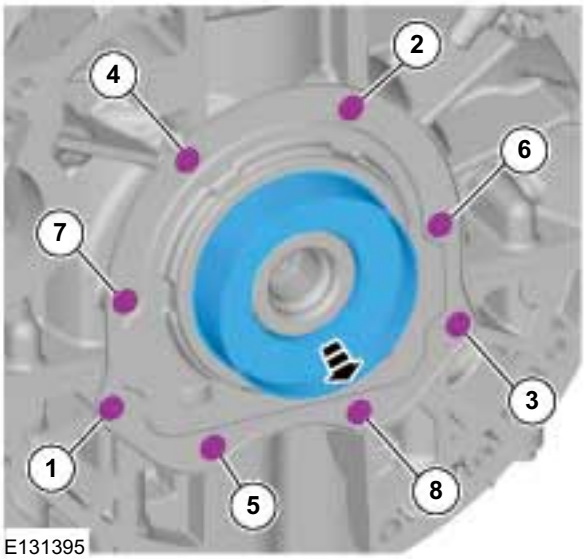

5. **NOTE:** Make sure that the flywheel is in full contact with the crankshaft flange before installing the flywheel bolts.

INSTALLATION

Initially hand tighten the fasteners.

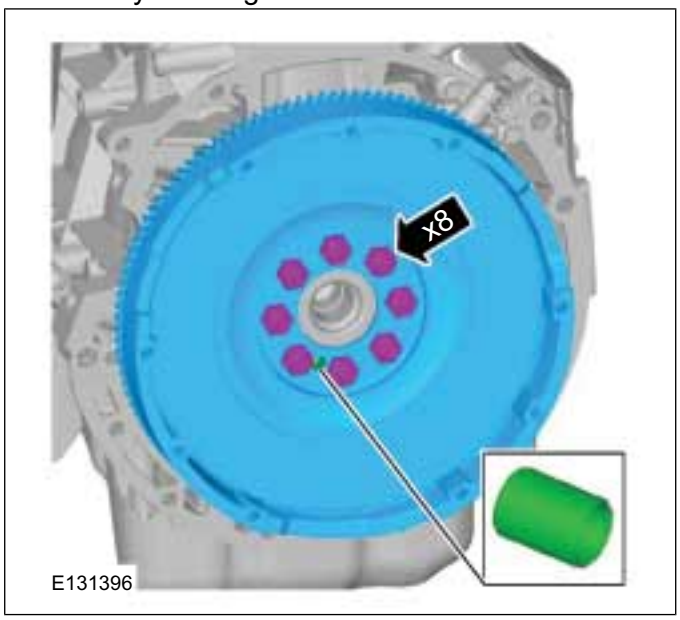

6. Special Tool(s): 303-254
   Torque:
   - Stage 1: 15 Nm
   - Stage 2: 30 Nm
   - Stage 3: 75 Nm
   - Stage 4: 45°

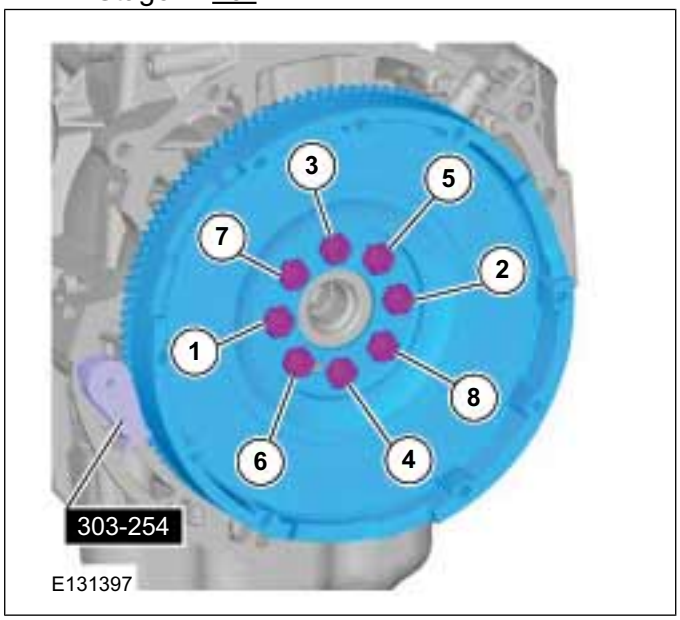

7. **NOTE:** The cone on the special tool must only be tightened finger tight to prevent damage to the clutch disc.

   Special Tool(s): 308-204

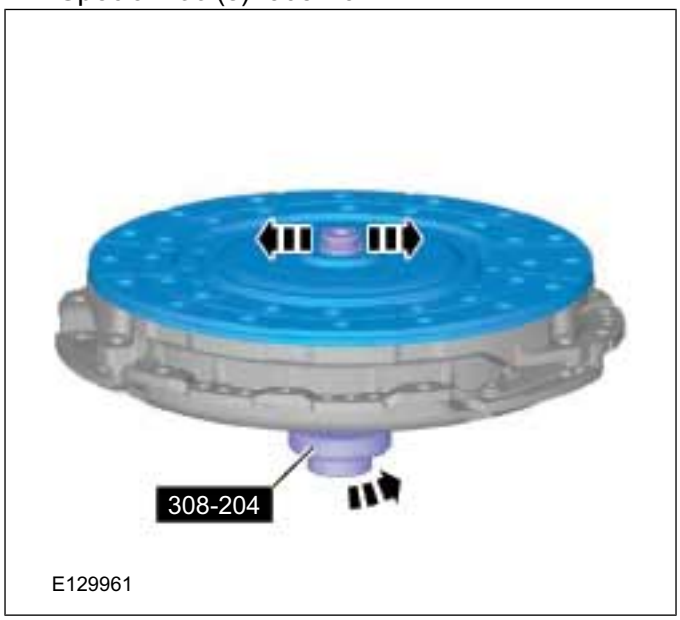

8. **NOTE:** Only tighten the bolt finger tight at this stage.

   Special Tool(s): 308-204

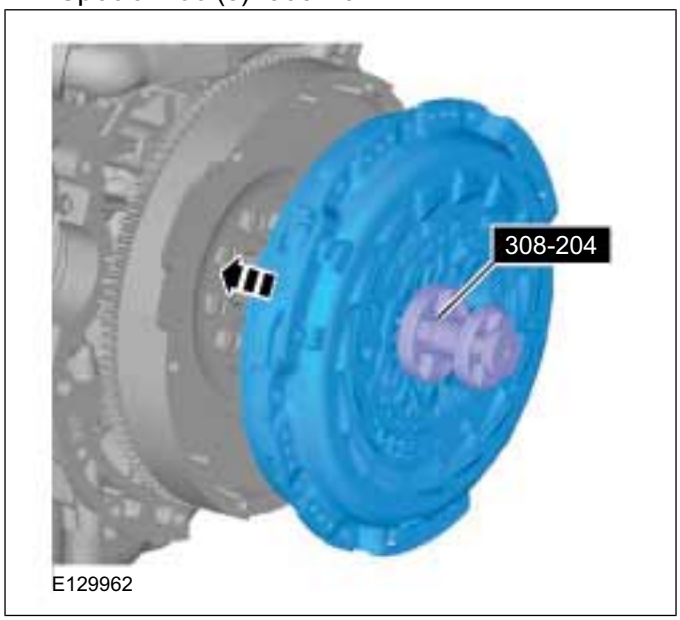

INSTALLATION

9. **CAUTION: Tighten the clutch pressure plate retaining bolts by two turns at a time in the sequence shown.**

Special Tool(s): 308-204
Torque: 45 Nm

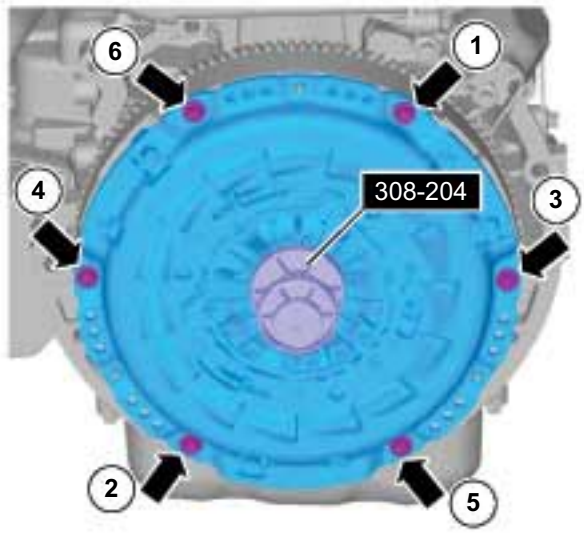

E129963

10. Remove the Special Tool(s): 308-204

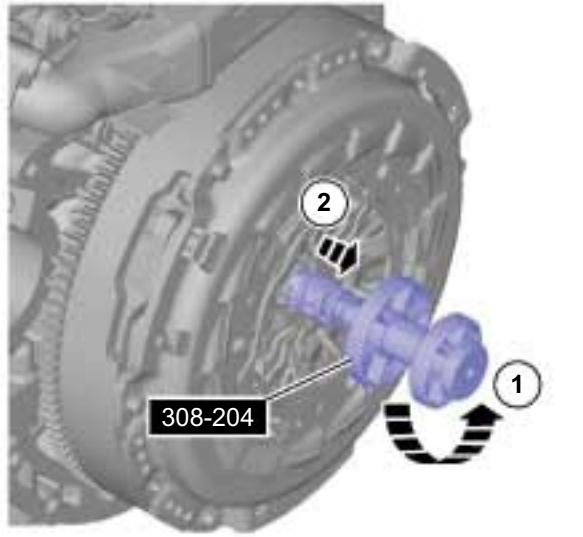

E129984

11. **NOTE:** Make sure that a new component is installed.

Torque: 7 Nm

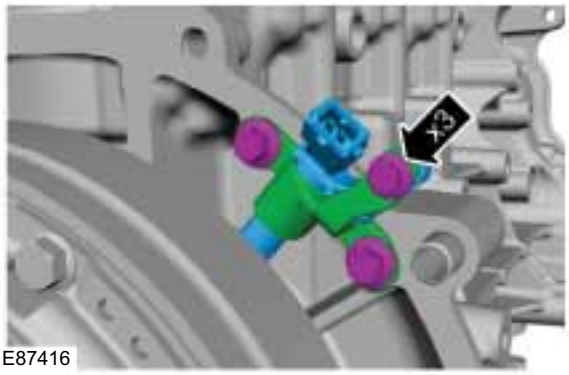

E87416

12. Torque: 25 Nm

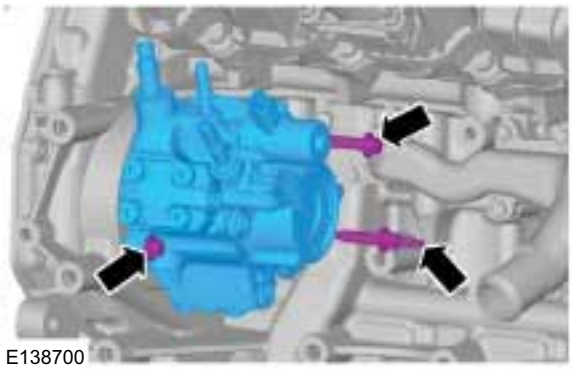
E138700

13. Remove the Special Tool(s): 303-249

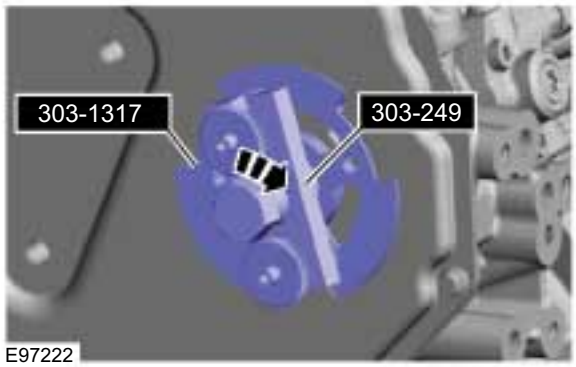

E97222

INSTALLATION

14. **NOTE:** Make sure that a new component is installed.

Torque: 45 Nm

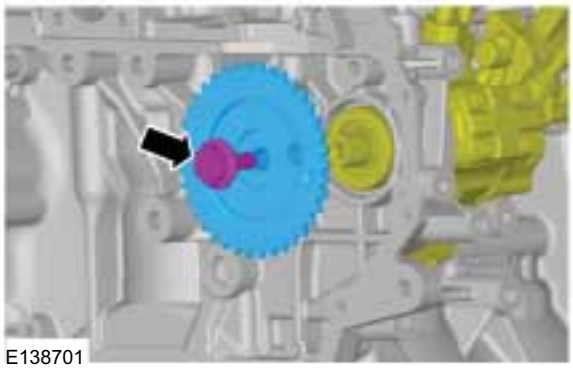
E138701

15. Torque: 22 Nm

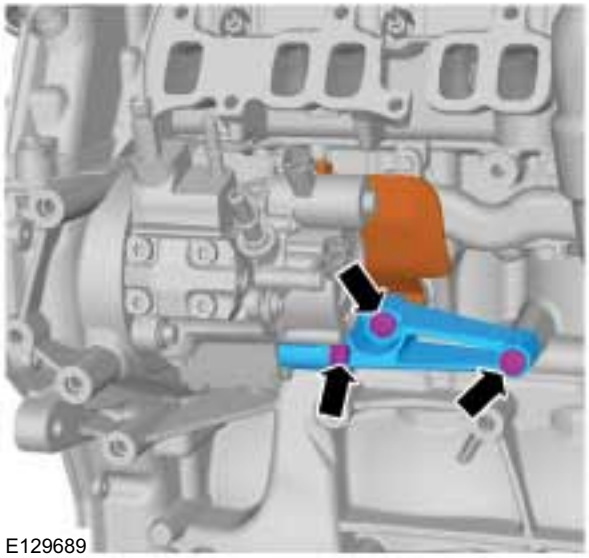
E129689

16. Remove the Special Tool(s): 303-1317

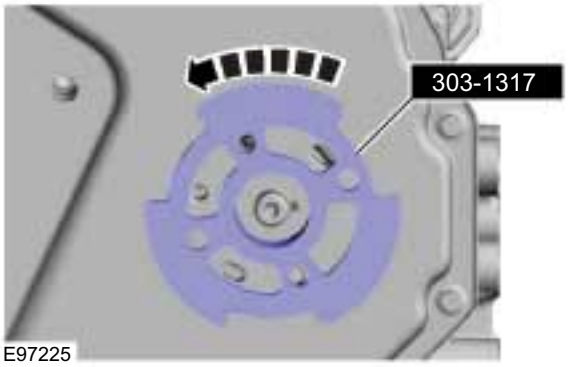

E97225

17. Remove the Special Tool(s): 303-679

E73839

18. Torque: 12 Nm

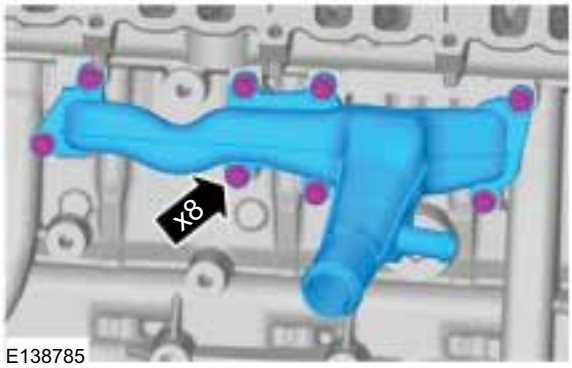

E138785

19. Torque: 23 Nm

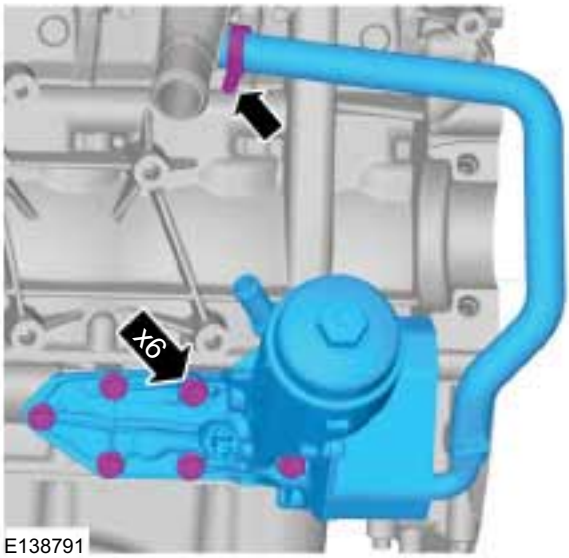

E138791

INSTALLATION

20. Torque: 23 Nm

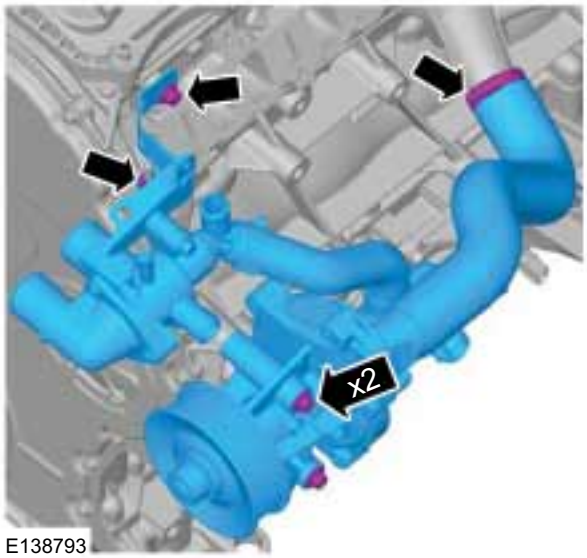

E138793

21. 1. Torque: 48 Nm
    2. Torque: 23 Nm

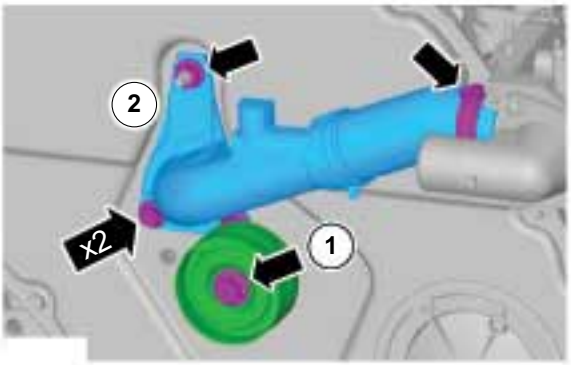

22. Torque: 48 Nm

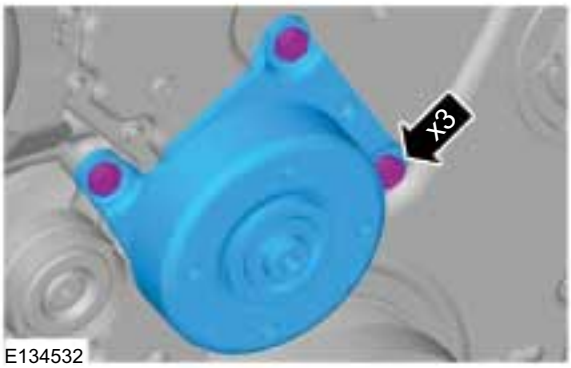

E134532

23. **NOTE:** Make sure that the mounting face is clean and lubricated.

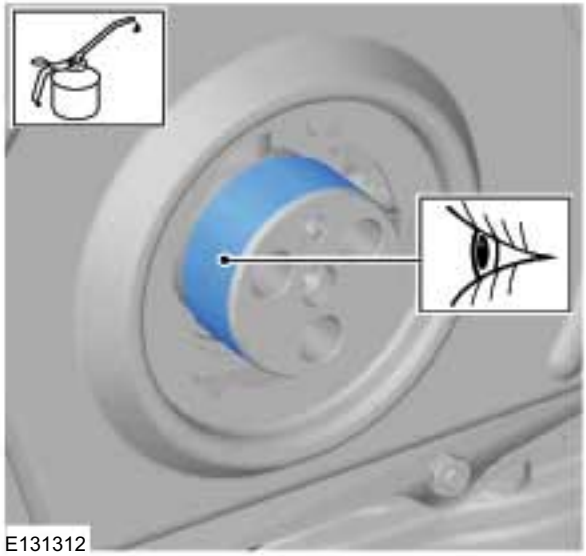
E131312

24. **CAUTION: Rotate the seal assembly until it locks. Failure to follow this instruction may result in damage to the seal assembly.**

NOTE: A new crankshaft front seal carrier is supplied with an alignment sleeve that must not be removed until the crankshaft rear seal is fully installed.

Special Tool(s): 303-679A

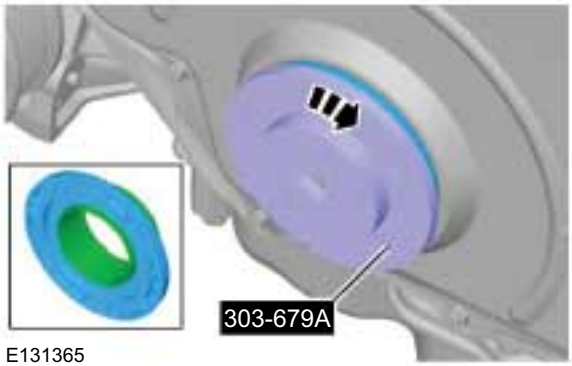

E131365

INSTALLATION

25. Remove the alignment sleeve after the seal is fully installed.

E131367

26. **CAUTION: Crankshaft pulley retaining bolts must only be used three times.**

NOTE: Initially hand tighten the fasteners.

Special Tool(s): 303-1310
Torque:
- Stage 1: 45 Nm
- Stage 2: 120°

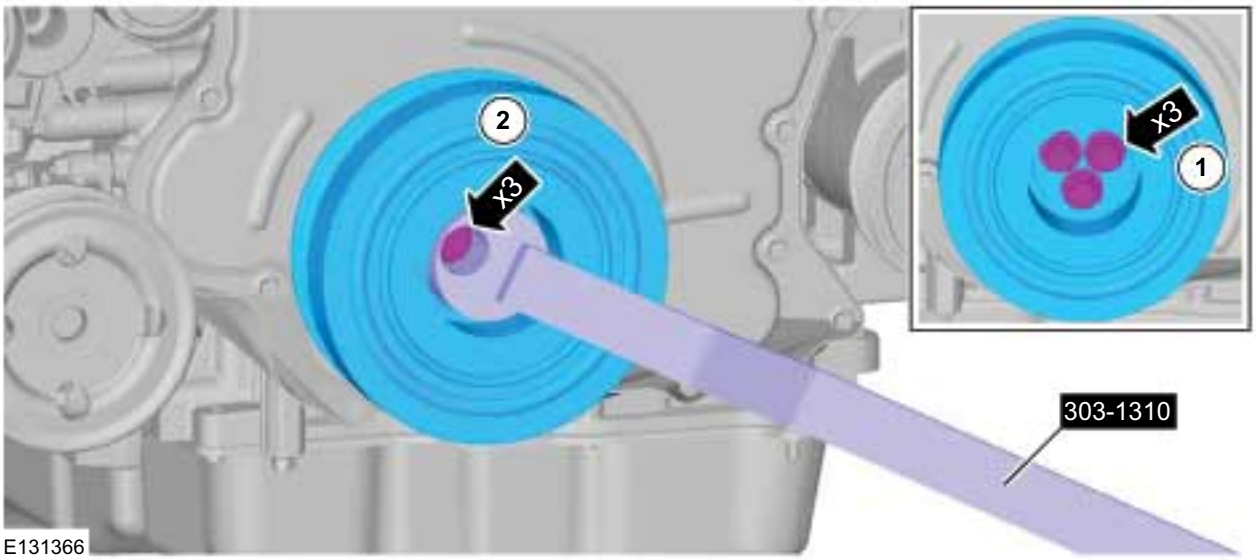

E131366

27. Torque: 9 Nm

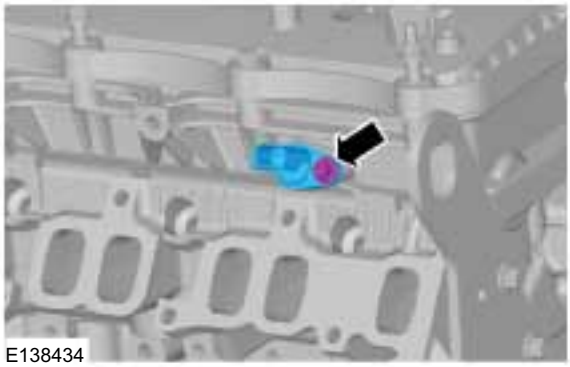
E138434

28. 1. Torque: 13 Nm
2. Torque: 3 Nm

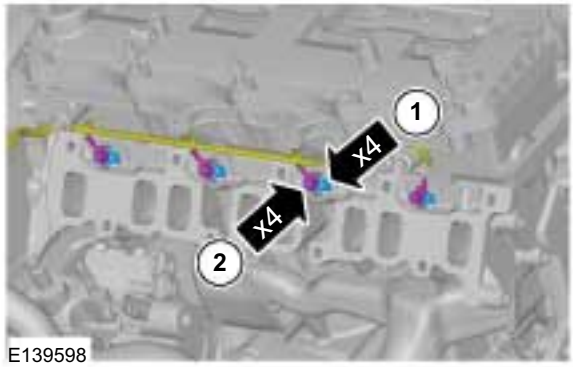

E139598

INSTALLATION

29. Torque: 10 Nm

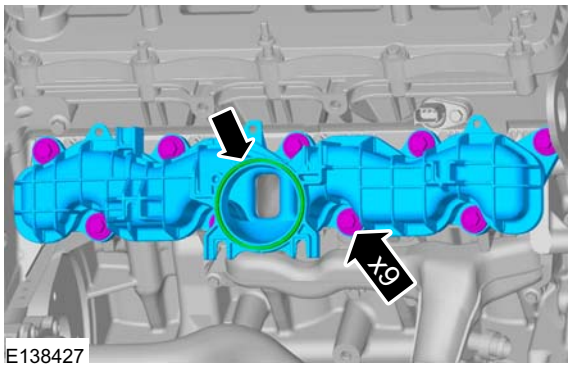

E138427

30. Record the new fuel injector correction factor code.

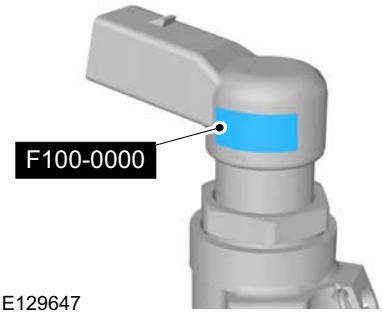

E129647

31. **NOTE:** Using a socket (or similar), press the new fuel injector copper seals onto the fuel injectors making sure that the copper seals are pushed fully home to prevent uneven clamping.

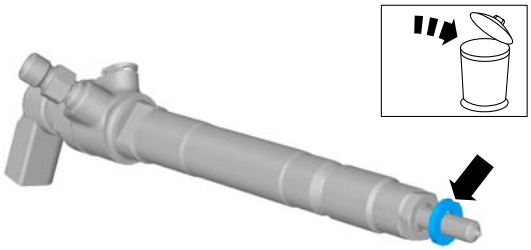
E129584

32. **CAUTION: Make sure that new bolts are installed.**

Torque:
- Stage 1: 5 Nm
- Stage 2: 180°

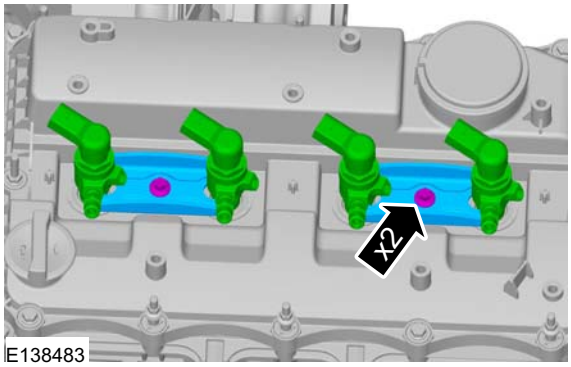

E138483

33. Torque:
- Stage 1: 6 Nm
- Stage 2: 23 Nm

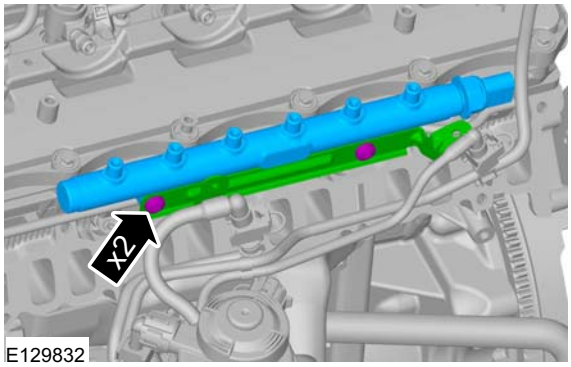

E129832

34. **CAUTIONS:**

Make sure that the fuel line remains in contact at both ends until both unions nuts have been unscrewed and the area around the joints thoroughly cleaned.

Make sure that all openings are sealed. Use new blanking caps.

INSTALLATION

NOTE: Vacuum foreign material from the high-pressure fuel supply line, the fuel pump and the fuel rail.

1. Torque:
   - Stage 1: 10 Nm
   - Stage 2: 35 Nm
2. Refer to: Fuel Injection Component Cleaning (303-04 Fuel Charging and Controls - 2.2L Duratorq-TDCi (88kW/120PS) - Puma/2.2L Duratorq-TDCi (96kW/130PS) - Puma/2.2L Duratorq-TDCi (110kW/150PS) - Puma, General Procedures).
   Torque: 12 Nm

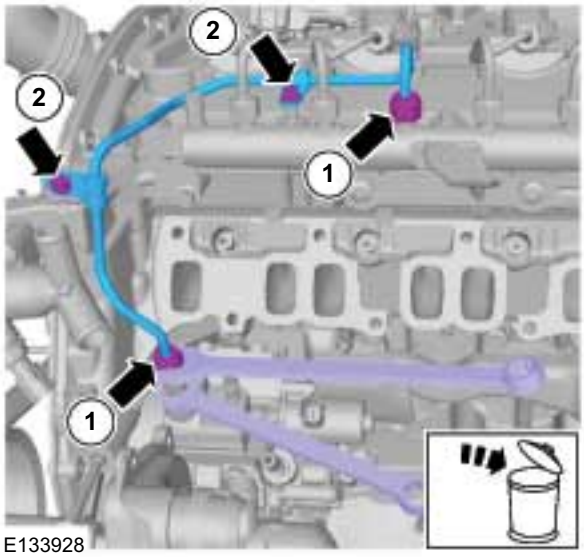

E133928

35. Torque:
   - Stage 1: 20 Nm
   - Stage 2: 25 Nm

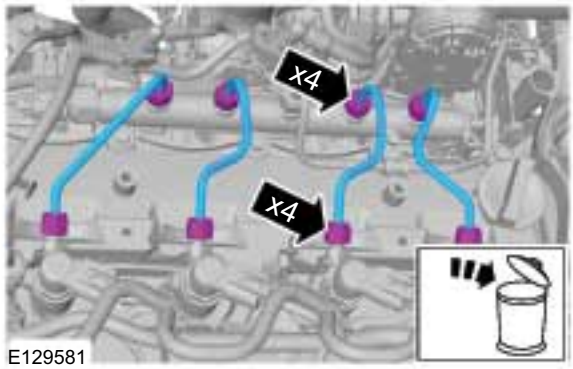

E129581

36. Torque: 22 Nm

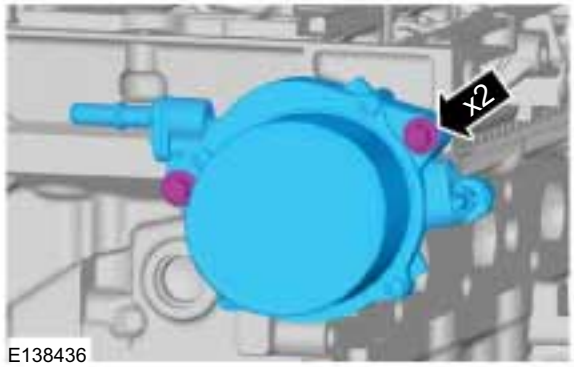

E138436

37. Torque: 12 Nm

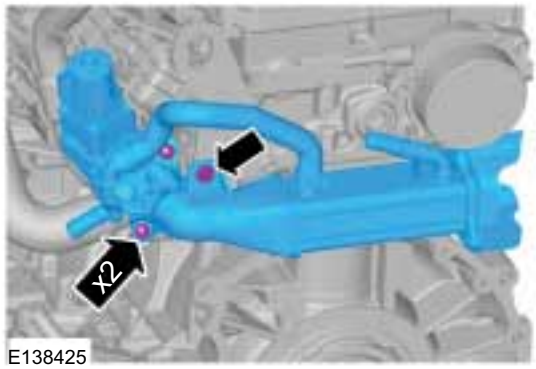

E138425

38.

INSTALLATION

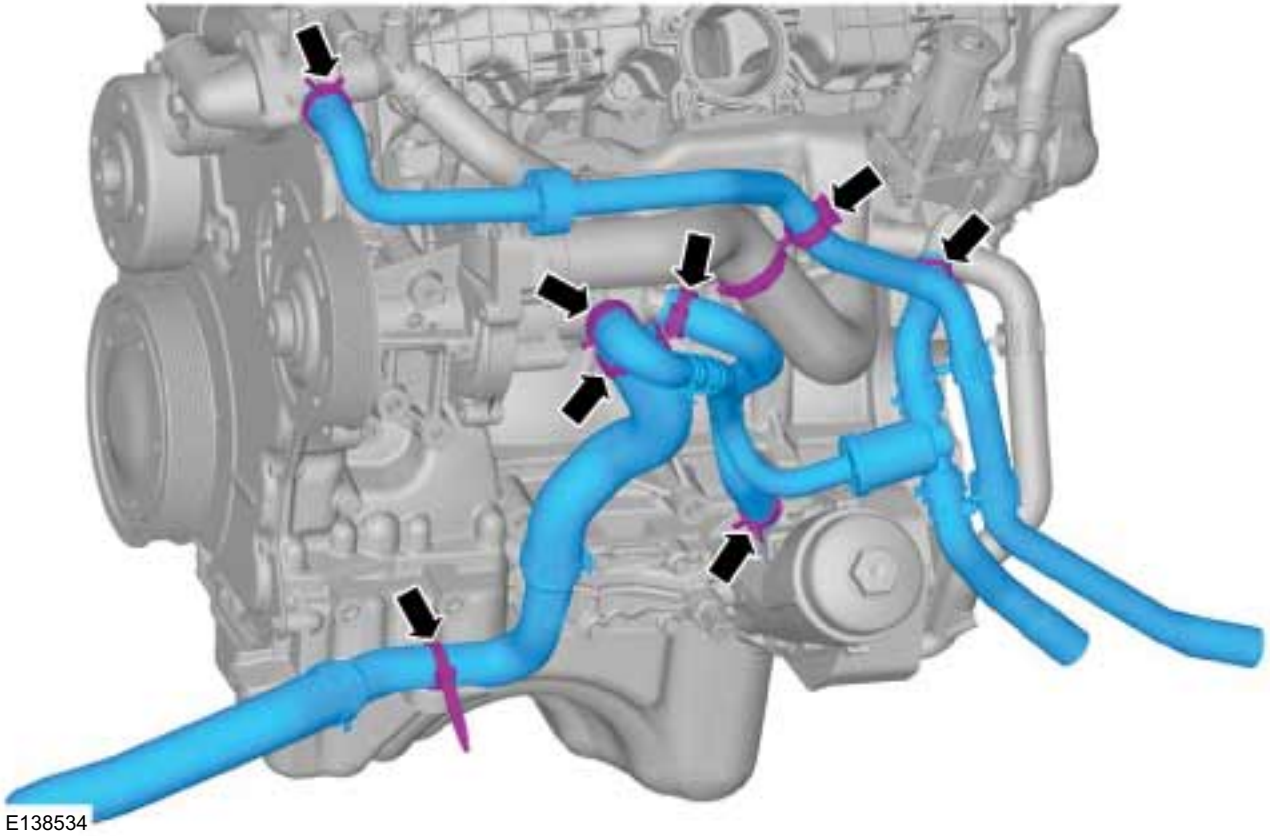

39. Torque: 25 Nm

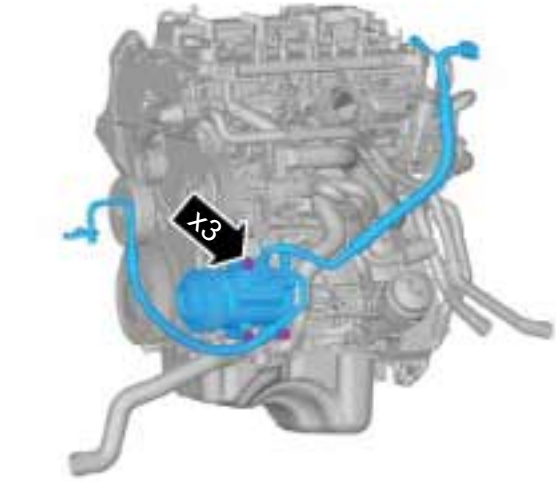

40. **CAUTION: Make sure that all openings are sealed. Use new blanking caps.**

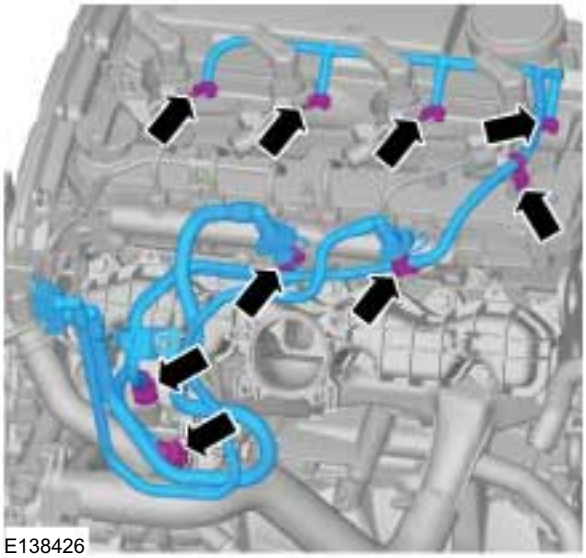

INSTALLATION

41. Torque: 25 Nm

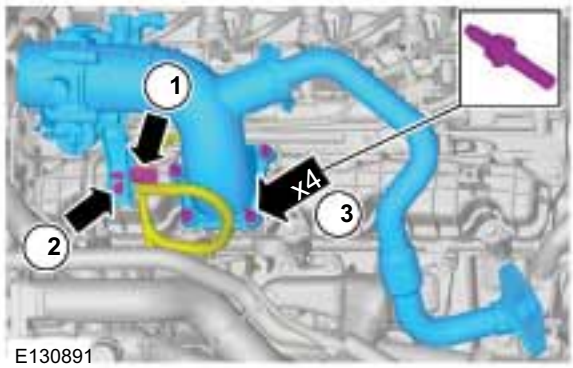

E130891

43.

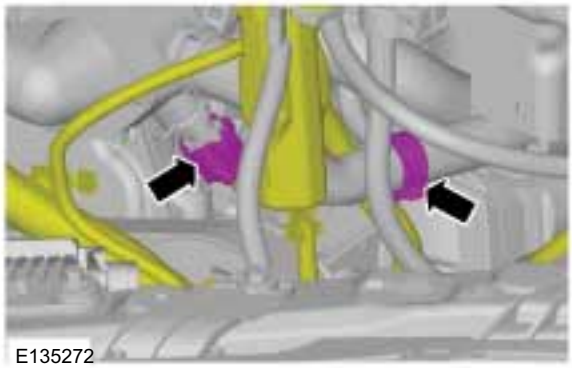
E135272

42.

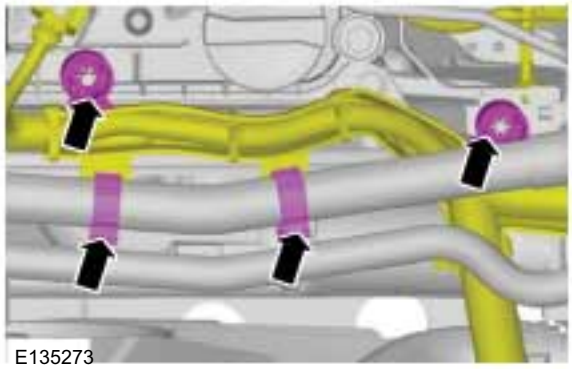
E135273

44.

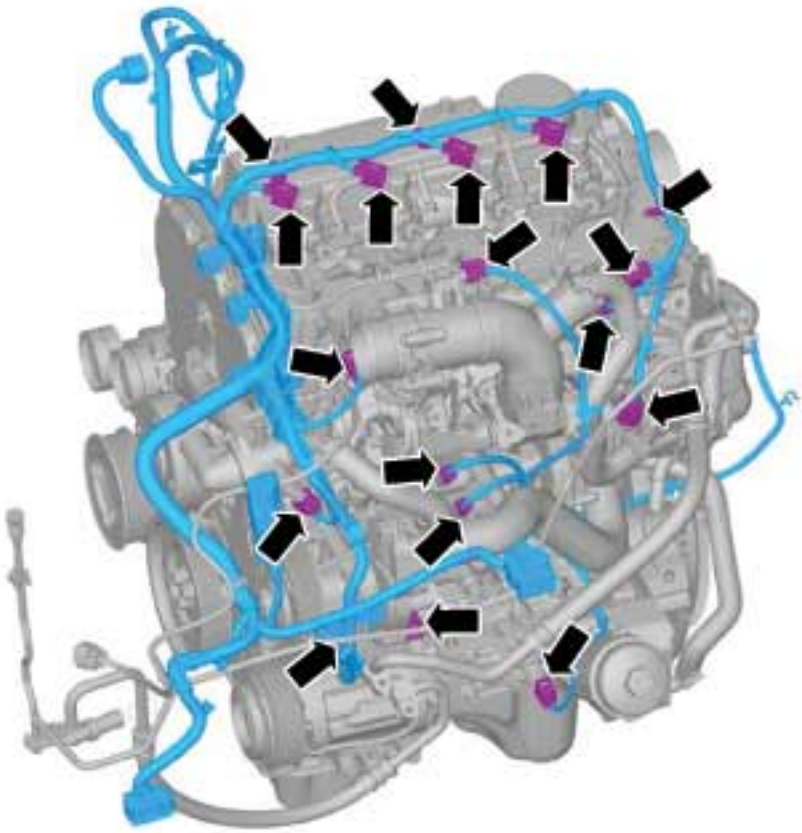
E138423

INSTALLATION

45.

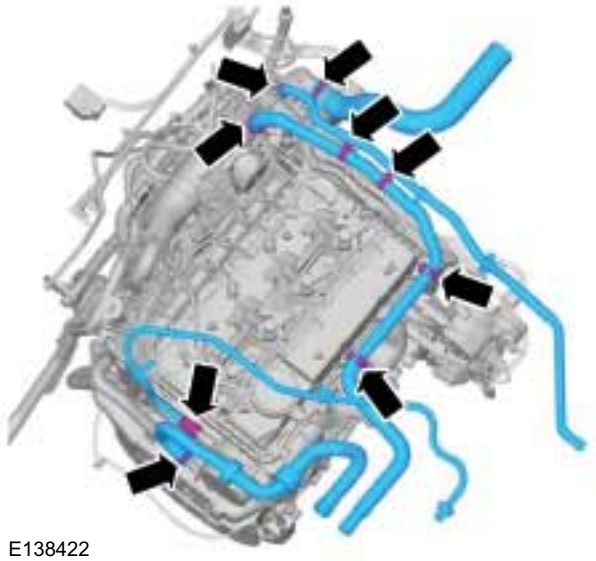
E138422

46. NOTE: The gasket is to be reused unless damaged.

NOTE: The studs are to be reused unless damaged.

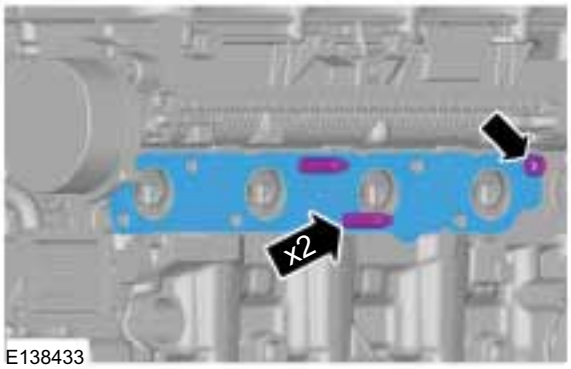

E138433

47. 1. Torque: 55 Nm
2. Torque: 40 Nm
3. Torque: 15 Nm

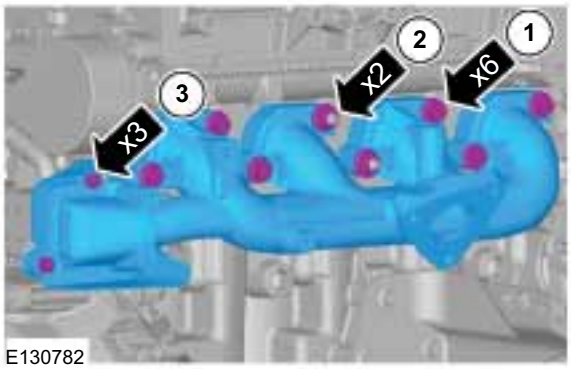

E130782

48. Torque: 9 Nm

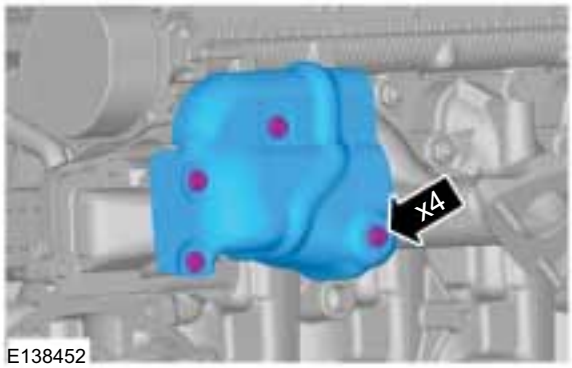

E138452

49. Torque: 25 Nm

E138430

50. Torque: 25 Nm

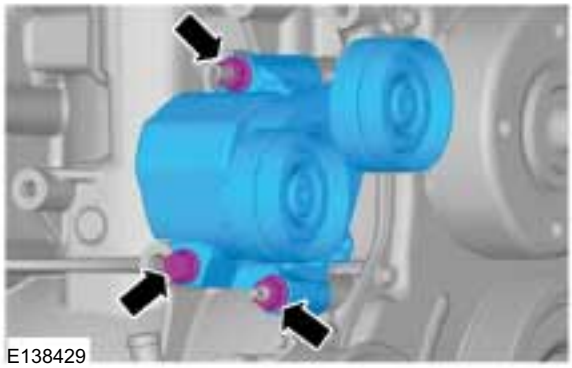
E138429

INSTALLATION

51. Torque: 25 Nm

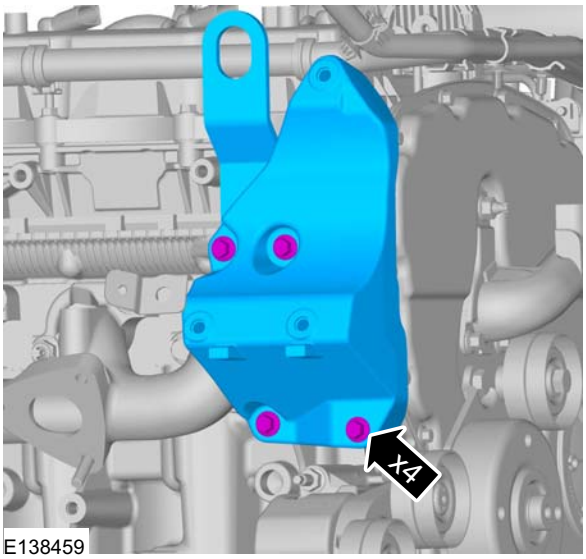

52. ⚠ **CAUTION: Take extra care not to damage the wiring harnesses.**
    4. Torque: 15 Nm
    5. Torque: 48 Nm

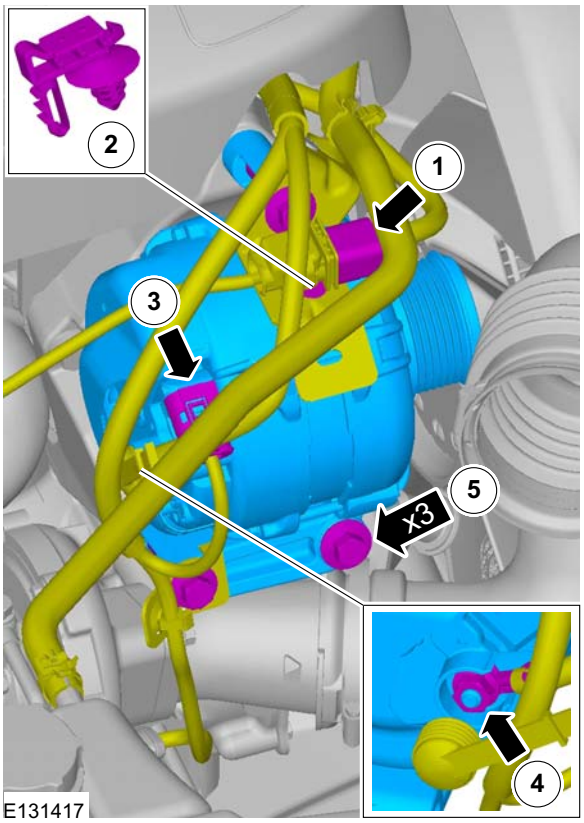

53. General Equipment: 1/2 Inch Square Drive Breaker Bar
    General Equipment: Dowel with a Diameter of 6 mm

INSTALLATION

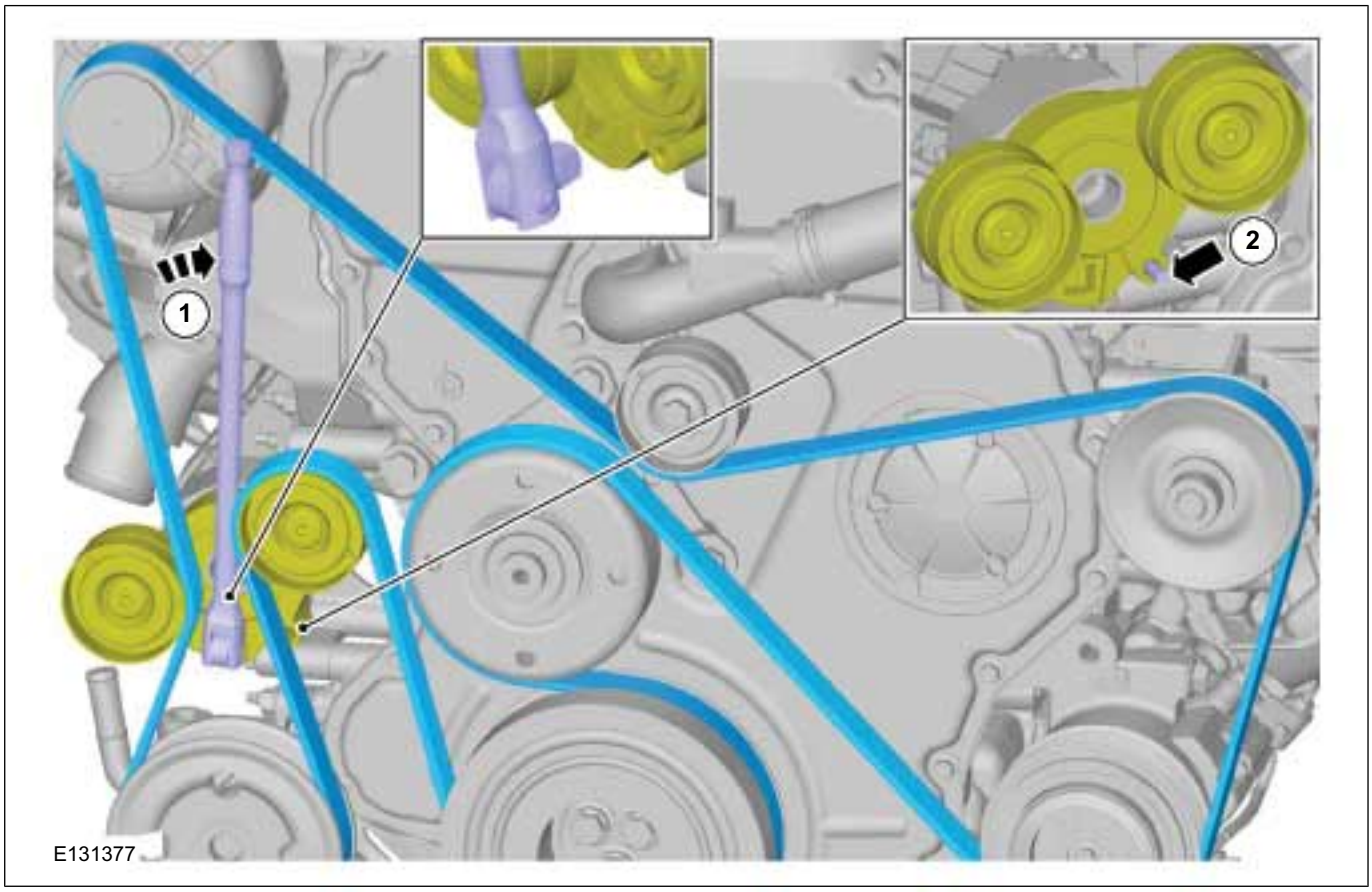

54. Install the Special Tool(s): 303-122

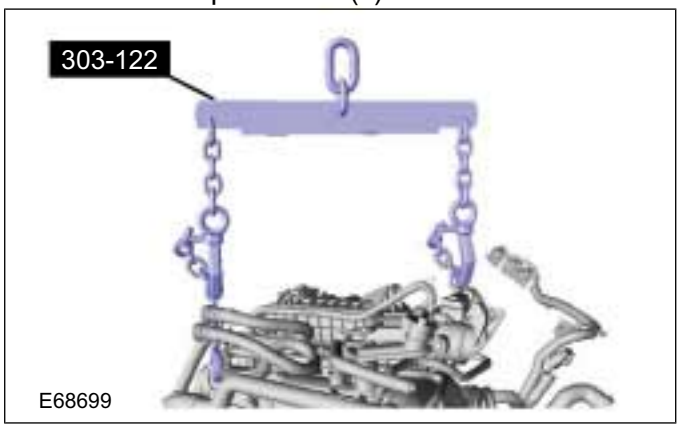

55. Remove the Special Tool(s): 303-435-06, 303-435

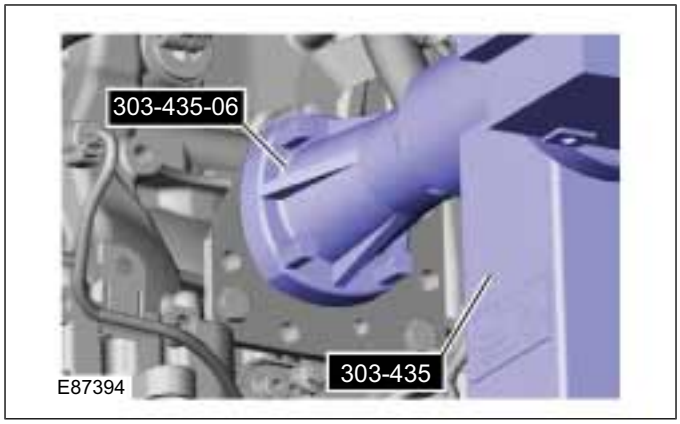

INSTALLATION

56. Remove the Special Tool(s): 303-435-11B

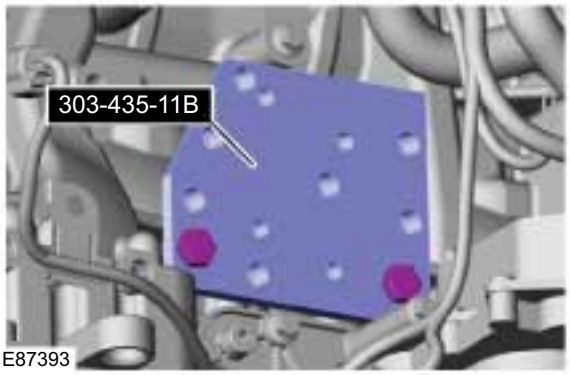

E87393

57. Torque: 9 Nm

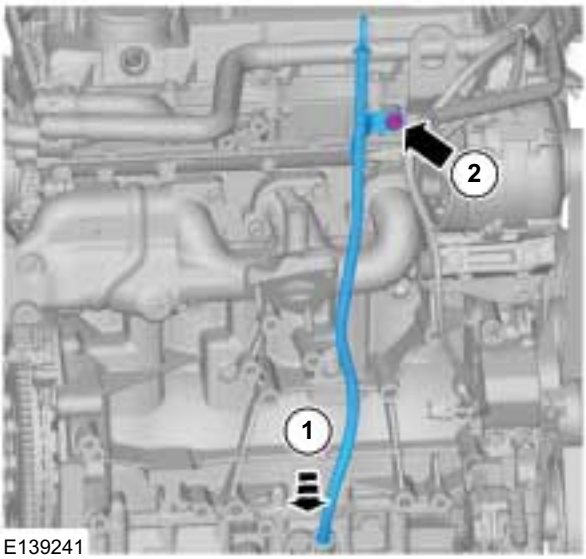

E139241

58. Torque: 23 Nm

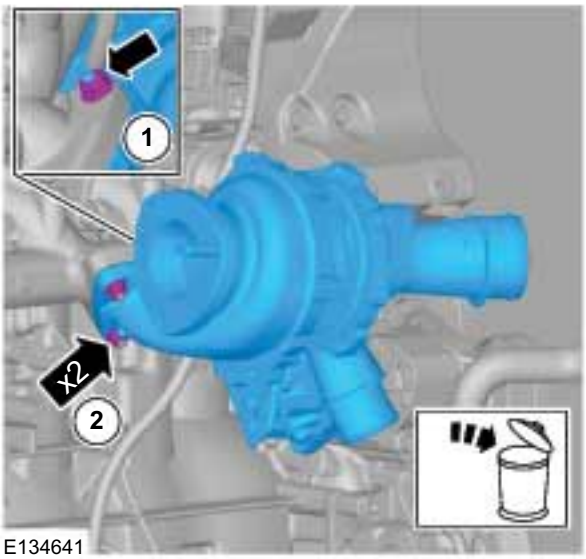

E134641

59.

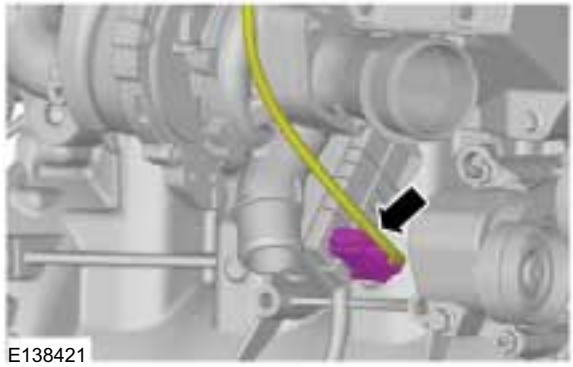
E138421

60. Torque: 10 Nm

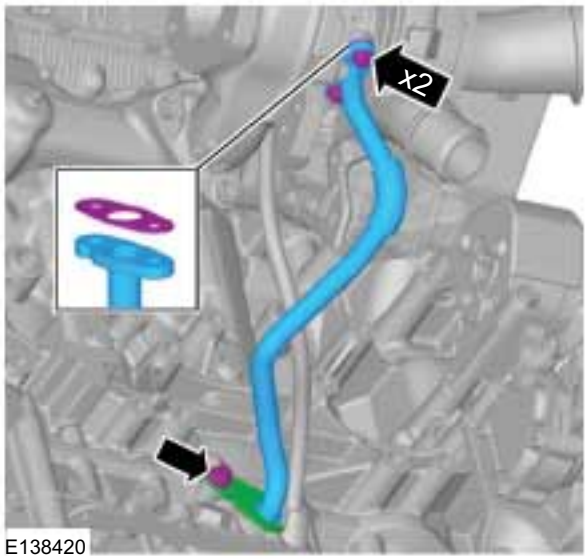

E138420

61. 1. Torque: 35 Nm
2. Torque: 32 Nm

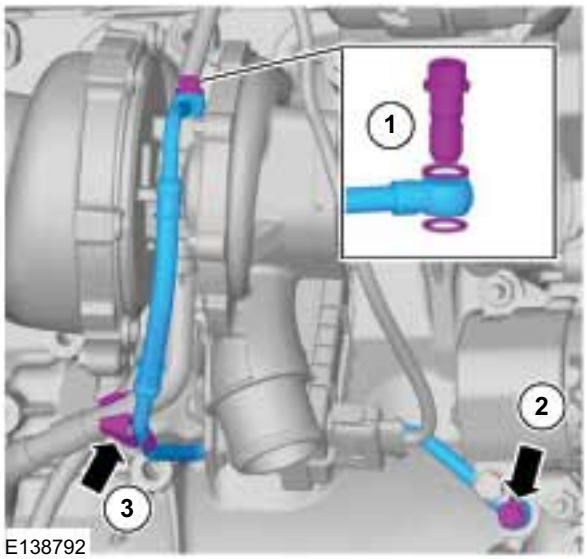

E138792

SECTION 303-01C Engine — 3.2L Duratorq-TDCi (148kW/200PS) - Puma

VEHICLE APPLICATION: 2011.50 Ranger

CONTENTS PAGE

PAGE 1 OF 2

SPECIFICATIONS

Specifications..... 303-01C-3
Engine Data..... 303-01C-3
Engine Oil Capacity..... 303-01C-3
Cylinder Block Dimensions..... 303-01C-3
Piston Dimensions..... 303-01C-3
Crankshaft Dimensions..... 303-01C-4
Connecting Rod Dimensions..... 303-01C-4
Piston Pin Dimensions..... 303-01C-4
Camshaft Dimensions..... 303-01C-4
Valve Dimensions..... 303-01C-4
Cylinder Head Dimensions..... 303-01C-4
Oil Pressure Specifications..... 303-01C-5

DESCRIPTION AND OPERATION

Engine (Overview)..... 303-01C-6
General View..... 303-01C-6
Engine overview..... 303-01C-8
Power and torque curves..... 303-01C-8
Engine type identification..... 303-01C-9
Cylinder head..... 303-01C-9
Electronic turbocharger guide vane adjustment..... 303-01C-11
Oil level/temperature sensor..... 303-01C-11
Service instruction..... 303-01C-11
Engine (Component Location)..... 303-01C-12

REMOVAL AND INSTALLATION

Intake Manifold..... (21 183 0) 303-01C-15
Exhaust Manifold..... (21 187 0) 303-01C-18
Valve Cover..... (21 141 0) 303-01C-20
Camshafts..... (21 284 0) 303-01C-22
Valves..... 303-01C-26
Valve Springs..... 303-01C-28
Valve Stem Seals..... (21 238 0) 303-01C-30
Timing Cover..... (21 146 0) 303-01C-31
Cylinder Head..... (21 163 0) 303-01C-36
Oil Pan..... (21 154 0) 303-01C-39
Oil Pump..... (21 714 0) 303-01C-43
Engine Front Seal..... 303-01C-45
Crankshaft Rear Seal..... (21 468 4) 303-01C-48

PAGE 2 OF 2

REMOVAL

Engine — Vehicles With: 6-Speed Manual Transmission - MT82..... (21 132 0; 21 132 6; 21 132 7) 303-01C-51
Engine — Vehicles With: 6-Speed Automatic Transaxle - 6R80..... (21 132 0; 21 132 6; 21 132 7) 303-01C-60
Engine Accessories..... (21 139 4) 303-01C-70

DISASSEMBLY

Engine..... (21 134 8) 303-01C-83

DISASSEMBLY AND ASSEMBLY OF SUBASSEMBLIES

Cylinder Head..... (21 165 6) 303-01C-89

ASSEMBLY

Engine..... (21 134 8) 303-01C-90

INSTALLATION

Engine — Vehicles With: 6-Speed Manual Transmission - MT82..... (21 132 0; 21 132 6; 21 132 7) 303-01C-103
Engine — Vehicles With: 6-Speed Automatic Transaxle - 6R80..... (21 132 0; 21 132 6; 21 132 7) 303-01C-112
Engine Accessories..... (21 139 4) 303-01C-122

SPECIFICATIONS

Engine Data

Description	
Code	SAFA
Firing order	1-2-4-5-3
Bore diameter	89.9 mm
Stroke	100.76 mm
Displacement	3198 cc
Compression ratio	17.5:1
Power output at 3500 rpm	147 kW (200 PS)
Torque between 2000 to 2500 rpm	470 Nm
Idle speed	800 +/- 50 rpm
Maximum oil consumption	0.1L / 1000 Km

Engine Oil Capacity

Description	Liters
Initial fill including oil filter	12,6
Service fill including oil filter	11,4
Service fill without oil filter	11,0

Cylinder Block Dimensions

Description	mm
Cylinder bore diameter — Class 1	89.900 - 89.910
Cylinder bore diameter — Class 2	89.910 - 89.920
Cylinder bore diameter — Class 3	89.920 - 89.930
Main bearing shells 1 to 5 inner diameter — bearings installed	64.994 - 65.022
Main bearing shell 6 inner diameter — bearings installed	69.994- 70.022
Main bearings 1 to 5 radial clearance	0.024 - 0.072
Main bearing 6 radial clearance	0.024 - 0.072
Main bearings 1 to 5 parent bore diameter — vertical measurement	69.504 - 64.520
Main bearing 6 parent bore diameter — vertical measurement	74.504 - 74.520
Main bearings 1 to 5 parent bore diameter — horizontal measurement	69.502 - 69.525
Main bearing 6 parent bore diameter — horizontal measurement	74.502 - 74.525

Piston Dimensions

Description	mm
Piston diameter — Class 1	89.84 - 89.85
Piston diameter — Class 2	89.85 - 89.86
Piston diameter — Class 3	89.86 - 89.87
Piston clearance in cylinder	0.05 - 0.07
Piston ring end gaps	

SPECIFICATIONS

Description	mm
— upper compression ring	0.25 - 0.40
— lower compression ring	0.50 - 0.75
— oil control ring	0.25 - 0.50
Piston ring gap position: The piston ring end gaps must be distributed evenly around the circumference of the piston. This also applies to the oil control ring elements. Align the piston ring end gaps at 120 degrees to each other.	

Crankshaft Dimensions

Description	mm
Main bearing journal end float	0.090 - 0.305
Main bearing journals 1 to 5 diameter	64.950 - 64.970
Main bearing journal 6 diameter	69.950 - 69.970
Connecting rod bearing journal diameter	52.980 - 53.000

Connecting Rod Dimensions

Description	mm
Large end bore diameter	55.996 - 56.016
Small end bore diameter	32.010 - 32.018
Connecting rod bearing shell inner diameter — bearings installed	53.016 - 53.046
Connecting rod bearing radial clearance	0.026 - 0.084
Connecting rod bearing axial clearance	0.100 - 0.320

Piston Pin Dimensions

Description	mm
Piston pin length	73.95
Piston pin diameter	31.998 - 32.002
Piston pin slide clearance	0.008 - 0.018

Camshaft Dimensions

Description	mm
Camshaft end float	0.014 - 0.200
Camshaft bearing journal diameter	26.440 - 26.465
Camshaft bearing clearance — radial measurement	0.04 - 0.09

Valve Dimensions

Description	mm
Valve stem to valve guide clearance — intake valve	0.0625 - 0.0275
Valve stem to valve guide clearance — exhaust valve	0.0725 - 0.0375

Cylinder Head Dimensions

Description	mm
Maximum distortion — measured longitudinally and diagonally	0.10

SPECIFICATIONS

Description	mm
Peak to valley height of mating surface	0.02
Cylinder head gasket thickness	
Piston protrusion of 0.310 - 0.400 mm	1.1 (one hole/tooth)
Piston protrusion of 0.401 - 0.450 mm	1.15 (two holes/teeth)
Piston protrusion of 0.451 - 0.500 mm	1.2 (three holes/teeth)

Oil Pressure Specifications

Description	bar
Minimum oil pressure at idle speed	1.25
Minimum oil pressure at 2000 rpm	2.5

Lubricants, Fluids, Sealers and Adhesives

Item	Specification
Ford Formula E SAE 5W-30 engine oil	WSS-M2C913-B
Sealer — oil pan, camshaft carrier and engine front cover	WSE-M4G323-A4

DESCRIPTION AND OPERATION

Engine – Overview

General View

- The 3.2L Duratorq-TDCi (Puma) diesel engine is a five-cylinder inline engine which delivers a power of 147kW (200 PS).
- The engine is additionally equipped with an oil level/oil temperature sensor .
- The cylinder head consists of two parts and is made of aluminum. Both parts are bolted to each other.
- The lower part contains four valves for each combustion chamber and the two camshafts.
- The upper part houses the rocker arm frame with the roller rocker arms. The hydraulic valve clearance adjustment is integrated in the roller rocker arms.
- The camshafts and the fuel injection pump are driven by the crankshaft via the timing chain.
- The oil pump is located inside the oil pan and is driven by the crankshaft via a chain.

NOTE: Cylinder 1 is located on the timing chain end.

DESCRIPTION AND OPERATION

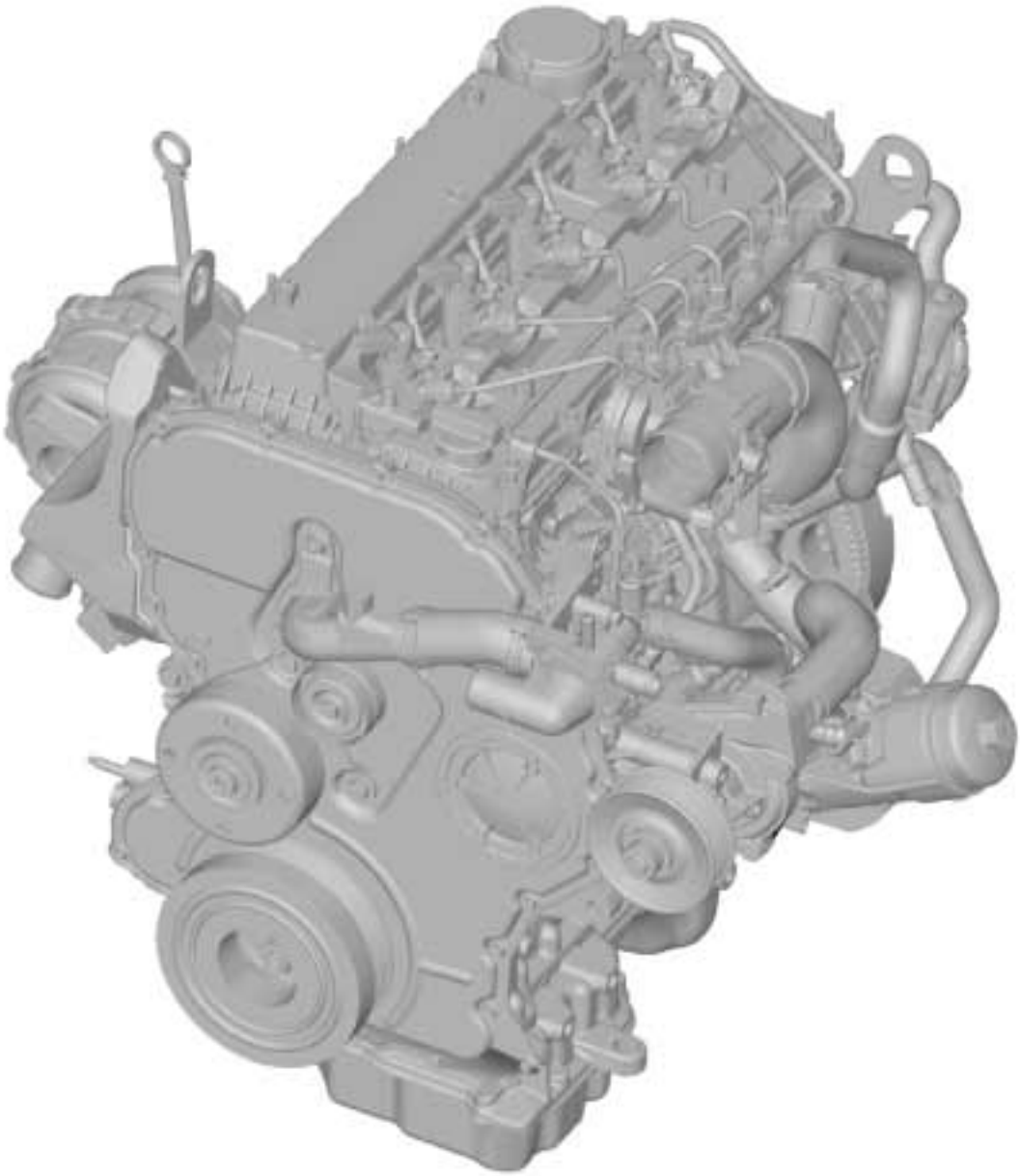

E131231

DESCRIPTION AND OPERATION

Engine overview

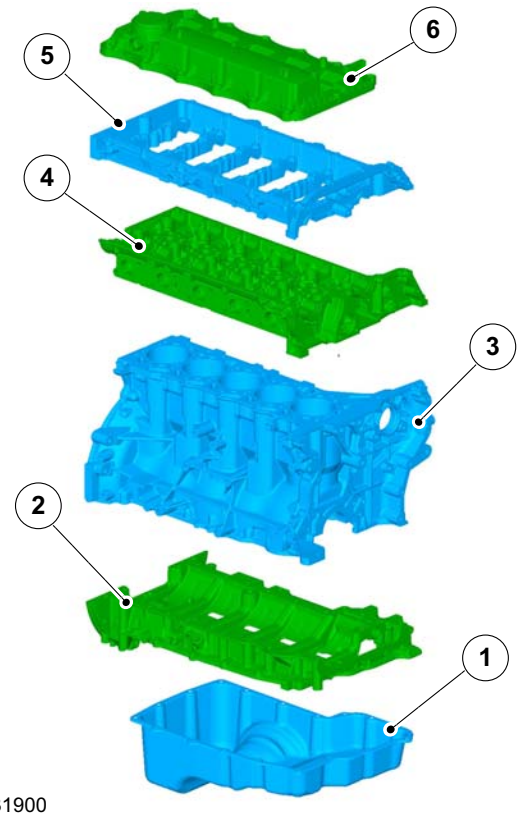

E131900

Item	Description
1	Oil pan
2	Oil pan extension
3	Cylinder block
4	Cylinder head lower part
5	Cylinder head upper part
6	Valve cover

Power and torque curves

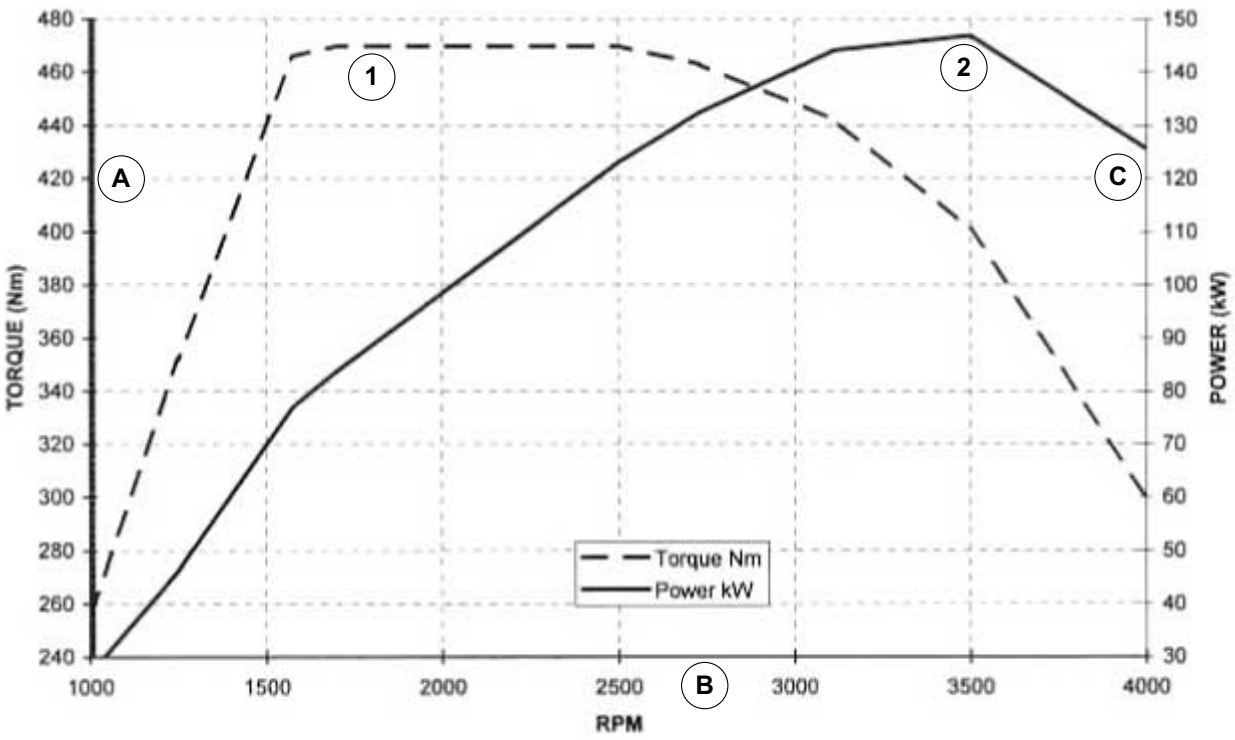

E94909

DESCRIPTION AND OPERATION

Item	Description
A	Torque (Nm)
B	Engine speed (rpm)
C	Power (kW)

Item	Description
1	Torque curve for the 147 kW engine (200 PS)
2	Power curve for the 147 kW engine (200 PS)

Engine type identification

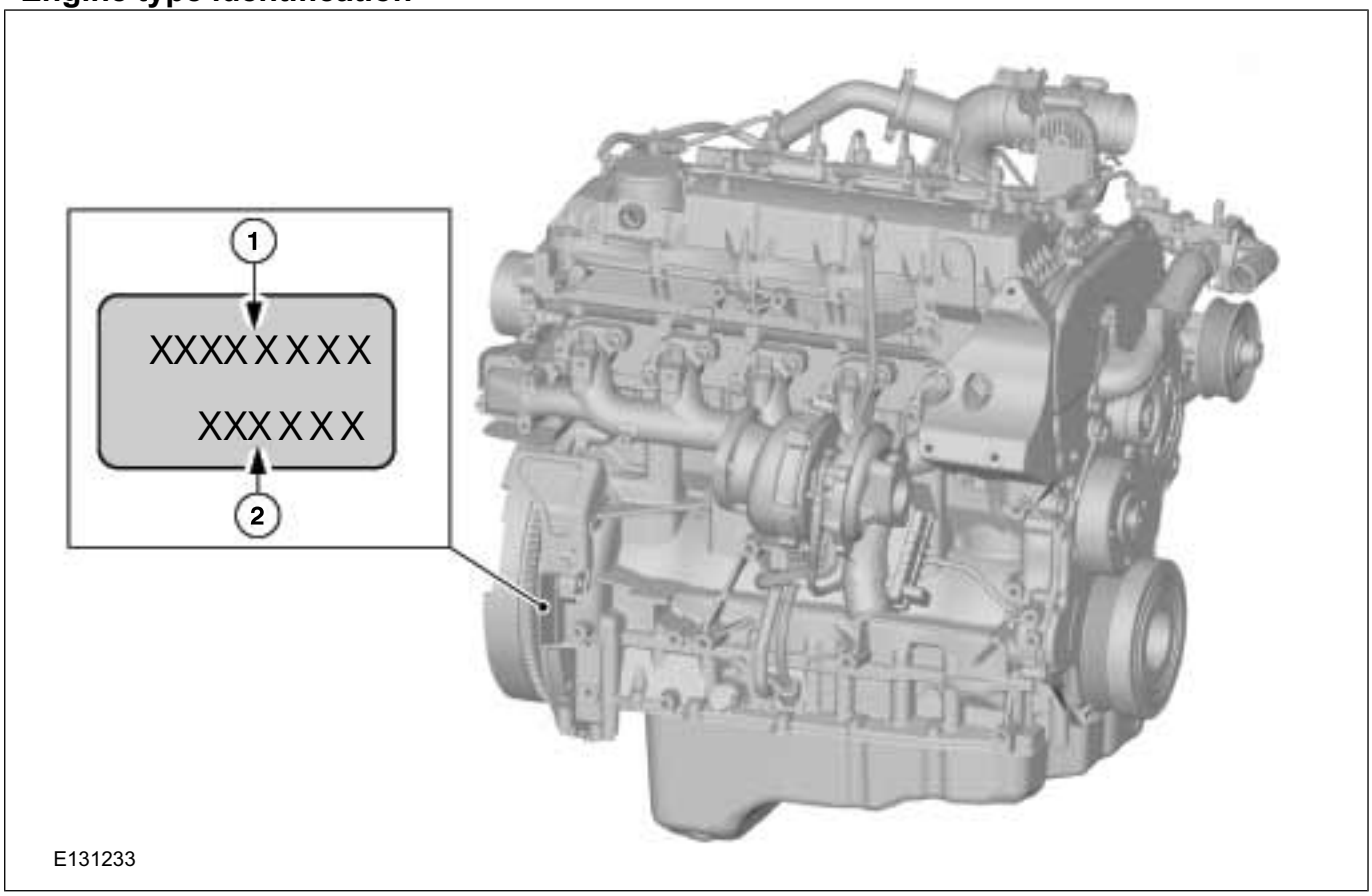

Item	Description
1	Engine code
2	Engine serial number

On the 3.2L engine the engine code (4 digits) and the engine serial number (2 letters for the year and month and 5 figures for the serial number) are stamped in the cylinder block on the exhaust side (in line with cylinder no. 5).

If the engine or cylinder block is changed, the vehicle identification number must be stamped in the indicated location.

Cylinder head

DESCRIPTION AND OPERATION

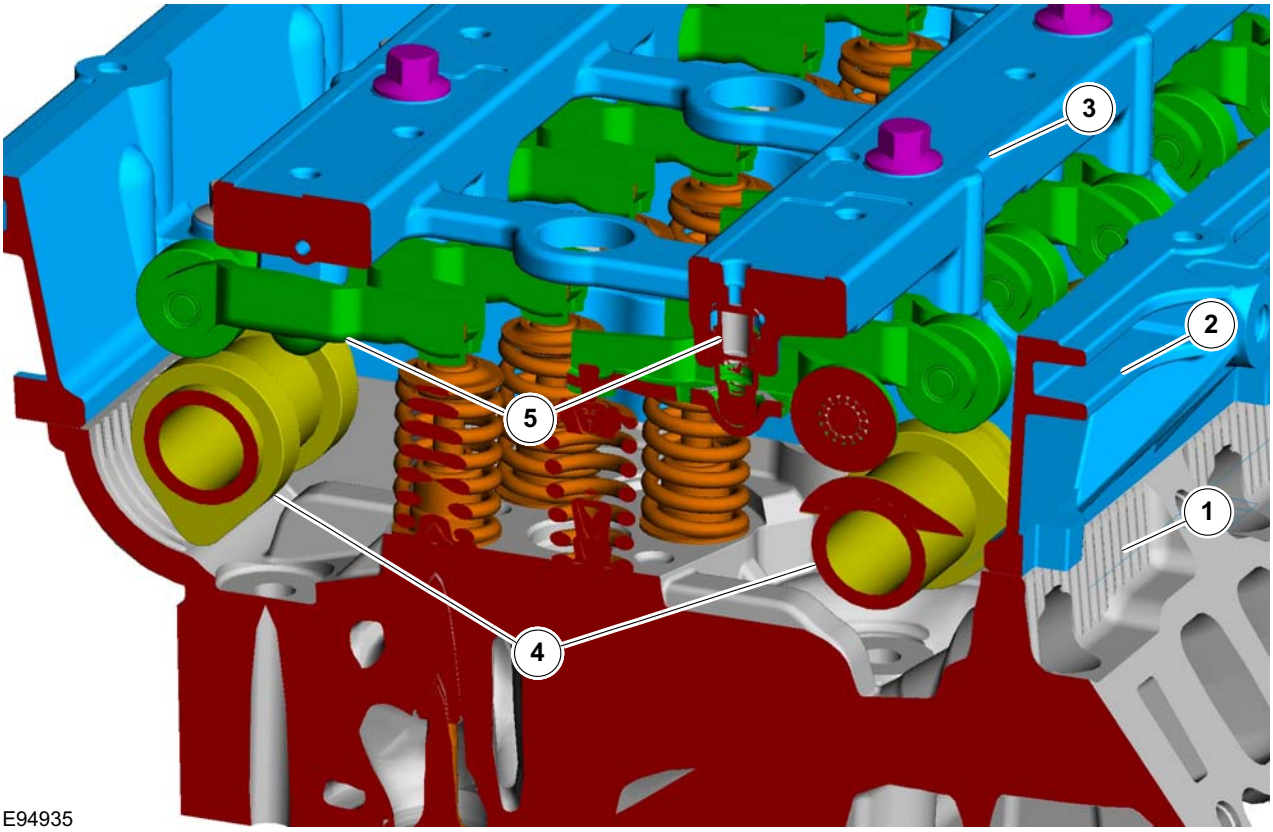

Item	Description
1	Cylinder head lower part
2	Cylinder head upper part
3	Rocker arm frame

Item	Description
4	Camshafts
5	Roller rocker arms with hydraulic valve clearance adjustment

DESCRIPTION AND OPERATION

Electronic turbocharger guide vane adjustment

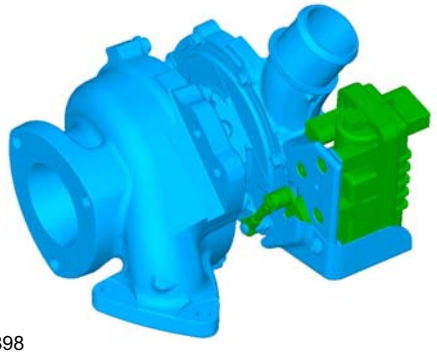
E131898

Item	Description
1	Electric actuator for turbocharger guide vane adjustment

Oil level/temperature sensor

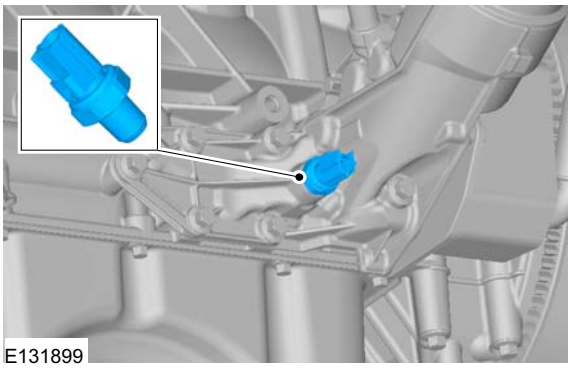
E131899

An oil level/temperature sensor located on the front of the engine directly beside the engine oil dipstick is provided for the service interval indicator.

A wire coil that is fitted inside the sensor and continuously supplied with current is used to measure the oil level.

The resistance of the wire coil changes according to how deeply the sensor is immersed in the oil. The measurement values are registered by the Powertrain Control Module (PCM).

The change in the voltage drop serves as an input variable for calculating the oil level. The oil temperature is sensed simultaneously via the integrated temperature sensor. The temperature is used as a corrective factor in the calculation.

The PCM calculates the next oil change on the basis of an integrated strategy (which also takes into consideration the mileage and engine operating conditions) and displays it in the instrument panel.

In addition, a separate indicator in conjunction with a corresponding message in the instrument cluster display warns the driver when the oil quantity falls below the minimum level.

Service instruction

The interval indicator must be reset after an oil change on all vehicles with a diesel engine.

It must be ensured that the vehicle is standing on level ground.

DESCRIPTION AND OPERATION

Engine – Component Location

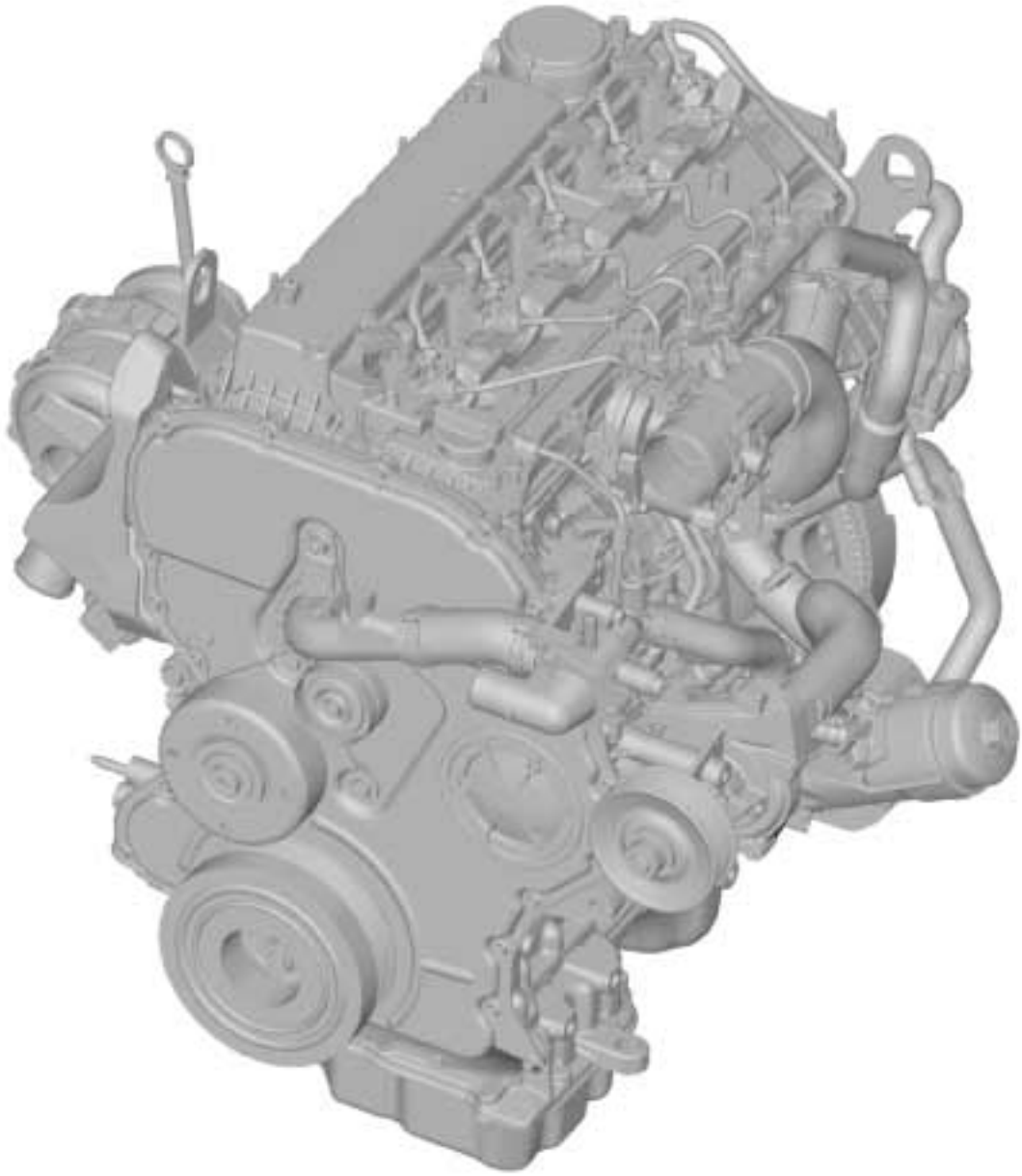

E131231

DESCRIPTION AND OPERATION

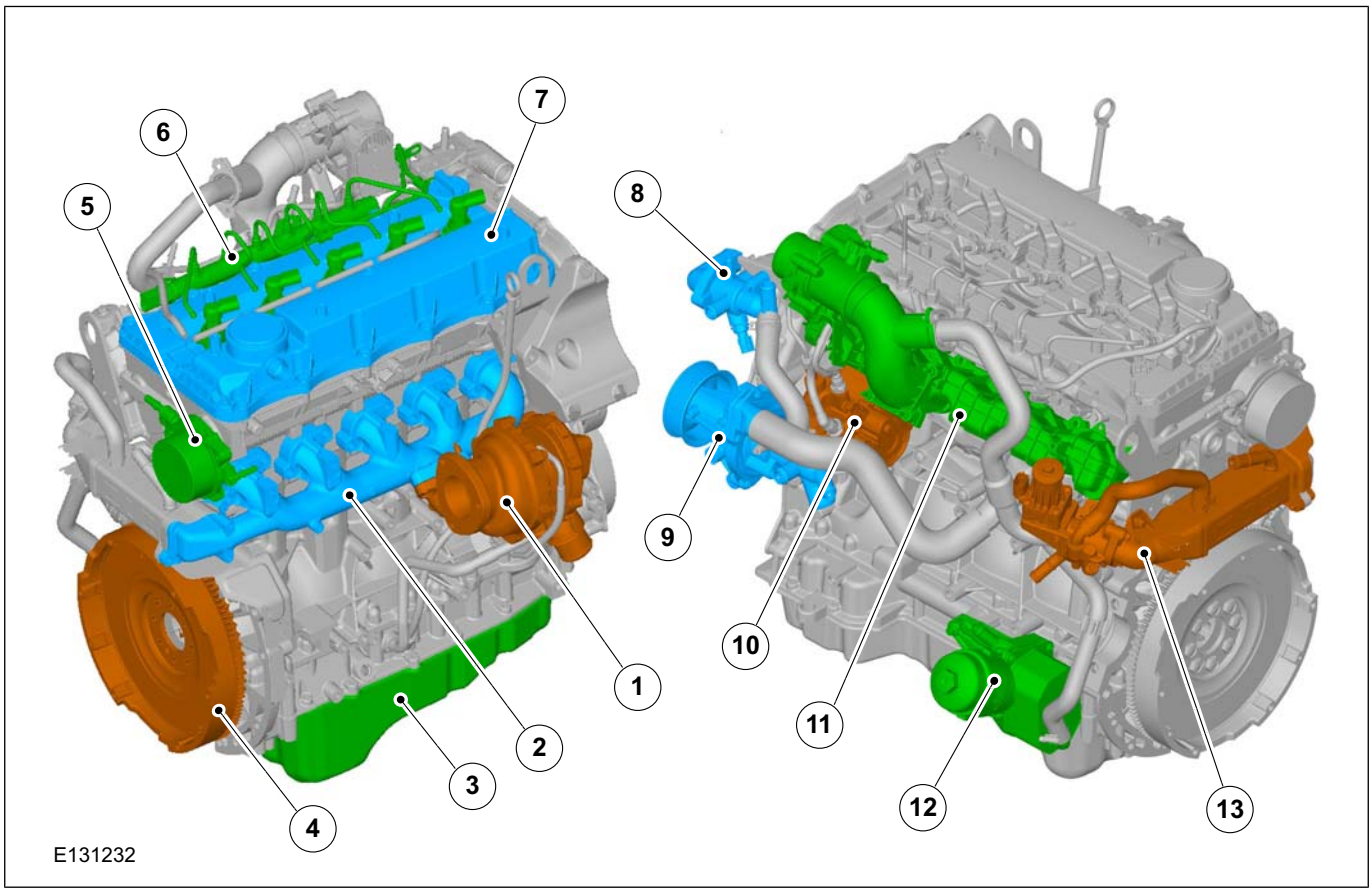

Item	Description
1	Turbocharger
2	Exhaust manifold
3	Oil pan
4	Flywheel
5	Vacuum pump
6	Fuel rail

Item	Description
7	Valve cover
8	Thermostat
9	Coolant pump
10	Fuel pump
11	Intake manifold
12	Oil cooler
13	EGR valve

DESCRIPTION AND OPERATION

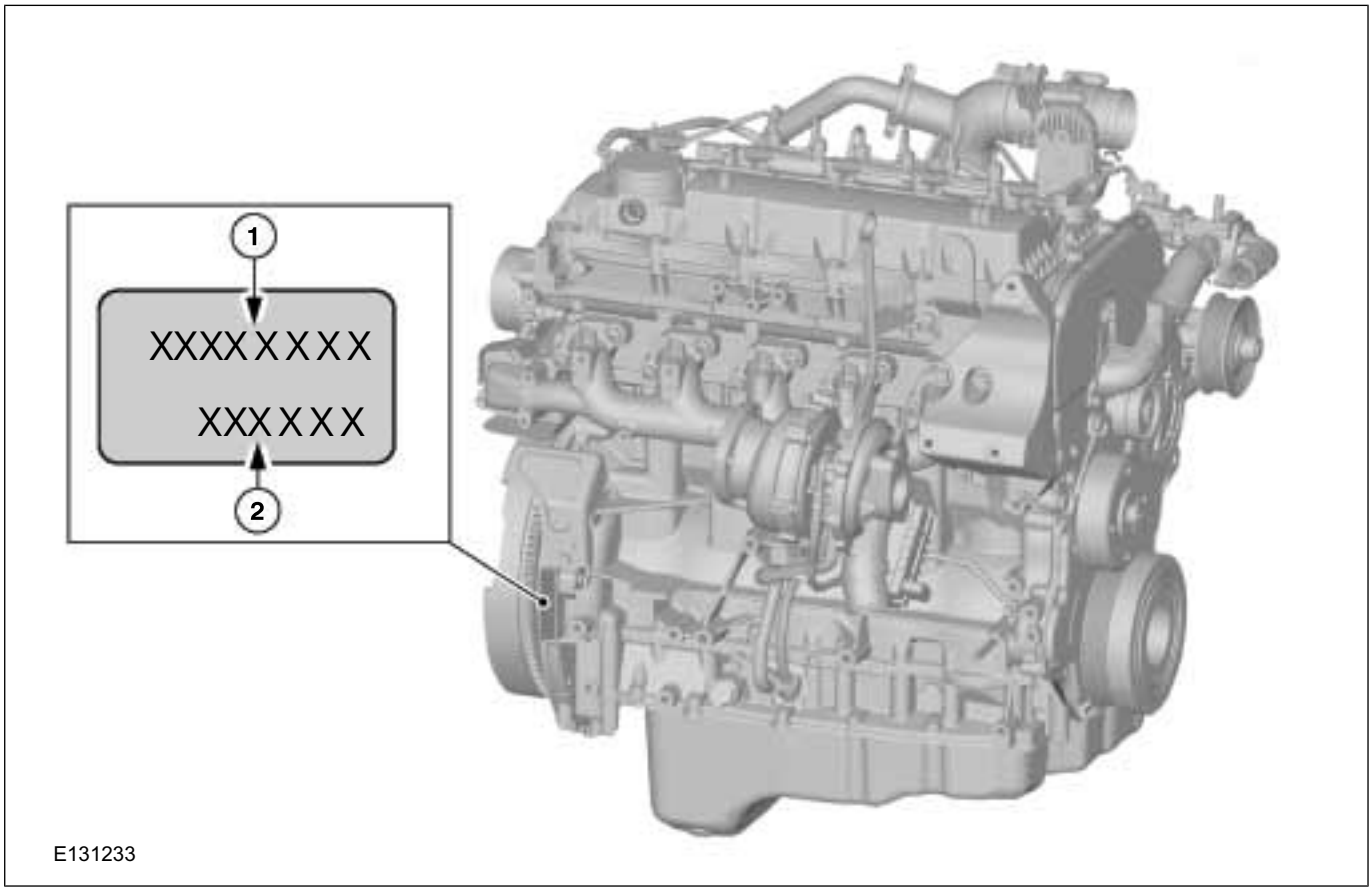

Item	Description
1	Engine code
2	Engine serial number

REMOVAL AND INSTALLATION

Intake Manifold(21 183 0)

Removal

WARNINGS:

Do not smoke or carry lighted tobacco or open flame of any type when working on or near any fuel related components. Highly flammable mixtures are always present and may ignite. Failure to follow these instructions may result in personal injury.

Wait at least one minute after the engine stops before commencing any repair to the fuel injection system. Failure to follow this instruction may result in personal injury.

NOTE: Removal steps in this procedure may contain installation details.

1. Refer to: Health and Safety Precautions (100-00 General Information, Description and Operation).
2. Refer to: Battery Disconnect and Connect (414-01 Battery, Mounting and Cables, General Procedures).
3.

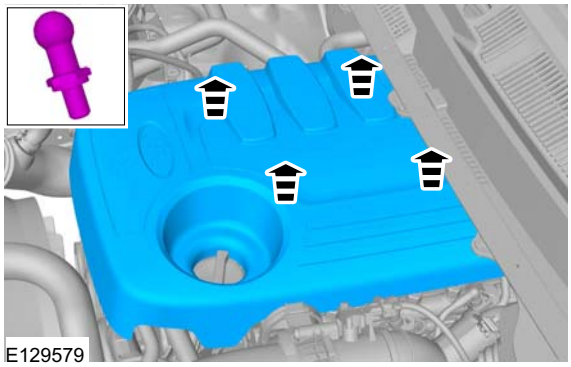
E129579

4.

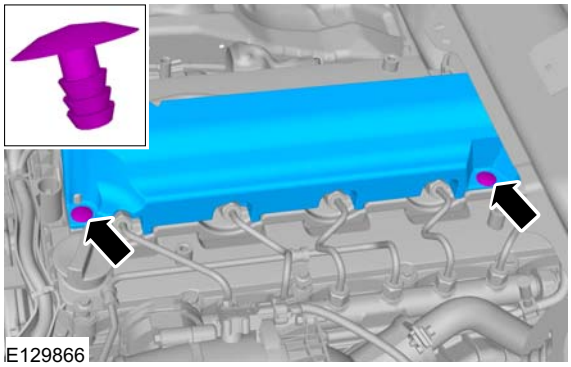
E129866

5.

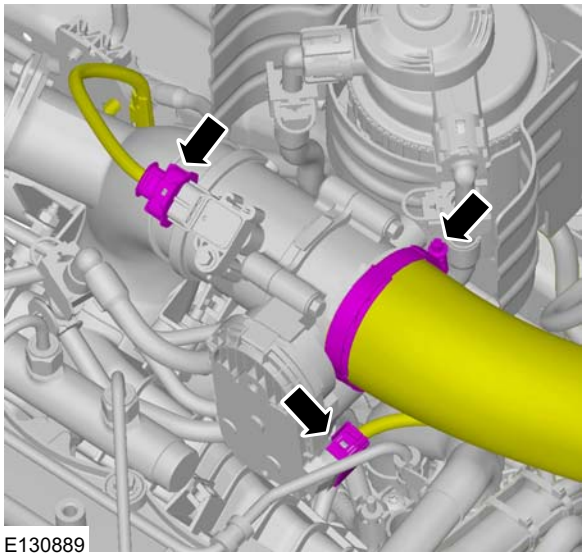
E130889

REMOVAL AND INSTALLATION

6. Torque: 11 Nm

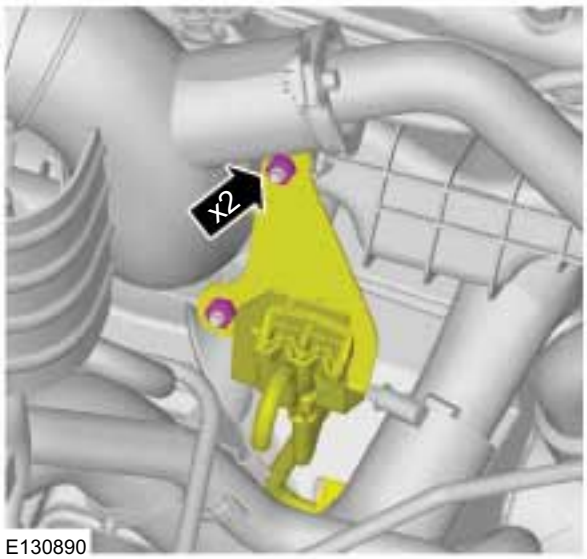

E130890

7. Refer to: Exhaust Gas Recirculation (EGR) Valve - 3.2L Duratorq-TDCi (148kW/200PS) - Puma (303-08 Engine Emission Control - 2.2L Duratorq-TDCi (88kW/120PS) - Puma/2.2L Duratorq-TDCi (96kW/130PS) - Puma/2.2L Duratorq-TDCi (110kW/150PS) - Puma/3.2L Duratorq-TDCi (148kW/200PS) - Puma, Removal and Installation).
8. 2. Torque: 10 Nm
   3. Torque: 15 Nm

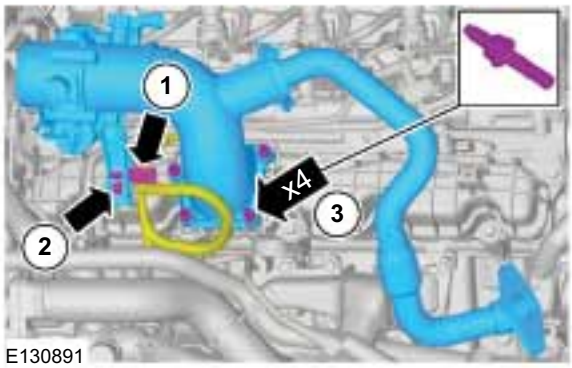

E130891

9.

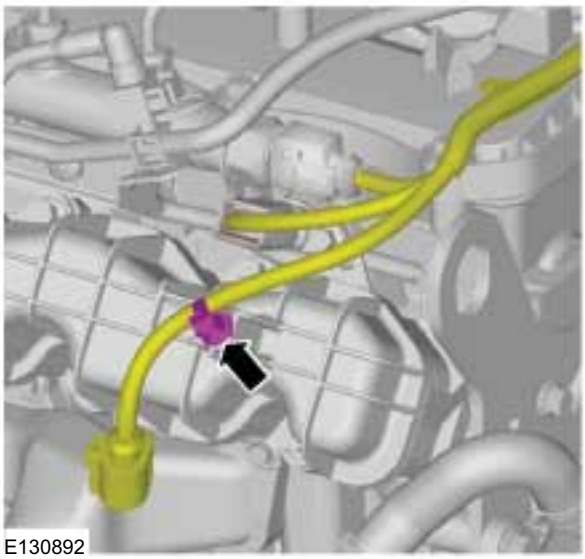
E130892

10.

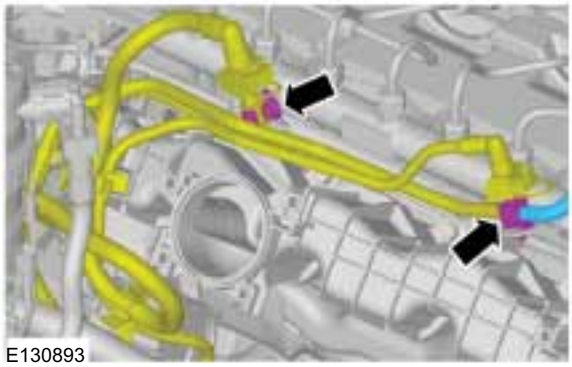
E130893

11.

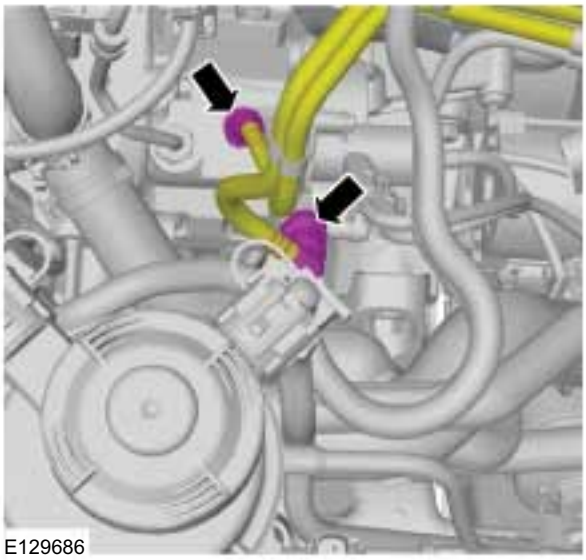
E129686

REMOVAL AND INSTALLATION

12. **NOTE:** Replace the o-ring, if necessary.

    NOTE: The gasket is to be reused unless damaged.

    Torque: 15 Nm

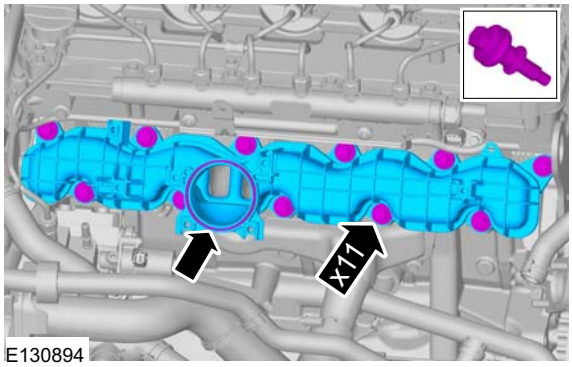

Installation

1. To install, reverse the removal procedure.

REMOVAL AND INSTALLATION

Exhaust Manifold(21 187 0)

Removal

NOTE: Removal steps in this procedure may contain installation details.

1. Refer to: Health and Safety Precautions (100-00 General Information, Description and Operation).
2. Refer to: Battery Disconnect and Connect (414-01 Battery, Mounting and Cables, General Procedures).
3.

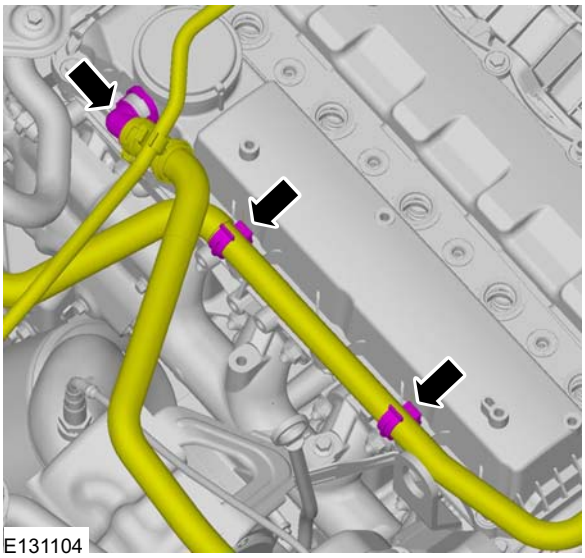
E131104

4. Refer to: Turbocharger - 3.2L Duratorq-TDCi (148kW/200PS) - Puma, LHD 4WD/LHD RWD (303-04 Fuel Charging and Controls - Turbocharger, Removal and Installation).
   Refer to: Turbocharger - 3.2L Duratorq-TDCi (148kW/200PS) - Puma, RHD 4WD/RHD RWD (303-04 Fuel Charging and Controls - Turbocharger, Removal and Installation).
   Refer to: Generator - 3.2L Duratorq-TDCi (148kW/200PS) - Puma (414-02 Generator and Regulator, Removal and Installation).
5.

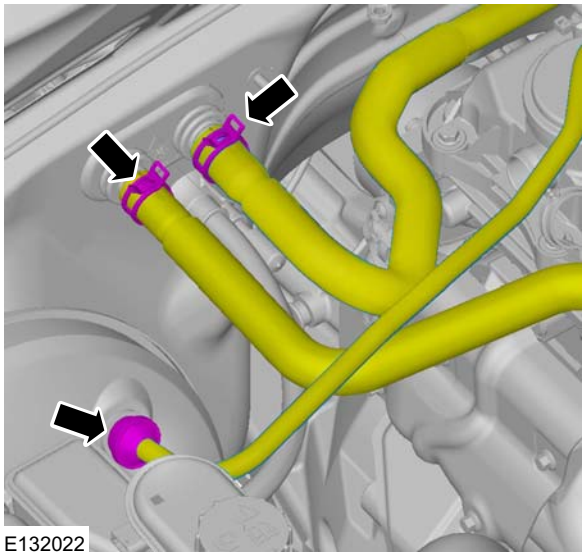
E132022

6. 1. Torque: 9 Nm
   2. Torque: 22 Nm
   3. Torque: 25 Nm

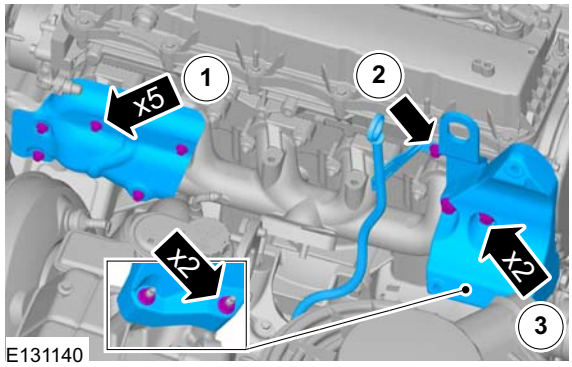

E131140

REMOVAL AND INSTALLATION

7. Refer to: Lifting (100-02 Jacking and Lifting, Description and Operation).

8. Remove front RH side wheel only.

   Refer to: Wheel and Tire (204-04 Wheels and Tires, Removal and Installation).

9. Torque: 10 Nm

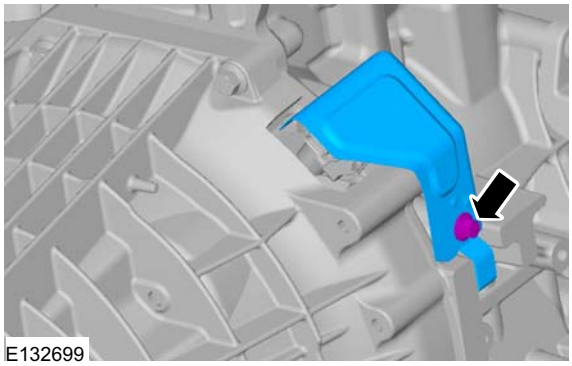
E132699

10. **CAUTIONS:**

    Make sure that new nuts are installed.

    Make sure that new bolts are installed.

    1. Torque: 40 Nm
    2. Torque: 23 Nm

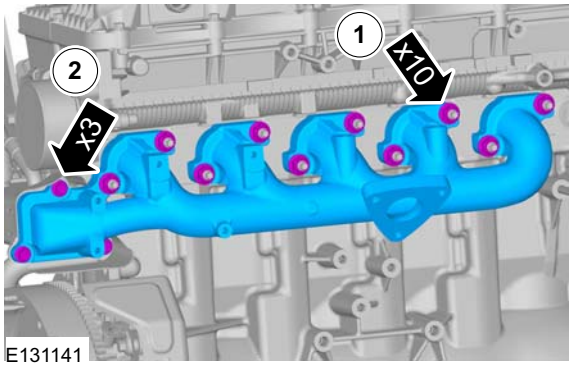

E131141

11. **CAUTION: Make sure that new studs are installed.**

NOTE: The gasket is to be reused unless damaged.

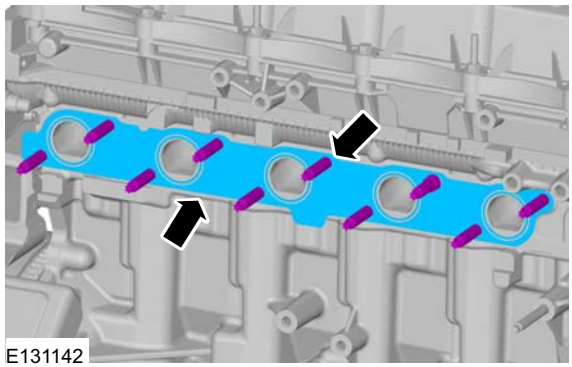
E131142

Installation

1. To install, reverse the removal procedure.

REMOVAL AND INSTALLATION

Valve Cover(21 141 0)

Removal

NOTE: Removal steps in this procedure may contain installation details.

1. Refer to: Health and Safety Precautions (100-00 General Information, Description and Operation).
Refer to: Battery Disconnect and Connect (414-01 Battery, Mounting and Cables, General Procedures).

2.

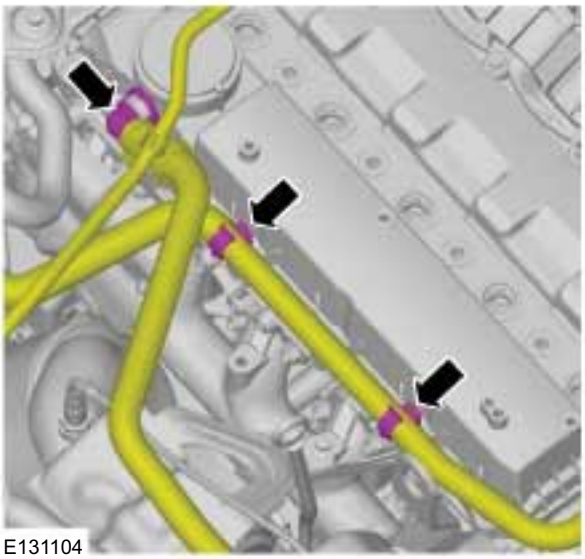
E131104

3. Refer to: Fuel Injectors (303-04 Fuel Charging and Controls - 3.2L Duratorq-TDCi (148kW/200PS) - Puma, Removal and Installation).

4. 1. Torque:
- Stage 1: 5 Nm
- Stage 2: 35 Nm

2. Torque: 10 Nm

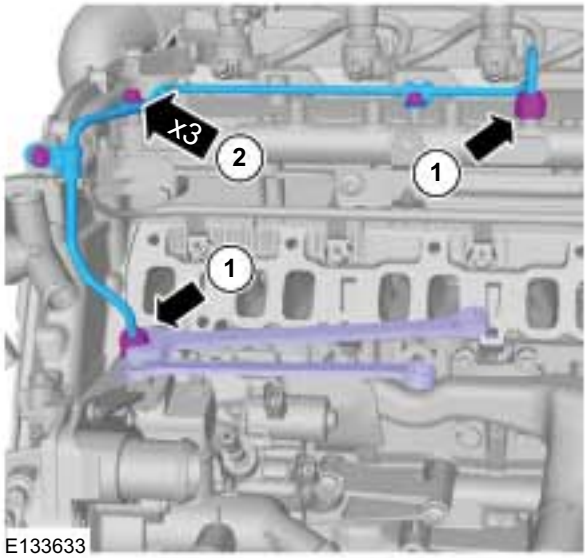

E133633

5. Torque: 10 Nm

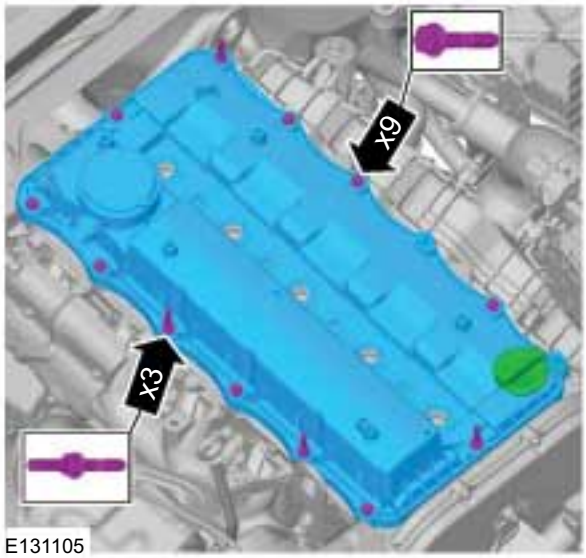

E131105

REMOVAL AND INSTALLATION

6. **NOTE:** The gasket is to be reused unless damaged.

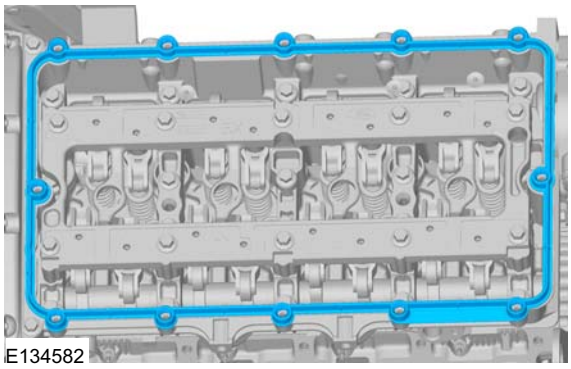

Installation

1. To install, reverse the removal procedure.

REMOVAL AND INSTALLATION

Camshafts(21 284 0)

Special Tool(s) / General Equipment

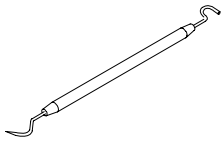 17063	100-010 Remover, O-Ring Seal
E131853	303-1562 Timing Tool
2 mm Punch	
6 mm Drill Bit	

Removal

WARNING: Do not smoke or carry lighted tobacco or open flame of any type when working on or near any fuel related components. Highly flammable mixtures are always present and may ignite. Failure to follow these instructions may result in personal injury.

NOTE: Removal steps in this procedure may contain installation details.

1. Refer to: Fuel Rail (303-04 Fuel Charging and Controls - 3.2L Duratorq-TDCi (148kW/200PS) - Puma, Removal and Installation).
   Refer to: Valve Cover (303-01 Engine - 3.2L Duratorq-TDCi (148kW/200PS) - Puma, Removal and Installation).
   Refer to: Timing Cover (303-01 Engine - 3.2L Duratorq-TDCi (148kW/200PS) - Puma, Removal and Installation).
   Refer to: Brake Vacuum Pump - 3.2L Duratorq-TDCi (148kW/200PS) - Puma (206-07 Power Brake Actuation, Removal and Installation).
2. Special Tool(s): 100-010
   General Equipment: 2 mm Punch

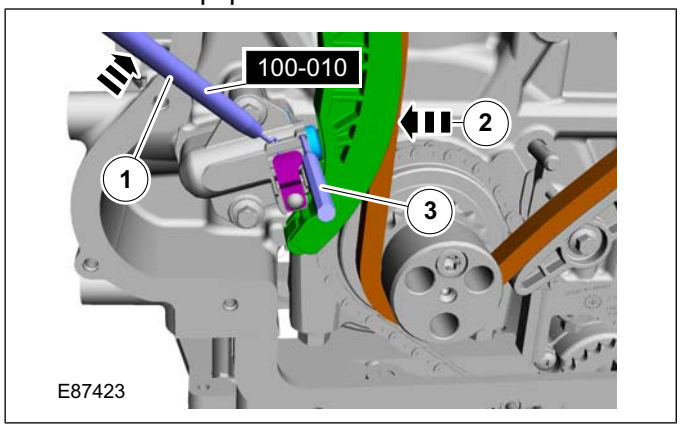

E87423

3. General Equipment: 2 mm Punch

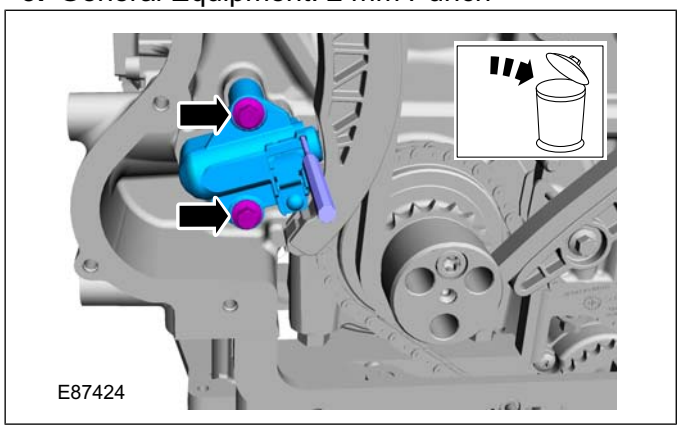
E87424

REMOVAL AND INSTALLATION

4.

E95464

5.

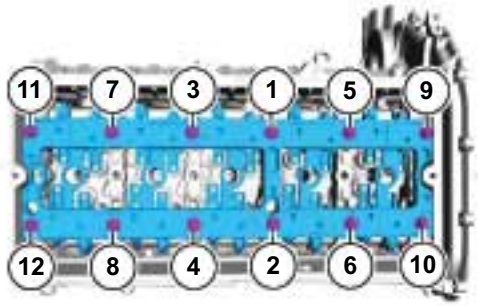

E94096

6.

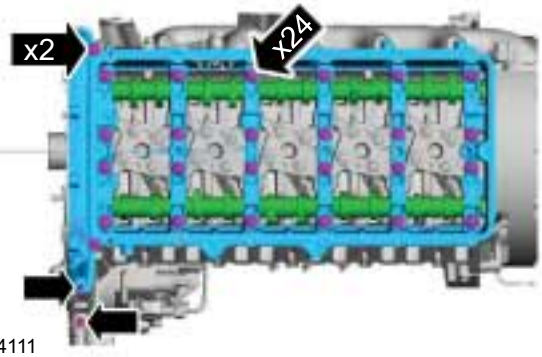

E94111

Installation

1. **NOTE:** Clean the mating faces of the camshaft carrier and the cylinder head.

   Torque:
   - Bolts 1 to 26
     - Stage 1: 3,5 Nm
     - Stage 2: 15 Nm
     - Stage 3: 23 Nm
   - Bolts 27 and 28
     - Stage 1: 3,5 Nm
     - Stage 2: 7,5 Nm
     - Stage 3: 10 Nm

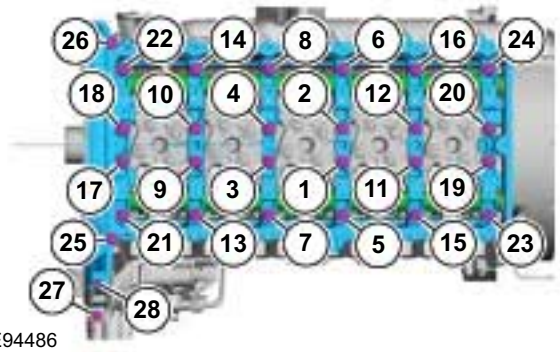

E94486

2. **NOTE:** Make sure that the rocker arms do not separate.

   Torque:
   - Stage 1: 10 Nm
   - Stage 2: 30°

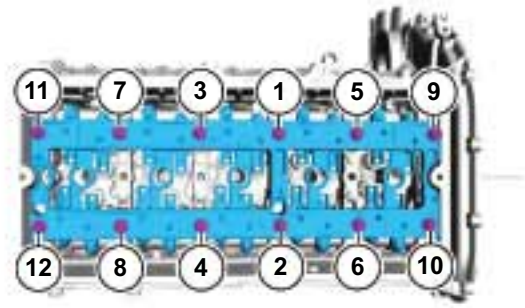

E94096

REMOVAL AND INSTALLATION

3. Special Tool(s): 303-1562

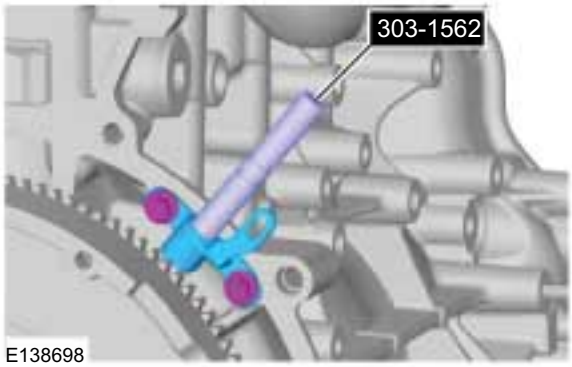

4. **NOTE:** Make sure that the installation marks are aligned.

   General Equipment: 6 mm Drill Bit
   Torque: 33 Nm

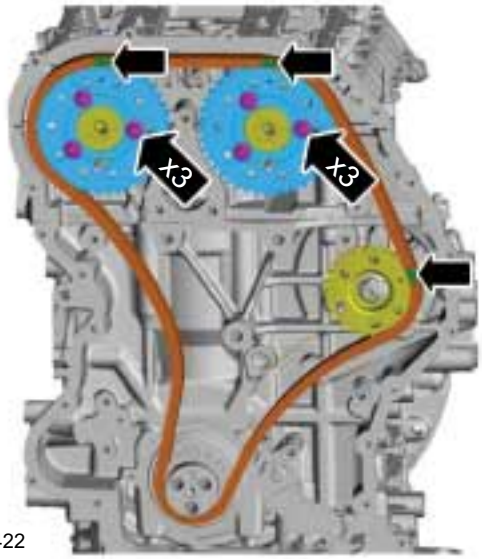

5. Remove the 6 mm drill bit.

6. Torque:
   - 1 15 Nm
   - 2 40 Nm
   - 3 40 Nm

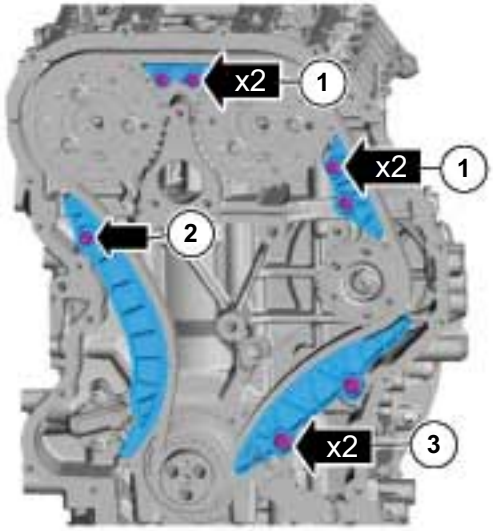

7. **NOTE:** Make sure that a new component is installed.

   Torque: 15 Nm

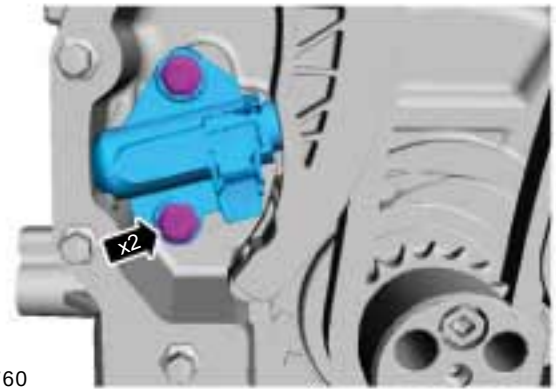

8. Remove the Special Tool(s): 303-1562

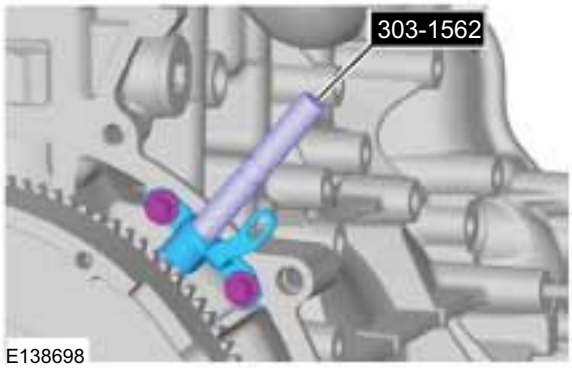

9. Rotate the engine two revolutions.

REMOVAL AND INSTALLATION

10. Special Tool(s): 303-1562

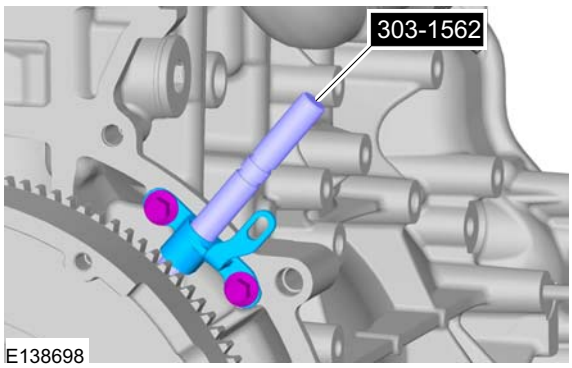

11. Check the valve timing by inserting the drill bits. If the drill bits cannot be inserted repeat the timing steps.

General Equipment: 6 mm Drill Bit

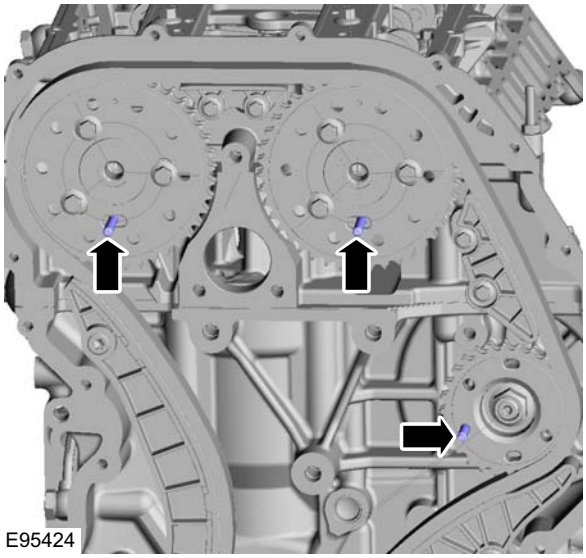

12. Remove the 6 mm drill bits.

13. Remove the Special Tool(s): 303-1562

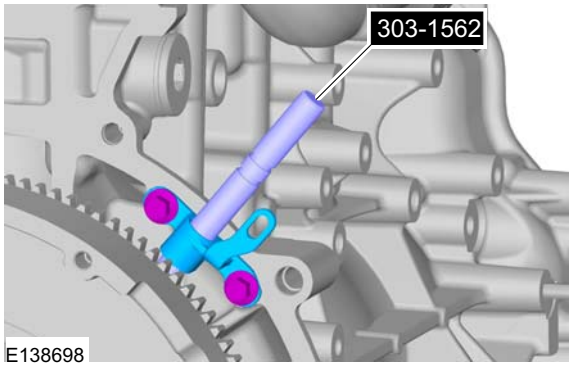

14. Refer to: Brake Vacuum Pump - 3.2L Duratorq-TDCi (148kW/200PS) - Puma (206-07 Power Brake Actuation, Removal and Installation).
Refer to: Timing Cover (303-01 Engine - 3.2L Duratorq-TDCi (148kW/200PS) - Puma, Removal and Installation).
Refer to: Valve Cover (303-01 Engine - 3.2L Duratorq-TDCi (148kW/200PS) - Puma, Removal and Installation).
Refer to: Fuel Rail (303-04 Fuel Charging and Controls - 3.2L Duratorq-TDCi (148kW/200PS) - Puma, Removal and Installation).

REMOVAL AND INSTALLATION

Valves

Special Tool(s)

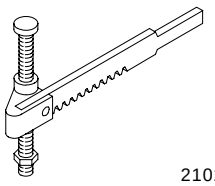 21024	303-060 Compressor, Valve Spring
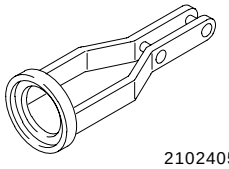 2102405	303-060-05 Adapter for 303-060

Special Tool(s)

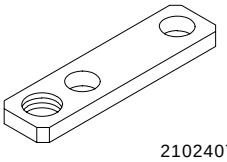 2102407	303-060-07 Adapter for 303-060
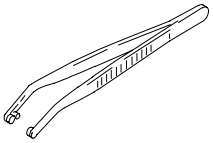 21156	303-362 Installer, Valve Stem Collets

Removal

NOTE: Removal steps in this procedure may contain installation details.

1. Refer to: Cylinder Head (303-01 Engine - 3.2L Duratorq-TDCi (148kW/200PS) - Puma, Removal and Installation).
2. **NOTE:** Position a socket on the valve spring seat and gently strike it with a hammer.

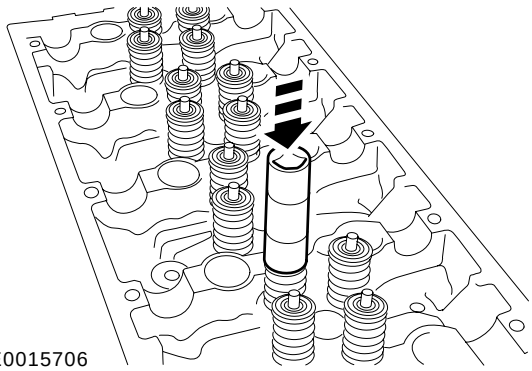
ELE0015706

3. Special Tool(s): 303-060, 303-060-05, 303-060-07, 303-362

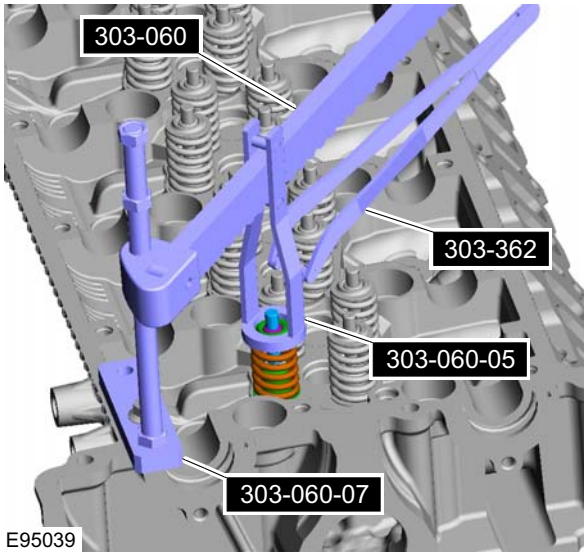

E95039

REMOVAL AND INSTALLATION

4.

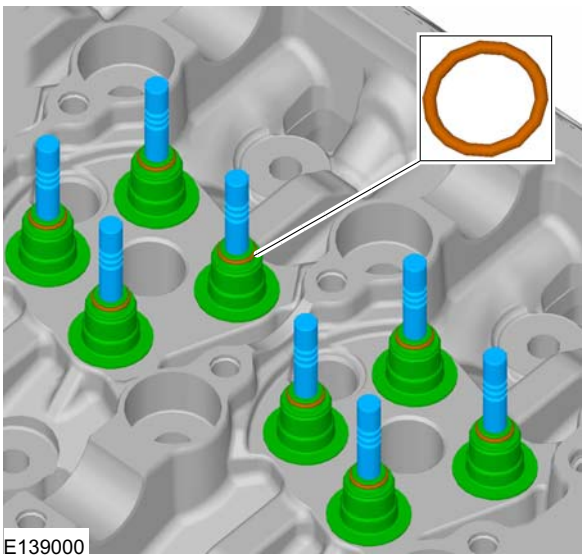

Installation

1. To install, reverse the removal procedure.

REMOVAL AND INSTALLATION

Valve Springs

Special Tool(s)

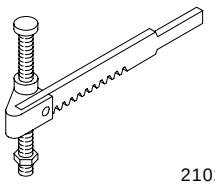 21024	303-060 Compressor, Valve Spring
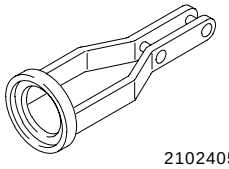 2102405	303-060-05 Adapter for 303-060

Special Tool(s)

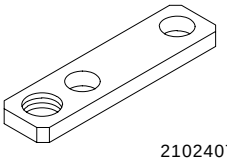 2102407	303-060-07 Adapter for 303-060
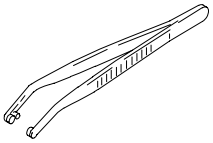 21156	303-362 Installer, Valve Stem Collets

Removal

1. Refer to: Valve Cover (303-01 Engine - 3.2L Duratorq-TDCi (148kW/200PS) - Puma, Removal and Installation).

2.

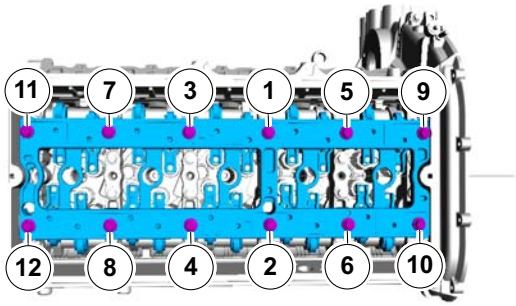

E94096

3. Position the appropriate piston at top dead center (TDC).

4. Special Tool(s): 303-060, 303-060-05, 303-060-07, 303-362

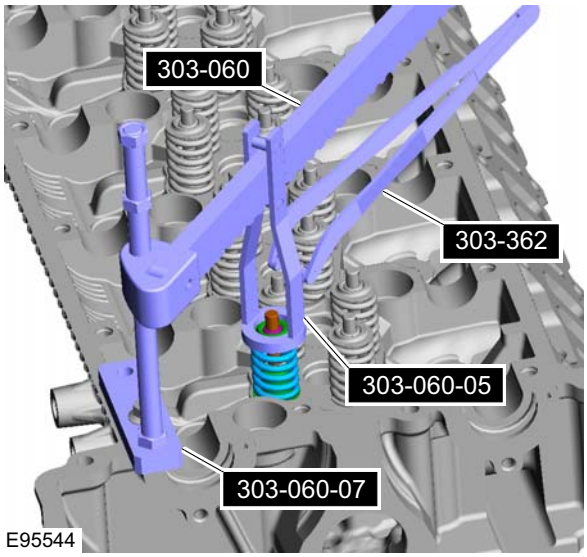

E95544

REMOVAL AND INSTALLATION

Installation

1. Special Tool(s): 303-060, 303-060-05, 303-060-07, 303-362

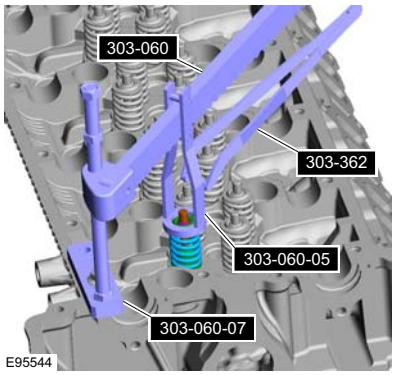

2. Torque:
   - Stage 1: 10 Nm
   - Stage 2: 30°

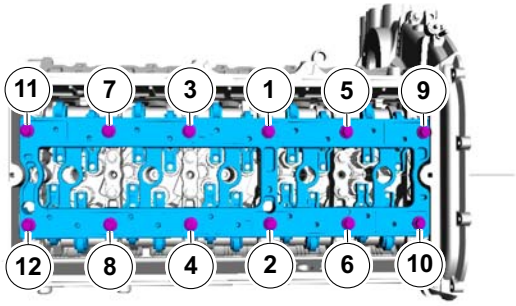

3. Refer to: Valve Cover (303-01 Engine - 3.2L Duratorq-TDCi (148kW/200PS) - Puma, Removal and Installation).

REMOVAL AND INSTALLATION

Valve Stem Seals(21 238 0)

Special Tool(s)

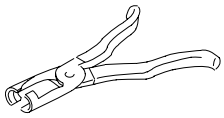 21211	303-508 Pliers, Valve Stem Seal

Removal

NOTE: Removal steps in this procedure may contain installation details.

1. Refer to: Valve Springs (303-01 Engine - 3.2L Duratorq-TDCi (148kW/200PS) - Puma, Removal and Installation).

2. Special Tool(s): 303-508

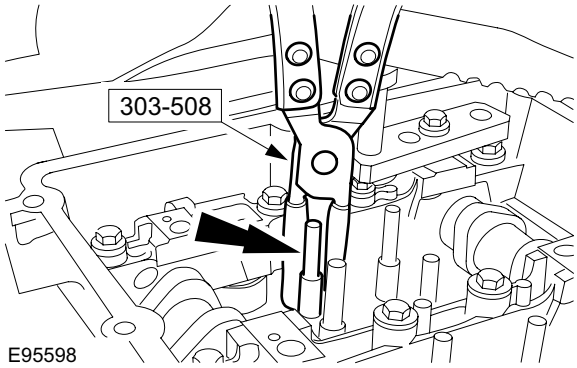

Installation

1. To install, reverse the removal procedure.

REMOVAL AND INSTALLATION

Timing Cover(21 146 0)

Special Tool(s)

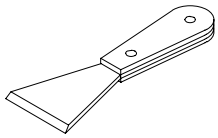 21179	303-428 Separator, Oil Pan
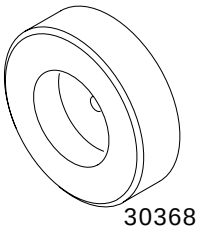 303682	303-682 Aligner, Engine Front Cover

Materials	
Name	**Specification**
Silicone Sealant LB	WSE-M4G323-A4 / 2U7J-M4G323-AA

Removal

NOTE: Removal steps in this procedure may contain installation details.

1. Refer to: Battery Disconnect and Connect (414-01 Battery, Mounting and Cables, General Procedures).
2. Refer to: Cooling Fan Motor and Shroud (303-03 Engine Cooling - 3.2L Duratorq-TDCi (148kW/200PS) - Puma, Removal and Installation).
3. Refer to: Generator - 3.2L Duratorq-TDCi (148kW/200PS) - Puma (414-02 Generator and Regulator, Removal and Installation).
4. 1. Torque: 35 Nm
   2. Torque: 35 Nm

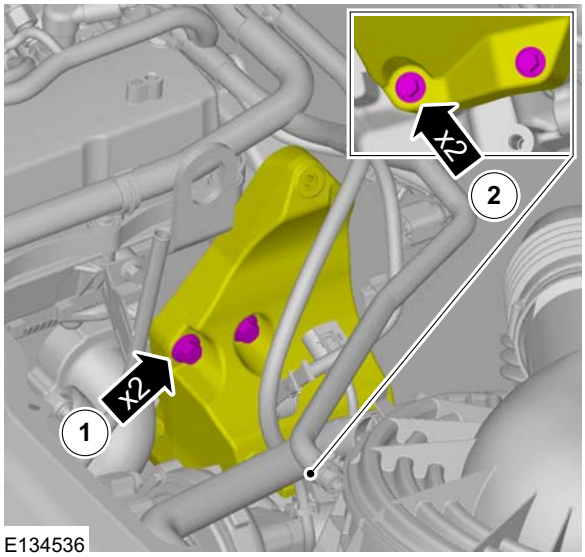

E134536

5. 1. Torque: 48 Nm
   2. Torque: 23 Nm

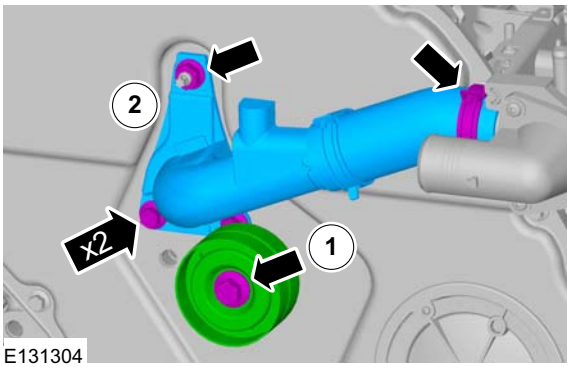

E131304

REMOVAL AND INSTALLATION

6. Torque: 48 Nm

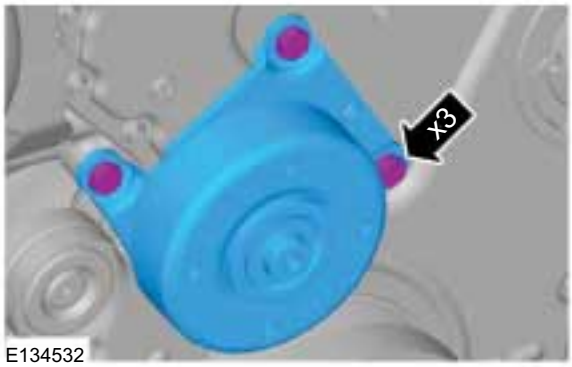

E134532

7. Refer to: Lifting (100-02 Jacking and Lifting, Description and Operation).

8. Torque: 30 Nm

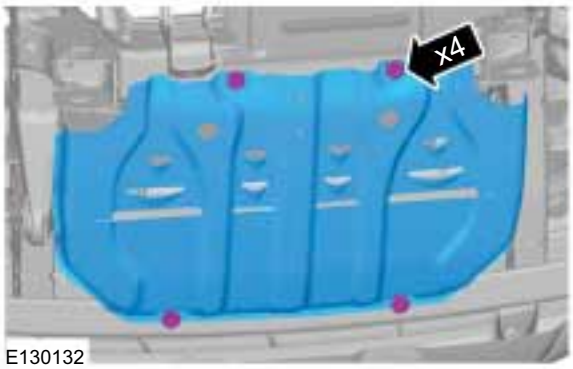

E130132

9. **NOTE:** Remove front RH side wheel only.

   Refer to: Wheel and Tire (204-04 Wheels and Tires, Removal and Installation).

10.

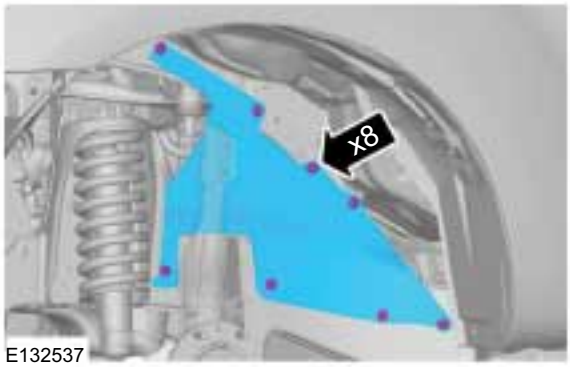

E132537

11. **CAUTION: Cap the power steering line to prevent fluid loss or dirt ingress.**

    Torque: 7 Nm

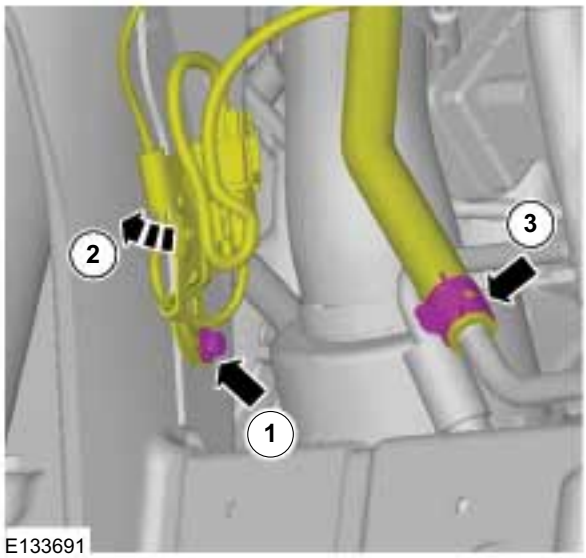

E133691

12.

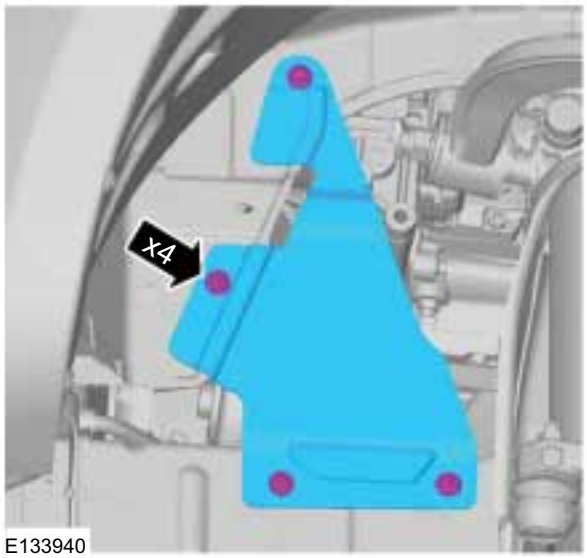

E133940

REMOVAL AND INSTALLATION

13. 1. Torque: 20 Nm
2. Torque: 20 Nm
3. Torque: 18 Nm

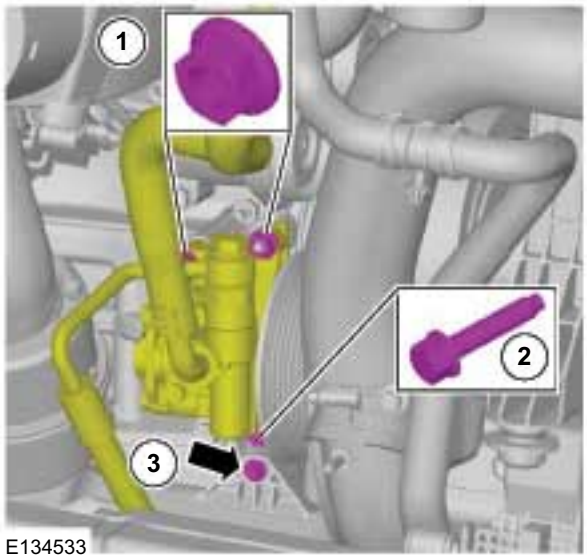

E134533

14. Torque: 10 Nm

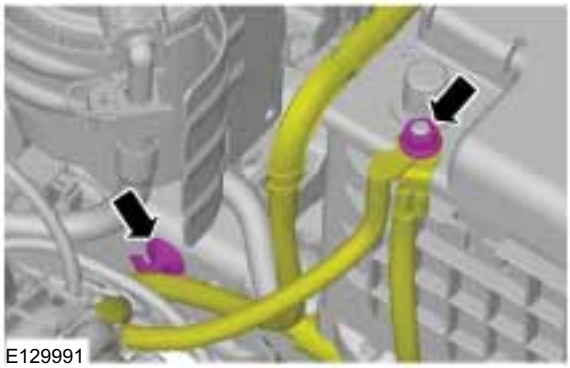
E129991

15.

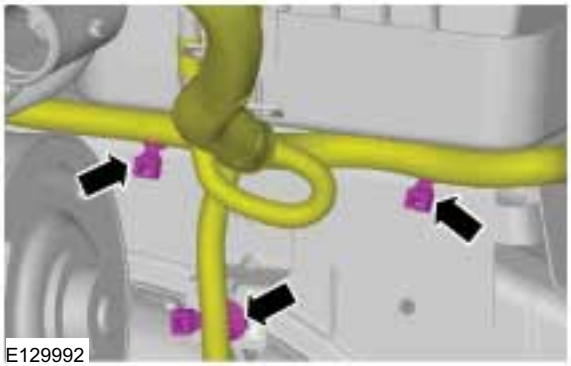
E129992

16. 3. Torque: 23 Nm

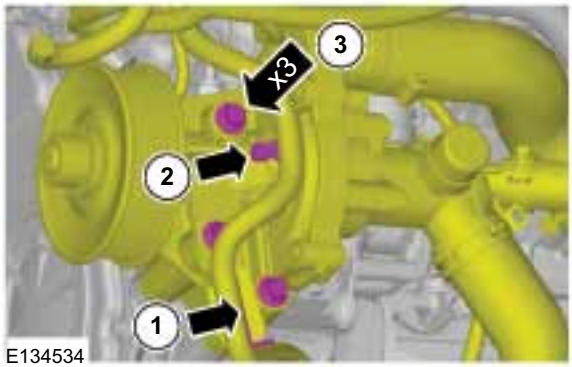

E134534

17. Torque: 23 Nm

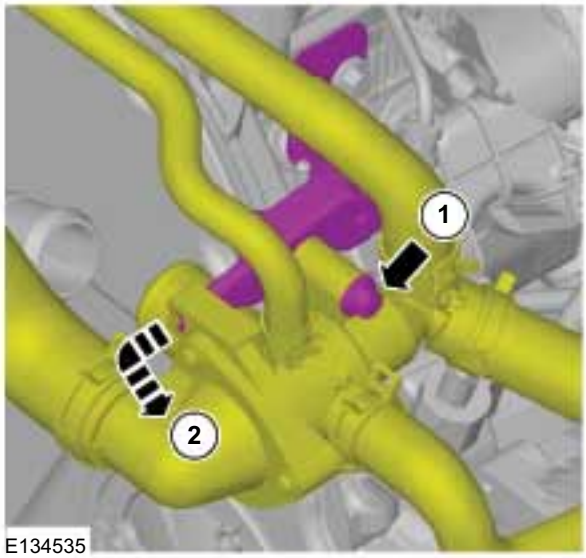

E134535

REMOVAL AND INSTALLATION

18. Refer to: Engine Front Seal (303-01 Engine - 3.2L Duratorq-TDCi (148kW/200PS) - Puma, Removal and Installation).

19. Special Tool(s): 303-428

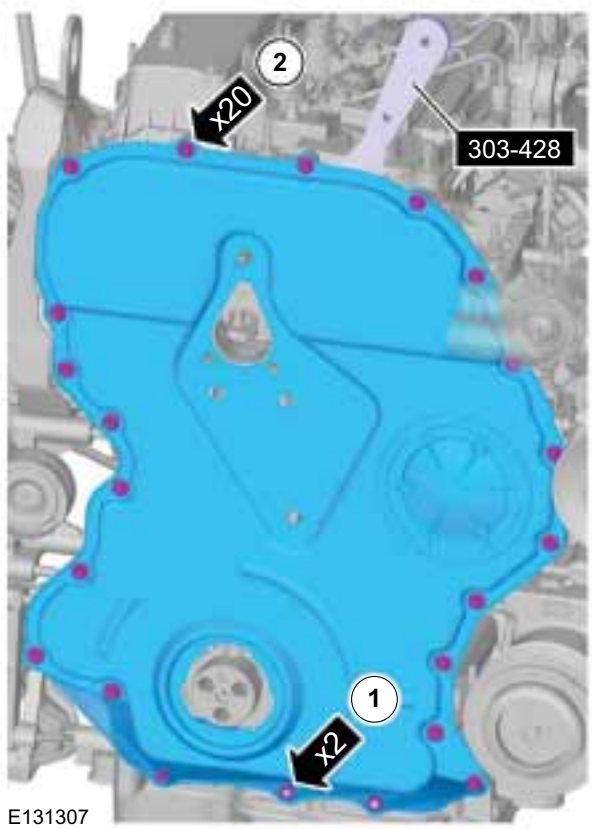

E131307

NOTE: Do not damage the mating faces.

Material: Silicone Sealant LB (WSE-M4G323-A4 / 2U7J-M4G323-AA) sealant

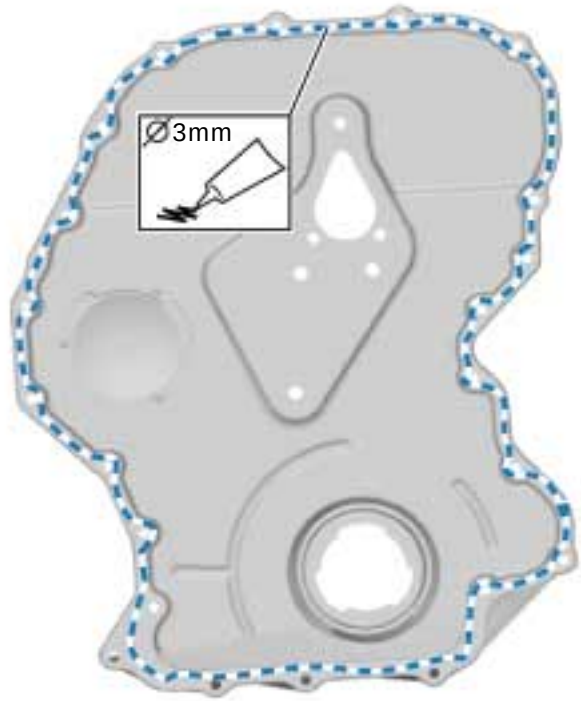

E131310

Installation

1. ⚠ **CAUTION: Install the timing cover within five minutes of applying the sealer.**

REMOVAL AND INSTALLATION

2. 1. Special Tool(s): 303-682
Torque: 10 Nm
2. Torque: 14 Nm

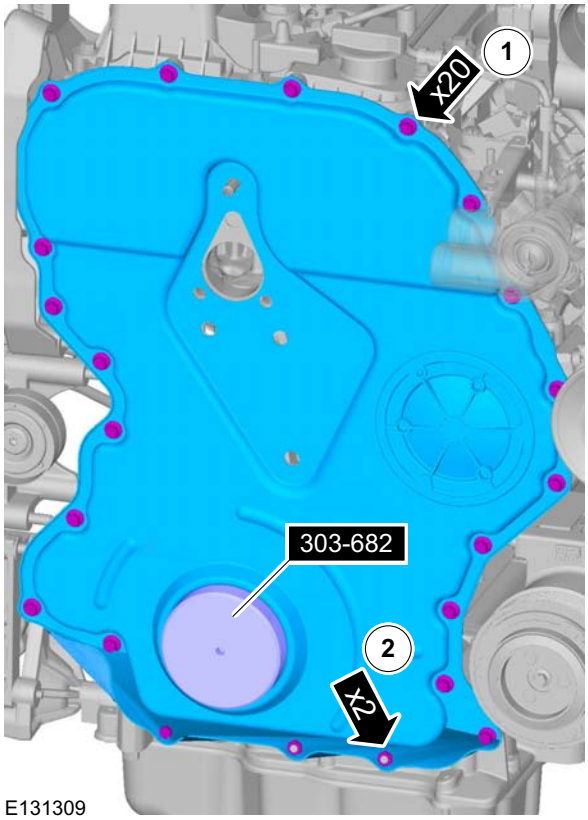

3. To install, reverse the removal procedure.

REMOVAL AND INSTALLATION

Cylinder Head(21 163 0)

Special Tool(s)

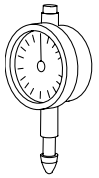 15046	205-069 Dial Indicator Gauge (Metric)
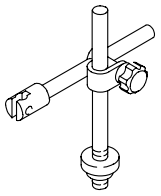 15022A	205-070 Holding Fixture, Dial Indicator Gauge
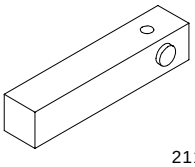 21183	303-432 Holding Fixture, Dial Indicator Gauge (Cylinder Liner Protrusion)

Removal

NOTE: Removal steps in this procedure may contain installation details.

1. Refer to: Intake Manifold (303-01 Engine - 3.2L Duratorq-TDCi (148kW/200PS) - Puma, Removal and Installation).
   Refer to: Brake Vacuum Pump - 3.2L Duratorq-TDCi (148kW/200PS) - Puma (206-07 Power Brake Actuation, Removal and Installation).
   Refer to: Exhaust Gas Recirculation (EGR) Cooler - 3.2L Duratorq-TDCi (148kW/200PS) - Puma (303-08 Engine Emission Control - 2.2L Duratorq-TDCi (88kW/120PS) - Puma/2.2L Duratorq-TDCi (96kW/130PS) - Puma/2.2L Duratorq-TDCi (110kW/150PS) - Puma/3.2L Duratorq-TDCi (148kW/200PS) - Puma, Removal and Installation).
   Refer to: Exhaust Manifold (303-01 Engine - 3.2L Duratorq-TDCi (148kW/200PS) - Puma, Removal and Installation).
   Refer to: Camshafts (303-01 Engine - 3.2L Duratorq-TDCi (148kW/200PS) - Puma, Removal and Installation).
2.

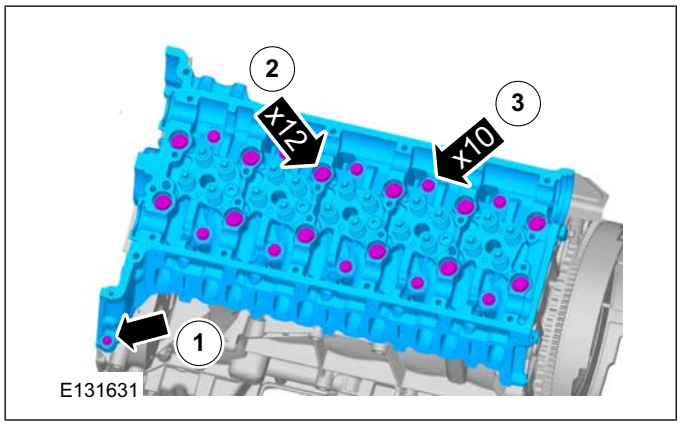

Installation

1. **WARNING: Do not use metal scrapers, wire brushes, power abrasive discs or other abrasive means to clean the sealing surfaces. These tools cause scratches and gouges that make leak**

REMOVAL AND INSTALLATION

paths. Use a plastic scraping tool to remove all traces of the head gasket.

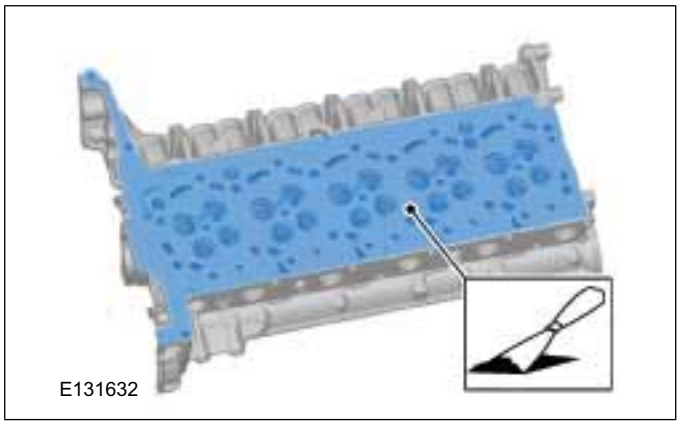

2. **NOTE:** Measure the piston protrusion of each cylinder at top dead center (TDC).

   Measure the distance between the piston crown and the cylinder block at the points indicated.

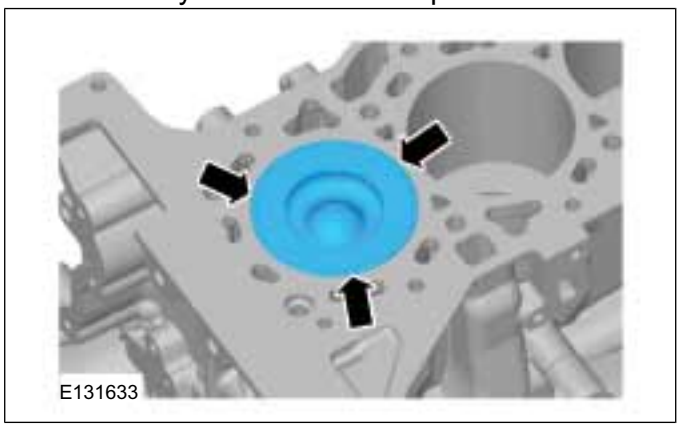

3. **NOTE:** The largest measurement determines the choice of the cylinder head gasket.

   Special Tool(s): 205-069, 205-070, 303-432

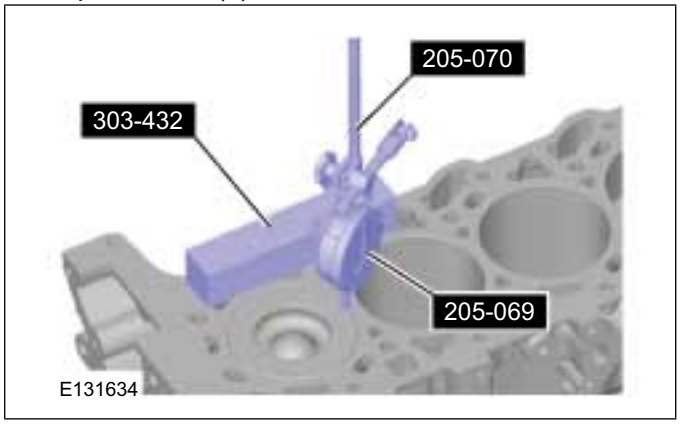

4. **NOTE:** Note the thickness of the gasket.

   NOTE: Make sure that a new component is installed.

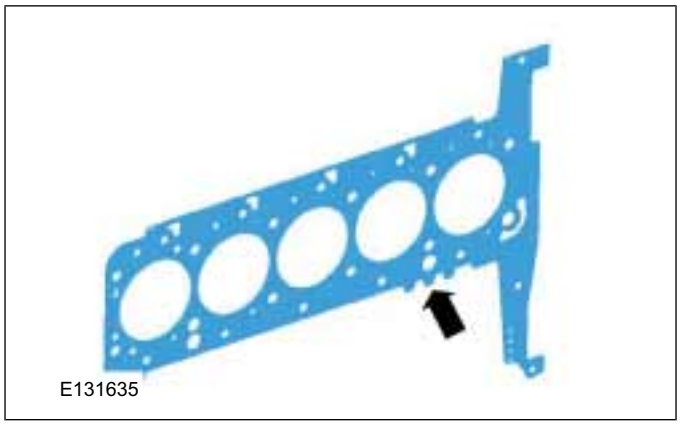

5.

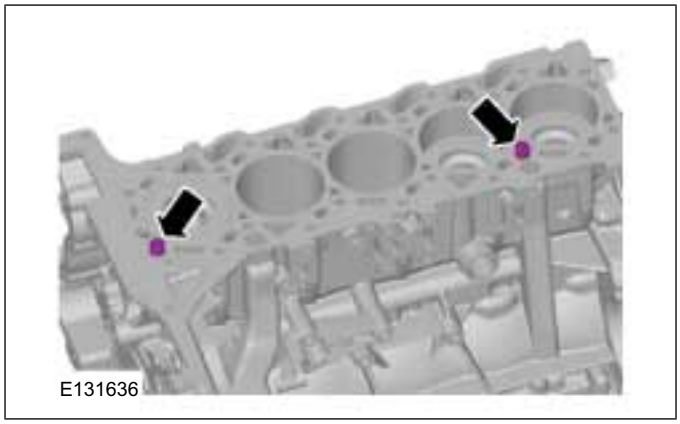

6. ⚠ **CAUTION: Make sure that new cylinder head bolts are installed.**

   Torque:
   - Bolts 1 to 12: 10 Nm
   - Bolts 13 to 22: 5 Nm
   - Bolts 1 to 12: 20 Nm
   - Bolts 13 to 22: 10 Nm
   - Bolts 1 to 12: 50 Nm
   - Bolts 1 to 12: 180°
   - Bolts 13 to 22: 25 Nm
   - Bolts 13 to 22: 180°

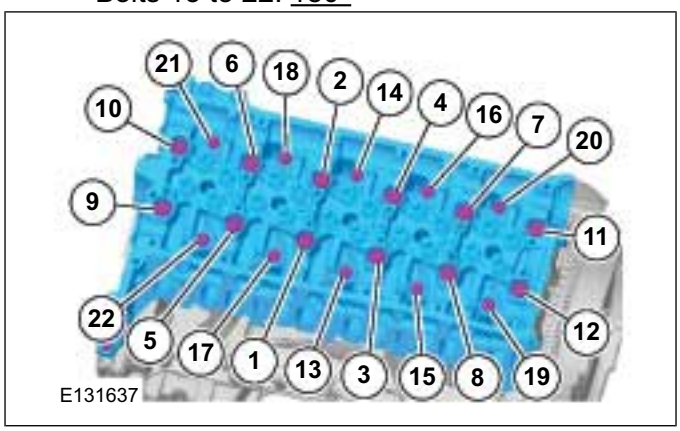

REMOVAL AND INSTALLATION

7. Refer to: Camshafts (303-01 Engine - 3.2L Duratorq-TDCi (148kW/200PS) - Puma, Removal and Installation).
   Refer to: Exhaust Manifold (303-01 Engine - 3.2L Duratorq-TDCi (148kW/200PS) - Puma, Removal and Installation).
   Refer to: Exhaust Gas Recirculation (EGR) Cooler - 3.2L Duratorq-TDCi (148kW/200PS) - Puma (303-08 Engine Emission Control - 2.2L Duratorq-TDCi (88kW/120PS) - Puma/2.2L Duratorq-TDCi (96kW/130PS) - Puma/2.2L Duratorq-TDCi (110kW/150PS) - Puma/3.2L Duratorq-TDCi (148kW/200PS) - Puma, Removal and Installation).
   Refer to: Brake Vacuum Pump - 3.2L Duratorq-TDCi (148kW/200PS) - Puma (206-07 Power Brake Actuation, Removal and Installation).
   Refer to: Intake Manifold (303-01 Engine - 3.2L Duratorq-TDCi (148kW/200PS) - Puma, Removal and Installation).

REMOVAL AND INSTALLATION

Oil Pan(21 154 0)

Special Tool(s)

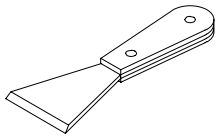 21179	303-428 Separator, Oil Pan

Materials	
Name	**Specification**
Silicone Sealant LB	WSE-M4G323-A4 / 2U7J-M4G323-AA

Removal

NOTE: Removal steps in this procedure may contain installation details.

1. Refer to: Engine Cooling System Health and Safety Precautions (100-00 General Information, Description and Operation).
2. Refer to: Battery Disconnect and Connect (414-01 Battery, Mounting and Cables, General Procedures).
3. Refer to: Lifting (100-02 Jacking and Lifting, Description and Operation).

4x4

4. Torque: 30 Nm

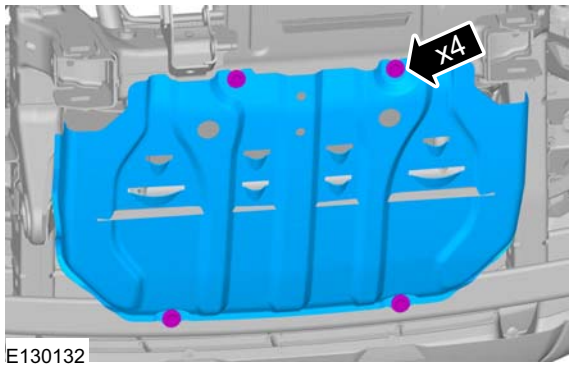

E130132

5. Torque: 30 Nm

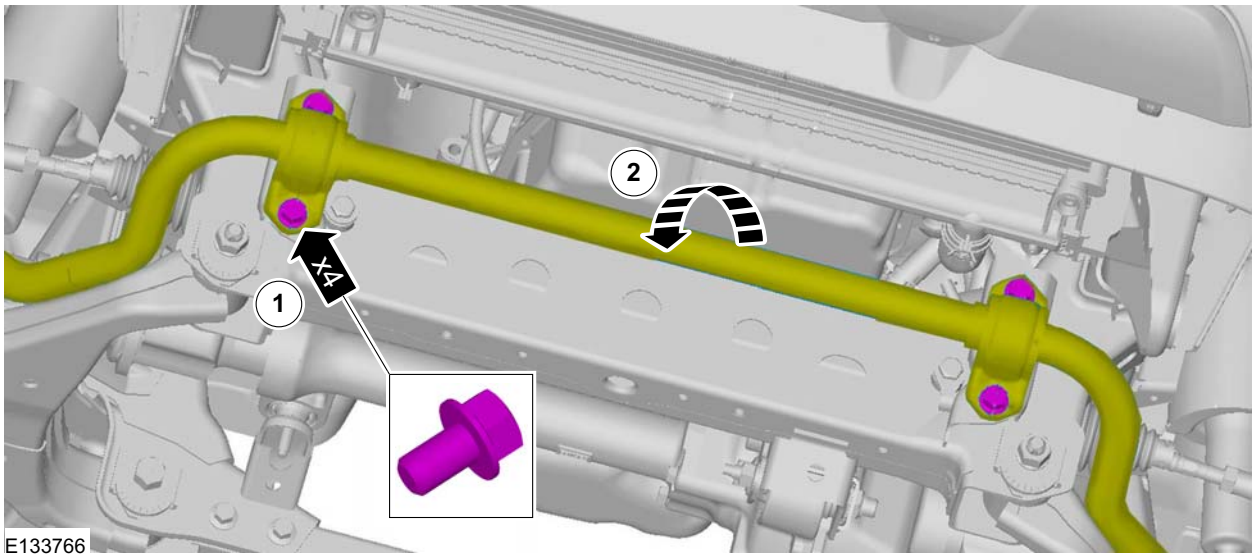

E133766

REMOVAL AND INSTALLATION

All vehicles

6. Torque: 30 Nm

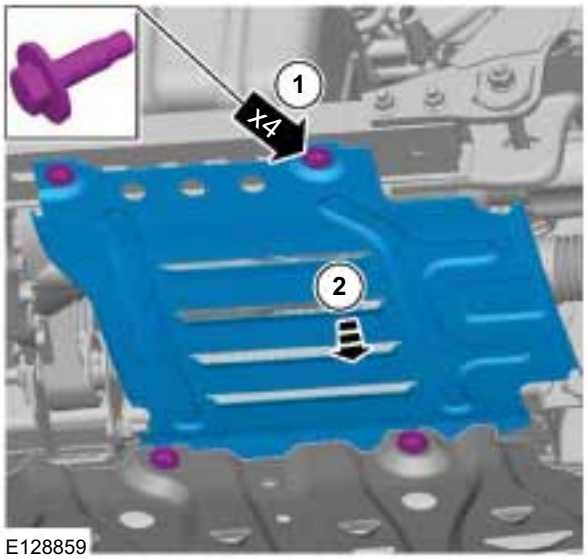

E128859

7. Torque: 35 Nm

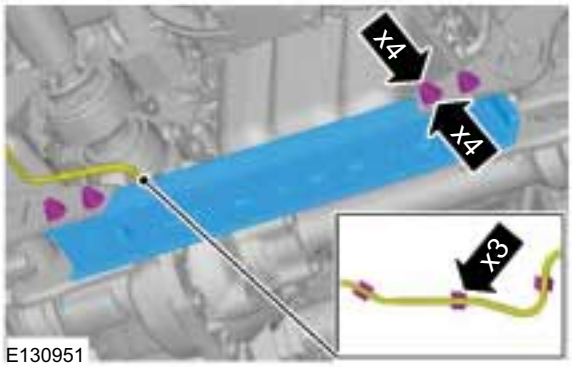

E130951

8. **CAUTION: Take extra care when handling steering gear rack.**
   1. Torque: 23 Nm
   2. Torque: 150 Nm

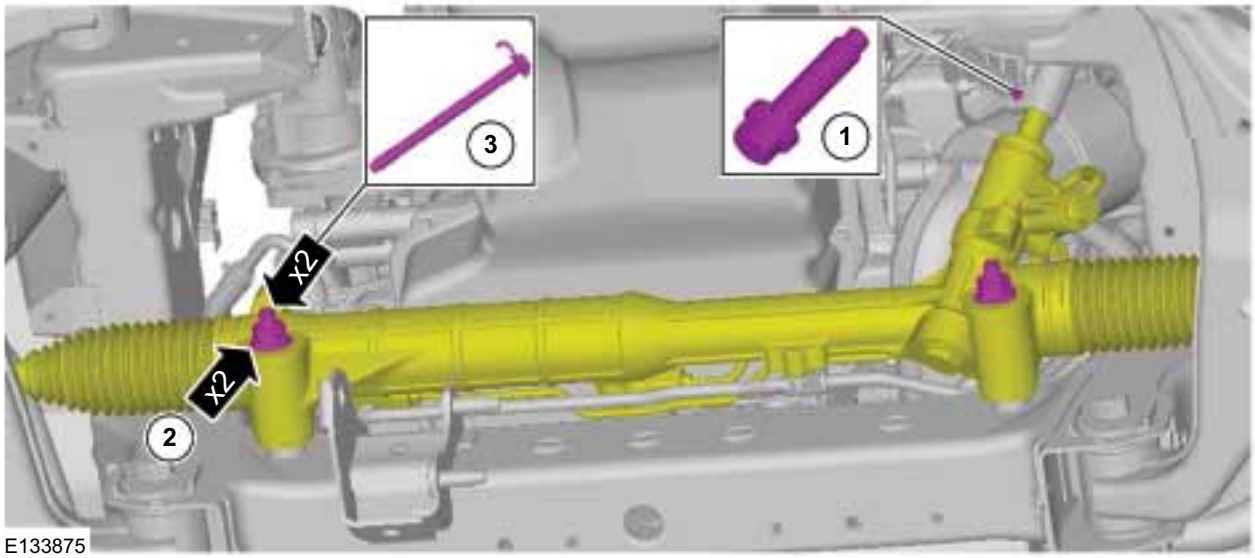

E133875

9. **WARNING: Be prepared to collect escaping fluids.**

REMOVAL AND INSTALLATION

Drain the oil pan into a suitable container.
Torque: 39 Nm

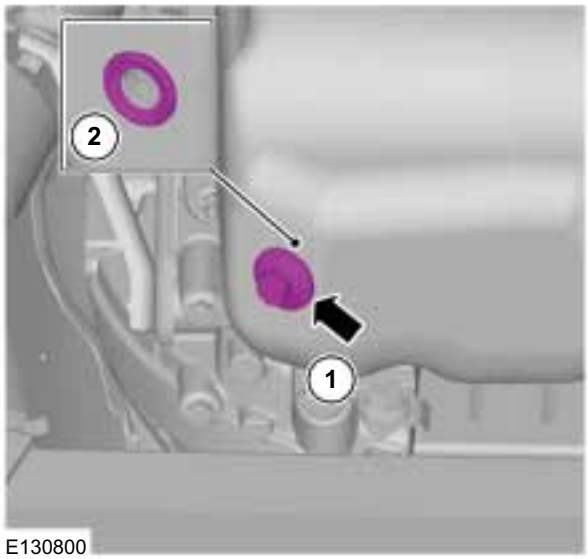

E130800

10. Special Tool(s): 303-428

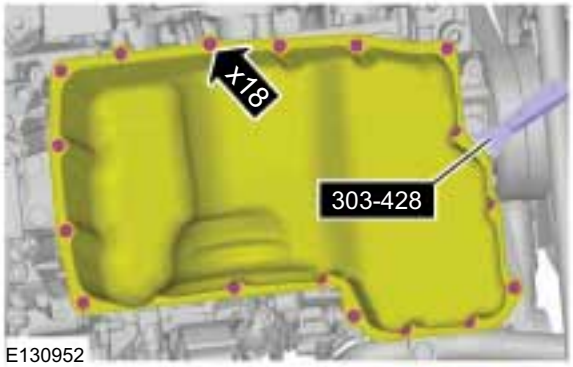

E130952

11. Torque: 10 Nm

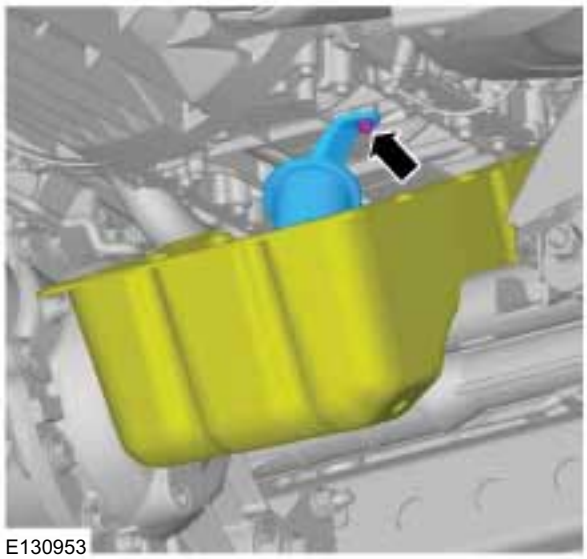
E130953

12. Torque: 10 Nm

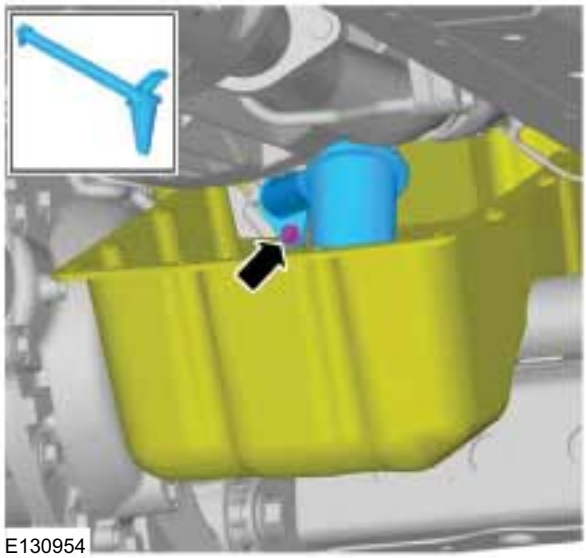
E130954

4x4

13.

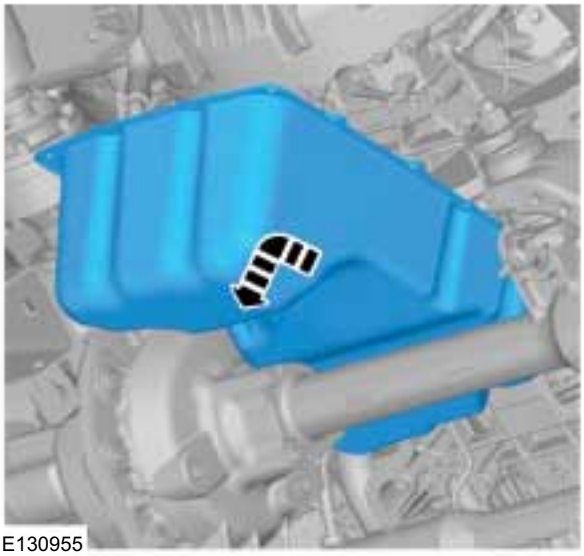
E130955

REMOVAL AND INSTALLATION

4x2

14.

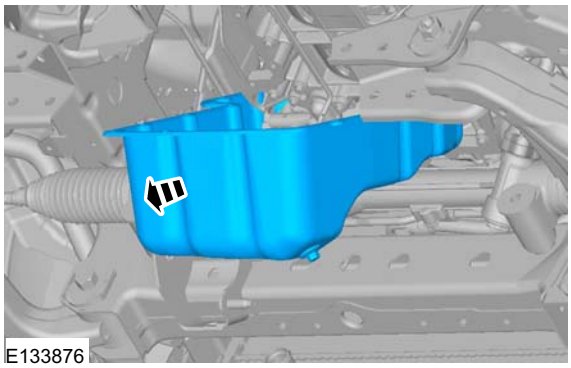

Installation

1. **NOTE:** Do not damage the mating faces.

   Special Tool(s): 303-428

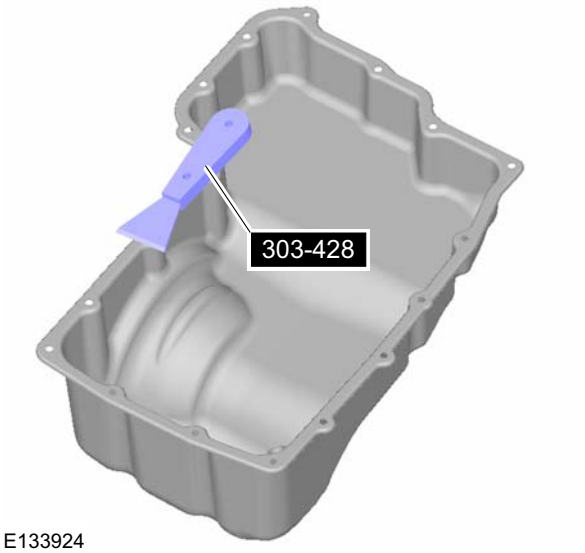

2. ⚠ **CAUTION: Install the oil pan within five minutes of applying the sealer.**

   NOTE: Do not damage the mating faces.

   Material: Silicone Sealant LB (WSE-M4G323-A4 / 2U7J-M4G323-AA) sealant

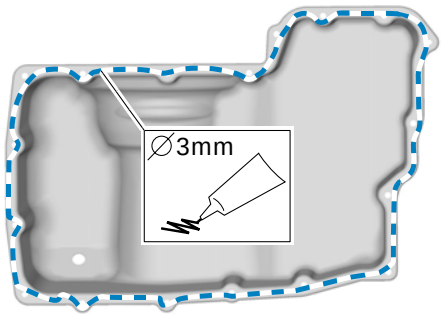

3. Torque:
   - Stage 1: 7 Nm
   - Stage 2: 14 Nm

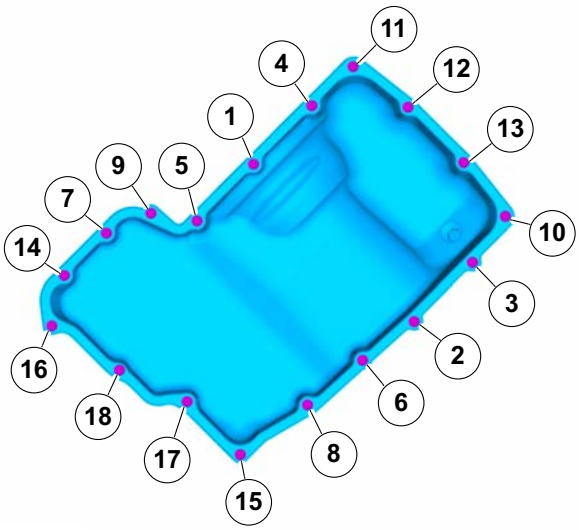

4. To install, reverse the removal procedure.

5. Fill the oil pan with clean engine oil.

   Refer to: Specifications (303-01 Engine - 2.5L Duratec-HE (122kW/165PS) - MI4, Specifications).

REMOVAL AND INSTALLATION

Oil Pump(21 714 0)

Special Tool(s)

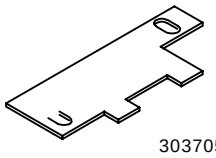 303705	303-705 Aligner, Oil Pump

Removal

NOTE: Removal steps in this procedure may contain installation details.

1. Refer to: Health and Safety Precautions (100-00 General Information, Description and Operation).
   Refer to: Battery Disconnect and Connect (414-01 Battery, Mounting and Cables, General Procedures).
2. Refer to: Oil Pan (303-01 Engine - 3.2L Duratorq-TDCi (148kW/200PS) - Puma, Removal and Installation).
3. Hand tighten the bolts at this stage.
   Special Tool(s): 303-705
   Torque: 15 Nm

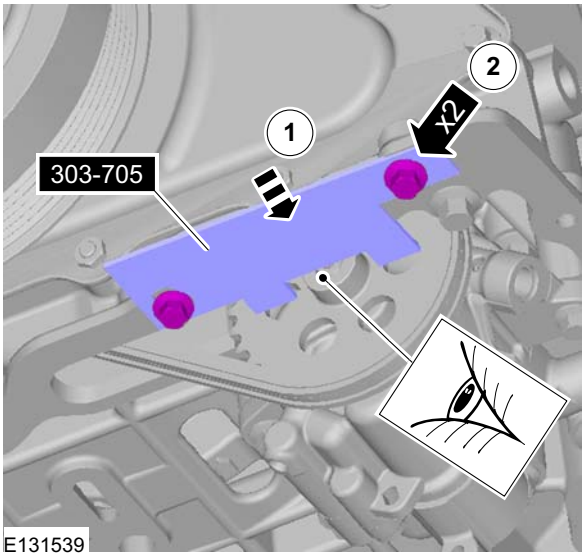

E131539

4. **WARNING: Be prepared to collect escaping fluids.**
   Torque: 13 Nm

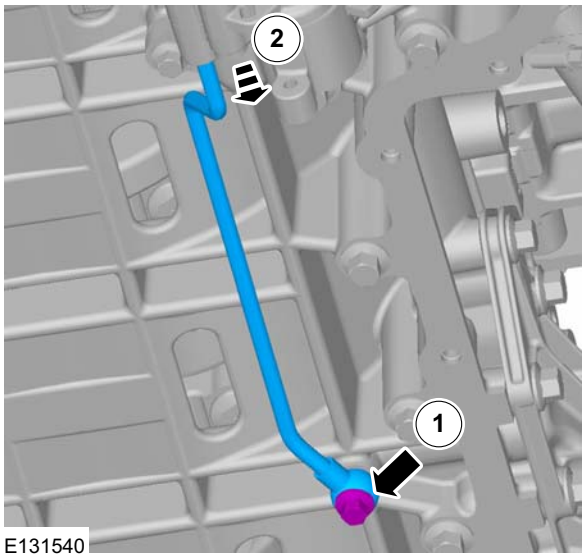

E131540

5. **NOTE:** Do not completely loosen the bolts at this stage.
   Special Tool(s): 303-705

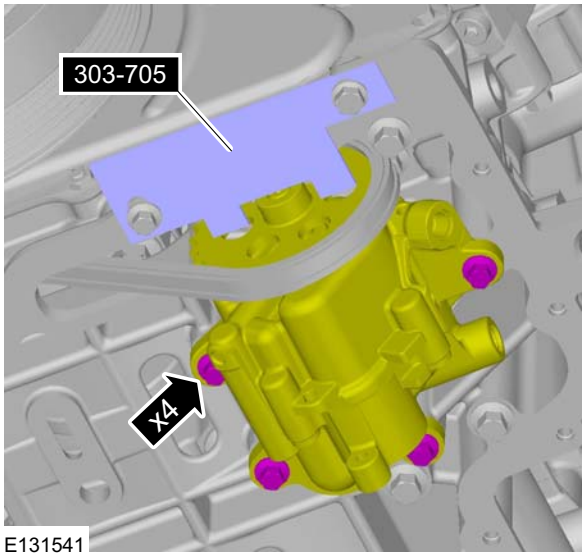

E131541

REMOVAL AND INSTALLATION

6. Special Tool(s): 303-705

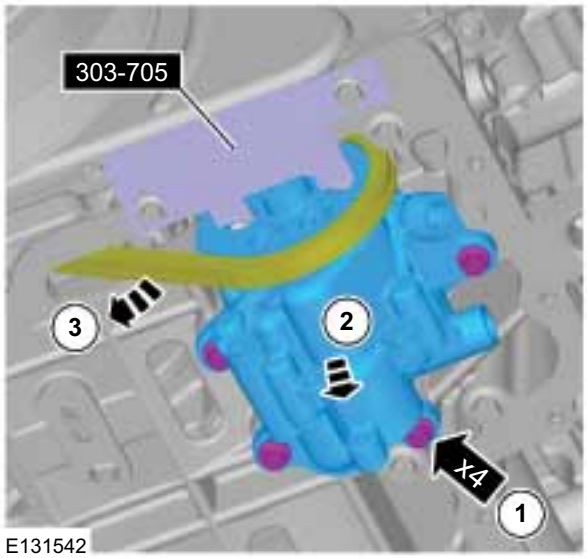

E131542

Installation

1. **NOTE:** The profile of the special tool must be in contact with the oil pump sprocket.

   Special Tool(s): 303-705

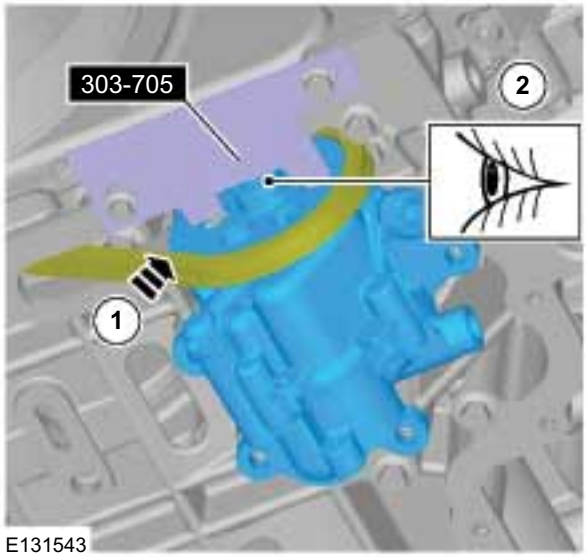

E131543

2. **NOTE:** Hand tighten the bolts at this stage.

   Special Tool(s): 303-705

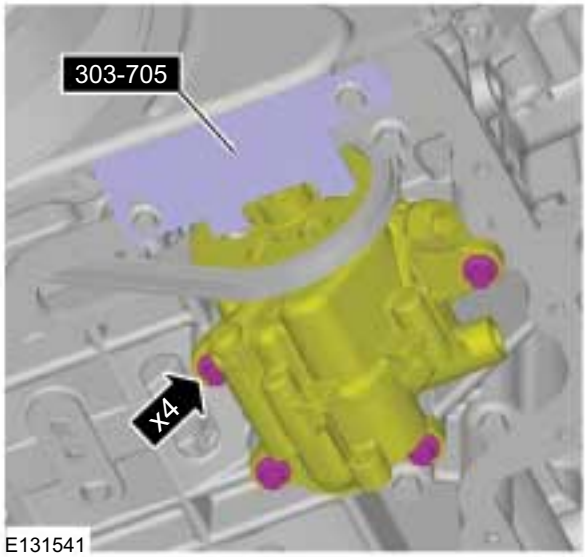

E131541

3. Torque: 10 Nm

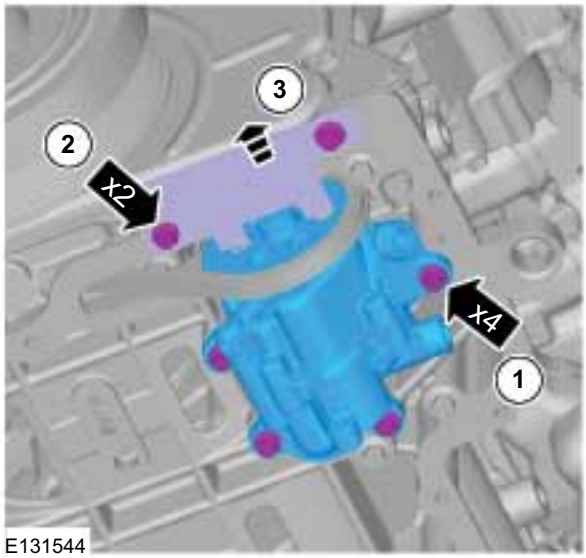

E131544

4. Refer to: Oil Pan (303-01 Engine - 3.2L Duratorq-TDCi (148kW/200PS) - Puma, Removal and Installation).

REMOVAL AND INSTALLATION

Engine Front Seal

Special Tool(s)

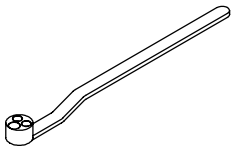 E87614	303-1310 Holding Wrench, Crankshaft

Special Tool(s)

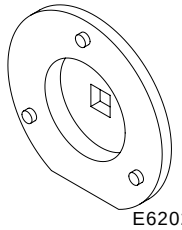 E62024	303-679A Remover/Installer, Engine Front Cover Inspection Plate

Removal

NOTE: Removal steps in this procedure may contain installation details.

1. Refer to: Cooling Fan Motor and Shroud (303-03 Engine Cooling - 3.2L Duratorq-TDCi (148kW/200PS) - Puma, Removal and Installation).
2. 1.Do not completely loosen the crankshaft pulley bolts.

   Special Tool(s): 303-1310

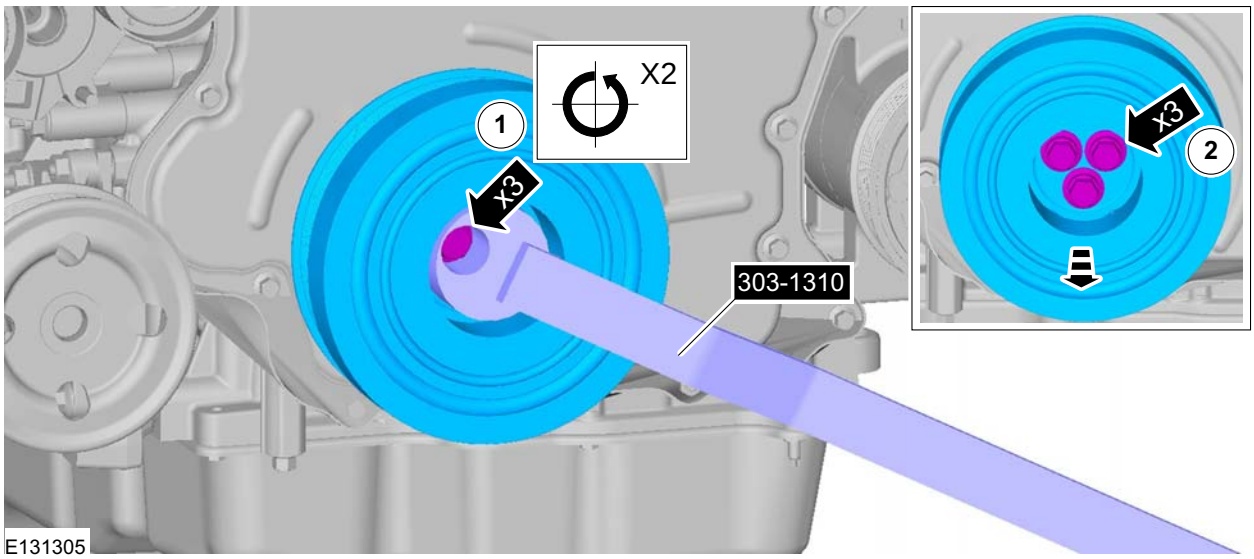

E131305

3. **CAUTION: Rotate the seal assembly until it releases. Failure to follow this**

REMOVAL AND INSTALLATION

instruction may result in damage to the seal assembly.

Special Tool(s): 303-679A

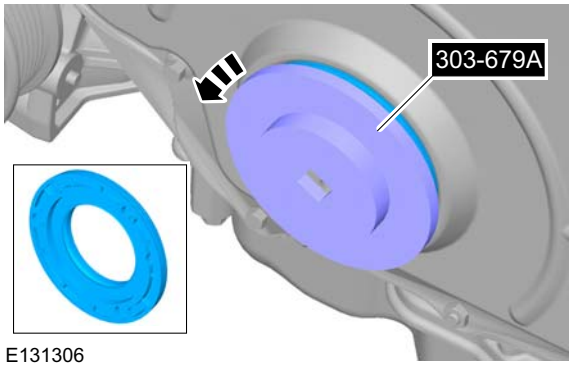

E131306

Installation

1. **NOTE:** Make sure that the mounting face is clean and lubricated.

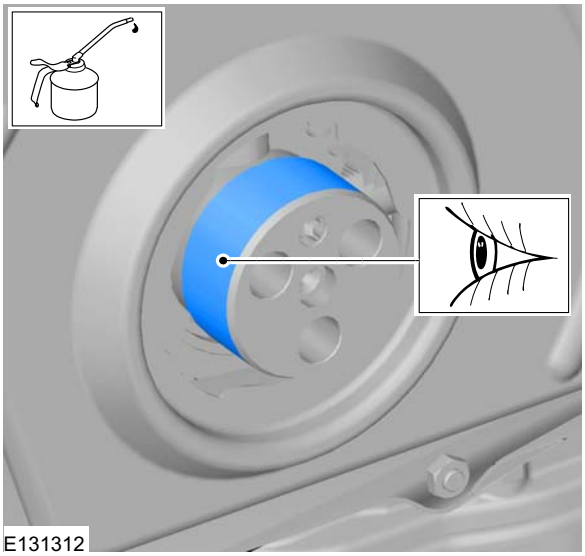
E131312

2. **CAUTION: Rotate the seal assembly until it locks. Failure to follow this instruction may result in damage to the seal assembly.**

NOTE: A new crankshaft front seal carrier is supplied with an alignment sleeve that must not be removed until the crankshaft rear seal is fully installed.

Special Tool(s): 303-679A

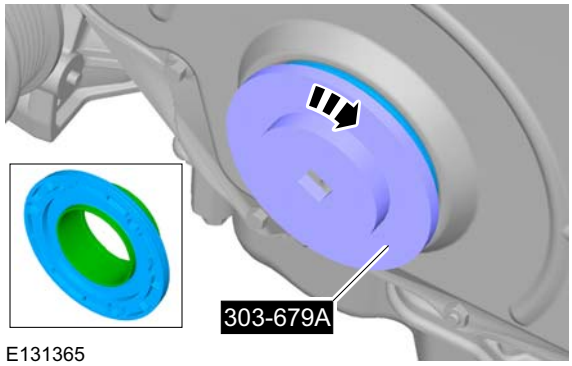

E131365

3. Remove the alignment sleeve after the seal is fully installed.

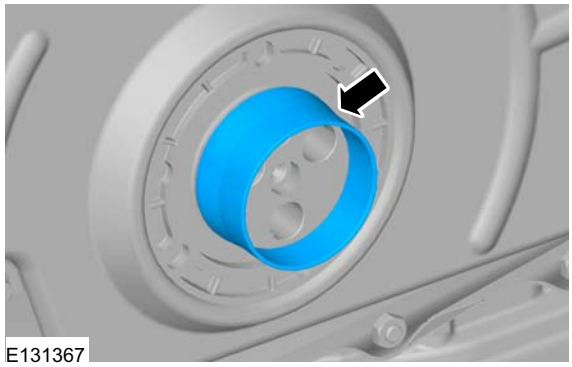
E131367

4. **CAUTION: The crankshaft pulley bolts must not be used more than 3 times.**

Special Tool(s): 303-1310
Torque:
- Stage 1: 45 Nm
- Stage 2: 120°

REMOVAL AND INSTALLATION

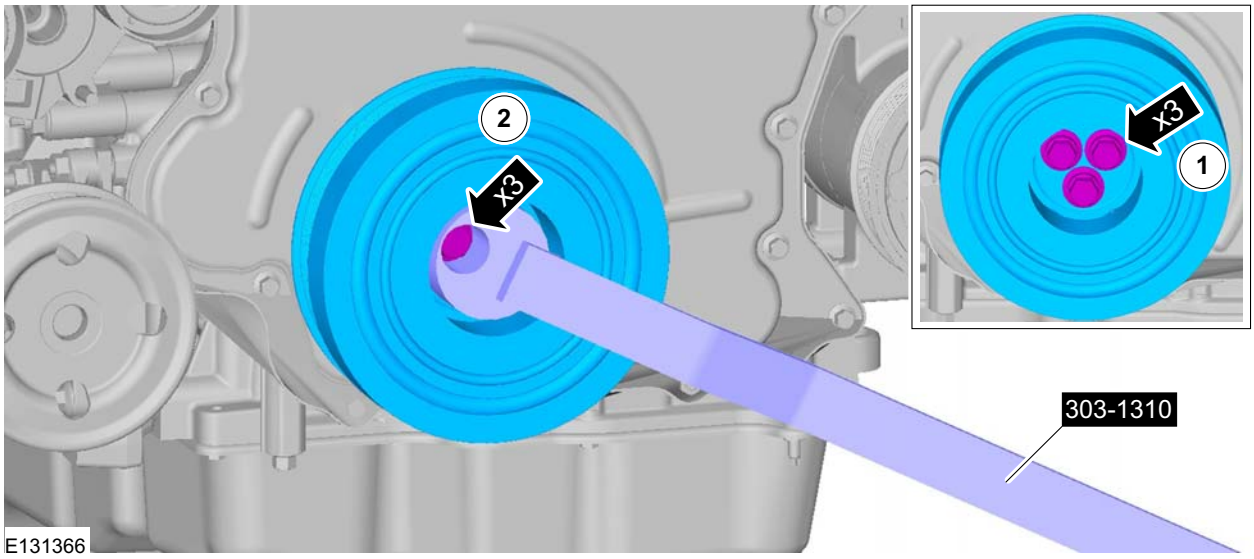

5. Refer to: Cooling Fan Motor and Shroud (303-03 Engine Cooling - 3.2L Duratorq-TDCi (148kW/200PS) - Puma, Removal and Installation).

REMOVAL AND INSTALLATION

Crankshaft Rear Seal(21 468 4)

Special Tool(s)

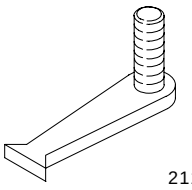 21135	303-254 Locking Tool, Flywheel

Materials	
Name	**Specification**
Silicone Sealant LB	WSE-M4G323-A4 / 2U7J-M4G323-AA

Removal

NOTE: Removal steps in this procedure may contain installation details.

Vehicles with automatic transmission

1. Refer to: Transmission - 2WD (307-01 Automatic Transmission/Transaxle - Vehicles With: 6-Speed Automatic Transaxle - 6R80, Removal).
   Refer to: Transmission - 4WD (307-01 Automatic Transmission/Transaxle - Vehicles With: 6-Speed Automatic Transaxle - 6R80, Removal).

Vehicles with manual transmission

2. Refer to: Clutch Disc and Pressure Plate (308-01 Clutch - Vehicles With: 6-Speed Manual Transmission - MT82, Removal and Installation).

All vehicles

3. Special Tool(s): 303-254

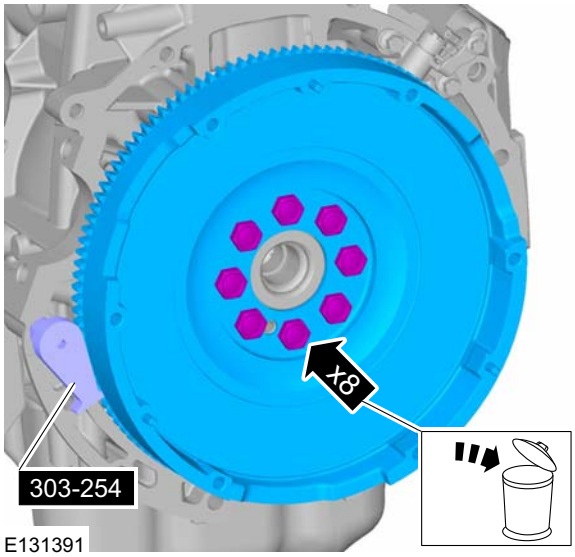

REMOVAL AND INSTALLATION

4.

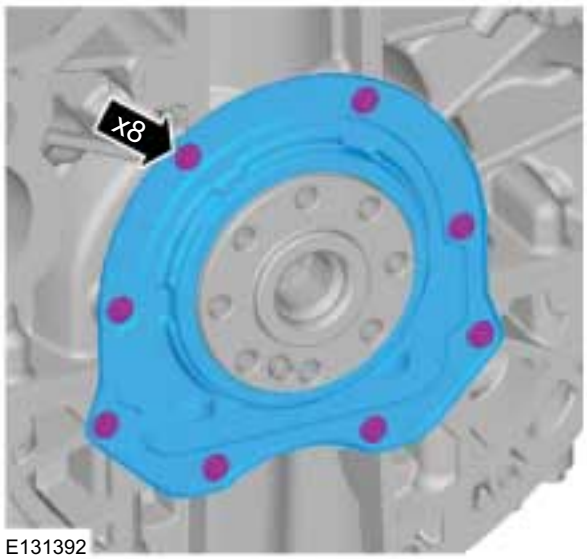

E131392

Installation

All vehicles

1.

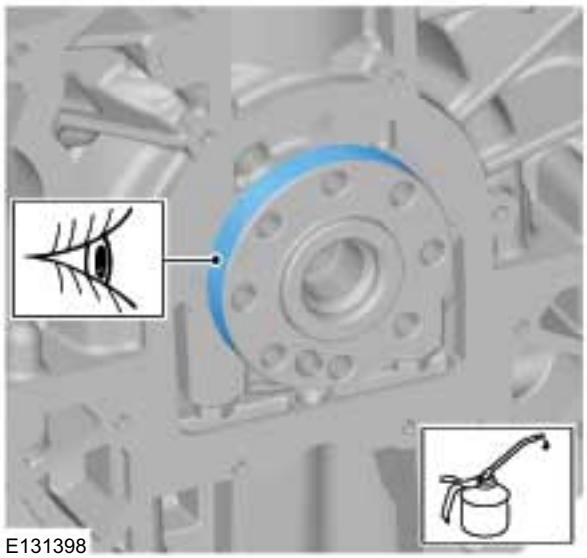
E131398

2. NOTE: Install the new crankshaft rear seal carrier within five minutes of applying the recommended sealant.

Material: Silicone Sealant LB (WSE-M4G323-A4 / 2U7J-M4G323-AA) sealant

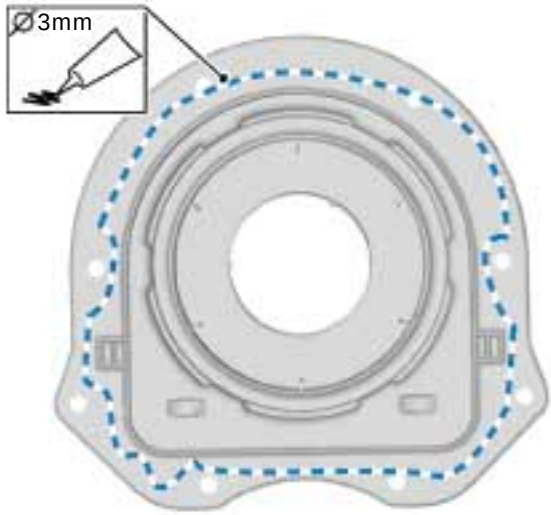

E131393

3. CAUTION: A new crankshaft rear seal carrier is supplied with an alignment sleeve that must not be removed until the crankshaft rear seal is fully installed. Failure to follow this instruction may result in damage to the vehicle.

Hand tighten the bolts at this stage.

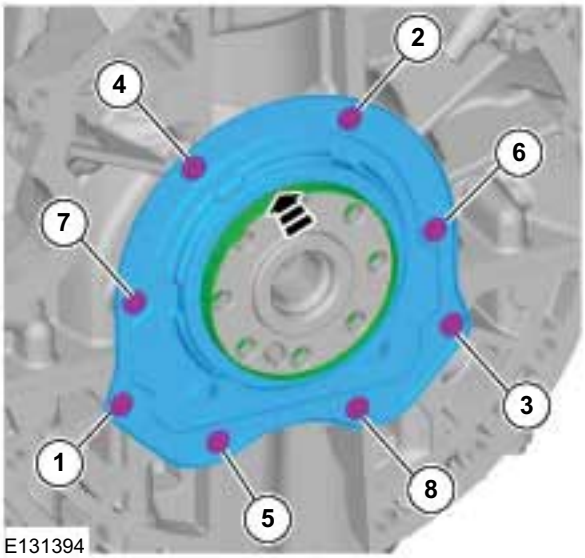

E131394

REMOVAL AND INSTALLATION

4. **NOTE:** New crankshaft rear seal carriers are supplied with an alignment sleeve which must be removed after installation.

   Torque: 10 Nm

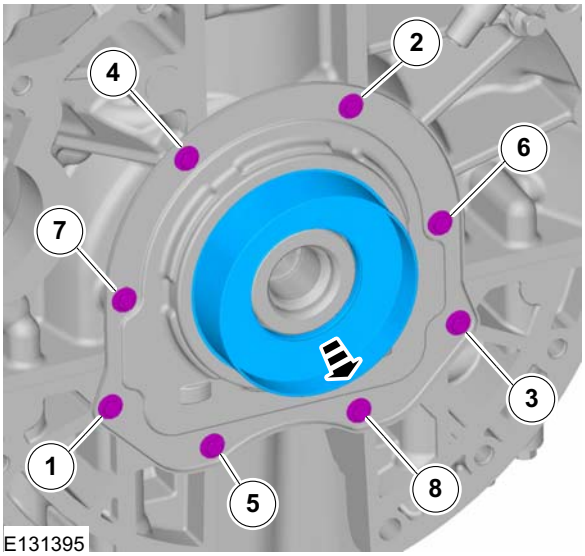

5. **NOTE:** Make sure that the flywheel is in full contact with the crankshaft flange before installing the flywheel bolts.

   Hand tighten the bolts at this stage.

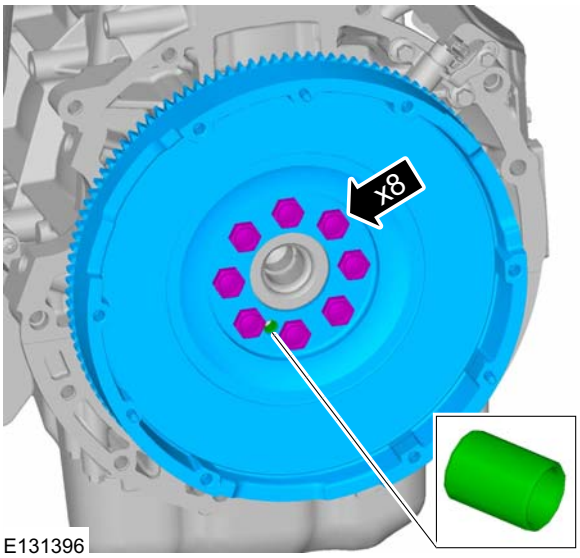

6. Special Tool(s): 303-254
   Torque:
   - Stage 1: 15 Nm
   - Stage 2: 30 Nm
   - Stage 3: 75 Nm
   - Stage 4: 45°

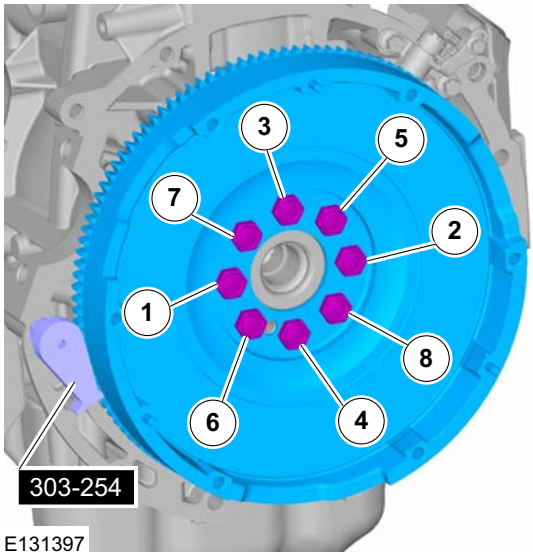

Vehicles with manual transmission

7. Refer to: Clutch Disc and Pressure Plate (308-01 Clutch - Vehicles With: 6-Speed Manual Transmission - MT82, Removal and Installation).

Vehicles with automatic transmission

8. Refer to: Transmission - 2WD (307-01 Automatic Transmission/Transaxle - Vehicles With: 6-Speed Automatic Transaxle - 6R80, Installation).
   Refer to: Transmission - 4WD (307-01 Automatic Transmission/Transaxle - Vehicles With: 6-Speed Automatic Transaxle - 6R80, Installation).

REMOVAL

Engine — Vehicles With: 6-Speed Manual Transmission - MT82(21 132 0; 21 132 6; 21 132 7)

Removal

Special Tool(s) / General Equipment

21068A	303-122 Lifting Bracket, Engine
Transmission Jack	

1. Refer to: Health and Safety Precautions (100-00 General Information, Description and Operation).
2. Refer to: Battery Disconnect and Connect (414-01 Battery, Mounting and Cables, General Procedures).
3. Refer to: Cooling System Draining, Filling and Bleeding - 2.2L Duratorq-TDCi (88kW/120PS) - Puma/2.2L Duratorq-TDCi (96kW/130PS) - Puma/2.2L Duratorq-TDCi (110kW/150PS) - Puma/3.2L Duratorq-TDCi (148kW/200PS) - Puma (303-03 Engine Cooling - 3.2L Duratorq-TDCi (148kW/200PS) - Puma, General Procedures).
4. Refer to: Air Conditioning (A/C) System Recovery, Evacuation and Charging (412-00 Climate Control System - General Information, General Procedures).
5. Refer to: Lifting (100-02 Jacking and Lifting, Description and Operation).

6.

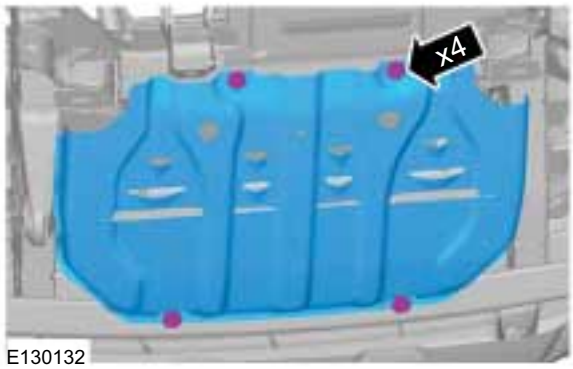

E130132

7.

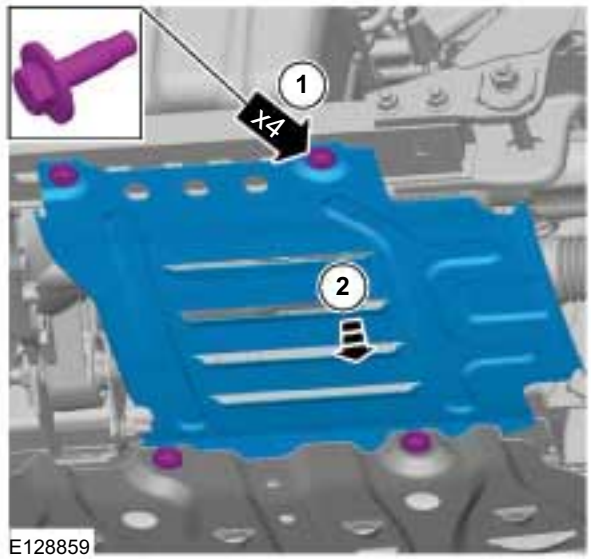

E128859

8.

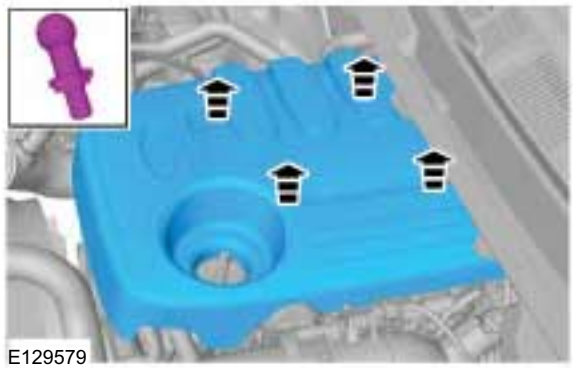
E129579

9.

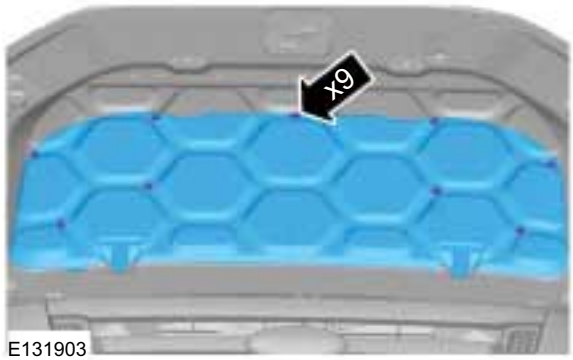

E131903

REMOVAL

10.

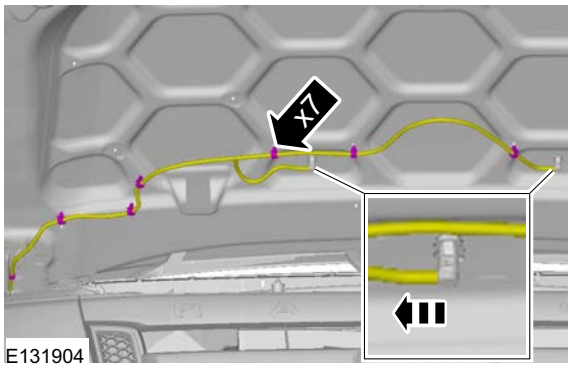

11.

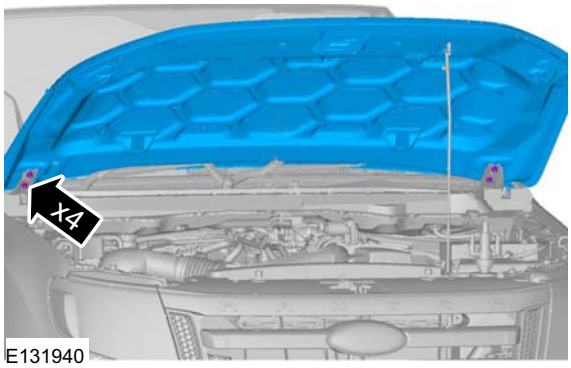

12. Refer to: Cowl Panel Grille (501-02 Front End Body Panels, Removal and Installation).

13.

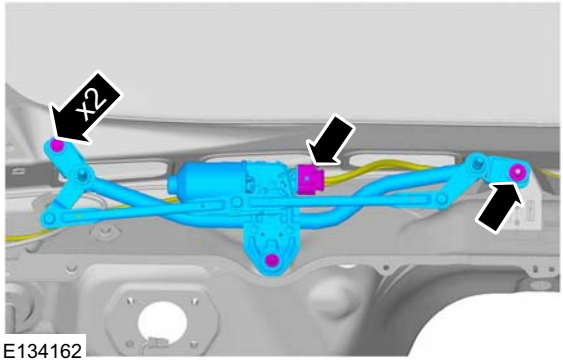

14. On both sides.

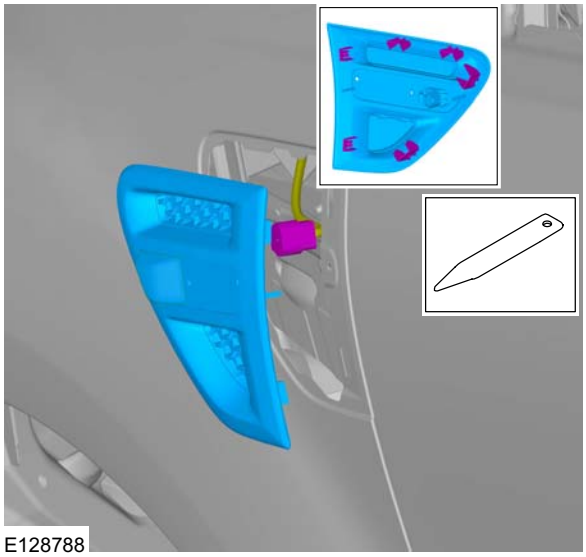

15.

REMOVAL

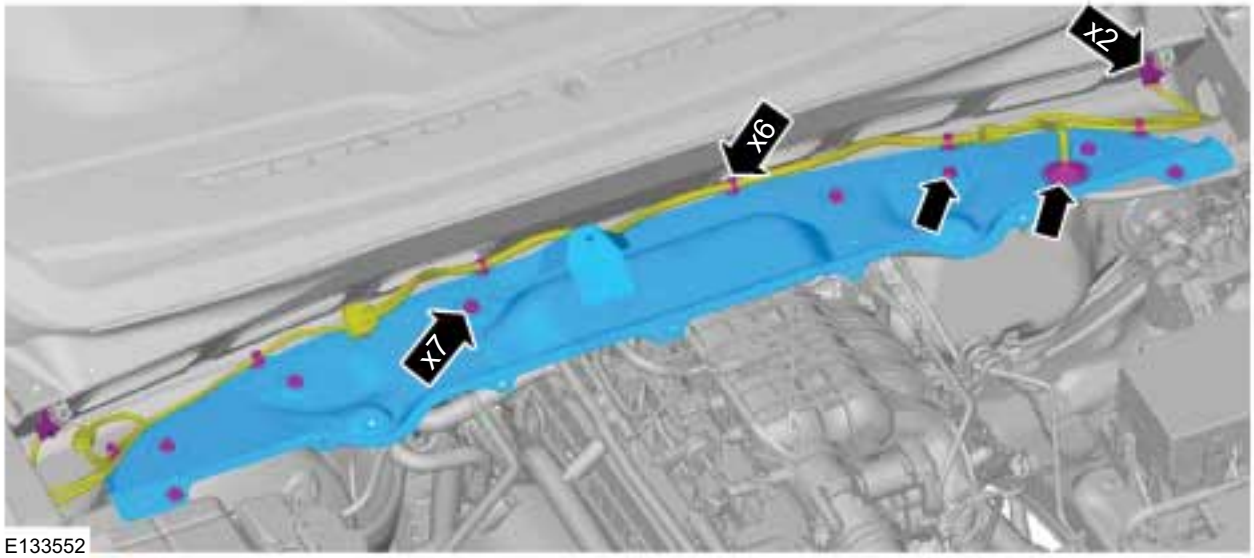

E133552

16.

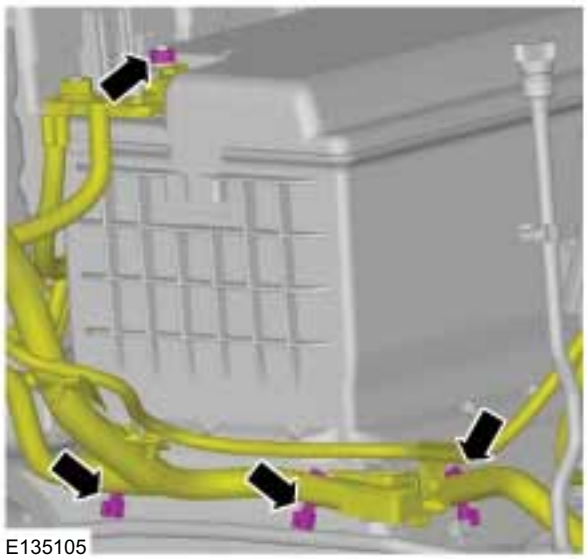
E135105

17.

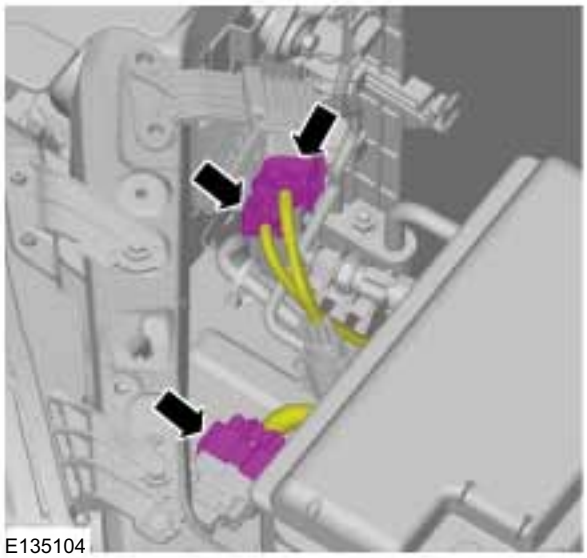
E135104

REMOVAL

18. Refer to: Battery (414-01 Battery, Mounting and Cables, Removal and Installation).

19. Refer to: Battery Tray (414-01 Battery, Mounting and Cables, Removal and Installation).

20. Refer to: Powertrain Control Module (PCM) (303-14 Electronic Engine Controls - 2.5L Duratec-HE (122kW/165PS) - MI4, Removal and Installation).
Refer to: Powertrain Control Module (PCM) (303-14 Electronic Engine Controls - 2.2L Duratorq-TDCi (88kW/120PS) - Puma/2.2L Duratorq-TDCi (96kW/130PS) - Puma/2.2L Duratorq-TDCi (110kW/150PS) - Puma/3.2L Duratorq-TDCi (148kW/200PS) - Puma, Removal and Installation).

21.

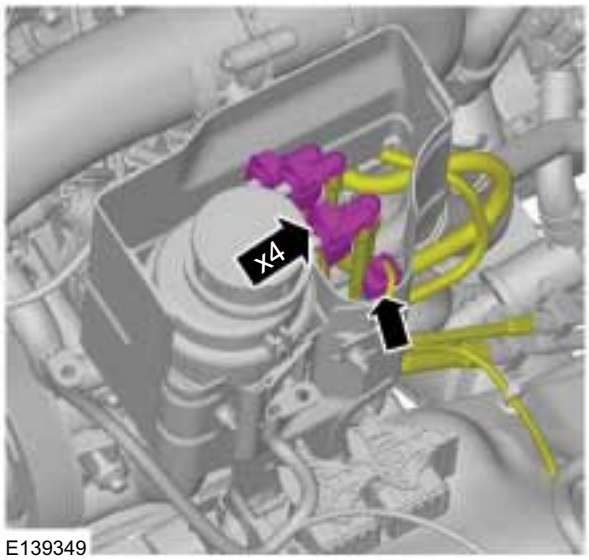

E139349

22.

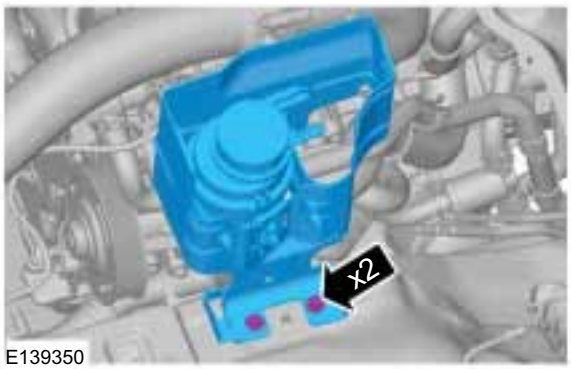

E139350

23.

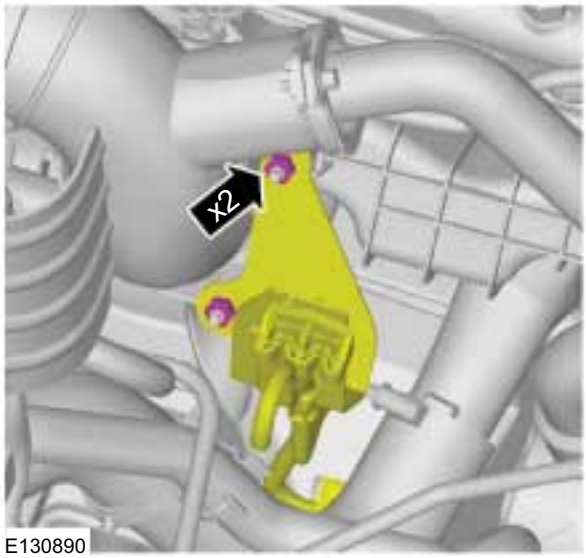

E130890

24.

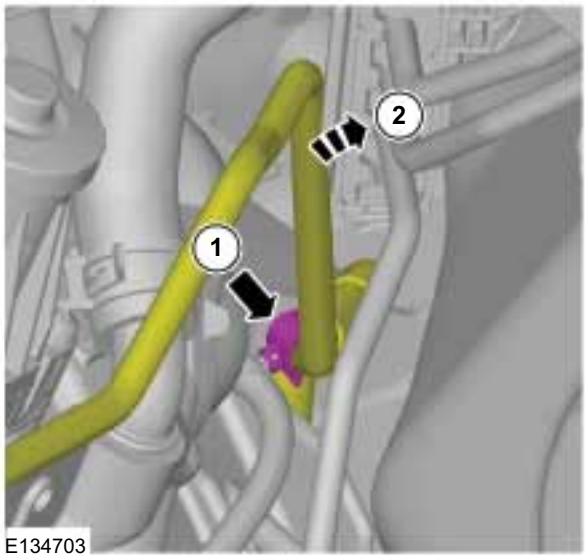

E134703

REMOVAL

25.

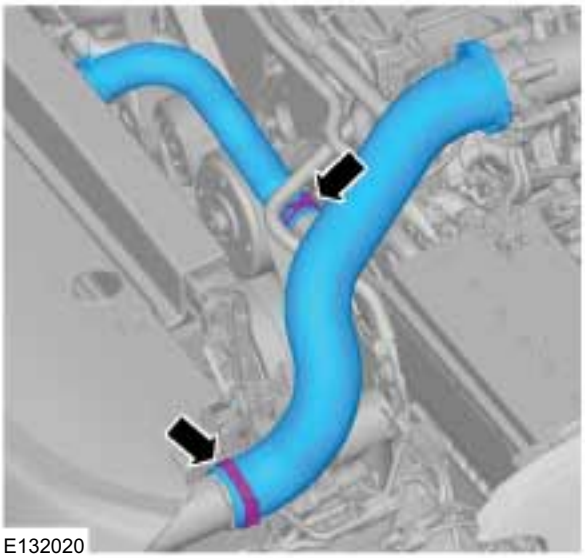
E132020

26. Refer to: Cooling Fan Motor and Shroud (303-03 Engine Cooling - 2.2L Duratorq-TDCi (88kW/120PS) - Puma/2.2L Duratorq-TDCi (96kW/130PS) - Puma/2.2L Duratorq-TDCi (110kW/150PS) - Puma, Removal and Installation).

27. Refer to: Radiator (303-03 Engine Cooling - 3.2L Duratorq-TDCi (148kW/200PS) - Puma, Removal and Installation).

28. Refer to: Condenser - 2.2L Duratorq-TDCi (88kW/120PS) - Puma/2.2L Duratorq-TDCi (96kW/130PS) - Puma/2.2L Duratorq-TDCi (110kW/150PS) - Puma/3.2L Duratorq-TDCi (148kW/200PS) - Puma (412-01 Climate Control, Removal and Installation).

29.

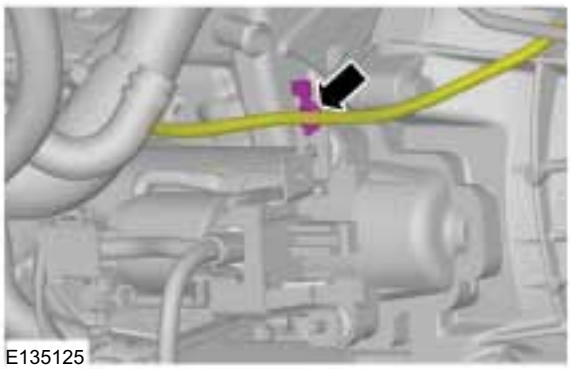
E135125

30. Refer to: Starter Motor - 3.2L Duratorq-TDCi (148kW/200PS) - Puma (303-06 Starting System - 2.2L Duratorq-TDCi (88kW/120PS) - Puma/2.2L Duratorq-TDCi (96kW/130PS) - Puma/2.2L Duratorq-TDCi (110kW/150PS) - Puma/3.2L Duratorq-TDCi (148kW/200PS) - Puma, Removal and Installation).

31.

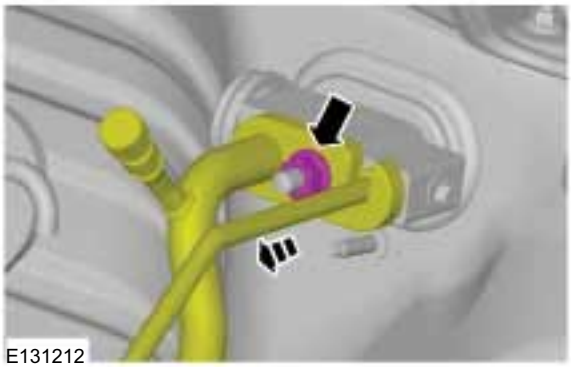
E131212

32.

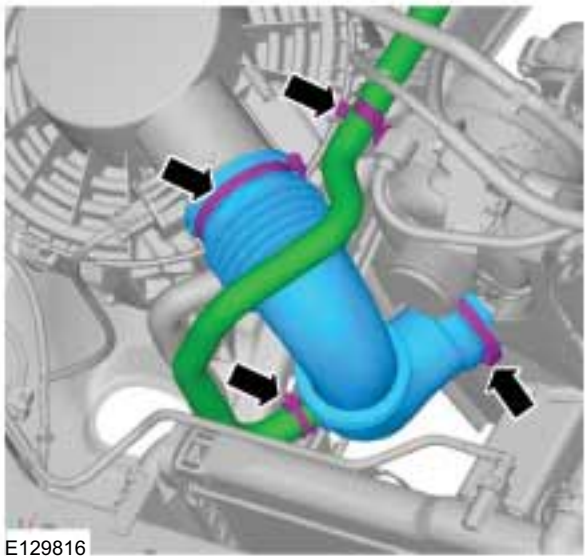
E129816

REMOVAL

33. Refer to: Air Cleaner - 3.2L Duratorq-TDCi (148kW/200PS) - Puma (303-12 Intake Air Distribution and Filtering - 2.2L Duratorq-TDCi (88kW/120PS) - Puma/2.2L Duratorq-TDCi (96kW/130PS) - Puma/2.2L Duratorq-TDCi (110kW/150PS) - Puma/3.2L Duratorq-TDCi (148kW/200PS) - Puma, Removal and Installation).

34. **NOTE:** Make sure that all openings are sealed.

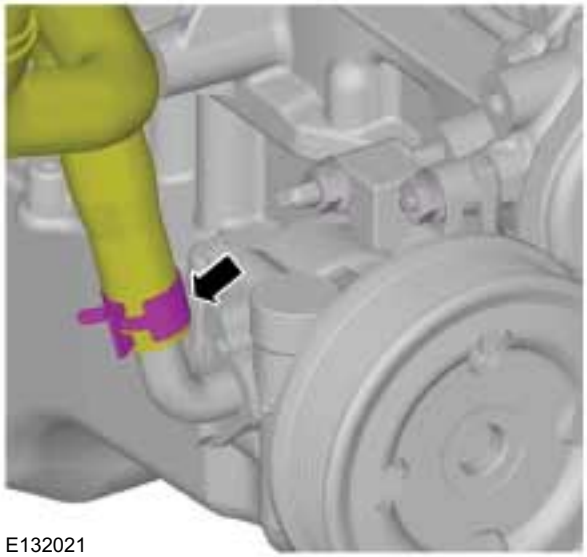
E132021

35. ⚠ **CAUTION: Cap the power steering line to prevent fluid loss or dirt ingress.**

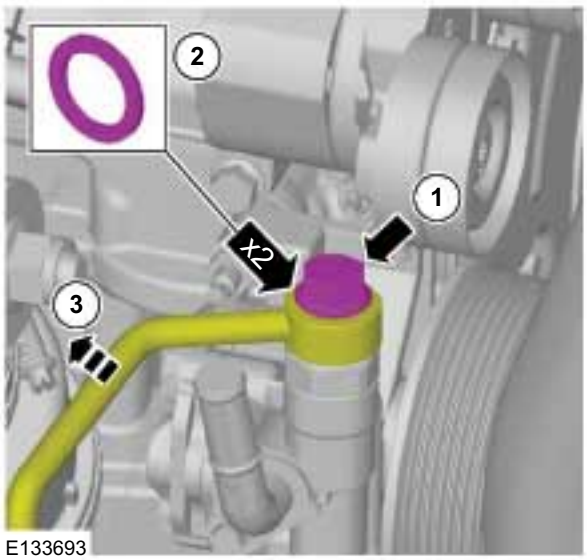

E133693

36.

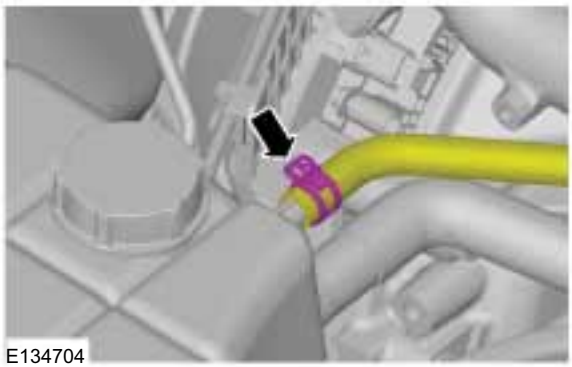
E134704

37.

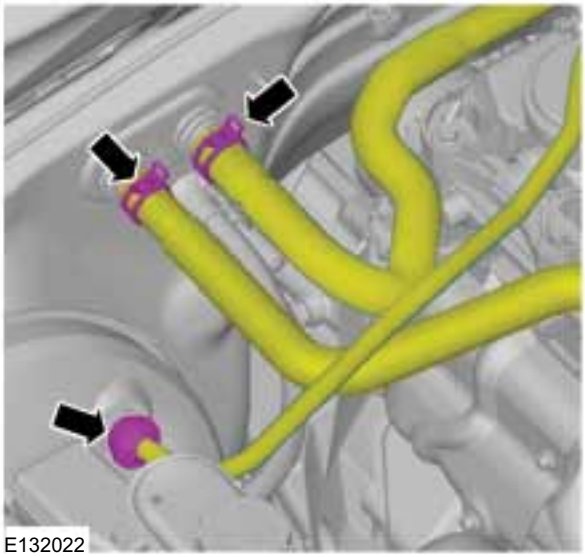
E132022

38.

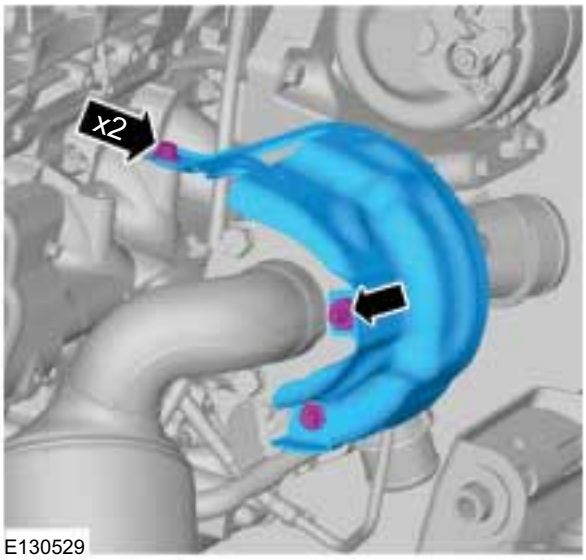

E130529

REMOVAL

39. Refer to: Catalytic Converter (309-00 Exhaust System - 2.2L Duratorq-TDCi (88kW/120PS) - Puma/2.2L Duratorq-TDCi (96kW/130PS) - Puma/2.2L Duratorq-TDCi (110kW/150PS) - Puma/3.2L Duratorq-TDCi (148kW/200PS) - Puma, Removal and Installation).

40.

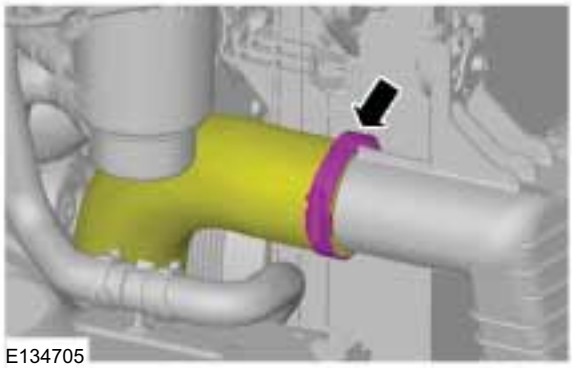
E134705

41.

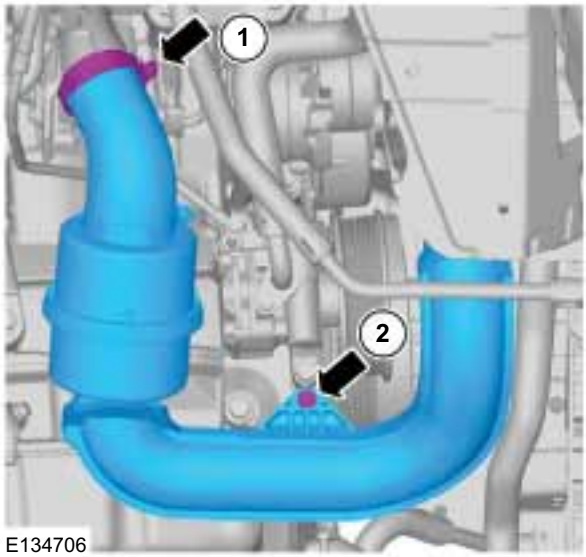

E134706

42.

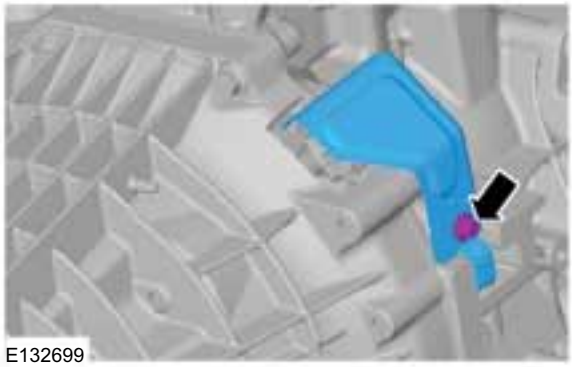
E132699

43.

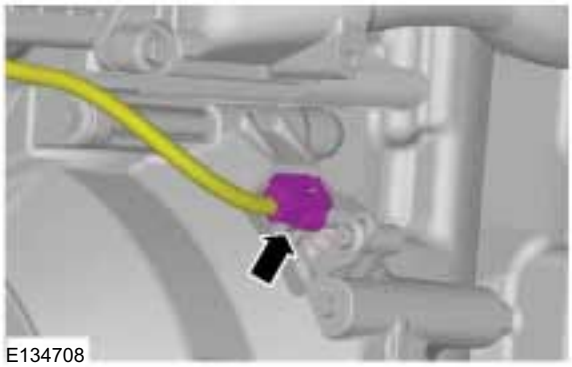
E134708

44.

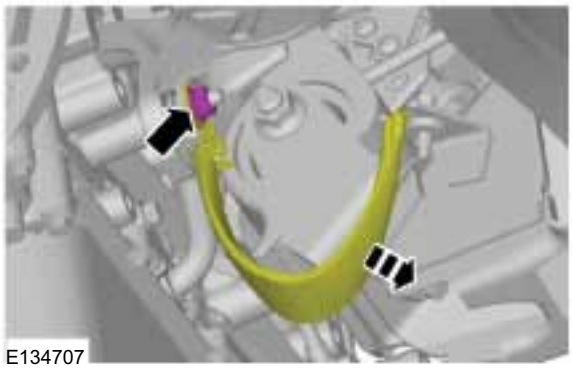
E134707

45. **WARNING: Make sure that transmission assembly is on wooden blocks and secured with suitable retaining straps.**

CAUTION: Do not tilt the transmission. This may cause damage to the pilot bearing.

REMOVAL

Tie and support the transmission to the chassis with a suitable strap.

General Equipment: Transmission Jack

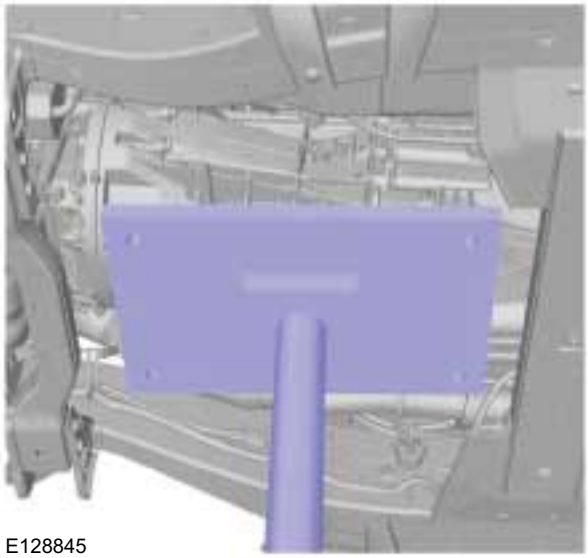
E128845

46.

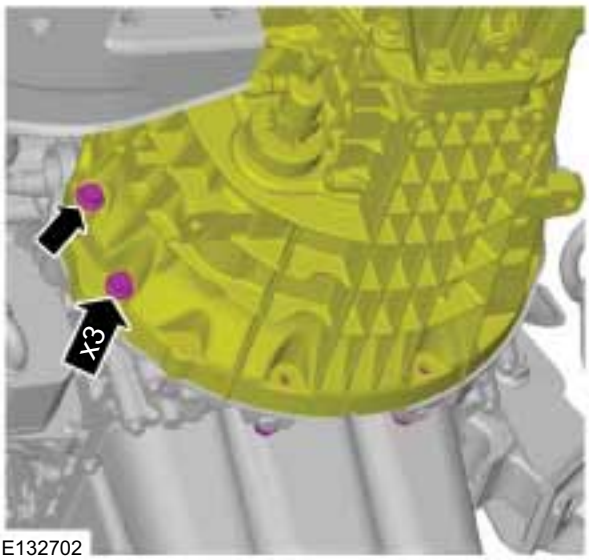

E132702

47.

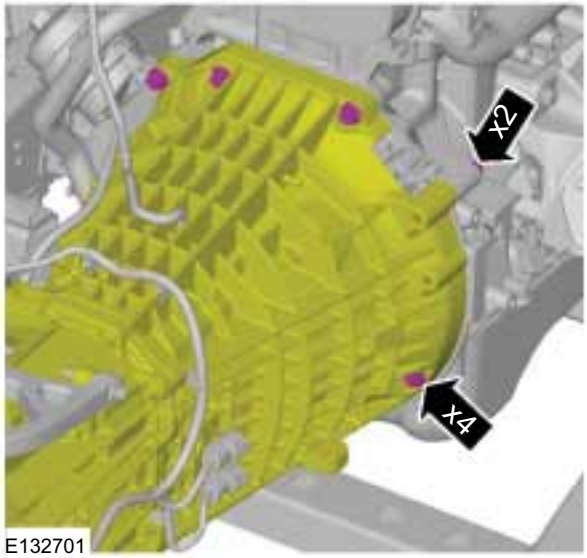

E132701

48. On both sides.

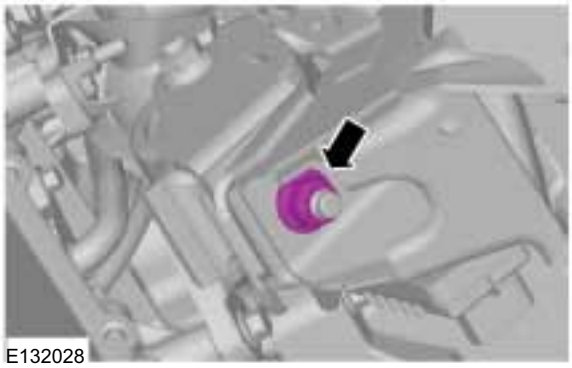
E132028

49. Special Tool(s): 303-122

E68699

REMOVAL

50.

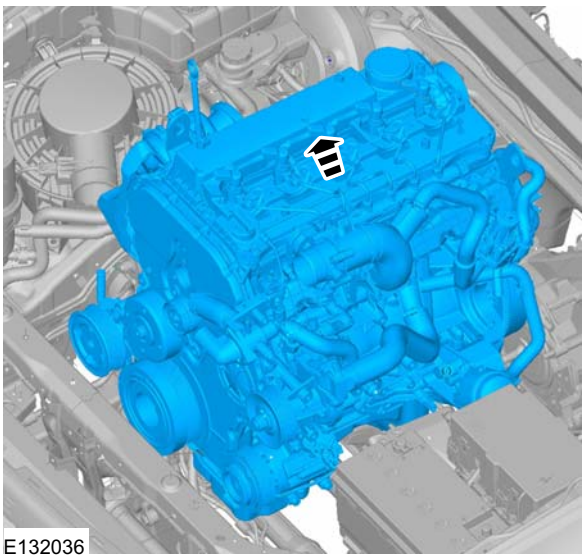
E132036

51.

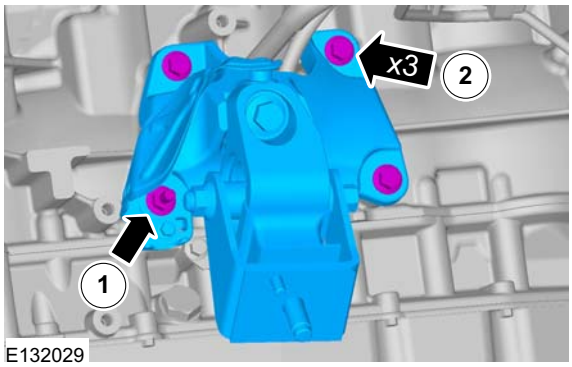

E132029

REMOVAL

Engine — Vehicles With: 6-Speed Automatic Transaxle - 6R80(21 132 0; 21 132 6; 21 132 7)

Removal

Special Tool(s) / General Equipment

21068A	303-122 Lifting Bracket, Engine
Transmission Jack	

1. Refer to: Health and Safety Precautions (100-00 General Information, Description and Operation).
2. Refer to: Battery Disconnect and Connect (414-01 Battery, Mounting and Cables, General Procedures).
3. Refer to: Cooling System Draining, Filling and Bleeding - 2.2L Duratorq-TDCi (88kW/120PS) - Puma/2.2L Duratorq-TDCi (96kW/130PS) - Puma/2.2L Duratorq-TDCi (110kW/150PS) - Puma/3.2L Duratorq-TDCi (148kW/200PS) - Puma (303-03 Engine Cooling - 3.2L Duratorq-TDCi (148kW/200PS) - Puma, General Procedures).
4. Refer to: Air Conditioning (A/C) System Recovery, Evacuation and Charging (412-00 Climate Control System - General Information, General Procedures).
5. Refer to: Lifting (100-02 Jacking and Lifting, Description and Operation).

6.

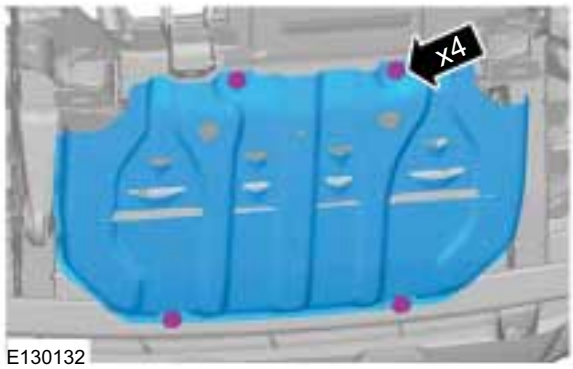

E130132

7.

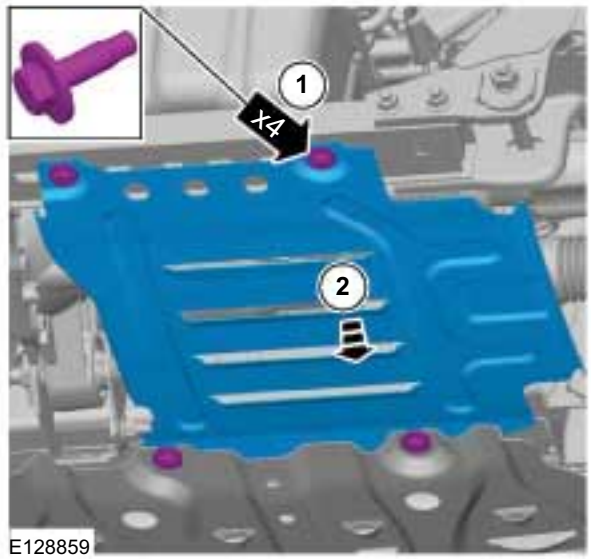

E128859

8.

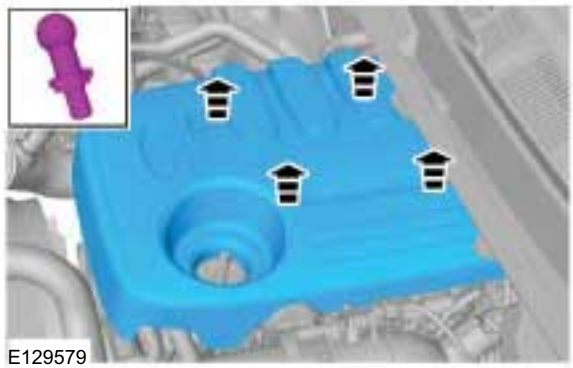
E129579

9.

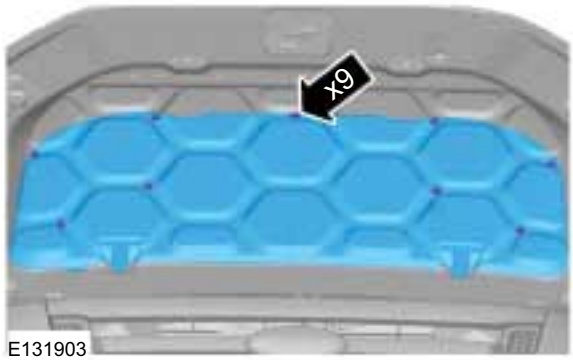

E131903

REMOVAL

10.

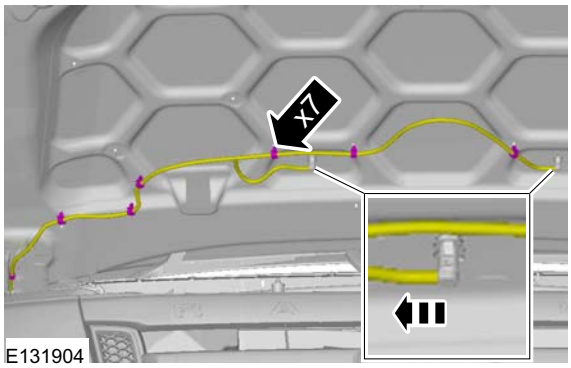

11.

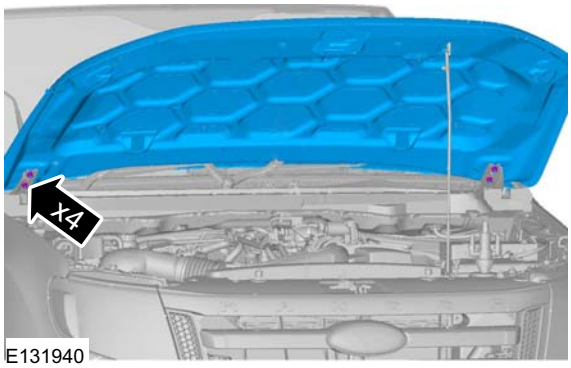

12. Refer to: Cowl Panel Grille (501-02 Front End Body Panels, Removal and Installation).

13.

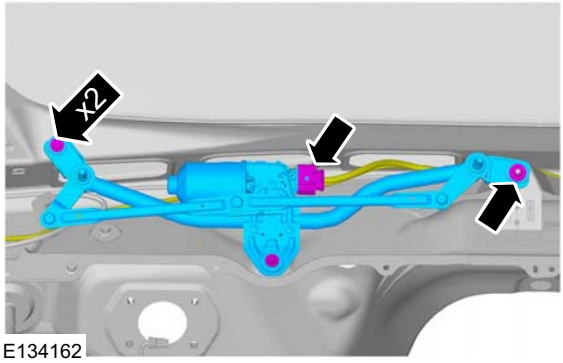

14. On both sides.

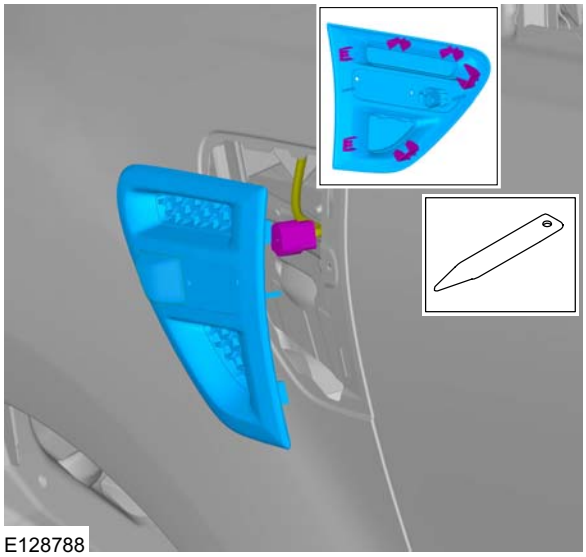

15.

REMOVAL

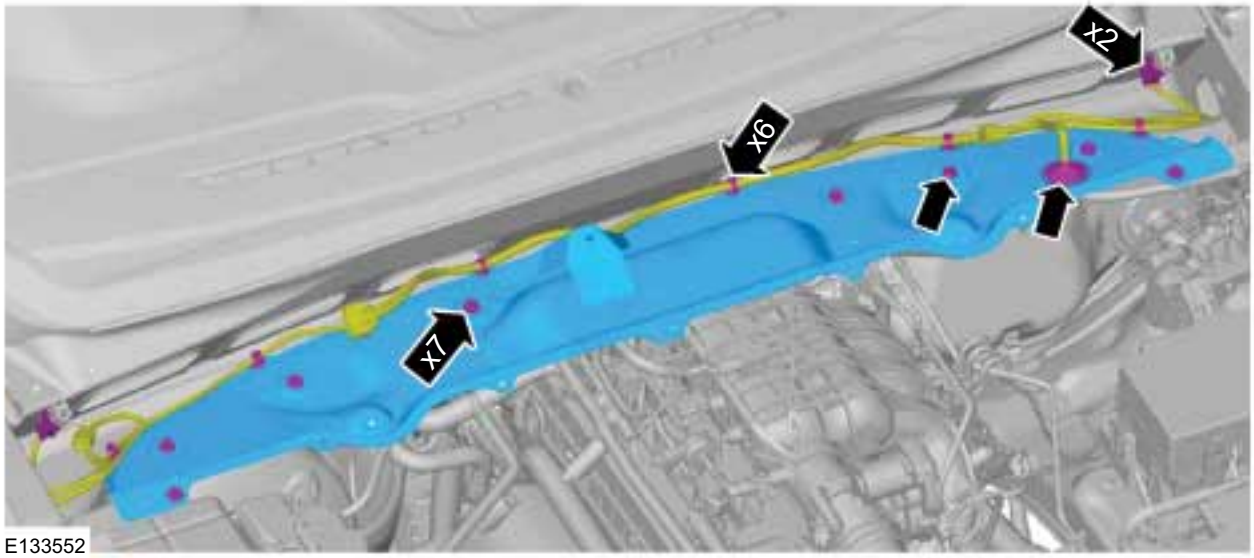

E133552

16.

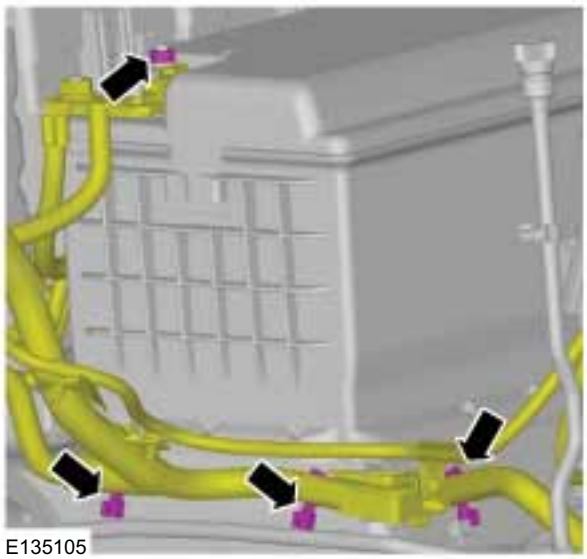
E135105

17.

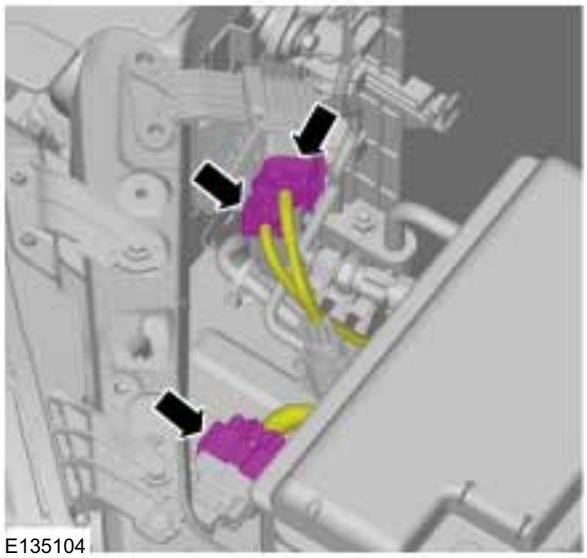
E135104

REMOVAL

18. Refer to: Battery (414-01 Battery, Mounting and Cables, Removal and Installation).

19. Refer to: Battery Tray (414-01 Battery, Mounting and Cables, Removal and Installation).

20. Refer to: Powertrain Control Module (PCM) (303-14 Electronic Engine Controls - 2.2L Duratorq-TDCi (88kW/120PS) - Puma/2.2L Duratorq-TDCi (96kW/130PS) - Puma/2.2L Duratorq-TDCi (110kW/150PS) - Puma/3.2L Duratorq-TDCi (148kW/200PS) - Puma, Removal and Installation).

21.

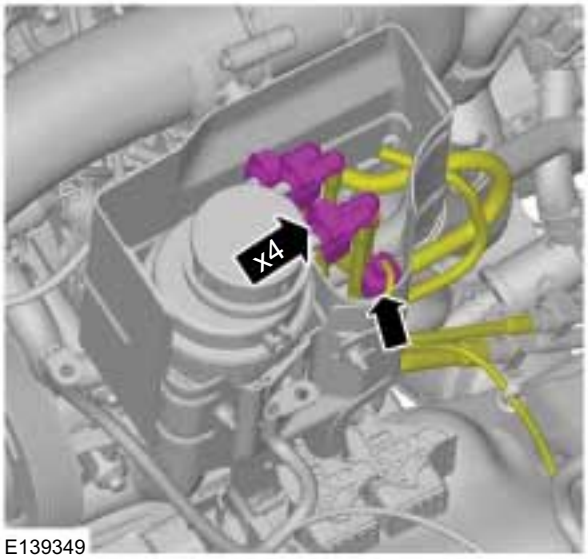

E139349

22.

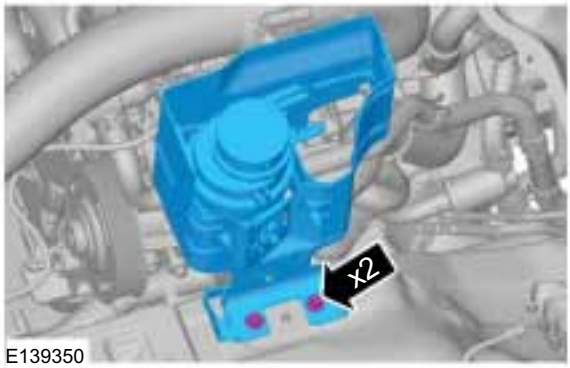

E139350

23.

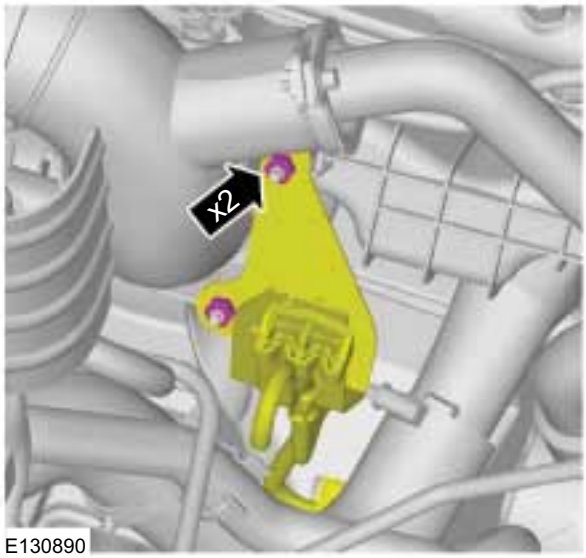

E130890

24.

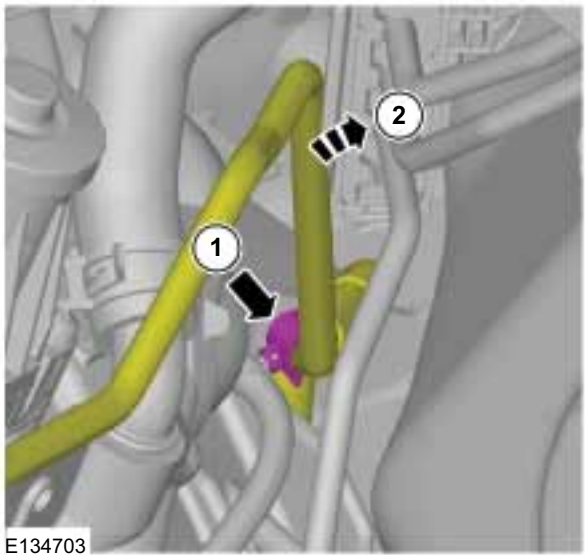

E134703

REMOVAL

25.

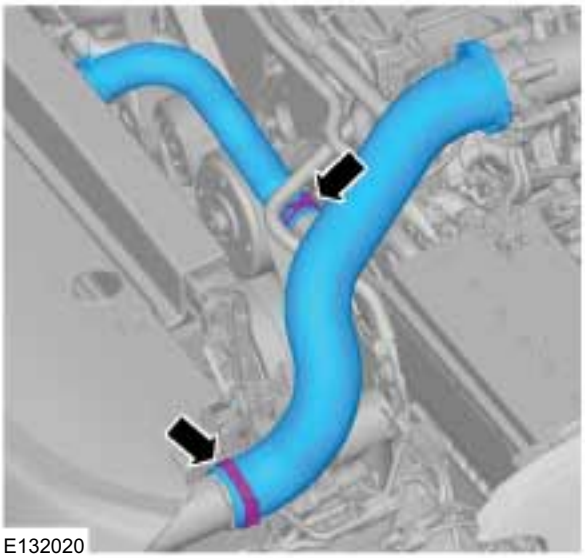
E132020

26. Refer to: Cooling Fan Motor and Shroud (303-03 Engine Cooling - 2.2L Duratorq-TDCi (88kW/120PS) - Puma/2.2L Duratorq-TDCi (96kW/130PS) - Puma/2.2L Duratorq-TDCi (110kW/150PS) - Puma, Removal and Installation).

27. Refer to: Radiator (303-03 Engine Cooling - 3.2L Duratorq-TDCi (148kW/200PS) - Puma, Removal and Installation).

28. Refer to: Condenser - 2.2L Duratorq-TDCi (88kW/120PS) - Puma/2.2L Duratorq-TDCi (96kW/130PS) - Puma/2.2L Duratorq-TDCi (110kW/150PS) - Puma/3.2L Duratorq-TDCi (148kW/200PS) - Puma (412-01 Climate Control, Removal and Installation).

29.

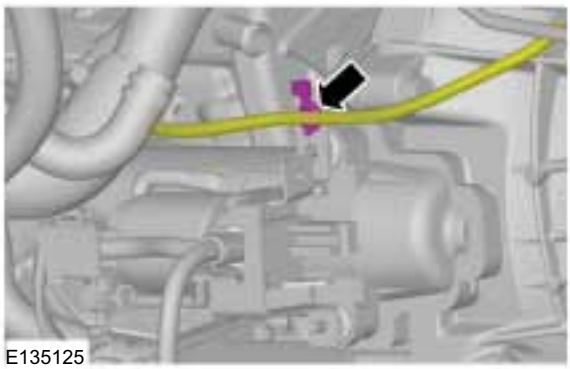
E135125

30. Refer to: Starter Motor - 3.2L Duratorq-TDCi (148kW/200PS) - Puma (303-06 Starting System - 2.2L Duratorq-TDCi (88kW/120PS) - Puma/2.2L Duratorq-TDCi (96kW/130PS) - Puma/2.2L Duratorq-TDCi (110kW/150PS) - Puma/3.2L Duratorq-TDCi (148kW/200PS) - Puma, Removal and Installation).

31.

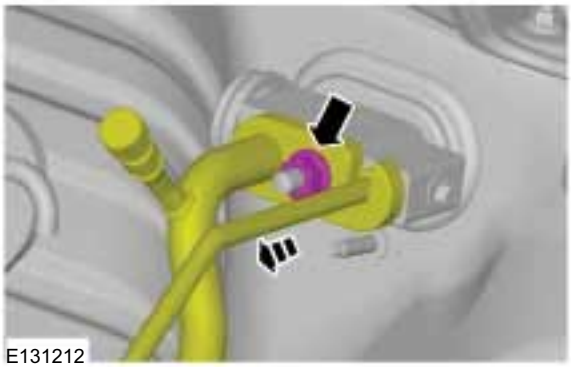
E131212

32. Refer to: Transmission Fluid Cooler (307-02 Transmission/Transaxle Cooling, Removal and Installation).

33.

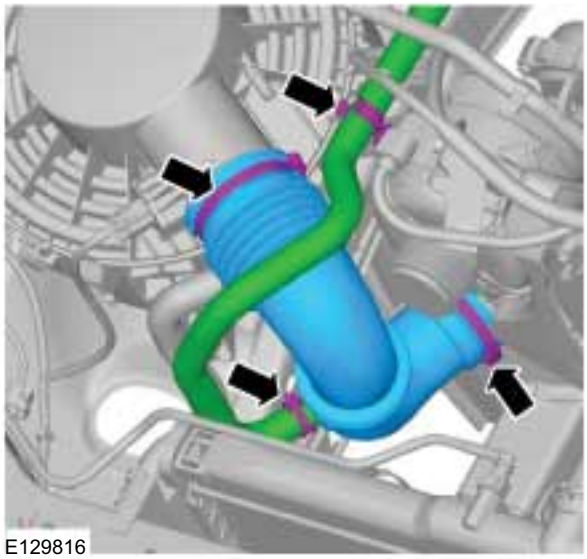
E129816

REMOVAL

34. Refer to: Air Cleaner - 3.2L Duratorq-TDCi (148kW/200PS) - Puma (303-12 Intake Air Distribution and Filtering - 2.2L Duratorq-TDCi (88kW/120PS) - Puma/2.2L Duratorq-TDCi (96kW/130PS) - Puma/2.2L Duratorq-TDCi (110kW/150PS) - Puma/3.2L Duratorq-TDCi (148kW/200PS) - Puma, Removal and Installation).

35. **NOTE:** Make sure that all openings are sealed.

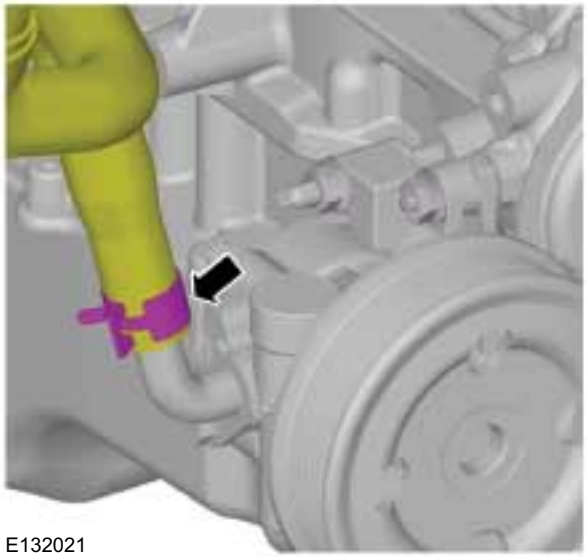
E132021

36. ⚠ **CAUTION: Cap the power steering line to prevent fluid loss or dirt ingress.**

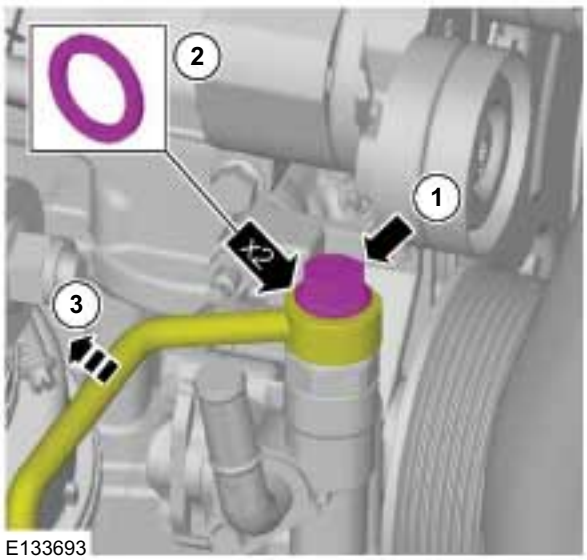

E133693

37.

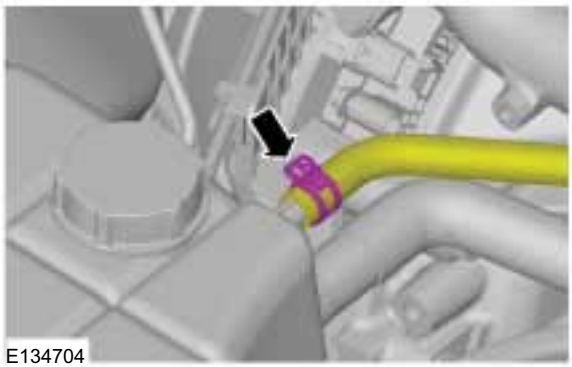
E134704

38.

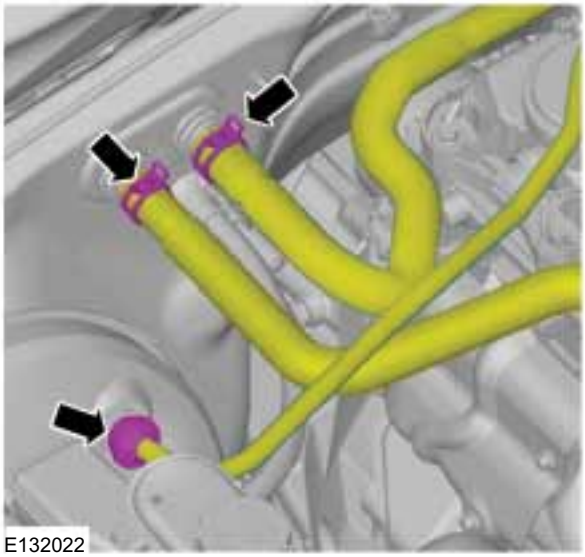
E132022

39.

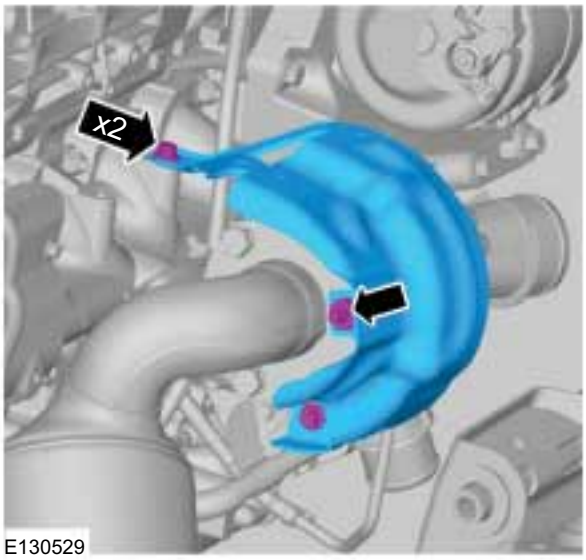

E130529

REMOVAL

40. Refer to: Catalytic Converter (309-00 Exhaust System - 2.2L Duratorq-TDCi (88kW/120PS) - Puma/2.2L Duratorq-TDCi (96kW/130PS) - Puma/2.2L Duratorq-TDCi (110kW/150PS) - Puma/3.2L Duratorq-TDCi (148kW/200PS) - Puma, Removal and Installation).

41.

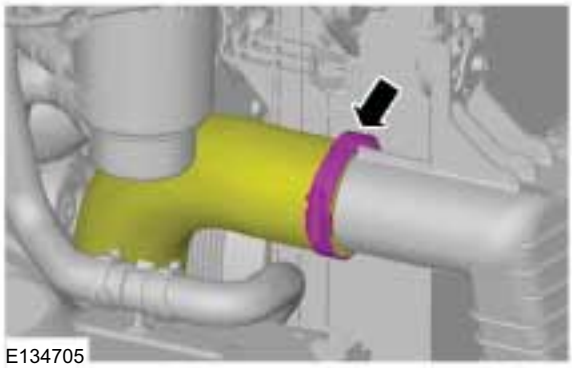
E134705

42.

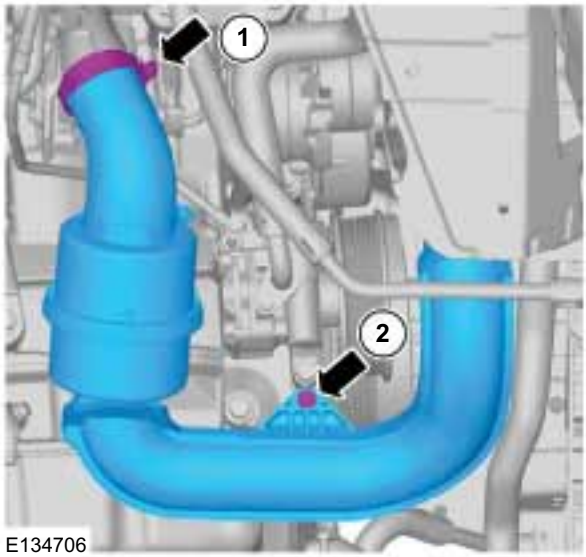

E134706

43.

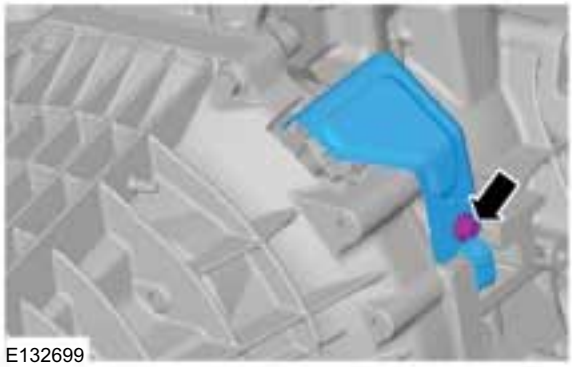
E132699

44.

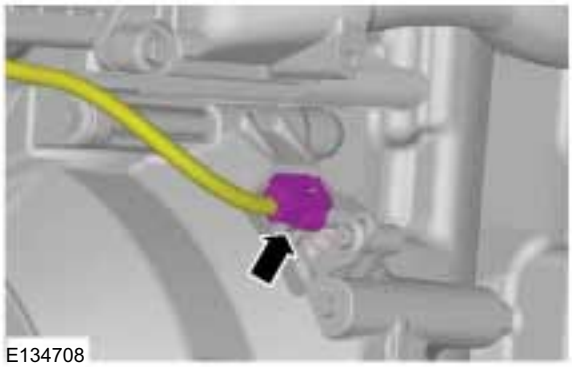
E134708

45.

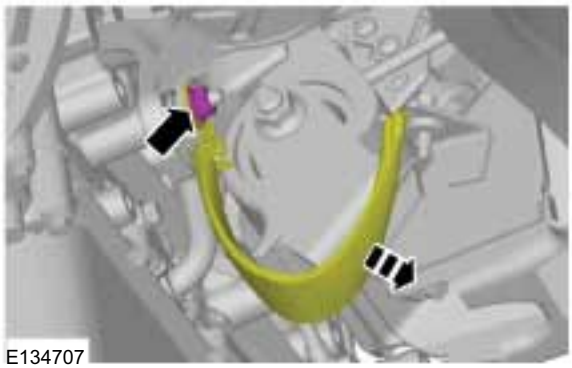
E134707

46. **WARNING: Make sure that transmission assembly is on wooden blocks and secured with suitable retaining straps.**

CAUTION: Do not tilt the transmission. This may cause damage to the pilot bearing.

REMOVAL

Tie and support the transmission to the chassis with a suitable strap.

General Equipment: Transmission Jack

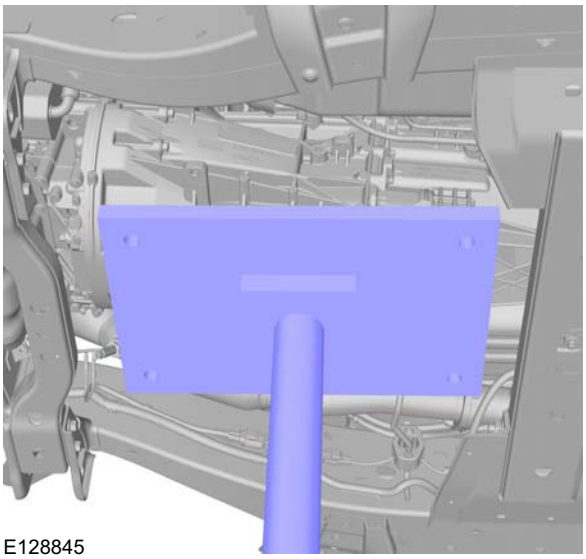

E128845

47.

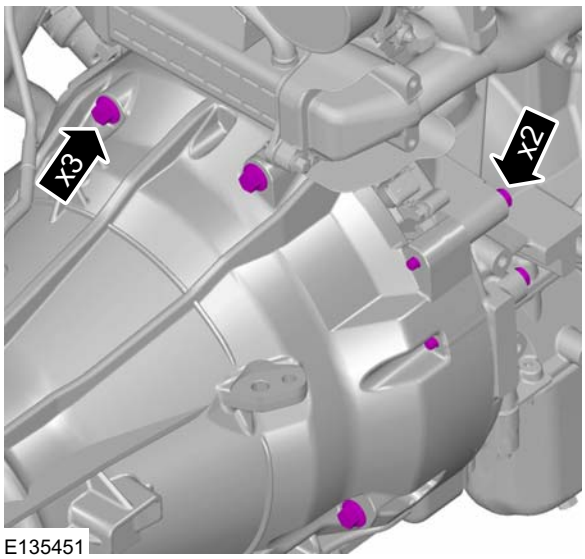

E135451

48.

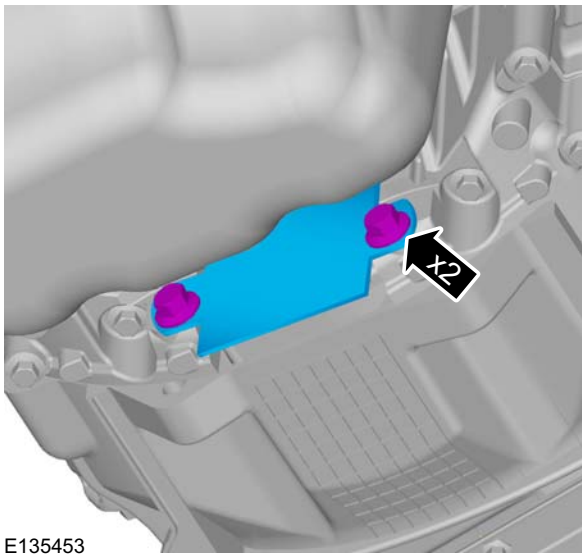

E135453

49.

REMOVAL

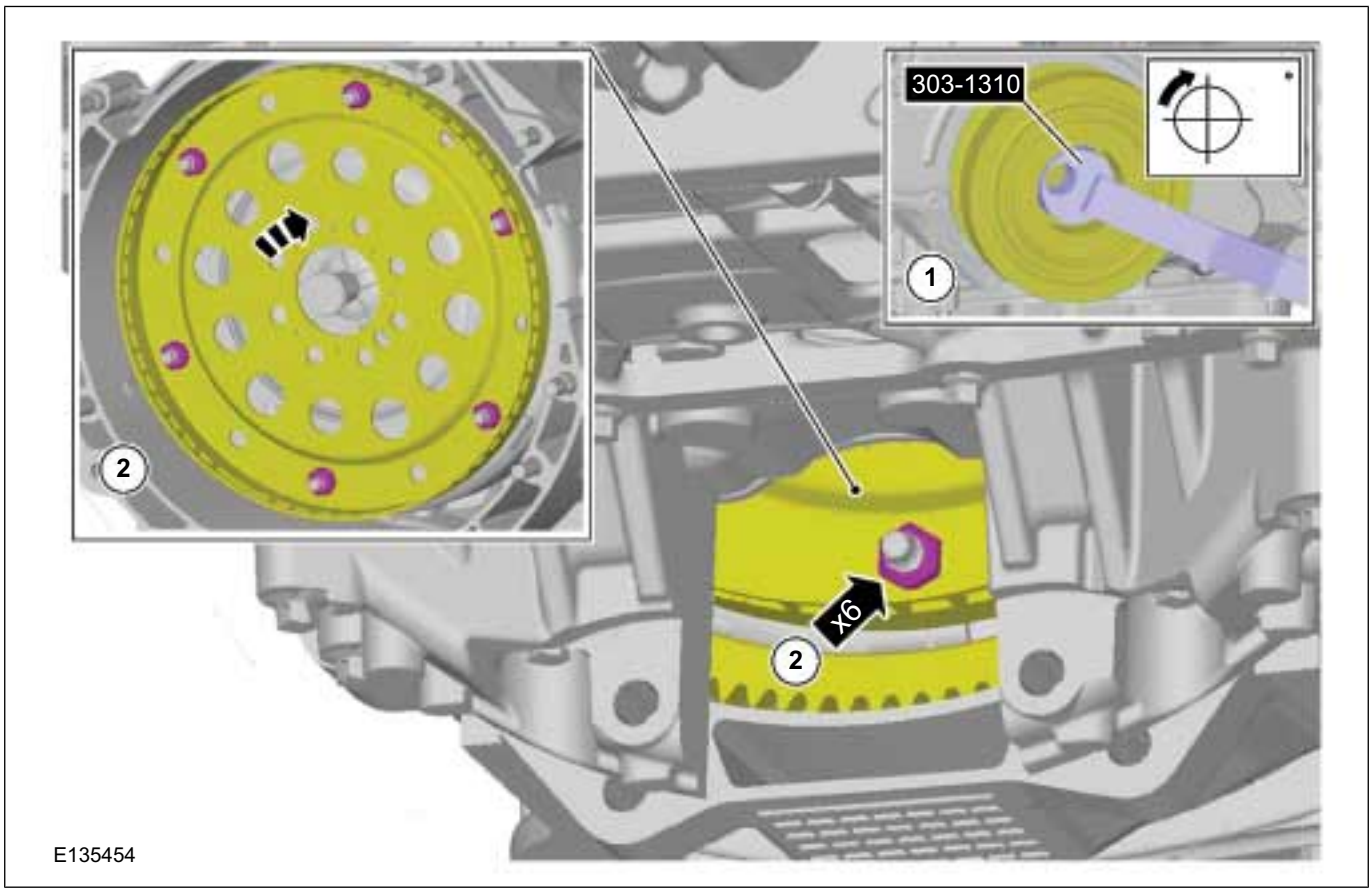

50.

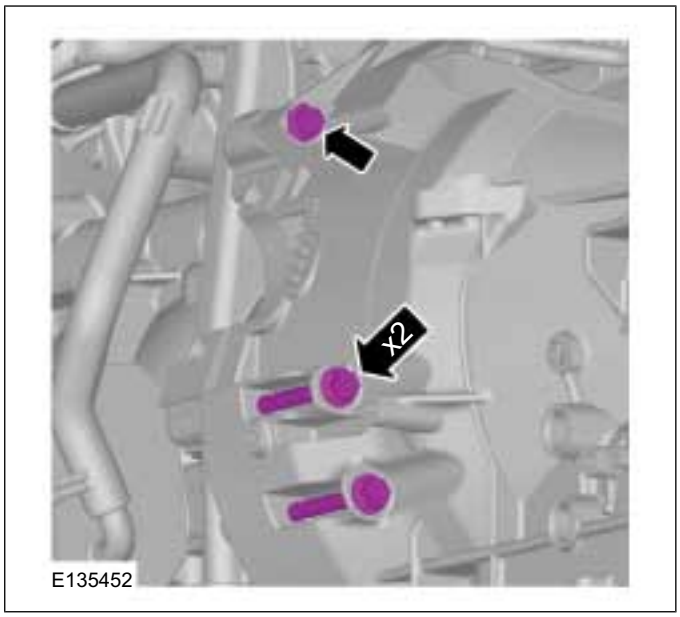

51. On both sides.

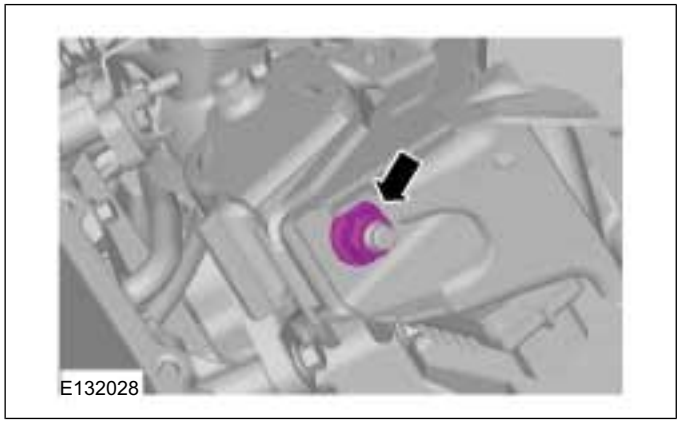

52. Special Tool(s): 303-122

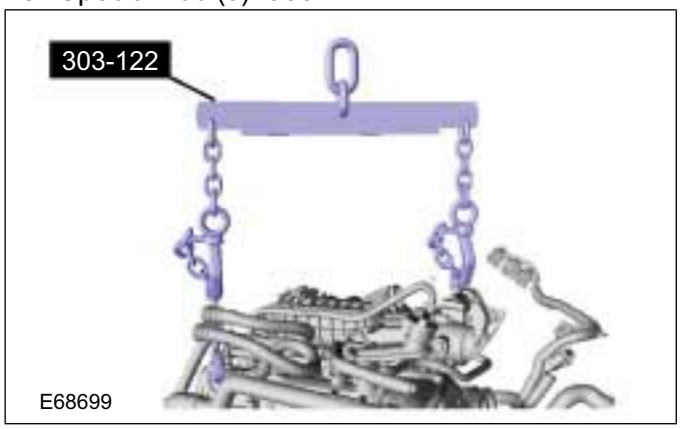

REMOVAL

53.

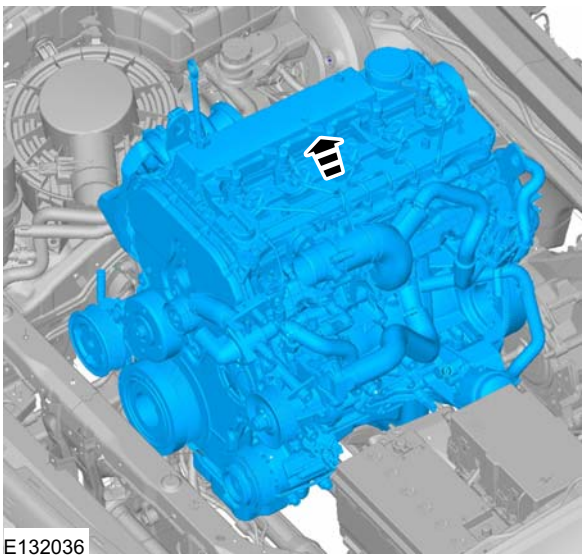
E132036

54.

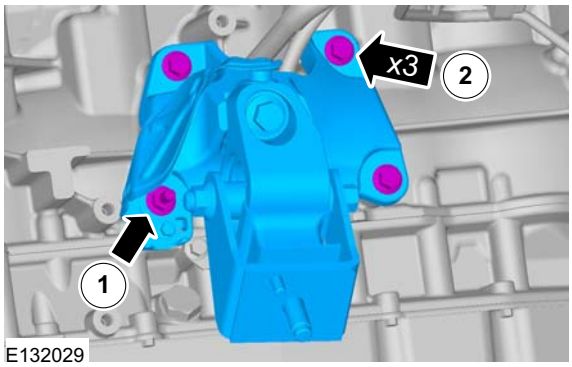

E132029

REMOVAL

Engine Accessories(21 139 4)

Removal

Special Tool(s) / General Equipment

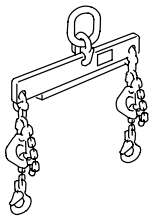 21068A	303-122 Lifting Bracket, Engine
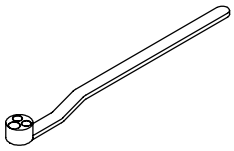 E87614	303-1310 Holding Wrench, Crankshaft
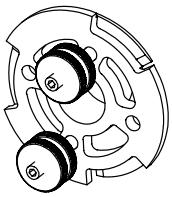 E75376	303-1317 Locking Tool, Fuel Injection Pump Sprocket
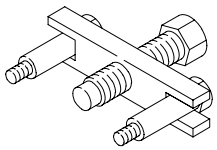 21132	303-249 Remover, Crankshaft Timing Pulley
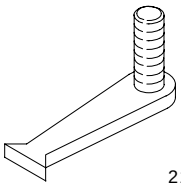 21135	303-254 Locking Tool, Flywheel
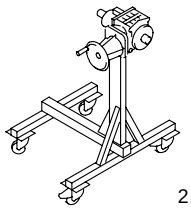 21187	303-435 Mounting Stand

Special Tool(s) / General Equipment

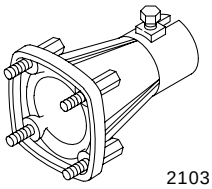 21031B	303-435-06 Mounting Bracket for 303-435
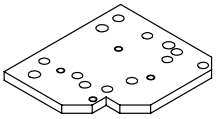 E68386	303-435-11B Mounting Plate for 303-435-06
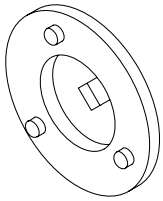 E62024	303-679 Remover/Installer, Engine Front Cover Inspection Plate
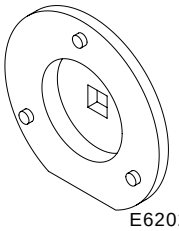 E62024	303-679A Remover/Installer, Engine Front Cover Inspection Plate
1/2 Inch Square Drive Breaker Bar	
Dowel with a Diameter of 6 mm	

1. Install the Special Tool(s): 303-122

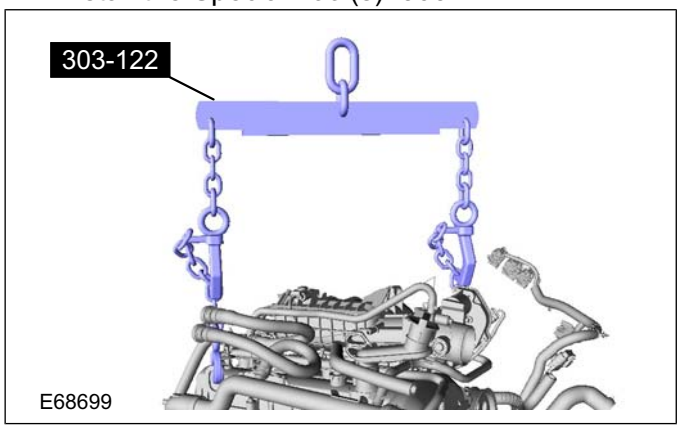

REMOVAL

2.

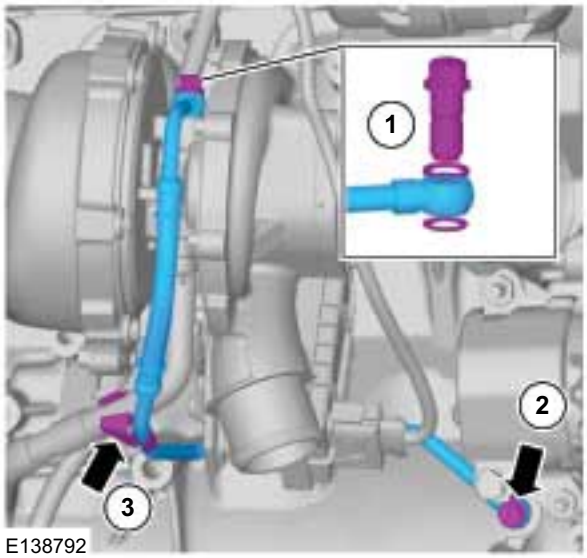

E138792

5.

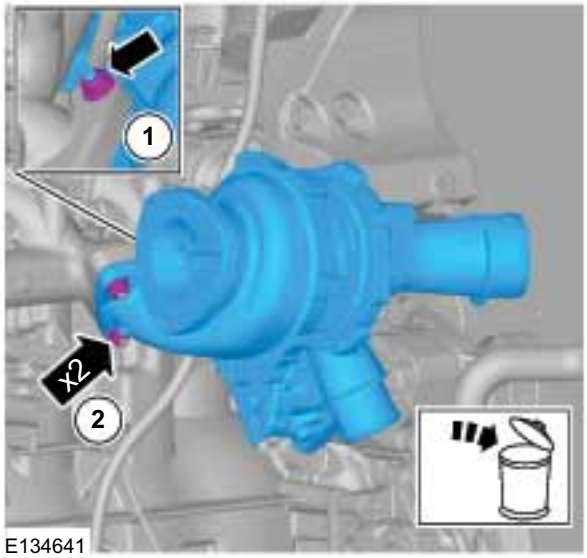

E134641

3.

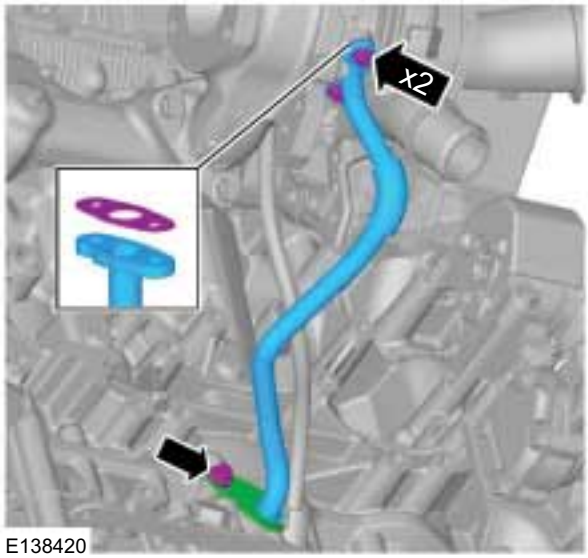

E138420

6.

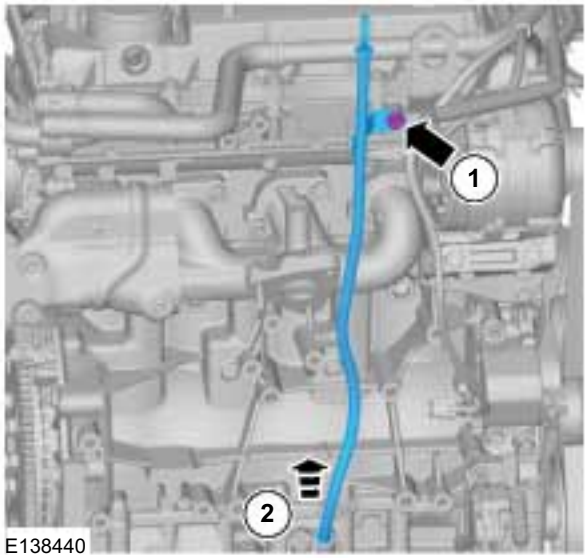

E138440

4.

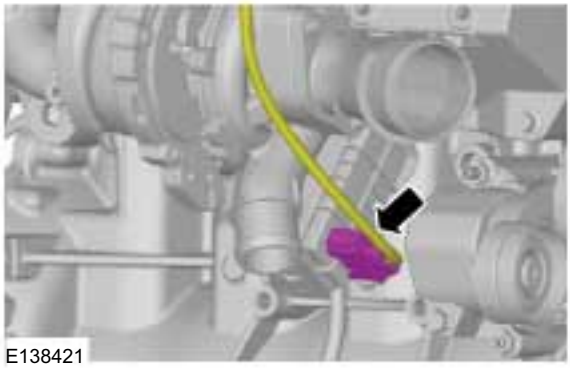
E138421

7. Install the Special Tool(s): 303-435-11B

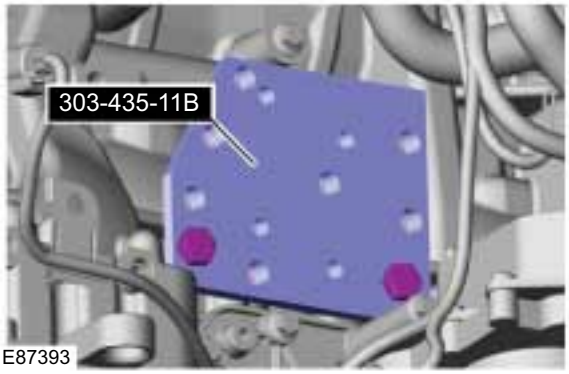

E87393

REMOVAL

8. Install the Special Tool(s): 303-435-06, 303-435

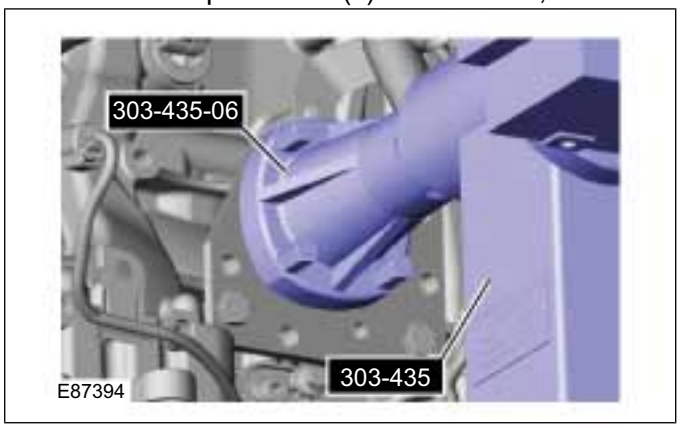

9. Remove the Special Tool(s): 303-122

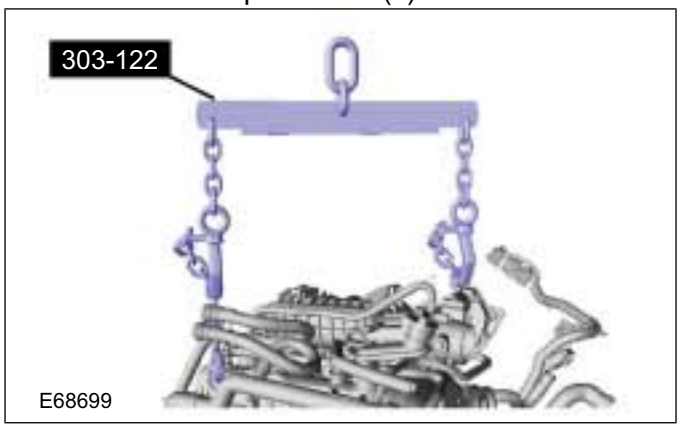

10. General Equipment: 1/2 Inch Square Drive Breaker Bar
General Equipment: Dowel with a Diameter of 6 mm

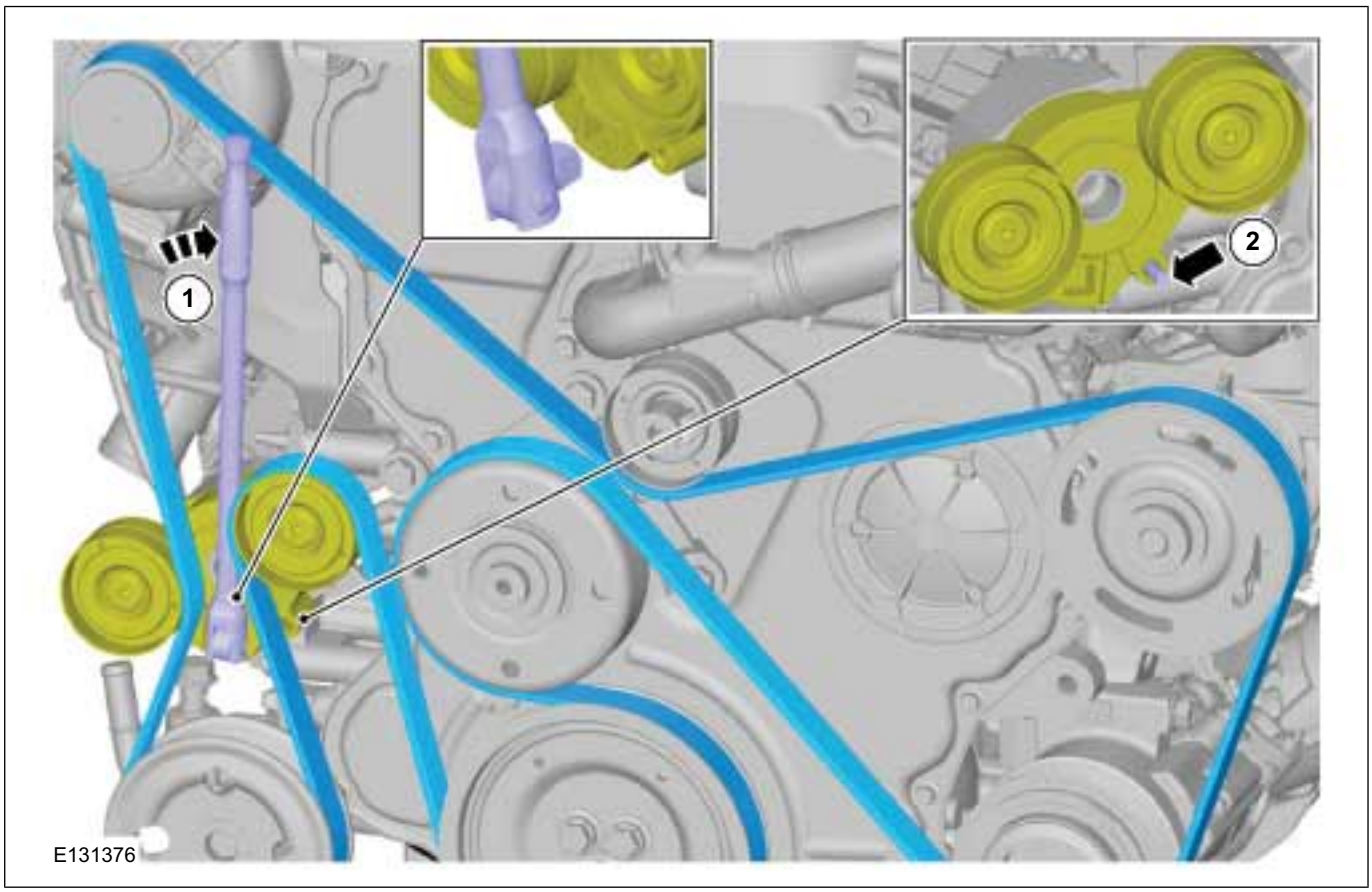

REMOVAL

11. CAUTION: Take extra care not to damage the wiring harnesses.

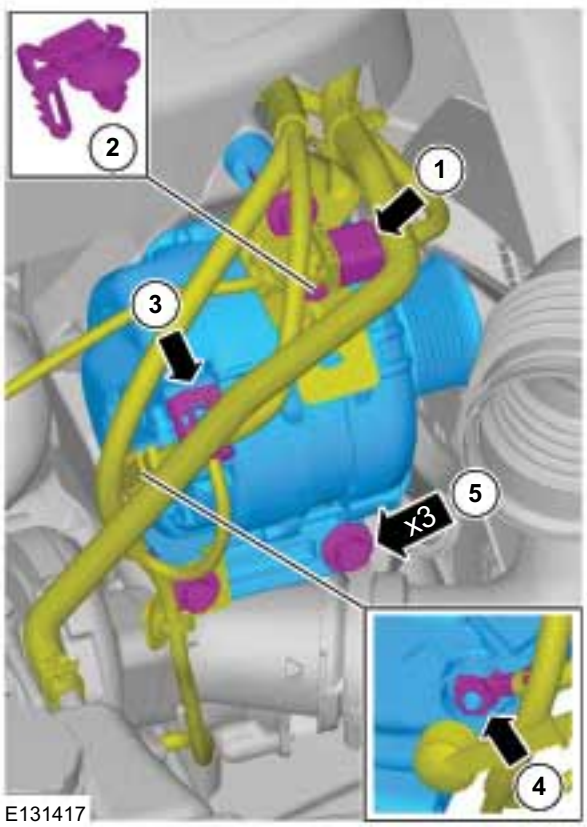

E131417

12.

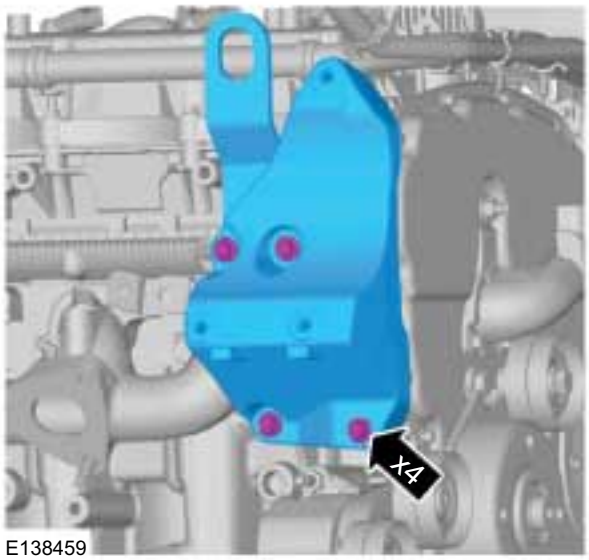

E138459

13.

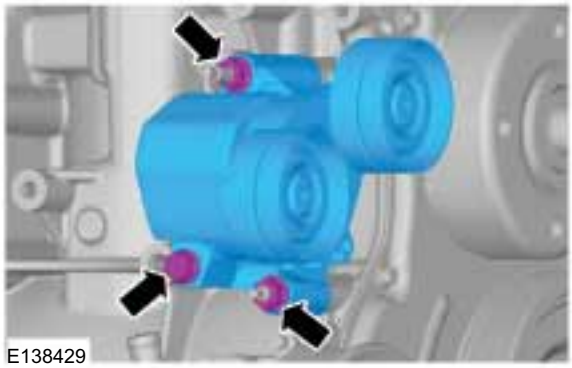
E138429

14.

E138430

15.

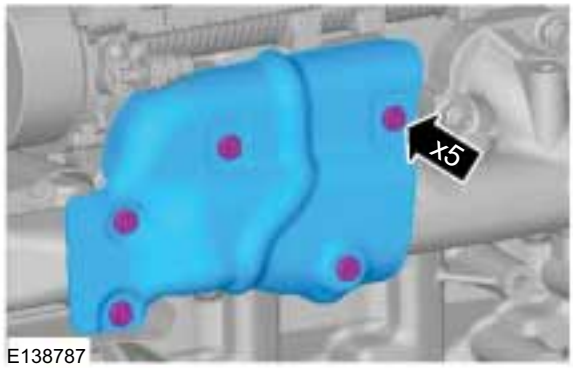

E138787

REMOVAL

16.

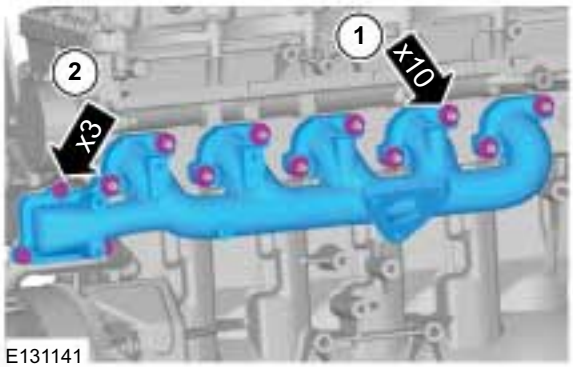

E131141

17. **NOTE:** The gasket is to be reused unless damaged.

NOTE: The studs are to be reused unless damaged.

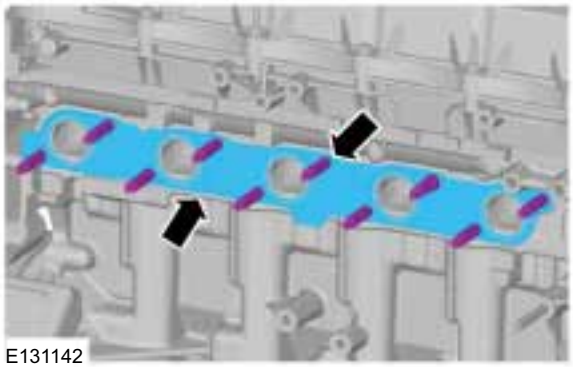
E131142

18.

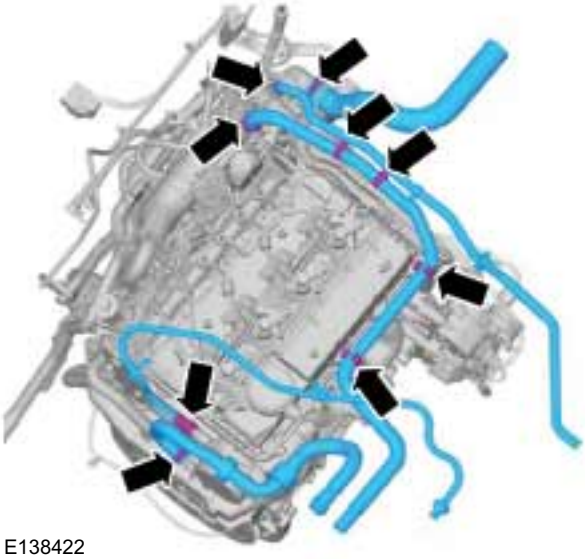
E138422

19.

E135272

20.

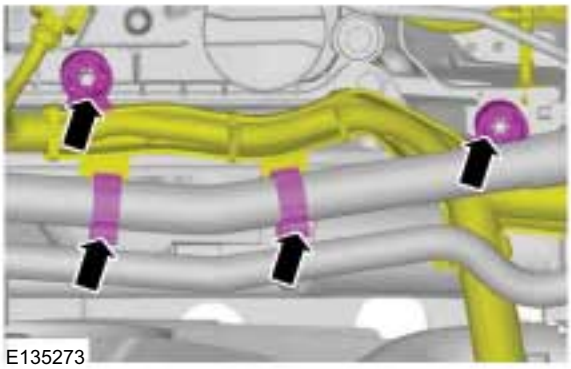
E135273

21.

REMOVAL

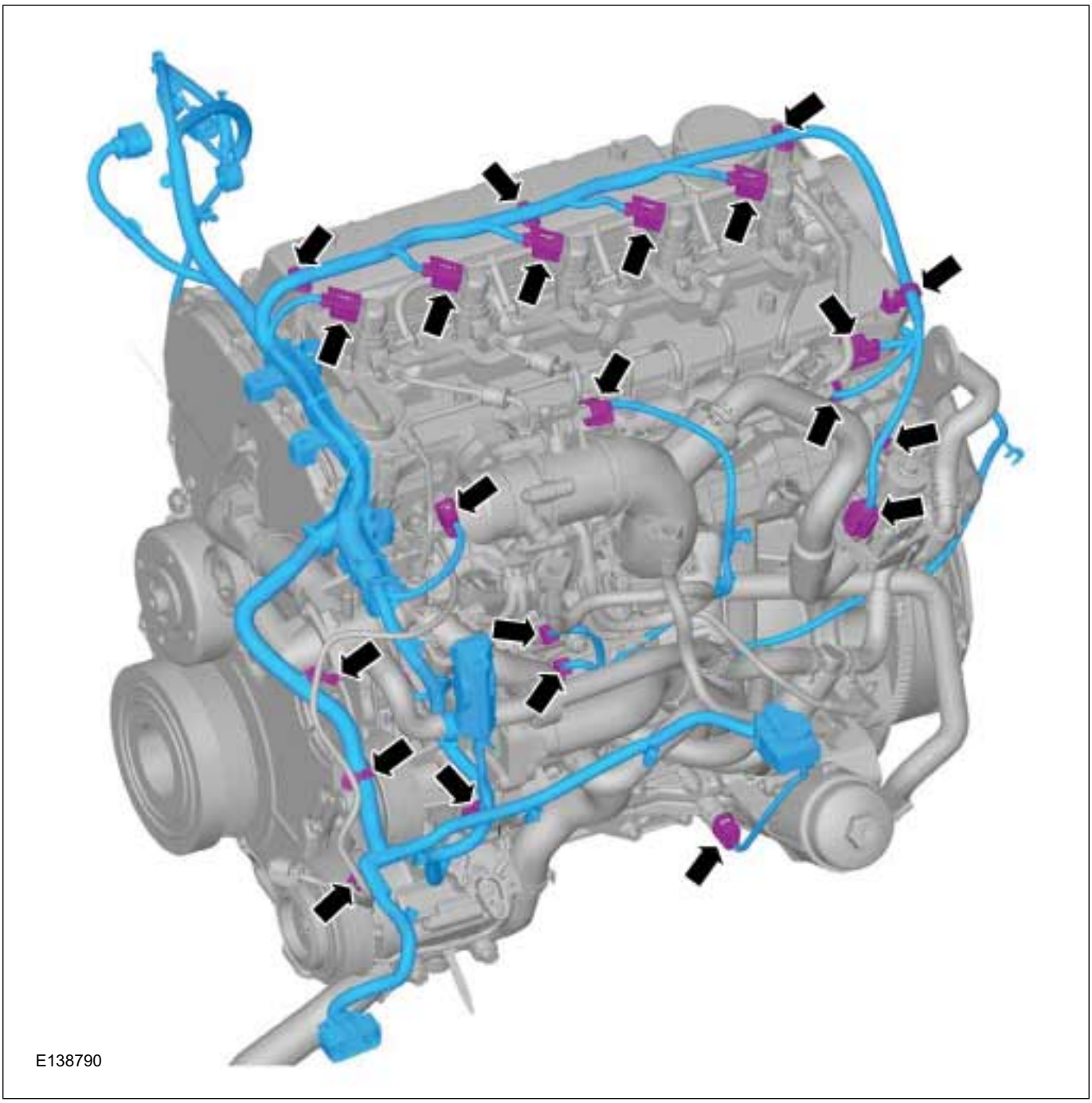

REMOVAL

22.

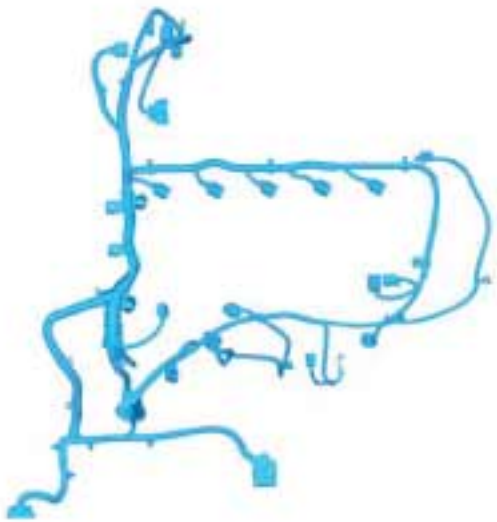
E135428

23.

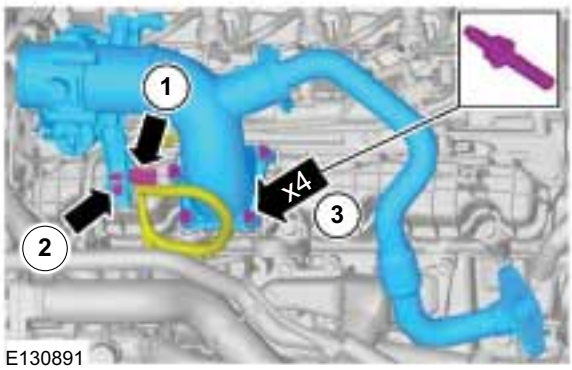

E130891

24.

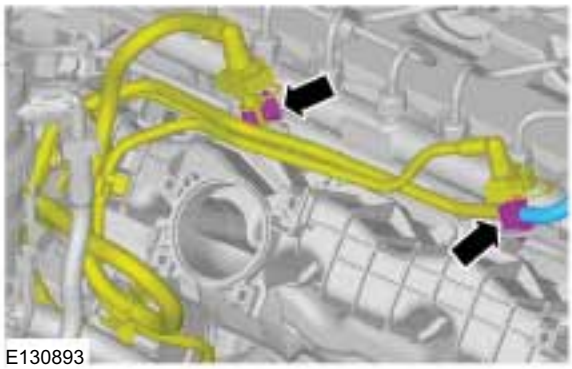
E130893

25. ⚠ **CAUTION: Make sure that all openings are sealed. Use new blanking caps.**

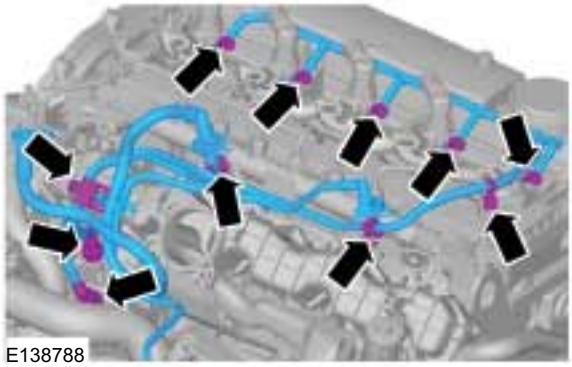
E138788

26.

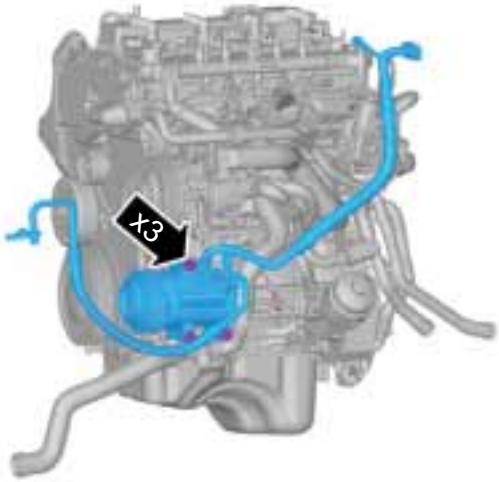

E138424

27.

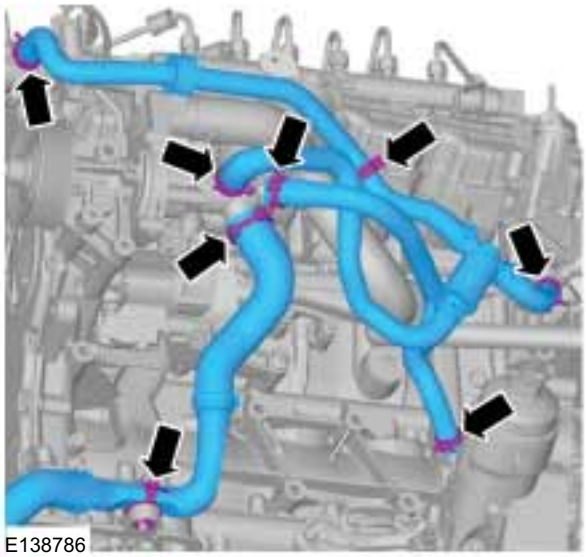
E138786

REMOVAL

28.

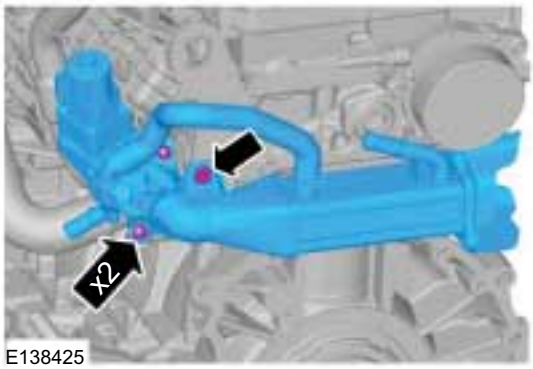

E138425

29.

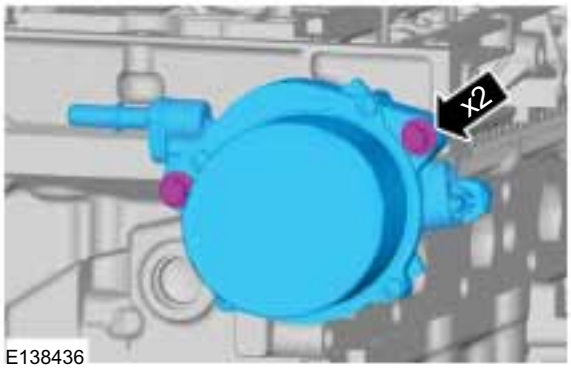

E138436

30.

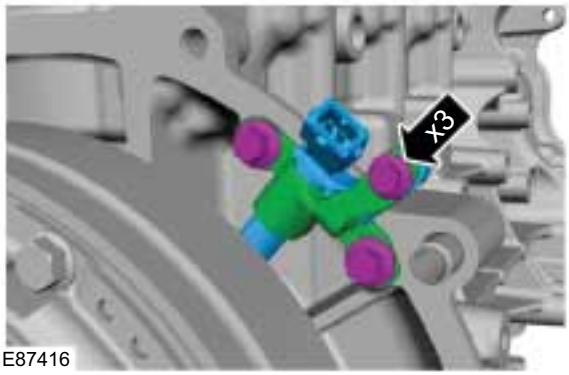

E87416

31. Special Tool(s): 303-254

E133584

32. NOTE: Do not loosen the bolts more than 2 turns.

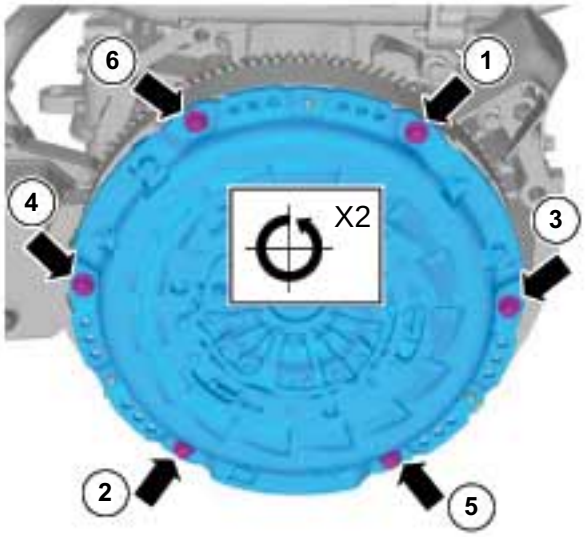

E129960

REMOVAL

33. Special Tool(s): 303-254

E131391

34.

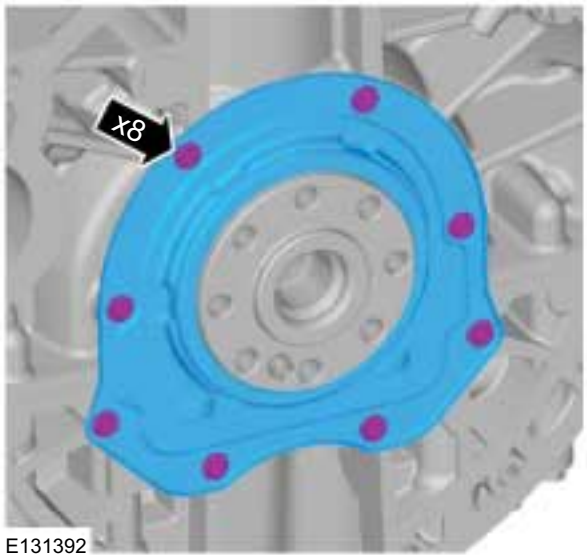

E131392

35.

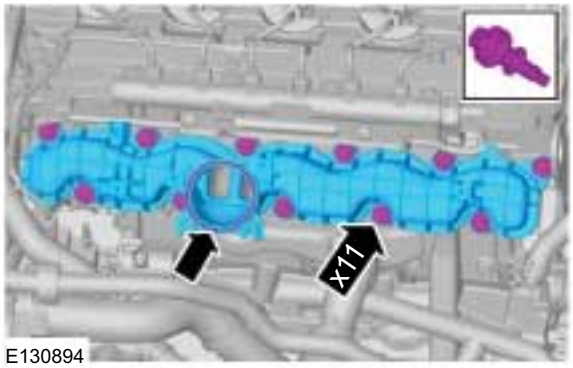

E130894

36.

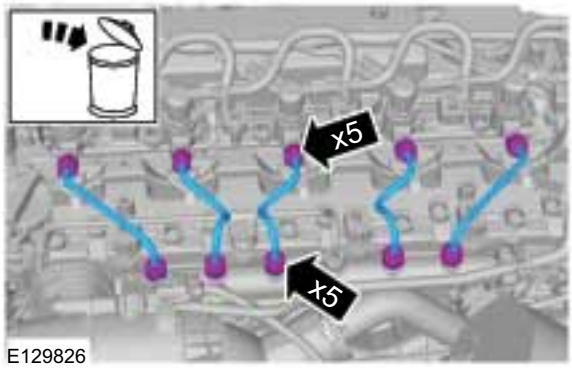

E129826

37. CAUTIONS:

- **Make sure that the fuel line remains in contact at both ends until both unions nuts have been unscrewed and the area around the joints thoroughly cleaned.**
- **Make sure that the high-pressure fuel supply line remains in contact with both the fuel pump and the fuel rail until both unions have been detached and cleaned.**
- **Make sure that all openings are sealed. Use new blanking caps.**

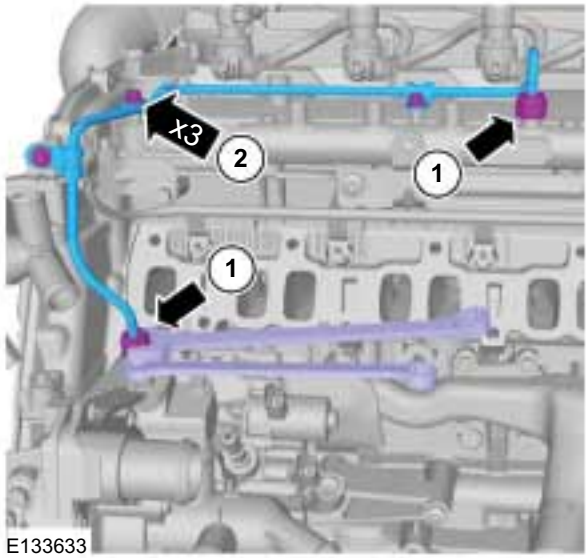

E133633

REMOVAL

38.

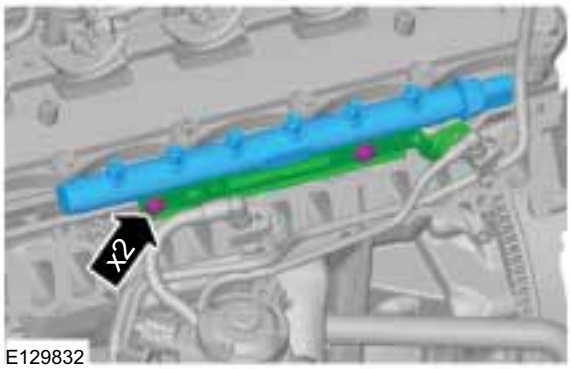

E129832

39.

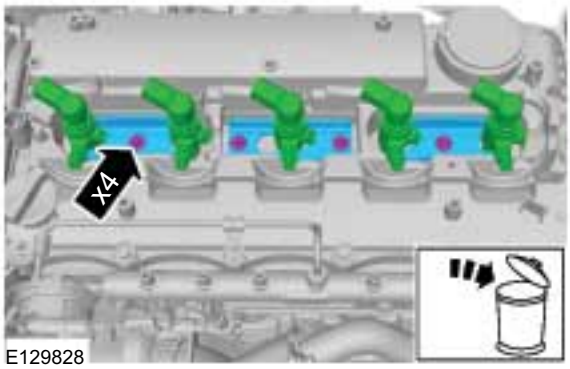

E129828

40.

E129584

41.

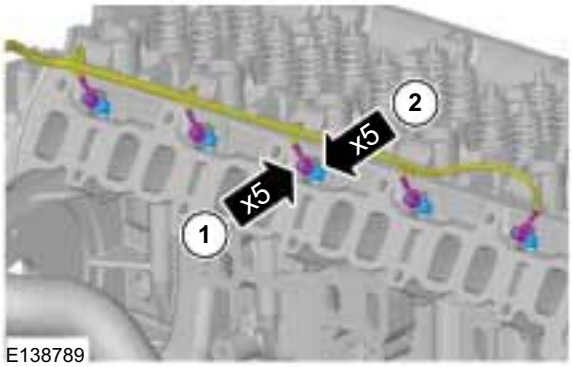

E138789

42.

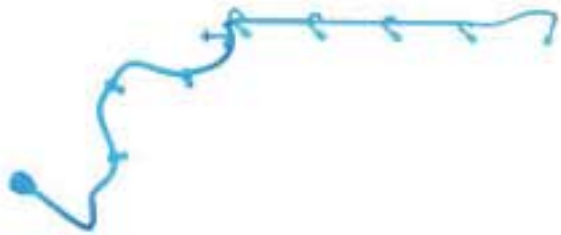
E135430

43.

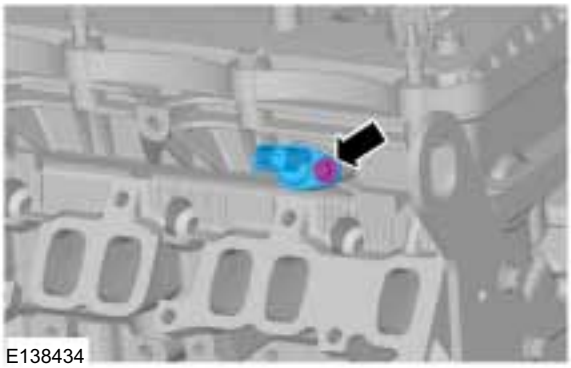
E138434

REMOVAL

44. Special Tool(s): 303-679

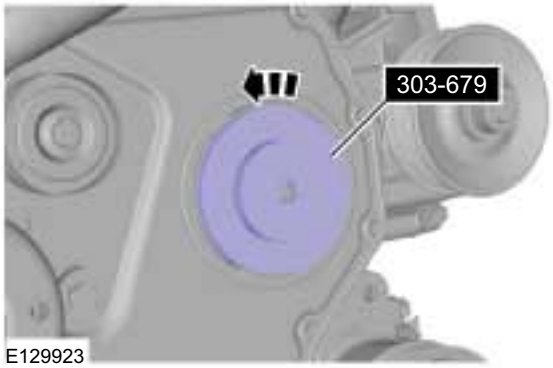

E129923

45.

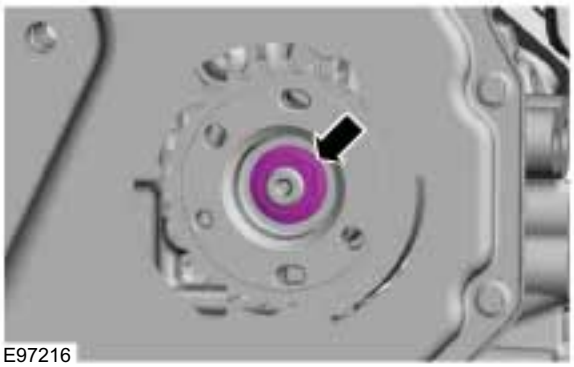
E97216

46. Special Tool(s): 303-1317

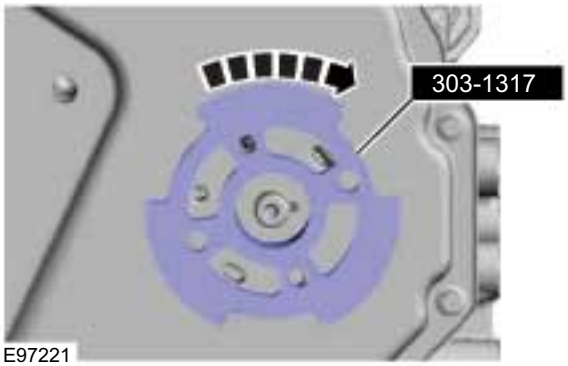

E97221

47.

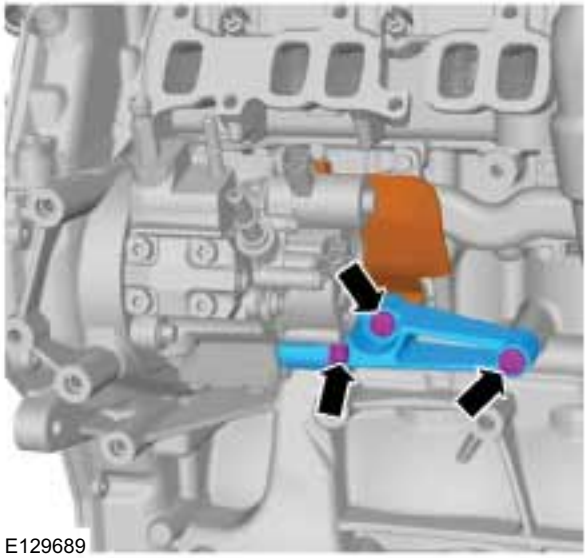
E129689

48. Special Tool(s): 303-1317, 303-249

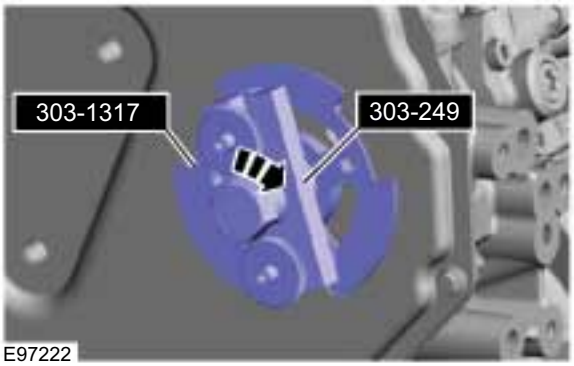

E97222

49.

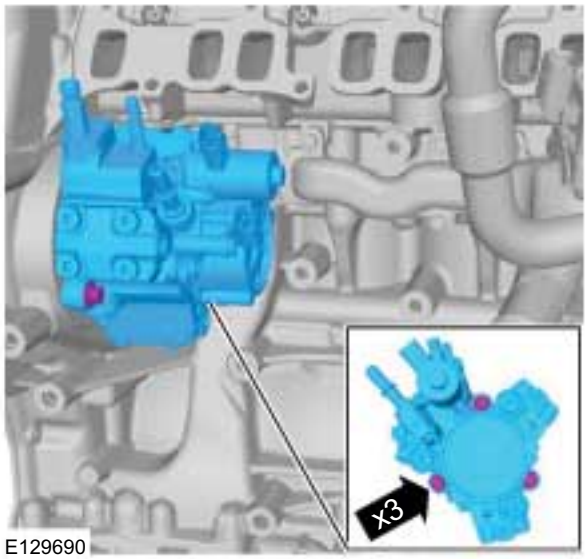

E129690

REMOVAL

50.

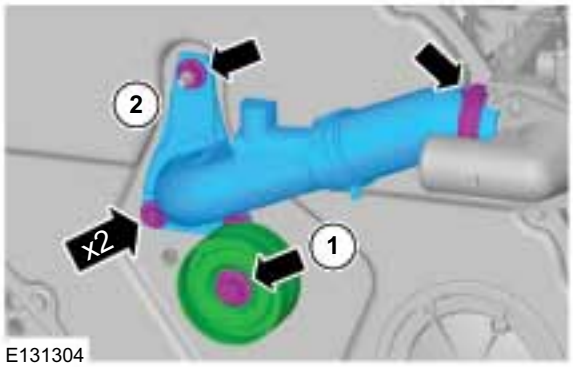

E131304

51.

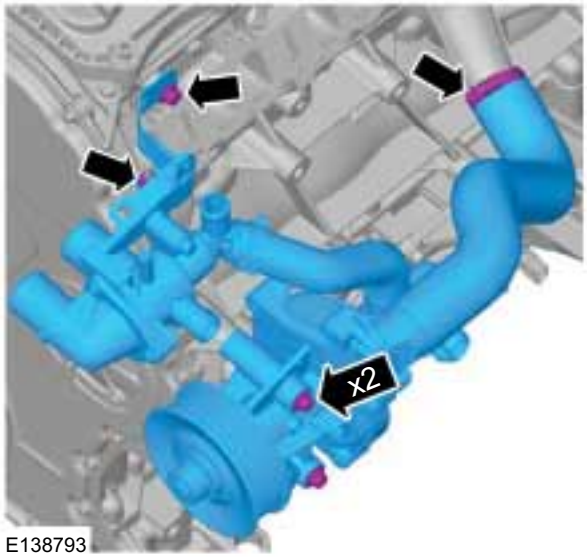

E138793

52.

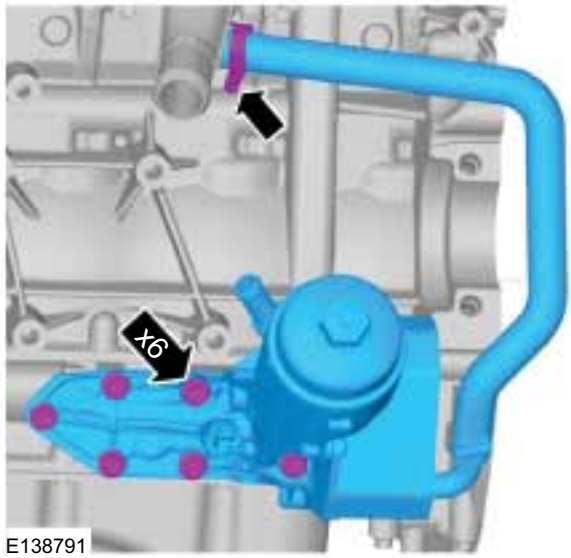

E138791

53.

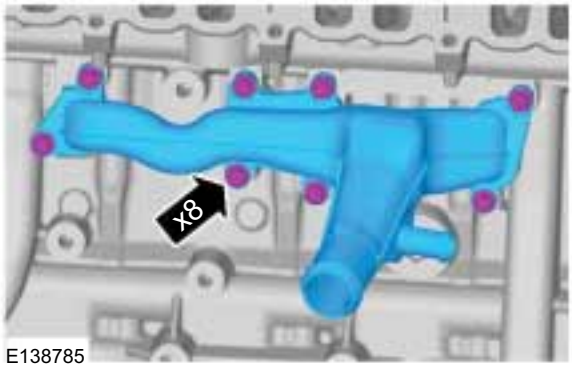

E138785

54.

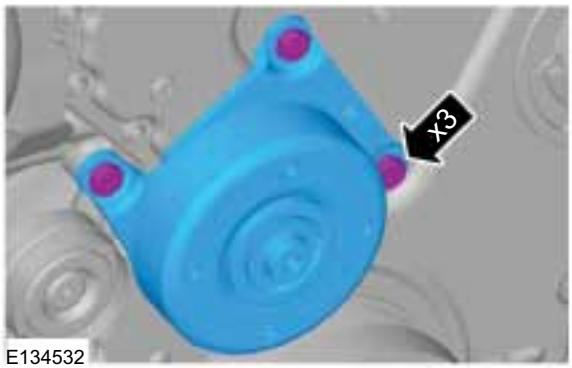

E134532

55. Special Tool(s): 303-1310

REMOVAL

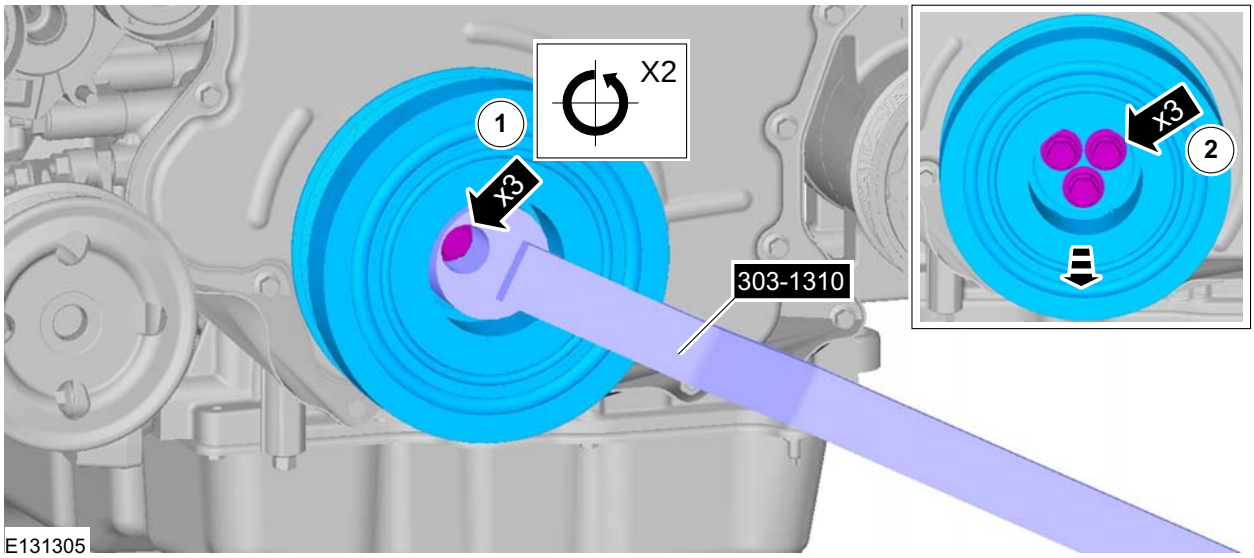

56. Special Tool(s): 303-679A

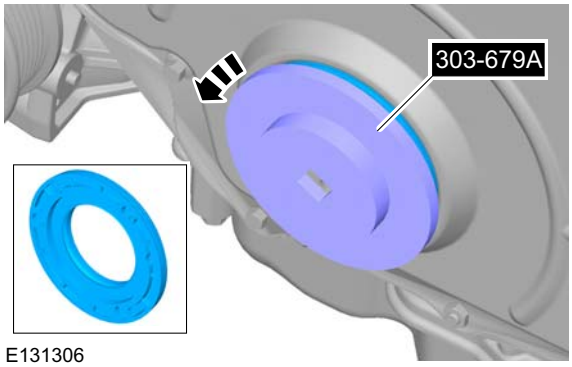

DISASSEMBLY

Engine(21 134 8)

Disassembly

Special Tool(s) / General Equipment

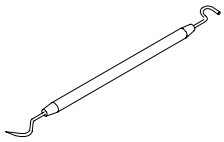 17063	100-010 Remover, O-Ring Seal
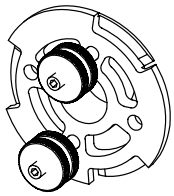 E75376	303-1317 Locking Tool, Fuel Injection Pump Sprocket
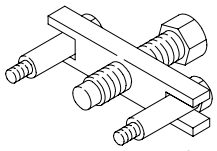 21132	303-249 Remover, Crankshaft Timing Pulley
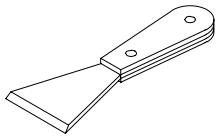 21179	303-428 Separator, Oil Pan
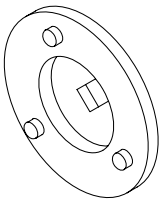 303679	303-679 Remover/Installer, Engine Front Cover Inspection Plate
2 mm Punch	

1. Torque: 23 Nm

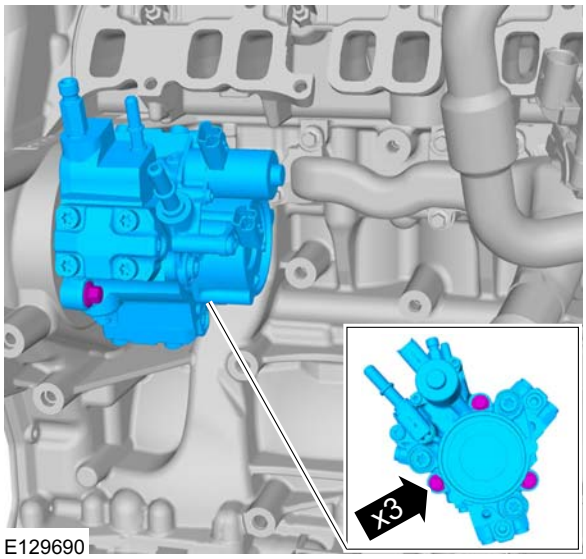

E129690

2. **NOTE:** Make sure that a new component is installed.

   Torque: 45 Nm

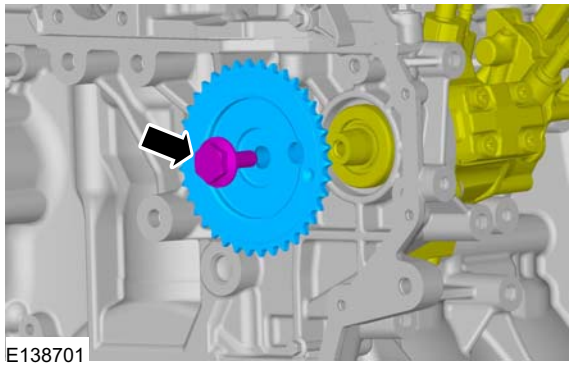
E138701

DISASSEMBLY

3. Torque: 22 Nm

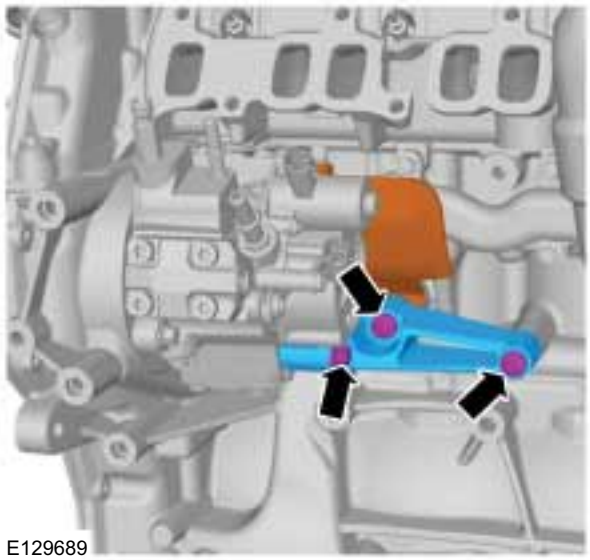

4. Remove the Special Tool(s): 303-1317, 303-249

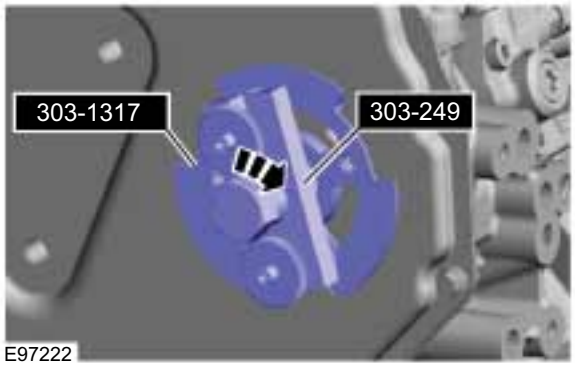

5. Remove the Special Tool(s): 303-1317

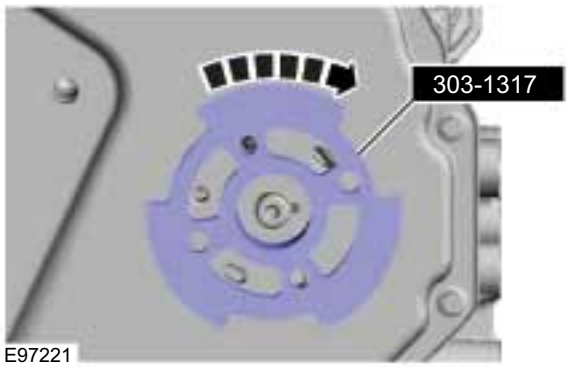

6. Remove the Special Tool(s): 303-679

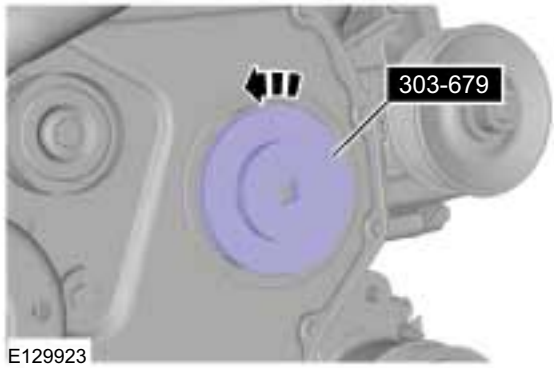

7.

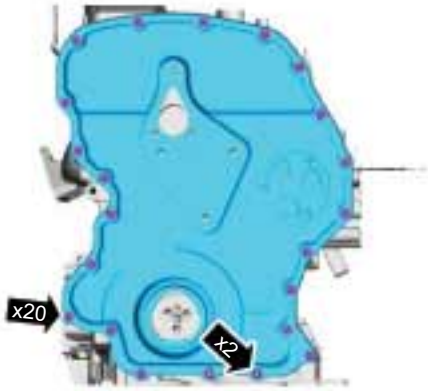

8. Special Tool(s): 303-428

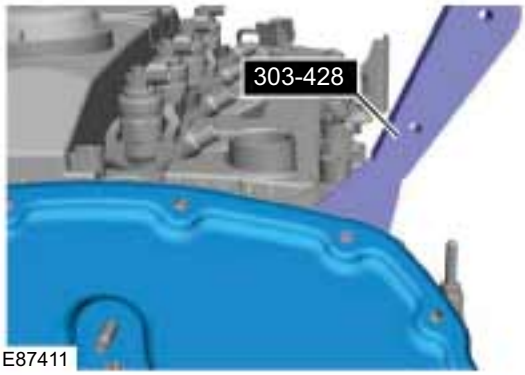

DISASSEMBLY

9.

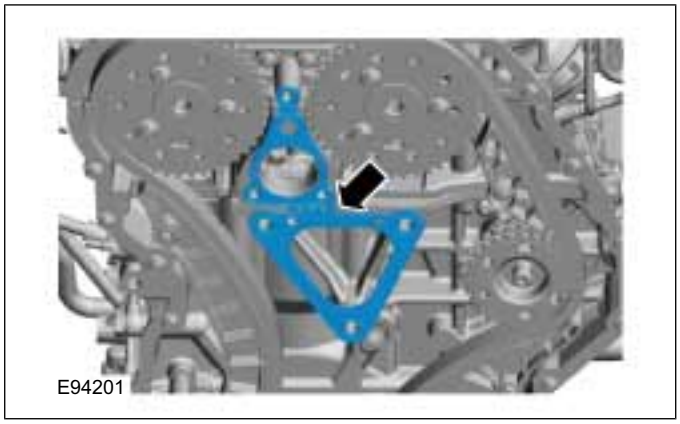

10. Special Tool(s): 100-010
General Equipment: 2 mm Punch

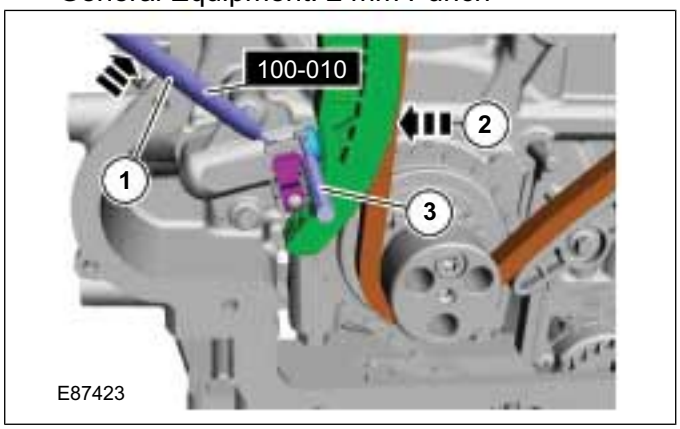

11. Remove and discard the timing chain tensioner.
General Equipment: 2 mm Punch

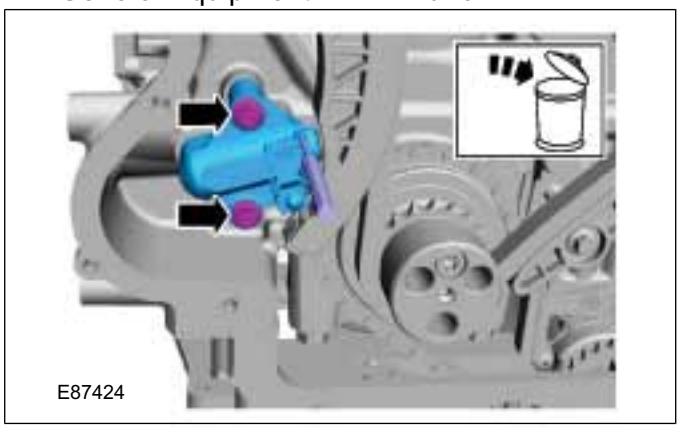

12.

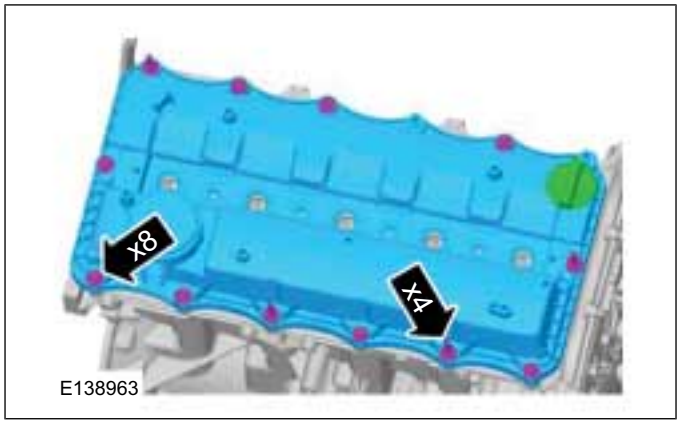

13. NOTE: The gasket is to be reused unless damaged.

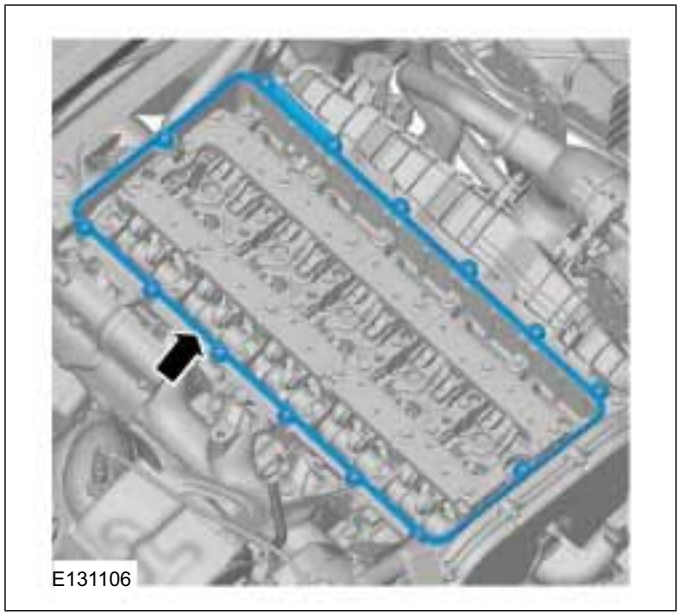

14.

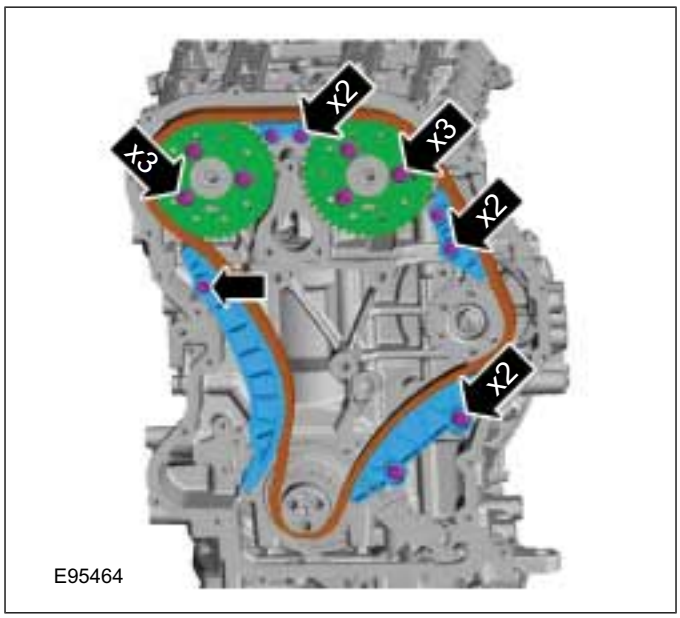

DISASSEMBLY

15.

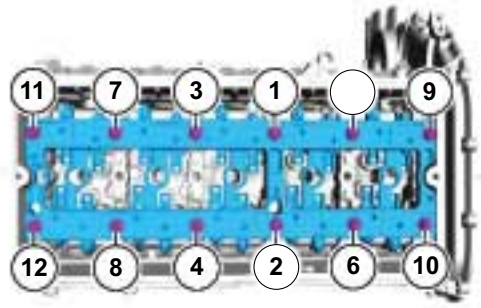

E94096

16.

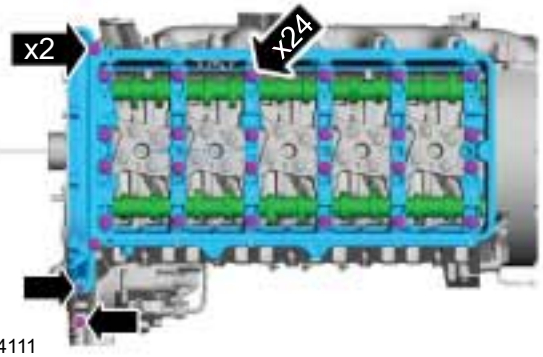

E94111

17.

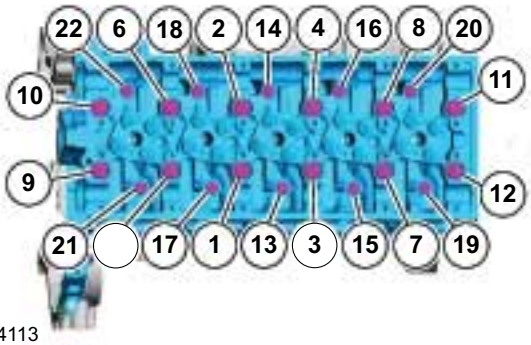

E94113

18. ⚠ **WARNING: Be prepared to collect escaping fluid.**

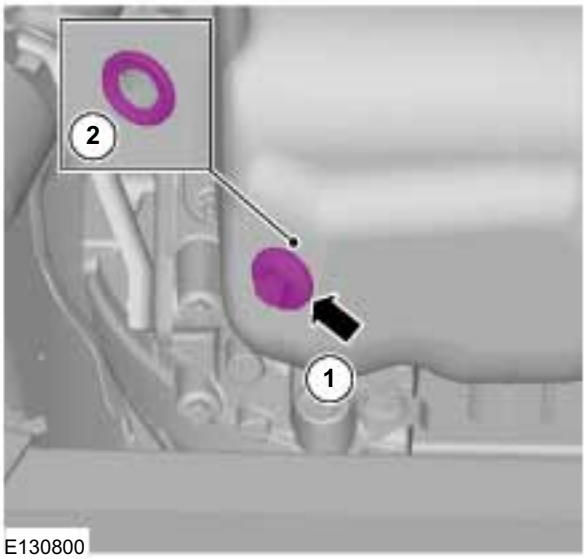

E130800

19. Special Tool(s): 303-428

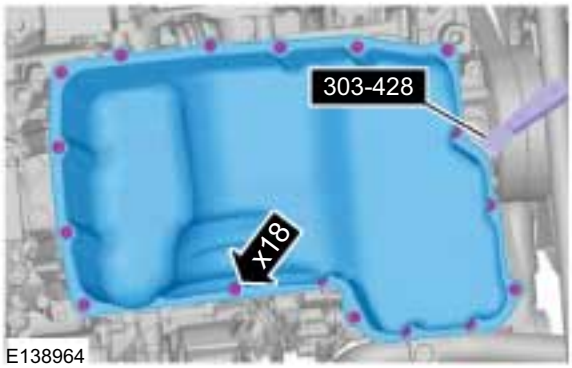

E138964

20.

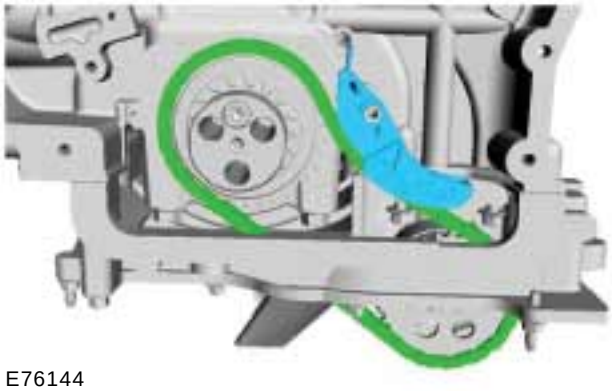
E76144

DISASSEMBLY

21.

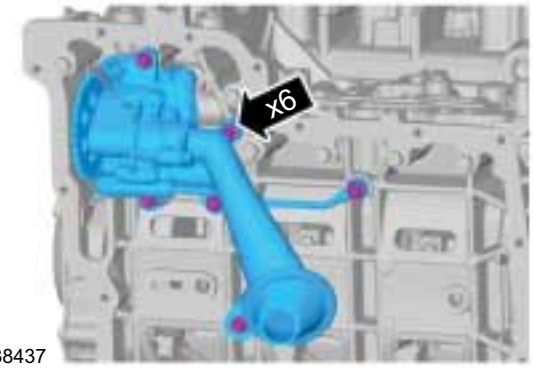

E138437

22.

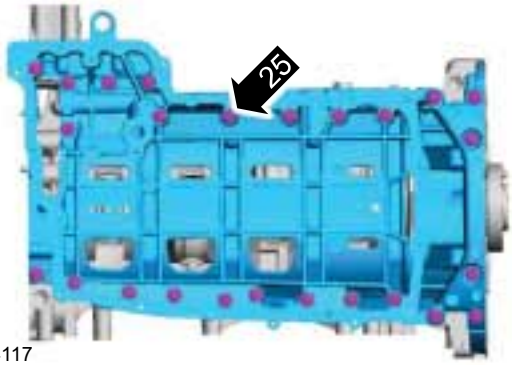

E94117

23.

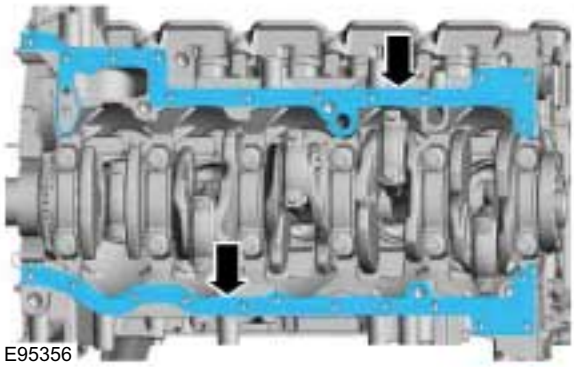
E95356

24. **NOTE:** Note the position of each component before removal.

E94118

25. **NOTE:** Note the position of each component before removal.

E94157

26. **NOTE:** Note the position of each component before removal.

E94158

DISASSEMBLY

27. **NOTE:** Note the position of each component before removal.

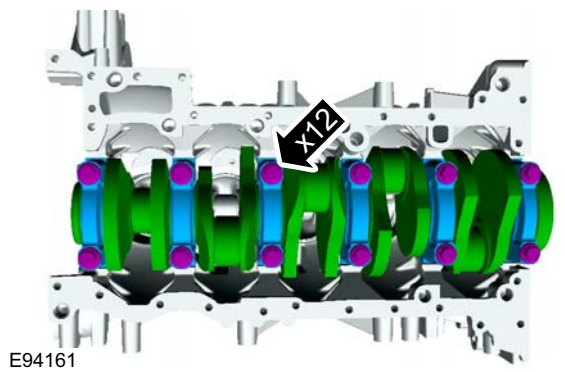

E94161

28. **NOTE:** Note the position of each component before removal.

E94173

29. **NOTE:** Note the position of each component before removal.

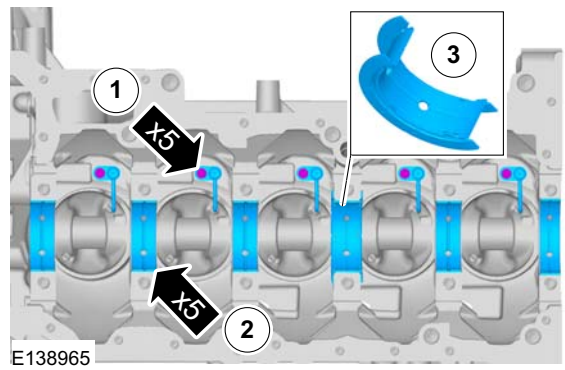

E138965

DISASSEMBLY AND ASSEMBLY OF SUBASSEMBLIES

Cylinder Head(21 165 6)

Disassembly

1. **For additional information, refer to: Valves (303-01 Engine - 3.2L Duratorq-TDCi (148kW/200PS) - Puma, Removal and Installation).**
2. **Torque : 13Nm**

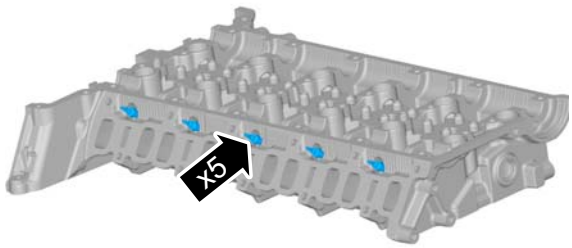

E138395

3. **Torque : 23Nm**

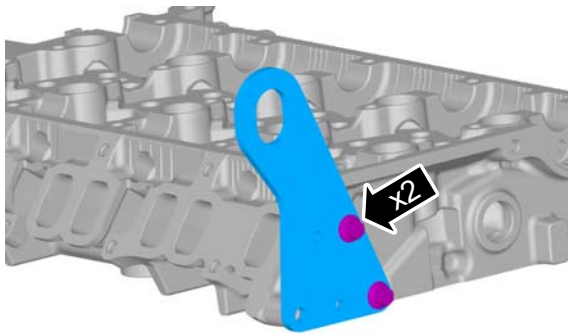

E138008

Assembly

1. **To assemble, reverse the disassembly procedure.**

ASSEMBLY

Engine(21 134 8)

Assembly

Special Tool(s) / General Equipment

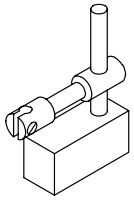 15008	205-044 Holding Fixture, Dial Indicator Gauge
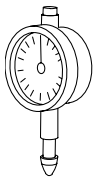 15046	205-069 Dial Indicator Gauge (Metric)
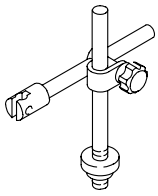 15022A	205-070 Holding Fixture, Dial Indicator Gauge
E131853	303-1562 Timing Tool
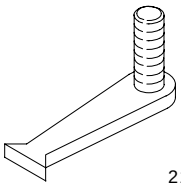 21135	303-254 Locking Tool, Flywheel
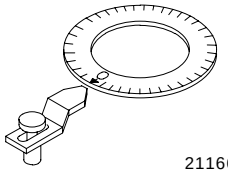 21166	303-391 Setting Gauge, Crankshaft

Special Tool(s) / General Equipment

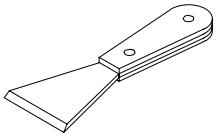 21179	303-428 Separator, Oil Pan
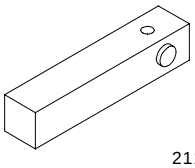 21183	303-432 Holding Fixture, Dial Indicator Gauge (Cylinder Liner Protrusion)
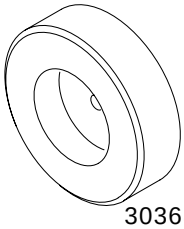 303682	303-682 Aligner, Engine Front Cover
6 mm Drill Bit	
Piston Ring Compressor	
Round-Ended Steel Rule	

Materials

Name	Specification
Engine Oil - 5W-30	WSS-M2C913-C
Silicone Sealant LB	WSE-M4G323-A4 / 2U7J-M4G323-AA

ASSEMBLY

1. **NOTE:** Make sure that these components are installed to the noted removal position.

   Material: Engine Oil - 5W-30 (WSS-M2C913-C) engine oil
   Torque: 10 Nm

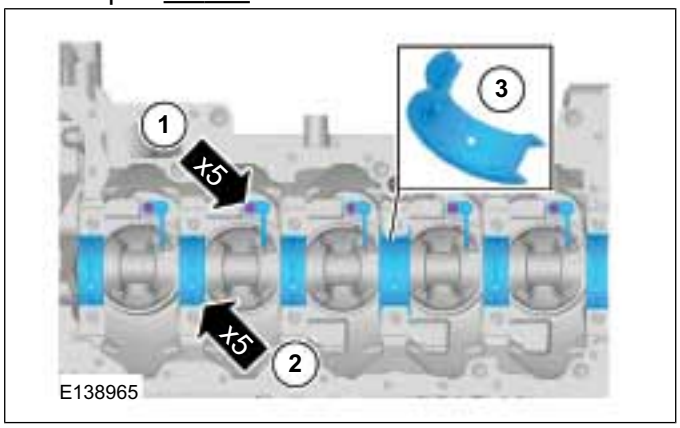

2. **NOTE:** Make sure that these components are installed to the noted removal position.

   Material: Engine Oil - 5W-30 (WSS-M2C913-C) engine oil

3. **NOTE:** Make sure that these components are installed to the noted removal position.

   NOTE: Install all the bolts finger tight before final tightening.

   Torque:
   - Stage 1: 15 Nm
   - Stage 2: 20 Nm
   - Stage 3: 35 Nm
   - Stage 4: 80 Nm
   - Stage 5: 90°

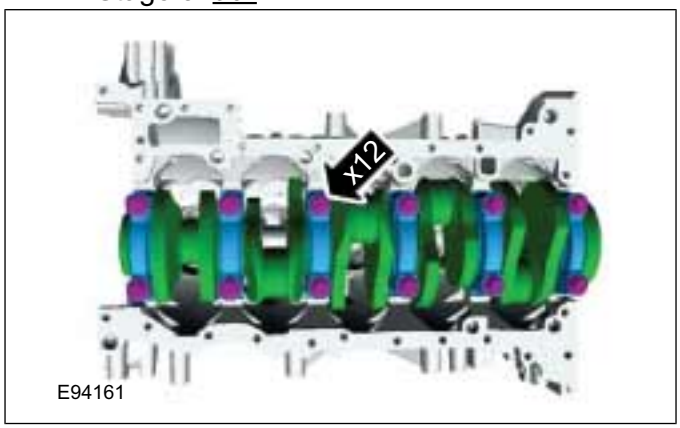

4. **NOTE:** Make sure that these components are installed to the noted removal position.

   General Equipment: Piston Ring Compressor
   Material: Engine Oil - 5W-30 (WSS-M2C913-C) engine oil

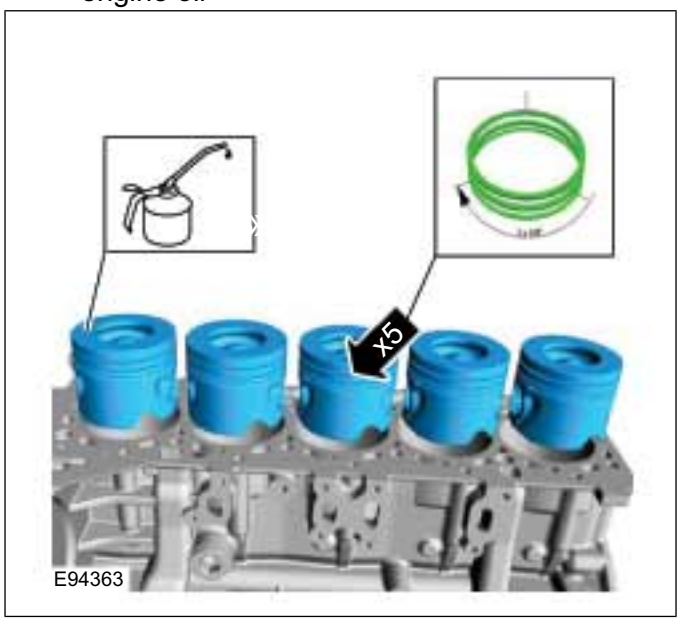

ASSEMBLY

5. **NOTE:** Make sure that these components are installed to the noted removal position.

   Material: Engine Oil - 5W-30 (WSS-M2C913-C) engine oil

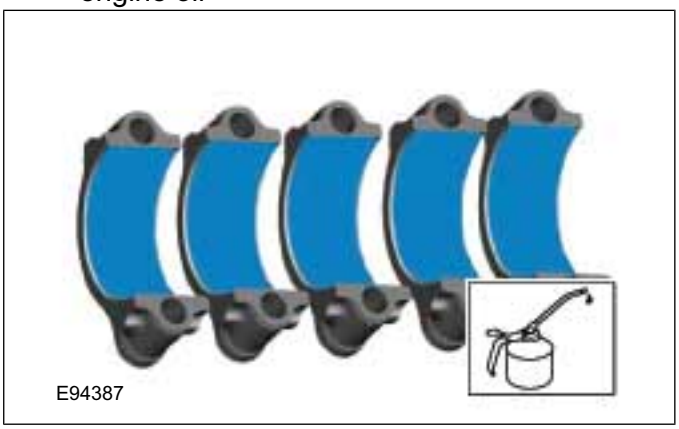
E94387

6. **NOTE:** Make sure that these components are installed to the noted removal position.

   NOTE: Install all the bolts finger tight before final tightening.

   Torque:
   - Stage 1: 25 Nm
   - Stage 2: 60 Nm
   - Stage 3: 90°

E94118

7.

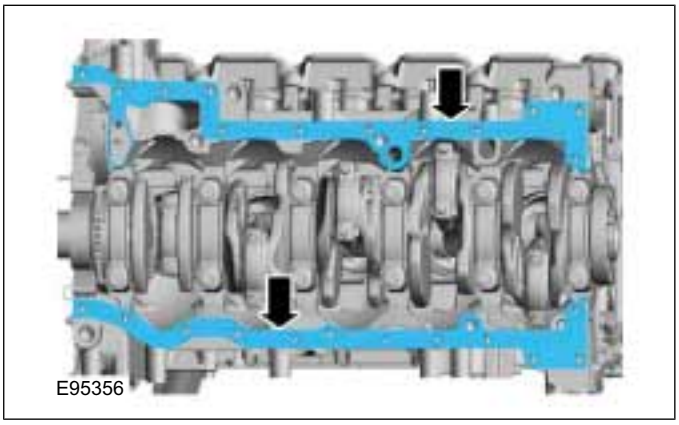
E95356

8. **NOTE:** Only tighten the bolts finger tight at this stage.

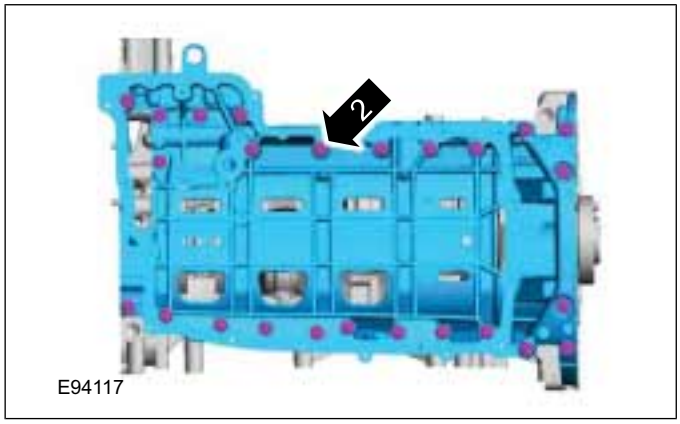

E94117

9. The ladder frame and the cylinder block must be aligned so that the side clearance does not exceed 0.05 mm overlap to 0.05 mm gap.

   Special Tool(s): 303-432

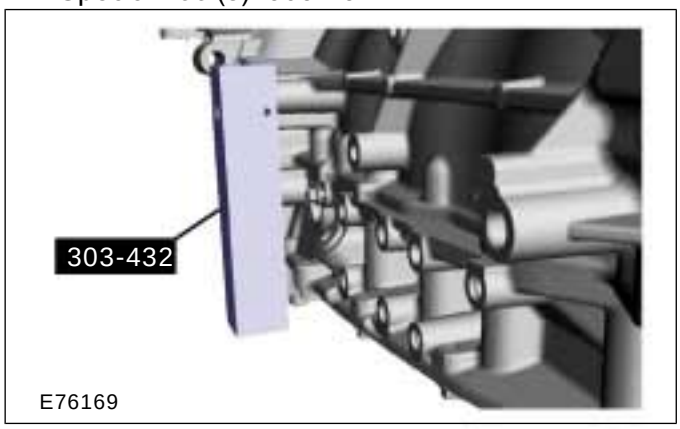

E76169

10. The ladder frame and the cylinder block must be aligned so that the rear clearance does not exceed 0.01 mm overlap to 0.2 mm gap.

    General Equipment: Round-Ended Steel Rule

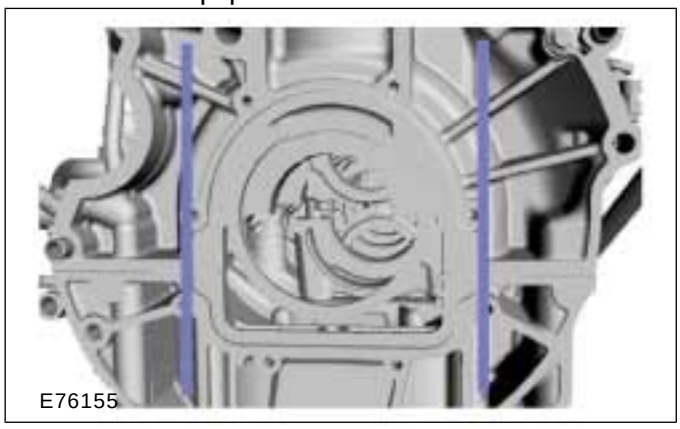
E76155

ASSEMBLY

11. Torque: 23 Nm

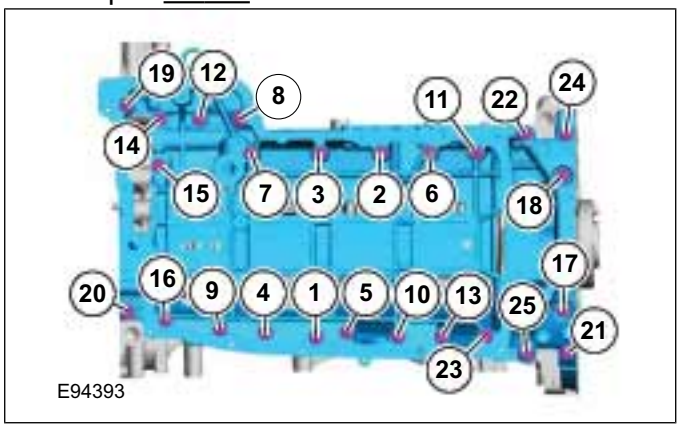

12. NOTE: Only tighten the bolts finger tight at this stage.

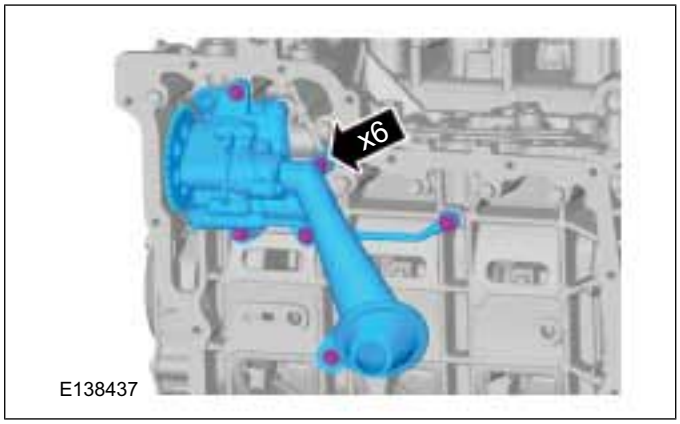

13. Take a reference measurement from the front face of the crankshaft sprocket.

Special Tool(s): 205-044, 205-069

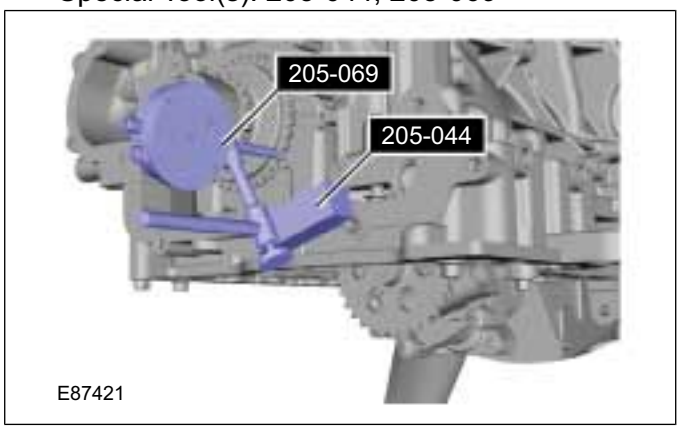

14. Take measurements at two different points on the oil pump sprocket and align the oil pump sprocket.

Special Tool(s): 205-044, 205-069

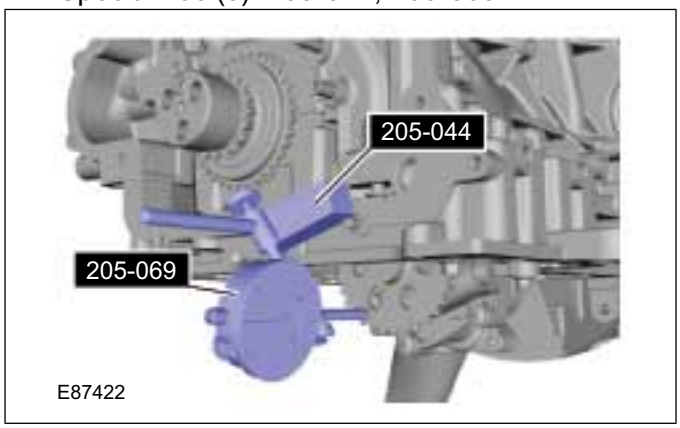

15. Torque: 10 Nm

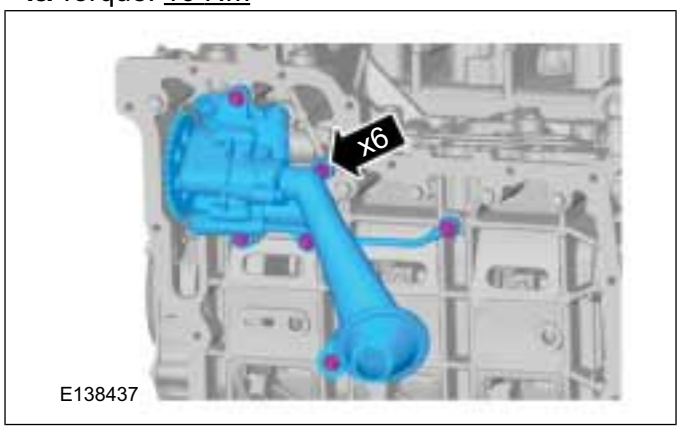

16.

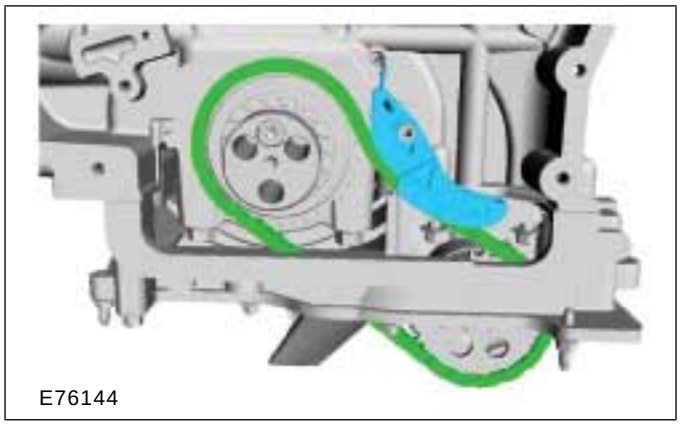

17. NOTE: A new crankshaft rear seal carrier is supplied with an alignment sleeve that must not be removed until the crankshaft rear seal is fully

ASSEMBLY

installed. Failure to follow this instruction may result in damage to the vehicle.

- Clean the area on the engine before installing a new crankshaft rear seal carrier.
- Check the two foam pads are located as shown on the ladder frame gasket.

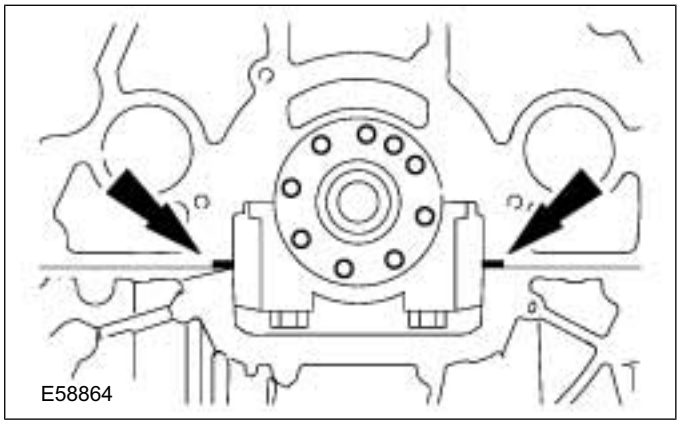

18. Material: Engine Oil - 5W-30 (WSS-M2C913-C) engine oil

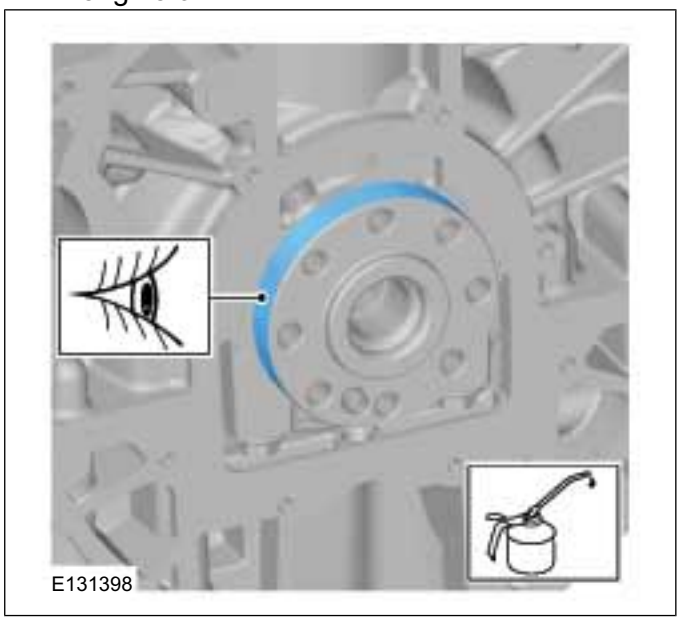

19. **NOTE:** Install the new crankshaft rear seal carrier within five minutes of applying the recommended sealant.

Material: Silicone Sealant LB (WSE-M4G323-A4 / 2U7J-M4G323-AA) sealant

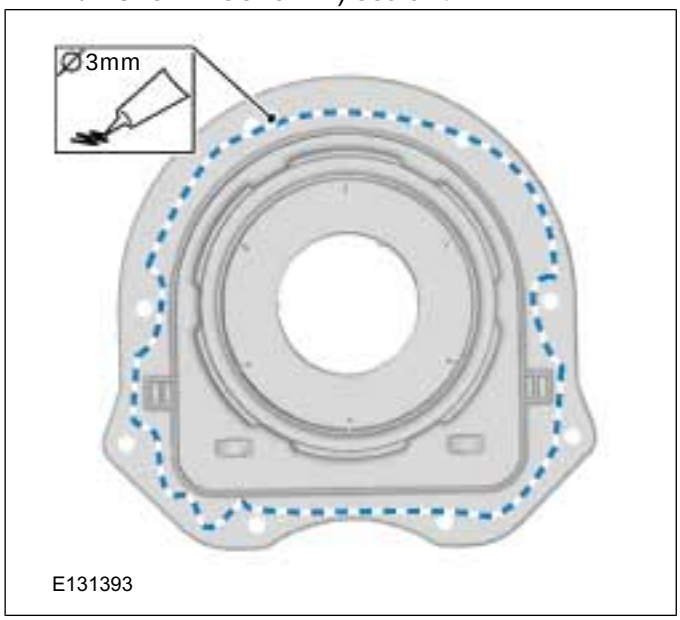

20. **CAUTION: A new crankshaft rear seal carrier is supplied with an alignment sleeve that must not be removed until the crankshaft rear seal is fully installed. Failure to follow this instruction may result in damage to the vehicle.**

Initially hand tighten the fasteners.

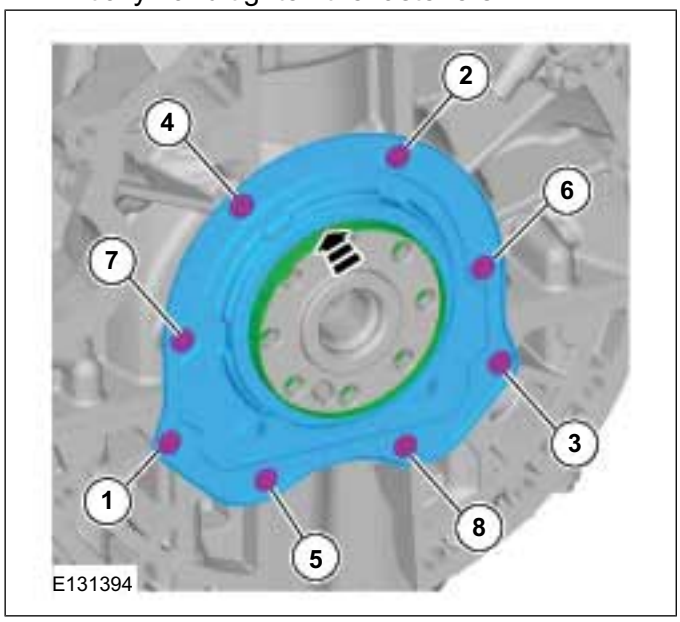

ASSEMBLY

21. **NOTE:** New crankshaft rear seal carriers are supplied with an alignment sleeve which must be removed after installation.

    Torque: 20 Nm

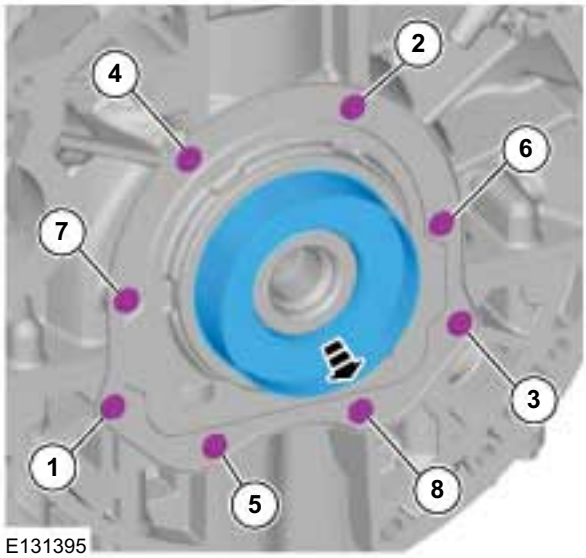

22. **NOTE:** Make sure that the flywheel is in full contact with the crankshaft flange before installing the flywheel bolts.

    Initially hand tighten the fasteners.

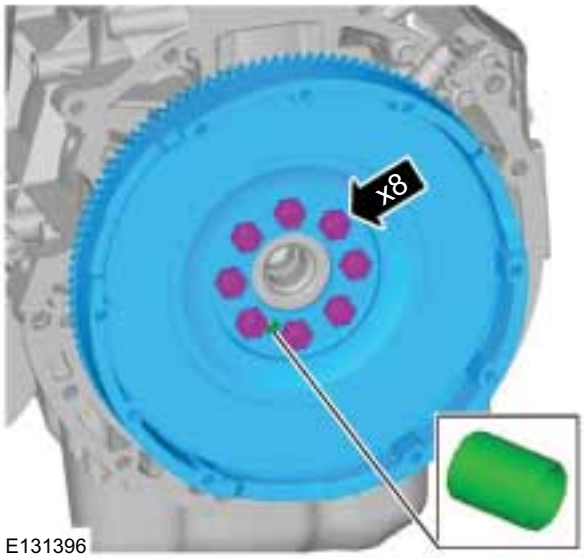

23. Special Tool(s): 303-254
    Torque:
    - Stage 1: 15 Nm
    - Stage 2: 30 Nm
    - Stage 3: 75 Nm

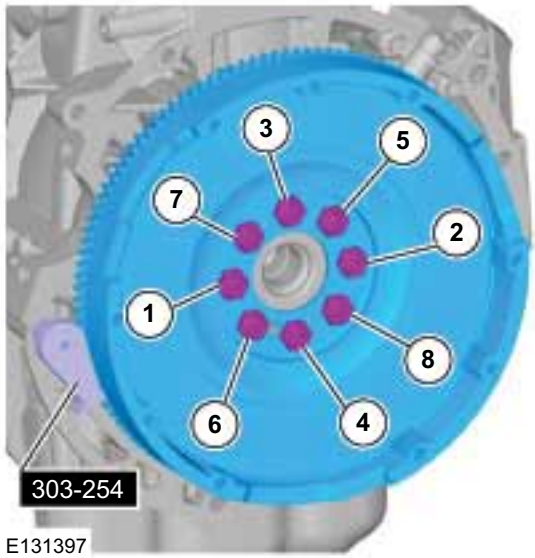

24. Special Tool(s): 205-069, 205-070

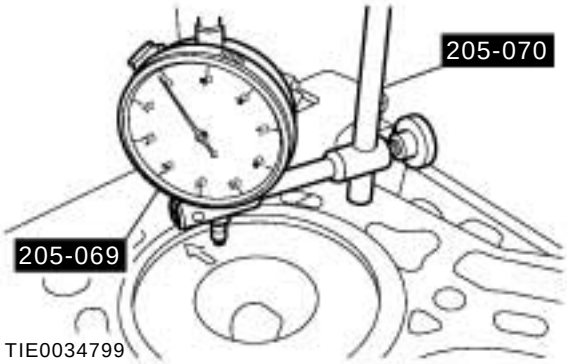

25. **NOTE:** Do not fully tighten the crankshaft position sensor bracket retaining bolts at this stage.

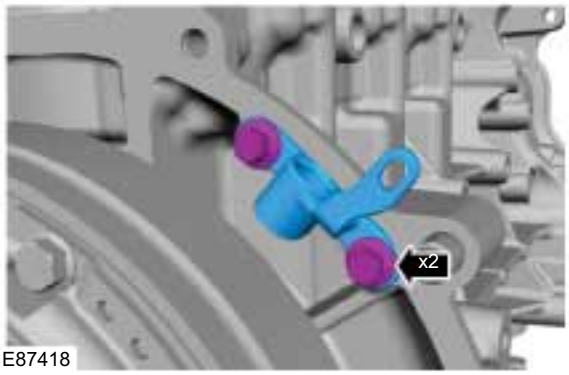

ASSEMBLY

26. **NOTE:** After installation do not move the special tool.

Special Tool(s): 303-391

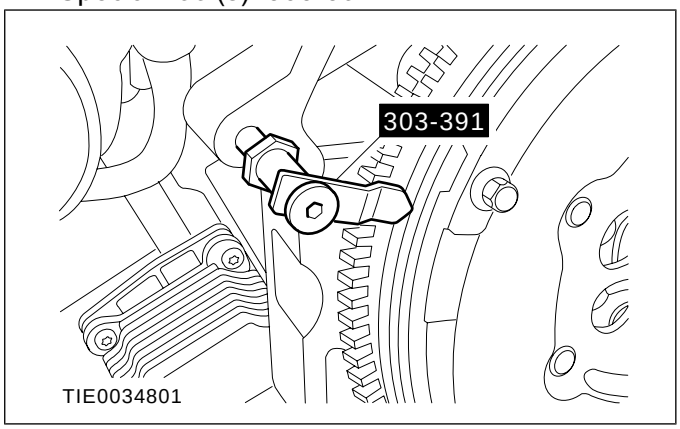

27. Rotate the crankshaft until piston No. one is approximately 10 mm before top dead center (TDC).

Special Tool(s): 205-069, 205-070

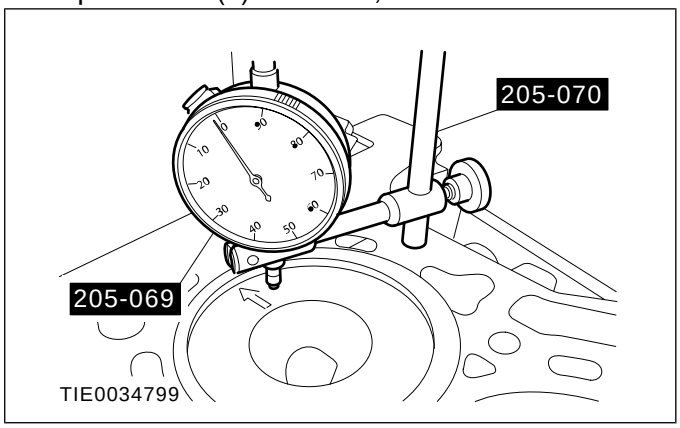

28. Zero the dial indicator gauge.

29. Mark the position on the flywheel primary mass.

Special Tool(s): 303-391

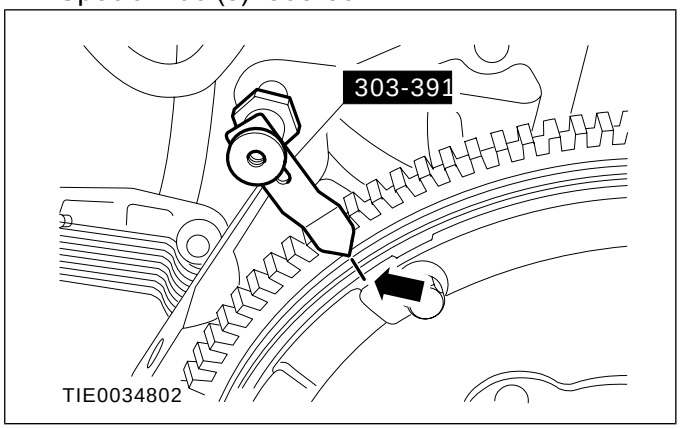

30. **NOTE:** Rotate the crankshaft counterclockwise.

1. Rotate the crankshaft until the piston No. one achieves zero on the dial indicator gauge.
2. Mark the position on the flywheel primary mass.

Special Tool(s): 303-391

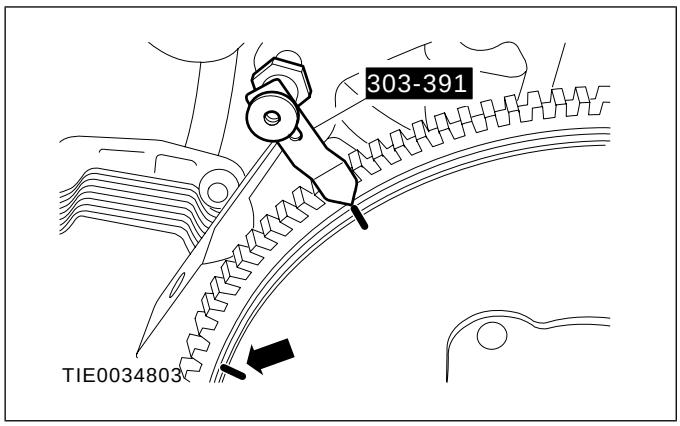

31. Repeat the previous steps to make sure that the marking is correct.

32. **NOTE:** The middle of the markings is TDC.

Measure the distance between the two marks.

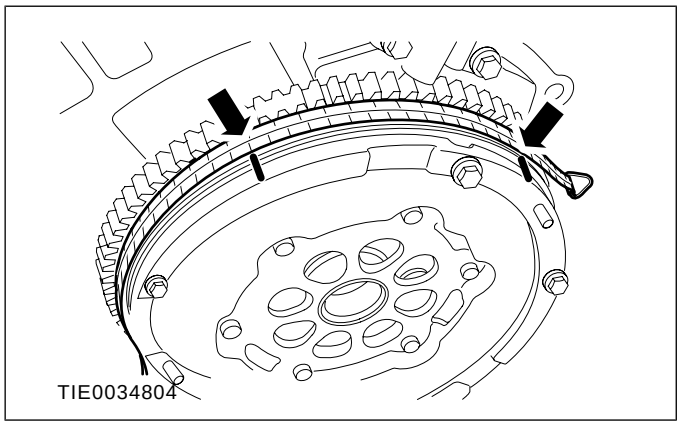

33. Divide the amount by two and mark the position TDC on the flywheel primary mass.

ASSEMBLY

34. Measure the circumference of the flywheel primary mass.

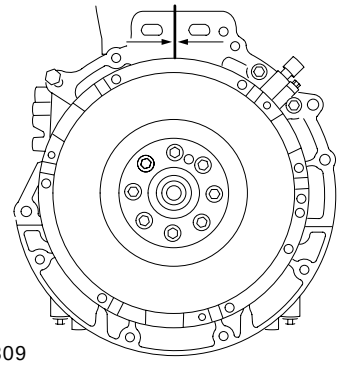
TIE0034809

35. Multiply the circumference by 0.1388 and mark the calculated amount on the flywheel primary mass by measuring from TDC counterclockwise.

36. 1. First mark.
    2. Second mark.
    3. Determined TDC.
    4. Determined 50 degrees before top dead center (BTDC).

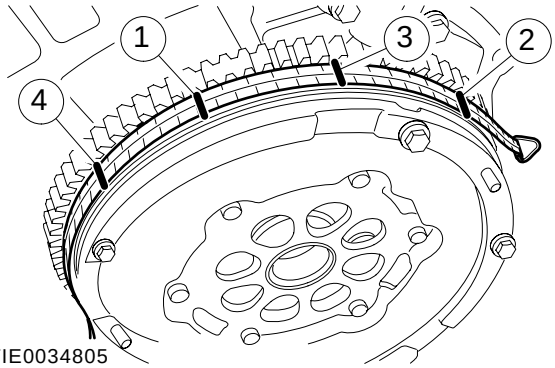

TIE0034805

37. **CAUTION: Do not turn the crankshaft when the special tool is fully located into the flywheel. Failure to follow this instruction will cause damage to the CKP sensor hole.**

NOTE: Rotate the crankshaft in the normal direction of rotation to the mark of the calculated 50 degrees BTDC.

NOTE: Make sure that the special tool is fully located in the flywheel so that the engine cannot be rotated in either direction.

Special Tool(s): 303-1562

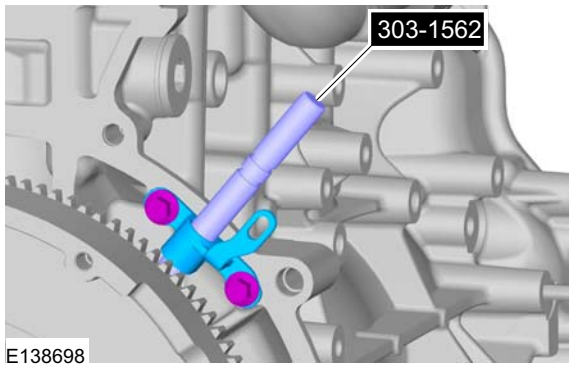

E138698

38. Remove the Special Tool(s): 303-1562
Torque: 25 Nm

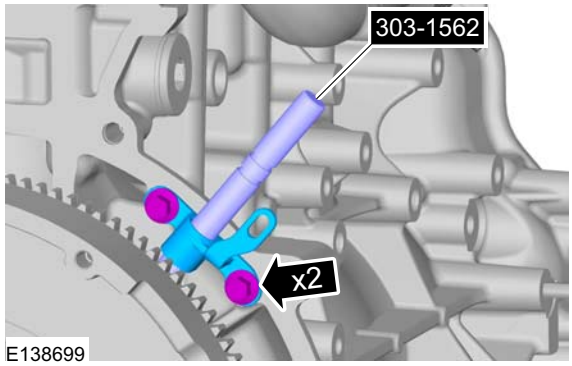

E138699

39. **WARNING: Do not use metal scrapers, wire brushes, power abrasive discs or other abrasive means to clean the sealing surfaces. These tools cause scratches and gouges that make leak paths. Use a plastic scraping tool to remove all traces of the head gasket.**

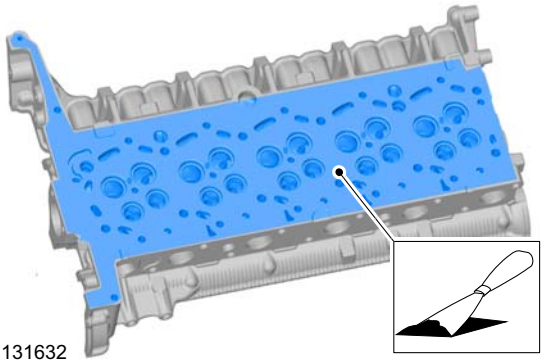
E131632

ASSEMBLY

40. **NOTE:** Measure the piston protrusion of each cylinder at top dead center (TDC).

    Measure the distance between the piston crown and the cylinder block at the points indicated.

E131633

41. **NOTE:** The largest measurement determines the choice of the cylinder head gasket.
    - Using the special tools, measure the piston protrusion.

      Special Tool(s): 205-070, 205-069, 303-432

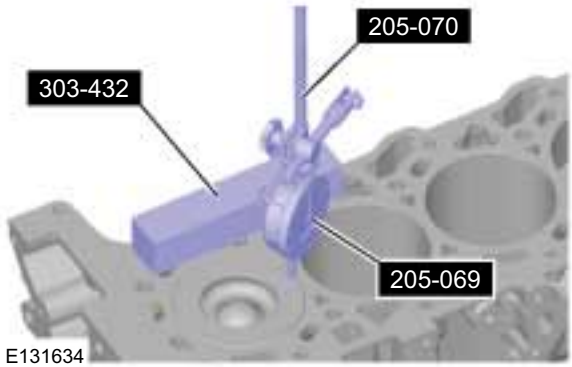

E131634

42. Determine the cylinder head gasket.

    Refer to: Specifications (303-01 Engine - 3.2L Duratorq-TDCi (148kW/200PS) - Puma, Specifications).

43. **NOTE:** Make sure that a new component is installed.

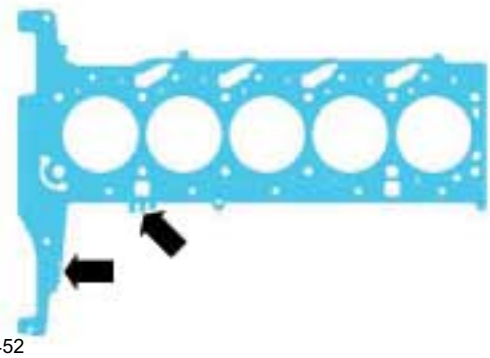
E94452

44.

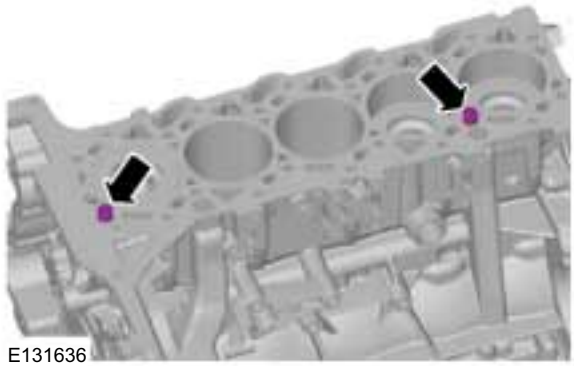
E131636

45. ⚠ **CAUTION: Make sure that new cylinder head bolts are installed.**

    Torque:
    - Bolts 1 to 12: 10 Nm
    - Bolts 13 to 22: 5 Nm
    - Bolts 1 to 12: 20 Nm
    - Bolts 13 to 22: 10 Nm
    - Bolts 1 to 12: 180°
    - Bolts 1 to 12: 50 Nm
    - Bolts 13 to 22: 180°
    - Bolts 13 to 22: 25 Nm

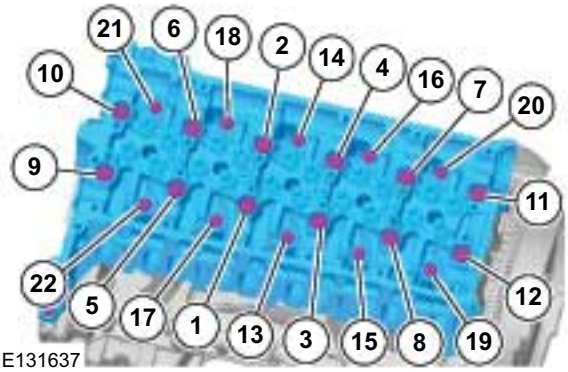

E131637

ASSEMBLY

46. Material: Silicone Sealant LB (WSE-M4G323-A4 / 2U7J-M4G323-AA) sealant

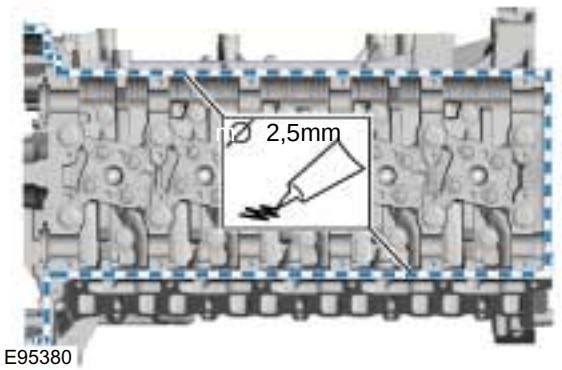

47. Torque:
- Bolts 1 to 26 23 Nm
- Bolts 27, 28 10 Nm

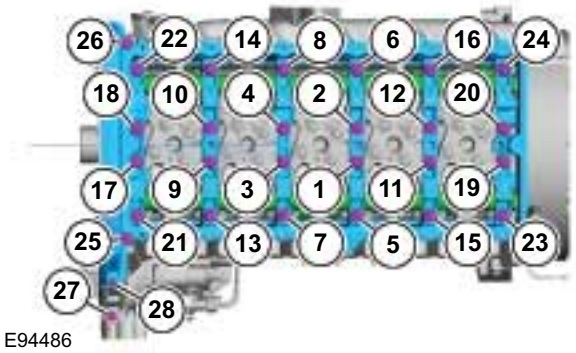

48. Torque:
- Stage 1: 10 Nm
- Stage 2: 30°

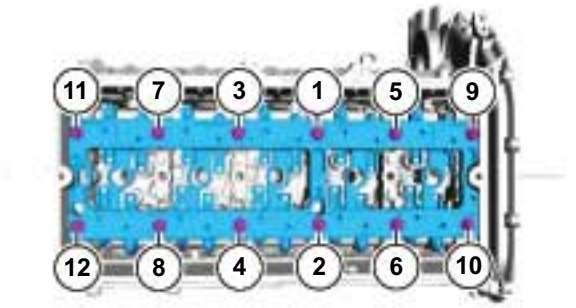

49. Special Tool(s): 303-1562

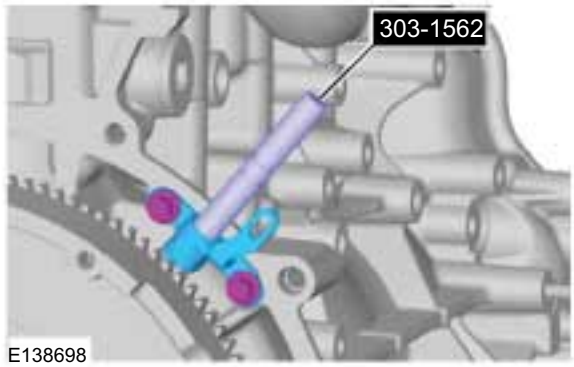

50. **NOTE:** Make sure that the installation marks are aligned.

General Equipment: 6 mm Drill Bit
Torque: 33 Nm

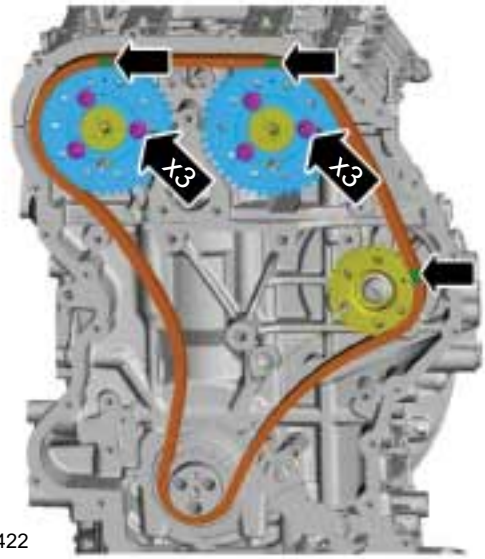

51. Remove the 6 mm drill bits.

ASSEMBLY

52. 1. Torque: 15 Nm
    2. Torque: 40 Nm
    3. ⚠ **CAUTION: Make sure that new bolts are installed.**

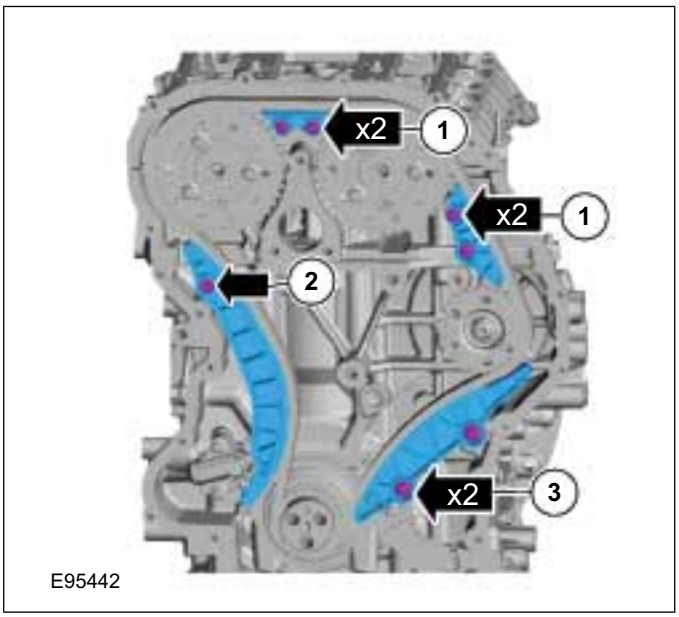

53. **NOTE:** Make sure that a new component is installed.

    Torque: 15 Nm

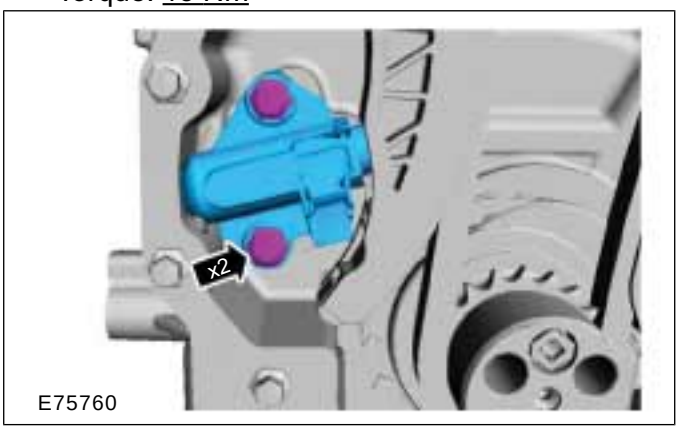

54. Remove the Special Tool(s): 303-1562

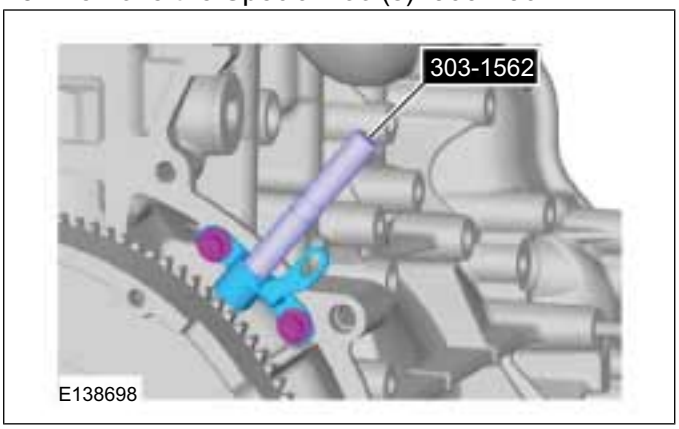

55. Rotate the engine two revolutions.

56. Special Tool(s): 303-1562

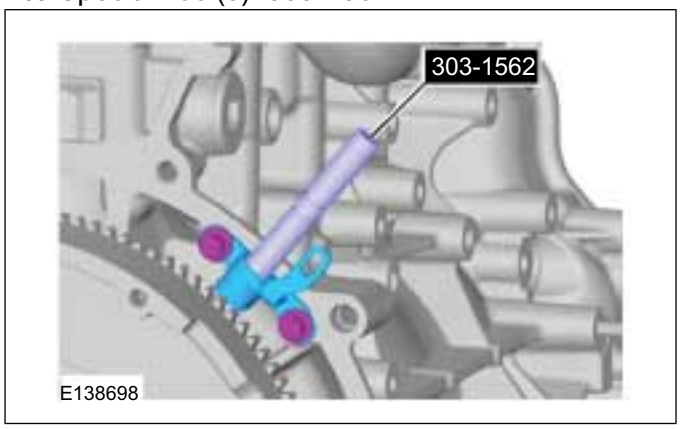

57. Check the position of the timing marks and correct if necessary.

    General Equipment: 6 mm Drill Bit

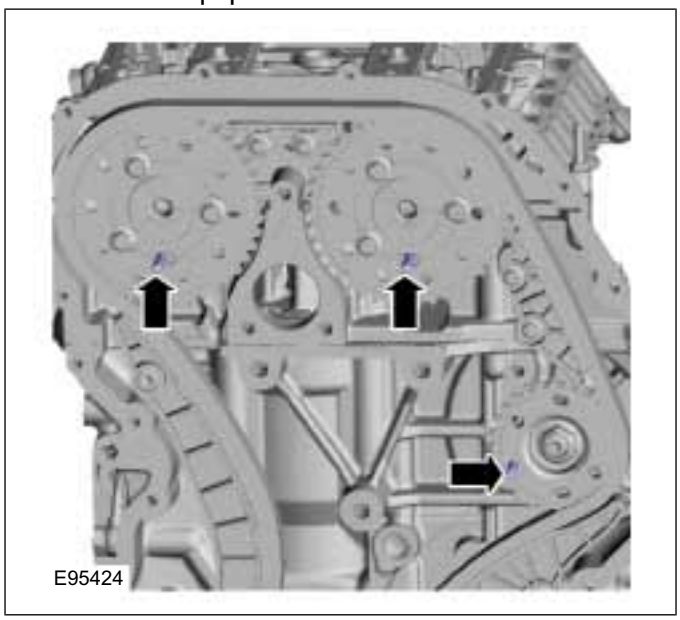

58. Remove the 6 mm drill bits.

59. Remove the Special Tool(s): 303-1562

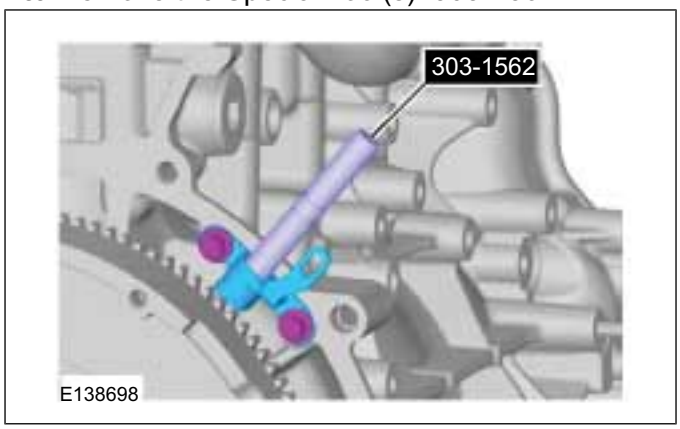

ASSEMBLY

60.

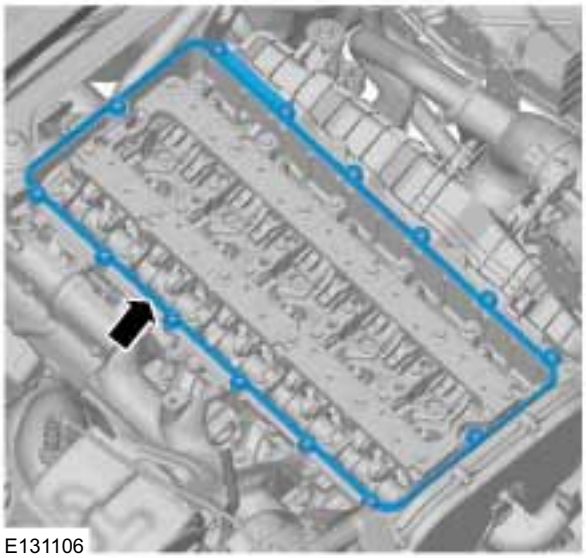
E131106

61. Torque: 10 Nm

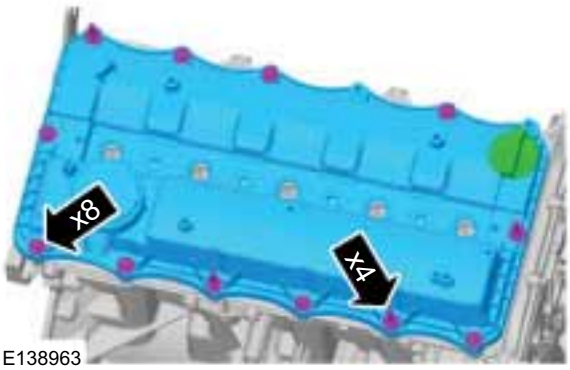

E138963

62. NOTE: Make sure that a new component is installed.

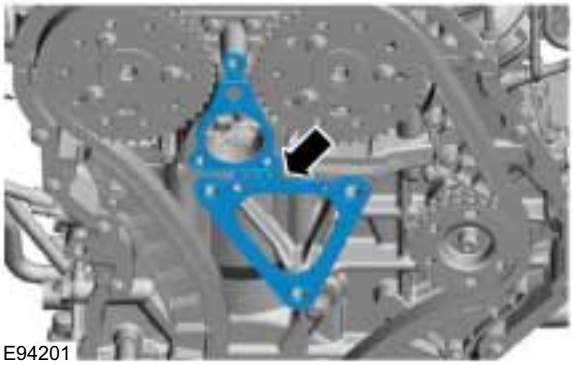
E94201

63. NOTE: The component must be installed within 5 minutes of applying the sealant.

NOTE: Make sure that a new component is installed.

Material: Silicone Sealant LB (WSE-M4G323-A4 / 2U7J-M4G323-AA) sealant

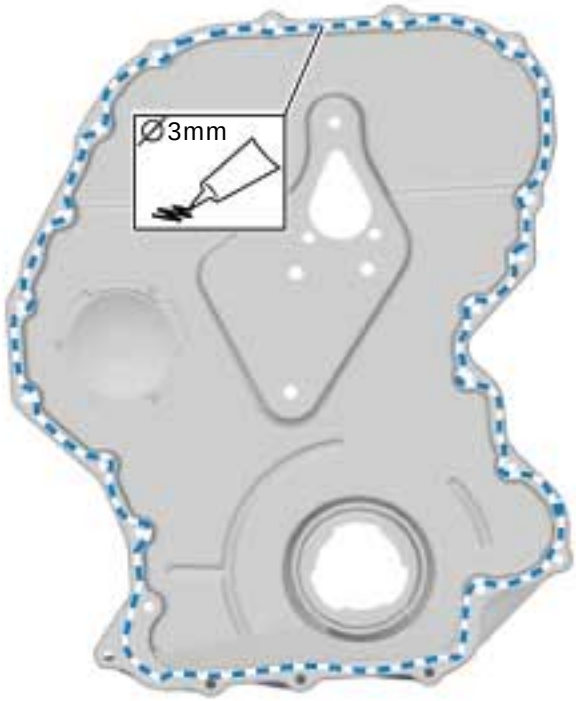

E131310

64. Special Tool(s): 303-682
Torque:
- 1 10 Nm
- 2 14 Nm

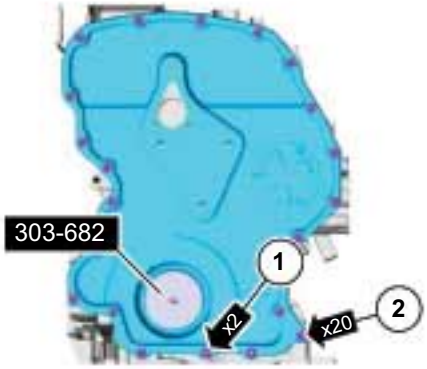

E87427

ASSEMBLY

65. **NOTE:** Do not damage the mating faces.

Special Tool(s): 303-428

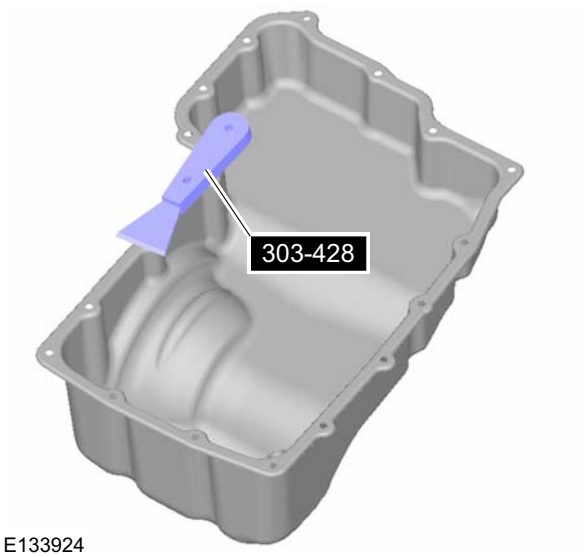

E133924

66. **CAUTION: Install the oil pan within five minutes of applying the sealer.**

NOTE: Do not damage the mating faces.

Material: Silicone Sealant LB (WSE-M4G323-A4 / 2U7J-M4G323-AA) sealant

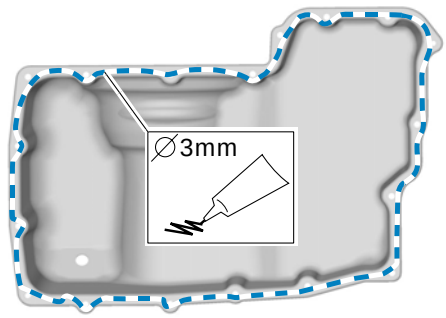

E130956

67. Torque:
- Stage 1: 12 Nm
- Stage 2: 15 Nm

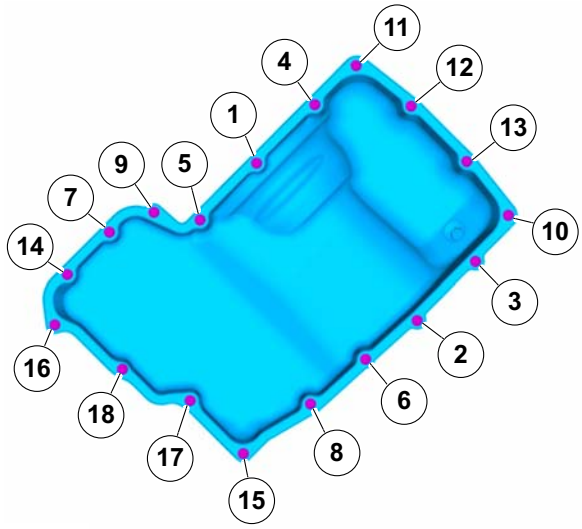

E130957

68. **NOTE:** The seal is to be reused unless damaged.

Torque: 35 Nm

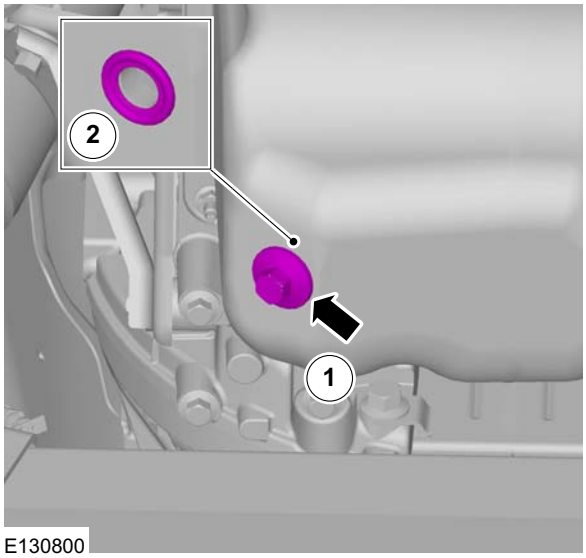

E130800

INSTALLATION

Engine — Vehicles With: 6-Speed Manual Transmission - MT82(21 132 0; 21 132 6; 21 132 7)

Installation

Special Tool(s)

21068A	303-122 Lifting Bracket, Engine

1. Refer to: Health and Safety Precautions (100-00 General Information, Description and Operation).

2. Special Tool(s): 303-122

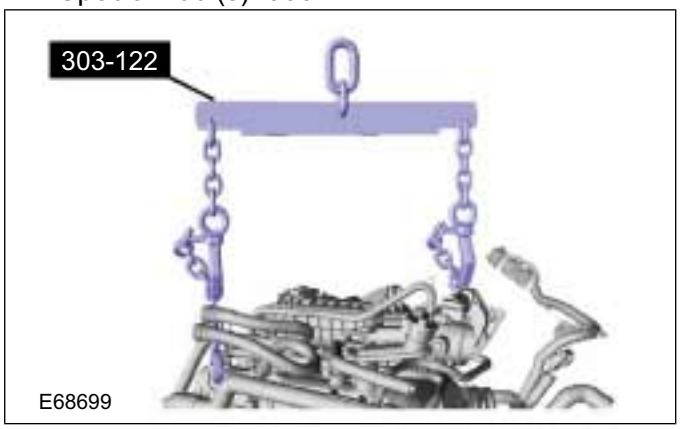

E68699

3.

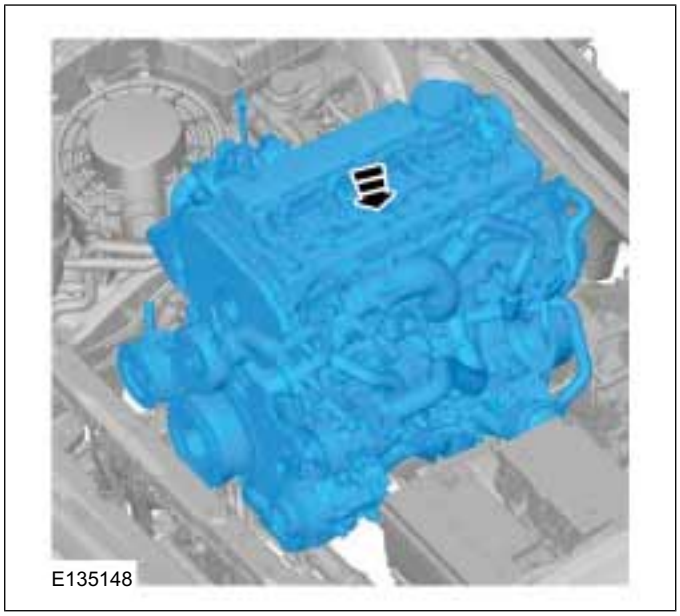
E135148

4. **NOTE:** Hand tighten the nut at this stage.

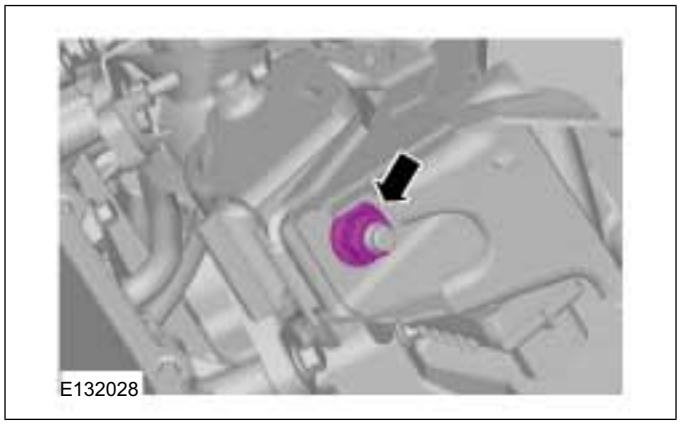
E132028

5. **NOTE:** Hand tighten the nuts at this stage.

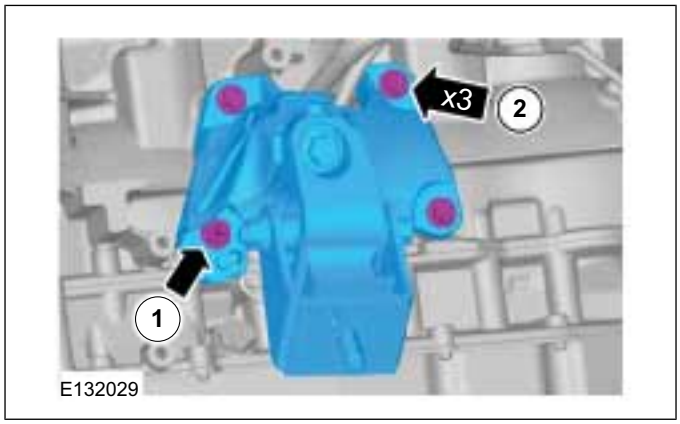

E132029

6. **NOTE:** Hand tighten the nut at this stage.

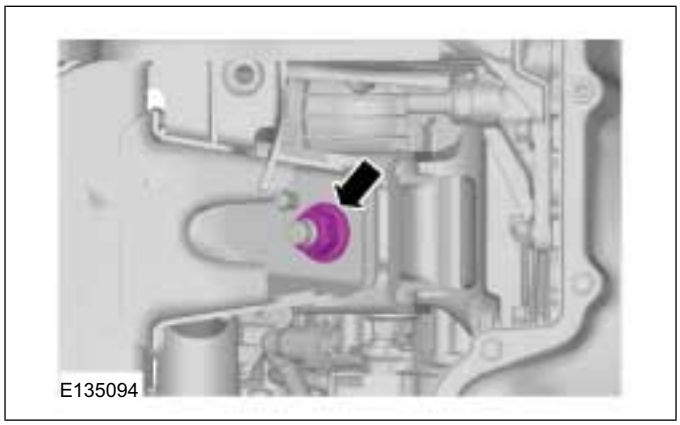
E135094

INSTALLATION

7. Initially hand tighten the fasteners.
   Torque: 48 Nm

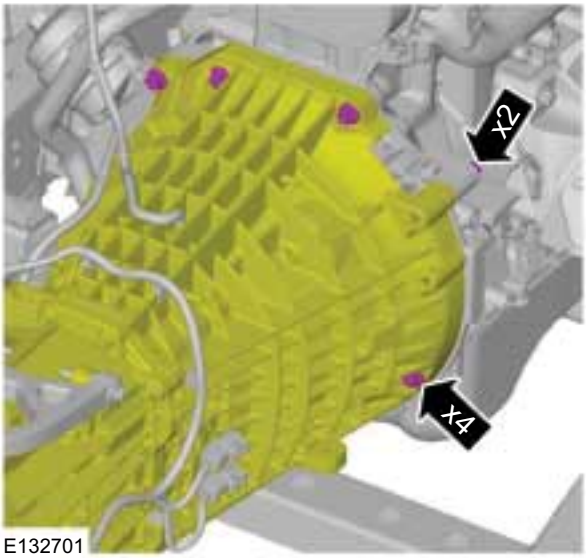

E132701

8. Initially hand tighten the fasteners.
   Torque: 48 Nm

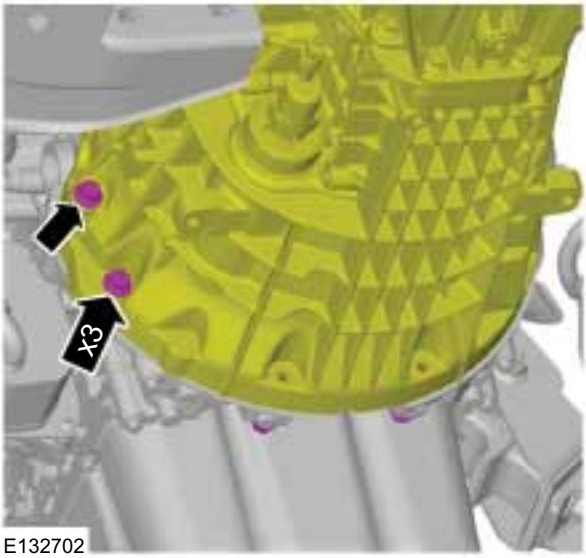

E132702

9. Torque: 80 Nm

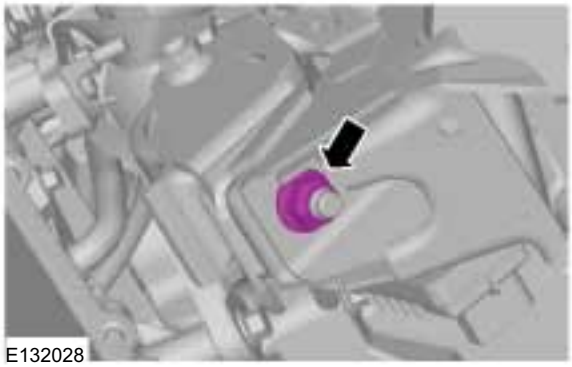
E132028

10. 1. Torque: 48 Nm
    2. Torque: 25 Nm

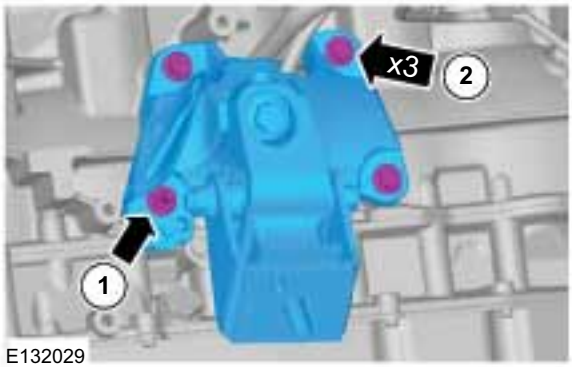

E132029

11. Torque: 80 Nm

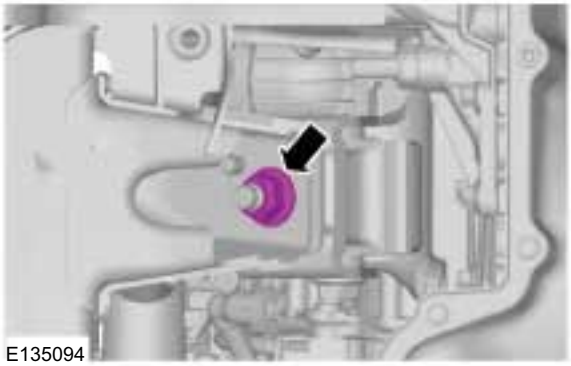
E135094

12. 1. Remove the Special Tool(s): 303-122

E68699

INSTALLATION

13. Torque: 13 Nm

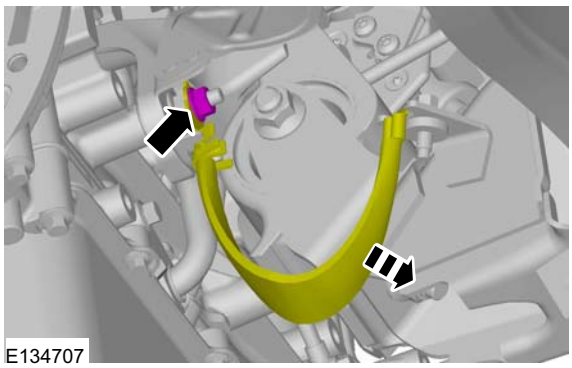
E134707

14.

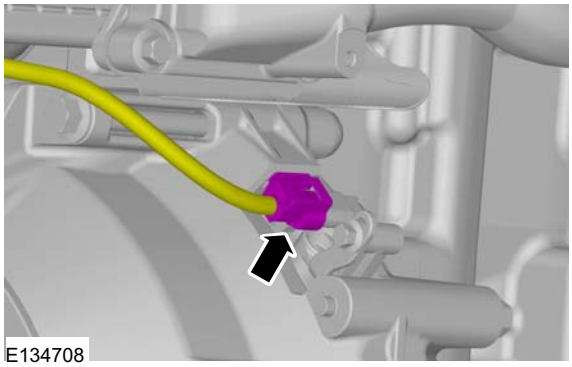
E134708

15. Torque: 12 Nm

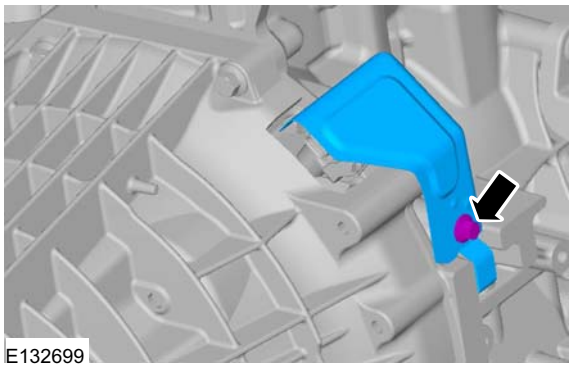
E132699

16.

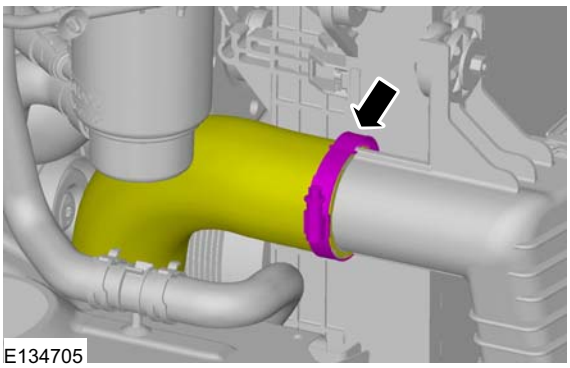
E134705

17. Torque: 10 Nm

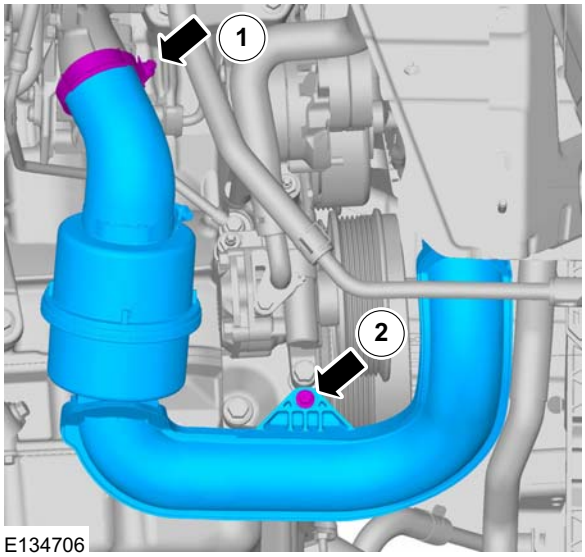

E134706

INSTALLATION

18. Refer to: Catalytic Converter (309-00 Exhaust System - 2.2L Duratorq-TDCi (88kW/120PS) - Puma/2.2L Duratorq-TDCi (96kW/130PS) - Puma/2.2L Duratorq-TDCi (110kW/150PS) - Puma/3.2L Duratorq-TDCi (148kW/200PS) - Puma, Removal and Installation).

19. Torque: 22 Nm

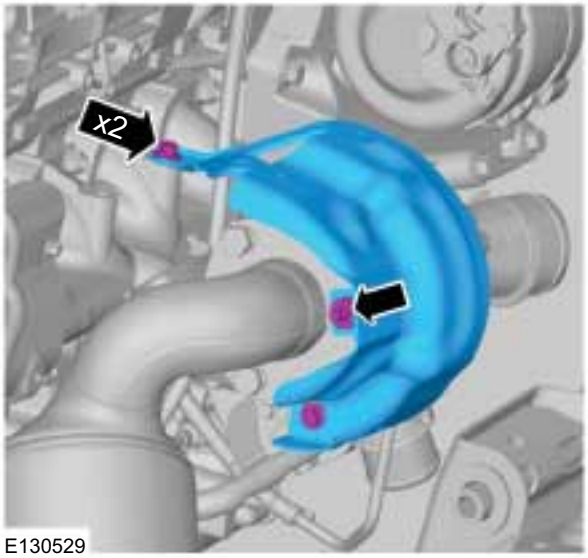

E130529

20.

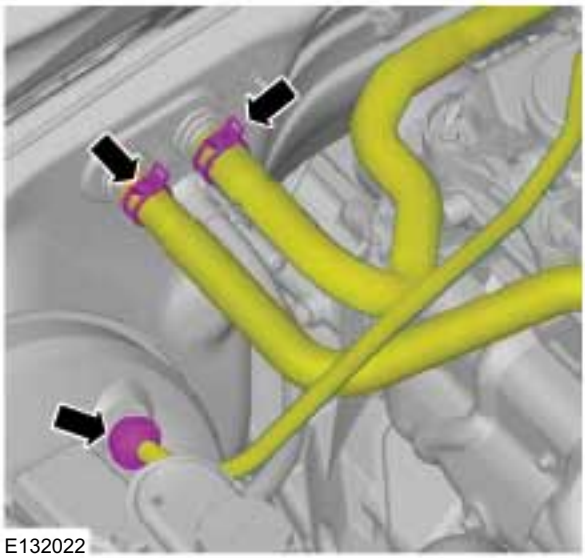
E132022

21.

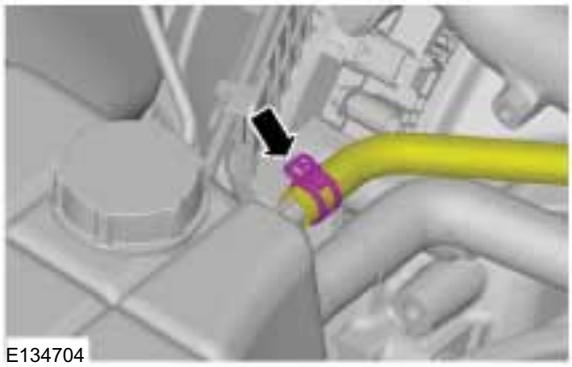
E134704

22. Torque: 35 Nm

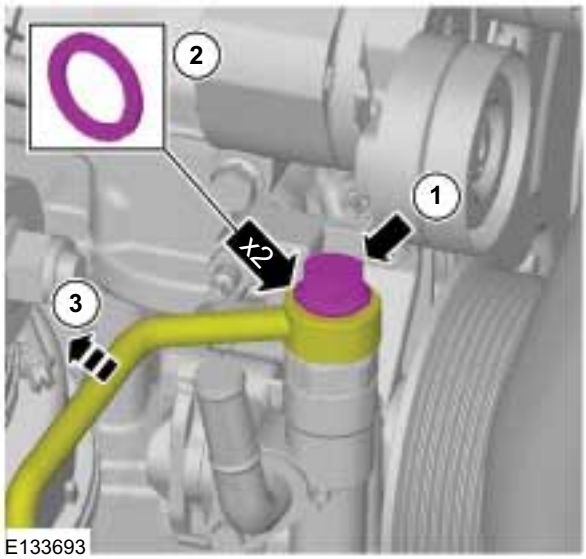

E133693

23.

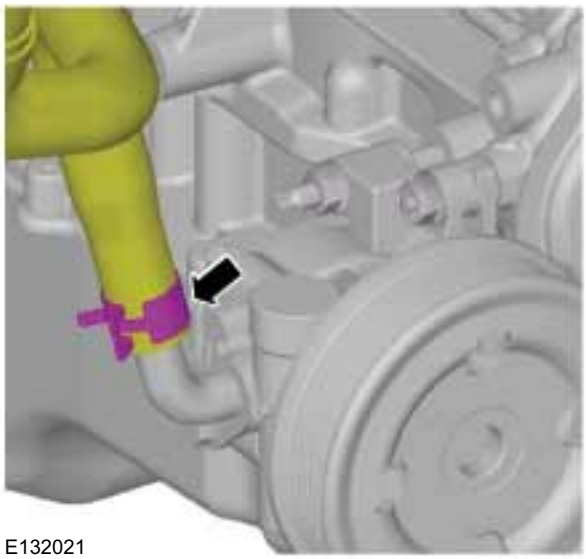
E132021

INSTALLATION

24. Torque: 22 Nm

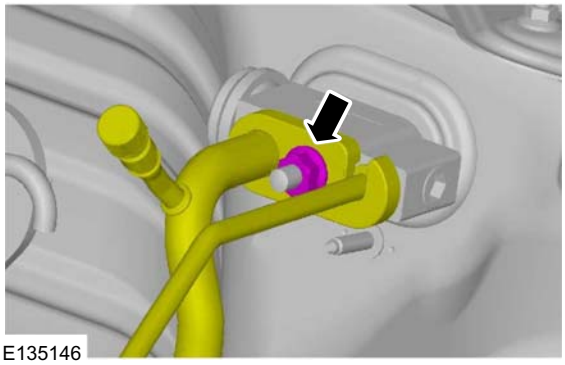
E135146

25. Refer to: Starter Motor - 3.2L Duratorq-TDCi (148kW/200PS) - Puma (303-06 Starting System - 2.2L Duratorq-TDCi (88kW/120PS) - Puma/2.2L Duratorq-TDCi (96kW/130PS) - Puma/2.2L Duratorq-TDCi (110kW/150PS) - Puma/3.2L Duratorq-TDCi (148kW/200PS) - Puma, Removal and Installation).

26.

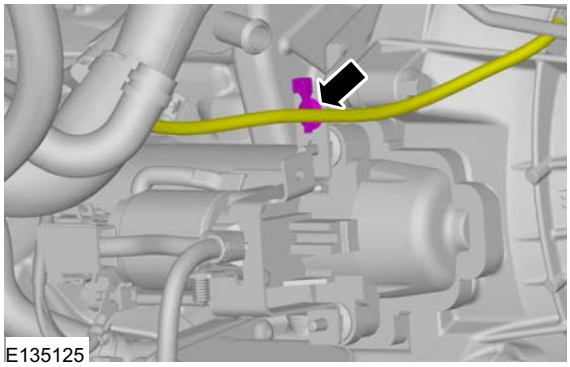
E135125

27. Refer to: Condenser - 2.2L Duratorq-TDCi (88kW/120PS) - Puma/2.2L Duratorq-TDCi (96kW/130PS) - Puma/2.2L Duratorq-TDCi (110kW/150PS) - Puma/3.2L Duratorq-TDCi (148kW/200PS) - Puma (412-01 Climate Control, Removal and Installation).

28. Refer to: Radiator (303-03 Engine Cooling - 3.2L Duratorq-TDCi (148kW/200PS) - Puma, Removal and Installation).

29. Refer to: Cooling Fan Motor and Shroud (303-03 Engine Cooling - 2.2L Duratorq-TDCi (88kW/120PS) - Puma/2.2L Duratorq-TDCi (96kW/130PS) - Puma/2.2L Duratorq-TDCi (110kW/150PS) - Puma, Removal and Installation).

30. Refer to: Air Cleaner - 3.2L Duratorq-TDCi (148kW/200PS) - Puma (303-12 Intake Air Distribution and Filtering - 2.2L Duratorq-TDCi (88kW/120PS) - Puma/2.2L Duratorq-TDCi (96kW/130PS) - Puma/2.2L Duratorq-TDCi (110kW/150PS) - Puma/3.2L Duratorq-TDCi (148kW/200PS) - Puma, Removal and Installation).

31.

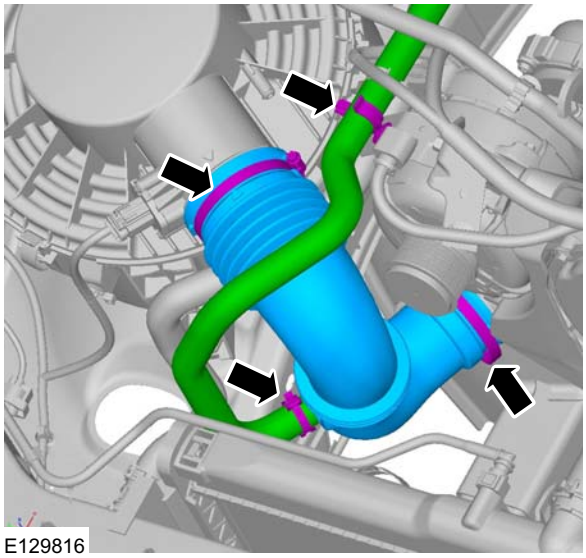
E129816

INSTALLATION

32.

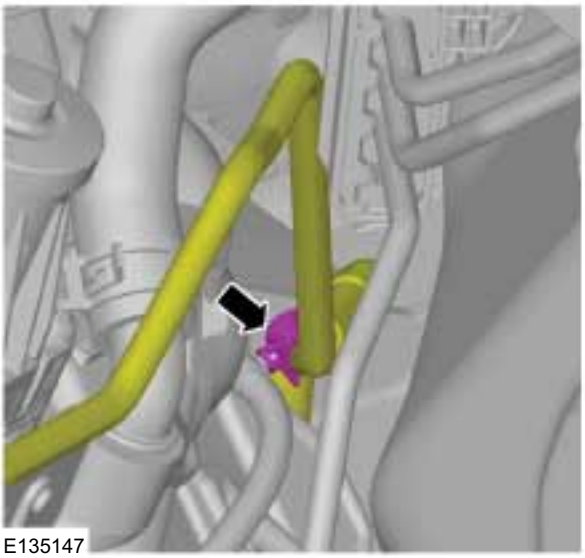
E135147

33. Torque: 10 Nm

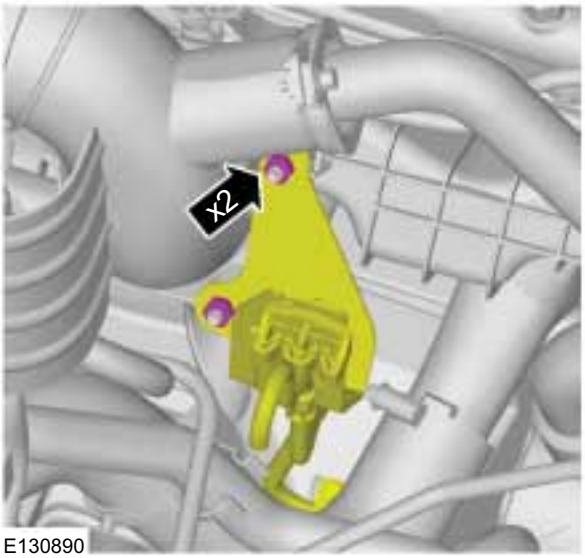

E130890

34. Torque: 18 Nm

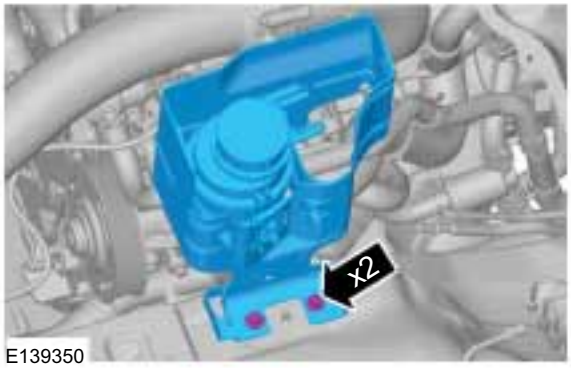

E139350

35. Torque: 5 Nm

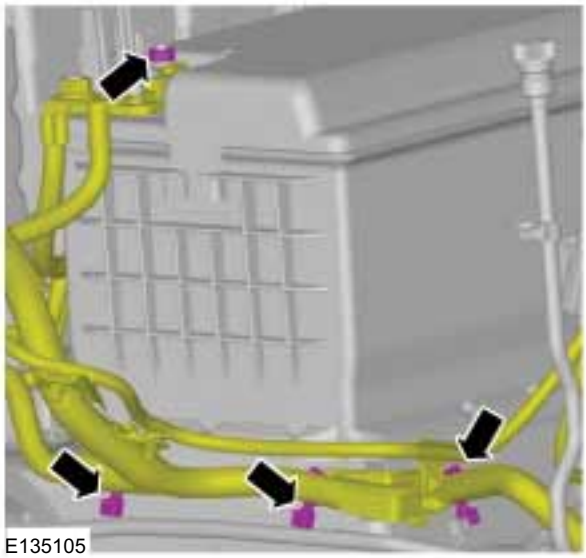
E135105

36.

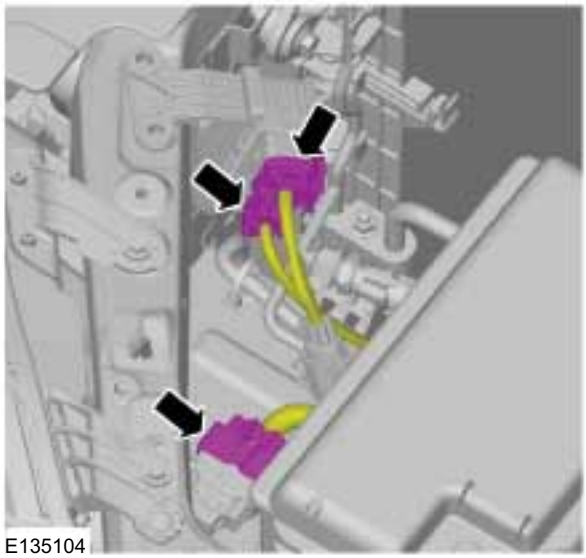
E135104

INSTALLATION

37.

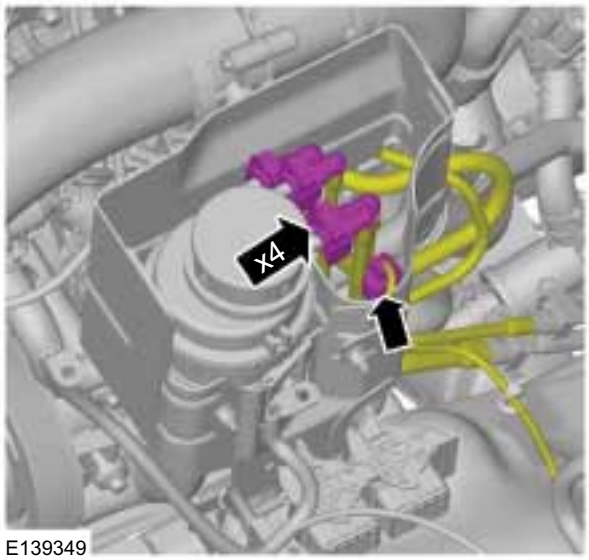

E139349

38. Refer to: Powertrain Control Module (PCM) (303-14 Electronic Engine Controls - 2.5L Duratec-HE (122kW/165PS) - MI4, Removal and Installation).
Refer to: Powertrain Control Module (PCM) (303-14 Electronic Engine Controls - 2.2L Duratorq-TDCi (88kW/120PS) - Puma/2.2L Duratorq-TDCi (96kW/130PS) - Puma/2.2L Duratorq-TDCi (110kW/150PS) - Puma/3.2L Duratorq-TDCi (148kW/200PS) - Puma, Removal and Installation).

39. Refer to: Battery Tray (414-01 Battery, Mounting and Cables, Removal and Installation).

40. Refer to: Battery (414-01 Battery, Mounting and Cables, Removal and Installation).

41. Torque: 10 Nm

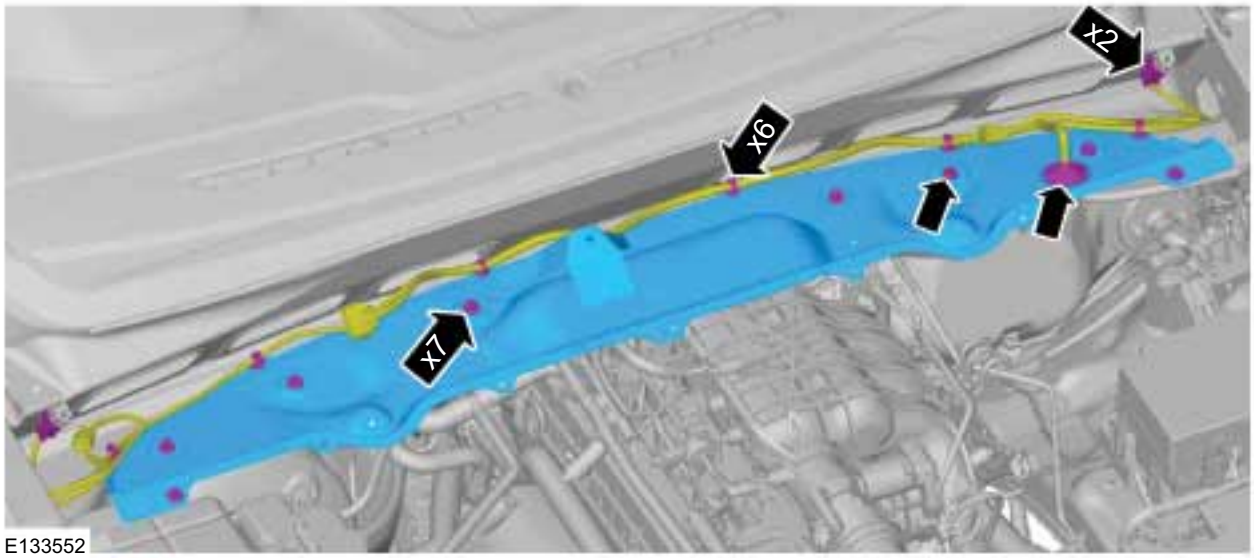

E133552

INSTALLATION

42. On both sides.

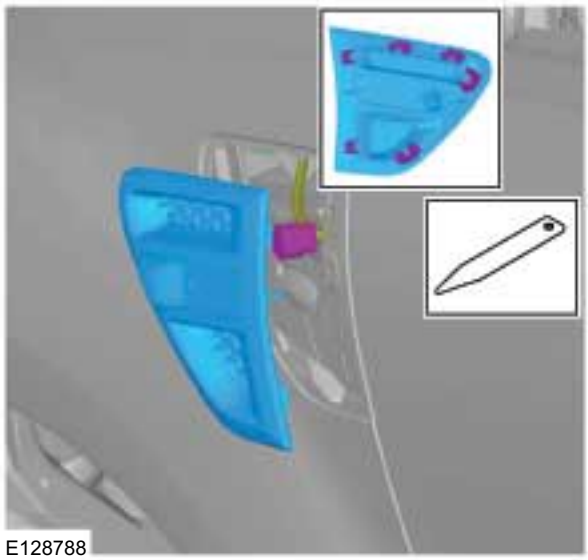
E128788

43. Torque: 10 Nm

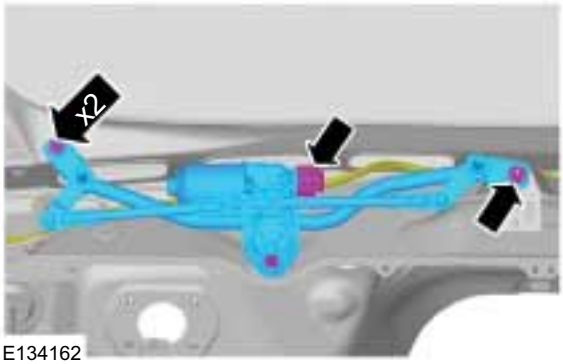

E134162

44. Refer to: Cowl Panel Grille (501-02 Front End Body Panels, Removal and Installation).

45. Torque: 25 Nm

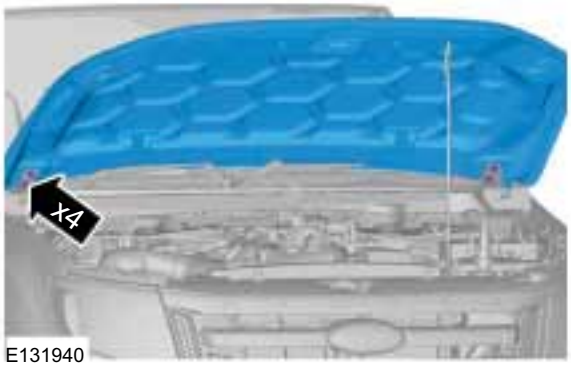

E131940

46.

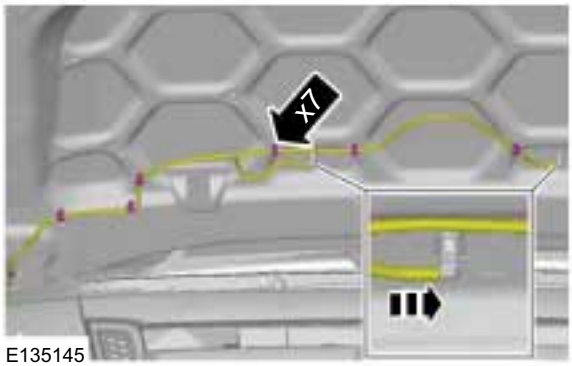

E135145

47.

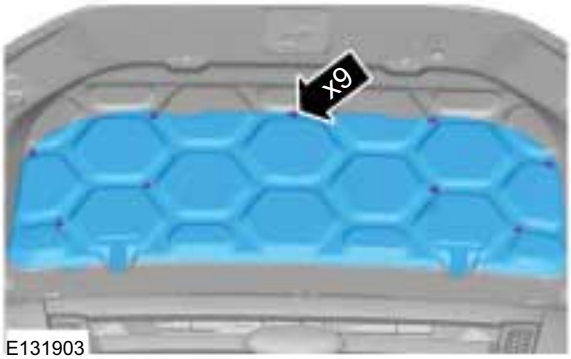

E131903

48. Refer to: Lifting (100-02 Jacking and Lifting, Description and Operation).

49. Torque: 30 Nm

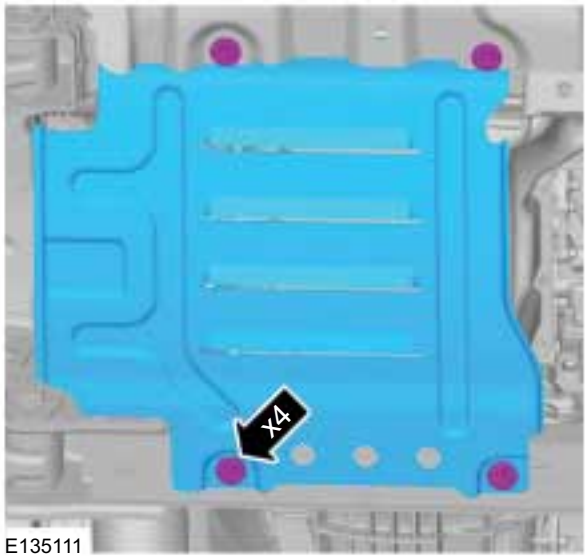

E135111

INSTALLATION

50. Refer to: Air Conditioning (A/C) System Recovery, Evacuation and Charging (412-00 Climate Control System - General Information, General Procedures).

51. Refer to: Cooling System Draining, Filling and Bleeding - 2.2L Duratorq-TDCi (88kW/120PS) - Puma/2.2L Duratorq-TDCi (96kW/130PS) - Puma/2.2L Duratorq-TDCi (110kW/150PS) - Puma/3.2L Duratorq-TDCi (148kW/200PS) - Puma (303-03 Engine Cooling - 3.2L Duratorq-TDCi (148kW/200PS) - Puma, General Procedures).

52. Refer to: Battery Disconnect and Connect (414-01 Battery, Mounting and Cables, General Procedures).

INSTALLATION

Engine — Vehicles With: 6-Speed Automatic Transaxle - 6R80(21 132 0; 21 132 6; 21 132 7)

Installation

Special Tool(s)

21068A	303-122 Lifting Bracket, Engine

1. Refer to: Health and Safety Precautions (100-00 General Information, Description and Operation).

2. Special Tool(s): 303-122

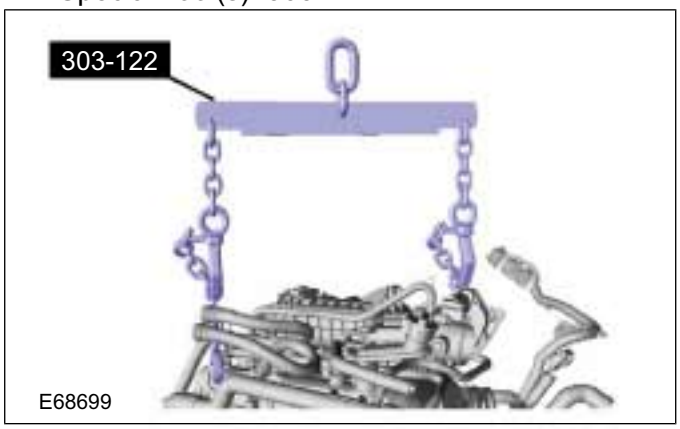

3.

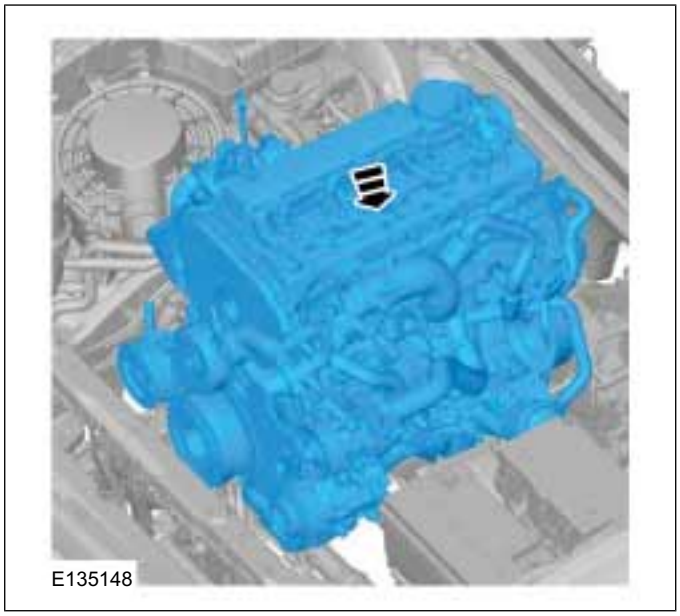

4. **NOTE:** Hand tighten the nut at this stage.

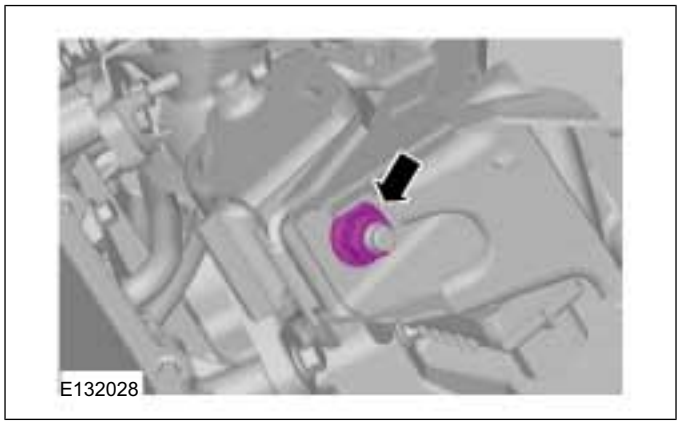

5. **NOTE:** Hand tighten the nuts at this stage.

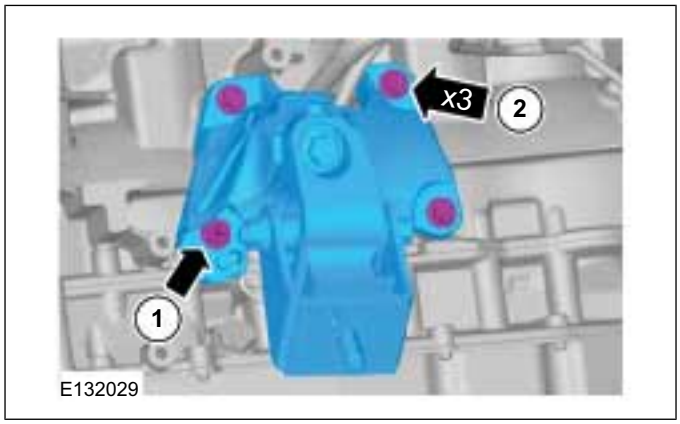

6. **NOTE:** Hand tighten the nut at this stage.

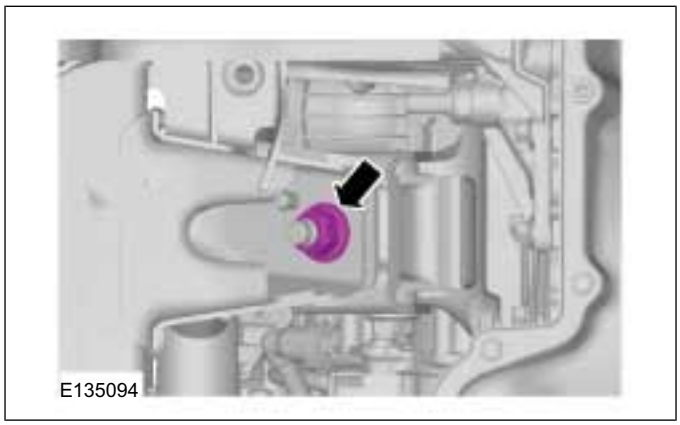

INSTALLATION

7. Initially hand tighten the fasteners.
   Torque: 48 Nm

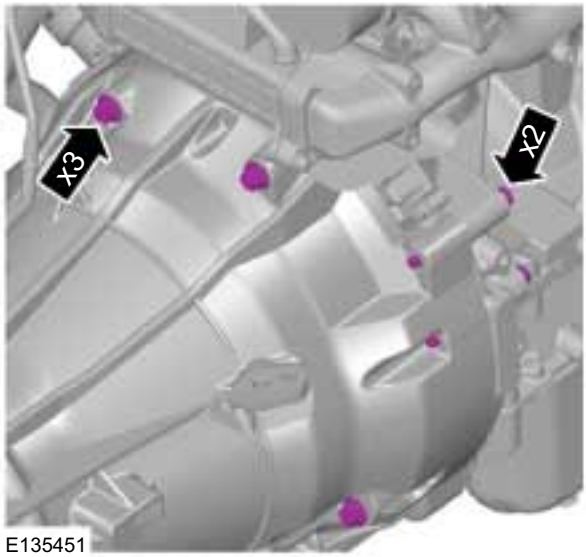

E135451

8. Initially hand tighten the fasteners.
   Torque: 48 Nm

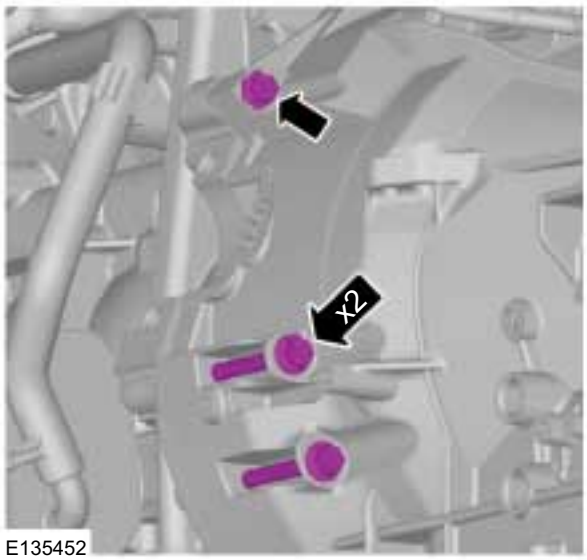

E135452

9. Torque: 80 Nm

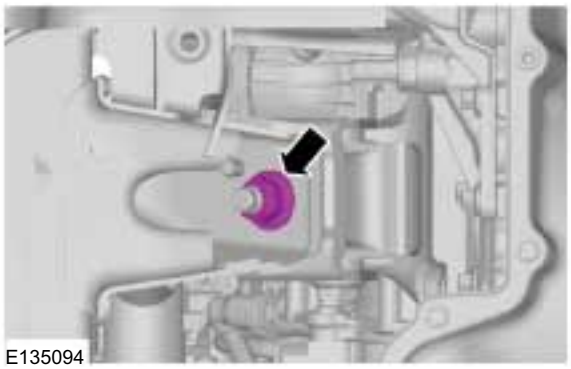
E135094

10. 1. Torque: 48 Nm
    2. Torque: 48 Nm

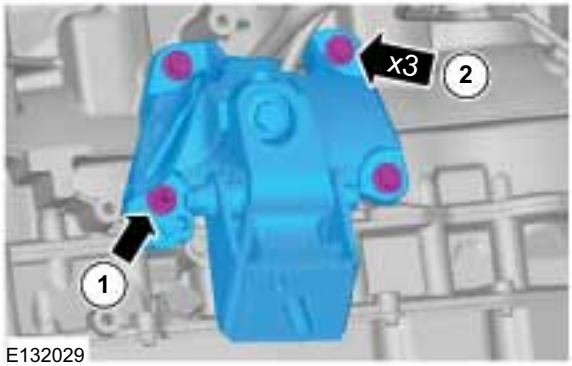

E132029

11. Torque: 80 Nm

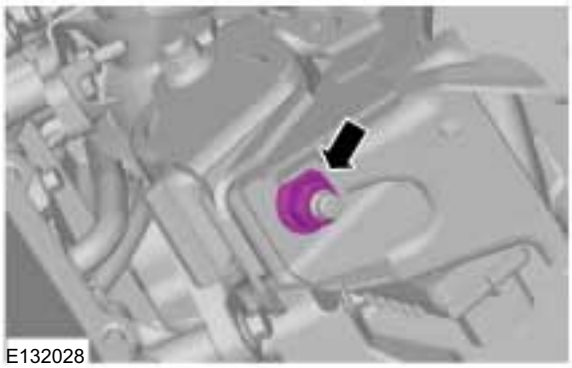
E132028

12. 1. Remove the Special Tool(s): 303-122

E68699

INSTALLATION

13. Torque: 13 Nm

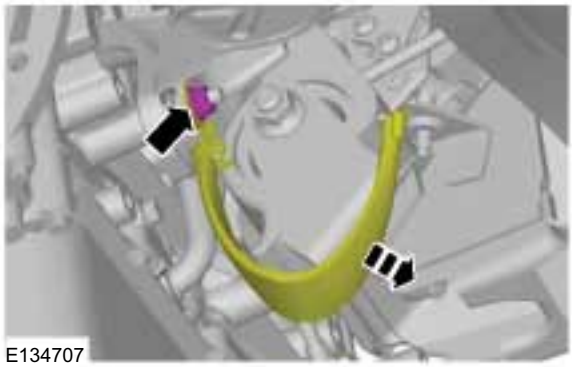

14. Torque: 40 Nm

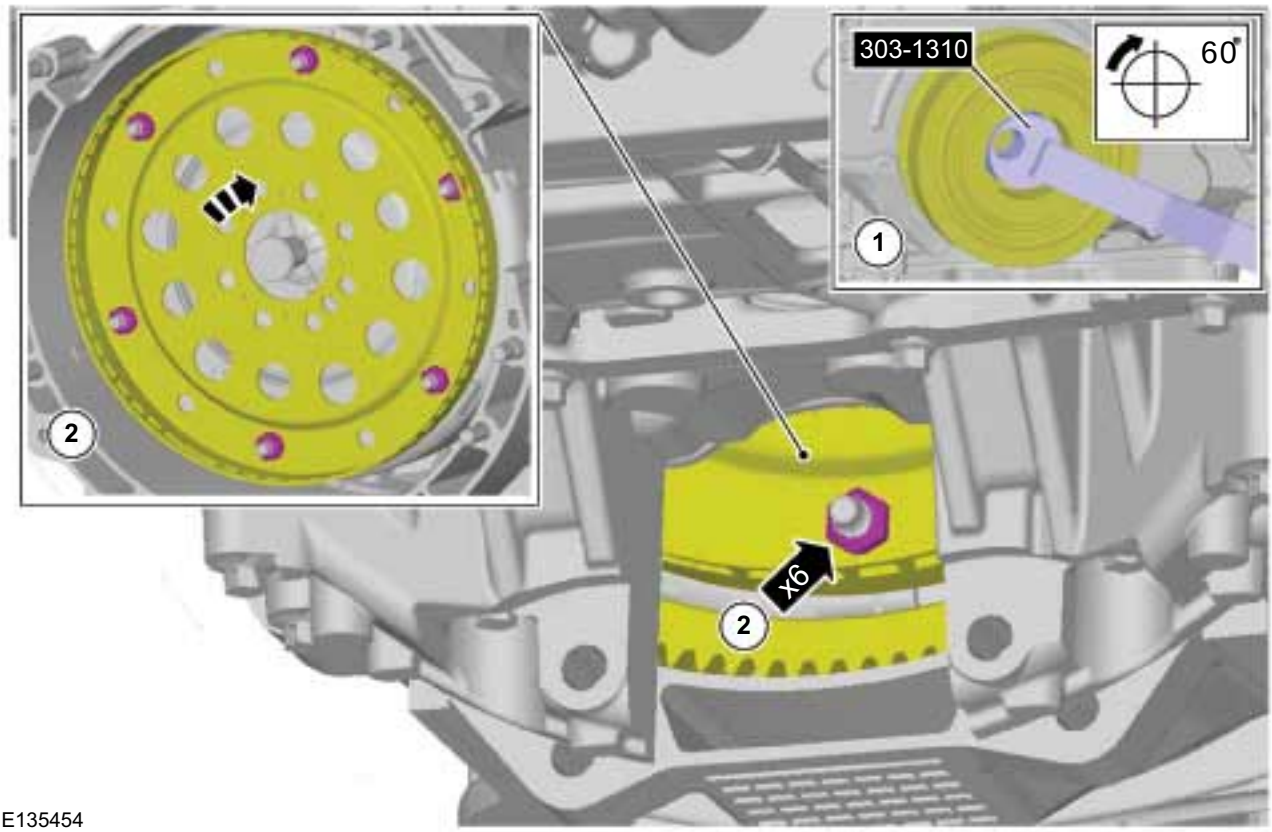

INSTALLATION

15. Torque: 22 Nm

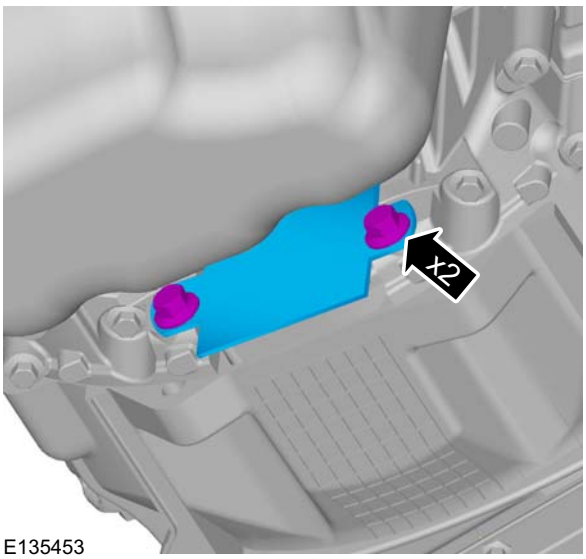

E135453

16.

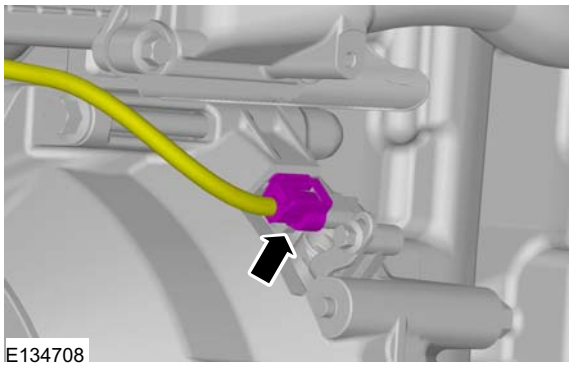
E134708

17. Torque: 12 Nm

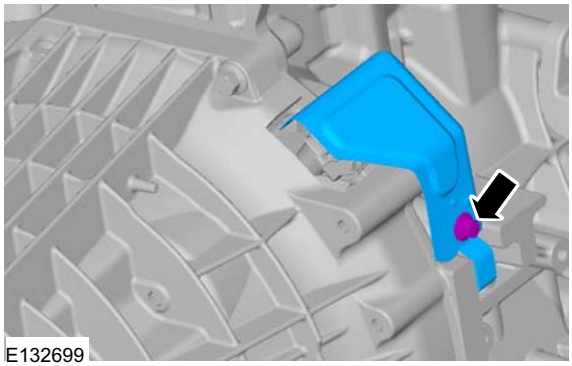
E132699

18.

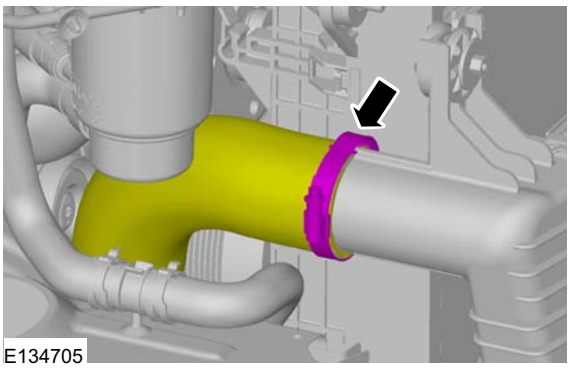
E134705

19. Torque: 10 Nm

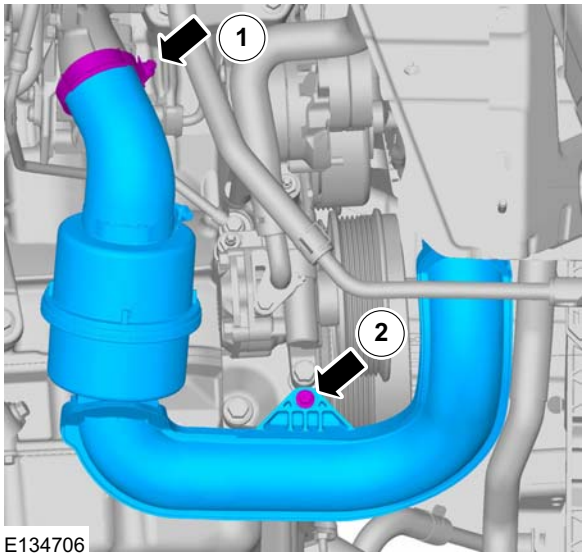

E134706

INSTALLATION

20. Refer to: Catalytic Converter (309-00 Exhaust System - 2.2L Duratorq-TDCi (88kW/120PS) - Puma/2.2L Duratorq-TDCi (96kW/130PS) - Puma/2.2L Duratorq-TDCi (110kW/150PS) - Puma/3.2L Duratorq-TDCi (148kW/200PS) - Puma, Removal and Installation).

21. Torque: 22 Nm

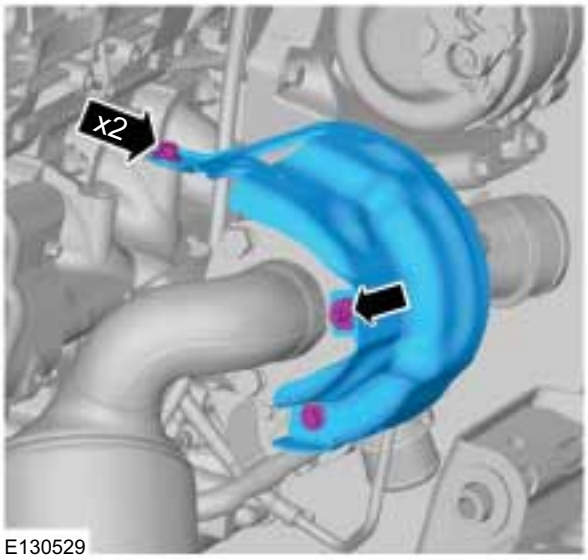

E130529

22.

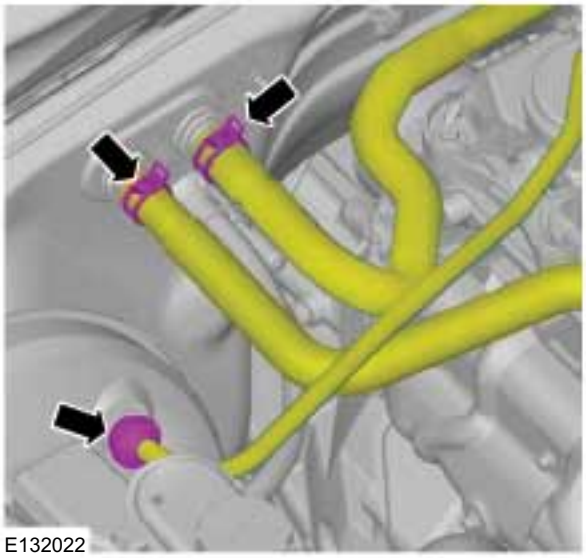
E132022

23.

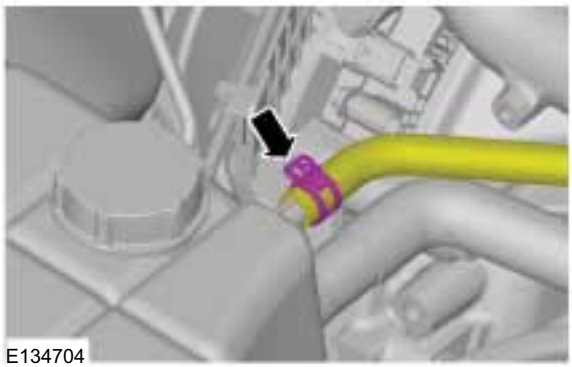
E134704

24. Torque: 35 Nm

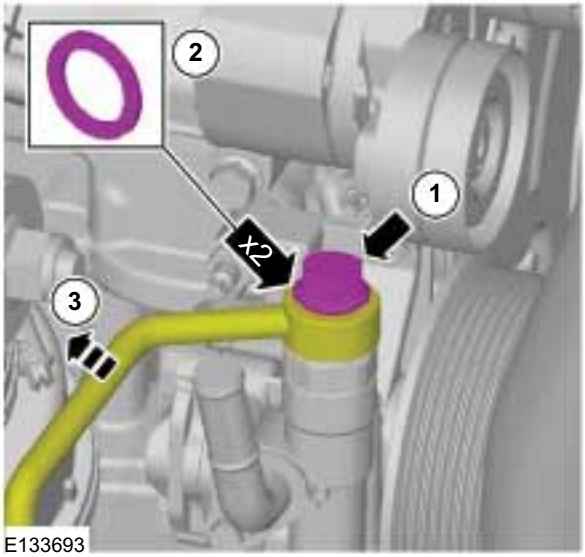

E133693

25.

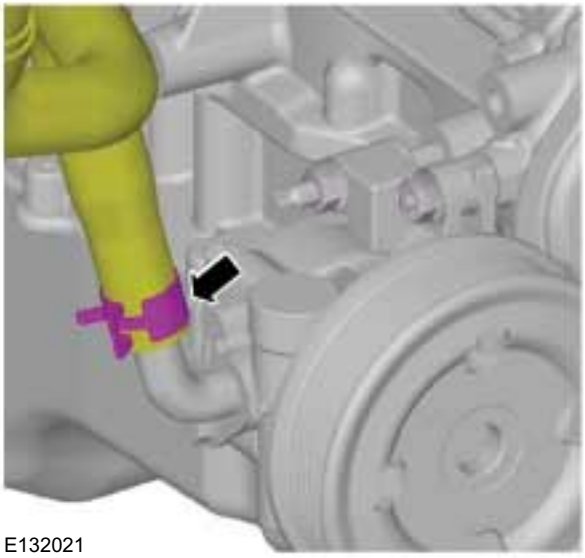
E132021

INSTALLATION

26. Torque: 22 Nm

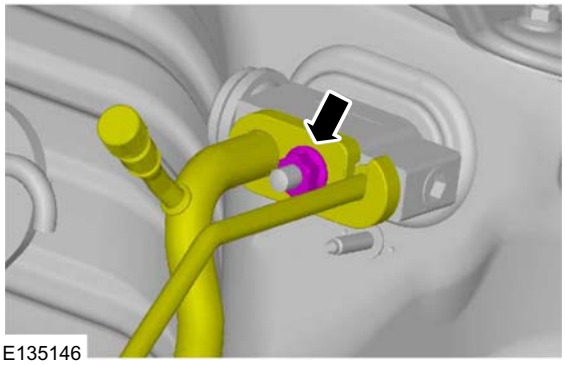
E135146

27. Refer to: Starter Motor - 3.2L Duratorq-TDCi (148kW/200PS) - Puma (303-06 Starting System - 2.2L Duratorq-TDCi (88kW/120PS) - Puma/2.2L Duratorq-TDCi (96kW/130PS) - Puma/2.2L Duratorq-TDCi (110kW/150PS) - Puma/3.2L Duratorq-TDCi (148kW/200PS) - Puma, Removal and Installation).

28.

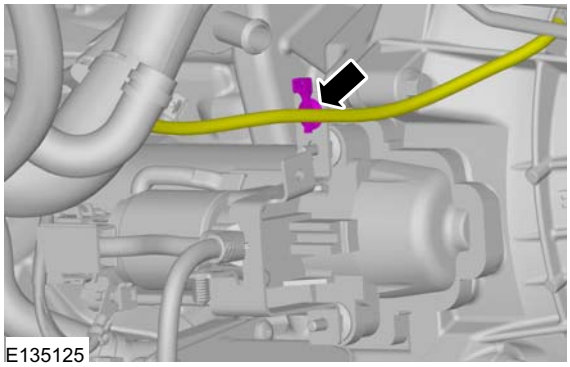
E135125

29. Refer to: Transmission Fluid Cooler (307-02 Transmission/Transaxle Cooling, Removal and Installation).

30. Refer to: Condenser - 2.2L Duratorq-TDCi (88kW/120PS) - Puma/2.2L Duratorq-TDCi (96kW/130PS) - Puma/2.2L Duratorq-TDCi (110kW/150PS) - Puma/3.2L Duratorq-TDCi (148kW/200PS) - Puma (412-01 Climate Control, Removal and Installation).

31. Refer to: Radiator (303-03 Engine Cooling - 3.2L Duratorq-TDCi (148kW/200PS) - Puma, Removal and Installation).

32. Refer to: Cooling Fan Motor and Shroud (303-03 Engine Cooling - 2.2L Duratorq-TDCi (88kW/120PS) - Puma/2.2L Duratorq-TDCi (96kW/130PS) - Puma/2.2L Duratorq-TDCi (110kW/150PS) - Puma, Removal and Installation).

33. Refer to: Air Cleaner - 3.2L Duratorq-TDCi (148kW/200PS) - Puma (303-12 Intake Air Distribution and Filtering - 2.2L Duratorq-TDCi (88kW/120PS) - Puma/2.2L Duratorq-TDCi (96kW/130PS) - Puma/2.2L Duratorq-TDCi (110kW/150PS) - Puma/3.2L Duratorq-TDCi (148kW/200PS) - Puma, Removal and Installation).

34.

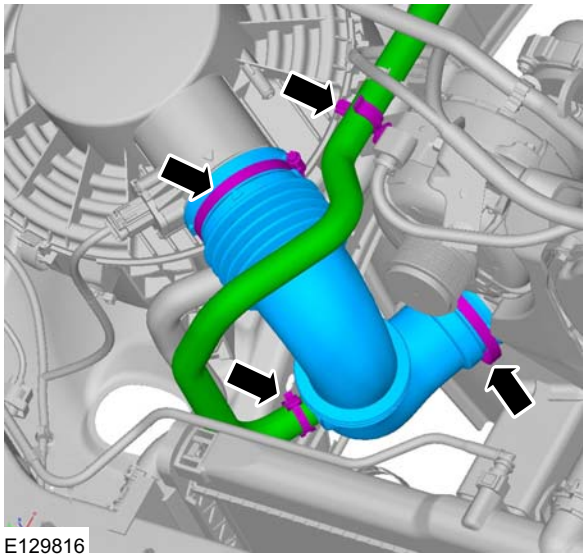
E129816

INSTALLATION

35.

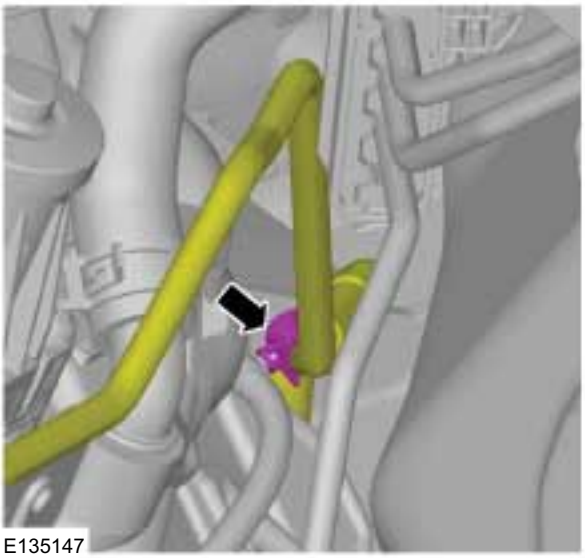

36. Torque: 10 Nm

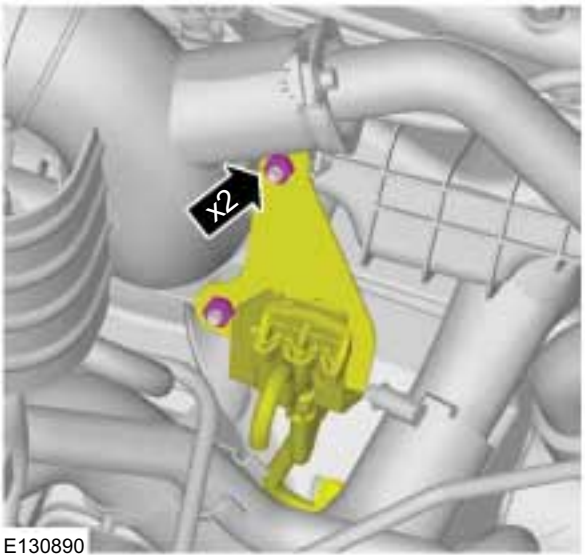

37. Torque: 18 Nm

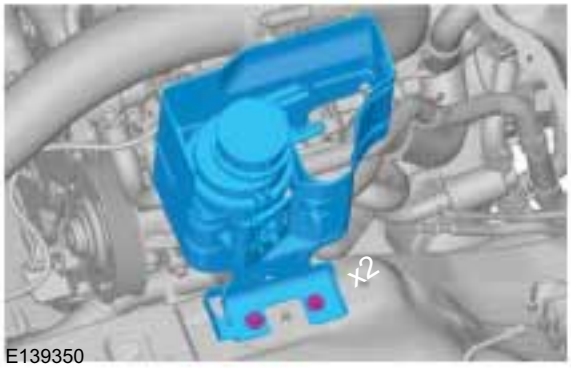

38. Torque: 5 Nm

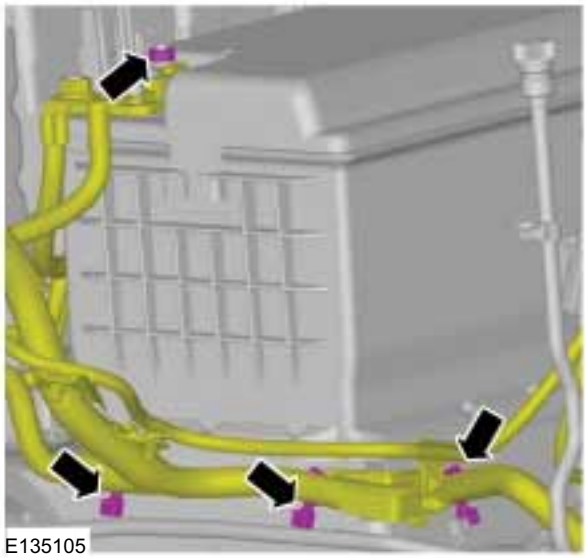

39.

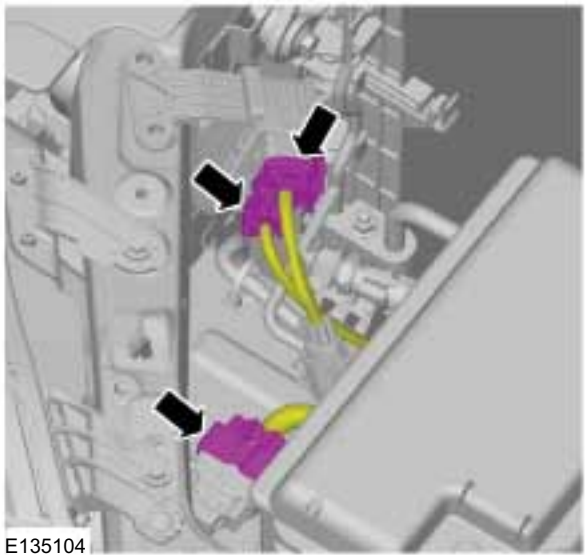

INSTALLATION

40.

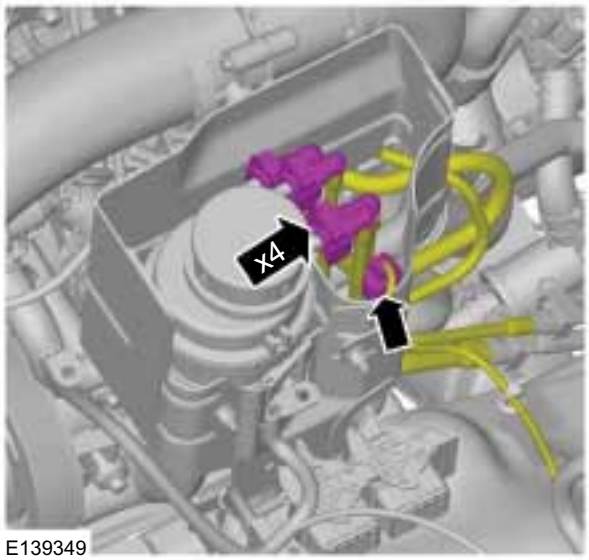

E139349

41. Refer to: Powertrain Control Module (PCM) (303-14 Electronic Engine Controls - 2.2L Duratorq-TDCi (88kW/120PS) - Puma/2.2L Duratorq-TDCi (96kW/130PS) - Puma/2.2L Duratorq-TDCi (110kW/150PS) - Puma/3.2L Duratorq-TDCi (148kW/200PS) - Puma, Removal and Installation).

42. Refer to: Battery Tray (414-01 Battery, Mounting and Cables, Removal and Installation).

43. Refer to: Battery (414-01 Battery, Mounting and Cables, Removal and Installation).

44. Torque: 10 Nm

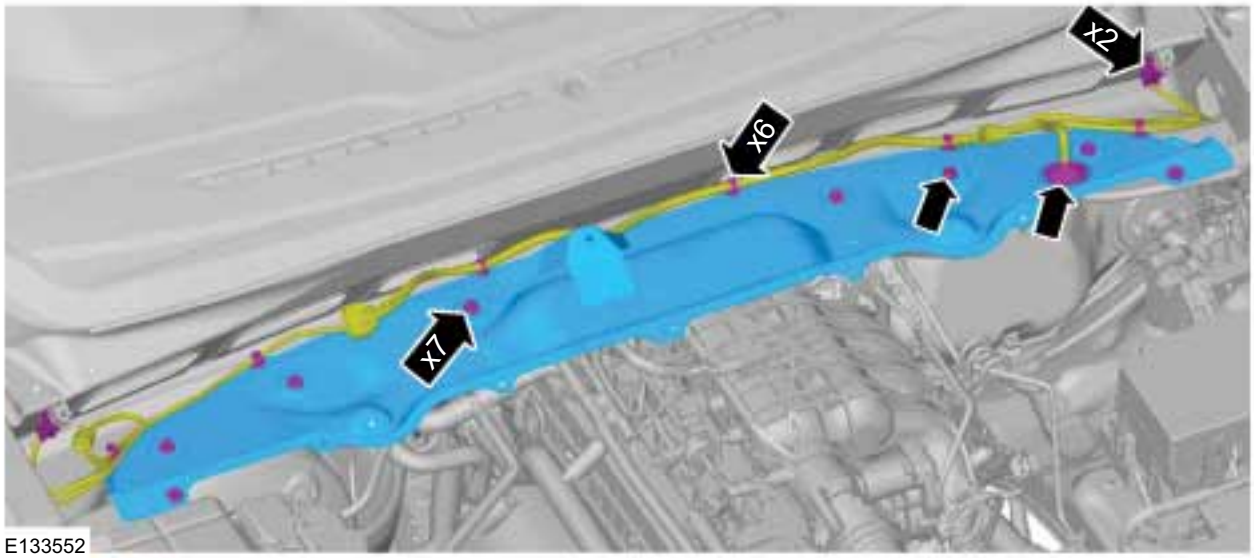

E133552

INSTALLATION

45. On both sides.

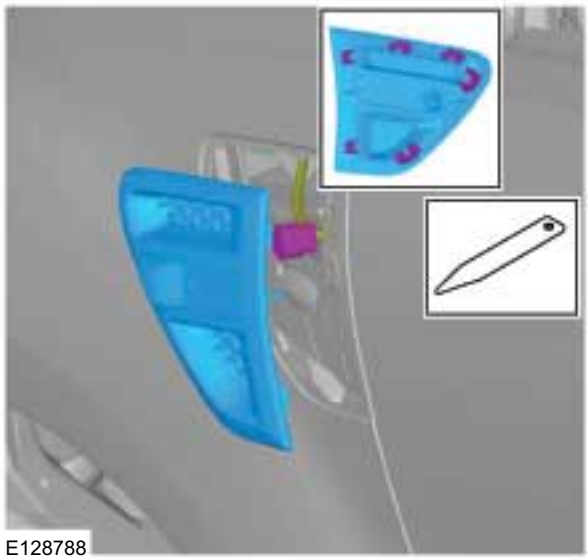
E128788

46. Torque: 10 Nm

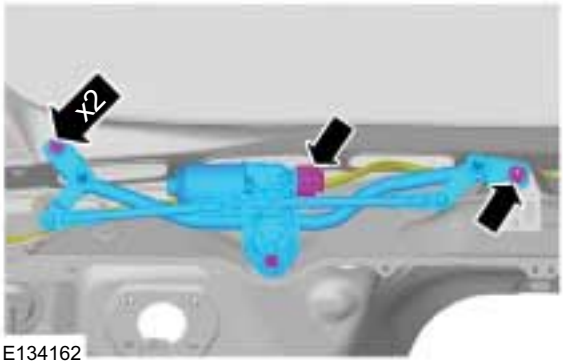

E134162

47. Refer to: Cowl Panel Grille (501-02 Front End Body Panels, Removal and Installation).

48. Torque: 25 Nm

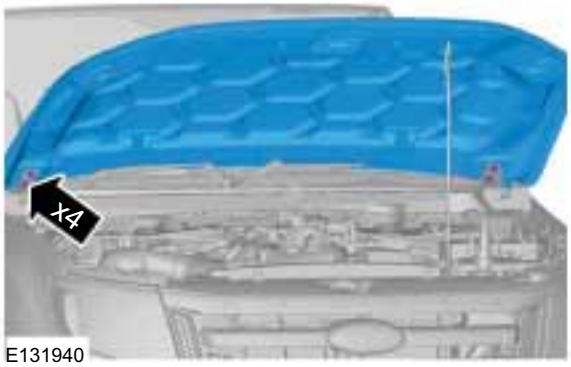

E131940

49.

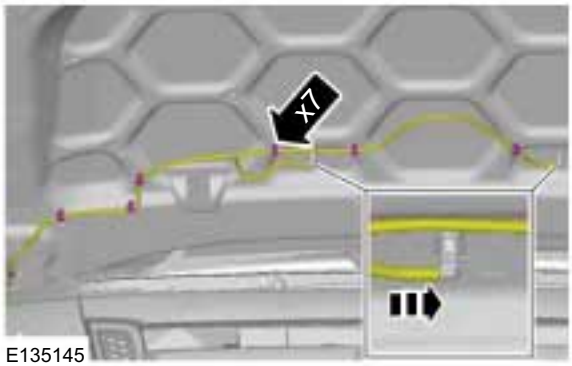

E135145

50.

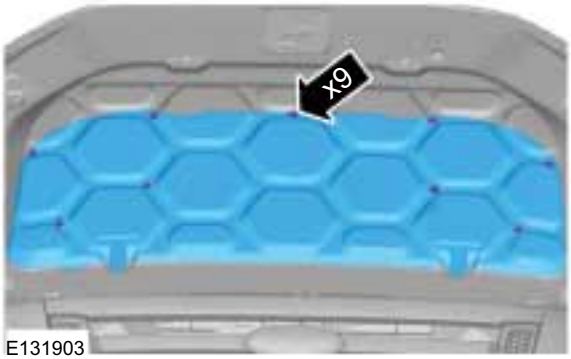

E131903

51. Refer to: Lifting (100-02 Jacking and Lifting, Description and Operation).

52. Torque: 30 Nm

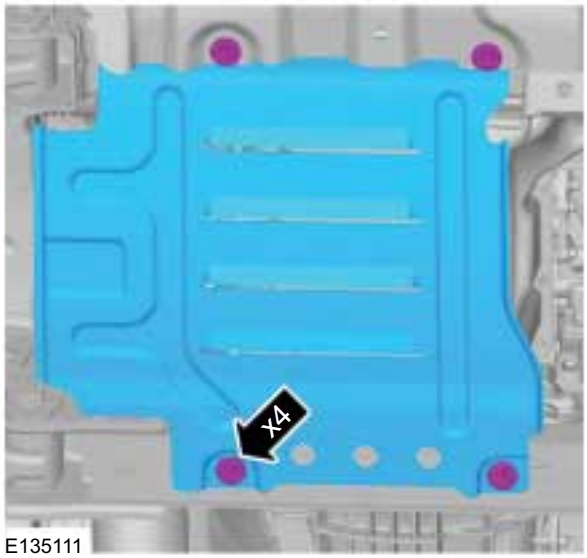

E135111

INSTALLATION

53. Torque: 20 Nm

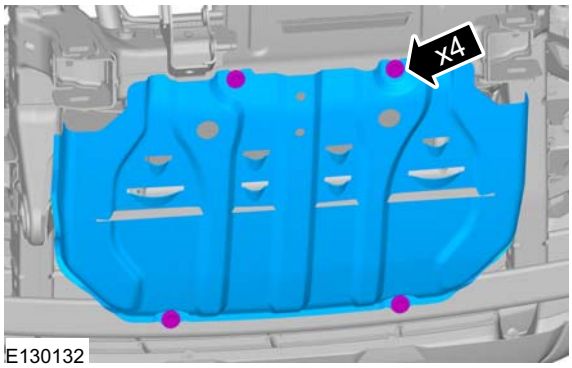

54. Refer to: Air Conditioning (A/C) System Recovery, Evacuation and Charging (412-00 Climate Control System - General Information, General Procedures).

55. Refer to: Cooling System Draining, Filling and Bleeding - 2.2L Duratorq-TDCi (88kW/120PS) - Puma/2.2L Duratorq-TDCi (96kW/130PS) - Puma/2.2L Duratorq-TDCi (110kW/150PS) - Puma/3.2L Duratorq-TDCi (148kW/200PS) - Puma (303-03 Engine Cooling - 3.2L Duratorq-TDCi (148kW/200PS) - Puma, General Procedures).

56. Refer to: Battery Disconnect and Connect (414-01 Battery, Mounting and Cables, General Procedures).

INSTALLATION

Engine Accessories(21 139 4)

Installation

Special Tool(s) / General Equipment

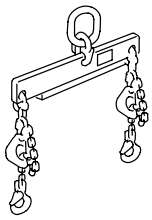 21068A	303-122 Lifting Bracket, Engine
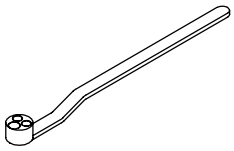 E87614	303-1310 Holding Wrench, Crankshaft
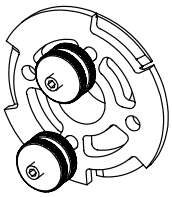 E75376	303-1317 Locking Tool, Fuel Injection Pump Sprocket
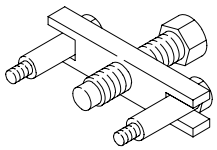 21132	303-249 Remover, Crankshaft Timing Pulley
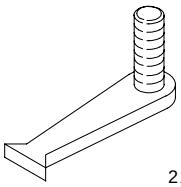 21135	303-254 Locking Tool, Flywheel
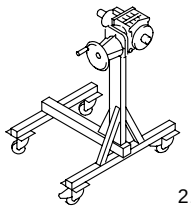 21187	303-435 Mounting Stand

Special Tool(s) / General Equipment

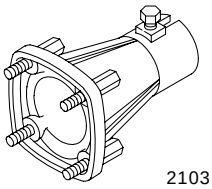 21031B	303-435-06 Mounting Bracket for 303-435
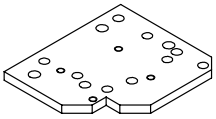 E68386	303-435-11B Mounting Plate for 303-435-06
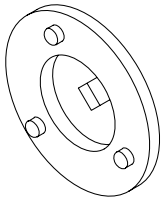 303679	303-679 Remover/Installer, Engine Front Cover Inspection Plate
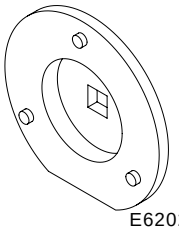 E62024	303-679A Remover/Installer, Engine Front Cover Inspection Plate
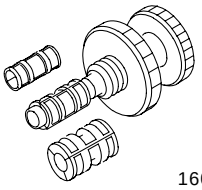 16067	308-204 Aligner, Clutch Disc
1/2 Inch Square Drive Breaker Bar	
Dowel with a Diameter of 6 mm	

Materials

Name	Specification
Silicone Sealant LB	WSE-M4G323-A4 / 2U7J-M4G323-AA

INSTALLATION

1.

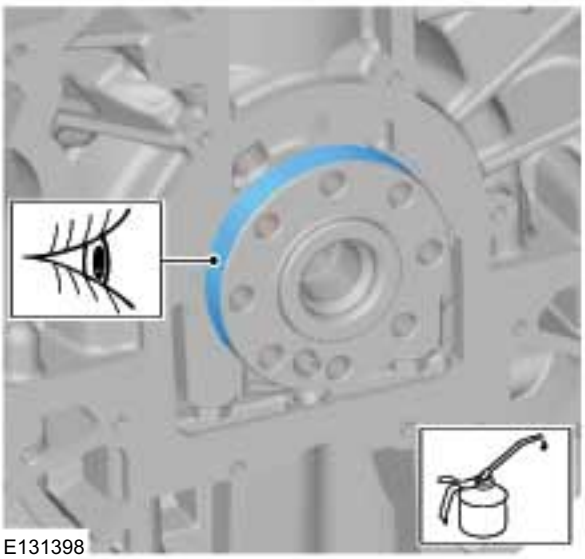

Initially hand tighten the fasteners.

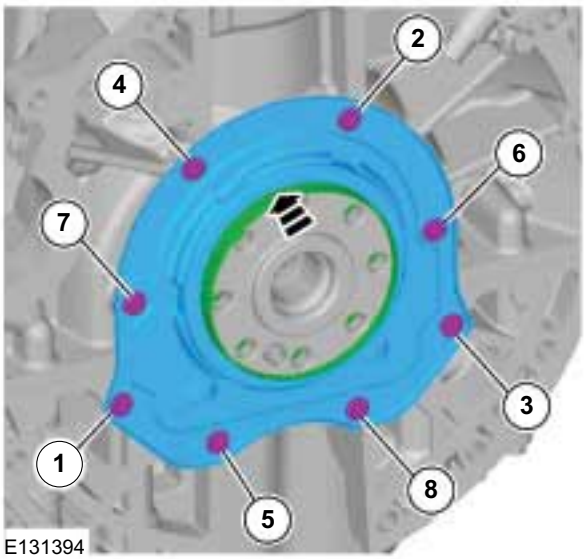

2. **NOTE:** Install the new crankshaft rear seal carrier within five minutes of applying the recommended sealant.

   Material: Silicone Sealant LB (WSE-M4G323-A4 / 2U7J-M4G323-AA) sealant

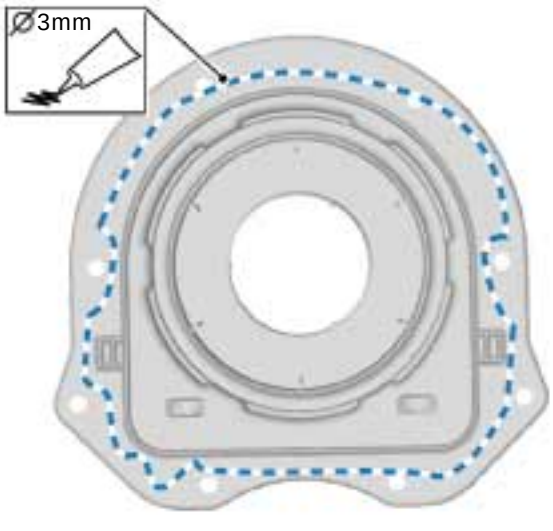

3. ⚠ **CAUTION: A new crankshaft rear seal carrier is supplied with an alignment sleeve that must not be removed until the crankshaft rear seal is fully installed. Failure to follow this instruction may result in damage to the vehicle.**

4. **NOTE:** New crankshaft rear seal carriers are supplied with an alignment sleeve which must be removed after installation.

   Torque: 20 Nm

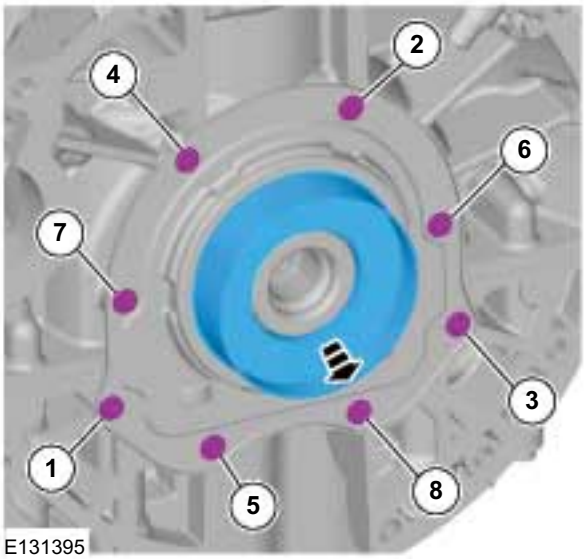

INSTALLATION

5. Special Tool(s): 303-254

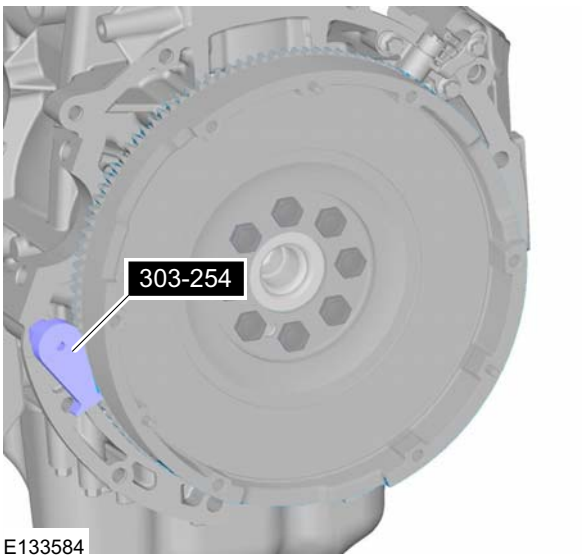

E133584

6. **NOTE:** Make sure that the flywheel is in full contact with the crankshaft flange before installing the flywheel bolts.

   Initially hand tighten the fasteners.

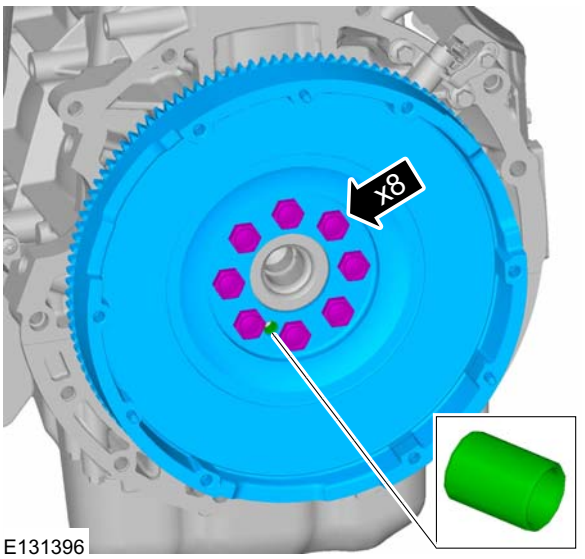

E131396

7. Special Tool(s): 303-254
   Torque:
   - Stage 1: 15 Nm
   - Stage 2: 30 Nm
   - Stage 3: 75 Nm

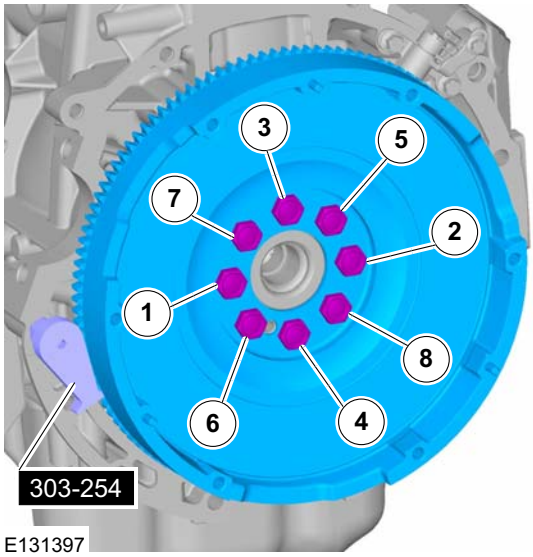

E131397

8. **NOTE:** The cone on the special tool must only be tightened finger tight to prevent damage to the clutch disc.

   Special Tool(s): 308-204

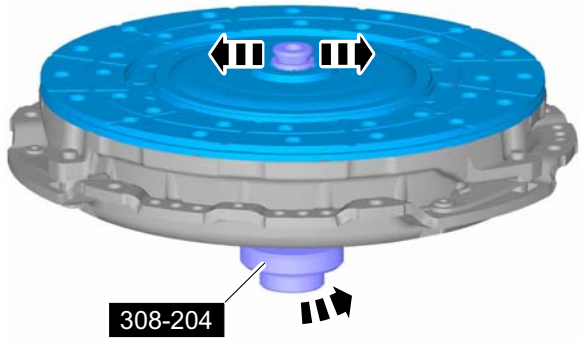

E129961

INSTALLATION

9. **NOTE:** Only tighten the bolt finger tight at this stage.

   Special Tool(s): 308-204

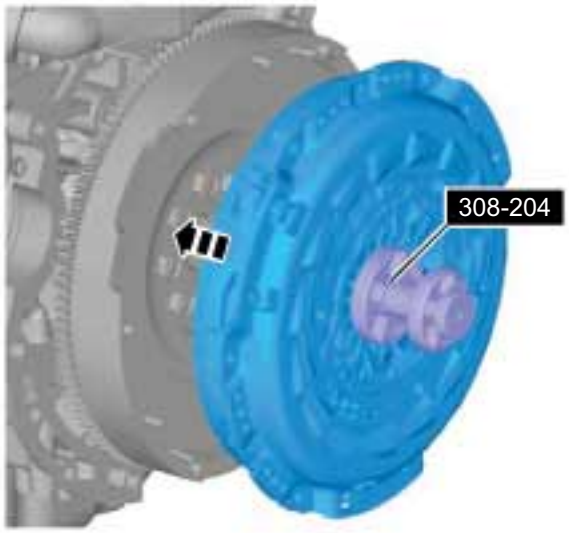

E129962

10. ⚠ **CAUTION: Tighten the clutch pressure plate retaining bolts by two turns at a time in the sequence shown.**

    Special Tool(s): 308-204
    Torque: 45 Nm

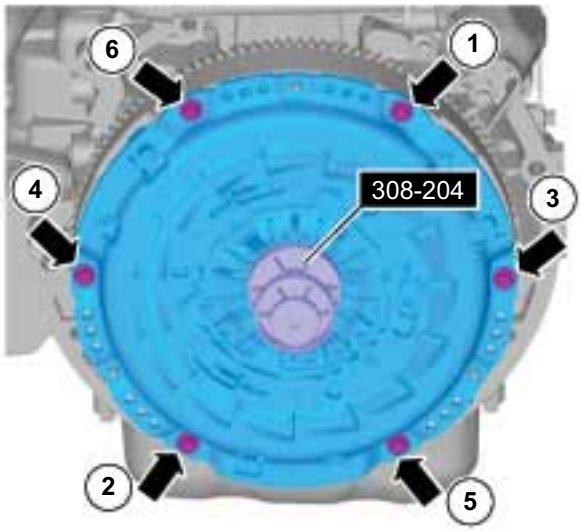

E129963

11. Remove the Special Tool(s): 308-204

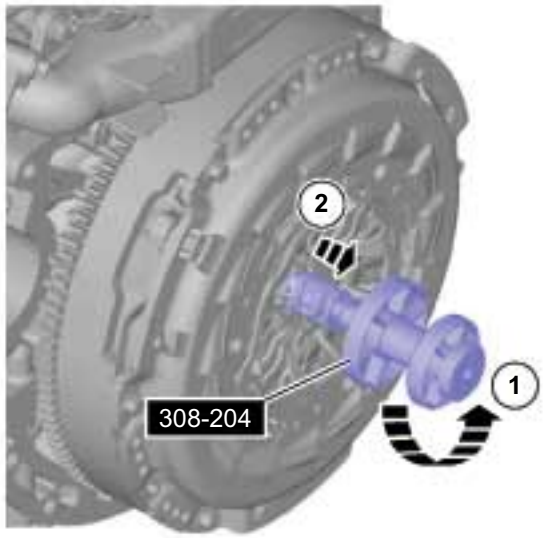

E129984

12. **NOTE:** Make sure that a new component is installed.

    Torque: 7 Nm

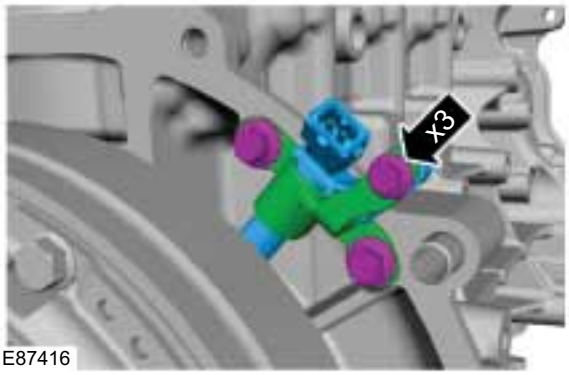

E87416

INSTALLATION

13. Torque: 23 Nm

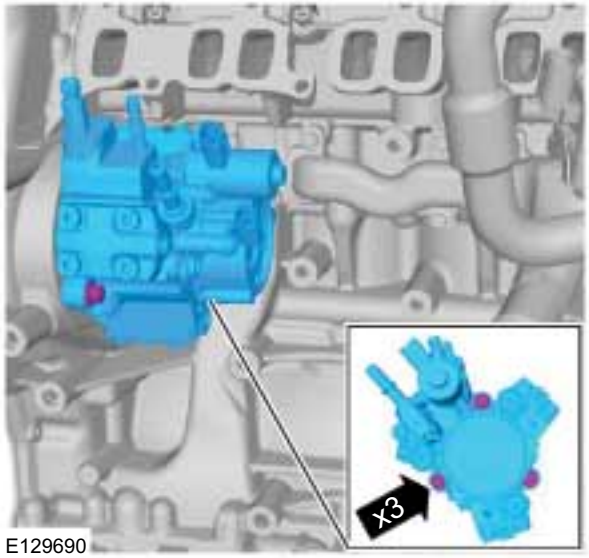

E129690

14. **NOTE:** Make sure that a new component is installed.

Torque: 45 Nm

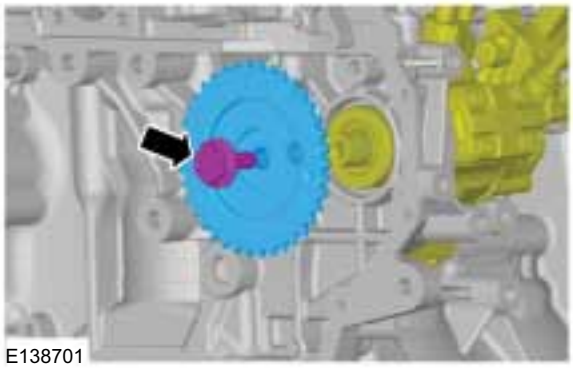
E138701

15. Torque: 22 Nm

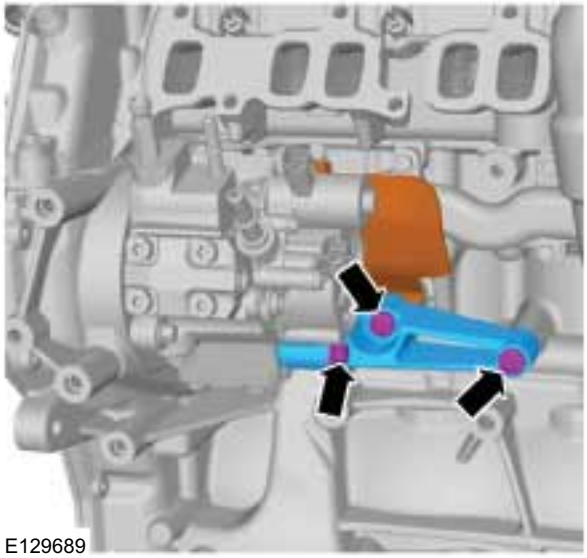
E129689

16. Remove the Special Tool(s): 303-1317, 303-249

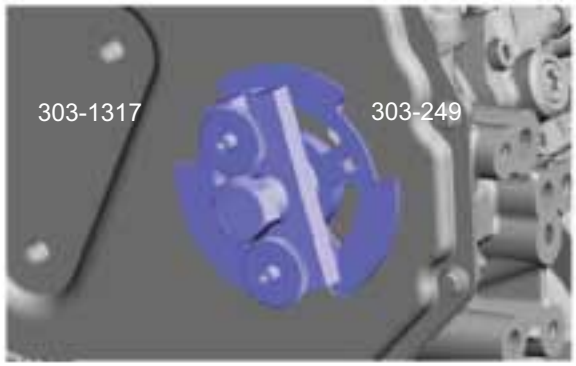

17. Remove the Special Tool(s): 303-1317

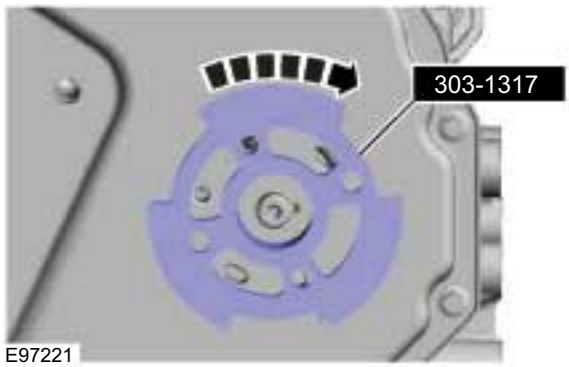

E97221

INSTALLATION

18. Remove the Special Tool(s): 303-679

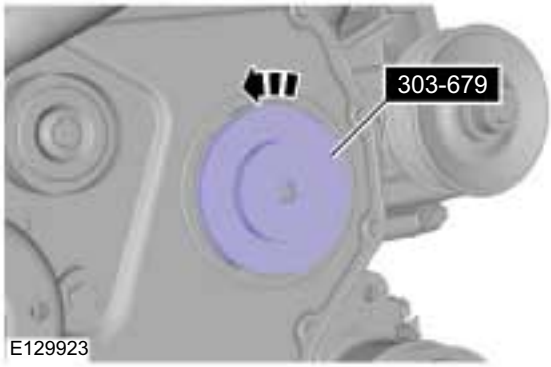

19. Torque: 12 Nm

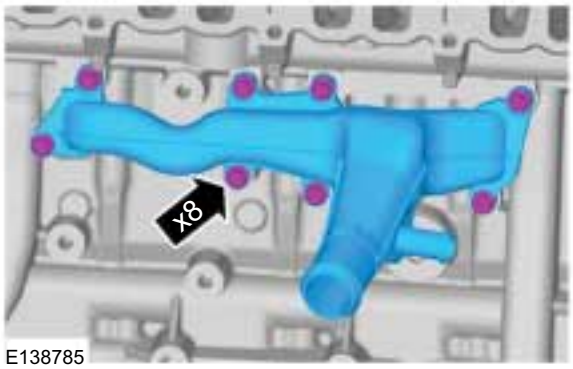

20. Torque: 23 Nm

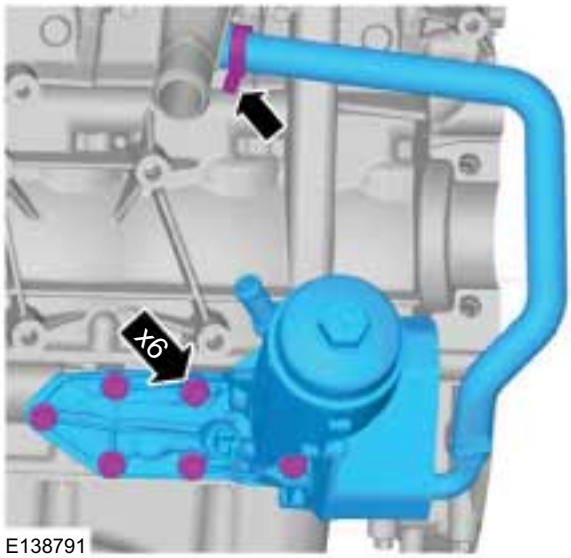

21. Torque: 23 Nm

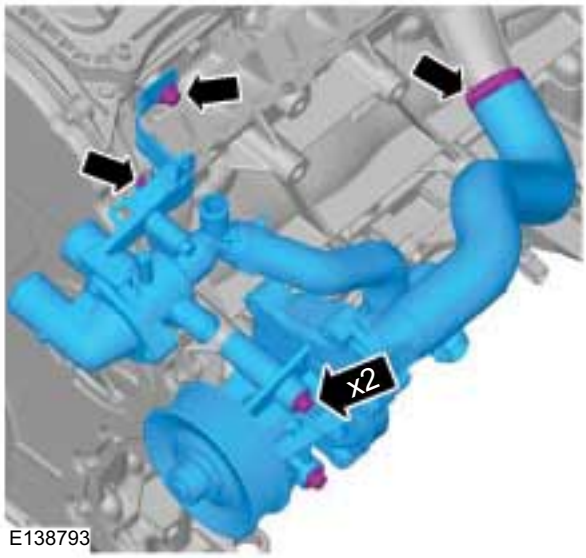

22. 1. Torque: 48 Nm
2. Torque: 23 Nm

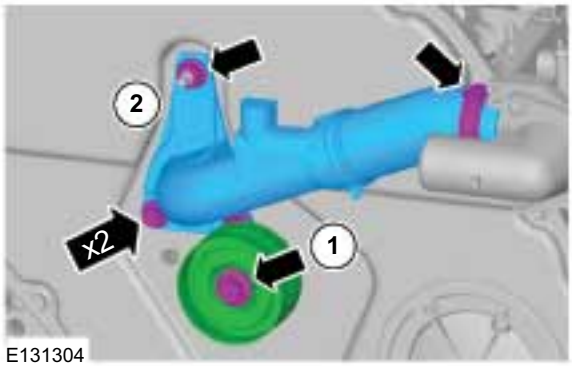

23. Torque: 48 Nm

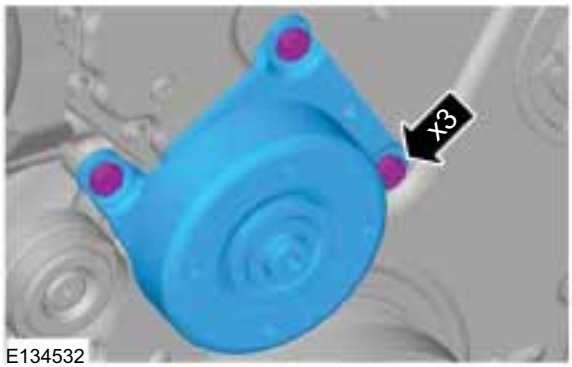

INSTALLATION

24. **NOTE:** Make sure that the mounting face is clean and lubricated.

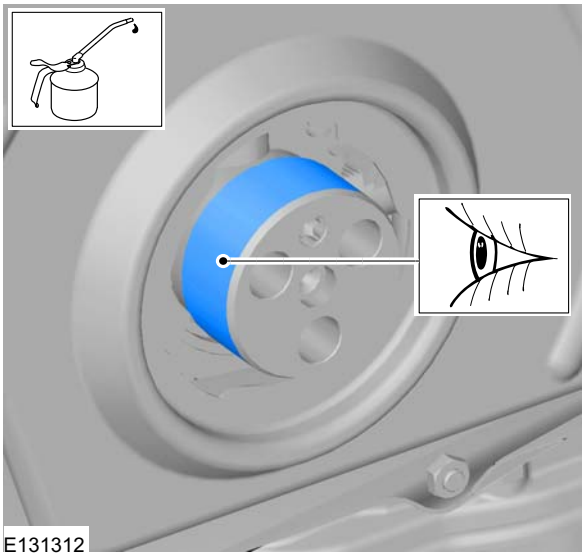
E131312

25. **CAUTION: Rotate the seal assembly until it locks. Failure to follow this instruction may result in damage to the seal assembly.**

NOTE: A new crankshaft front seal carrier is supplied with an alignment sleeve that must not be removed until the crankshaft rear seal is fully installed.

Special Tool(s): 303-679A

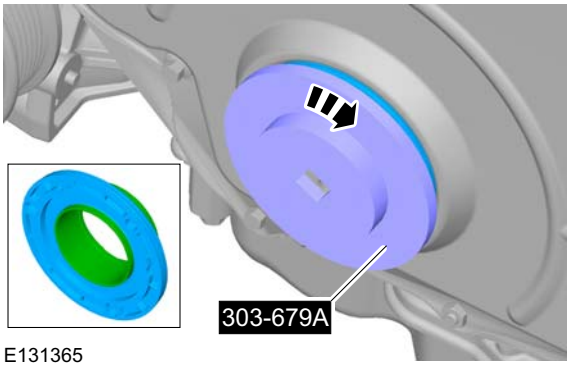

E131365

26. Remove the alignment sleeve after the seal is fully installed.

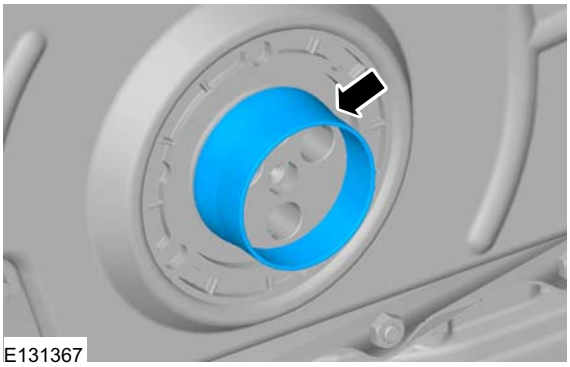
E131367

27. **CAUTION: Crankshaft pulley retaining bolts must only be used three times.**

NOTE: Initially hand tighten the fasteners.

Special Tool(s): 303-1310
Torque:
- Stage 1: 45 Nm
- Stage 2: 120°

INSTALLATION

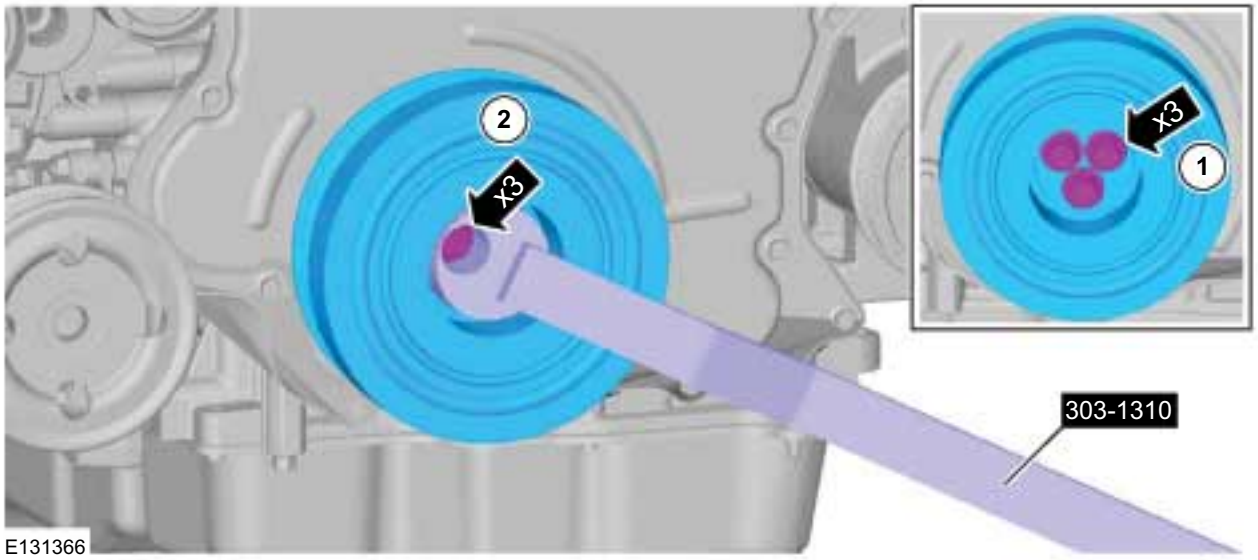

28. Torque: 9 Nm

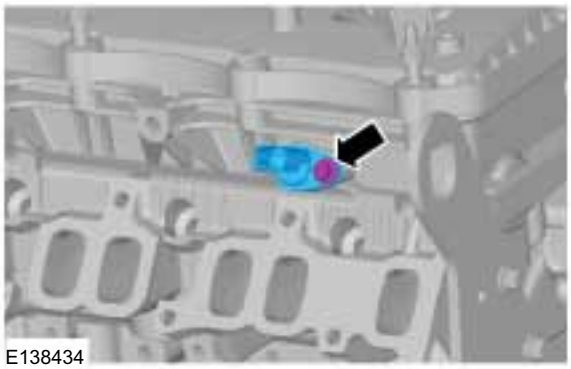

29.

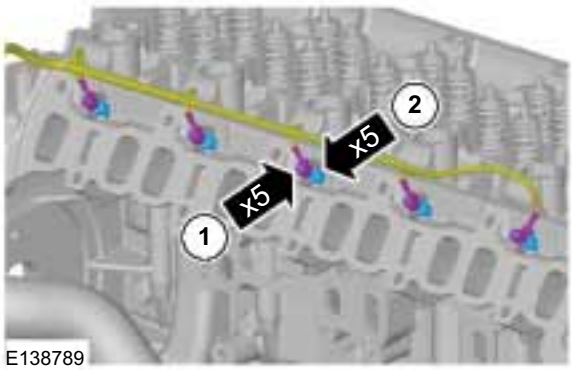

30. Torque: 15 Nm

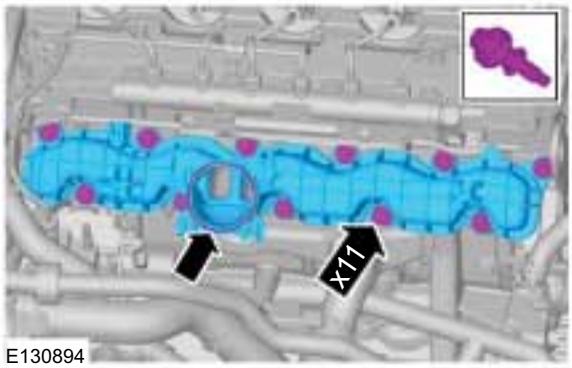

31. Record the new fuel injector correction factor code.

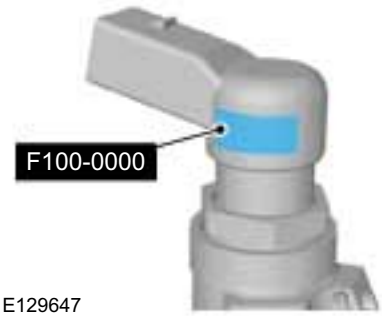

32. **NOTE:** Using a socket (or similar), press the new fuel injector copper seals onto the fuel

INSTALLATION

injectors making sure that the copper seals are pushed fully home to prevent uneven clamping.

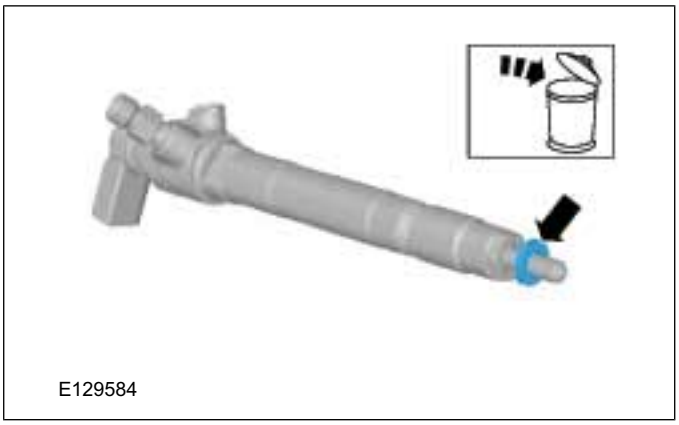

33. **CAUTION: Make sure that new bolts are installed.**

Torque:
- Stage 1: 5 Nm
- Stage 2: 180°

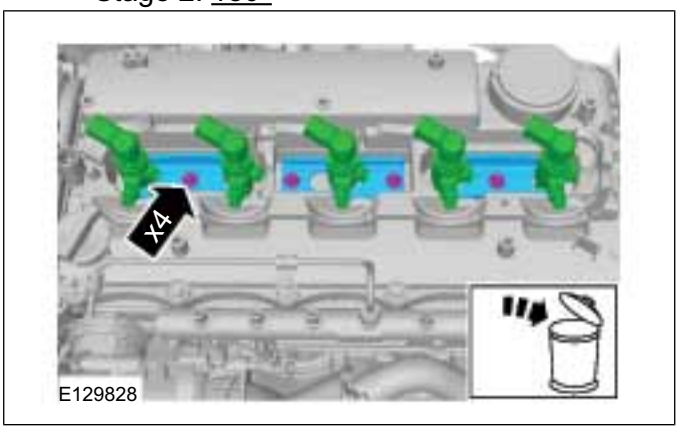

34. Torque:
- Stage 1: 7 Nm
- Stage 2: 20 Nm

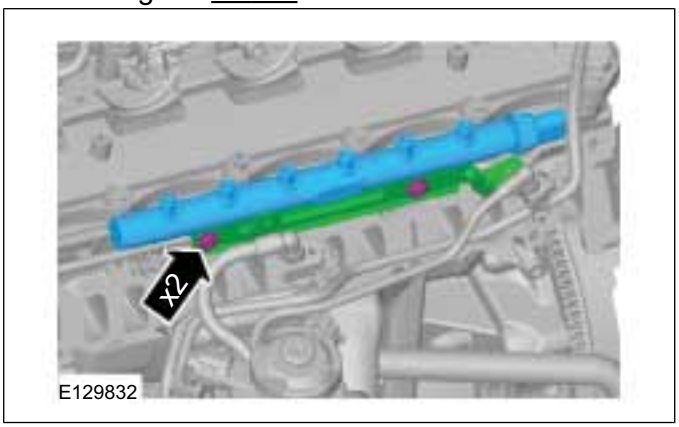

35. **CAUTIONS:**

Make sure that the fuel line remains in contact at both ends until both unions nuts have been unscrewed and the area around the joints thoroughly cleaned.

Make sure that all openings are sealed. Use new blanking caps.

NOTE: Vacuum foreign material from the high-pressure fuel supply line, the fuel pump and the fuel rail.

1. Torque:
   - Stage 1: 10 Nm
   - Stage 2: 35 Nm
2. Refer to: Fuel Injection Component Cleaning (303-04 Fuel Charging and Controls - 2.2L Duratorq-TDCi (88kW/120PS) - Puma/2.2L Duratorq-TDCi (96kW/130PS) - Puma/2.2L Duratorq-TDCi (110kW/150PS) - Puma, General Procedures).
   Torque: 12 Nm

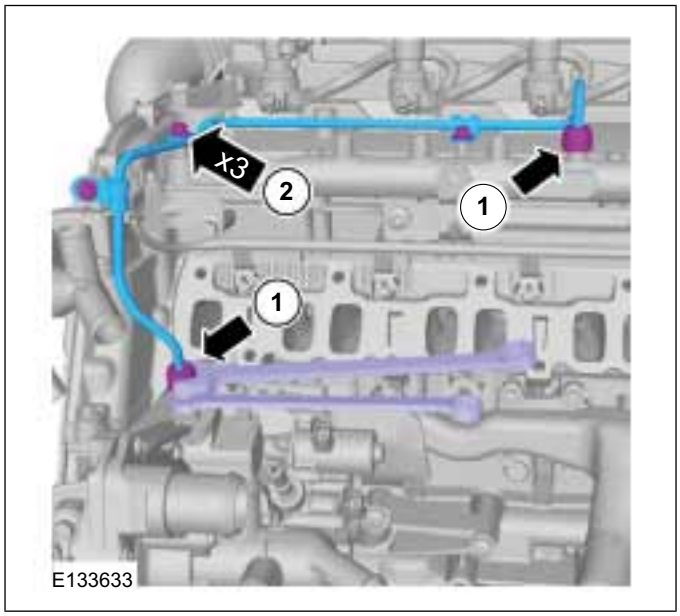

36. Torque:
- Stage 1: 20 Nm
- Stage 2: 25 Nm

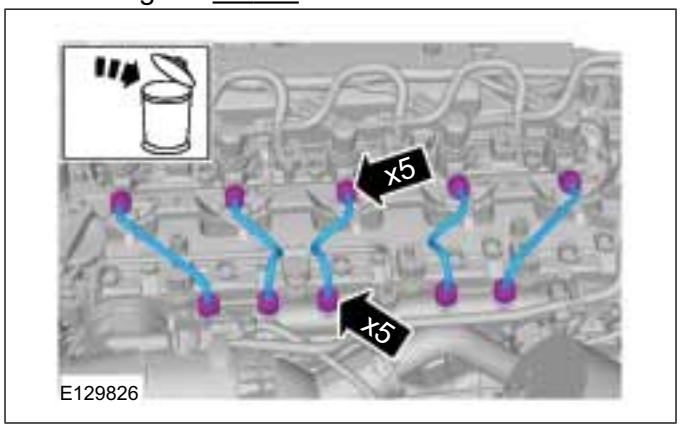

INSTALLATION

37. Torque: 22 Nm

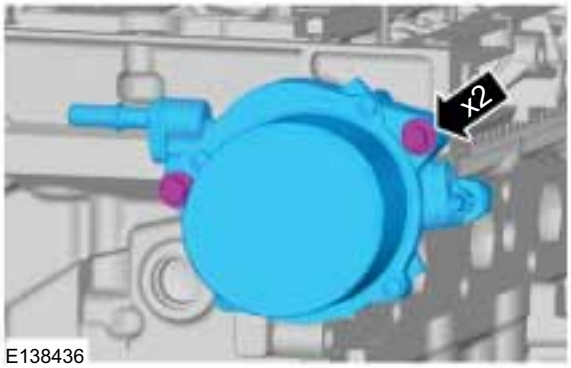

E138436

38. Torque: 12 Nm

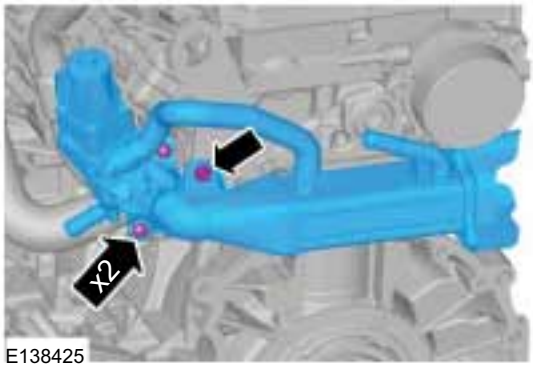

E138425

39.

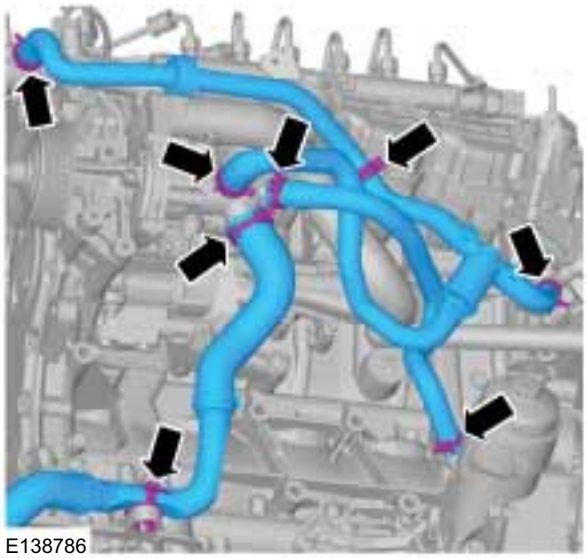
E138786

40. Torque: 25 Nm

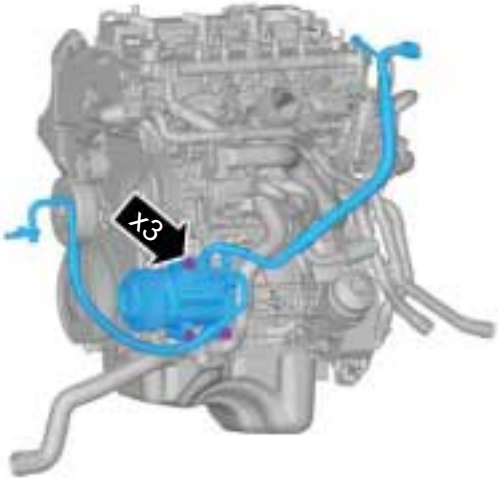

E138424

41. ⚠ **CAUTION: Make sure that all openings are sealed. Use new blanking caps.**

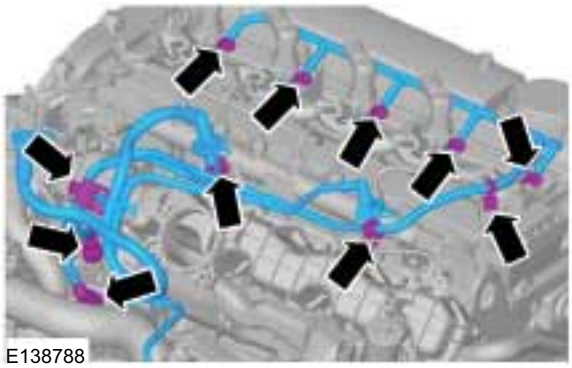
E138788

42.

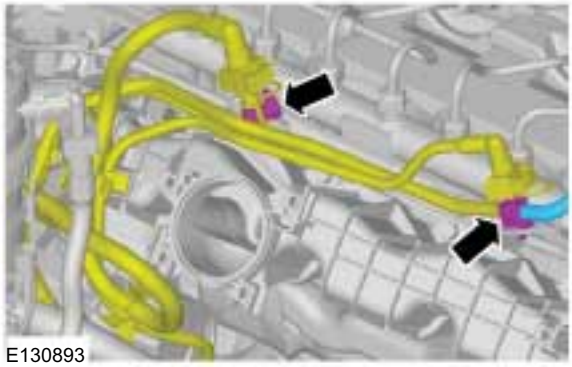
E130893

INSTALLATION

43. 3. Torque: 25 Nm

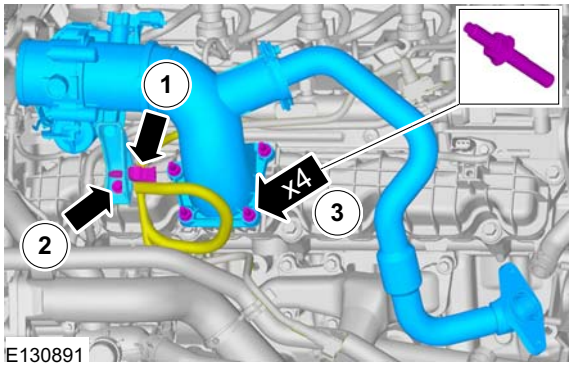

44.

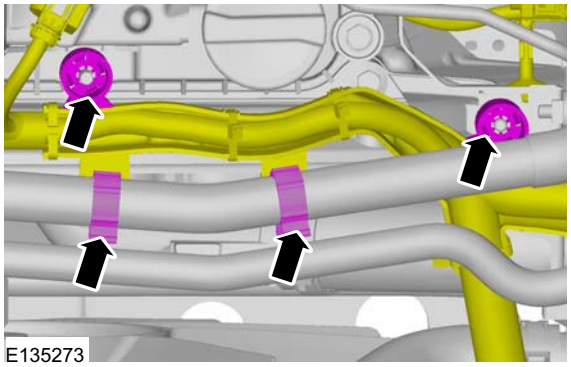

45.

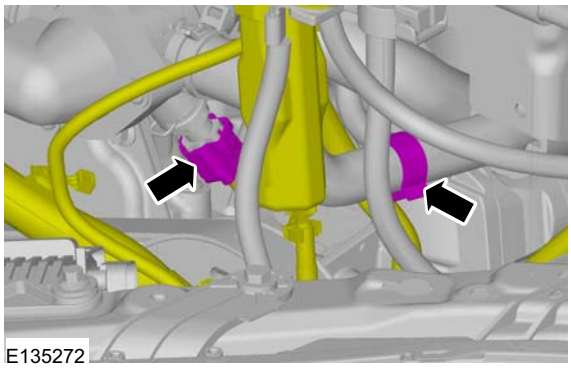

46.

INSTALLATION

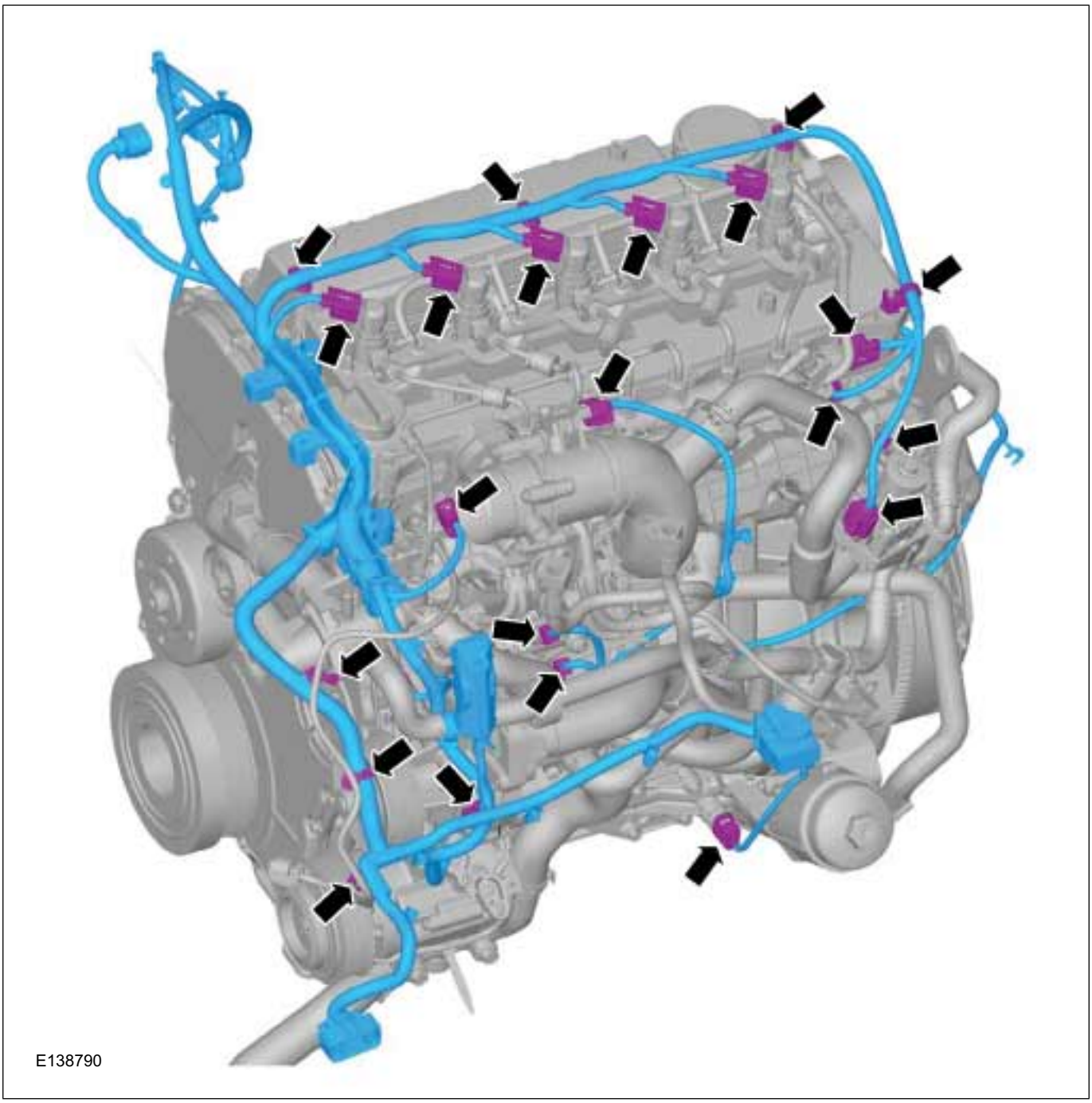

INSTALLATION

47.

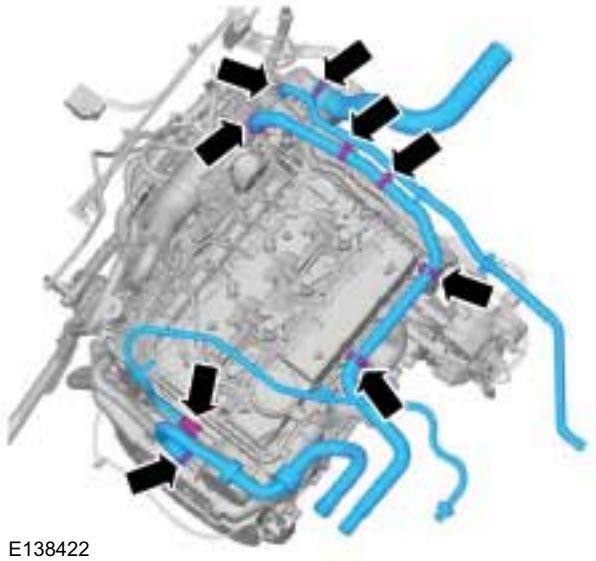
E138422

48. NOTE: The gasket is to be reused unless damaged.

NOTE: The studs are to be reused unless damaged.

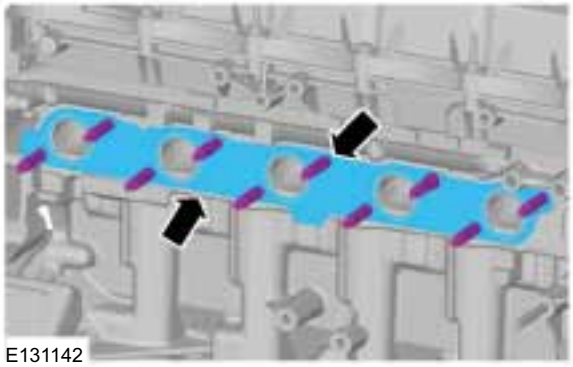
E131142

49. 1. Torque: 40 Nm
2. Torque: 23 Nm

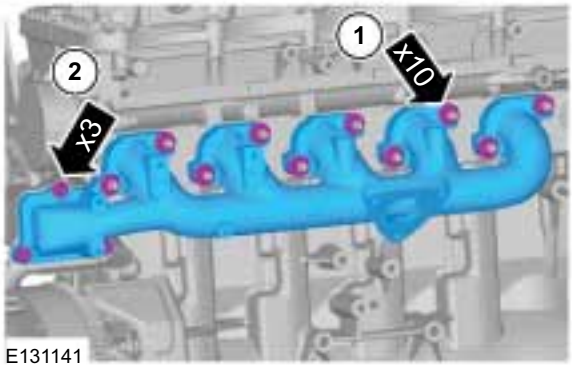

E131141

50. Torque: 9 Nm

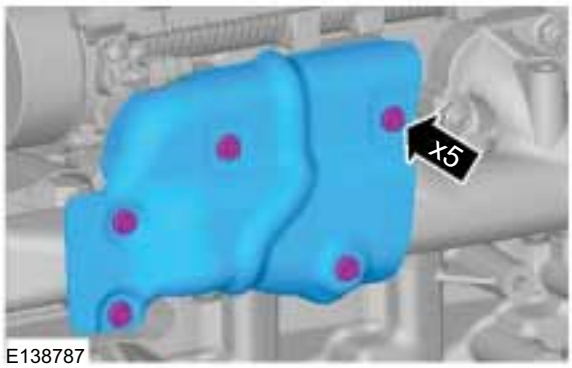

E138787

51. Torque: 20 Nm

E138430

52. Torque: 25 Nm

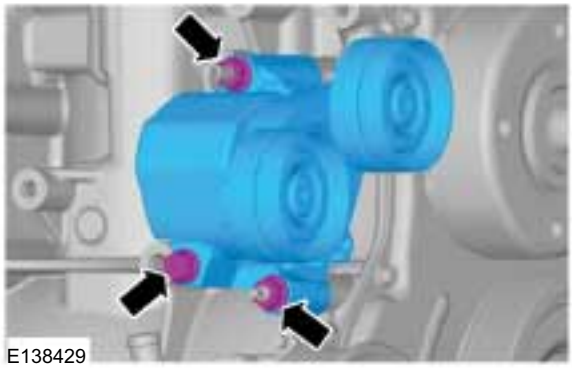
E138429

INSTALLATION

53. Torque: 25 Nm

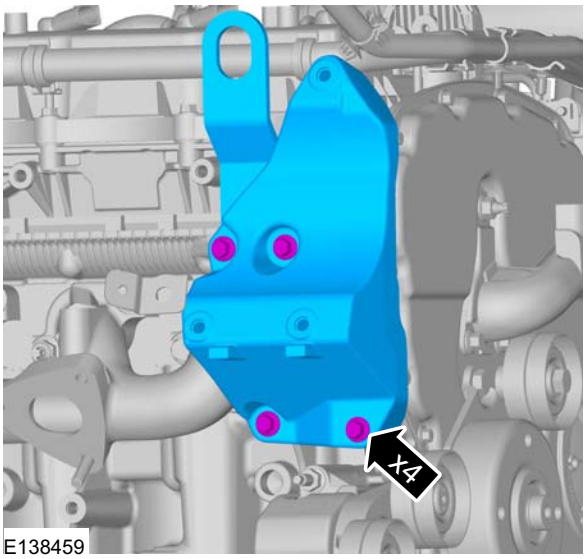

54. ⚠ **CAUTION: Take extra care not to damage the wiring harnesses.**
    4. Torque: 15 Nm
    5. Torque: 48 Nm

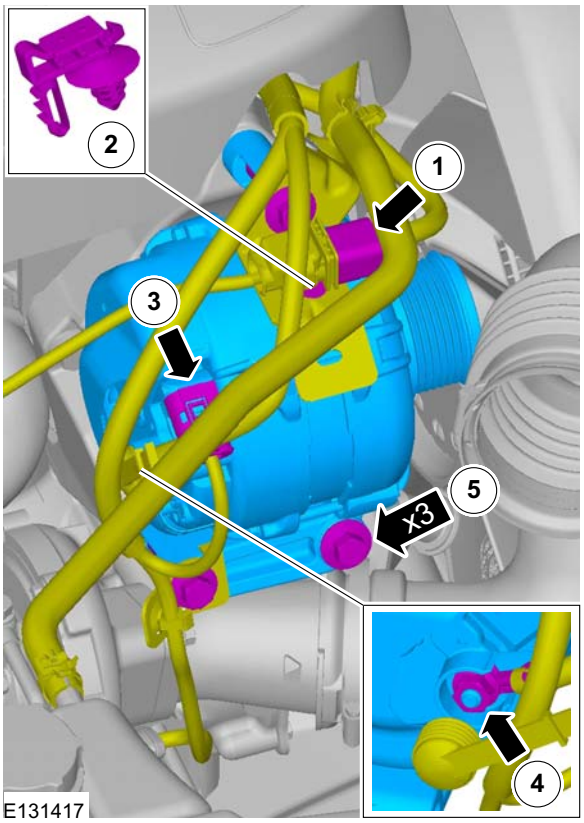

55. General Equipment: 1/2 Inch Square Drive Breaker Bar
    General Equipment: Dowel with a Diameter of 6 mm

INSTALLATION

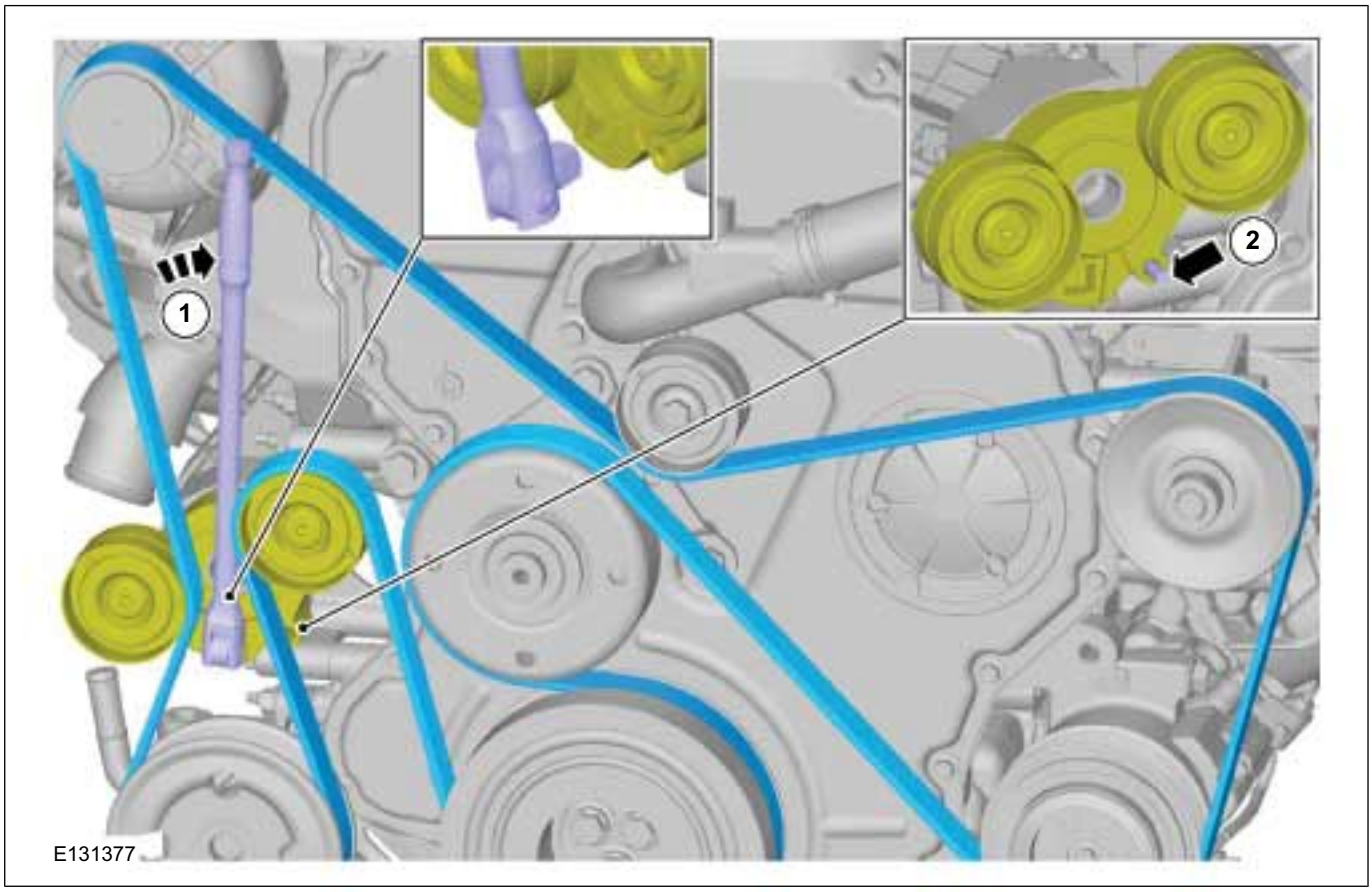

56. Install the Special Tool(s): 303-122

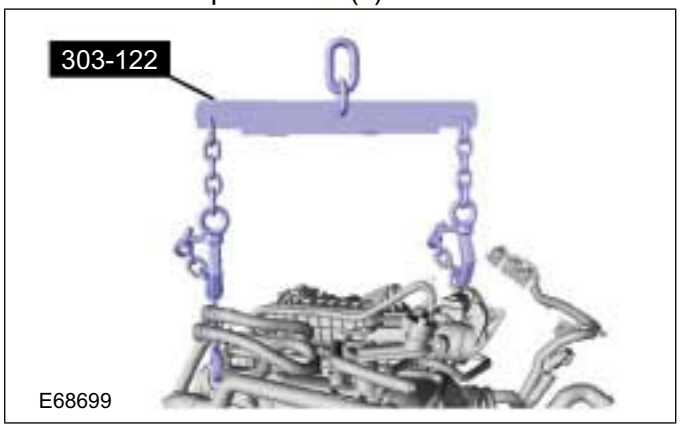

57. Remove the Special Tool(s): 303-435-06, 303-435

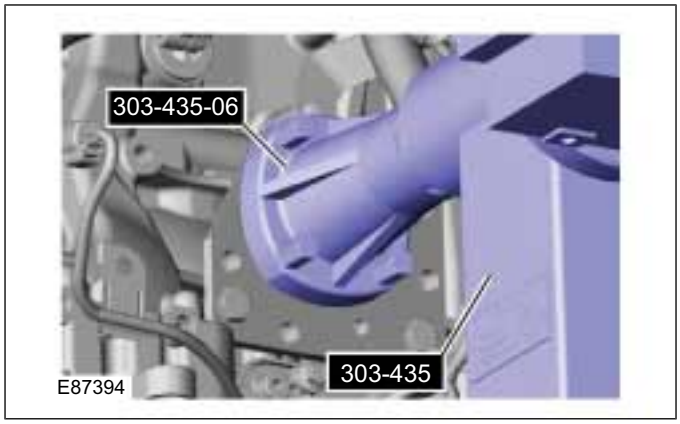

INSTALLATION

58. Remove the Special Tool(s): 303-435-11B

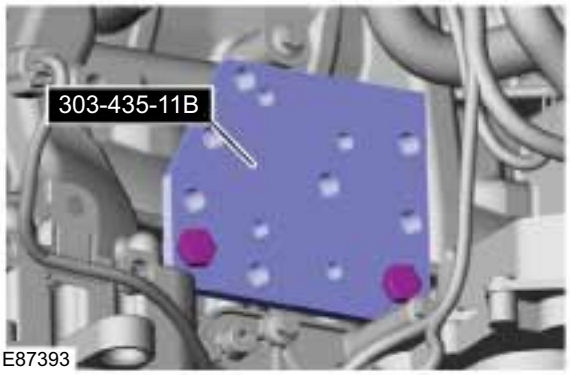

59. Torque: 9 Nm

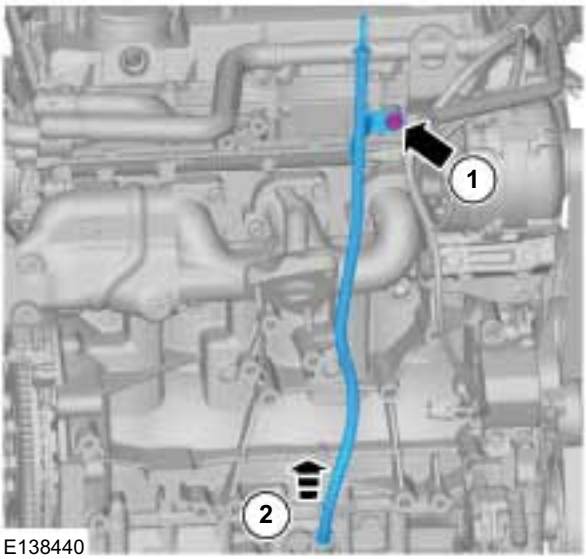

60. Torque: 23 Nm

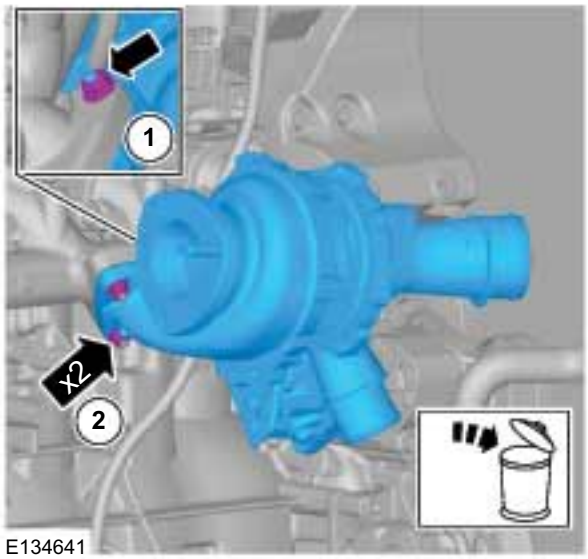

61.

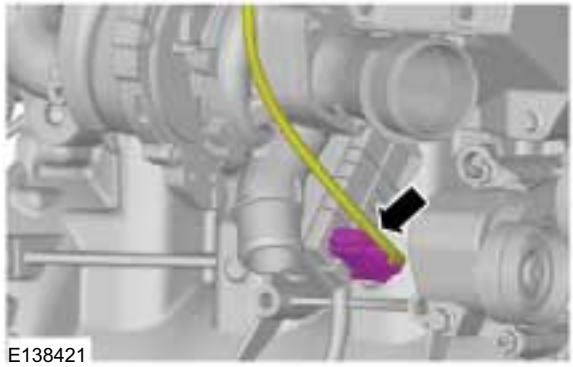

62. Torque: 10 Nm

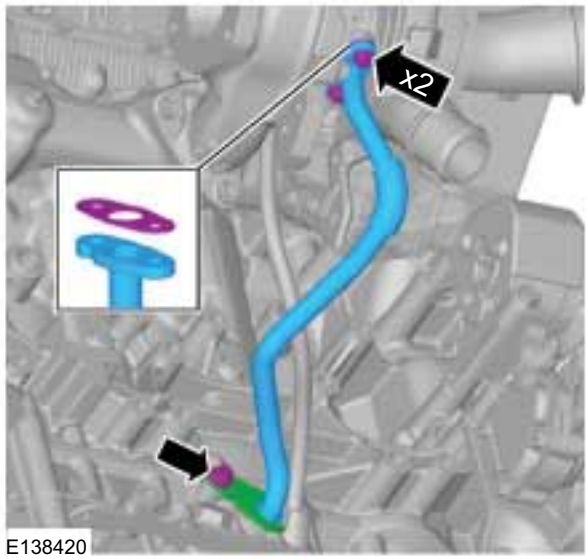

63. 1. Torque: 35 Nm
2. Torque: 32 Nm

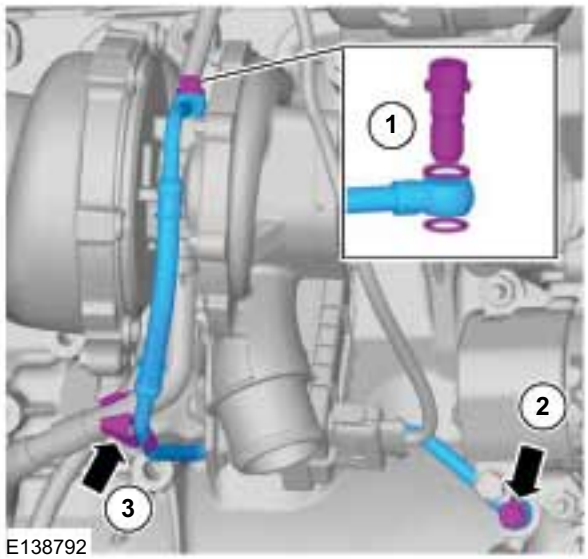

SECTION 303-03A Engine Cooling — 2.2L Duratorq-TDCi (88kW/120PS) - Puma/2.2L Duratorq-TDCi (96kW/130PS) - Puma/2.2L Duratorq-TDCi (110kW/150PS) - Puma

VEHICLE APPLICATION: 2011.50 Ranger

CONTENTS PAGE

SPECIFICATIONS

Specifications..... 303-03A-2

DESCRIPTION AND OPERATION

Engine Cooling..... 303-03A-3
Vehicles with 2.2L Duratorq-TDCi (Puma) diesel engine..... 303-03A-3

GENERAL PROCEDURES

Cooling System Draining, Filling and Bleeding — 2.2L Duratorq-TDCi (88kW/120PS) - Puma/2.2L Duratorq-TDCi (96kW/130PS) - Puma/2.2L Duratorq-TDCi (110kW/150PS) - Puma/3.2L Duratorq-TDCi (148kW/200PS) - Puma..... (24 122 0) 303-03A-5
Draining..... 303-03A-5
Filling..... 303-03A-5
Bleeding..... 303-03A-5

REMOVAL AND INSTALLATION

Thermostat..... (24 454 0) 303-03A-7
Thermostat Housing..... (24 001 0) 303-03A-8
Coolant Pump..... (24 404 0) 303-03A-9
Radiator..... (24 254 0) 303-03A-11
Cooling Fan Motor and Shroud..... (24 222 0) 303-03A-13
Coolant Outlet Connector..... 303-03A-15

SPECIFICATIONS

Antifreeze Specifications

Description	Specification
Motorcraft Super Plus 2000	WSS-M97B44-D
Specific gravity (providing no other additive is in the coolant)	1.068 at +15°C
Approximate percentage of antifreeze (by volume)	50%
Coolant remains fluid to	-30°C (-22°F)
Coolant solidifies at	-35°C (-31°F)

Cooling System Capacities — Vehicles with 2.2L Diesel Engine

Description	Liters
Vehicles with front heater only	11.5

Cooling System Pressure Specification

Description	Pressure kPa (psi)
Radiator pressure test	138 (20)
Coolant expansion tank cap release pressure	135-155 (19-22)

DESCRIPTION AND OPERATION

Engine Cooling

Vehicles with 2.2L Duratorq-TDCi (Puma) diesel engine

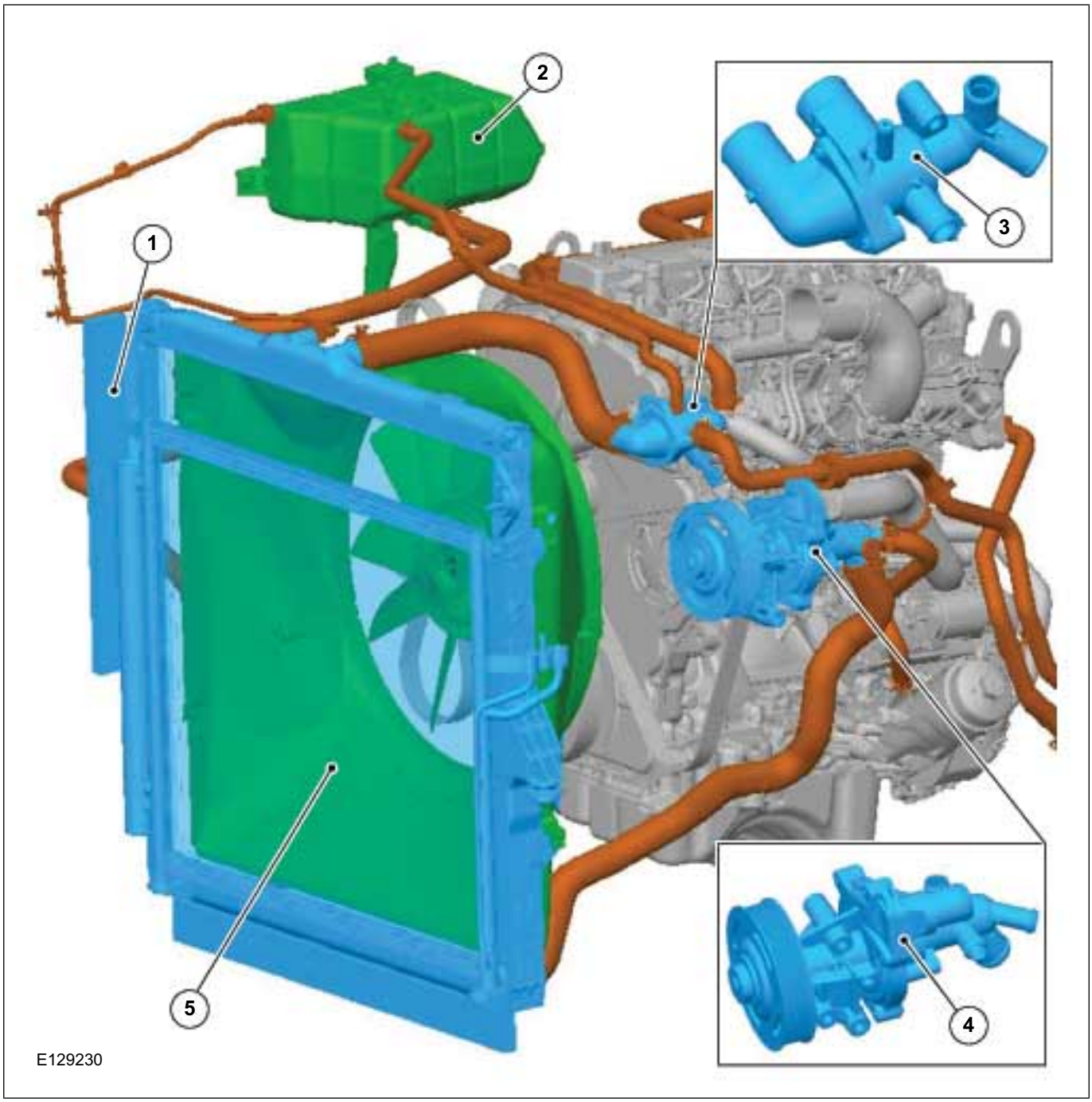

Item	Description
1	Radiator
2	Coolant expansion tank
3	Thermostat housing

Item	Description
4	Coolant pump
5	Cooling fan motor and shroud

CAUTION: If the coolant concentration is insufficient, low temperature protection and corrosion resistance will be inadequate.

DESCRIPTION AND OPERATION

NOTE: Providing the coolant has not been contaminated with other fluids or foreign material, the robust corrosion resistance properties of this coolant means that it can be reused after changing an aluminium cooling system component. The concentration should always be checked and maintained within specification.

Coolant concentration should be checked through the neck of the coolant expansion tank with a hydrometer. The acceptable range of specific gravity (sg) must be maintained.

The coolant used is an orange colored Motorcraft Super Plus 2000 engine coolant. This is a non silicated organic acid technology (OAT) coolant that must not be mixed with other coolant types. For cooling system top up, only use coolant which meets the correct specification.

GENERAL PROCEDURES

Cooling System Draining, Filling and Bleeding — 2.2L Duratorq-TDCi (88kW/120PS) - Puma/2.2L Duratorq-TDCi (96kW/130PS) - Puma/2.2L Duratorq-TDCi (110kW/150PS) - Puma/3.2L Duratorq-TDCi (148kW/200PS) - Puma(24 122 0)

Draining

WARNING: When releasing the cooling system pressure, cover the coolant expansion tank cap with a thick cloth.

1. Release the cooling system pressure by slowly turning the coolant expansion tank cap between 2 and 3 turns.

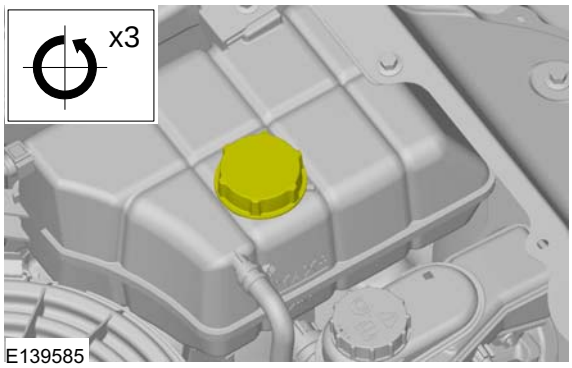

E139585

2.

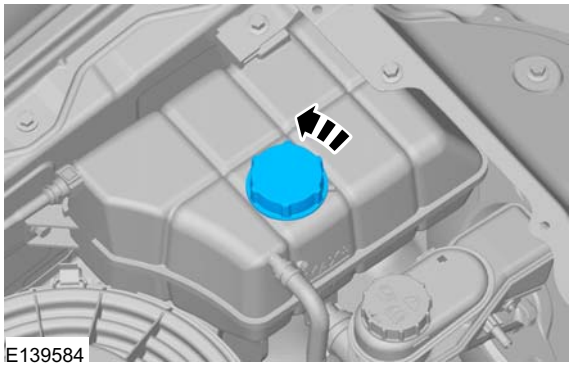
E139584

3. Refer to: Lifting (100-02 Jacking and Lifting, Description and Operation).

4.

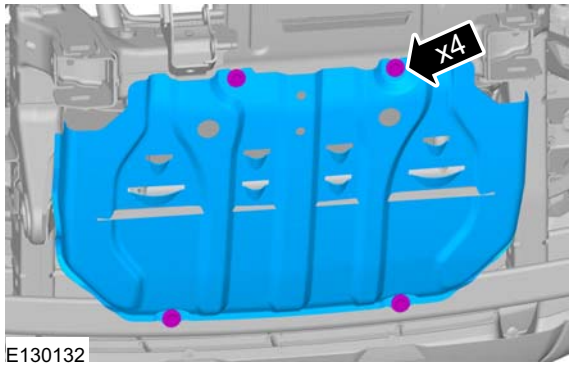

E130132

5. Remove the radiator drain plug and drain the coolant.

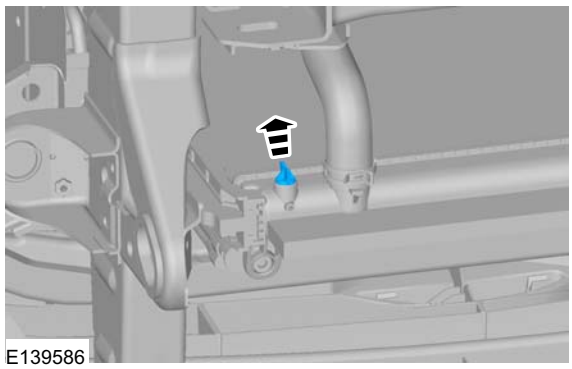
E139586

6. Install the radiator drain plug.
7. Lower the vehicle.

Filling

1. Refill the coolant to the expansion tank to maximum line (+15mm).

Bleeding

CAUTION: The fluid level must remain between the MAX and MIN marks.

1. Run the engine for 5 minutes at idle rpm.

GENERAL PROCEDURES

2. Install the coolant expansion tank cap.
3. Run the engine speed to 2500 RPM and maintain it for approximately 15 minutes.
4. Run the engine for 5minutes at idle rpm.
5. Switch the engine off.
6. Check the cooling system for leaks.
7. Refer to: Lifting (100-02 Jacking and Lifting, Description and Operation).
8. Torque: 30 Nm

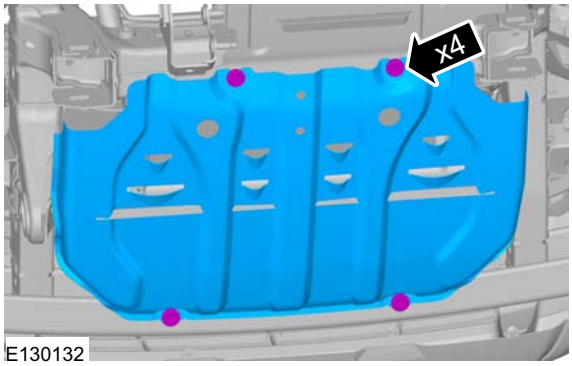

E130132

9. Lower the vehicle.
10. Allow the engine to cool and maintain close to room temperature.
11. Fill the coolant to the expansion tank max fill line, if required.

REMOVAL AND INSTALLATION

Thermostat(24 454 0)

Removal

NOTE: Removal steps in this procedure may contain installation details.

1. Drain the cooling system.

   Refer to: Cooling System Draining, Filling and Bleeding - 2.2L Duratorq-TDCi (88kW/120PS) - Puma/2.2L Duratorq-TDCi (96kW/130PS) - Puma/2.2L Duratorq-TDCi (110kW/150PS) - Puma/3.2L Duratorq-TDCi (148kW/200PS) - Puma (303-03 Engine Cooling - 3.2L Duratorq-TDCi (148kW/200PS) - Puma, General Procedures).

2. Torque: 10 Nm

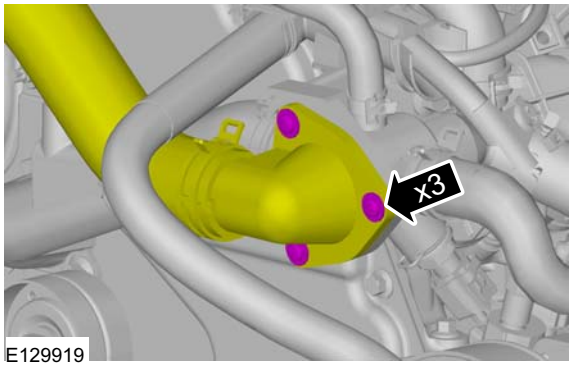

E129919

3.

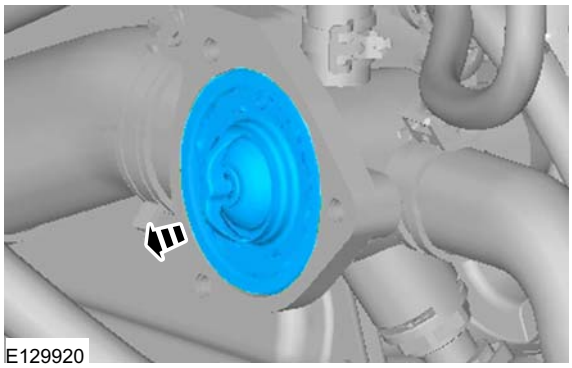
E129920

Installation

1. **NOTE:** Inspect the thermostat housing cover O-ring seal. Install a new O-ring seal if necessary.

   To install, reverse the removal procedure.

2. Bleed the cooling system.

   Refer to: Cooling System Draining, Filling and Bleeding - 2.2L Duratorq-TDCi (88kW/120PS) - Puma/2.2L Duratorq-TDCi (96kW/130PS) - Puma/2.2L Duratorq-TDCi (110kW/150PS) - Puma/3.2L Duratorq-TDCi (148kW/200PS) - Puma (303-03 Engine Cooling - 3.2L Duratorq-TDCi (148kW/200PS) - Puma, General Procedures).

REMOVAL AND INSTALLATION

Thermostat Housing(24 001 0)

Removal

NOTE: Removal steps in this procedure may contain installation details.

1. Drain the cooling system.

   Refer to: Cooling System Draining, Filling and Bleeding - 2.2L Duratorq-TDCi (88kW/120PS) - Puma/2.2L Duratorq-TDCi (96kW/130PS) - Puma/2.2L Duratorq-TDCi (110kW/150PS) - Puma/3.2L Duratorq-TDCi (148kW/200PS) - Puma (303-03 Engine Cooling - 3.2L Duratorq-TDCi (148kW/200PS) - Puma, General Procedures).

2.

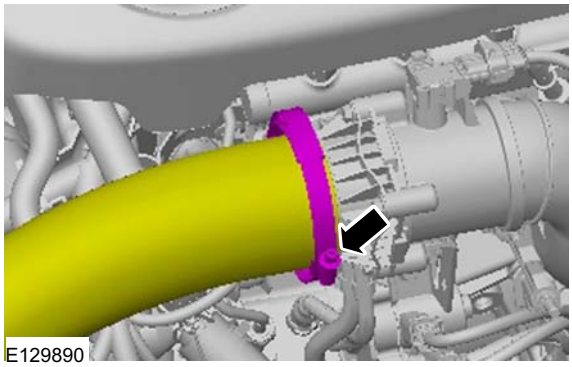
E129890

3.

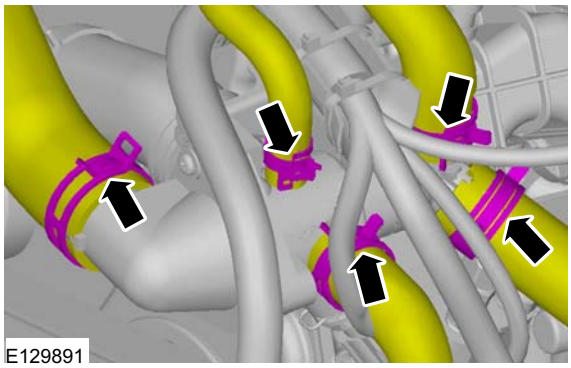
E129891

4. Torque: 23 Nm

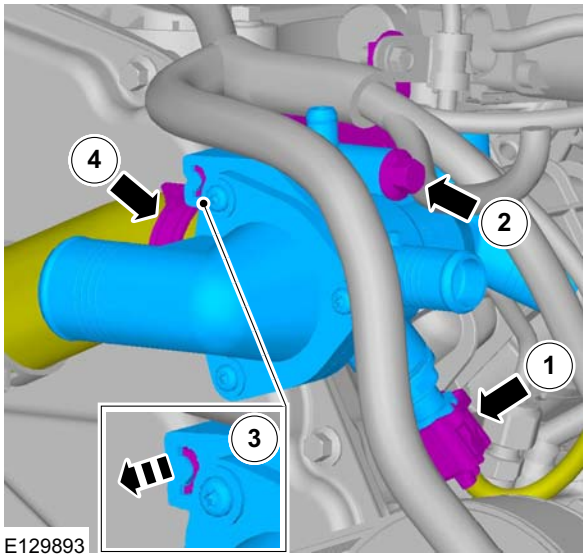

E129893

Installation

1. To install, reverse the removal procedure.
2. Bleed the cooling system.

   Refer to: Cooling System Draining, Filling and Bleeding - 2.2L Duratorq-TDCi (88kW/120PS) - Puma/2.2L Duratorq-TDCi (96kW/130PS) - Puma/2.2L Duratorq-TDCi (110kW/150PS) - Puma/3.2L Duratorq-TDCi (148kW/200PS) - Puma (303-03 Engine Cooling - 3.2L Duratorq-TDCi (148kW/200PS) - Puma, General Procedures).

REMOVAL AND INSTALLATION

Coolant Pump(24 404 0)

Removal

NOTE: Removal steps in this procedure may contain installation details.

1. Drain the cooling system.

   Refer to: Cooling System Draining, Filling and Bleeding - 2.2L Duratorq-TDCi (88kW/120PS) - Puma/2.2L Duratorq-TDCi (96kW/130PS) - Puma/2.2L Duratorq-TDCi (110kW/150PS) - Puma/3.2L Duratorq-TDCi (148kW/200PS) - Puma (303-03 Engine Cooling - 2.2L Duratorq-TDCi (88kW/120PS) - Puma/2.2L Duratorq-TDCi (96kW/130PS) - Puma/2.2L Duratorq-TDCi (110kW/150PS) - Puma, General Procedures).

2. Refer to: Accessory Drive Belt - 2.2L Duratorq-TDCi (88kW/120PS) - Puma/2.2L Duratorq-TDCi (96kW/130PS) - Puma/2.2L Duratorq-TDCi (110kW/150PS) - Puma/3.2L Duratorq-TDCi (148kW/200PS) - Puma (303-05 Accessory Drive - 2.2L Duratorq-TDCi (88kW/120PS) - Puma/2.2L Duratorq-TDCi (96kW/130PS) - Puma/2.2L Duratorq-TDCi (110kW/150PS) - Puma/3.2L Duratorq-TDCi (148kW/200PS) - Puma, Removal and Installation).

3. Torque: 14 Nm

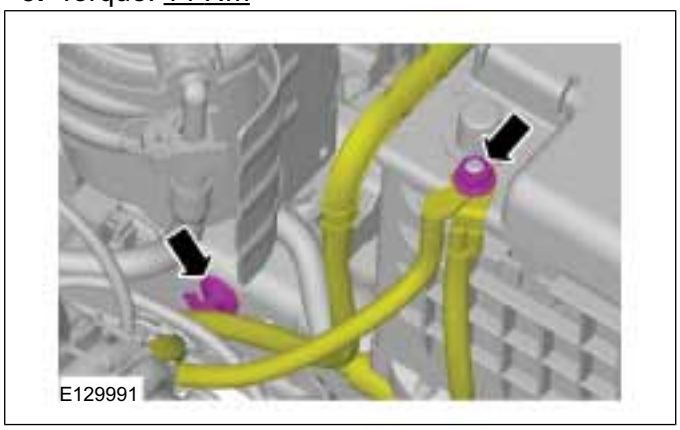
E129991

4.

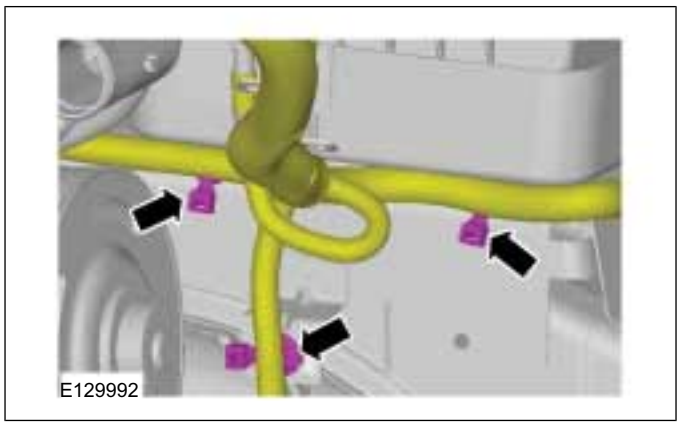
E129992

5.

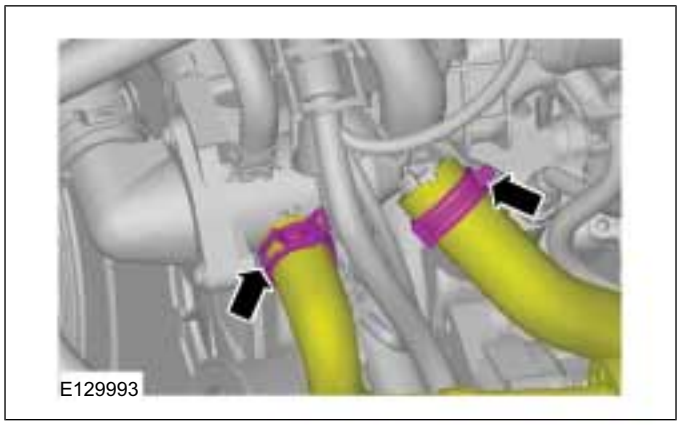
E129993

6. 2. Torque: 23 Nm
   4. Torque: 23 Nm

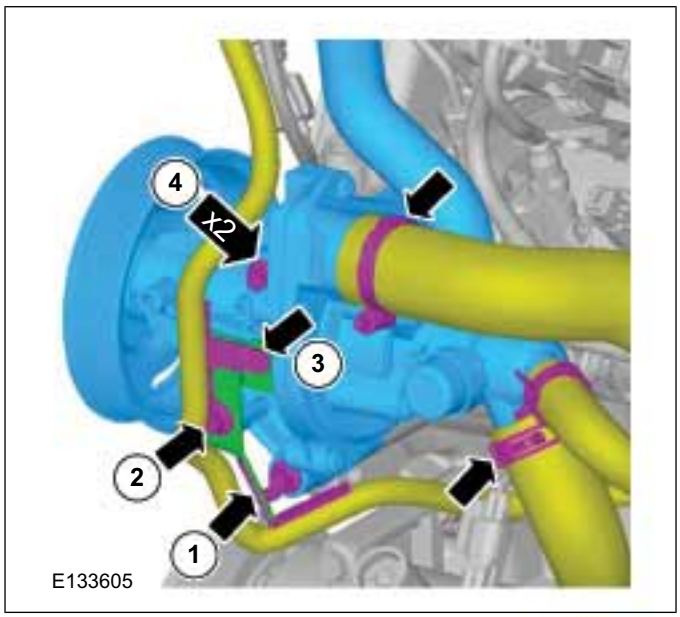

E133605

REMOVAL AND INSTALLATION

7. **NOTE:** Use care when cleaning the water pump gasket mating surfaces. Gouges in the aluminum could form leak paths.

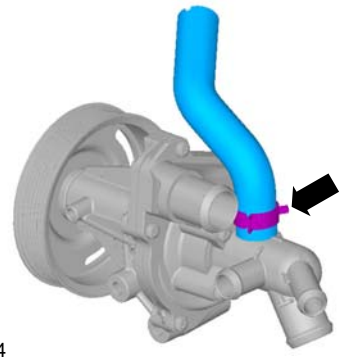

Installation

1. To install, reverse the removal procedure.
2. Bleed the cooling system.

   Refer to: Cooling System Draining, Filling and Bleeding - 2.2L Duratorq-TDCi (88kW/120PS) - Puma/2.2L Duratorq-TDCi (96kW/130PS) - Puma/2.2L Duratorq-TDCi (110kW/150PS) - Puma/3.2L Duratorq-TDCi (148kW/200PS) - Puma (303-03 Engine Cooling - 2.2L Duratorq-TDCi (88kW/120PS) - Puma/2.2L Duratorq-TDCi (96kW/130PS) - Puma/2.2L Duratorq-TDCi (110kW/150PS) - Puma, General Procedures).

REMOVAL AND INSTALLATION

Radiator(24 254 0)

Removal

NOTE: Removal steps in this procedure may contain installation details.

1. Refer to: Cooling Fan Motor and Shroud (303-03 Engine Cooling - 2.2L Duratorq-TDCi (88kW/120PS) - Puma/2.2L Duratorq-TDCi (96kW/130PS) - Puma/2.2L Duratorq-TDCi (110kW/150PS) - Puma, Removal and Installation).

2.

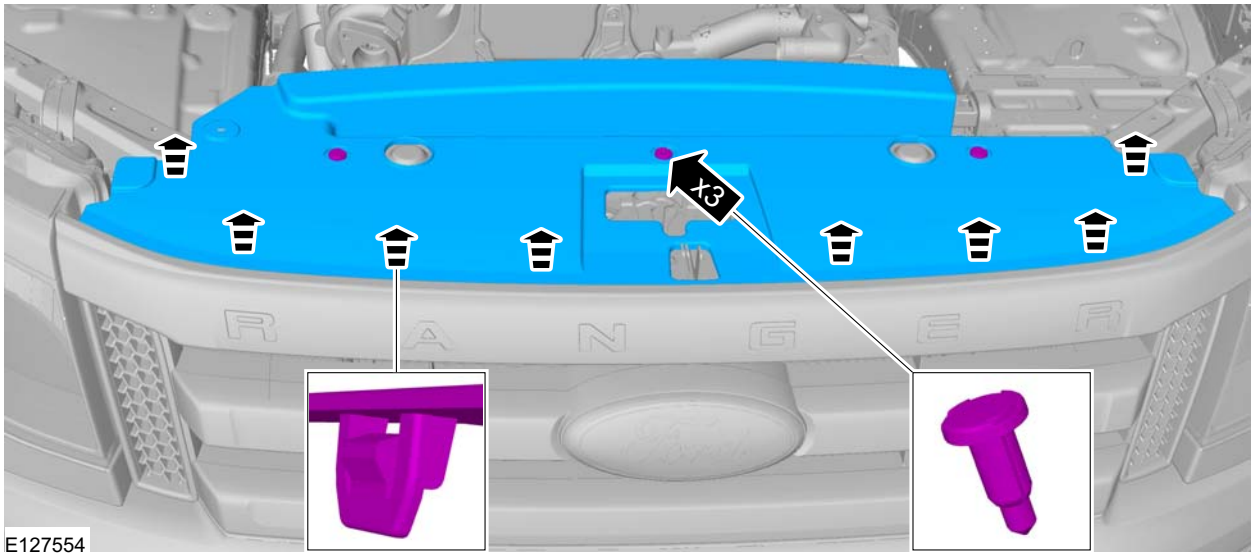

3.

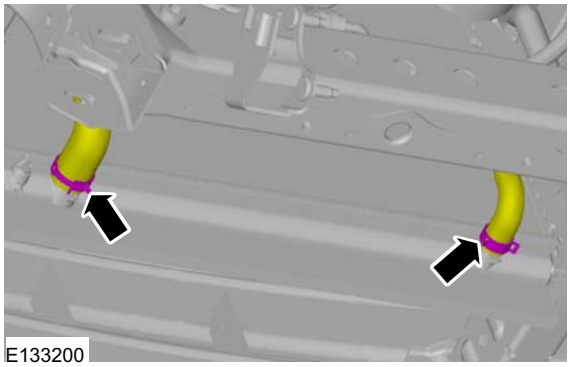

4. **NOTE:** Take extra care not to damage the A/C refrigerant filling pipe.

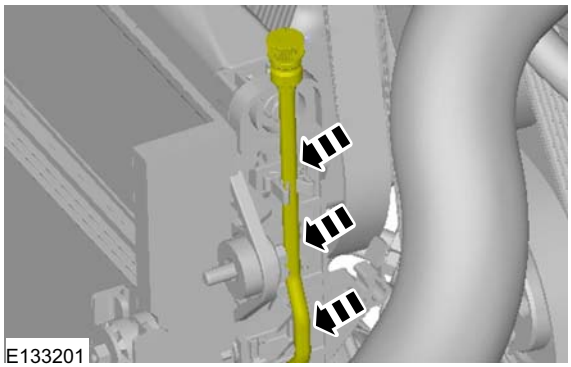

REMOVAL AND INSTALLATION

5. Torque: 20 Nm

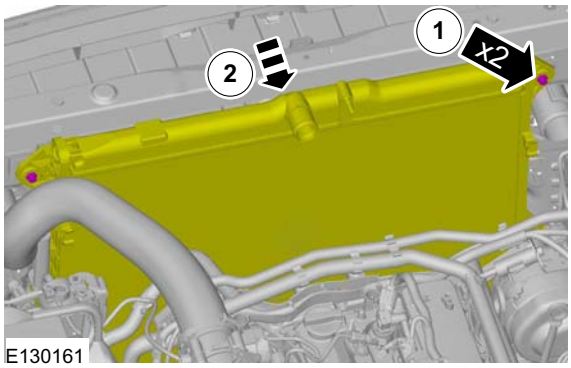

E130161

6. Lift the A/C condenser off the supports and move the A/C condenser toward the front of the vehicle and securely strap the A/C condenser on the grill support.
Torque: 7 Nm

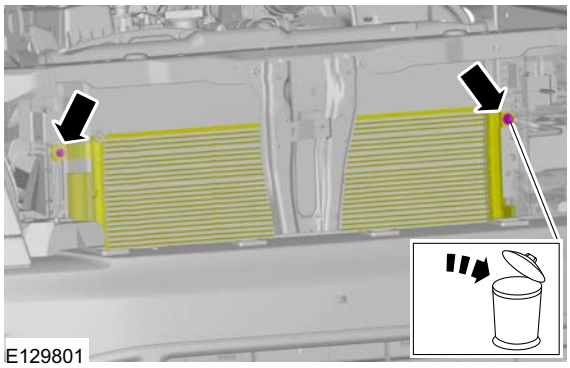
E129801

7. **NOTE:** Radiator insulators are to be reused unless damaged.

NOTE: Take extra care not to damage the radiator during removal.

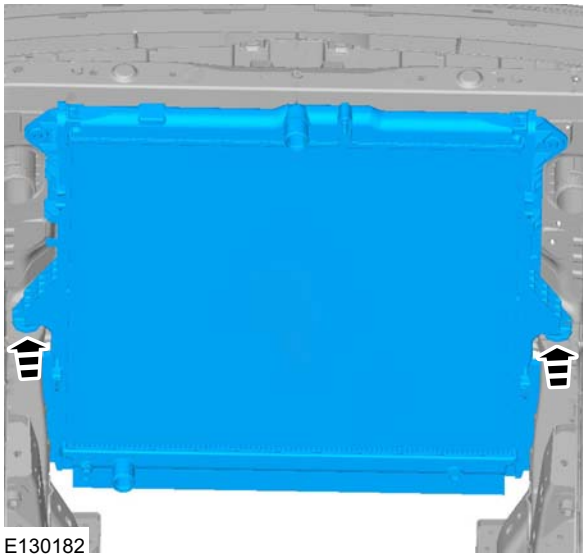
E130182

Installation

1. **NOTE:** Make sure that no components catch when installing the radiator.

   To install, reverse the removal procedure.

REMOVAL AND INSTALLATION

Cooling Fan Motor and Shroud(24 222 0)

Special Tool(s)

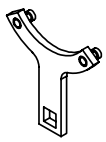 E62783	303-1196 Holding Wrench, Pulley
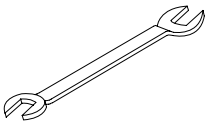 24002	303-378 Wrench, Fan Hub

Removal

NOTE: Removal steps in this procedure may contain installation details.

1. Drain the cooling system.

   Refer to: Cooling System Draining, Filling and Bleeding - 2.2L Duratorq-TDCi (88kW/120PS) - Puma/2.2L Duratorq-TDCi (96kW/130PS) - Puma/2.2L Duratorq-TDCi (110kW/150PS) - Puma/3.2L Duratorq-TDCi (148kW/200PS) - Puma (303-03 Engine Cooling - 3.2L Duratorq-TDCi (148kW/200PS) - Puma, General Procedures).

2.

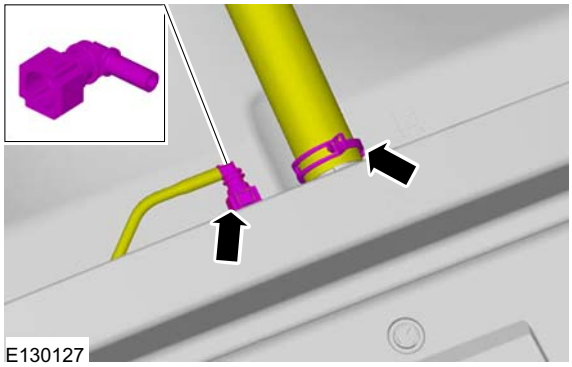
E130127

3.

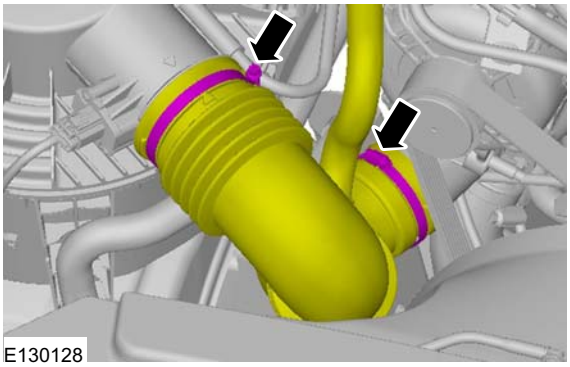
E130128

4.

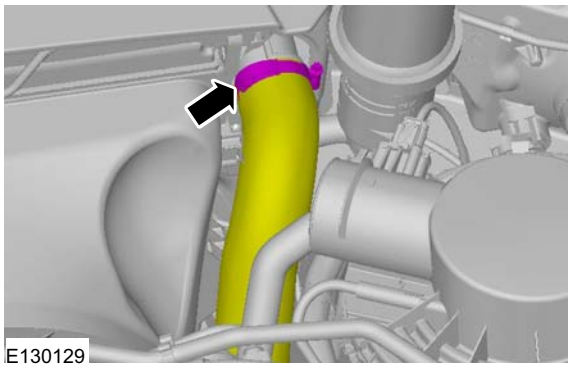
E130129

5.

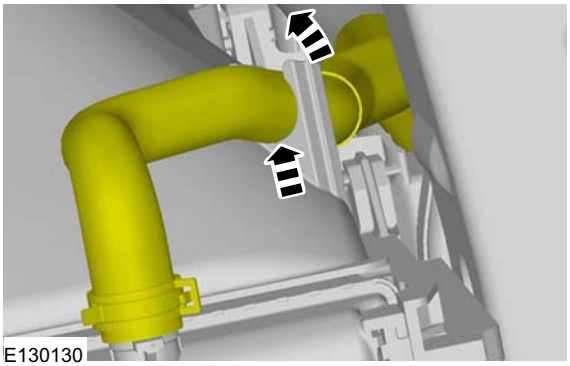
E130130

REMOVAL AND INSTALLATION

6. Special Tool(s): 303-378, 303-1196
   Torque: 105 Nm

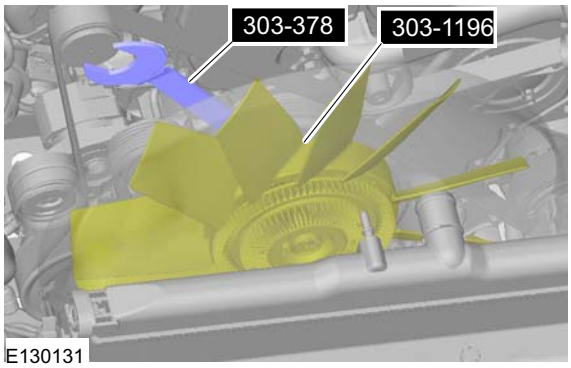

E130131

7. Remove the fan and position it inside the shroud. Lift the fan and shroud together and remove from the vehicle.

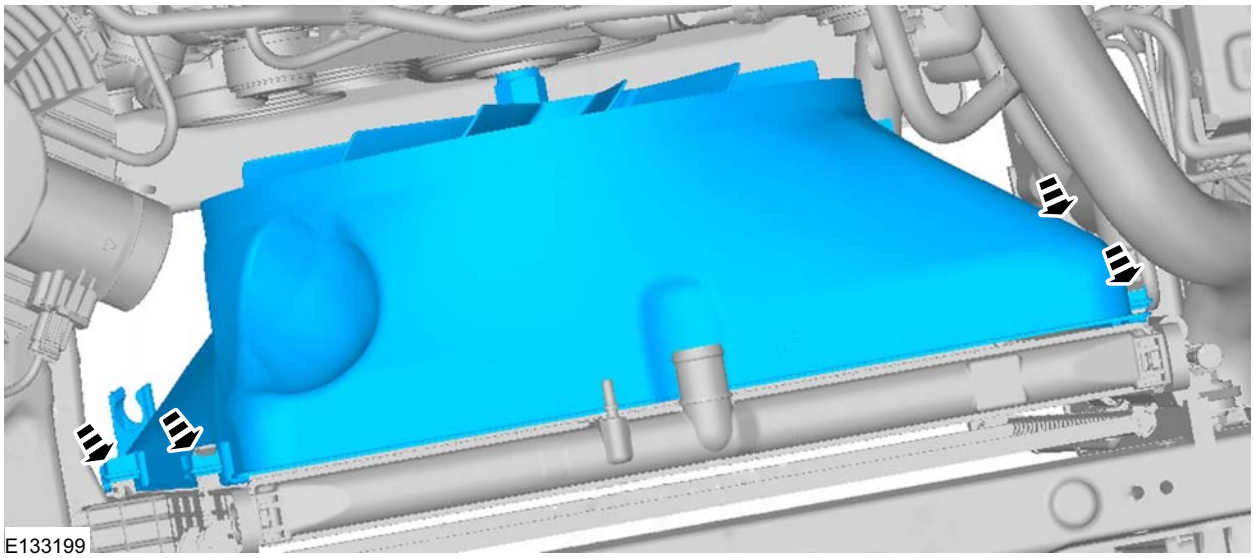
E133199

Installation

1. To install, reverse the removal procedure.
2. Bleed the cooling system.

   Refer to: Cooling System Draining, Filling and Bleeding - 2.2L Duratorq-TDCi (88kW/120PS) - Puma/2.2L Duratorq-TDCi (96kW/130PS) - Puma/2.2L Duratorq-TDCi (110kW/150PS) - Puma/3.2L Duratorq-TDCi (148kW/200PS) - Puma (303-03 Engine Cooling - 3.2L Duratorq-TDCi (148kW/200PS) - Puma, General Procedures).

REMOVAL AND INSTALLATION

Coolant Outlet Connector

Removal

NOTE: Removal steps in this procedure may contain installation details.

1. Drain the cooling system.

   Refer to: Cooling System Draining, Filling and Bleeding - 2.2L Duratorq-TDCi (88kW/120PS) - Puma/2.2L Duratorq-TDCi (96kW/130PS) - Puma/2.2L Duratorq-TDCi (110kW/150PS) - Puma/3.2L Duratorq-TDCi (148kW/200PS) - Puma (303-03 Engine Cooling - 2.2L Duratorq-TDCi (88kW/120PS) - Puma/2.2L Duratorq-TDCi (96kW/130PS) - Puma/2.2L Duratorq-TDCi (110kW/150PS) - Puma, General Procedures).

2. Refer to: Lifting (100-02 Jacking and Lifting, Description and Operation).

3. Refer to: Accessory Drive Belt - 2.2L Duratorq-TDCi (88kW/120PS) - Puma/2.2L Duratorq-TDCi (96kW/130PS) - Puma/2.2L Duratorq-TDCi (110kW/150PS) - Puma/3.2L Duratorq-TDCi (148kW/200PS) - Puma (303-05 Accessory Drive - 2.2L Duratorq-TDCi (88kW/120PS) - Puma/2.2L Duratorq-TDCi (96kW/130PS) - Puma/2.2L Duratorq-TDCi (110kW/150PS) - Puma/3.2L Duratorq-TDCi (148kW/200PS) - Puma, Removal and Installation).

4. **NOTE:** Make sure that these components are installed to the noted removal position.

   NOTE: The gasket is to be reused unless damaged.

   1. Torque: 23 Nm
   2. Torque: 48 Nm

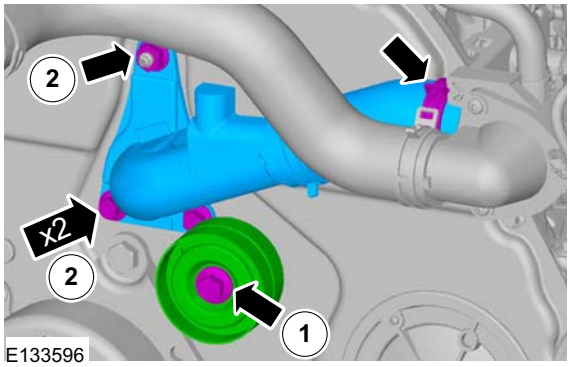

Installation

1. To install, reverse the removal procedure.

2. Bleed the cooling system.

   Refer to: Cooling System Draining, Filling and Bleeding - 2.2L Duratorq-TDCi (88kW/120PS) - Puma/2.2L Duratorq-TDCi (96kW/130PS) - Puma/2.2L Duratorq-TDCi (110kW/150PS) - Puma/3.2L Duratorq-TDCi (148kW/200PS) - Puma (303-03 Engine Cooling - 2.2L Duratorq-TDCi (88kW/120PS) - Puma/2.2L Duratorq-TDCi (96kW/130PS) - Puma/2.2L Duratorq-TDCi (110kW/150PS) - Puma, General Procedures).

SECTION 303-03B Engine Cooling — 3.2L Duratorq-TDCi (148kW/200PS) - Puma

VEHICLE APPLICATION: 2011.50 Ranger

CONTENTS PAGE

SPECIFICATIONS

Specifications..... 303-03B-2

DESCRIPTION AND OPERATION

Engine Cooling..... 303-03B-3
Vehicles with 3.2L Duratorq-TDCi (Puma) diesel engine..... 303-03B-3

GENERAL PROCEDURES

Cooling System Draining, Filling and Bleeding — 2.2L Duratorq-TDCi (88kW/120PS) - Puma/2.2L Duratorq-TDCi (96kW/130PS) - Puma/2.2L Duratorq-TDCi (110kW/150PS) - Puma/3.2L Duratorq-TDCi (148kW/200PS) - Puma..... (24 122 0) 303-03B-5
Draining..... 303-03B-5
Filling..... 303-03B-5
Bleeding..... 303-03B-5

REMOVAL AND INSTALLATION

Thermostat..... (24 454 0) 303-03B-7
Thermostat Housing..... (24 001 0) 303-03B-8
Coolant Pump..... (24 404 0) 303-03B-9
Radiator..... (24 254 0) 303-03B-11
Cooling Fan Motor and Shroud..... (24 222 0) 303-03B-13
Coolant Outlet Connector..... 303-03B-15

SPECIFICATIONS

Antifreeze Specifications

Description	Specification
Motorcraft Super Plus 2000	WSS-M97B44-D
Specific gravity (providing no other additive is in the coolant)	1.068 at +15°C
Approximate percentage of antifreeze (by volume)	50%
Coolant remains fluid to	-30°C (-22°F)
Coolant solidifies at	-35°C (-31°F)

Cooling System Capacities — Vehicles with 3.2L Diesel Engine

Description	Liters
Vehicles with front heater only	12.9

Cooling System Pressure Specification

Description	Pressure kPa (psi)
Radiator pressure test	138 (20)
Coolant expansion tank cap release pressure	135-155 (19-22)

DESCRIPTION AND OPERATION

Engine Cooling

Vehicles with 3.2L Duratorq-TDCi (Puma) diesel engine

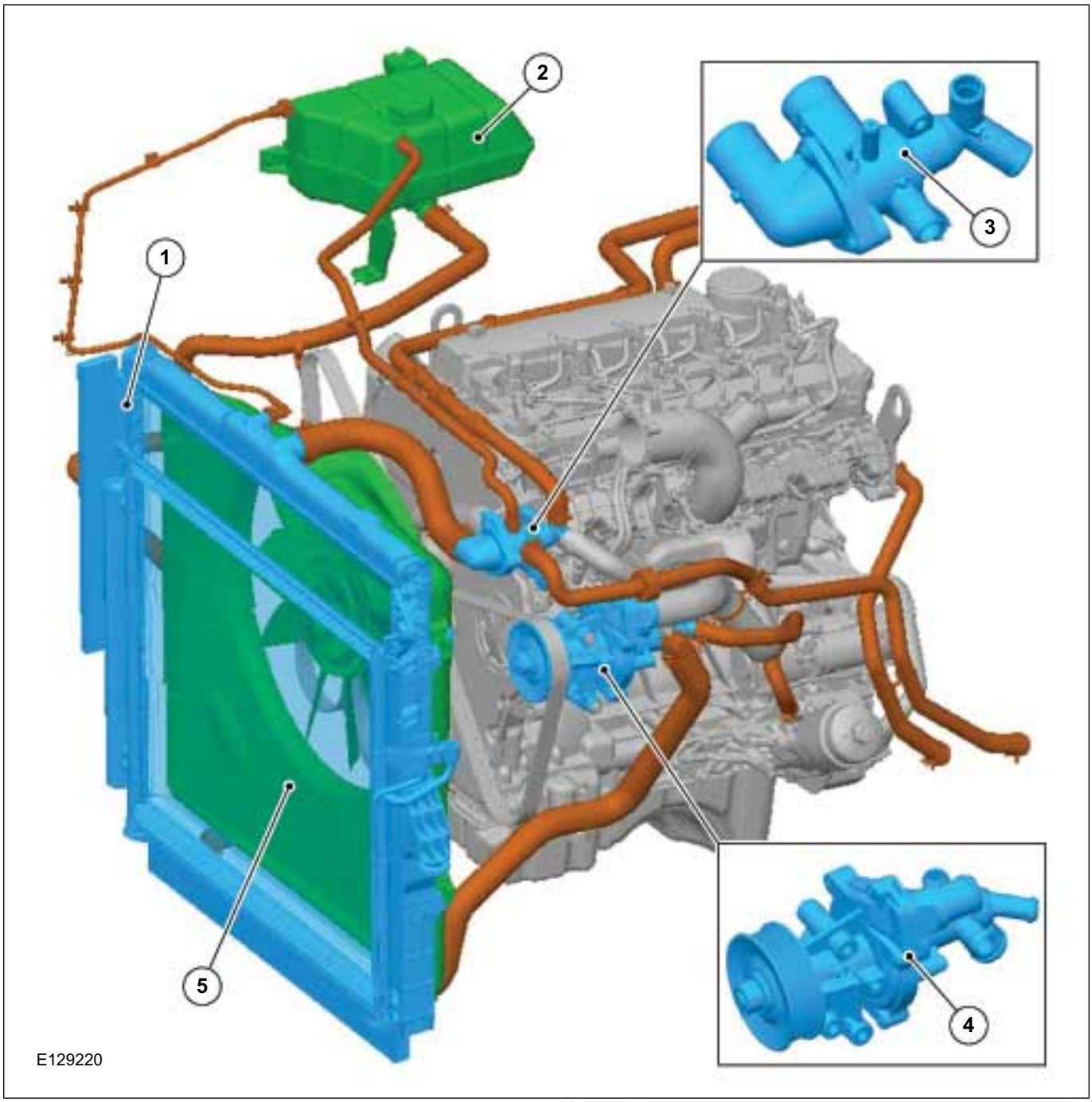

Item	Description
1	Radiator
2	Coolant expansion tank
3	Thermostat housing

Item	Description
4	Coolant pump
5	Cooling fan motor and shroud

CAUTION: If the coolant concentration is insufficient, low temperature protection and corrosion resistance will be inadequate.

DESCRIPTION AND OPERATION

NOTE: Providing the coolant has not been contaminated with other fluids or foreign material, the robust corrosion resistance properties of this coolant means that it can be reused after changing an aluminium cooling system component. The concentration should always be checked and maintained within specification.

Coolant concentration should be checked through the neck of the coolant expansion tank with a hydrometer. The acceptable range of specific gravity (sg) must be maintained.

The coolant used is an orange colored Motorcraft Super Plus 2000 engine coolant. This is a non silicated organic acid technology (OAT) coolant that must not be mixed with other coolant types. For cooling system top up, only use coolant which meets the correct specification.

GENERAL PROCEDURES

Cooling System Draining, Filling and Bleeding — 2.2L Duratorq-TDCi (88kW/120PS) - Puma/2.2L Duratorq-TDCi (96kW/130PS) - Puma/2.2L Duratorq-TDCi (110kW/150PS) - Puma/3.2L Duratorq-TDCi (148kW/200PS) - Puma(24 122 0)

Draining

WARNING: When releasing the cooling system pressure, cover the coolant expansion tank cap with a thick cloth.

1. Release the cooling system pressure by slowly turning the coolant expansion tank cap between 2 and 3 turns.

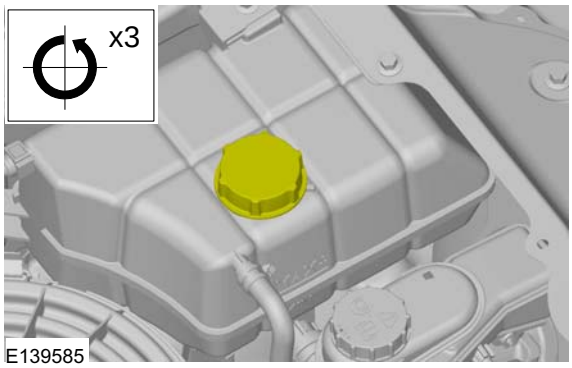

E139585

2.

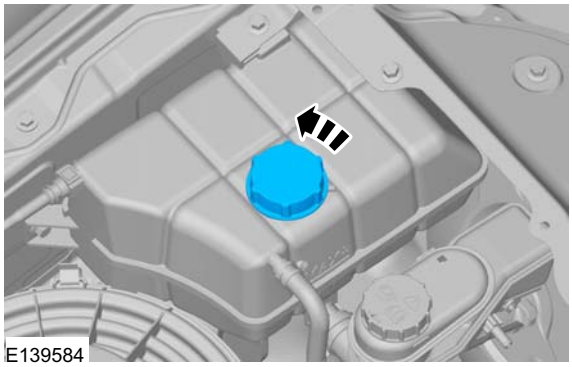
E139584

3. Refer to: Lifting (100-02 Jacking and Lifting, Description and Operation).

4.

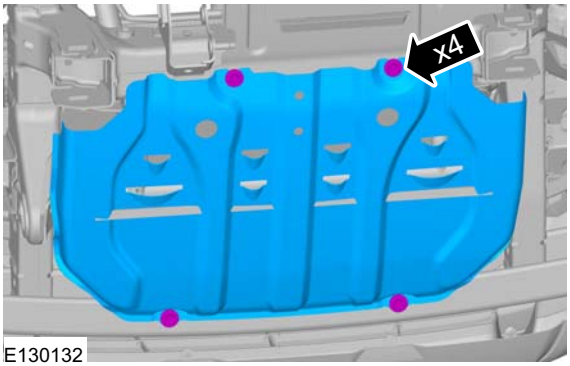

E130132

5. Remove the radiator drain plug and drain the coolant.

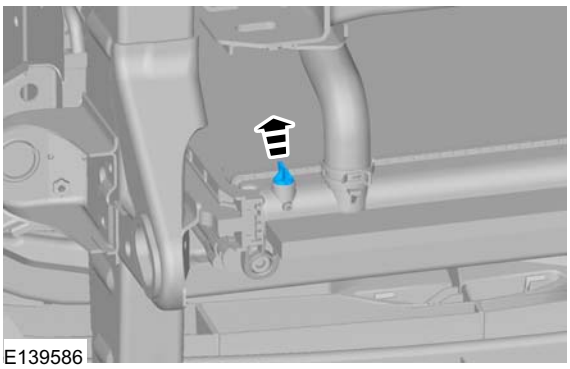
E139586

6. Install the radiator drain plug.
7. Lower the vehicle.

Filling

1. Refill the coolant to the expansion tank to maximum line (+15mm).

Bleeding

CAUTION: The fluid level must remain between the MAX and MIN marks.

1. Run the engine for 5 minutes at idle rpm.

GENERAL PROCEDURES

2. Install the coolant expansion tank cap.
3. Run the engine speed to 2500 RPM and maintain it for approximately 15 minutes.
4. Run the engine for 5minutes at idle rpm.
5. Switch the engine off.
6. Check the cooling system for leaks.
7. Refer to: Lifting (100-02 Jacking and Lifting, Description and Operation).
8. Torque: 30 Nm

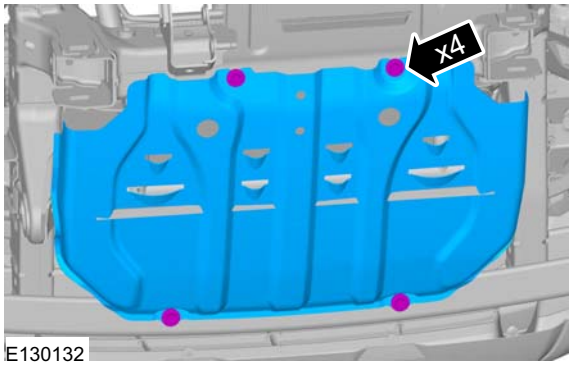

9. Lower the vehicle.
10. Allow the engine to cool and maintain close to room temperature.
11. Fill the coolant to the expansion tank max fill line, if required.

REMOVAL AND INSTALLATION

Thermostat(24 454 0)

Removal

NOTE: Removal steps in this procedure may contain installation details.

1. Drain the cooling system.

   Refer to: Cooling System Draining, Filling and Bleeding - 2.2L Duratorq-TDCi (88kW/120PS) - Puma/2.2L Duratorq-TDCi (96kW/130PS) - Puma/2.2L Duratorq-TDCi (110kW/150PS) - Puma/3.2L Duratorq-TDCi (148kW/200PS) - Puma (303-03 Engine Cooling - 3.2L Duratorq-TDCi (148kW/200PS) - Puma, General Procedures).

2. Torque: 10 Nm

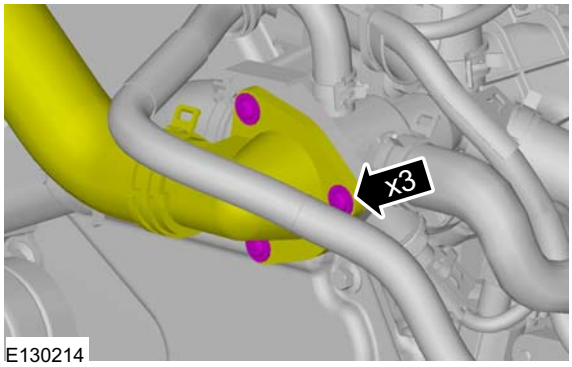

E130214

3.

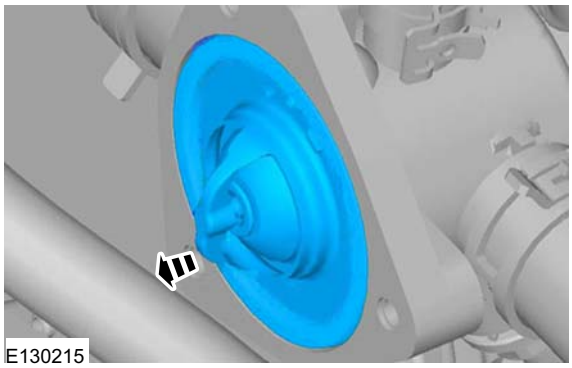
E130215

Installation

1. **NOTE:** Inspect the thermostat housing cover O-ring seal. Install a new O-ring seal if necessary.

   To install, reverse the removal procedure.

2. Bleed the cooling system.

   Refer to: Cooling System Draining, Filling and Bleeding - 2.2L Duratorq-TDCi (88kW/120PS) - Puma/2.2L Duratorq-TDCi (96kW/130PS) - Puma/2.2L Duratorq-TDCi (110kW/150PS) - Puma/3.2L Duratorq-TDCi (148kW/200PS) - Puma (303-03 Engine Cooling - 3.2L Duratorq-TDCi (148kW/200PS) - Puma, General Procedures).

REMOVAL AND INSTALLATION

Thermostat Housing(24 001 0)

Removal

NOTE: Removal steps in this procedure may contain installation details.

1. Drain the cooling system.

Refer to: Cooling System Draining, Filling and Bleeding - 2.2L Duratorq-TDCi (88kW/120PS) - Puma/2.2L Duratorq-TDCi (96kW/130PS) - Puma/2.2L Duratorq-TDCi (110kW/150PS) - Puma/3.2L Duratorq-TDCi (148kW/200PS) - Puma (303-03 Engine Cooling - 3.2L Duratorq-TDCi (148kW/200PS) - Puma, General Procedures).

2.

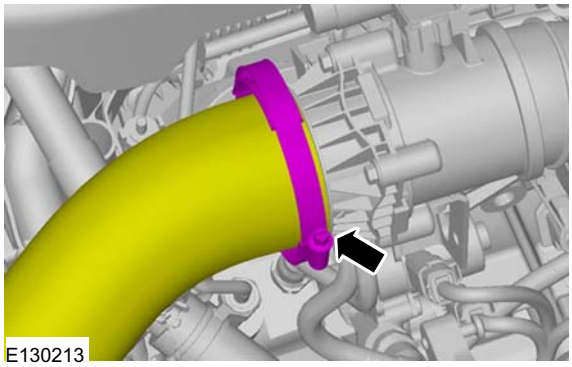
E130213

3.

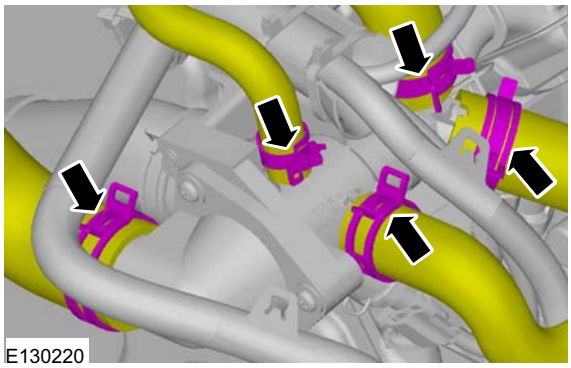
E130220

4. Torque: 23 Nm

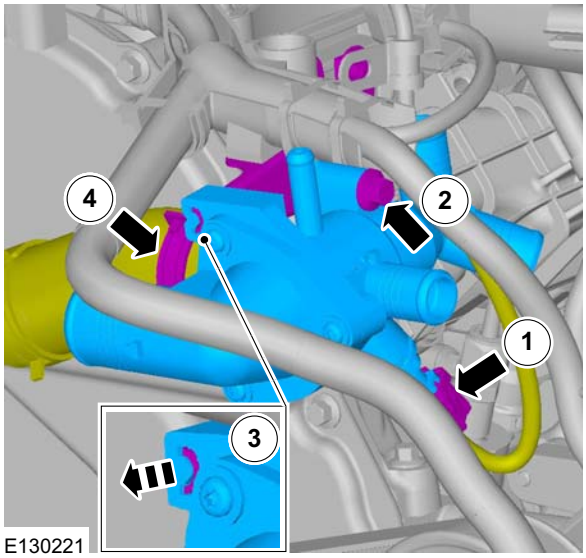

E130221

Installation

1. To install, reverse the removal procedure.

2. Bleed the cooling system.

Refer to: Cooling System Draining, Filling and Bleeding - 2.2L Duratorq-TDCi (88kW/120PS) - Puma/2.2L Duratorq-TDCi (96kW/130PS) - Puma/2.2L Duratorq-TDCi (110kW/150PS) - Puma/3.2L Duratorq-TDCi (148kW/200PS) - Puma (303-03 Engine Cooling - 3.2L Duratorq-TDCi (148kW/200PS) - Puma, General Procedures).

REMOVAL AND INSTALLATION

Coolant Pump(24 404 0)

Removal

NOTE: Removal steps in this procedure may contain installation details.

1. Drain the cooling system.

Refer to: Cooling System Draining, Filling and Bleeding - 2.2L Duratorq-TDCi (88kW/120PS) - Puma/2.2L Duratorq-TDCi (96kW/130PS) - Puma/2.2L Duratorq-TDCi (110kW/150PS) - Puma/3.2L Duratorq-TDCi (148kW/200PS) - Puma (303-03 Engine Cooling - 2.2L Duratorq-TDCi (88kW/120PS) - Puma/2.2L Duratorq-TDCi (96kW/130PS) - Puma/2.2L Duratorq-TDCi (110kW/150PS) - Puma, General Procedures).

2. Refer to: Accessory Drive Belt - 2.2L Duratorq-TDCi (88kW/120PS) - Puma/2.2L Duratorq-TDCi (96kW/130PS) - Puma/2.2L Duratorq-TDCi (110kW/150PS) - Puma/3.2L Duratorq-TDCi (148kW/200PS) - Puma (303-05 Accessory Drive - 2.2L Duratorq-TDCi (88kW/120PS) - Puma/2.2L Duratorq-TDCi (96kW/130PS) - Puma/2.2L Duratorq-TDCi (110kW/150PS) - Puma/3.2L Duratorq-TDCi (148kW/200PS) - Puma, Removal and Installation).

3. Torque: 14 Nm

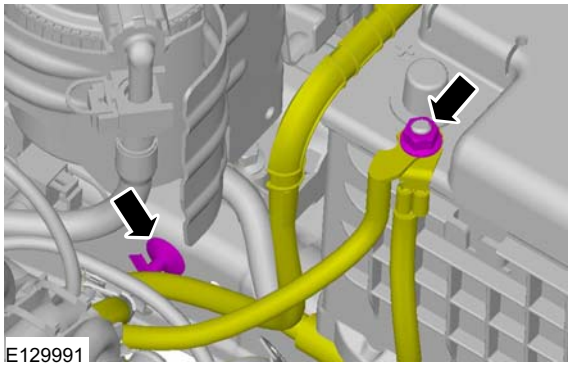
E129991

4.

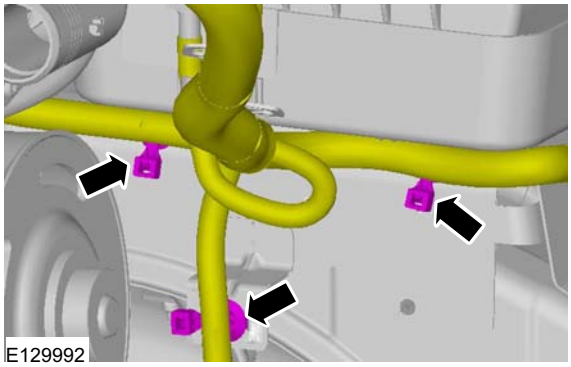
E129992

5.

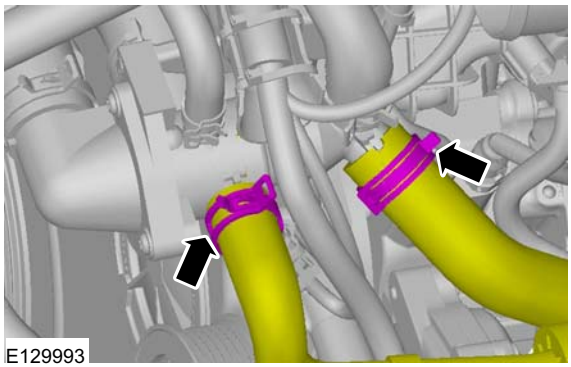
E129993

6. 3. Torque: 23 Nm
4. Torque: 23 Nm

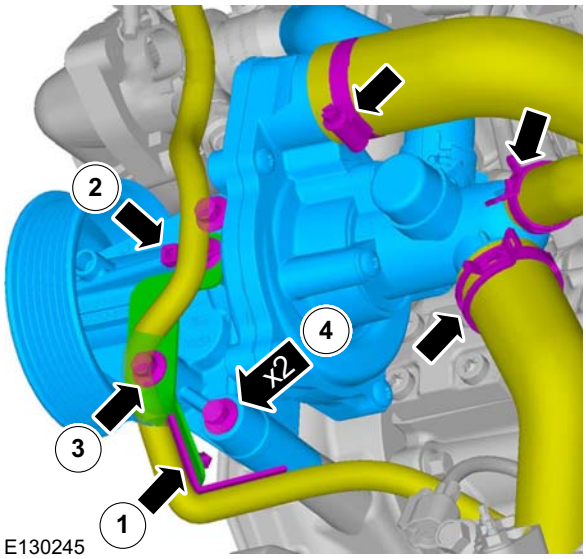

E130245

REMOVAL AND INSTALLATION

7. **NOTE:** Use care when cleaning the water pump gasket mating surfaces. Gouges in the aluminum could form leak paths.

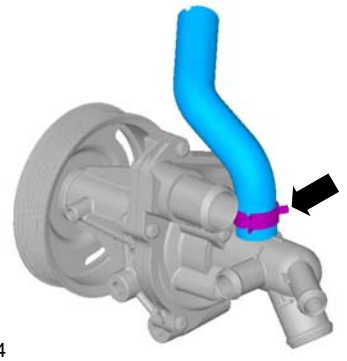

Installation

1. To install, reverse the removal procedure.
2. Bleed the cooling system.

   Refer to: Cooling System Draining, Filling and Bleeding - 2.2L Duratorq-TDCi (88kW/120PS) - Puma/2.2L Duratorq-TDCi (96kW/130PS) - Puma/2.2L Duratorq-TDCi (110kW/150PS) - Puma/3.2L Duratorq-TDCi (148kW/200PS) - Puma (303-03 Engine Cooling - 2.2L Duratorq-TDCi (88kW/120PS) - Puma/2.2L Duratorq-TDCi (96kW/130PS) - Puma/2.2L Duratorq-TDCi (110kW/150PS) - Puma, General Procedures).

REMOVAL AND INSTALLATION

Radiator(24 254 0)

Removal

NOTE: Removal steps in this procedure may contain installation details.

1. Refer to: Cooling Fan Motor and Shroud (303-03 Engine Cooling - 3.2L Duratorq-TDCi (148kW/200PS) - Puma, Removal and Installation).

2.

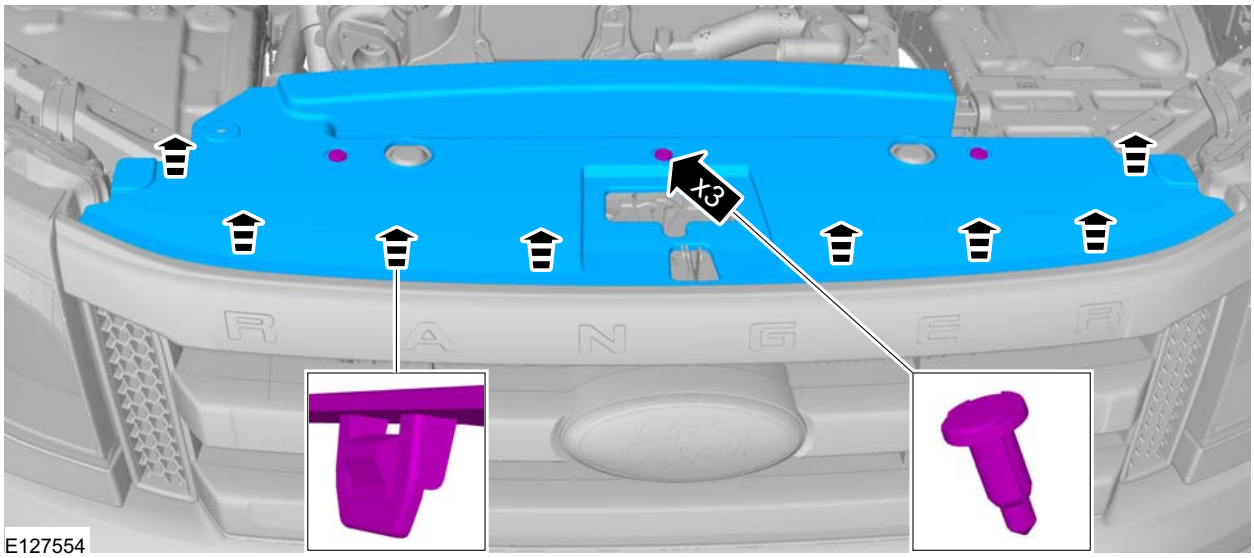

3.

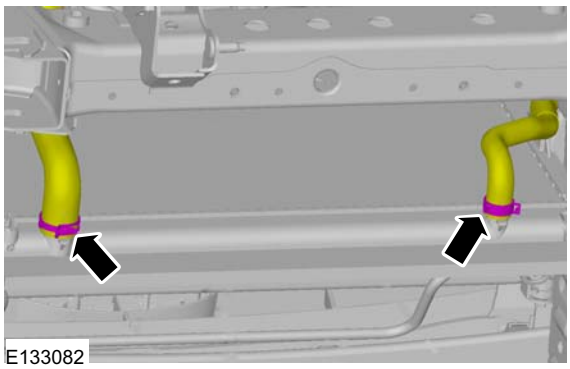

4. **NOTE:** Take extra care not to damage the A/C refrigerant filling pipe.

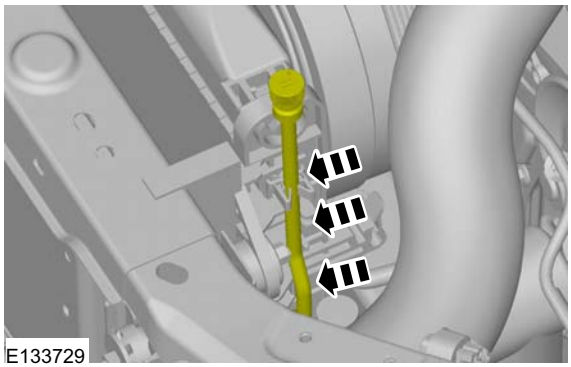

REMOVAL AND INSTALLATION

5. Torque: 20 Nm

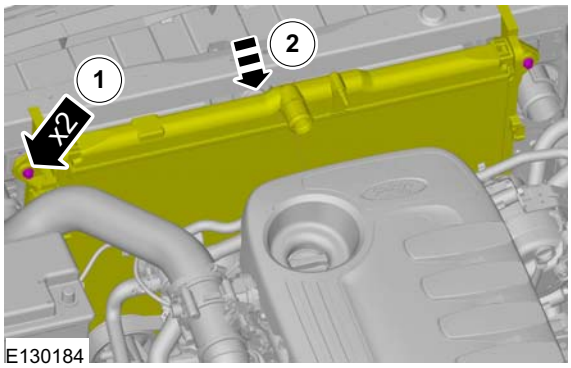

E130184

6. Lift the A/C condenser off the supports and move the A/C condenser toward the front of the vehicle and securely strap the A/C condenser on the grill support.
Torque: 7 Nm

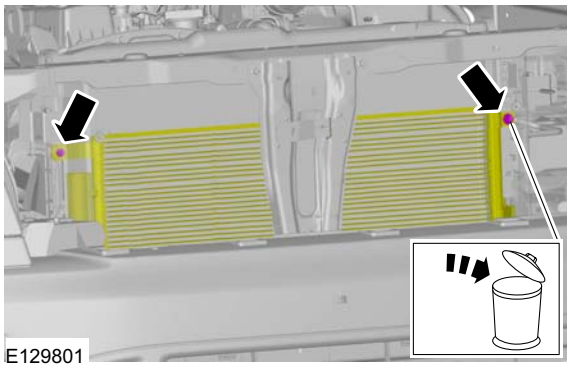
E129801

7. **NOTE:** Radiator insulators are to be reused unless damaged.

NOTE: Take extra care not to damage the radiator during removal.

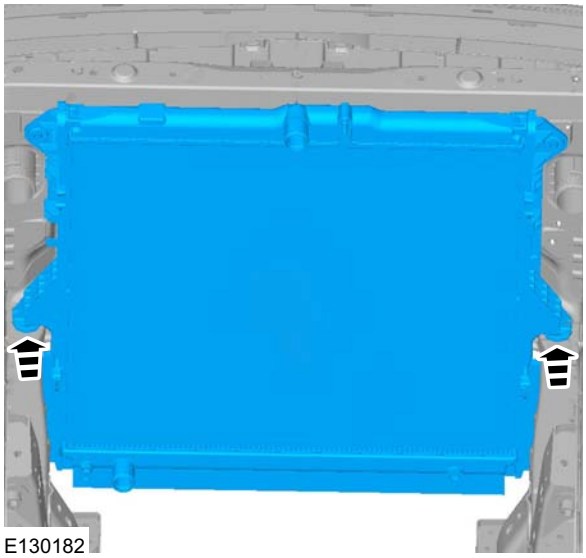
E130182

Installation

1. **NOTE:** Make sure that no components catch when installing the radiator.

   To install, reverse the removal procedure.

REMOVAL AND INSTALLATION

Cooling Fan Motor and Shroud(24 222 0)

Special Tool(s)

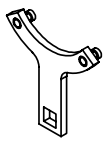 E62783	303-1196 Holding Wrench, Pulley
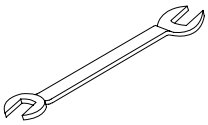 24002	303-378 Wrench, Fan Hub

Removal

NOTE: Removal steps in this procedure may contain installation details.

1. Drain the cooling system.

Refer to: Cooling System Draining, Filling and Bleeding - 2.2L Duratorq-TDCi (88kW/120PS) - Puma/2.2L Duratorq-TDCi (96kW/130PS) - Puma/2.2L Duratorq-TDCi (110kW/150PS) - Puma/3.2L Duratorq-TDCi (148kW/200PS) - Puma (303-03 Engine Cooling - 3.2L Duratorq-TDCi (148kW/200PS) - Puma, General Procedures).

2.

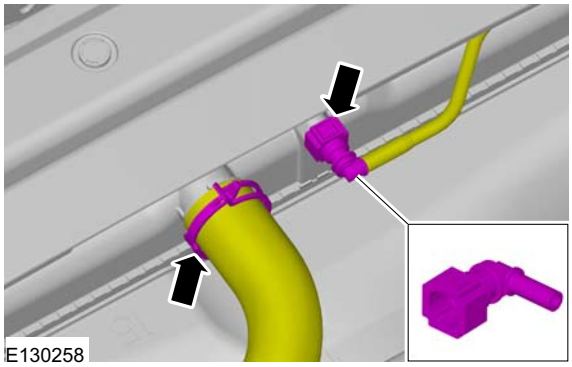
E130258

3.

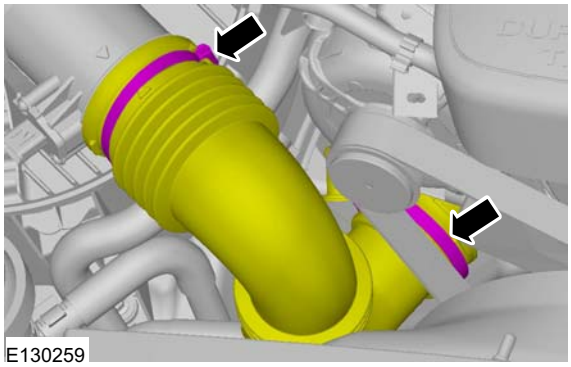
E130259

4.

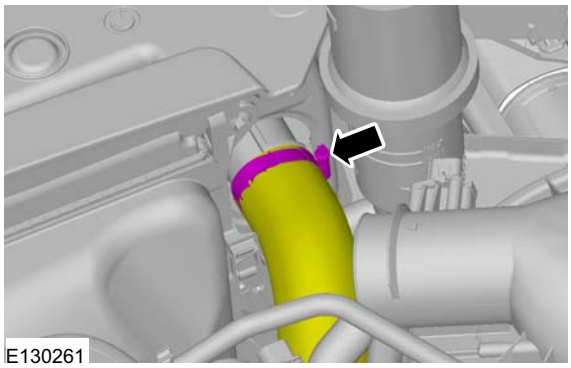
E130261

5. Special Tool(s): 303-378, 303-1196
Torque: 105 Nm

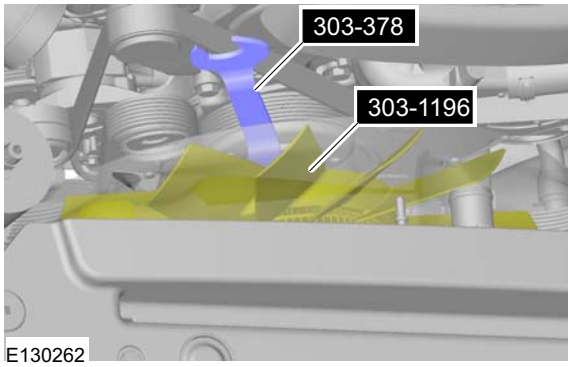

E130262

6. Remove the fan and position it inside the shroud. Lift the fan and shroud together and remove from the vehicle.

REMOVAL AND INSTALLATION

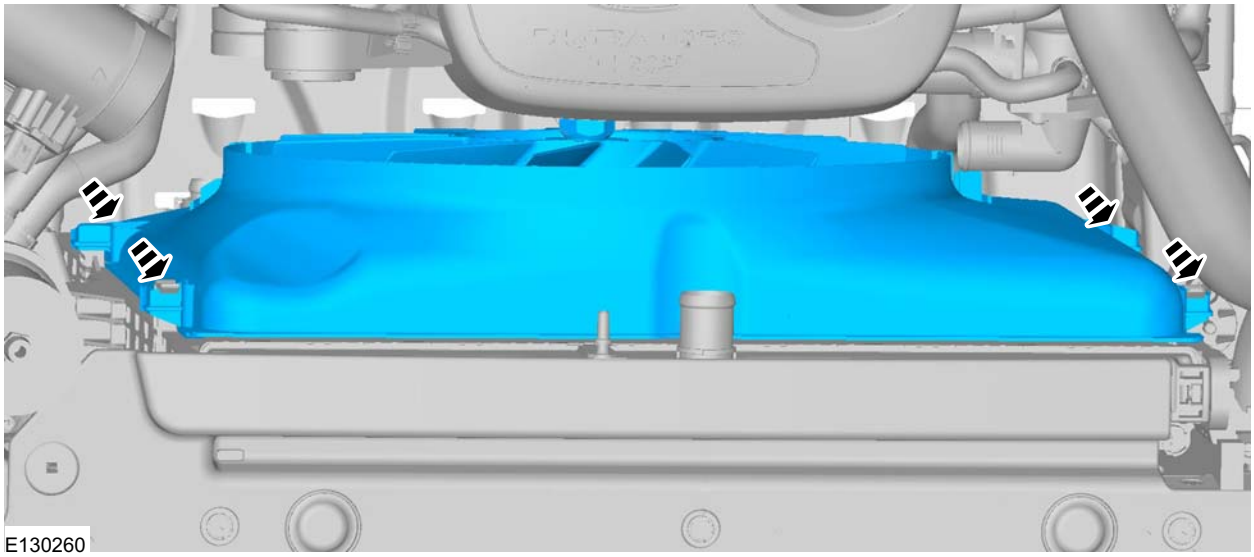

Installation

1. To install, reverse the removal procedure.
2. Bleed the cooling system.

   Refer to: Cooling System Draining, Filling and Bleeding - 2.2L Duratorq-TDCi (88kW/120PS) - Puma/2.2L Duratorq-TDCi (96kW/130PS) - Puma/2.2L Duratorq-TDCi (110kW/150PS) - Puma/3.2L Duratorq-TDCi (148kW/200PS) - Puma (303-03 Engine Cooling - 3.2L Duratorq-TDCi (148kW/200PS) - Puma, General Procedures).

REMOVAL AND INSTALLATION

Coolant Outlet Connector

Removal

NOTE: Removal steps in this procedure may contain installation details.

1. Drain the cooling system.

   Refer to: Cooling System Draining, Filling and Bleeding - 2.2L Duratorq-TDCi (88kW/120PS) - Puma/2.2L Duratorq-TDCi (96kW/130PS) - Puma/2.2L Duratorq-TDCi (110kW/150PS) - Puma/3.2L Duratorq-TDCi (148kW/200PS) - Puma (303-03 Engine Cooling - 2.2L Duratorq-TDCi (88kW/120PS) - Puma/2.2L Duratorq-TDCi (96kW/130PS) - Puma/2.2L Duratorq-TDCi (110kW/150PS) - Puma, General Procedures).

2. Refer to: Lifting (100-02 Jacking and Lifting, Description and Operation).

3. Refer to: Accessory Drive Belt - 2.2L Duratorq-TDCi (88kW/120PS) - Puma/2.2L Duratorq-TDCi (96kW/130PS) - Puma/2.2L Duratorq-TDCi (110kW/150PS) - Puma/3.2L Duratorq-TDCi (148kW/200PS) - Puma (303-05 Accessory Drive - 2.2L Duratorq-TDCi (88kW/120PS) - Puma/2.2L Duratorq-TDCi (96kW/130PS) - Puma/2.2L Duratorq-TDCi (110kW/150PS) - Puma/3.2L Duratorq-TDCi (148kW/200PS) - Puma, Removal and Installation).

4. **NOTE:** Make sure that these components are installed to the noted removal position.

   NOTE: The gasket is to be reused unless damaged.

   1. Torque: 23 Nm
   2. Torque: 48 Nm

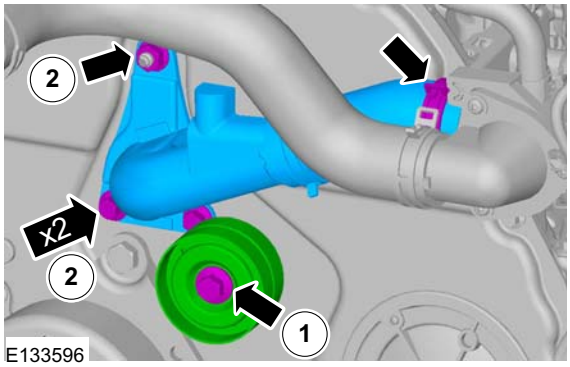

Installation

1. To install, reverse the removal procedure.

2. Bleed the cooling system.

   Refer to: Cooling System Draining, Filling and Bleeding - 2.2L Duratorq-TDCi (88kW/120PS) - Puma/2.2L Duratorq-TDCi (96kW/130PS) - Puma/2.2L Duratorq-TDCi (110kW/150PS) - Puma/3.2L Duratorq-TDCi (148kW/200PS) - Puma (303-03 Engine Cooling - 2.2L Duratorq-TDCi (88kW/120PS) - Puma/2.2L Duratorq-TDCi (96kW/130PS) - Puma/2.2L Duratorq-TDCi (110kW/150PS) - Puma, General Procedures).

SECTION 303-03C Engine Cooling

VEHICLE APPLICATION: 2011.50 Ranger

CONTENTS PAGE

SPECIFICATIONS

Specifications..... 303-03C-2

DESCRIPTION AND OPERATION

Engine Cooling..... 303-03C-3

GENERAL PROCEDURES

Cooling System Draining, Filling and Bleeding..... (24 122 0) 303-03C-5
Draining..... 303-03C-5
Filling..... 303-03C-5
Bleeding..... 303-03C-5
Cooling System Draining and Vacuum Filling..... 303-03C-7
Draining..... 303-03C-7
Evacuating and Filling..... 303-03C-8

REMOVAL AND INSTALLATION

Thermostat..... (24 454 0) 303-03C-9
Coolant Pump..... (24 404 0) 303-03C-10
Radiator..... (24 254 0) 303-03C-11
Cooling Fan Motor and Shroud..... (24 222 0) 303-03C-13
Coolant Outlet Connector..... 303-03C-15

SPECIFICATIONS

Lubricants, Fluids, Sealers and Adhesives

Item	Specification
Motorcraft Super Plus Antifreeze	WSS-M97B44–D

Antifreeze

Specific Gravity (providing no other additive is in coolant)	Approximate percentage of Anti-Freeze (by volume)	Remains Fluid to	Solidifies at
1.068 at +15°C	50%	–30°C (–22°F)	–35°C (–31°F)

Cooling System Refill Capacity - Vehicles with 2.5L Duratec-HE (MI4) engine

Description	Liters
Cooling system and heater	11.0

Cooling System Pressure Specification

Description	Pressure kpa (psi)
Radiator pressure test	138 (20)
Coolant expansion tank cap release pressure	135 to 155 (19 to 22)

DESCRIPTION AND OPERATION

Engine Cooling

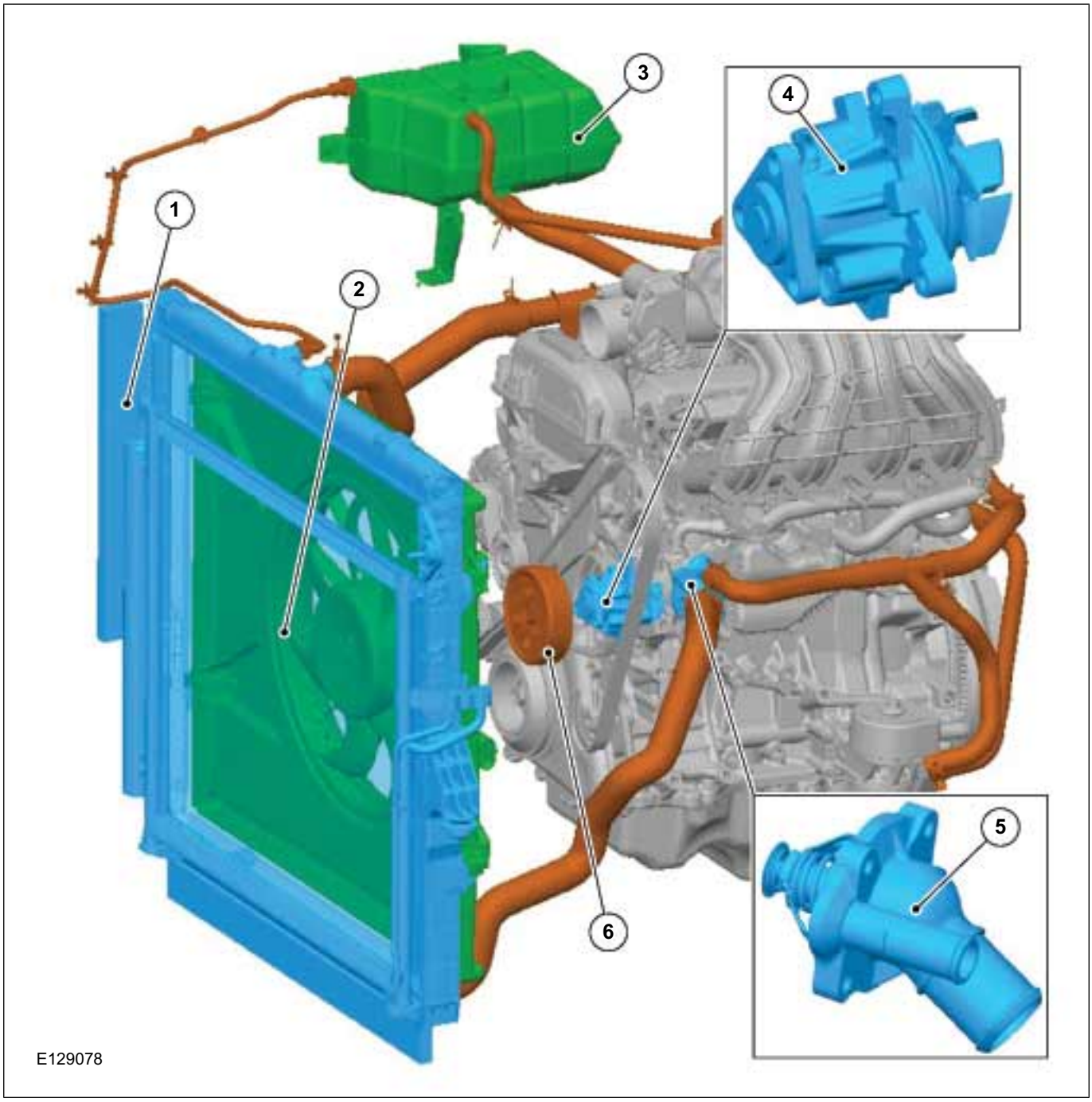

Item	Description
1	Radiator
2	Cooling fan motor and shroud
3	Coolant expansion tank
4	Coolant pump
5	Thermostat
6	Coolant pump pulley

CAUTION: If the coolant concentration is insufficient, low temperature protection and corrosion resistance will be impaired.

NOTE: Providing the coolant has not been contaminated with other fluids or foreign material, the robust corrosion resistance properties of this coolant means that it can be reused after changing an aluminum cooling system component. The concentration should always be checked and maintained within the specification.

DESCRIPTION AND OPERATION

Coolant concentration should be checked through the neck of the coolant expansion tank with a hydrometer. The acceptable range of specific gravity (sg) must be maintained.

The coolant used is an orange colored Motorcraft Super Plus 2000 engine coolant. This is a non silicated organic acid technology (OAT) coolant that must not be mixed with other coolant types. For cooling system top up, only use coolant which meets the correct specification.

GENERAL PROCEDURES

Cooling System Draining, Filling and Bleeding(24 122 0)

Draining

WARNING: When releasing the cooling system pressure, cover the coolant expansion tank cap with a thick cloth.

1. Release the cooling system pressure by slowly turning the coolant expansion tank cap between 2 and 3 turns.

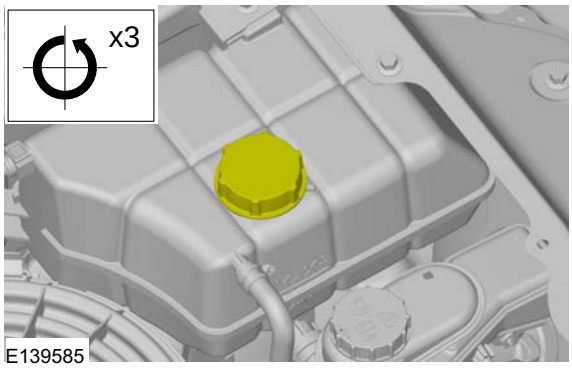

E139585

2.

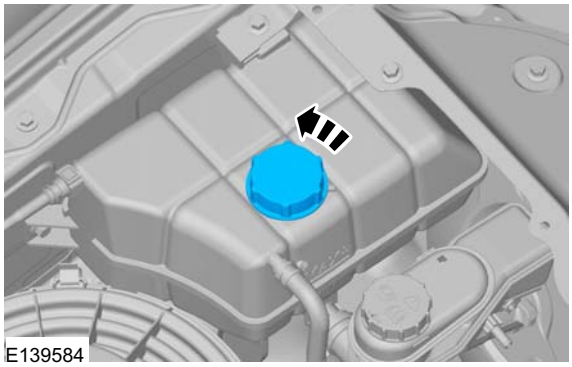
E139584

3. Refer to: Lifting (100-02 Jacking and Lifting, Description and Operation).

4.

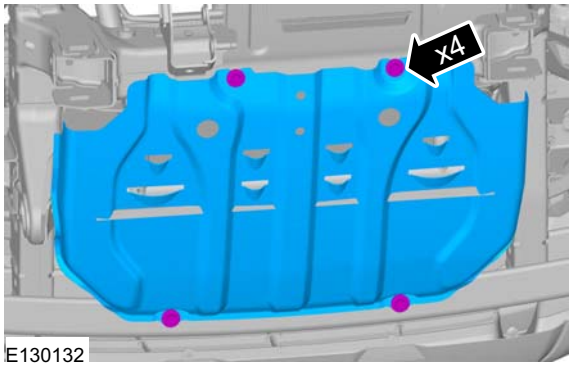

E130132

5. Remove the radiator drain plug and drain the coolant.

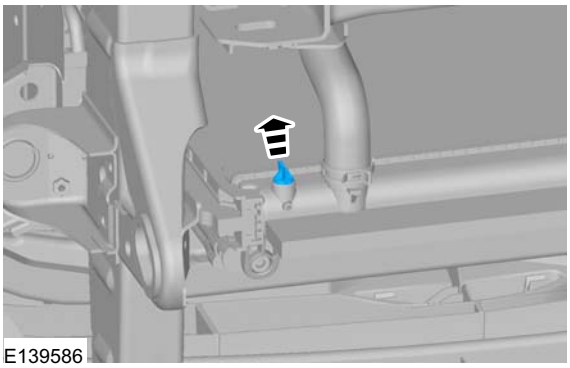
E139586

6. Install the radiator drain plug.
7. Lower the vehicle.

Filling

1. Refill the coolant to the expansion tank to maximum line (+15mm).

Bleeding

CAUTION: The fluid level must remain between the MAX and MIN marks.

1. Run the engine for 5 minutes at idle rpm.
2. Install the coolant expansion tank cap.
3. Run the engine speed to 2500 RPM and maintain it for approximately 15 minutes.
4. Run the engine for 5minutes at idle rpm.
5. Switch the engine off.
6. Check the cooling system for leaks.

GENERAL PROCEDURES

7. Refer to: Lifting (100-02 Jacking and Lifting, Description and Operation).

8. Torque: 30 Nm

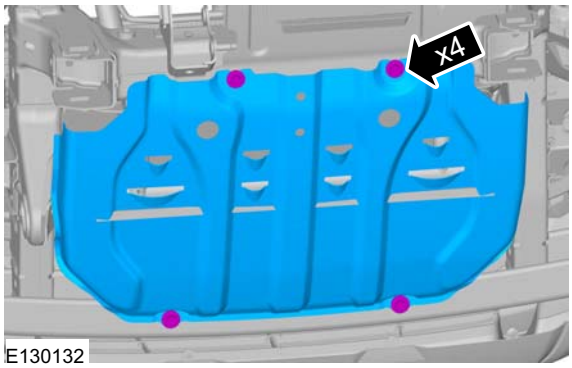

9. Lower the vehicle.

10. Allow the engine to cool and maintain close to room temperature.

11. Fill the coolant to the expansion tank max fill line, if required.

GENERAL PROCEDURES

Cooling System Draining and Vacuum Filling

General Equipment

Cooling System Vacuum Tester and Refiller
Fluid Container

Draining

WARNING: When releasing the cooling system pressure, cover the coolant expansion tank cap with a thick cloth.

NOTE: Always follow the manufacturer's instructions when handling the equipment.

1. Refer to: Engine Cooling System Health and Safety Precautions (100-00 General Information, Description and Operation).

2. Release the cooling system pressure by slowly turning the coolant expansion tank cap between 2 and 3 turns.

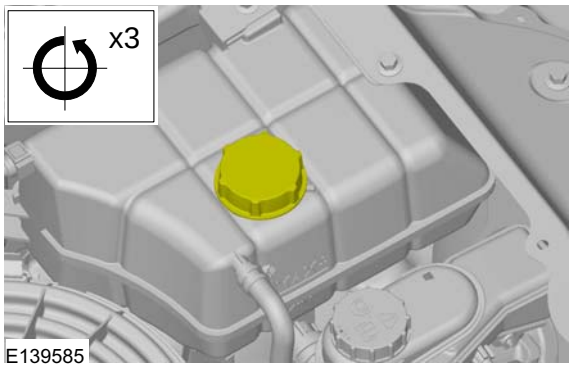

E139585

3. Refer to: Lifting (100-02 Jacking and Lifting, Description and Operation).

4.

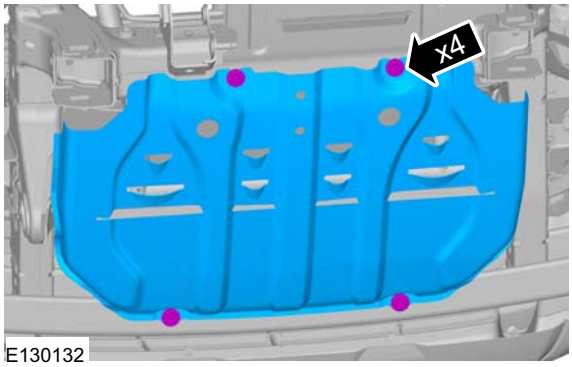

E130132

5.

WARNING: Be prepared to collect escaping fluid.

Use a suitable coolant hose to drain the coolant.

General Equipment: Fluid Container
Loosen: 4 turn(s)

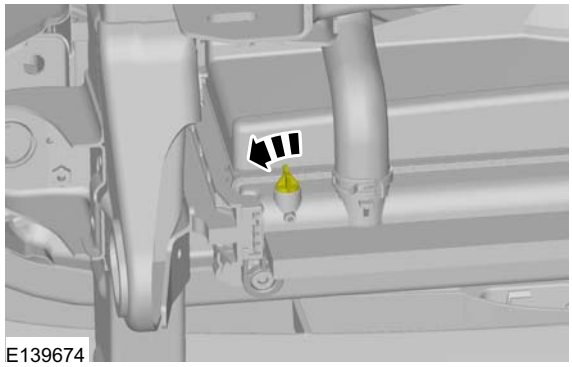
E139674

6. Install the radiator drain plug.

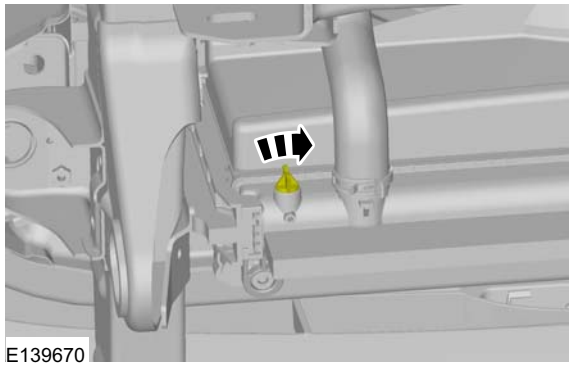
E139670

7. Torque: 30 Nm

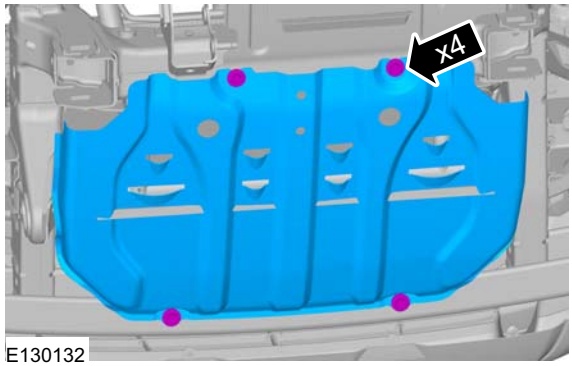

E130132

GENERAL PROCEDURES

Evacuating and Filling

1. • If the cooling system was completely drained, fill the fluid container with the full cooling system fill capacity plus 0.5L of additional coolant.
   • If the cooling system was partially drained, fill the fluid container with the removed and spilled amount of coolant plus 1.0L of additional coolant. When in doubt always use the full cooling system fill capacity plus 0.5L of additional coolant.

2. Remove the coolant expansion tank cap.

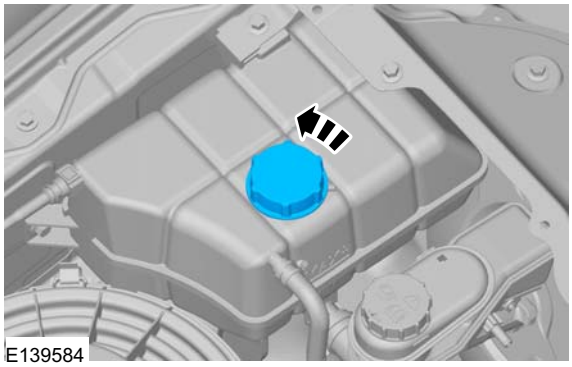

3. 1. Close the valve, install the coolant hose and place it into the fluid container.

   General Equipment: Cooling System Vacuum Tester and Refiller

   2. Close the valve and connect the compressed air hose.

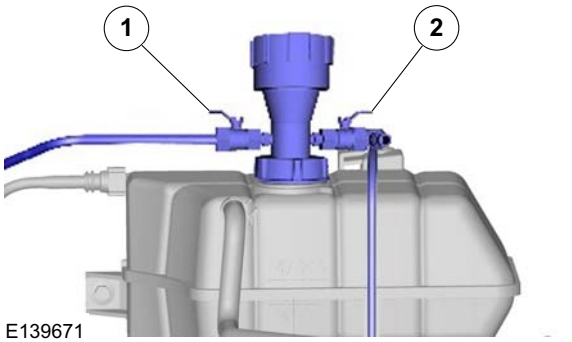

4. 1. General Equipment: Cooling System Vacuum Tester and Refiller
   2. Open the valve until the specificied vacuum is achieved.

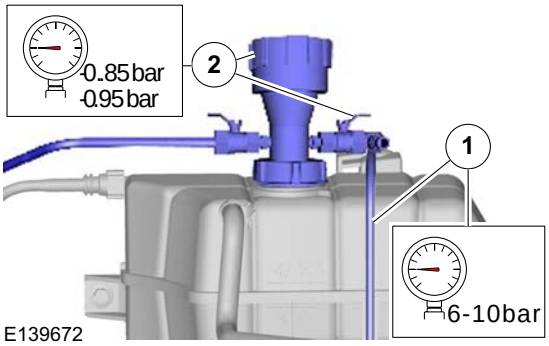

5. • Open the valve until the coolant reservoir fluid level is at the MAX mark.

   General Equipment: Cooling System Vacuum Tester and Refiller

   • If no coolant is visible in the coolant expansion tank, add 2.0L of coolant to the fluid container and repeat the evacuating and filling procedure.

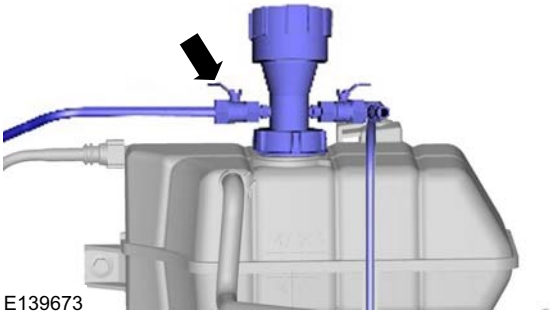

6. Install the coolant expansion tank cap.

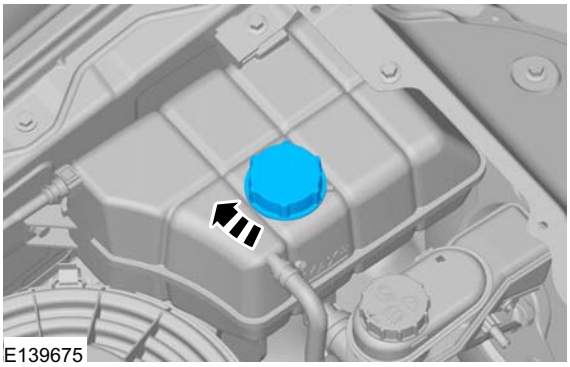

REMOVAL AND INSTALLATION

Thermostat(24 454 0)

Removal

NOTE: Removal steps in this procedure may contain installation details.

1. Drain the cooling system.

   Refer to: Cooling System Draining, Filling and Bleeding (303-03 Engine Cooling, General Procedures).

2. **NOTE:** The gasket is to be reused unless damaged.

   Torque: 10 Nm

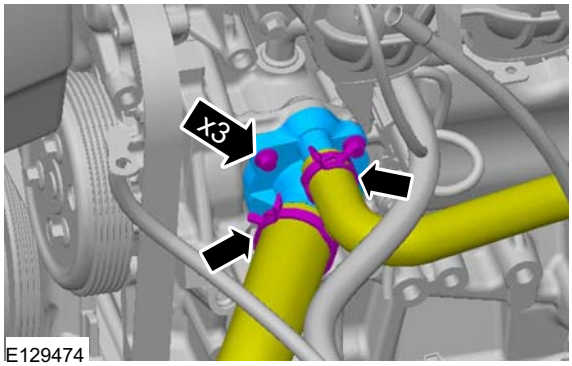

E129474

3.

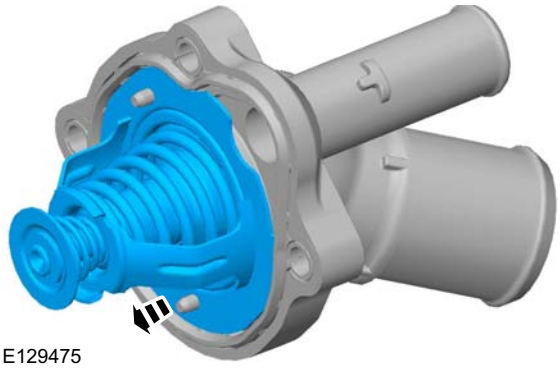
E129475

Installation

1. To install, reverse the removal procedure.

2. Bleed the cooling system.

   Refer to: Cooling System Draining, Filling and Bleeding (303-03 Engine Cooling, General Procedures).

REMOVAL AND INSTALLATION

Coolant Pump(24 404 0)

Removal

NOTE: Removal steps in this procedure may contain installation details.

1. Drain the cooling system.

   Refer to: Cooling System Draining, Filling and Bleeding (303-03 Engine Cooling, General Procedures).

2. Refer to: Lifting (100-02 Jacking and Lifting, Description and Operation).

3. Loosen: 3 turn(s)

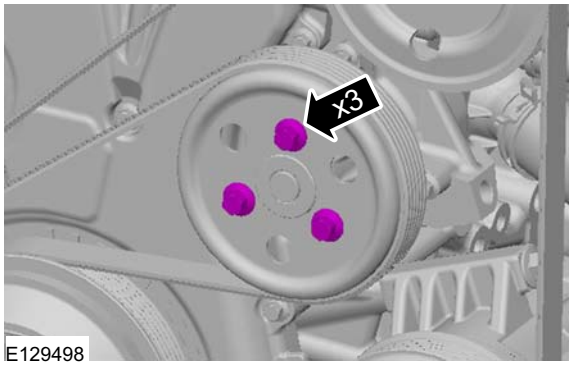

E129498

4. Refer to: Accessory Drive Belt (303-05 Accessory Drive - 2.5L Duratec-HE (122kW/165PS) - MI4, Removal and Installation).

5. Torque: 20 Nm

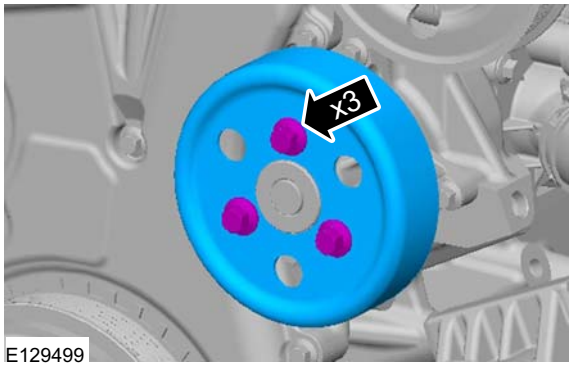

E129499

6. **NOTE:** Make sure that the mating faces are clean and free of foreign material.

   Torque: 10 Nm

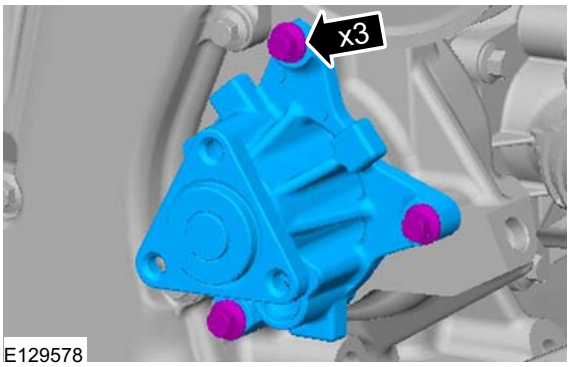

E129578

Installation

1. **NOTE:** Install all the bolts finger tight before final tightening.

   To install, reverse the removal procedure.

2. Bleed the cooling system.

   Refer to: Cooling System Draining, Filling and Bleeding (303-03 Engine Cooling, General Procedures).

REMOVAL AND INSTALLATION

Radiator(24 254 0)

Removal

NOTE: Removal steps in this procedure may contain installation details.

1. Refer to: Cooling Fan Motor and Shroud (303-03 Engine Cooling, Removal and Installation).

2.

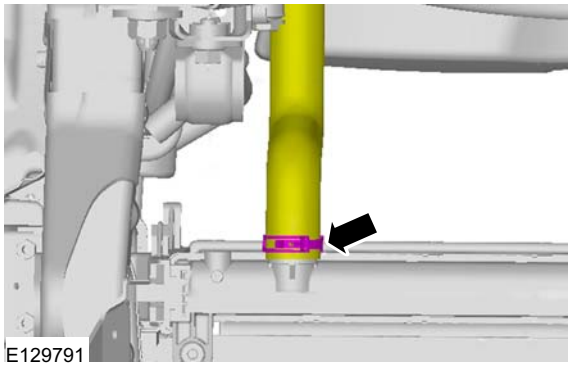

3.

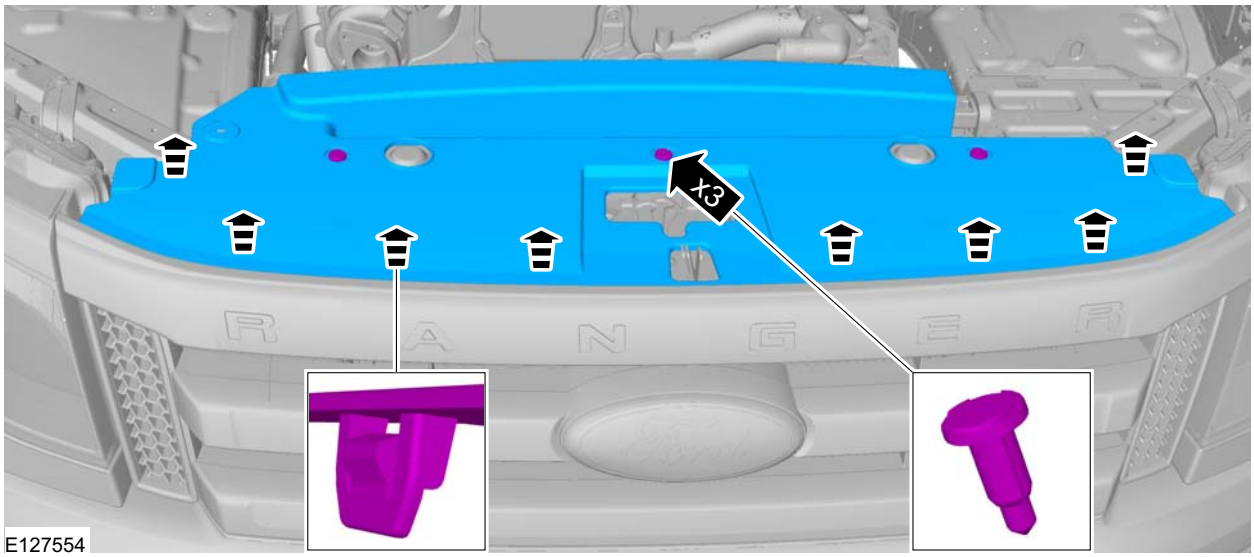

4. **NOTE:** Take extra care not to damage the A/C refrigerant filling pipe.

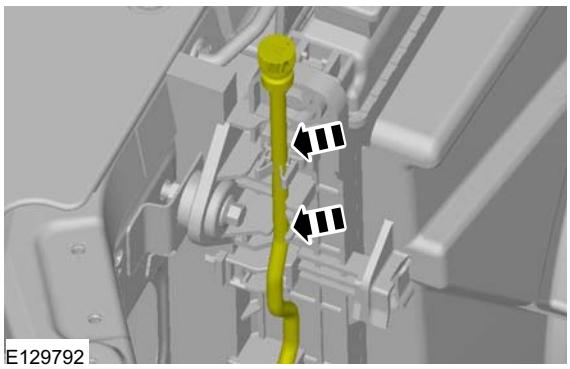

5. **NOTE:** Take extra care not to bend the radiator.

Torque: 20 Nm

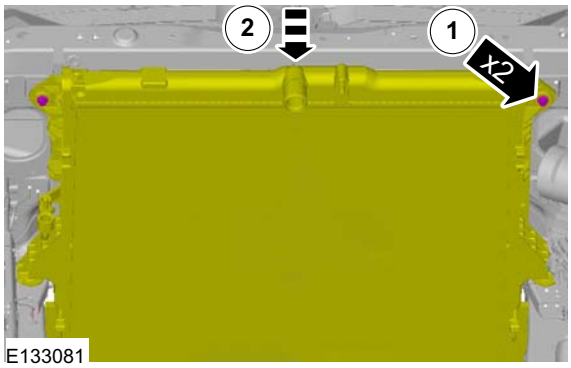

REMOVAL AND INSTALLATION

6. Lift the A/C condenser off the supports and move the A/C condenser toward the front of the vehicle and securely strap the A/C condenser on the grill support.
   Torque: 7 Nm

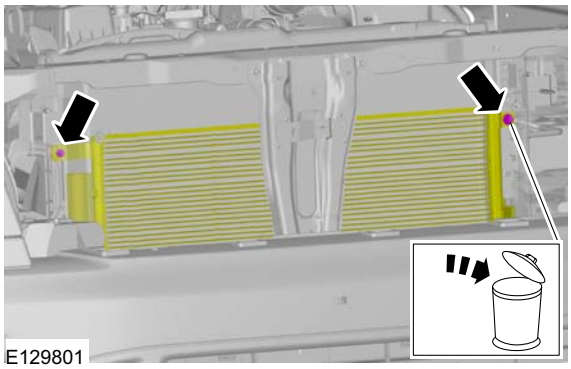

7. **NOTE:** Radiator insulators are to be reused unless damaged.

   NOTE: Take extra care not to damage the radiator during removal.

Installation

1. **NOTE:** Make sure that no components catch when installing the radiator.

   To install, reverse the removal procedure.

REMOVAL AND INSTALLATION

Cooling Fan Motor and Shroud(24 222 0)

Removal

NOTE: Removal steps in this procedure may contain installation details.

1. Drain the cooling system.

Refer to: Cooling System Draining, Filling and Bleeding (303-03 Engine Cooling, General Procedures).

2. Torque: 11 Nm

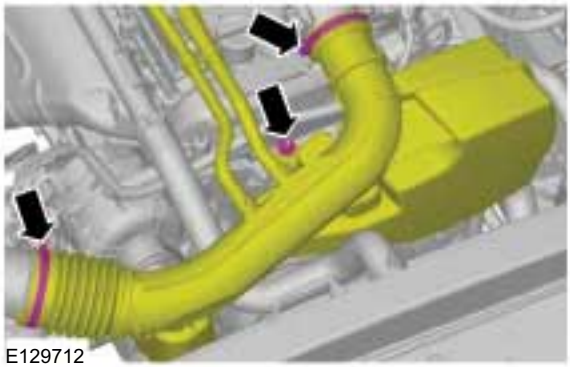
E129712

3.

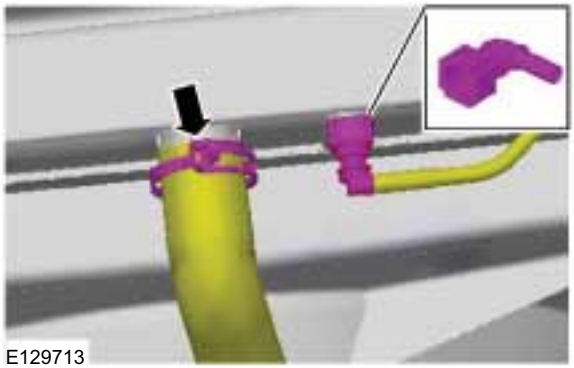
E129713

4.

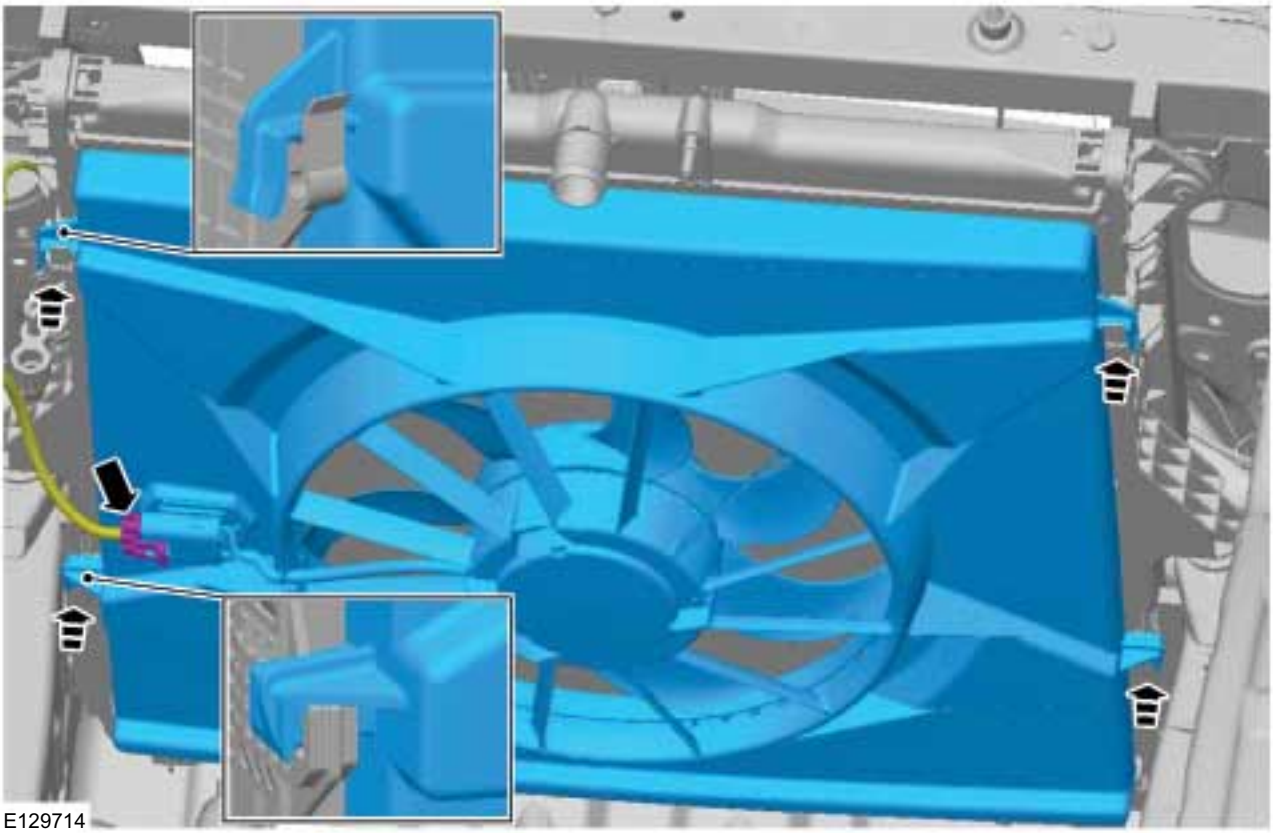
E129714

REMOVAL AND INSTALLATION

Installation

1. To install, reverse the removal procedure.
2. Bleed the cooling system.

   Refer to: Cooling System Draining, Filling and Bleeding (303-03 Engine Cooling, General Procedures).

REMOVAL AND INSTALLATION

Coolant Outlet Connector

Removal

NOTE: Removal steps in this procedure may contain installation details.

1. Drain the cooling system.

   Refer to: Cooling System Draining, Filling and Bleeding (303-03 Engine Cooling, General Procedures).

2. Refer to: Lifting (100-02 Jacking and Lifting, Description and Operation).

3. Refer to: Cowl Panel Grille (501-02 Front End Body Panels, Removal and Installation).

4. Torque: 11 Nm

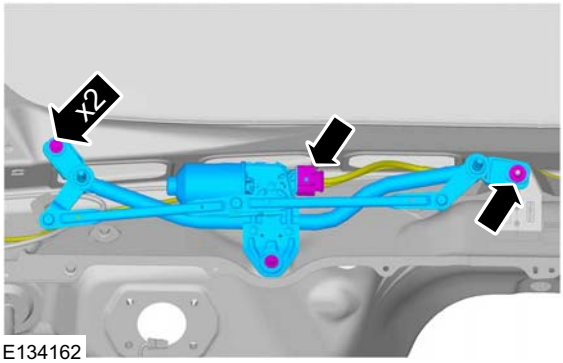

E134162

5. on both sides.

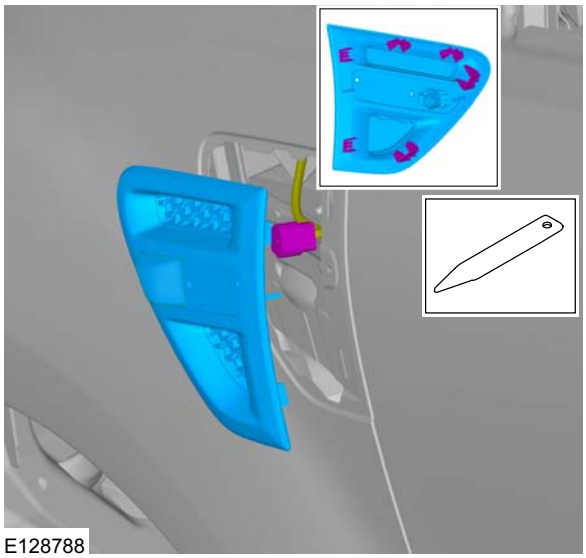
E128788

6. Torque: 14 Nm

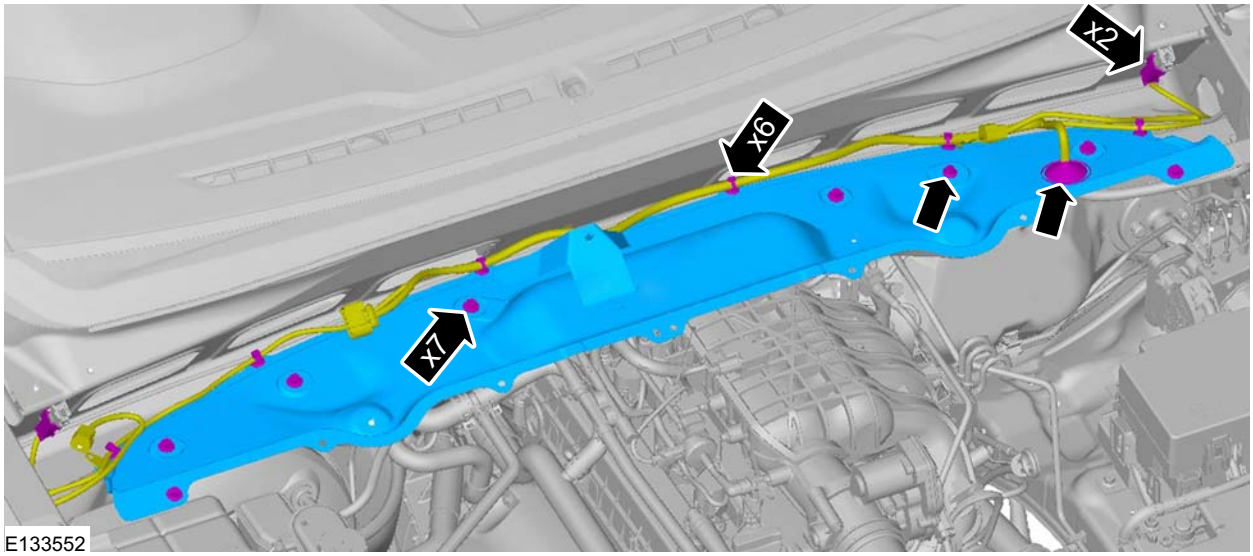

E133552

REMOVAL AND INSTALLATION

7.

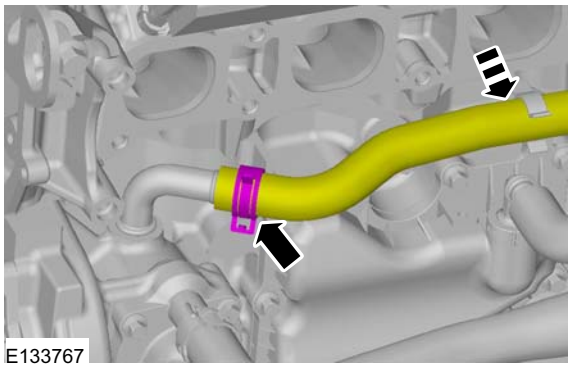

8.

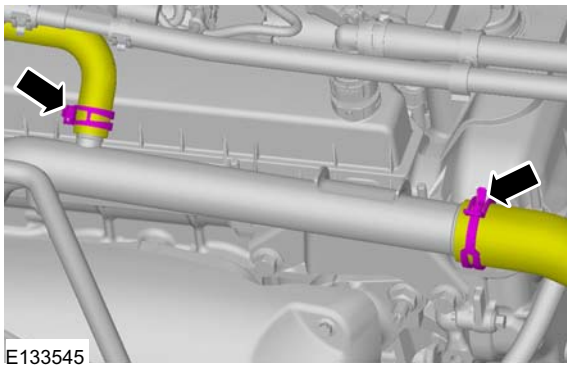

9. Torque: 48 Nm

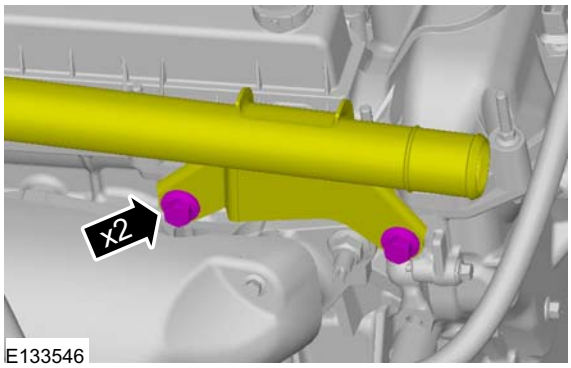

10. **NOTE:** Make sure that these components are installed to the noted removal position.

NOTE: The gasket is to be reused unless damaged.

Torque: 10 Nm

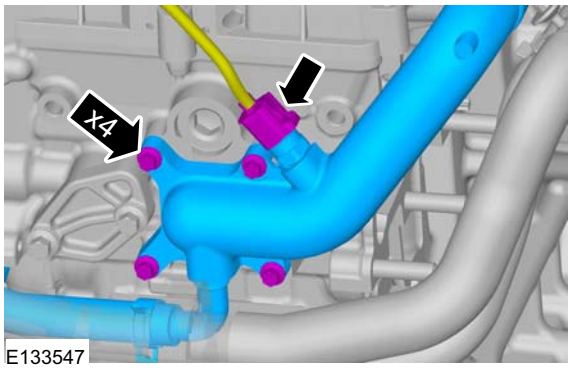

11.

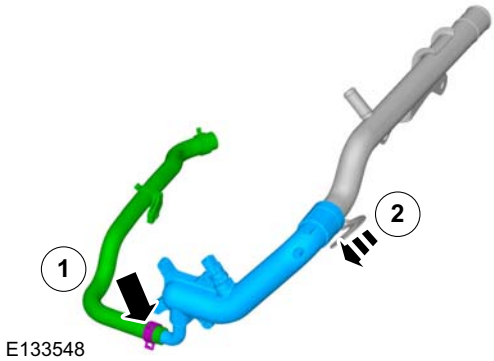

12. **NOTE:** Make sure that the mating faces are clean and free of foreign material.

NOTE: The O-ring seal is to be reused unless damaged.

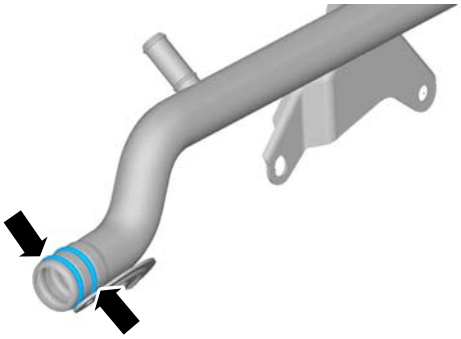

Installation

1. To install, reverse the removal procedure.

REMOVAL AND INSTALLATION

2. Bleed the cooling system.

   Refer to: Cooling System Draining, Filling and Bleeding (303-03 Engine Cooling, General Procedures).

SECTION 303-04A Fuel Charging and Controls — 2.5L

Duratec-HE (122kW/165PS) - MI4

VEHICLE APPLICATION: 2011.50 Ranger

CONTENTS PAGE

DESCRIPTION AND OPERATION

Fuel Charging and Controls..... 303-04A-2

REMOVAL AND INSTALLATION

Fuel Rail..... 303-04A-4
Throttle Body..... (23 198 0) 303-04A-6

DESCRIPTION AND OPERATION

Fuel Charging and Controls

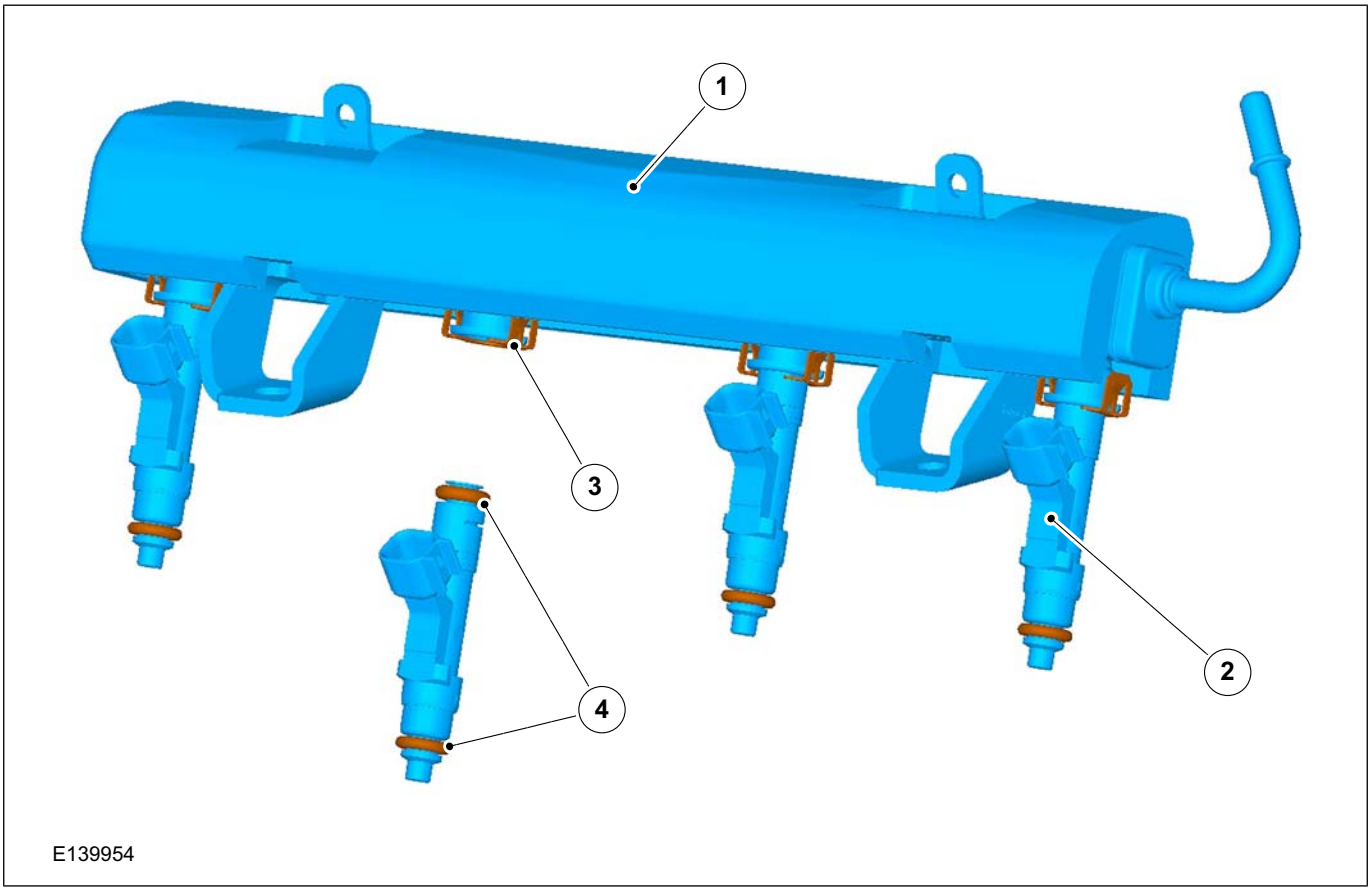

Item	Part Number	Description
1		Fuel rail
2		Fuel injector

Item	Part Number	Description
3		Fuel injector retaining clip
4	-	Fuel injector O-ring seals

DESCRIPTION AND OPERATION

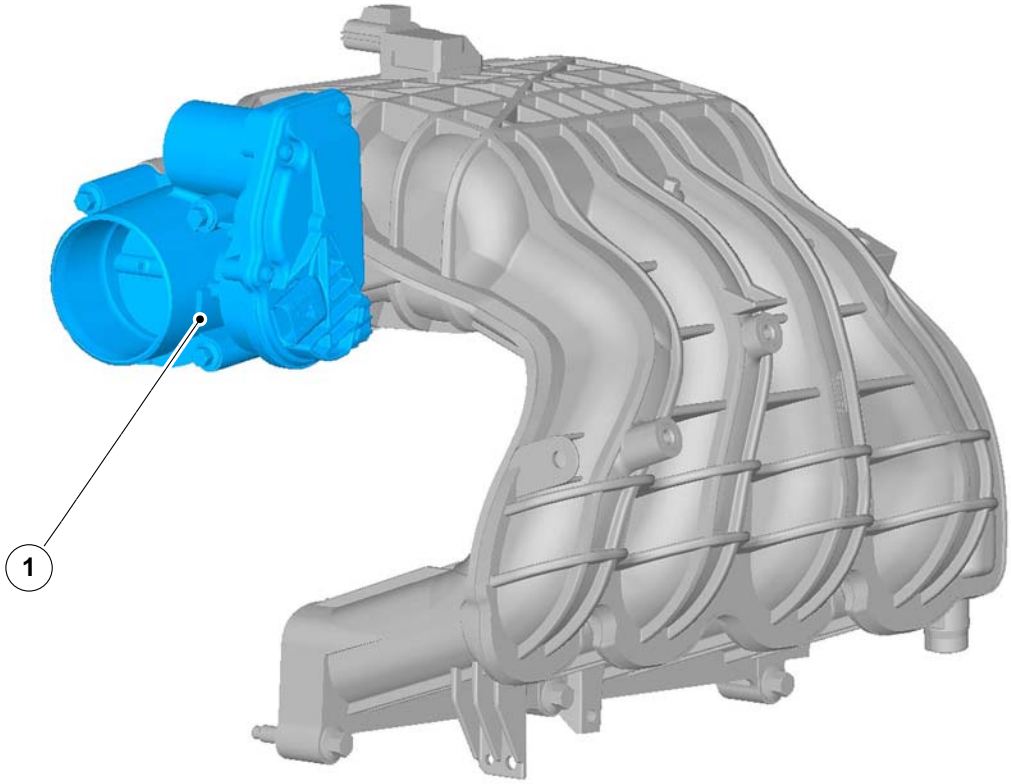

E139955

Item	Description
1	Throttle body

Throttle Body

The throttle plate position is controlled by a signal from the powertrain control module (PCM) which receives an input from the accelerator pedal position (APP) sensor. The system is fully electronic and does not use any cables. The signal from the PCM is used to control a DC motor within the throttle body which is connected to the throttle plate through gears. The throttle body also gives inputs back to the PCM. This information allows the PCM to compensate for factors such as carbon build up within the throttle body and throttle body wear. The throttle body also provides information to the PCM to enable the flagging of a diagnostic trouble code (DTC).

REMOVAL AND INSTALLATION

Fuel Rail

Materials	
Name	**Specification**
Engine Oil - 5W-30	WSS-M2C913-C

Removal

NOTE: Removal steps in this procedure may contain installation details.

1. Refer to: Petrol and Petrol-Ethanol Fuel Systems Health and Safety Precautions (100-00 General Information, Description and Operation).
2. Refer to: Fuel System Pressure Release (310-00 Fuel System - General Information - 2.5L Duratec-HE (122kW/165PS) - MI4, General Procedures).
3. Refer to: Battery Disconnect and Connect (414-01 Battery, Mounting and Cables, General Procedures).
4.

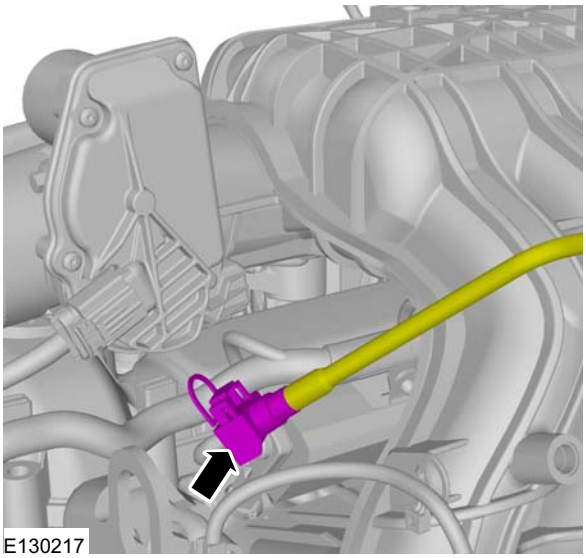
E130217

5. Refer to: Intake Manifold (303-01 Engine - 2.5L Duratec-HE (122kW/165PS) - MI4, Removal and Installation).
6.

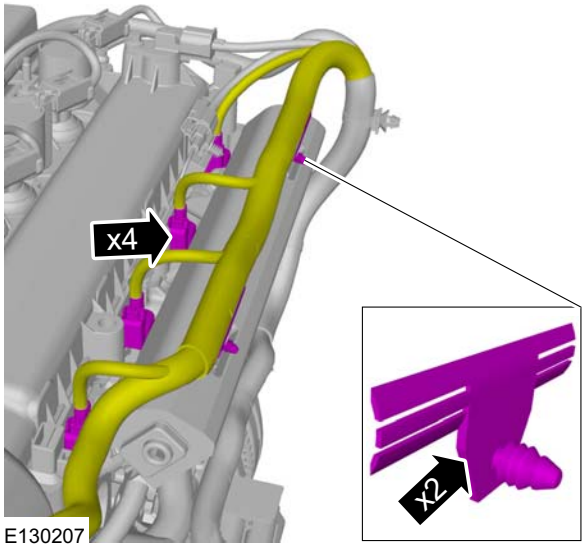

E130207

7. Torque: 10 Nm

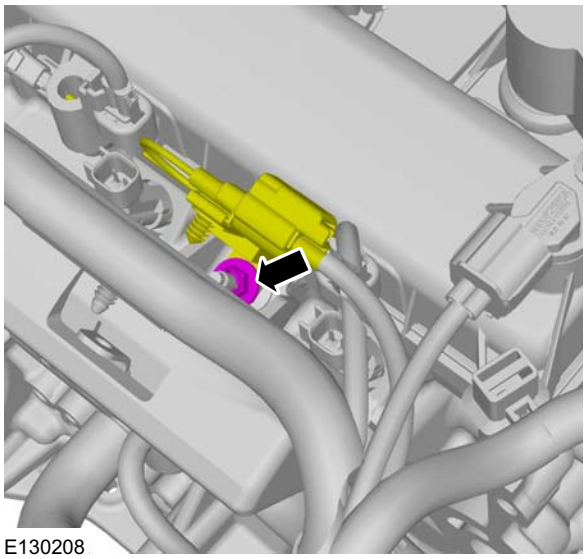
E130208

REMOVAL AND INSTALLATION

8. Torque: 23 Nm

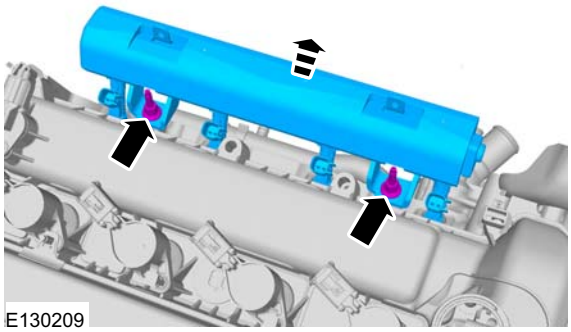

9.

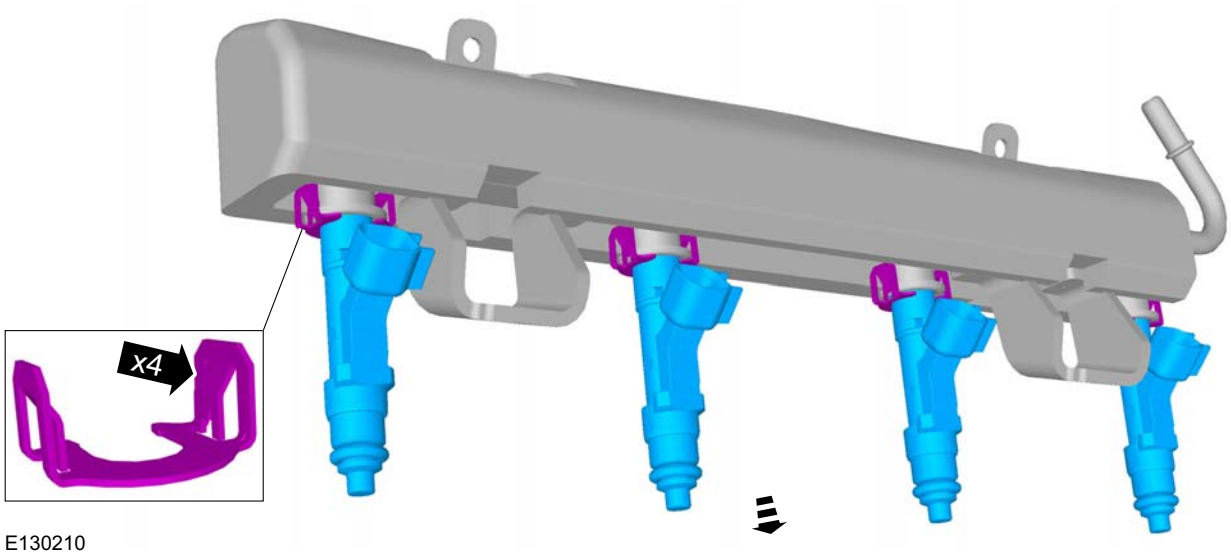

10. **CAUTION: Only use the specified material to lubricate the seals.**

Material: Engine Oil - 5W-30 (WSS-M2C913-C) engine oil

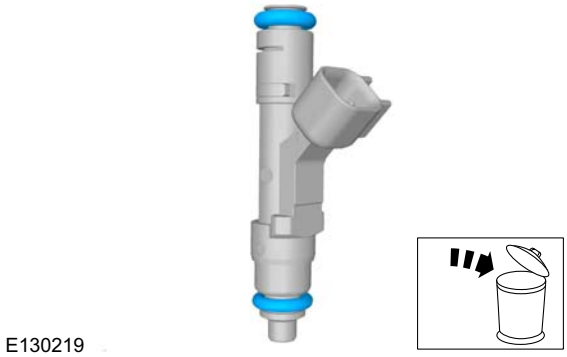

Installation

1. To install, reverse the removal procedure.

REMOVAL AND INSTALLATION

Throttle Body(23 198 0)

Removal

NOTE: Removal steps in this procedure may contain installation details.

1.

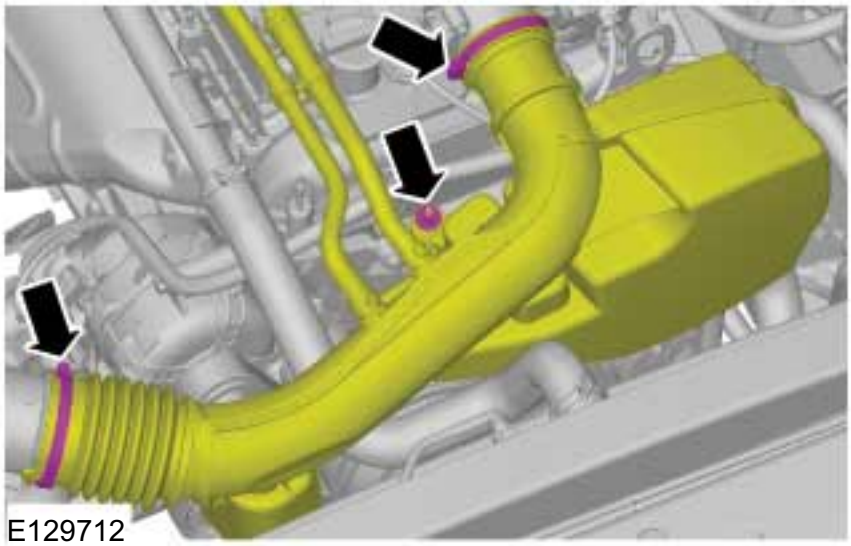

2.

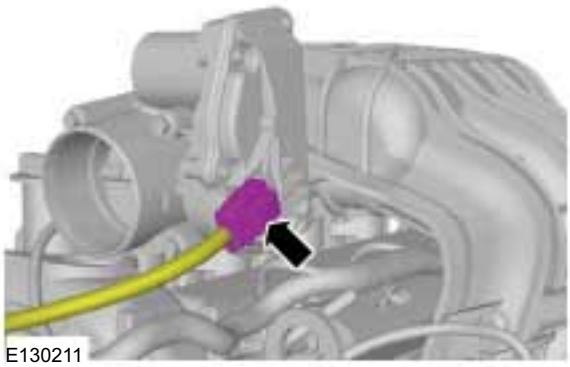

3. **NOTE:** The gasket is to be reused unless damaged.

Torque: 10 Nm

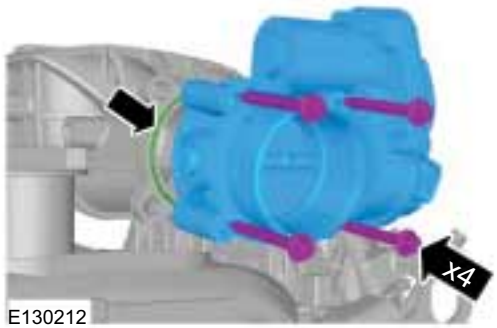

Installation

1. To install, reverse the removal procedure.
2. **NOTE:** Make sure that the pedals remain in the rest position during the initialization.

   Turn the ignition key to position II and wait for one minute to initialize the throttle body.
3. Turn the ignition key to the OFF position.

SECTION 303-04B Fuel Charging and Controls — 2.2L Duratorq-TDCi (88kW/120PS) - Puma/2.2L Duratorq-TDCi (96kW/130PS) - Puma/2.2L Duratorq-TDCi (110kW/150PS) - Puma

VEHICLE APPLICATION: 2011.50 Ranger

CONTENTS PAGE

DESCRIPTION AND OPERATION

Fuel Charging and Controls..... 303-04B-2
Overview..... 303-04B-2
General..... 303-04B-2
Fuel pump..... 303-04B-3
Fuel rail..... 303-04B-3
Fuel injectors..... 303-04B-4

GENERAL PROCEDURES

Fuel Injection Component Cleaning..... 303-04B-6

REMOVAL AND INSTALLATION

Fuel Injectors..... 303-04B-8
Fuel Pump..... 303-04B-11
Fuel Rail..... 303-04B-15

DESCRIPTION AND OPERATION

Fuel Charging and Controls

Overview

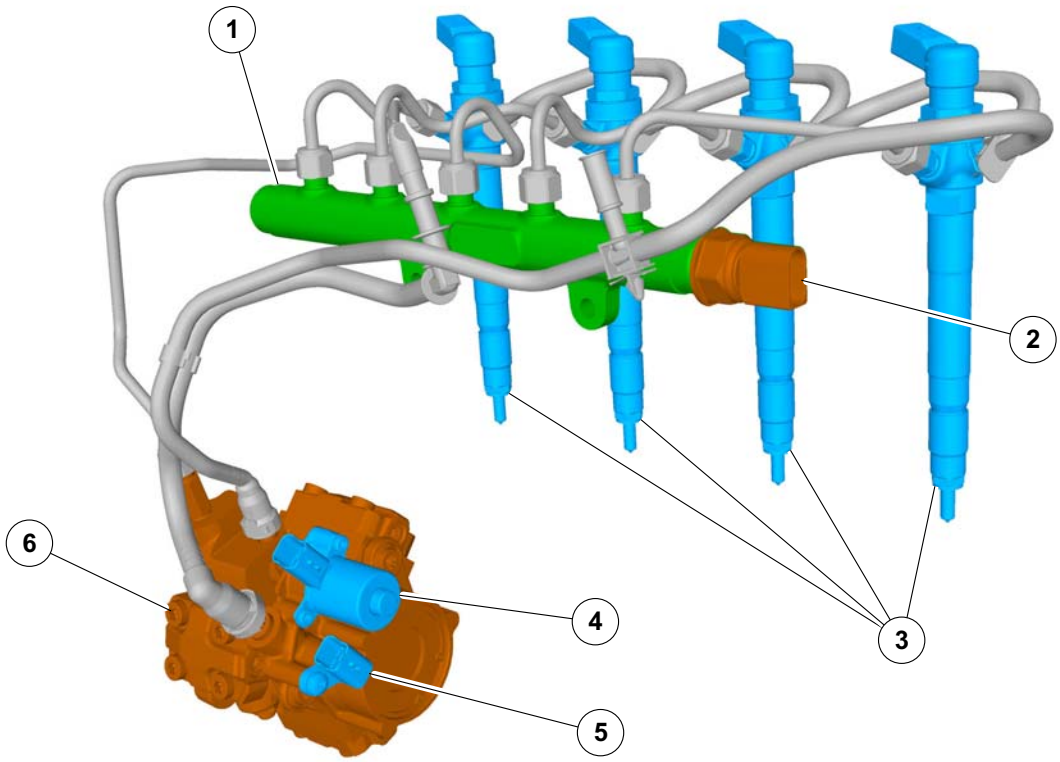

E129441

Item	Description
1	Fuel rail
2	Fuel rail pressure (FRP) sensor
3	Fuel Injector(s)
4	Fuel metering valve
5	Fuel temperature sensor
6	Fuel pump

General

A Denso common rail fuel injection system is used on the 2.2L Duratorq-TDCi (Puma) diesel engine.

Within the fuel pump there is an integral fuel transfer pump which draws the fuel from the fuel tank to the fuel pump.

A fuel metering valve is located in the supply port to the high-pressure chamber of the fuel pump. The fuel metering valve varies the quantity of fuel supplied to the fuel rail and fuel injector(s), in relation to the driving conditions.

The fuel is supplied at high-pressure to the fuel rail and to the fuel injectors ready for injection. Depending on engine operating conditions, the fuel injection pressure varies between 230 bar and 1600 bar.

Fuel system pressure is measured using an FRP sensor located in the fuel rail. The FRP sensor converts the fuel system pressure into a voltage signal. This voltage signal acts as an input signal to the powertrain control module (PCM) for calculation of the fuel injection quantity.

The power train control module (PCM) calculates the time of fuel injection and the fuel injection quantity depending on various input variables. The specified quantity of fuel is injected into the respective combustion chamber through the solenoid actuated fuel injector(s). In doing so, a pre-injection and a main injection occur each time.

The excess fuel is returned to the fuel tank through the fuel return line.

DESCRIPTION AND OPERATION

Fuel pump

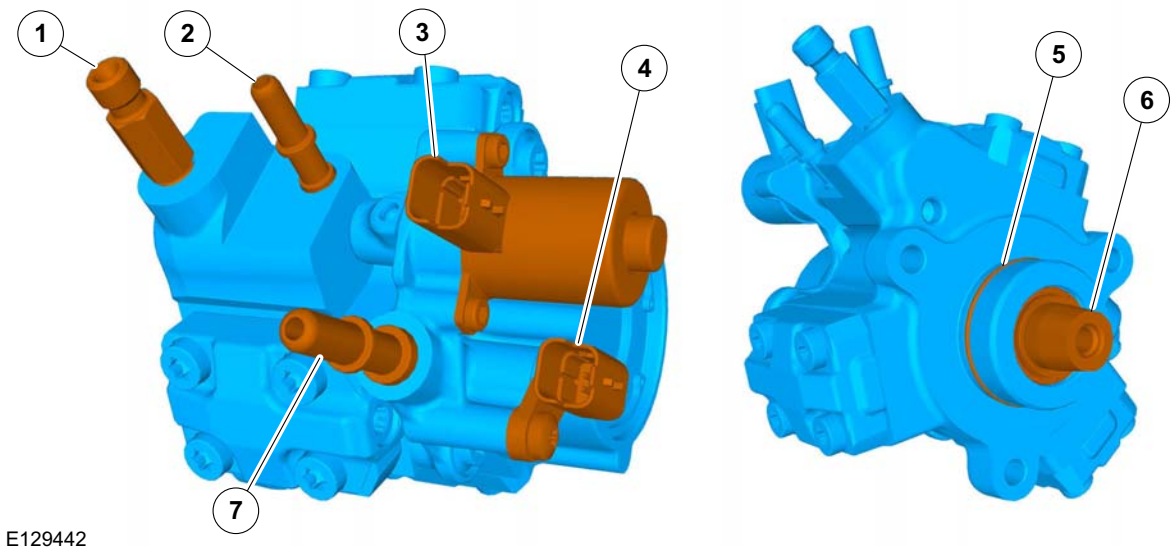

Item	Description
1	Fuel pump high-pressure outlet union
2	Fuel pump fuel return union
3	Fuel metering valve
4	Fuel temperature sensor
5	Fuel pump O-ring seal
6	Fuel pump input drive
7	Fuel pump fuel supply union

The fuel pump is driven directly by the intake camshaft and is located at the rear of the cylinder head.

The fuel pump has three pump elements, each offset from each other by 120 degrees.

The fuel transfer pump is incorporated into the fuel pump and is located on the drive flange. The fuel transfer pump is a cycloid type pump.

The fuel metering valve is actuated by the PCM using pulse width modulation.

Fuel rail

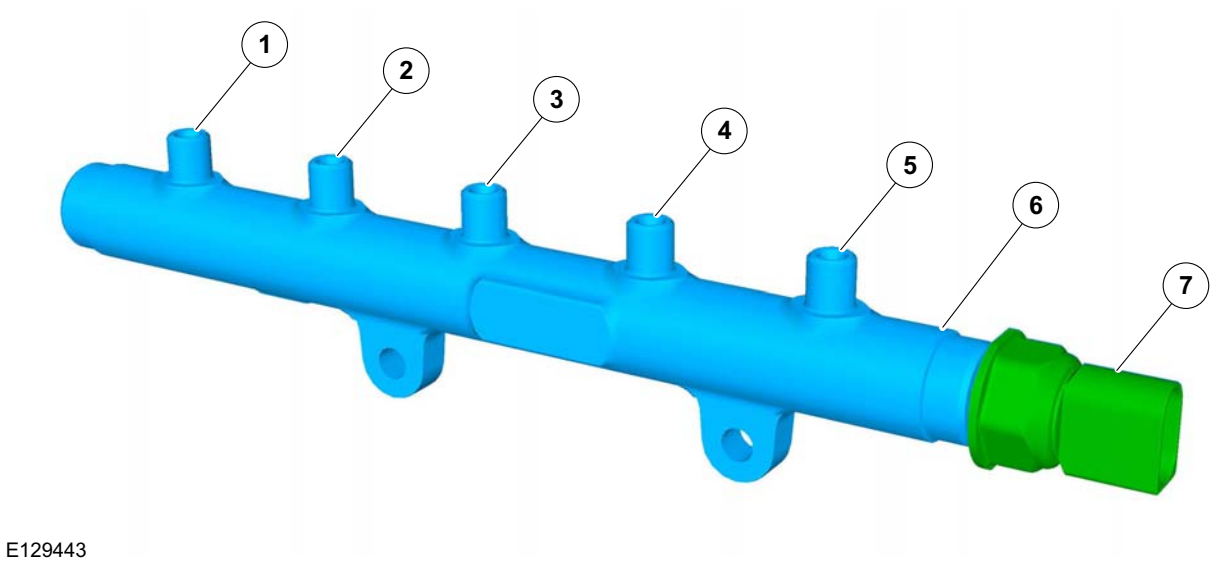

DESCRIPTION AND OPERATION

Item	Description
1	Fuel rail to fuel injector number 1 high-pressure fuel supply line union
2	Fuel rail to fuel injector number 2 high-pressure fuel supply line union
3	Fuel pump to fuel rail high-pressure fuel supply line union
4	Fuel rail to fuel injector number 3 high-pressure fuel supply line union
5	Fuel rail to fuel injector number 4 high-pressure fuel supply line union
6	Fuel rail
7	FRP sensor

CAUTION: The FRP sensor must not be detached or removed from the fuel rail.

The fuel rail is made from forged steel and is retained by a support bracket located on the camshaft carrier .

The fuel is delivered by one high-pressure fuel supply line from the fuel pump to the fuel rail.

From the fuel rail, the fuel travels through high-pressure fuel supply line(s) to the fuel injector(s).

Fuel injectors

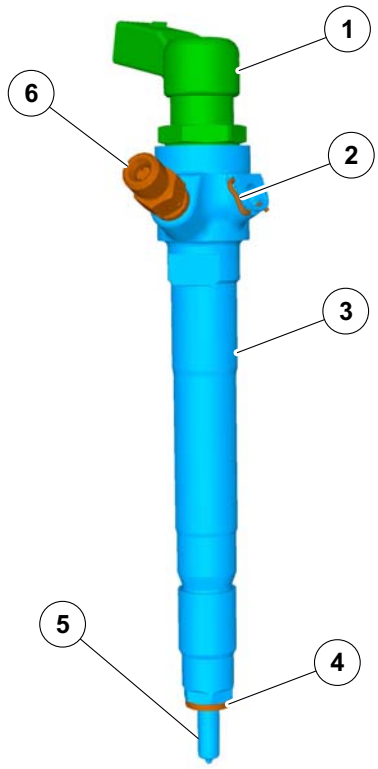

E129444

Item	Description
1	Fuel injector electrical connector
2	Fuel injector fuel return line clip
3	Fuel injector
4	Fuel injector sealing washer
5	Fuel injector nozzle
6	Fuel injector high-pressure fuel supply line union

The fuel injector(s) are located centrally on the cylinder head upper section and are attached by means of retaining clamps.

The fuel injector(s) are sealed from the combustion chamber by means of a copper sealing washer located between the fuel injector and the cylinder head. A new sealing washer must always be installed when carrying out installation work.

The fuel injectors are controlled directly by the PCM.

The fuel return line(s) are attached to the top of the fuel injector and are connected in series.

DESCRIPTION AND OPERATION

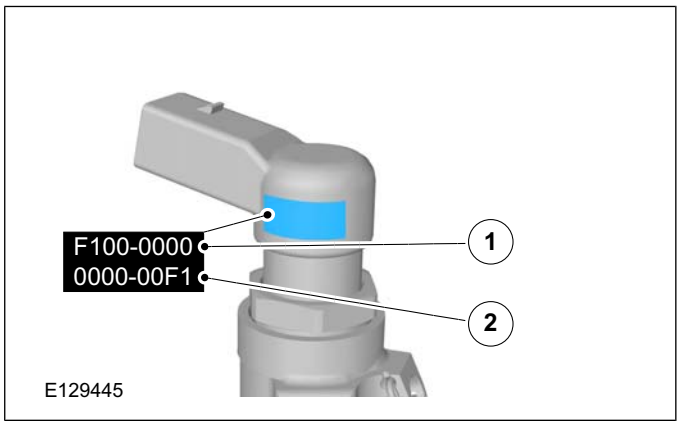

Item	Description
1	Eight digit injector correction factor (example only shown)
2	Eight digit serial code (For manufacturer use only)

When installing new fuel injectors, the injector correction factor from the new fuel injector(s) must be recorded and uploaded using the Worldwide Diagnostic System (WDS).

GENERAL PROCEDURES

Fuel Injection Component Cleaning

General Equipment

Pneumatic vacuum gun

WARNINGS:

Do not smoke or carry lighted tobacco or open flame of any type when working on or near any fuel related components. Highly flammable mixtures are always present and may ignite. Failure to follow these instructions may result in personal injury.

Do not carry out any repairs to the fuel injection system with the engine running. The fuel pressure within the system can be as high as 1600 bar. Failure to follow this instruction may result in personal injury.

Eye protection must be worn at all times when working on or near any fuel related components. Failure to follow this instruction may result in personal injury.

CAUTIONS:

Make sure that the workshop area in which the vehicle is being worked on is as clean and dust-free as possible. Areas in which work on clutches, brakes or where welding or machining are carried out are not suitable in view of the risk of contamination to the fuel system.

Make sure that clean non-plated tools are used. Clean tools using a new brush that will not lose its bristles and fresh suitable evaporative cleaning agent, prior to starting work on the vehicle.

Use a steel topped workbench and cover it with clean, lint-free non-flocking material.

Make sure that all parts removed from the vehicle are placed on the lint-free non-flocking material.

Make sure that any protective clothing worn is clean and made from lint-free non-flocking material.

Make sure that any protective gloves worn are new and are of the non-powdered latex type.

Before using the suitable evaporative cleaning agent, protect all electrical components and connectors with lint-free non-flocking material.

1. **For additional information, refer to: Solvents, Sealants and Adhesives (100-00 General Information, Description and Operation) / Diesel Fuel System Health and Safety Precautions (100-00 General Information, Description and Operation).**
2.

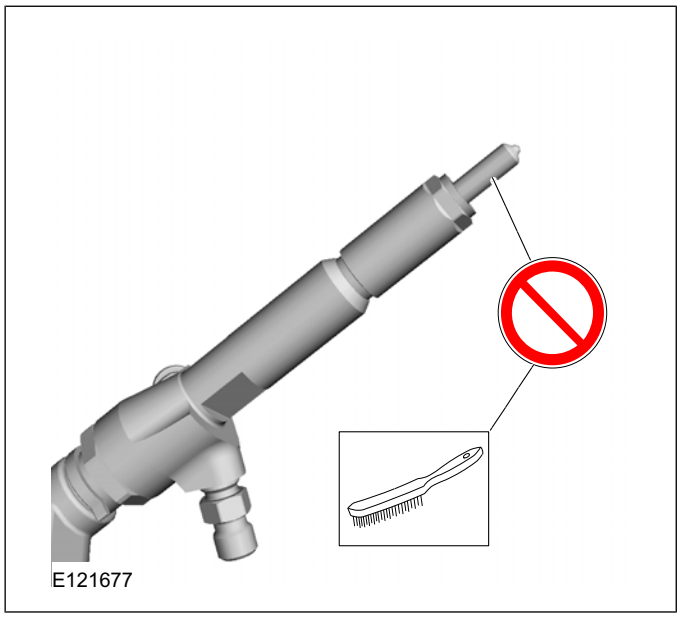

CAUTION: Use lint free cloth.

3. **Using Brake Cleaner: 3U7J-2C410-AA**

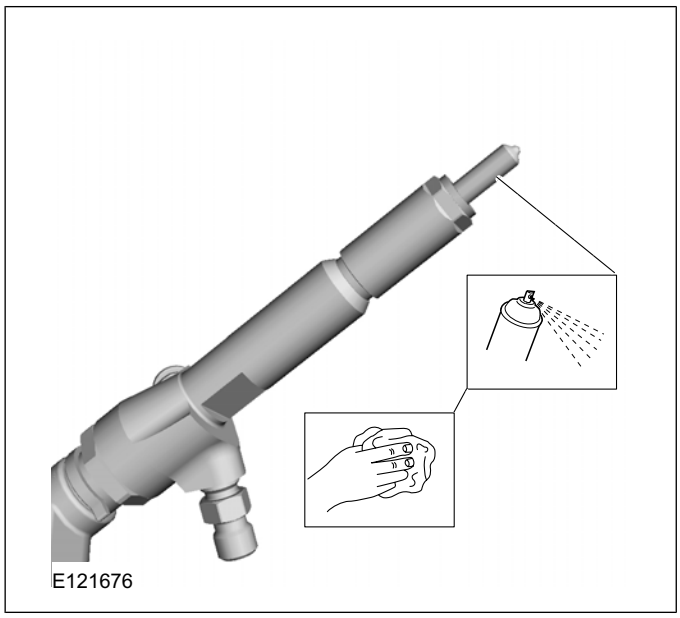

GENERAL PROCEDURES

4. Using a new brush that will not lose its bristles, brush a suitable evaporative cleaning agent onto the components being removed and onto the surrounding area.
5. Using the pneumatic vacuum gun, remove all traces of evaporative cleaning agent and foreign material.
6. Dispose of any unused evaporative cleaning agent and the brush after completing the repair.

REMOVAL AND INSTALLATION

Fuel Injectors

General Equipment

Ford Diagnostic Equipment

General Equipment

Long Nose Pliers

Removal

1. **WARNINGS:**

   Make sure that the engine is switched off.

   Make sure that the fuel pressure has dropped to zero and that the fuel temperature is at ambient temperature.

   Wait for a minimum of 1 minute after the engine has stopped before commencing any repair to the fuel injection system.

   CAUTIONS:

   Fuel injectors must not be dismantled or the nozzles cleaned, not even with ultrasonic equipment. Install new fuel injectors if necessary.

   Fuel injectors sharing a common fuel injector clamp must be removed in pairs.

   NOTE: Removal steps in this procedure may contain installation details.

   Refer to: Diesel Fuel System Health and Safety Precautions (100-00 General Information, Description and Operation).

2. Within the datalogger function of WDS, check that the fuel pressure has dropped to zero and that the fuel temperature has either reached ambient temperature or is below 30ºC whichever is the greater.

   General Equipment: Ford Diagnostic Equipment

3. Refer to: Battery Disconnect and Connect (414-01 Battery, Mounting and Cables, General Procedures).

4.

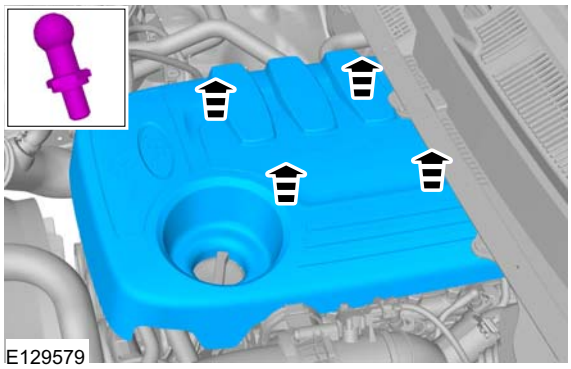

5.

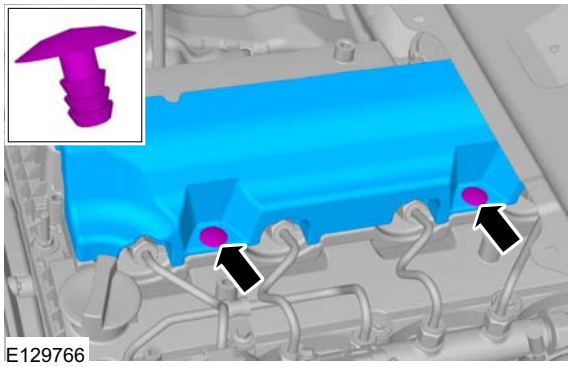

6. **CAUTION: Make sure that all openings are sealed. Use new blanking caps.**

   Vacuum foreign material from the fuel injector and fuel return lines.

   Refer to: Fuel Injection Component Cleaning (303-04 Fuel Charging and Controls - 3.2L Duratorq-TDCi (148kW/200PS) - Puma, General Procedures).

REMOVAL AND INSTALLATION

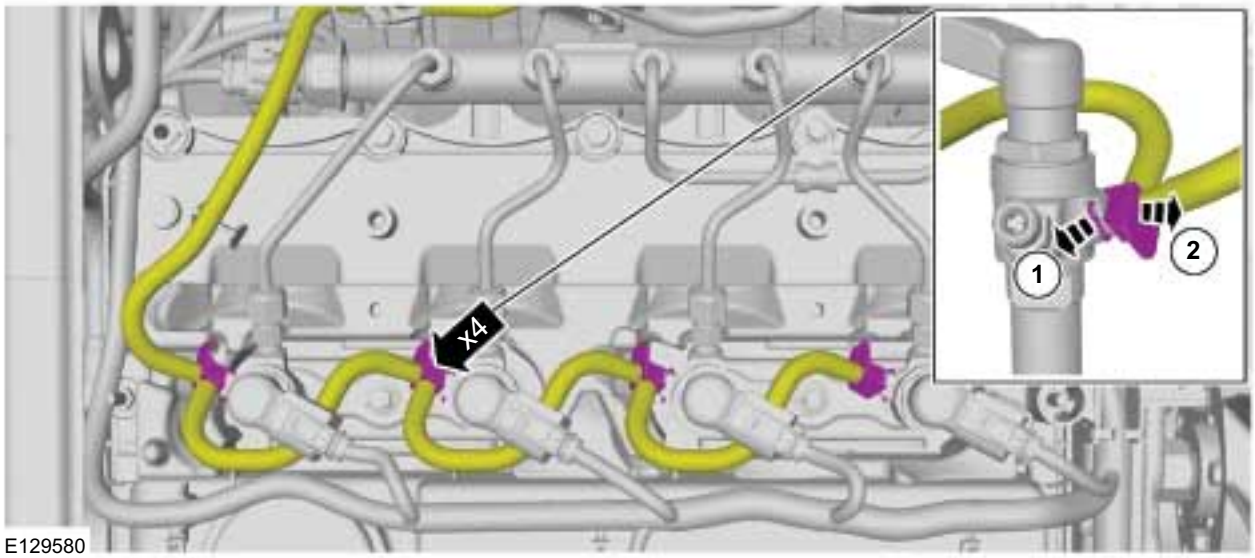

E129580

7. **CAUTIONS:**

   Make sure that the fuel line remains in contact at both ends until both unions nuts have been unscrewed and the area around the joints thoroughly cleaned.

   Make sure that all openings are sealed. Use new blanking caps.

   Vacuum foreign material from the high-pressure fuel supply line, the fuel injector and the fuel rail.

   Refer to: Fuel Injection Component Cleaning (303-04 Fuel Charging and Controls - 3.2L Duratorq-TDCi (148kW/200PS) - Puma, General Procedures).

   Torque:
   - Stage 1: 22 Nm
   - Stage 2: 25 Nm

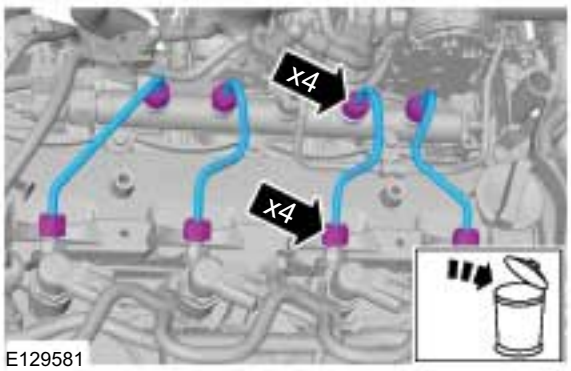

E129581

8.

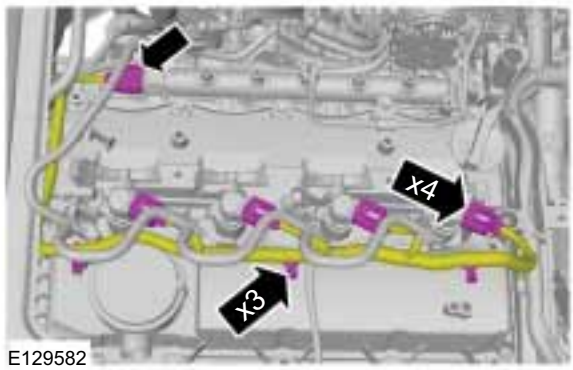

E129582

9. Torque:
   - Stage 1: 5 Nm
   - Stage 2: 180°

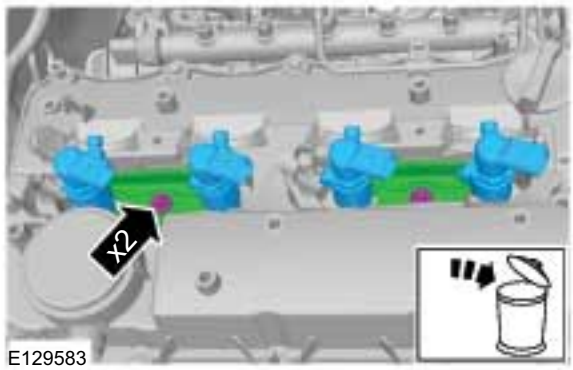

E129583

REMOVAL AND INSTALLATION

10. General Equipment: Long Nose Pliers

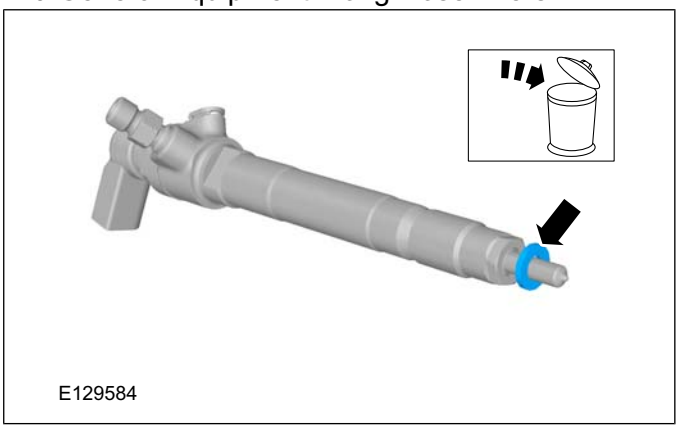

Installation

1. To install, reverse the removal procedure.
2. Record the new fuel injector correction factor code.

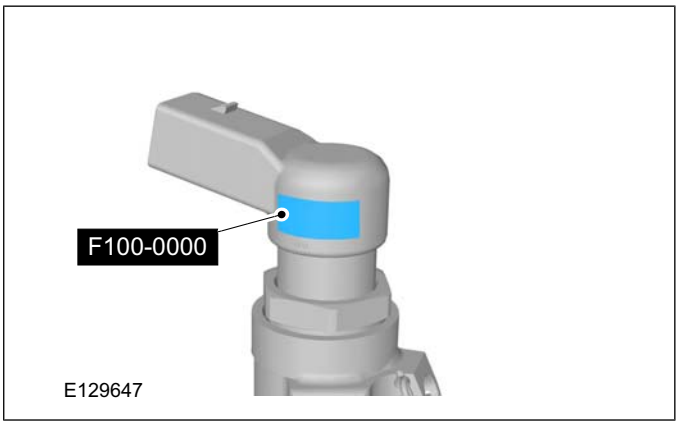

3. Input the new Injector Correction Factors using the following WDS menu options:
   ToolBox/Powertrain/Service Functions

   General Equipment: Ford Diagnostic Equipment

REMOVAL AND INSTALLATION

Fuel Pump

Special Tool(s) / General Equipment

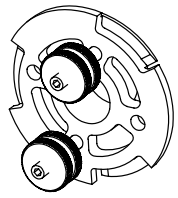 E75376	303-1317 Locking Tool, Fuel Injection Pump Sprocket
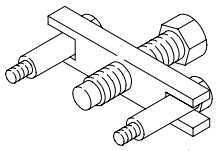 21132	303-249 Remover, Crankshaft Timing Pulley

Special Tool(s) / General Equipment

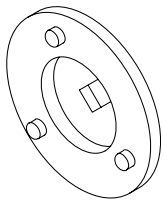	303-679 Remover/Installer, Engine Front Cover Inspection Plate
Ford Diagnostic Equipment	

Removal

1. **WARNINGS:**

   Make sure that the engine is switched off.

   Make sure that the fuel pressure has dropped to zero and that the fuel temperature is at ambient temperature.

   Wait for a minimum of 1 minute after the engine has stopped before commencing any repair to the fuel injection system.

   NOTE: Vacuum any foreign material from the fuel pump and fuel rail unions before sealing the unions with blanking caps.

   NOTE: Removal steps in this procedure may contain installation details.

   Refer to: Diesel Fuel System Health and Safety Precautions (100-00 General Information, Description and Operation).

2. Within the datalogger function, check that the fuel pressure has dropped to zero and that the fuel temperature has either reached ambient temperature or is below 30ºC whichever is the greater.

   General Equipment: Ford Diagnostic Equipment

REMOVAL AND INSTALLATION

3. Refer to: Battery Disconnect and Connect (414-01 Battery, Mounting and Cables, General Procedures).

4. Refer to: Accessory Drive Belt - 2.2L Duratorq-TDCi (88kW/120PS) - Puma/2.2L Duratorq-TDCi (96kW/130PS) - Puma/2.2L Duratorq-TDCi (110kW/150PS) - Puma/3.2L Duratorq-TDCi (148kW/200PS) - Puma (303-05 Accessory Drive - 2.2L Duratorq-TDCi (88kW/120PS) - Puma/2.2L Duratorq-TDCi (96kW/130PS) - Puma/2.2L Duratorq-TDCi (110kW/150PS) - Puma/3.2L Duratorq-TDCi (148kW/200PS) - Puma, Removal and Installation).

5. Refer to: Intake Manifold (303-01 Engine - 2.2L Duratorq-TDCi (88kW/120PS) - Puma/2.2L Duratorq-TDCi (96kW/130PS) - Puma/2.2L Duratorq-TDCi (110kW/150PS) - Puma, Removal and Installation).

6. Refer to: Fuel Injection Component Cleaning (303-04 Fuel Charging and Controls - 3.2L Duratorq-TDCi (148kW/200PS) - Puma, General Procedures).

7. Special Tool(s): 303-679

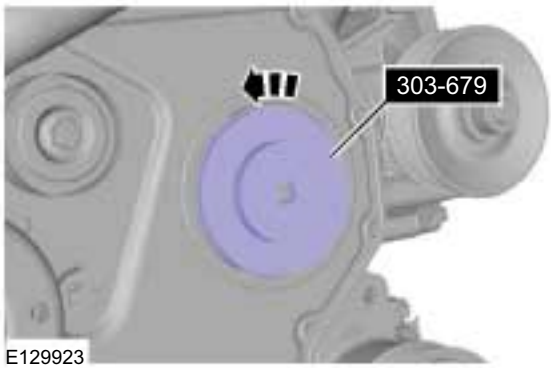

E129923

8. Torque: 64 Nm

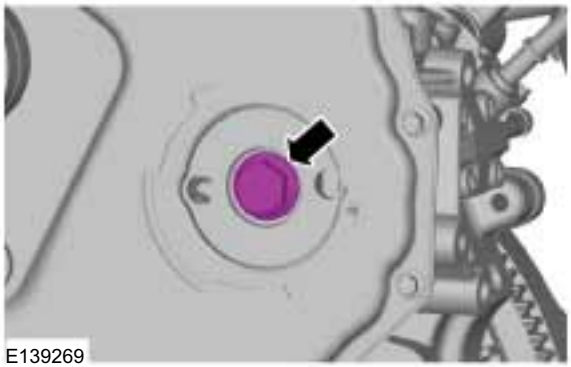
E139269

9. Install the Special Tool(s): 303-1317

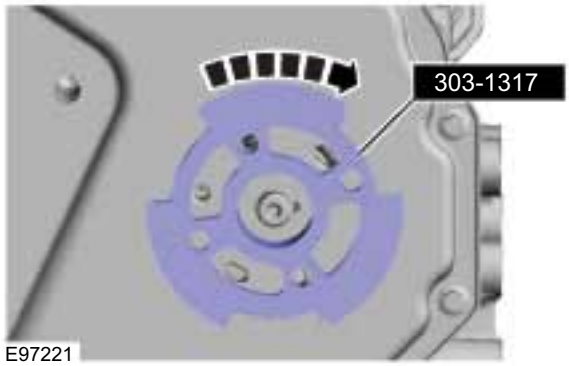

E97221

10. Special Tool(s): 303-249

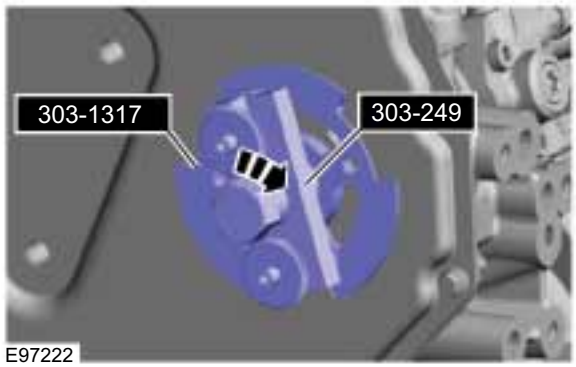

E97222

11. **CAUTION: Make sure that all openings are sealed. Use new blanking caps.**

Vacuum foreign material from the low-pressure fuel supply line and fuel return line.

Refer to: Fuel Injection Component Cleaning (303-04 Fuel Charging and Controls - 3.2L Duratorq-TDCi (148kW/200PS) - Puma, General Procedures).

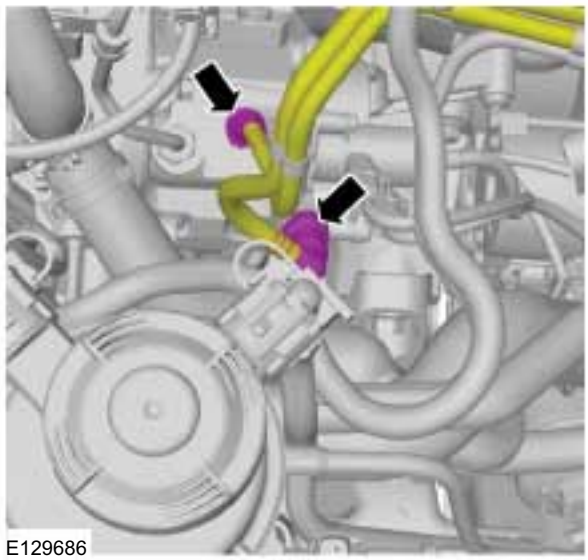
E129686

REMOVAL AND INSTALLATION

12.

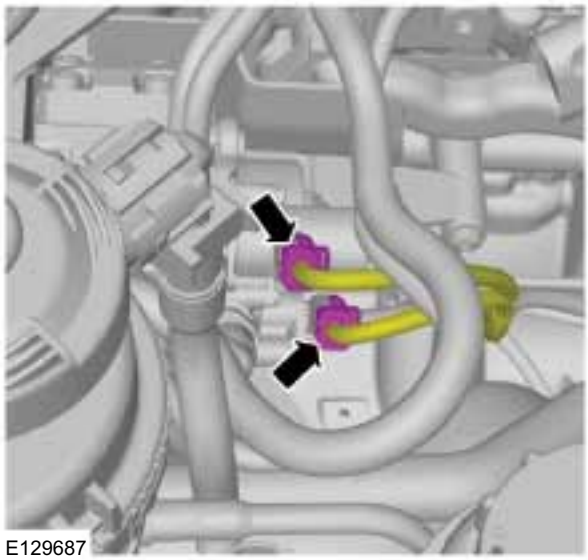
E129687

13. CAUTIONS:

Make sure that the fuel line remains in contact at both ends until both unions nuts have been unscrewed and the area around the joints thoroughly cleaned.

Make sure that all openings are sealed. Use new blanking caps.

Vacuum foreign material from the high-pressure fuel supply line, the fuel pump and the fuel rail.

Refer to: Fuel Injection Component Cleaning (303-04 Fuel Charging and Controls - 3.2L Duratorq-TDCi (148kW/200PS) - Puma, General Procedures).

Torque:

- Fuel rail high-pressure fuel supply line unions
  - Stage 1: 5 Nm
  - Stage 2: 35 Nm
- Fuel rail high-pressure fuel supply line bracket bolt 10 Nm

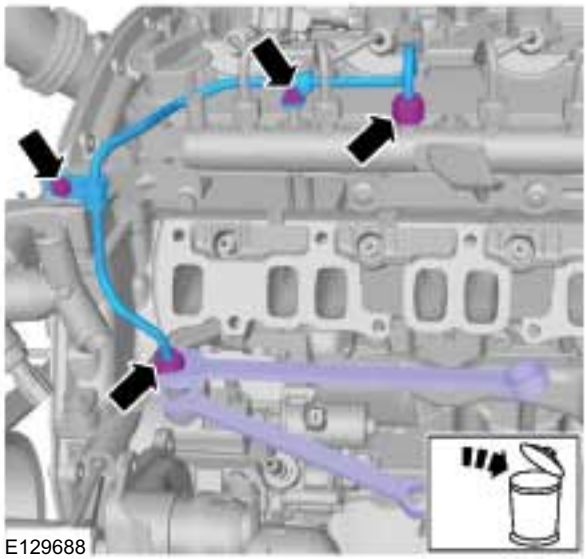
E129688

14. Torque: 23 Nm

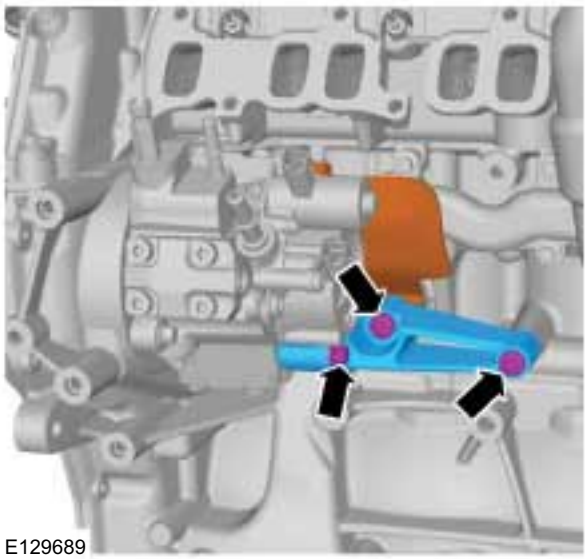
E129689

REMOVAL AND INSTALLATION

15. Torque: 23 Nm

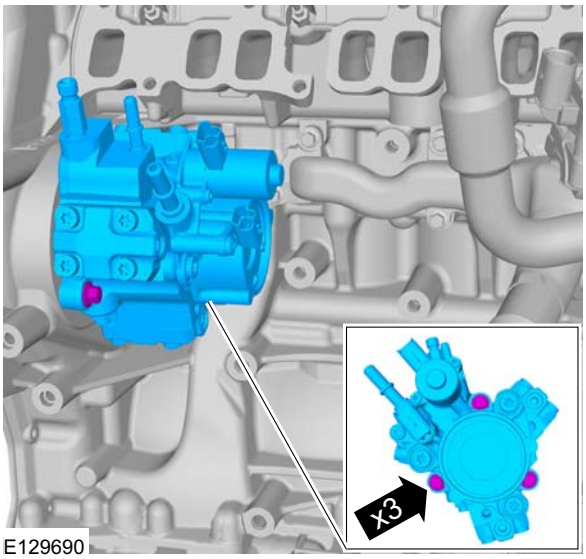

E129690

Installation

1. To install, reverse the removal procedure.
2. Carry out a Fuel System Leak Test using the following menu options:
   ToolBox/Powertrain/Service Functions

   General Equipment: Ford Diagnostic Equipment
3. Carry out a Pump Learn procedure using the following menu options:
   ToolBox/Powertrain/Service Functions

   General Equipment: Ford Diagnostic Equipment
4. Carry out the Pilot Correction Learn procedure using the following menu options:
   ToolBox/Powertrain/Service Functions

   General Equipment: Ford Diagnostic Equipment

REMOVAL AND INSTALLATION

Fuel Rail

General Equipment

Ford Diagnostic Equipment

Removal

1. **WARNINGS:**

   Make sure that the engine is switched off.

   Make sure that the fuel pressure has dropped to zero and that the fuel temperature is at ambient temperature.

   Wait at least 1 minute after the engine has stopped before commencing any repair to the fuel injection system.

   CAUTION: Always carry out the cleaning process before carrying out any repairs to the fuel injection system components.

   NOTE: Removal steps in this procedure may contain installation details.

2. Within the datalogger function of WDS, check that the fuel pressure has dropped to zero and that the fuel temperature has either reached ambient temperature or is below 30ºC whichever is the greater.

   General Equipment: Ford Diagnostic Equipment

3. Refer to: Battery Disconnect and Connect (414-01 Battery, Mounting and Cables, General Procedures).

4. Refer to: Air Cleaner - 2.2L Duratorq-TDCi (88kW/120PS) - Puma/2.2L Duratorq-TDCi (96kW/130PS) - Puma/2.2L Duratorq-TDCi (110kW/150PS) - Puma (303-12 Intake Air Distribution and Filtering - 2.2L Duratorq-TDCi (88kW/120PS) - Puma/2.2L Duratorq-TDCi (96kW/130PS) - Puma/2.2L Duratorq-TDCi (110kW/150PS) - Puma/3.2L Duratorq-TDCi (148kW/200PS) - Puma, Removal and Installation).

5.

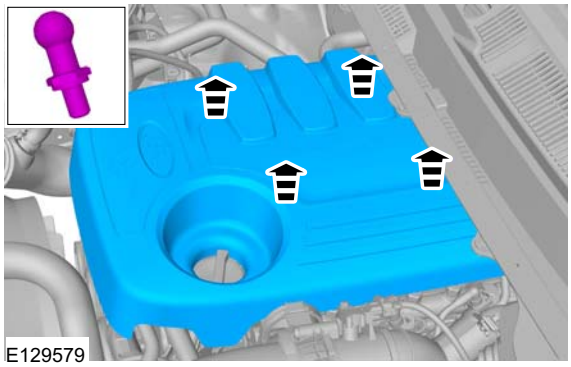
E129579

6.

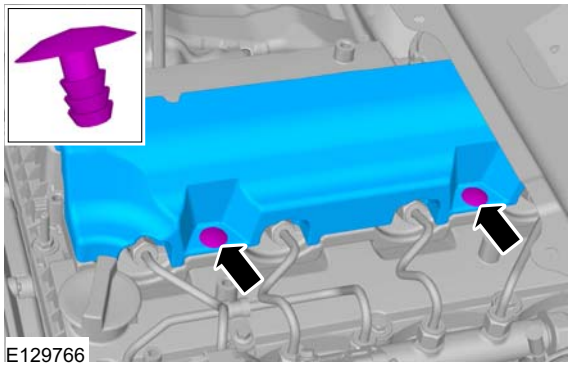
E129766

7. **CAUTIONS:**

   Make sure that the fuel line remains in contact at both ends until both unions

REMOVAL AND INSTALLATION

nuts have been unscrewed and the area around the joints thoroughly cleaned.

Make sure that all openings are sealed. Use new blanking caps.

Vacuum foreign material from the high-pressure fuel supply line, the fuel injector and the fuel rail.

Refer to: Fuel Injection Component Cleaning (303-04 Fuel Charging and Controls - 3.2L Duratorq-TDCi (148kW/200PS) - Puma, General Procedures).

Torque:
- Stage 1: 22 Nm
- Stage 2: 25 Nm

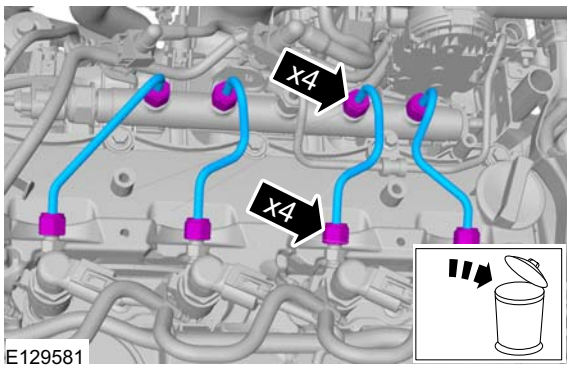

E129581

8. **CAUTION: Make sure that all openings are sealed. Use new blanking caps.**

Vacuum foreign material from the fuel rail fuel return line quick release coupling.

Refer to: Fuel Injection Component Cleaning (303-04 Fuel Charging and Controls - 3.2L Duratorq-TDCi (148kW/200PS) - Puma, General Procedures).

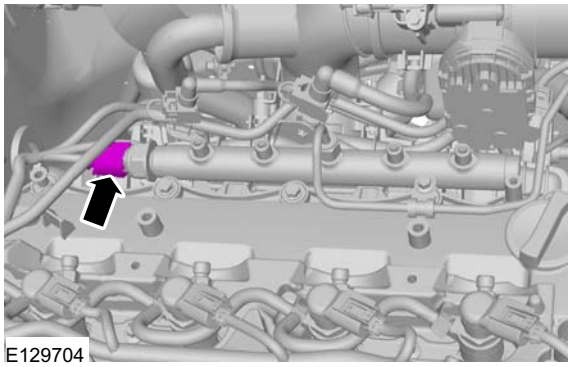
E129704

9. Refer to: Intake Manifold (303-01 Engine - 2.2L Duratorq-TDCi (88kW/120PS) - Puma/2.2L Duratorq-TDCi (96kW/130PS) - Puma/2.2L Duratorq-TDCi (110kW/150PS) - Puma, Removal and Installation).

10. **CAUTIONS:**

Make sure that the fuel line remains in contact at both ends until both unions nuts have been unscrewed and the area around the joints thoroughly cleaned.

Make sure that all openings are sealed. Use new blanking caps.

Vacuum foreign material from the high-pressure fuel supply line, the fuel pump and the fuel rail.

Refer to: Fuel Injection Component Cleaning (303-04 Fuel Charging and Controls - 3.2L Duratorq-TDCi (148kW/200PS) - Puma, General Procedures).

Torque:
- Fuel rail high-pressure fuel supply line unions
  - Stage 1: 5 Nm
  - Stage 2: 35 Nm
- Fuel rail high-pressure fuel supply line bracket bolt 10 Nm

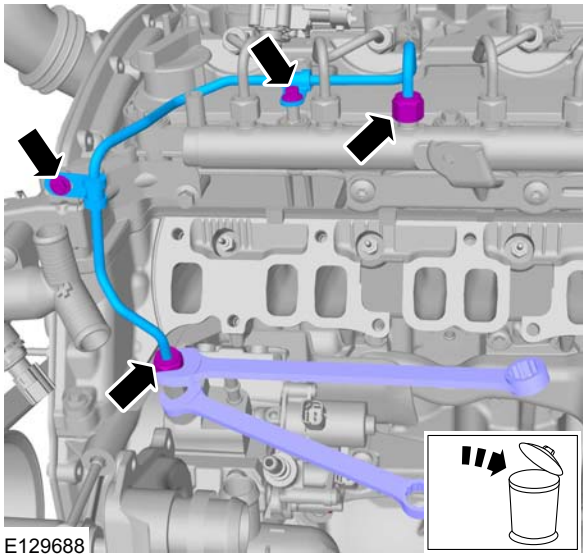
E129688

REMOVAL AND INSTALLATION

11. Fuel rail bolts
Torque:
- Stage 1: 6 Nm
- Stage 2: 23 Nm

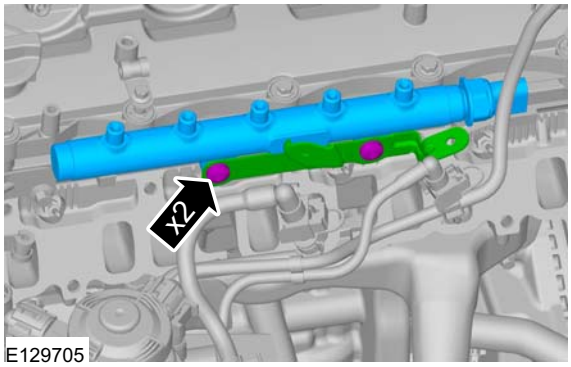

E129705

Installation

1. To install, reverse the removal procedure.

2. Carry out a Fuel System Leak Test using the following WDS menu options:
ToolBox/Powertrain/Service Functions

General Equipment: Ford Diagnostic Equipment

SECTION 303-04C Fuel Charging and Controls — 3.2L

Duratorq-TDCi (148kW/200PS) - Puma

VEHICLE APPLICATION: 2011.50 Ranger

CONTENTS PAGE

DESCRIPTION AND OPERATION

Fuel Charging and Controls..... 303-04C-2
Overview..... 303-04C-2
General..... 303-04C-2
Fuel pump..... 303-04C-3
Fuel rail..... 303-04C-3
Fuel injectors..... 303-04C-4

GENERAL PROCEDURES

Fuel Injection Component Cleaning..... 303-04C-6

REMOVAL AND INSTALLATION

Fuel Pump..... 303-04C-8
Fuel Rail..... 303-04C-12
Fuel Injectors..... 303-04C-14

DESCRIPTION AND OPERATION

Fuel Charging and Controls

Overview

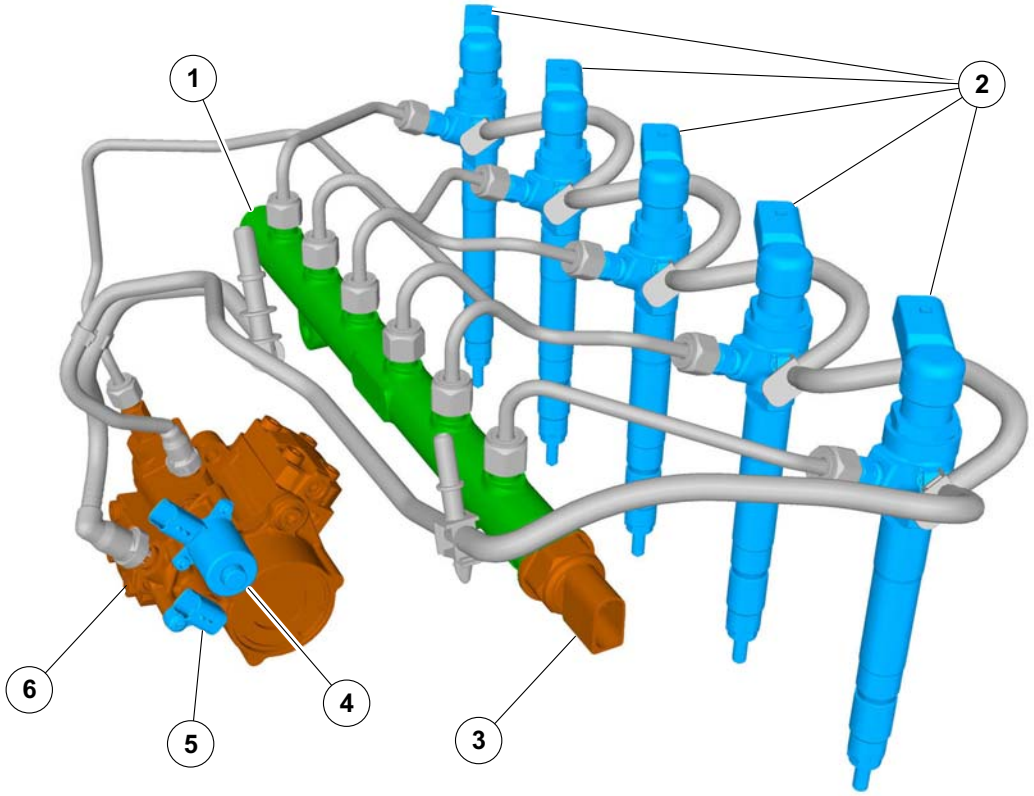

E129822

Item	Description
1	Fuel rail
2	Fuel injector(s)
3	Fuel pressure (FRP) sensor
4	Fuel metering valve
5	Fuel temperature sensor
6	Fuel pump

General

A common rail fuel injection system is used on the 3.2L Duratorq-TDCi (Puma) diesel engine.

Within the fuel pump there is an integral fuel transfer pump which draws the fuel from the fuel tank to the fuel pump.

A fuel metering valve is located in the supply port to the high-pressure chamber of the fuel pump. The fuel metering valve varies the quantity of fuel supplied to the fuel rail and fuel injector(s), in relation to the driving conditions.

The fuel is supplied at high-pressure to the fuel rail and to the fuel injectors ready for injection. Depending on engine operating conditions, the fuel injection pressure varies between 230 bar and 1600 bar.

Fuel system pressure is measured using an FRP sensor located in the fuel rail. The FRP sensor converts the fuel system pressure into a voltage signal. This voltage signal acts as an input signal to the powertrain control module (PCM) for calculation of the fuel injection quantity.

The power train control module (PCM) calculates the time of fuel injection and the fuel injection quantity depending on various input variables. The specified quantity of fuel is injected into the respective combustion chamber through the solenoid actuated fuel injector(s). In doing so, a pre-injection and a main injection occur each time.

The excess fuel is returned to the fuel tank through the fuel return line.

DESCRIPTION AND OPERATION

Fuel pump

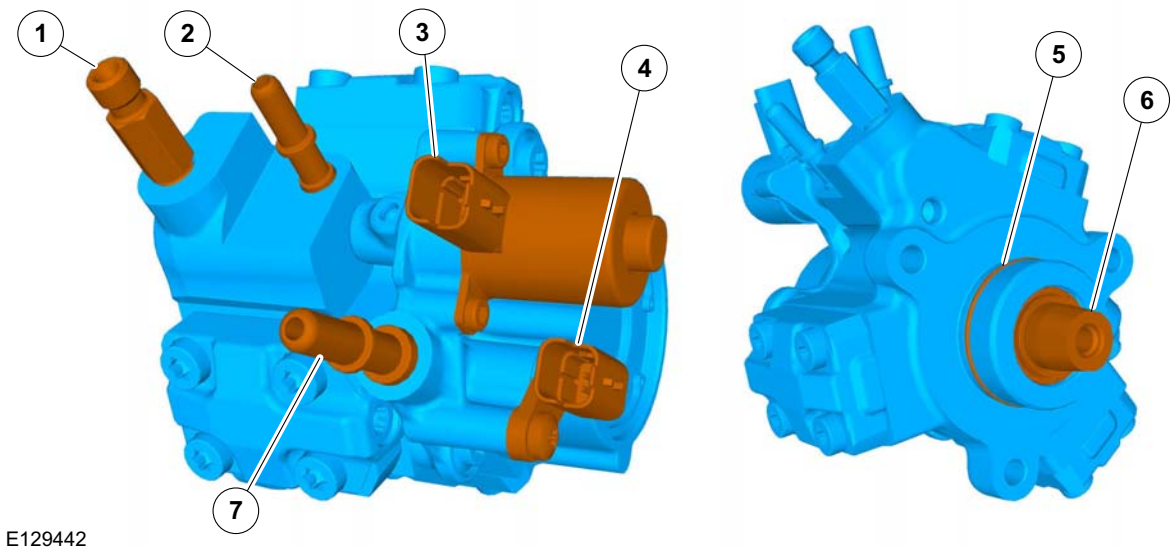

Item	Description
1	Fuel pump high-pressure outlet union
2	Fuel pump fuel return union
3	Fuel metering valve
4	Fuel temperature sensor
5	Fuel pump O-ring seal
6	Fuel pump input drive
7	Fuel pump fuel supply union

The fuel pump is driven directly by the timing belt.

The fuel pump has three pump elements, each offset from each other by 120 degrees.

The fuel transfer pump is incorporated into the fuel pump and is located on the drive flange. The fuel transfer pump is a cycloid type pump.

The fuel metering valve is actuated by the PCM using pulse width modulation.

Fuel rail

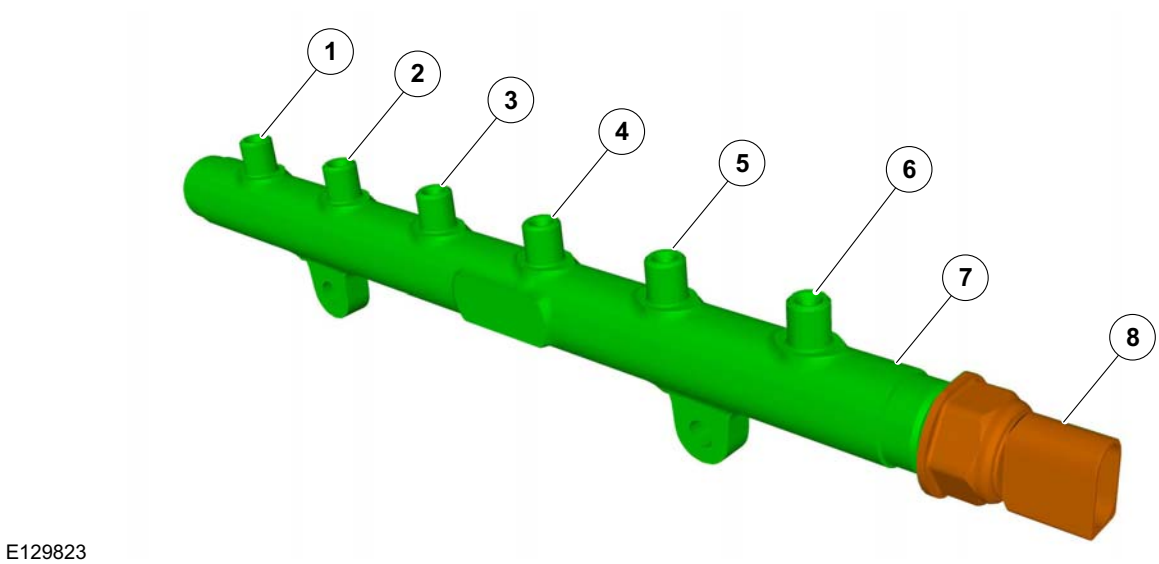

DESCRIPTION AND OPERATION

Item	Description
1	Fuel rail to fuel injector number 1 high-pressure fuel supply line union
2	Fuel rail to fuel injector number 2 high-pressure fuel supply line union
3	Fuel rail to fuel injector number 3 high-pressure fuel supply line union
4	Fuel pump to fuel rail high-pressure fuel supply line union
5	Fuel rail to fuel injector number 4 high-pressure fuel supply line union
6	Fuel rail to fuel injector number 5 high-pressure fuel supply line union
7	Fuel rail
8	FRP sensor

CAUTION: The FRP sensor must not be detached or removed from the fuel rail.

The fuel rail is made from forged steel and is retained by a support bracket located on the camshaft carrier.

The fuel is delivered by one high-pressure fuel supply line from the fuel pump to the fuel rail.

From the fuel rail, the fuel travels through the high-pressure fuel supply line(s) to the fuel injector(s).

Fuel injectors

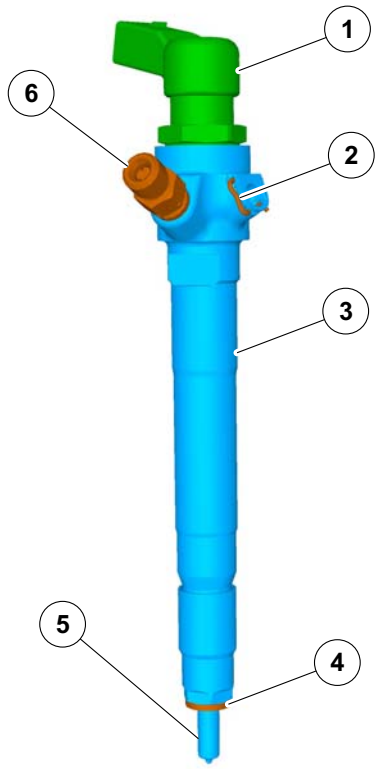

E129444

Item	Description
1	Fuel injector electrical connector
2	Fuel injector fuel return line clip
3	Fuel injector
4	Fuel injector sealing washer
5	Fuel injector nozzle
6	Fuel injector high-pressure fuel supply line union

The fuel injector(s) are located centrally on the cylinder head upper section and are attached by means of retaining clamps.

The fuel injector(s) are sealed from the combustion chamber by means of a copper sealing washer located between the fuel injector and the cylinder head. A new sealing washer must always be installed when carrying out installation work.

The fuel injectors are controlled directly by the PCM.

The fuel return line(s) are attached to the top of the fuel injector and are connected in series.

DESCRIPTION AND OPERATION

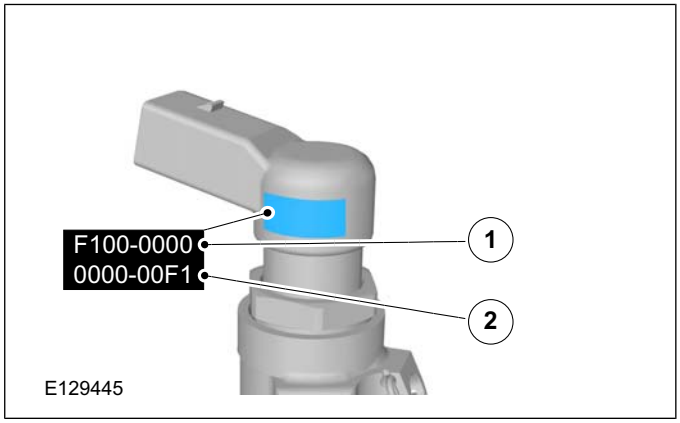

Item	Description
1	Eight digit injector correction factor (example only shown)
2	Eight digit serial code (For manufacturer use only)

When installing new fuel injectors, the injector correction factor from the new fuel injector(s) must be recorded and uploaded using the Worldwide Diagnostic System (WDS).

GENERAL PROCEDURES

Fuel Injection Component Cleaning

General Equipment

Pneumatic vacuum gun

WARNINGS:

Do not smoke or carry lighted tobacco or open flame of any type when working on or near any fuel related components. Highly flammable mixtures are always present and may ignite. Failure to follow these instructions may result in personal injury.

Do not carry out any repairs to the fuel injection system with the engine running. The fuel pressure within the system can be as high as 1600 bar. Failure to follow this instruction may result in personal injury.

Eye protection must be worn at all times when working on or near any fuel related components. Failure to follow this instruction may result in personal injury.

CAUTIONS:

Make sure that the workshop area in which the vehicle is being worked on is as clean and dust-free as possible. Areas in which work on clutches, brakes or where welding or machining are carried out are not suitable in view of the risk of contamination to the fuel system.

Make sure that clean non-plated tools are used. Clean tools using a new brush that will not lose its bristles and fresh suitable evaporative cleaning agent, prior to starting work on the vehicle.

Use a steel topped workbench and cover it with clean, lint-free non-flocking material.

Make sure that all parts removed from the vehicle are placed on the lint-free non-flocking material.

Make sure that any protective clothing worn is clean and made from lint-free non-flocking material.

Make sure that any protective gloves worn are new and are of the non-powdered latex type.

Before using the suitable evaporative cleaning agent, protect all electrical components and connectors with lint-free non-flocking material.

1. **For additional information, refer to: Solvents, Sealants and Adhesives (100-00 General Information, Description and Operation) / Diesel Fuel System Health and Safety Precautions (100-00 General Information, Description and Operation).**
2.

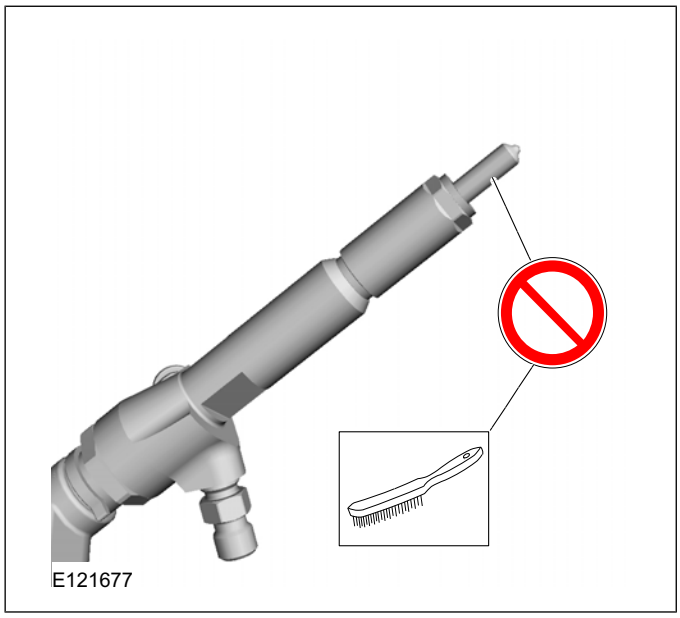

CAUTION: Use lint free cloth.

3. **Using Brake Cleaner: 3U7J-2C410-AA**

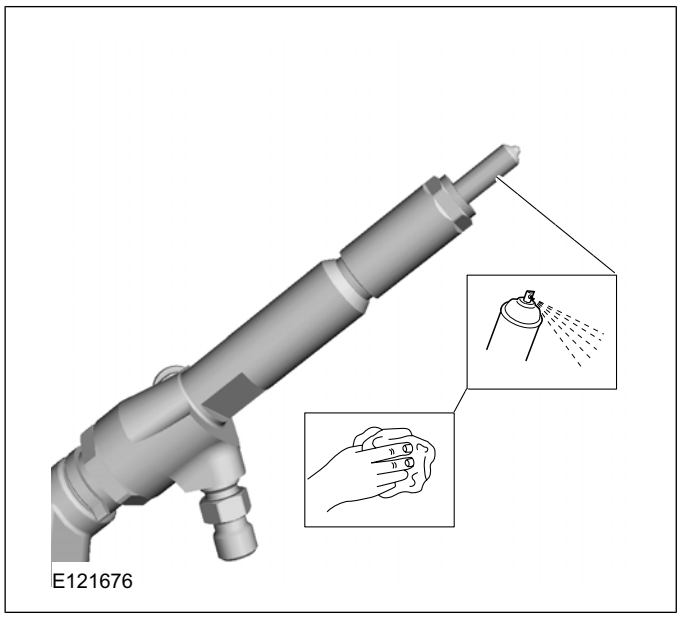

GENERAL PROCEDURES

4. Using a new brush that will not lose its bristles, brush a suitable evaporative cleaning agent onto the components being removed and onto the surrounding area.
5. Using the pneumatic vacuum gun, remove all traces of evaporative cleaning agent and foreign material.
6. Dispose of any unused evaporative cleaning agent and the brush after completing the repair.

REMOVAL AND INSTALLATION

Fuel Pump

Special Tool(s) / General Equipment

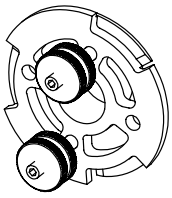 E75376	303-1317 Locking Tool, Fuel Injection Pump Sprocket

Special Tool(s) / General Equipment

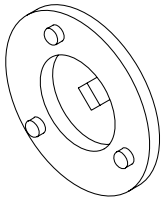 303679	303-679 Remover/Installer, Engine Front Cover Inspection Plate
Ford approved diagnostic tool	
Ford Diagnostic Equipment	

Removal

1. Refer to: Health and Safety Precautions (100-00 General Information, Description and Operation).

WARNINGS:

Make sure that the engine is switched off.

Wait for a minimum of 1 minute after the engine has stopped before commencing any repair to the fuel injection system.

Make sure that the fuel pressure has dropped to zero and that the fuel temperature is at ambient temperature.

CAUTION: Extreme cleanliness must be exercised when handling these components.

REMOVAL AND INSTALLATION

2. General Equipment: Ford Diagnostic Equipment

3. Refer to: Battery Disconnect and Connect (414-01 Battery, Mounting and Cables, General Procedures).

4. Refer to: Accessory Drive Belt - 2.2L Duratorq-TDCi (88kW/120PS) - Puma/2.2L Duratorq-TDCi (96kW/130PS) - Puma/2.2L Duratorq-TDCi (110kW/150PS) - Puma/3.2L Duratorq-TDCi (148kW/200PS) - Puma (303-05 Accessory Drive - 2.2L Duratorq-TDCi (88kW/120PS) - Puma/2.2L Duratorq-TDCi (96kW/130PS) - Puma/2.2L Duratorq-TDCi (110kW/150PS) - Puma/3.2L Duratorq-TDCi (148kW/200PS) - Puma, Removal and Installation).

5. Refer to: Intake Manifold (303-01 Engine - 3.2L Duratorq-TDCi (148kW/200PS) - Puma, Removal and Installation).

6. Refer to: Fuel Injection Component Cleaning (303-04 Fuel Charging and Controls - 3.2L Duratorq-TDCi (148kW/200PS) - Puma, General Procedures).

7. Special Tool(s): 303-679

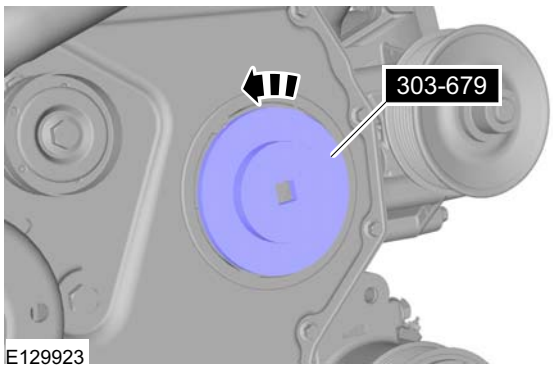

8. Torque: 64 Nm

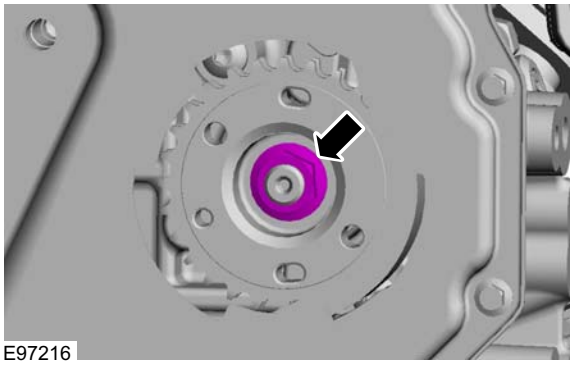

9. Install the Special Tool(s): 303-1317

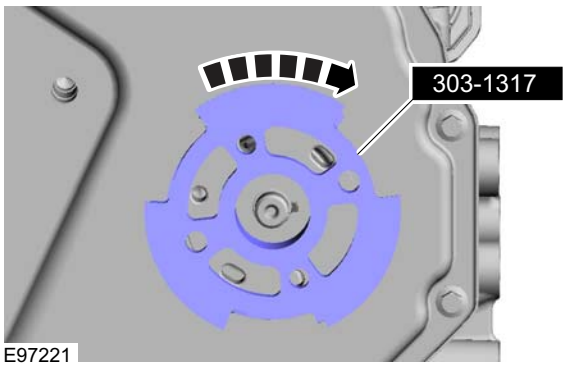

10. **CAUTION: Make sure that all openings are sealed. Use new blanking caps.**

Vacuum foreign material from the low-pressure fuel supply line and fuel return line.

Refer to: Fuel Injection Component Cleaning (303-04 Fuel Charging and Controls - 3.2L Duratorq-TDCi (148kW/200PS) - Puma, General Procedures).

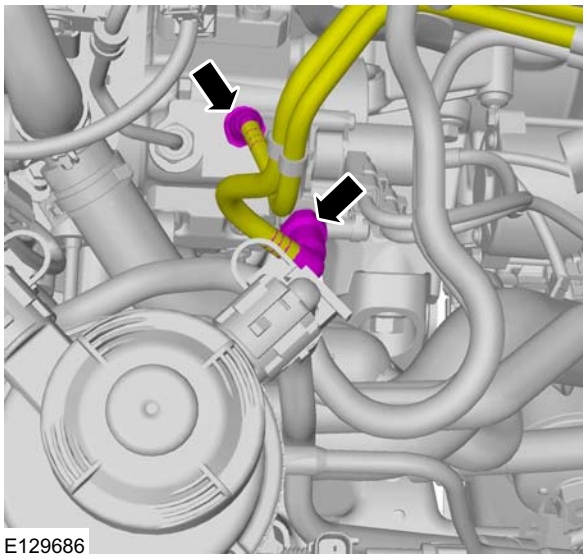

REMOVAL AND INSTALLATION

11.

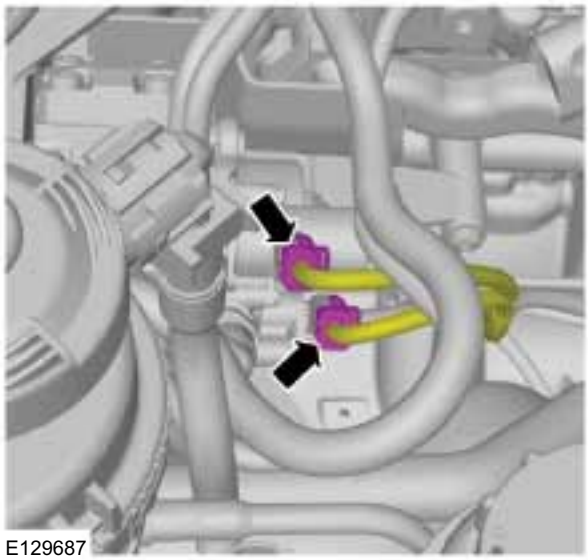
E129687

12. CAUTIONS:

Make sure that the fuel line remains in contact at both ends until both unions nuts have been unscrewed and the area around the joints thoroughly cleaned.

Make sure that all openings are sealed. Use new blanking caps.

Vacuum foreign material from the high-pressure fuel supply line, the fuel pump and the fuel rail.

Refer to: Fuel Injection Component Cleaning (303-04 Fuel Charging and Controls - 3.2L Duratorq-TDCi (148kW/200PS) - Puma, General Procedures).

Torque:

- Fuel rail high-pressure fuel supply line unions
  - Stage 1: 5 Nm
  - Stage 2: 35 Nm
- Fuel rail high-pressure fuel supply line bracket bolt 10 Nm

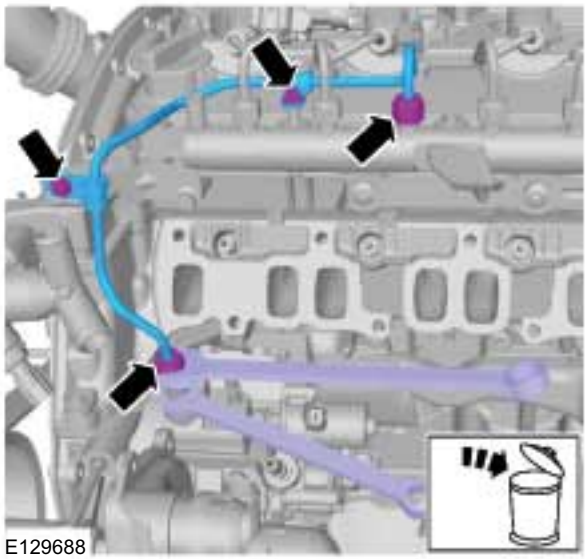
E129688

13. Torque: 23 Nm

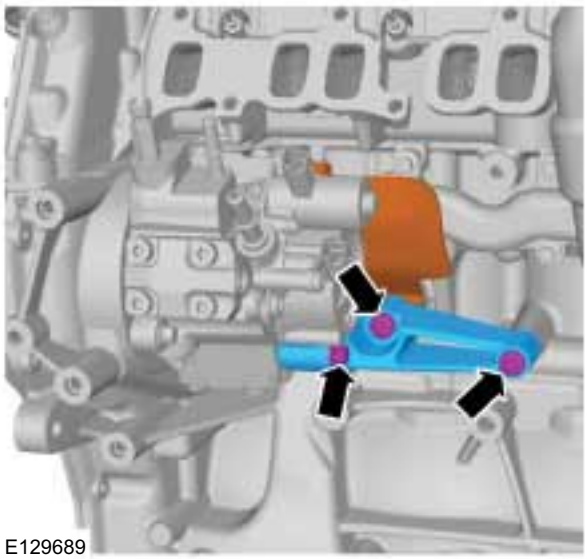
E129689

REMOVAL AND INSTALLATION

14. Torque: 23 Nm

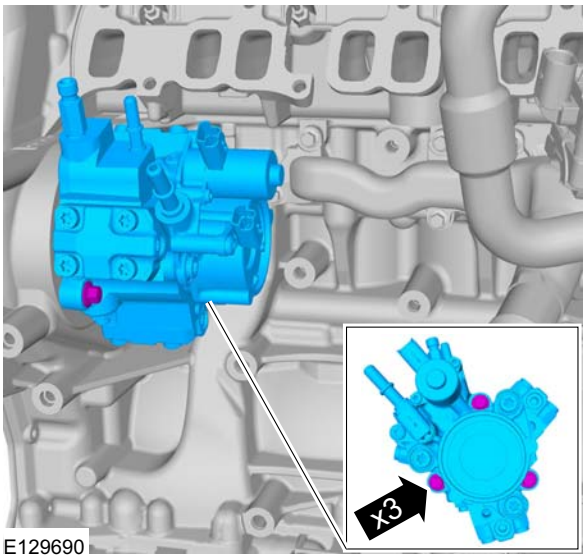

E129690

Installation

1. To install, reverse the removal procedure.
2. Carry out a Fuel System Leak Test using the following menu options:
   ToolBox/Powertrain/Service Functions

   General Equipment: Ford approved diagnostic tool
3. Carry out a Pump Learn procedure using the following menu options:
   ToolBox/Powertrain/Service Functions

   General Equipment: Ford approved diagnostic tool
4. Carry out the Pilot Correction Learn procedure using the following menu options:
   ToolBox/Powertrain/Service Functions

   General Equipment: Ford approved diagnostic tool

REMOVAL AND INSTALLATION

Fuel Rail

General Equipment

Ford Diagnostic Equipment

Removal

1. **WARNINGS:**

   Make sure that the engine is switched off.

   Make sure that the fuel pressure has dropped to zero and that the fuel temperature is at ambient temperature.

   Wait at least 1 minute after the engine has stopped before commencing any repair to the fuel injection system.

   CAUTION: Always carry out the cleaning process before carrying out any repairs to the fuel injection system components.

   NOTE: Removal steps in this procedure may contain installation details.

2. Within the datalogger function, check that the fuel pressure has dropped to zero and that the fuel temperature has either reached ambient temperature or is below 30ºC whichever is the greater.

   General Equipment: Ford Diagnostic Equipment

3. Refer to: Battery Disconnect and Connect (414-01 Battery, Mounting and Cables, General Procedures).

4.

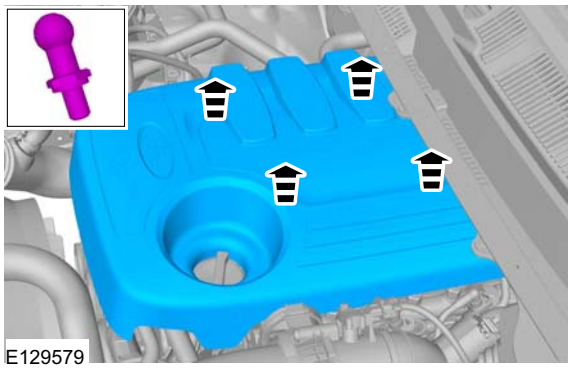

5.

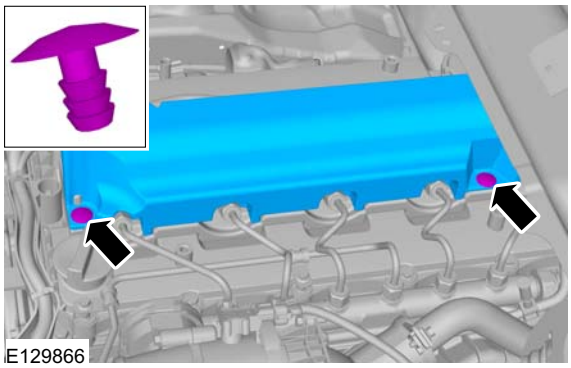

6. **CAUTIONS:**

   Make sure that the fuel line remains in contact at both ends until both unions nuts have been unscrewed and the area around the joints thoroughly cleaned.

   Make sure that all openings are sealed. Use new blanking caps.

   Vacuum foreign material from the high-pressure fuel supply line, the fuel injector and the fuel rail.

   Refer to: Fuel Injection Component Cleaning (303-04 Fuel Charging and Controls - 3.2L Duratorq-TDCi (148kW/200PS) - Puma, General Procedures).

   Torque:
   - Stage 1: 22 Nm
   - Stage 2: 25 Nm

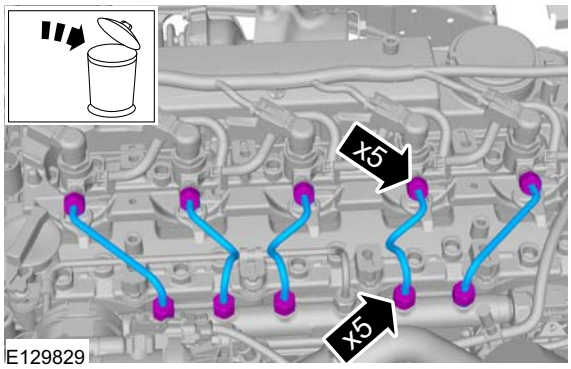

7. **CAUTION: Make sure that all openings are sealed. Use new blanking caps.**

REMOVAL AND INSTALLATION

Vacuum foreign material from the fuel rail fuel return line quick release coupling.

Refer to: Fuel Injection Component Cleaning (303-04 Fuel Charging and Controls - 3.2L Duratorq-TDCi (148kW/200PS) - Puma, General Procedures).

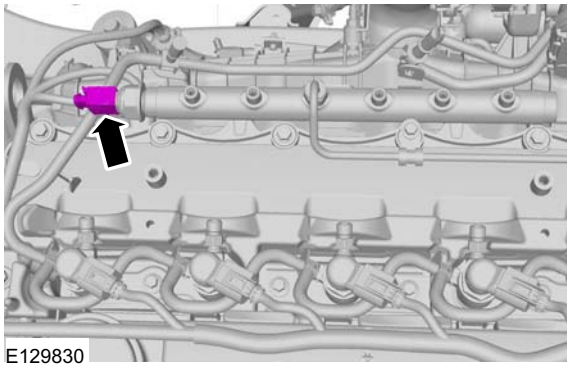
E129830

8. Refer to: Intake Manifold (303-01 Engine - 2.5L Duratec-HE (122kW/165PS) - MI4, Removal and Installation).

9. **CAUTIONS:**

Make sure that the fuel line remains in contact at both ends until both unions nuts have been unscrewed and the area around the joints thoroughly cleaned.

Make sure that all openings are sealed. Use new blanking caps.

Vacuum foreign material from the high-pressure fuel supply line, the fuel pump and the fuel rail.

Refer to: Fuel Injection Component Cleaning (303-04 Fuel Charging and Controls - 3.2L Duratorq-TDCi (148kW/200PS) - Puma, General Procedures).

Torque:
- Fuel rail high-pressure fuel supply line unions
  - Stage 1: 5 Nm
  - Stage 2: 35 Nm
- Fuel rail high-pressure fuel supply line bracket bolt 10 Nm

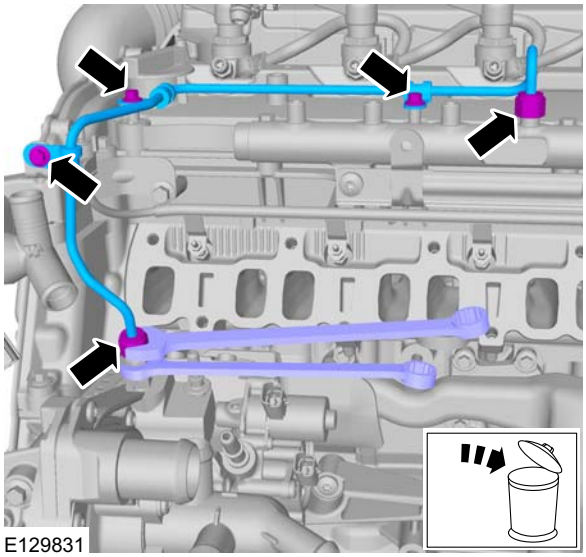
E129831

10. Fuel rail bolts
Torque:
- Stage 1: 6 Nm
- Stage 2: 23 Nm

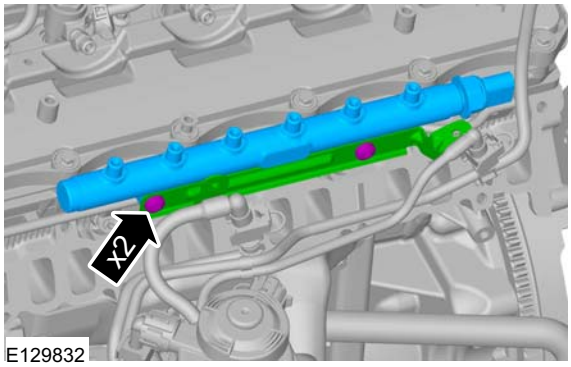

E129832

Installation

1. To install, reverse the removal procedure.

REMOVAL AND INSTALLATION

Fuel Injectors

General Equipment

Ford Diagnostic Equipment

General Equipment

Long Nose Pliers

Removal

1. **WARNINGS:**

   Make sure that the engine is switched off.

   Make sure that the fuel pressure has dropped to zero and that the fuel temperature is at ambient temperature.

   Wait for a minimum of 1 minute after the engine has stopped before commencing any repair to the fuel injection system.

   CAUTIONS:

   Fuel injectors must not be dismantled or the nozzles cleaned, not even with ultrasonic equipment. Install new fuel injectors if necessary.

   Fuel injectors sharing a common fuel injector clamp must be removed in pairs.

   NOTE: Removal steps in this procedure may contain installation details.

   Refer to: Diesel Fuel System Health and Safety Precautions (100-00 General Information, Description and Operation).

2. Within the datalogger function of WDS, check that the fuel pressure has dropped to zero and that the fuel temperature has either reached ambient temperature or is below 30ºC whichever is the greater.

   General Equipment: Ford Diagnostic Equipment

3. Refer to: Battery Disconnect and Connect (414-01 Battery, Mounting and Cables, General Procedures).

4.

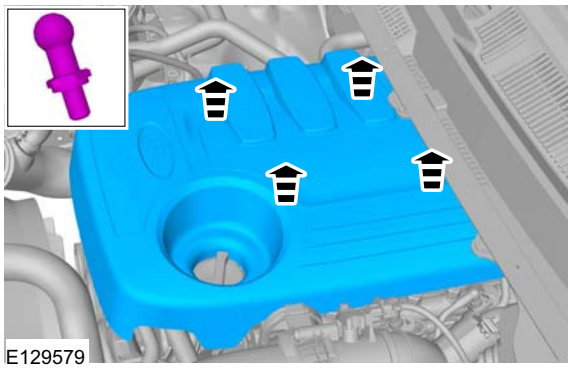

5.

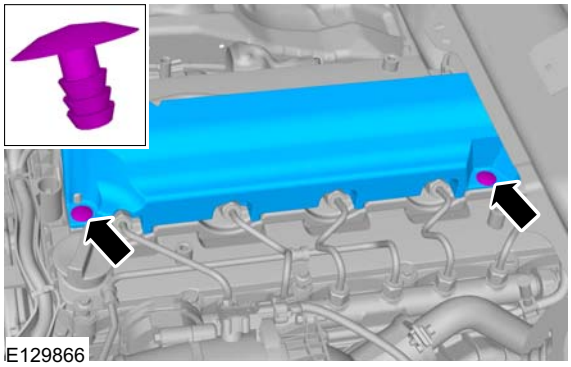

6. **CAUTION: Make sure that all openings are sealed. Use new blanking caps.**

   Vacuum foreign material from the fuel injector and fuel return lines.

   Refer to: Fuel Injection Component Cleaning (303-04 Fuel Charging and Controls - 3.2L Duratorq-TDCi (148kW/200PS) - Puma, General Procedures).

REMOVAL AND INSTALLATION

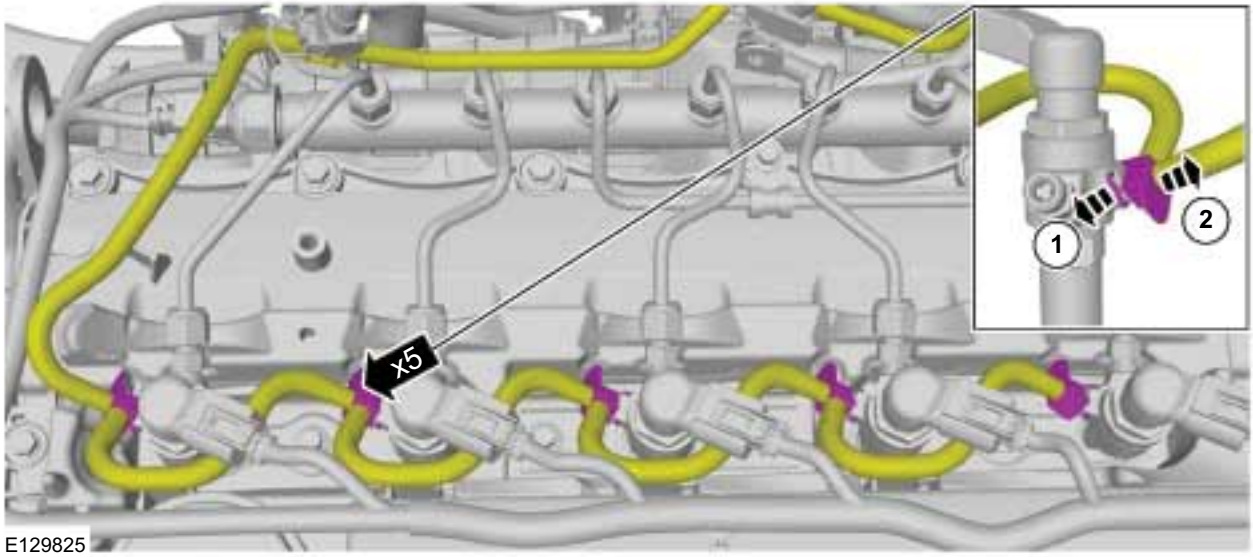

E129825

7. **CAUTIONS:**

Make sure that the fuel line remains in contact at both ends until both unions nuts have been unscrewed and the area around the joints thoroughly cleaned.

Make sure that all openings are sealed. Use new blanking caps.

Vacuum foreign material from the high-pressure fuel supply line, the fuel injector and the fuel rail.

Refer to: Fuel Injection Component Cleaning (303-04 Fuel Charging and Controls - 3.2L Duratorq-TDCi (148kW/200PS) - Puma, General Procedures).

Torque:
- Stage 1: 22 Nm
- Stage 2: 25 Nm

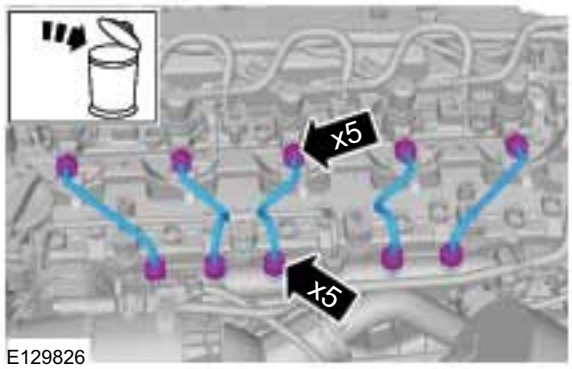

E129826

8.

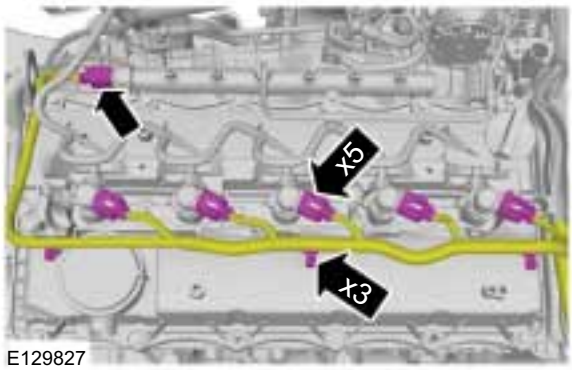

E129827

9. Torque:
- Stage 1: 5 Nm
- Stage 2: 180°

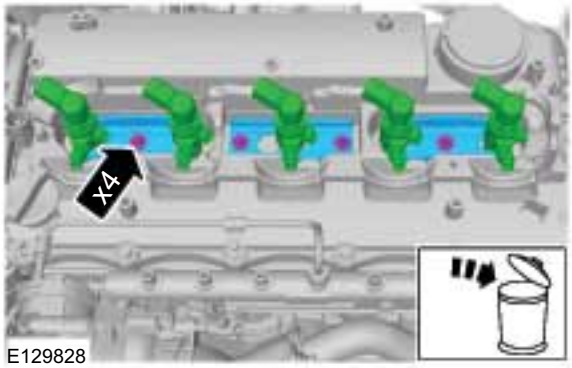

E129828

REMOVAL AND INSTALLATION

10. General Equipment: Long Nose Pliers

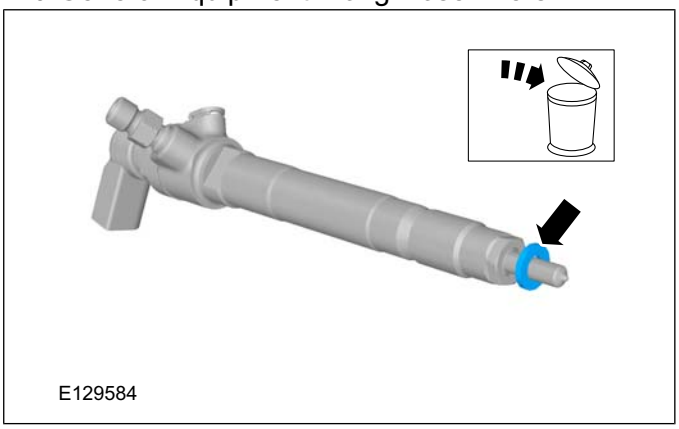

Installation

1. To install, reverse the removal procedure.
2. Record the new fuel injector correction factor code.

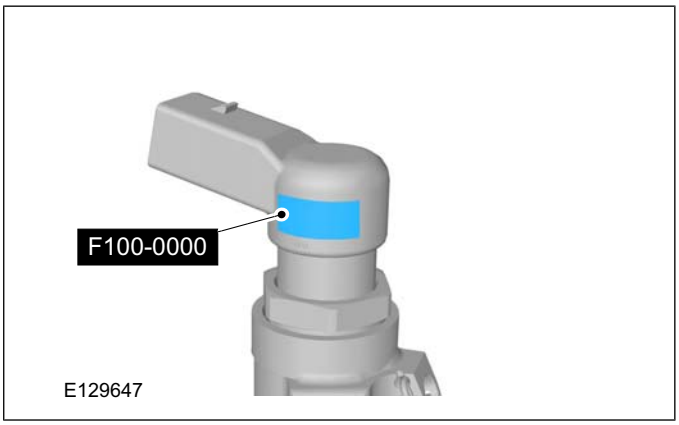

3. Input the new Injector Correction Factors using the following WDS menu options:
   ToolBox/Powertrain/Service Functions

   General Equipment: Ford Diagnostic Equipment

SECTION 303-04D Fuel Charging and Controls - Turbocharger

VEHICLE APPLICATION: 2011.50 Ranger

CONTENTS PAGE

DESCRIPTION AND OPERATION

Turbocharger..... 303-04D-2
2.2L Duratorq-TDCi (Puma) diesel engine..... 303-04D-2
3.2 L Duratorq-TDCi (Puma) diesel engine..... 303-04D-4

REMOVAL AND INSTALLATION

Turbocharger — 2.2L Duratorq-TDCi (88kW/120PS) - Puma/2.2L Duratorq-TDCi (96kW/130PS) - Puma/2.2L Duratorq-TDCi (110kW/150PS) - Puma, LHD 4WD/LHD RWD..... (23 612 0) 303-04D-5
Turbocharger — 2.2L Duratorq-TDCi (88kW/120PS) - Puma/2.2L Duratorq-TDCi (96kW/130PS) - Puma/2.2L Duratorq-TDCi (110kW/150PS) - Puma, RHD 4WD/RHD RWD..... (23 612 0) 303-04D-9
Turbocharger — 3.2L Duratorq-TDCi (148kW/200PS) - Puma, LHD 4WD/LHD RWD..... (23 612 0) 303-04D-13
Turbocharger — 3.2L Duratorq-TDCi (148kW/200PS) - Puma, RHD 4WD/RHD RWD..... (23 612 0) 303-04D-16

DESCRIPTION AND OPERATION

Turbocharger

2.2L Duratorq-TDCi (Puma) diesel engine

Vehicles with 2.2L Duratorq-TDCi (Puma) (125 PS/120 PS) diesel engine

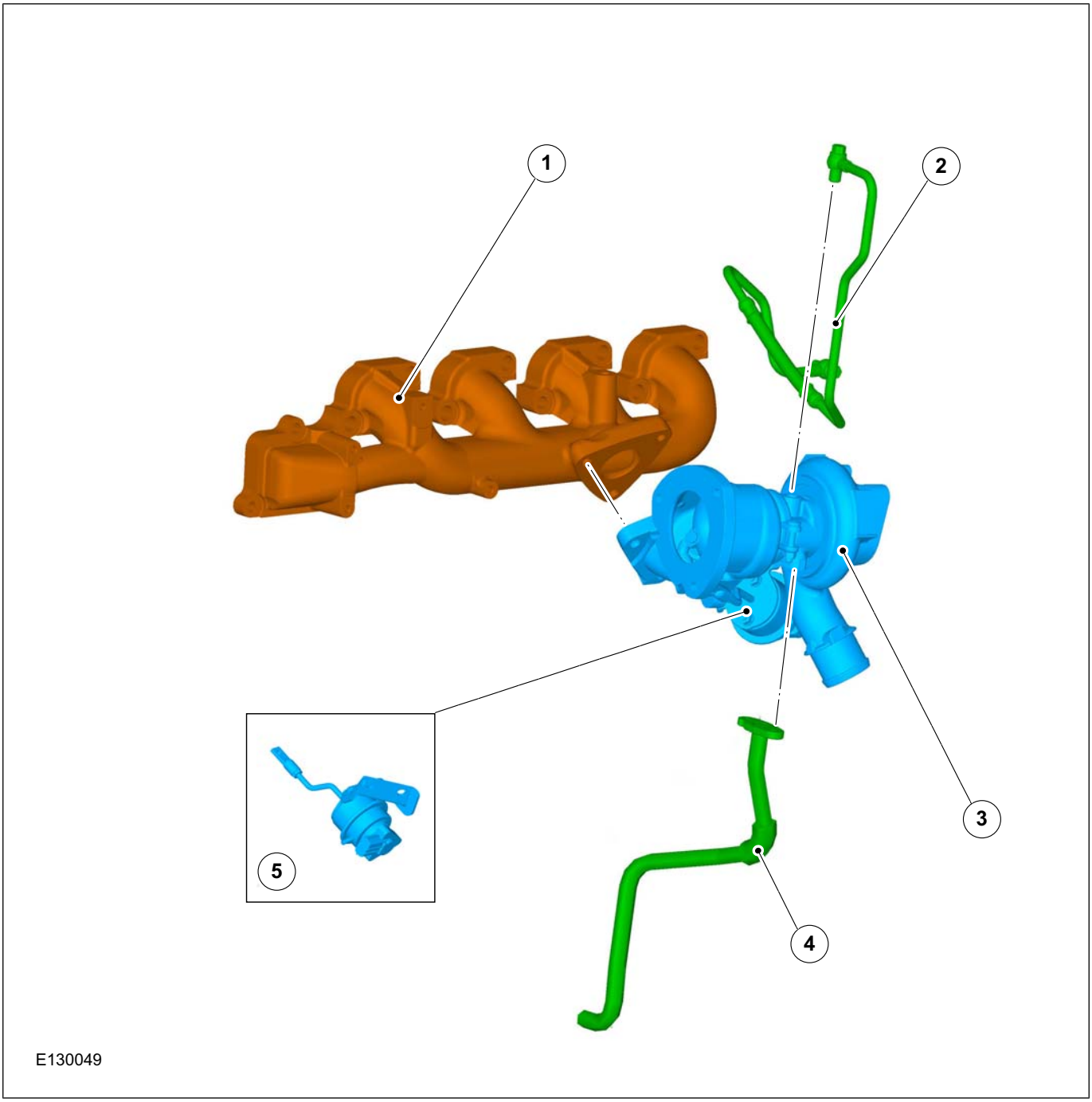

Item	Description
1	Exhaust manifold
2	Oil supply tube

Item	Description
3	Turbocharger
4	Oil drain tube
5	Actuator

DESCRIPTION AND OPERATION

Vehicles with 2.2L Duratorq-TDCi (Puma) (150 PS) diesel engine

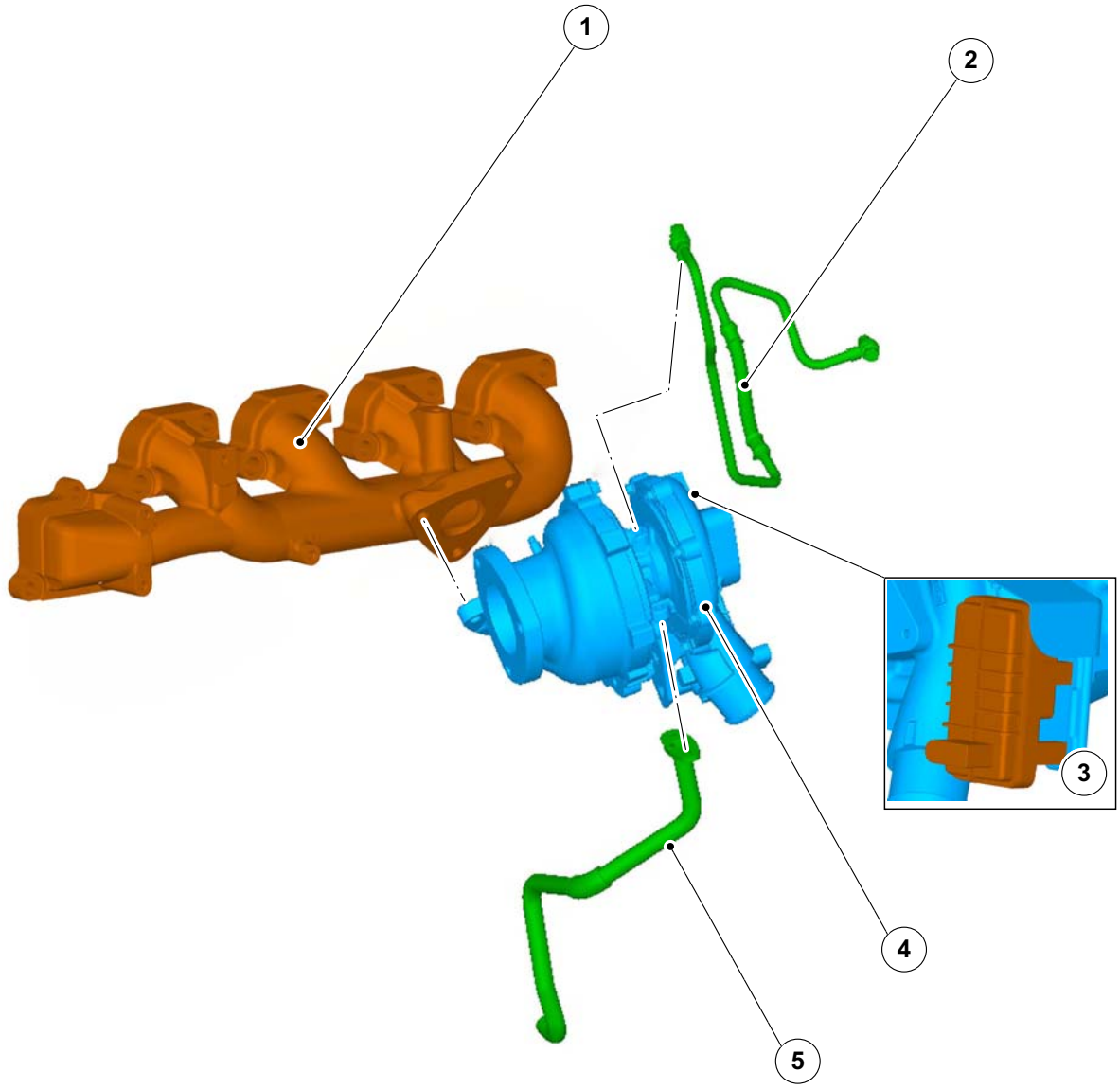

E130050

Item	Description
1	Exhaust manifold
2	Oil supply tube

Item	Description
3	Electronic turbocharger guide vane adjuster
4	Turbocharger
5	Oil drain tube

DESCRIPTION AND OPERATION

3.2 L Duratorq-TDCi (Puma) diesel engine

Vehicles with 3.2L Duratorq-TDCi (Puma) (200 PS) diesel engine

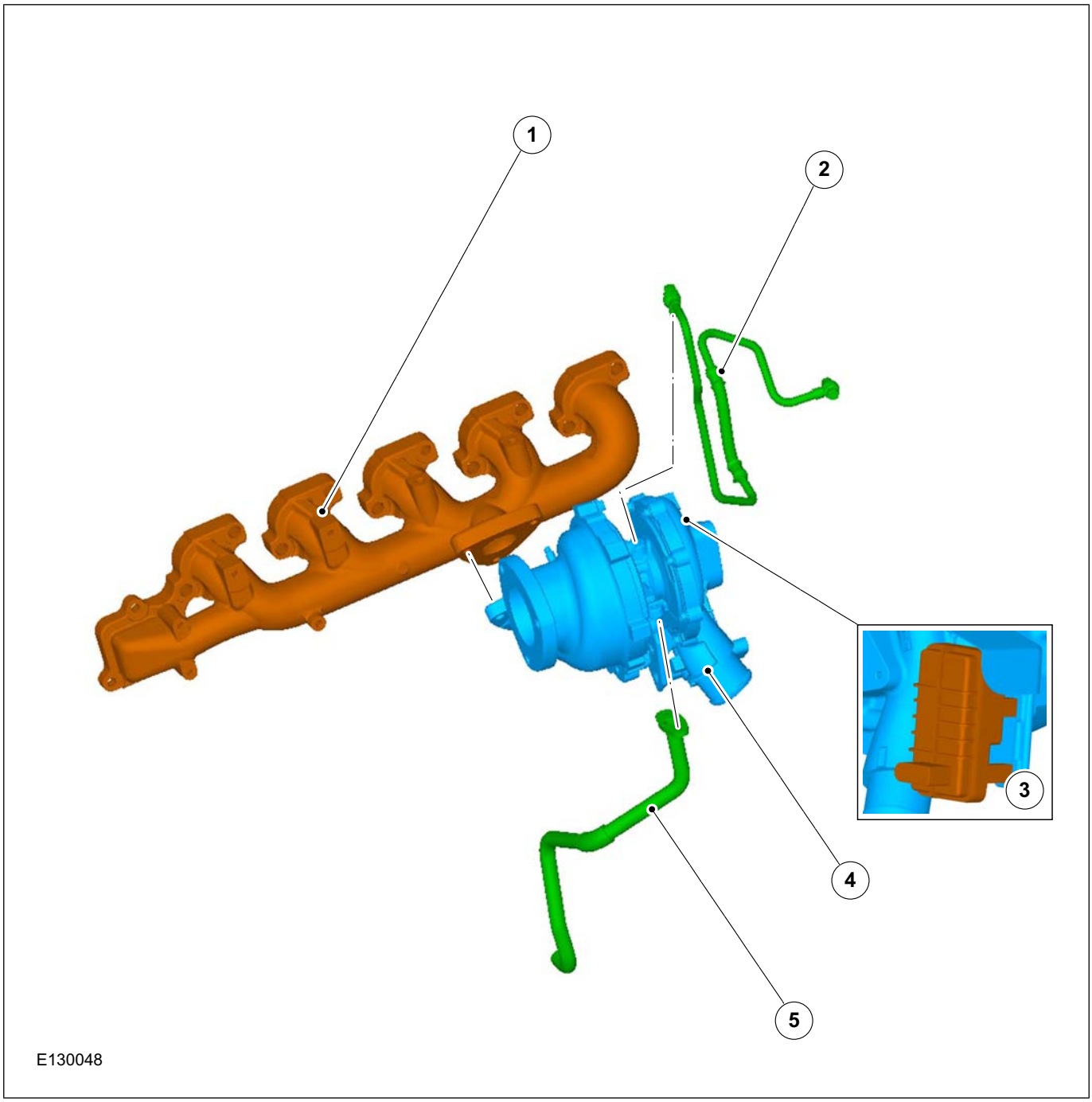

Item	Description
1	Exhaust manifold
2	Oil supply tube
3	Electronic turbocharger guide vane adjuster

Item	Description
4	Turbocharger
5	Oil drain tube

REMOVAL AND INSTALLATION

Turbocharger — 2.2L Duratorq-TDCi (88kW/120PS) - Puma/2.2L Duratorq-TDCi (96kW/130PS) - Puma/2.2L Duratorq-TDCi (110kW/150PS) - Puma, LHD 4WD/LHD RWD(23 612 0)

Removal

WARNING: When the engine and exhaust system are hot, they can cause severe burns or injury. Turn off the engine and wait until they are cool before removing the exhaust system.

NOTE: Removal steps in this procedure may contain installation details.

All vehicles

1. Refer to: Battery Disconnect and Connect (414-01 Battery, Mounting and Cables, General Procedures).
2. Refer to: Air Cleaner - 2.2L Duratorq-TDCi (88kW/120PS) - Puma/2.2L Duratorq-TDCi (96kW/130PS) - Puma/2.2L Duratorq-TDCi (110kW/150PS) - Puma (303-12 Intake Air Distribution and Filtering - 2.2L Duratorq-TDCi (88kW/120PS) - Puma/2.2L Duratorq-TDCi (96kW/130PS) - Puma/2.2L Duratorq-TDCi (110kW/150PS) - Puma/3.2L Duratorq-TDCi (148kW/200PS) - Puma, Removal and Installation).
3.

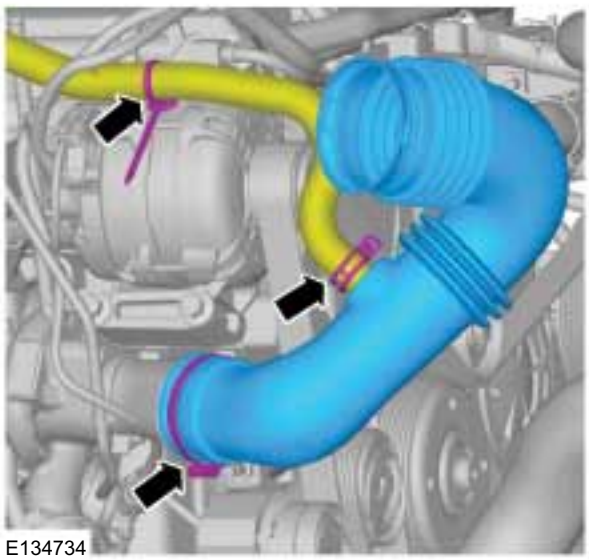

4.

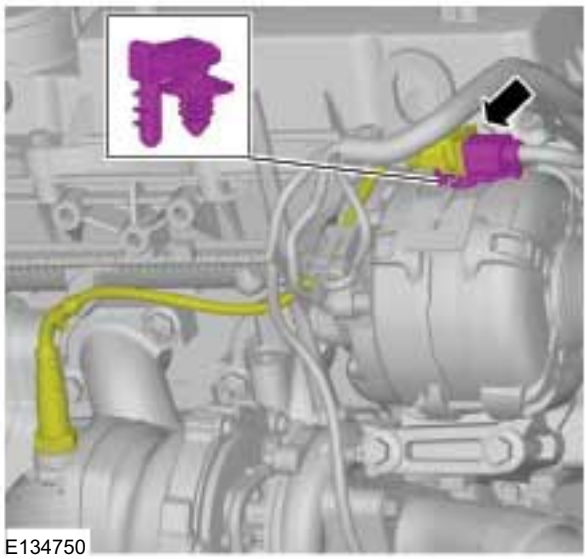

5. Refer to: Lifting (100-02 Jacking and Lifting, Description and Operation).

4x4

6. Torque: 30 Nm

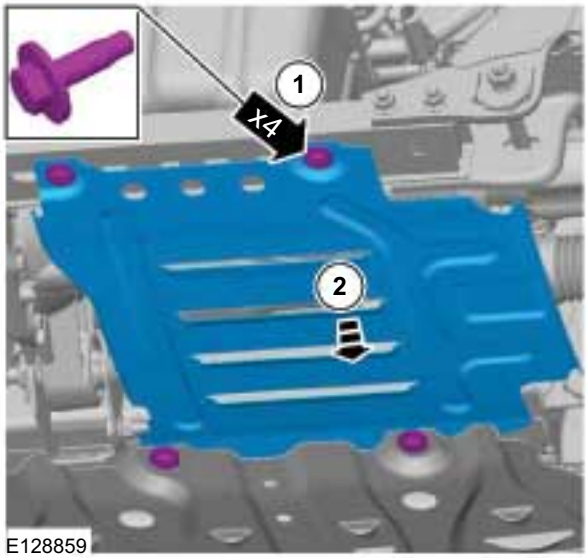

REMOVAL AND INSTALLATION

All vehicles

7. Torque: 10 Nm

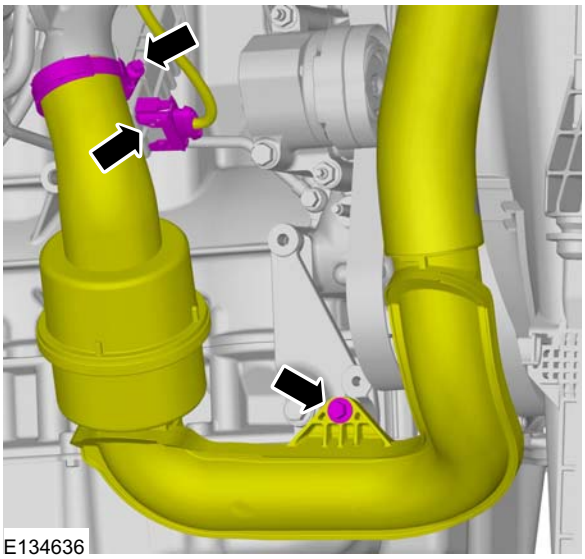

Vehicles with fixed vane turbocharger

8.

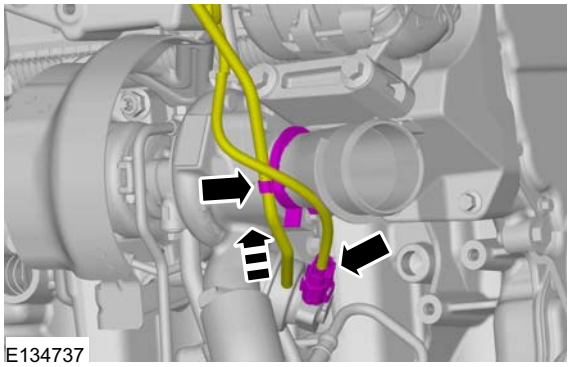

9. 1. Torque: 47 Nm
2. Torque: 22 Nm

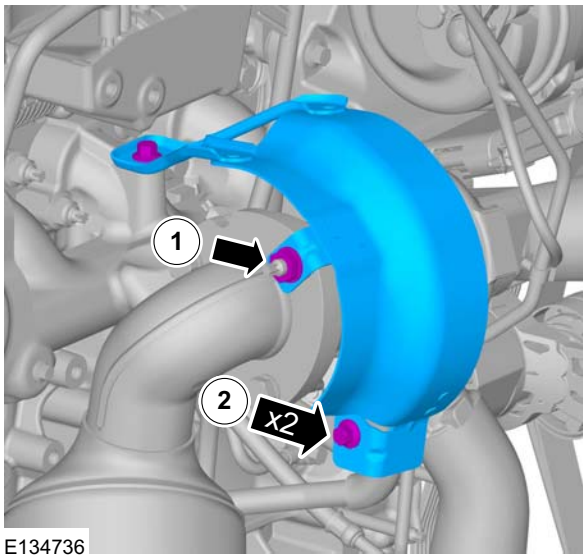

10. Torque: 22 Nm

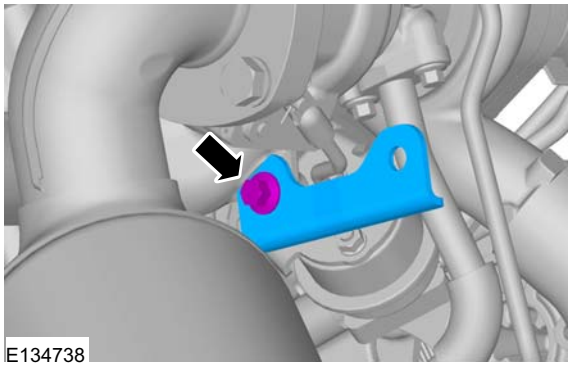

REMOVAL AND INSTALLATION

All vehicles

11. 1. Torque: 47 Nm
2. Torque: 22 Nm
3. Torque: 22 Nm

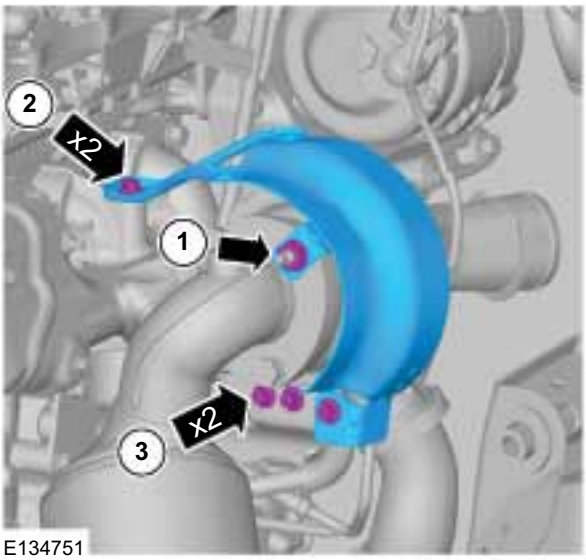

E134751

12. ⚠ **CAUTION: Over bending the exhaust flexible pipe may cause damage resulting in failure.**

NOTE: Securely strap the exhaust flexible pipe to the frame.

Torque: 25 Nm

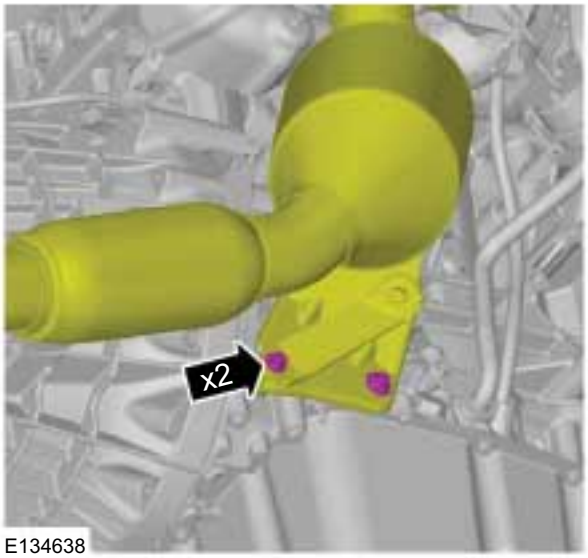

E134638

13. 1. Torque: 47 Nm
2. Torque: 47 Nm

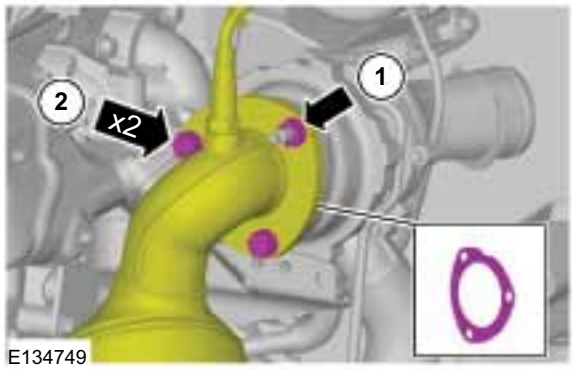

E134749

14. 1. Torque: 35 Nm
2. Torque: 10 Nm

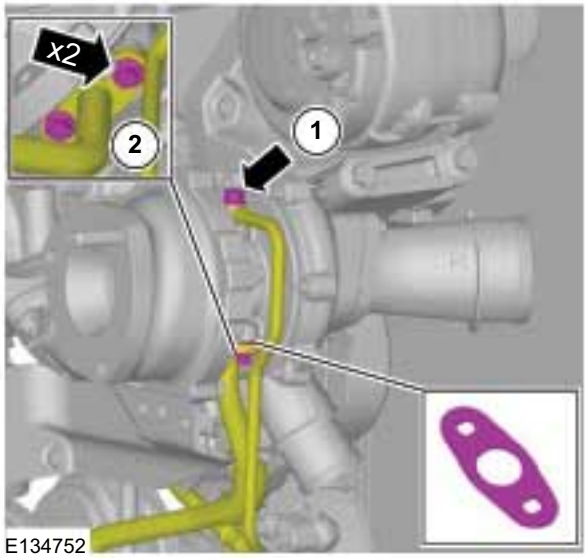

E134752

REMOVAL AND INSTALLATION

Vehicles with fixed vane turbocharger

15. 1. Torque: 23 Nm
2. Torque: 23 Nm

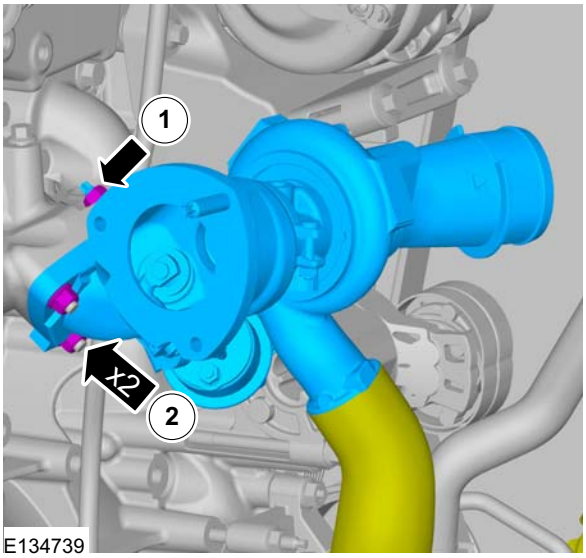

E134739

All vehicles

16. 1. Torque: 23 Nm
2. Torque: 23 Nm

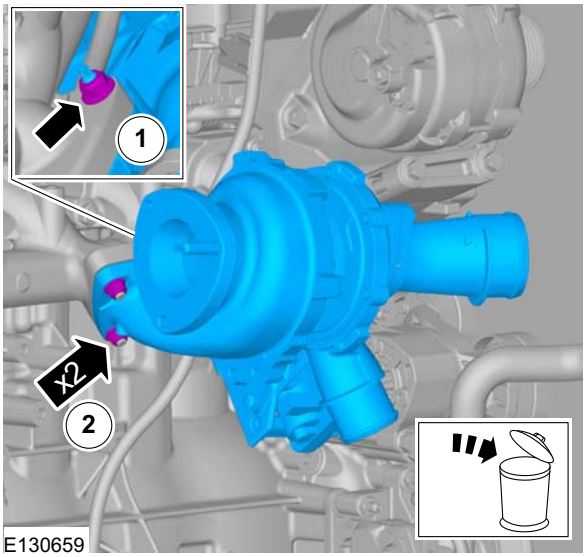

E130659

17. Torque: 10 Nm

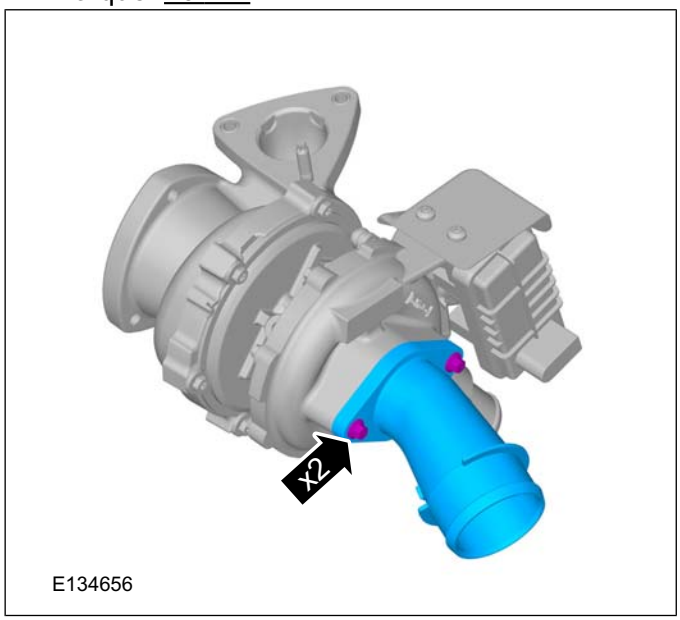

E134656

Installation

1. To install, reverse the removal procedure.

REMOVAL AND INSTALLATION

Turbocharger — 2.2L Duratorq-TDCi (88kW/120PS) - Puma/2.2L Duratorq-TDCi (96kW/130PS) - Puma/2.2L Duratorq-TDCi (110kW/150PS) - Puma, RHD 4WD/RHD RWD(23 612 0)

Removal

WARNING: When the engine and exhaust system are hot, they can cause severe burns or injury. Turn off the engine and wait until they are cool before removing the exhaust system.

NOTE: Removal steps in this procedure may contain installation details.

All vehicles

1. Refer to: Battery Disconnect and Connect (414-01 Battery, Mounting and Cables, General Procedures).
2. Refer to: Air Cleaner - 2.2L Duratorq-TDCi (88kW/120PS) - Puma/2.2L Duratorq-TDCi (96kW/130PS) - Puma/2.2L Duratorq-TDCi (110kW/150PS) - Puma (303-12 Intake Air Distribution and Filtering - 2.2L Duratorq-TDCi (88kW/120PS) - Puma/2.2L Duratorq-TDCi (96kW/130PS) - Puma/2.2L Duratorq-TDCi (110kW/150PS) - Puma/3.2L Duratorq-TDCi (148kW/200PS) - Puma, Removal and Installation).
3.

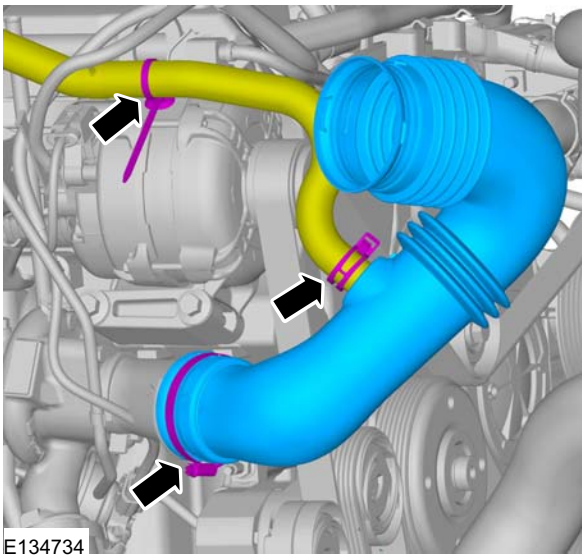
E134734

4. Refer to: Generator - 2.2L Duratorq-TDCi (88kW/120PS) - Puma/2.2L Duratorq-TDCi (96kW/130PS) - Puma/2.2L Duratorq-TDCi (110kW/150PS) - Puma (414-02 Generator and Regulator, Removal and Installation).
5. Refer to: Lifting (100-02 Jacking and Lifting, Description and Operation).

4x4

6. Torque: 30 Nm

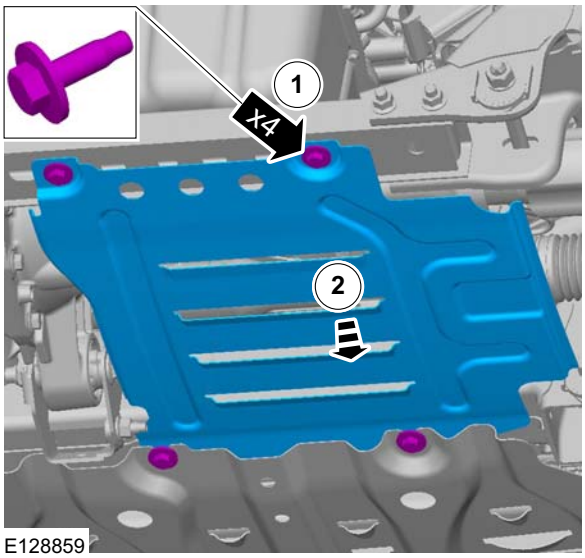

E128859

REMOVAL AND INSTALLATION

All vehicles

7. Torque: 10 Nm

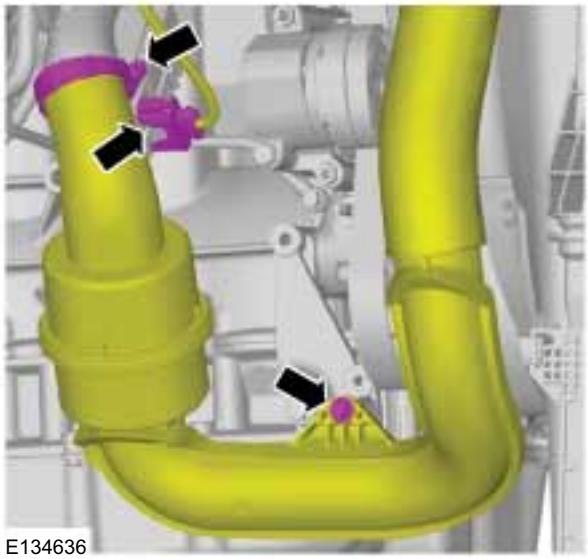

Vehicles with fixed vane turbocharger

8.

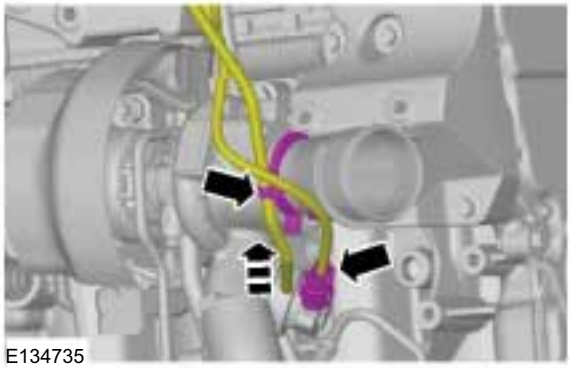

9. 1. Torque: 47 Nm
2. Torque: 22 Nm

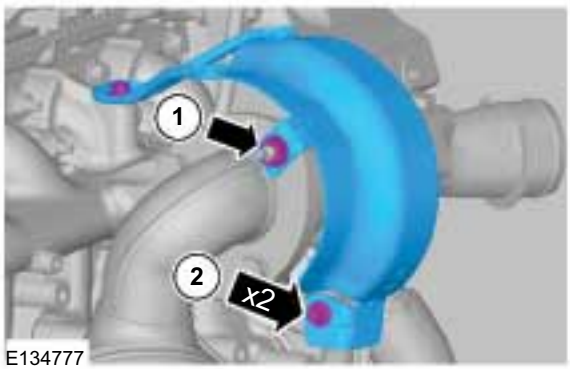

10. Torque: 22 Nm

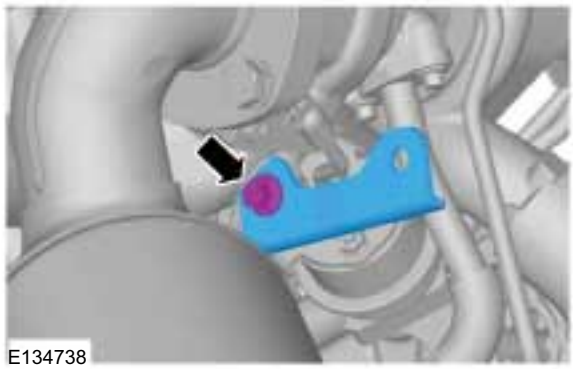

All vehicles

11. 1. Torque: 47 Nm
2. Torque: 22 Nm
3. Torque: 22 Nm

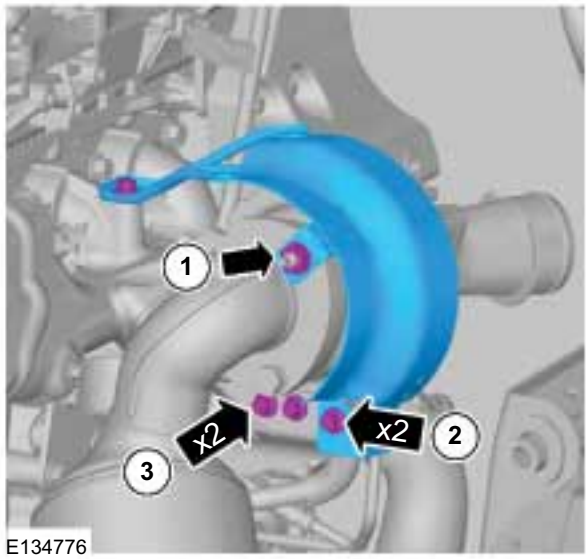

12. ⚠ **CAUTION: Over bending the exhaust flexible pipe may cause damage resulting in failure.**

REMOVAL AND INSTALLATION

NOTE: Securely strap the exhaust flexible pipe to the frame.

Torque: 25 Nm

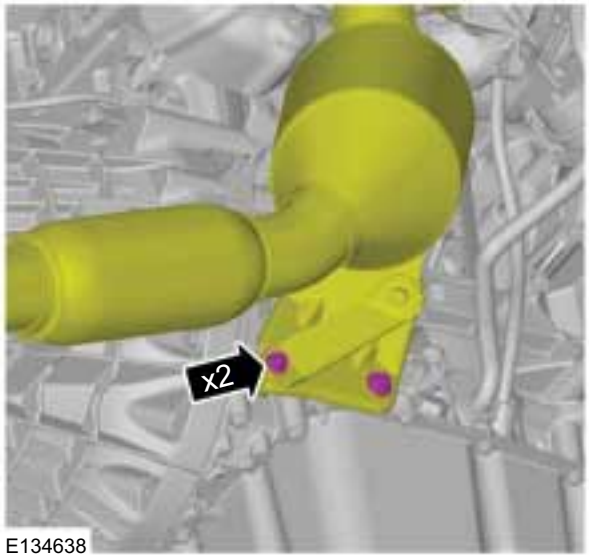

E134638

13. 1. Torque: 47 Nm
    2. Torque: 47 Nm

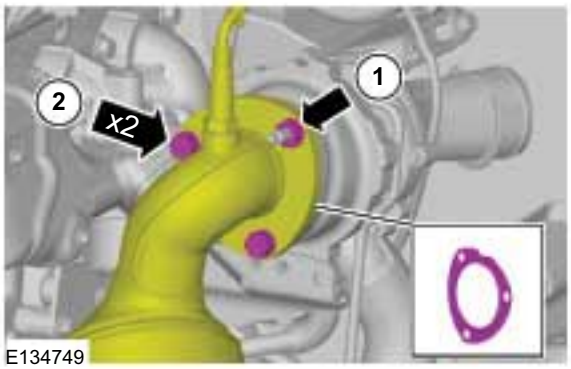

E134749

14. 1. Torque: 35 Nm
    2. Torque: 10 Nm

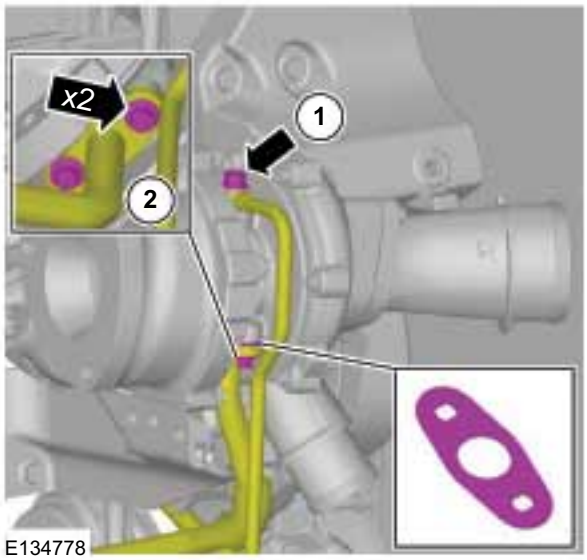

E134778

Vehicles with fixed vane turbocharger

15. 1. Torque: 23 Nm
    2. Torque: 23 Nm

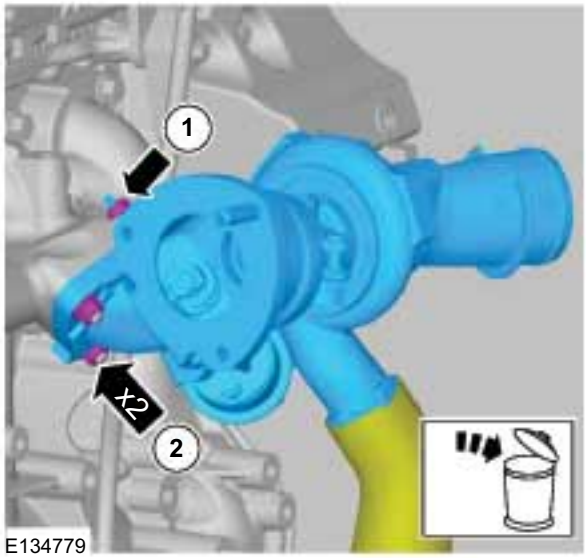

E134779

REMOVAL AND INSTALLATION

All vehicles

16. 1. Torque: 23 Nm
    2. Torque: 23 Nm

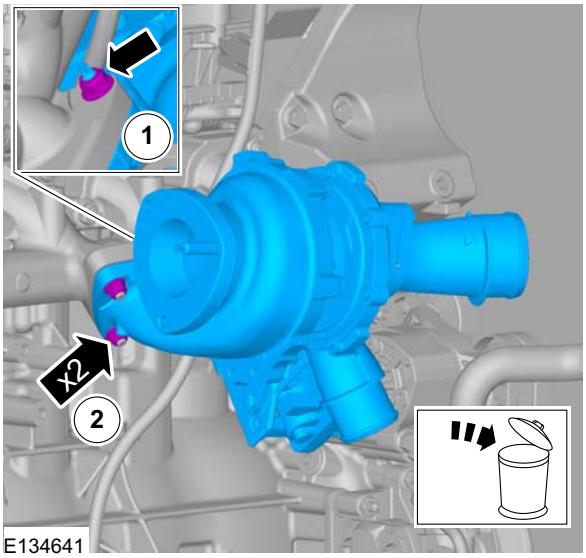

17. Torque: 10 Nm

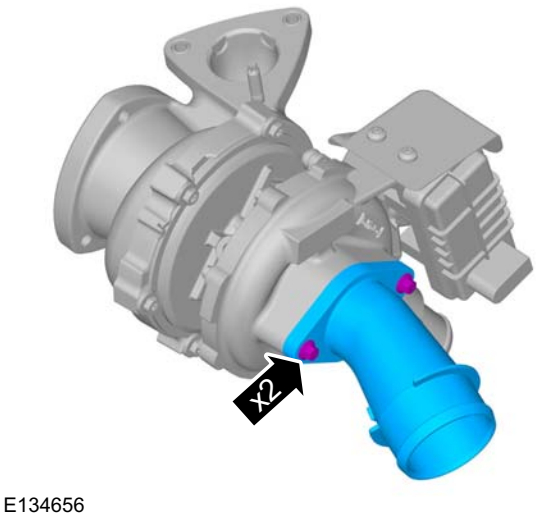

Installation

1. To install, reverse the removal procedure.

REMOVAL AND INSTALLATION

Turbocharger — 3.2L Duratorq-TDCi (148kW/200PS) - Puma, LHD 4WD/LHD RWD(23 612 0)

Removal

WARNING: When the engine and exhaust system are hot, they can cause severe burns or injury. Turn off the engine and wait until they are cool before removing the exhaust system.

NOTE: Removal steps in this procedure may contain installation details.

All vehicles

1. Refer to: Battery Disconnect and Connect (414-01 Battery, Mounting and Cables, General Procedures).
2. Refer to: Air Cleaner - 3.2L Duratorq-TDCi (148kW/200PS) - Puma (303-12 Intake Air Distribution and Filtering - 2.2L Duratorq-TDCi (88kW/120PS) - Puma/2.2L Duratorq-TDCi (96kW/130PS) - Puma/2.2L Duratorq-TDCi (110kW/150PS) - Puma/3.2L Duratorq-TDCi (148kW/200PS) - Puma, Removal and Installation).
3.

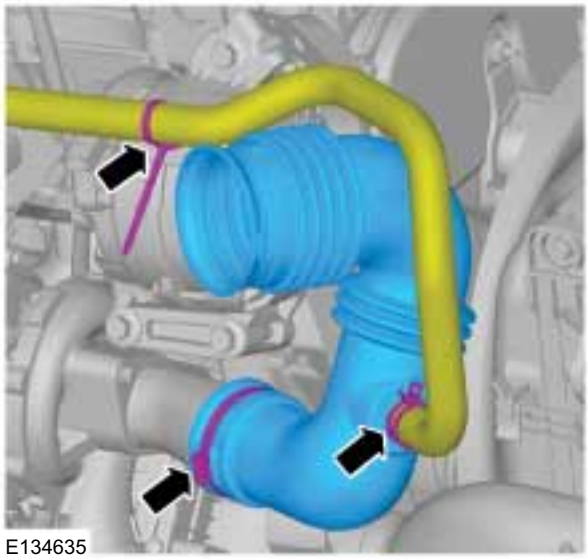
E134635

4.

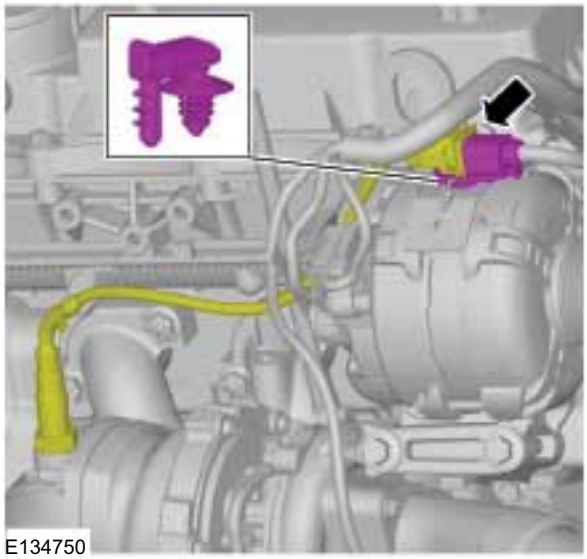
E134750

4x4

5. Refer to: Lifting (100-02 Jacking and Lifting, Description and Operation).
   Torque: 30 Nm

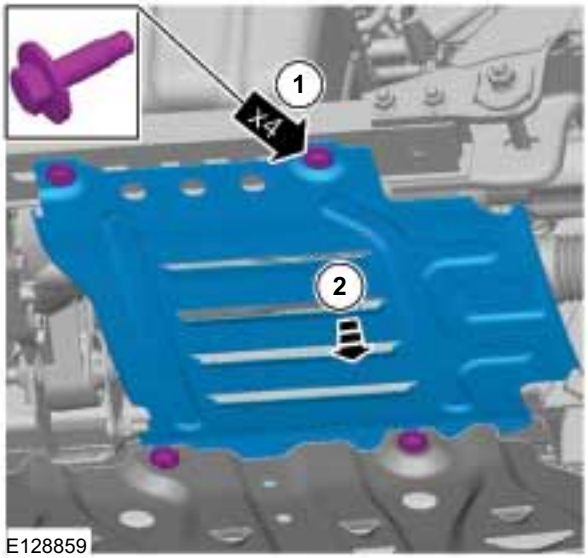

E128859

REMOVAL AND INSTALLATION

All vehicles

6. Torque: 10 Nm

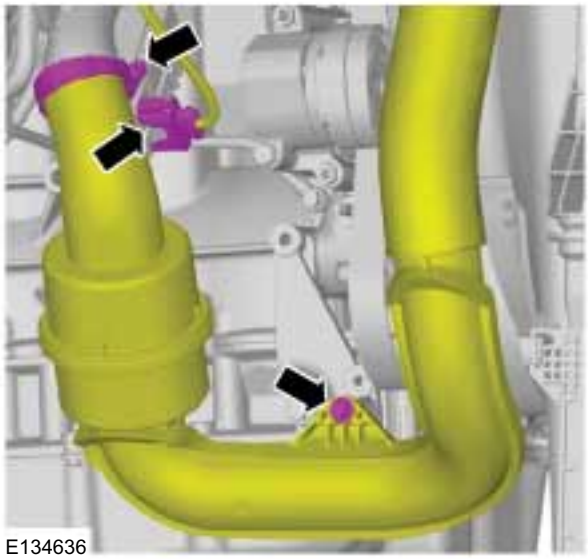

7. 1. Torque: 47 Nm
2. Torque: 22 Nm

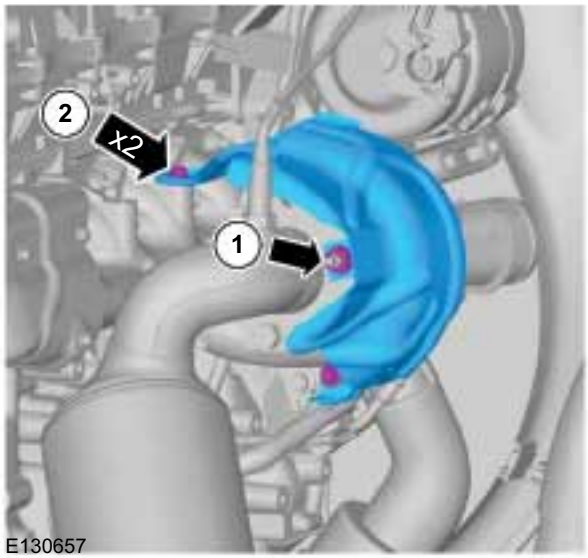

8. **CAUTION: Over bending the exhaust flexible pipe may cause damage resulting in failure.**

NOTE: Securely strap the exhaust flexible pipe to the frame.

Torque: 25 Nm

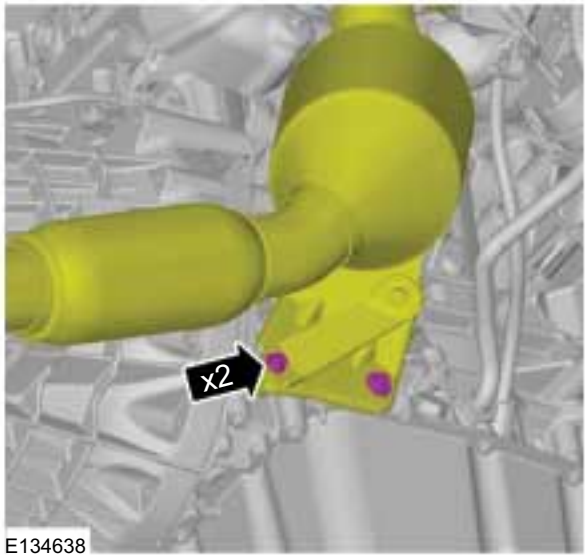

9. 1. Torque: 47 Nm
2. Torque: 47 Nm

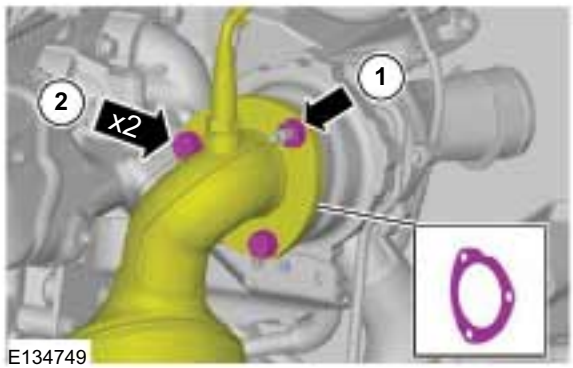

REMOVAL AND INSTALLATION

10. 1. Torque: 35 Nm
3. Torque: 22 Nm
4. Torque: 10 Nm

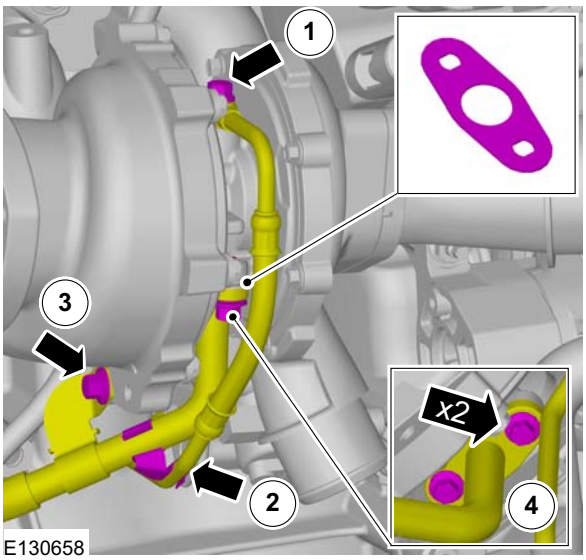

E130658

11. 1. Torque: 23 Nm
2. Torque: 23 Nm

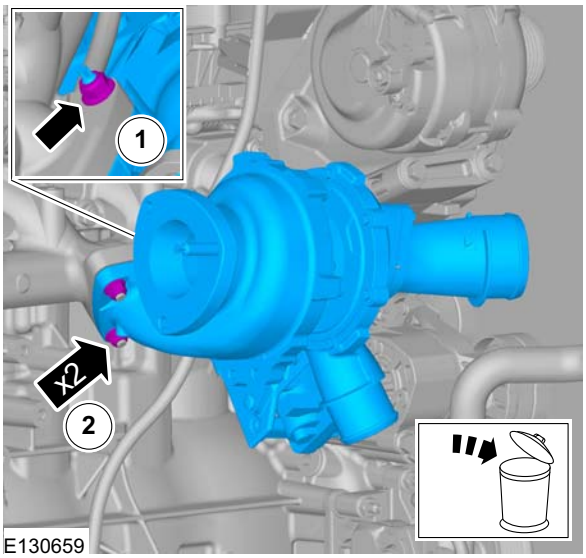

E130659

12. Torque: 10 Nm

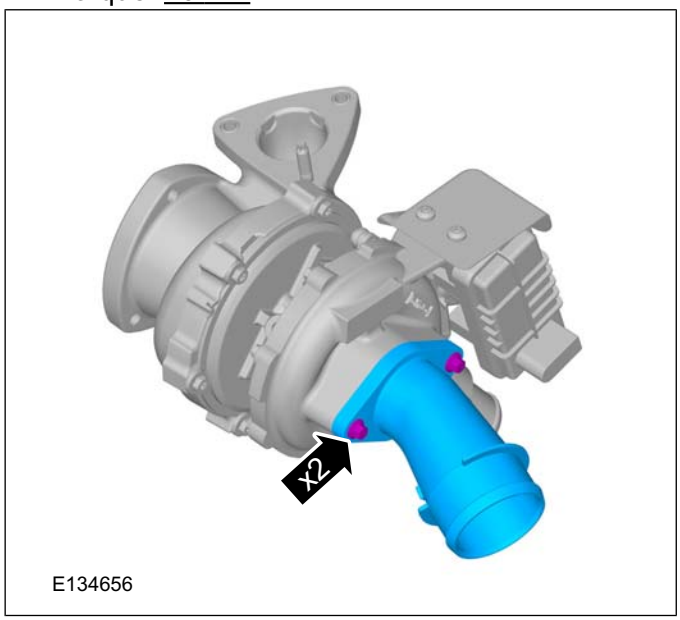

E134656

Installation

1. To install, reverse the removal procedure.

REMOVAL AND INSTALLATION

Turbocharger — 3.2L Duratorq-TDCi (148kW/200PS) - Puma, RHD 4WD/RHD RWD(23 612 0)

Removal

WARNING: When the engine and exhaust system are hot, they can cause severe burns or injury. Turn off the engine and wait until they are cool before removing the exhaust system.

NOTE: Removal steps in this procedure may contain installation details.

All vehicles

1. Refer to: Battery Disconnect and Connect (414-01 Battery, Mounting and Cables, General Procedures).
2. Refer to: Air Cleaner - 3.2L Duratorq-TDCi (148kW/200PS) - Puma (303-12 Intake Air Distribution and Filtering - 2.2L Duratorq-TDCi (88kW/120PS) - Puma/2.2L Duratorq-TDCi (96kW/130PS) - Puma/2.2L Duratorq-TDCi (110kW/150PS) - Puma/3.2L Duratorq-TDCi (148kW/200PS) - Puma, Removal and Installation).
3. 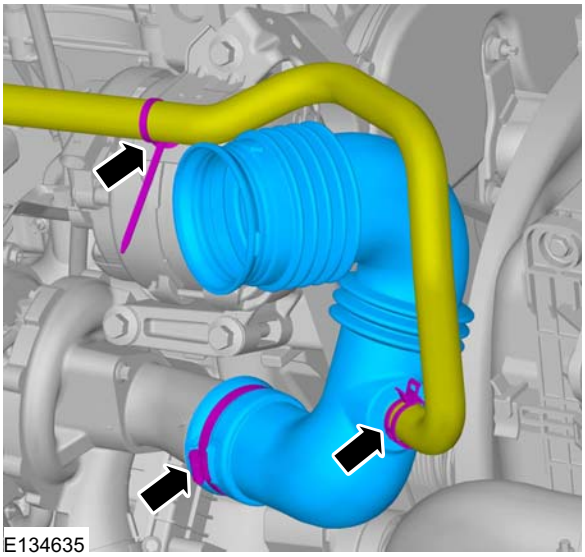
E134635
4. Refer to: Generator - 3.2L Duratorq-TDCi (148kW/200PS) - Puma (414-02 Generator and Regulator, Removal and Installation).
5. Refer to: Lifting (100-02 Jacking and Lifting, Description and Operation).

4x4

6. Torque: 30 Nm

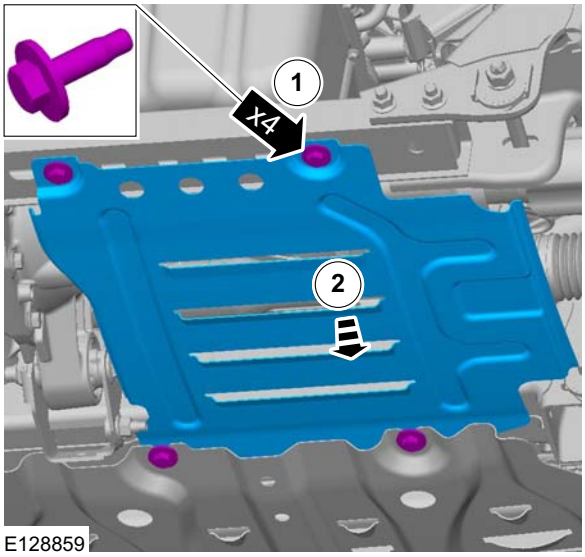

E128859

All vehicles

7. Torque: 10 Nm

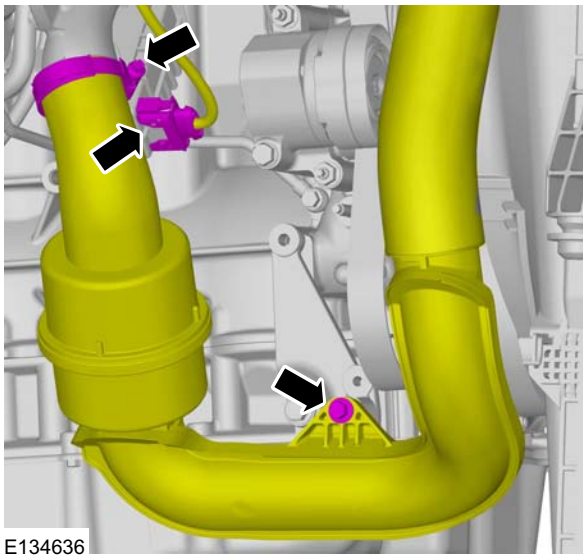
E134636

REMOVAL AND INSTALLATION

8. 1. Torque: 47 Nm
2. Torque: 22 Nm

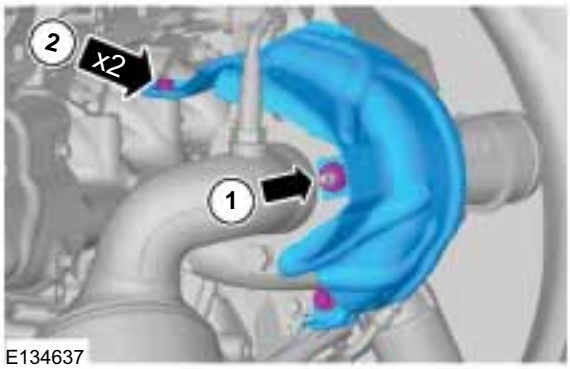

E134637

9. ⚠ **CAUTION: Over bending the exhaust flexible pipe may cause damage resulting in failure.**

NOTE: Securely strap the exhaust flexible pipe to the frame.

Torque: 25 Nm

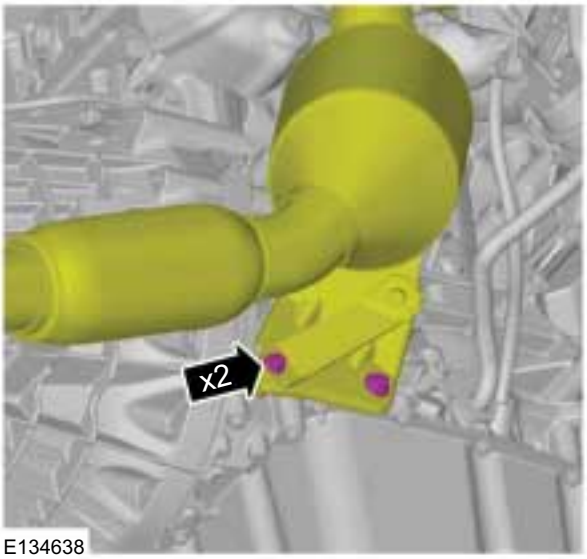

E134638

10. 1. Torque: 47 Nm
2. Torque: 47 Nm

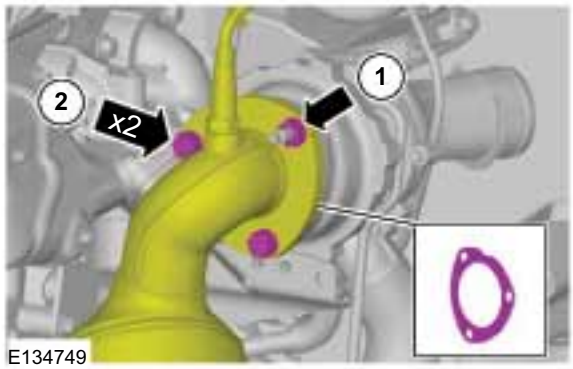

E134749

11. 1. Torque: 35 Nm
3. Torque: 22 Nm
4. Torque: 10 Nm

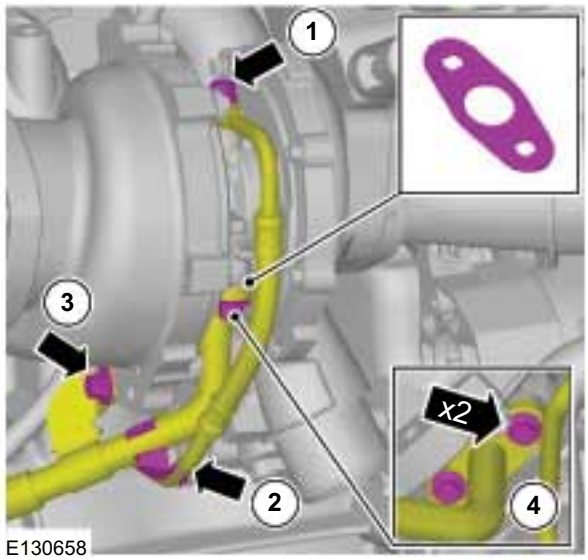

E130658

REMOVAL AND INSTALLATION

12. 1. Torque: 23 Nm
    2. Torque: 23 Nm

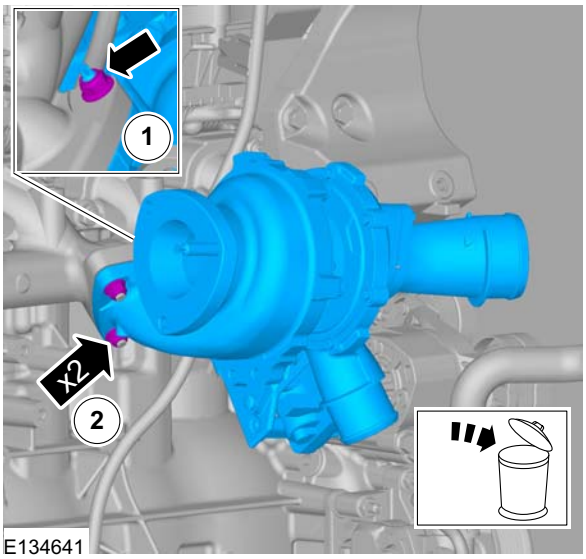

E134641

13. Torque: 10 Nm

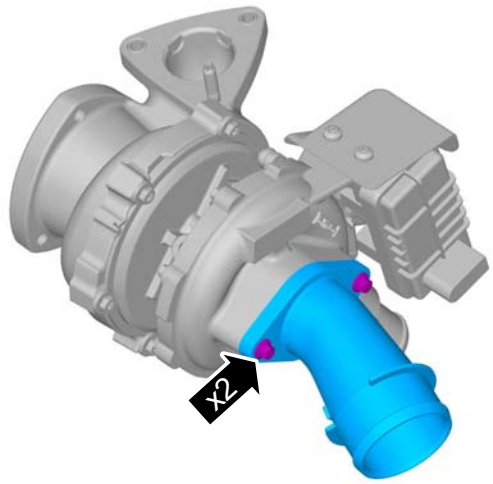

E134656

Installation

1. To install, reverse the removal procedure.

SECTION 303-05A Accessory Drive — 2.5L Duratec-HE (122kW/165PS) - MI4

VEHICLE APPLICATION: 2011.50 Ranger

CONTENTS PAGE

DESCRIPTION AND OPERATION

Accessory Drive..... 303-05A-2

REMOVAL AND INSTALLATION

Accessory Drive Belt..... (21 567 0) 303-05A-4
Accessory Drive Belt Tensioner..... (21 569 0) 303-05A-5

DESCRIPTION AND OPERATION

Accessory Drive

Vehicles with air conditioning

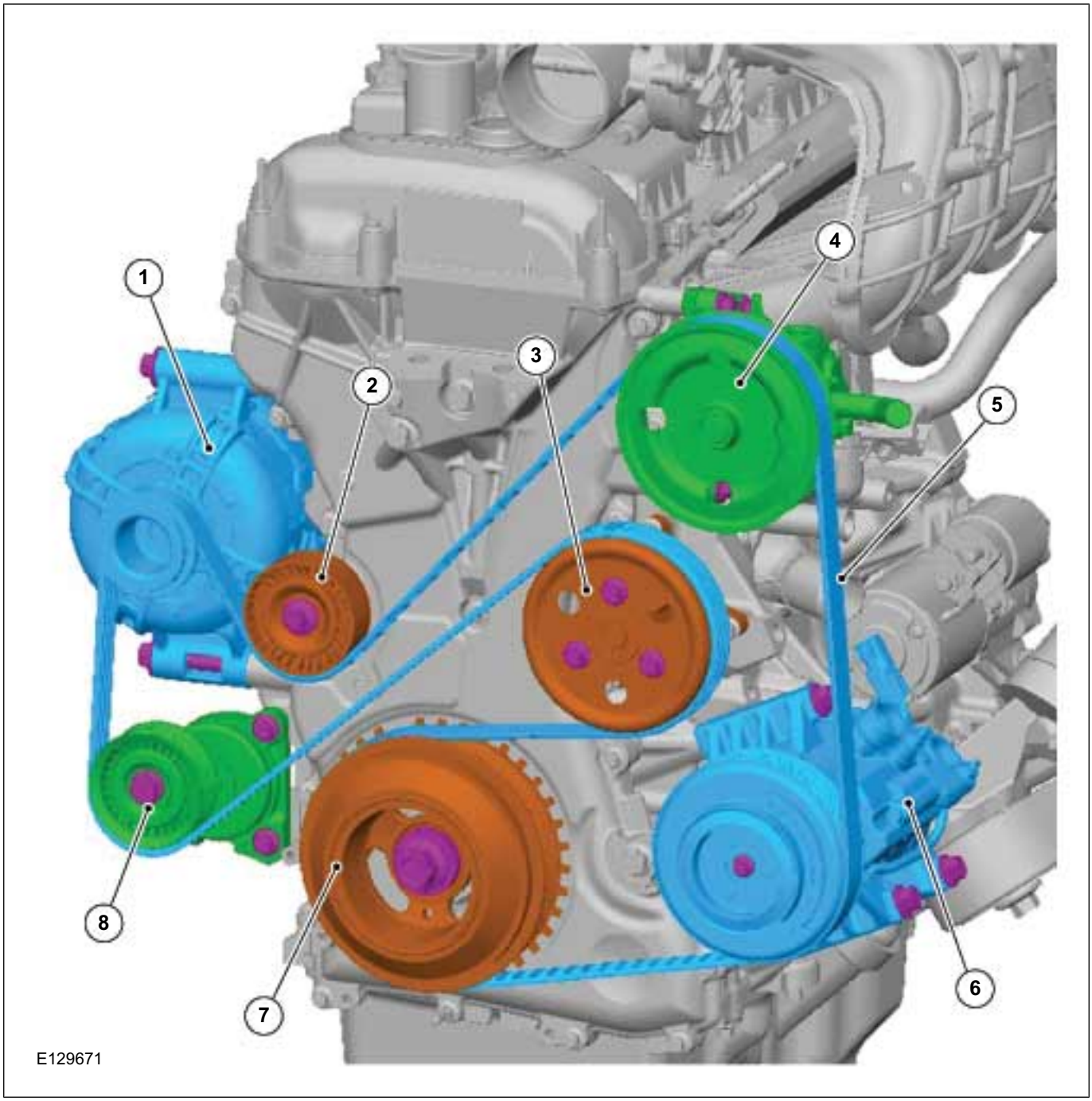

Item	Description
1	Alternator
2	Accessory drive belt idler pulley
3	Coolant pump pulley
4	Power steering pump pulley

Item	Description
5	Accessory drive belt
6	Air conditioning (A/C) compressor
7	Crankshaft pulley
8	Accessory drive belt tensioner pulley

DESCRIPTION AND OPERATION

Vehicles without air conditioning

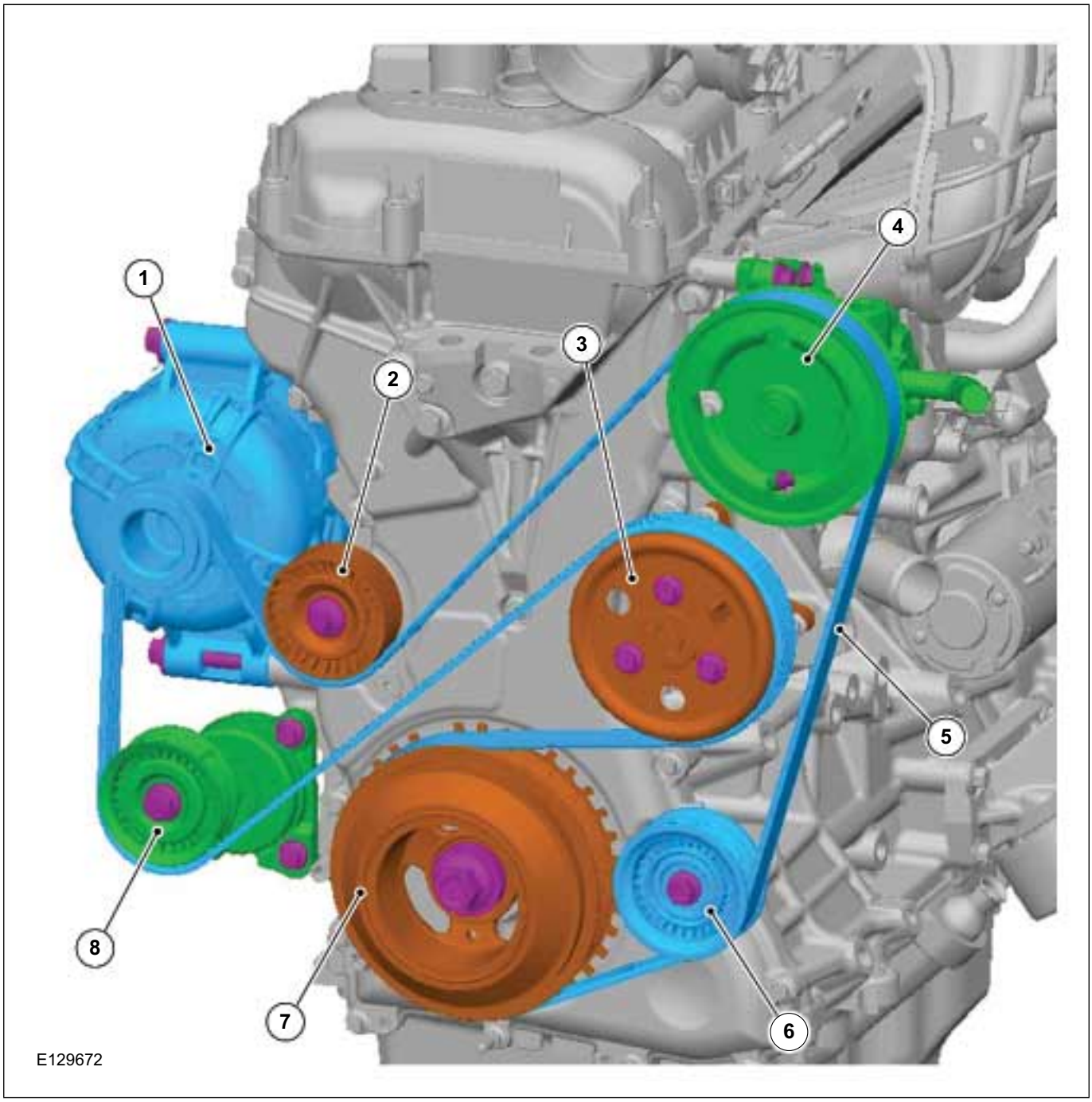

Item	Description
1	Alternator
2	Accessory drive belt idler pulley
3	Coolant pump pulley
4	Power steering pump pulley
5	Accessory drive belt
6	Accessory drive belt idler pulley

Item	Description
7	Crankshaft pulley
8	Accessory drive belt tensioner pulley

REMOVAL AND INSTALLATION

Accessory Drive Belt(21 567 0)

Special Tool(s)

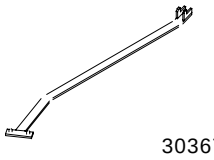 303676	303-676 Release Tool, Belt Tensioner

Removal

NOTE: Removal steps in this procedure may contain installation details.

1. Refer to: Lifting (100-02 Jacking and Lifting, Description and Operation).
2. Torque: 30 Nm

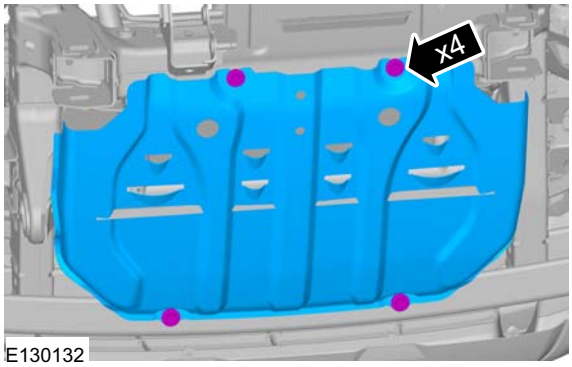

E130132

3. Rotate the accessory drive belt tensioner clockwise and remove the accessory drive belt.

   Remove the Special Tool(s): 303-676

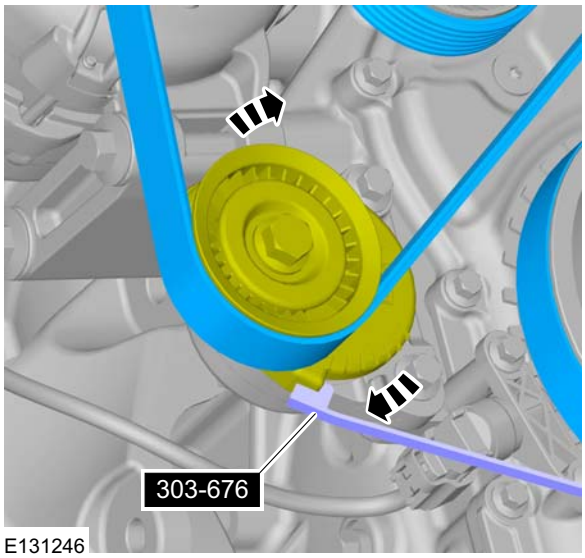

E131246

Installation

1. To install, reverse the removal procedure.

   Refer to: Accessory Drive (303-05 Accessory Drive - 2.5L Duratec-HE (122kW/165PS) - MI4, Description and Operation).

REMOVAL AND INSTALLATION

Accessory Drive Belt Tensioner(21 569 0)

Removal

NOTE: Removal steps in this procedure may contain installation details.

1. Refer to: Accessory Drive Belt (303-05 Accessory Drive - 2.5L Duratec-HE (122kW/165PS) - MI4, Removal and Installation).
2. **NOTE:** The accessory drive belt tensioner must be replaced as a complete unit.

   Torque: 25 Nm

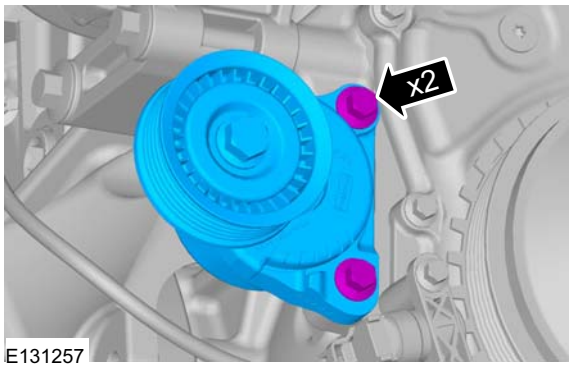

Installation

1. To install, reverse the removal procedure.

SECTION 303-05B Accessory Drive — 2.2L Duratorq-TDCi (88kW/120PS) - Puma/2.2L Duratorq-TDCi (96kW/130PS) - Puma/2.2L Duratorq-TDCi (110kW/150PS) - Puma/3.2L Duratorq-TDCi (148kW/200PS) - Puma

VEHICLE APPLICATION: 2011.50 Ranger

CONTENTS PAGE

DESCRIPTION AND OPERATION

Accessory Drive..... 303-05B-2
Vehicles with 2.2L Duratorq-TDCi (Puma) diesel engine..... 303-05B-2
Vehicles with 3.2L Duratorq-TDCi (Puma) diesel engine..... 303-05B-4

REMOVAL AND INSTALLATION

Accessory Drive Belt — 2.2L Duratorq-TDCi (88kW/120PS) - Puma/2.2L Duratorq-TDCi (96kW/130PS) - Puma/2.2L Duratorq-TDCi (110kW/150PS) - Puma/3.2L Duratorq-TDCi (148kW/200PS) - Puma..... (21 567 0) 303-05B-6
Accessory Drive Belt Tensioner — 2.2L Duratorq-TDCi (88kW/120PS) - Puma/2.2L Duratorq-TDCi (96kW/130PS) - Puma/2.2L Duratorq-TDCi (110kW/150PS) - Puma/3.2L Duratorq-TDCi (148kW/200PS) - Puma..... (21 569 0) 303-05B-8

DESCRIPTION AND OPERATION

Accessory Drive

Vehicles with 2.2L Duratorq-TDCi (Puma) diesel engine

Vehicles with air conditioning

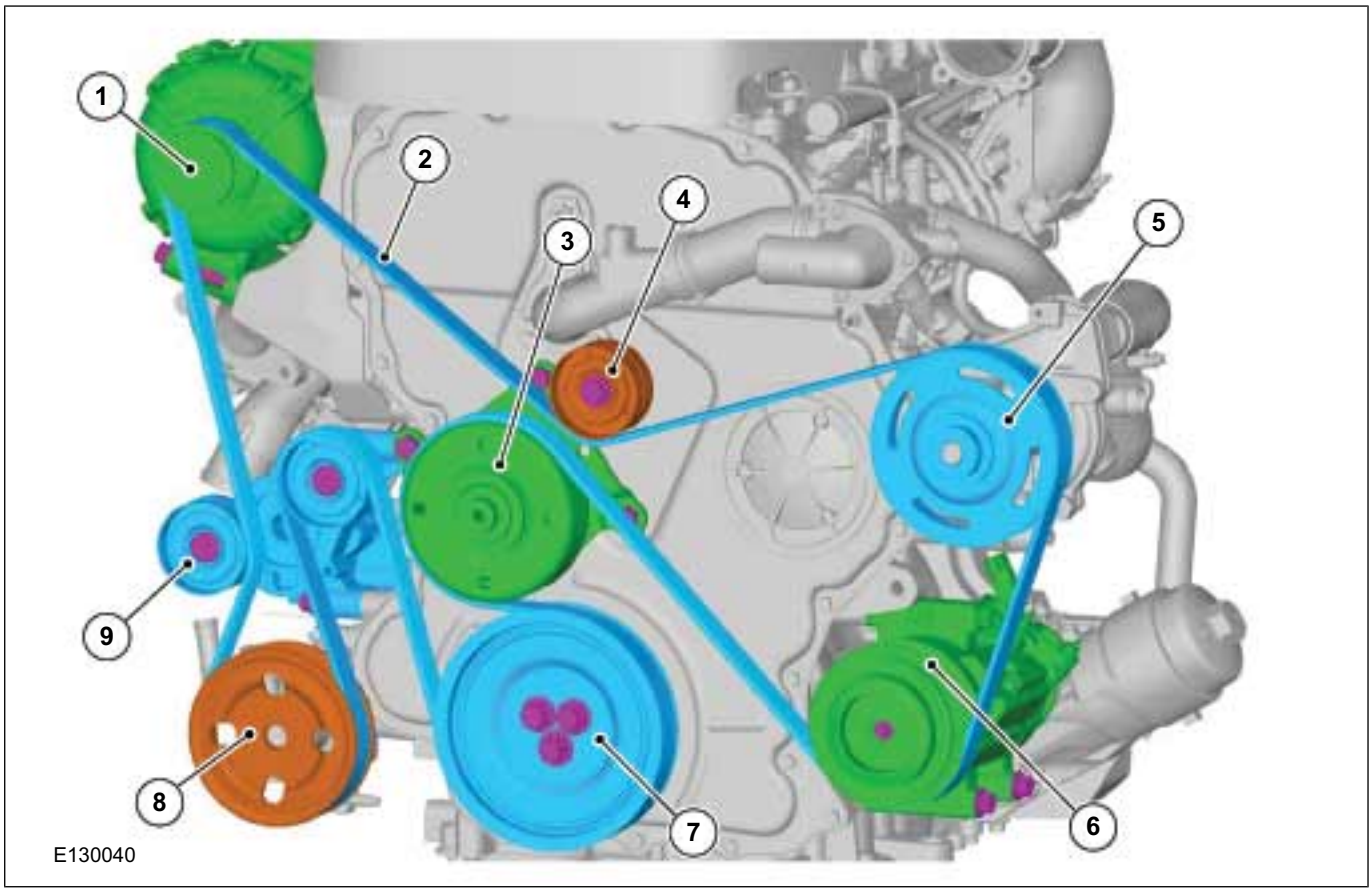

Item	Description
1	Alternator
2	Accessory drive belt
3	Cooling fan pulley
4	Accessory drive belt idler pulley

Item	Description
5	Coolant pump pulley
6	Air conditioning (A/C) compressor
7	Crankshaft pulley
8	Power steering pump pulley
9	Accessory drive belt tensioner pulley

DESCRIPTION AND OPERATION

Vehicles without air conditioning

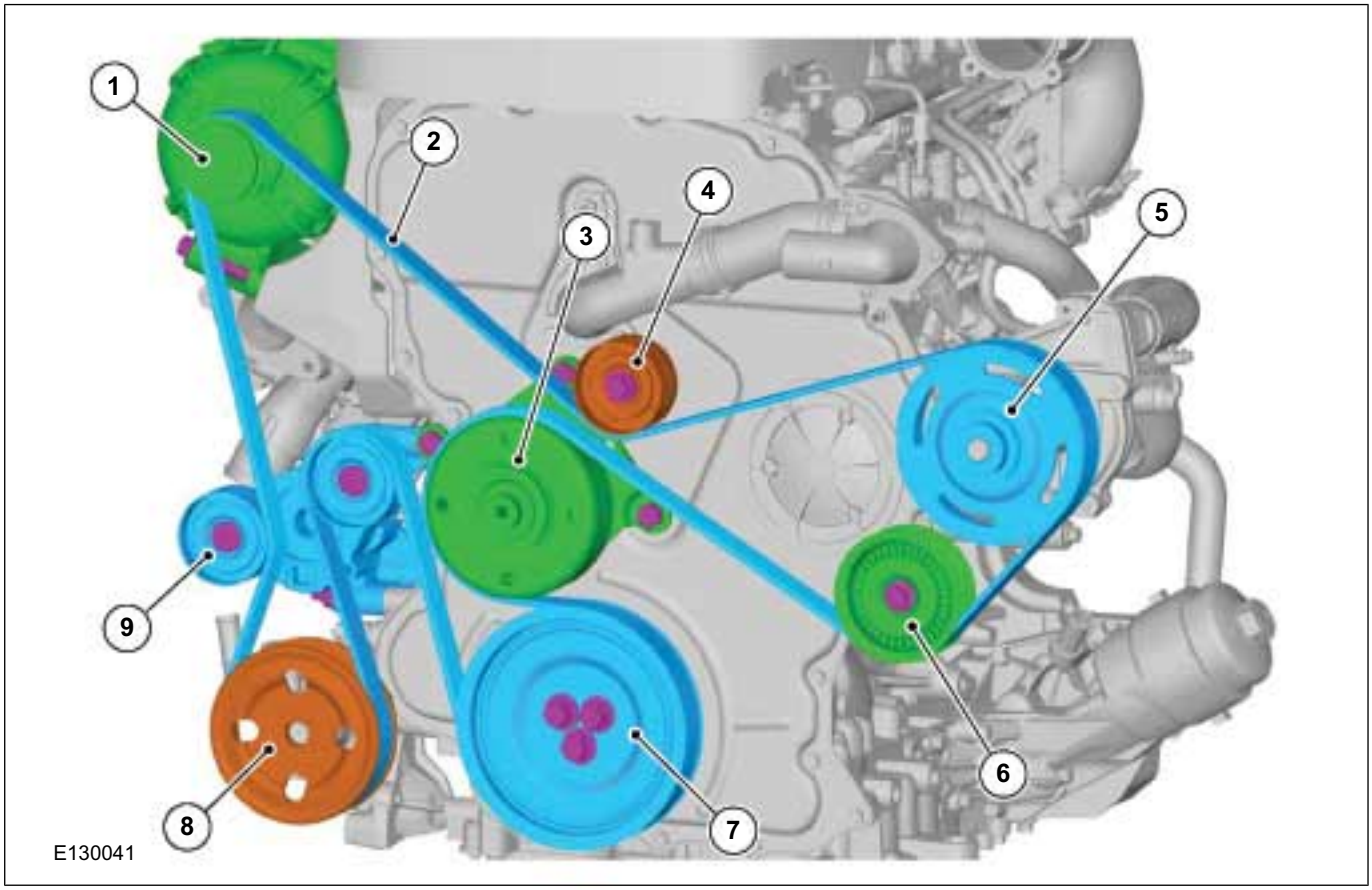

Item	Description
1	Alternator
2	Accessory drive belt
3	Cooling fan pulley
4	Accessory drive belt idler pulley

Item	Description
5	Coolant pump pulley
6	Accessory drive belt idler pulley
7	Crankshaft pulley
8	Power steering pump pulley
9	Accessory drive belt tensioner pulley

DESCRIPTION AND OPERATION

Vehicles with 3.2L Duratorq-TDCi (Puma) diesel engine

Vehicles with air conditioning

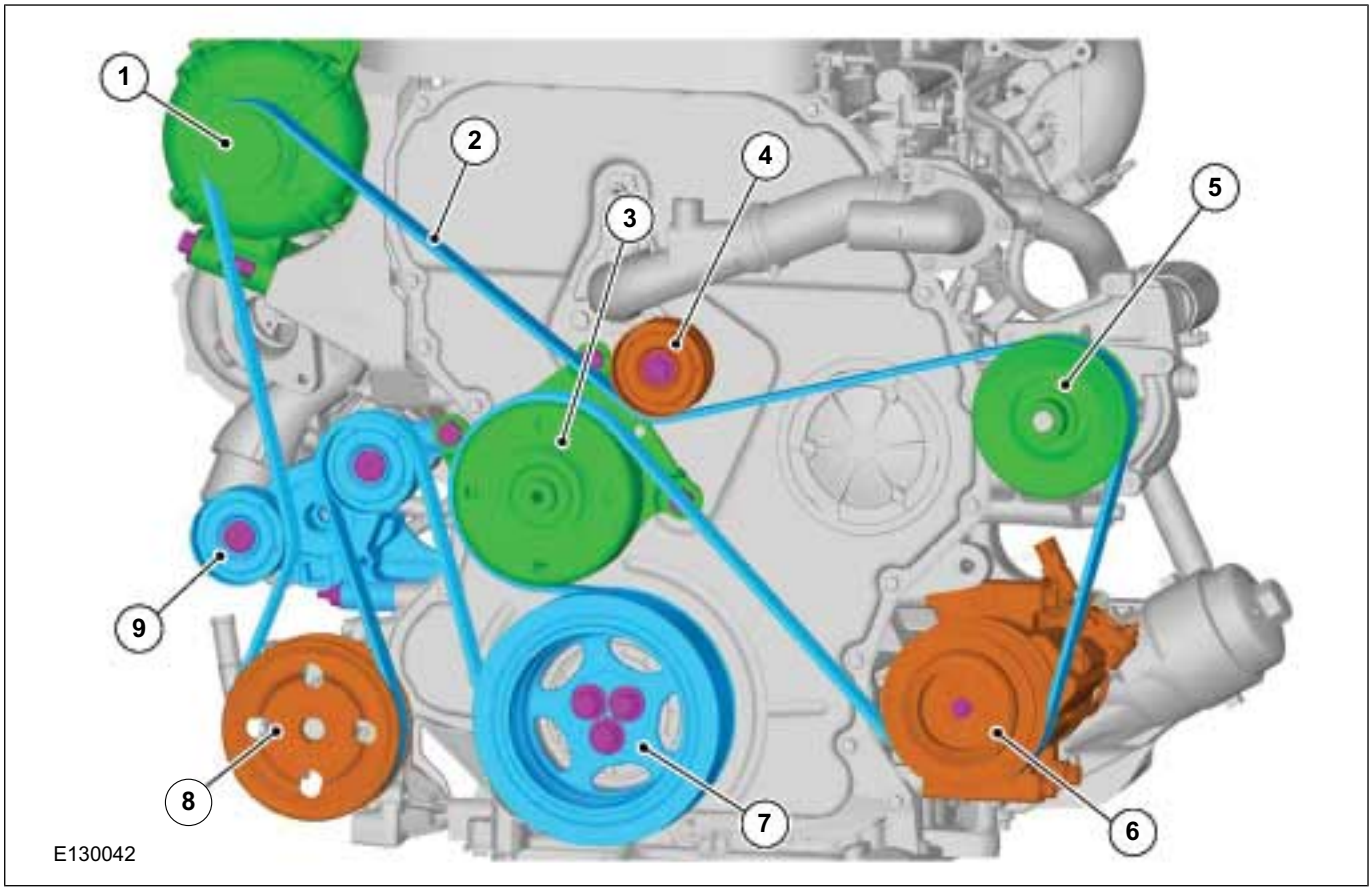

Item	Description
1	Alternator
2	Accessory drive belt
3	Cooling fan pulley
4	Accessory drive belt idler pulley

Item	Description
5	Coolant pump pulley
6	Air conditioning (A/C) compressor
7	Crankshaft pulley
8	Power steering pump pulley
9	Accessory drive belt tensioner pulley

DESCRIPTION AND OPERATION

Vehicles without air conditioning

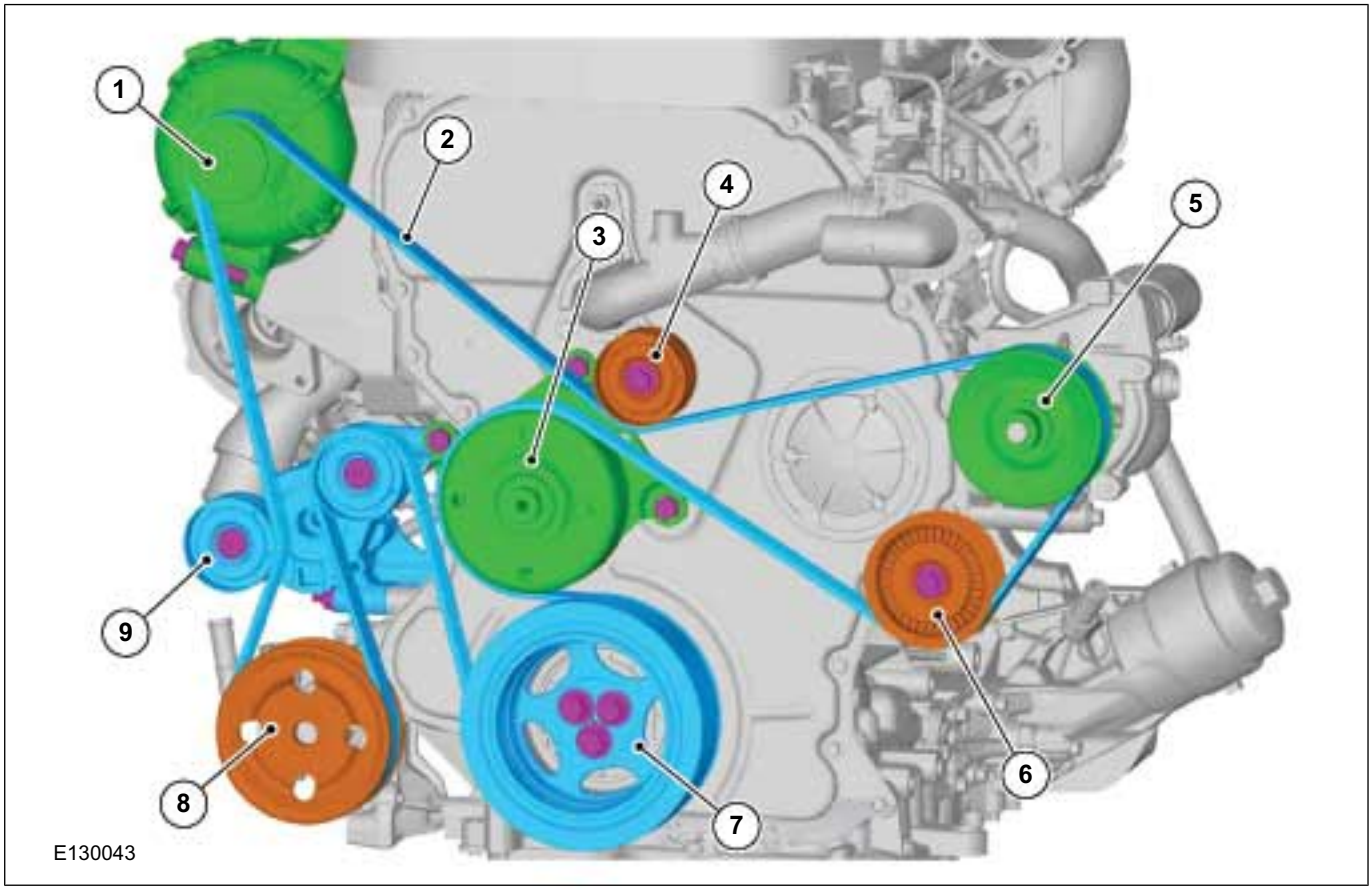

Item	Description
1	Alternator
2	Accessory drive belt
3	Cooling fan pulley
4	Accessory drive belt idler pulley
5	Coolant pump pulley
6	Accessory drive belt idler pulley
7	Crankshaft pulley
8	Power steering pump pulley
9	Accessory drive belt tensioner pulley

REMOVAL AND INSTALLATION

Accessory Drive Belt — 2.2L Duratorq-TDCi (88kW/120PS) - Puma/2.2L Duratorq-TDCi (96kW/130PS) - Puma/2.2L Duratorq-TDCi (110kW/150PS) - Puma/3.2L Duratorq-TDCi (148kW/200PS) - Puma(21 567 0)

General Equipment

1/2 Inch Square Drive Breaker Bar
Dowel with a Diameter of 6 mm

Removal

NOTE: Removal steps in this procedure may contain installation details.

Vehicles with 2.2L diesel engine

1. 1. Rotate the accessory drive belt tensioner clockwise and remove the accessory drive belt.

General Equipment: 1/2 Inch Square Drive Breaker Bar

2. General Equipment: Dowel with a Diameter of 6 mm

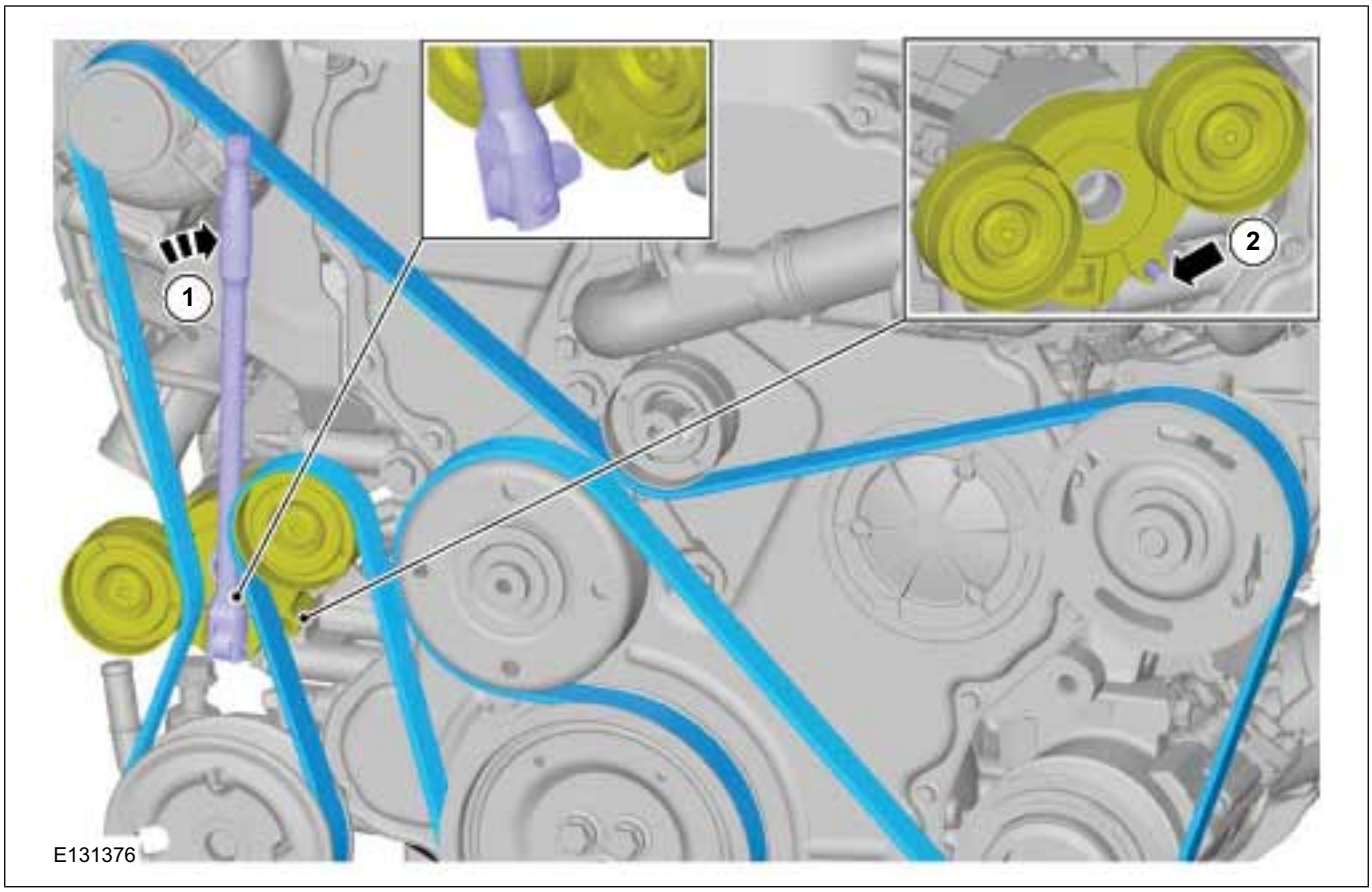

Vehicles with 3.2L diesel engine

2. 1. Rotate the accessory drive belt tensioner clockwise and remove the accessory drive belt.

General Equipment: 1/2 Inch Square Drive Breaker Bar

2. General Equipment: Dowel with a Diameter of 6 mm

REMOVAL AND INSTALLATION

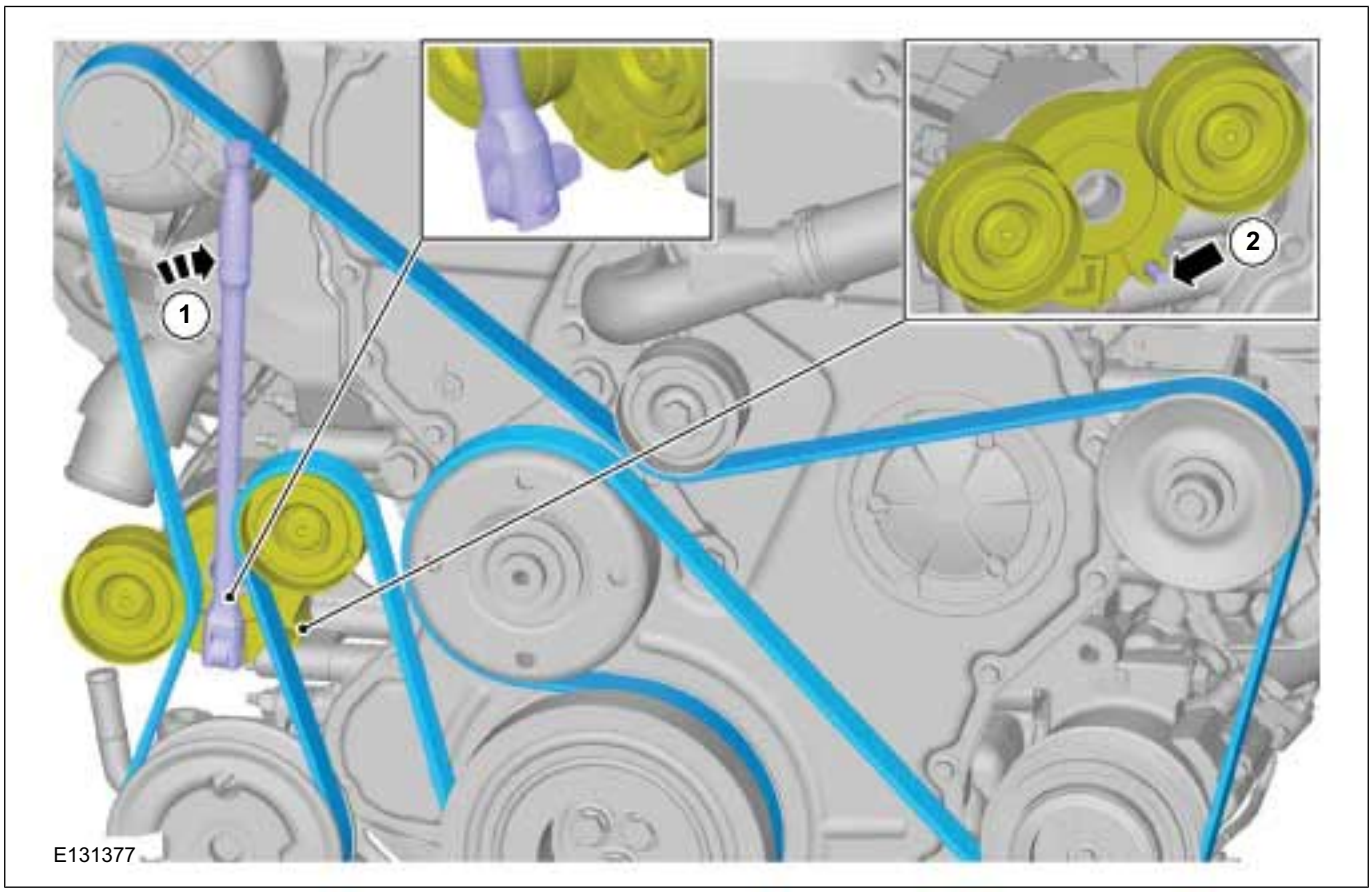

Installation

1. To install, reverse the removal procedure.

REMOVAL AND INSTALLATION

Accessory Drive Belt Tensioner — 2.2L Duratorq-TDCi (88kW/120PS) - Puma/2.2L Duratorq-TDCi (96kW/130PS) - Puma/2.2L Duratorq-TDCi (110kW/150PS) - Puma/3.2L Duratorq-TDCi (148kW/200PS) - Puma(21 569 0)

Removal

NOTE: Removal steps in this procedure may contain installation details.

1. Refer to: Accessory Drive Belt - 2.2L Duratorq-TDCi (88kW/120PS) - Puma/2.2L Duratorq-TDCi (96kW/130PS) - Puma/2.2L Duratorq-TDCi (110kW/150PS) - Puma/3.2L Duratorq-TDCi (148kW/200PS) - Puma (303-05 Accessory Drive - 2.2L Duratorq-TDCi (88kW/120PS) - Puma/2.2L Duratorq-TDCi (96kW/130PS) - Puma/2.2L Duratorq-TDCi (110kW/150PS) - Puma/3.2L Duratorq-TDCi (148kW/200PS) - Puma, Removal and Installation).
2. **NOTE:** The accessory drive belt tensioner must be replaced as a complete unit.

   Torque: 25 Nm

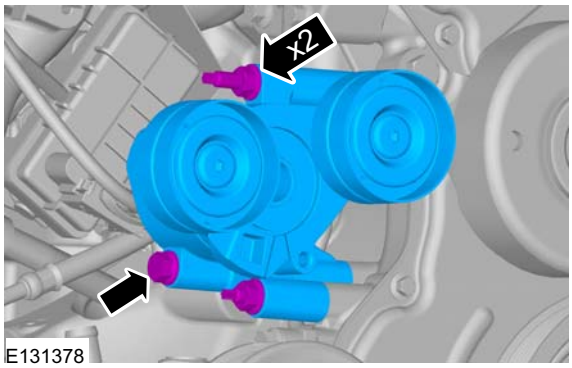

Installation

1. To install, reverse the removal procedure.

SECTION 303-06A Starting System — 2.5L Duratec-HE (122kW/165PS) - MI4

VEHICLE APPLICATION: 2011.50 Ranger

CONTENTS PAGE

REMOVAL AND INSTALLATION

Starter Motor..... (26 204 0) 303-06A-2

REMOVAL AND INSTALLATION

Starter Motor(26 204 0)

Removal

NOTE: Removal steps in this procedure may contain installation details.

1. Refer to: Battery Disconnect and Connect (414-01 Battery, Mounting and Cables, General Procedures).
2. Remove Front LH wheel only.

   Refer to: Wheel and Tire (204-04 Wheels and Tires, Removal and Installation).
3. Refer to: Lifting (100-02 Jacking and Lifting, Description and Operation).
4.

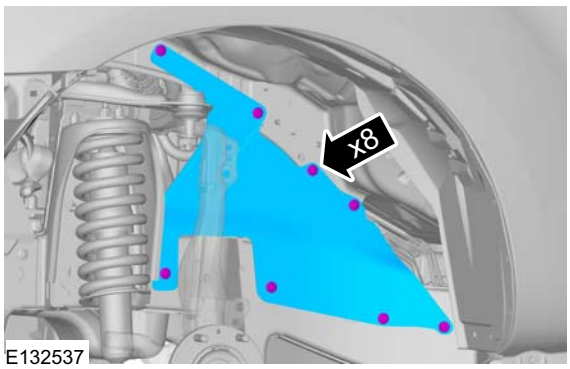

E132537

5. 1. Torque: 10 Nm
   2. Torque: 10 Nm
   3. Torque: 10 Nm

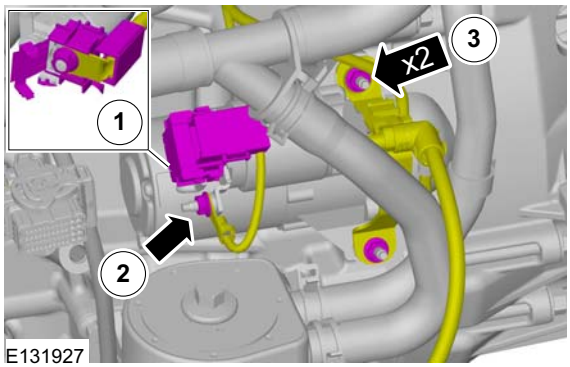

E131927

6. Torque: 35 Nm

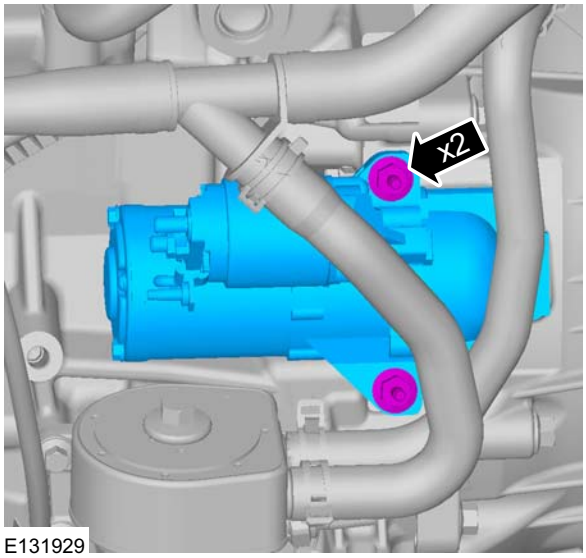

E131929

Installation

1. To install, reverse the removal procedure.

SECTION 303-06B Starting System — 2.2L Duratorq-TDCi (88kW/120PS) - Puma/2.2L Duratorq-TDCi (96kW/130PS) - Puma/2.2L Duratorq-TDCi (110kW/150PS) - Puma/3.2L Duratorq-TDCi (148kW/200PS) - Puma

VEHICLE APPLICATION: 2011.50 Ranger

CONTENTS PAGE

REMOVAL AND INSTALLATION

Starter Motor — 2.2L Duratorq-TDCi (88kW/120PS) - Puma/2.2L Duratorq-TDCi (96kW/130PS) - Puma/2.2L Duratorq-TDCi (110kW/150PS) - Puma..... (26 204 0) 303-06B-2
Starter Motor — 3.2L Duratorq-TDCi (148kW/200PS) - Puma..... (26 204 0) 303-06B-4

REMOVAL AND INSTALLATION

Starter Motor — 2.2L Duratorq-TDCi (88kW/120PS) - Puma/2.2L Duratorq-TDCi (96kW/130PS) - Puma/2.2L Duratorq-TDCi (110kW/150PS) - Puma(26 204 0)

Removal

NOTE: Removal steps in this procedure may contain installation details.

All vehicles

1. Refer to: Battery Disconnect and Connect (414-01 Battery, Mounting and Cables, General Procedures).
2. Remove Front LH wheel only.

   Refer to: Wheel and Tire (204-04 Wheels and Tires, Removal and Installation).
3. Refer to: Lifting (100-02 Jacking and Lifting, Description and Operation).
4.

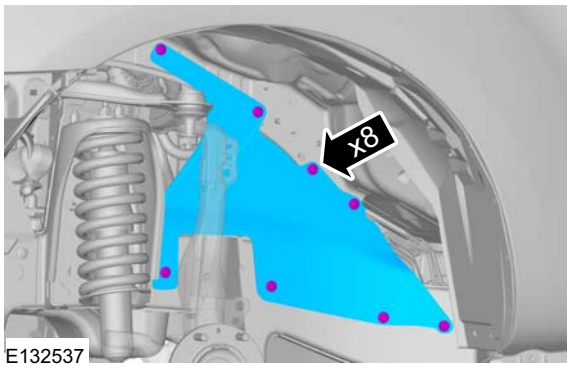

E132537

Vehicles with automatic transmission

5. Refer to: Cooling System Draining, Filling and Bleeding - 2.2L Duratorq-TDCi (88kW/120PS) - Puma/2.2L Duratorq-TDCi (96kW/130PS) - Puma/2.2L Duratorq-TDCi (110kW/150PS) - Puma/3.2L Duratorq-TDCi (148kW/200PS) - Puma (303-03 Engine Cooling - 2.2L Duratorq-TDCi (88kW/120PS) - Puma/2.2L Duratorq-TDCi (96kW/130PS) - Puma/2.2L Duratorq-TDCi (110kW/150PS) - Puma, General Procedures).
6.

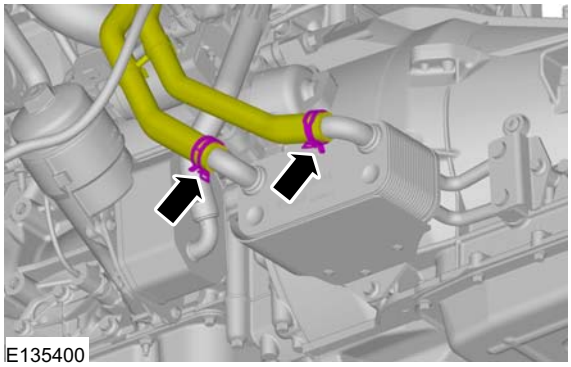
E135400

All vehicles

7. 1. Torque: 10 Nm
   2. Torque: 10 Nm
   3. Torque: 10 Nm

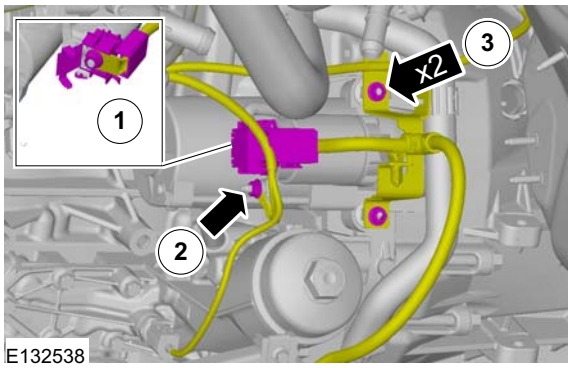

E132538

REMOVAL AND INSTALLATION

8. Torque: 35 Nm

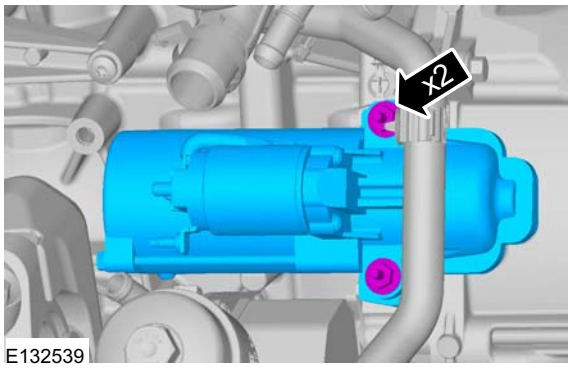

Installation

1. To install, reverse the removal procedure.

REMOVAL AND INSTALLATION

Starter Motor — 3.2L Duratorq-TDCi (148kW/200PS) - Puma(26 204 0)

Removal

NOTE: Removal steps in this procedure may contain installation details.

All vehicles

1. Refer to: Battery Disconnect and Connect (414-01 Battery, Mounting and Cables, General Procedures).
2. Remove Front LH Wheel only.

   Refer to: Wheel and Tire (204-04 Wheels and Tires, Removal and Installation).
3. Refer to: Lifting (100-02 Jacking and Lifting, Description and Operation).
4.

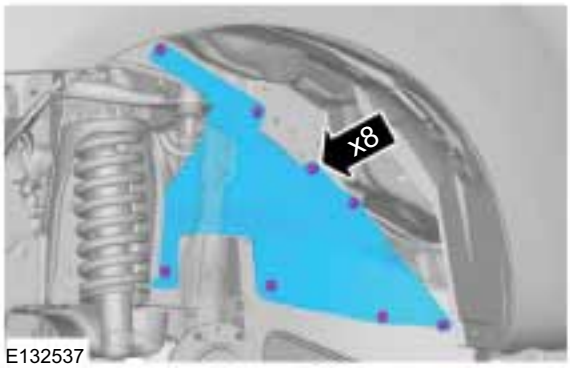

E132537

Vehicles with automatic transmission

5. Refer to: Cooling System Draining, Filling and Bleeding - 2.2L Duratorq-TDCi (88kW/120PS) - Puma/2.2L Duratorq-TDCi (96kW/130PS) - Puma/2.2L Duratorq-TDCi (110kW/150PS) - Puma/3.2L Duratorq-TDCi (148kW/200PS) - Puma (303-03 Engine Cooling - 2.2L Duratorq-TDCi (88kW/120PS) - Puma/2.2L Duratorq-TDCi (96kW/130PS) - Puma/2.2L Duratorq-TDCi (110kW/150PS) - Puma, General Procedures).
6.

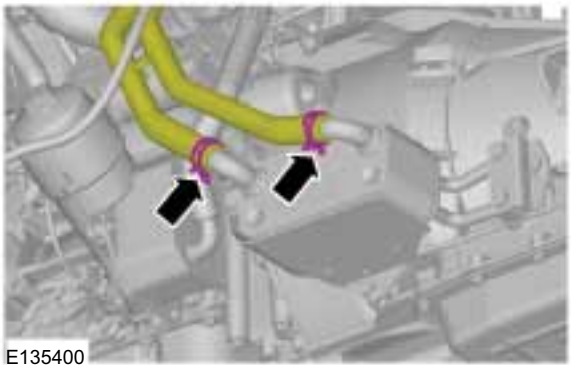
E135400

All vehicles

7. 1. Torque: 10 Nm
   2. Torque: 10 Nm
   3. Torque: 10 Nm

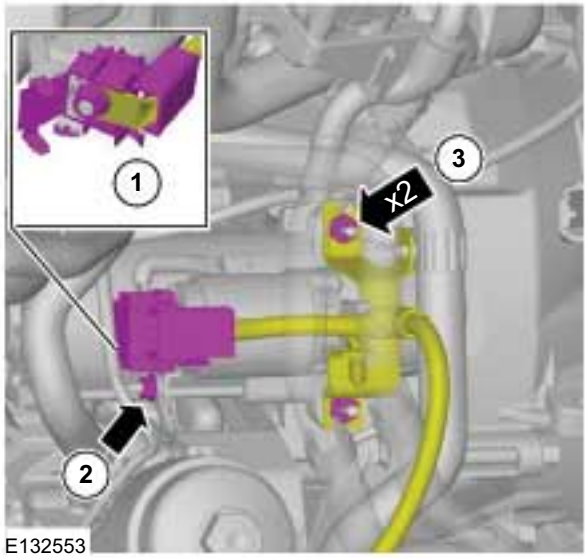

E132553

REMOVAL AND INSTALLATION

8. Torque: 35 Nm

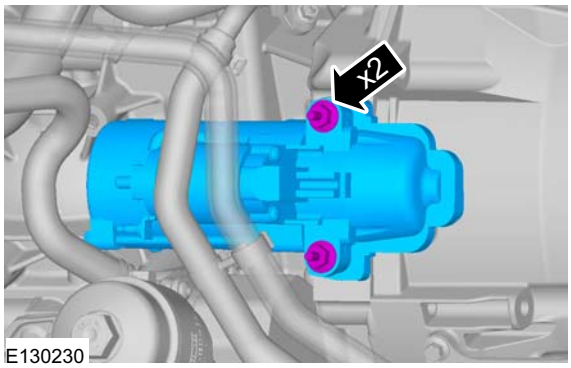

Installation

1. To install, reverse the removal procedure.

SECTION 303-07A Engine Ignition — 2.5L Duratec-HE (122kW/165PS) - MI4

VEHICLE APPLICATION: 2011.50 Ranger

CONTENTS PAGE

SPECIFICATIONS

Specifications..... 303-07A-2

SPECIFICATIONS

Torque Specifications

Item	Nm	lb-ft	lb-in
Ignition coil-on-plug retaining bolt(s)	8	-	71
Spark plug(s)	12	-	106

Item	mm
Spark plug gap	1,3

SECTION 303-07B Glow Plug System — 2.2L Duratorq-TDCi (88kW/120PS) - Puma/2.2L Duratorq-TDCi (96kW/130PS) - Puma/2.2L Duratorq-TDCi (110kW/150PS) - Puma

VEHICLE APPLICATION: 2011.50 Ranger

CONTENTS PAGE

SPECIFICATIONS

Specifications..... 303-07B-2

DESCRIPTION AND OPERATION

Glow Plug System..... 303-07B-3

DIAGNOSIS AND TESTING

Glow Plug System..... 303-07B-5
Inspection and Verification..... 303-07B-5

REMOVAL AND INSTALLATION

Glow Plugs..... (23 777 0) 303-07B-6

SPECIFICATIONS

Torque Specifications

Description	Nm	lb-ft	lb-in
Glow plug electrical connector retaining nut	2	-	18
Main wiring harness to glow plug wiring harness nut	4	-	35
Glow plug terminal block retaining screw	5	-	44
Intake manifold retaining bolts	16	12	-
Glow plug	12	9	-

DESCRIPTION AND OPERATION

Glow Plug System

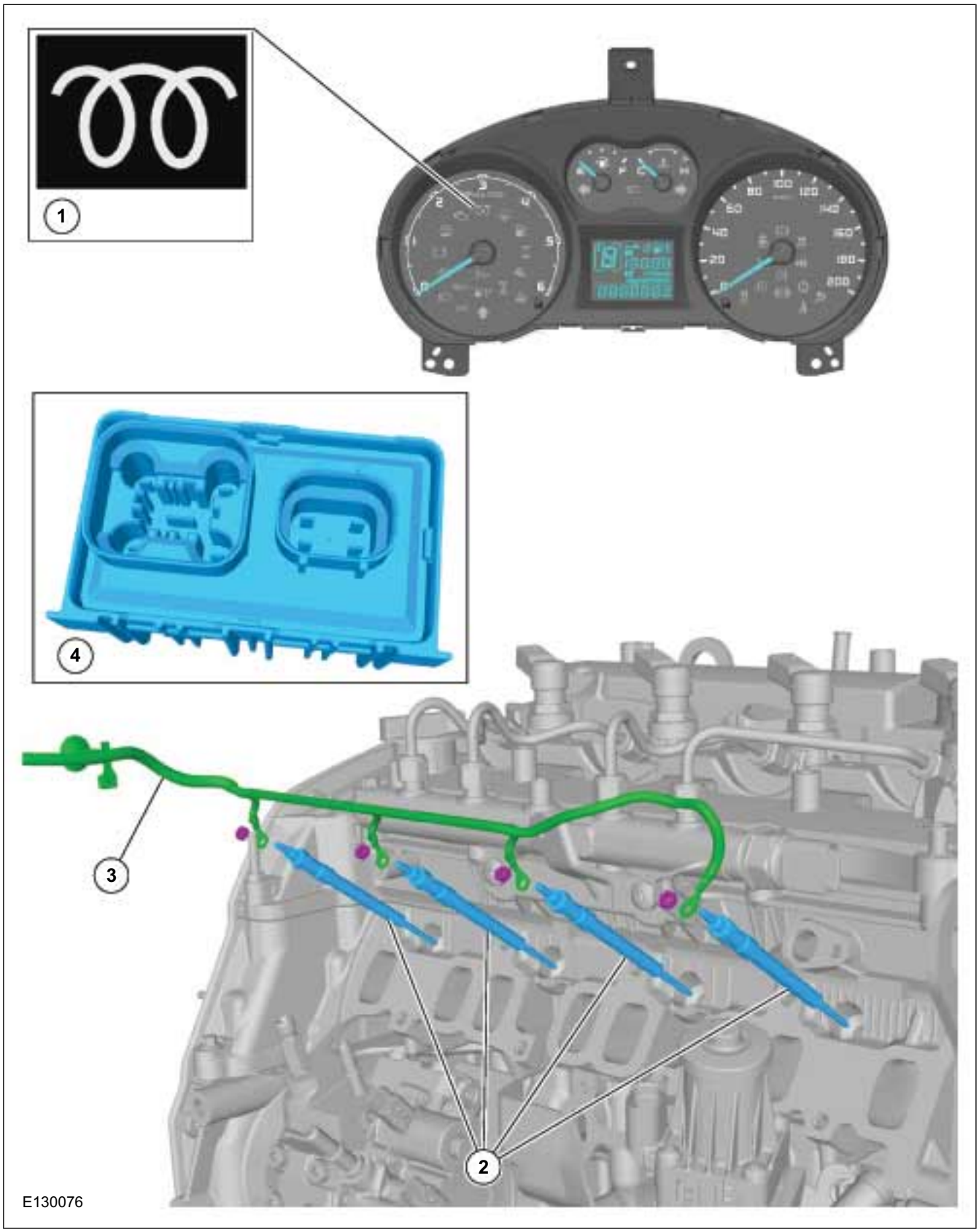

DESCRIPTION AND OPERATION

Item	Part Number	Description
1		Glow plug indicator lamp
2		Glow plug(s)
3		Glow plug wire
4		Glow plug relay

Glow Plugs

The glow plugs are located in the side of the cylinder head and aid engine starting and efficiency. The glow plugs and the glow plug indicator lamp are controlled by the powertrain control module (PCM).

The glow plugs preheat the combustion chambers, which aids cold starting. During the preheat stage, the PCM receives an engine temperature signal from the cylinder head temperature (CHT) sensor and this determines the preheat time. The lower the temperature, the longer the preheat time. There is a maximum preheat time of 8 seconds at -20°C or lower. At temperatures above 80°C there is no preheat phase.

Once the engine has started, the glow plugs enter an after-glow phase. The after-glow phase helps to improve idling and reduce hydrocarbon emissions through more efficient combustion just after starting. The after-glow phase only operates at engine speeds below 2500 RPM, above that, the after-glow phase is interrupted to increase the durability of the glow plugs. There is a maximum after-glow time of 30 seconds at -20°C or lower. At temperatures above 50°C there is no after-glow phase.

DIAGNOSIS AND TESTING

Glow Plug System

Inspection and Verification

1. Verify the customer concern.
2. Visually inspect for obvious signs of electrical damage.

Visual Inspection Chart

Electrical
– Fuse(s) – Relay – Wiring harness – Electrical connector(s) – Glow plug(s) – Glow plug wire – Powertrain control module (PCM)

3. If an obvious cause for an observed or reported concern is found, correct the cause (if possible) before proceeding to the next step.
4. If the cause is not visually evident, verify the symptom and refer to WDS to diagnose the system.

REMOVAL AND INSTALLATION

Glow Plugs(23 777 0)

Removal

NOTE: Removal steps in this procedure may contain installation details.

1. Refer to: Intake Manifold (303-01 Engine - 2.5L Duratec-HE (122kW/165PS) - MI4, Removal and Installation).

CAUTION: Make sure that all openings are sealed.

2. Torque:
   - Glow plug wire retainer 8 Nm
   - Glow plug 13 Nm

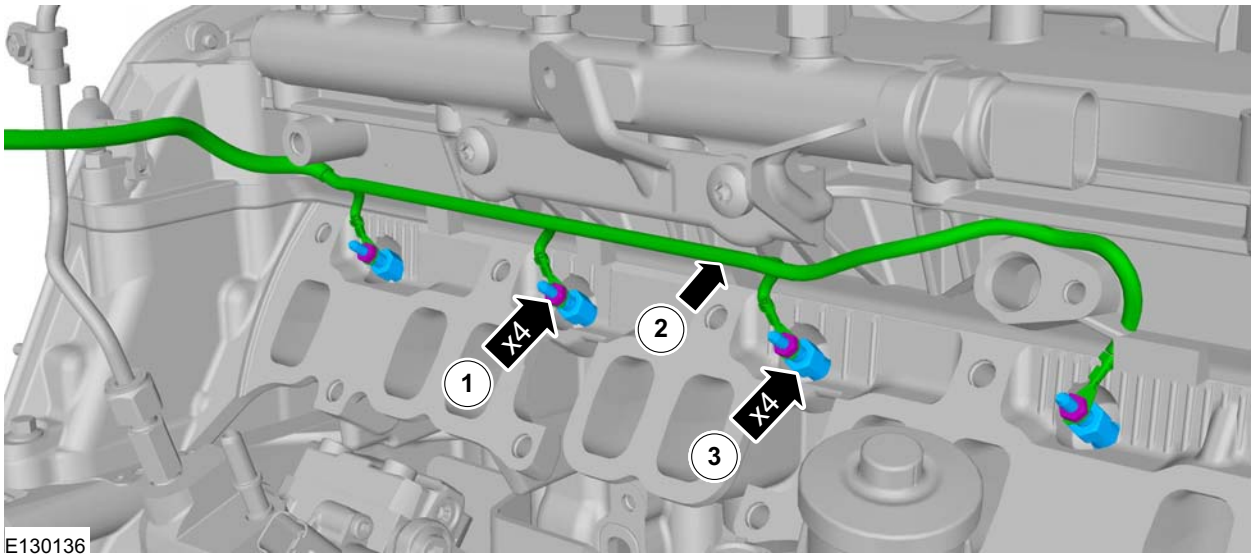

Installation

1. To install, reverse the removal procedure.

SECTION 303-07C Glow Plug System — 3.2L Duratorq-TDCi (148kW/200PS) - Puma

VEHICLE APPLICATION: 2011.50 Ranger

CONTENTS PAGE

DESCRIPTION AND OPERATION

Glow Plug System..... 303-07C-2

DIAGNOSIS AND TESTING

Glow Plug System..... 303-07C-4
Inspection and Verification..... 303-07C-4

REMOVAL AND INSTALLATION

Glow Plugs..... (23 777 0) 303-07C-5

DESCRIPTION AND OPERATION

Glow Plug System

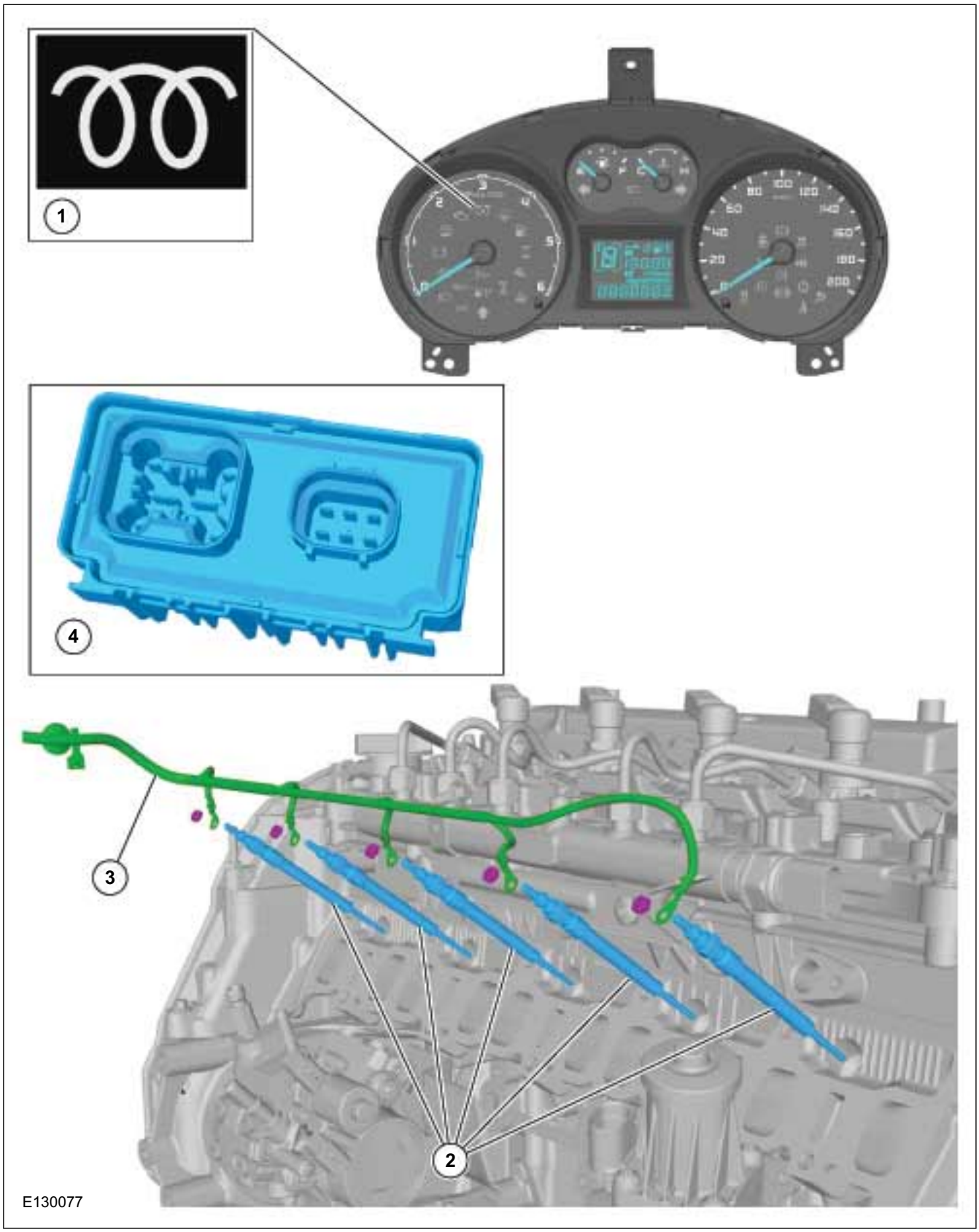

DESCRIPTION AND OPERATION

Item	Part Number	Description
1		Glow plug indicator lamp
2		Glow plug(s)
3		Glow plug wire
4		Glow plug relay

Glow Plugs

The glow plugs are located in the side of the cylinder head and aid engine starting and efficiency. The glow plugs and the glow plug indicator lamp are controlled by the powertrain control module (PCM).

The glow plugs preheat the combustion chambers, which aids cold starting. During the preheat stage, the PCM receives an engine temperature signal from the cylinder head temperature (CHT) sensor and this determines the preheat time. The lower the temperature, the longer the preheat time. There is a maximum preheat time of 8 seconds at -20°C or lower. At temperatures above 80°C there is no preheat phase.

Once the engine has started, the glow plugs enter an after-glow phase. The after-glow phase helps to improve idling and reduce hydrocarbon emissions through more efficient combustion just after starting. The after-glow phase only operates at engine speeds below 2500 RPM, above that, the after-glow phase is interrupted to increase the durability of the glow plugs. There is a maximum after-glow time of 30 seconds at -20°C or lower. At temperatures above 50°C there is no after-glow phase.

DIAGNOSIS AND TESTING

Glow Plug System

Inspection and Verification

1. Verify the customer concern.
2. Visually inspect for obvious signs of electrical damage.

Visual Inspection Chart

Electrical
– Fuse(s) – Relay – Wiring harness – Electrical connector(s) – Glow plug(s) – Glow plug wire – Powertrain control module (PCM)

3. If an obvious cause for an observed or reported concern is found, correct the cause (if possible) before proceeding to the next step.
4. If the cause is not visually evident, verify the symptom and refer to WDS to diagnose the system.

REMOVAL AND INSTALLATION

Glow Plugs(23 777 0)

Removal

NOTE: Removal steps in this procedure may contain installation details.

1. Refer to: Intake Manifold (303-01 Engine - 3.2L Duratorq-TDCi (148kW/200PS) - Puma, Removal and Installation).

CAUTION: Make sure that all openings are sealed.

2. Torque:
   - Glow plug wire retainer 8 Nm
   - Glow plug 13 Nm

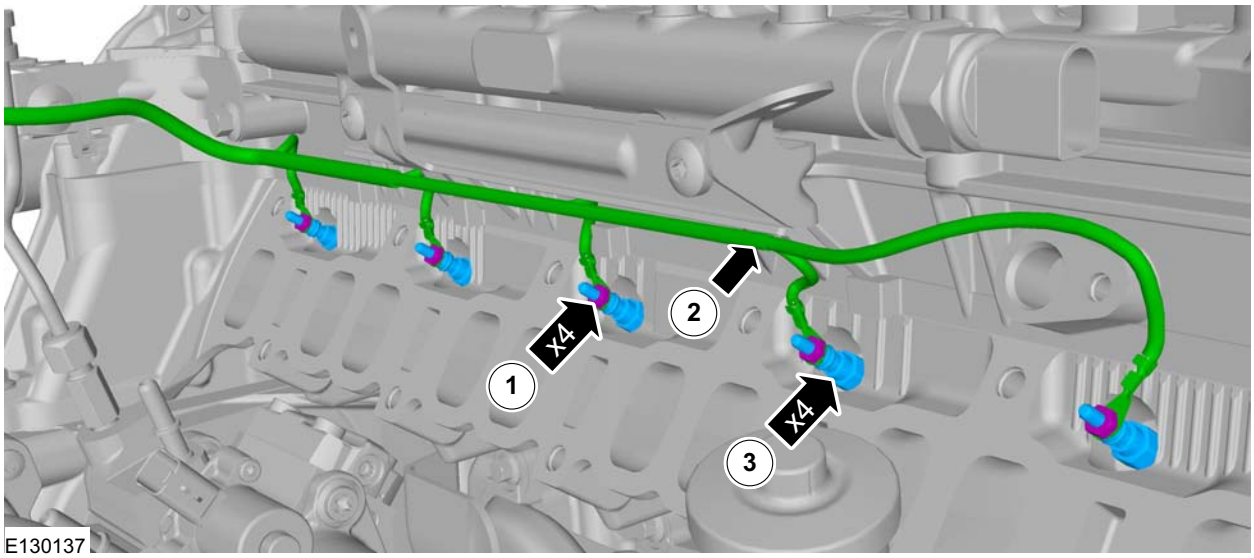

Installation

1. To install, reverse the removal procedure

SECTION 303-08A Engine Emission Control — 2.2L Duratorq-TDCi (88kW/120PS) - Puma/2.2L Duratorq-TDCi (96kW/130PS) - Puma/2.2L Duratorq-TDCi (110kW/150PS) - Puma/3.2L Duratorq-TDCi (148kW/200PS) - Puma

VEHICLE APPLICATION: 2011.50 Ranger

CONTENTS PAGE

DESCRIPTION AND OPERATION

Engine Emission Control..... 303-08A-2
Vehicles with 2.2L Duratorq-TDCi (Puma) diesel engine..... 303-08A-2
Vehicles with 3.2L Duratorq-TDCi (Puma) diesel engine..... 303-08A-3

REMOVAL AND INSTALLATION

Exhaust Gas Recirculation (EGR) Valve — 2.2L Duratorq-TDCi (88kW/120PS) - Puma/2.2L Duratorq-TDCi (96kW/130PS) - Puma/2.2L Duratorq-TDCi (110kW/150PS) - Puma..... (23 312 0) 303-08A-4
Exhaust Gas Recirculation (EGR) Valve — 3.2L Duratorq-TDCi (148kW/200PS) - Puma..... (23 312 0) 303-08A-5
Cooled Exhaust Gas Recirculation (EGR) Valve — 2.2L Duratorq-TDCi (88kW/120PS) - Puma/2.2L Duratorq-TDCi (96kW/130PS) - Puma/2.2L Duratorq-TDCi (110kW/150PS) - Puma/3.2L Duratorq-TDCi (148kW/200PS) - Puma..... 303-08A-6
Exhaust Gas Recirculation (EGR) Cooler — 2.2L Duratorq-TDCi (88kW/120PS) - Puma/2.2L Duratorq-TDCi (96kW/130PS) - Puma/2.2L Duratorq-TDCi (110kW/150PS) - Puma..... (23 299 0) 303-08A-7
Exhaust Gas Recirculation (EGR) Cooler — 3.2L Duratorq-TDCi (148kW/200PS) - Puma..... (23 299 0) 303-08A-9
Exhaust Gas Recirculation (EGR) Valve Outlet Tube — 2.2L Duratorq-TDCi (88kW/120PS) - Puma/2.2L Duratorq-TDCi (96kW/130PS) - Puma/2.2L Duratorq-TDCi (110kW/150PS) - Puma..... (23 301 0) 303-08A-11
Exhaust Gas Recirculation (EGR) Valve Outlet Tube — 3.2L Duratorq-TDCi (148kW/200PS) - Puma..... (23 301 0) 303-08A-12

DESCRIPTION AND OPERATION

Engine Emission Control

Vehicles with 2.2L Duratorq-TDCi (Puma) diesel engine

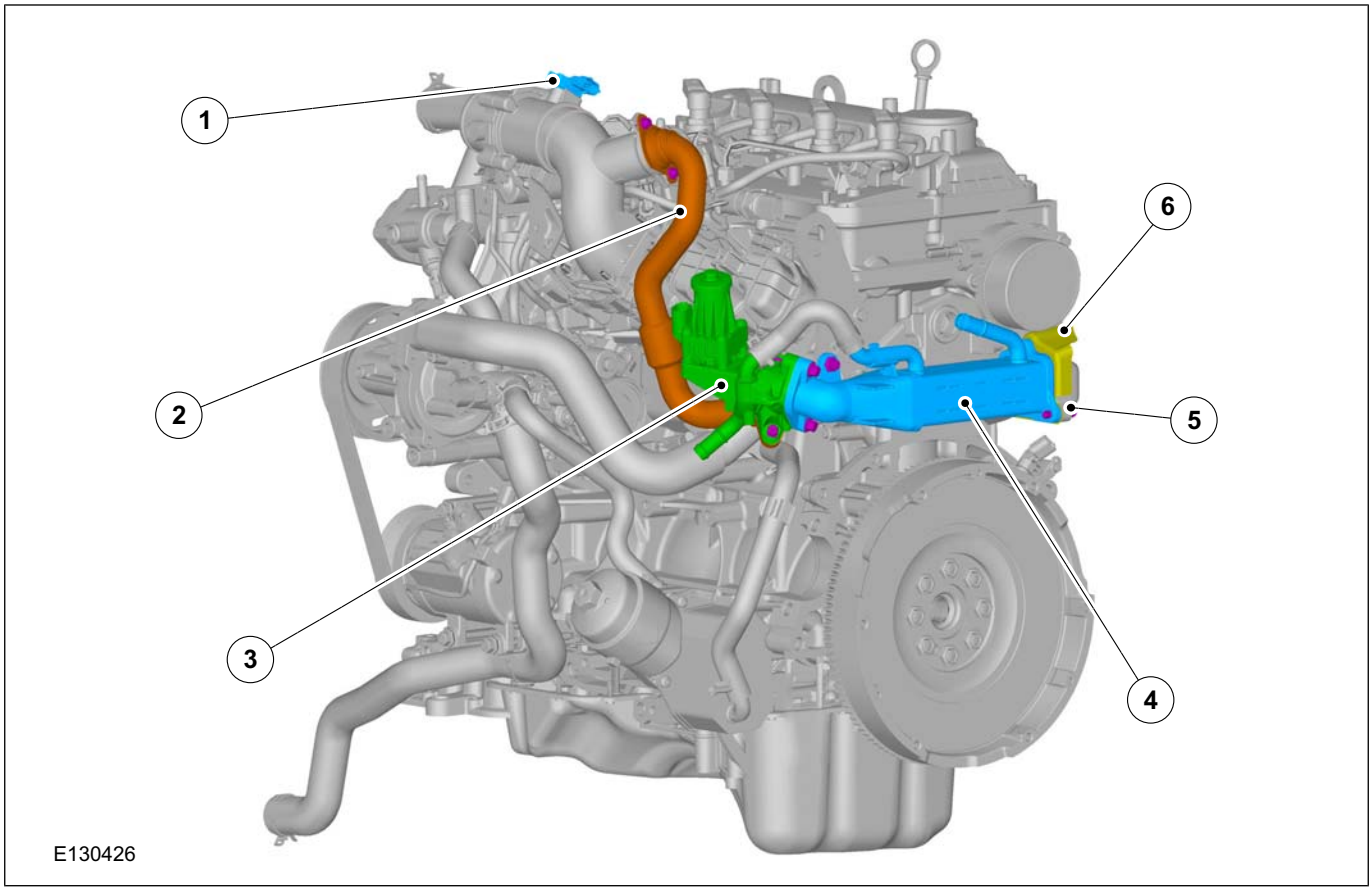

Item	Description
1	Intake air temperature (IAT) sensor
2	Exhaust gas recirculation (EGR) valve outlet tube
3	EGR valve

Item	Description
4	EGR cooler
5	Exhaust manifold
6	Heat shield

DESCRIPTION AND OPERATION

Vehicles with 3.2L Duratorq-TDCi (Puma) diesel engine

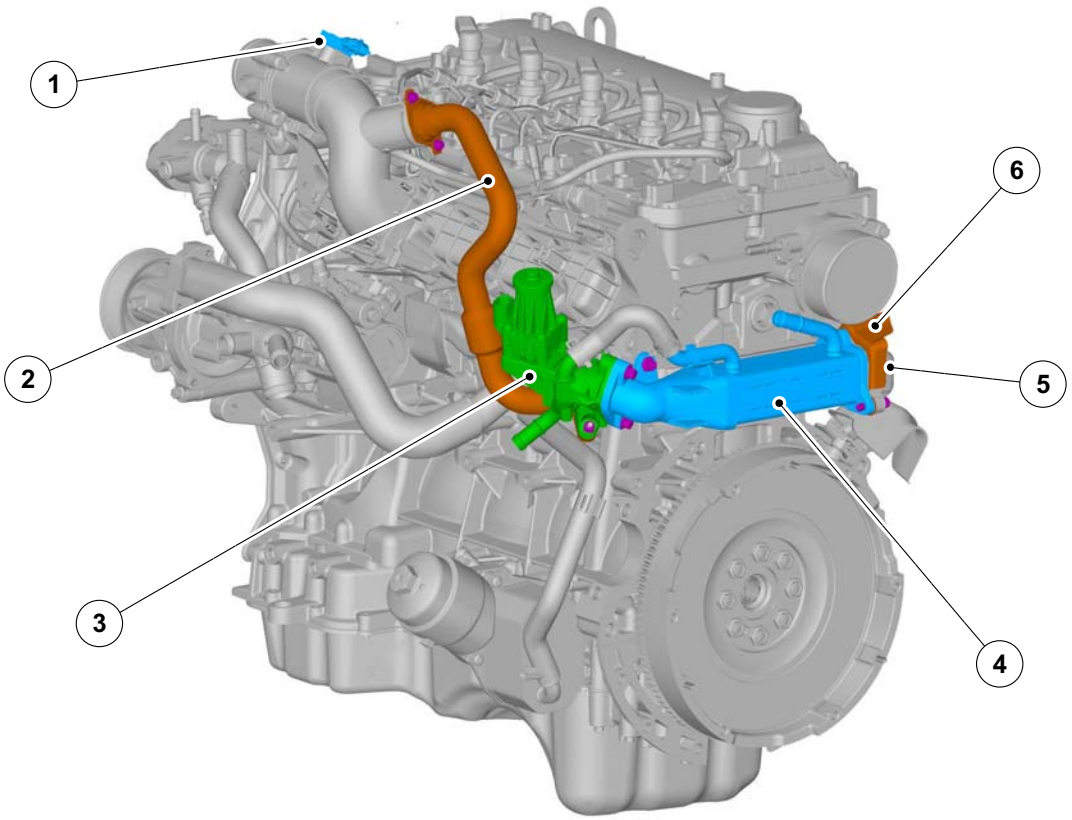

E130427

Item	Description
1	Intake air temperature (IAT) sensor
2	Exhaust gas recirculation (EGR) valve outlet tube
3	EGR valve
4	EGR cooler
5	Exhaust manifold
6	Heat shield

REMOVAL AND INSTALLATION

Exhaust Gas Recirculation (EGR) Valve — 2.2L Duratorq-TDCi (88kW/120PS) - Puma/2.2L Duratorq-TDCi (96kW/130PS) - Puma/2.2L Duratorq-TDCi (110kW/150PS) - Puma(23 312 0)

General Equipment

Hose Clamp Remover/Installer

Removal

NOTE: Removal steps in this procedure may contain installation details.

1. Refer to: Cooling System Draining, Filling and Bleeding - 2.2L Duratorq-TDCi (88kW/120PS) - Puma/2.2L Duratorq-TDCi (96kW/130PS) - Puma/2.2L Duratorq-TDCi (110kW/150PS) - Puma/3.2L Duratorq-TDCi (148kW/200PS) - Puma (303-03 Engine Cooling - 2.2L Duratorq-TDCi (88kW/120PS) - Puma/2.2L Duratorq-TDCi (96kW/130PS) - Puma/2.2L Duratorq-TDCi (110kW/150PS) - Puma, General Procedures).
2. Refer to: Cowl Panel Grille (501-02 Front End Body Panels, Removal and Installation).
3. Refer to: Lifting (100-02 Jacking and Lifting, Description and Operation).
4. Refer to: Wheel and Tire (204-04 Wheels and Tires, Removal and Installation).
5.

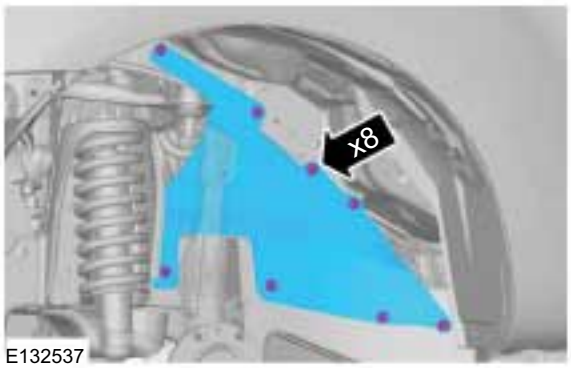

E132537

6. General Equipment: Hose Clamp Remover/Installer

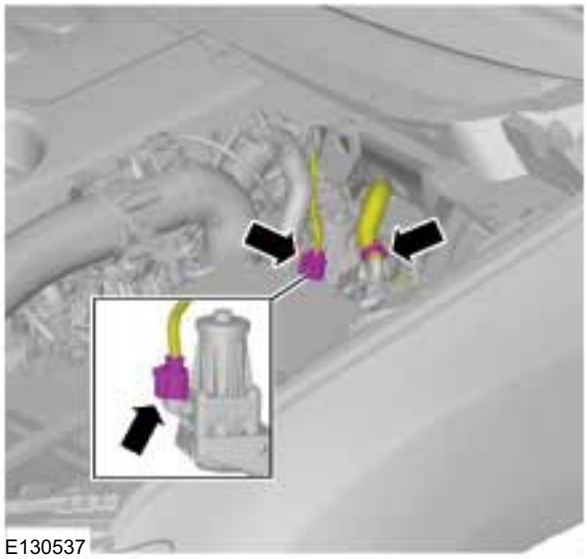
E130537

7. 1. Torque: 10 Nm
   2. Torque: 24 Nm

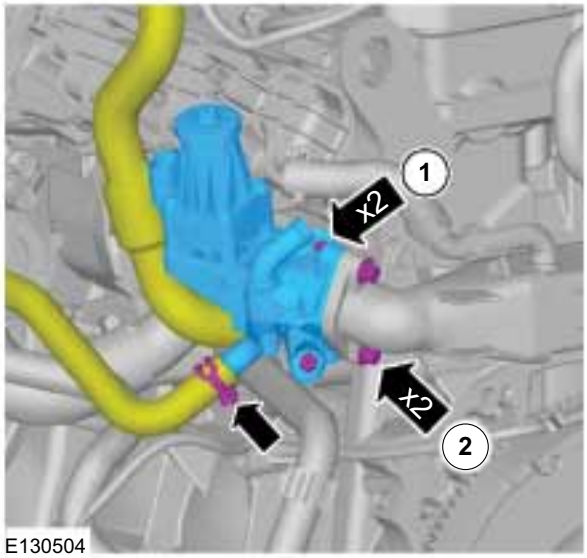

E130504

Installation

NOTE: Install all the bolts finger tight before final tightening.

NOTE: Make sure that new gaskets are installed.

1. To install, reverse the removal procedure.

REMOVAL AND INSTALLATION

Exhaust Gas Recirculation (EGR) Valve — 3.2L Duratorq-TDCi (148kW/200PS) - Puma(23 312 0)

General Equipment

Hose Clamp Remover/Installer

Removal

NOTE: Removal steps in this procedure may contain installation details.

1. Refer to: Cooling System Draining, Filling and Bleeding - 2.2L Duratorq-TDCi (88kW/120PS) - Puma/2.2L Duratorq-TDCi (96kW/130PS) - Puma/2.2L Duratorq-TDCi (110kW/150PS) - Puma/3.2L Duratorq-TDCi (148kW/200PS) - Puma (303-03 Engine Cooling - 2.2L Duratorq-TDCi (88kW/120PS) - Puma/2.2L Duratorq-TDCi (96kW/130PS) - Puma/2.2L Duratorq-TDCi (110kW/150PS) - Puma, General Procedures).
2. Refer to: Cowl Panel Grille (501-02 Front End Body Panels, Removal and Installation).
3. Refer to: Lifting (100-02 Jacking and Lifting, Description and Operation).
4. Refer to: Wheel and Tire (204-04 Wheels and Tires, Removal and Installation).
5.

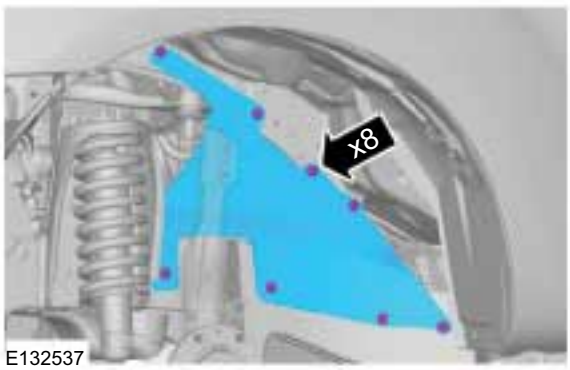

E132537

6. General Equipment: Hose Clamp Remover/Installer

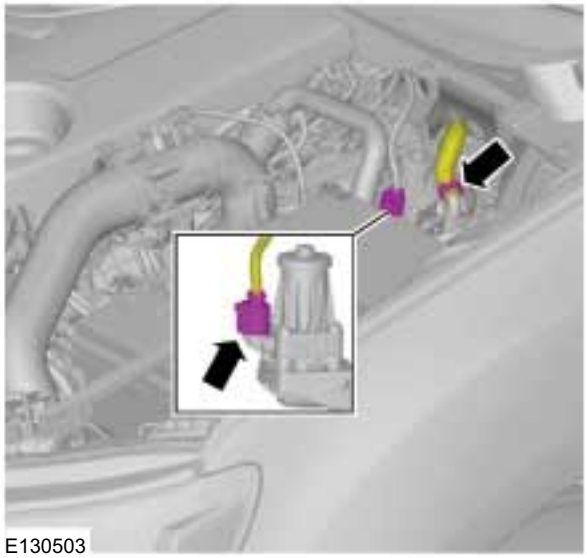
E130503

7. 1. Torque: 10 Nm
   2. Torque: 24 Nm

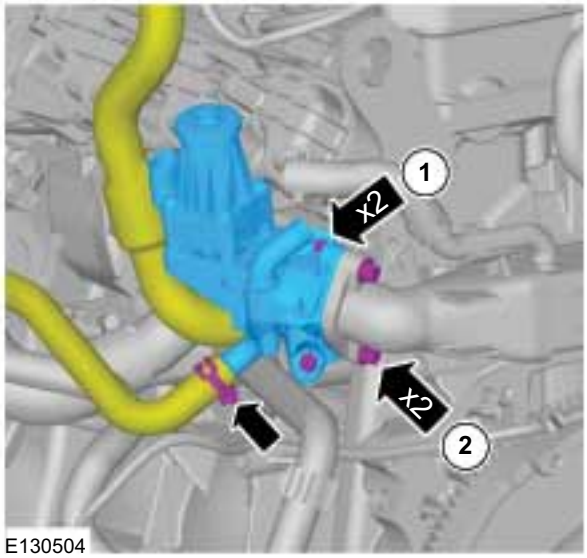

E130504

Installation

NOTE: Install all the bolts finger tight before final tightening.

NOTE: Make sure that new gaskets are installed.

1. To install, reverse the removal procedure.

REMOVAL AND INSTALLATION

Cooled Exhaust Gas Recirculation (EGR) Valve — 2.2L Duratorq-TDCi (88kW/120PS) - Puma/2.2L Duratorq-TDCi (96kW/130PS) - Puma/2.2L Duratorq-TDCi (110kW/150PS) - Puma/3.2L Duratorq-TDCi (148kW/200PS) - Puma

General Equipment

Hose Clamp(s)

General Equipment

Hose Clamp Remover/Installer

Removal

NOTE: Removal steps in this procedure may contain installation details.

1. Refer to: Lifting (100-02 Jacking and Lifting, Description and Operation).
2. General Equipment: Hose Clamp Remover/Installer
   General Equipment: Hose Clamp(s)

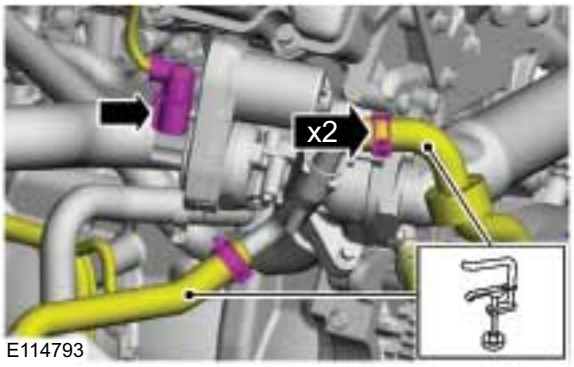

3. Torque:
   - 1: 10 Nm
   - 2: 24 Nm

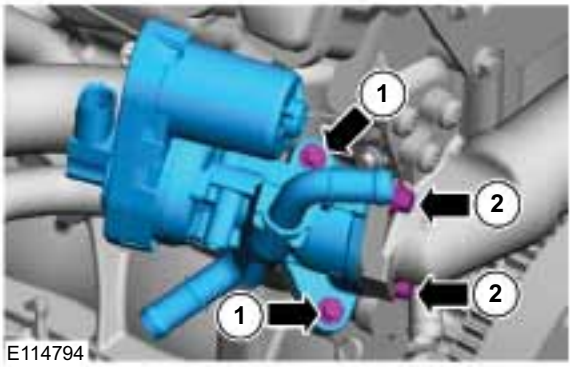

Installation

1. **NOTE:** Install all the bolts finger tight before final tightening.

To install, reverse the removal procedure.

2. Refer to: Cooling System Draining, Filling and Bleeding - 2.2L Duratorq-TDCi (88kW/120PS) - Puma/2.2L Duratorq-TDCi (96kW/130PS) - Puma/2.2L Duratorq-TDCi (110kW/150PS) - Puma/3.2L Duratorq-TDCi (148kW/200PS) - Puma (303-03 Engine Cooling - 2.2L Duratorq-TDCi (88kW/120PS) - Puma/2.2L Duratorq-TDCi (96kW/130PS) - Puma/2.2L Duratorq-TDCi (110kW/150PS) - Puma, General Procedures).
   Refer to: Cooling System Draining, Filling and Bleeding - 2.2L Duratorq-TDCi (88kW/120PS) - Puma/2.2L Duratorq-TDCi (96kW/130PS) - Puma/2.2L Duratorq-TDCi (110kW/150PS) - Puma/3.2L Duratorq-TDCi (148kW/200PS) - Puma (303-03 Engine Cooling - 3.2L Duratorq-TDCi (148kW/200PS) - Puma, General Procedures).

REMOVAL AND INSTALLATION

Exhaust Gas Recirculation (EGR) Cooler — 2.2L Duratorq-TDCi (88kW/120PS) - Puma/2.2L Duratorq-TDCi (96kW/130PS) - Puma/2.2L Duratorq-TDCi (110kW/150PS) - Puma(23 299 0)

General Equipment

Hose Clamp Remover/Installer

Removal

NOTE: Removal steps in this procedure may contain installation details.

1. Refer to: Battery Disconnect and Connect (414-01 Battery, Mounting and Cables, General Procedures).
2. Refer to: Cooling System Draining, Filling and Bleeding - 2.2L Duratorq-TDCi (88kW/120PS) - Puma/2.2L Duratorq-TDCi (96kW/130PS) - Puma/2.2L Duratorq-TDCi (110kW/150PS) - Puma/3.2L Duratorq-TDCi (148kW/200PS) - Puma (303-03 Engine Cooling - 2.2L Duratorq-TDCi (88kW/120PS) - Puma/2.2L Duratorq-TDCi (96kW/130PS) - Puma/2.2L Duratorq-TDCi (110kW/150PS) - Puma, General Procedures).
3. Refer to: Lifting (100-02 Jacking and Lifting, Description and Operation).
4. Refer to: Wheel and Tire (204-04 Wheels and Tires, Removal and Installation).
5.

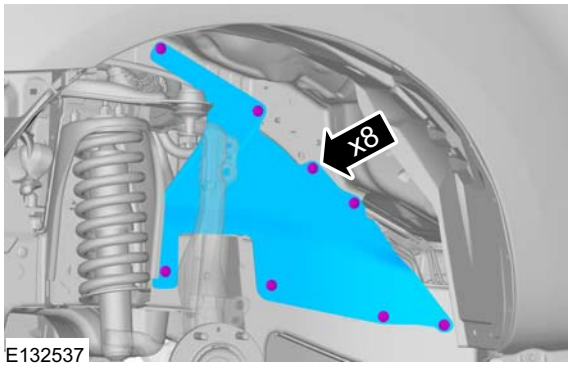

E132537

6. Refer to: Exhaust Gas Recirculation (EGR) Valve - 2.2L Duratorq-TDCi (88kW/120PS) - Puma/2.2L Duratorq-TDCi (96kW/130PS) - Puma/2.2L Duratorq-TDCi (110kW/150PS) - Puma (303-08 Engine Emission Control - 2.2L Duratorq-TDCi (88kW/120PS) - Puma/2.2L Duratorq-TDCi (96kW/130PS) - Puma/2.2L Duratorq-TDCi (110kW/150PS) - Puma/3.2L Duratorq-TDCi (148kW/200PS) - Puma, Removal and Installation).
7. Torque: 22 Nm

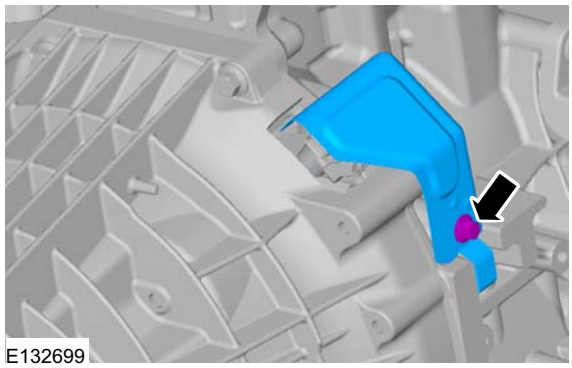
E132699

8. General Equipment: Hose Clamp Remover/Installer
   Torque: 23 Nm

REMOVAL AND INSTALLATION

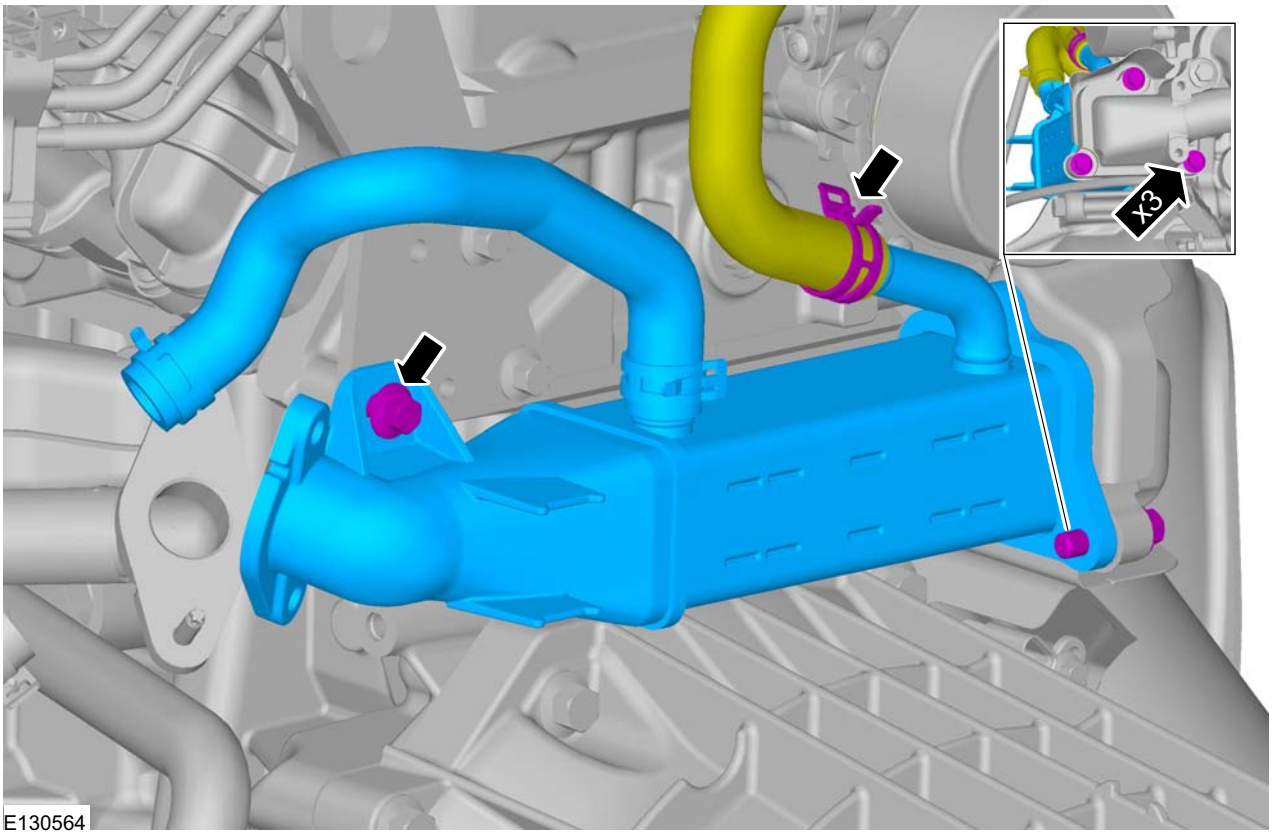

Installation

1. **NOTE:** Make sure that new gaskets are installed.

   To install, reverse the removal procedure.

REMOVAL AND INSTALLATION

Exhaust Gas Recirculation (EGR) Cooler — 3.2L Duratorq-TDCi (148kW/200PS) - Puma(23 299 0)

General Equipment

Hose Clamp Remover/Installer

Removal

NOTE: Removal steps in this procedure may contain installation details.

1. Refer to: Battery Disconnect and Connect (414-01 Battery, Mounting and Cables, General Procedures).
2. Refer to: Cooling System Draining, Filling and Bleeding - 2.2L Duratorq-TDCi (88kW/120PS) - Puma/2.2L Duratorq-TDCi (96kW/130PS) - Puma/2.2L Duratorq-TDCi (110kW/150PS) - Puma/3.2L Duratorq-TDCi (148kW/200PS) - Puma (303-03 Engine Cooling - 2.2L Duratorq-TDCi (88kW/120PS) - Puma/2.2L Duratorq-TDCi (96kW/130PS) - Puma/2.2L Duratorq-TDCi (110kW/150PS) - Puma, General Procedures).
3. Refer to: Lifting (100-02 Jacking and Lifting, Description and Operation).
4. Refer to: Wheel and Tire (204-04 Wheels and Tires, Removal and Installation).
5. 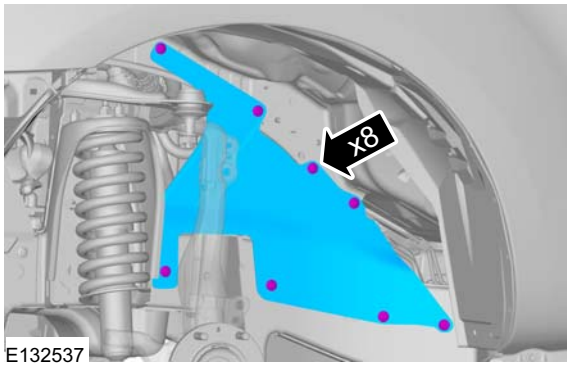

E132537
6. Refer to: Exhaust Gas Recirculation (EGR) Valve - 3.2L Duratorq-TDCi (148kW/200PS) - Puma (303-08 Engine Emission Control - 2.2L Duratorq-TDCi (88kW/120PS) - Puma/2.2L Duratorq-TDCi (96kW/130PS) - Puma/2.2L Duratorq-TDCi (110kW/150PS) - Puma/3.2L Duratorq-TDCi (148kW/200PS) - Puma, Removal and Installation).
7. Torque: 22 Nm
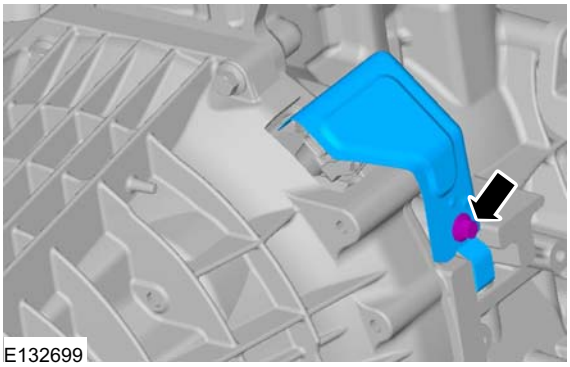
E132699
8. General Equipment: Hose Clamp Remover/Installer
   Torque: 23 Nm

REMOVAL AND INSTALLATION

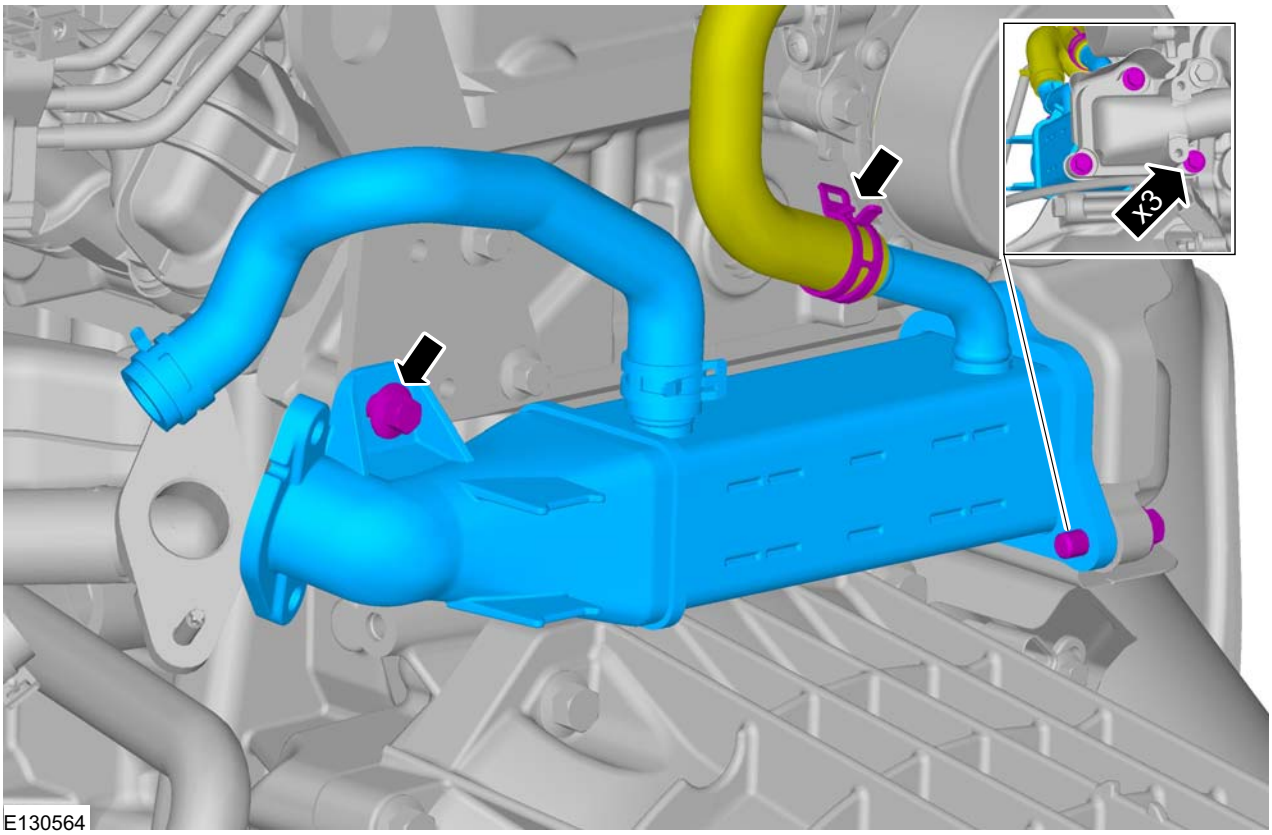

Installation

1. **NOTE:** Make sure that new gaskets are installed.

   To install, reverse the removal procedure.

REMOVAL AND INSTALLATION

Exhaust Gas Recirculation (EGR) Valve Outlet Tube — 2.2L Duratorq-TDCi (88kW/120PS) - Puma/2.2L Duratorq-TDCi (96kW/130PS) - Puma/2.2L Duratorq-TDCi (110kW/150PS) - Puma(23 301 0)

Removal

NOTE: Removal steps in this procedure may contain installation details.

1. **NOTE:** The O-ring is to be reused unless damaged.

   Torque: 10 Nm

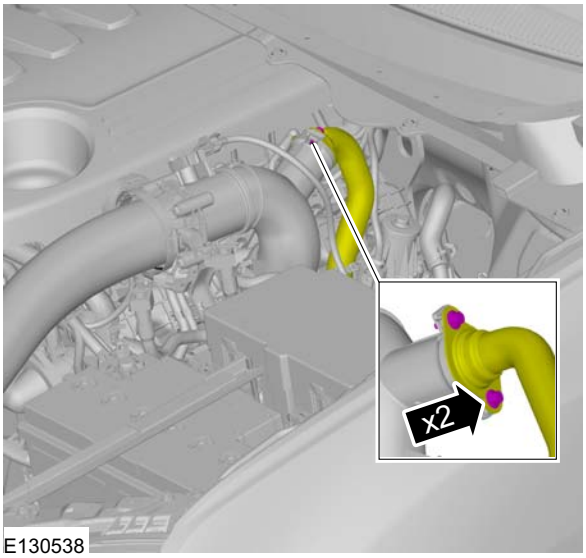

E130538

2. **NOTE:** Make sure that new gaskets are installed.

   Torque: 10 Nm

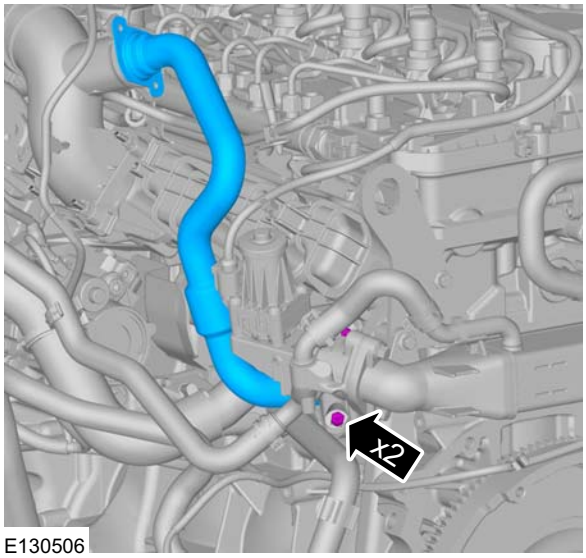

E130506

Installation

NOTE: Install all the bolts finger tight before final tightening.

1. To install, reverse the removal procedure.

REMOVAL AND INSTALLATION

Exhaust Gas Recirculation (EGR) Valve Outlet Tube — 3.2L Duratorq-TDCi (148kW/200PS) - Puma(23 301 0)

Removal

NOTE: Removal steps in this procedure may contain installation details.

1. **NOTE:** The O-ring is to be reused unless damaged.

   Torque: 10 Nm

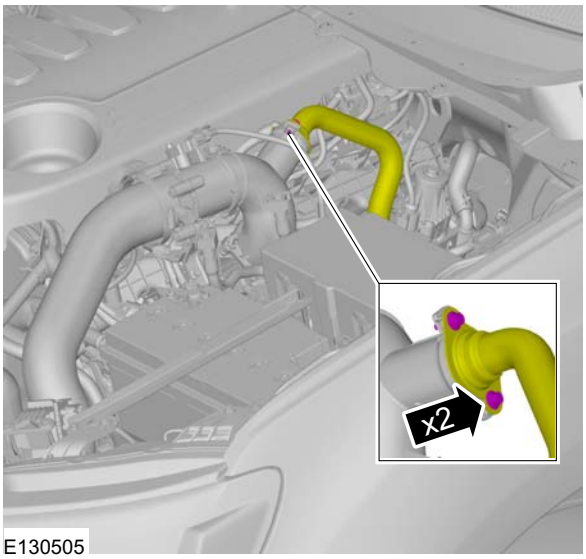

E130505

2. **NOTE:** Make sure that new gaskets are installed.

   Torque: 10 Nm

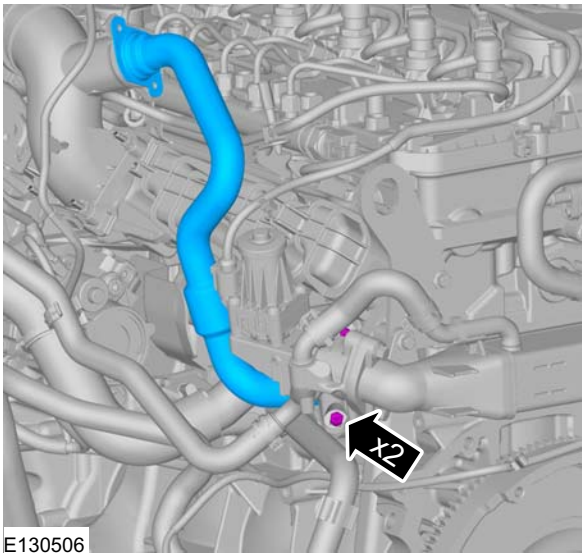

E130506

Installation

NOTE: Install all the bolts finger tight before final tightening.

1. To install, reverse the removal procedure.

SECTION 303-08B Engine Emission Control

VEHICLE APPLICATION: 2011.50 Ranger

CONTENTS PAGE

DESCRIPTION AND OPERATION

Engine Emission Control..... 303-08B-2
Vehicles with 2.5L Duratec-HE engine..... 303-08B-2

REMOVAL AND INSTALLATION

Crankcase Vent Oil Separator — 2.5L Duratec-HE (122kW/165PS) - MI4..... 303-08B-4

DESCRIPTION AND OPERATION

Engine Emission Control

Vehicles with 2.5L Duratec-HE engine

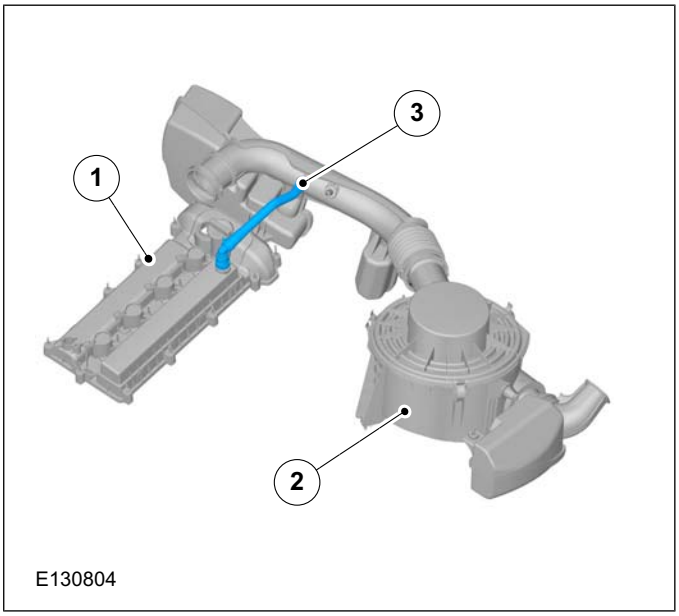

Item	Description
1	Valve cover
2	Air cleaner assembly
3	Valve cover to air cleaner outlet pipe positive crankcase ventilation (PCV) hose

DESCRIPTION AND OPERATION

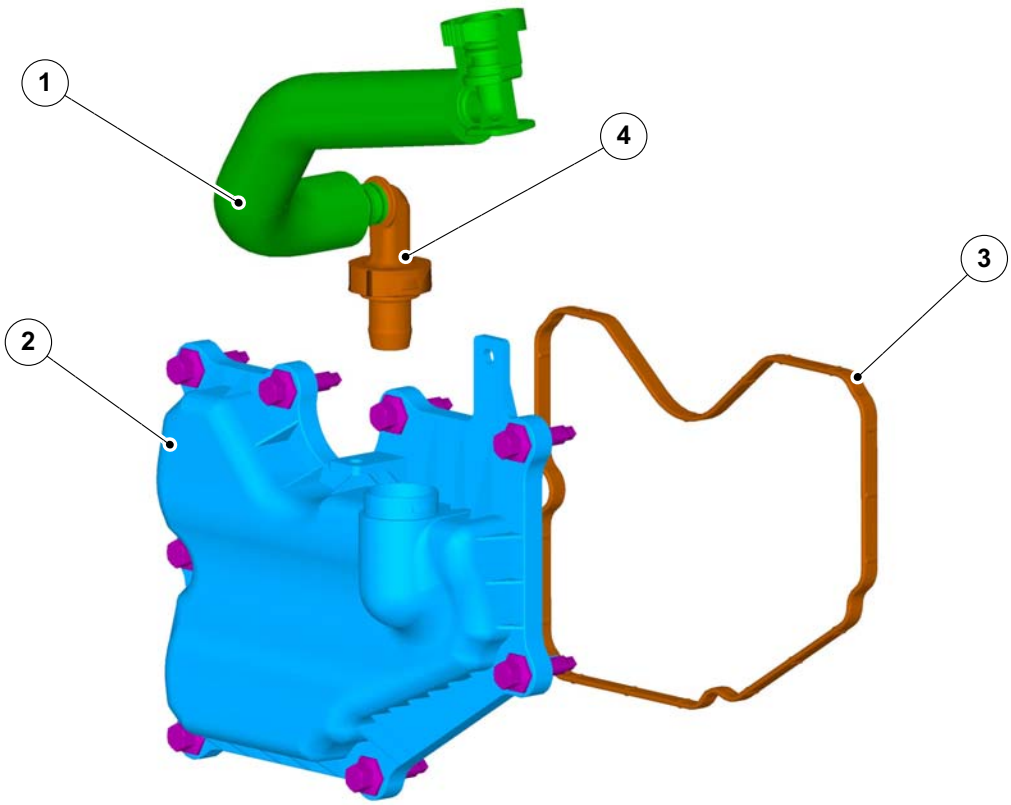

E130803

Item	Description
1	PCV valve to intake manifold PCV hose
2	Crankcase vent oil separator
3	Crankcase vent oil separator gasket
4	PCV valve

PCV System

The PCV system consists of a valve mounted in the crankcase vent oil separator (attached to the cylinder block) and two hoses. One PCV hose connects the PCV valve to the intake manifold, the other PCV hose connects the valve cover to the air cleaner outlet pipe.

Under idle and part throttle conditions, the crankcase vapor flows from the crankcase vent oil separator to the intake manifold and into the combustion chambers where the vapor is burnt during combustion.

Under full throttle conditions, the crankcase vapor flows from the valve cover into the air cleaner outlet pipe through the PCV hose.

REMOVAL AND INSTALLATION

Crankcase Vent Oil Separator — 2.5L Duratec-HE (122kW/165PS) - MI4

Removal

NOTE: Removal steps in this procedure may contain installation details.

1. **NOTE:** The gasket is to be reused unless damaged.

   NOTE: Make sure that the mating faces are clean and free of foreign material.

   Torque: 11 Nm

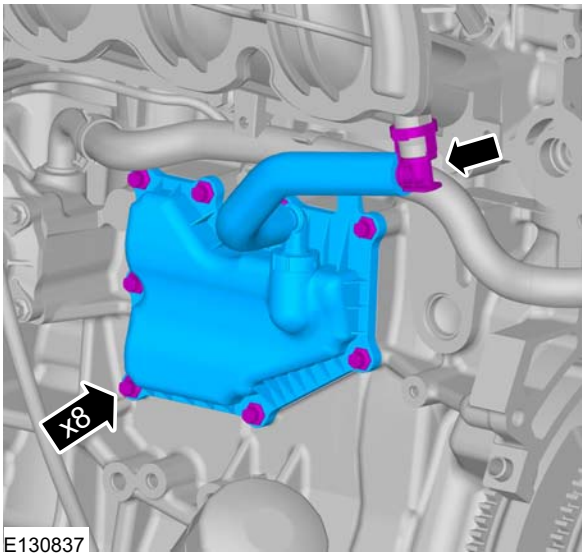

Installation

1. To install, reverse the removal procedure.

SECTION 303-12A Intake Air Distribution and Filtering

— 2.5L Duratec-HE (122kW/165PS) - MI4

VEHICLE APPLICATION: 2011.50 Ranger

CONTENTS PAGE

DESCRIPTION AND OPERATION

Intake Air Distribution and Filtering..... 303-12A-2

REMOVAL AND INSTALLATION

Air Cleaner..... (23 174 0) 303-12A-3

DESCRIPTION AND OPERATION

Intake Air Distribution and Filtering

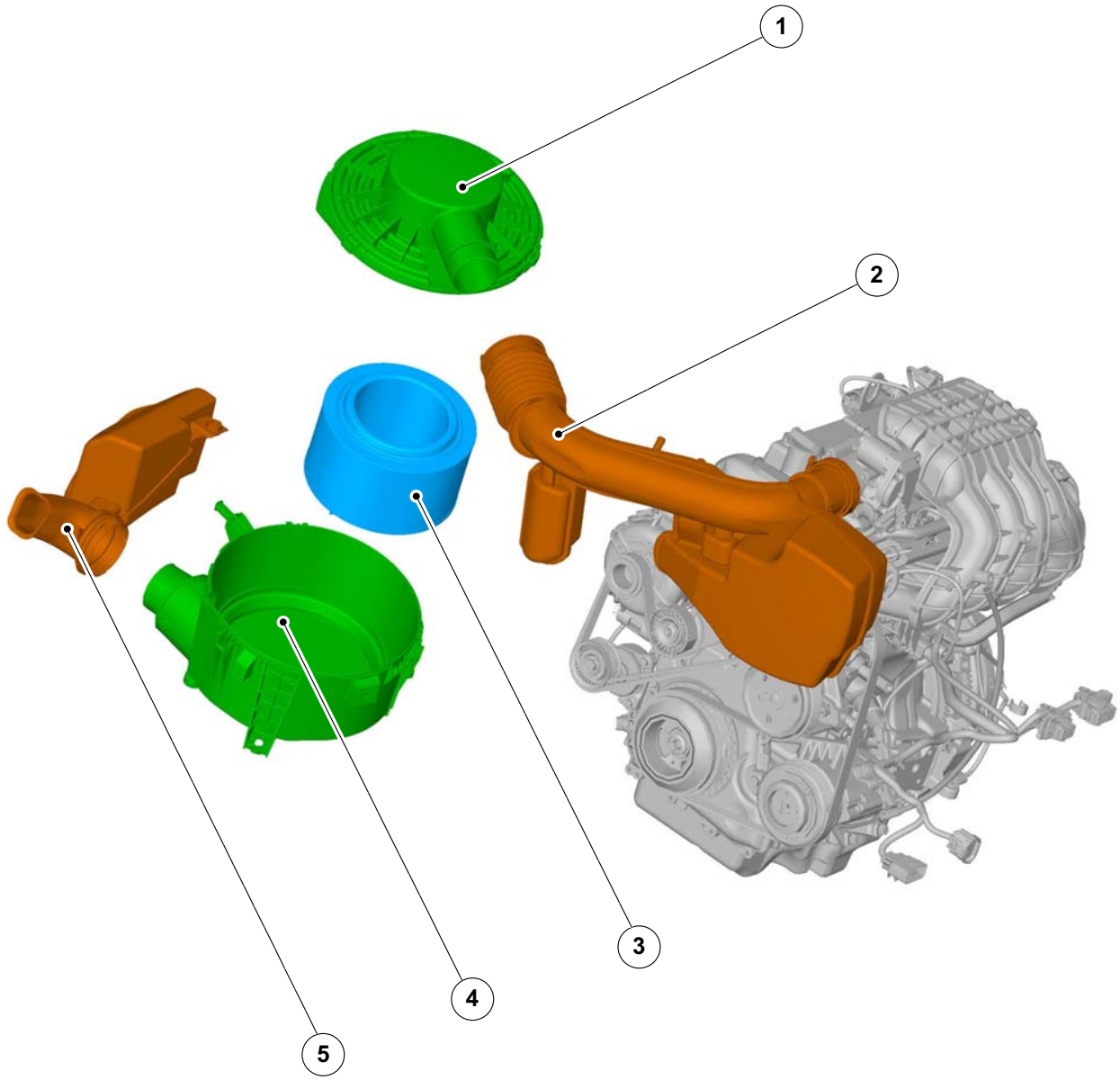

E130404

Item	Description
1.	Air cleaner housing cover
2.	Air cleaner outlet pipe
3.	Air cleaner element
4.	Air cleaner housing
5.	Air cleaner intake pipe

REMOVAL AND INSTALLATION

Air Cleaner(23 174 0)

Removal

NOTE: Removal steps in this procedure may contain installation details.

NOTE: Make sure that crankcase ventilation tube and Brake vaccum pump hose are not disturbed.

1. Torque: 10 Nm

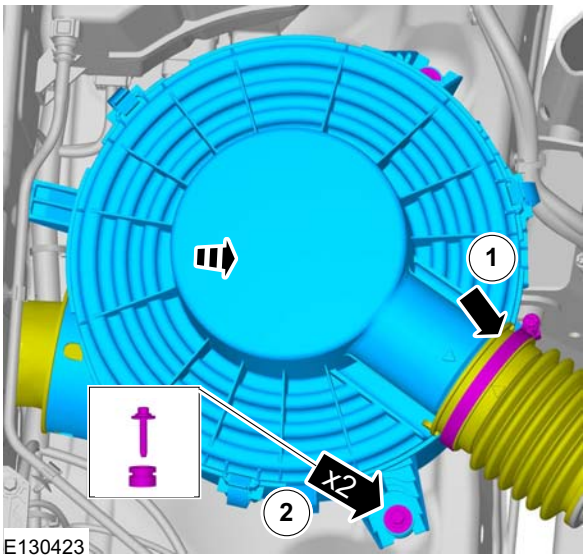

Installation

1. To install, reverse the removal procedure.

SECTION 303-12B Intake Air Distribution and Filtering

— 2.2L Duratorq-TDCi (88kW/120PS) - Puma/2.2L Duratorq-TDCi (96kW/130PS) - Puma/2.2L Duratorq-TDCi (110kW/150PS) - Puma/3.2L Duratorq-TDCi (148kW/200PS) - Puma

VEHICLE APPLICATION: 2011.50 Ranger

CONTENTS PAGE

DESCRIPTION AND OPERATION

Intake Air Distribution and Filtering..... 303-12B-2

REMOVAL AND INSTALLATION

Air Cleaner — 2.2L Duratorq-TDCi (88kW/120PS) - Puma/2.2L Duratorq-TDCi (96kW/130PS) - Puma/2.2L Duratorq-TDCi (110kW/150PS) - Puma..... (23 174 0) 303-12B-4
Air Cleaner — 3.2L Duratorq-TDCi (148kW/200PS) - Puma..... (23 174 0) 303-12B-5
Charge Air Cooler..... (23 620 0) 303-12B-6

DESCRIPTION AND OPERATION

Intake Air Distribution and Filtering

Vehicles with 2.2L Duratorq-TDCi (Puma) diesel engine

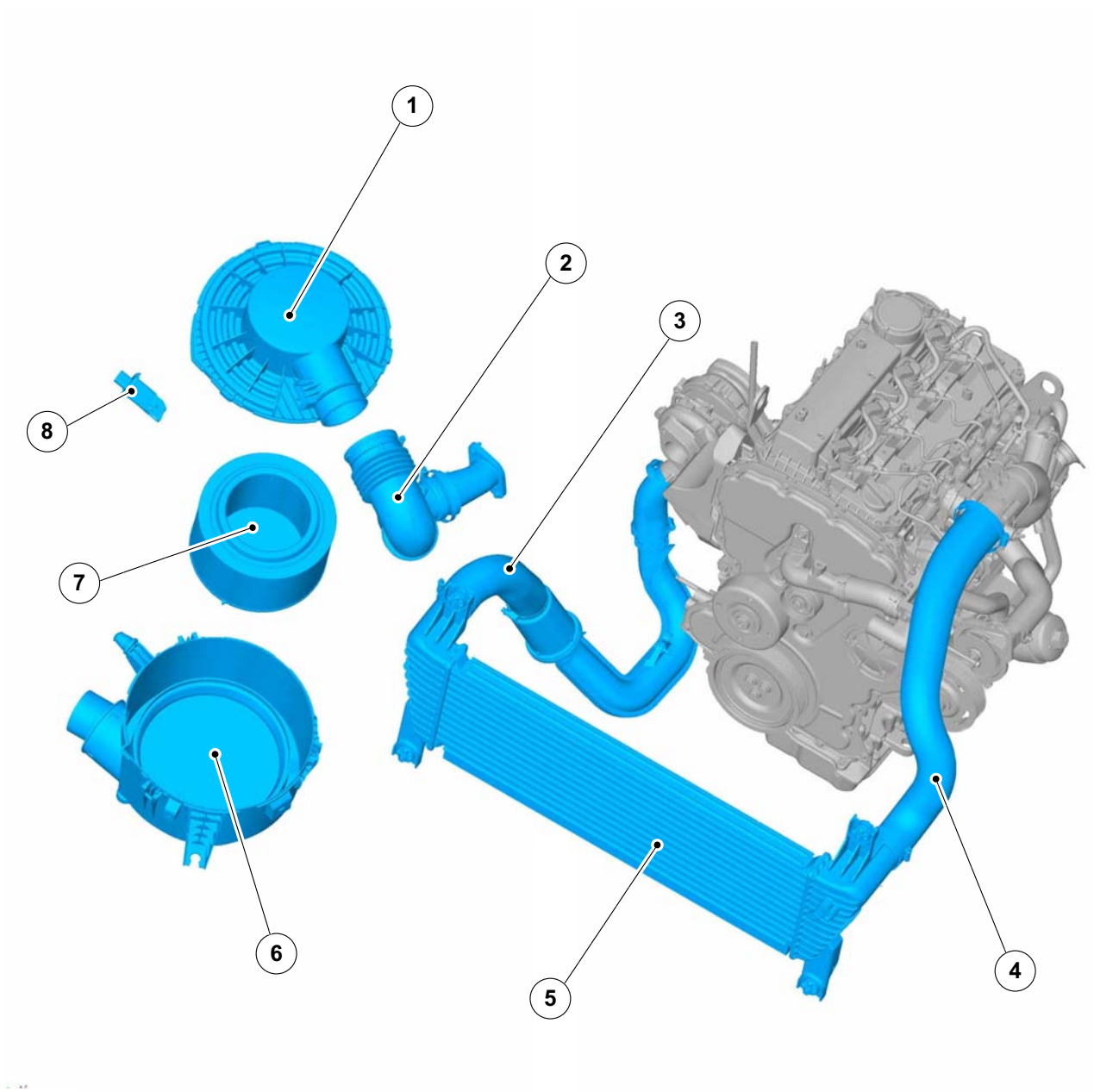

Item	Description
1	Air cleaner housing cover
2	Air cleaner outlet pipe
3	Charge air cooler intake pipe
4	Charge air cooler outlet pipe

Item	Description
5	Charge air cooler
6	Air cleaner housing
7	Air cleaner element
8	Mass air flow (MAF) sensor

DESCRIPTION AND OPERATION

Vehicles with 3.2 L Duratorq-TDCi (Puma) diesel engine

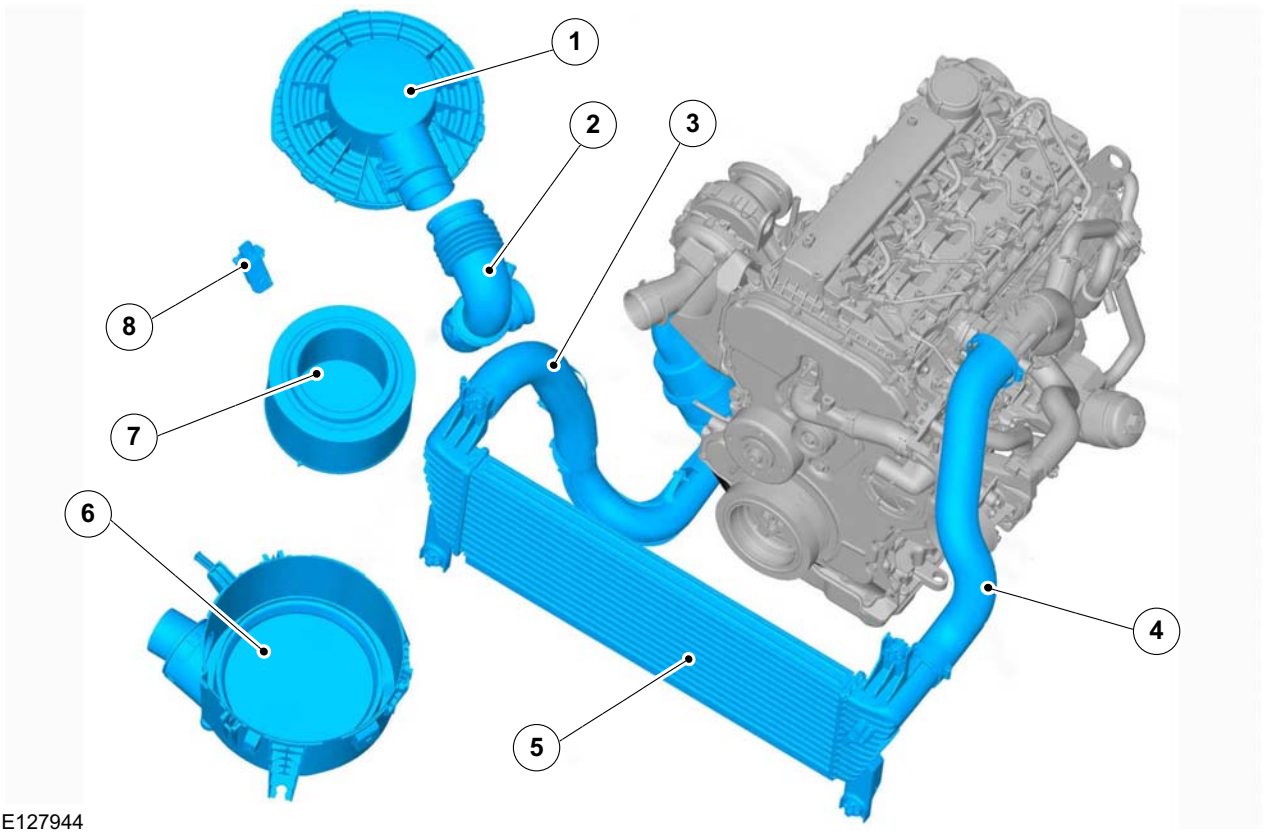

Item	Description
1	Air cleaner housing cover
2	Air cleaner outlet pipe
3	Charge air cooler intake pipe
4	Charge air cooler outlet pipe
5	Charge air cooler
6	Air cleaner housing
7	Air cleaner element
8	Mass air flow (MAF) sensor

REMOVAL AND INSTALLATION

Air Cleaner — 2.2L Duratorq-TDCi (88kW/120PS) - Puma/2.2L Duratorq-TDCi (96kW/130PS) - Puma/2.2L Duratorq-TDCi (110kW/150PS) - Puma(23 174 0)

Removal

NOTE: Removal steps in this procedure may contain installation details.

1. **NOTE:** This step is applicable for FGT engines only.

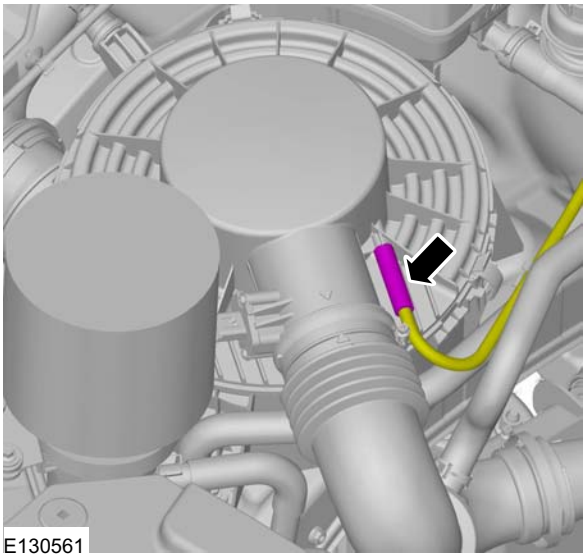
E130561

2. **NOTE:** Make sure that the positive crankcase ventilation (PCV) hose and the turbocharger intake pipe are not disturbed.

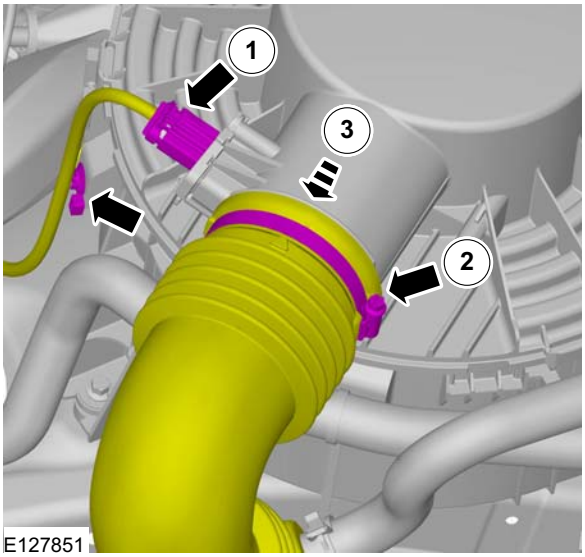

E127851

3. Torque: 10 Nm

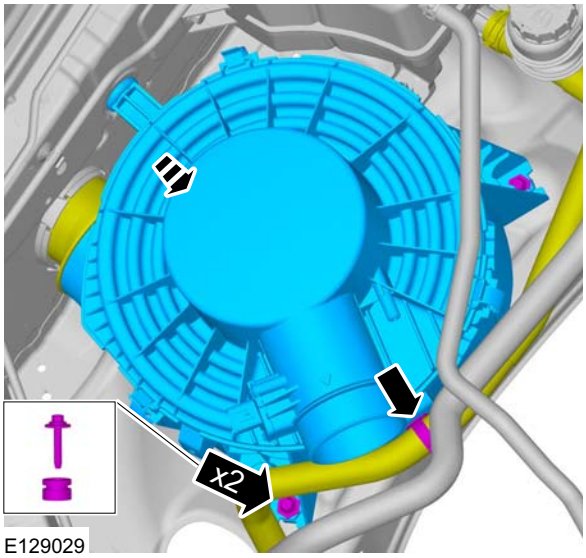

E129029

Installation

1. To install, reverse the removal procedure.

REMOVAL AND INSTALLATION

Air Cleaner — 3.2L Duratorq-TDCi (148kW/200PS) - Puma(23 174 0)

Removal

NOTE: Removal steps in this procedure may contain installation details.

1. **NOTE:** Make sure that the positive crankcase ventilation (PCV) hose and the turbocharger intake pipe are not disturbed.

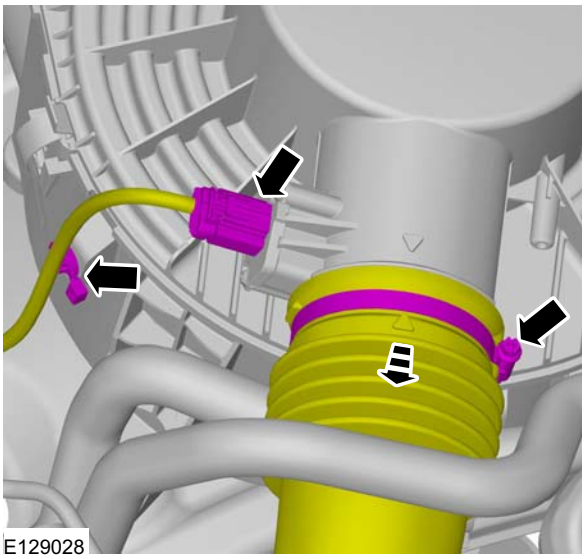

2. Torque: 10 Nm

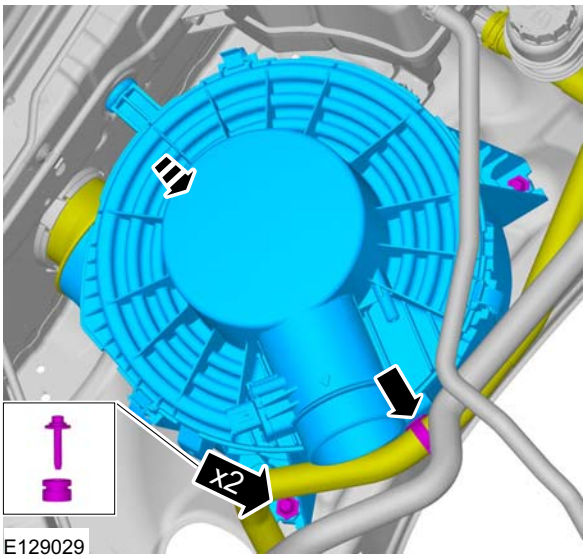

Installation

1. To install, reverse the removal procedure.

REMOVAL AND INSTALLATION

Charge Air Cooler(23 620 0)

1.

Removal

NOTE: Removal steps in this procedure may contain installation details.

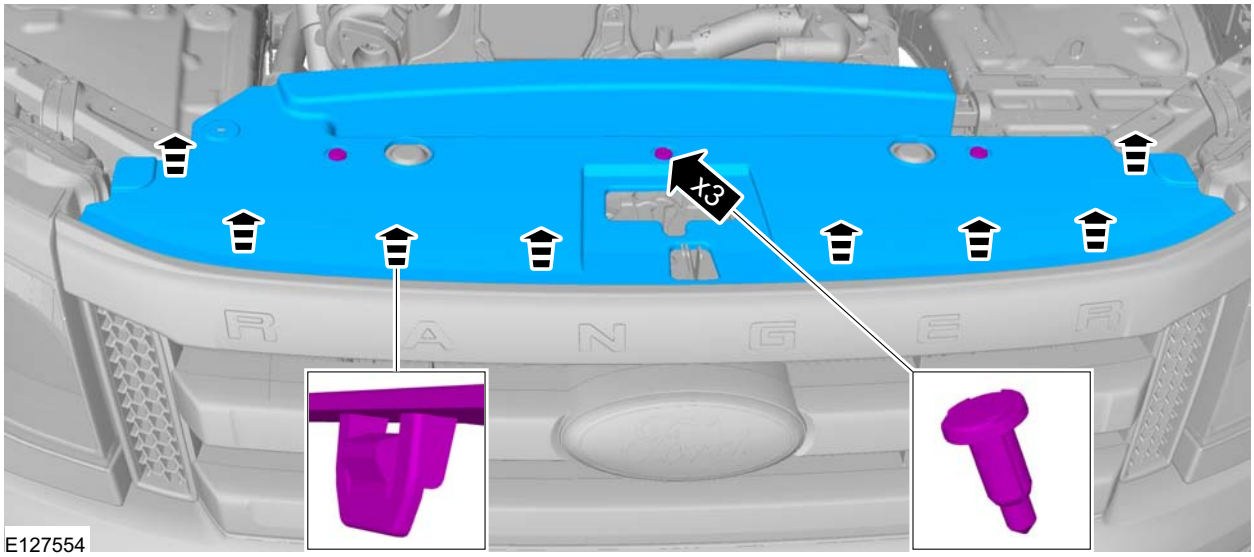

2.

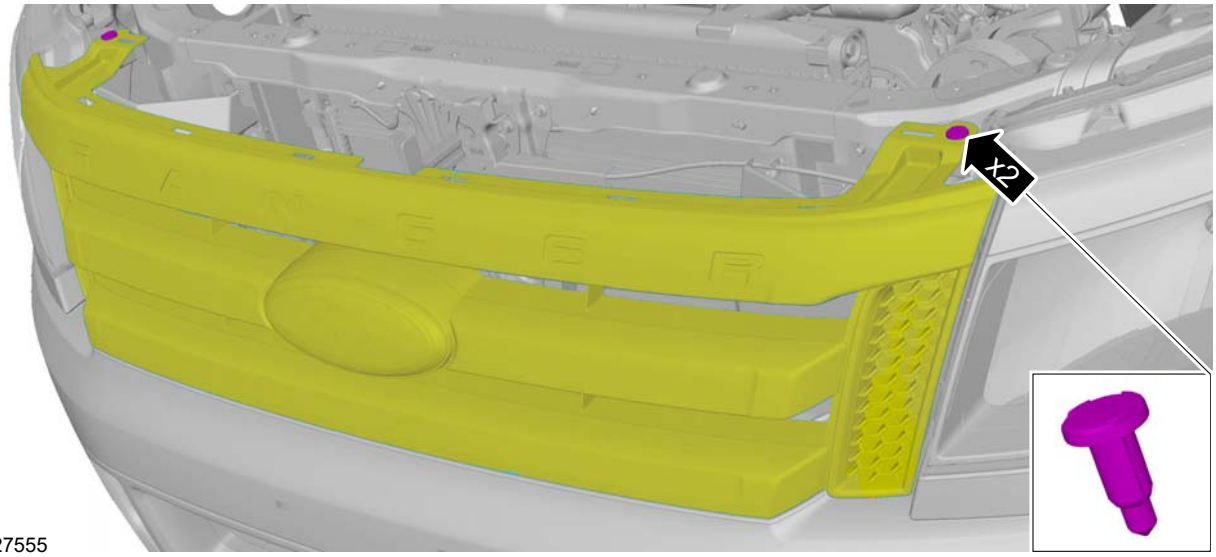

REMOVAL AND INSTALLATION

3. Torque: 10 Nm

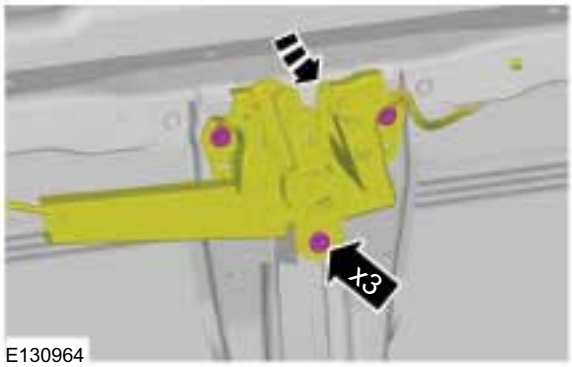

E130964

4. Torque: 10 Nm

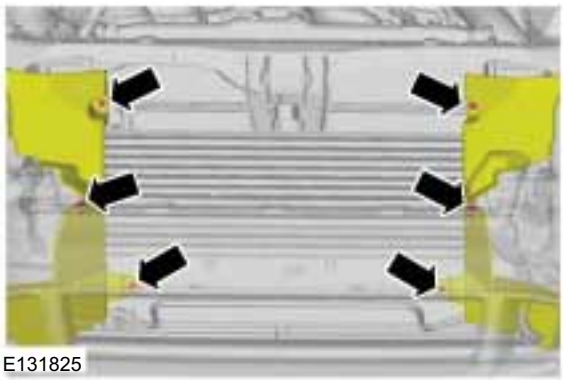
E131825

5. ⚠ **CAUTION: Make sure that the inside of the pipe ends are clean and free of oil residue.**

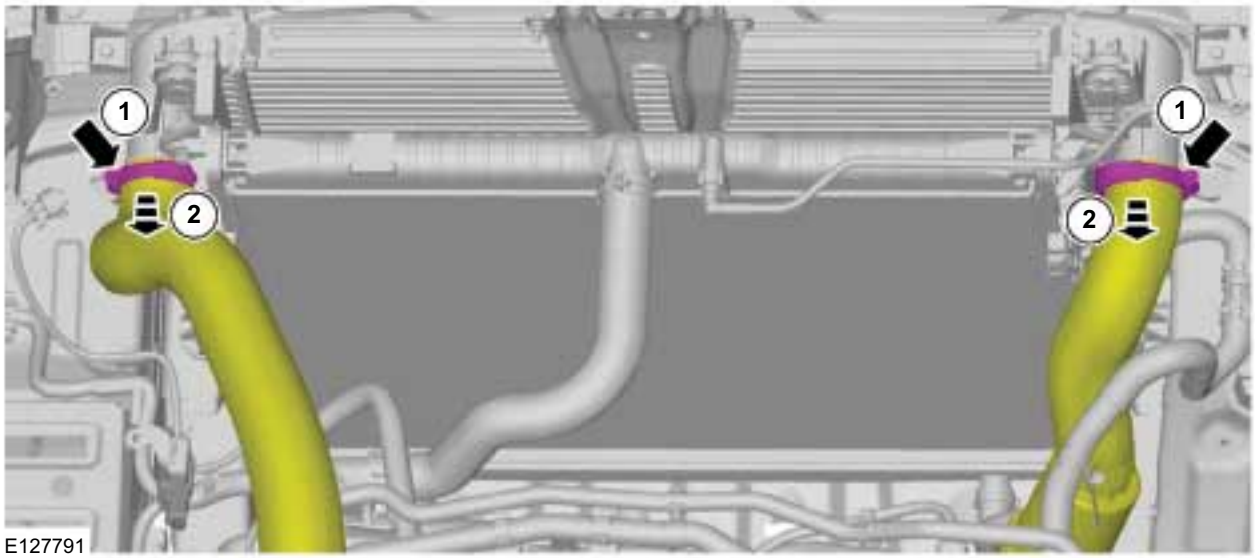

E127791

6. 3. Torque: 10 Nm
4. Torque: 10 Nm

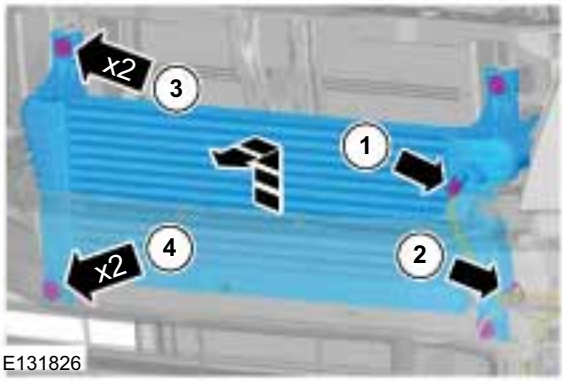

E131826

Installation

1. To install, reverse the removal procedure.

SECTION 303-13 Evaporative Emissions

VEHICLE APPLICATION: 2011.50 Ranger

CONTENTS PAGE

DESCRIPTION AND OPERATION

Evaporative Emissions..... 303-13-2

REMOVAL AND INSTALLATION

Evaporative Emission Canister..... (29 250 0) 303-13-3

DESCRIPTION AND OPERATION

Evaporative Emissions

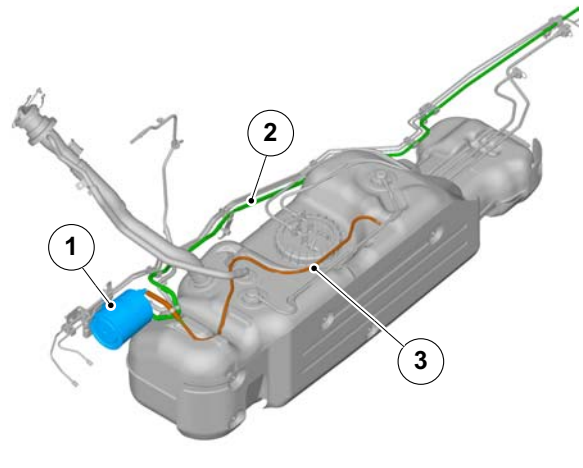

Item	Part Number	Description
1		Evaporative emission canister
2		Evaporative emission canister to evaporative emission canister purge valve vapor line
3	-	Fuel tank vent to evaporative emission canister line

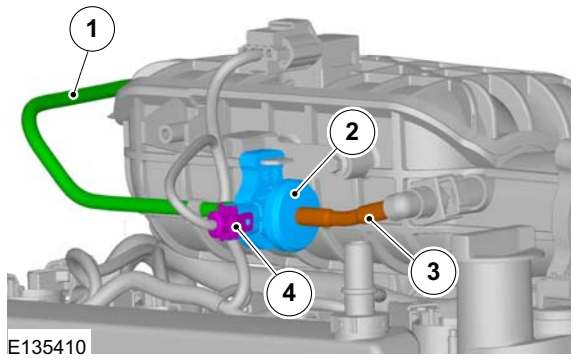

Item	Description
1	Evaporative emission canister to evaporative emission canister purge valve vapor line
2	Evaporative emission canister purge valve
3	Evaporative emission canister purge valve to intake manifold vapor line
4	Evaporative emission canister purge valve electrical connector

REMOVAL AND INSTALLATION

Evaporative Emission Canister(29 250 0)

Removal

CAUTION: Do not smoke, carry lighted tobacco or have an open flame of any type when working on or near any fuel-related component. Highly flammable mixtures are always present and may be ignited. Failure to follow these instructions may result in serious personal injury.

NOTE: Removal steps in this procedure may contain installation details.

1. Refer to: Petrol and Petrol-Ethanol Fuel Systems Health and Safety Precautions (100-00 General Information, Description and Operation).
   Refer to: Battery Disconnect and Connect (414-01 Battery, Mounting and Cables, General Procedures).
2. Refer to: Lifting (100-02 Jacking and Lifting, Description and Operation).
3. **WARNING: Be prepared to collect escaping fluids.**

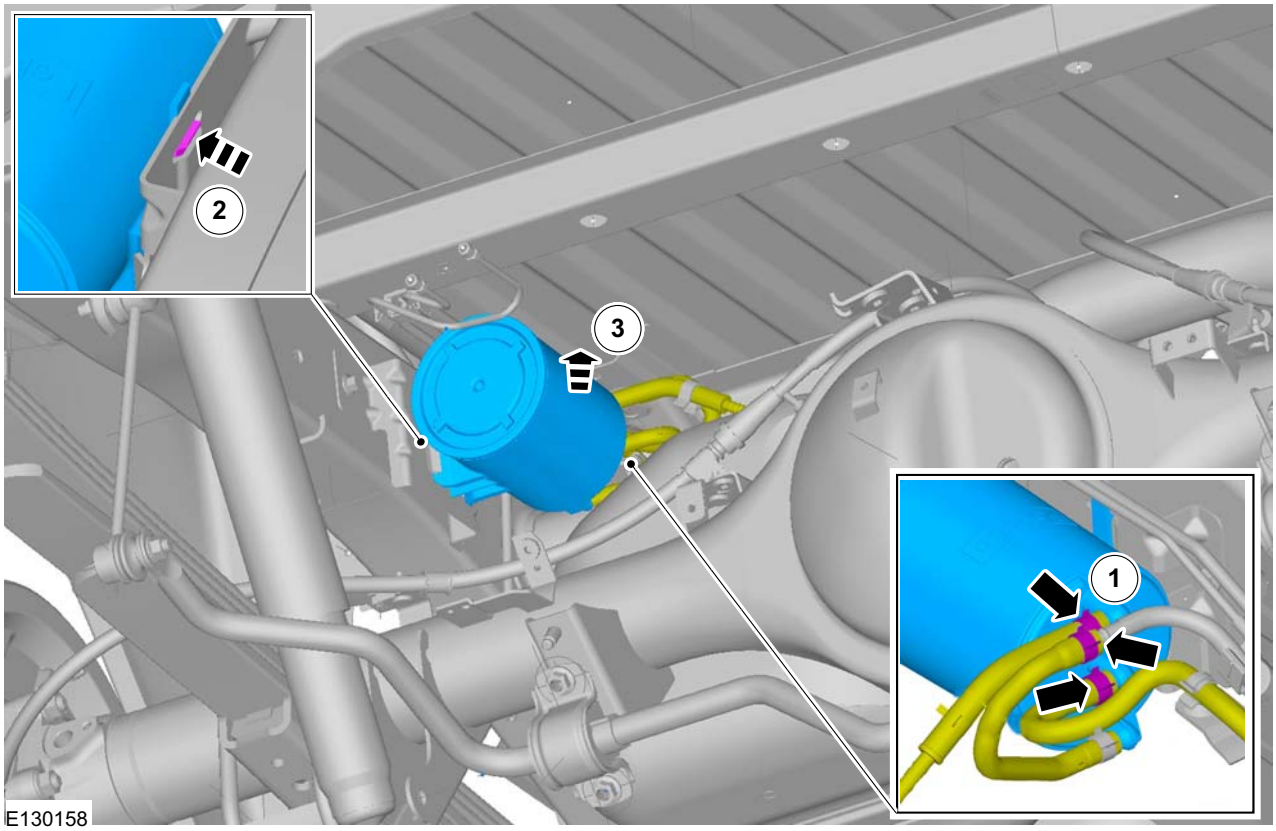

Installation

1. To install, reverse the removal procedure.

SECTION 303-14A Electronic Engine Controls — 2.5L

Duratec-HE (122kW/165PS) - MI4

VEHICLE APPLICATION: 2011.50 Ranger

CONTENTS PAGE

DESCRIPTION AND OPERATION

Electronic Engine Controls..... 303-14A-2
Electronic Engine Controls (System Operation and Component Description)..... 303-14A-4
System Diagram..... 303-14A-4
System Operation..... 303-14A-5
Ignition Coil..... 303-14A-5
Crankshaft Position (CKP) Sensor..... 303-14A-6
Heated oxygen (HO2S) senso..... 303-14A-6
Engine coolant temperature (ECT) sensor..... 303-14A-7
Manifold absolute pressure and Temperature (MAPT) sensor..... 303-14A-7
Electronic Throttle..... 303-14A-8
Camshaft position (CMP) sensor..... 303-14A-8
Engine oil pressure (EOP) sensor..... 303-14A-9
Knock (KS) sensor..... 303-14A-9
Injectors..... 303-14A-9
Variable camshaft timing (VCT) oil control solenoid..... 303-14A-10
Electronic Engine Controls — Vehicles With: Ethanol Capability..... 303-14A-11

REMOVAL AND INSTALLATION

Crankshaft Position (CKP) Sensor..... (29 230 0) 303-14A-12
Powertrain Control Module (PCM)..... (29 200 0) 303-14A-15
Camshaft Position (CMP) Sensor..... (29 232 0) 303-14A-17
Engine Coolant Temperature (ECT) Sensor..... (21 190 0) 303-14A-18
Heated Oxygen Sensor (HO2S)..... (29 220 0) 303-14A-19
Knock Sensor (KS)..... (29 222 0) 303-14A-20
Engine Oil Pressure (EOP) Sensor..... 303-14A-21
Manifold Absolute Pressure (MAP) Sensor..... (29 224 0) 303-14A-22

DESCRIPTION AND OPERATION

Electronic Engine Controls

Electronic Engine Control Location

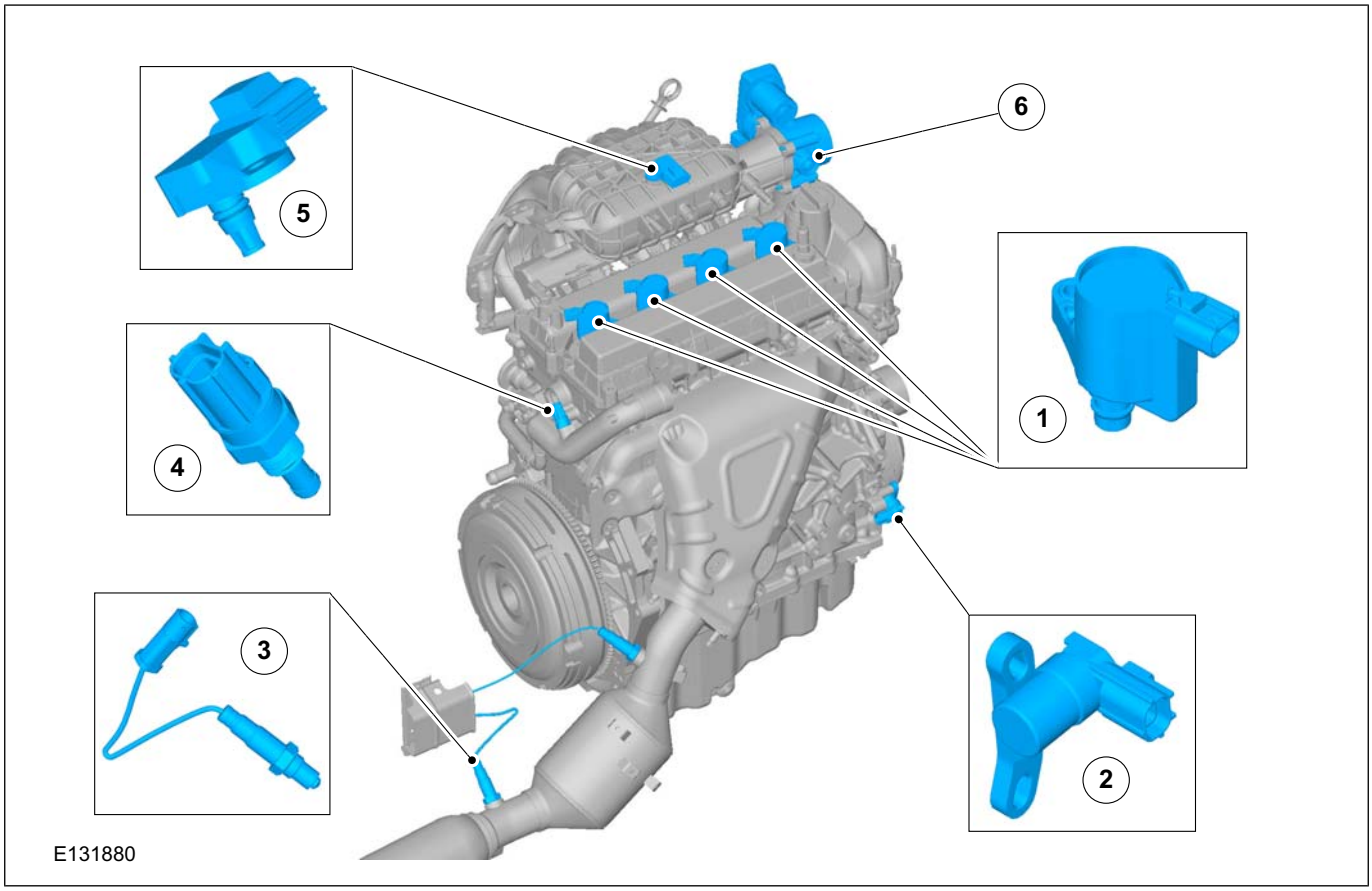

Item	Description
1	Ignition coils
2	Crankshaft position (CKP) sensor
3	Heated oxygen (HO2S) sensor

Item	Description
4	Engine coolant temperature (ECT) sensor
5	Manifold absolute pressure and temperature (MAPT) sensor
6	Electronic throttle body

DESCRIPTION AND OPERATION

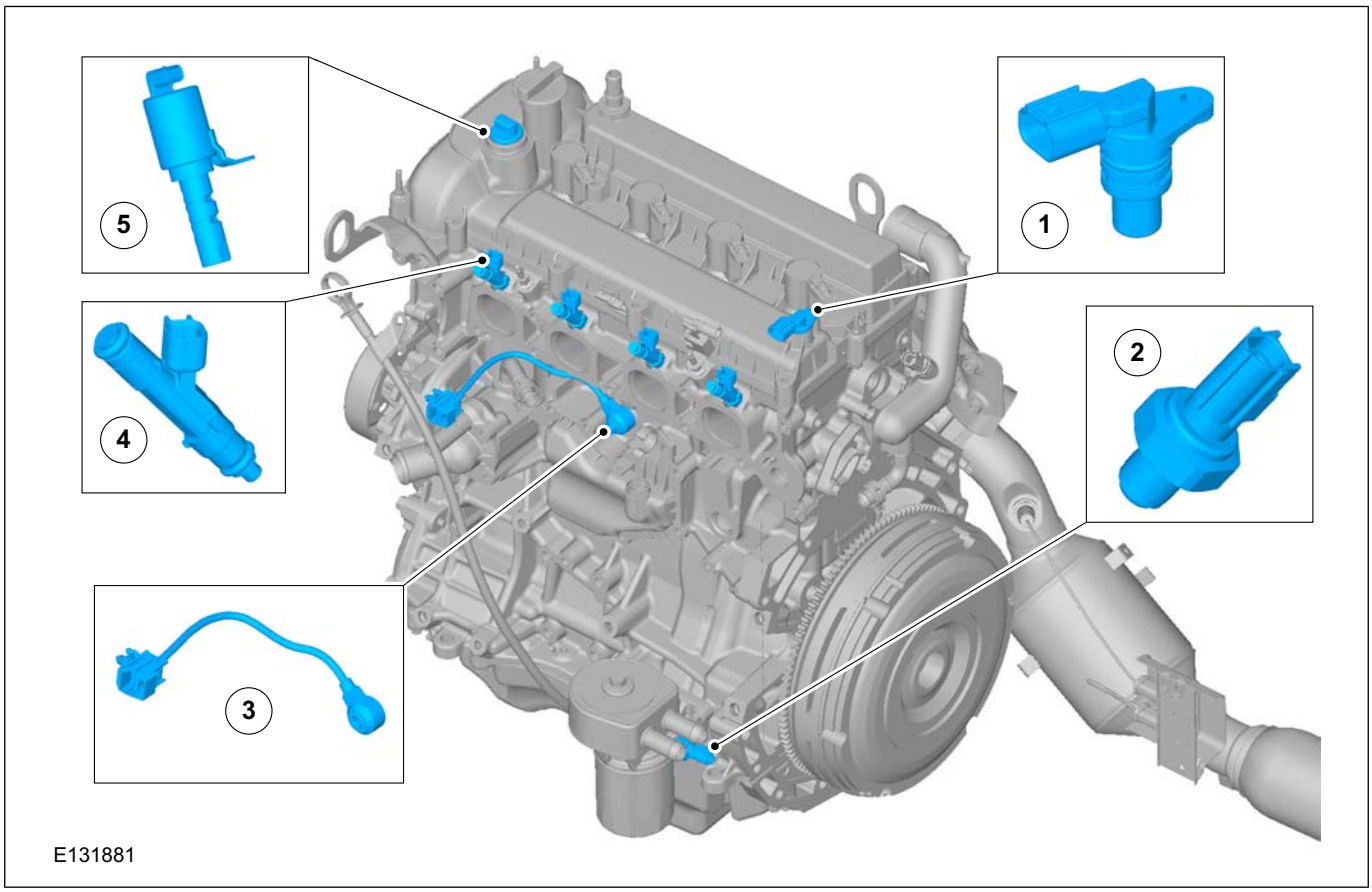

Item	Description
1	Camshaft position (CMP) sensor
2	Engine oil pressure (EOP) sensor
3	Knock (KS) sensor
4	Injectors
5	Variable camshaft timing (VCT) oil control solenoid

DESCRIPTION AND OPERATION

Electronic Engine Controls – System Operation and Component Description

System Diagram

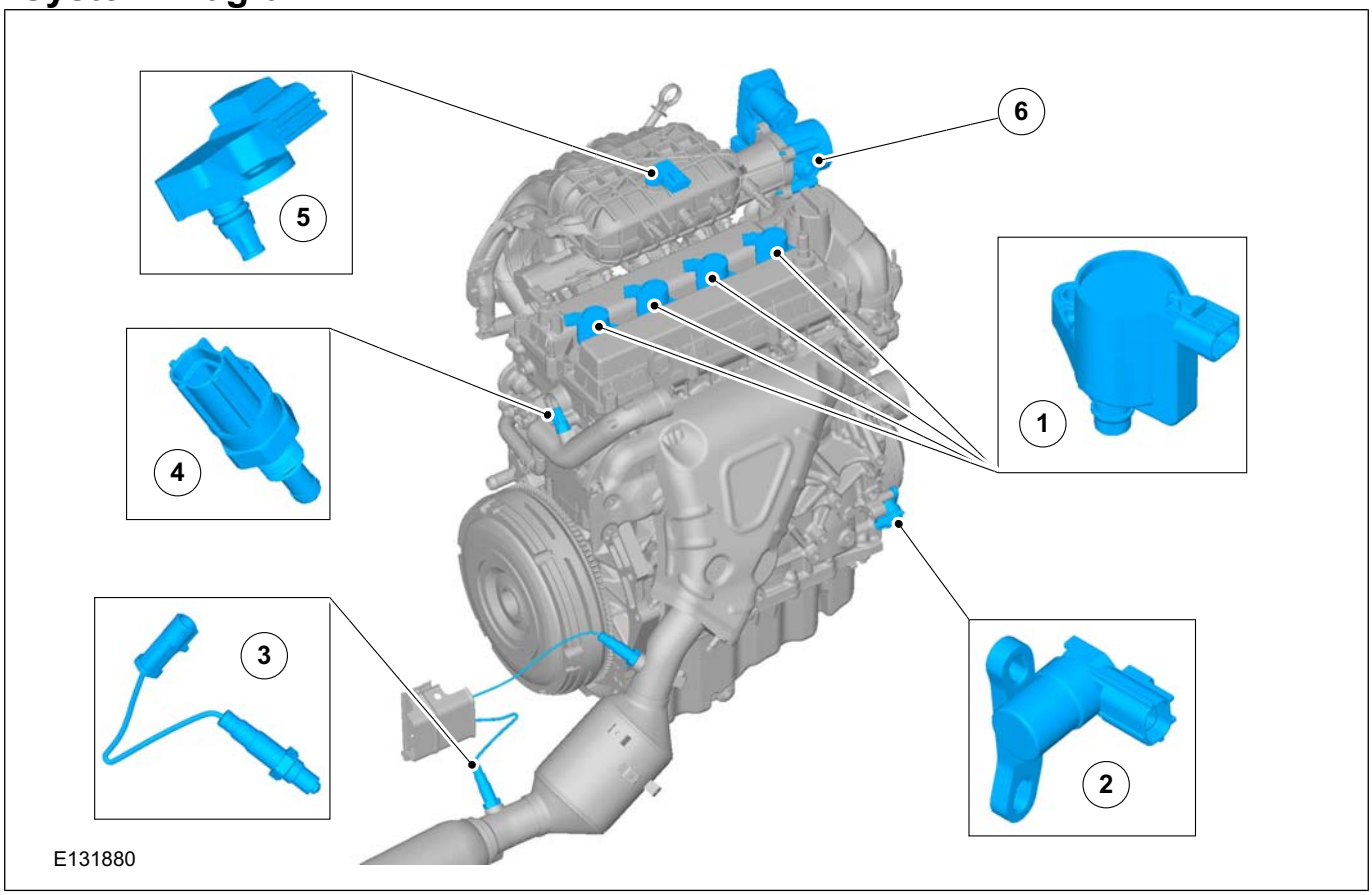

Item	Description
1	Ignition coil
2	Crankshaft position (CKP) sensor
3	Heated oxygen (HO2S) sensor

Item	Description
4	Engine coolant temperature (ECT) sensor
5	Manifold absolute pressure and temperature (MAPT) sensor
6	Electronic throttle body

DESCRIPTION AND OPERATION

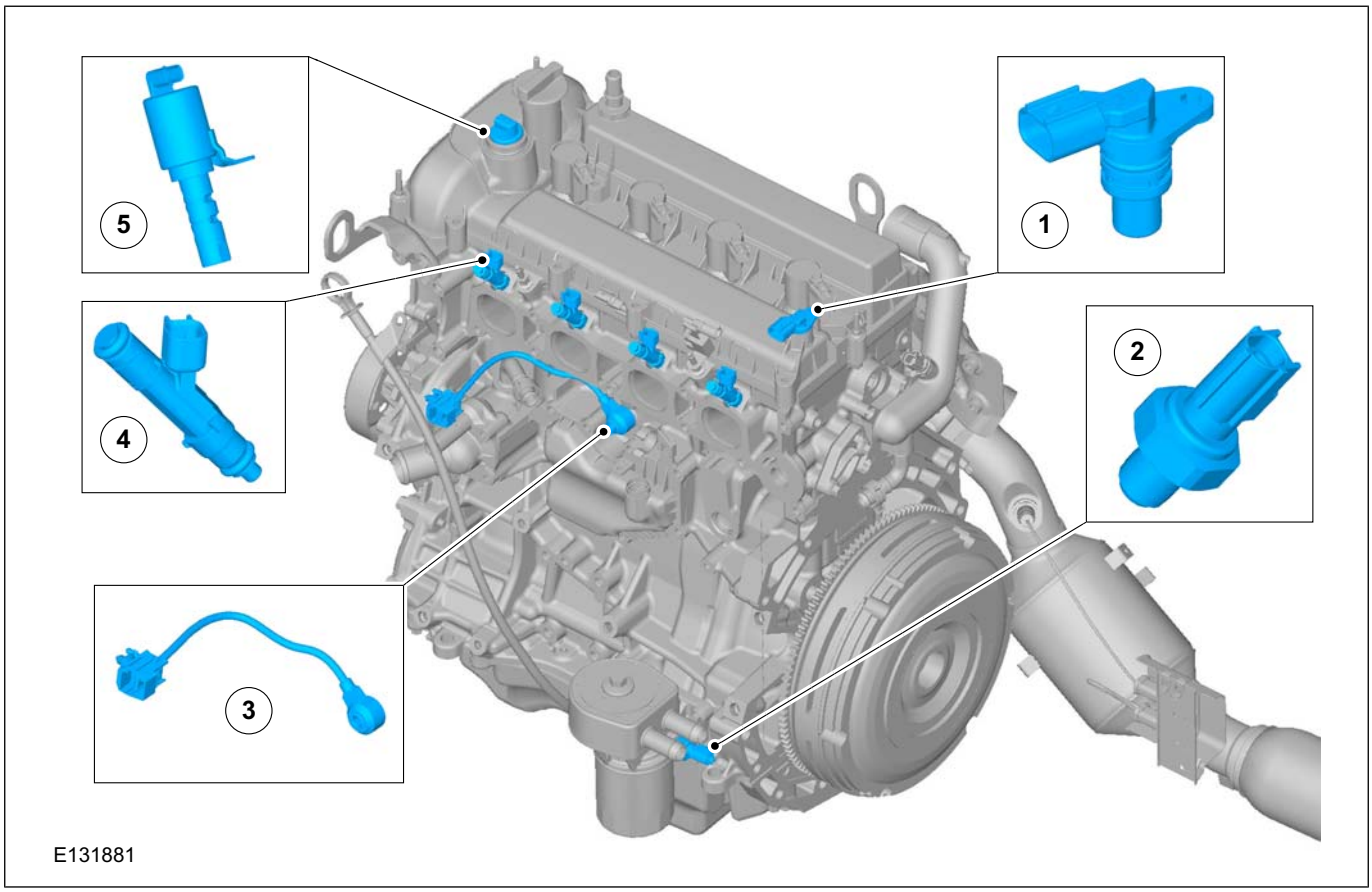

Item	Description
1	Camshaft position (CMP) sensor
2	Engine oil pressure (EOP) sensor
3	Knock (KS) sensor

Item	Description
4	Injectors
5	Variable camshaft timing (VCT) oil control solenoid

System Operation

Ignition Coil

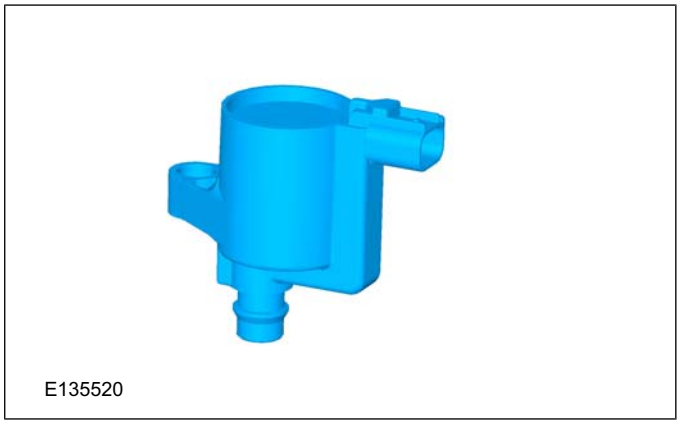

The electronic ignition system is a fully electronic, distributor less ignition system with no moving parts on the high-voltage side

The electronic ignition system is integrated into the PCM.

With an electronic ignition system, high-voltage distribution to the individual cylinders is realized via special double spark coils. The signal from the CKP sensor forms the basis for ignition timing calculations. From an ignition map, the PCM determines the optimum closing time and current rise of the primary current circuit of the ignition coil with switching carried out via end-stages in the PCM. The ignition timing is determined by the PCM on the basis of the engine operating conditions. Once the ignition timing is determined, the PCM interrupts the current supply to the ignition coil

DESCRIPTION AND OPERATION

primary circuit, thereby producing an ignition spark which passes to the cylinder via the spark plug.

The spark plugs are activated in pairs (cylinders 1 and 4, and cylinders 2 and 3) and send a strong main spark to the cylinder in the compression cycle and a weak secondary spark to the cylinder in the exhaust cycle. The main spark is generated automatically in the cylinder that is in the compression cycle, because a higher resistance exists between the electrodes on account of the high compression.

On one spark plug a spark jumps across from the center electrode to the earth electrode and on the other spark plug from the earth electrode to the center electrode.

Crankshaft Position (CKP) Sensor

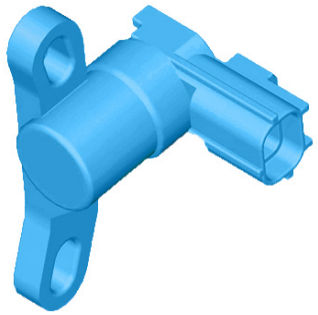

E135521

The CKP sensor is an inductive sensor that allows the ECM to determine the angular position of the crankshaft and the engine speed.

The CKP sensor is installed in the rear left side of the sump body, in line with the engine drive plate. The sensor is secured with a single screw and sealed with an O-ring. A two pin electrical connector provides the interface with the engine harness.

The head of the CKP sensor faces a reluctor ring pressed into the outer circumference of the engine drive plate. The reluctor ring has a 60 minus 2 tooth pattern. There are 58 teeth at 6° intervals, with two teeth removed to provide a reference point with a centerline that is 21° BTDC (before top dead center) on cylinder 1 of bank A.

If the CKP sensor fails, the ECM:

Uses signals from the CMP sensors to determine the angular position of the crankshaft and the engine speed

Adopts a limp home mode where engine speed is limited to a maximum of 3000 rev/min. With a failed CKP sensor, engine starts will require a long crank time while the ECM determines the angular position of the crankshaft.

Heated oxygen (HO2S) senso

E135522

The heated oxygen sensors allow the ECM to measure the oxygen content of the exhaust gases, for closed loop control of the fuel:air mixture and for catalytic converter monitoring.

An upstream heated oxygen sensor is installed in the outlet of each exhaust manifold, which enables independent control of the fuel:air mixture for each cylinder bank. A downstream heated oxygen sensor is installed in each catalytic converter, which enables the performance of the catalytic converters to be optimized and monitored

Oxygen sensors need to operate at high temperatures in order to function correctly. To achieve the high temperatures required, the sensors are fitted with heater elements that are controlled by a PWM (pulse width modulation) signal from the ECM. The heater elements are operated after each engine start, once it has been calculated that there is no moisture in the exhaust (between 0 and 2 minutes delay), and also during low load conditions when the temperature of the exhaust gases is insufficient to maintain the required sensor temperature. The PWM duty cycle is carefully controlled to prevent thermal shock to cold sensors. A non-functioning heater delays the sensor's readiness for closed loop control and increases emissions.

The upstream heated oxygen sensors produce a constant voltage, with a variable current that is proportional to the lambda ratio. The downstream heated oxygen sensors produce an output voltage dependant on the ratio of the exhaust gas oxygen to the ambient oxygen.

DESCRIPTION AND OPERATION

The heated oxygen sensors age with mileage, increasing their response time to switch from rich to lean and lean to rich. This increase in response time influences the ECM closed loop control and leads to progressively increased emissions. Measuring the period of rich to lean and lean to rich switching monitors the response rate of the upstream sensors.

Diagnosis of electrical faults is continually monitored in both the upstream and downstream sensors. This is achieved by checking the signal against maximum and minimum threshold, for open and short circuit conditions.

If a heated oxygen sensor fails:

The ECM defaults to open loop fueling for the related cylinder bank

The CO (carbon monoxide) and emissions content of the exhaust gases may increase

The exhaust may smell of rotten eggs (hydrogen sulphide).

With a failed heated oxygen sensor, the engine will suffer from reduced refinement and performance.

Engine coolant temperature (ECT) sensor

E135523

The ECT sensors are NTC (negative temperature coefficient) thermostats that allow the ECM to monitor the engine coolant temperature.

There are two identical ECT sensors installed, which are identified as ECT 1 and ECT 2. Each sensor is secured with a twist-lock and latch mechanism, and is sealed with an O-ring. A two pin electrical connector provides the interface between the sensor and the engine harness

ECT 1

ECT 1 is installed in the heater manifold, at the rear of the RH (right-hand) cylinder head. The input from this sensor is used in calibration tables and by other systems.

If there is an ECT 1 fault, the ECM adopts an estimated coolant temperature. On the second consecutive trip with an ECT 1 fault, the ECM illuminates the MIL (malfunction indicator lamp).

ECT 2

ECT 2 is installed in the lower hose connector which attaches to the bottom of the thermostat. The input from this sensor is used for OBD (on-board diagnostic) 2 diagnostics and, in conjunction with the input from ECT 1, to confirm that the thermostat is functional.

If there is an ECT 2 fault, the ECM illuminates the MIL on the second consecutive trip.

Manifold absolute pressure and Temperature (MAPT) sensor

E135524

In the MAPT sensor housing are located a piezo-pressure sensor element (MAP (manifold absolute pressure) sensor) and the electronic circuits for signal amplification and temperature compensation. The IAT sensor element is an NTC (negative temperature coefficient) resistor. A special coating process renders the MAP and IAT sensor elements resistant to damp and humidity in the intake pipe. The MAPT sensor receives a reference voltage of 5 Volts from the PCM. The output signal from the MAP sensor element is an analogue voltage signal which changes proportionately to the absolute pressure in the intake manifold. A high absolute pressure in the intake manifold (throttle valve wide open) means a high voltage, and a low absolute pressure in the intake manifold (throttle valve closed) means a low voltage. With ignition on and wide-open throttle the MAP sensor measures the BARO (barometric pressure). The resulting value is stored in the Keep Alive Memory and serves as a reference pressure

DESCRIPTION AND OPERATION

for the prevailing manifold absolute pressure at the various load states.

The IAT sensor element also sends an analog voltage signal to the PCM. The temperature range (falling temperature characteristic) of the IAT sensor is from -40 ºC (nominal resistance approx. 48 kOhms) to 130 ºC (nominal resistance approx. 85 Ohms). At an intake air temperature of 20ºC, the nominal resistance is 2.5 kOhm +/- 5%. The analog voltage signals are digitized in the analog-to-digital converter and transmitted to the microprocessor as numerical values (counts).

Use of the MAPT signal:

Electronic Throttle

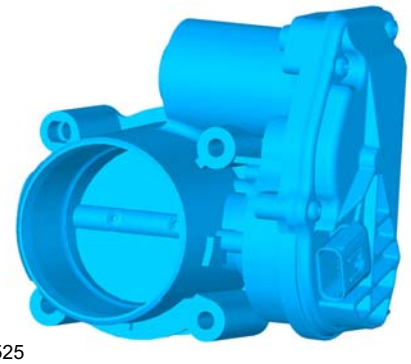

E135525

The ECM uses the electronic throttle to help regulate engine torque.

The electronic throttle is attached to the intake manifold. For additional information, refer to: Intake Air Distribution and Filtering (303-12 Intake Air Distribution and Filtering - 5.0L NA V8 - AJ133, Description and Operation).

The throttle plate is operated by an electric DC (direct current) motor integrated into the throttle body. The ECM uses a PWM signal to control the DC motor. The ECM compares the APP sensor inputs against an electronic request or value to determine the required position of the throttle plate. The ECM and electronic throttle are also required to:

- Monitor requests for cruise control operation
- Automatically operate the electronic throttle for accurate cruise control
- Perform all dynamic stability control engine interventions
- Monitor and carry out maximum engine speed and road speed cut outs
- Provide different engine maps for the ride and handling optimization system.

A software strategy within the ECM calibrates the position of the throttle plate at the beginning of each ignition cycle. When the ignition is turned on, the ECM performs a self test and calibration routine by fully closing the throttle plate and then opening it again. This tests the default position springs and allows the ECM to learn the fully closed position.

Camshaft position (CMP) sensor

E135526

A sensor is installed for the intake camshaft. The CMP sensor is used by the PCM for cylinder number one recognition so that the injection sequence can be determined.

Based on the calculated camshaft position and information about the crankshaft position, the PCM is able to determine the correct ignition timing and the correct injection timing for each individual cylinder. Also it can accurately identify a cylinder that is showing a tendency to knocking combustion

The CMP sensor is realized as a Hall effect sensor and is provided by the PCM with a 5 volt supply. The Hall effect sensor emits a signal when the pulse segments incorporated into the sensor wheel rotate past the tip of the sensor. Thanks to the composition of the pulse segments, and combined with the signals from the CKP sensor, the PCM is able to calculate the position of the individual camshafts at any time. If an increase occurs in the area of the sensor, the PCM receives a 'low' signal with a maximum voltage of 0.5V. If a gap occurs in the area of the sensor, a 'high' signal is sent to the PCM. In this case the voltage is approx. 4.5V.

If the CMP sensor fails, the fault is stored in the fault memory of the PCM and knock control is deactivated.

DESCRIPTION AND OPERATION

On vehicles without a CMP sensor, cylinder no. 1 is recognized using the different current rises of the two sparked cylinders 1 and 3.

Engine oil pressure (EOP) sensor

E135527

The EOP switch detects the oil pressure. When a defined engine oil pressure is reached, the EOP switch opens.

This information is transmitted via the CAN bus to the instrument cluster where the EOP warning lamp is switched on or off accordingly.

Knock (KS) sensor

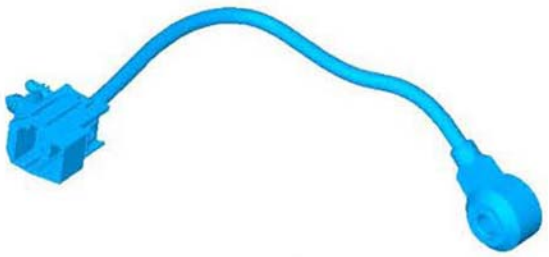

E135528

The knock sensors are piezo-ceramic sensors that allow the ECM to employ active knock control and prevent engine damage from pre-ignition or detonation.

Two knock sensors are installed on the inboard side of each cylinder head, one mid-way between cylinders 1 and 2, and one mid-way between cylinders 3 and 4. Each knock sensor is secured with a single screw. On each knock sensor, a two pin electrical connector provides the interface with the engine harness.

The ECM compares the signals from the knock sensors with mapped values stored in memory to determine when detonation occurs on individual cylinders. When detonation is detected, the ECM retards the ignition timing on that cylinder for a number of engine cycles, then gradually returns it to the original setting.

The ECM cancels closed loop control of the ignition system if the signal received from a knock sensor becomes implausible. In these circumstances the ECM defaults to base mapping for the ignition timing. This ensures the engine will not become damaged if low quality fuel is used. The MIL will not illuminate, although the driver may notice that the engine 'pinks' in some driving conditions and displays a drop in performance and smoothness.

The ECM calculates the default value if one sensor fails on each bank of cylinders.

Injectors

E135529

The electromagnetically controlled injectors dose and atomize the fuel. The quantity of injected fuel is regulated by the duration of actuation of the fuel injectors. The fuel injectors are either closed (not actuated) or opened (actuated). Each cylinder has its own injector. The injection is accurately dosed and takes place at a time determined by the PCM. Injection takes place immediately in front of the intake valves of the cylinder.

DESCRIPTION AND OPERATION

Variable camshaft timing (VCT) oil control solenoid

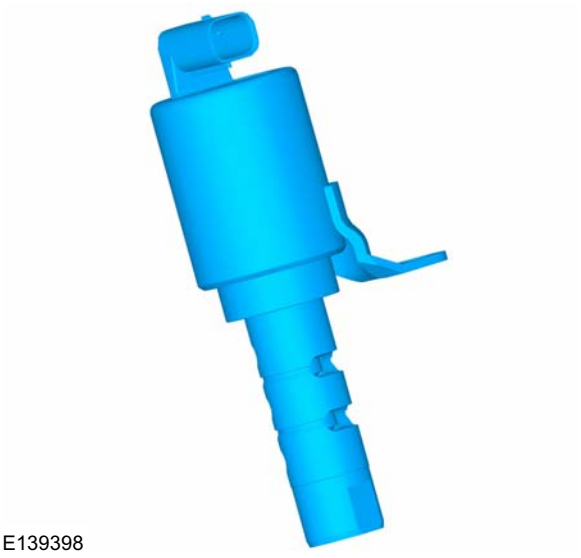

The VCT oil control solenoid is an electrically controlled hydraulic valve that directs engine oil to the variable camshaft. Once the PCM transmits a signal, the solenoid moves a valve spool, directing oil into the camshaft phaser cavity. This action changes valve timing by either inducing an advance or retard condition. The camshaft is, thereby repositioned in relation to crankshaft timing and allows for optimum engine performance and lower emissions.

DESCRIPTION AND OPERATION

Electronic Engine Controls — Vehicles With: Ethanol Capability

As a general rule, engine management works according to the same principles as for petrol operation. The PCM (powertrain control module), the sensors and the actuators are the same for petrol and for ethanol operation E100. For vehicles operated with ethanol, however, a fuel type determination and adaptation function is activated. This determines the fuel composition and adapts the control mode accordingly.

Fuel type determination

The mixture of fuel in the tank can vary from an ethanol share of 0% to 100%. This ethanol share is important for the engine management, as it has a strong influence on the engine running characteristics and the exhaust gas emissions. To determine the ethanol share in the fuel, the HO2S (heated oxygen sensor) and the fuel level sensor are used.

Adaptation for ethanol operation

The optimal fuel-air mixture for ethanol fuel E100 is 9.7 kg air per 1 kg E100. For petrol, the optimal fuel-air mixture is 14.5 kg air per 1 kg petrol. Ethanol operation therefore requires a richer mixture. To achieve this, injectors with a higher flow rate are used. In addition, the ignition time is "advanced", as the speed of transmission of the flame front of ethanol fuel E100 is lower.

The requirements for petrol and ethanol operation are very different, which is why special characteristics maps have been saved in the PCM for both fuel types.

Errors during fuel type determination and adaptation can have a significant influence on fuel consumption and the engine running characteristics. If a leak upstream of the HO2S causes the engine management to change the control mode to ethanol operation, the spark plugs may fail due to an excessive fuel supply and the engine will not run satisfactorily in the cold state. If the engine management switches to petrol during ethanol operation, the engine will run irregularly or will not start.

REMOVAL AND INSTALLATION

Crankshaft Position (CKP) Sensor(29 230 0)

Special Tool(s)

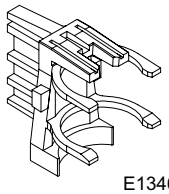 E134676	303-1417 Tool, Crank Sensor Alignment
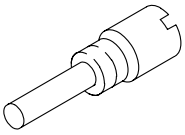 PZ21210	303-507 Timing Peg, Crankshaft TDC

Removal

NOTE: Removal steps in this procedure may contain installation details.

1. Refer to: Battery Disconnect and Connect (414-01 Battery, Mounting and Cables, General Procedures).
2. Refer to: Lifting (100-02 Jacking and Lifting, Description and Operation).
3.

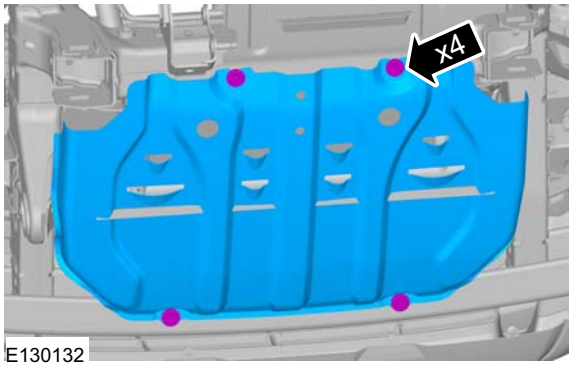

E130132

4. **WARNING: Only rotate the crankshaft clockwise.**

Turn the crankshaft until no. 1 piston is at about 45° before TDC.

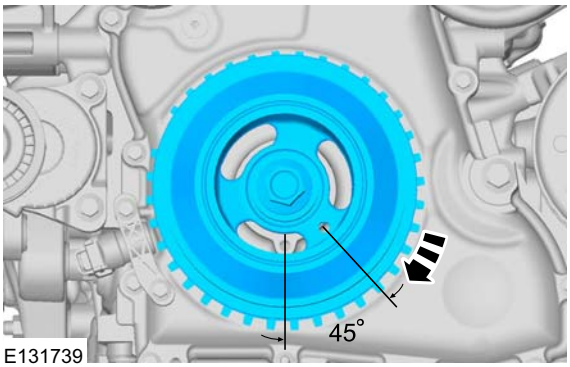

E131739

5.

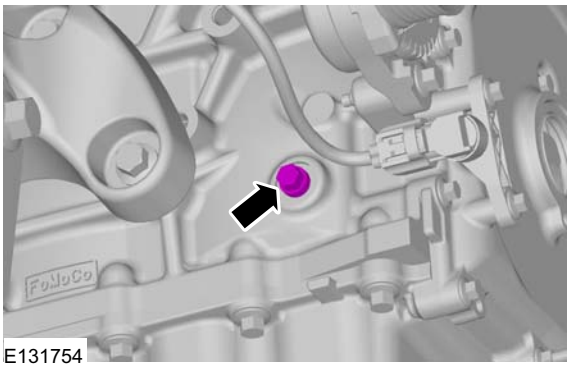
E131754

6. Special Tool(s): 303-507

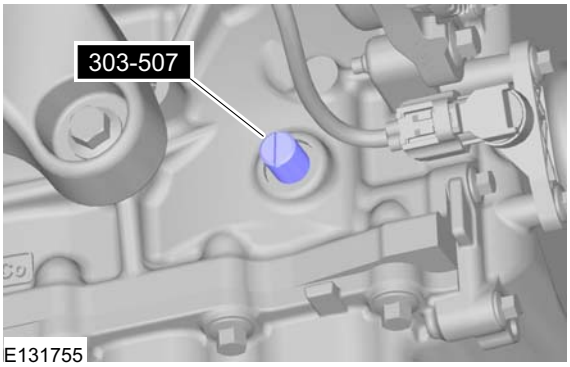

E131755

REMOVAL AND INSTALLATION

7.

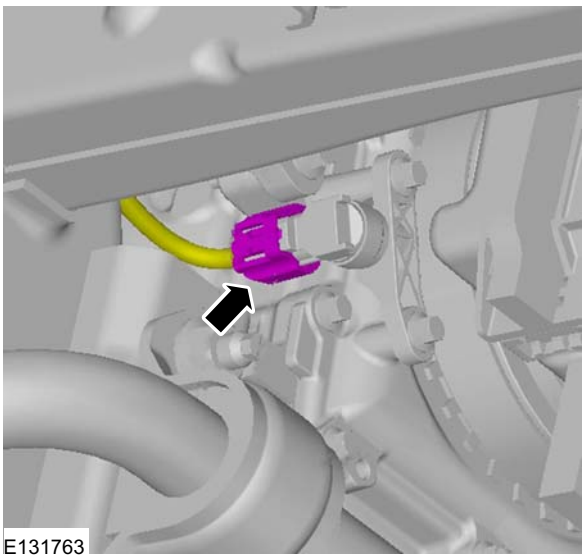
E131763

8.

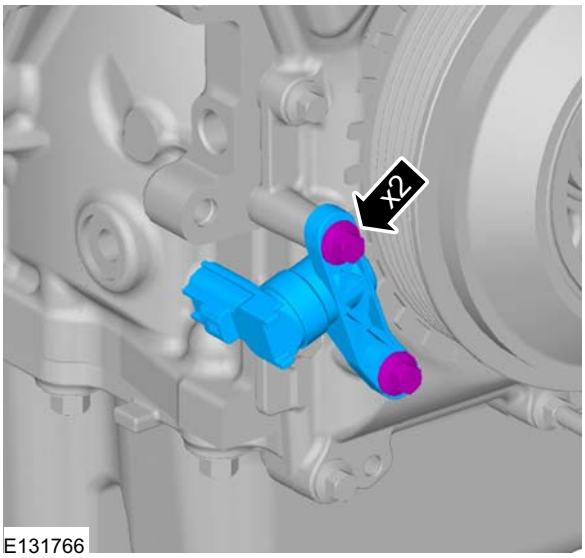

E131766

Installation

1. Install the bolt M6 x 18 mm.

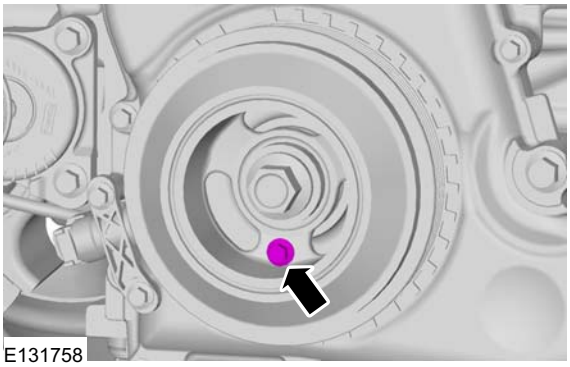
E131758

2. Special Tool(s): 303-1417

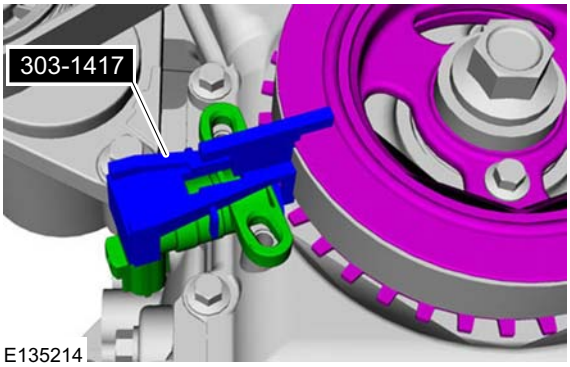

E135214

3. Torque: 7 Nm

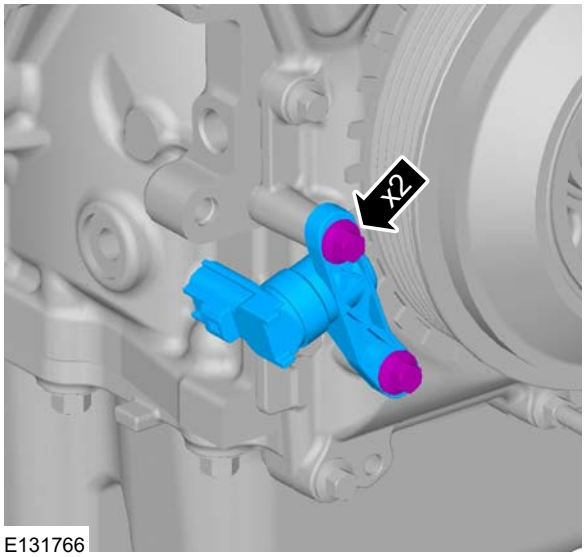

E131766

REMOVAL AND INSTALLATION

4.

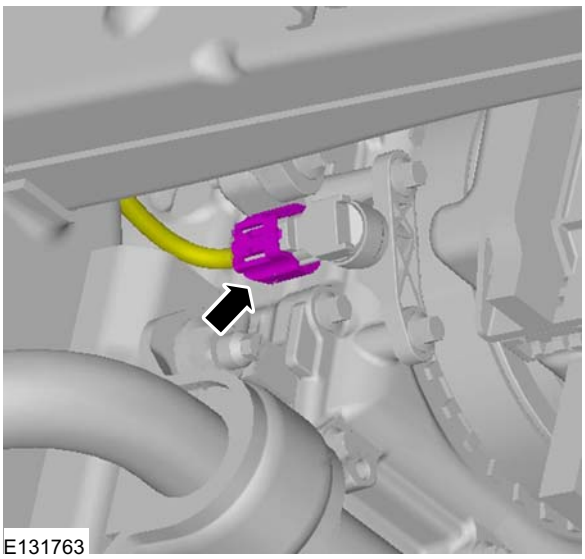
E131763

5. Remove the bolt M6 x 18 mm.

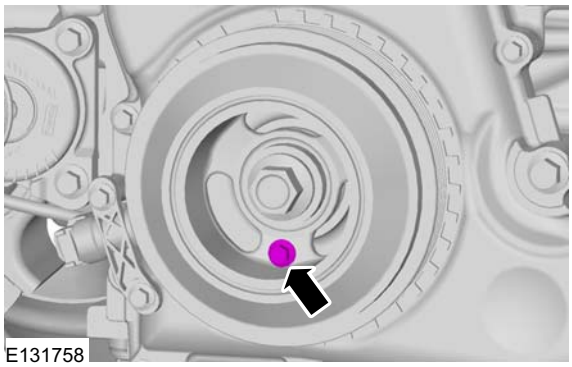
E131758

6. Remove the Special Tool(s): 303-507

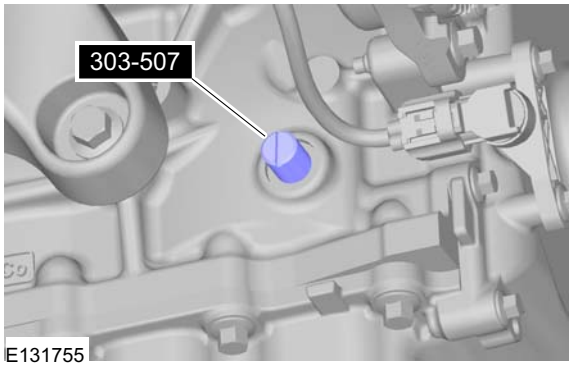

E131755

7. Torque: 20 Nm

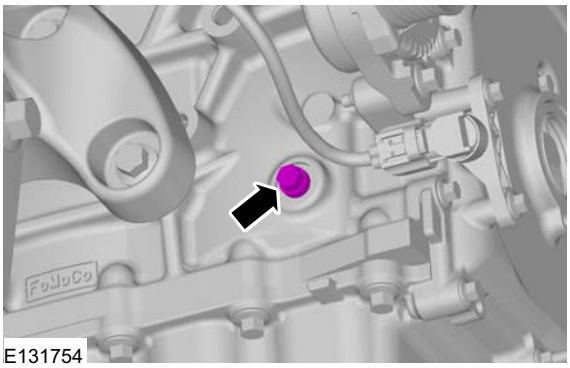
E131754

8. Torque: 30 Nm

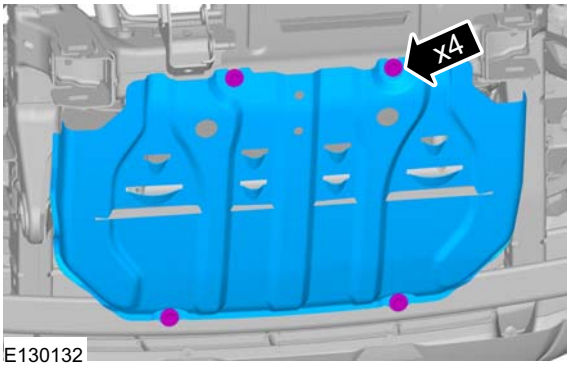

E130132

REMOVAL AND INSTALLATION

Powertrain Control Module (PCM)(29 200 0)

General Equipment

Ford Diagnostic Equipment

Removal

CAUTION: If a new PCM is to be installed, upload the PCM configuration information using the Programmable Modules Installation Routine, prior to commencing the removal of the PCM.

NOTE: Removal steps in this procedure may contain installation details.

All vehicles

1. Refer to: Battery Disconnect and Connect (414-01 Battery, Mounting and Cables, General Procedures).
2. Refer to: Battery (414-01 Battery, Mounting and Cables, Removal and Installation).
3. Refer to: Battery Tray (414-01 Battery, Mounting and Cables, Removal and Installation).
4.

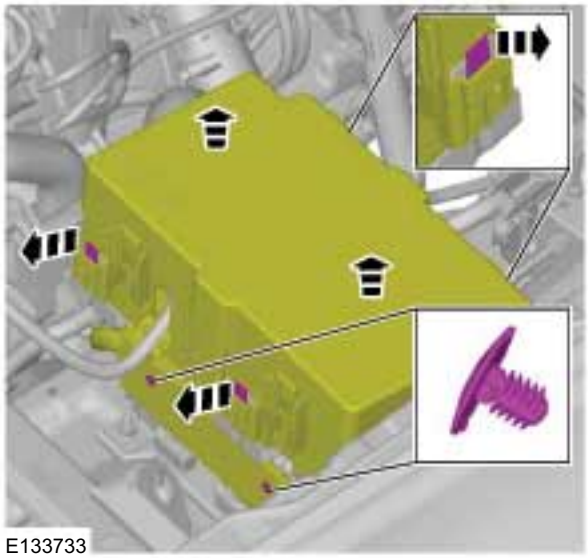
E133733

Vehicles with PCM security shield

5. Torque: 15 Nm

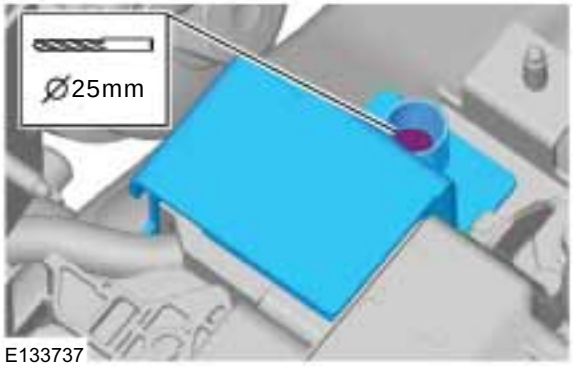

E133737

All vehicles

6. Torque: 11 Nm

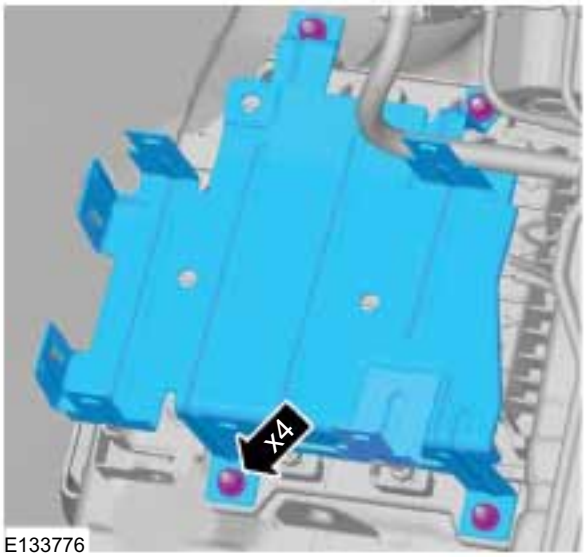

E133776

7. 1. Torque: 10 Nm
   2. Torque: 11 Nm

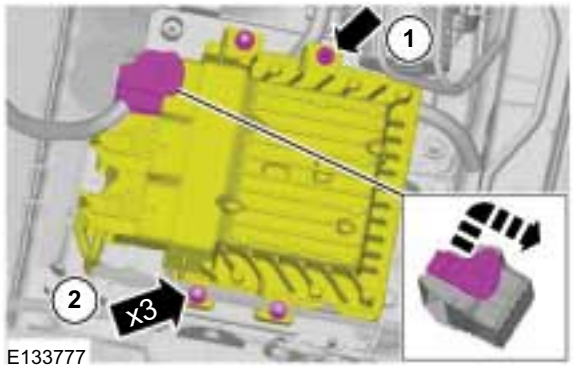

E133777

REMOVAL AND INSTALLATION

8.

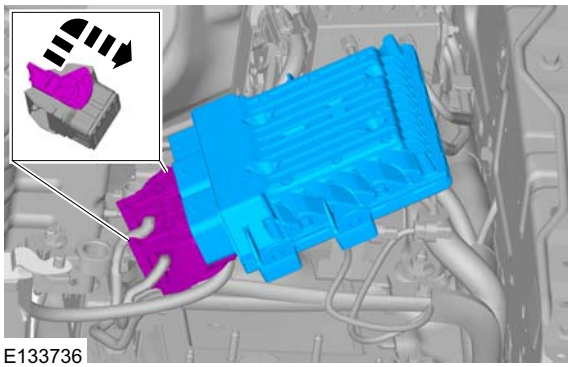
E133736

Installation

1. To install, reverse the removal procedure.
2. Carry out the Injector Correction Factors procedure using the following menu options: ToolBox/Powertrain/Service Functions.

   General Equipment: Ford Diagnostic Equipment
3. Carry out the Oil Quality History function using the following menu options: ToolBox/Powertrain/Service Functions.

   General Equipment: Ford Diagnostic Equipment
4. Carry out the Stored Speed Limit function using the following menu options: ToolBox/Powertrain/Service Functions.

   General Equipment: Ford Diagnostic Equipment
5. Carry out the Pump Learn procedure using the following menu options: ToolBox/Powertrain/Service Functions.

   General Equipment: Ford Diagnostic Equipment
6. Carry out the Pilot Correction Learn procedure using the following menu options: ToolBox/Powertrain/Service Functions.

   General Equipment: Ford Diagnostic Equipment
7. Change the engine oil and the oil filter.
8. Carry out the oil reset procedure.

REMOVAL AND INSTALLATION

Camshaft Position (CMP) Sensor(29 232 0)

Removal

NOTE: Removal steps in this procedure may contain installation details.

1. Refer to: Battery Disconnect and Connect (414-01 Battery, Mounting and Cables, General Procedures).
2. **NOTE:** Lubricate the O-ring seal with clean engine oil.

   Torque: 7 Nm

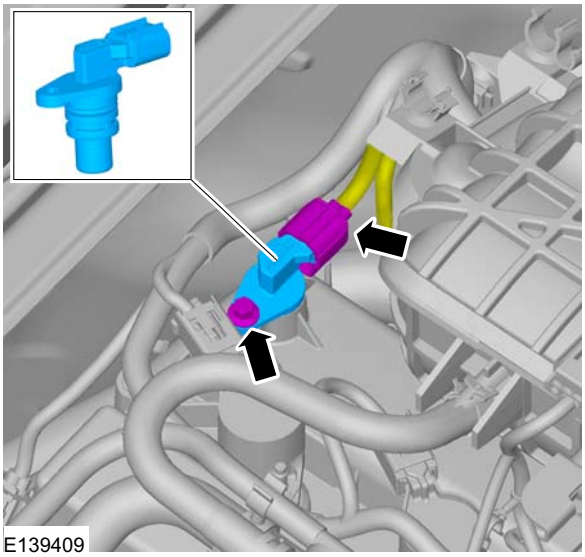

Installation

1. To install, reverse the removal procedure.

REMOVAL AND INSTALLATION

Engine Coolant Temperature (ECT) Sensor(21 190 0)

Removal

NOTE: Removal steps in this procedure may contain installation details.

1. Refer to: Battery Disconnect and Connect (414-01 Battery, Mounting and Cables, General Procedures).

NOTE: The sensor is located at the rear of the cylinder head.

2. **NOTE:** Lubricate the O-ring seal with clean engine oil.

   Torque: 30 Nm

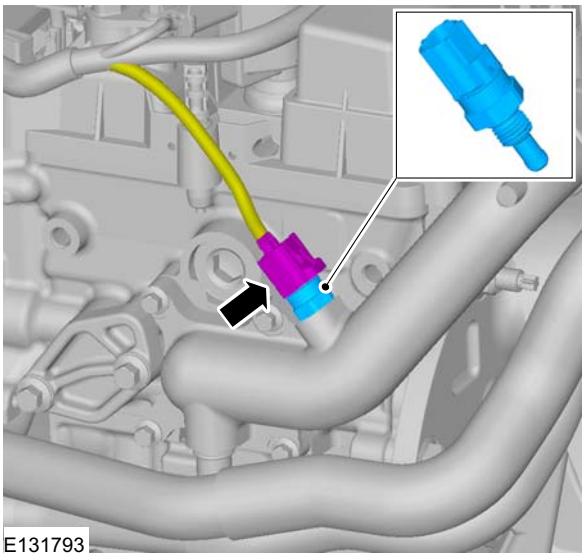

Installation

1. To install, reverse the removal procedure.

REMOVAL AND INSTALLATION

Heated Oxygen Sensor (HO2S)(29 220 0)

Removal

NOTE: Removal steps in this procedure may contain installation details.

1. Refer to: Battery Disconnect and Connect (414-01 Battery, Mounting and Cables, General Procedures).
2. Refer to: Lifting (100-02 Jacking and Lifting, Description and Operation).
3. Torque: 18 Nm

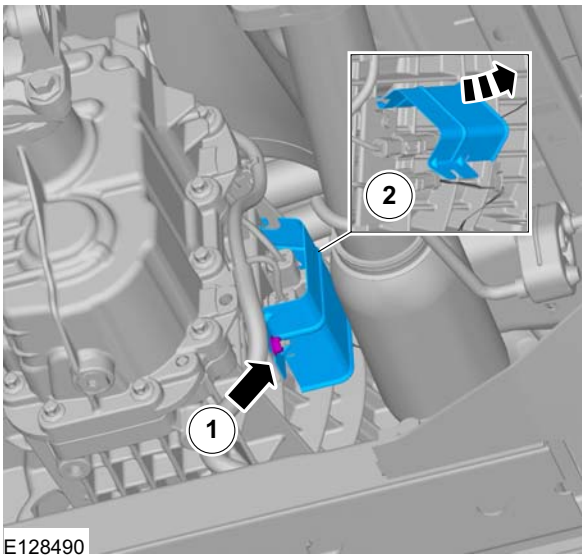

E128490

4.

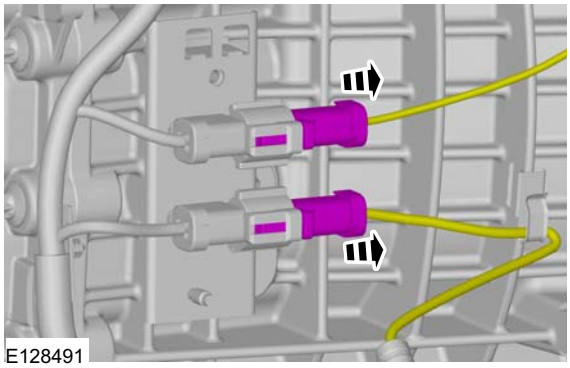
E128491

5. Torque: 48 Nm

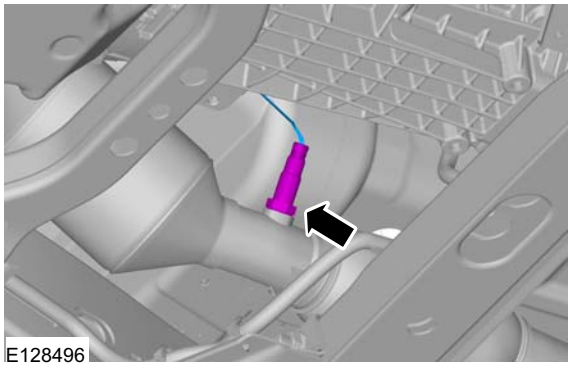
E128496

6. Torque: 48 Nm

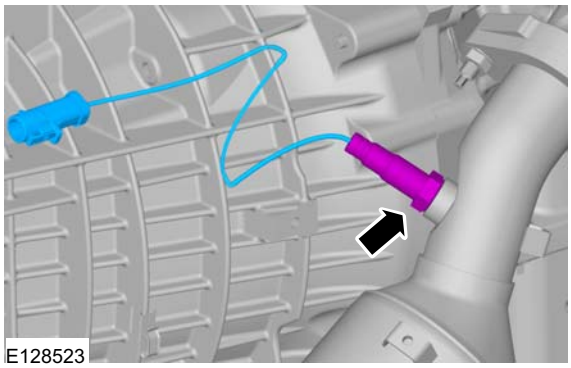
E128523

Installation

1. **NOTE:** A new component may be supplied with a longer cable than the one removed. Make sure that the cable is routed and secured in such a way that it cannot be damaged and cause a noise, vibration or harshness (NVH) concern.

   To install, reverse the removal procedure.

REMOVAL AND INSTALLATION

Knock Sensor (KS)(29 222 0)

Removal

NOTE: Removal steps in this procedure may contain installation details.

1. Refer to: Battery Disconnect and Connect (414-01 Battery, Mounting and Cables, General Procedures).
2. Refer to: Lifting (100-02 Jacking and Lifting, Description and Operation).
3.

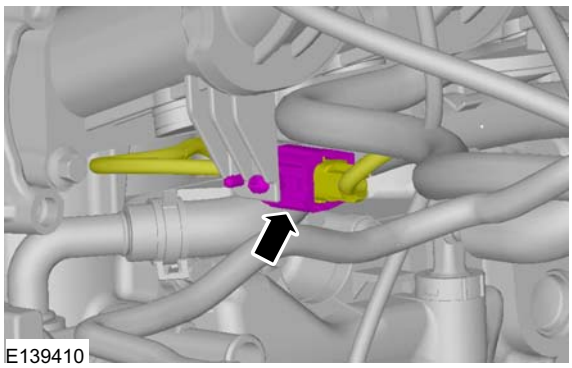
E139410

4. **NOTE:** Make sure that the mating faces are clean and free of foreign material.

   Torque: 20 Nm

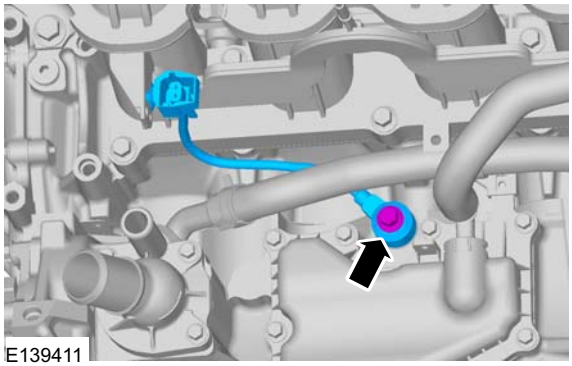
E139411

Installation

1. To install, reverse the removal procedure.

REMOVAL AND INSTALLATION

Engine Oil Pressure (EOP) Sensor

Removal

NOTE: Removal steps in this procedure may contain installation details.

1. Refer to: Health and Safety Precautions (100-00 General Information, Description and Operation).
2. Refer to: Battery Disconnect and Connect (414-01 Battery, Mounting and Cables, General Procedures).
3. Refer to: Lifting (100-02 Jacking and Lifting, Description and Operation).
4.

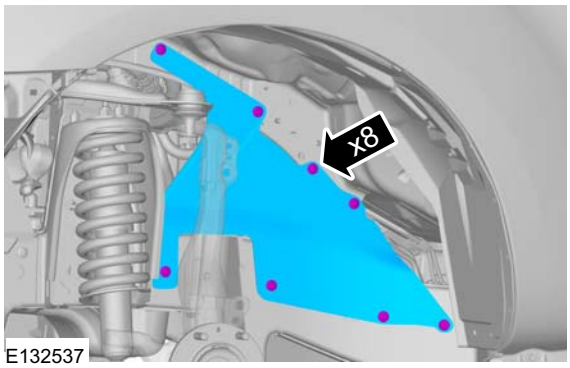

E132537

5. Torque: 30 Nm

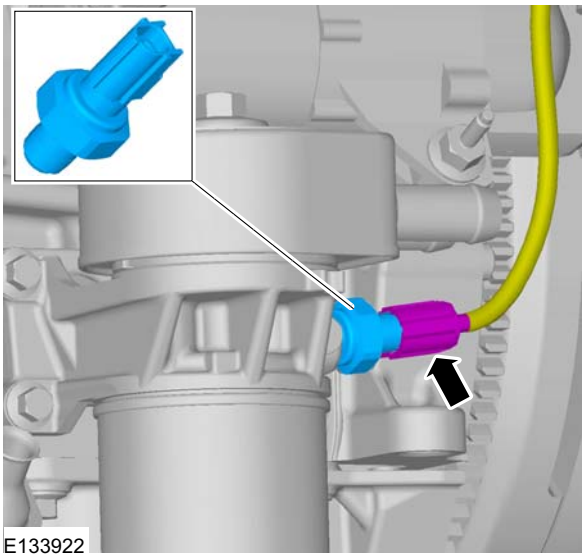
E133922

Installation

1. To install, reverse the removal procedure.

REMOVAL AND INSTALLATION

Manifold Absolute Pressure (MAP) Sensor(29 224 0)

Removal

NOTE: Removal steps in this procedure may contain installation details.

1. Refer to: Health and Safety Precautions (100-00 General Information, Description and Operation).
2. Refer to: Battery Disconnect and Connect (414-01 Battery, Mounting and Cables, General Procedures).
3. Torque: 3 Nm

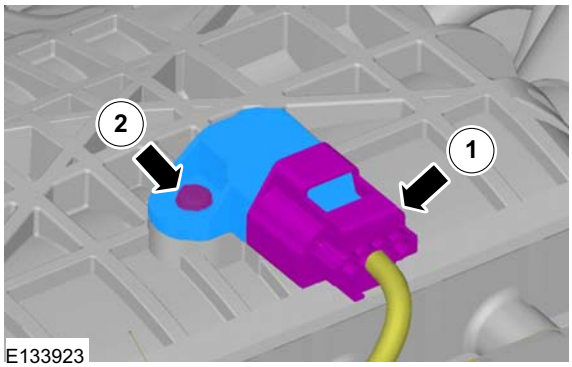

Installation

1. To install, reverse the removal procedure.

SECTION 303-14B Electronic Engine Controls — 2.2L Duratorq-TDCi (88kW/120PS) - Puma/2.2L Duratorq-TDCi (96kW/130PS) - Puma/2.2L Duratorq-TDCi (110kW/150PS) - Puma/3.2L Duratorq-TDCi (148kW/200PS) - Puma

VEHICLE APPLICATION: 2011.50 Ranger

CONTENTS PAGE

DESCRIPTION AND OPERATION

Electronic Engine Controls..... 303-14B-2
Vehicles with 2.2L Duratorq-TDCi (Puma) diesel engine..... 303-14B-2
Vehicles with 3.2L Duratorq-TDCi (Puma) diesel engine..... 303-14B-3
Electronic Engine Controls (System Operation and Component Description)..... 303-14B-4

REMOVAL AND INSTALLATION

Crankshaft Position (CKP) Sensor — 2.2L Duratorq-TDCi (88kW/120PS) - Puma/2.2L Duratorq-TDCi (96kW/130PS) - Puma/2.2L Duratorq-TDCi (110kW/150PS) - Puma..... (29 230 0) 303-14B-5
Crankshaft Position (CKP) Sensor — 3.2L Duratorq-TDCi (148kW/200PS) - Puma..... (29 230 0) 303-14B-6
Engine Coolant Temperature (ECT) Sensor..... (21 190 0) 303-14B-7
Brake Pedal Position (BPP) Switch..... (33 502 0) 303-14B-8
Powertrain Control Module (PCM)..... (29 200 0) 303-14B-9
Camshaft Position (CMP) Sensor — 2.2L Duratorq-TDCi (88kW/120PS) - Puma/2.2L Duratorq-TDCi (96kW/130PS) - Puma/2.2L Duratorq-TDCi (110kW/150PS) - Puma..... (29 232 0) 303-14B-11
Camshaft Position (CMP) Sensor — 3.2L Duratorq-TDCi (148kW/200PS) - Puma..... (29 232 0) 303-14B-12

DESCRIPTION AND OPERATION

Electronic Engine Controls

Vehicles with 2.2L Duratorq-TDCi (Puma) diesel engine

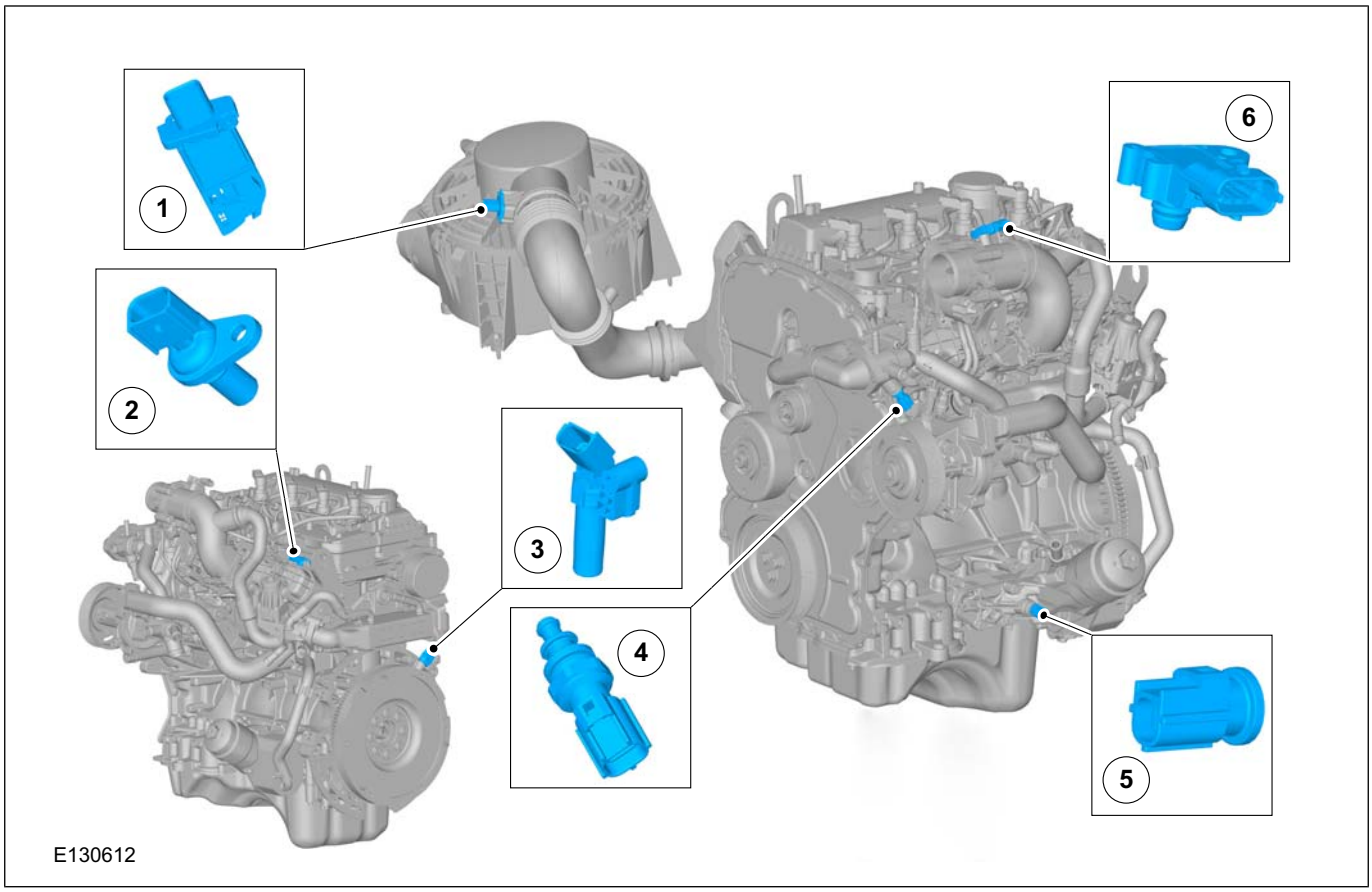

Item	Description
1	Mass air flow (MAF)
2	Camshaft position (CMP) sensor
3	Crankshaft position (CKP) sensor

Item	Description
4	Engine coolant temprature (ECT) sensor
5	Engine oil pressure sensor
6	Manifold absolute pressure and temperature (MAPT) sensor

DESCRIPTION AND OPERATION

Vehicles with 3.2L Duratorq-TDCi (Puma) diesel engine

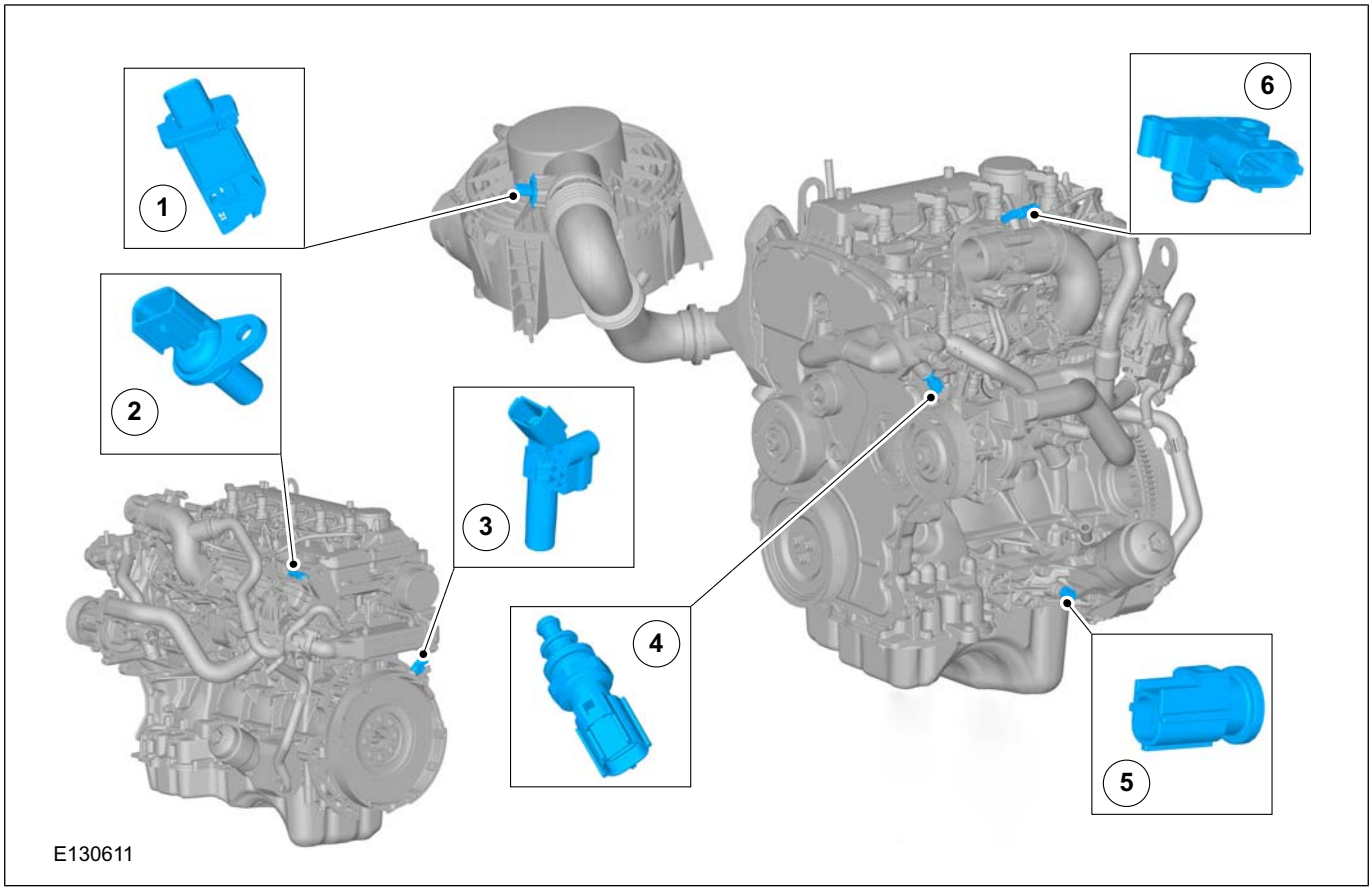

Item	Description
1	Mass air flow (MAF) sensor
2	Camshaft position (CMP) sensor
3	Crankshaft position (CKP) sensor
4	Engine coolant temprature (ECT) sensor
5	Engine oil pressure sensor
6	Manifold absolute pressure and temperature (MAPT) sensor

DESCRIPTION AND OPERATION

Electronic Engine Controls – System Operation and Component Description

Information not available at this time.

REMOVAL AND INSTALLATION

Crankshaft Position (CKP) Sensor — 2.2L Duratorq-TDCi (88kW/120PS) - Puma/2.2L Duratorq-TDCi (96kW/130PS) - Puma/2.2L Duratorq-TDCi (110kW/150PS) - Puma(29 230 0)

Removal

NOTE: Removal steps in this procedure may contain installation details.

1. Refer to: Battery Disconnect and Connect (414-01 Battery, Mounting and Cables, General Procedures).
2. Refer to: Lifting (100-02 Jacking and Lifting, Description and Operation).
3. Torque: 7 Nm

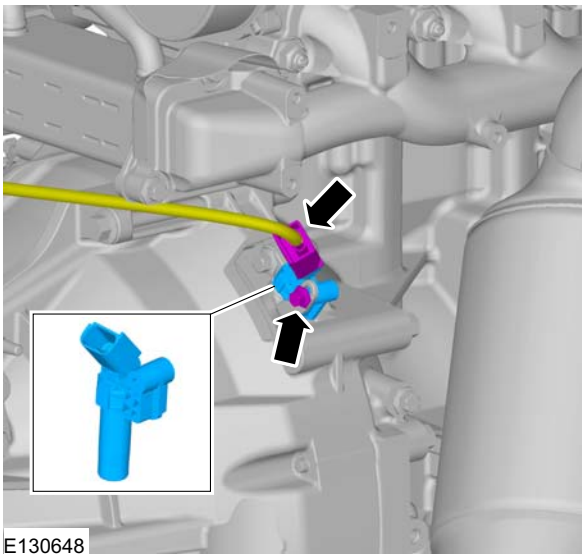
E130648

Installation

1. **CAUTION: Only rotate the crankshaft clockwise.**

   Rotate the crankshaft until a flywheel tooth is visible through the CKP sensor housing.

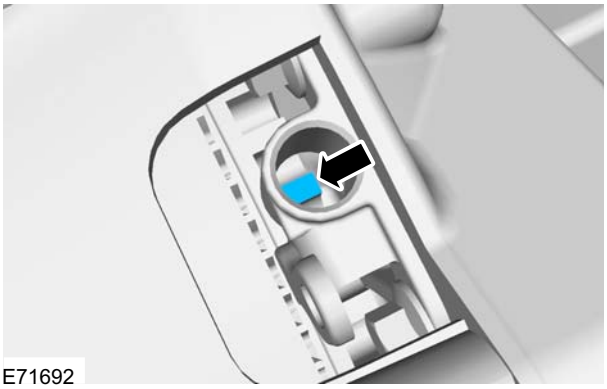
E71692

2. **CAUTION: The tip of the sensor must rest on a flywheel tooth.**

   NOTE: Make sure that a new component is installed.

   To install, reverse the removal procedure.

REMOVAL AND INSTALLATION

Crankshaft Position (CKP) Sensor — 3.2L Duratorq-TDCi (148kW/200PS) - Puma(29 230 0)

Removal

NOTE: Removal steps in this procedure may contain installation details.

1. Refer to: Battery Disconnect and Connect (414-01 Battery, Mounting and Cables, General Procedures).
2. Refer to: Lifting (100-02 Jacking and Lifting, Description and Operation).
3. Torque: 25 Nm

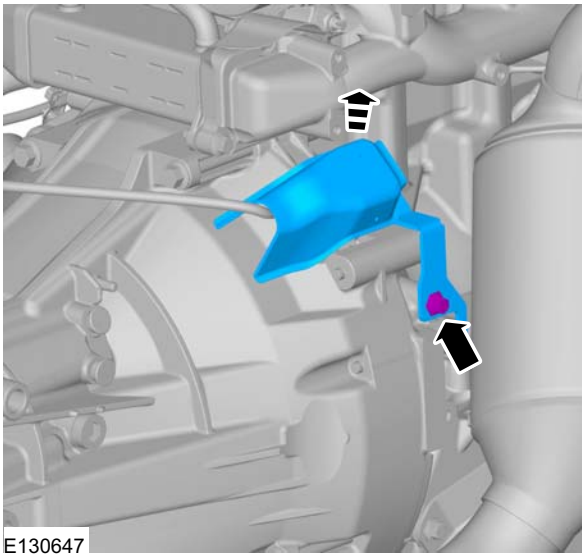
E130647

4. Torque: 7 Nm

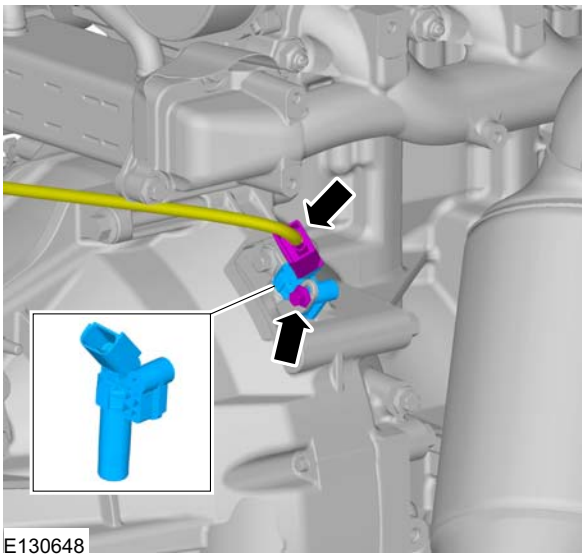
E130648

Installation

1. **CAUTION: Only rotate the crankshaft clockwise.**

   Rotate the crankshaft until a flywheel tooth is visible through the CKP sensor housing.

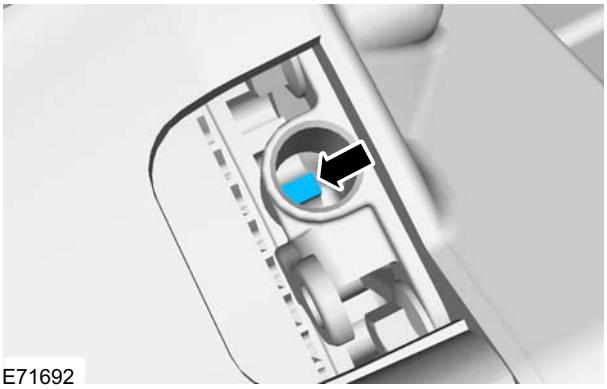
E71692

2. **CAUTION: The tip of the sensor must rest on a flywheel tooth.**

   NOTE: Make sure that a new component is installed.

   To install, reverse the removal procedure.

REMOVAL AND INSTALLATION

Engine Coolant Temperature (ECT) Sensor(21 190 0)

Removal

NOTE: Removal steps in this procedure may contain installation details.

1. Refer to: Cooling System Draining, Filling and Bleeding - 2.2L Duratorq-TDCi (88kW/120PS) - Puma/2.2L Duratorq-TDCi (96kW/130PS) - Puma/2.2L Duratorq-TDCi (110kW/150PS) - Puma/3.2L Duratorq-TDCi (148kW/200PS) - Puma (303-03 Engine Cooling - 2.2L Duratorq-TDCi (88kW/120PS) - Puma/2.2L Duratorq-TDCi (96kW/130PS) - Puma/2.2L Duratorq-TDCi (110kW/150PS) - Puma, General Procedures).
2. Refer to: Battery Disconnect and Connect (414-01 Battery, Mounting and Cables, General Procedures).
3. Torque: 24 Nm

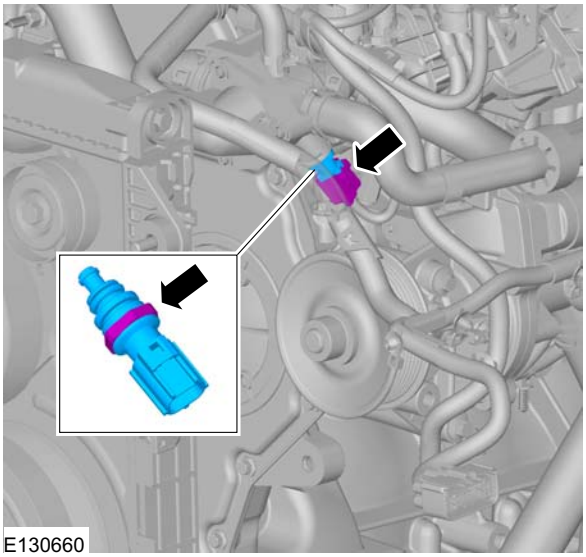
E130660

Installation

1. To install, reverse the removal procedure.

REMOVAL AND INSTALLATION

Brake Pedal Position (BPP) Switch(33 502 0)

Removal

NOTE: Removal steps in this procedure may contain installation details.

1.

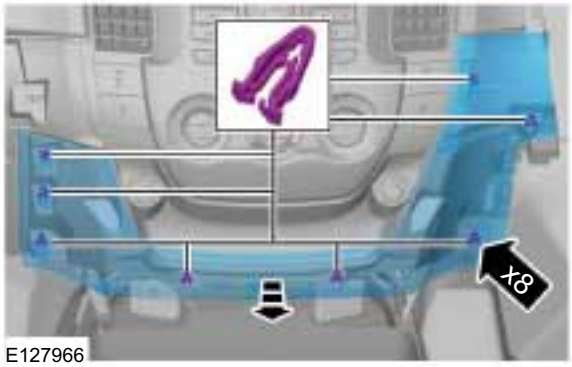

E127966

2.

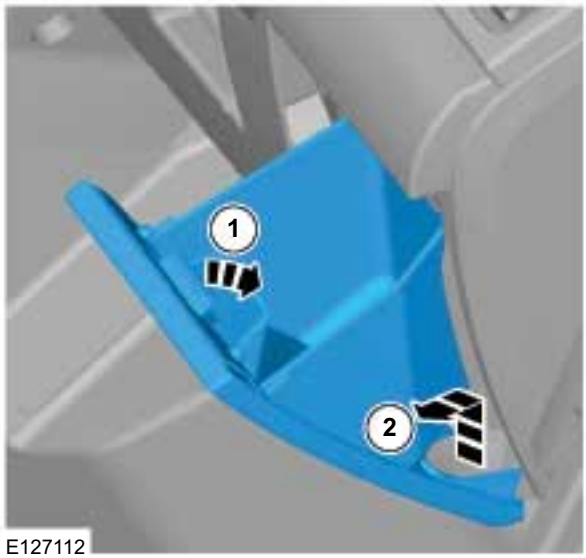

E127112

3.

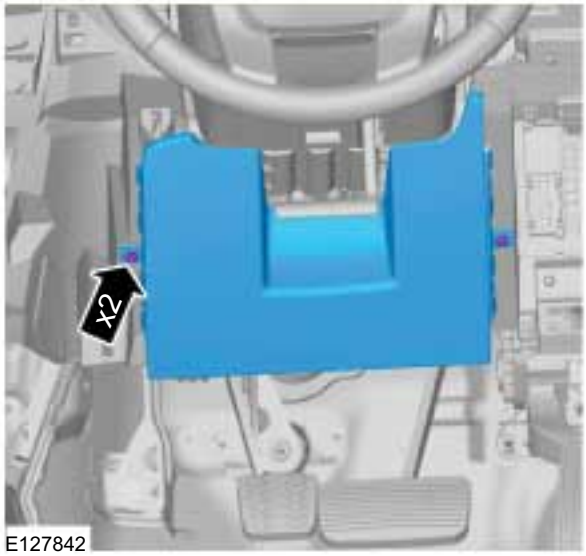

E127842

4. **NOTE:** Only if equipped with driver lower air bag module.

Refer to: Driver Lower Air Bag Module (501-20 Supplemental Restraint System, Removal and Installation).

5.

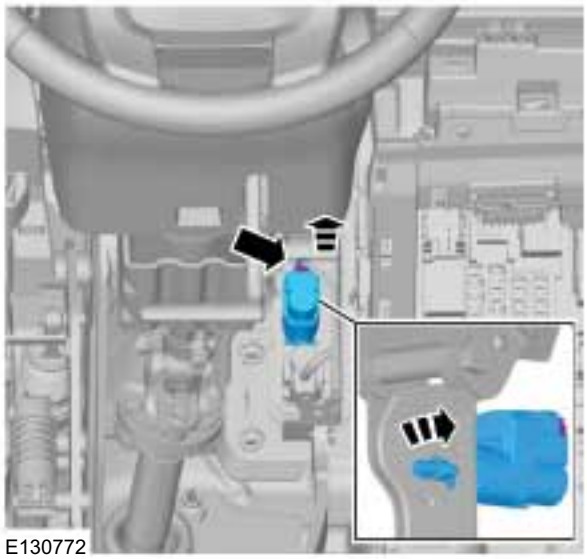
E130772

Installation

1. To install, reverse the removal procedure.

REMOVAL AND INSTALLATION

Powertrain Control Module (PCM)(29 200 0)

General Equipment

Ford Diagnostic Equipment

Removal

CAUTION: If a new PCM is to be installed, upload the PCM configuration information using the Programmable Modules Installation Routine, prior to commencing the removal of the PCM.

NOTE: Removal steps in this procedure may contain installation details.

All vehicles

1. Refer to: Battery Disconnect and Connect (414-01 Battery, Mounting and Cables, General Procedures).
2. Refer to: Battery (414-01 Battery, Mounting and Cables, Removal and Installation).
3. Refer to: Battery Tray (414-01 Battery, Mounting and Cables, Removal and Installation).
4.

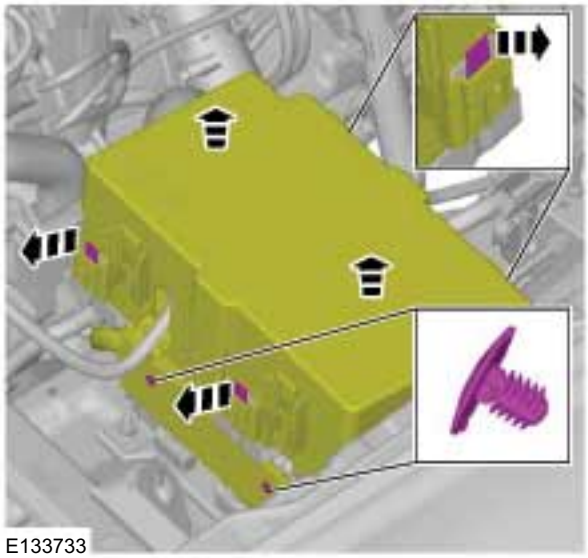
E133733

Vehicles with PCM security shield

5. Torque: 15 Nm

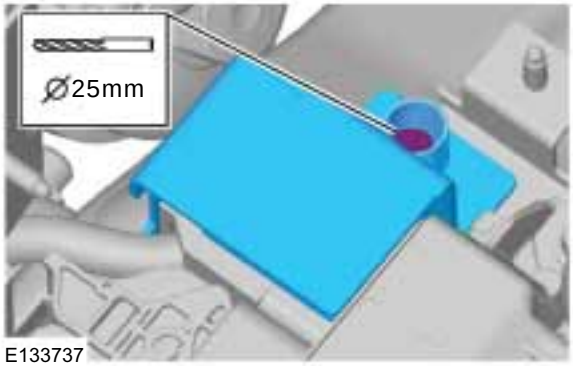

E133737

All vehicles

6. Torque: 11 Nm

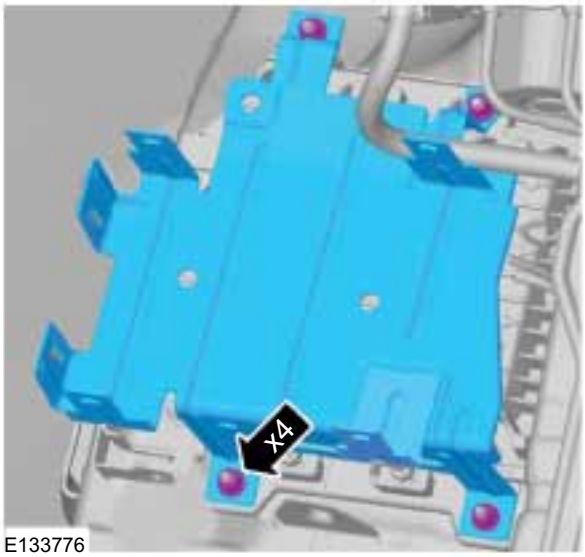

E133776

7. 1. Torque: 10 Nm
   2. Torque: 11 Nm

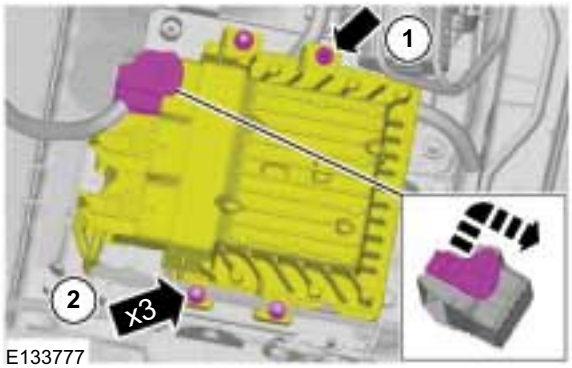

E133777

REMOVAL AND INSTALLATION

8.

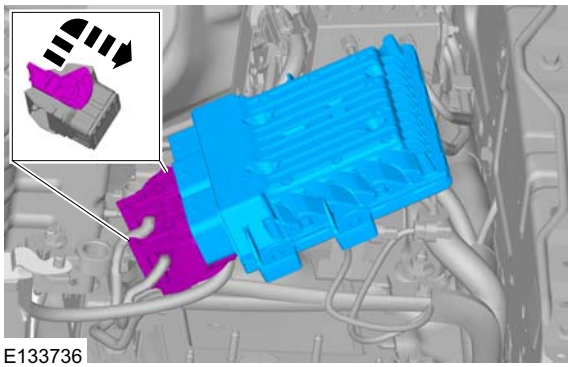
E133736

Installation

1. To install, reverse the removal procedure.
2. Carry out the Injector Correction Factors procedure using the following menu options: ToolBox/Powertrain/Service Functions.

   General Equipment: Ford Diagnostic Equipment
3. Carry out the Oil Quality History function using the following menu options: ToolBox/Powertrain/Service Functions.

   General Equipment: Ford Diagnostic Equipment
4. Carry out the Stored Speed Limit function using the following menu options: ToolBox/Powertrain/Service Functions.

   General Equipment: Ford Diagnostic Equipment
5. Carry out the Pump Learn procedure using the following menu options: ToolBox/Powertrain/Service Functions.

   General Equipment: Ford Diagnostic Equipment
6. Carry out the Pilot Correction Learn procedure using the following menu options: ToolBox/Powertrain/Service Functions.

   General Equipment: Ford Diagnostic Equipment
7. Change the engine oil and the oil filter.
8. Carry out the oil reset procedure.

REMOVAL AND INSTALLATION

Camshaft Position (CMP) Sensor — 2.2L Duratorq-TDCi (88kW/120PS) - Puma/2.2L Duratorq-TDCi (96kW/130PS) - Puma/2.2L Duratorq-TDCi (110kW/150PS) - Puma(29 232 0)

Removal

NOTE: Removal steps in this procedure may contain installation details.

1.

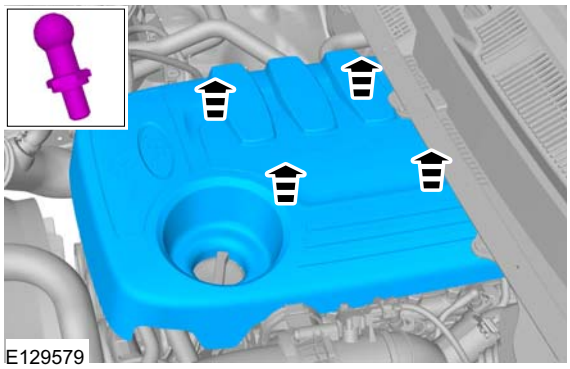

2.

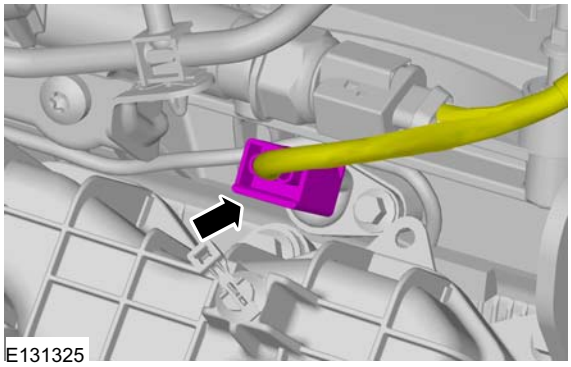

3.

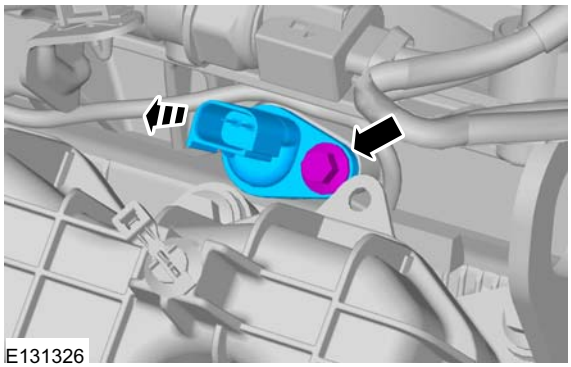

Installation

1. To install, reverse the removal procedure.

REMOVAL AND INSTALLATION

Camshaft Position (CMP) Sensor — 3.2L Duratorq-TDCi (148kW/200PS) - Puma(29 232 0)

Removal

NOTE: Removal steps in this procedure may contain installation details.

1.

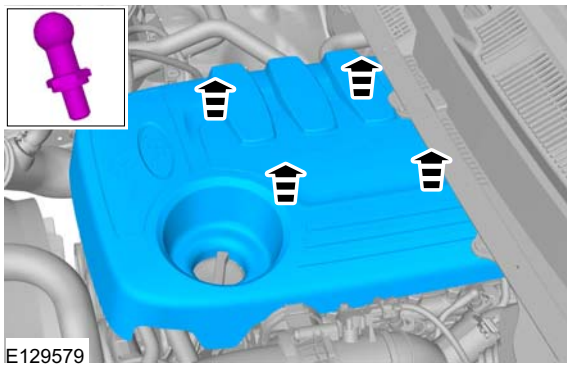

2.

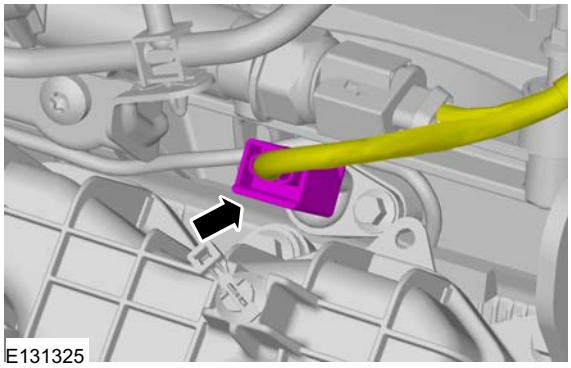

3.

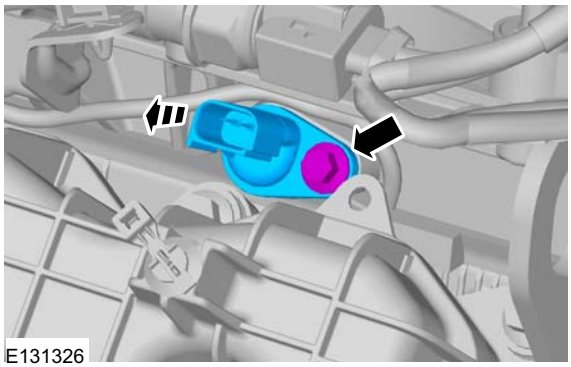

Installation

1. To install, reverse the removal procedure.

SECTION 307-01 Automatic Transmission/Transaxle

— Vehicles With: 6-Speed Automatic Transaxle - 6R80

VEHICLE APPLICATION: 2011.50 Ranger

CONTENTS PAGE

DESCRIPTION AND OPERATION

Transmission Description (Component Location)..... 307-01-2
Transmission Description (Overview)..... 307-01-4
6R80 Transmission..... 307-01-4
Major Components 307-01-5
Multi-Plate Clutch 307-01-5
Shift Overlap Control 307-01-5
Hydraulic Systems..... 307-01-6
Fluid Pump 307-01-6
Fluid Filter..... 307-01-6
Single Planetary Gearset 307-01-6
Ravigenaux Planetary Gearset 307-01-6
Output Shaft 307-01-6

GENERAL PROCEDURES

Transmission Fluid Cooler - Backflushing and Cleaning..... 307-01-7
Transmission Fluid Drain and Refill..... 307-01-8
Adding additional transmission fluid..... 307-01-11
Removing transmission fluid..... 307-01-12
Transmission Fluid Level Check..... 307-01-14

REMOVAL

Transmission — 2WD..... 307-01-16
Transmission — 4WD..... 307-01-21

INSTALLATION

Transmission — 2WD..... 307-01-26
Transmission — 4WD..... 307-01-31

DESCRIPTION AND OPERATION

Transmission Description – Component Location

Major Components of 6R80 Transmission

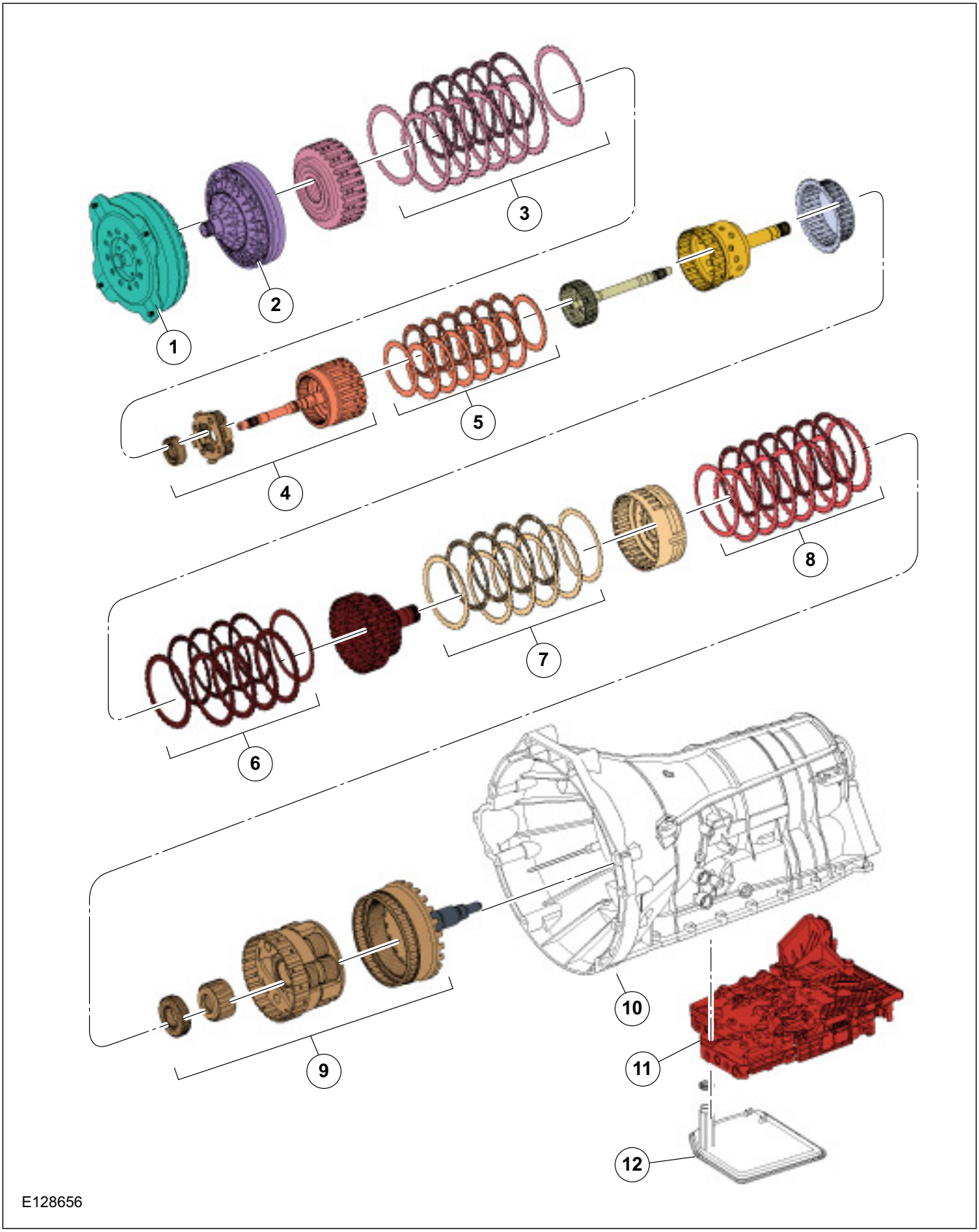

DESCRIPTION AND OPERATION

Item	Description
1	Torque converter
2	Front pump assembly
3	Forward clutch (A) (quantity model dependant)
4	Front planetary gearset
5	Overdrive (O/D) clutch (E)
6	Direct clutch (B) (quantity model dependant)

Item	Description
7	Intermediate clutch (C) (quantity model dependant)
8	Low/reverse clutch (D)
9	Rear planetary gearset
10	Transmission case
11	Main control assembly
12	Transmission fluid filter

DESCRIPTION AND OPERATION

Transmission Description – Overview

6R80 Transmission

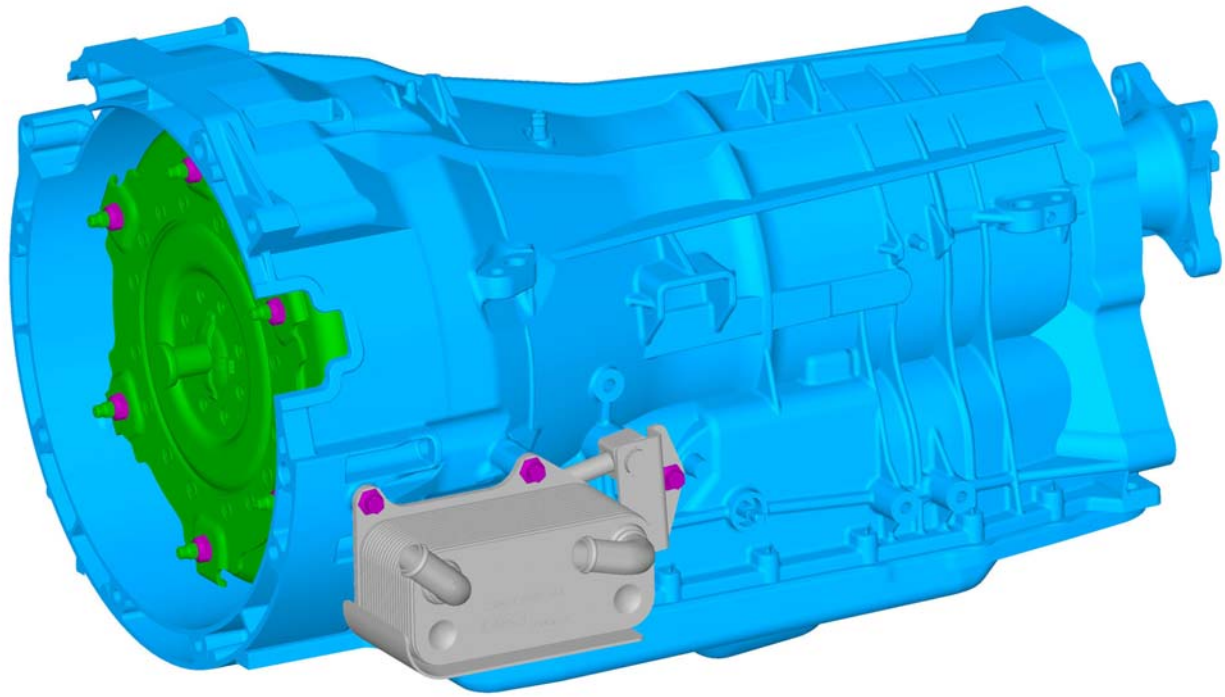

E128660

This transmission has an internal thermal bypass valve contained within the case.

This transmission uses planetary gears with hydraulic electronic controls. The Transmission Control Module (TCM) and the main control valve body units form a composite element that is installed as a single unit inside the automatic transmission.

This transmission has the following features:

- Six forward speeds
- Torque converter with an integral converter clutch
- Electronic shift and pressure controls
- Single planetary gear set
- Double planetary gear set
- Two fixed multi-disc clutches
- Three multi-plate clutches

All hydraulic functions are directed by electronic solenoids to control the following:

- Engagement feel
- Shift feel
- Shift scheduling
- Modulated Torque Converter Clutch (TCC) applications

This transmission has a mechatronic unit which contains:

- Transmission Control Module (TCM)
- Turbine Shaft Speed (TSS) sensor
- Output Shaft Speed (OSS) sensor
- An internal P, R, N, D selector shaft position sensor
- Transmission Fluid Temperature (TFT) sensor

Engine power reaches the transmission by a torque converter with an integral clutch. The 6 forward gears and one reverse gear are obtained from 2 planetary gearsets.

This automatic transmission is a 6-speed electronically controlled transmission comprising the basic elements, main control valve body unit,

DESCRIPTION AND OPERATION

torque converter, 1 solenoid valve and 6 pressure regulators. Gear selection is achieved by the control of automatic transmission fluid flow to operate various internal clutches. The TCM operates the electrical components and provides for the control of gear selection shift pressure, which increases refinement and torque converter slip.

In the event of a system fault, the TCM also provides for Failure Mode Effect Management to maintain maximum functional operation of the transmission with a minimum reduction in driver, passenger or vehicle safety. In the event of a total loss of control or electrical power, the basic transmission functions P, R, N and D are retained. Also 3rd or 5th gear is retained by the hydraulic system. The gear retained is dependent upon the gear selected at the time of the failure.

Major Components

This transmission has the following major components:

- Transmission case with integral torque converter housing and extension housing
- Torque converter
- Fluid pump
- Three drive clutches:
  - Forward clutch (A)
  - Direct clutch (B)
  - Overdrive (O/D) clutch (E)
- Two brake clutches:
  - Intermediate clutch (C)
  - Low/reverse clutch (D)
- Two planetary gearsets:
  - Front single planetary gearset (1 sun gear, 1 carrier, 1 ring gear)
  - Rear Ravigenaux planetary gearset (2 sun gears, 1 carrier with 2 sets of pinion gears and 1 ring gear)
- Main control (mechatronic assembly):
  - Upper valve body
  - Lower valve body
  - Transmission Control Module (TCM)
  - Transmission Range (TR) sensor
  - Turbine Shaft Speed (TSS) sensor
  - Output Shaft Speed (OSS) sensor

NOTE: Friction and steel plate quantity will vary based on engine displacement. Refer to the Clutch Plate Quantity Chart in the Specifications portion of this section.

In addition to the torque converter, the other shift elements are:

- three rotating multi-plate clutches: forward (A), direct (B) and overdrive (E).
- two fixed multi-disc brakes: intermediate (C) and low/reverse (D).

All gear shifts from 1st to 6th or from 6th to 1st are power-on overlapping shifts. That is, during the shift, one of the clutches must continue to transmit the drive at lower main pressure until the other clutch is able to accept the input torque.

The shift elements, clutches or brakes are engaged hydraulically. The transmission fluid pressure builds up between the cylinder and the piston, pressing the clutches together.

The purpose of these shift elements is to carry out in-load shifts with no interruption to traction.

Multi-plate clutches; forward, direct and overdrive, supply power from the engine to the planetary geartrain. Multi-disc brakes, intermediate and low/reverse, press against the transmission housing in order to achieve a torque reaction effect.

Multi-Plate Clutch

Clutches; O/D (E), forward (A) and direct (B) are balanced in terms of dynamic pressure. That is, their pistons are exposed to the transmission fluid flow on both sides, in order to prevent pressure buildup in the clutch as speed increases. This equalization process is achieved by a baffle plate and pressure-free transmission fluid supply by a lubricating passage, through which the space between piston and baffle plate is filled with transmission fluid.

The advantages of this dynamic pressure equalization are:

- Reliable clutch engagement and release in all speed ranges.
- Improved shift refinement.

Shift Overlap Control

The electro-hydraulic shift action is obtained by means of various valves in the TCM and main control valve body, actuated by pressure regulators. They engage or disengage the relevant clutches or brakes at the correct moments.

DESCRIPTION AND OPERATION

Hydraulic Systems

Fluid Pump

The torque converter is supported in the fluid pump by a needle roller bearing. The fluid pump is driven directly from the engine by the torque converter shell and supplies transmission fluid to the transmission and the hydraulic control unit.

The fluid pump draws in transmission fluid through a transmission fluid filter and delivers it at high pressure to the main pressure valve in the main control valve body unit. The valve adjusts the pressure and returns excess transmission fluid to the transmission fluid pan.

Fluid Filter

All transmission fluid that is picked up from the transmission fluid pan passes through the transmission fluid filter. The transmission fluid filter and its accompanying seal are part of the transmission fluid path from the pan to the transmission fluid pump.

Single Planetary Gearset

The single planetary gear O/D carrier is driven by the input shaft. The single planetary gear set consists of the following components:

- One sun gear
- Four planetary gears meshing with the sun gear
- One planetary carrier
- One ring gear

Ravigenaux Planetary Gearset

The Ravigenaux planetary gearset is splined to the output shaft and consists of the following components:

- Two sun gears of different sizes
- Three short planetary gear pinions meshing with the sun gears
- Three long planetary gear pinions meshing with the sun gears
- One planetary carrier
- One ring gear

Output Shaft

The output shaft provides torque to the driveshaft and rear axle assembly. It is driven by the ring gear of the planetary gearset.

GENERAL PROCEDURES

Transmission Fluid Cooler - Backflushing and Cleaning

Special Tool(s)

E128862	Transmission Heated Cooler Line Flusher 222-00007, 222-00004

WARNING: Use transmission fluid specified for this transmission. Do not use any supplemental transmission fluid additives or cleaning agents. The use of these products could cause internal transmission components to fail; this will affect the operation of the transmission.

NOTE: Transmission fluid cooler backflushing and cleaning will be performed using the Transmission Heated Cooler Line Flusher or equivalent. Follow the manufacturer's instructions included with the machine. Test the equipment to make sure that a vigorous fluid flow is present before proceeding.

NOTE: If the Transmission Heated Cooler Line Flusher or equivalent is not available, install a new transmission fluid cooler and/or an auxiliary transmission fluid cooler will be required.

NOTE: If the vehicle is equipped with an in-line transmission fluid filter, remove and discard the in-line filter.

1. **Check and top off the fluid level of the cooler line flusher with transmission fluid.**
2. **Allow the transmission fluid in the cooler line flusher 15-30 minutes to heat up to 60°C (140°F) before using.**
3. **If equipped, remove and discard the in-line transmission fluid filter.**

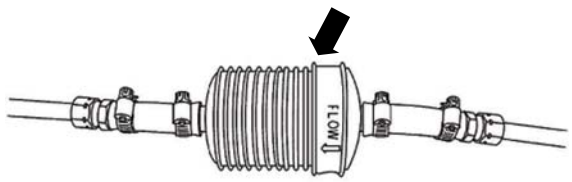

E128858

4. **Install the line adapters into the transmission fluid cooler tubes.**
5. **Attach the cooler line flusher red line to the transmission fluid cooler pressure tube quick connect fitting.**
6. **Attach the cooler line flusher blue line to the transmission fluid cooler return tube quick connect fitting.**
7. **Follow the equipment instructions to purge the transmission fluid cooler tubes and cooler prior to starting the flushing procedure.**
8. **Allow the transmission fluid cooling system to backflush for 10-15 minutes, then flush the transmission fluid cooler in a normal flow direction for an additional 10-15 minutes.**

GENERAL PROCEDURES

Transmission Fluid Drain and Refill

Special Tool(s)

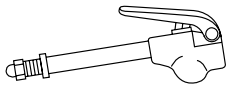 ST2467-A	Rubber Tip Air Nozzle 100-D009 (D93L-7000-A)
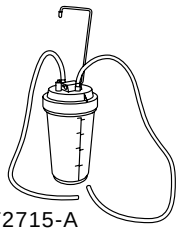 ST2715-A	Fluid Transporter/Evacuator/Injector 307-D465
E129427	Adapter, Fluid Level and Fill Plug 307-437
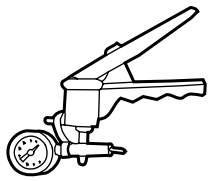 ST1269-A	Vacuum Pump Kit 416-D002 (D95L-7559-A) Integrated Diagnostic System (IDS) Vehicle Communication Module, with appropriate adapters or equivalent diagnostic tool

Materials	
Name	**Specification**
Transmission Fluid	MERCON®V

Drain

1. **With the vehicle in NEUTRAL, position it on a hoist. For additional information, refer to Section 100-02.**
2. **NOTE: Some transmission fluid leakage may occur when removing the transmission fluid fill plug.**

   Remove the transmission fluid fill plug fluid level indicator assembly located on the passenger side front portion of the transmission case. Removal of the transmission fluid fill plug will relieve any vacuum that might have built up in the transmission. This will aid in allowing the transmission fluid pan to be easily removed when the bolts are removed.

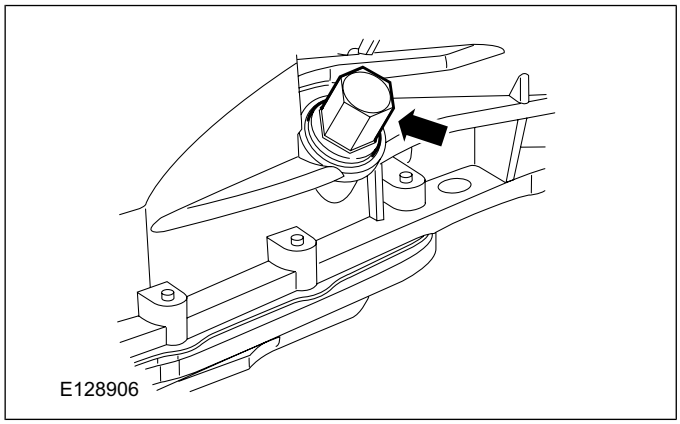
E128906

3. **Remove the transmission fluid pan and allow the transmission fluid to drain.**

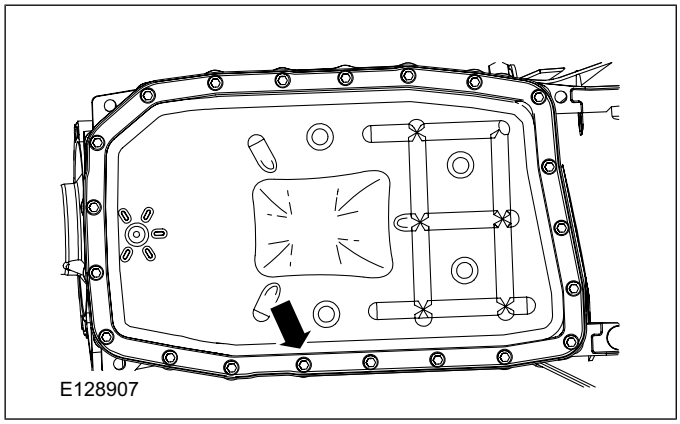
E128907

4. **NOTE: The transmission fluid pan gasket can be reused if not damaged.**

   Install a new transmission fluid pan gasket, if required.

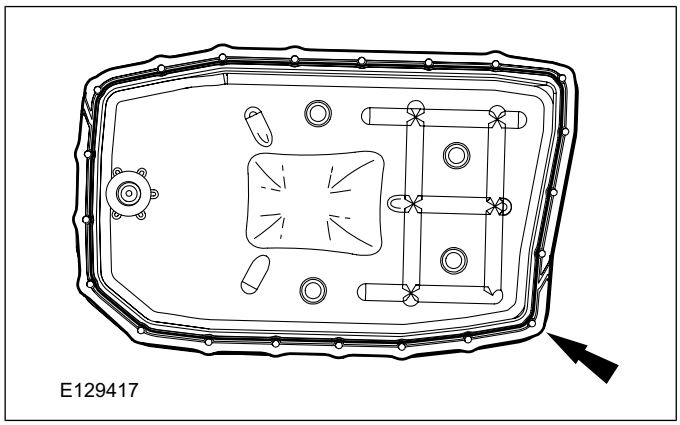
E129417

GENERAL PROCEDURES

5. **Install the transmission fluid pan and tighten the bolts in a crisscross pattern.**
   - Tighten to 12NM

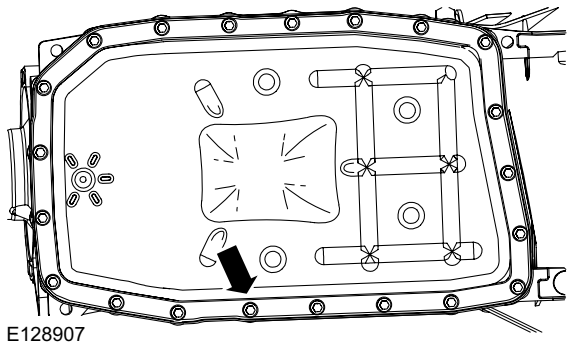
E128907

Refill

WARNING: The transmission fluid fill plug is located near the exhaust system. The exhaust will be extremely hot during this procedure.

CAUTIONS:

This procedure contains the air purge steps required to purge air from the transmission fluid cooling system. This procedure is NOT intended for use with the Transmission Fluid Level Check.

The vehicle should not be driven if the transmission fluid level is low as internal failure could result.

The use of any other transmission fluid than specified can result in the transmission failing to operate in a normal manner or transmission failure.

NOTE: If the transmission starts to slip, shifts slowly or shows signs of transmission fluid leaking, the transmission fluid level should be checked.

NOTE: Here is an overview of the Transmission Fluid Drain and Refill procedure.

1. **NOTE: The transmission will need 3.3L (3.5 qt) of transmission fluid added to the transmission as an initial fill if: th•e transmission has been overhauled. a• new mechatronic assembly has been installed. th•e transmission fluid pan or transmission fluid filter have been removed.**

   Using the Transmission Fluid Fill Tube, add 3.3L (3.5 qt) of transmission fluid to the transmission through the transmission fluid fill hole. For additional information, refer to Adding Additional Transmission Fluid in this procedure.transmission fluid

2. **Check the transmission fluid level cold.**
   - The vehicle is safe to drive if the transmission fluid is in the cold level range 32°C-43°C (90°F-110°F).
   - Using the scan tool and with the engine running, place the selector lever in each gear position and hold approximately 5 seconds. Place the selector lever in PARK, with the engine at idle (600-750 rpm).

3. **Separate the transmission fluid level indicator from the transmission fluid fill plug.**

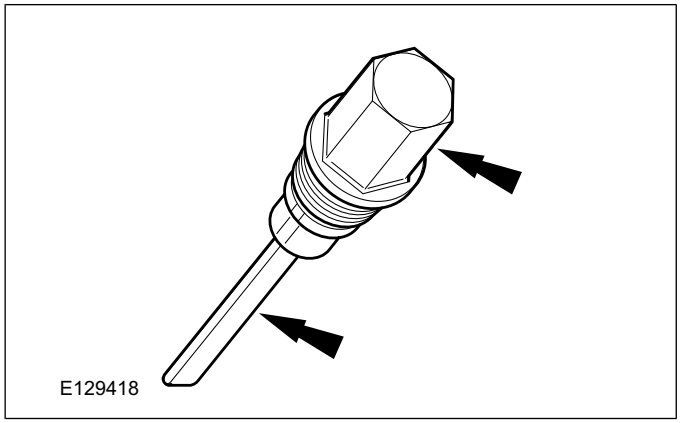
E129418

4. **Wipe the transmission fluid level indicator clean. Reinstall the transmission fluid level indicator only back into the transmission fluid fill plug hole to check the transmission fluid level. Repeat this until a consistent reading is established.**

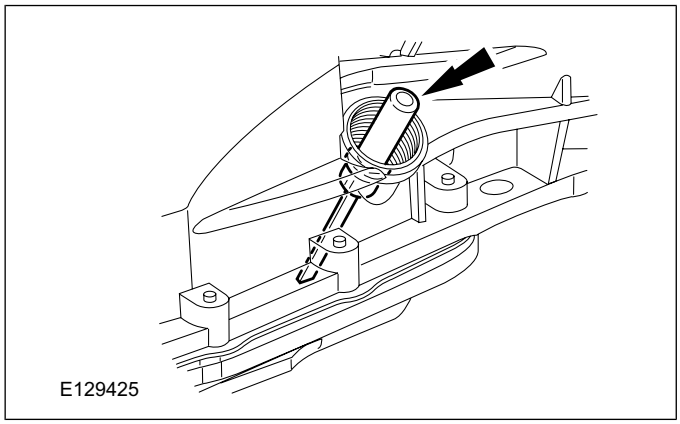
E129425

GENERAL PROCEDURES

5. **Add transmission fluid to the cold level location as shown in the illustration.**

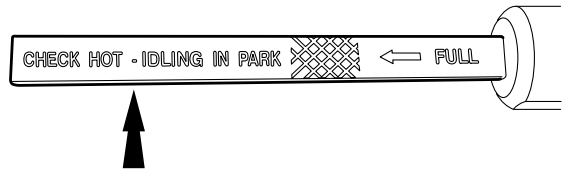

E129419

6. **Install the transmission fluid fill plug.**
   - Tighten to 35 Nm

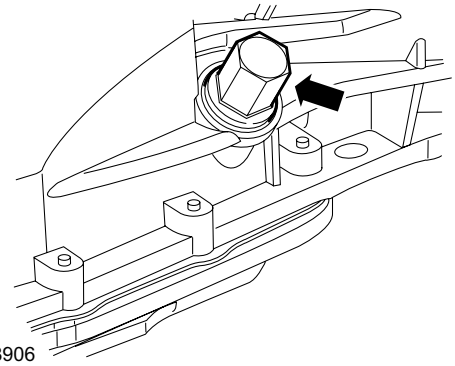
E128906

7. **While driving the vehicle, use the scan tool to verify that the TFT has reached a temperature of 88°C (190°F). This will circulate the transmission fluid through the torque converter and the transmission fluid cooling system, eliminating any trapped air in the transmission fluid cooling system.**
   - With the engine idling (600-750 rpm) in PARK, verify that the TFT is between 80ºC-85ºC (176ºF-185ºF).
8. **Remove the transmission fluid fill plug transmission fluid level indicator assembly located on the passenger side front portion of the transmission case.**

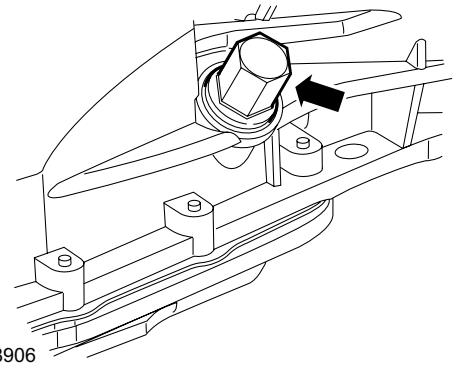
E128906

9. **Separate the transmission fluid level indicator from the transmission fluid fill plug.**

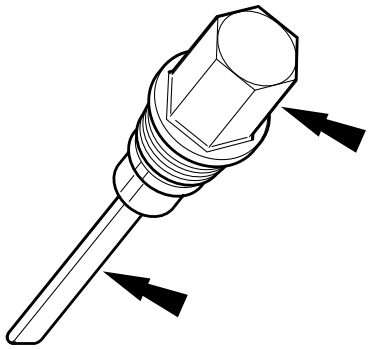
E129418

10. **Wipe the transmission fluid level indicator clean. Reinstall the transmission fluid level indicator only back into the transmission fluid fill plug hole to check the transmission fluid level. Repeat this until a consistent reading is established.**

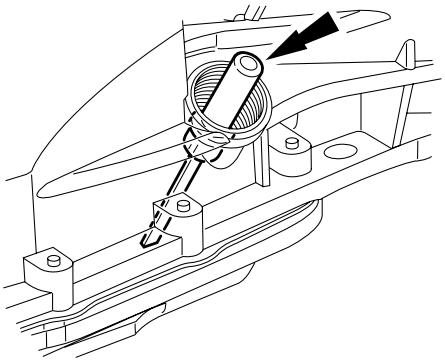
E129425

11. **Using the scan tool verify that the TFT is between 80ºC-85ºC (176ºF-185ºF). The**

GENERAL PROCEDURES

transmission fluid level must be at the upper level of the crosshatch mark.

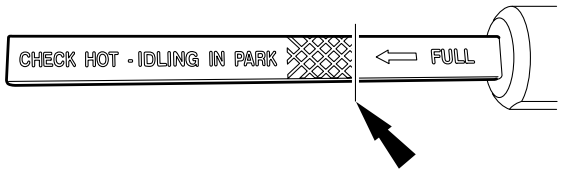

E129428

12. **NOTE: If the transmission fluid is not at the correct level, follow the steps for Adding Additional Transmission Fluid or Removing Transmission Fluid in this procedure.**

    Install the transmission fluid fill plug.

    - Tighten to 35 Nm

Adding additional transmission fluid

1. **NOTE: To get an accurate transmission fluid level reading the engine should be idling (600-750 rpm) in PARK.**

   Install the Transmission Fluid Fill Tube into the transmission fluid fill hole.

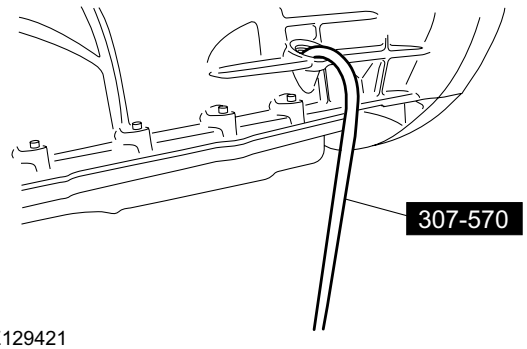

E129421

2. **Fill the Transporter Fluid Evacuator/Injector with approximately 0.47L (1 pt) of transmission fluid.**

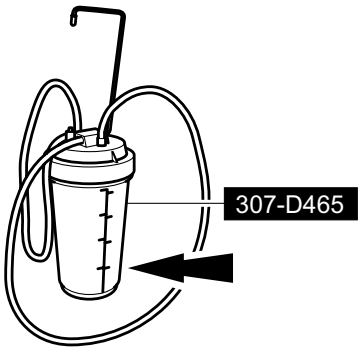

E129422

3. **Hang the Transporter Fluid Evacuator/Injector under the vehicle, upright and close to the transmission.**

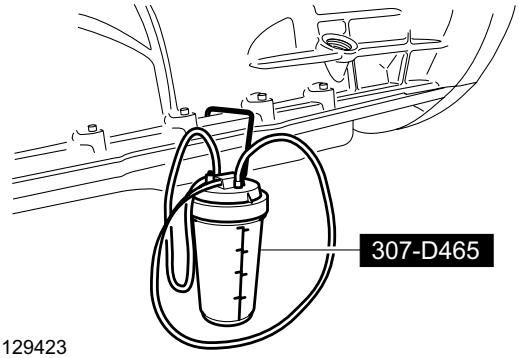

E129423

4. **Connect the Transporter Fluid Evacuator/Injector and Transmission Fluid Fill Tube.**

   - Connect the open end of the fluid hose from the Transporter Fluid Evacuator/Injector onto the Transmission Fluid Fill Tube from the transmission case.

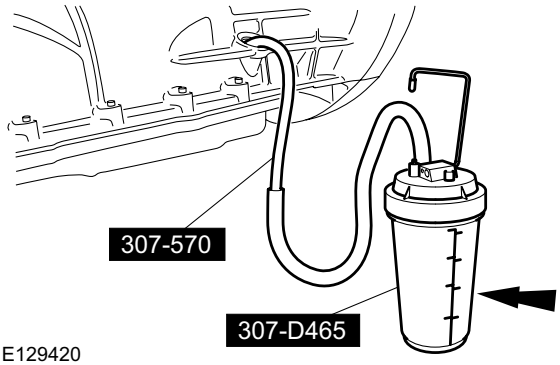

E129420

GENERAL PROCEDURES

5. **Use a Rubber Tip Air Nozzle to apply a maximum of 206.85 kPa (30 psi) to the open end of the vacuum/ pressure hose from the Transporter Fluid Evacuator/ Injector. Transmission fluid will immediately start flowing out of the Transporter Fluid Evacuator/Injector into the transmission.**

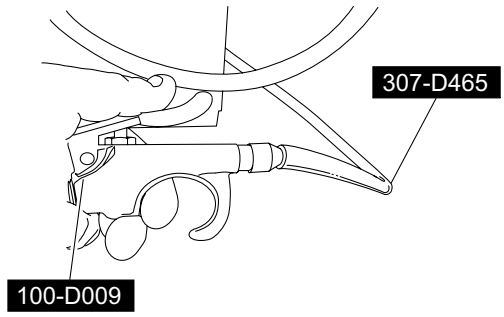

E129424

6. **NOTE: Do not overfill the transmission. The transmission fluid level must be at the upper level of the crosshatch mark.**

   Reinstall the transmission fluid level indicator only back into the transmission fluid fill plug hole to check the transmission fluid level. Repeat this until a consistent reading is established.

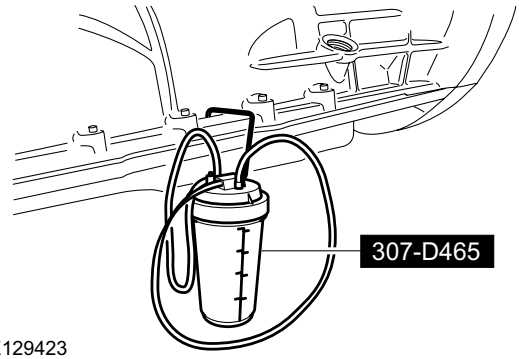

E129423

7. **Using the scan tool, verify that the TFT is between 80ºC-85ºC (176ºF-185ºF). The transmission fluid level must be at the upper level of the crosshatch mark.**

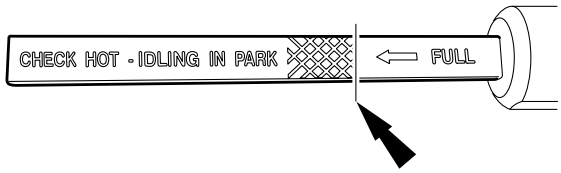

E129428

8. **NOTE: If the transmission fluid is over full, follow the steps for Removing Transmission Fluid in this procedure.**

   Install the transmission fluid fill plug.

   - Tighten to 35 Nm

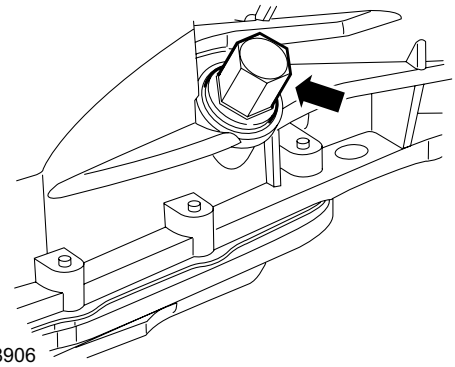
E128906

Removing transmission fluid

NOTE: To get an accurate transmission fluid level reading the engine should be idling (600-750 rpm) in PARK.

1. **If the transmission is overfilled, transmission fluid must be removed to the correct level. Use the Transporter Fluid Evacuator/Injector**

GENERAL PROCEDURES

and the Vacuum Pump Kit to extract any excessive transmission fluid.

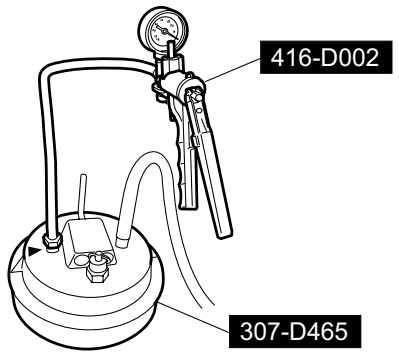

E129426

2. **Using the scan tool, verify that the TFT is between 80ºC-85ºC (176ºF-185ºF). The transmission fluid level must be at the upper level of the crosshatch mark. Reinstall the transmission fluid level indicator only back into the transmission fluid fill plug hole to check the transmission fluid level. Repeat this until a consistent reading is established.**

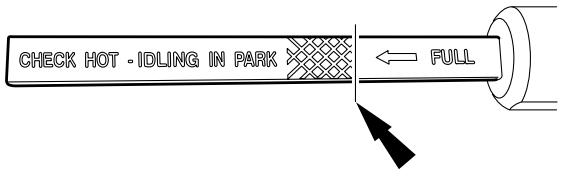

E129428

3. **Install the transmission fluid fill plug.**
   - Tighten to 35 Nm

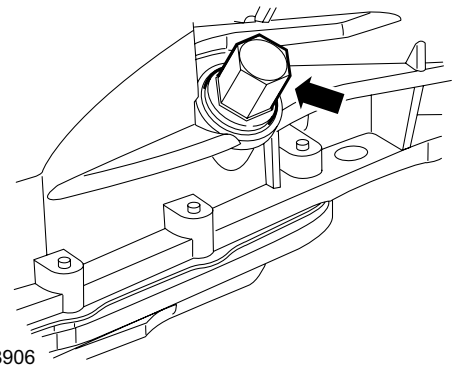
E128906

GENERAL PROCEDURES

Transmission Fluid Level Check

WARNING: The vehicle should not be driven if the transmission fluid level is low as internal failure could result.

CAUTION: The transmission fluid fill plug is located near the exhaust system. The exhaust will be extremely hot during this procedure.

NOTE: If the vehicle has been operated for an extended period at high highway speeds, in city traffic, during hot weather or while pulling a trailer, the transmission fluid must cool down to obtain an accurate reading.

NOTE: If the transmission starts to slip, shifts slowly or shows signs of transmission fluid leaking, the transmission fluid level should be checked.

NOTE: Do not overfill the transmission. The transmission fluid level must be at the upper level of the crosshatch mark.

NOTE: If the installation of a new transmission fluid cooler or transmission fluid cooler tubes has been carried out, the vehicle must be driven to get the transmission fluid to a temperature of 88ºC (190ºF) in order to purge the air from the transmission fluid cooling system.

1. **With the engine running, place the transmission selector lever in each gear position and hold approximately 5 seconds. Place the transmission selector lever in PARK.**
2. **With the engine idling (600-750 rpm) in PARK, position it on a hoist. For additional information, refer to Section 100-02.**
3.

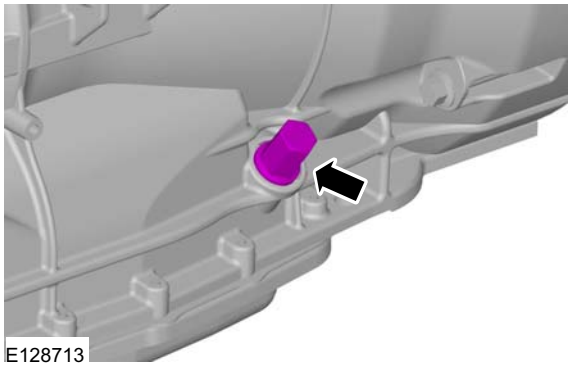
E128713

4.

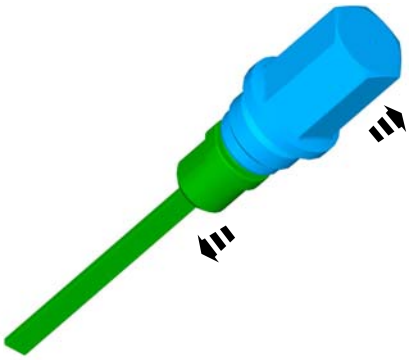
E128714

5.

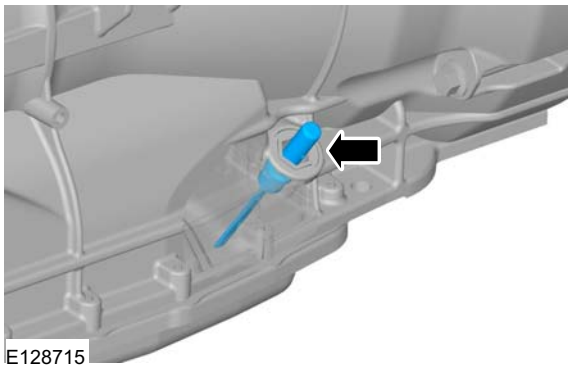
E128715

6.

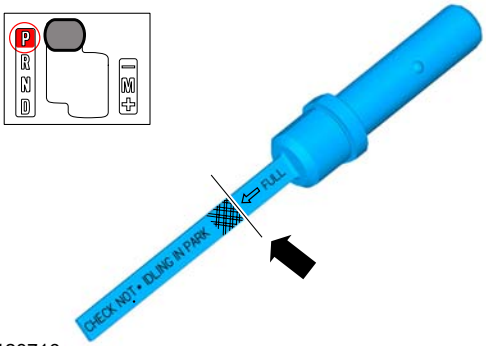

E128716

7. **NOTE: If the transmission fluid is not at the correct level, follow the steps for Adding Additional Transmission Fluid or Removing Transmission Fluid. For additional information, refer to Transmission Fluid Drain and Refill in this section**

GENERAL PROCEDURES

Tighten to 35 Nm (26 lb-ft).

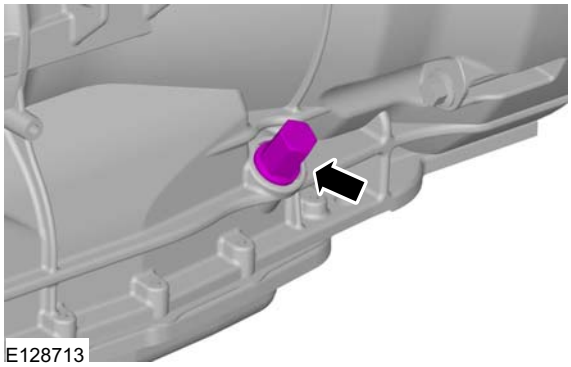

REMOVAL

Transmission — 2WD

Removal

1. Refer to: Driveshaft - 2WD (205-01 Driveshaft, Removal and Installation).
2. Refer to: Lifting (100-02 Jacking and Lifting, Description and Operation).
3. Refer to: Battery Disconnect and Connect (414-01 Battery, Mounting and Cables, General Procedures).
4. Refer to: Transmission Fluid Drain and Refill (307-01 Automatic Transmission/Transaxle - Vehicles With: 6-Speed Automatic Transaxle - 6R80, General Procedures).
5. Refer to: Cooling System Draining, Filling and Bleeding - 2.2L Duratorq-TDCi (88kW/120PS) - Puma/2.2L Duratorq-TDCi (96kW/130PS) - Puma/2.2L Duratorq-TDCi (110kW/150PS) - Puma/3.2L Duratorq-TDCi (148kW/200PS) - Puma (303-03 Engine Cooling - 2.2L Duratorq-TDCi (88kW/120PS) - Puma/2.2L Duratorq-TDCi (96kW/130PS) - Puma/2.2L Duratorq-TDCi (110kW/150PS) - Puma, General Procedures).
6. Torque: 21 Nm

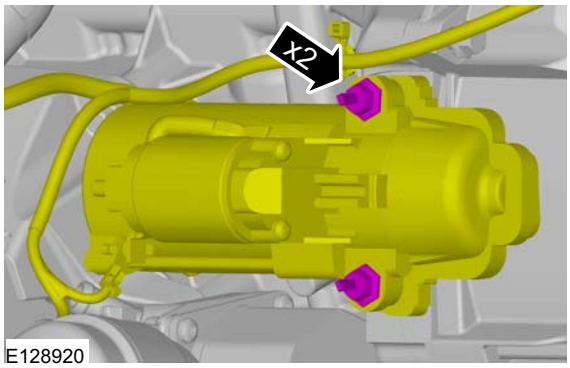

E128920

7.

REMOVAL

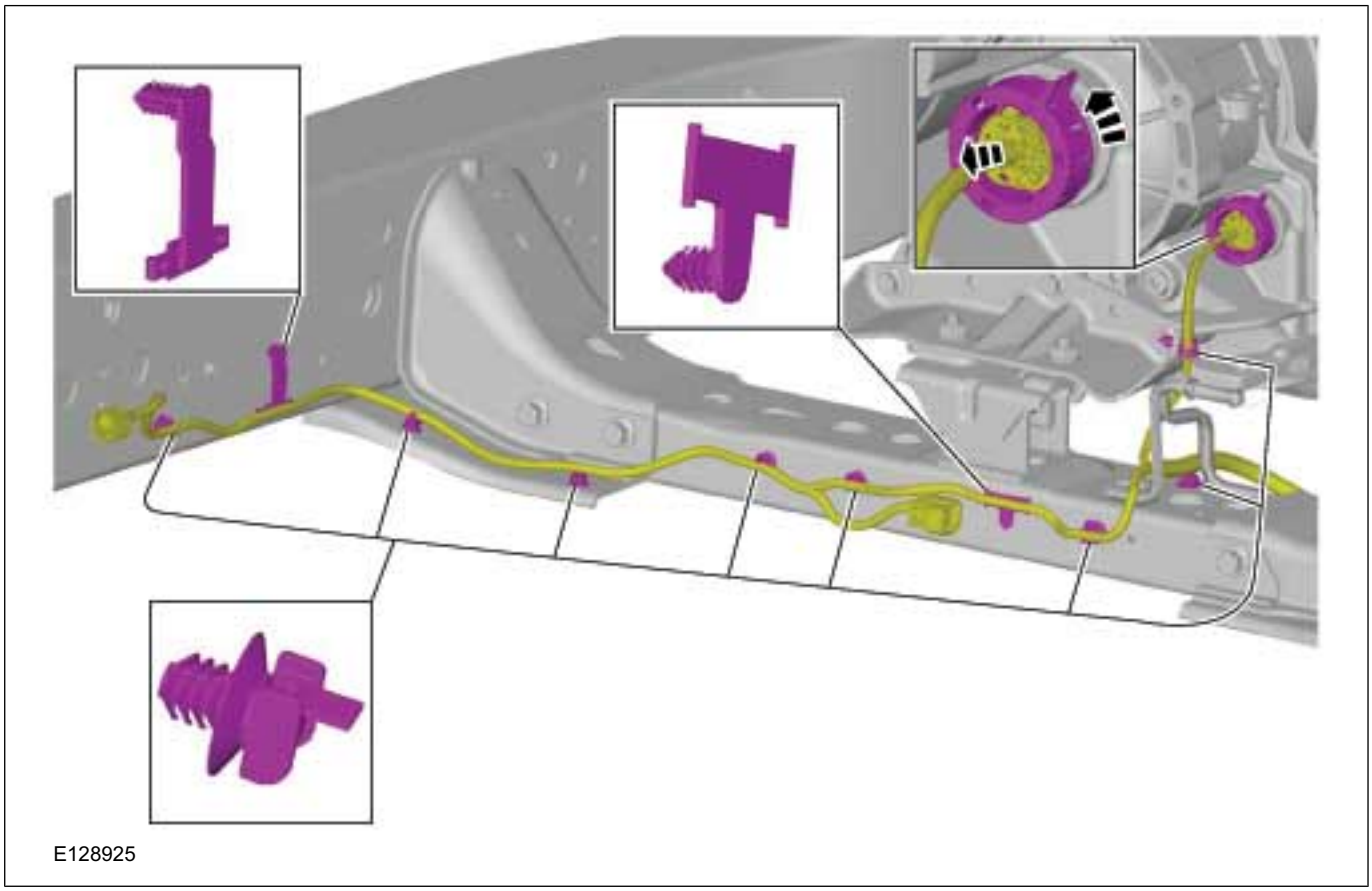

8. Torque: 19 Nm

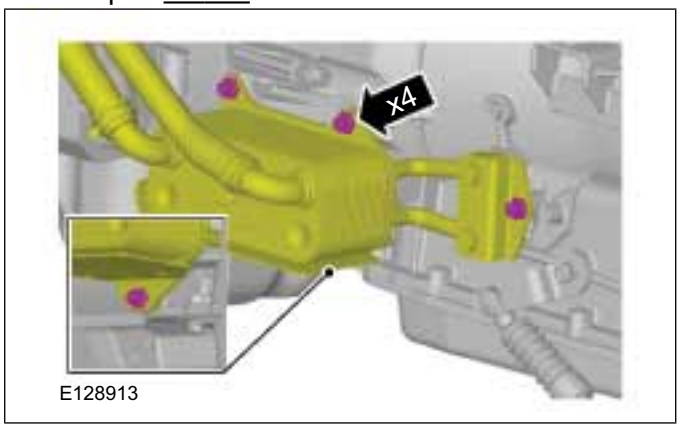

9. **WARNING: To prevent selector lever cable damage, do not apply force to the selector lever cable between the manual control lever and the selector lever cable bracket.**

Torque: 15 Nm

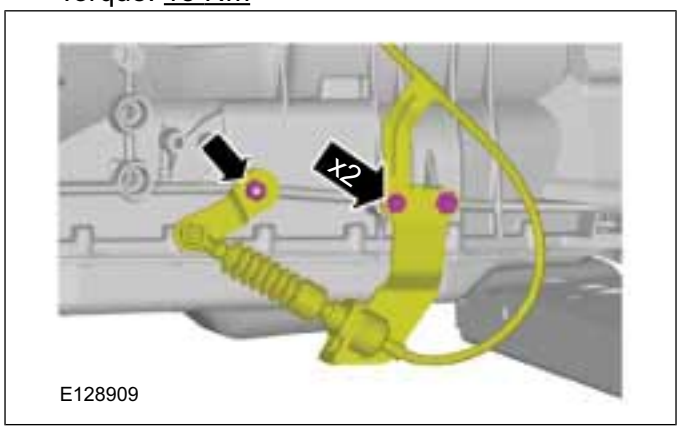

REMOVAL

10. Torque: 22 Nm

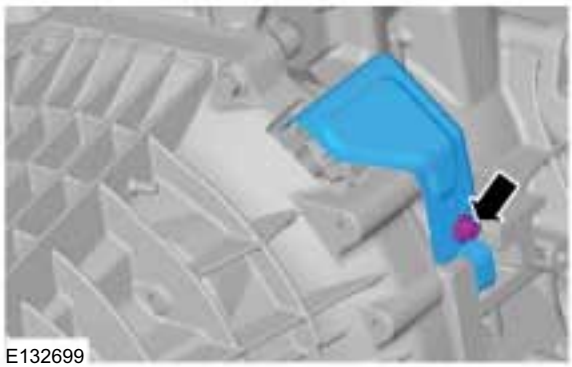

11. Torque: 21 Nm

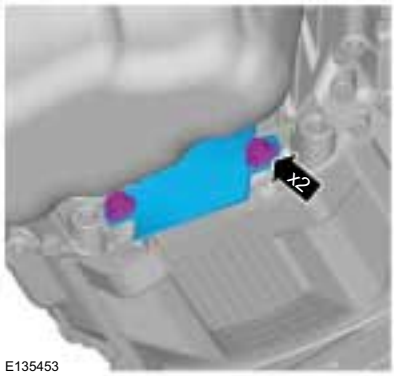

12. Torque: 29 Nm

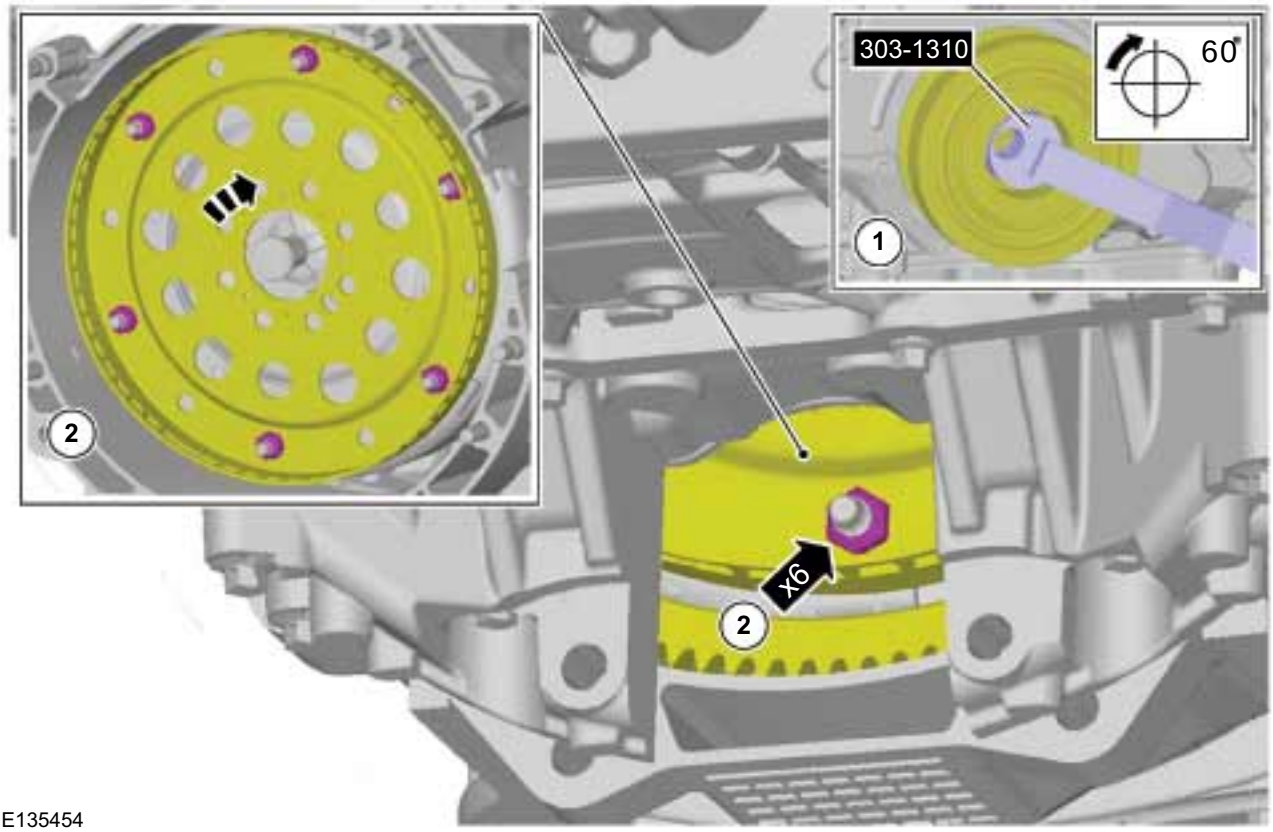

13. NOTE: Make sure that the transmission jack makes contact on the outer ribs of the fluid pan.

REMOVAL

NOTE: Make sure that the transmission is securely fastened to the transmission jack.

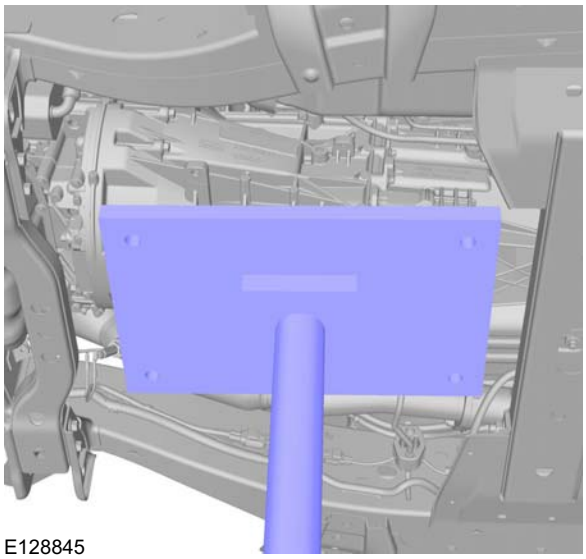

14. Torque: 45 Nm

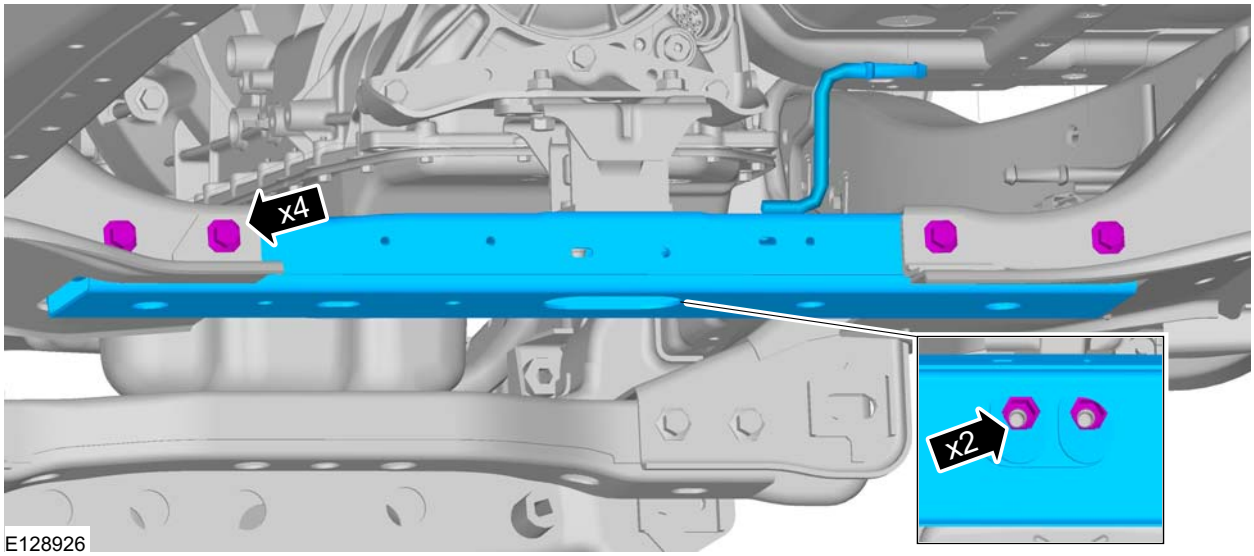

15. **NOTE:** The top 2 transmission-to-engine bolts need to be removed prior to removing the remaining bolts.

REMOVAL

NOTE: The top left bolt secures the fuel line bracket to the transmission case.

Torque: 40 Nm

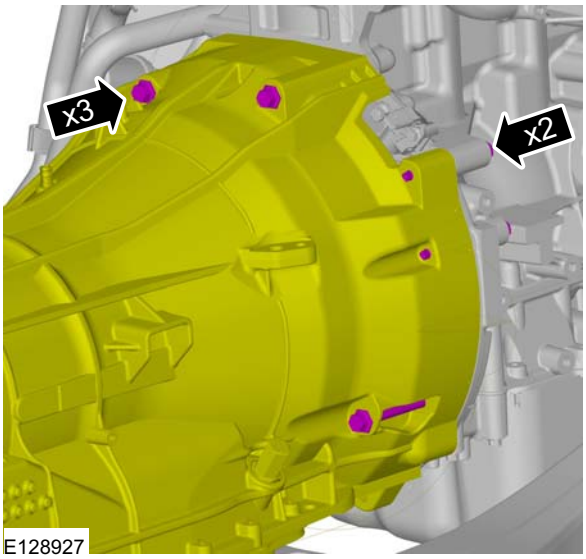

E128927

16. **NOTE:** The top left bolt secures the fuel line bracket to the transmission case.

Torque: 40 Nm

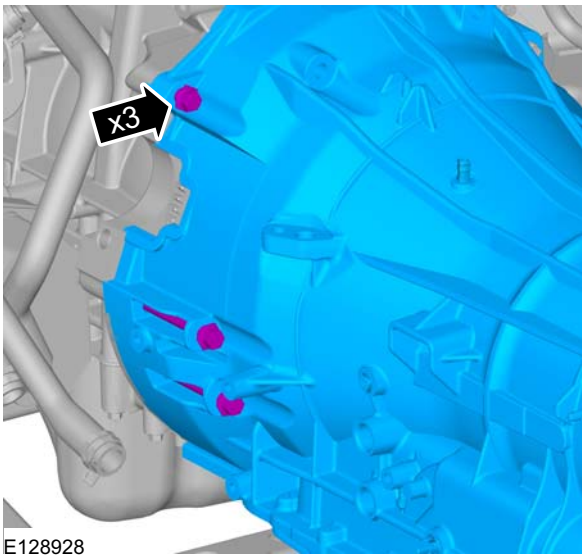

E128928

17. Slide the transmission back far enough to install the Torque Converter Retainer.

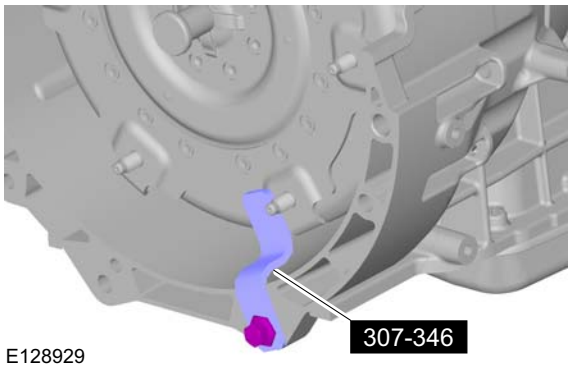

E128929

18. If the transmission is being disassembled to install new parts, or if a new or remanufactured transmission is being installed, the transmission fluid cooler, the auxiliary transmission fluid cooler (if equipped) and the transmission fluid cooler tubes must be cleaned and backflushed to keep contaminants from entering the transmission. For additional information, refer to Transmission Fluid Cooler Backflushing and Cleaning in this section.

REMOVAL

Transmission — 4WD

Removal

1. Refer to: Battery Disconnect and Connect (414-01 Battery, Mounting and Cables, General Procedures).
2. Refer to: Lifting (100-02 Jacking and Lifting, Description and Operation).
3. Refer to: Driveshaft - 4WD (205-01 Driveshaft, Removal and Installation).
4. Refer to: Transmission Fluid Drain and Refill (307-01 Automatic Transmission/Transaxle - Vehicles With: 6-Speed Automatic Transaxle - 6R80, General Procedures).
5. Refer to: Cooling System Draining, Filling and Bleeding - 2.2L Duratorq-TDCi (88kW/120PS) - Puma/2.2L Duratorq-TDCi (96kW/130PS) - Puma/2.2L Duratorq-TDCi (110kW/150PS) - Puma/3.2L Duratorq-TDCi (148kW/200PS) - Puma (303-03 Engine Cooling - 2.2L Duratorq-TDCi (88kW/120PS) - Puma/2.2L Duratorq-TDCi (96kW/130PS) - Puma/2.2L Duratorq-TDCi (110kW/150PS) - Puma, General Procedures).
6. Torque: 21 Nm

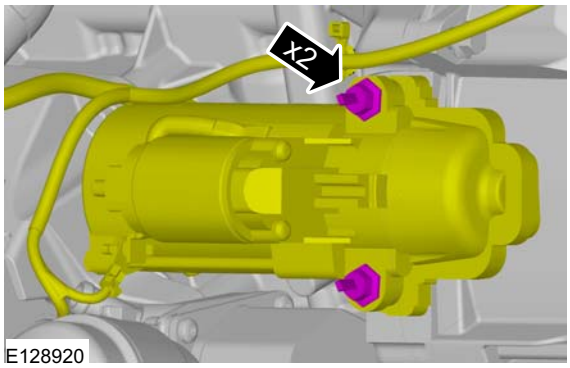

E128920

7.

REMOVAL

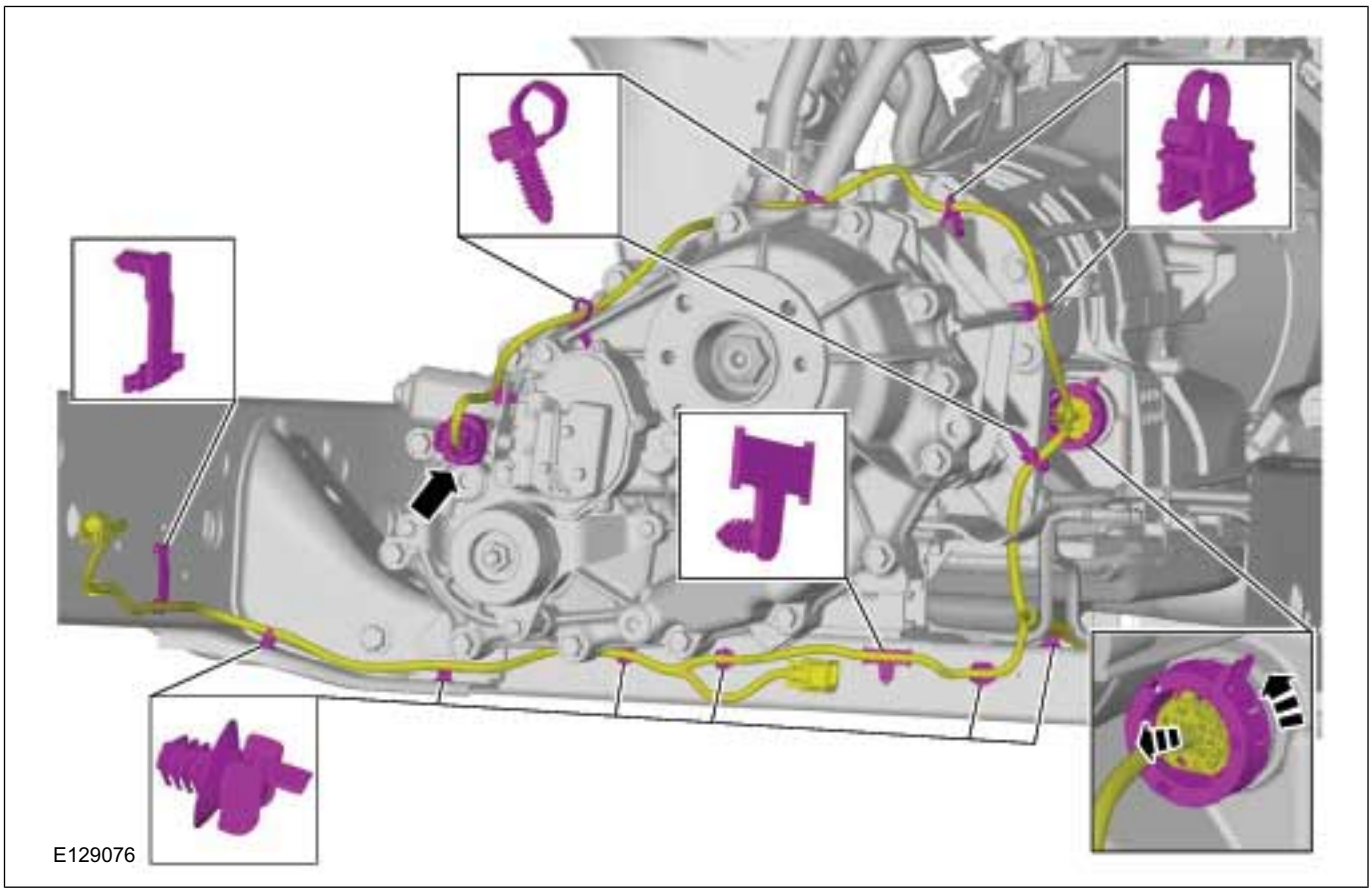

8. Torque: 19 Nm

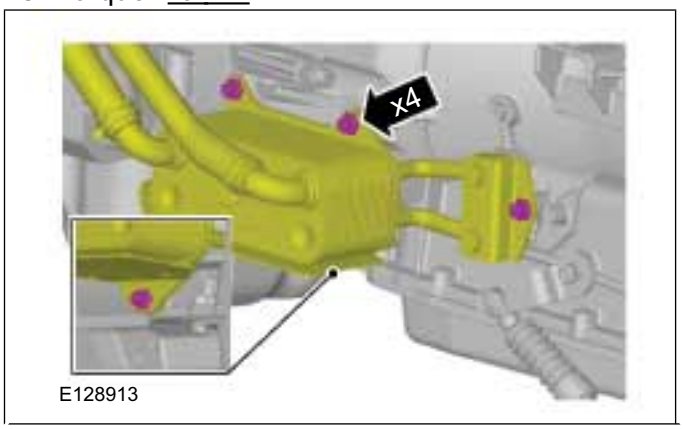

9. **WARNING: To prevent selector lever cable damage, do not apply force to the selector lever cable between the manual control lever and the selector lever cable bracket.**

Torque: 15 Nm

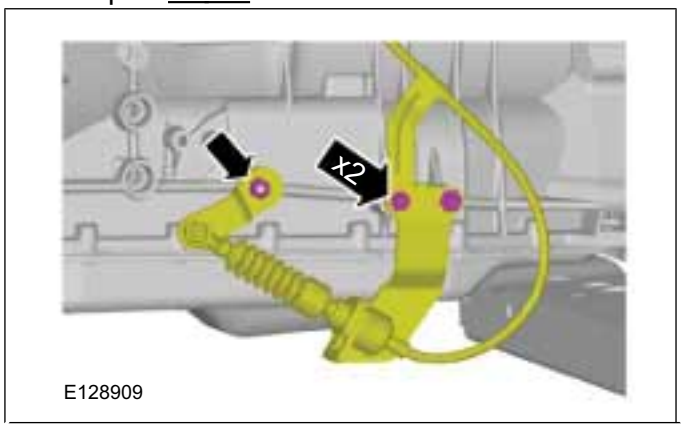

REMOVAL

10. Torque: 22 Nm

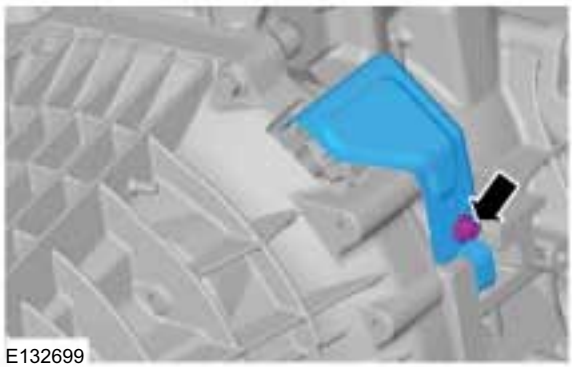

11. Torque: 21 Nm

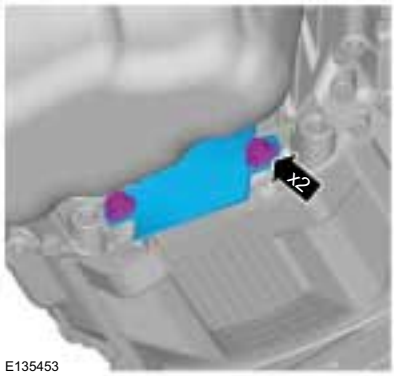

12. Torque: 29 Nm

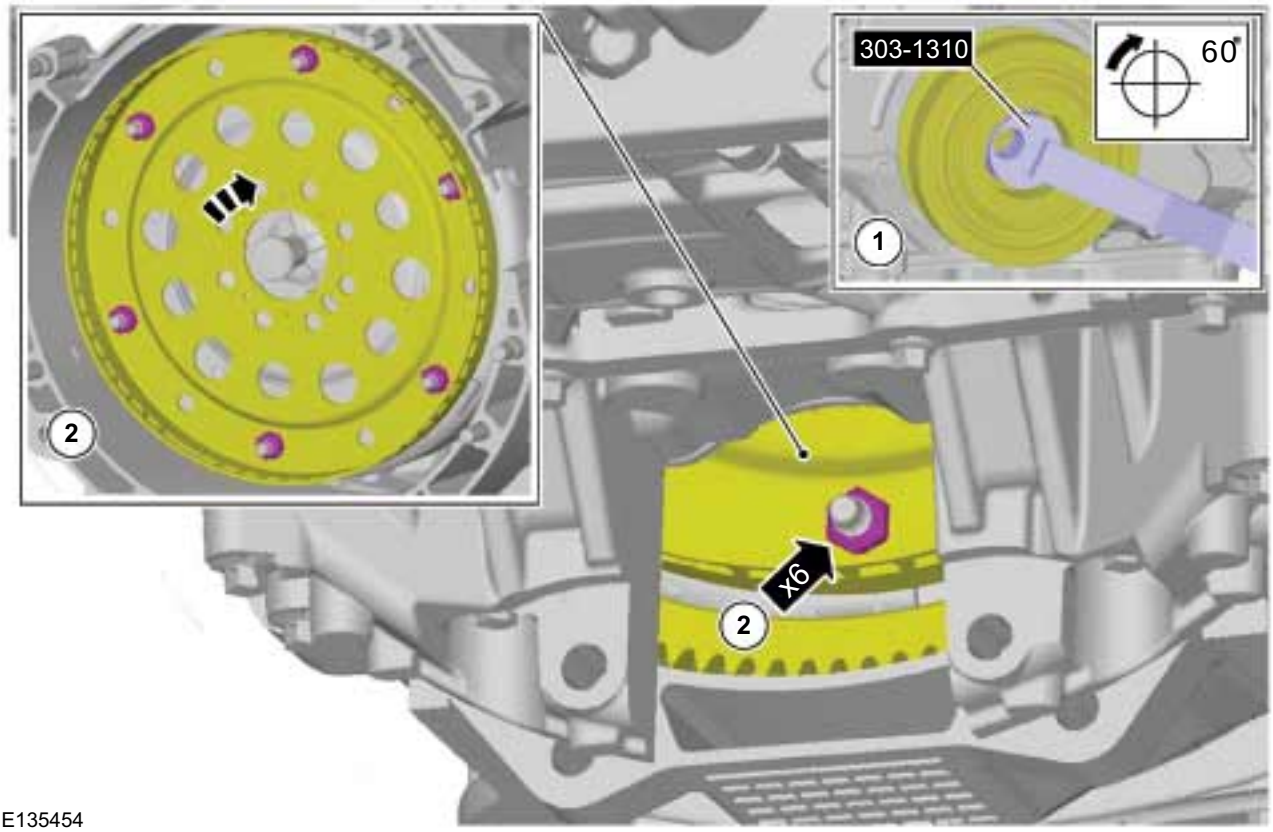

13. NOTE: Make sure that the transmission jack makes contact on the outer ribs of the fluid pan.

REMOVAL

NOTE: Make sure that the transmission is securely fastened to the transmission jack.

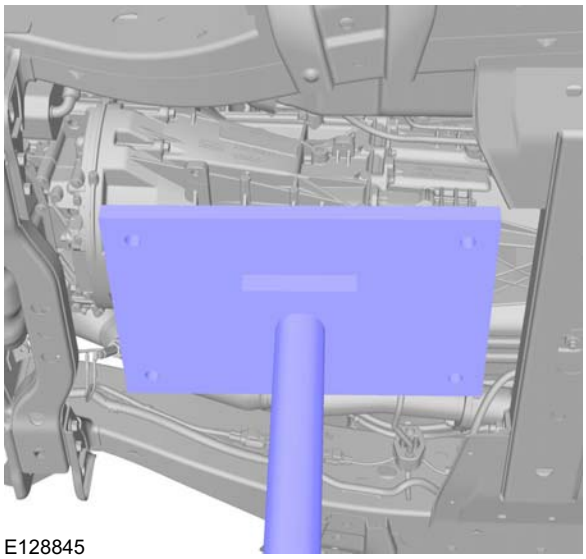

14. Torque: 45 Nm

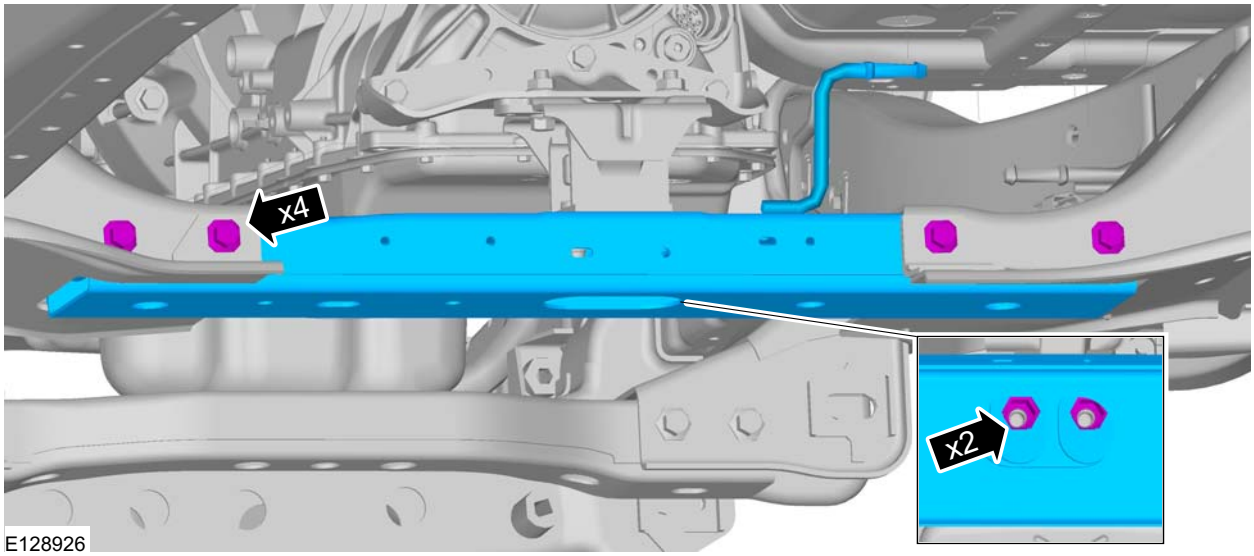

15. **NOTE:** The top 2 transmission-to-engine bolts need to be removed prior to removing the remaining bolts.

REMOVAL

NOTE: The top left bolt secures the fuel line bracket to the transmission case.

Torque: 40 Nm

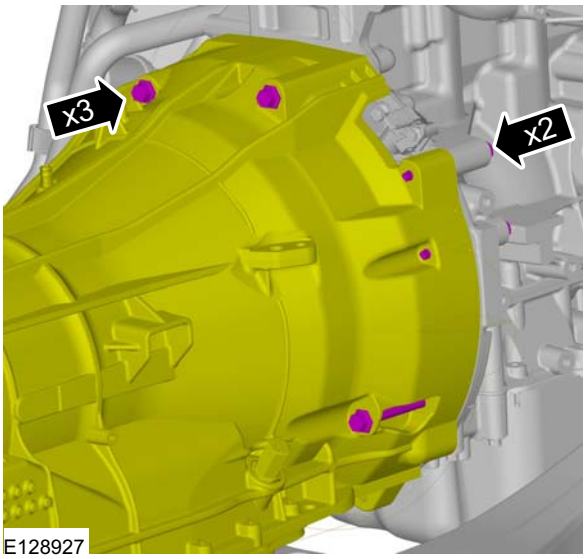

E128927

16. **NOTE:** The top left bolt secures the fuel line bracket to the transmission case.

Torque: 40 Nm

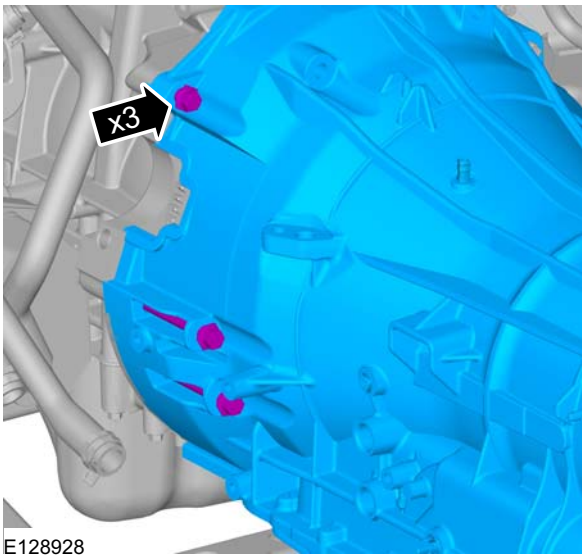

E128928

17. Slide the transmission back far enough to install the Torque Converter Retainer.

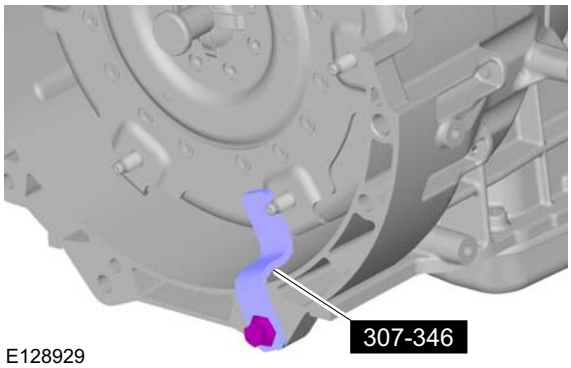

E128929

18. If the transmission is being disassembled to install new parts, or if a new or remanufactured transmission is being installed, the transmission fluid cooler, the auxiliary transmission fluid cooler (if equipped) and the transmission fluid cooler tubes must be cleaned and backflushed to keep contaminants from entering the transmission. For additional information, refer to Transmission Fluid Cooler Backflushing and Cleaning in this section.

INSTALLATION

Transmission — 2WD

Installation

Materials	
Name	**Specification**
Automatic Transmission Oil C-ML5	WSS-M2C938-A / 7U7J-M2C938-AA
Contact Grease	WSB-M1C239-A / YS5J-M1C239-AA

1. **CAUTION: Prior to installation of the transmission, the torque converter pilot hub must be lubricated with multipurpose grease or damage to the torque converter or the engine crankshaft can occur.**

   Lubricate the torque converter pilot hub with multipurpose grease.

   Material: Contact Grease (WSB-M1C239-A / YS5J-M1C239-AA) grease

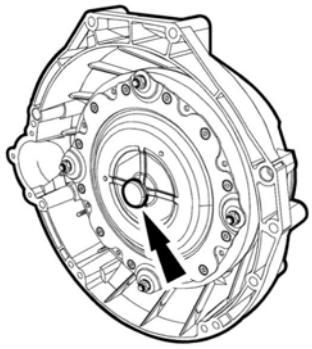

E129224

2. **CAUTION: Prior to installation of the transmission, the torque converter pilot hub must be lubricated with multipurpose grease or damage to the torque converter or the engine crankshaft can occur.**

   Remove the Torque Converter Retainer.

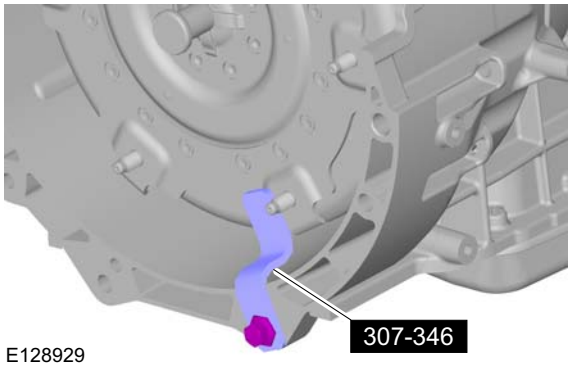

E128929

3. **CAUTION: The converter housing is piloted into position by dowels in the rear of the engine block. The torque converter must rest squarely against the flexplate. This indicates that the converter pilot is not binding in the engine crankshaft.**

   NOTE: Make sure that the transmission jack makes contact on the outer ribs of the transmission fluid pan.

   NOTE: Make sure that the transmission is securely fastened to the transmission jack.

   Position and secure the transmission on the high-lift transmission jack. Raise and position the transmission into the vehicle.

4. **NOTE:** Make sure the torque converter is fully seated in the transmission before aligning the transmission to the engine.

   With the transmission in a horizontal position, move it toward the engine. Align the orange balancing marks between the torque converter studs and the flexplate bolt holes.

INSTALLATION

5. **NOTE:** LH shown, RH similar.

   Torque: 49 Nm

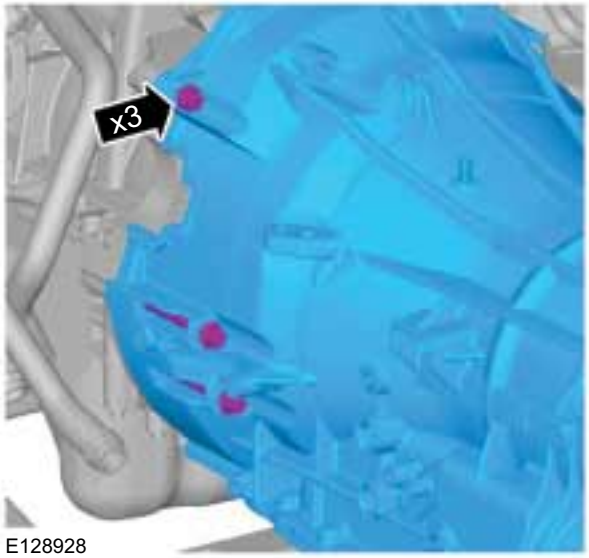

E128928

6. Torque: 49 Nm

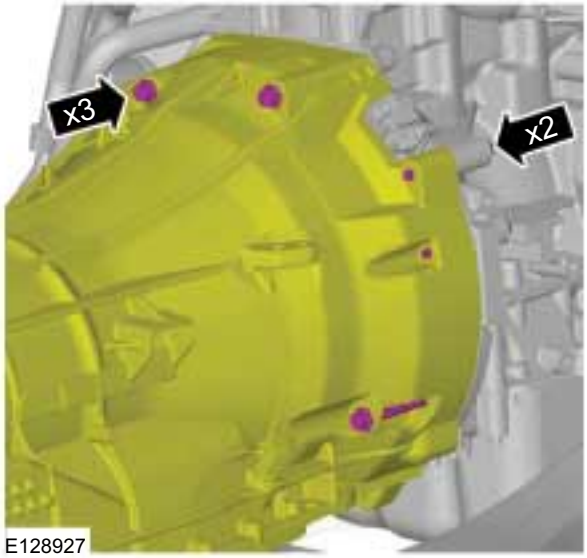

E128927

7. Torque: 45 Nm

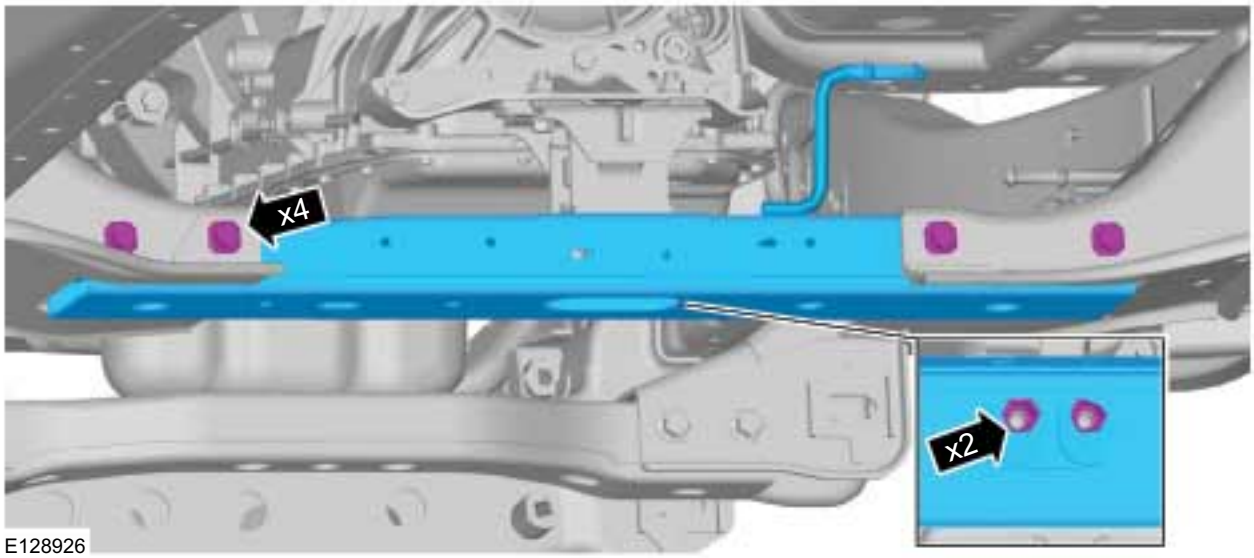

E128926

8. Torque: 49 Nm

INSTALLATION

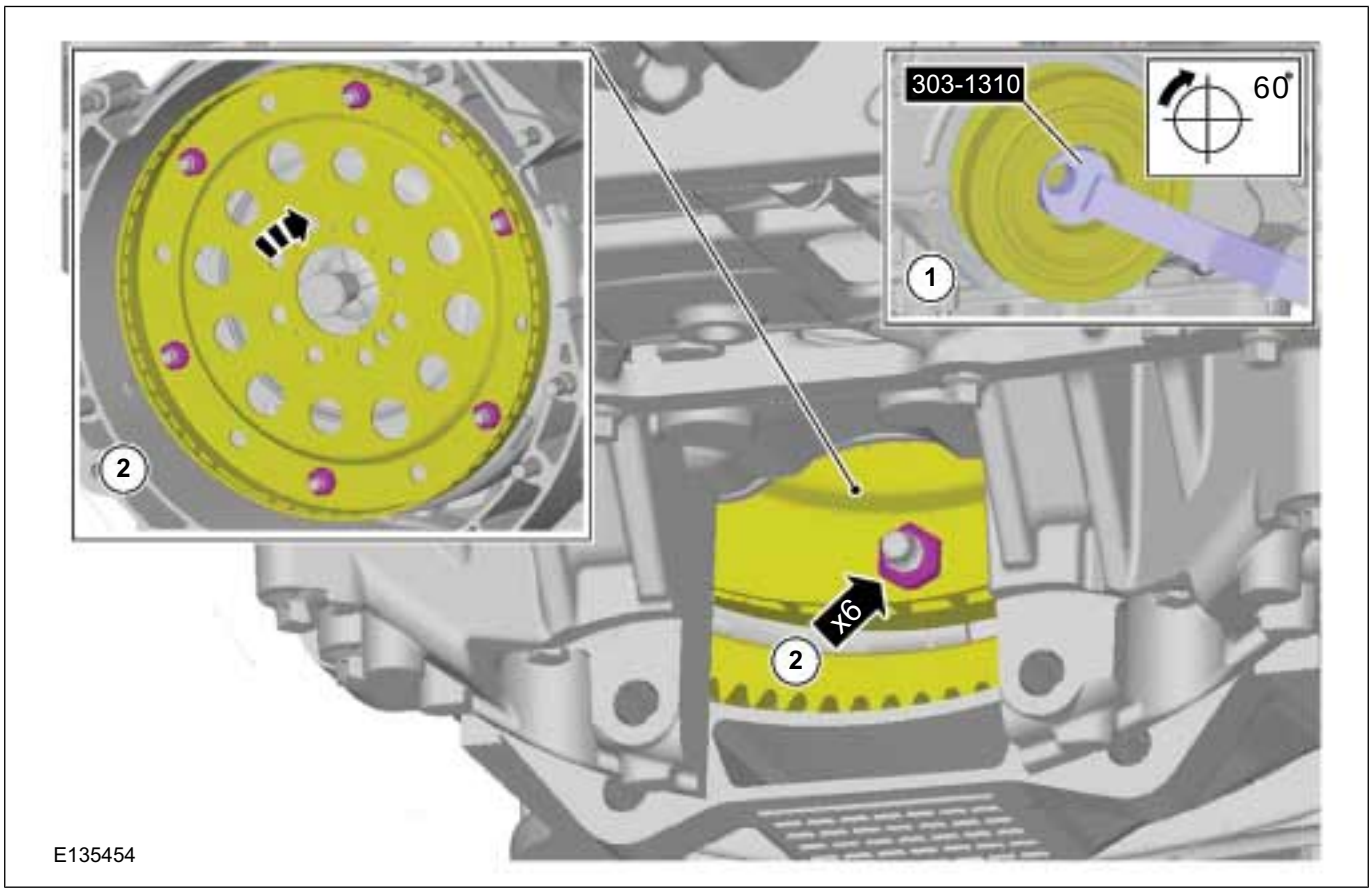

9. Torque: 49 Nm

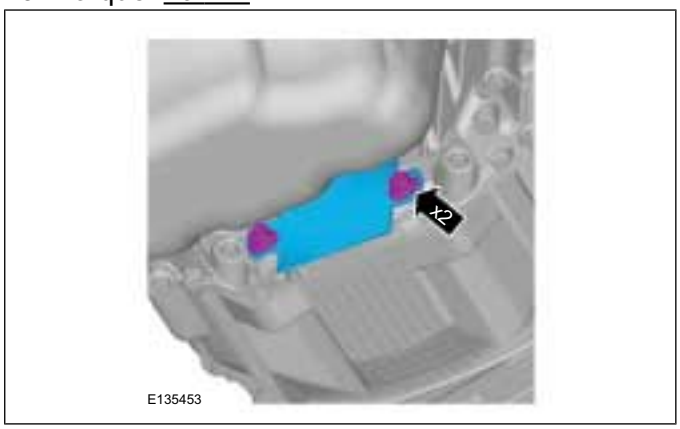

10. Torque: 18 Nm

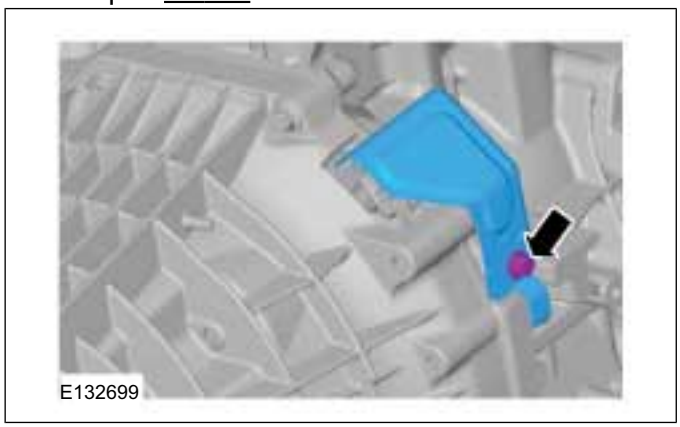

11. **WARNING: To prevent selector lever cable damage, do not apply force to the selector lever cable between the manual**

INSTALLATION

control lever and the selector lever cable bracket.

Torque: 25 Nm

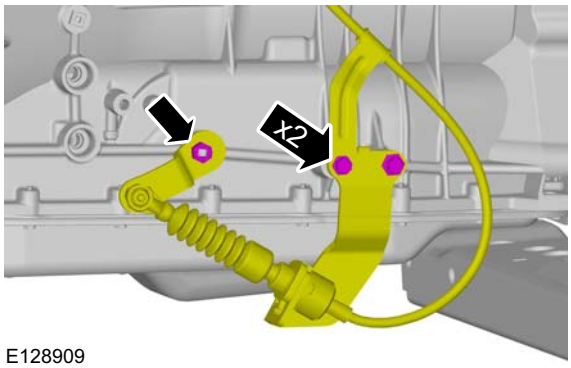

E128909

12.

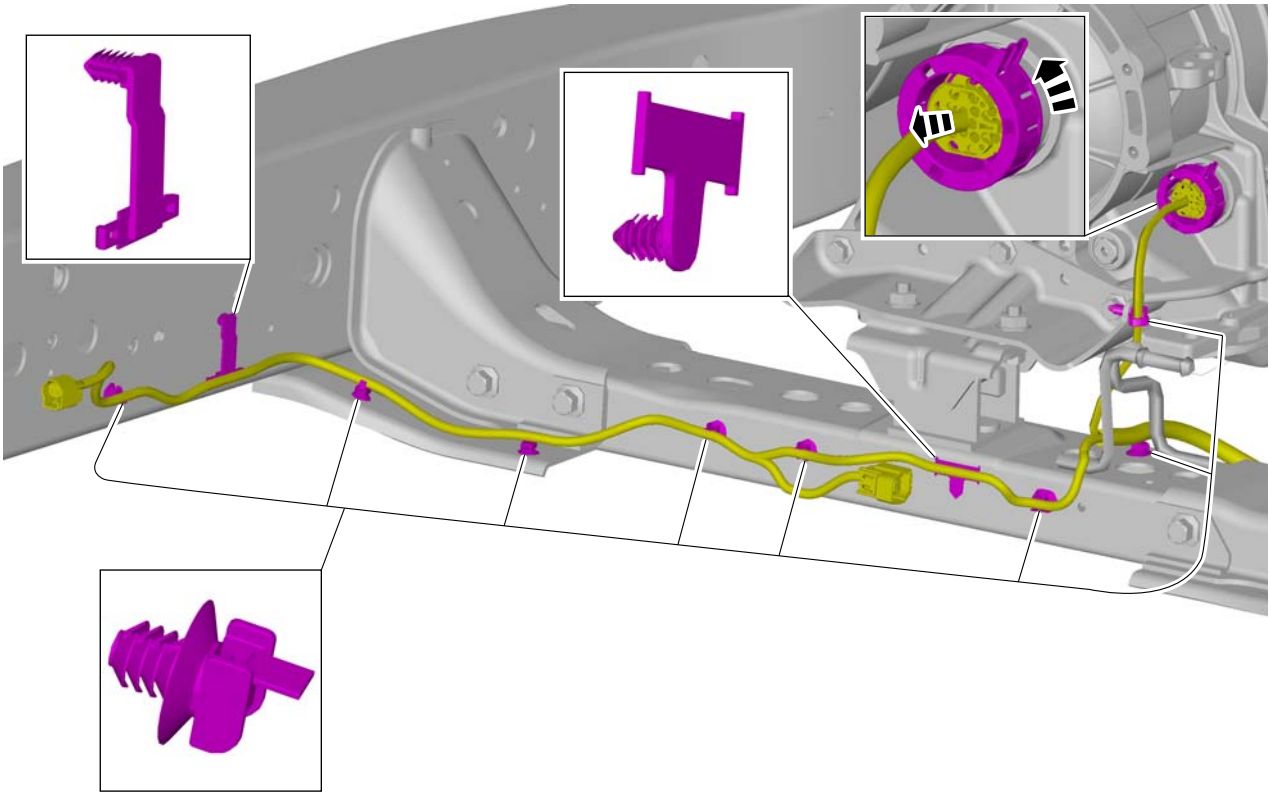
E128925

INSTALLATION

13. Torque: 26 Nm

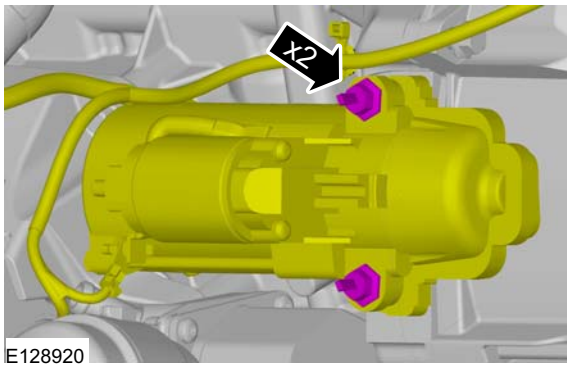

E128920

14. **NOTE:** Inspect the case to make sure that the old transmission fluid cooler tube O-rings are not stuck in the case.

    NOTE: Install new transmission fluid cooler tube O-rings on the ends of the transmission fluid cooler tubes prior to installing.

    Install new transmission fluid cooler tube O-rings on the transmission fluid cooler tubes.

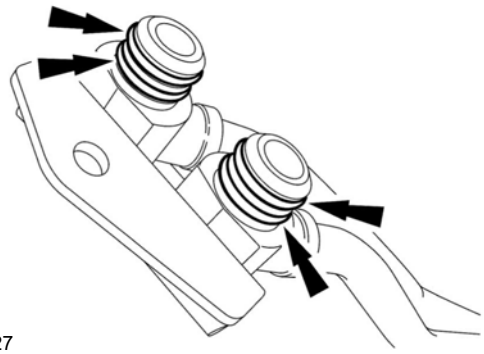
E129227

15. Install the transmission fluid cooler tube bracket bolt.
    Torque: 26 Nm

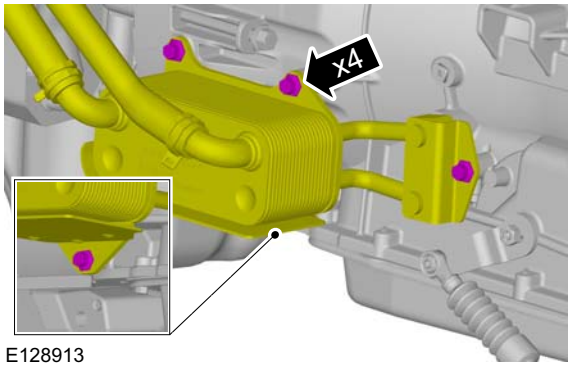

E128913

16. Refer to: Driveshaft - 2WD (205-01 Driveshaft, Removal and Installation).

17. Refer to: Battery Disconnect and Connect (414-01 Battery, Mounting and Cables, General Procedures).

18. Refer to: Selector Lever Cable Adjustment (307-05 Automatic Transmission/Transaxle External Controls, General Procedures).

19. Program the Transmission Control Module (TCM) with the latest calibration.

20. Refer to: Transmission Fluid Drain and Refill (307-01 Automatic Transmission/Transaxle - Vehicles With: 6-Speed Automatic Transaxle - 6R80, General Procedures).
    Material: Automatic Transmission Oil C-ML5 (WSS-M2C938-A / 7U7J-M2C938-AA) transmission fluid

INSTALLATION

Transmission — 4WD

Installation

Materials	
Name	**Specification**
Contact Grease	WSB-M1C239-A / YS5J-M1C239-AA

1. Refer to: Lifting (100-02 Jacking and Lifting, Description and Operation).

2. **CAUTION: Prior to installation of the transmission, the torque converter pilot hub must be lubricated with multipurpose grease or damage to the torque converter or the engine crankshaft can occur.**

   Lubricate the torque converter pilot hub with multipurpose grease.

   Material: Contact Grease (WSB-M1C239-A / YS5J-M1C239-AA) grease

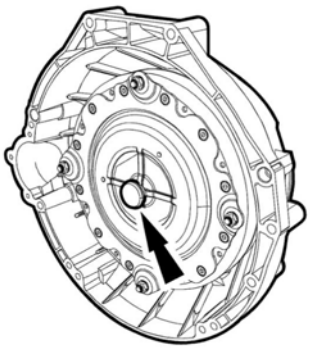

E129224

3. **CAUTION: The converter housing is piloted into position by dowels in the rear of the engine block. The torque converter must rest squarely against the flexplate. This indicates that the converter pilot is not binding in the engine crankshaft.**

   NOTE: Make sure that the transmission jack makes contact on the outer ribs of the transmission fluid pan.

   NOTE: Make sure that the transmission is securely fastened to the transmission jack.

   Position and secure the transmission on the high-lift transmission jack. Raise and position the transmission into the vehicle.

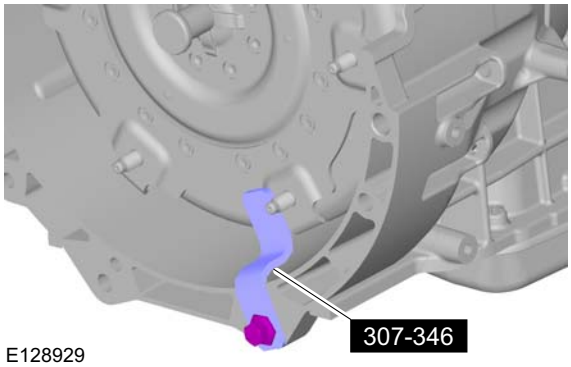

E128929

4. **NOTE:** The top 2 transmission-to-engine bolts need to be removed prior to removing the remaining bolts.

   NOTE: The top left bolt secures the fuel line bracket to the transmission case.

   Torque: 49 Nm

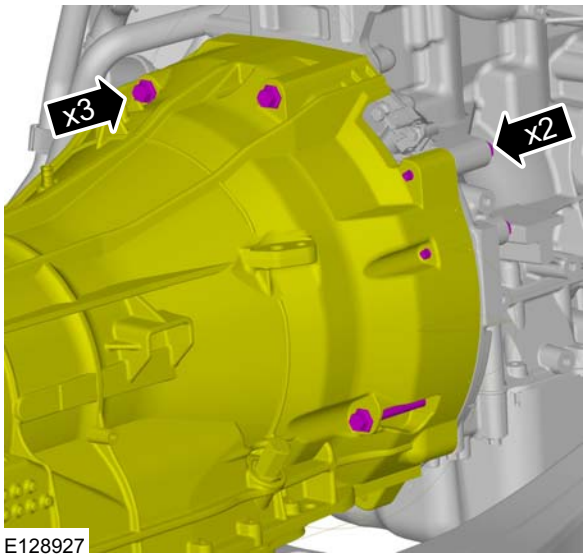

E128927

5. **NOTE:** The top 2 transmission-to-engine bolts need to be removed prior to removing the remaining bolts.

INSTALLATION

NOTE: The top left bolt secures the fuel line bracket to the transmission case.

Torque: 49 Nm

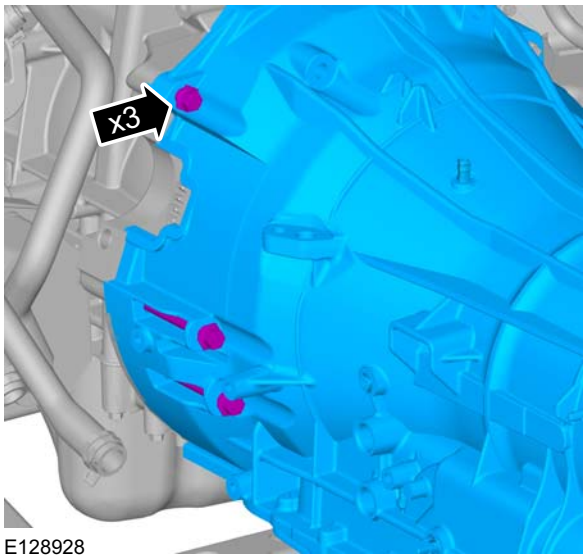

E128928

6. Torque: 45 Nm

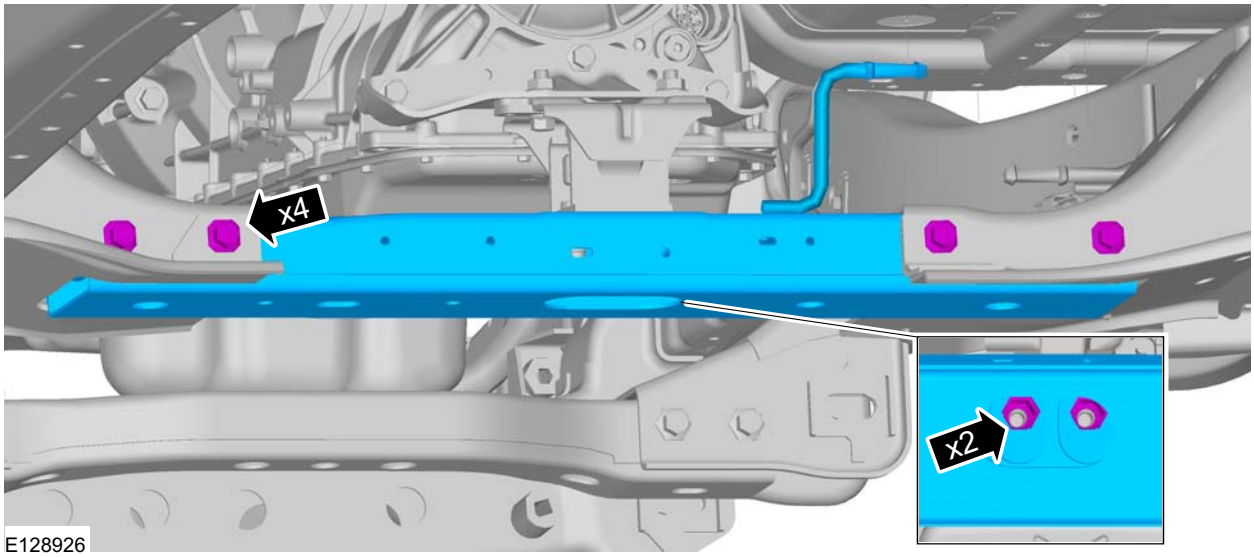

E128926

7. Torque: 49 Nm

INSTALLATION

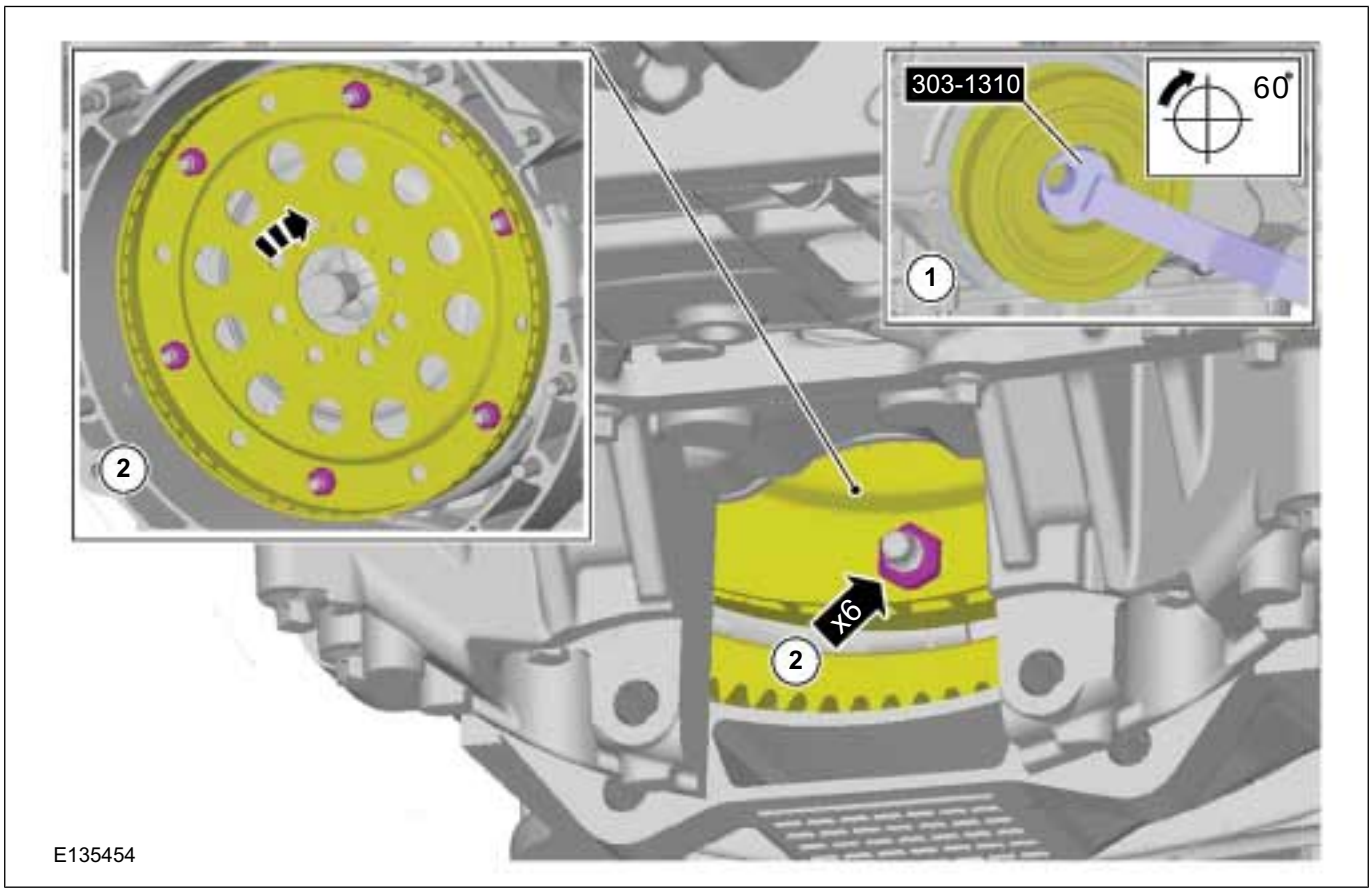

8. Torque: 49 Nm

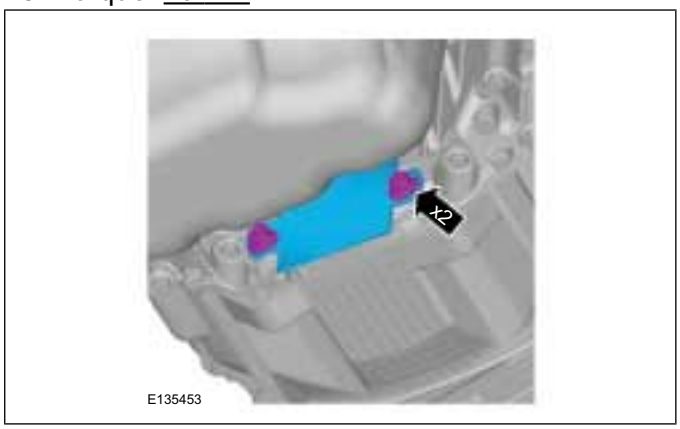

9. Torque: 18 Nm

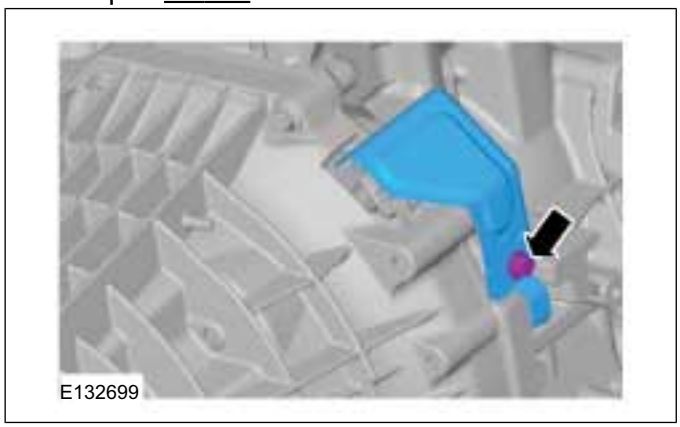

10. **NOTE:** Make sure that the transmission jack makes contact on the outer ribs of the fluid pan.

INSTALLATION

NOTE: Make sure that the transmission is securely fastened to the transmission jack.

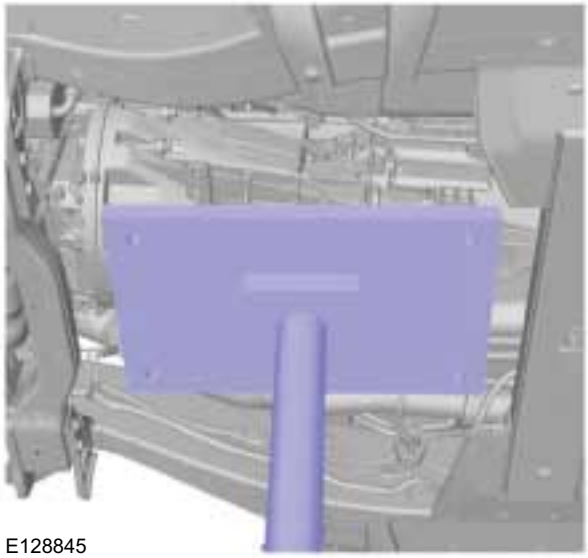
E128845

11. **NOTE:** Inspect the case to make sure that the old transmission fluid cooler tube O-rings are not stuck in the case.

    NOTE: Install new transmission fluid cooler tube O-rings on the ends of the transmission fluid cooler tubes prior to installing.

    Install new transmission fluid cooler tube O-rings on the transmission fluid cooler tubes.

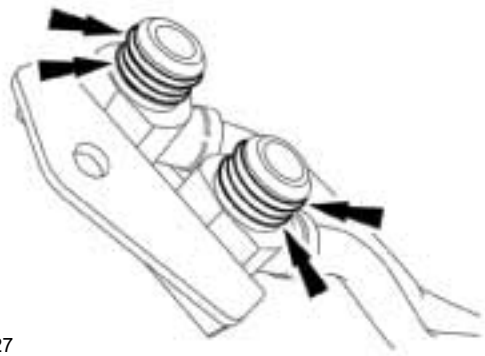
E129227

12. Torque: 26 Nm

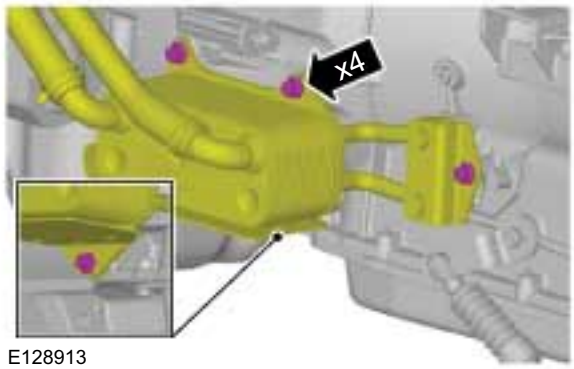

E128913

13. **WARNING: To prevent selector lever cable damage, do not apply force to the selector lever cable between the manual control lever and the selector lever cable bracket.**

    NOTE: When installing the selector lever cable end, make sure that the selector lever cable end is correctly installed onto the manual control lever. Pull back on the selector lever cable end to make sure that the selector lever cable end is securely installed onto the manual control lever.

    Torque: 26 Nm

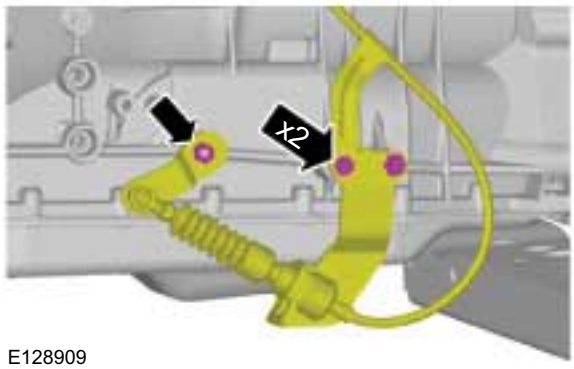

E128909

14. Torque: 26 Nm

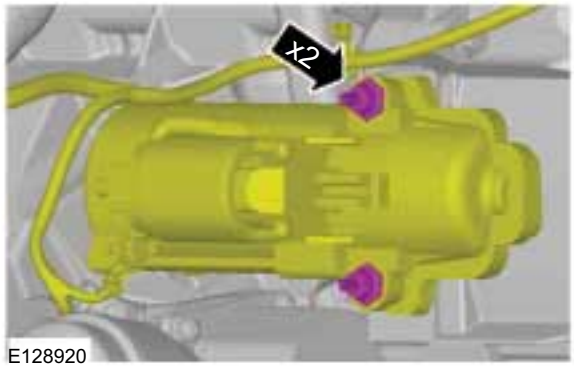

E128920

INSTALLATION

15.

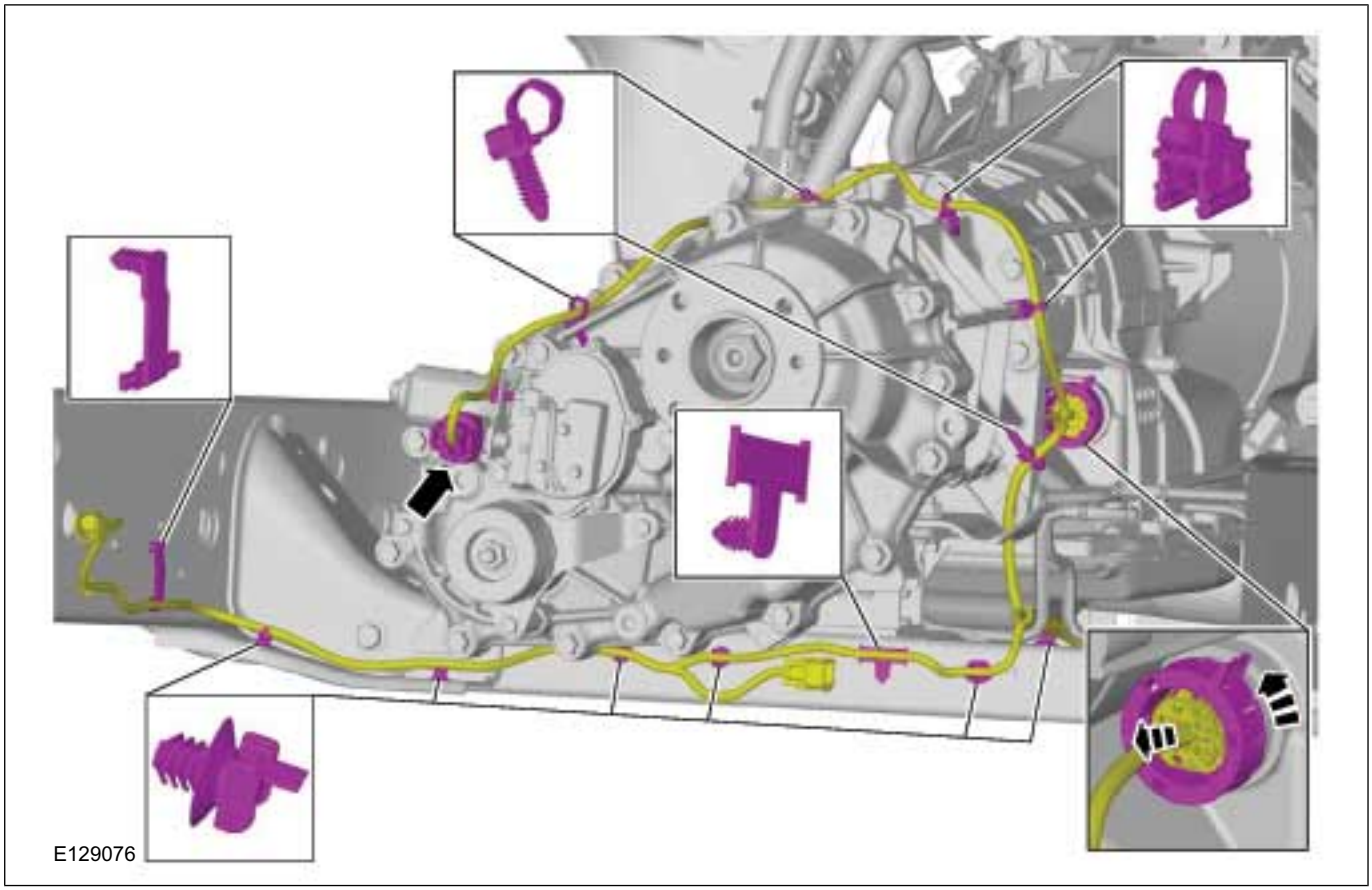

16. Refer to: Selector Lever Cable Adjustment (307-05 Automatic Transmission/Transaxle External Controls, General Procedures).

17. Program the Transmission Control Module (TCM (transmission control module)) with the latest calibration.

18. Refer to: Driveshaft - 4WD (205-01 Driveshaft, Removal and Installation).

19. Refer to: Transmission Fluid Drain and Refill (307-01 Automatic Transmission/Transaxle - Vehicles With: 6-Speed Automatic Transaxle - 6R80, General Procedures).

20. Refer to: Cooling System Draining, Filling and Bleeding - 2.2L Duratorq-TDCi (88kW/120PS) - Puma/2.2L Duratorq-TDCi (96kW/130PS) - Puma/2.2L Duratorq-TDCi (110kW/150PS) - Puma/3.2L Duratorq-TDCi (148kW/200PS) - Puma (303-03 Engine Cooling - 2.2L Duratorq-TDCi (88kW/120PS) - Puma/2.2L Duratorq-TDCi (96kW/130PS) - Puma/2.2L Duratorq-TDCi (110kW/150PS) - Puma, General Procedures).

21. Refer to: Battery Disconnect and Connect (414-01 Battery, Mounting and Cables, General Procedures).

SECTION 307-02 Transmission/Transaxle Cooling

VEHICLE APPLICATION: 2011.50 Ranger

CONTENTS PAGE

REMOVAL AND INSTALLATION

Transmission Fluid Cooler..... 307-02-2

REMOVAL AND INSTALLATION

Transmission Fluid Cooler

Removal

NOTE: Removal steps in this procedure may contain installation details.

1. Refer to: Health and Safety Precautions (100-00 General Information, Description and Operation).

2. **CAUTION: Make sure that all openings are sealed.**

   Refer to: Cooling System Draining, Filling and Bleeding - 2.2L Duratorq-TDCi (88kW/120PS) - Puma/2.2L Duratorq-TDCi (96kW/130PS) - Puma/2.2L Duratorq-TDCi (110kW/150PS) - Puma/3.2L Duratorq-TDCi (148kW/200PS) - Puma (303-03 Engine Cooling - 3.2L Duratorq-TDCi (148kW/200PS) - Puma, General Procedures).
   Refer to: Transmission Fluid Drain and Refill (307-01 Automatic Transmission/Transaxle - Vehicles With: 6-Speed Automatic Transaxle - 6R80, General Procedures).

3. Torque: 15 Nm

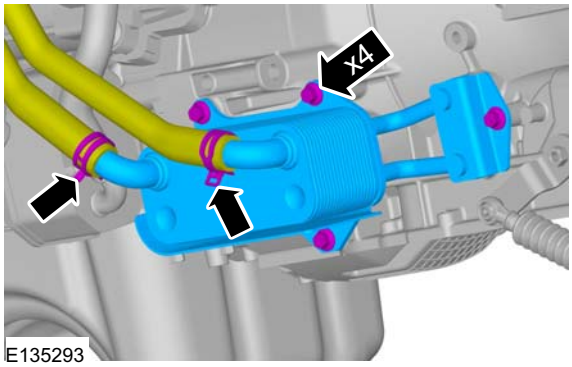

Installation

1. To install, reverse the removal procedure.

   Refer to: Cooling System Draining, Filling and Bleeding - 2.2L Duratorq-TDCi (88kW/120PS) - Puma/2.2L Duratorq-TDCi (96kW/130PS) - Puma/2.2L Duratorq-TDCi (110kW/150PS) - Puma/3.2L Duratorq-TDCi (148kW/200PS) - Puma (303-03 Engine Cooling - 3.2L Duratorq-TDCi (148kW/200PS) - Puma, General Procedures).
   Refer to: Transmission Fluid Drain and Refill (307-01 Automatic Transmission/Transaxle - Vehicles With: 6-Speed Automatic Transaxle - 6R80, General Procedures).

SECTION 307-05 Automatic Transmission/Transaxle External Controls

VEHICLE APPLICATION: 2011.50 Ranger

CONTENTS PAGE

GENERAL PROCEDURES

Selector Lever Cable Adjustment..... 307-05-2

REMOVAL AND INSTALLATION

Selector Lever Assembly..... 307-05-3
Selector Lever Cable..... 307-05-4

GENERAL PROCEDURES

Selector Lever Cable Adjustment

Adjustment

1. Shift the selector lever to the "D" (DRIVE) position.
2. Refer to: Jacking (100-02 Jacking and Lifting, Description and Operation).
   Refer to: Lifting (100-02 Jacking and Lifting, Description and Operation).
3.

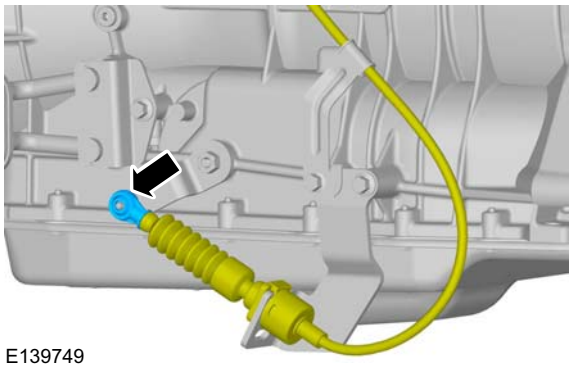
E139749

4. Rotate the selector lever clockwise until the travel stops. Then rotate the manual lever counterclockwise 3 detents, this should be the (D) position.

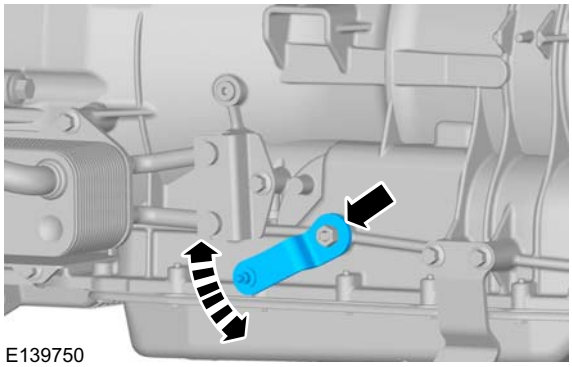
E139750

5. **NOTE:** NOTE: Ensure that the selector lever cable adjustment mechanism is locked.

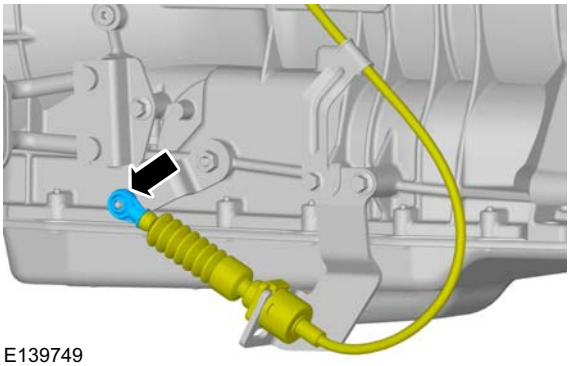
E139749

6. Refer to: Jacking (100-02 Jacking and Lifting, Description and Operation).
   Refer to: Lifting (100-02 Jacking and Lifting, Description and Operation).
7. Start the engine and move the selector lever through all the gear positions. Wait until each gear engages when moving through the gear positions.
8. Check that the selector lever position indicator corresponds to the position of the selector lever, repeat the adjustment procedure if necessary.
9. Move the selector lever into the "P" (PARK) position and switch off the engine.

REMOVAL AND INSTALLATION

Selector Lever Assembly

Removal

1. Refer to: Floor Console - Single Cab (501-12 Instrument Panel and Console, Removal and Installation).
   Refer to: Floor Console - Double Cab (501-12 Instrument Panel and Console, Removal and Installation).

2.

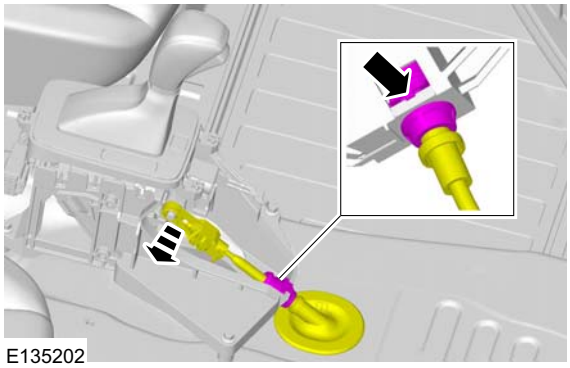

3. Torque: 15 Nm

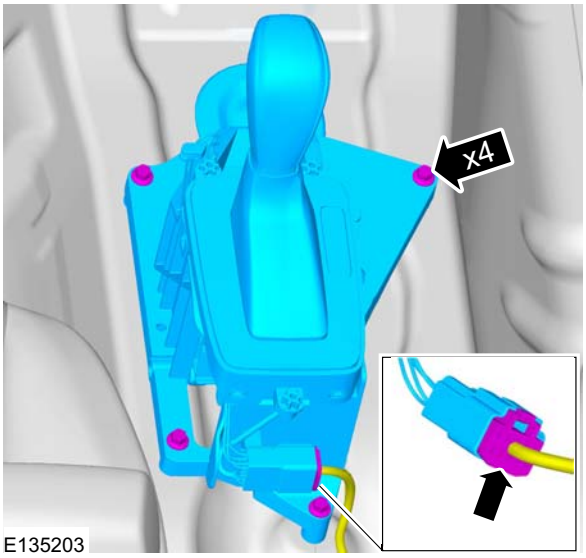

Installation

1. To Install, Reverse the removal procedure.

REMOVAL AND INSTALLATION

Selector Lever Cable

Removal

1. Refer to: Floor Console - Single Cab (501-12 Instrument Panel and Console, Removal and Installation).
   Refer to: Floor Console - Double Cab (501-12 Instrument Panel and Console, Removal and Installation).
2. 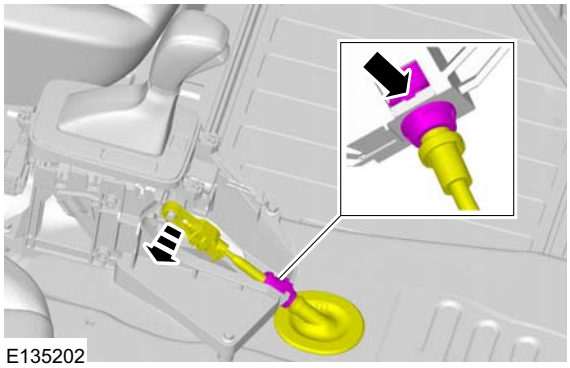

3. Refer to: Lifting (100-02 Jacking and Lifting, Description and Operation).
4. Torque: 25 Nm

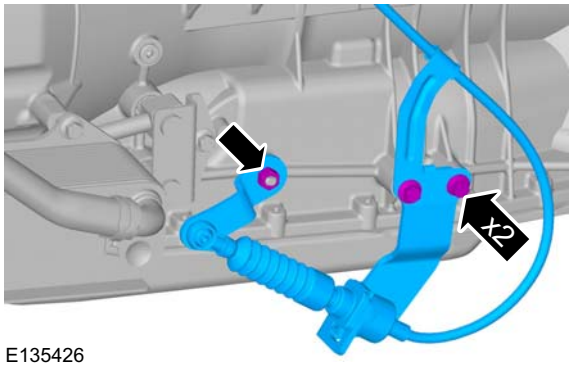

Installation

1. To install, reverse the removal procedure.
2. Refer to: Selector Lever Cable Adjustment (307-05 Automatic Transmission/Transaxle External Controls, General Procedures).

SECTION 308-00 Manual Transmission/Transaxle and Clutch - General Information

VEHICLE APPLICATION: 2011.50 Ranger

CONTENTS PAGE

GENERAL PROCEDURES

Clutch System Bleeding — Vehicles With: MT-75..... (16 843 0) 308-00-2
Clutch System Bleeding — Vehicles With: MT82..... (16 843 0) 308-00-3

GENERAL PROCEDURES

Clutch System Bleeding — Vehicles With: MT-75(16 843 0)

Special Tool(s)

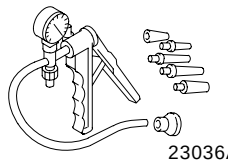 23036A	Vacuum Pump Kit 416-D001 (23-036 A)

WARNING: Brake fluid contains polyglycol ethers and polyglycols. Avoid contact with the eyes. Wash hands thoroughly after handling. If brake fluid contacts the eyes, flush the eyes for 15 minutes with cold running water. Get medical attention if irritation persists. If taken internally, drink water and induce vomiting. Get medical attention immediately. Failure to follow these instructions may result in personal injury.

CAUTION: If brake fluid is spilt on the paintwork, the affected area must be immediately washed down with cold water.

NOTE: If proprietary brake bleeding equipment is available, this can be used to bleed the clutch system, following the method below. The maximum pressure must not exceed 1.5 bar.

NOTE: The clutch control system is self-venting. The components are arranged in such a way that small amounts of air trapped in the system are removed automatically during clutch operation.

1. **Drain the brake fluid reservoir.**
2. **Raise and support the vehicle.**

   For additional information, refer to: Jacking (100-02 Jacking and Lifting, Description and Operation) / Lifting (100-02 Jacking and Lifting, Description and Operation).
3. **Fill the reservoir of the special tool with approximately 100 ml of new brake fluid.**
4. **NOTE: Make sure that the special tool reservoir is positioned lower than the bleed nipple.**

   Install the special tool.

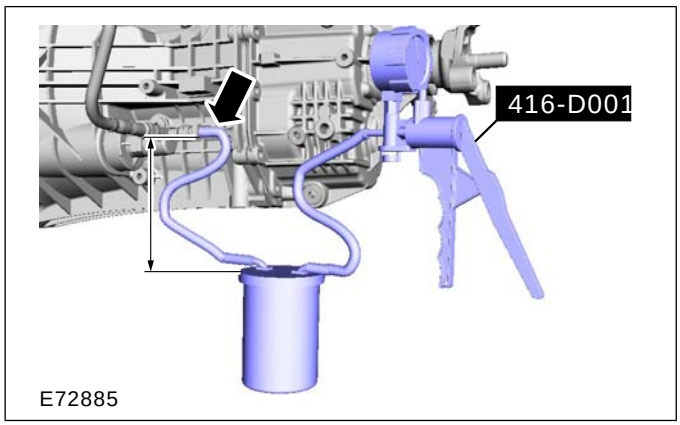

5. **Open the bleed nipple.**
6. **Using the special tool, bleed the clutch system.**
   - Pump approximately 80 ml of brake fluid into the clutch system.
7. **Close the bleed nipple.**
8. **Remove the special tool.**
9. **Lower the vehicle.**
10. **In order to remove any small amounts of trapped air remaining in the system, operate the clutch pedal several times (maximum five times), using the full clutch pedal travel.**
11. **Check the fluid level in the brake fluid reservoir and top up to the MAX mark with brake fluid if necessary.**
12. **Test the clutch control system for normal operation.**
    - Start the engine, depress the clutch pedal, wait two seconds, then carefully engage reverse gear. If there are any abnormal noises, or reverse gear is difficult to engage, repeat the clutch system bleeding procedure.

GENERAL PROCEDURES

Clutch System Bleeding — Vehicles With: MT82(16 843 0)

Special Tool(s)

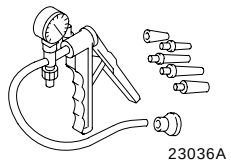 23036A	Vacuum Pump Kit 416-D001 (23-036 A)

General Equipment

Syringe

Materials	
Name	**Specification**
Super DOT 4 brake fluid	ESD-M6C57-A / WSSM6C57- A2

WARNING: Brake fluid contains polyglycol ethers and polyglycols. Avoid contact with the eyes. Wash hands thoroughly after handling. If brake fluid contacts the eyes, flush the eyes for 15 minutes with cold running water. Get medical attention if irritation persists. If taken internally, drink water and induce vomiting. Get medical attention immediately. Failure to follow these instructions may result in personal injury.

CAUTION: If brake fluid is spilt on the paintwork, the affected area must be immediately washed down with cold water.

NOTE: If proprietary brake bleeding equipment is available, this can be used to bleed the clutch system, following the method below. The maximum pressure must not exceed 1.5 bar.

NOTE: The clutch control system is self-venting. The components are arranged in such a way that small amounts of air trapped in the system are removed automatically during clutch operation.

1. **Drain the brake fluid reservoir.**
2. **Raise and support the vehicle.**

   For additional information, refer to: Lifting (100-02 Jacking and Lifting, Description and Operation).
3. **Remove the clutch slave cylinder bleed nipple dust cap.**
4. **NOTE: Make sure that the special tool reservoir is positioned lower than the bleed nipple.**

   Install the special tool.
   - Fill the reservoir of the special tool with approximately 100 ml of new Super DOT 4 brake fluid.
   - Connect the reservoir hose to the clutch slave cylinder bleed nipple.

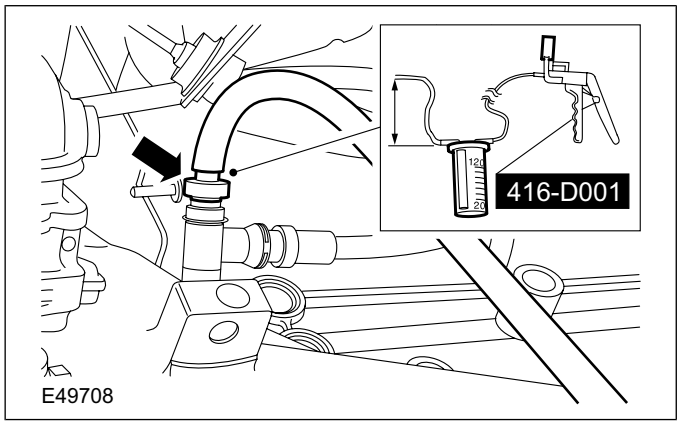

5. **Using the special tool, bleed the clutch system.**
   - Pump approximately 80 ml of the Super DOT 4 brake fluid into the clutch system.
6. **Close the bleed nipple.**
7. **Remove the special tool.**

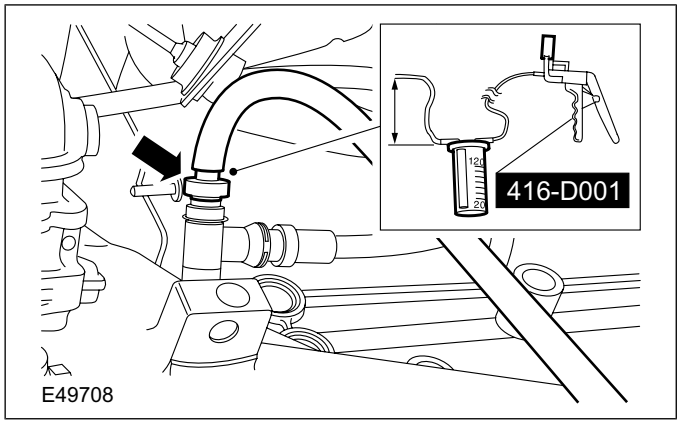

8. **In order to remove any small amounts of trapped air remaining in the system, operate the clutch pedal several times (maximum five times), using the full clutch pedal travel.**
9. **Lower the vehicle.**

GENERAL PROCEDURES

10. **Check the fluid level in the brake fluid reservoir and top up to the MAX mark with brake fluid if necessary.**
11. **Test the clutch control system for normal operation.**
    - Start the engine, depress the clutch pedal, wait two seconds, then carefully engage reverse gear. If there are any abnormal noises, or reverse gear is difficult to engage, repeat the clutch system bleeding procedure.
12. **CAUTION: The brake fluid reservoir cap must not become contaminated.**

    Install the brake fluid reservoir cap.

SECTION 308-01A Clutch — Vehicles With: 5-Speed Manual Transmission - MT75

VEHICLE APPLICATION: 2011.50 Ranger

CONTENTS PAGE

REMOVAL AND INSTALLATION

Clutch Disc and Pressure Plate..... 308-01A-2
Pilot Bearing — 2.5L Duratec-HE (122kW/165PS) - MI4..... 308-01A-5
Pilot Bearing — 2.2L Duratorq-TDCi (88kW/120PS) - Puma/2.2L Duratorq-TDCi (96kW/130PS) - Puma/2.2L Duratorq-TDCi (110kW/150PS) - Puma/3.2L Duratorq-TDCi (148kW/200PS) - Puma..... 308-01A-7

REMOVAL AND INSTALLATION

Clutch Disc and Pressure Plate

Special Tool(s)

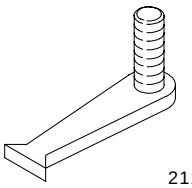 21135	303-254 Locking Tool, Flywheel

Special Tool(s)

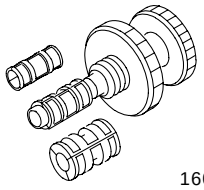 16067	308-204 Aligner, Clutch Disc

Removal

NOTE: Removal steps in this procedure may contain installation details.

1. Refer to: Health and Safety Precautions (100-00 General Information, Description and Operation).
2. Refer to: Battery Disconnect and Connect (414-01 Battery, Mounting and Cables, General Procedures).
3. Refer to: Transmission - 2WD (308-03 Manual Transmission/Transaxle - Vehicles With: 5-Speed Manual Transmission - MT75, Removal).
   Refer to: Transmission - 4WD (308-03 Manual Transmission/Transaxle - Vehicles With: 5-Speed Manual Transmission - MT75, Removal).
4. Special Tool(s): 303-254

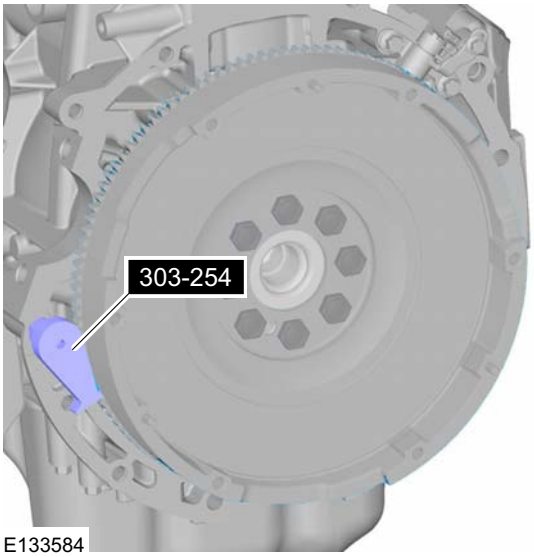

E133584

5. **CAUTION: Loosen the clutch pressure plate retaining bolts by two turns at a time in the sequence shown.**

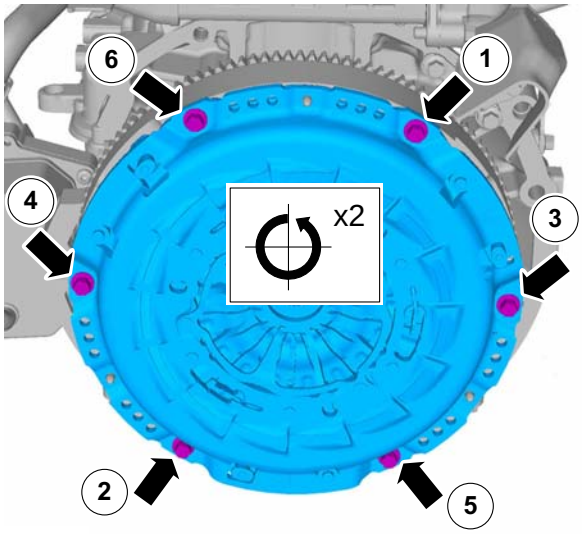

E129960

REMOVAL AND INSTALLATION

Installation

1. Using the special tool, centralize the clutch disc on the pressure plate.

   Special Tool(s): 308-204

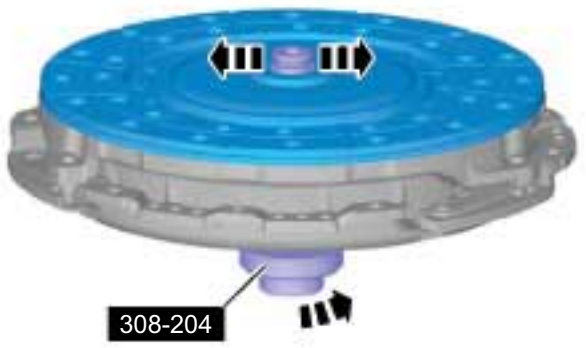

E129961

2. **NOTE:** Check the pilot bearing for damage. If damaged, install a new pilot bearing.

   NOTE: Do not apply grease to a newly installed pilot bearing.

   Refer to: Pilot Bearing - 2.5L Duratec-HE (122kW/165PS) - MI4 (308-01 Clutch - Vehicles With: 5-Speed Manual Transmission - MT75, Removal and Installation).

3. **NOTE:** Hand tighten the bolts at this stage.

   Special Tool(s): 308-204

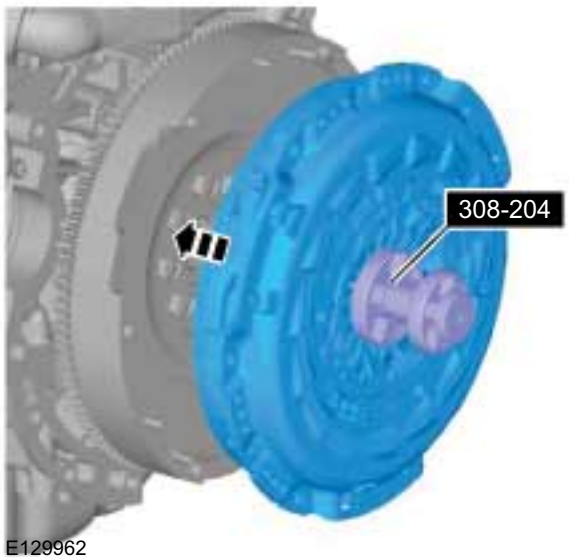

E129962

4. ⚠ **CAUTION: Tighten the clutch pressure plate retaining bolts in the sequence shown to the specified torque.**

   Special Tool(s): 308-204
   Torque: 30 Nm

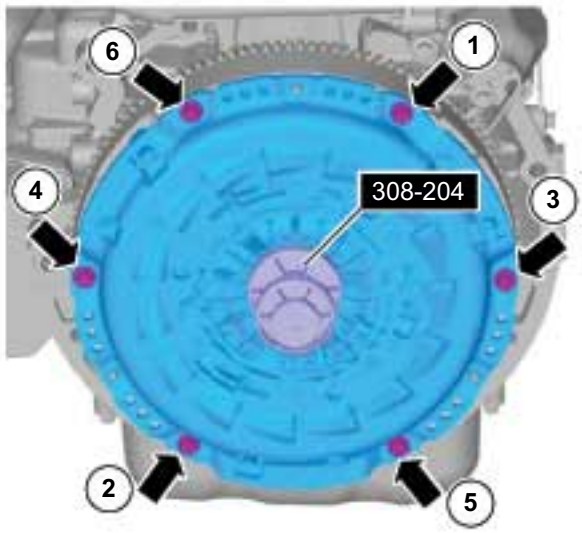

E129963

5. Remove the Special Tool(s): 308-204

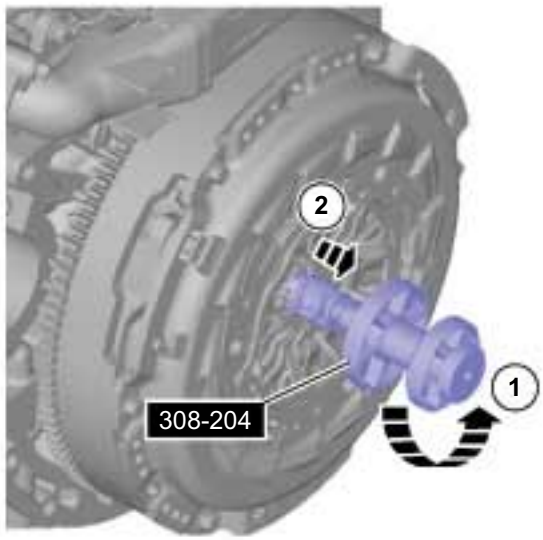

E129984

REMOVAL AND INSTALLATION

6. Remove the Special Tool(s): 303-254

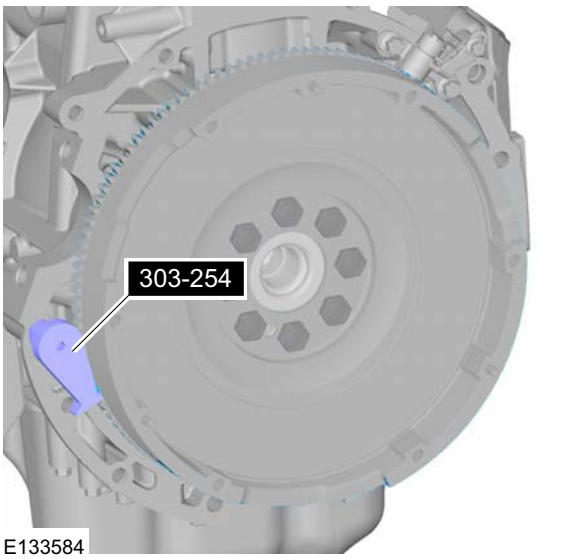

7. Refer to: Transmission - 2WD (308-03 Manual Transmission/Transaxle - Vehicles With: 5-Speed Manual Transmission - MT75, Installation).
   Refer to: Transmission - 4WD (308-03 Manual Transmission/Transaxle - Vehicles With: 5-Speed Manual Transmission - MT75, Installation).

REMOVAL AND INSTALLATION

Pilot Bearing — 2.5L Duratec-HE (122kW/165PS) - MI4

Special Tool(s)

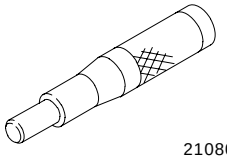 21080	303-132 Installer/Aligner, Pilot Bearing/Clutch Plate

Special Tool(s)

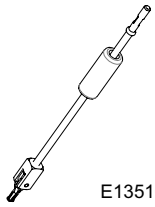 E135106	308-001 Remover Pilot Bearing

Removal

NOTE: Removal steps in this procedure may contain installation details.

1. Refer to: Clutch Disc and Pressure Plate (308-01 Clutch - Vehicles With: 5-Speed Manual Transmission - MT75, Removal and Installation).
2. Special Tool(s): 308-001

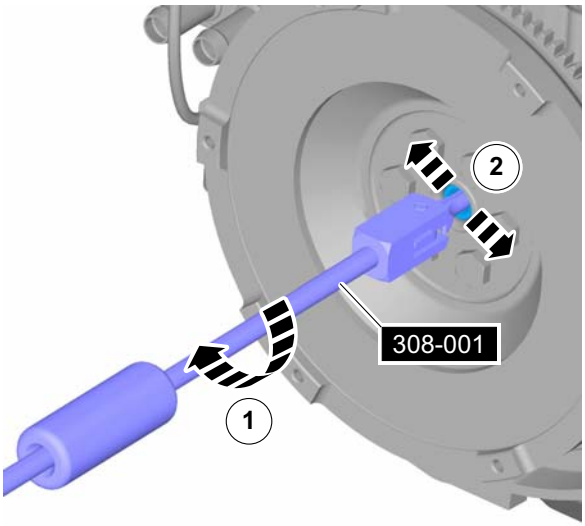

E129167

3. Special Tool(s): 308-001

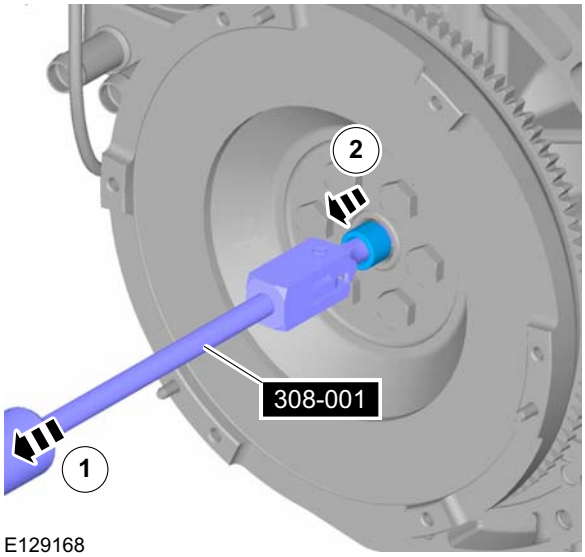

E129168

Installation

1. Special Tool(s): 303-132

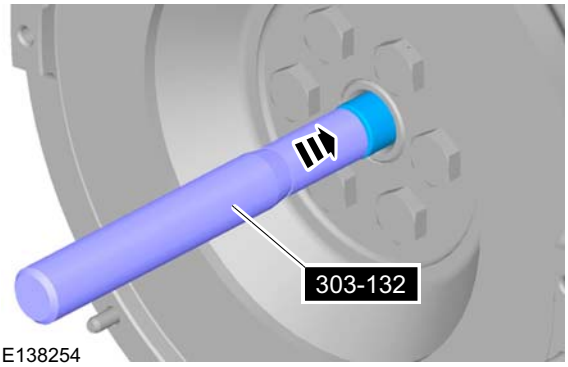

E138254

2. **CAUTION: Make sure that the pilot bearing is correctly installed.**

   Special Tool(s): 303-132

REMOVAL AND INSTALLATION

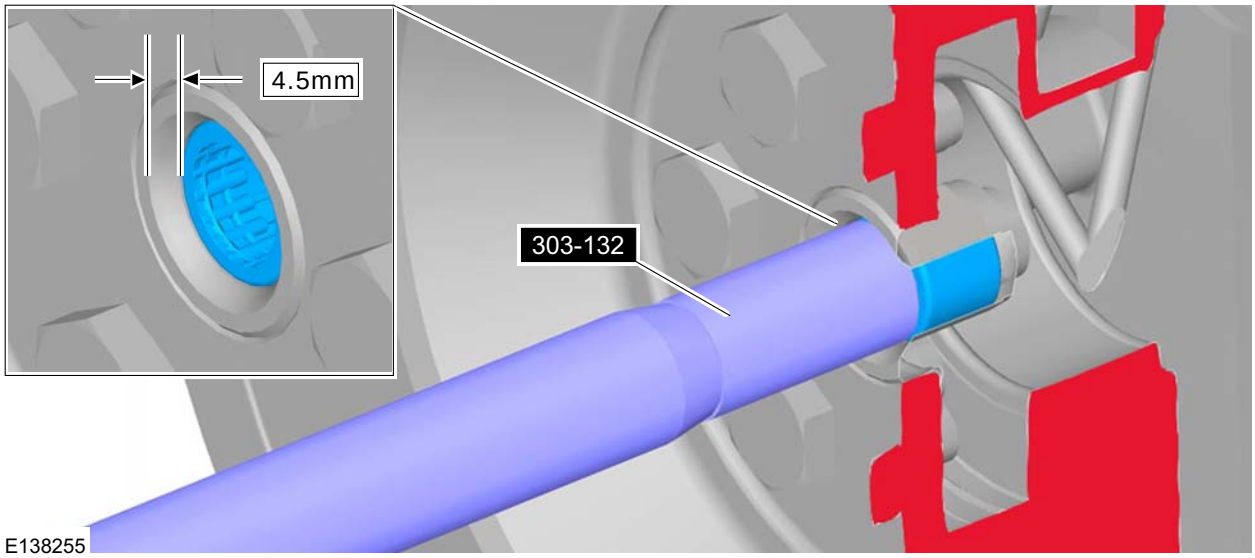

3. Refer to: Clutch Disc and Pressure Plate (308-01 Clutch - Vehicles With: 5-Speed Manual Transmission - MT75, Removal and Installation).

REMOVAL AND INSTALLATION

Pilot Bearing — 2.2L Duratorq-TDCi (88kW/120PS) - Puma/2.2L Duratorq-TDCi (96kW/130PS) - Puma/2.2L Duratorq-TDCi (110kW/150PS) - Puma/3.2L Duratorq-TDCi (148kW/200PS) - Puma

Special Tool(s)

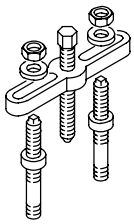	205-311 Remover, Bearing/Gear

Special Tool(s)

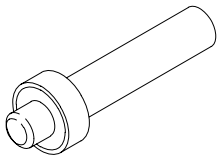	303-090 Installer, Crankshaft Pilot Bearing
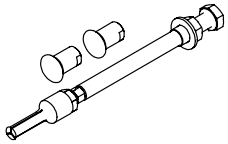 E92318	303-1365 Remover, Crankshaft Pilot Bearing

Removal

NOTE: Removal steps in this procedure may contain installation details.

1. Refer to: Clutch Disc and Pressure Plate (308-01 Clutch - Vehicles With: 6-Speed Manual Transmission - MT82, Removal and Installation).
   Refer to: Clutch Disc and Pressure Plate (308-01 Clutch - Vehicles With: 5-Speed Manual Transmission - MT75, Removal and Installation).
2. Special Tool(s): 205-311, 303-1365

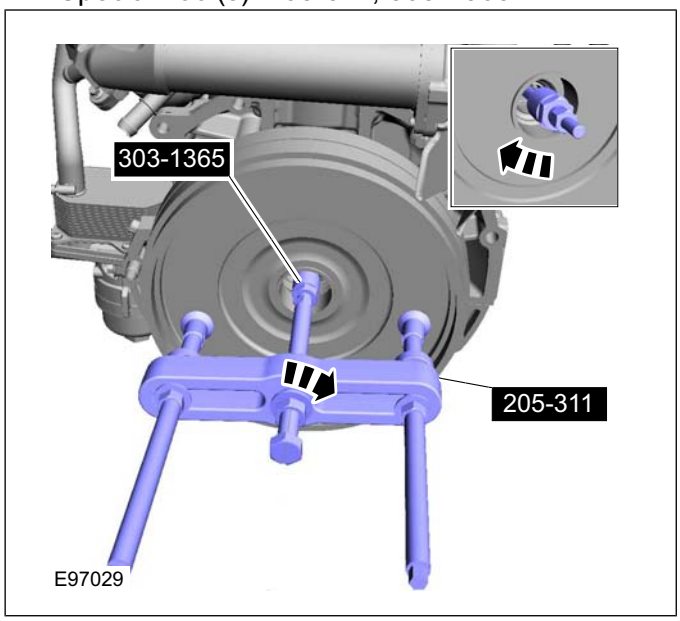

REMOVAL AND INSTALLATION

Installation

1. Special Tool(s): 303-090

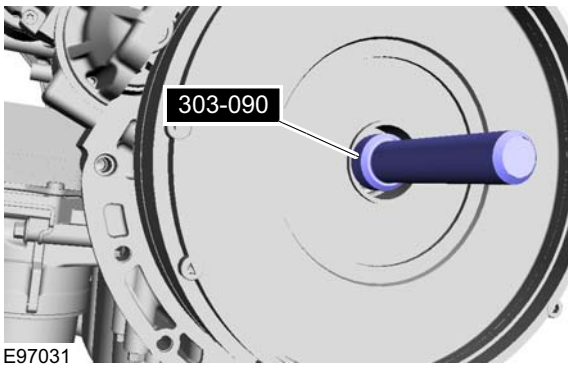

E97031

2. Refer to: Clutch Disc and Pressure Plate (308-01 Clutch - Vehicles With: 6-Speed Manual Transmission - MT82, Removal and Installation).
   Refer to: Clutch Disc and Pressure Plate (308-01 Clutch - Vehicles With: 5-Speed Manual Transmission - MT75, Removal and Installation).

SECTION 308-01B Clutch — Vehicles With: 6-Speed Manual Transmission - MT82

VEHICLE APPLICATION: 2011.50 Ranger

CONTENTS PAGE

REMOVAL AND INSTALLATION

Clutch Disc and Pressure Plate..... 308-01B-2
Pilot Bearing — 2.2L Duratorq-TDCi (88kW/120PS) - Puma/2.2L Duratorq-TDCi (96kW/130PS) - Puma/2.2L Duratorq-TDCi (110kW/150PS) - Puma/3.2L Duratorq-TDCi (148kW/200PS) - Puma..... 308-01B-6

REMOVAL AND INSTALLATION

Clutch Disc and Pressure Plate

Special Tool(s)

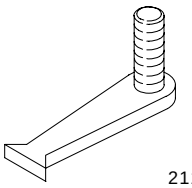 21135	303-254 Locking Tool, Flywheel

Special Tool(s)

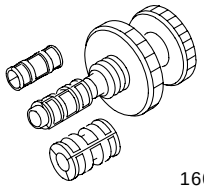 16067	308-204 Aligner, Clutch Disc

Removal

NOTE: Removal steps in this procedure may contain installation details.

REMOVAL AND INSTALLATION

1. Refer to: Health and Safety Precautions (100-00 General Information, Description and Operation).

2. Refer to: Battery Disconnect and Connect (414-01 Battery, Mounting and Cables, General Procedures).

3. Refer to: Transmission - 2.2L Duratorq-TDCi (88kW/120PS) - Puma/2.2L Duratorq-TDCi (96kW/130PS) - Puma/2.2L Duratorq-TDCi (110kW/150PS) - Puma/3.2L Duratorq-TDCi (148kW/200PS) - Puma, 2WD (308-03 Manual Transmission/Transaxle - Vehicles With: 6-Speed Manual Transmission - MT82, Removal).
   Refer to: Transmission - 2.2L Duratorq-TDCi (88kW/120PS) - Puma/2.2L Duratorq-TDCi (96kW/130PS) - Puma/2.2L Duratorq-TDCi (110kW/150PS) - Puma/3.2L Duratorq-TDCi (148kW/200PS) - Puma, 4WD (308-03 Manual Transmission/Transaxle - Vehicles With: 6-Speed Manual Transmission - MT82, Removal).

4. Special Tool(s): 303-254

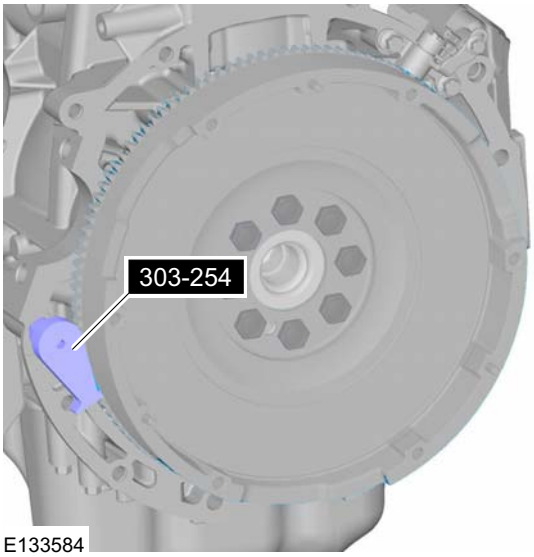

E133584

5. **CAUTION: Loosen the clutch pressure plate retaining bolts by two turns at a time in the sequence shown.**

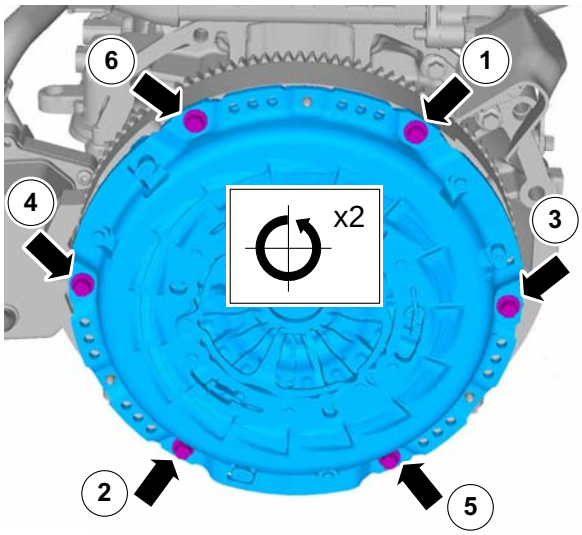

E129960

Installation

1. Using the special tool, centralize the clutch disc on the pressure plate.

   Special Tool(s): 308-204

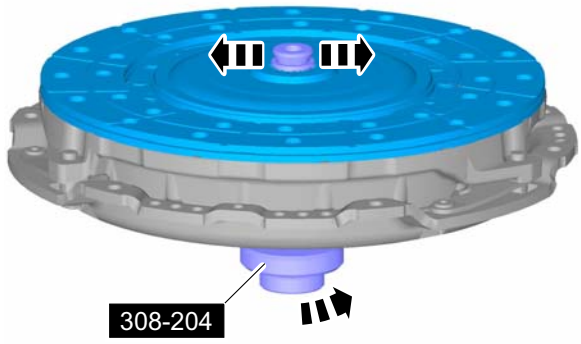

E129961

2. **NOTE:** Check the pilot bearing for damage. If damaged, install a new pilot bearing.

   NOTE: Do not apply grease to a newly installed pilot bearing.

   Refer to: Pilot Bearing - 2.2L Duratorq-TDCi (88kW/120PS) - Puma/2.2L Duratorq-TDCi (96kW/130PS) - Puma/2.2L Duratorq-TDCi

REMOVAL AND INSTALLATION

(110kW/150PS) - Puma/3.2L Duratorq-TDCi (148kW/200PS) - Puma (308-01 Clutch - Vehicles With: 5-Speed Manual Transmission - MT75, Removal and Installation).

3. **NOTE:** Hand tighten the bolts at this stage.

   Special Tool(s): 308-204

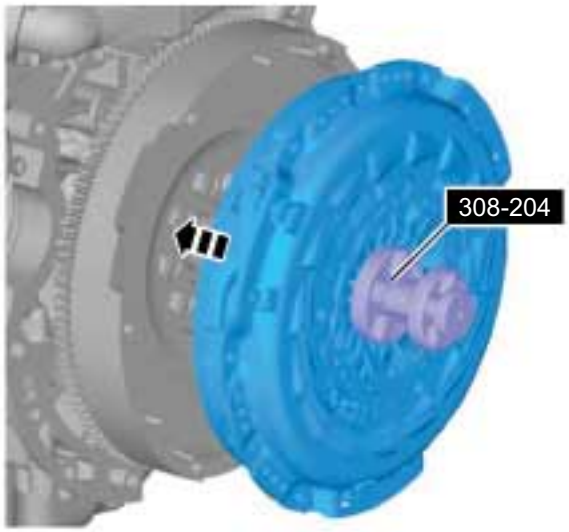

E129962

4. **CAUTION: Tighten the clutch pressure plate retaining bolts in the sequence shown to the specified torque.**

   Special Tool(s): 308-204
   Torque: 30 Nm

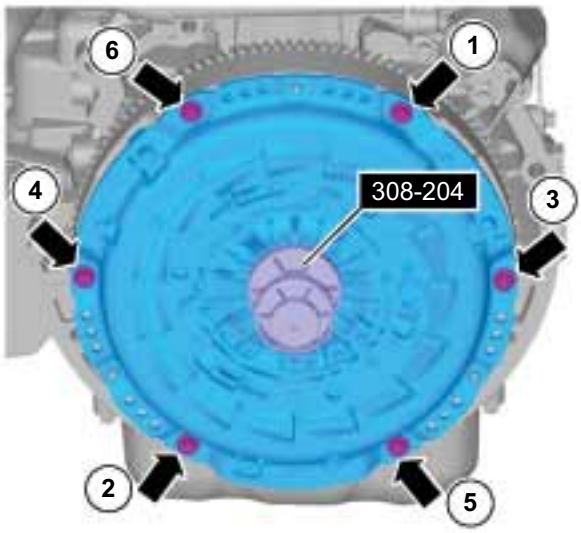

E129963

5. Remove the Special Tool(s): 308-204

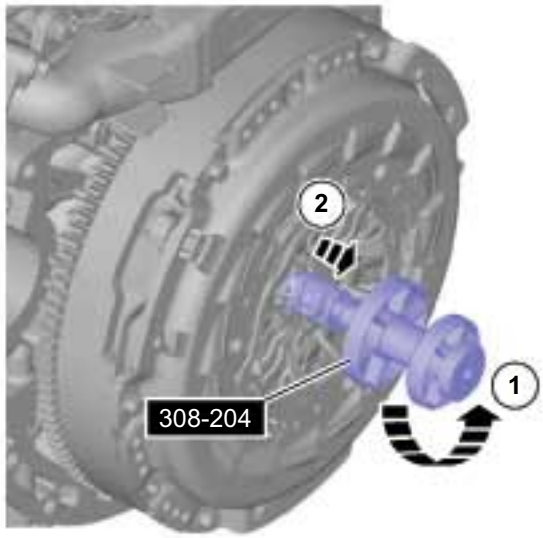

E129984

6. Remove the Special Tool(s): 303-254

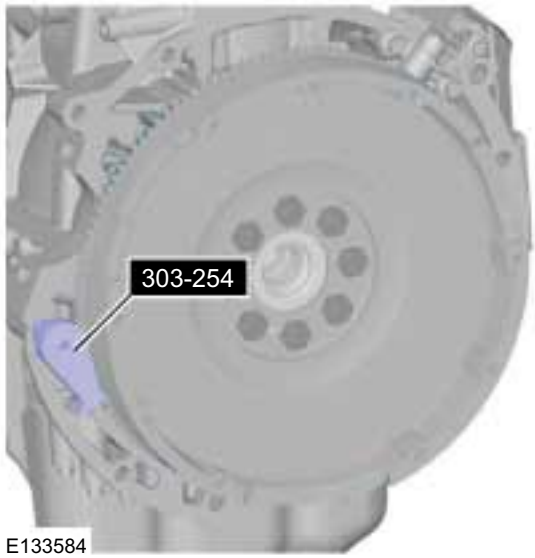

E133584

REMOVAL AND INSTALLATION

7. Refer to: Transmission - 2.2L Duratorq-TDCi (88kW/120PS) - Puma/2.2L Duratorq-TDCi (96kW/130PS) - Puma/2.2L Duratorq-TDCi (110kW/150PS) - Puma/3.2L Duratorq-TDCi (148kW/200PS) - Puma, 2WD (308-03 Manual Transmission/Transaxle - Vehicles With: 6-Speed Manual Transmission - MT82, Installation).
   Refer to: Transmission - 2.2L Duratorq-TDCi (88kW/120PS) - Puma/2.2L Duratorq-TDCi (96kW/130PS) - Puma/2.2L Duratorq-TDCi (110kW/150PS) - Puma/3.2L Duratorq-TDCi (148kW/200PS) - Puma, 4WD (308-03 Manual Transmission/Transaxle - Vehicles With: 6-Speed Manual Transmission - MT82, Installation).

REMOVAL AND INSTALLATION

Pilot Bearing — 2.2L Duratorq-TDCi (88kW/120PS) - Puma/2.2L Duratorq-TDCi (96kW/130PS) - Puma/2.2L Duratorq-TDCi (110kW/150PS) - Puma/3.2L Duratorq-TDCi (148kW/200PS) - Puma

Special Tool(s)

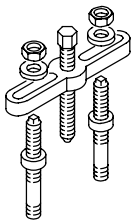 15092	205-311 Remover, Bearing/Gear

Special Tool(s)

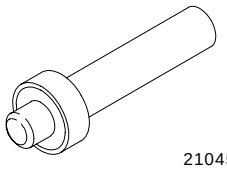 21045	303-090 Installer, Crankshaft Pilot Bearing
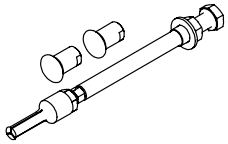 E92318	303-1365 Remover, Crankshaft Pilot Bearing

Removal

NOTE: Removal steps in this procedure may contain installation details.

1. Refer to: Clutch Disc and Pressure Plate (308-01 Clutch - Vehicles With: 6-Speed Manual Transmission - MT82, Removal and Installation).
   Refer to: Clutch Disc and Pressure Plate (308-01 Clutch - Vehicles With: 5-Speed Manual Transmission - MT75, Removal and Installation).
2. Special Tool(s): 205-311, 303-1365

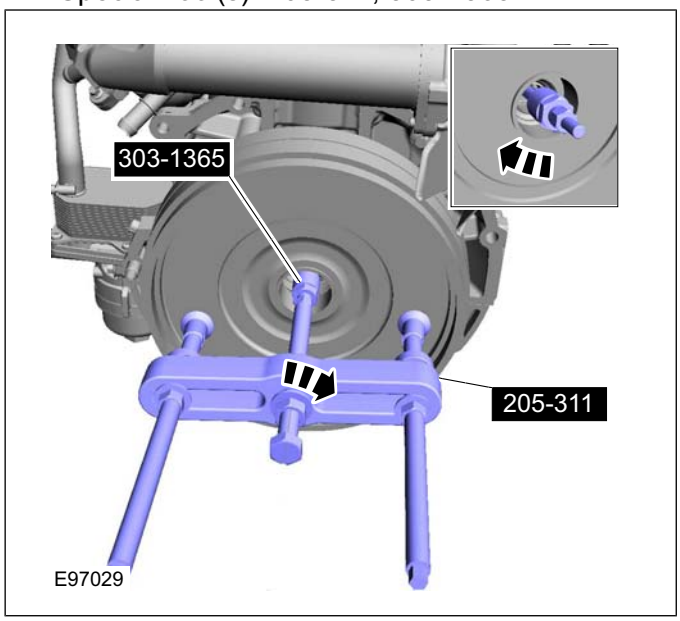

REMOVAL AND INSTALLATION

Installation

1. Special Tool(s): 303-090

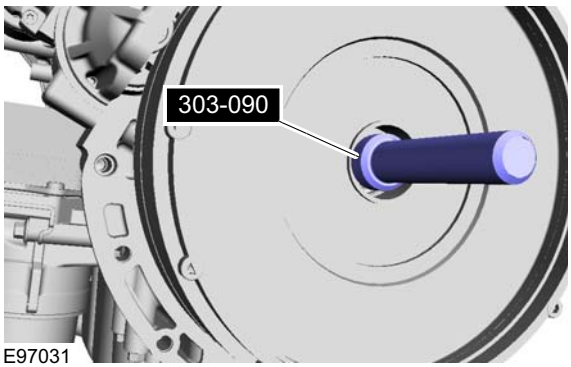

2. Refer to: Clutch Disc and Pressure Plate (308-01 Clutch - Vehicles With: 6-Speed Manual Transmission - MT82, Removal and Installation).
   Refer to: Clutch Disc and Pressure Plate (308-01 Clutch - Vehicles With: 5-Speed Manual Transmission - MT75, Removal and Installation).

SECTION 308-02A Clutch Controls — Vehicles With: 5-Speed Manual Transmission - MT75

VEHICLE APPLICATION: 2011.50 Ranger

CONTENTS PAGE

DESCRIPTION AND OPERATION

Clutch Controls..... 308-02A-2

REMOVAL AND INSTALLATION

Clutch Master Cylinder..... 308-02A-3
Clutch Slave Cylinder..... 308-02A-7

DESCRIPTION AND OPERATION

Clutch Controls

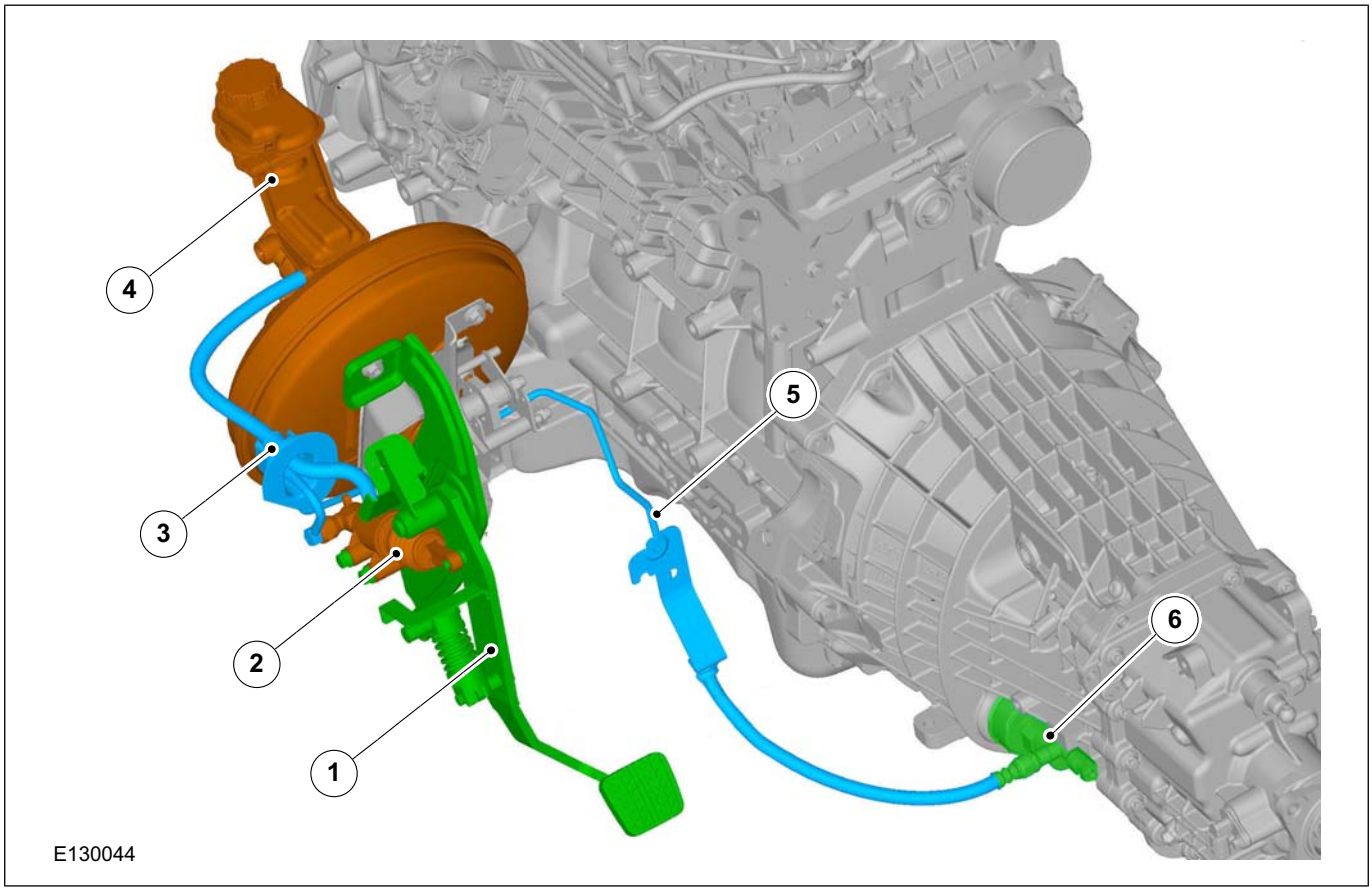

Item	Part Number	Description
1		Clutch pedal
2		Clutch master cylinder
3		Master cylinder fluid tube
4		Hydraulic fluid reservior
5		Slave cylinder fluid tube
6		Clutch slave cylinder

REMOVAL AND INSTALLATION

Clutch Master Cylinder

Removal

CAUTION: If brake fluid is spilt on the paintwork, the affected area must be immediately washed down with cold water.

NOTE: Removal steps in this procedure may contain installation details.

1. Refer to: Health and Safety Precautions (100-00 General Information, Description and Operation).
2. Refer to: Battery Disconnect and Connect (414-01 Battery, Mounting and Cables, General Procedures).

Vehicles with driver lower air bag

3. Refer to: Driver Lower Air Bag Module (501-20 Supplemental Restraint System, Removal and Installation).

Vehicles without driver lower air bag

4.

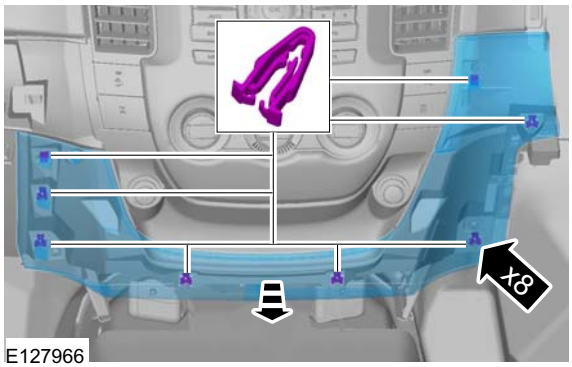

E127966

5.

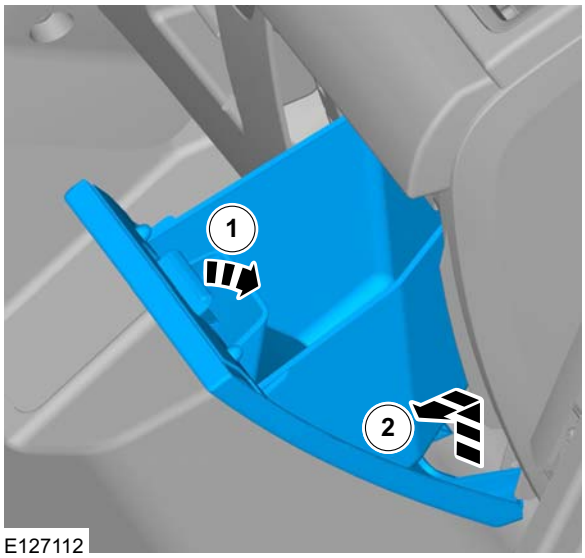

E127112

6. Torque: 2 Nm

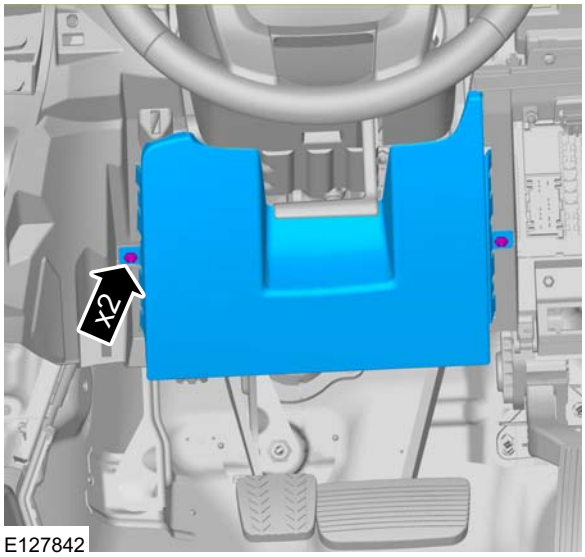

E127842

REMOVAL AND INSTALLATION

7.

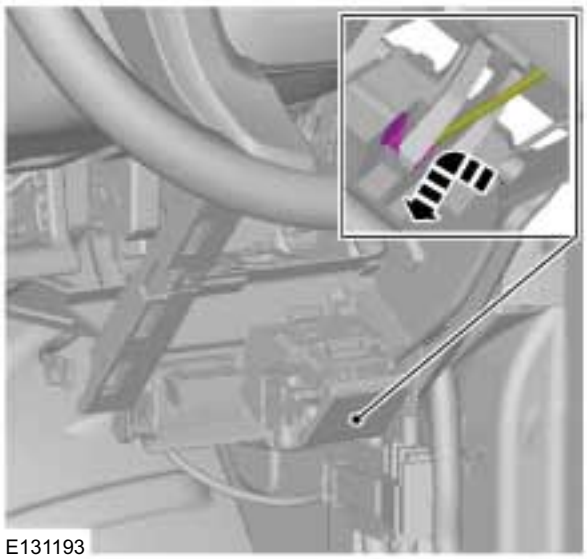

8.

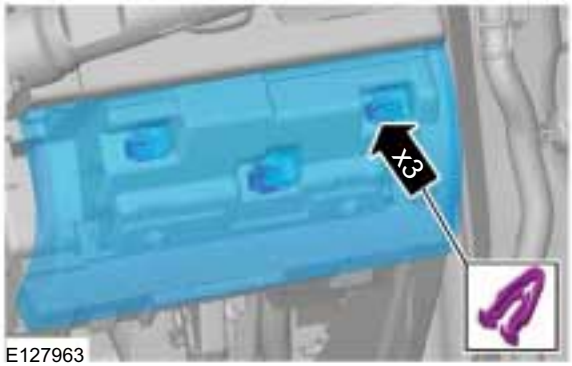

9. 1. Torque: 3 Nm
2. Torque: 2 Nm

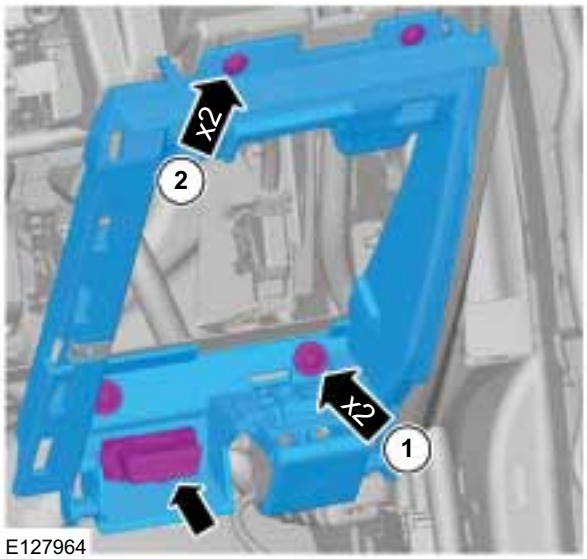

10. Torque: 10 Nm

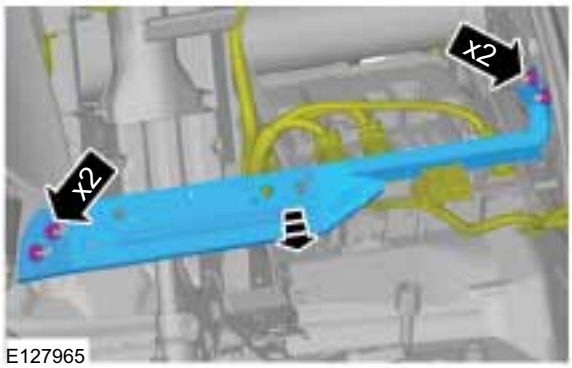

Left-hand drive vehicles

11. **WARNING: Be prepared to collect escaping fluids.**

NOTE: Cap the clutch master cylinder supply hose to prevent fluid loss or dirt ingress.

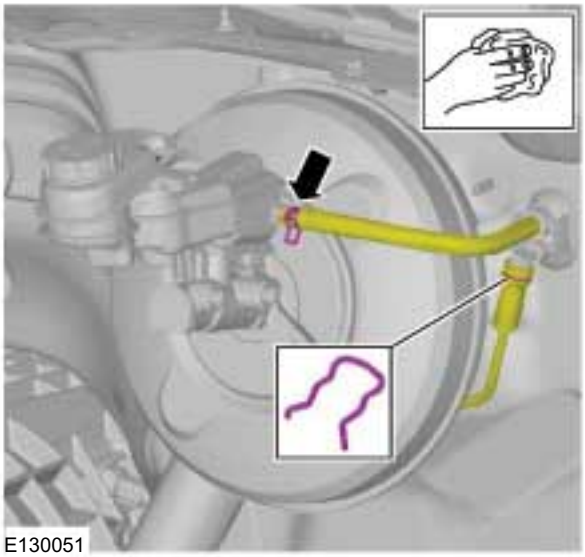

Right-hand drive vehicles

12. **WARNING: Be prepared to collect escaping fluids.**

REMOVAL AND INSTALLATION

NOTE: Cap the clutch master cylinder supply hose to prevent fluid loss or dirt ingress.

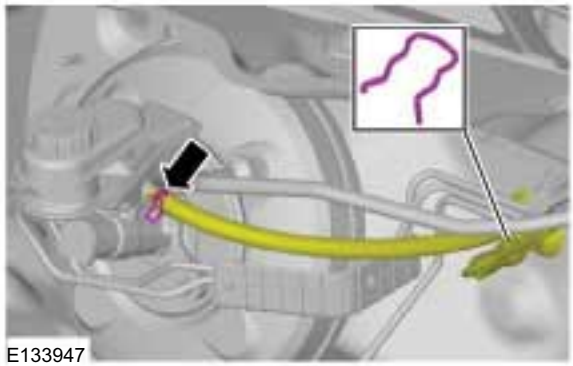

All vehicles

13.

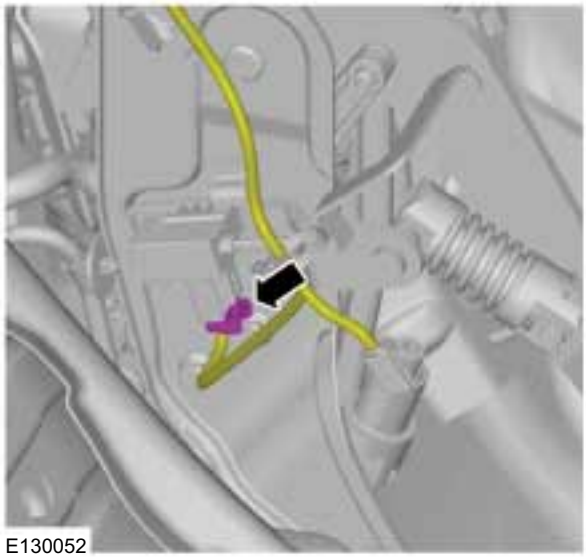

14.

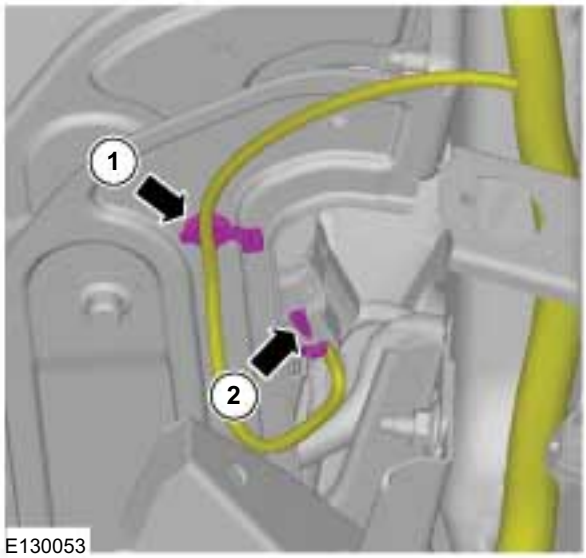

15. Torque: 15 Nm

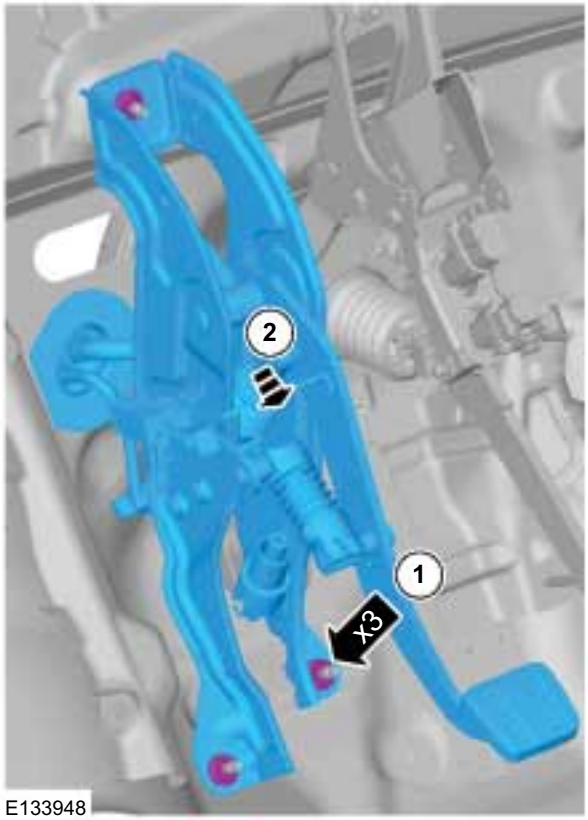

REMOVAL AND INSTALLATION

16.

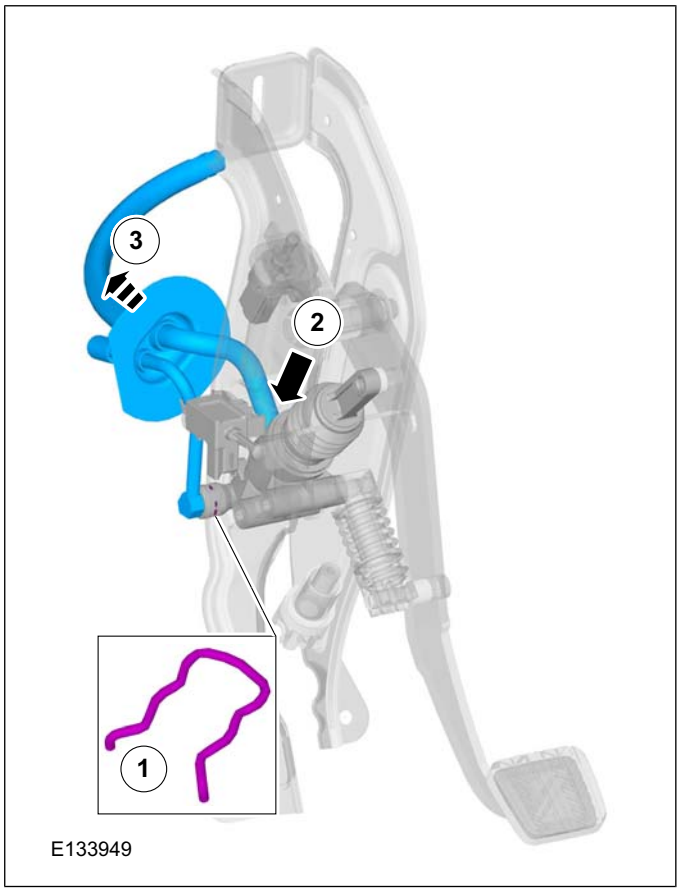

17. Torque: 20 Nm

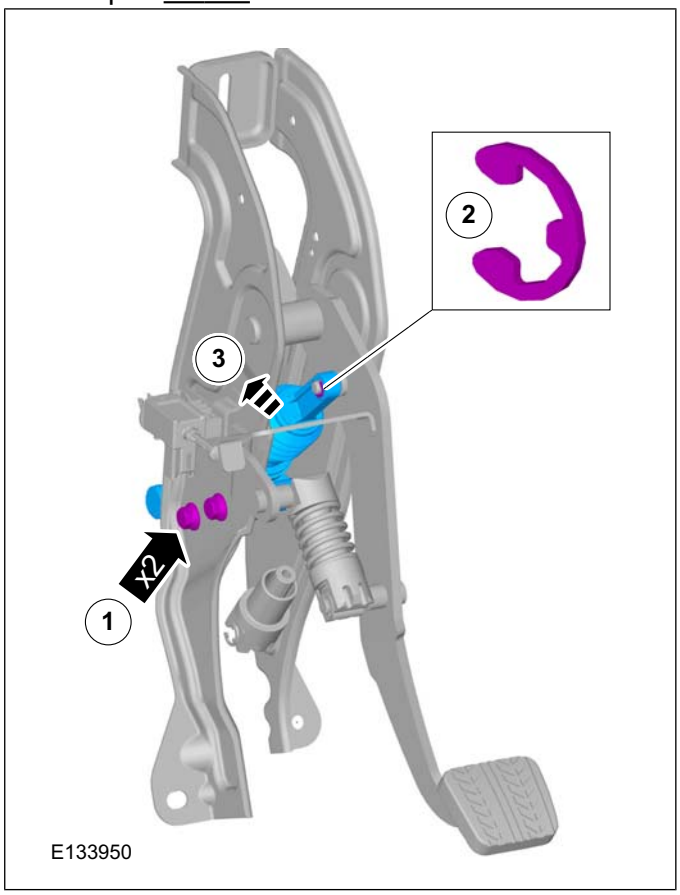

Installation

1. To install, reverse the removal procedure.
2. Refer to: Clutch System Bleeding - Vehicles With: MT-75 (308-00 Manual Transmission/Transaxle and Clutch - General Information, General Procedures).
   Refer to: Clutch System Bleeding - Vehicles With: MT82 (308-00 Manual Transmission/Transaxle and Clutch - General Information, General Procedures).

REMOVAL AND INSTALLATION

Clutch Slave Cylinder

Removal

CAUTION: If the fluid is spilled on the paintwork, the affected area must be immediately washed down with cold water.

NOTE: Removal steps in this procedure may contain installation details.

1. Refer to: Clutch System Bleeding - Vehicles With: MT-75 (308-00 Manual Transmission/Transaxle and Clutch - General Information, General Procedures).

2.

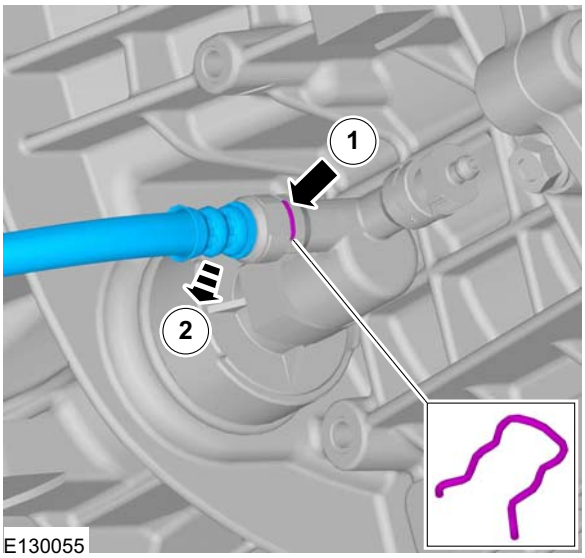

E130055

3.

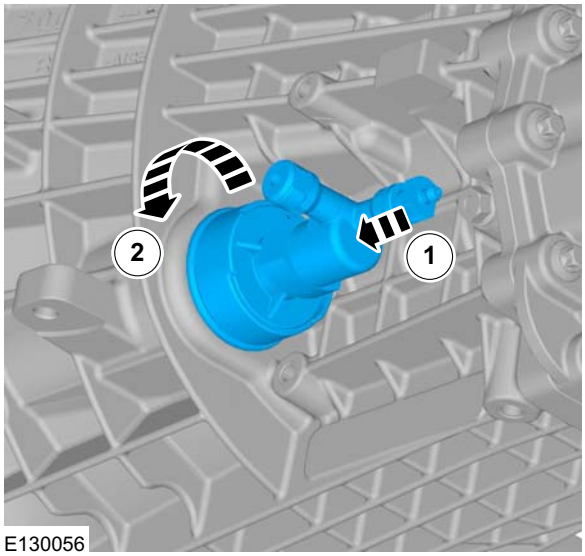

E130056

Installation

1. To install, reverse the removal procedure.
2. **CAUTION: Make sure that the clutch slave cylinder actuating rod is correctly engaged with the clutch release lever.**

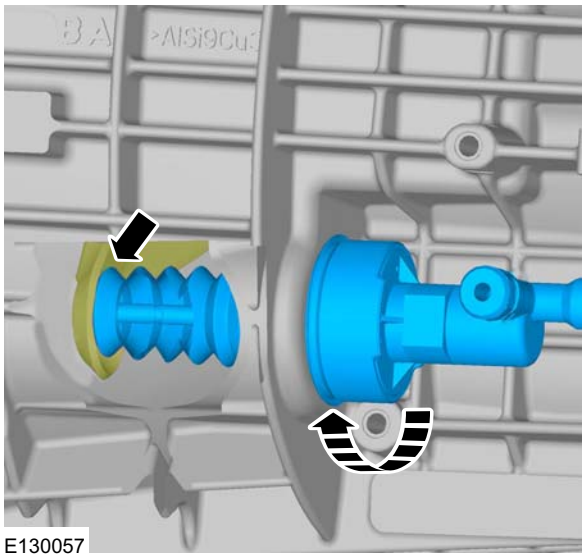
E130057

REMOVAL AND INSTALLATION

3. Refer to: Clutch System Bleeding - Vehicles With: MT-75 (308-00 Manual Transmission/Transaxle and Clutch - General Information, General Procedures).

SECTION 308-02B Clutch Controls — Vehicles With: 6-Speed Manual Transmission - MT82

VEHICLE APPLICATION: 2011.50 Ranger

CONTENTS PAGE

DESCRIPTION AND OPERATION

Clutch Controls (Component Location)..... 308-02B-2

REMOVAL AND INSTALLATION

Clutch Master Cylinder..... 308-02B-3
Clutch Slave Cylinder..... 308-02B-7

DESCRIPTION AND OPERATION

Clutch Controls – Component Location

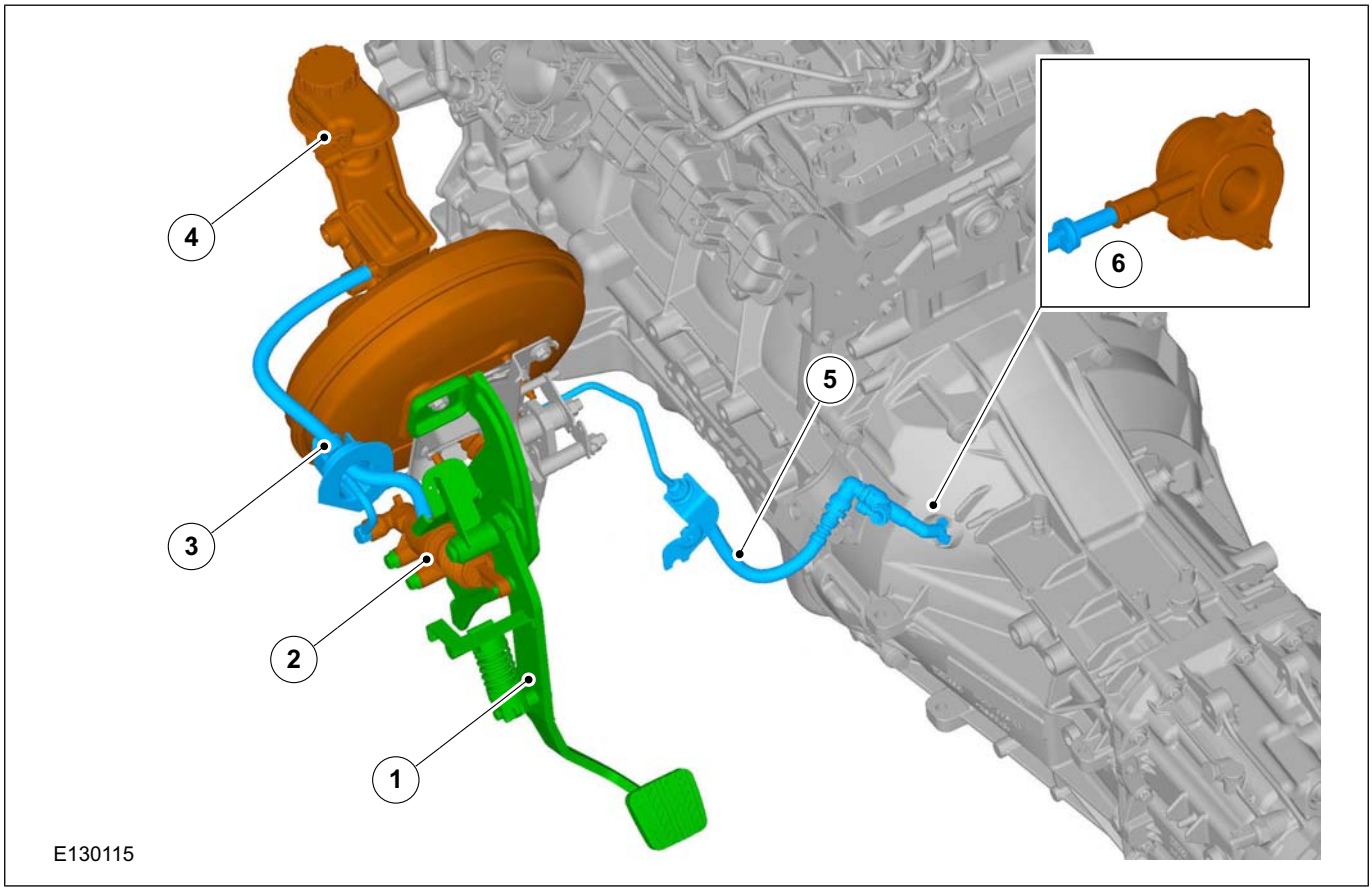

Item	Description
1	Clutch pedal
2	Clutch master cylinder
3	Master cylinder fluid tube

Item	Description
4	Hydraulic fluid reservior
5	Slave cylinder fluid tube
6	Clutch slave cylinder

REMOVAL AND INSTALLATION

Clutch Master Cylinder

Removal

CAUTION: If brake fluid is spilt on the paintwork, the affected area must be immediately washed down with cold water.

NOTE: Removal steps in this procedure may contain installation details.

1. Refer to: Health and Safety Precautions (100-00 General Information, Description and Operation).
2. Refer to: Battery Disconnect and Connect (414-01 Battery, Mounting and Cables, General Procedures).

Vehicles with driver lower air bag

3. Refer to: Driver Lower Air Bag Module (501-20 Supplemental Restraint System, Removal and Installation).

Vehicles without driver lower air bag

4.

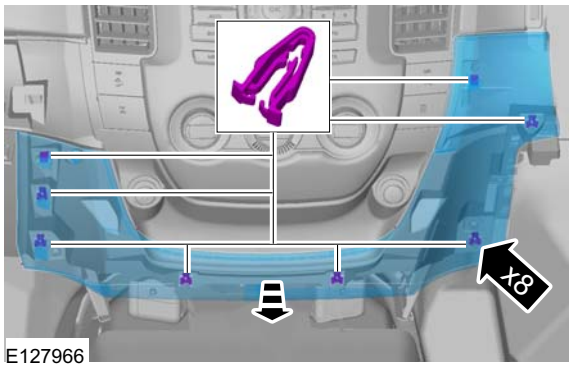

E127966

5.

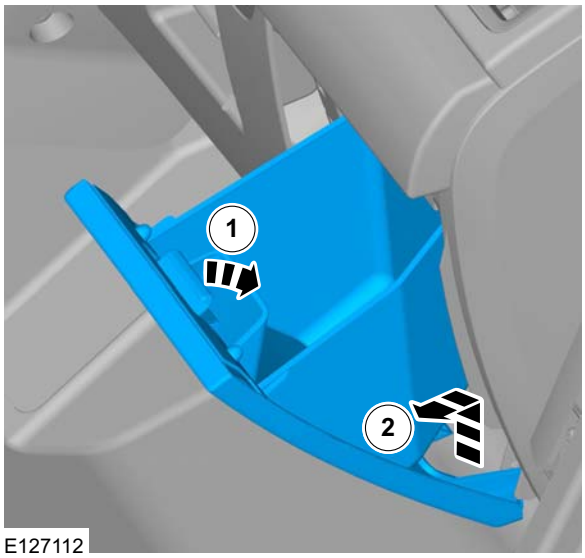

E127112

6. Torque: 2 Nm

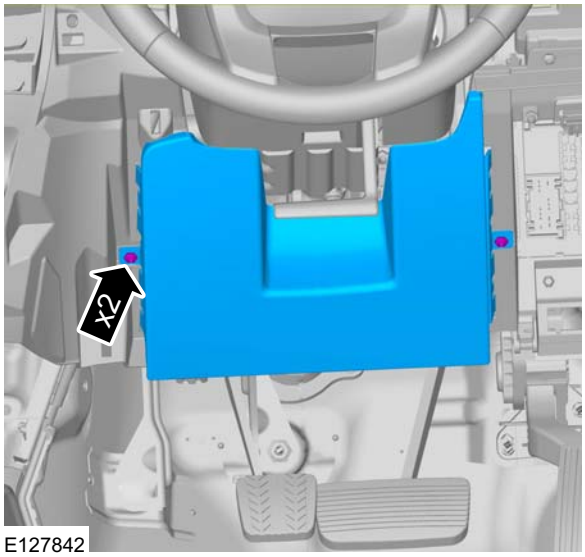

E127842

REMOVAL AND INSTALLATION

7.

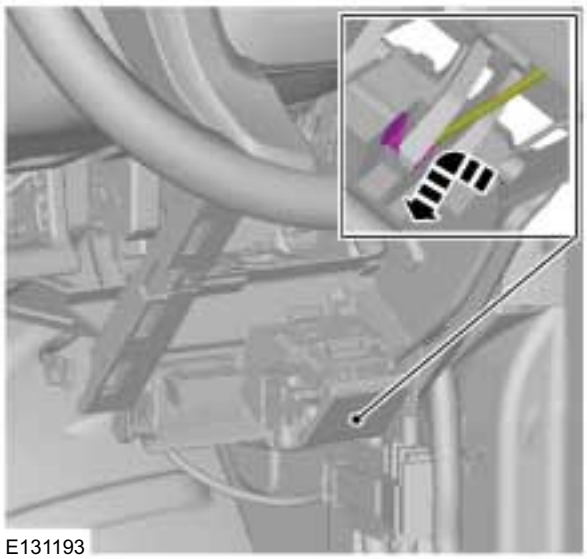

8.

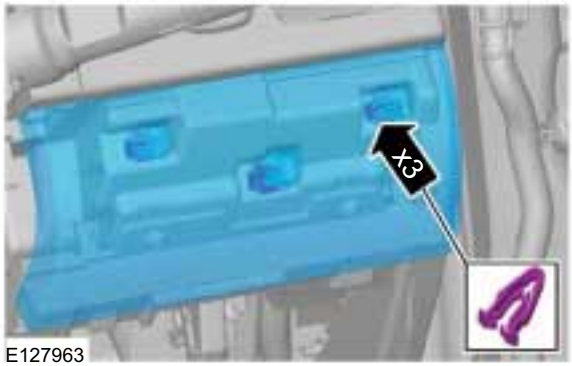

9. 1. Torque: 3 Nm
2. Torque: 2 Nm

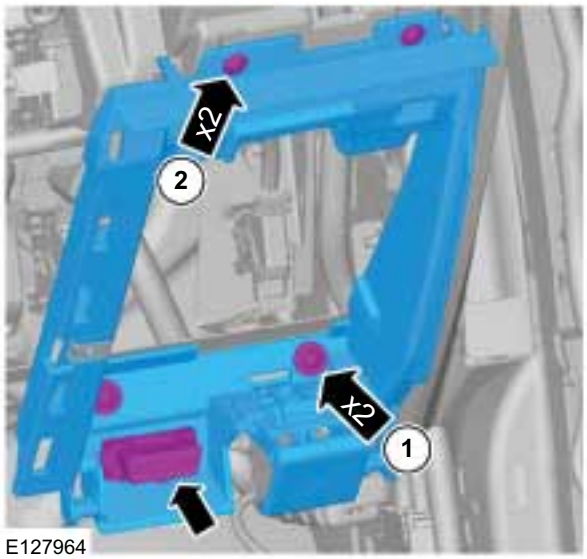

10. Torque: 10 Nm

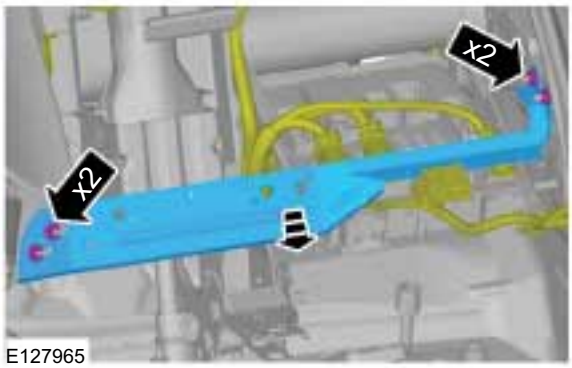

Left-hand drive vehicles

11. **WARNING: Be prepared to collect escaping fluids.**

NOTE: Cap the clutch master cylinder supply hose to prevent fluid loss or dirt ingress.

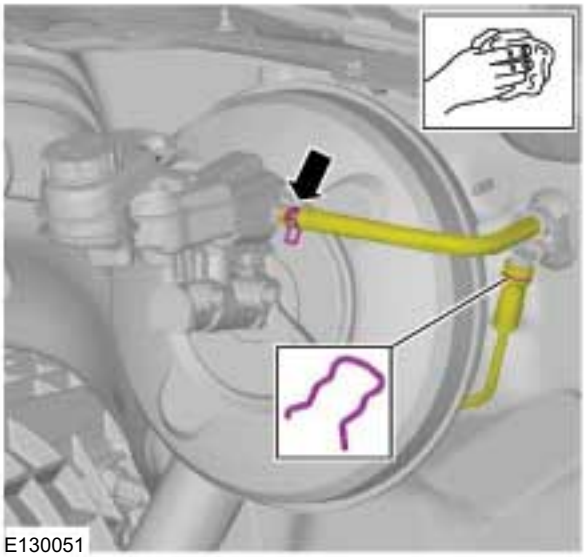

Right-hand drive vehicles

12. **WARNING: Be prepared to collect escaping fluids.**

REMOVAL AND INSTALLATION

NOTE: Cap the clutch master cylinder supply hose to prevent fluid loss or dirt ingress.

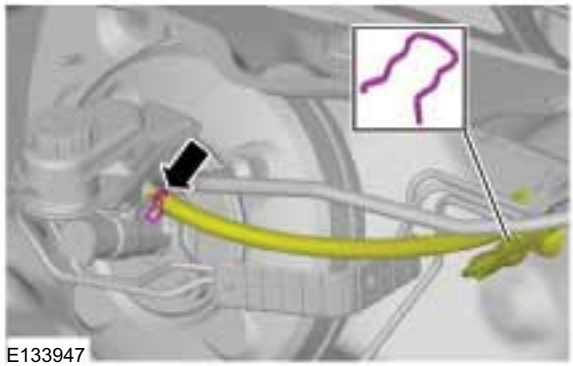

All vehicles

13.

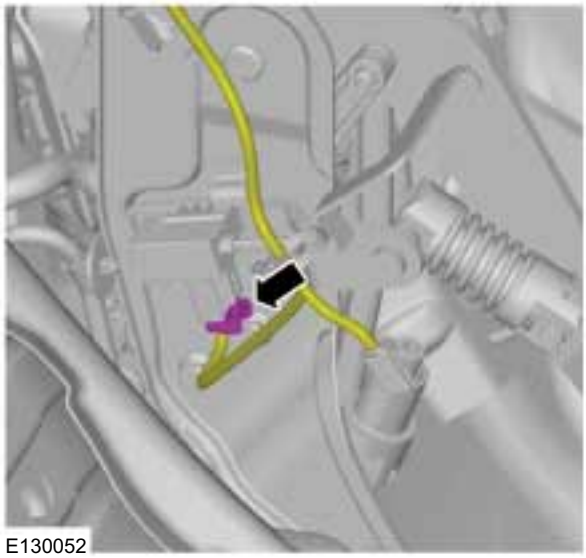

14.

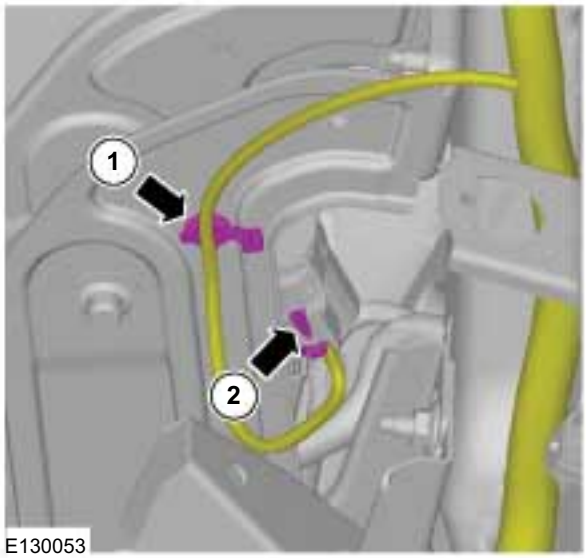

15. Torque: 15 Nm

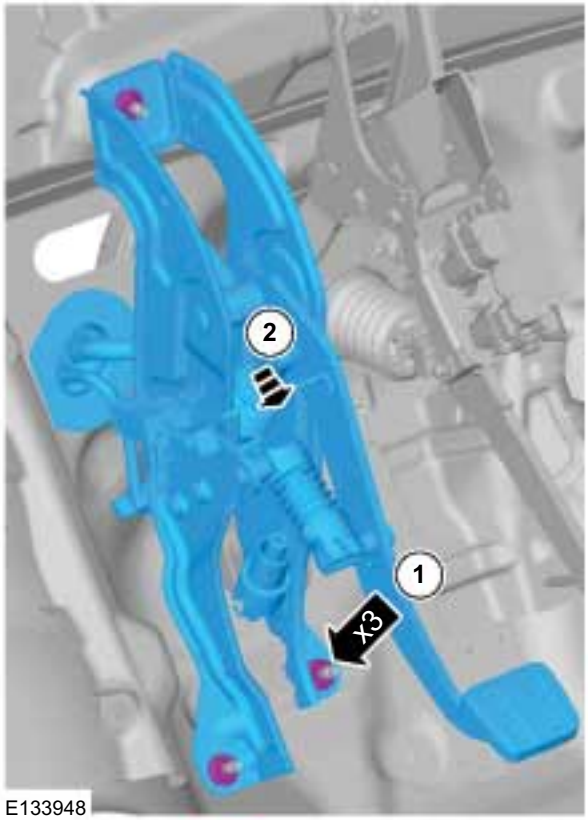

REMOVAL AND INSTALLATION

16.

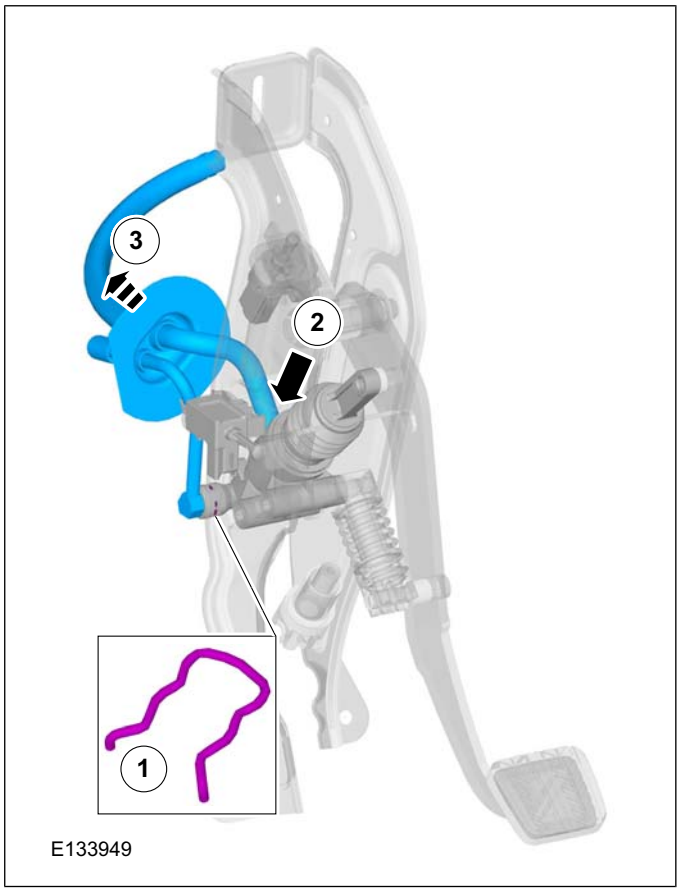

17. Torque: 20 Nm

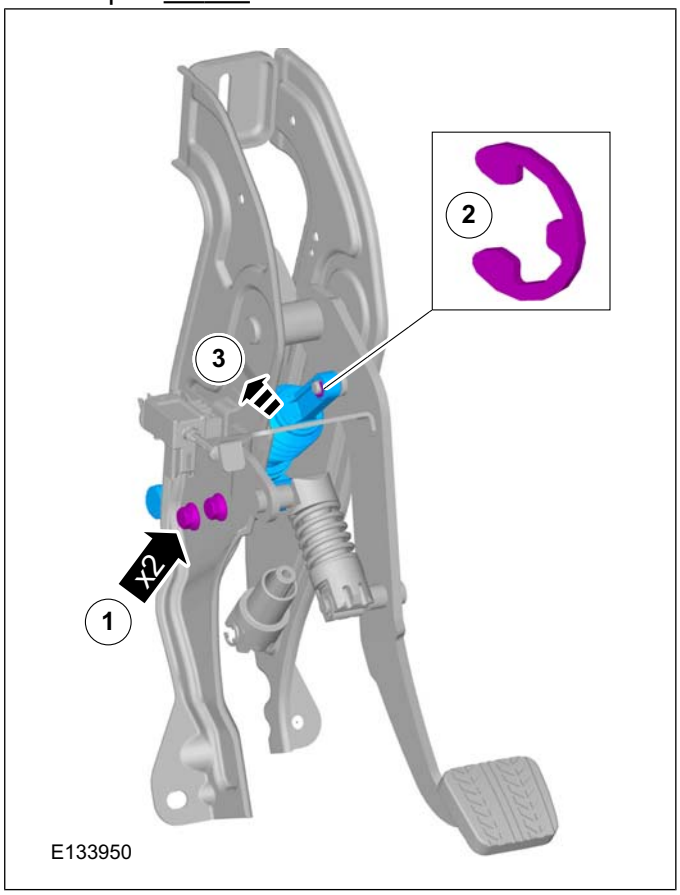

Installation

1. To install, reverse the removal procedure.
2. Refer to: Clutch System Bleeding - Vehicles With: MT-75 (308-00 Manual Transmission/Transaxle and Clutch - General Information, General Procedures).
   Refer to: Clutch System Bleeding - Vehicles With: MT82 (308-00 Manual Transmission/Transaxle and Clutch - General Information, General Procedures).

REMOVAL AND INSTALLATION

Clutch Slave Cylinder

Removal

NOTE: Removal steps in this procedure may contain installation details.

1. Refer to: Health and Safety Precautions (100-00 General Information, Description and Operation).
2. Refer to: Transmission - 2.2L Duratorq-TDCi (88kW/120PS) - Puma/2.2L Duratorq-TDCi (96kW/130PS) - Puma/2.2L Duratorq-TDCi (110kW/150PS) - Puma/3.2L Duratorq-TDCi (148kW/200PS) - Puma, 2WD (308-03 Manual Transmission/Transaxle - Vehicles With: 6-Speed Manual Transmission - MT82, Removal).
   Refer to: Transmission - 2.2L Duratorq-TDCi (88kW/120PS) - Puma/2.2L Duratorq-TDCi (96kW/130PS) - Puma/2.2L Duratorq-TDCi (110kW/150PS) - Puma/3.2L Duratorq-TDCi (148kW/200PS) - Puma, 4WD (308-03 Manual Transmission/Transaxle - Vehicles With: 6-Speed Manual Transmission - MT82, Removal).
3.

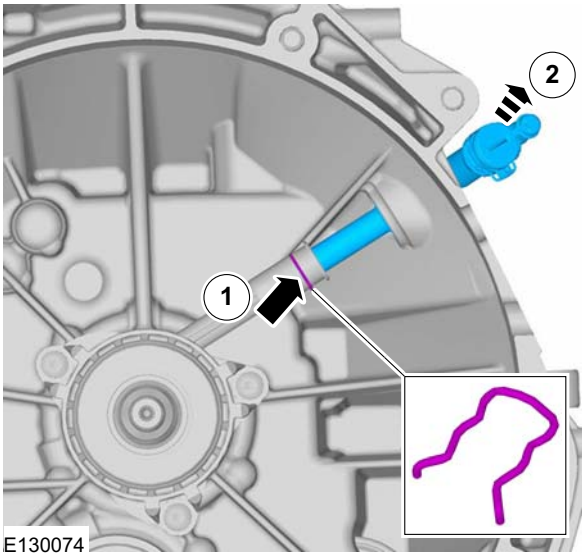

4. Torque: 10 Nm

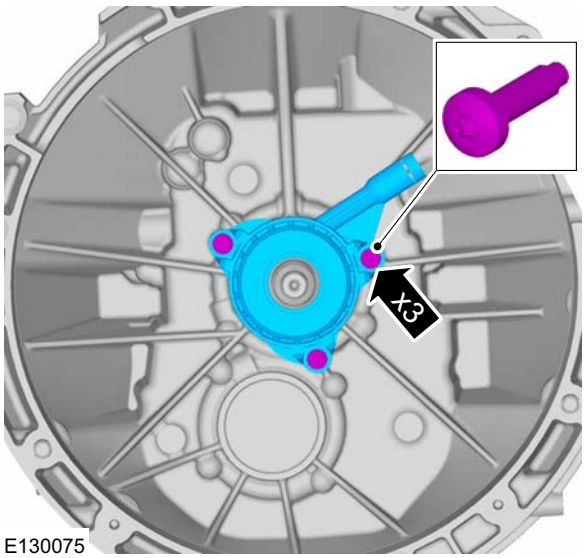

Installation

1. To install, reverse the removal procedure.
2. Refer to: Clutch System Bleeding - Vehicles With: MT82 (308-00 Manual Transmission/Transaxle and Clutch - General Information, General Procedures).

SECTION 308-03A Manual Transmission/Transaxle —

Vehicles With: 5-Speed Manual Transmission - MT75

VEHICLE APPLICATION: 2011.50 Ranger

CONTENTS PAGE

SPECIFICATIONS

Specifications..... 308-03A-2

DESCRIPTION AND OPERATION

Manual Transmission..... 308-03A-3
Power Flow..... 308-03A-10

GENERAL PROCEDURES

Transmission Draining and Filling..... 308-03A-16

REMOVAL

Transmission — 2WD..... 308-03A-17
Transmission — 4WD..... 308-03A-21

DISASSEMBLY

Transmission..... 308-03A-26

DISASSEMBLY AND ASSEMBLY OF SUBASSEMBLIES

Input Shaft..... 308-03A-35
Output Shaft..... 308-03A-36
Countershaft..... 308-03A-40
Reverse Idler Gear..... 308-03A-41
Synchronizers..... 308-03A-42
Gearshift Control Shaft..... 308-03A-43

ASSEMBLY

Transmission..... 308-03A-44

INSTALLATION

Transmission — 2WD..... 308-03A-56
Transmission — 4WD..... 308-03A-60

SPECIFICATIONS

Lubricants, Fluids, Sealers and Adhesives

Item	Specification
Manual transmission fluid	WSD-M2C200-C
Sealant	WSK-M2G348-A8 / WSS-M2G348-A10
Grease	ESD-M1C220-A
Thread-locking compound	SDM-4G9107-A

Capacities

	Litres
MT75 transmission	1.7

Torque Specifications

Description	Nm	lb-ft	lb-in
Selector gate retaining bolts	10	-	89
Transmission retaining bolts	50	37	-
Reversing lamp switch	20	15	-
Transmission output shaft flange retaining nut	200	148	-
Oil drain plug	50	37	-
Oil fill plug	35	26	-
Vehicle speed sensor (VSS)	10	-	89

DESCRIPTION AND OPERATION

Manual Transmission

Transmission Overview

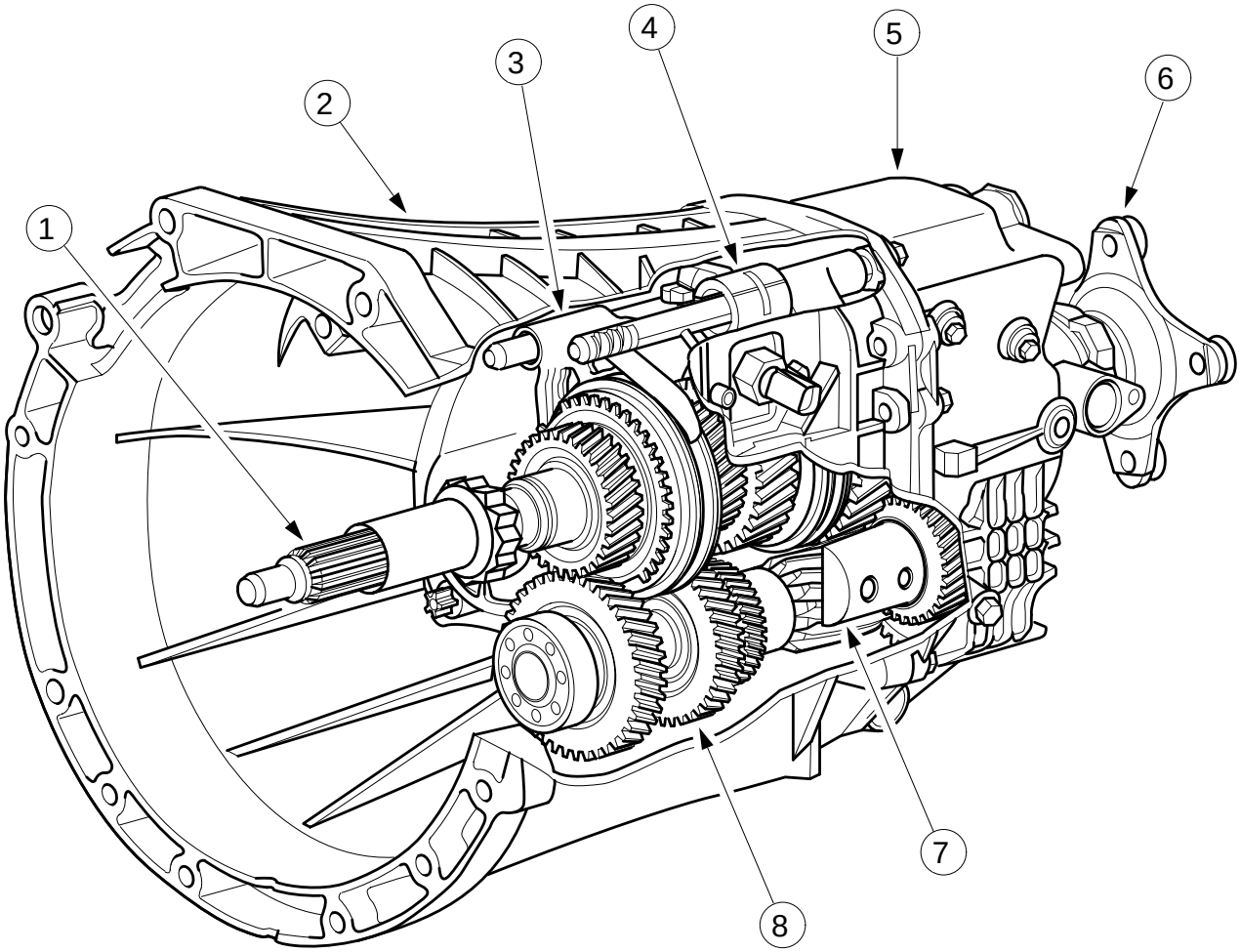

ELE0010443

Item	Part Number	Description
1		Mainshaft — Input shaft/Output shaft
2		Transmission front case
3		Shifter fork third/fourth gear
4		Selector shaft

Item	Part Number	Description
5		Transmission rear case
6		Output drive flange
7		Reverse gear idler
8		Counter shaft

DESCRIPTION AND OPERATION

The MT - 75 manual transmission is a ” three - shaft transmission".

MT - 75 means:

- M: Manual.
- T: Transmission
- 75: Distance between main shaft and counter shaft in mm.

The aluminum transmission housing consists of two closed sections. The reinforcing ribs on the transmission housing have been revised to reduce noise and vibration.

Mainshaft and Counter Shaft

With the ” three - shaft transmission", all the gears are in permanent mesh. In each gear the required transmission ratio is achieved by means of a pair of gears.

When the reverse gear is selected, the direction of the output shaft is changed by an idler gear.

The input and output shafts turn on taper roller bearings.

All the gears, including reverse, are bevel - cut, synchronized and turn on needle roller bearings.

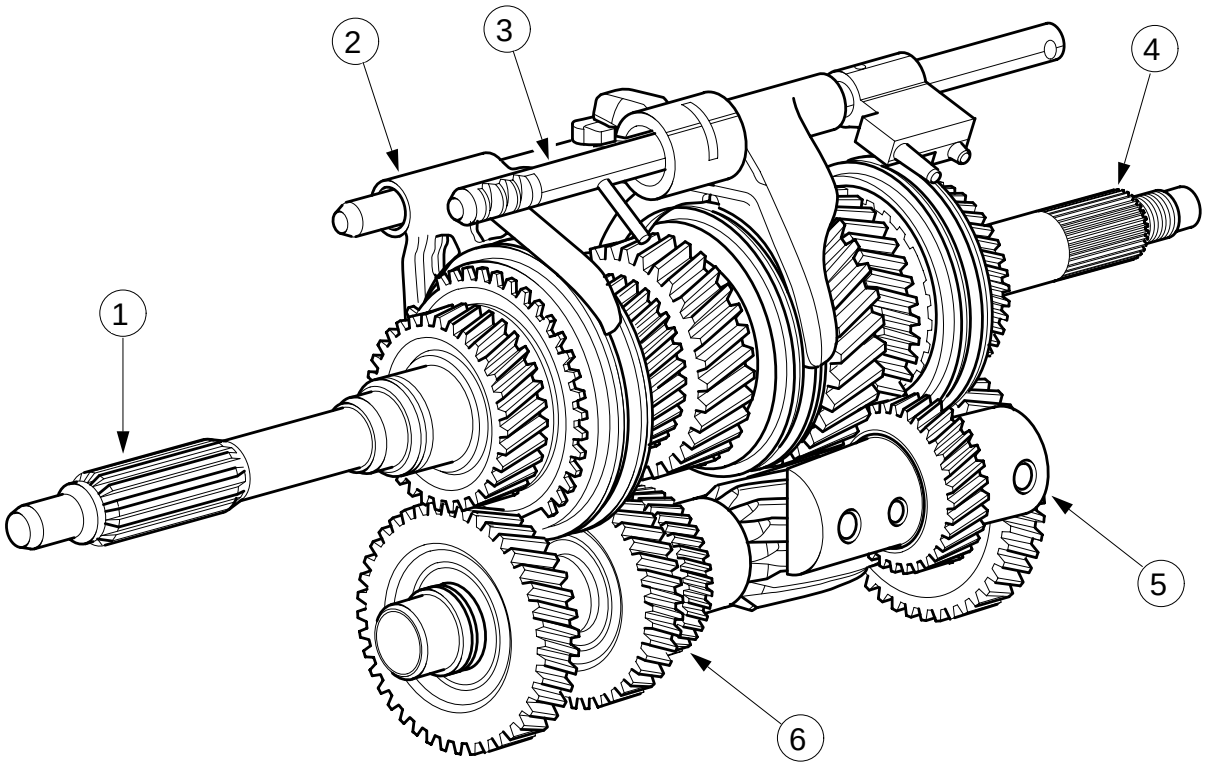

ELE0010444

Item	Part Number	Description
1		Input shaft
2		Selector fork third/fourth gear
3		Selector fork fifth/reverse gear

Item	Part Number	Description
4		Output shaft
5		Reverse gear idler
6		Counter shaft

DESCRIPTION AND OPERATION

Input shaft

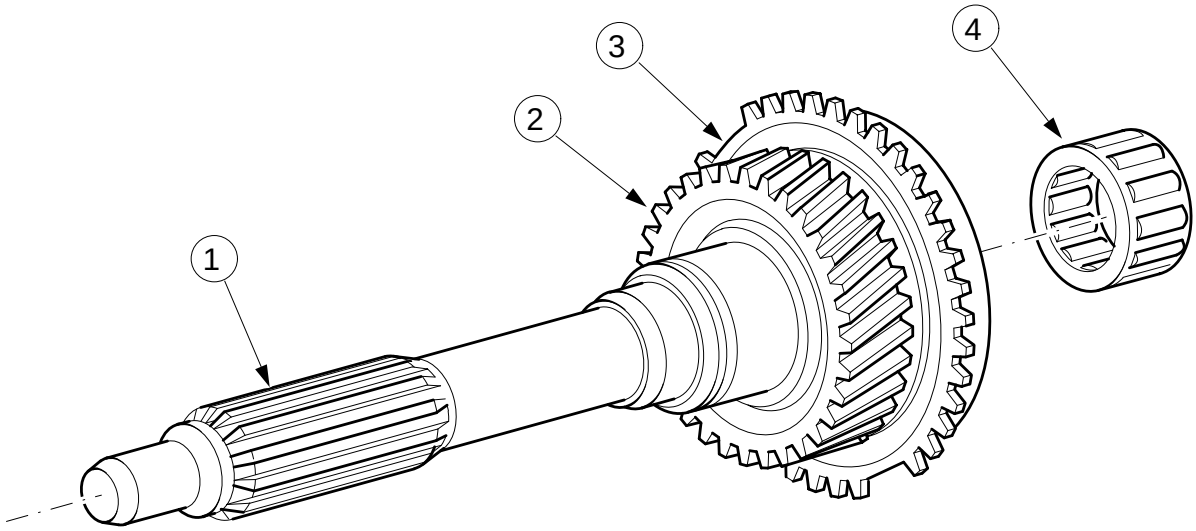

ELE0010445

Item	Part Number	Description
1		Input shaft
2		Driving gear for counter shaft

Item	Part Number	Description
3		Fourth gear synchronizer teeth
4		Output shaft locating bearing

DESCRIPTION AND OPERATION

Mainshaft (left - hand side shown)

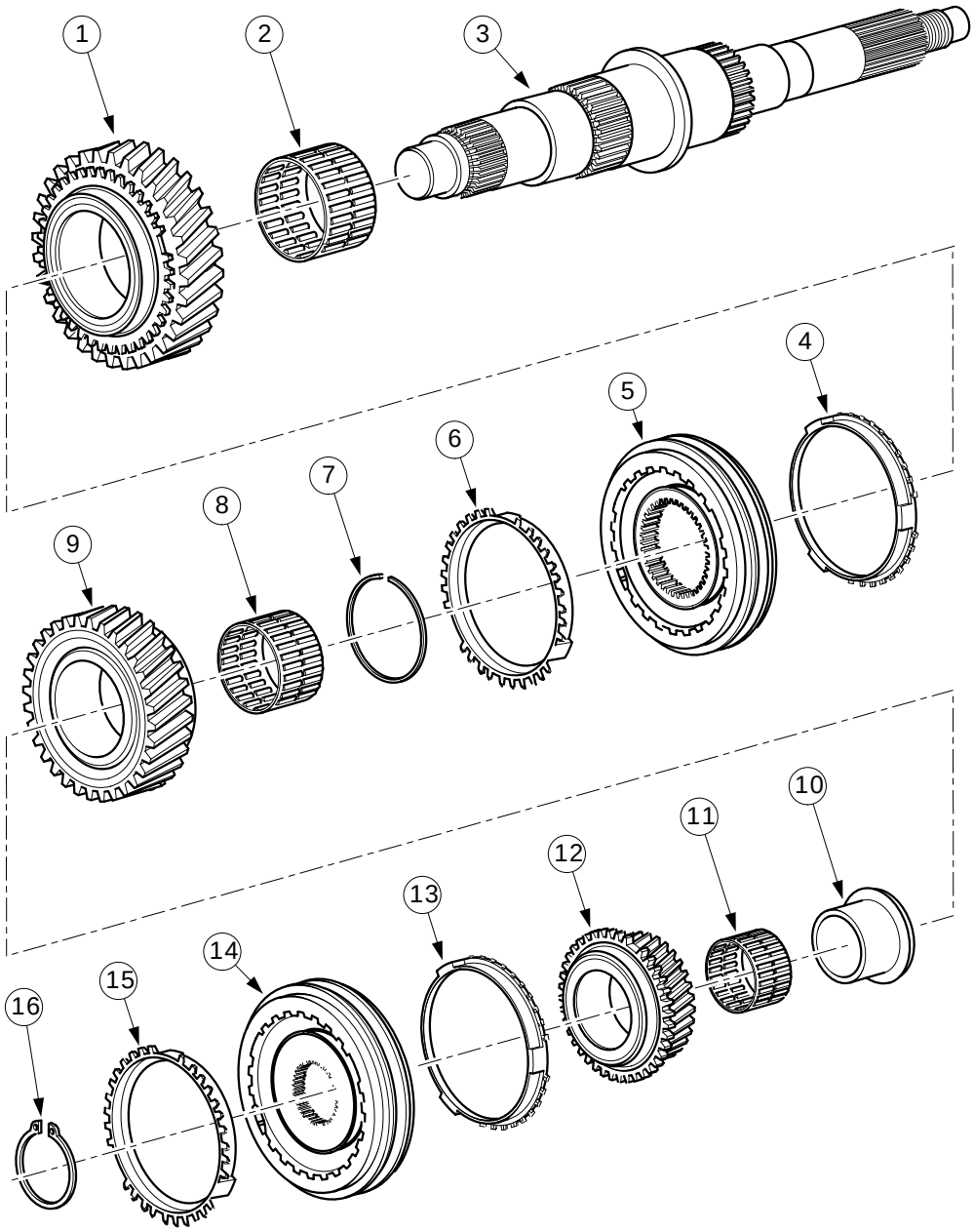

ELE0010447

Item	Part Number	Description
1		Output shaft
2		Needle roller bearing
3		Gear wheel first gear
4		Synchronizer ring first gear
5		Synchronizer clutch first/second gear
6		Synchronizer ring second gear

Item	Part Number	Description
7		Snap ring
8		Needle roller bearing
9		Gear wheel second gear
10		Inner race third gear needle roller bearing
11		Neeedle roller bearing
12		Gear wheel third gear

DESCRIPTION AND OPERATION

Item	Part Number	Description
13		Synchronizer ring third gear
14		Synchronizer clutch third/fourth gear

Item	Part Number	Description
15		Synchronizer ring fourth gear
16		Snap ring

Mainshaft (right - hand side shown)

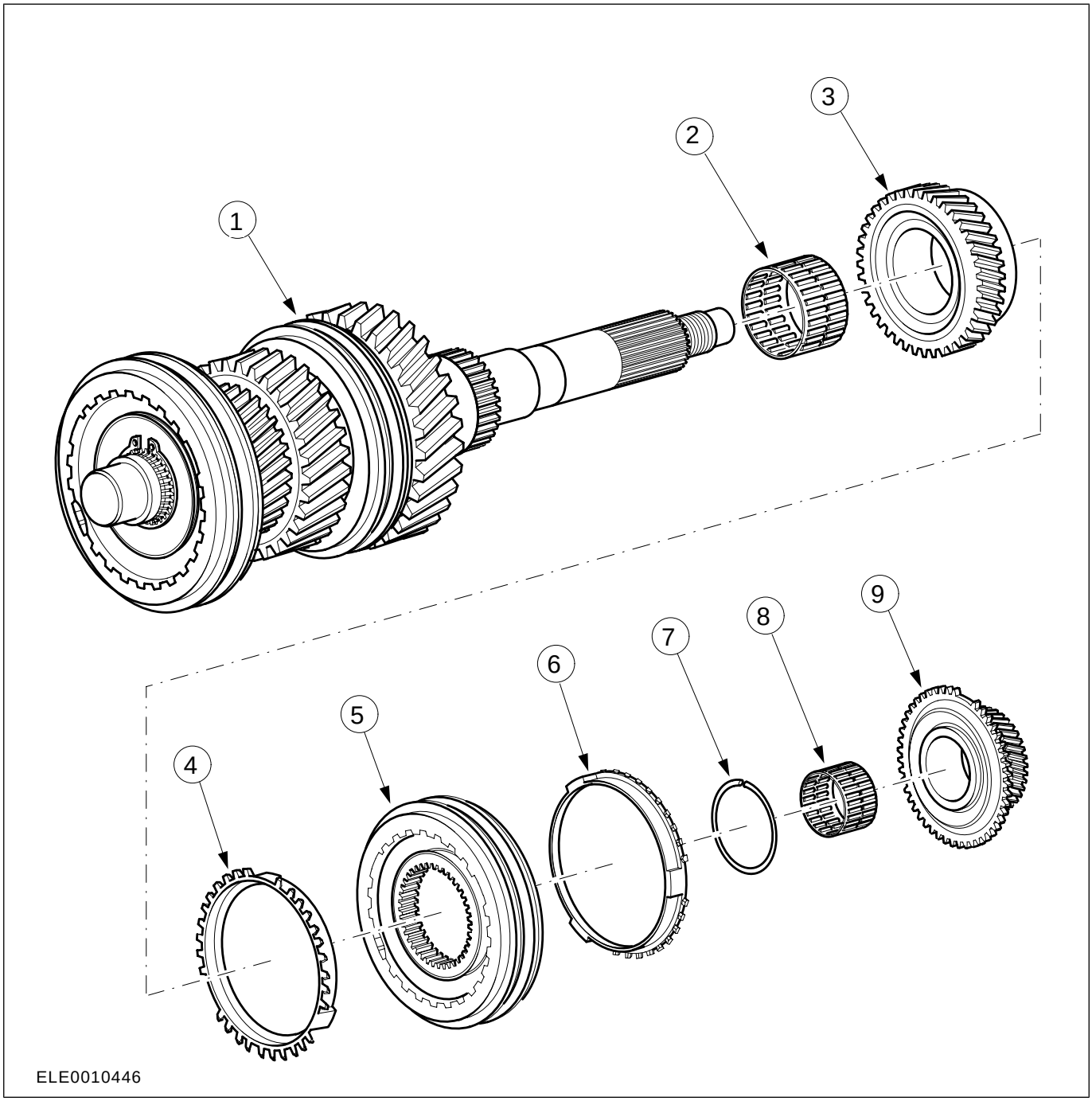

Item	Part Number	Description
1		Output shaft
2		Needle roller bearing

Item	Part Number	Description
3		Reverse gear wheel
4		Synchronizer ring reverse gear

DESCRIPTION AND OPERATION

Item	Part Number	Description
5		Synchronizer clutch fifth/reverse gear
6		Synchronizer ring fifth gear
7		Snap ring

Item	Part Number	Description
8		Needle roller bearing
9		Gear wheel fifth gear
10		Taper roller bearing

Countershaft

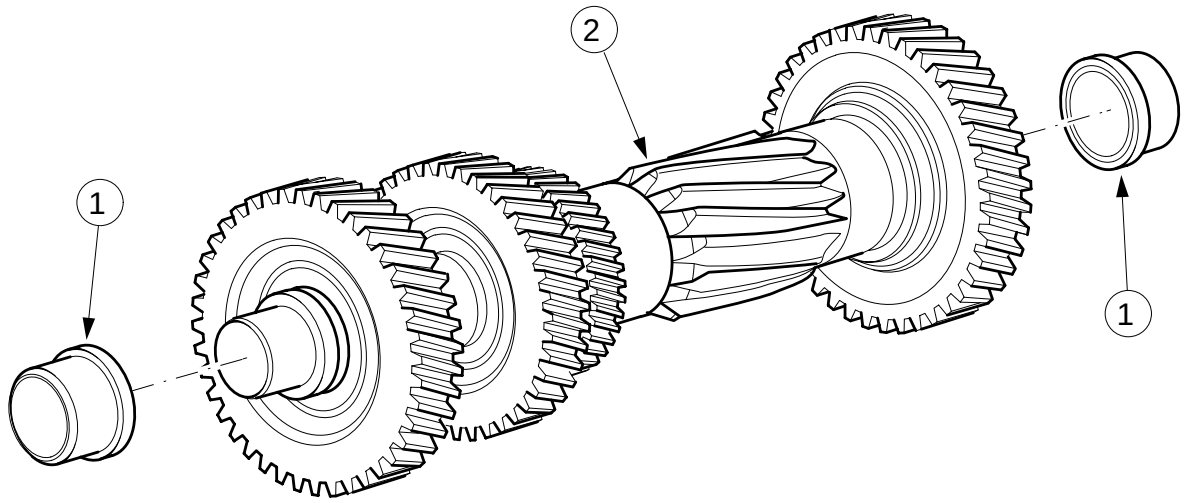

ELE0010448

Item	Part Number	Description
1		Inner race
2		Countershaft

DESCRIPTION AND OPERATION

Reverse gear idler

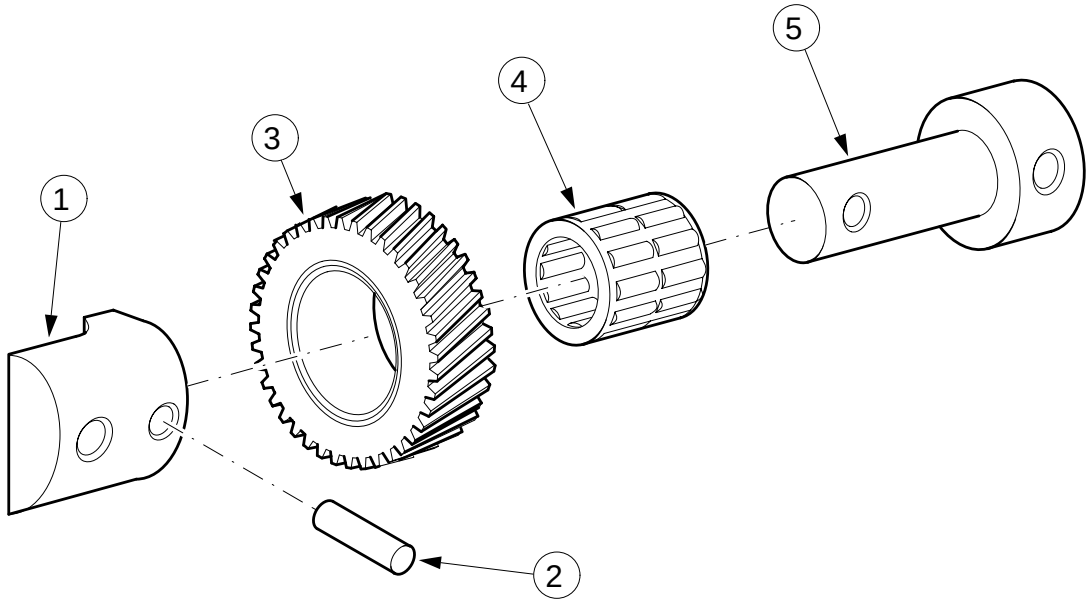

ELE0010449

Item	Part Number	Description
1		Reverse gear idler shaft mounting
2		Roll pin

Item	Part Number	Description
3		Reverse gear idler
4		Needle roller bearing
5		Reverse gear idler shaft

DESCRIPTION AND OPERATION

Power Flow

First gear

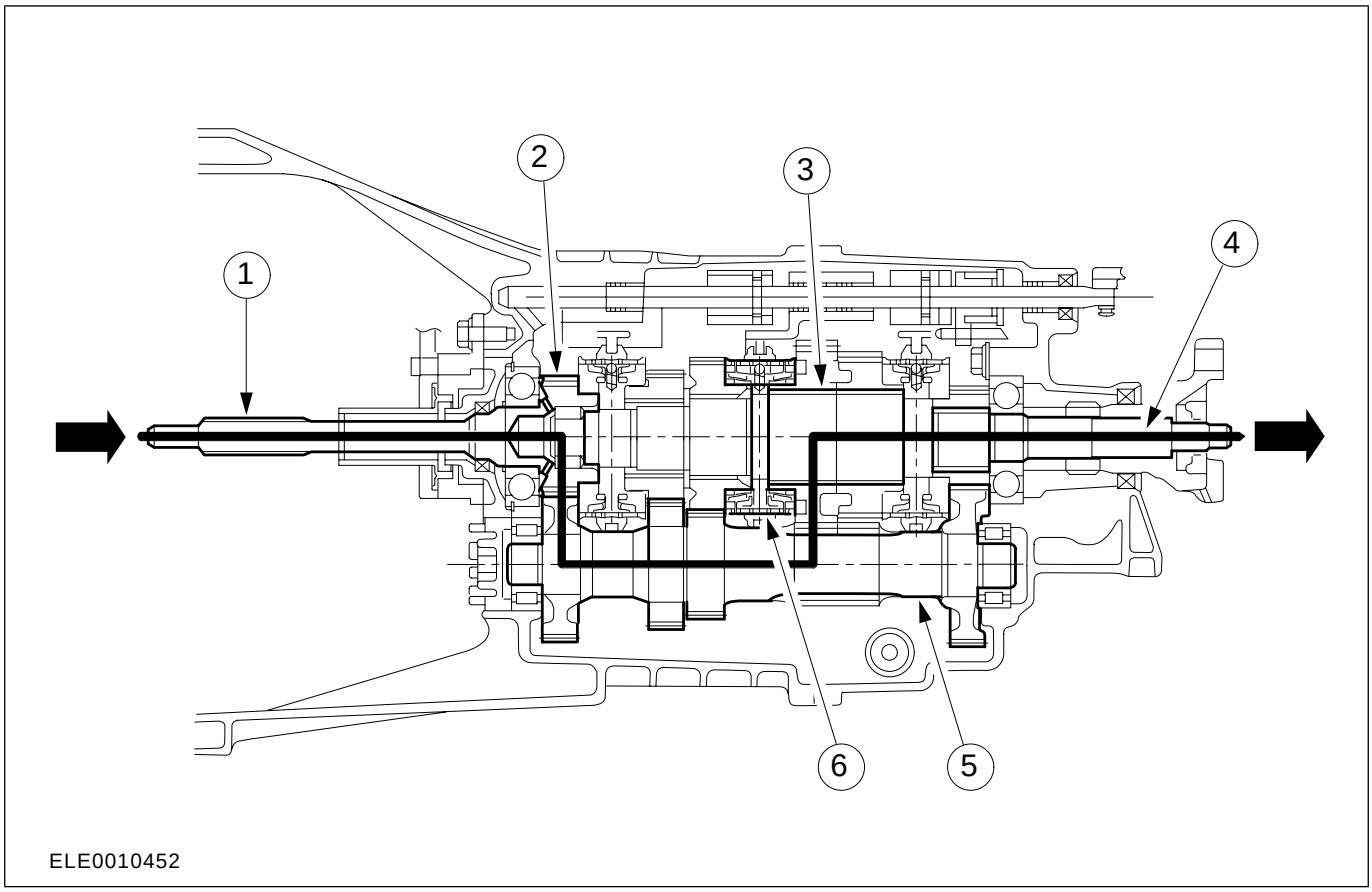

Item	Part Number	Description
1		Input shaft
2		Driving gear for countershaft
3		Gear wheel fist gear

Item	Part Number	Description
4		Output shaft
5		Counter shaft
6		Synchonizer clutch first/second gear

DESCRIPTION AND OPERATION

Second gear

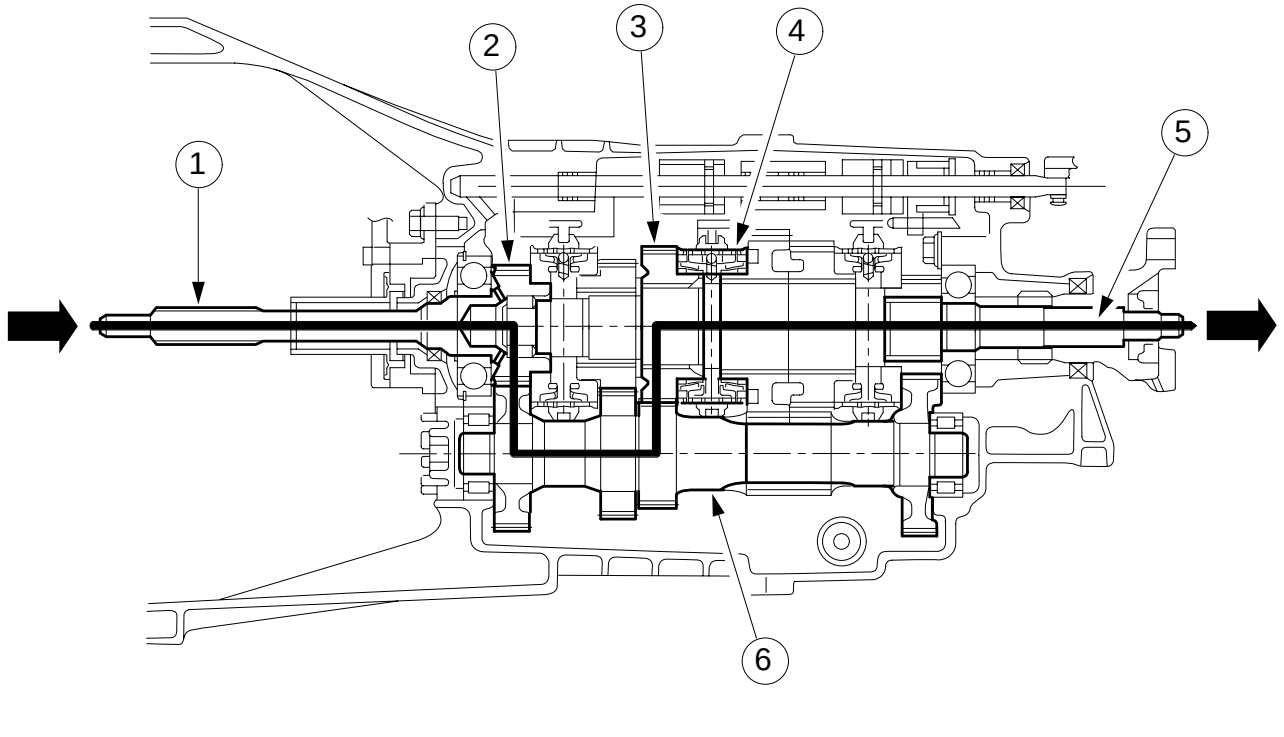

Item	Part Number	Description
1		Input shaft
2		Driving gear for countershaft
3		Gear wheel second gear

Item	Part Number	Description
4		Synchonizer clutch first/second gear
5		Output shaft
6		Counter shaft

DESCRIPTION AND OPERATION

Third gear

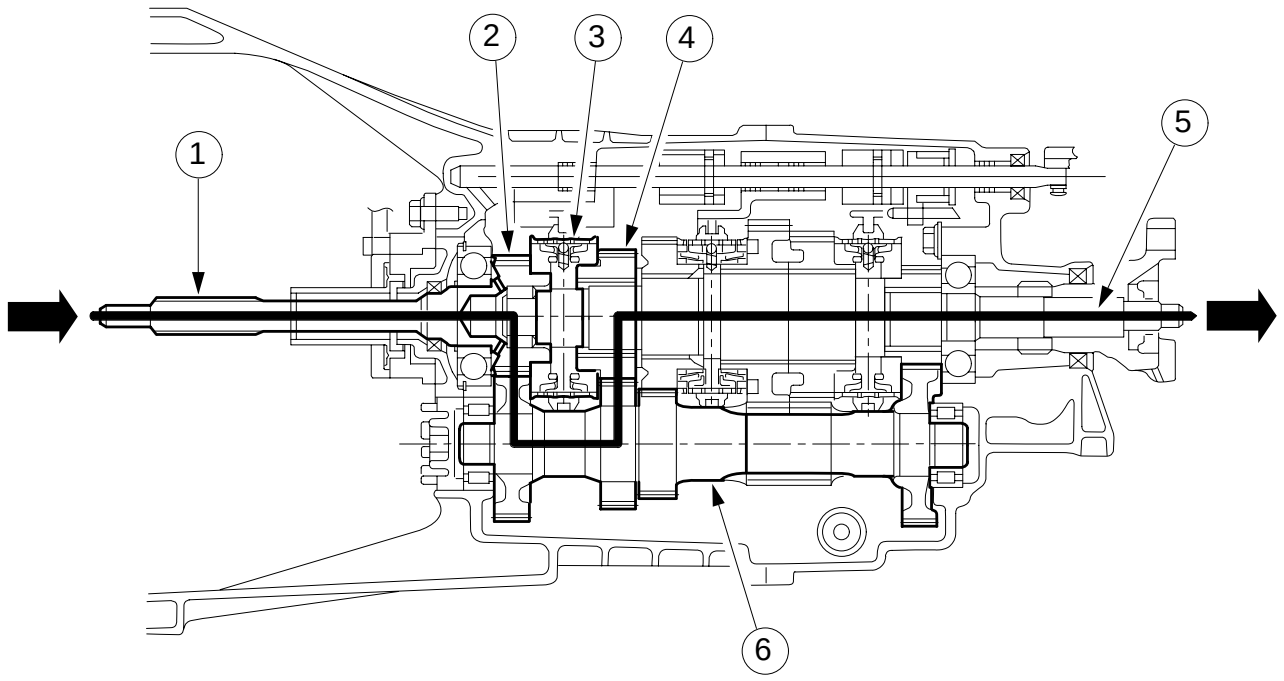

ELE0010454

Item	Part Number	Description
1		Input shaft
2		Driving gear for countershaft
3		Synchronizer clutch first/second gear

Item	Part Number	Description
4		Gear wheel second gear
5		Output shaft
6		Counter shaft

DESCRIPTION AND OPERATION

Fourth gear

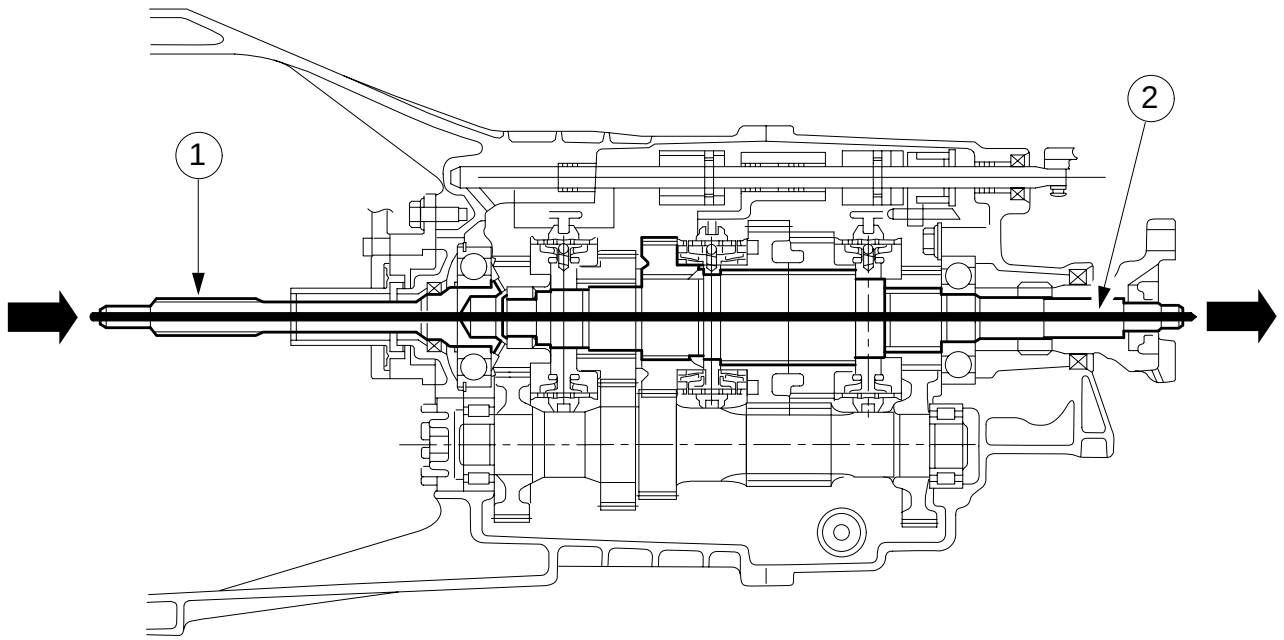

ELE0010455

Item	Part Number	Description
1		Input shaft
2		Output shaft

DESCRIPTION AND OPERATION

Fifth gear

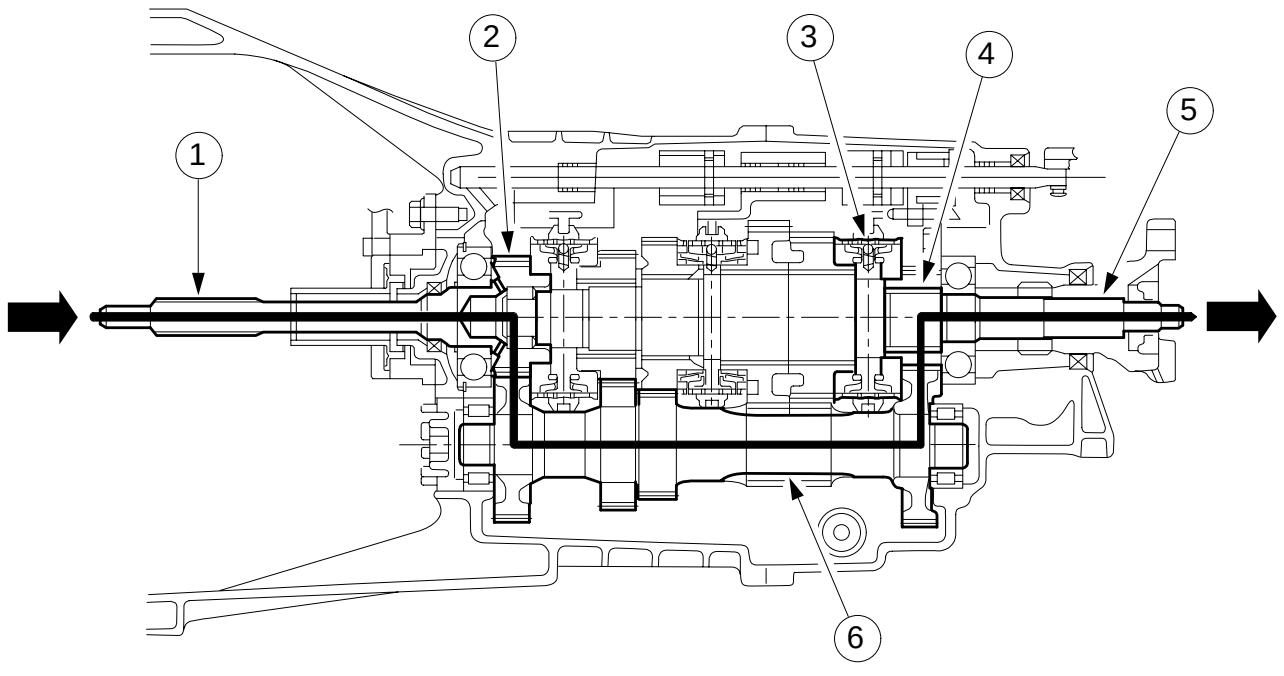

ELE0010456

Item	Part Number	Description
1		Input shaft
2		Driving gear for countershaft
3		Synchronizer clutch fifth/reverse gear

Item	Part Number	Description
4		Gerar wheel fifth gear
5		Output shaft
6		Counter shaft

DESCRIPTION AND OPERATION

Reverse gear

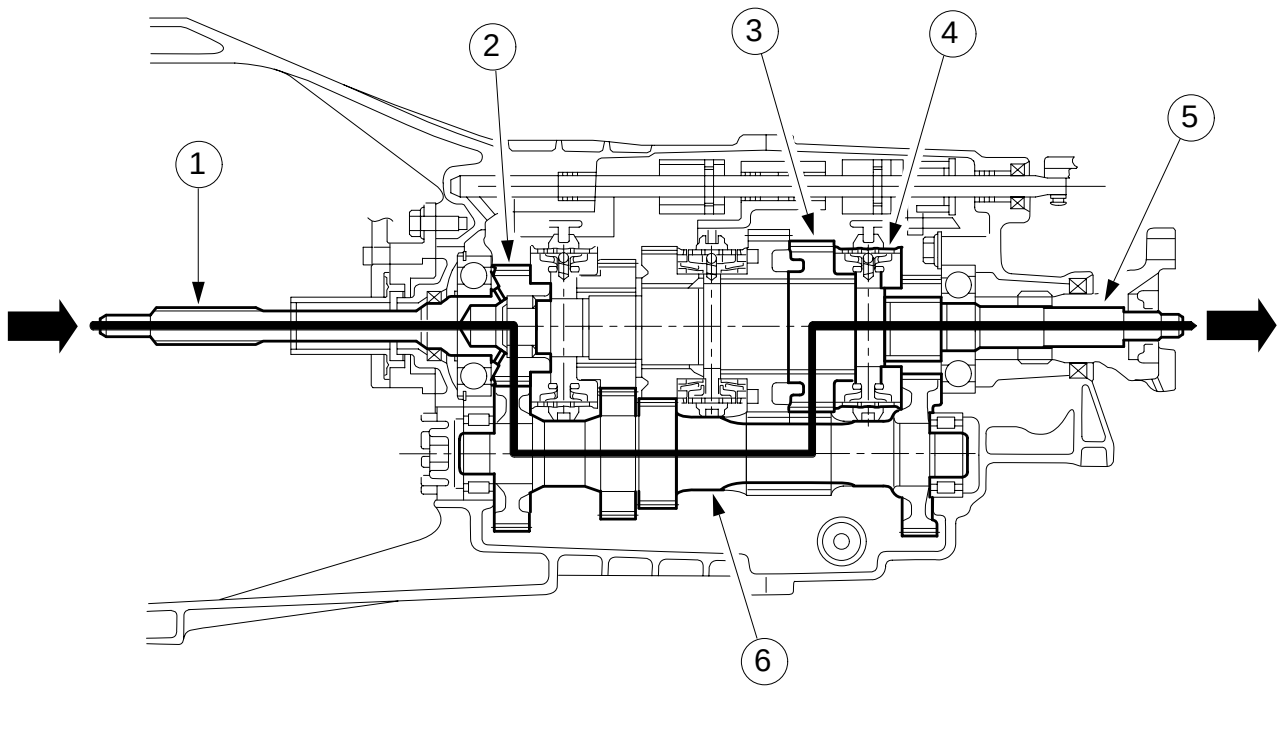

Item	Part Number	Description
1		Input shaft
2		Driving gear for countershaft
3		Gear wheel reverse gear
4		Synchronizer clutch fifth/reverse gear
5		Output shaft
6		Input shaft

GENERAL PROCEDURES

Transmission Draining and Filling

1. **Information not available at this time.**

REMOVAL

Transmission — 2WD

Removal

General Equipment

Transmission Jack

1. Refer to: Battery Disconnect and Connect (414-01 Battery, Mounting and Cables, General Procedures).

2. Refer to: Floor Console - Single Cab (501-12 Instrument Panel and Console, Removal and Installation).
   Refer to: Floor Console - Double Cab (501-12 Instrument Panel and Console, Removal and Installation).

3.

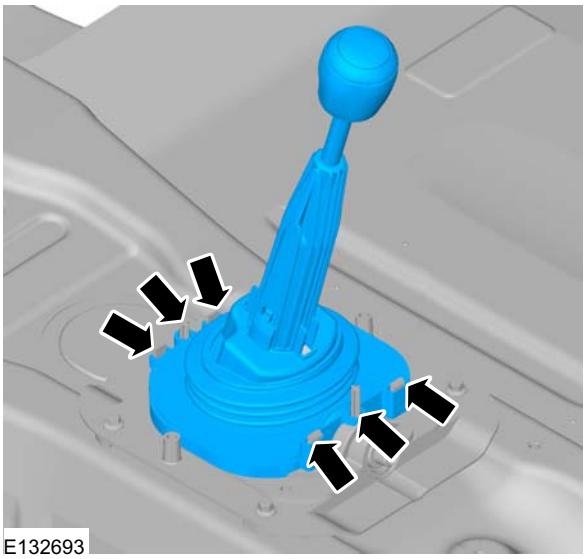
E132693

4. Refer to: Catalytic Converter (309-00 Exhaust System - 2.2L Duratorq-TDCi (88kW/120PS) - Puma/2.2L Duratorq-TDCi (96kW/130PS) - Puma/2.2L Duratorq-TDCi (110kW/150PS) - Puma/3.2L Duratorq-TDCi (148kW/200PS) - Puma, Removal and Installation).

5. Refer to: Jacking (100-02 Jacking and Lifting, Description and Operation).
   Refer to: Lifting (100-02 Jacking and Lifting, Description and Operation).

6. Refer to: Driveshaft - 2WD (205-01 Driveshaft, Removal and Installation).

7.

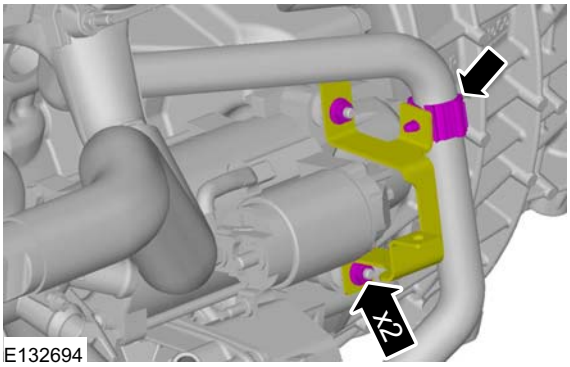

E132694

8.

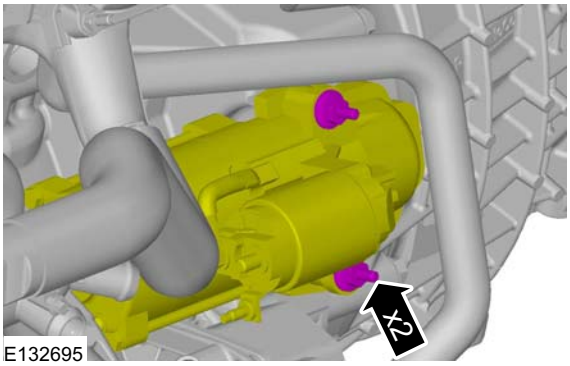

E132695

REMOVAL

9. **NOTE:** Cap the fluid line

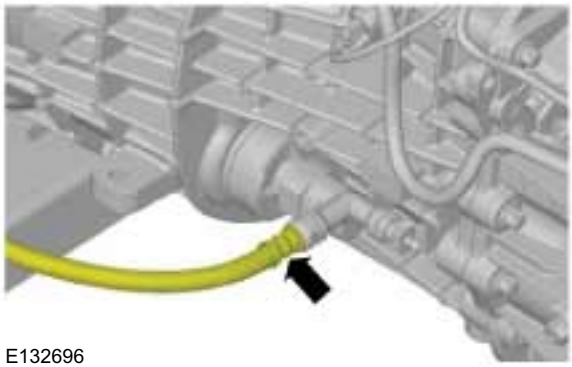
E132696

Vehicles with 2.5L engine

10.

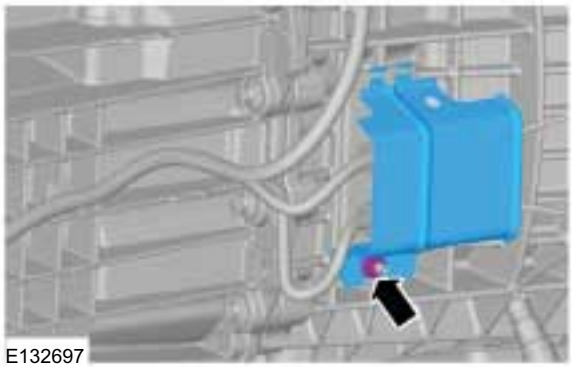
E132697

11.

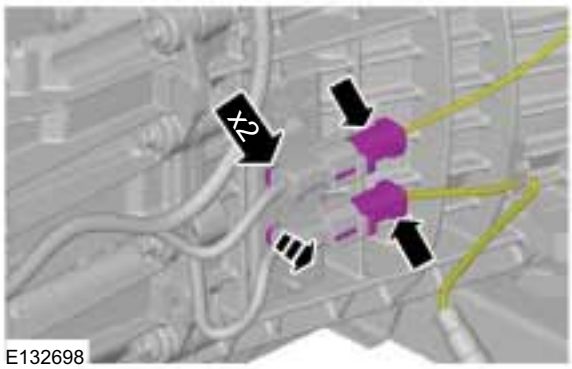

E132698

12.

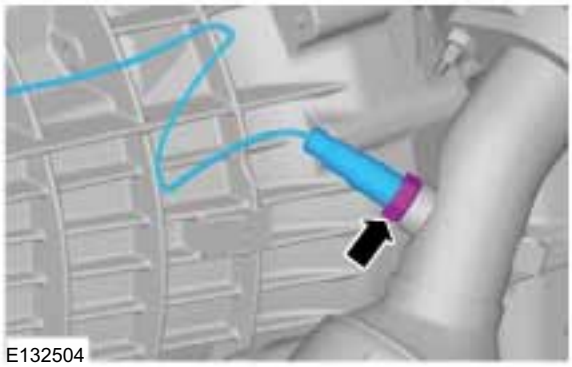
E132504

All vehicles

13.

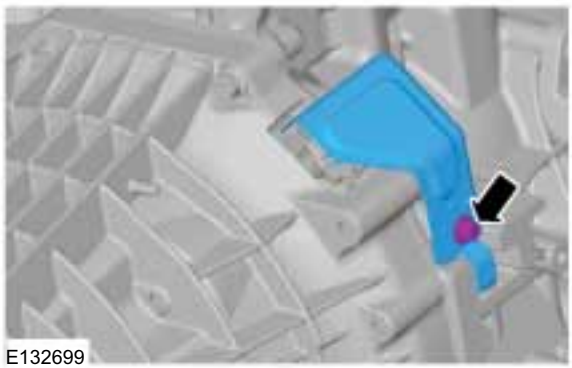
E132699

14.

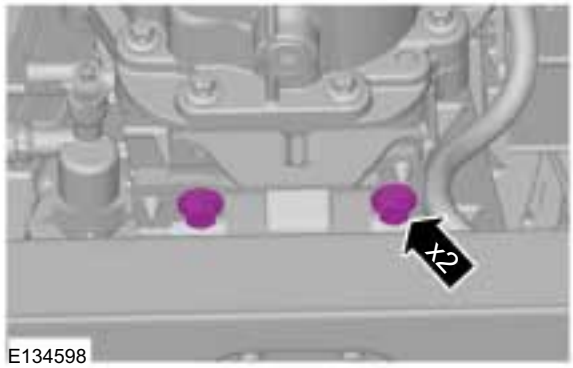

E134598

REMOVAL

15. General Equipment: Transmission Jack

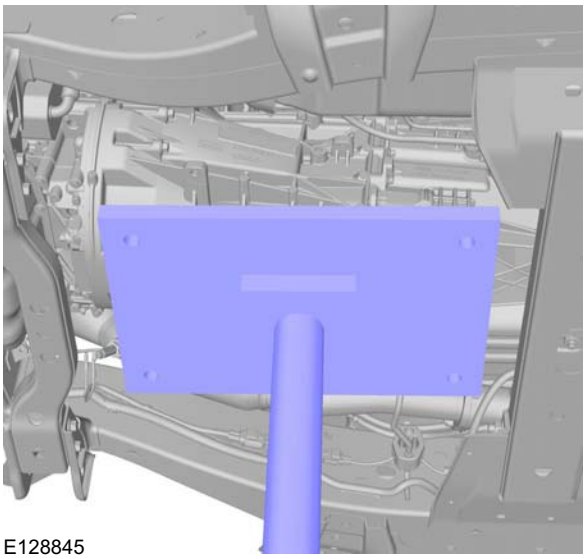

16.

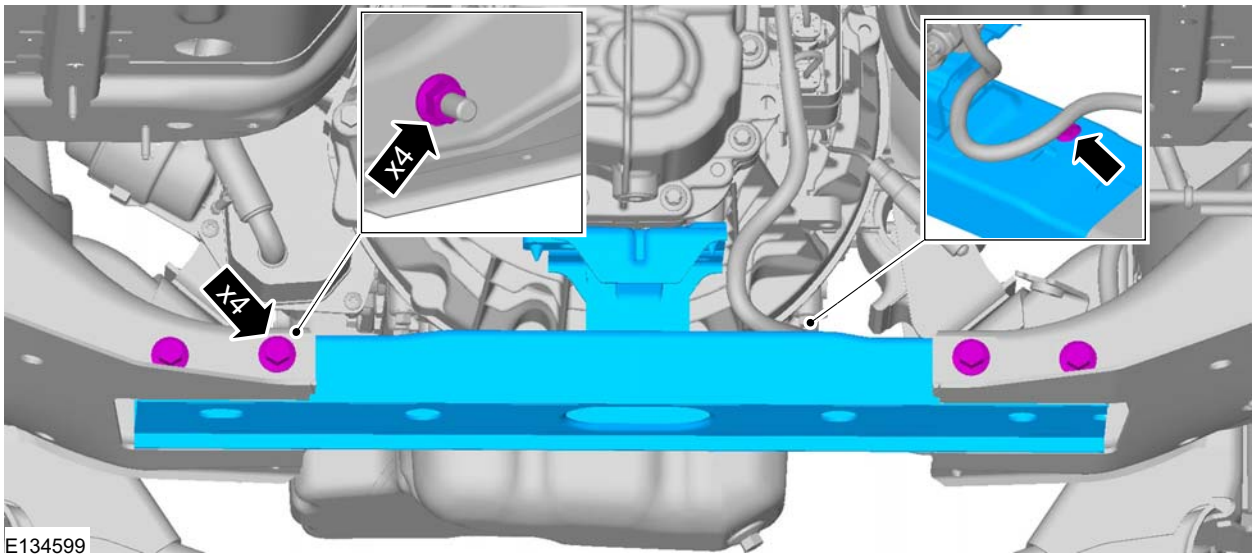

REMOVAL

17.

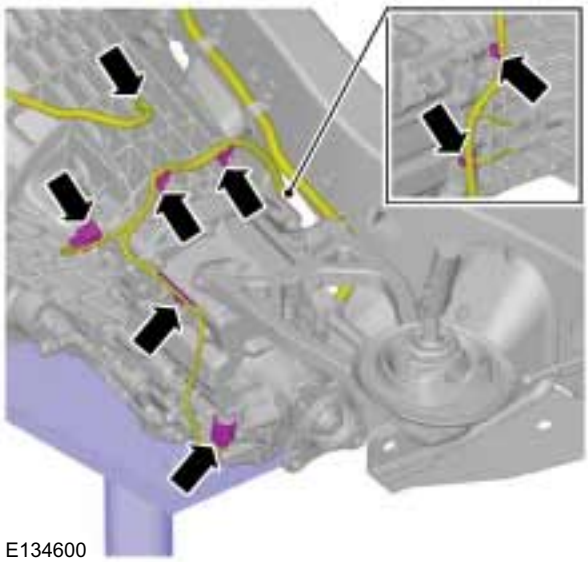

19.

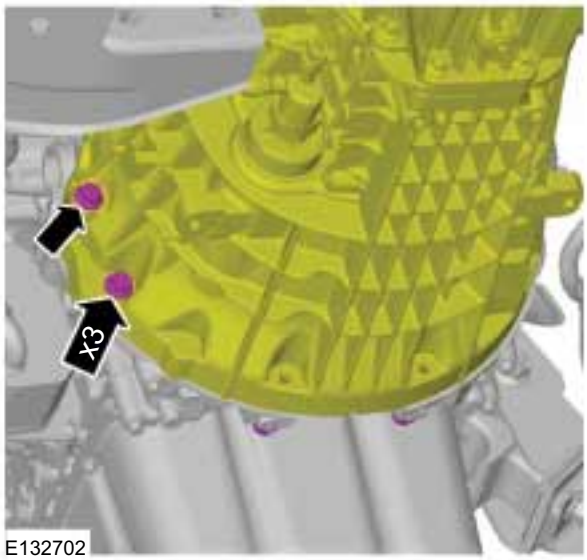

18.

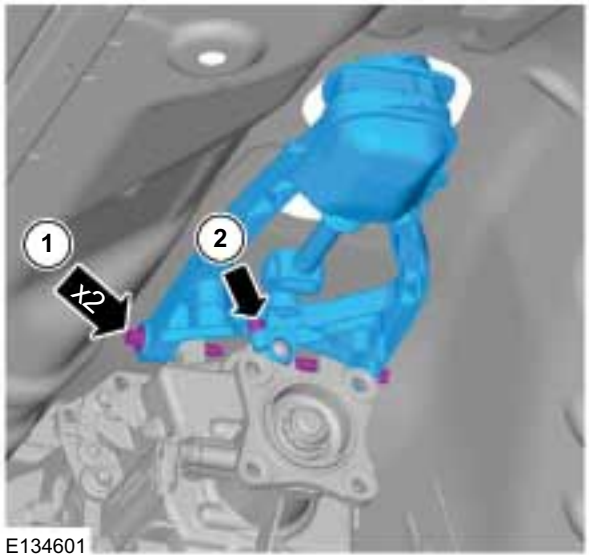

20.

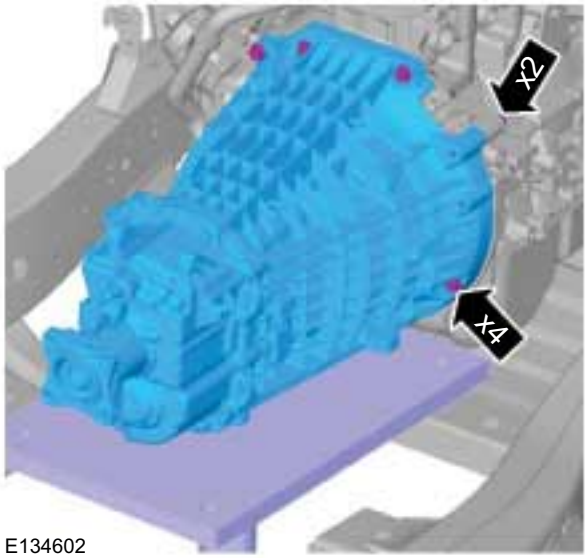

REMOVAL

Transmission — 4WD

Removal

General Equipment

Transmission Jack

1. Refer to: Battery Disconnect and Connect (414-01 Battery, Mounting and Cables, General Procedures).

2. Refer to: Floor Console - Single Cab (501-12 Instrument Panel and Console, Removal and Installation).
   Refer to: Floor Console - Double Cab (501-12 Instrument Panel and Console, Removal and Installation).

3.

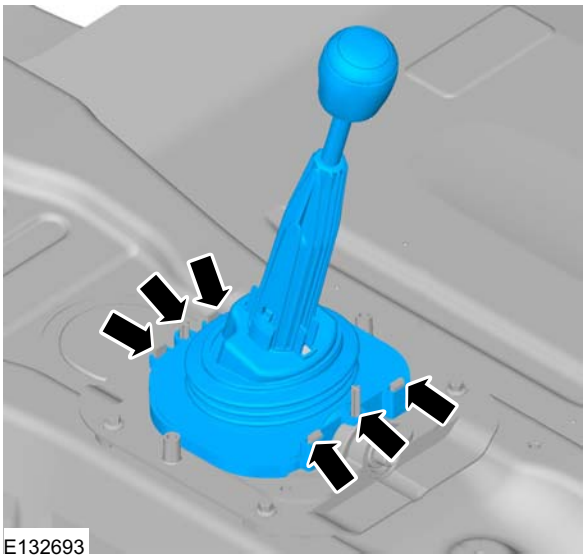
E132693

4. Refer to: Catalytic Converter (309-00 Exhaust System - 2.2L Duratorq-TDCi (88kW/120PS) - Puma/2.2L Duratorq-TDCi (96kW/130PS) - Puma/2.2L Duratorq-TDCi (110kW/150PS) - Puma/3.2L Duratorq-TDCi (148kW/200PS) - Puma, Removal and Installation).

5. Refer to: Jacking (100-02 Jacking and Lifting, Description and Operation).
   Refer to: Lifting (100-02 Jacking and Lifting, Description and Operation).

6. Refer to: Driveshaft - 4WD (205-01 Driveshaft, Removal and Installation).
   Refer to: Front Driveshaft - 4WD (205-01 Driveshaft, Removal and Installation).

7.

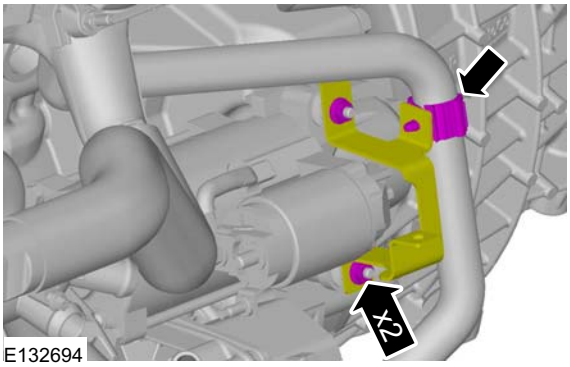

E132694

8.

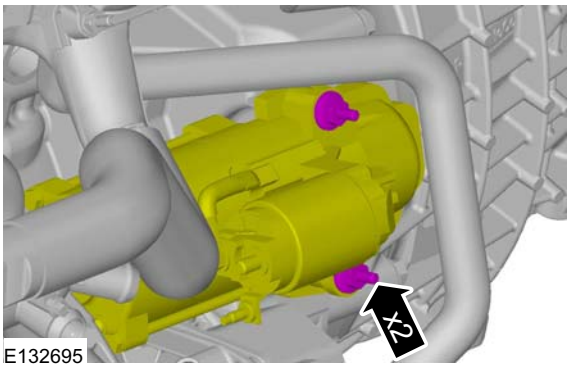

E132695

REMOVAL

9. **NOTE:** Cap the fluid line

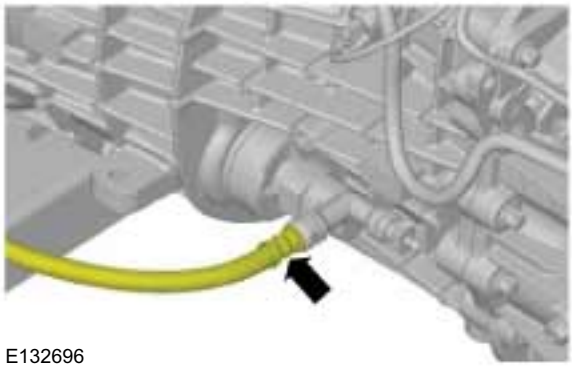
E132696

Vehicles with 2.5L engine

10.

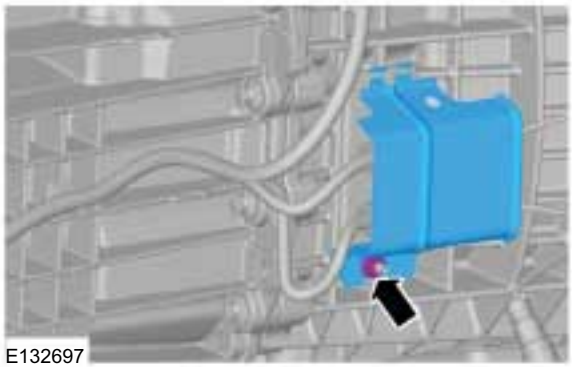
E132697

11.

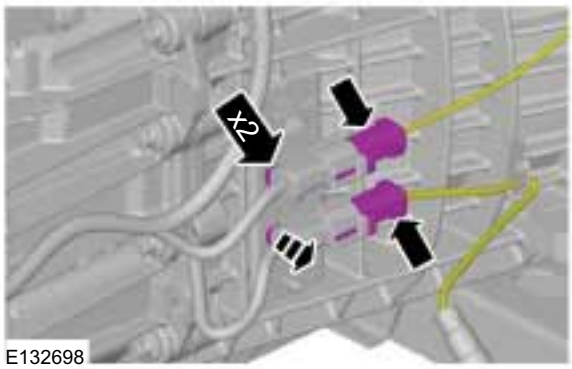

E132698

12.

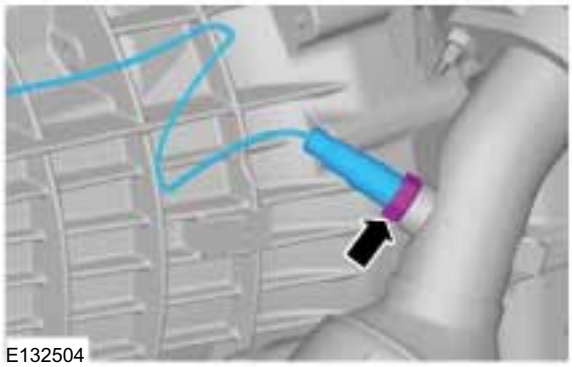
E132504

All vehicles

13.

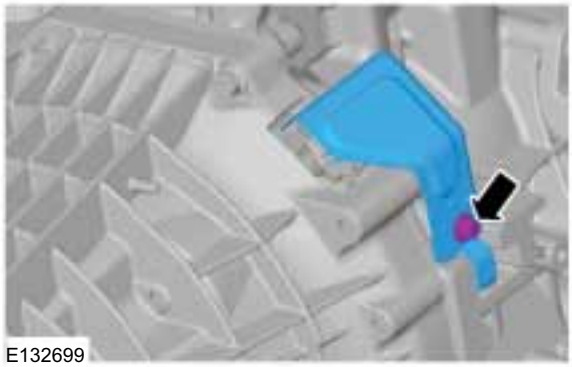
E132699

14.

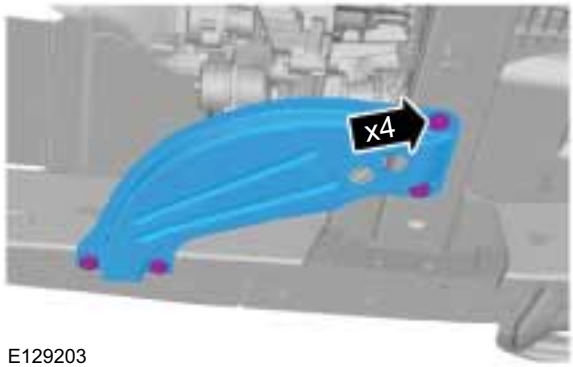

E129203

REMOVAL

15.

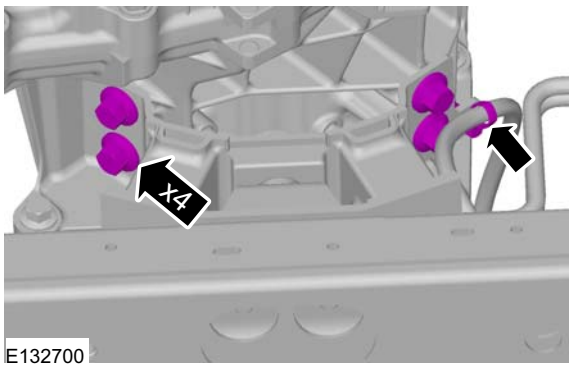

E132700

16. General Equipment: Transmission Jack

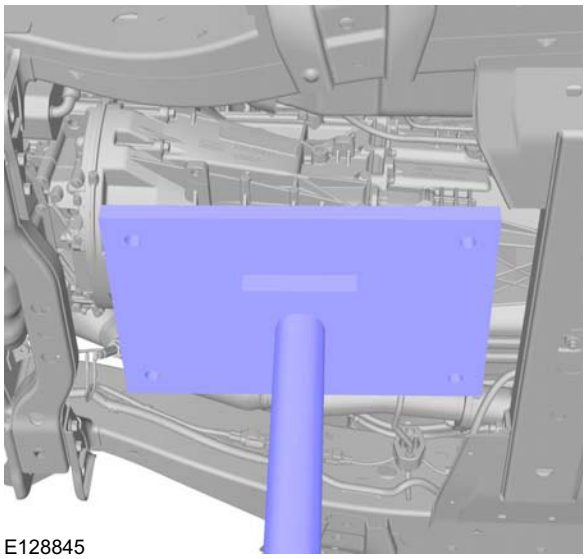
E128845

17.

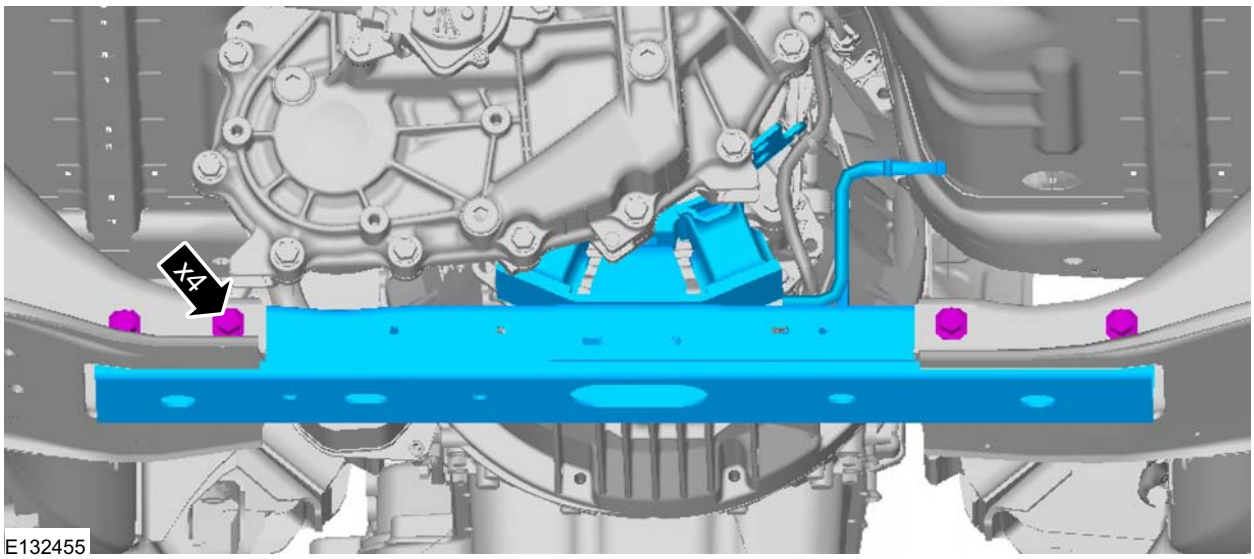

E132455

REMOVAL

18.

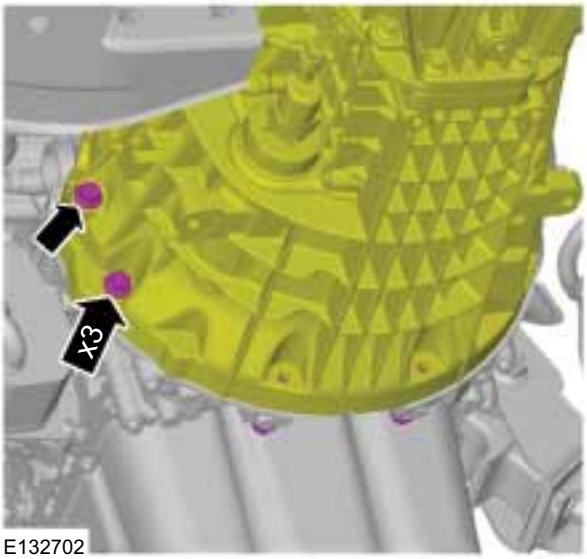

E132702

20.

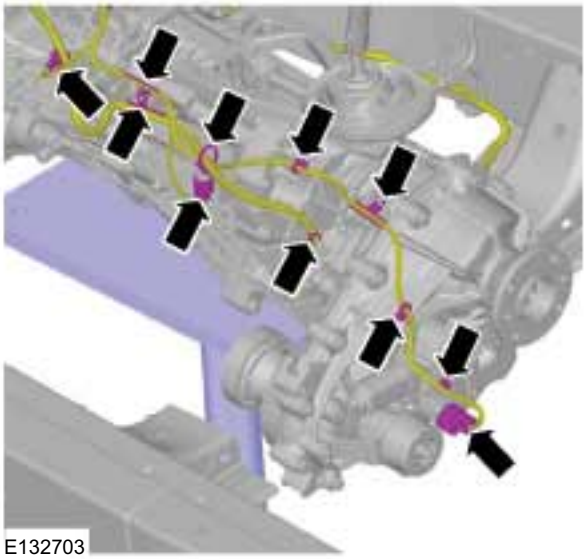
E132703

19.

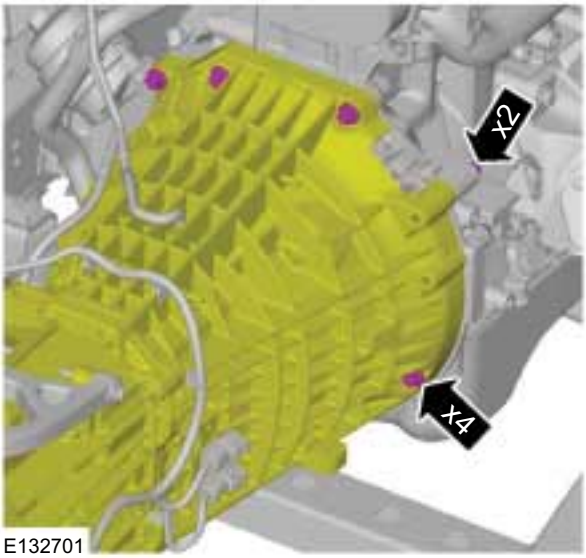

E132701

21.

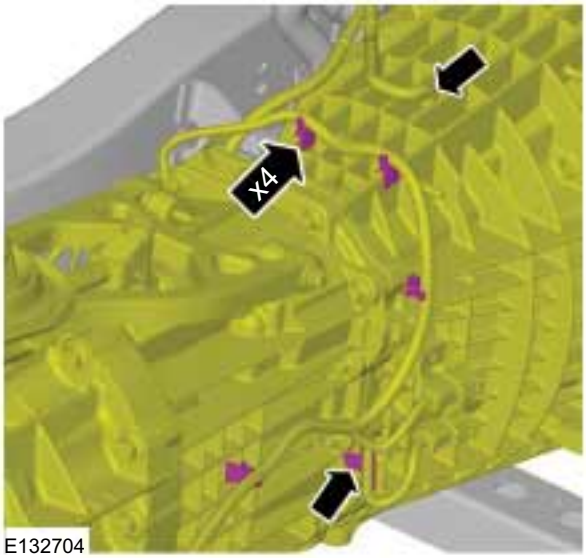

E132704

REMOVAL

22.

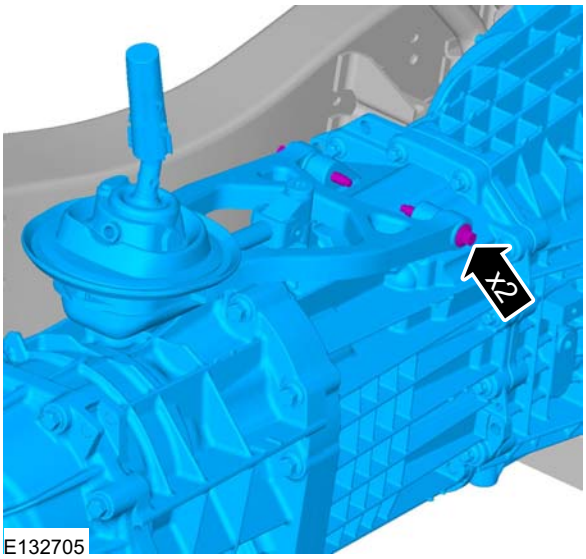

DISASSEMBLY

Transmission

Special Tool(s)

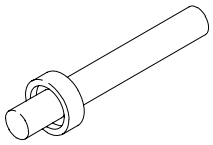 15025A	Installer, Differential Bearing 205-062 (15-025A)
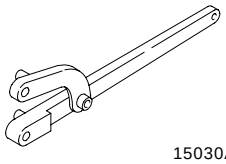 15030A	Flange Holding Wrench, Universal 205-072 (15-030A)
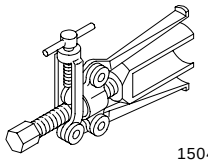 15048	Remover, Drive Pinion Oil Seal 205-078 (15-048)
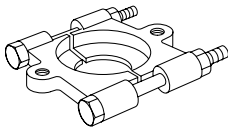 T115091	Remover, Bearing/Gear 205-310 (15-091)
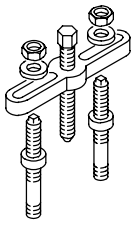 15092	Remover, Bearing/Gear 205-311 (15-092)
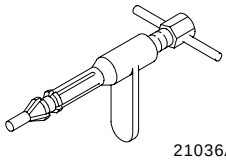 21036A	Remover, Crankshaft Pilot Bearing 303-078 (21-036A)

Special Tool(s)

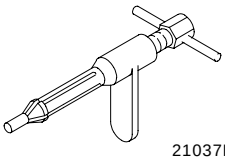 21037B	Remover, Crankshaft Pilot Bearing 303-079 (21-037B)
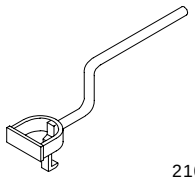 21051	Remover, Oil Seal 303-112 (21-051)
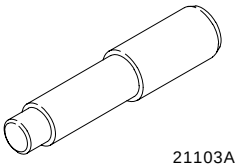 21103A	Aligner, Clutch Plate 303-173 (21-103A)
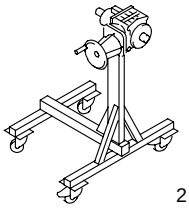 21187	Mounting Stand 303-435 (21-187)
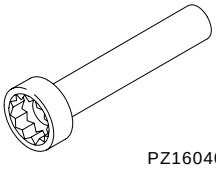 PZ16040A	Socket, Guide Sleeve 308-109 (16-040A)
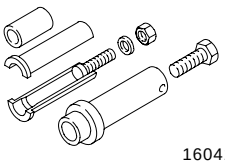 16041	Remover/Installer, Front Housing 308-110 (16-041)

DISASSEMBLY

Special Tool(s)

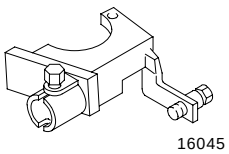 16045	Mounting Bracket for 303-435 308-114 (16-045)
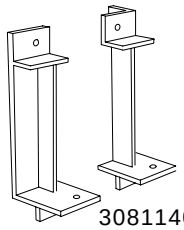 30811401	Mounting Brackets for 308-114 308-114-01 (16-045-01)
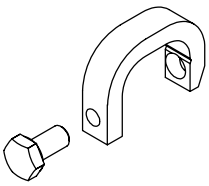 E77040	Remover, Slider 308-652

Disassembly

All vehicles

NOTE: All the bearings are paired and must not be mixed.

1. Remove the external gearshift control cover.

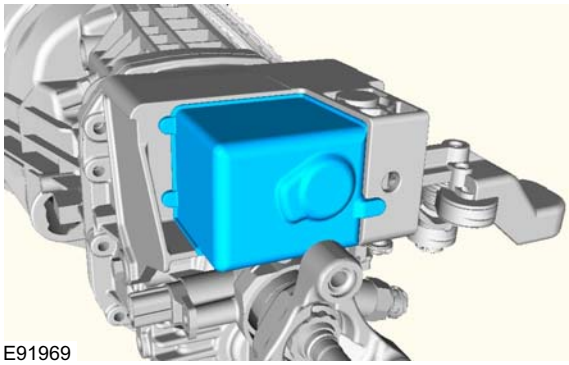
E91969

2. Detach the external gearshift control assembly.

1. Remove the nut.
2. Remove the bolts.

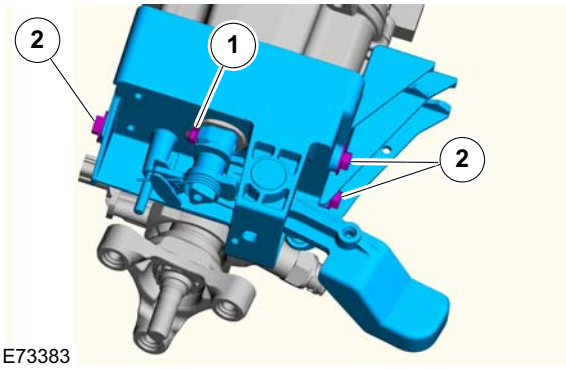

E73383

3. Using the special tool, detach the shifter shaft connector.

- Remove the external gearshift control assembly.

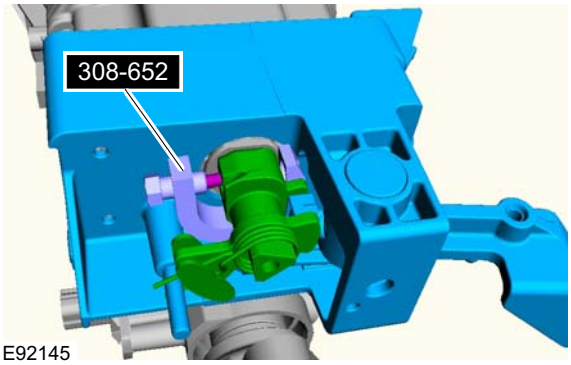

E92145

Vehicles with tachograph

4. Remove the tachograph sensor.

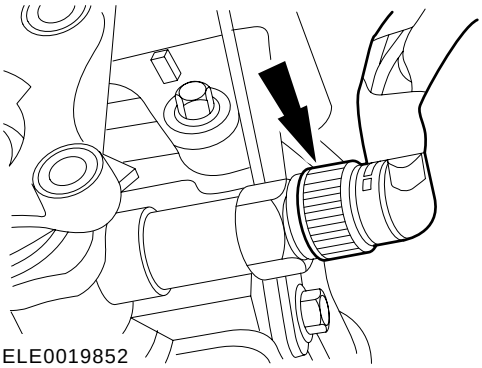
ELE0019852

All vehicles

5. Drain the transmission.

- Remove the drain plug.

DISASSEMBLY

- Allow the oil to drain into a suitable container.

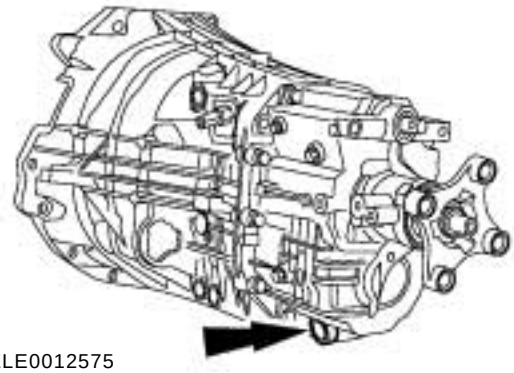
ELE0012575

6. **Remove the vehicle speed sensor (VSS).**

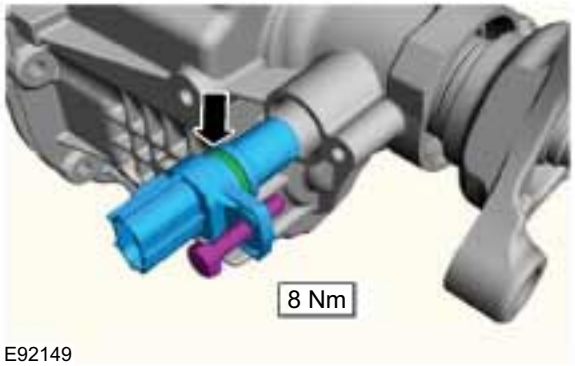

E92149

7. **Mount the transmission on the mounting stand.**
   - Remove the transmission housing retaining bolt.

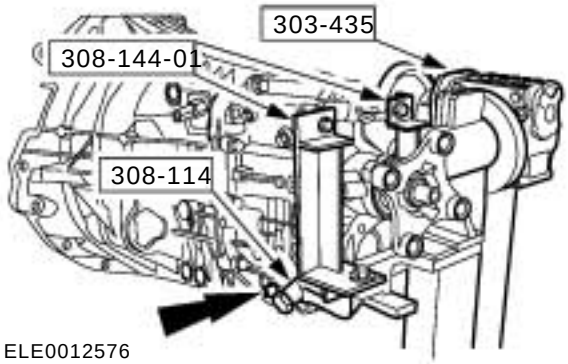

ELE0012576

8. **Remove the clutch release bearing and the clutch release lever.**

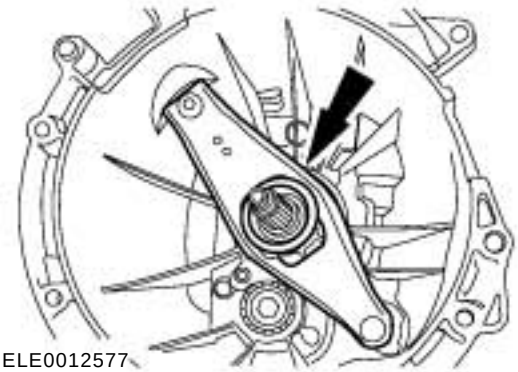
ELE0012577

9. **Using the special tool, remove the output shaft flange retaining nut.**
   - Discard the nut.

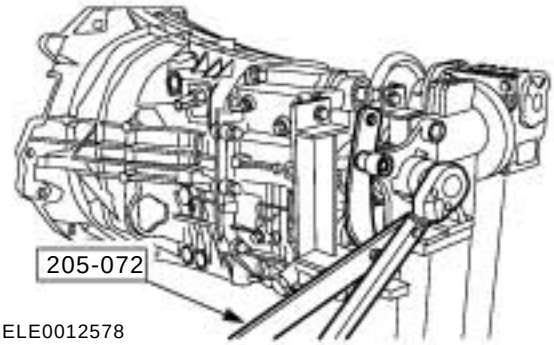

ELE0012578

10. **Using the special tools, remove the output shaft flange.**
    - Remove the splash shield.

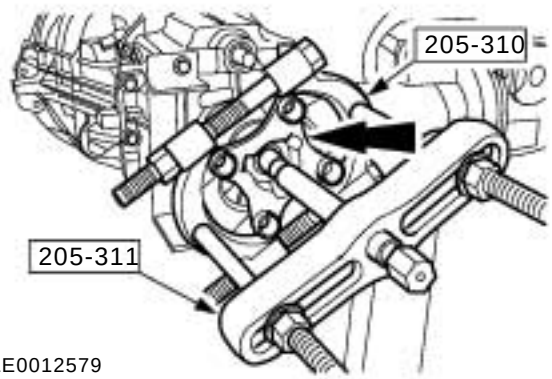

ELE0012579

DISASSEMBLY

11. Using the special tool, remove the output shaft oil seal.

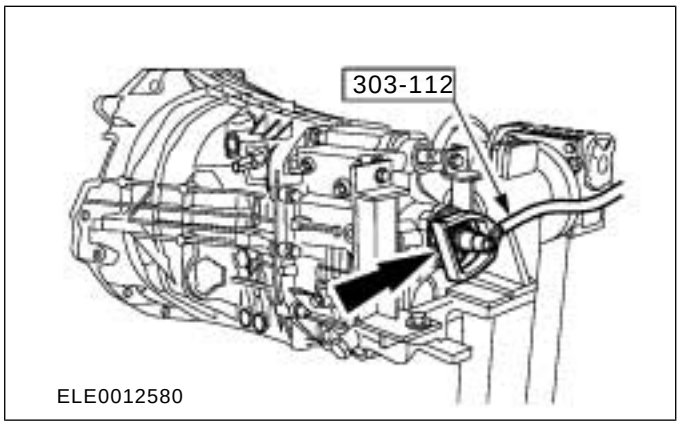

12. Remove the VSS ring.

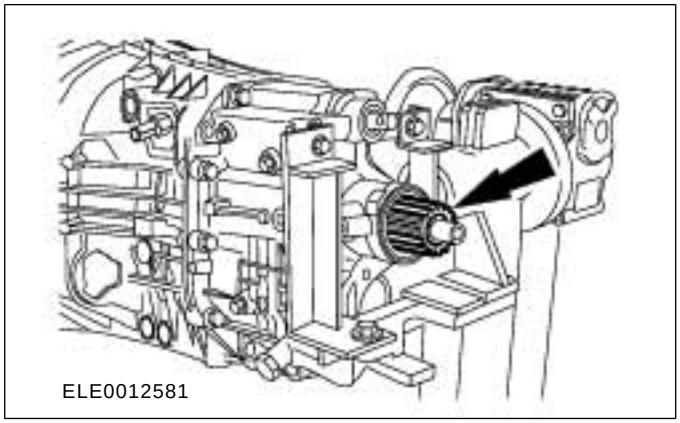

13. Using the special tool, remove the input shaft guide sleeve.

1. Remove the bearing retainer locking plate.
2. Install the special tool and remove the guide sleeve.

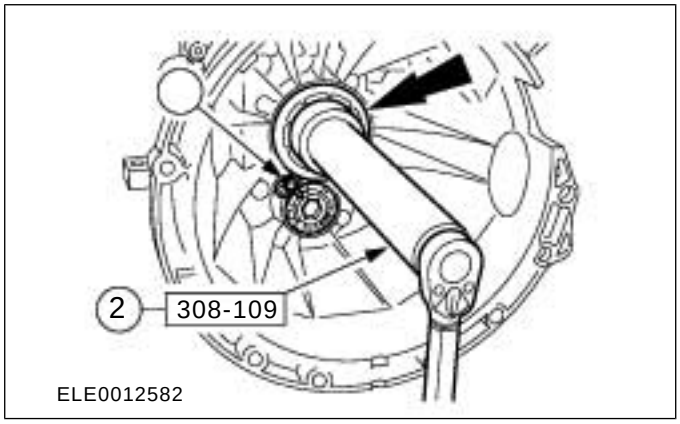

14. Disassemble the input shaft guide sleeve.

1. Remove the oil seal.
2. Remove the thrust washer.
3. Remove the O-ring seal.

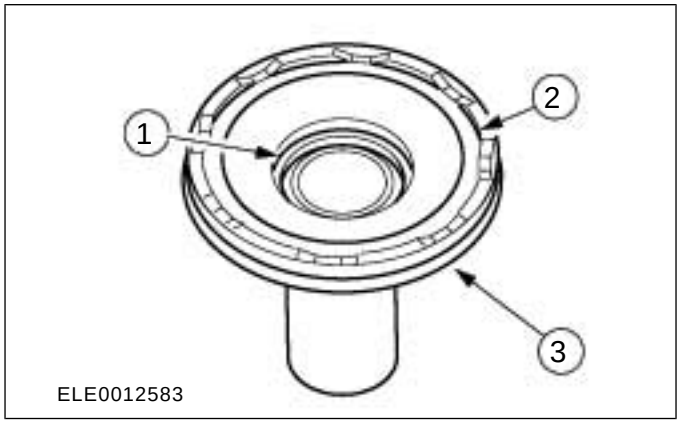

15. Remove the countershaft bearing.

1. Remove the bearing retainer.
2. Remove the circlip.

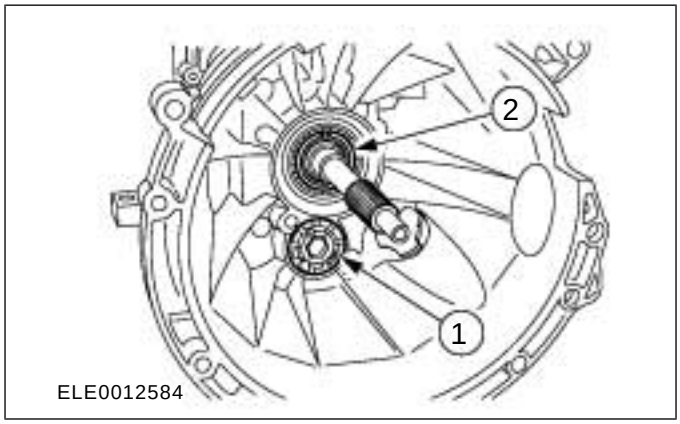

16. Remove the selector interlock mechanism.

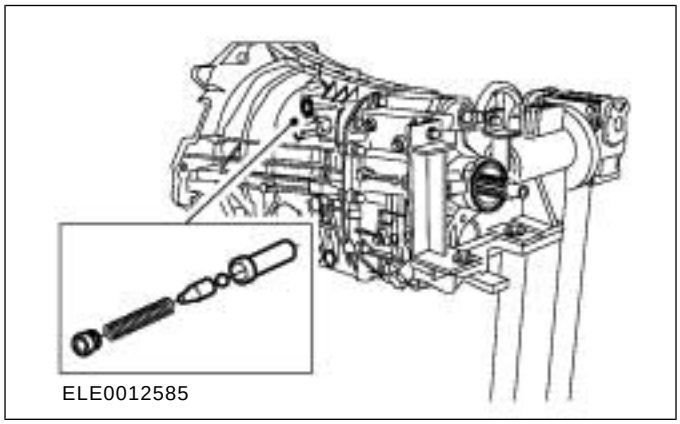

DISASSEMBLY

17. **Remove the selector shaft locking plate bolt.**

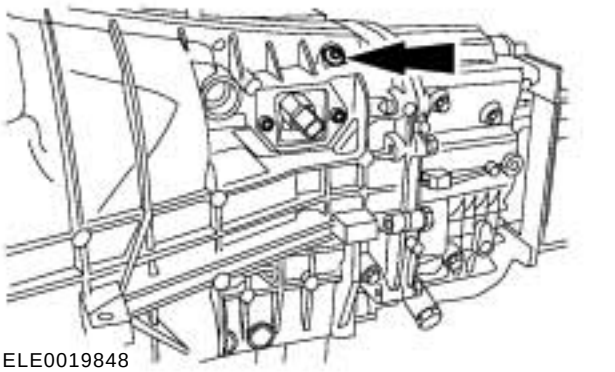
ELE0019848

18. **Loosen and remove the reverse gear idler shaft retaining bolts.**
    1. Loosen the retaining bolt.
    2. Remove the retaining bolt.

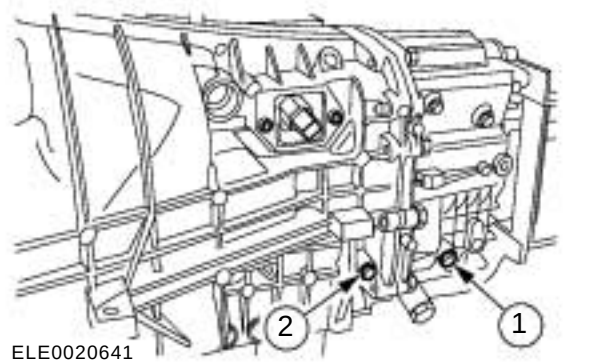

ELE0020641

19. **Remove the reversing lamp switch.**

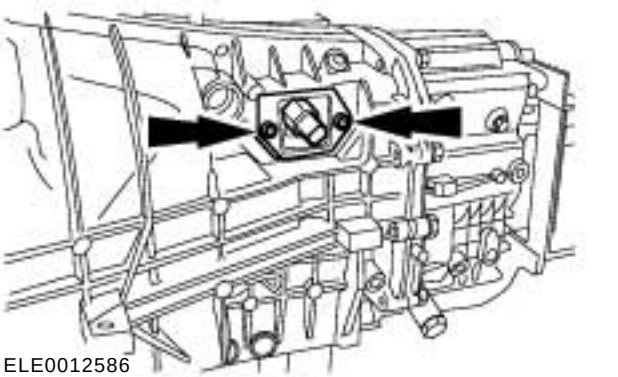
ELE0012586

20. **Remove the transmission housing retaining bolts (nine bolts).**

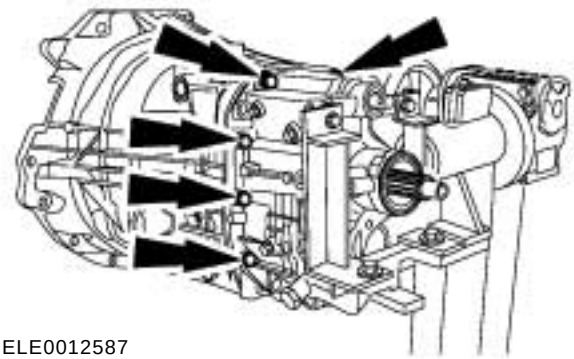
ELE0012587

21. **CAUTIONS:**

    ⚠ **Do not remove the housing locating dowels.**

    ⚠ **Only apply leverage to the reinforcement ribs.**

    Using a suitable lever, separate the two halves of the transmission housing.

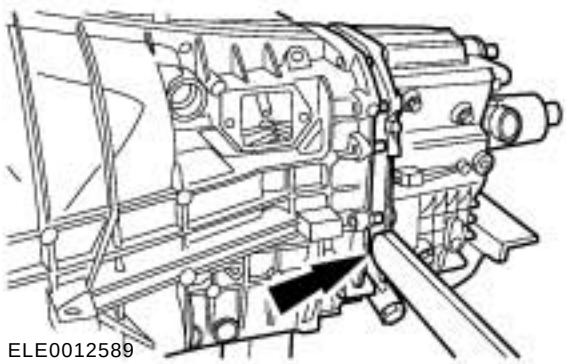
ELE0012589

22. ⚠ **CAUTION: Do not apply excessive pressure to the input shaft. This may cause damage to the fourth gear synchronizer ring.**

NOTE: Hold the special tool with a drift.

DISASSEMBLY

Using the special tool, remove the transmission front housing.

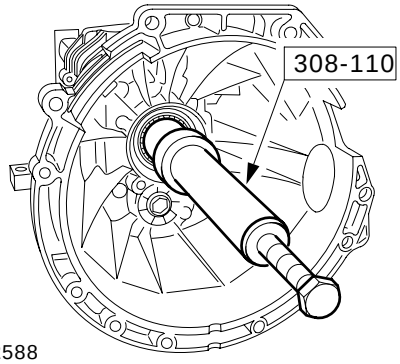

ELE0012588

23. Remove the third and fourth gear selector fork.

1. Remove the auxiliary selector shaft.
2. Remove the selector fork.

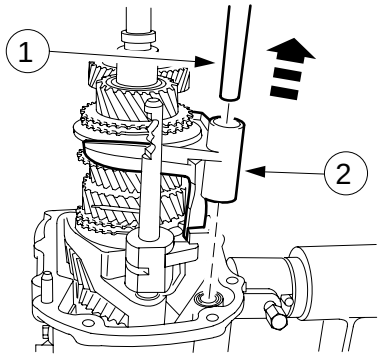

D1601161

24. Remove the reverse gear idler shaft rear retaining bolt.

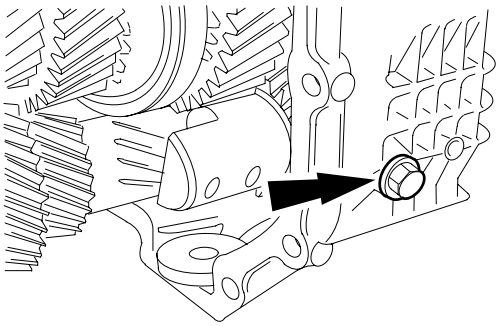

ELE0019846

25. Remove the magnetic disc.

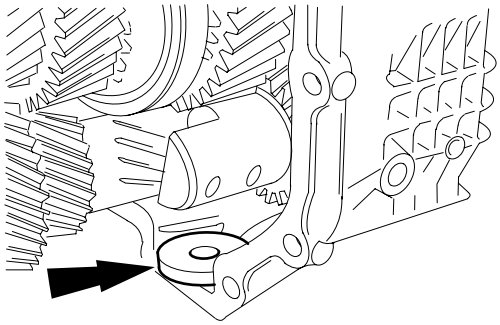

ELE0019847

26. Remove the transmission from the mounting stand.

27. CAUTIONS:

⚠ Move the main selector shaft to the NEUTRAL position. Failure to follow this instruction may result in damage to the shift finger.

⚠ Make sure that no component falls off during removal.

Using a hydraulic press and press out the output shaft. Avoid the output shaft, input

DISASSEMBLY

shaft, reverse gear and selector mechanism from falling down.

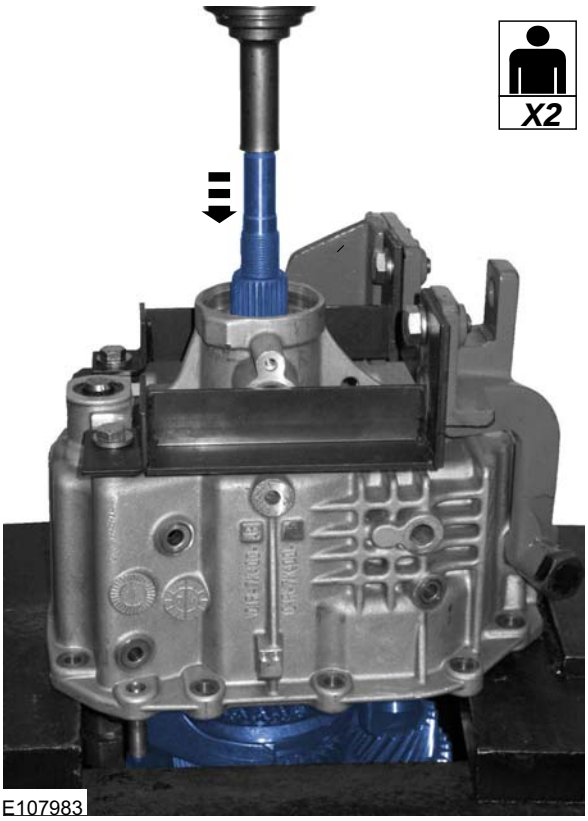

E107983

28. Mount the transmission on the mounting stand.

29. Remove the mainshaft and countershaft assembly, the main selector shaft and the selector fork.

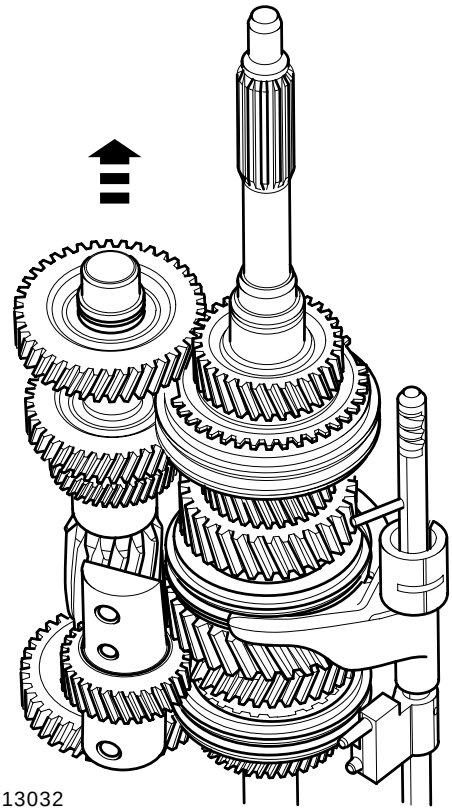
ELE0013032

30. Remove the countershaft rear bearing rollers.

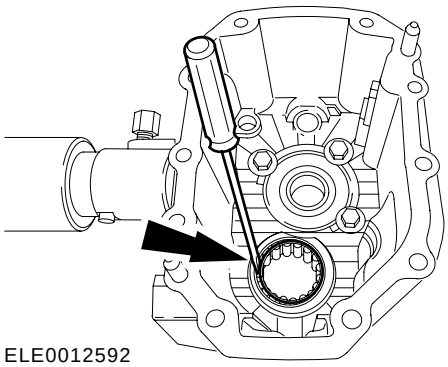
ELE0012592

DISASSEMBLY

31. Using the special tool, remove the countershaft rear bearing.

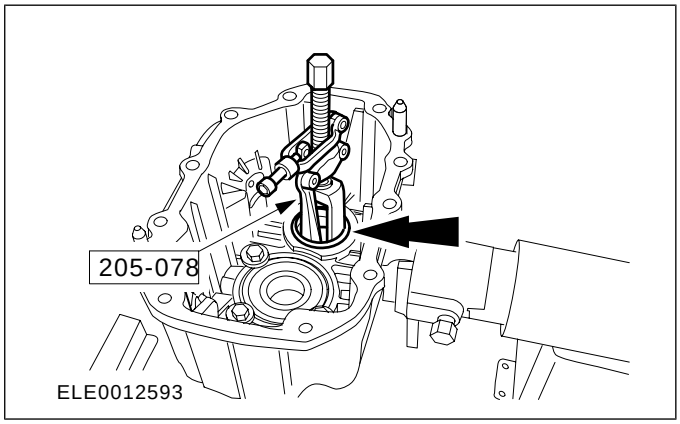

32. NOTE: Only remove the selector gate if it is damaged.

Remove the selector gate.

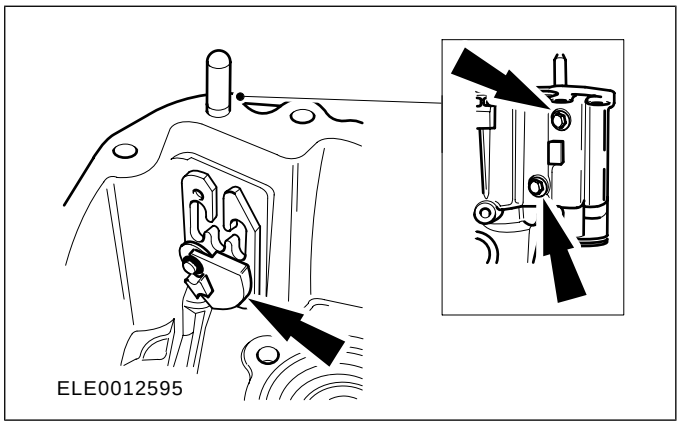

33. Using the special tool, remove the main selector shaft bearing and oil seal.

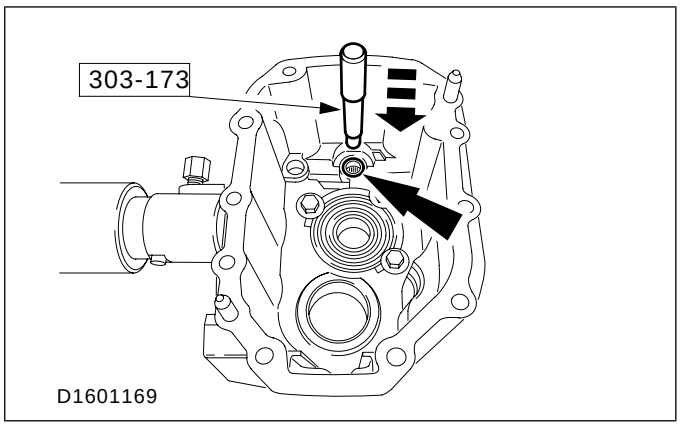

34. Remove the output shaft bearing retaining bolts.

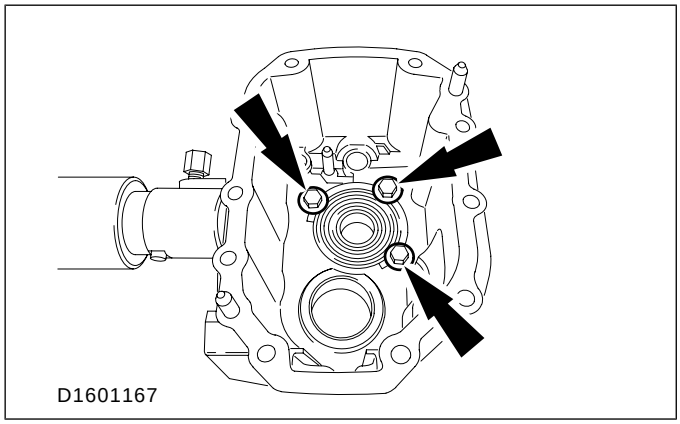

35. Using a length of suitable tube, remove the output shaft bearing.

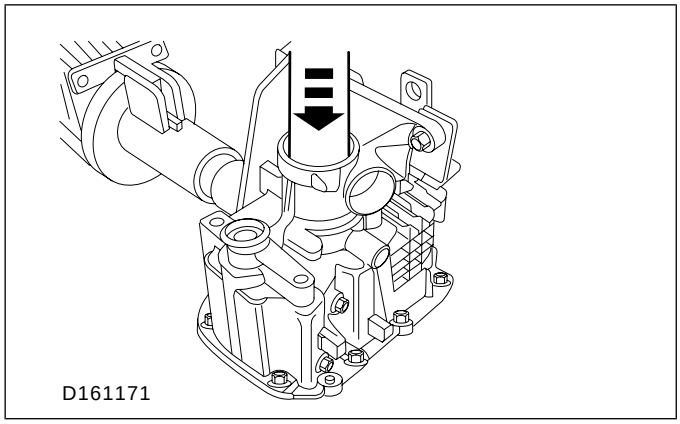

36. Using the special tools and a 63 mm spacer, remove the main selector shaft bearing.

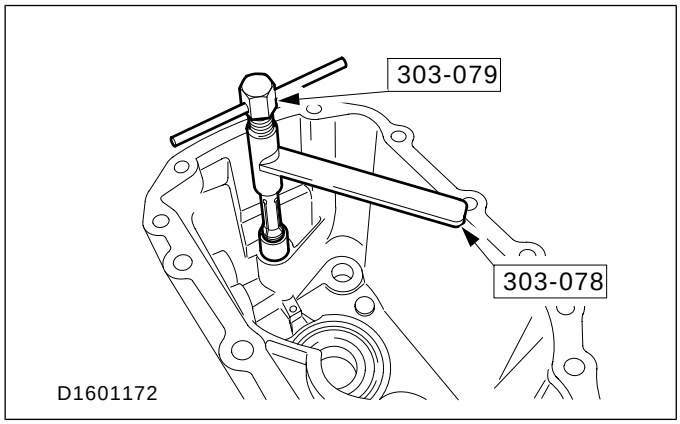

DISASSEMBLY

37. Using a length of suitable tube, remove the input shaft bearing.

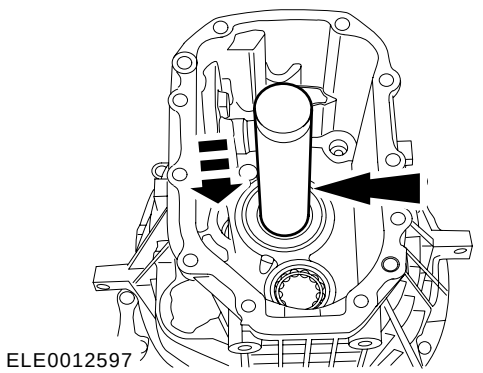

38. ⚠CAUTION: Do not damage the thread in the transmission housing.

Using the special tool, remove the countershaft front bearing.

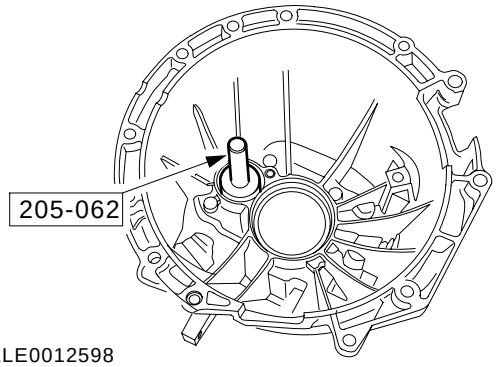

DISASSEMBLY AND ASSEMBLY OF SUBASSEMBLIES

Input Shaft

Disassembly

1. **CAUTION: Handle the synchronizer ring and synchronizer cone with care.**

   Remove the input shaft with the fourth gear synchronizer ring from the output shaft.

   - Remove the output shaft locating bearing.

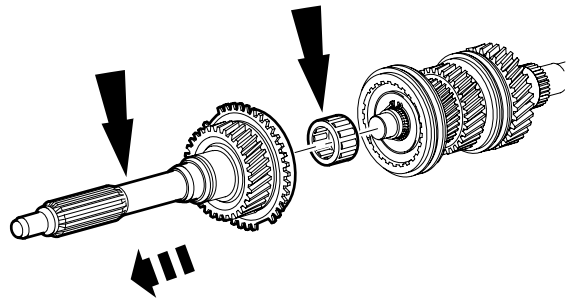

ELE0010466

Assembly

1. **Carefully clean and check all parts and assemble the parts in reverse order.**

DISASSEMBLY AND ASSEMBLY OF SUBASSEMBLIES

Output Shaft

Special Tool(s)

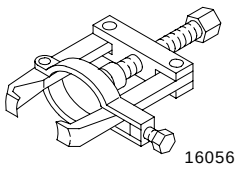 16056	Remover, Mainshaft Needle Bearing Sleeve 308 - 191 (16 - 056)

General Equipment

Hot air gun

Materials	
Name	**Specification**
Manual transmission fluid	WSD - M2C200 - C

Disassembly

1. **CAUTION: Mark the position of the synchronizer rings in relation to the synchronizer units to aid installation.**

   Remove the input shaft and fourth gear synchronizer ring from the output shaft.

   - Remove the output shaft locating bearing.

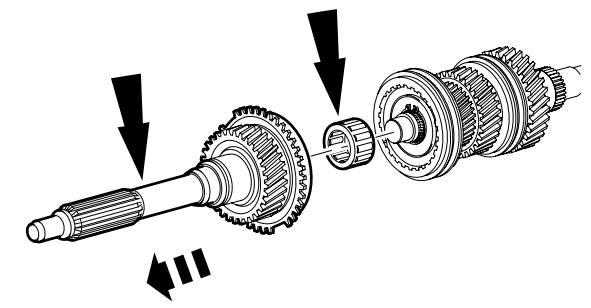
ELE0010466

2. **Remove the fifth gear wheel and synchronizer ring from the output shaft.**
   1. Remove the gear wheel.
   2. Remove the gear synchronizer ring.
   3. Remove the needle roller bearing.

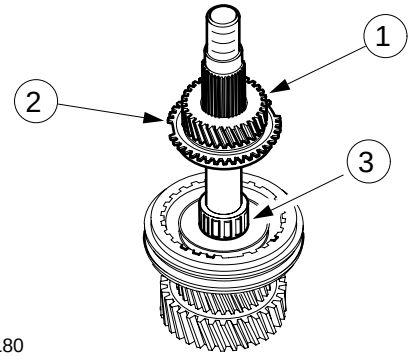

JI601180

3. **WARNING: Do not allow the synchronizers to fall apart. Failure to follow these instructions may result in personal injury.**

   CAUTION: Use soft jaws for all operations in a vise.

   NOTE: Clamp the output shaft in a vise with the output end.

   Remove the third/fourth gear synchronizer unit together with the third gear wheel.
   1. Remove the circlip.
   2. Third/fourth gear synchronizer.
   3. Needle roller bearing.
   4. Third gear wheel.

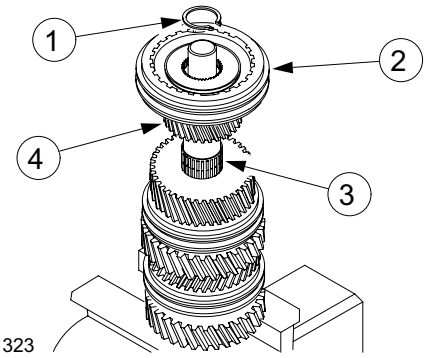

ELE0011323

4. **Using the special tool, remove the third gear bearing ring.**

DISASSEMBLY AND ASSEMBLY OF SUBASSEMBLIES

- Locate the special tool in the recesses off the bearing ring.

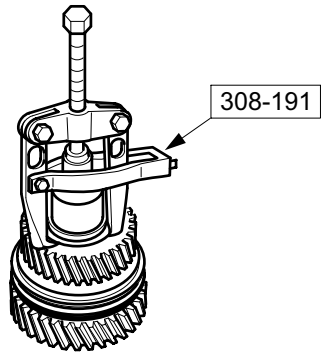

ELE0011322

5. **NOTE: Mark the position of the second gear wheel in relation to the synchronizer ring to aid installation.**

   Remove the second gear wheel, the needle roller bearing and synchronizer ring.

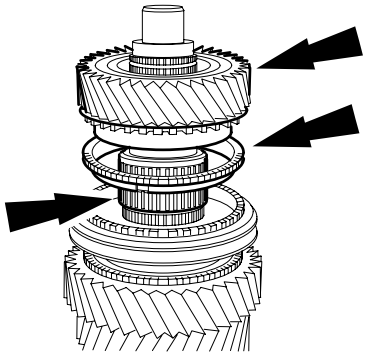
ELE0011322

6. **NOTE: Mark the position of the shift ring in relation to the first gear wheel to aid installation.. Components are paired.**

NOTE: Remove the circlip.

Remove the first/second gear synchronizer and the first gear wheel.

1. First/second gear synchronizer.
2. First gear wheel.
3. Needle roller bearing.

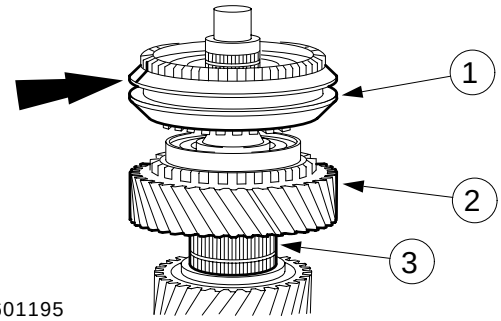

S1601195

7. **NOTE: Mark the position of the shift ring in relation to the reverse gear wheel to aid installation. Components are paired.**

NOTE: Clamp the output shaft the other way round in the vise.

NOTE: Remove the circlip.

Remove the fifth/reverse gear synchronizer, the reverse gear wheel and needle roller bearing.

1. Fifth/reverse gear synchronizer.
2. Reverse gear wheel.
3. Needle roller bearing.

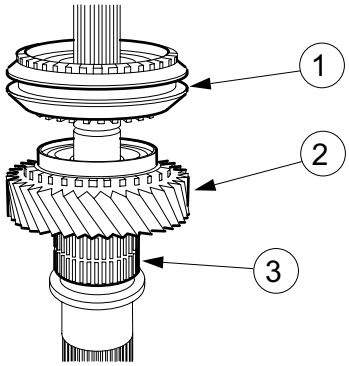

ELE0011333

Assembly

1. **Carefully clean and check all sliding parts and lubricate the synchronizer rings with Manual transmission fluid before assembly.**
2. **Install the needle roller bearing, reverse gear wheel and synchronizer unit.**
   1. Install the reverse gear wheel.
   2. Install the synchronizer.

DISASSEMBLY AND ASSEMBLY OF SUBASSEMBLIES

3. Install the snap ring.

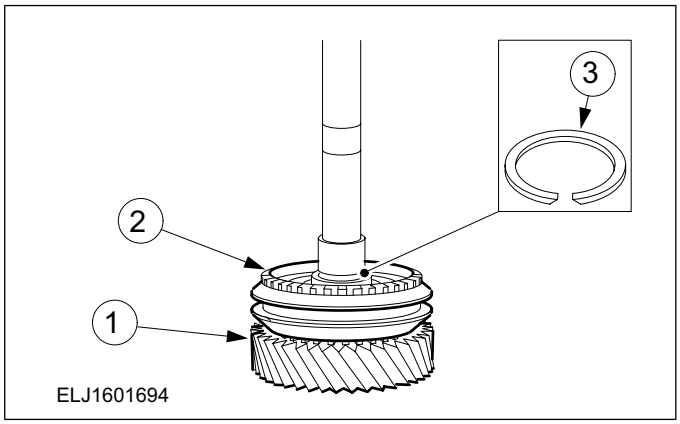

3. Install the first/second gear synchronizer unit.

1. Install the needle roller bearing.
2. Install the gear wheel.
3. Install the synchronizer unit.
- Install the circlip.

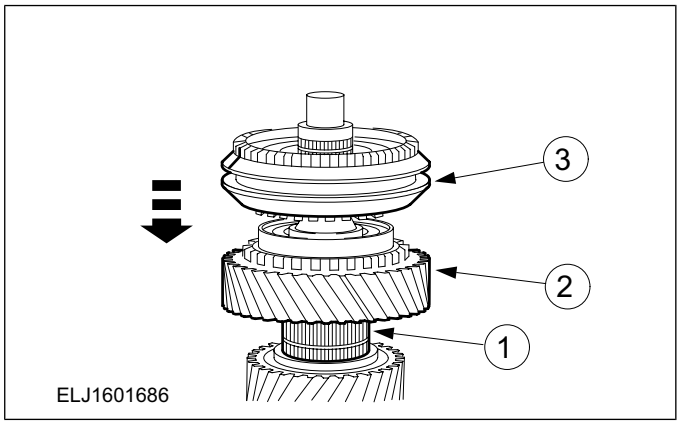

4. Install the synchronizer ring, needle roller bearing and second gear wheel.

1. Install the needle roller bearing.
2. Install the synchronizer ring.
3. Install the gear wheel.

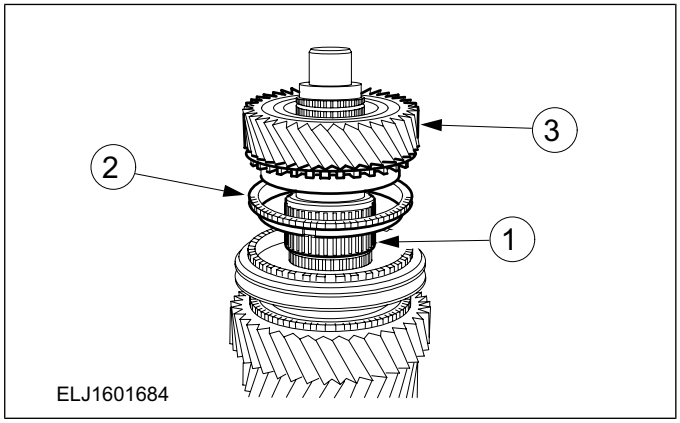

5. NOTE: Slide the inner bearing ring onto the output shaft as far as the shoulder.

NOTE: Install a new inner bearing ring and needle bearing.

Using a hot air gun heat the inner bearing ring to approximately 100 ° C and install it.

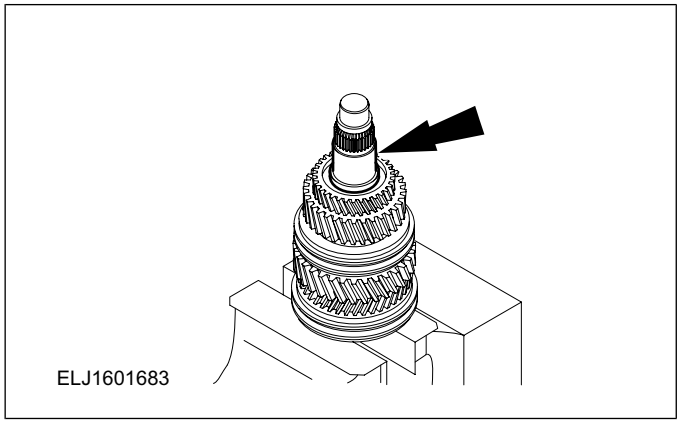

6. NOTE: Install the synchronizer with the small collar upwards.

NOTE: Install the needle roller bearing.

Install the third/fourth gear synchronizer.

1. Install the gear wheel.
2. Install the synchronizer.
3. Install the circlip.

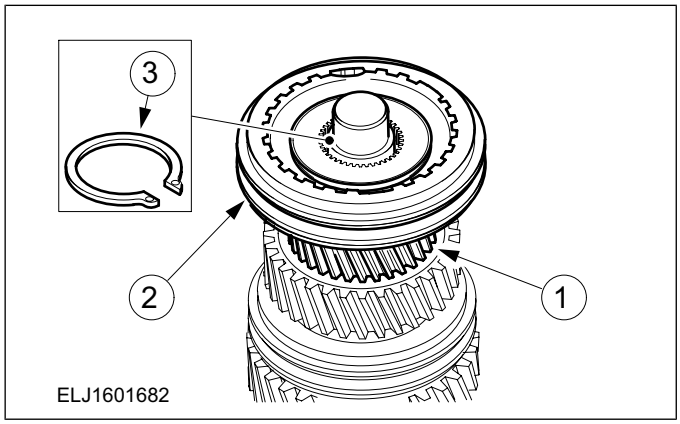

7. Install the fifth gear wheel.

1. Install the needle roller bearing.
2. Install the synchronizer ring.

DISASSEMBLY AND ASSEMBLY OF SUBASSEMBLIES

3. Install the gear wheel.

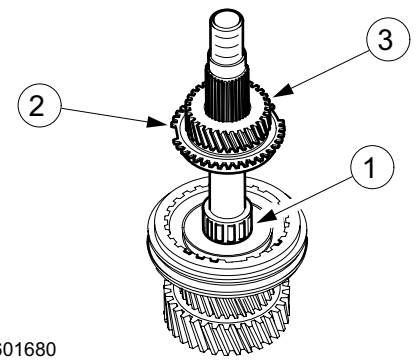

ELJ1601680

8. Install the output shaft locating bearing, synchronizer ring and the input shaft.

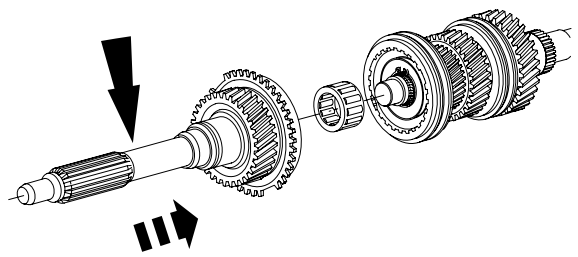
ELE0010467

DISASSEMBLY AND ASSEMBLY OF SUBASSEMBLIES

Countershaft

Special Tool(s)

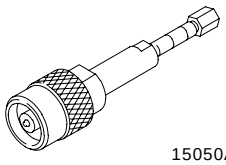 15050A	Remover, Bearing (Main Tool) 205-295 (15-050A)
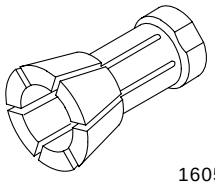 16050	Collet for 205-295 308-146 (16-050)

Disassembly

1. **NOTE: Insert the special tool in the annular groove provided in the ring.**

   Using the special tools, pull the bearing rings off the countershaft.

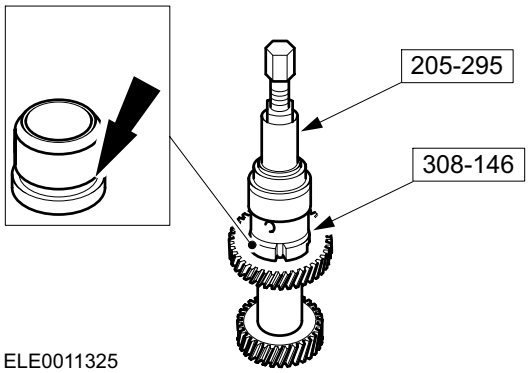

ELE0011325

Assembly

1. **Install the bearing rings.**

- Heat the bearing rings to approximately 100°C and slide on.

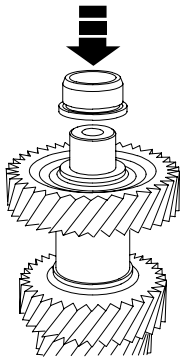
J1601690

DISASSEMBLY AND ASSEMBLY OF SUBASSEMBLIES

Reverse Idler Gear

Disassembly

1. Disassemble the reverse gear idler shaft.

1. Drive out the roll pin.
2. Remove the bearing housing.
3. Remove the reverse idler gear.
4. Remove the needle roller bearing.

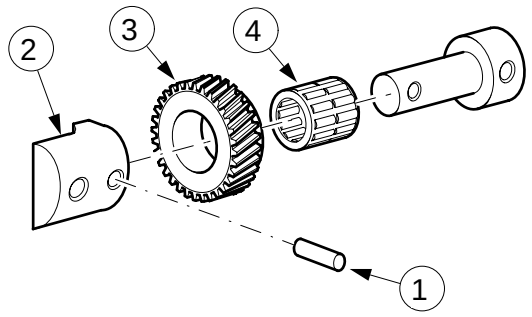

J1601191

Assembly

1. NOTE: Do not install the bearing housing twisted. The threaded holes must line up with one another.

Assemble the reverse gear idler shaft.

1. Install the needle roller bearing.
2. Install the reverse idler gear.
3. Install the bearing housing.
4. Drive in the roll pin.

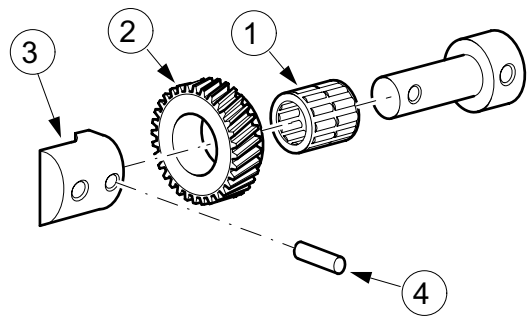

ELJ1601691

DISASSEMBLY AND ASSEMBLY OF SUBASSEMBLIES

Synchronizers

Materials	
Name	**Specification**
Manual transmission fluid	WSD-M2C200-C

Disassembly

1. **CAUTIONS:**

   ⚠ **Take care when pulling the selector ring off the synchronizer hub. The detent balls are spring-loaded.**

   ⚠ **Mark the synchronizers to the synchronizer hubs in relation to the selector rings.**

   Disassemble the synchronizer.

   1. Selector ring.
   2. Synchronizer hub.
   3. Compression spring.
   4. Blocker bar.
   5. Detent ball.

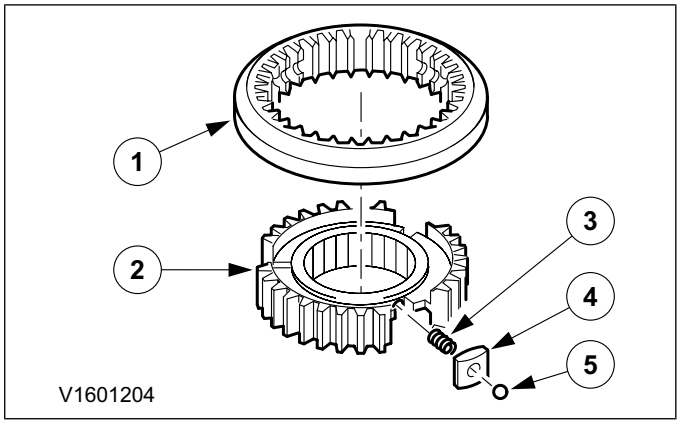

Assembly

1. **NOTE: Carefully clean and check all sliding parts and lubricate them with Manuel transmission fluid before assembly.**

   Assemble the inner synchronizer.

   1. Synchronizer inner ring.
   2. Blocker bars.
   3. Compression springs.

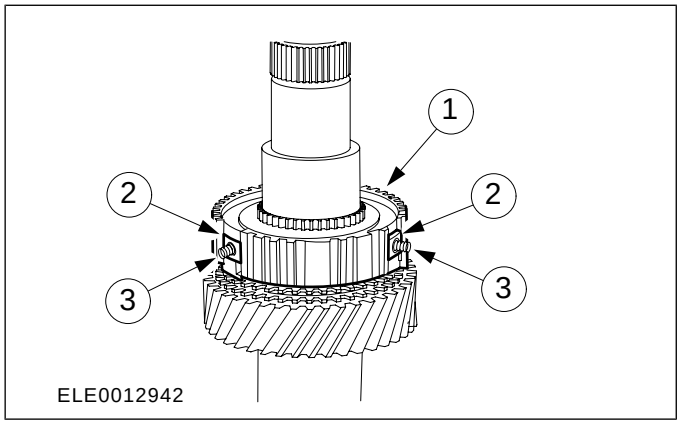

2. **Assemble the outer synchronizer.**

   1. Synchronizer outer ring.
   2. Detent balls.

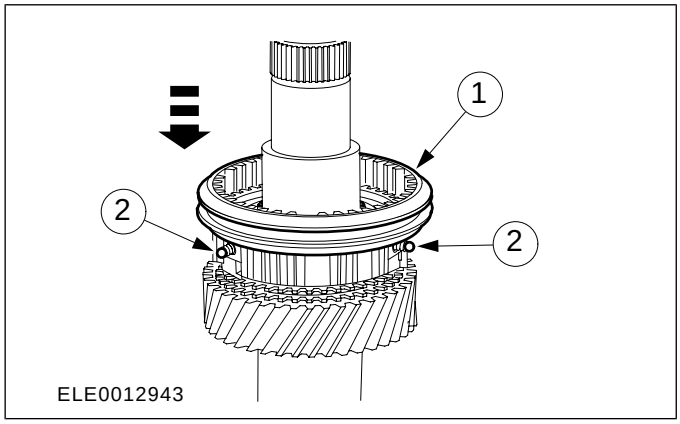

DISASSEMBLY AND ASSEMBLY OF SUBASSEMBLIES

Gearshift Control Shaft

Disassembly

1. Disassemble the gearshift control shaft.

1. Remove the roll pin.
2. Remove the shift finger.
3. Remove the selector fork.

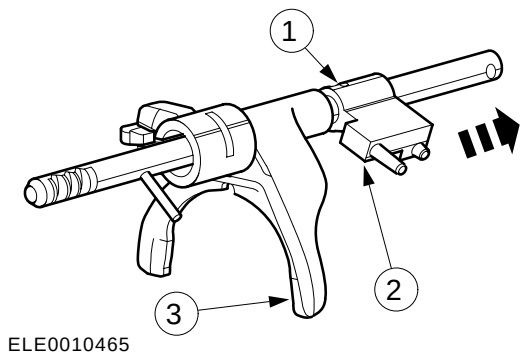

ELE0010465

2. Disassemble the gearshift control shaft (continued)

1. Remove the locking sleeve.
2. Remove the roll pin and the selector finger.

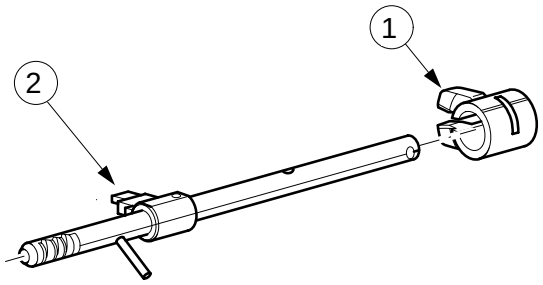

ELE0010464

Assembly

1. NOTE: Make sure that the roll pins do not protrude.

To assemble, reverse the disassembly procedure.

ASSEMBLY

Transmission

Special Tool(s)

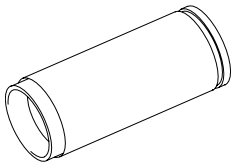 204276	Installer, Wear Sleeve Stub Axle 204-276 (14-055)
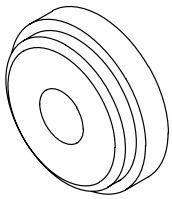 15068	Adapter for 205-066 205-066-04 (15-068)
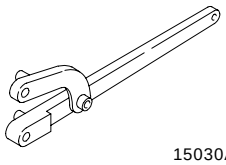 15030A	Flange Holding Wrench, Universal 205-072 (15-030A)
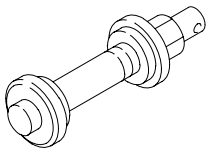 15035	Installer, Differential Bearing Cone 205-074 (15-035)
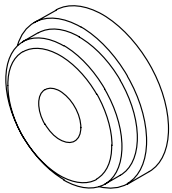 15064	Adapter for 205-074 205-074-01 (15-064)
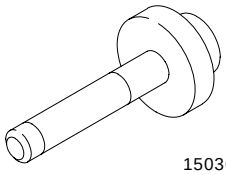 15036	Installer, Rear Hub Oil Seal 205-075 (15-036)

Special Tool(s)

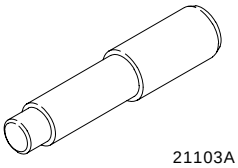 21103A	Aligner, Clutch Plate 303-173 (21-103A)
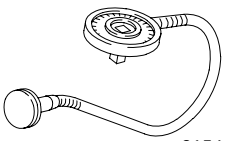 21540	Angle Gauge, Bolt Tightening 303-174 (21-540)
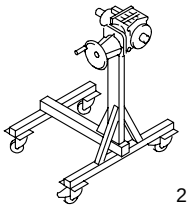 21187	Mounting Stand 303-435 (21-187)
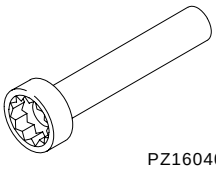 PZ16040A	Socket, Guide Sleeve 308-109 (16-040A)
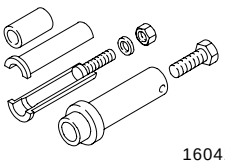 16041	Remover/Installer, Front Housing 308-110 (16-041)
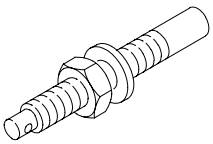 16042A01	Threaded Spindle 308-111 (16-042A-01)

ASSEMBLY

Special Tool(s)

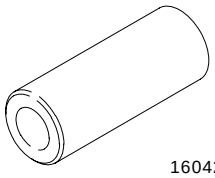 16042A	Adapter for 308-111 308-111-01 (16-042A)
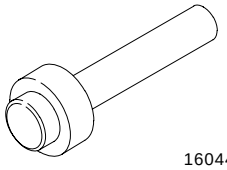 16044	Installer, Input Shaft Seal 308-113 (16-044)
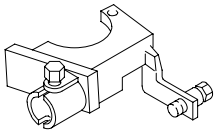 16045	Mounting Bracket for 303-435 308-114 (16-045)
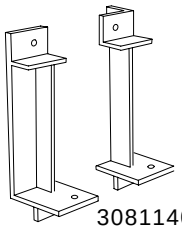 30811401	Mounting Brackets for 308-114 308-114-01 (16-045-01)

General Equipment

17 mm socket

Materials	
Name	**Specification**
Manual transmission fluid	WSD-M2C200-C
Sealant	WSS-M2G348-A10
Sealant	ESK-M4G242-A
Sealant - Loctite 518	WSK-M2G348-A5
Grease	ESD-M2C220-A

Assembly

All vehicles

1. **NOTE: Lubricate all moving parts with manual transmission fluid during assembly.**

NOTE: Clean and check all parts for wear and damage. Install new parts as necessary.

NOTE: When installing a new transmission rear housing, install the locating studs with a 24 ± 0.5 mm protrusion.

Using the special tools, install the output shaft bearing.

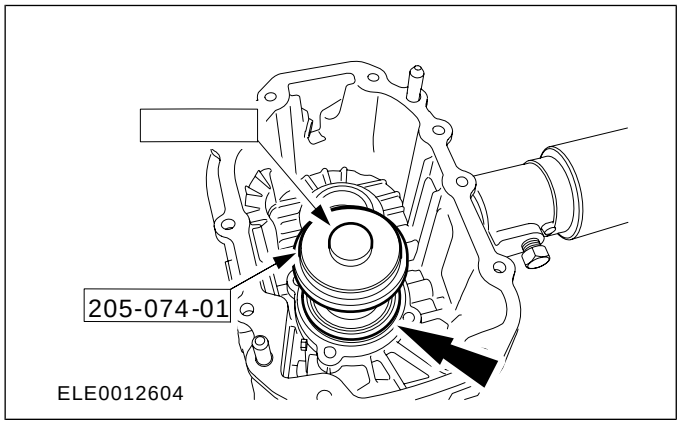

2. **Using the special tools, install the output shaft bearing.**

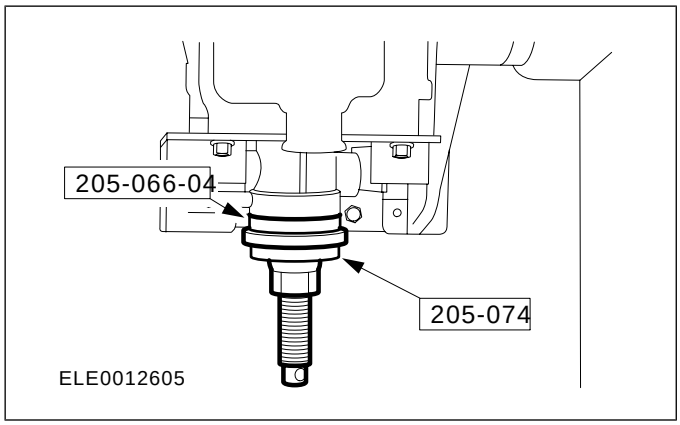

3. **Install the output shaft bearing retaining bolts.**

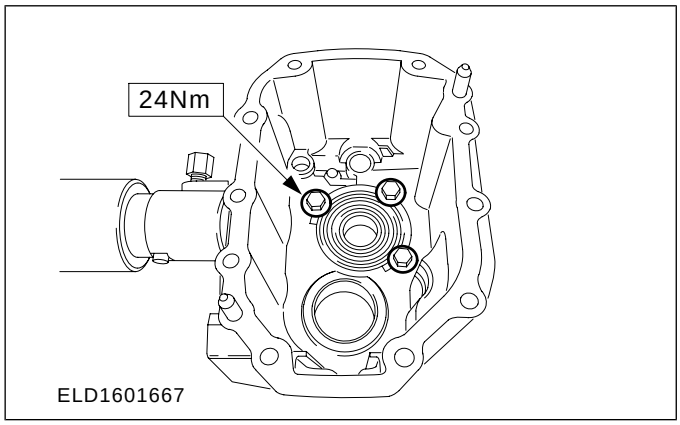

ASSEMBLY

4. Using the special tool, install the main selector shaft bearing.

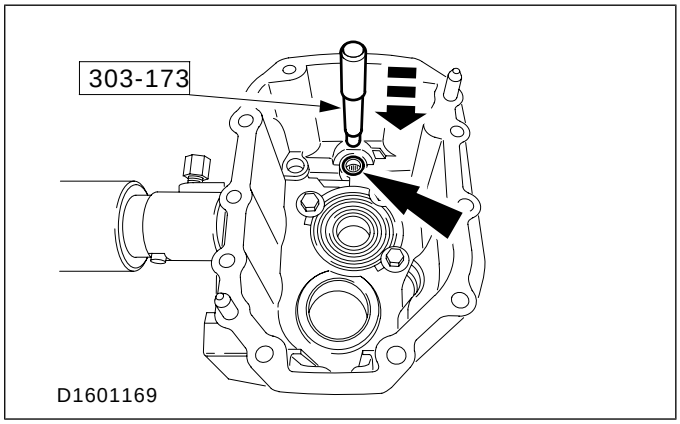

5. Using the special tool, install the countershaft rear bearing.

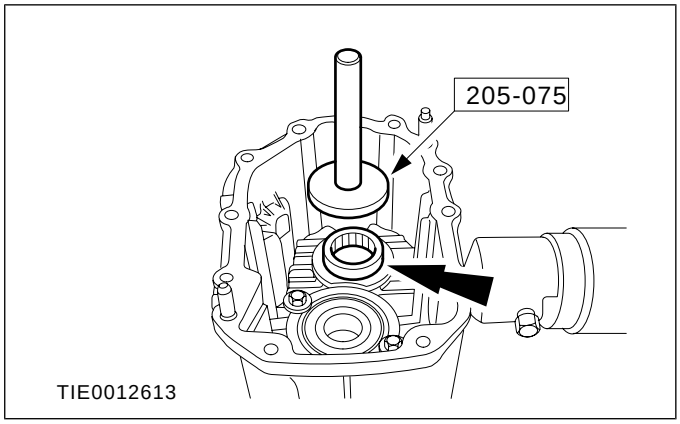

6. Coat the lip of the main selector shaft oil seal with grease.
7. Using a 17 mm socket, install the main selector shaft oil seal.

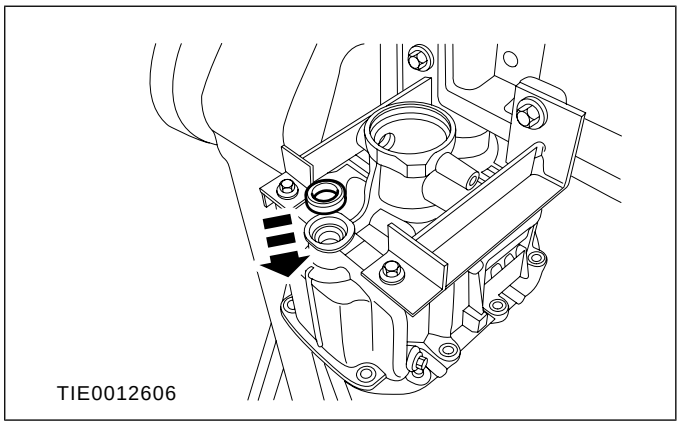

8. NOTE: Install new selector gate retaining bolts.

   Install the selector gate.

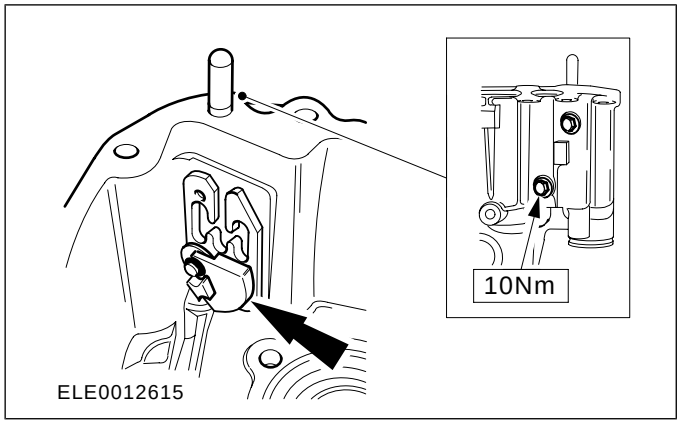

9. NOTE: Install a new input shaft bearing snap ring.

   Using the special tools, install the input shaft bearing.

   - Install the snap ring in the annular groove of the bearing.

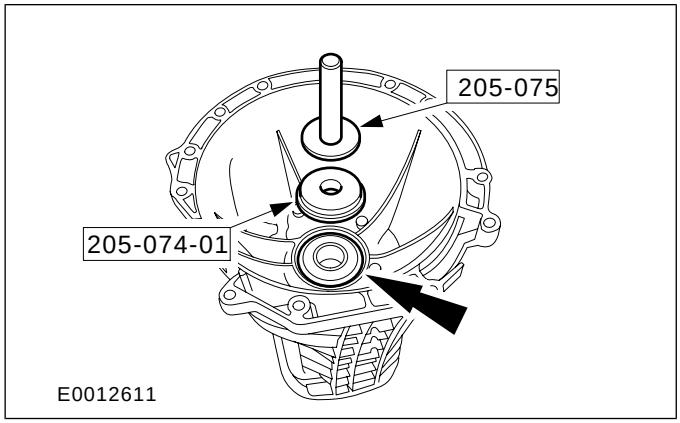

10. Using the special tool, install the countershaft front bearing.

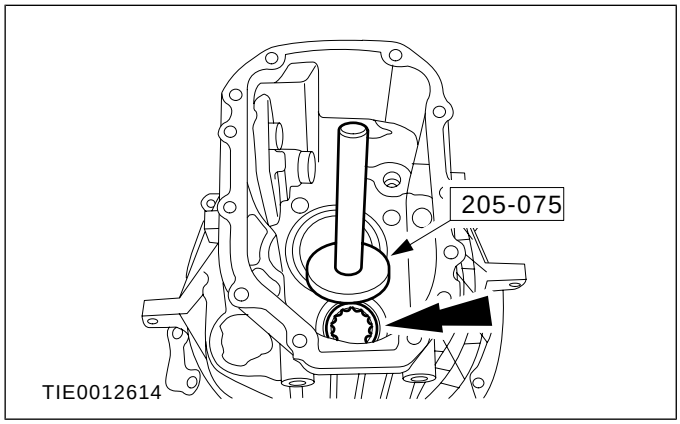

ASSEMBLY

11. **Using the special tool, install the main selector shaft bearing.**

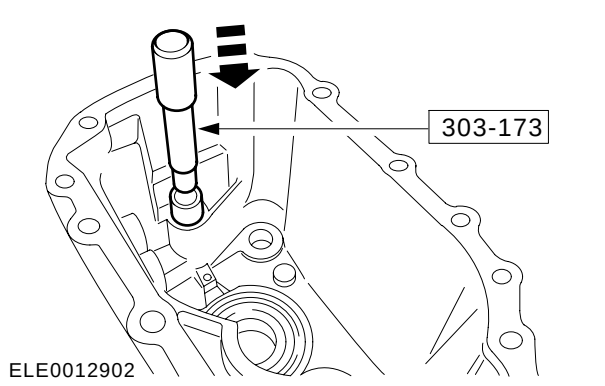

12. **Assemble the countershaft to the output shaft and secure it with a cable tie.**

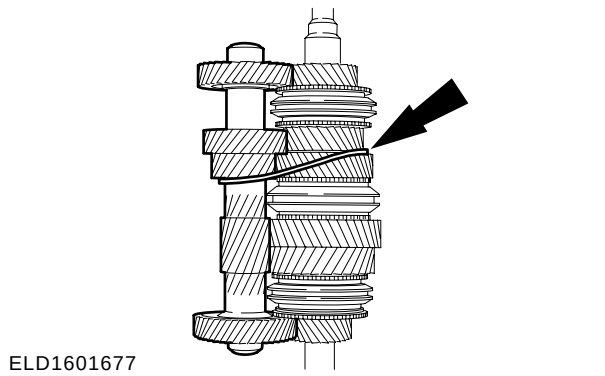

13. **NOTE: The first and second gear selector fork must engage in the middle of the first and second gear synchronizer unit.**

Assemble the main selector shaft to the countershaft and output shaft assembly.

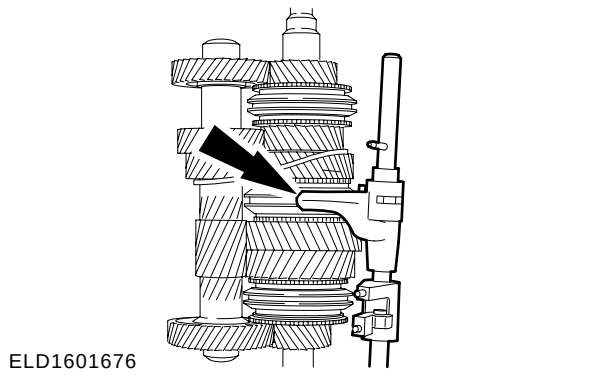

14. **NOTE: Make sure that the flat end of the reverse gear idler shaft is facing upwards.**

Assemble the reverse gear idler to the countershaft and output shaft assembly and secure it with cable ties.

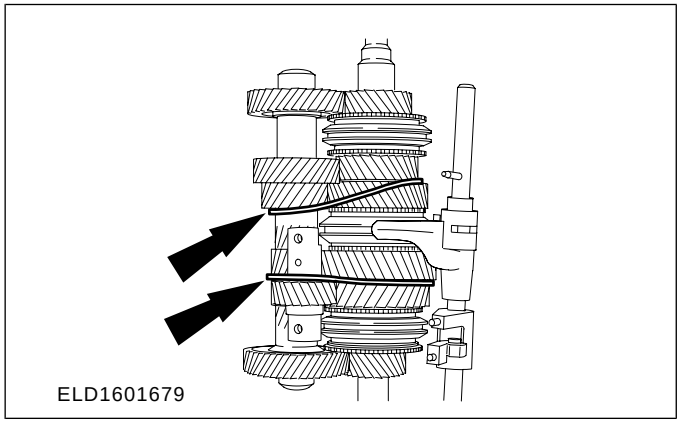

15. **NOTE: Make sure that the outtrigger of the selector fork is facing upwards.**

Attach the fifth and reverse gear selector fork to the lower synchronizer unit.

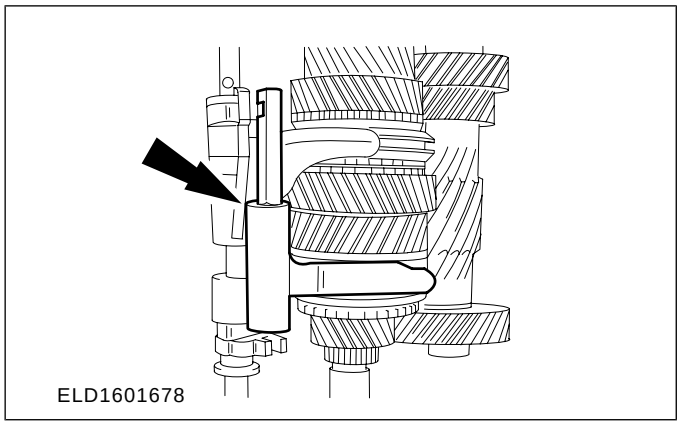

16. **NOTE: During installation, guide the main selector shaft into the bearing and selector gate correctly.**

NOTE: Make sure that there is no touch condition between the countershaft and the synchronizer ring.

NOTE: Make sure that the inside splines of the sensor ring are facing to the output shaft flange.

Using the special tools, install the countershaft and output shaft assembly.

1. Install the vehicle speed sensor (VSS) ring.

ASSEMBLY

2. Use the special tools to guide the countershaft into the rear bearing.

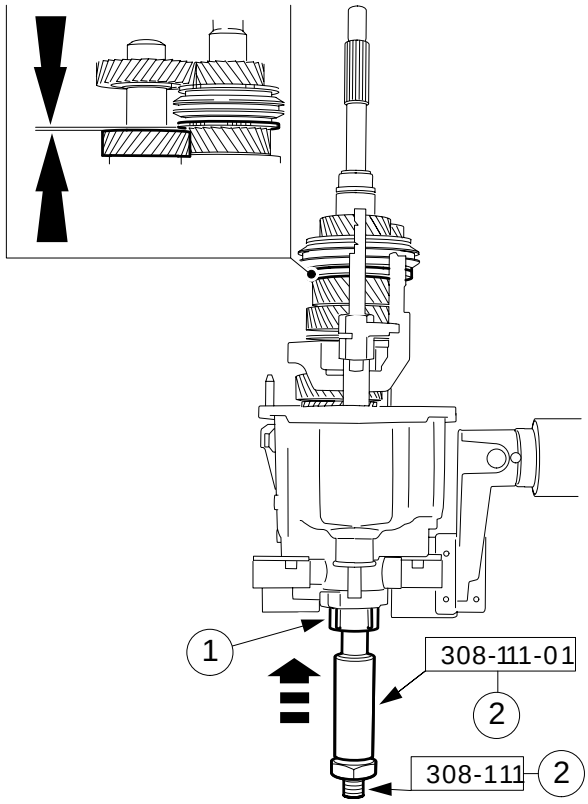

TIE0012607

17. **Remove the VSS ring.**
18. **Install the magnetic disc.**

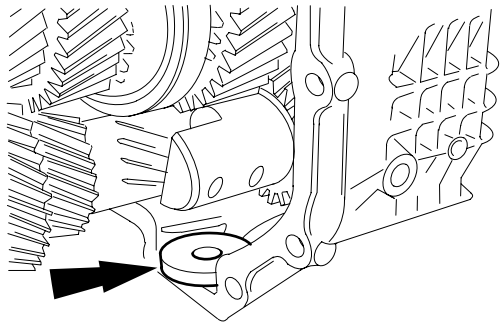
ELE0019847

19. **NOTE: Do not fully tighten the reverse gear idler shaft rear retaining bolt at this stage.**

Install the reverse gear idler shaft rear retaining bolt.

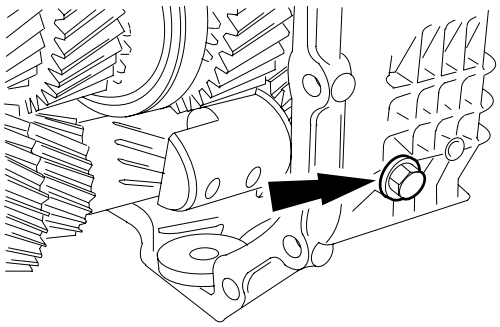
ELE0019846

20. **Remove the cable ties from the countershaft and output shaft assembly.**
21. **NOTE: Make sure that the chamfered end of the selector shaft is facing upwards.**

Install the third and fourth gear selector fork and the auxiliary selector shaft.

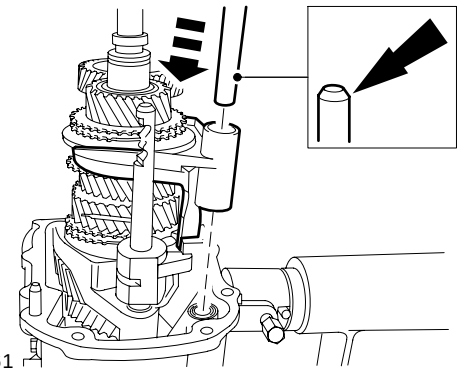
ELD1601661

22. **⚠CAUTION: Install the transmission front housing within 15 minutes of applying the sealant.**

Apply sealantto the mating surface of the transmission rear housing.

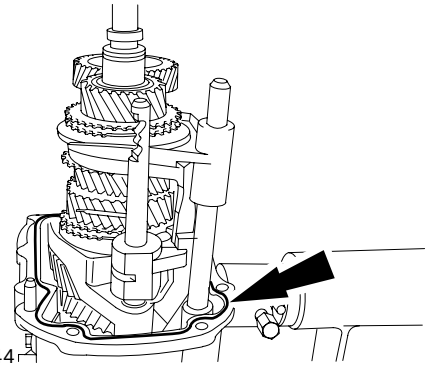
ELE0012944

ASSEMBLY

23. **CAUTION: Install the transmission front housing carefully. Failure to follow this instruction may result in damage to the fourth gear synchronizer ring.**

Assemble the transmission front housing to the transmission rear housing.

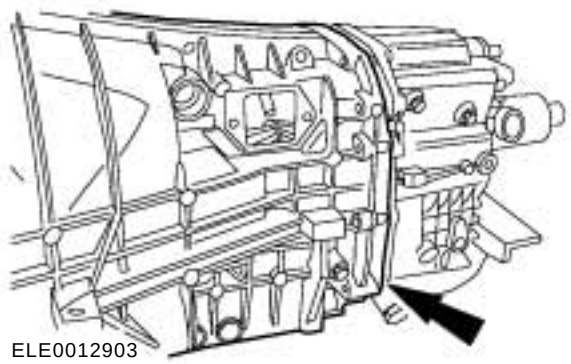

24. **NOTE: During installation, guide the countershaft carefully into the bearing.**

Using the special tool, install the transmission front housing.

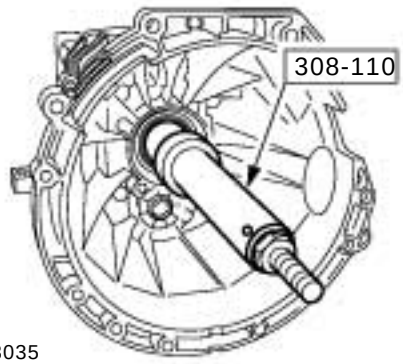

25. **NOTE: Install a new input shaft circlip.**

Install the input shaft circlip.

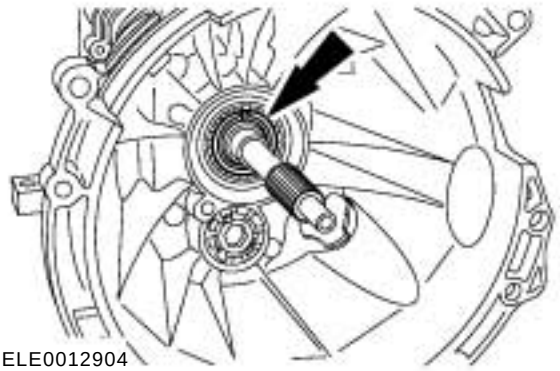

26. **Install the transmission housing retaining bolts.**

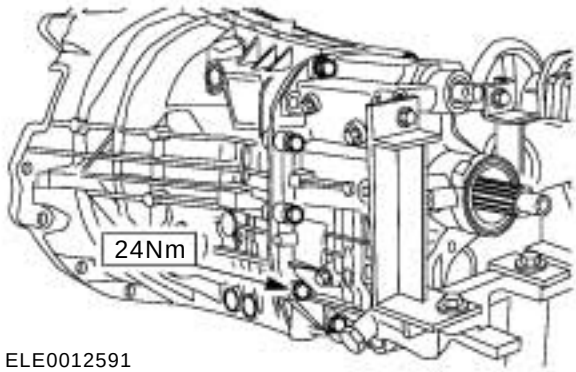

27. **CAUTION: Check the reversing lamp switch gasket. If the gasket is loose or damaged, discard the reversing lamp switch.**

NOTE: Install new reversing lamp switch retaining bolts.

Install the reversing lamp switch.

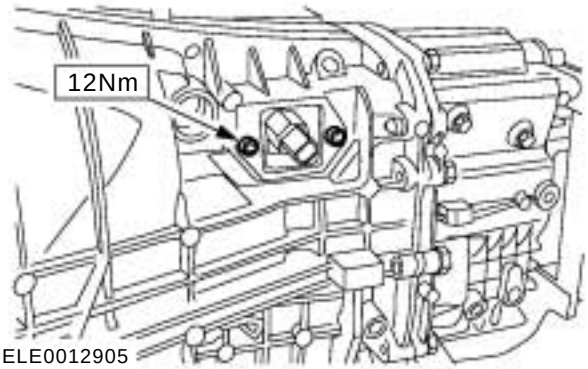

28. **Install the reverse gear idler shaft front retaining bolt**

- Tighten the reverse gear idler shaft retaining bolts.

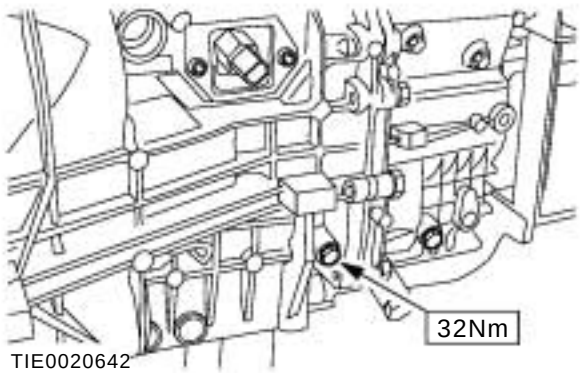

ASSEMBLY

29. **Install the selector shaft locking plate bolt.**

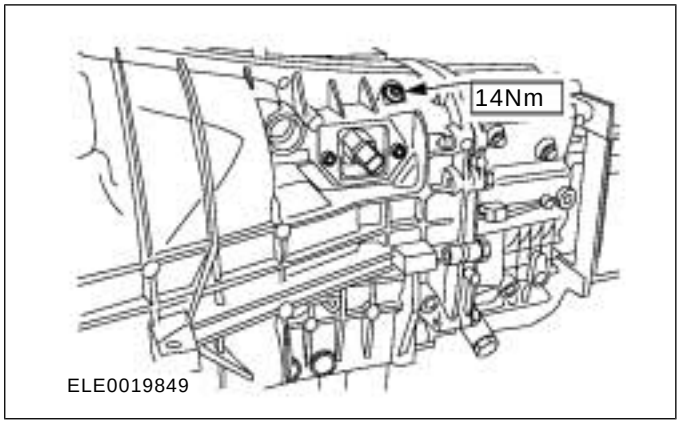

30. **Apply sealant to the selector interlock mechanism retaining plug.**
31. **Install the selector interlock mechanism.**

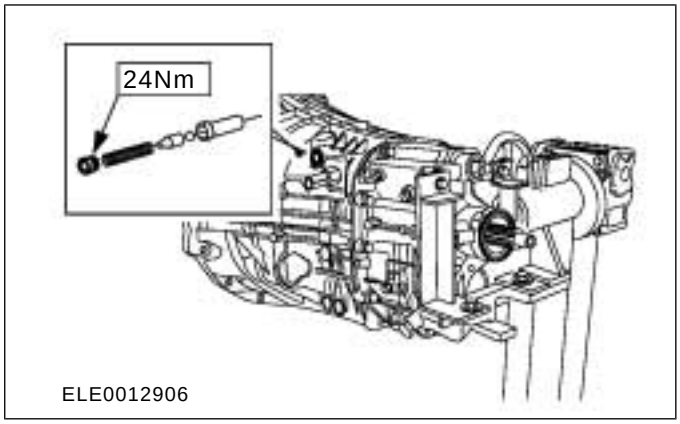

32. **NOTE: Make sure that the inside splines of the sensor ring are facing the output shaft flange.**

    Install the VSS ring.

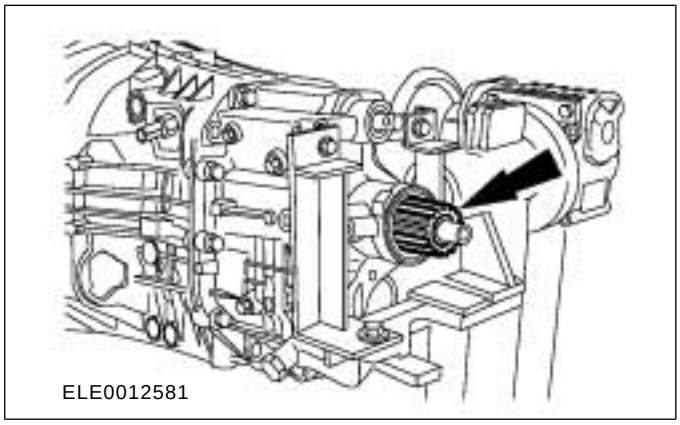

33. **Coat the lip of the output shaft oil seal with grease.**
34. **Using the special tool, install the output shaft oil seal.**
    - Install the splash shield.

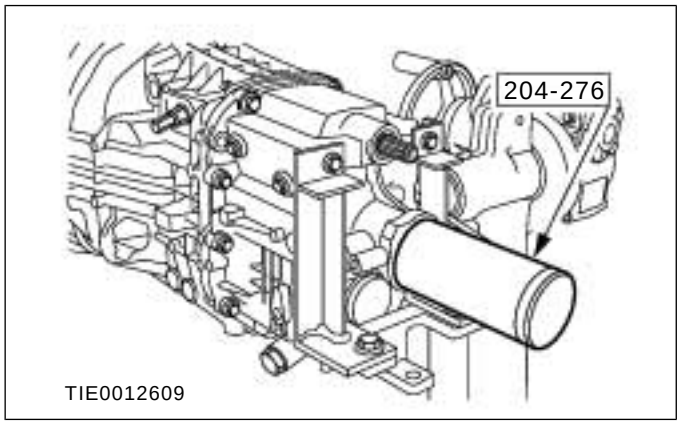

35. **Using the special tools, install the output shaft flange.**
    - Hold the spindle with a drift.

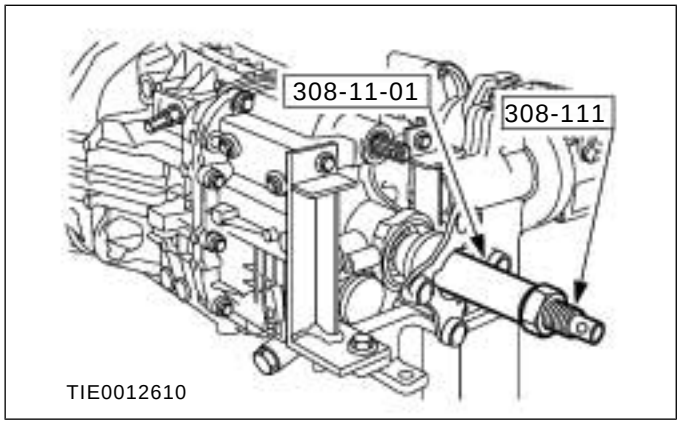

36. **NOTE: Install a new output shaft flange retaining nut.**

    Coat the threads and the mating surface of the output shaft retaining nut with sealant.
37. **Using the special tool, install the output shaft flange retaining nut.**

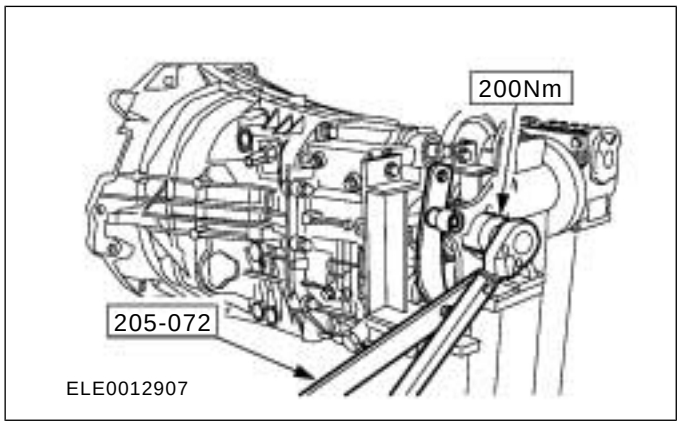

ASSEMBLY

38. **Using the special tool, install the input shaft guide sleeve oil seal.**

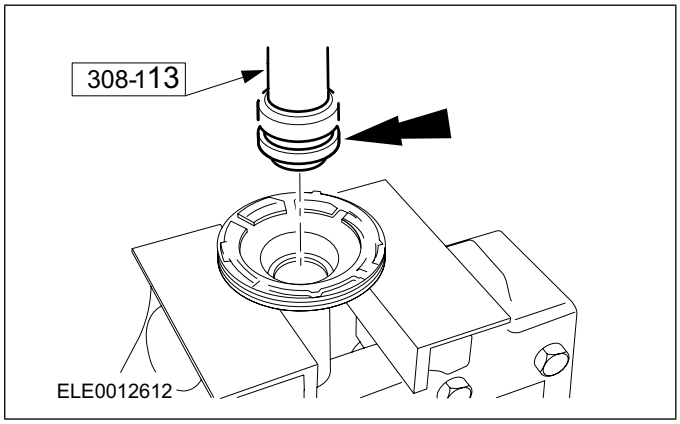

39. **Assemble the input shaft guide sleeve.**
    1. Install the thrust washer.
    2. Install the O-ring seal.

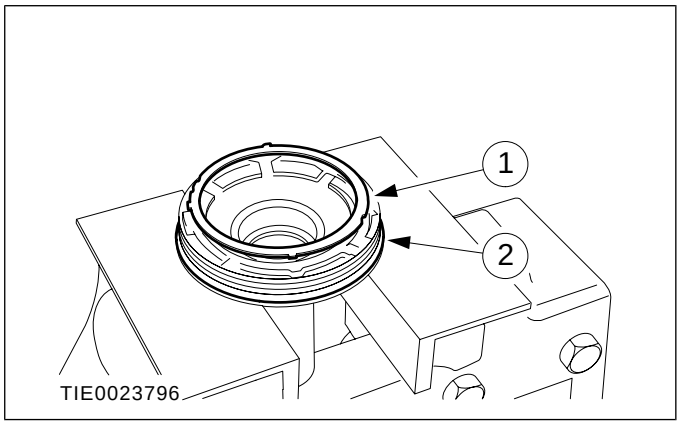

40. **Coat the threads of the input shaft guide sleeve and the O-ring seal with grease**

41. **Using the special tool, install the input shaft guide sleeve.**

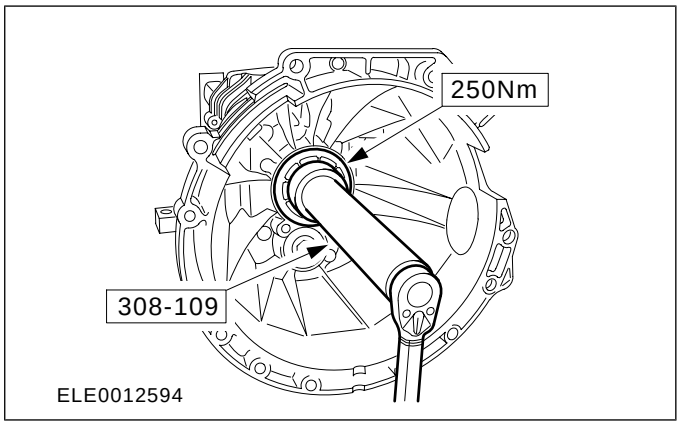

42. **Coat the threads of the countershaft bearing retainer and the O-ring seal with grease.**

43. **NOTE: Install a new countershaft bearing retainer O-ring seal.**

    Install the countershaft bearing retainer.

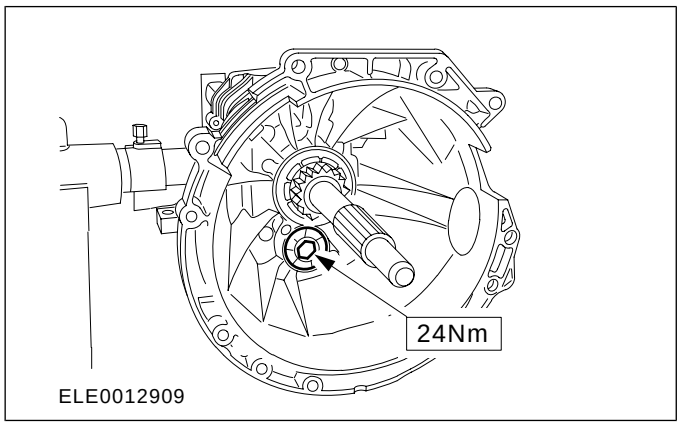

44. **Using the special tool, loosen the bearing retainer by 80 degrees.**

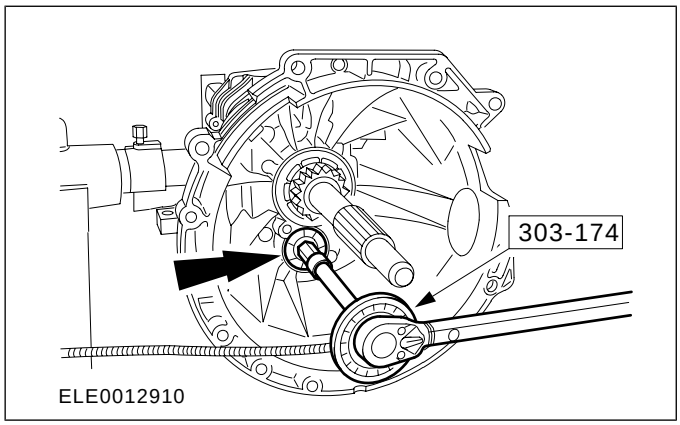

45. **NOTE: Rotate the transmission housing downwards at least 45 degrees.**

    Adjust the countershaft.

    - Using a suitable brass drift and a soft faced hammer, strike two blows on each of the bosses. This will seat the countershaft front bearing against the bearing retainer.

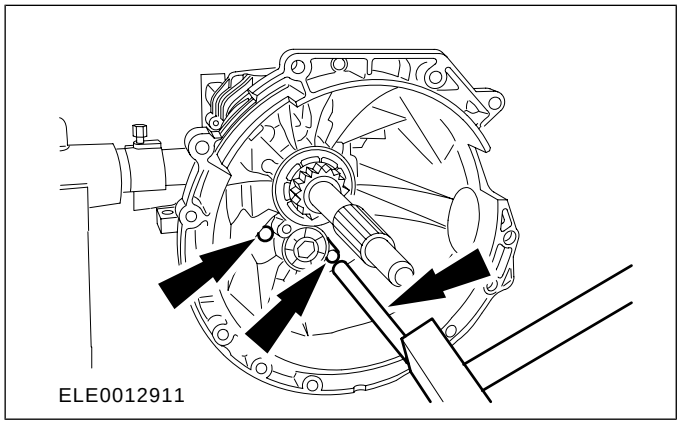

ASSEMBLY

46. ⚠CAUTION: The indicated torque must be achieved.

Using the special tool, tighten the bearing retainer 20 degrees.

- If the indicated torque is not achieved, repeat the previous two steps.

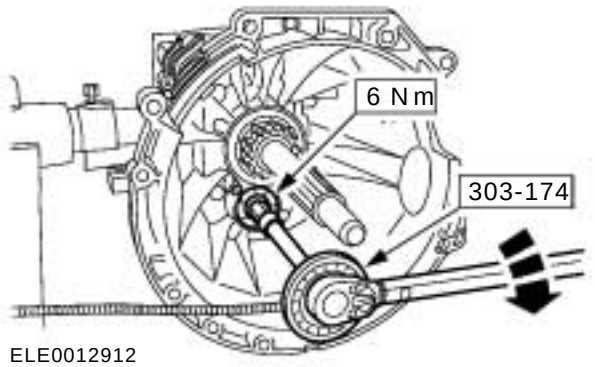

ELE0012912

47. NOTE: Install a new countershaft bearing retainer locking plate bolt.

Install the countershaft bearing retainer locking plate.

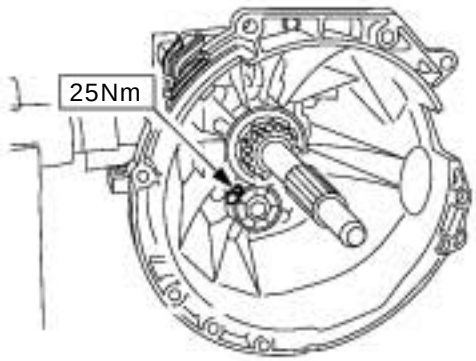

48. Install the clutch release bearing and the clutch release lever.

ELE0012577

49. Remove the transmission from the mounting stand.

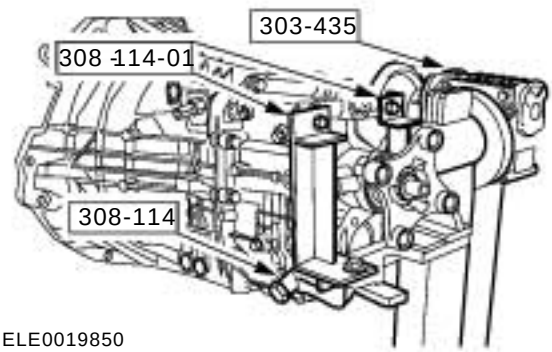

ELE0019850

50. Install the vehicle speed sensor.

- Coat the VSS O-ring seal with grease

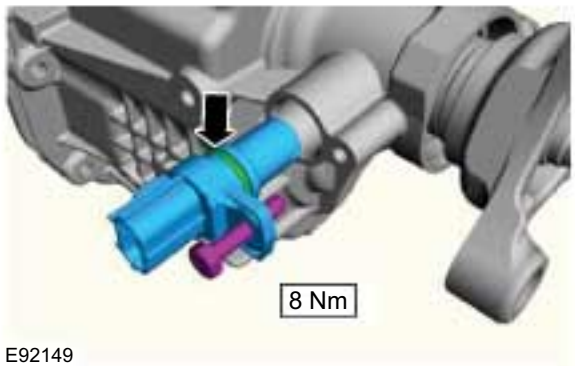

E92149

51. Install the drain plug.

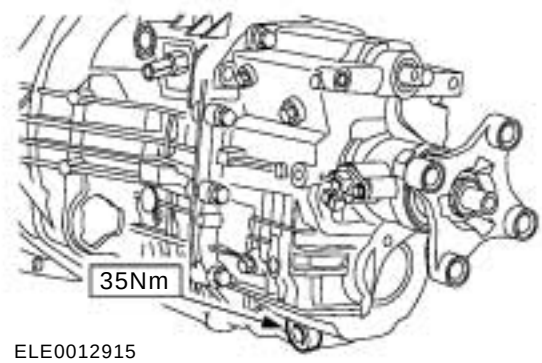

ELE0012915

ASSEMBLY

Vehicles with tachograph

52. Install the tachograph sensor.

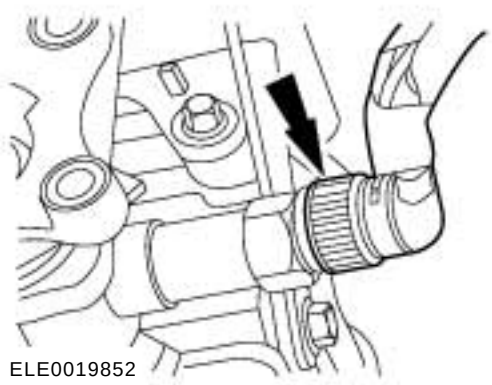

All vehicles

53. Install the external gearshift control assembly.

- Make sure that one of the flat sides of the output shaft flange is upper most.

1. Install the bolt and nut.

NOTE: Only tighten the bolts finger tight at this stage.

2. Install the bolts.

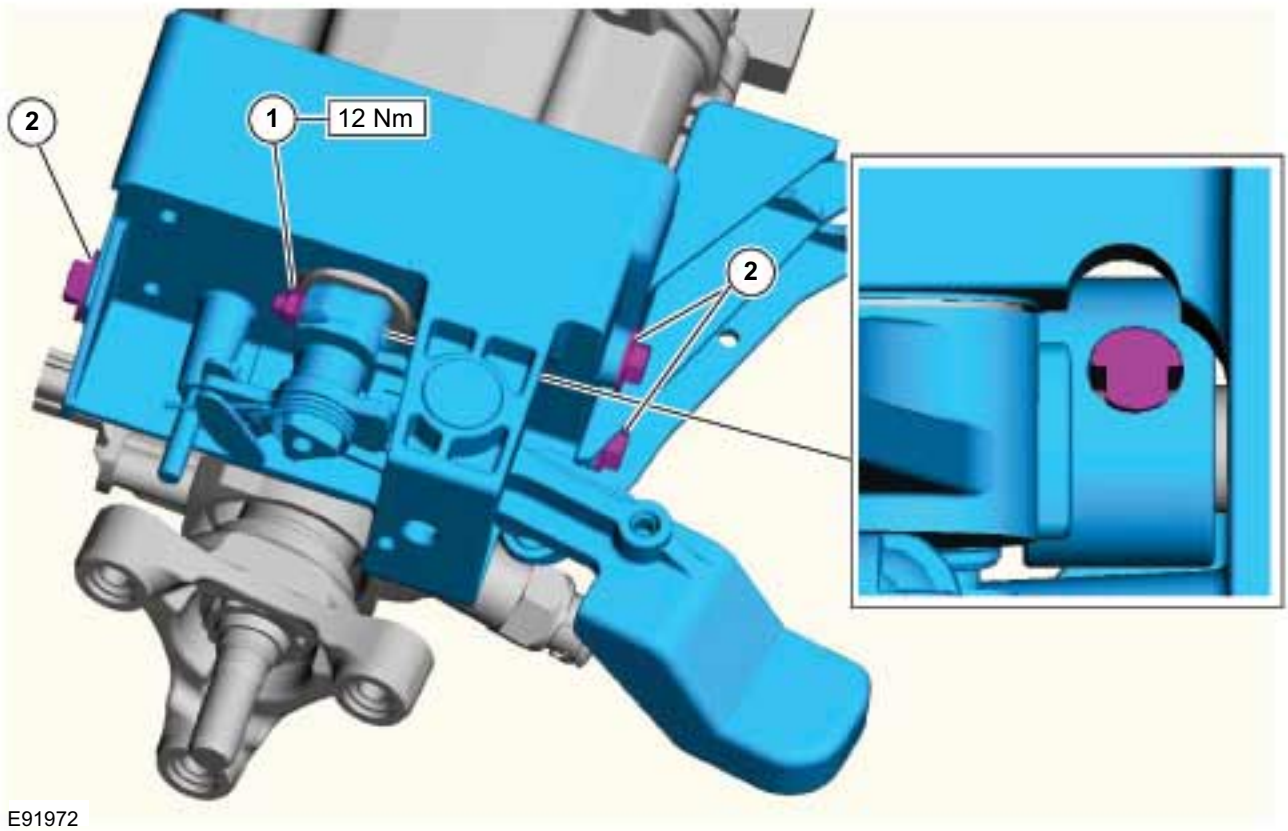

ASSEMBLY

54. Shift the transmission into 4th gear.

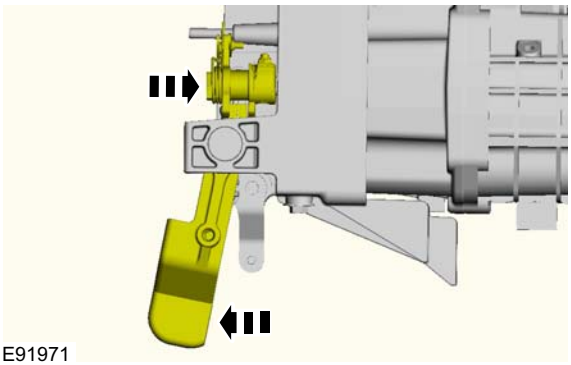

55. Move the external gearshift control assembly, to achive the dimension shown.

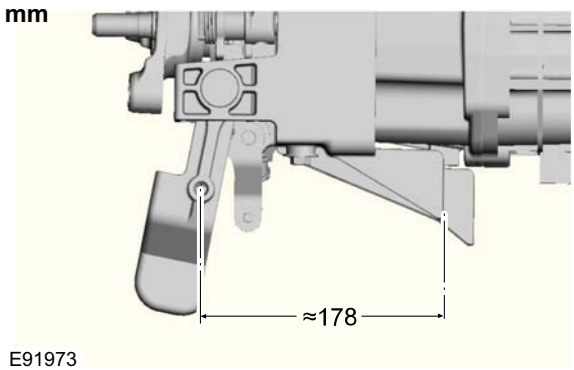

56. Make sure that the spring touches the pin on both sides.

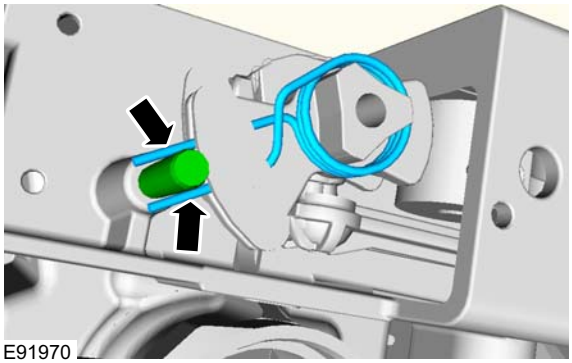

57. Tighten the external gearshift control assembly bolts in the sequence shown.

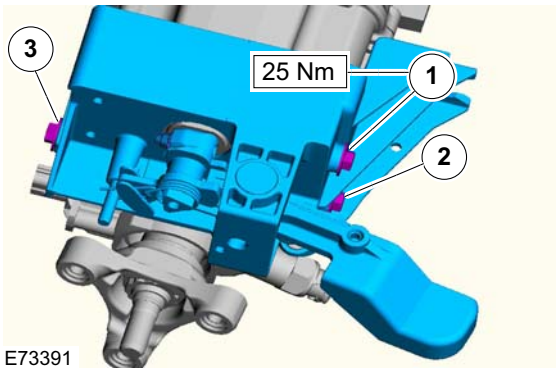

58. Make sure that the spring touches the pin on both sides in 4th gear, neutral and 3rd gear position. If not, loosen the external gearshift control assembly bolts and repeat the previous four steps.

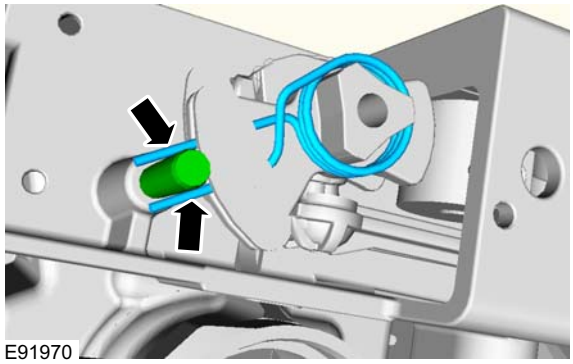

59. Install the external gearshift control cover.

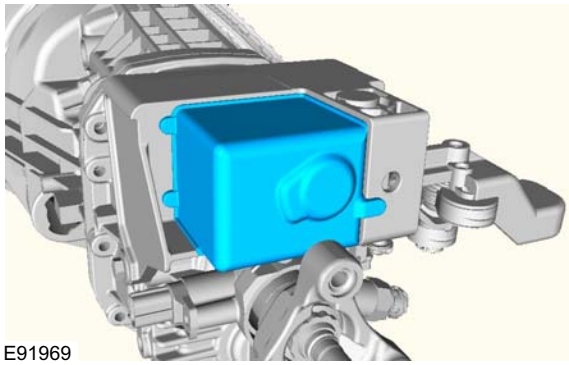

60. Fill the transmission with manual transmission fluid .

For additional information, refer to:
Transmission Draining and Filling (308-03

ASSEMBLY

Manual Transmission/Transaxle - Vehicles With: MT-75, General Procedures).

INSTALLATION

Transmission — 2WD

Installation

General Equipment

Transmission Jack

1. Check the pilot bearing for damage. If damaged, install a new pilot bearing.

   Refer to: Pilot Bearing - 2.5L Duratec-HE (122kW/165PS) - MI4 (308-01 Clutch - Vehicles With: 5-Speed Manual Transmission - MT75, Removal and Installation).

2. **NOTE:** Do not apply grease to a newly installed pilot bearing.

   Apply approximately one gram of grease to the pilot bearing.

3. Apply a thin film of grease to the input shaft guide sleeve.

4. Shift the transmission into third gear.

All vehicles

5. General Equipment: Transmission Jack
   Torque: 48 Nm

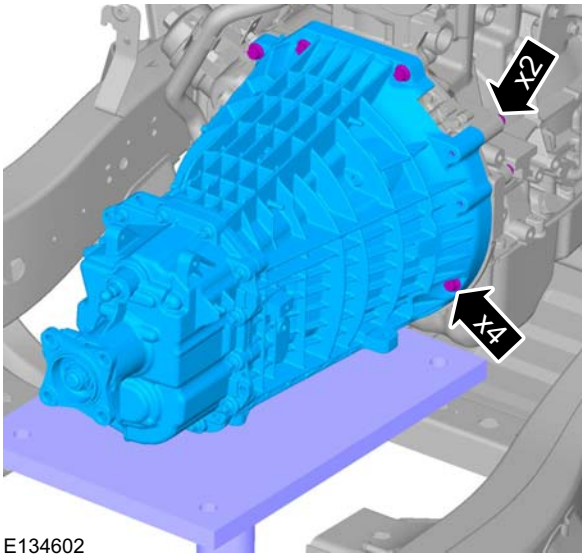

E134602

6. Torque: 48 Nm

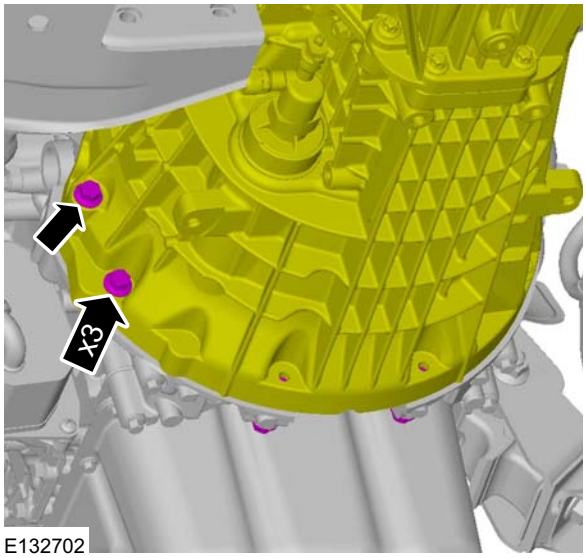

E132702

7. 1. Torque: 25 Nm
   2. Torque: 40 Nm

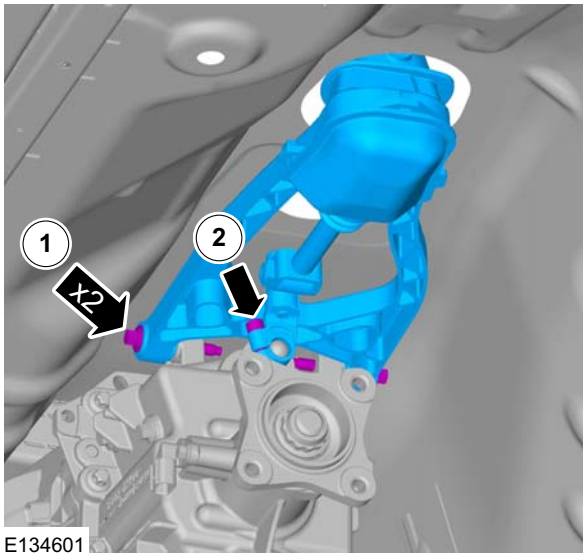

E134601

INSTALLATION

8.

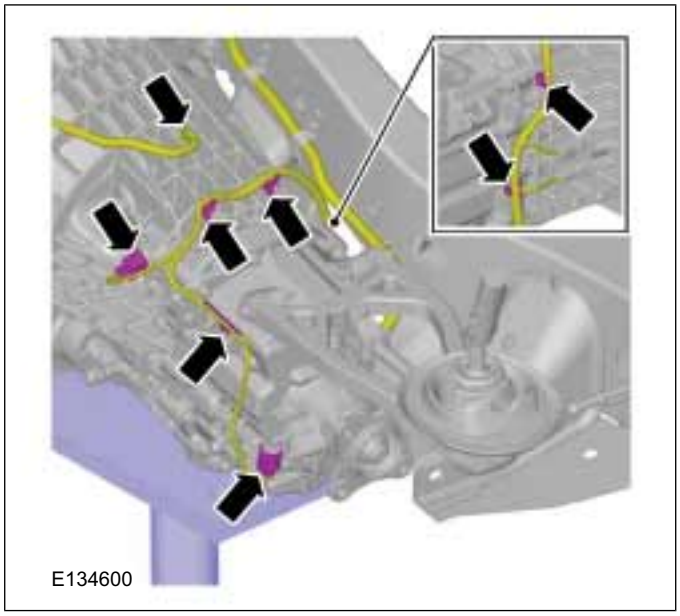

9. Torque: 90 Nm

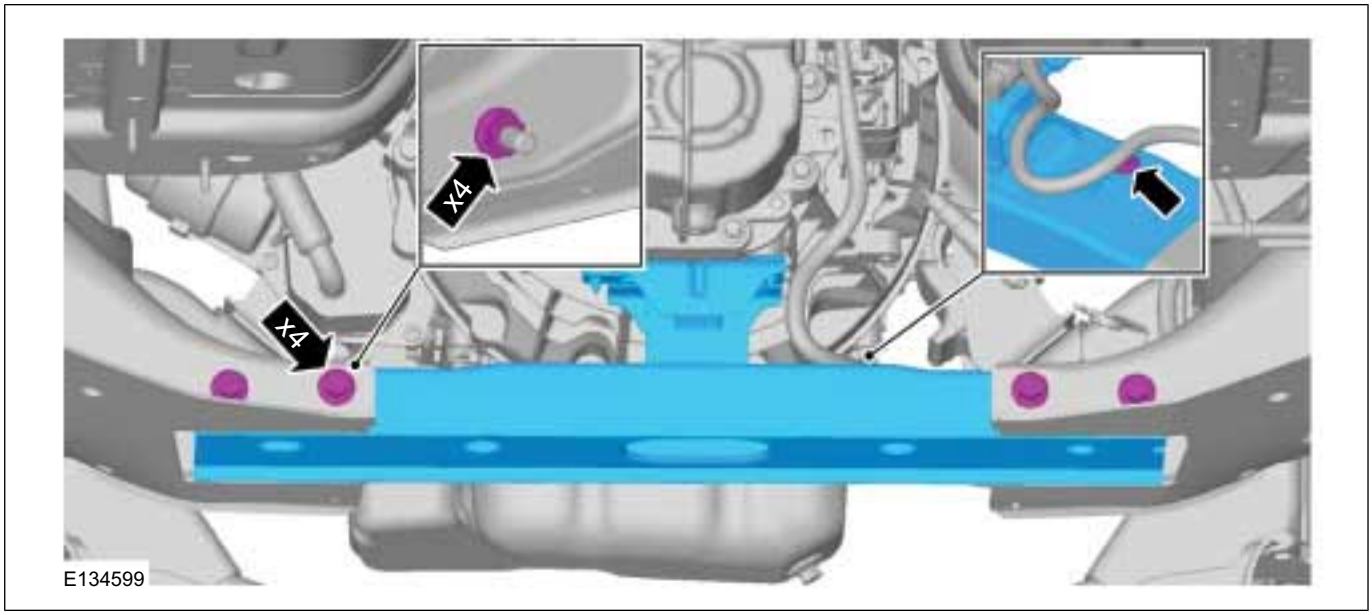

INSTALLATION

10. Lower the transmission jack.

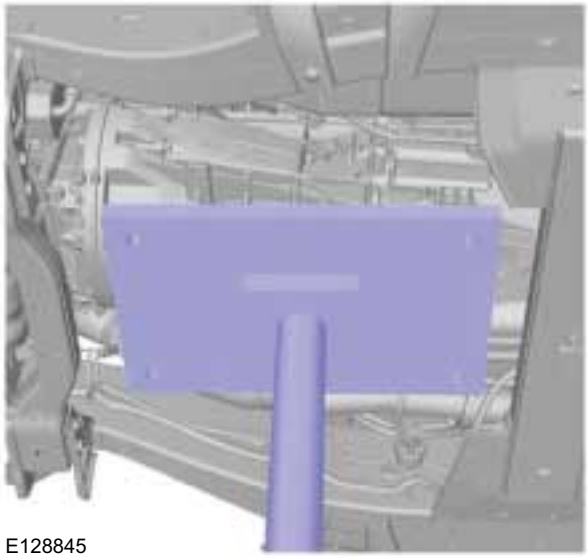
E128845

11. Torque: 55 Nm

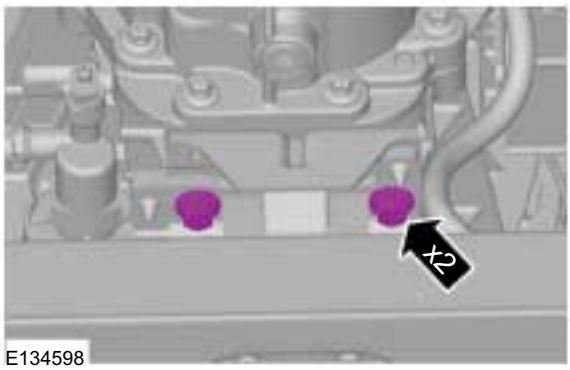

E134598

12. Torque: 25 Nm

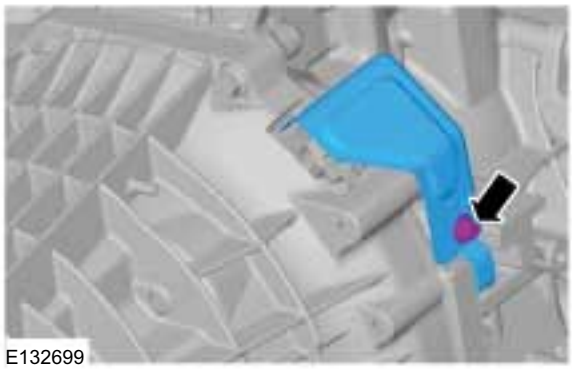
E132699

Vehicles with 2.5L engine

13. Torque: 50 Nm

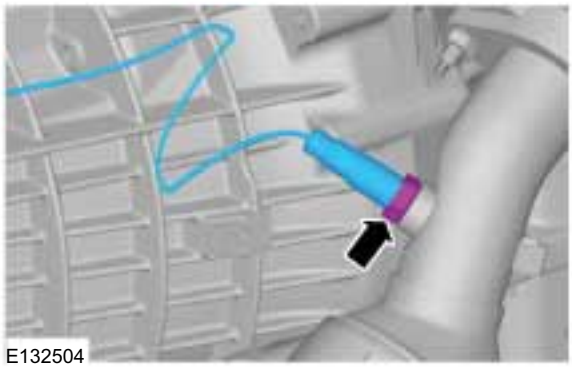
E132504

14.

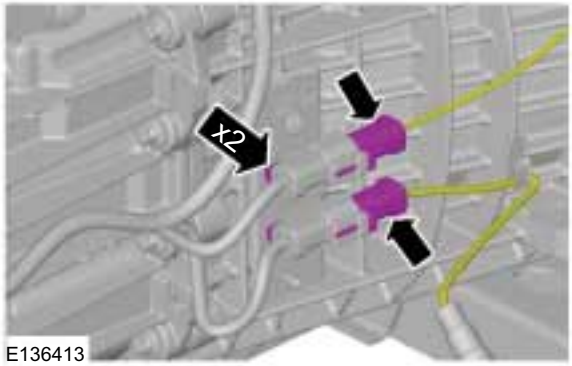

E136413

15. Torque: 11 Nm

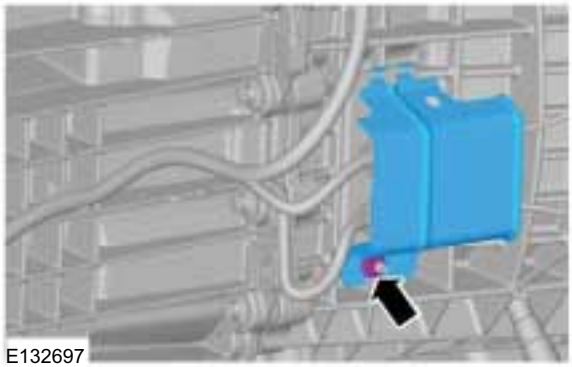
E132697

INSTALLATION

All vehicles

16. **NOTE:** Uncap the fluid line.

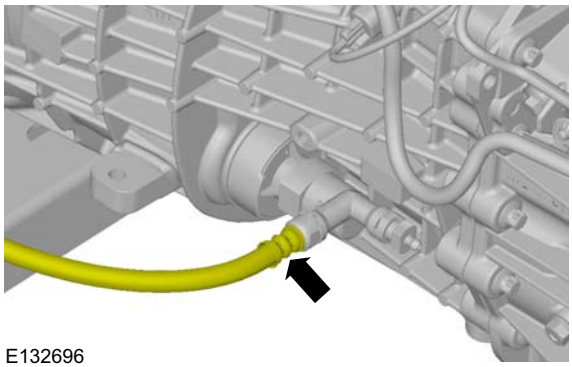
E132696

17. Torque: 35 Nm

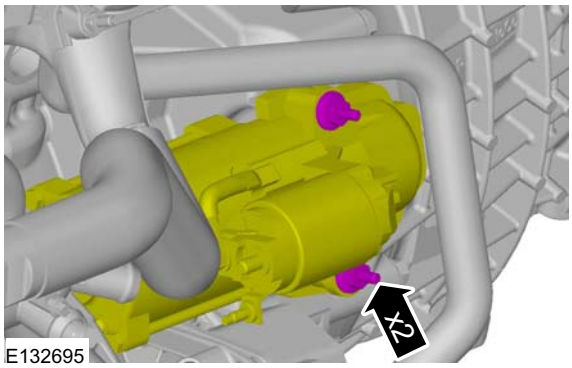

E132695

18. Torque: 35 Nm

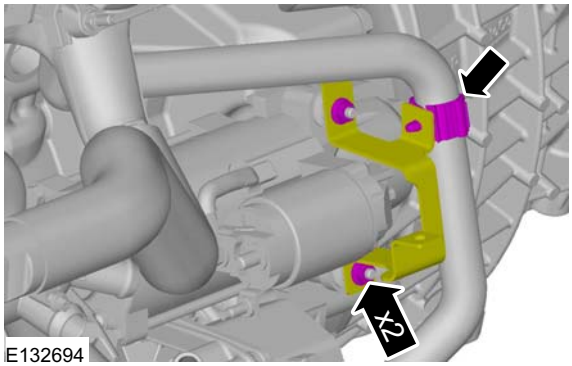

E132694

19. Refer to: Driveshaft - 2WD (205-01 Driveshaft, Removal and Installation).

20. Refer to: Jacking (100-02 Jacking and Lifting, Description and Operation).
Refer to: Lifting (100-02 Jacking and Lifting, Description and Operation).

21. Refer to: Catalytic Converter (309-00 Exhaust System - 2.2L Duratorq-TDCi (88kW/120PS) - Puma/2.2L Duratorq-TDCi (96kW/130PS) - Puma/2.2L Duratorq-TDCi (110kW/150PS) - Puma/3.2L Duratorq-TDCi (148kW/200PS) - Puma, Removal and Installation).

22.

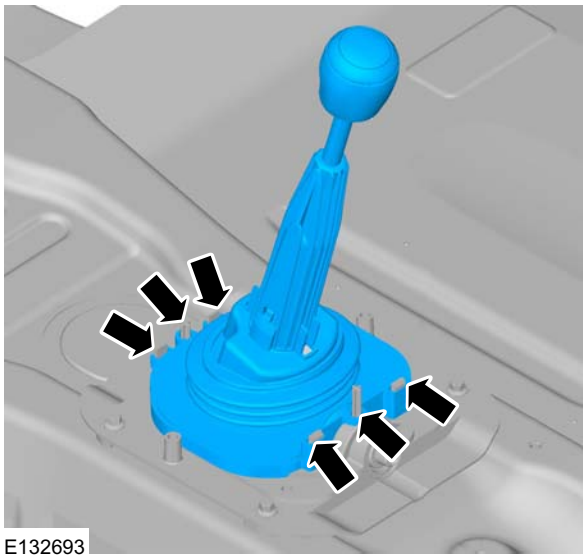
E132693

23. Refer to: Floor Console - Single Cab (501-12 Instrument Panel and Console, Removal and Installation).
Refer to: Floor Console - Double Cab (501-12 Instrument Panel and Console, Removal and Installation).

24. Refer to: Battery Disconnect and Connect (414-01 Battery, Mounting and Cables, General Procedures).

INSTALLATION

Transmission — 4WD

Installation

1. Check the pilot bearing for damage. If damaged, install a new pilot bearing.

   Refer to: Pilot Bearing - 2.5L Duratec-HE (122kW/165PS) - MI4 (308-01 Clutch - Vehicles With: 5-Speed Manual Transmission - MT75, Removal and Installation).

2. **NOTE:** Do not apply grease to a newly installed pilot bearing.

   Apply approximately one gram of grease to the pilot bearing.

3. Apply a thin film of grease to the input shaft guide sleeve.

4. Shift the transmission into third gear.

All vehicles

5. Torque: 25 Nm

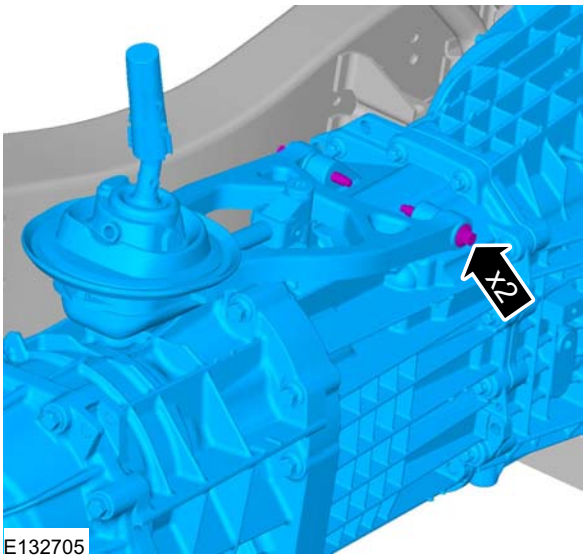

E132705

6.

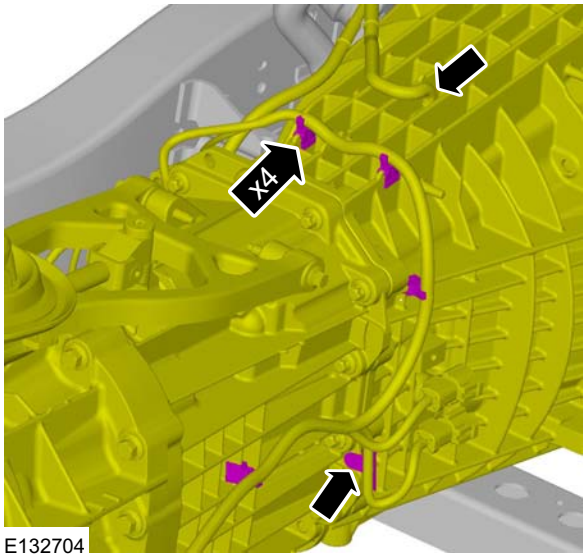

E132704

7.

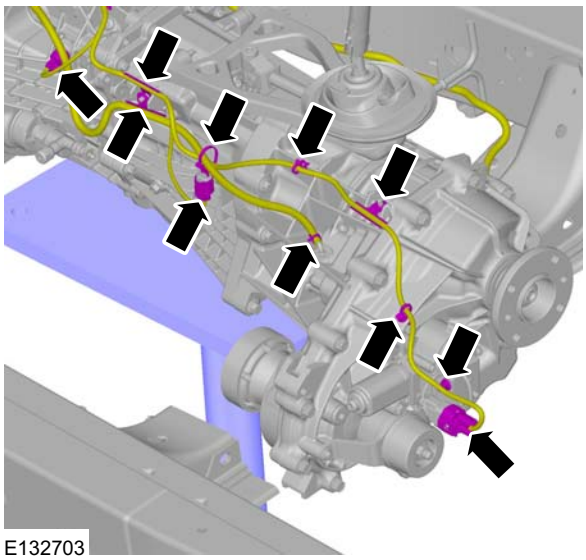
E132703

INSTALLATION

8. Torque: 48 Nm

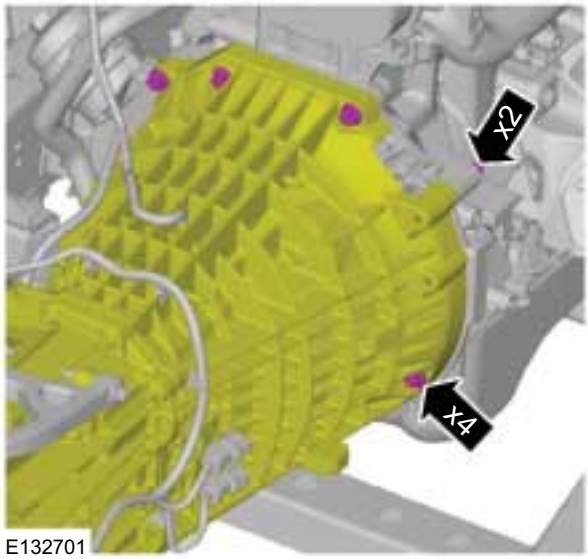

E132701

9. Torque: 48 Nm

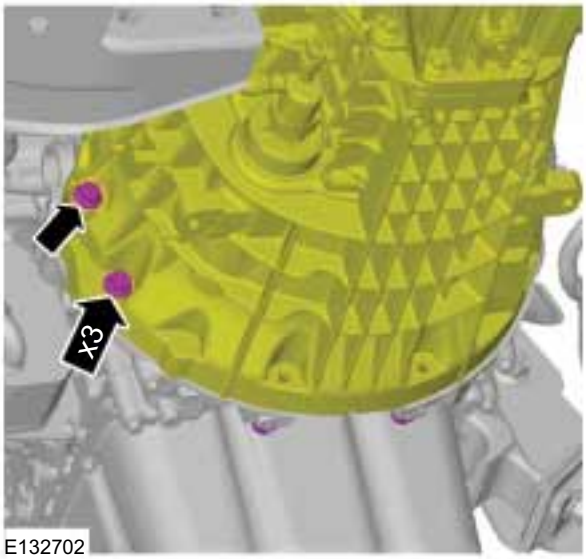

E132702

10. Torque: 90 Nm

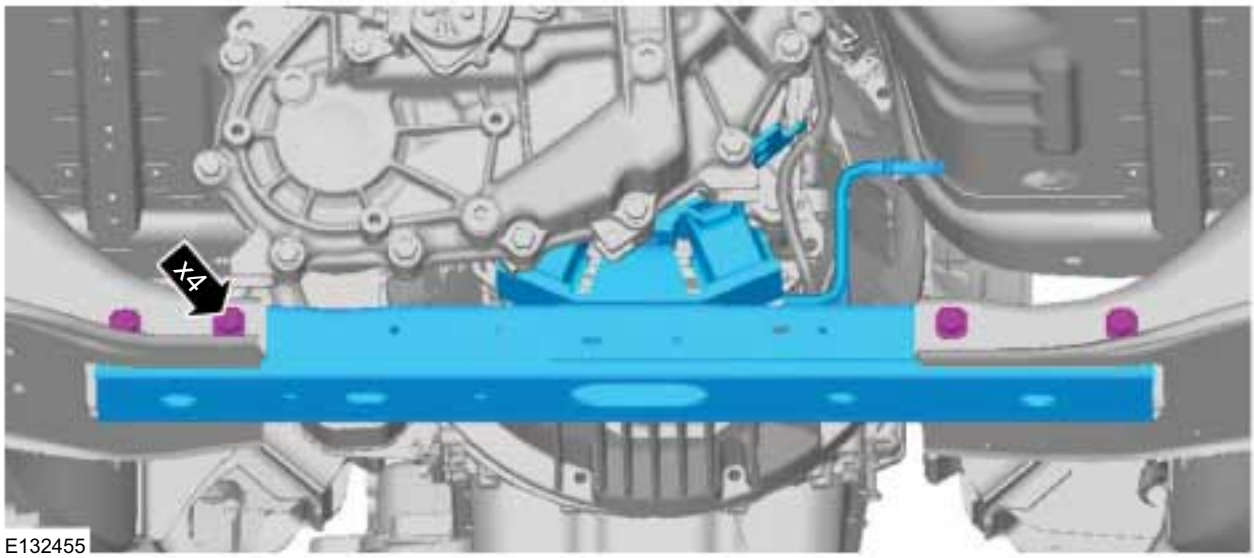

E132455

11. Torque: 90 Nm

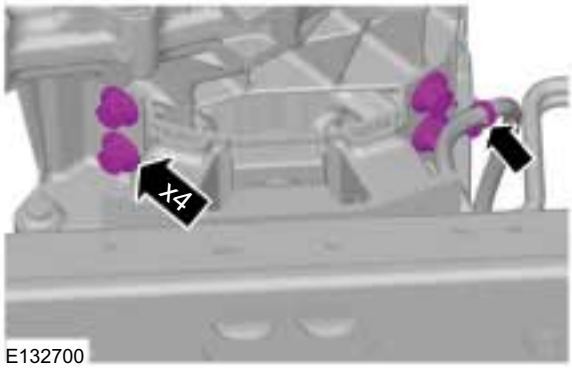

E132700

INSTALLATION

12. Lower the transmission jack.

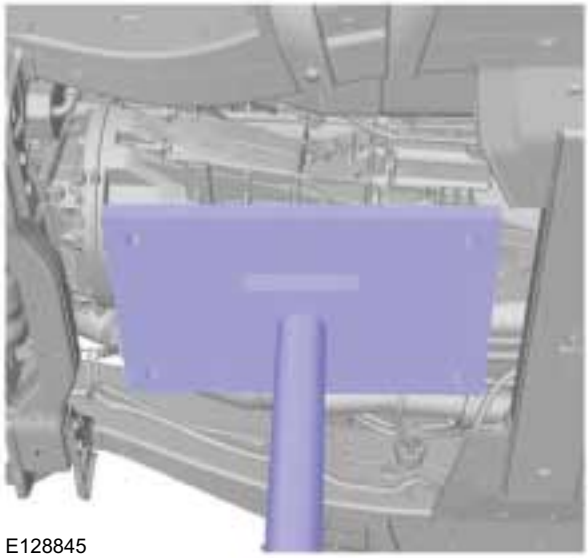
E128845

13. Torque: 48 Nm

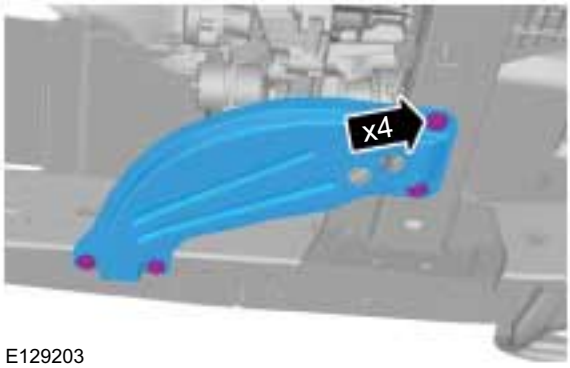

E129203

14. Torque: 25 Nm

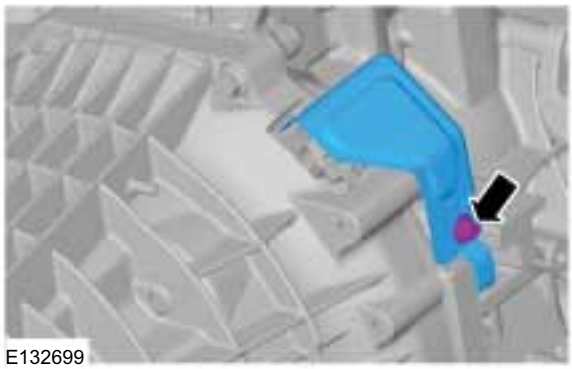
E132699

Vehicles with 2.5L engine

15. Torque: 50 Nm

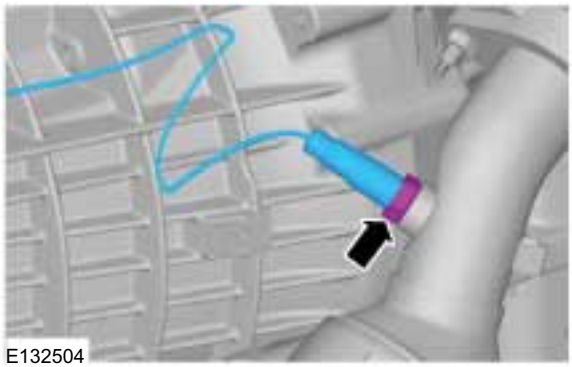
E132504

16.

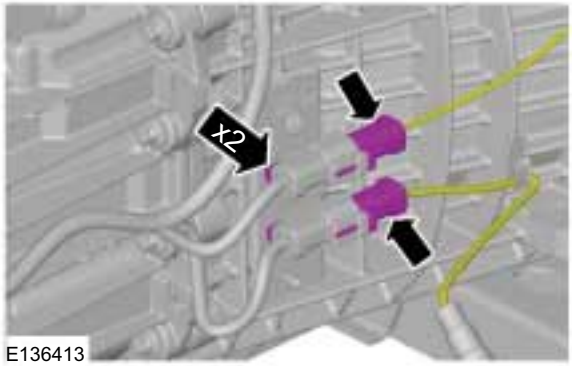

E136413

17. Torque: 11 Nm

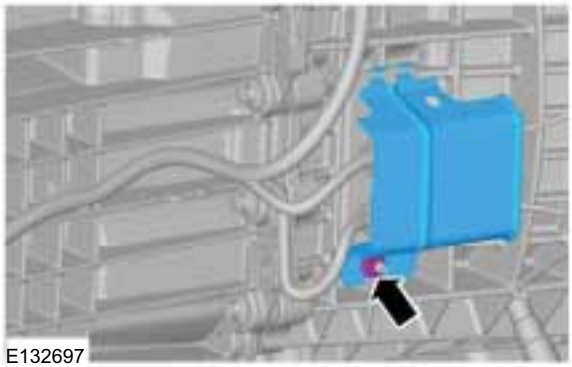
E132697

INSTALLATION

All vehicles

18. **NOTE:** Uncap the fluid line.

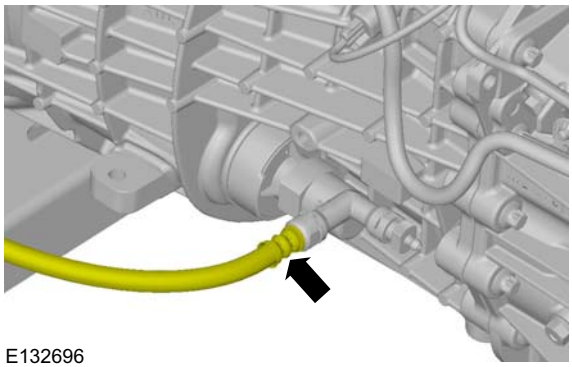
E132696

19. Torque: 35 Nm

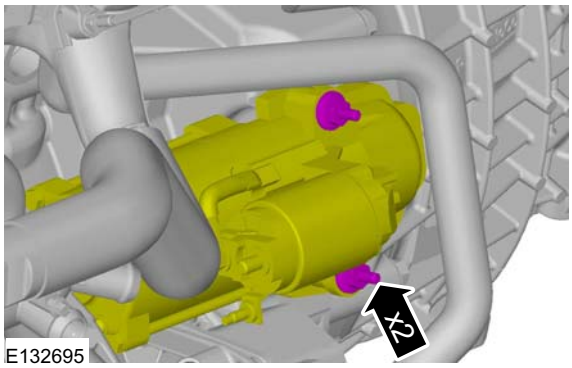

E132695

20. Torque: 35 Nm

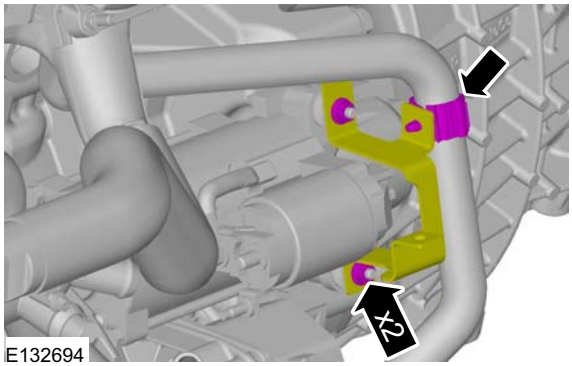

E132694

21. Refer to: Driveshaft - 4WD (205-01 Driveshaft, Removal and Installation).
Refer to: Front Driveshaft - 4WD (205-01 Driveshaft, Removal and Installation).

22. Refer to: Jacking (100-02 Jacking and Lifting, Description and Operation).
Refer to: Lifting (100-02 Jacking and Lifting, Description and Operation).

23. Refer to: Catalytic Converter (309-00 Exhaust System - 2.2L Duratorq-TDCi (88kW/120PS) - Puma/2.2L Duratorq-TDCi (96kW/130PS) - Puma/2.2L Duratorq-TDCi (110kW/150PS) - Puma/3.2L Duratorq-TDCi (148kW/200PS) - Puma, Removal and Installation).

24.

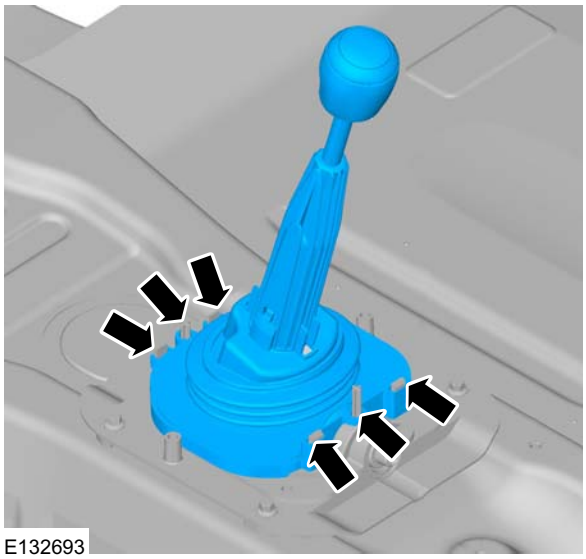
E132693

25. Refer to: Floor Console - Single Cab (501-12 Instrument Panel and Console, Removal and Installation).
Refer to: Floor Console - Double Cab (501-12 Instrument Panel and Console, Removal and Installation).

26. Refer to: Battery Disconnect and Connect (414-01 Battery, Mounting and Cables, General Procedures).

SECTION 308-03B Manual Transmission/Transaxle —

Vehicles With: 6-Speed Manual Transmission - MT82

VEHICLE APPLICATION: 2011.50 Ranger

CONTENTS PAGE

PAGE 1 OF 2

SPECIFICATIONS

Specifications..... 308-03B-3

DESCRIPTION AND OPERATION

Manual Transmission (Overview)..... 308-03B-4
Component Location..... 308-03B-4
Overview..... 308-03B-5
Internal gearshift mechanism..... 308-03B-6
Internal gears - Transfer case..... 308-03B-8
(4x2)..... 308-03B-8
Side view - right-hand side..... 308-03B-9
4x4..... 308-03B-10
Side view - left-hand side..... 308-03B-10
Side view - right-hand side..... 308-03B-11
Torque path..... 308-03B-12
External gearshift mechanism..... 308-03B-15

DIAGNOSIS AND TESTING

Manual Transmission..... 308-03B-16

GENERAL PROCEDURES

Transmission Draining and Filling..... 308-03B-17
Transmission Fluid Level Check..... 308-03B-18

REMOVAL AND INSTALLATION

Input Shaft Seal..... 308-03B-19
Output Shaft Seal..... 308-03B-20

REMOVAL

Transmission — 2.2L Duratorq-TDCi (88kW/120PS) - Puma/2.2L Duratorq-TDCi (96kW/130PS) - Puma/2.2L Duratorq-TDCi (110kW/150PS) - Puma/3.2L Duratorq-TDCi (148kW/200PS) - Puma, 2WD..... 308-03B-21
Transmission — 2.2L Duratorq-TDCi (88kW/120PS) - Puma/2.2L Duratorq-TDCi (96kW/130PS) - Puma/2.2L Duratorq-TDCi (110kW/150PS) - Puma/3.2L Duratorq-TDCi (148kW/200PS) - Puma, 4WD..... 308-03B-26

DISASSEMBLY

Transmission..... 308-03B-32

PAGE 2 OF 2

DISASSEMBLY AND ASSEMBLY OF SUBASSEMBLIES

Synchronizers..... 308-03B-33

ASSEMBLY

Transmission..... 308-03B-35

INSTALLATION

Transmission — 2.2L Duratorq-TDCi (88kW/120PS) - Puma/2.2L Duratorq-TDCi (96kW/130PS) - Puma/2.2L Duratorq-TDCi (110kW/150PS) - Puma/3.2L Duratorq-TDCi (148kW/200PS) - Puma, 2WD..... 308-03B-36
Transmission — 2.2L Duratorq-TDCi (88kW/120PS) - Puma/2.2L Duratorq-TDCi (96kW/130PS) - Puma/2.2L Duratorq-TDCi (110kW/150PS) - Puma/3.2L Duratorq-TDCi (148kW/200PS) - Puma, 4WD..... 308-03B-42

SPECIFICATIONS

Lubricants, Fluids, Sealers and Adhesives

Item	Specification
Manual transmission fluid	WSD-M2C200-D2
Thread locking compound	WSK-M2G349-A7
Sealant	WSS-M2G348-A10
Grease	ESD-M1C220-A

Capacities

	Litres
MT82 transmission - Service fill	2.6
MT82 transmission - Add-on for initial fill or if transmission has been disassembled and assembled in the workshop	0.1

Torque Specifications

Description	Nm	lb-ft	lb-in
Transmission retaining bolts	50	37	-
Reversing lamp switch	20	15	-
Transmission output shaft flange retaining nut	200	148	-
Oil drain plug	50	37	-
Oil fill plug	35	26	-
Vehicle speed sensor (VSS)	10	-	89

DESCRIPTION AND OPERATION

Manual Transmission – Overview

Component Location
4x2

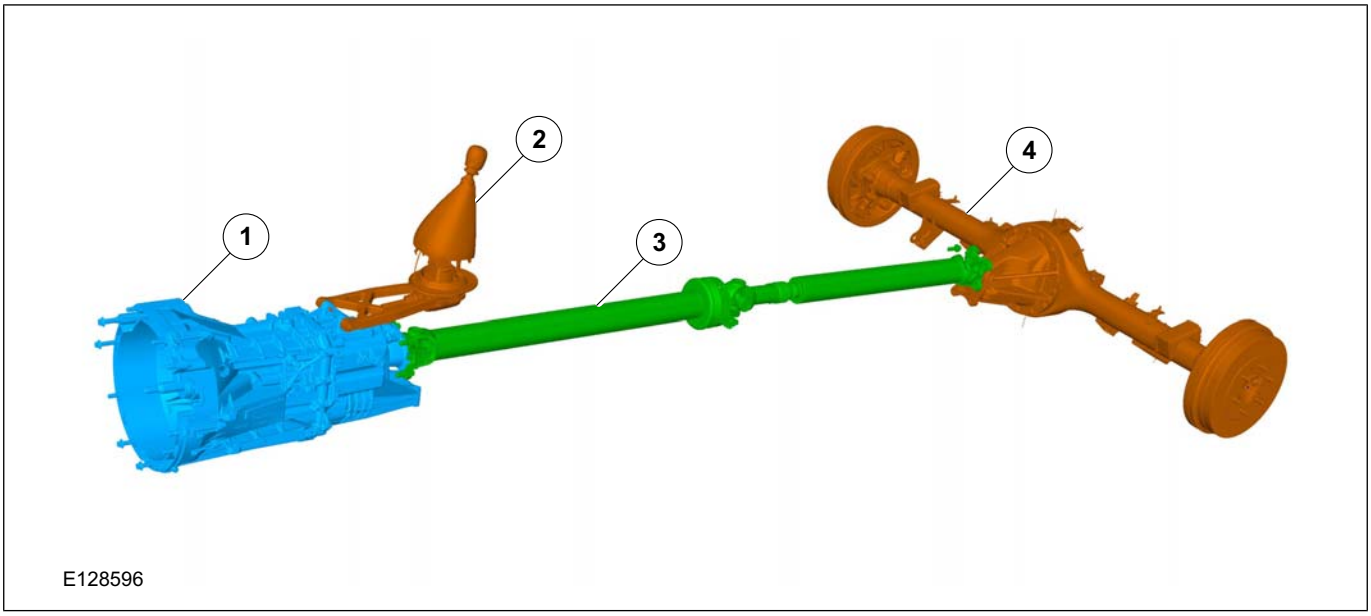

Item	Description
1	MT82 4x2
2	Manual gear change lever

Item	Description
3	Rear propeller shaft
4	Rear drive axle

DESCRIPTION AND OPERATION

4x4

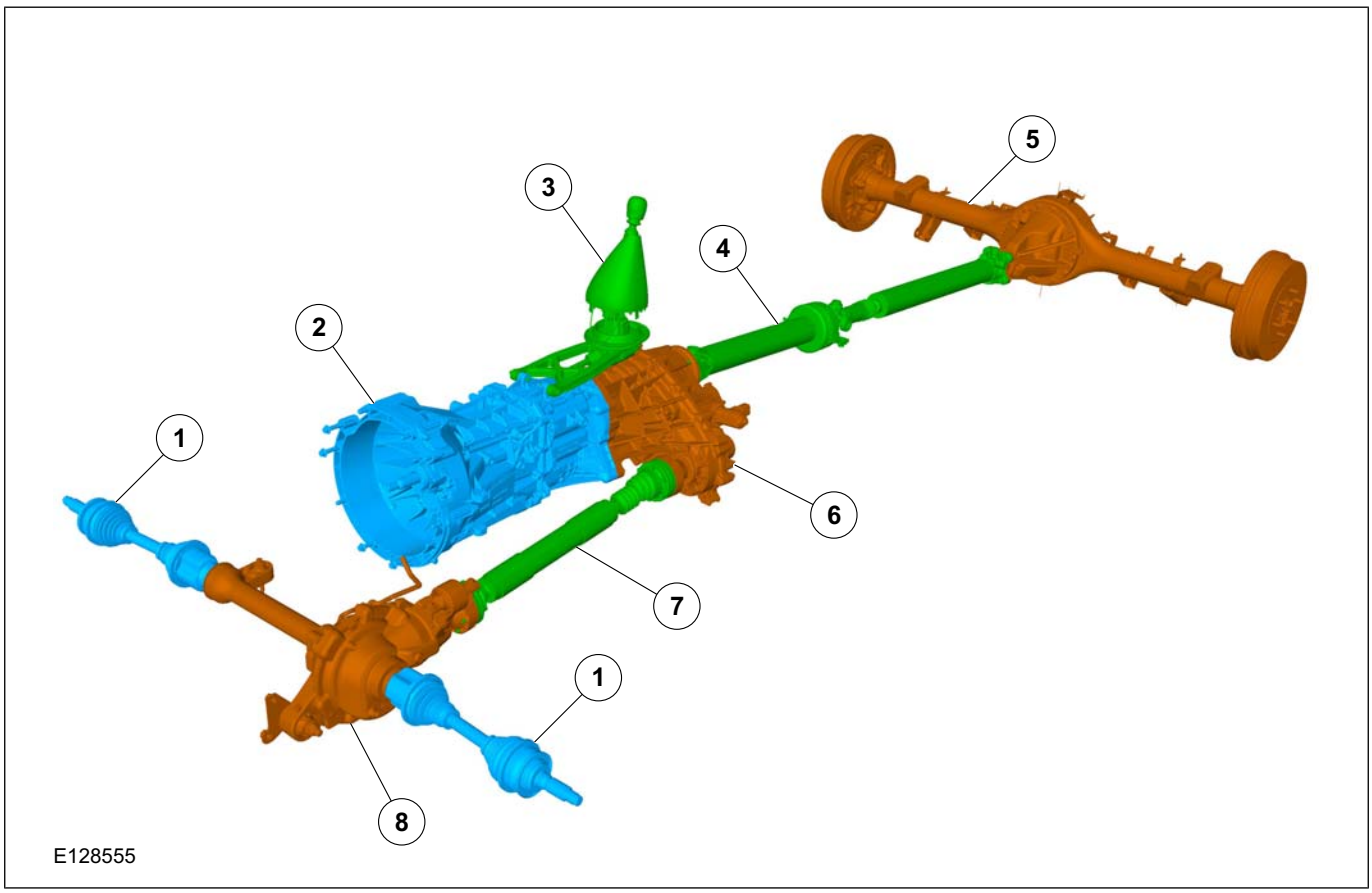

Item	Description
1	Front half shafts
2	MT82 4x4
3	Manual gear change lever
4	Rear propeller shaft

Item	Description
5	Rear drive axle
6	Transfer case
7	Front propeller shaft
8	Front differential assembly

Overview

The name of the 6-speed manual transaxle MT82 is derived from the distance between the two shafts in the transaxle:

- M stands for Manual
- T stands for Transaxle
- 82 is the distance between the two shafts in mm

DESCRIPTION AND OPERATION

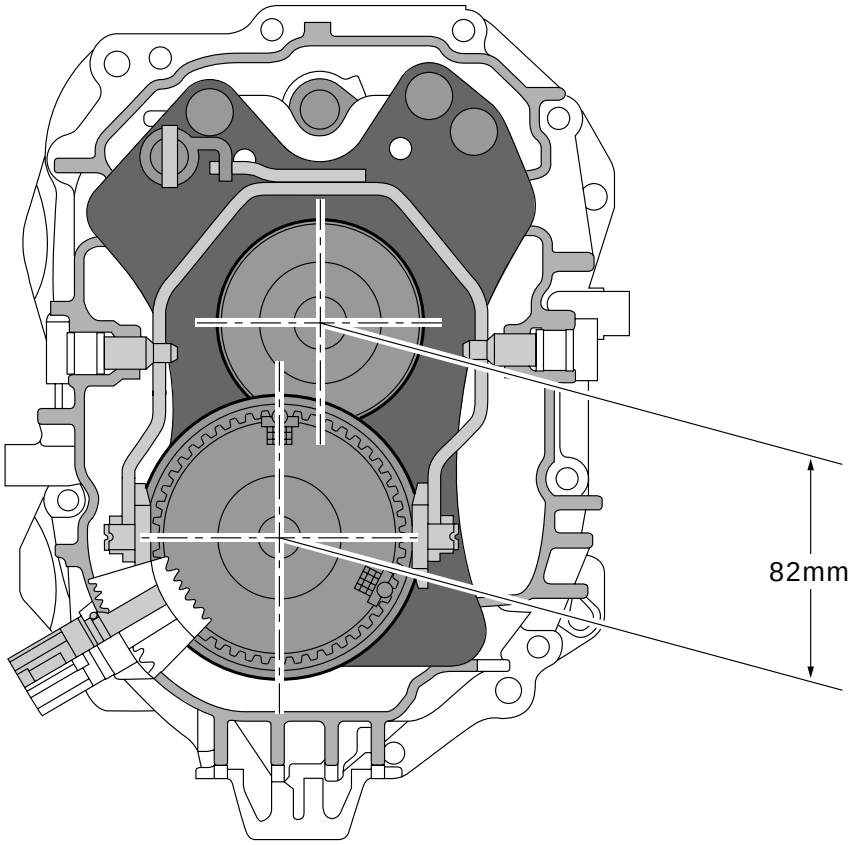

E47709

Transaxles are designed for a torque of max. 480 Nm.

In order to ensure secure mounting of the selector rods, these are passed through a centre bearing mounting plate. The centre bearing mounting plate is in turn bolted to the housing.

All gear selector forks and shift forks are made of forged steel.

The sliding elements of the selector forks are made of a plastic material that exhibits high resistance to wear.

The main selector shaft is mounted in the center bearing mounting plate.

Internal gearshift mechanism

DESCRIPTION AND OPERATION

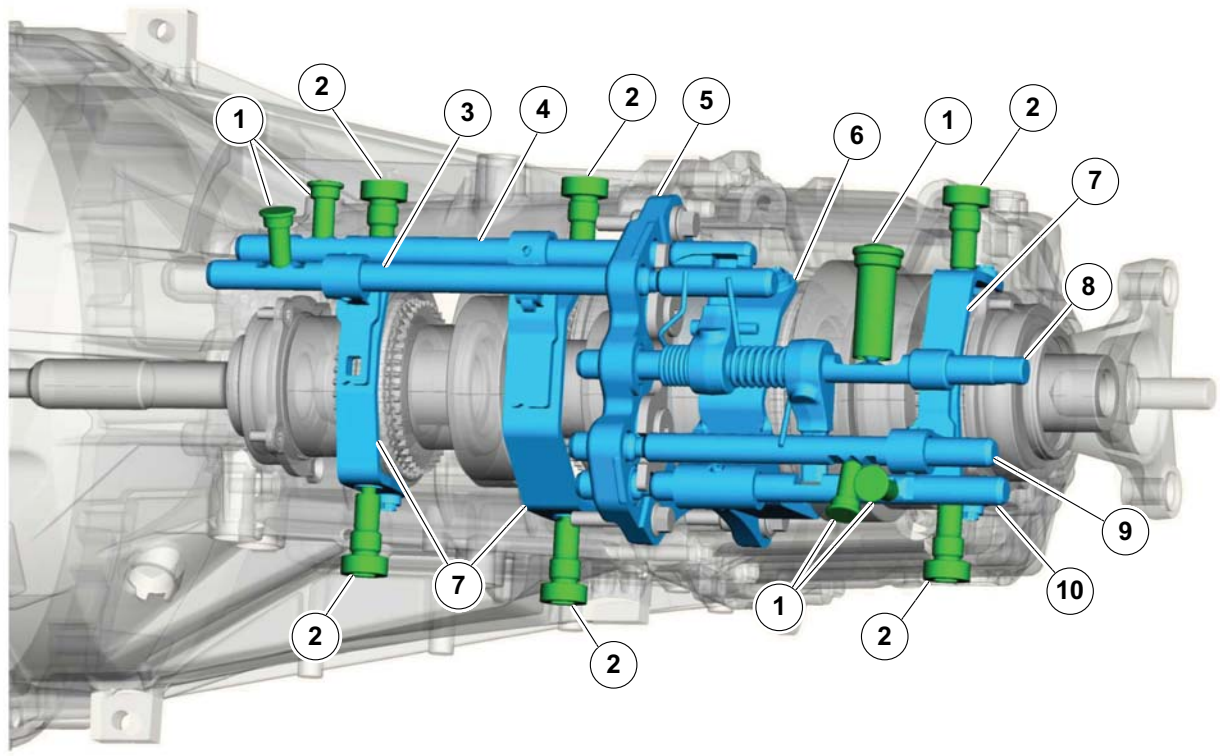

E104867

Item	Description
1	Selector rod detent
2	Shift fork bolt
3	1st/2nd gear selector rod
4	Reverse gear selector rod
5	Center bearing mounting plate

Item	Description
6	1st/2nd gear selector fork
7	Shift fork
8	Main shift rod
9	5th/6th gear selector rod
10	3rd/4th gear selector rod

DESCRIPTION AND OPERATION

Internal gears - Transfer case

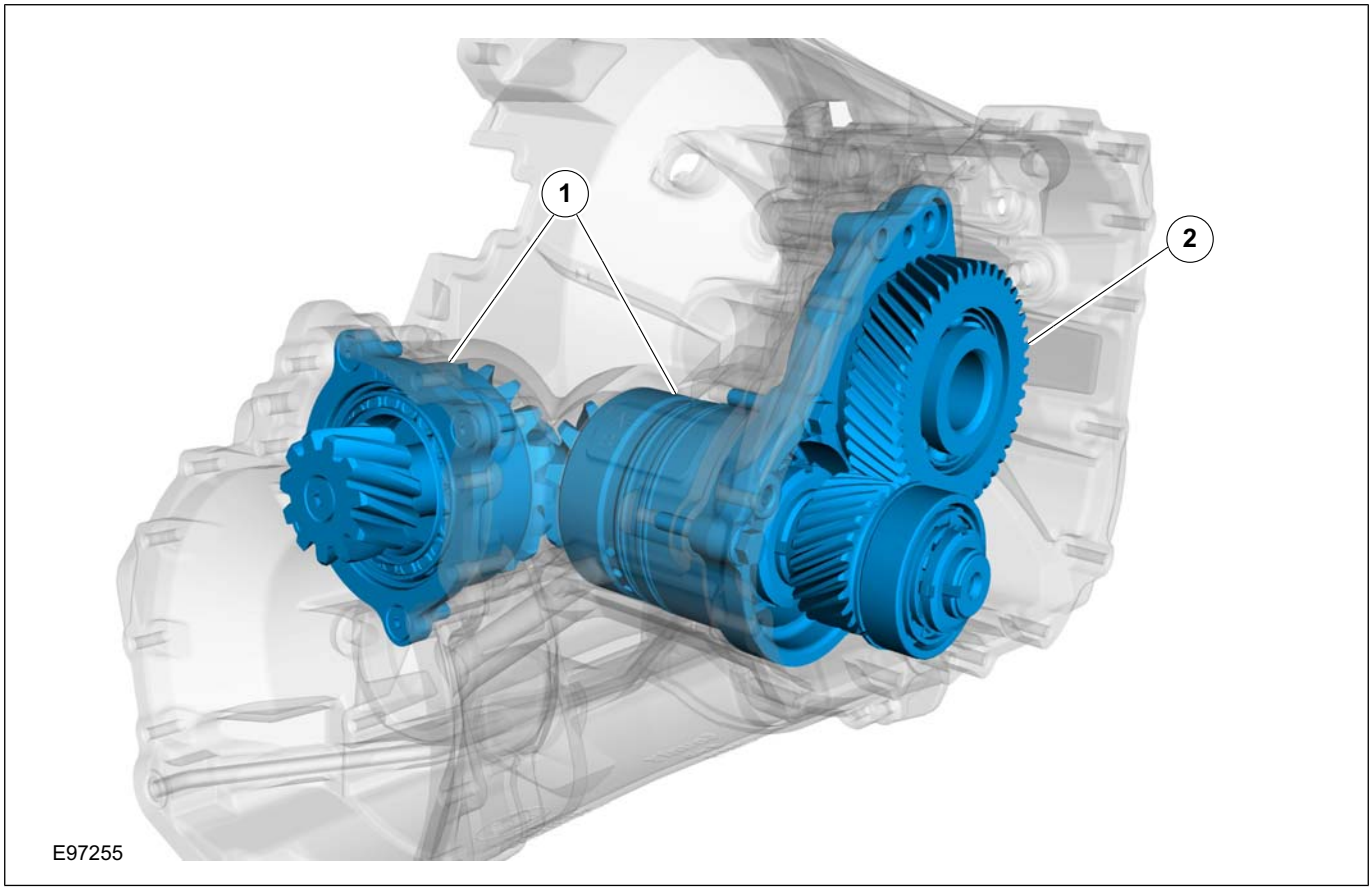

Item	Description
1	Right-angle drive
2	Idle gear

(4x2)

DESCRIPTION AND OPERATION

Side view - left-hand side

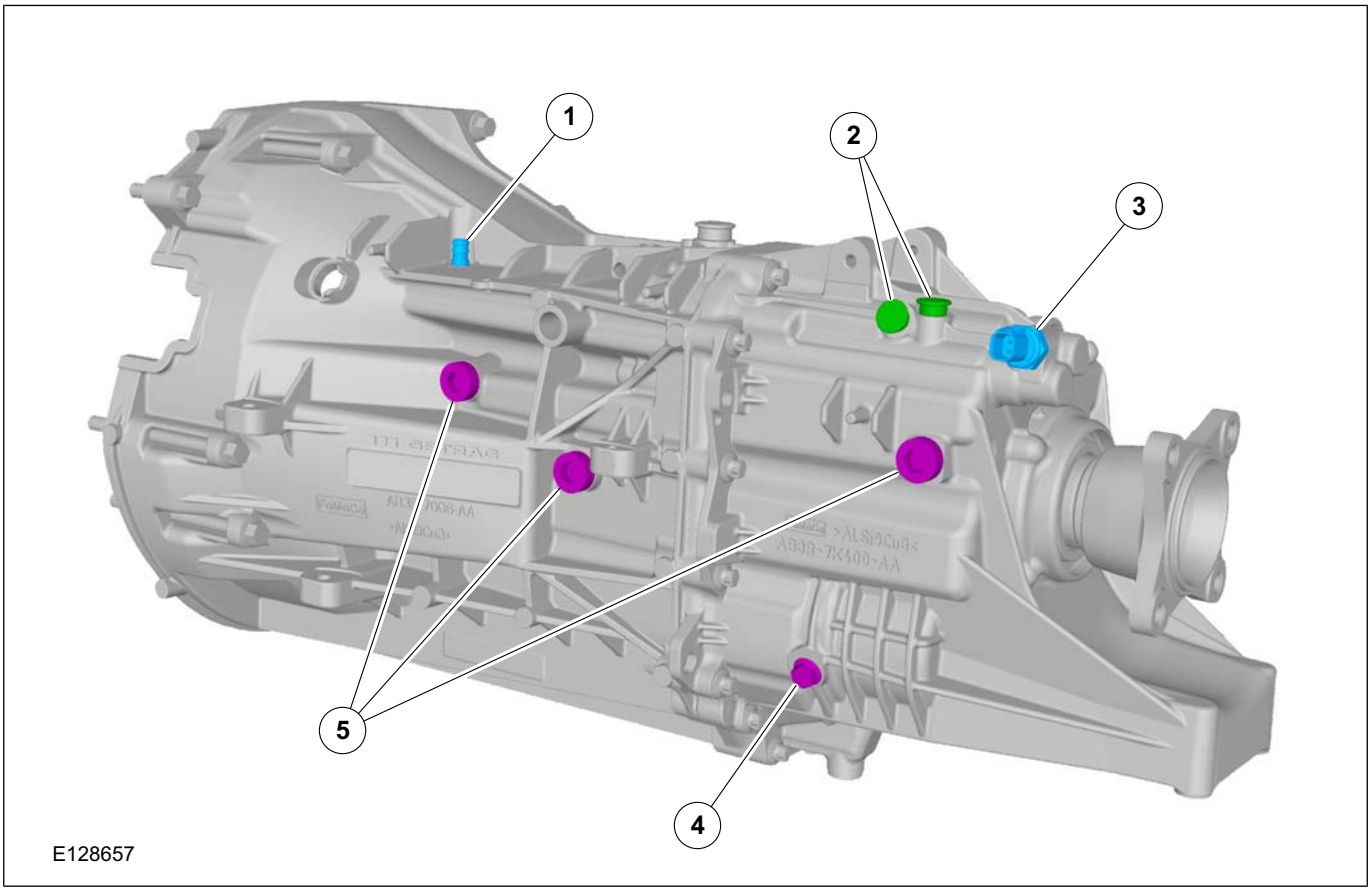

Item	Description
1	Transaxle breather
2	Selector rod detents

Item	Description
3	Reverse switch
4	Reverse gear mounting retaining bolt
5	Shift fork bolts

The reverse idler gear shaft is attached to the housing using the reverse gear mounting retaining bolt (4). This should not be mixed up with any other bolt on the transaxle.

NOTE: The reverse gear mounting retaining bolt should only be removed to dismantle the transaxle.

Side view - right-hand side

DESCRIPTION AND OPERATION

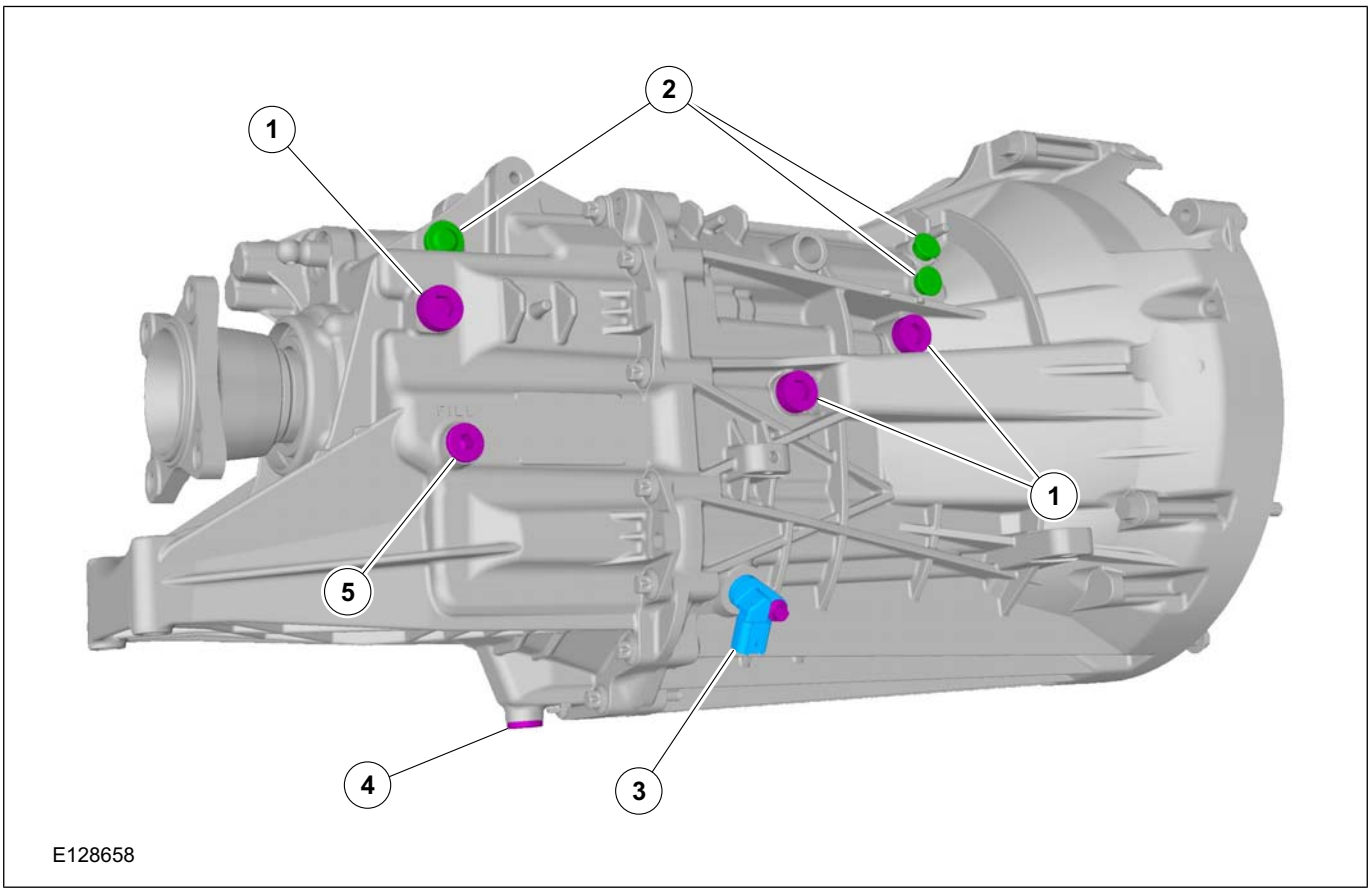

Item	Description
1	Shift fork bolts
2	Selector rod detents

Item	Description
3	Vehicle speed sensor
4	Oil drain plug
5	Oil filler plug / oil level check

The transmission oil in the MT82 6-speed transaxle does not need to be changed in service. Only before repair work on the transaxle should the transmission oil be drained by removing the oil drain plug (4).

NOTE: The shift fork bolts (1) must only be removed during repair.

The oil filler plug (5) also allows the oil level to be checked.

4x4

Side view - left-hand side

DESCRIPTION AND OPERATION

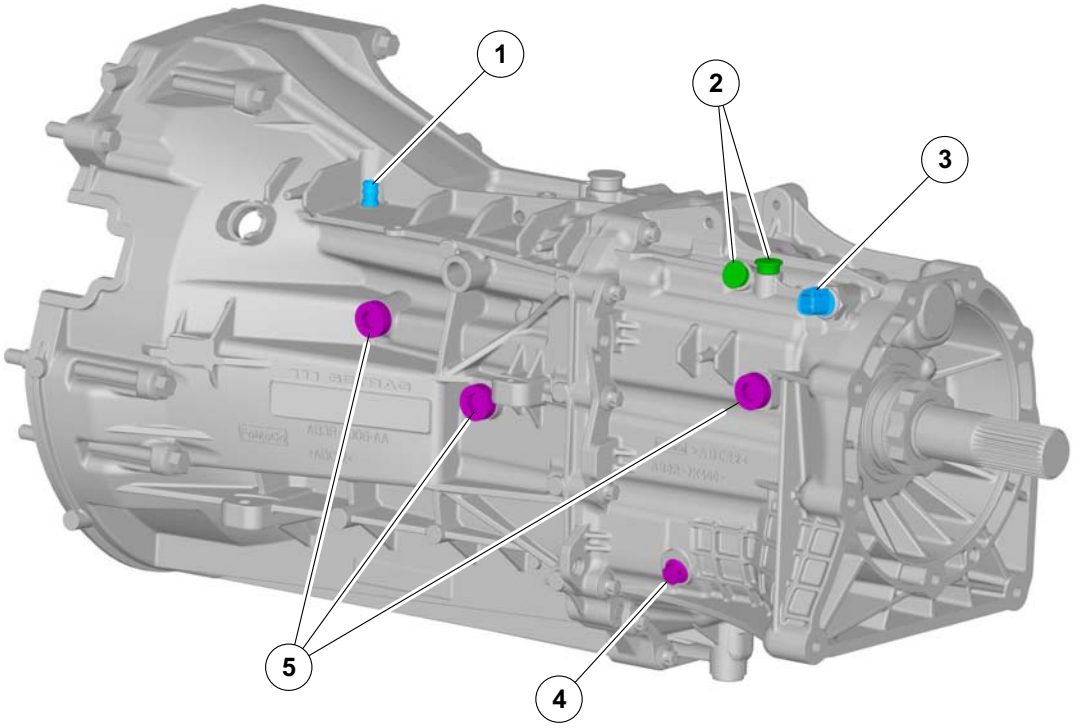

E139371

Item	Description
1	Transaxle breather
2	Selector rod detents

Item	Description
3	Reverse switch
4	Reverse gear mounting retaining bolt
5	Shift fork bolts

Side view - right-hand side

DESCRIPTION AND OPERATION

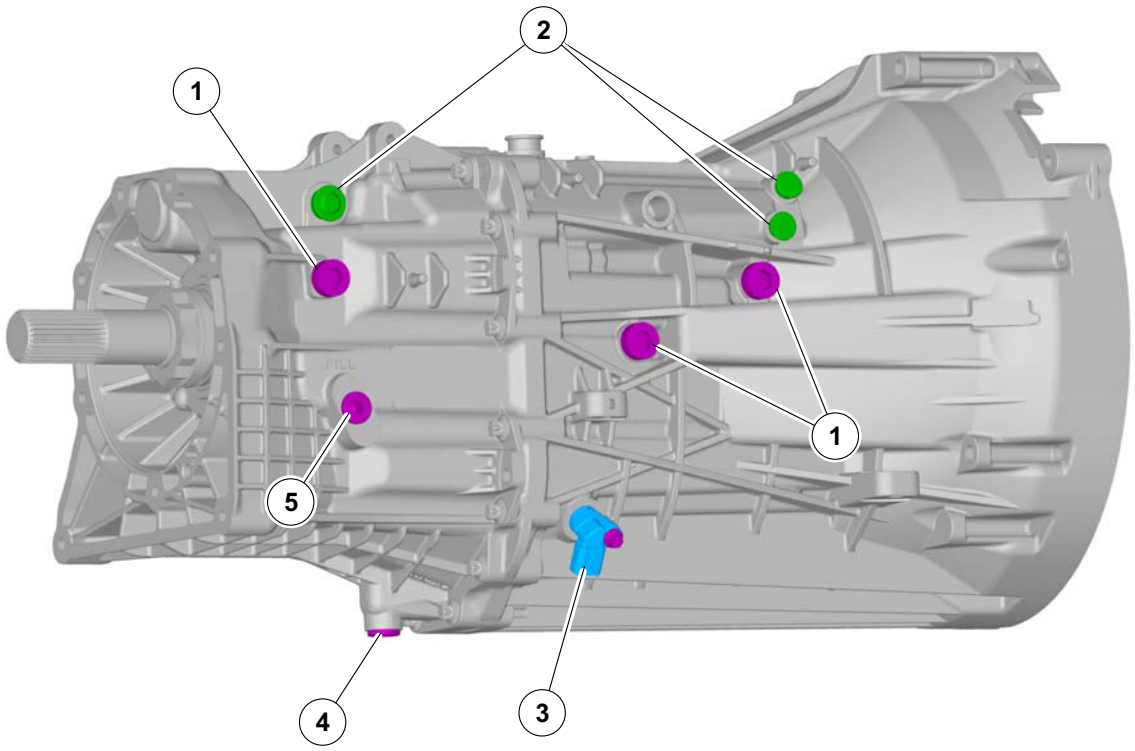

E139372

Item	Description
1	Shift fork bolts
2	Selector rod detents

Item	Description
3	Vehicle speed sensor
4	Oil drain plug
5	Oil filler plug / oil level check

Torque path

DESCRIPTION AND OPERATION

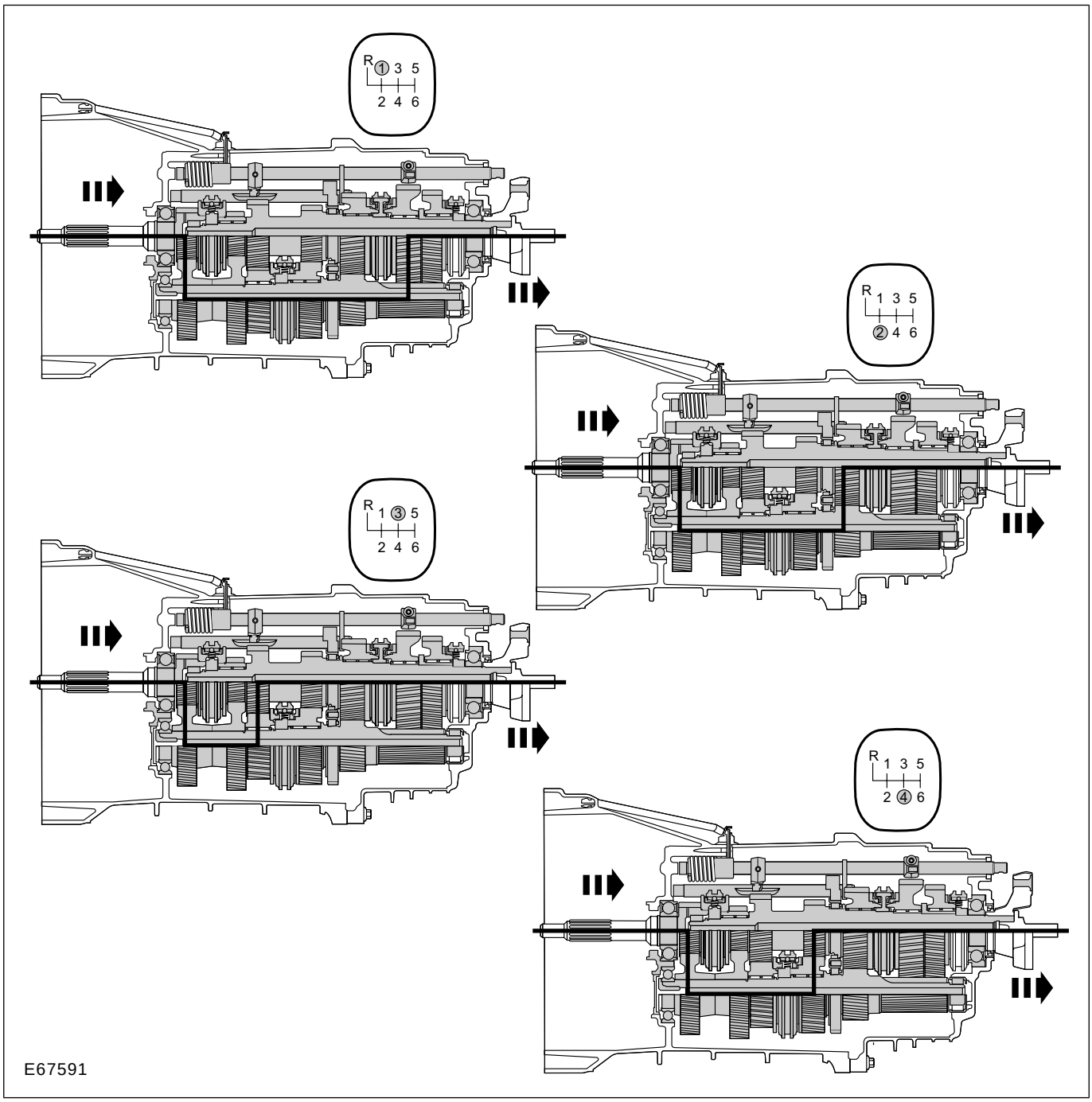

DESCRIPTION AND OPERATION

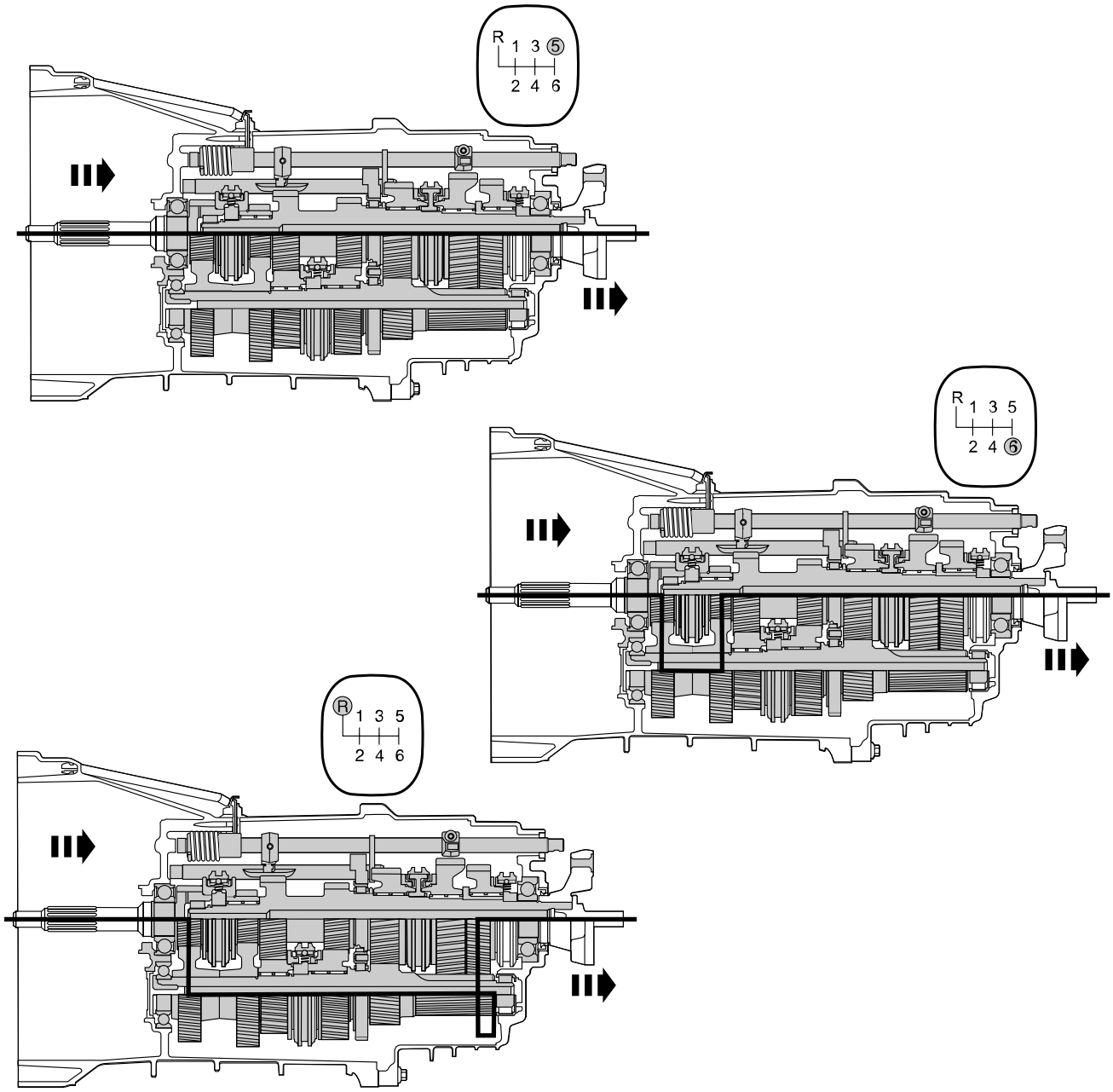

E67828

DESCRIPTION AND OPERATION

External gearshift mechanism

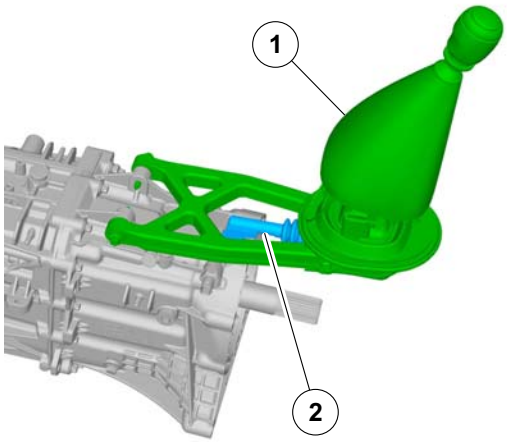

E128659

Item	Description
1	Selector lever
2	Gear shift rod

DIAGNOSIS AND TESTING

Manual Transmission

REFER to Section 308-00 [Manual Transmission/Transaxle and Clutch - General Information].

GENERAL PROCEDURES

Transmission Draining and Filling

Materials	
Name	**Specification**
Transmission Oil 75W FE	WSS-M2C200-D2 / 7U7J-M2C200-BA

1. Raise and support the vehicle.

   Refer to: Lifting (100-02 Jacking and Lifting, Description and Operation).

2. **WARNING: Be prepared to collect escaping fluid.**

   Torque: 50 Nm

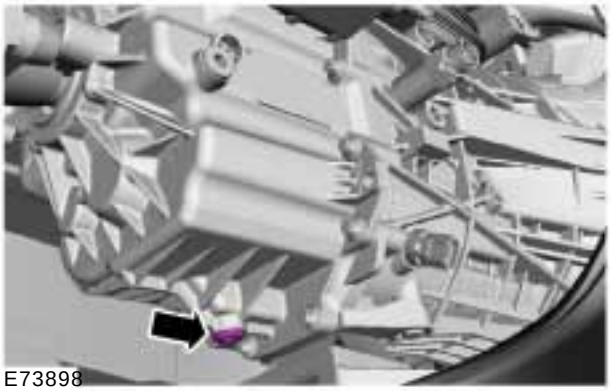

3. **NOTE:** Add additional 0.1L Transmission Fluid to the initial fill amount, if transmission has been disassembled and assembled in your workshop.

   Fill with 2.6L Transmission fluid.

   Material: Transmission Oil 75W FE (WSS-M2C200-D2 / 7U7J-M2C200-BA) transmission fluid

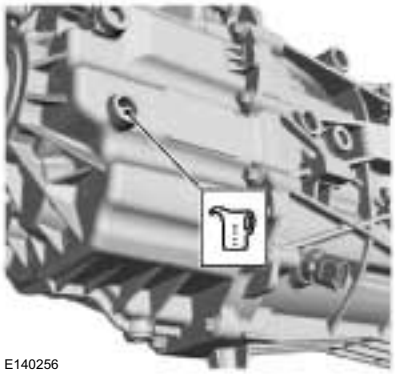

4. Torque: 35 Nm

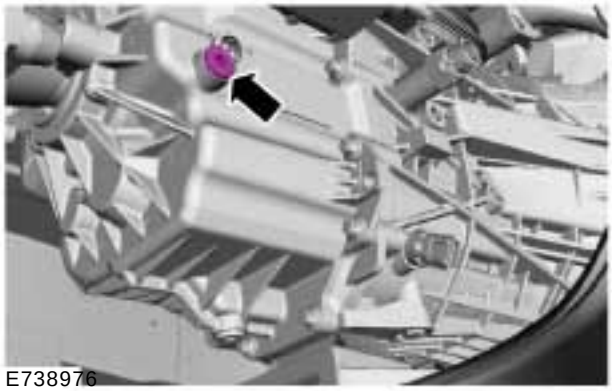

GENERAL PROCEDURES

Transmission Fluid Level Check

Materials	
Name	**Specification**
Transmission Oil 75W FE	WSS-M2C200-D2 / 7U7J-M2C200-BA

1. Check the component for leaks.
2. Transmission Fluid Level Check should only be carried out if an oil leak was identified.

   Refer to: Health and Safety Precautions (100-00 General Information, Description and Operation).
3. **NOTE:** Make sure that the vehicle is standing on a level surface.

   Refer to: Lifting (100-02 Jacking and Lifting, Description and Operation).
4.

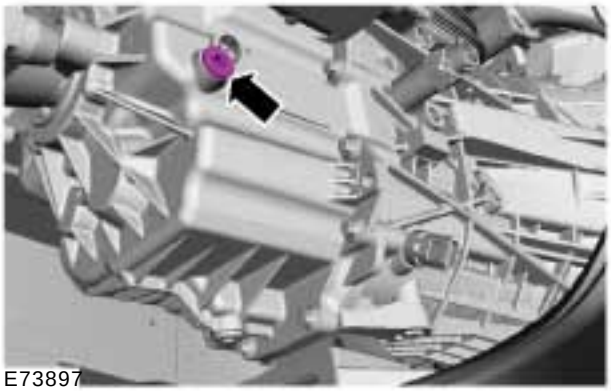

5. **X:**0 - 3 mm

   Material: Transmission Oil 75W FE (WSS-M2C200-D2 / 7U7J-M2C200-BA) transmission fluid

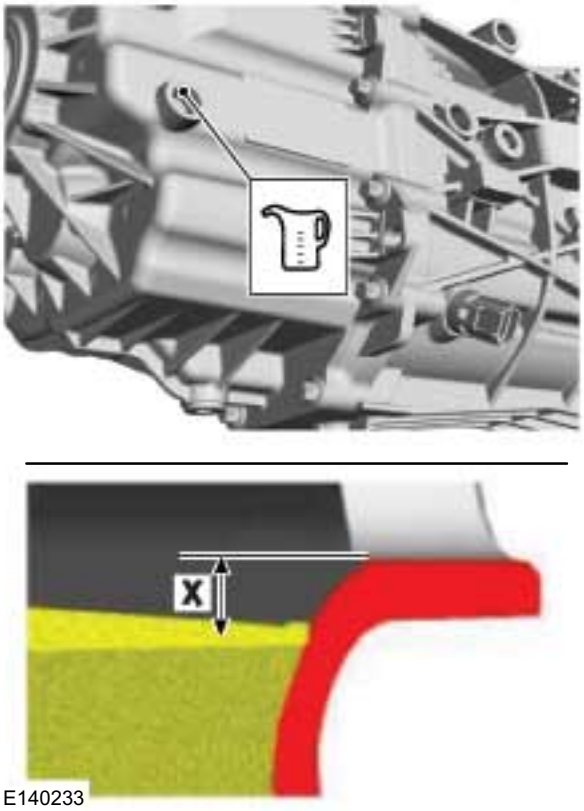

6. Torque: 35 Nm

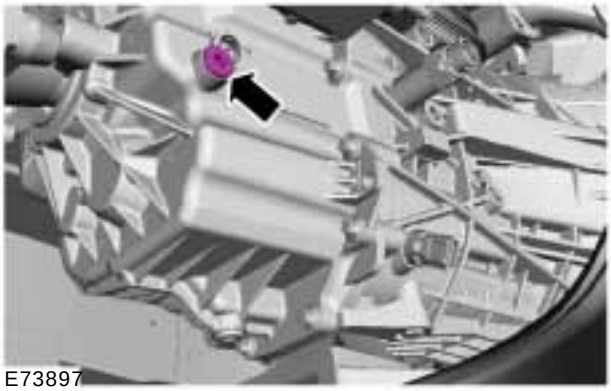

REMOVAL AND INSTALLATION

Input Shaft Seal

1. **Information not available at this time.**

REMOVAL AND INSTALLATION

Output Shaft Seal

2. Information not available at this time.

REMOVAL

Transmission — 2.2L Duratorq-TDCi (88kW/120PS) - Puma/2.2L Duratorq-TDCi (96kW/130PS) - Puma/2.2L Duratorq-TDCi (110kW/150PS) - Puma/3.2L Duratorq-TDCi (148kW/200PS) - Puma, 2WD

Removal

General Equipment

Transmission Jack

1. Refer to: Battery Disconnect and Connect (414-01 Battery, Mounting and Cables, General Procedures).
2. Refer to: Floor Console - Single Cab (501-12 Instrument Panel and Console, Removal and Installation).
   Refer to: Floor Console - Double Cab (501-12 Instrument Panel and Console, Removal and Installation).
3. Torque: 40 Nm

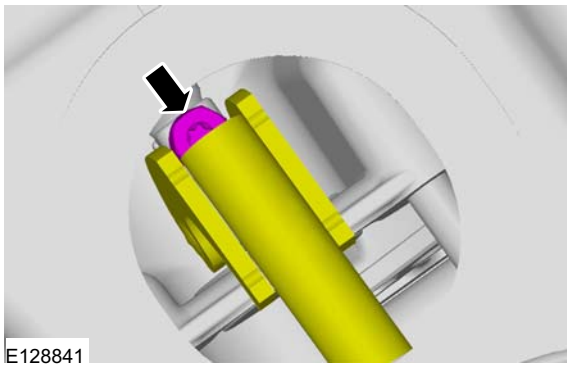
E128841

4. Refer to: Catalytic Converter (309-00 Exhaust System - 2.2L Duratorq-TDCi (88kW/120PS) - Puma/2.2L Duratorq-TDCi (96kW/130PS) - Puma/2.2L Duratorq-TDCi (110kW/150PS) - Puma/3.2L Duratorq-TDCi (148kW/200PS) - Puma, Removal and Installation).
5. Refer to: Driveshaft - 2WD (205-01 Driveshaft, Removal and Installation).
6. **CAUTION: Cap the clutch slave cylinder supply line to prevent fluid loss or dirt ingress.**

NOTE: If the clutch fluid comes into contact with the painted area, rinse off the affected areas with cold water without delay.

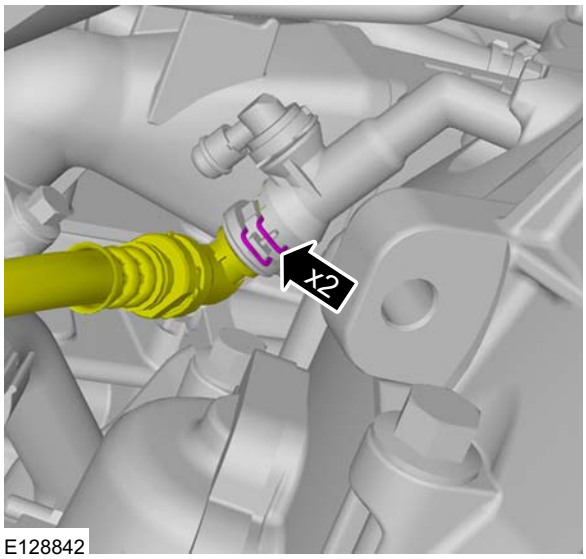

E128842

7.

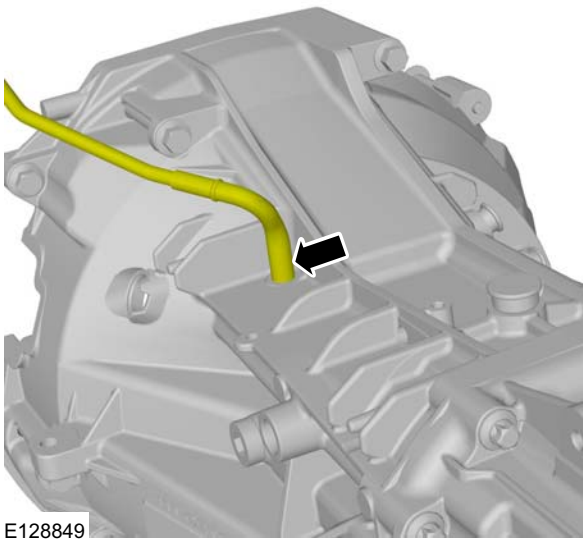
E128849

REMOVAL

8. Torque: 25 Nm

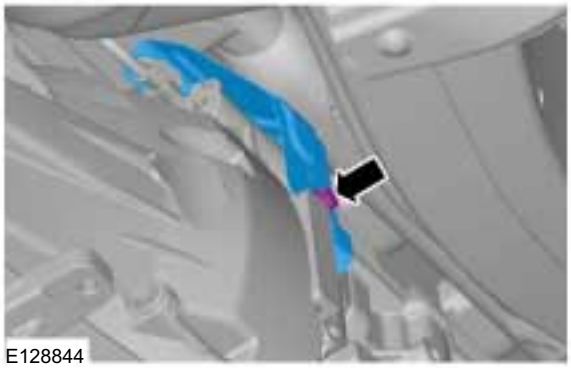
E128844

10. Torque: 35 Nm

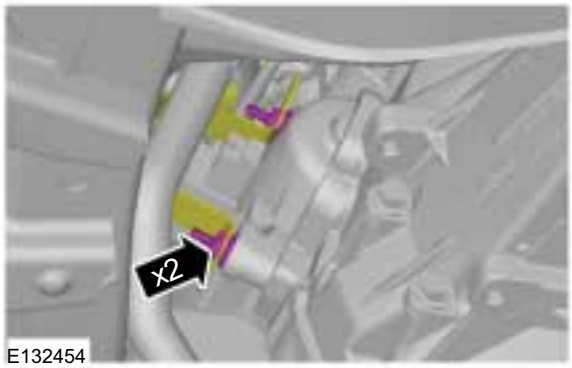

E132454

9. Torque: 25 Nm

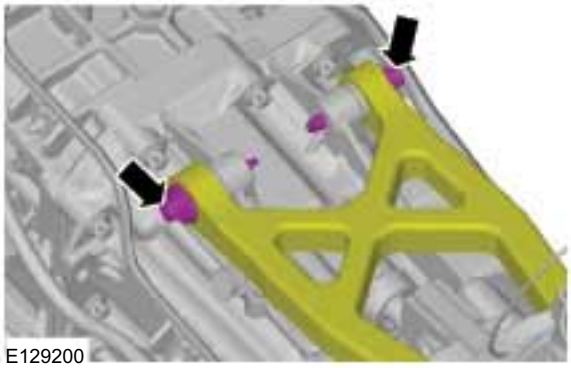
E129200

11. Torque: 35 Nm

E128848

12.

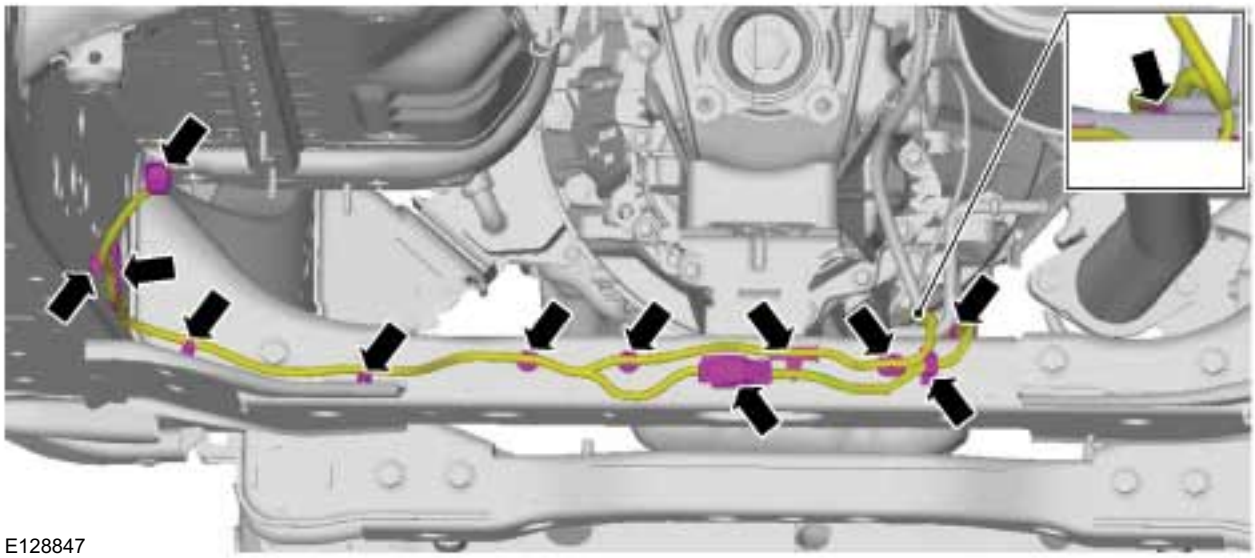
E128847

REMOVAL

13. Torque: 95 Nm

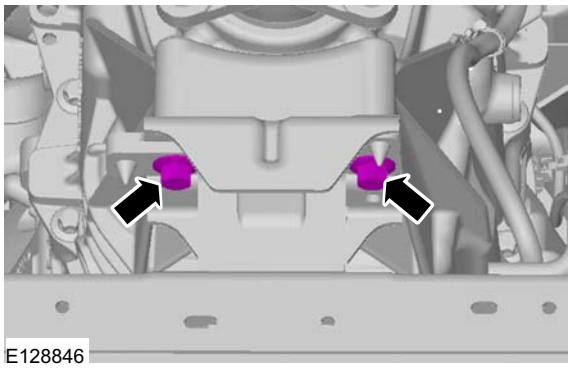

14. General Equipment: Transmission Jack

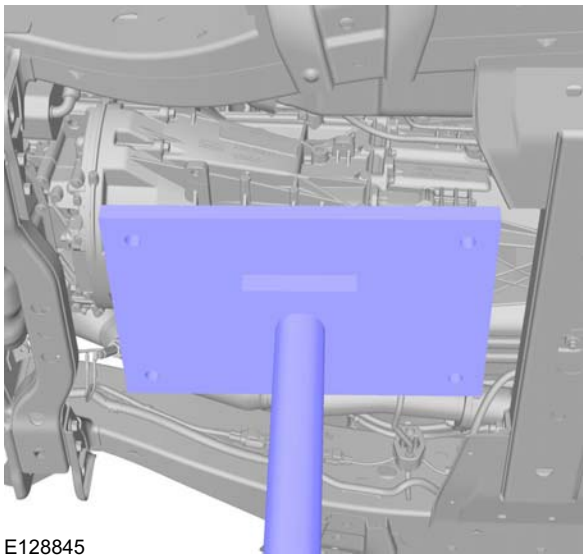

15. Torque: 90 Nm

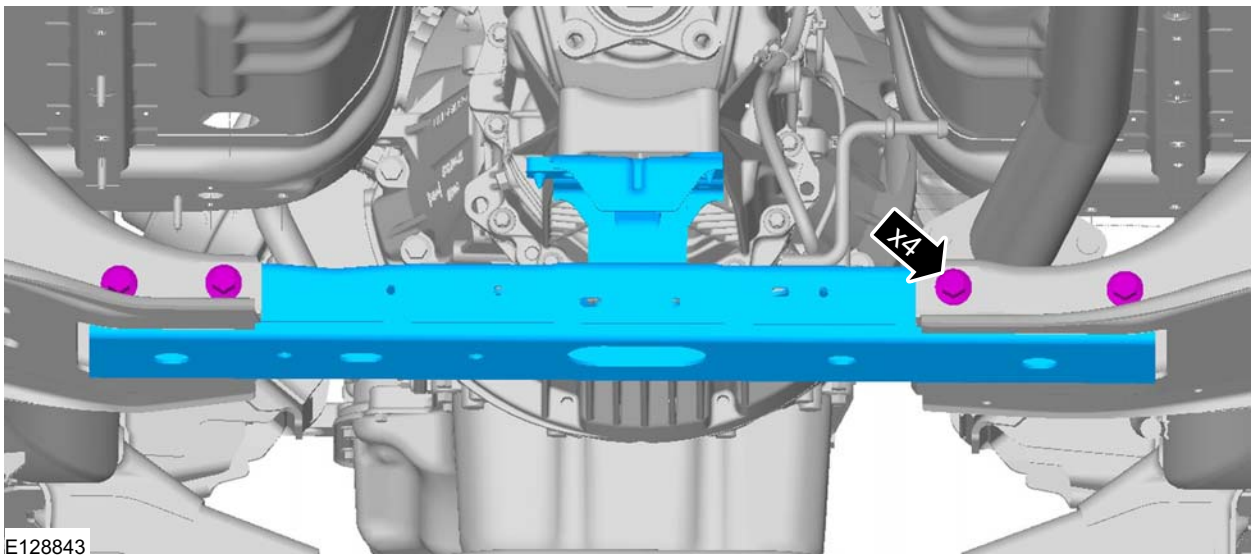

16. Torque: 50 Nm

REMOVAL

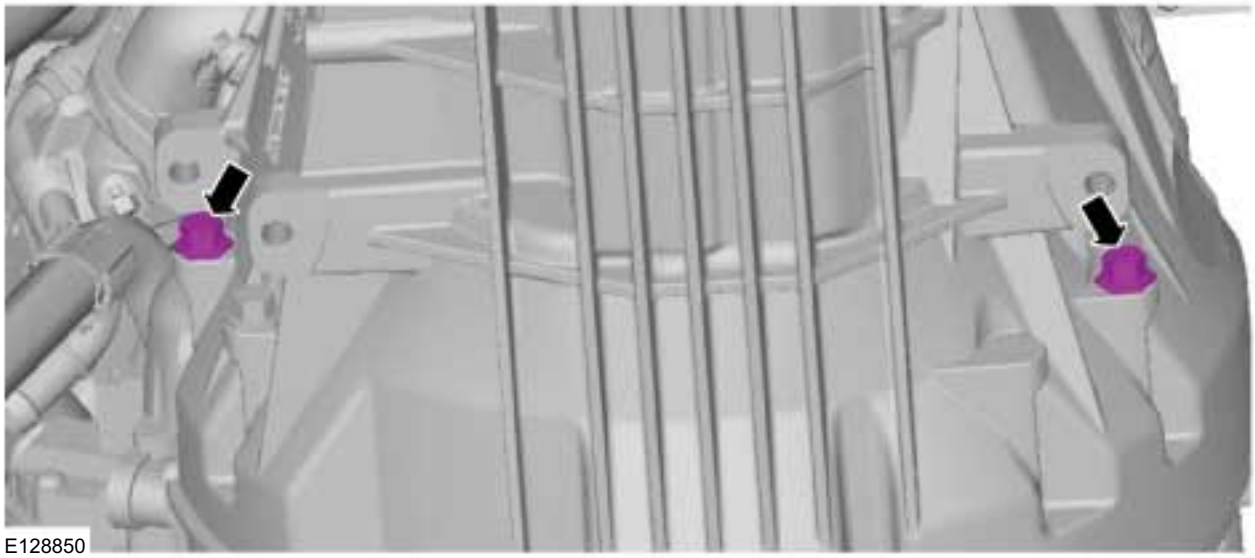
E128850

17. Torque: 50 Nm

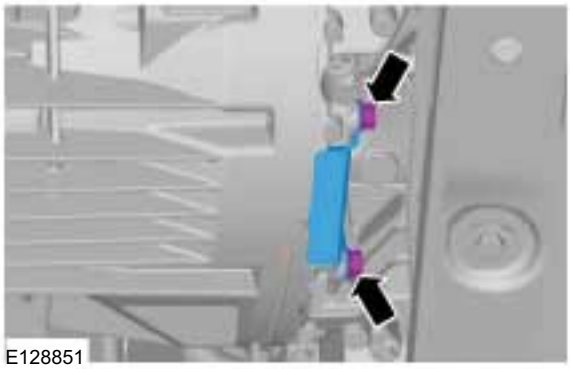
E128851

18. Torque: 50 Nm

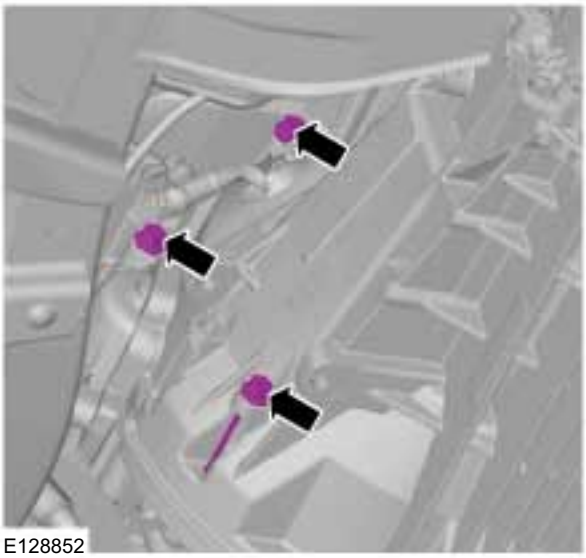
E128852

19. Torque: 50 Nm

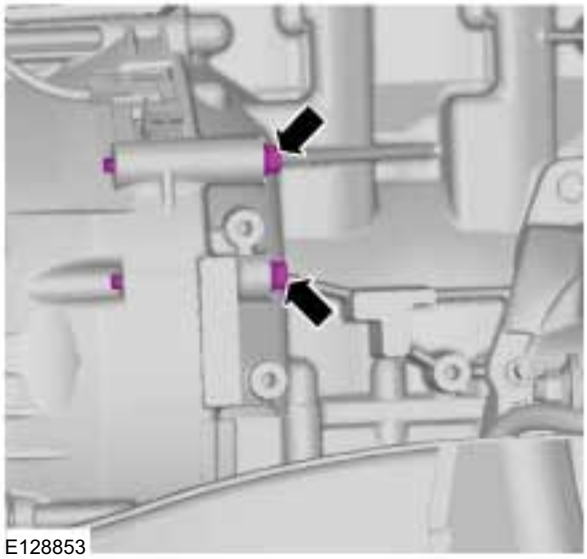
E128853

REMOVAL

20. **CAUTION: Do not tilt the transmission during removal. This may cause damage to the pilot bearing.**

Torque: 50 Nm

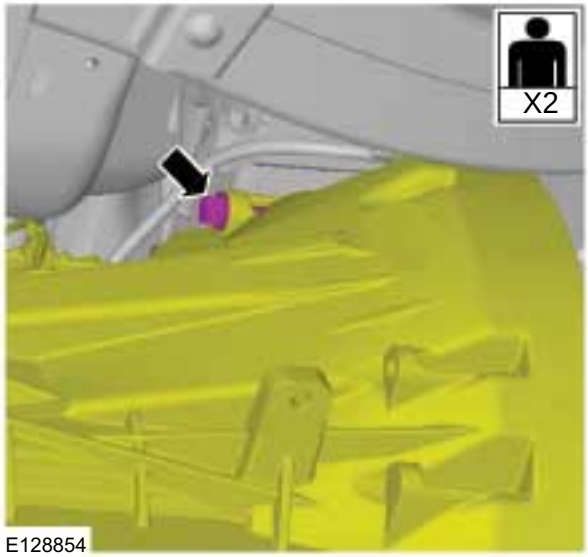

E128854

21.

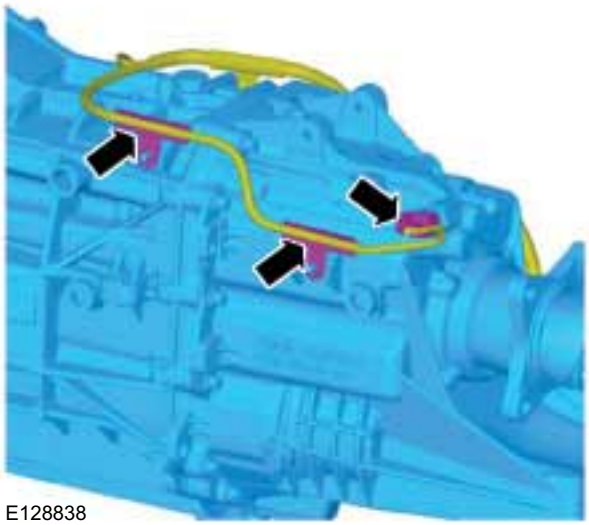

E128838

Vehicles with speed control

22.

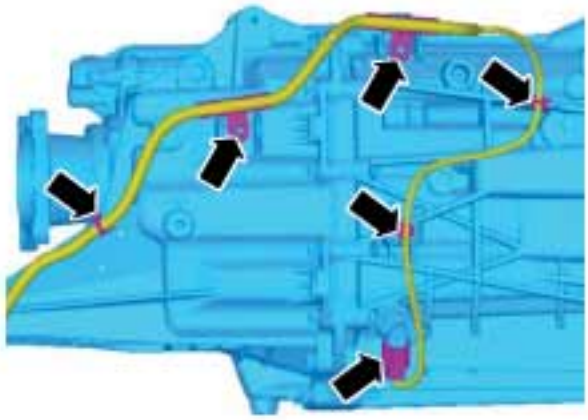

E128839

Vehicles without speed control

23.

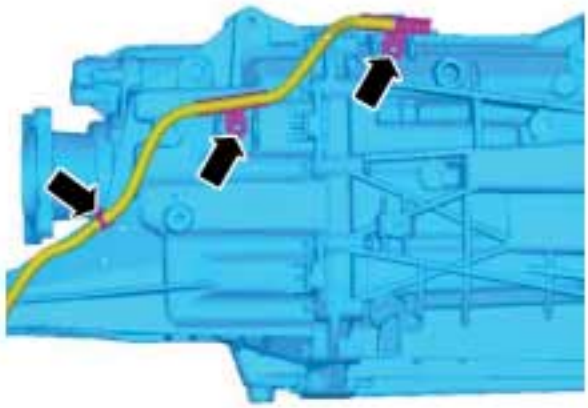

E128840

REMOVAL

Transmission — 2.2L Duratorq-TDCi (88kW/120PS) - Puma/2.2L Duratorq-TDCi (96kW/130PS) - Puma/2.2L Duratorq-TDCi (110kW/150PS) - Puma/3.2L Duratorq-TDCi (148kW/200PS) - Puma, 4WD

Removal

General Equipment

Transmission Jack

1. Refer to: Battery Disconnect and Connect (414-01 Battery, Mounting and Cables, General Procedures).

2. Refer to: Floor Console - Single Cab (501-12 Instrument Panel and Console, Removal and Installation).
   Refer to: Floor Console - Double Cab (501-12 Instrument Panel and Console, Removal and Installation).

3. Torque: 40 Nm

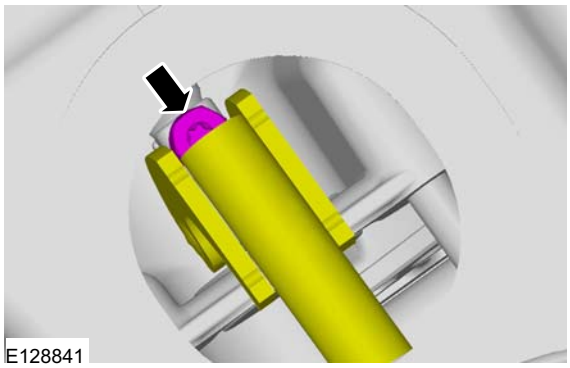
E128841

4. Refer to: Catalytic Converter (309-00 Exhaust System - 2.2L Duratorq-TDCi (88kW/120PS) - Puma/2.2L Duratorq-TDCi (96kW/130PS) - Puma/2.2L Duratorq-TDCi (110kW/150PS) - Puma/3.2L Duratorq-TDCi (148kW/200PS) - Puma, Removal and Installation).

5. Refer to: Front Driveshaft - 4WD (205-01 Driveshaft, Removal and Installation).
   Refer to: Driveshaft - 4WD (205-01 Driveshaft, Removal and Installation).

6. **CAUTION: Cap the clutch slave cylinder supply line to prevent fluid loss or dirt ingress.**

NOTE: If the clutch fluid comes into contact with the painted area, rinse off the affected areas with cold water without delay.

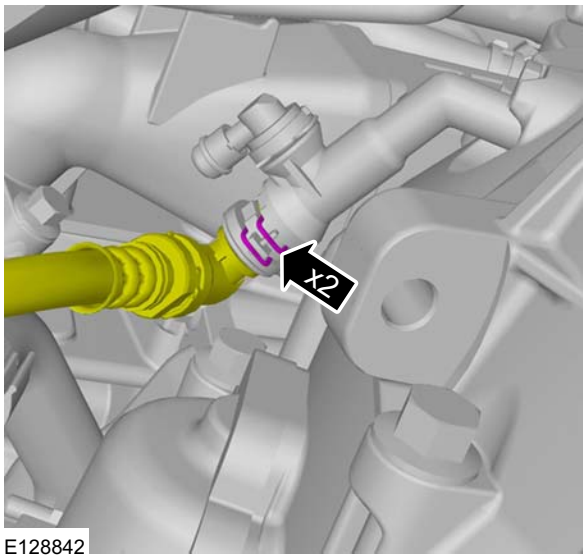

E128842

7. Torque: 25 Nm

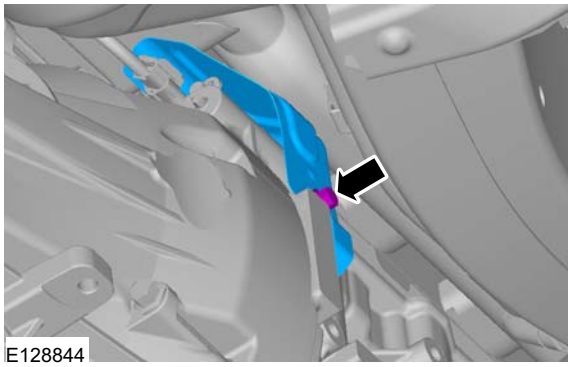
E128844

REMOVAL

8. Torque: 25 Nm

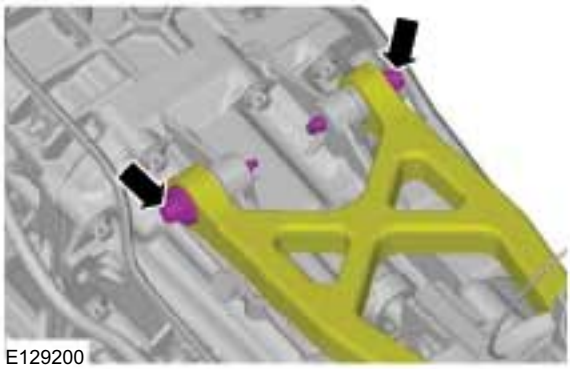
E129200

9.

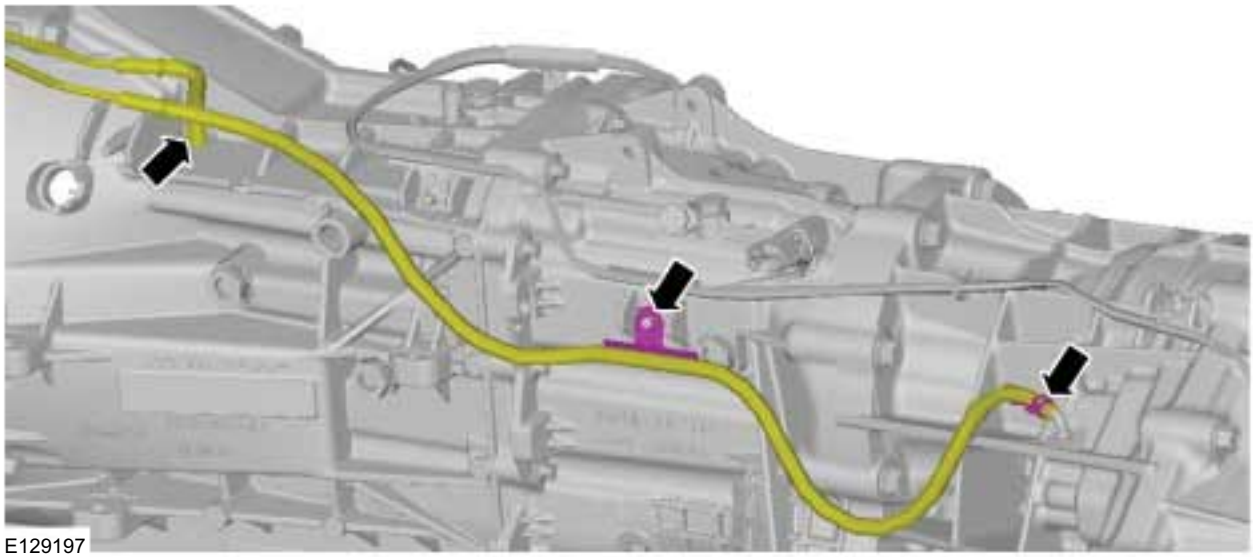
E129197

10. Torque: 35 Nm

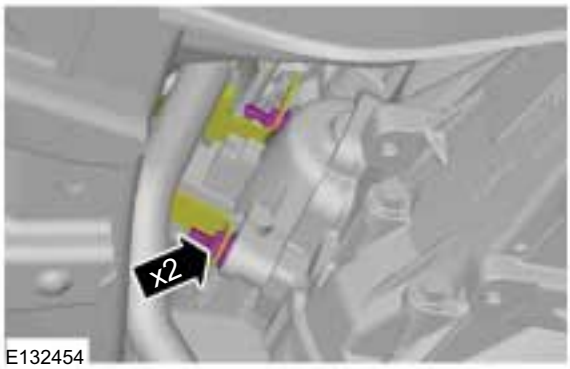

E132454

11. Torque: 35 Nm

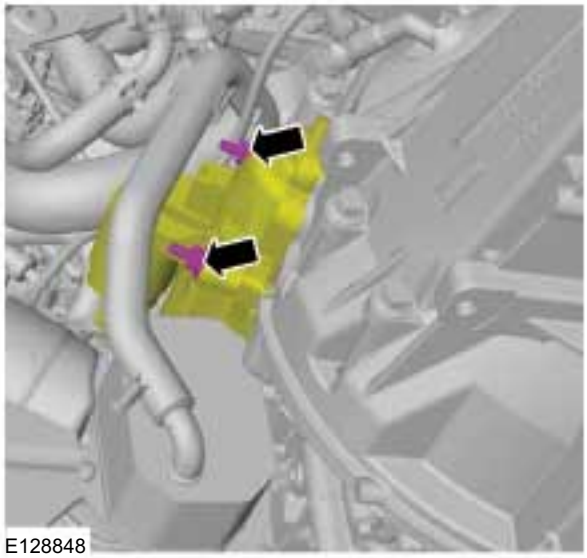
E128848

REMOVAL

12.

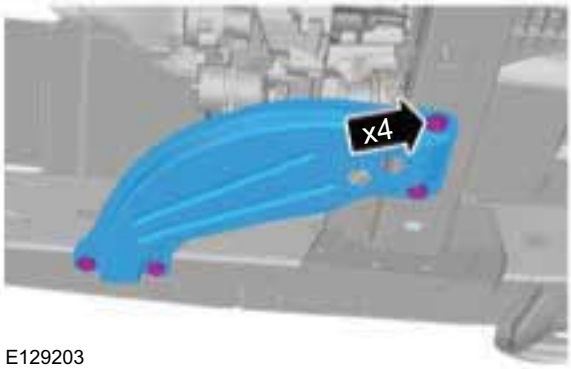

E129203

13.

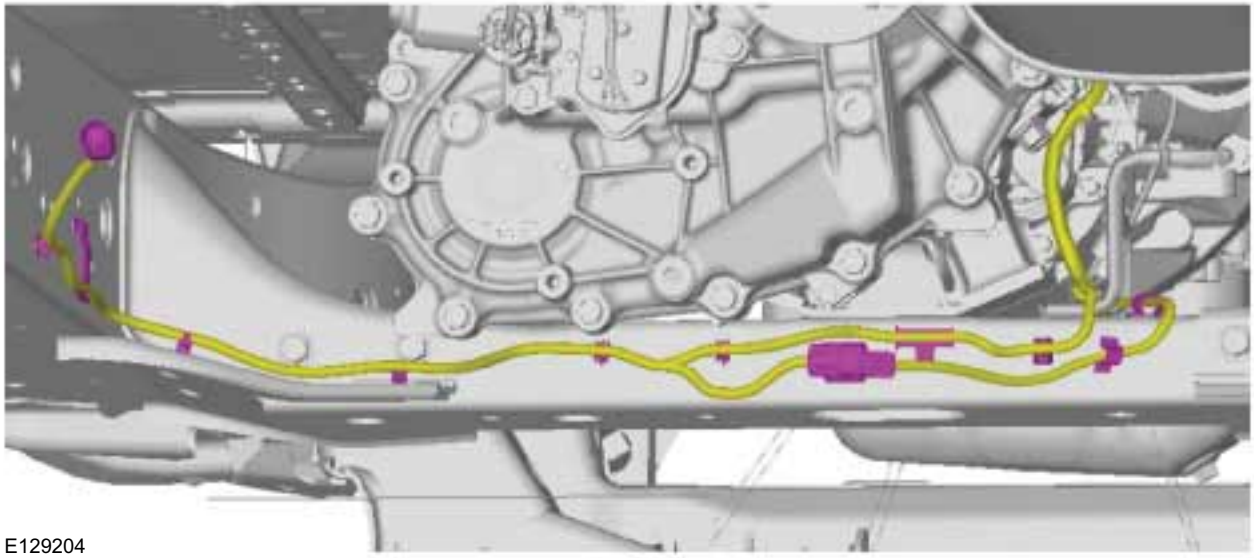
E129204

14. Torque: 95 Nm

E129202

15. General Equipment: Transmission Jack

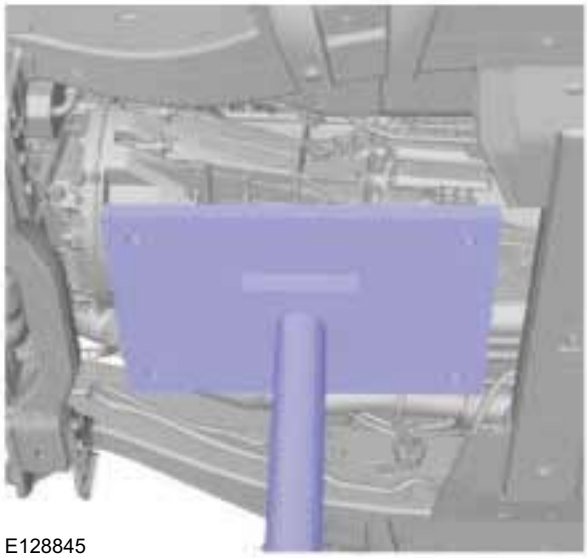
E128845

16. Torque: 90 Nm

REMOVAL

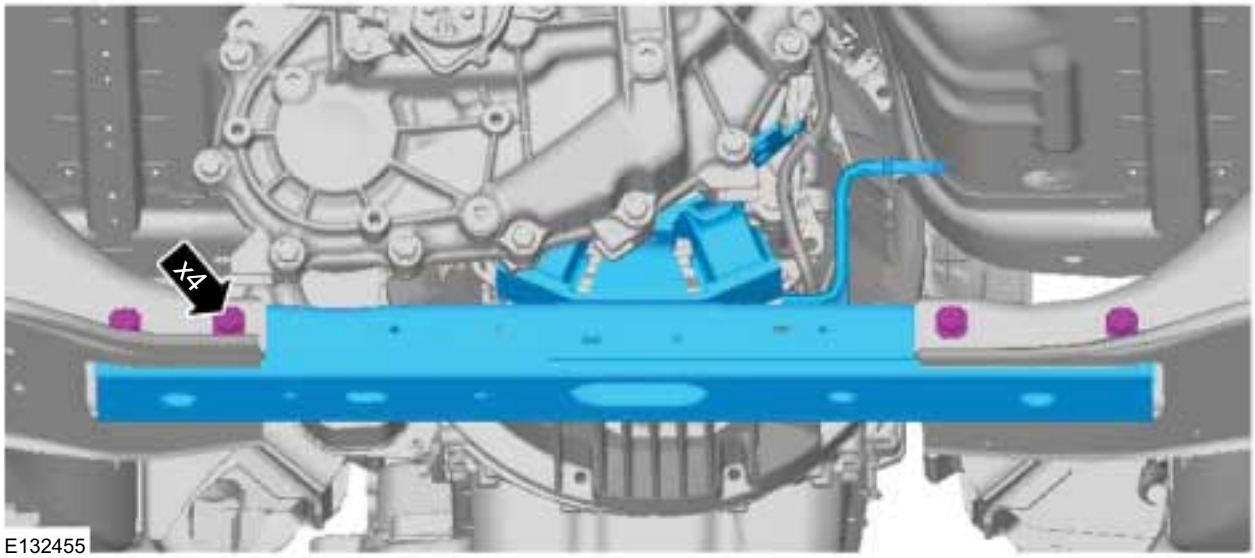

E132455

17. Torque: 50 Nm

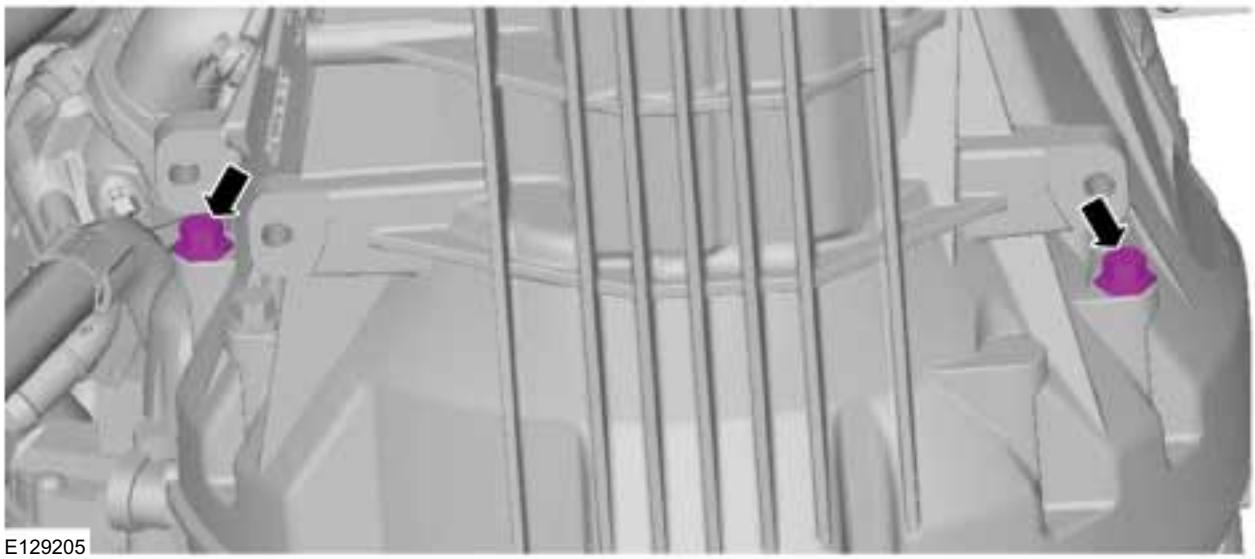
E129205

18. Torque: 50 Nm

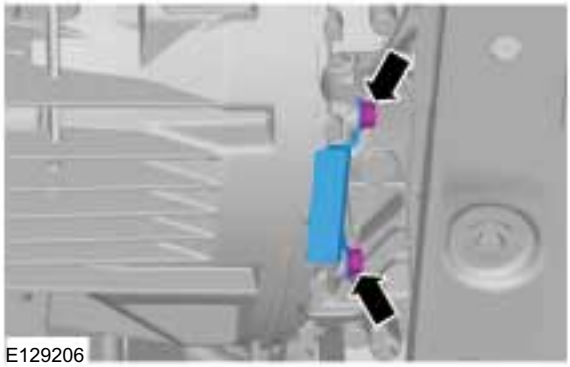
E129206

REMOVAL

19. Torque: 50 Nm

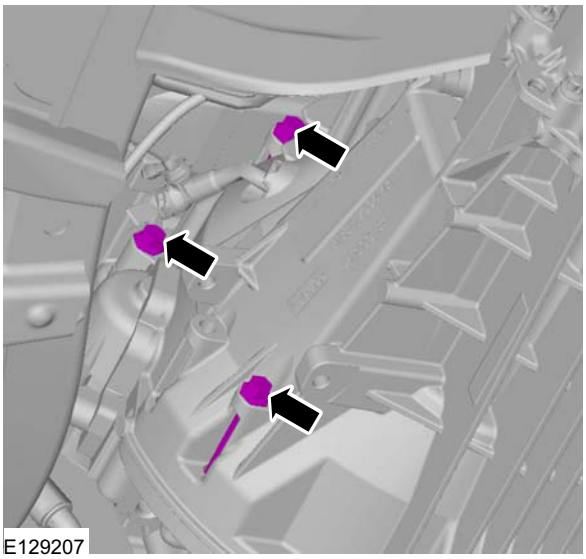
E129207

20. Torque: 50 Nm

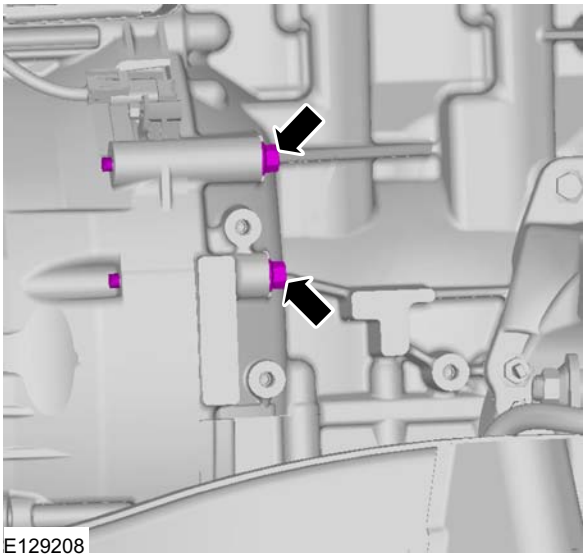
E129208

21. ⚠ **CAUTION: Do not tilt the transmission during removal. This may cause damage to the pilot bearing.**

Torque: 50 Nm

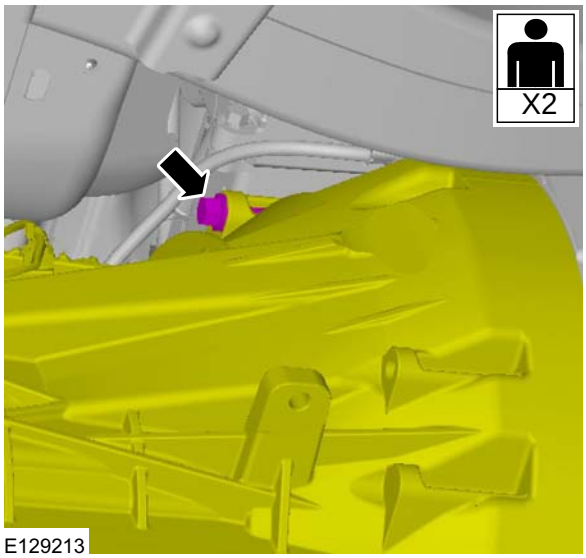

E129213

22.

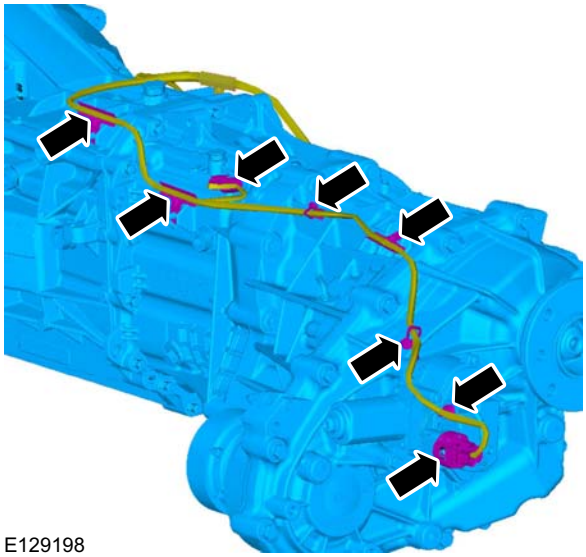
E129198

REMOVAL

Vehicles with speed control

23.

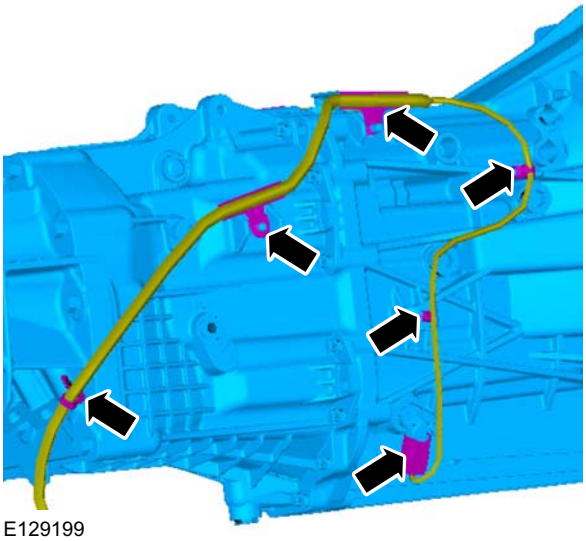

Vehicles without speed control

24.

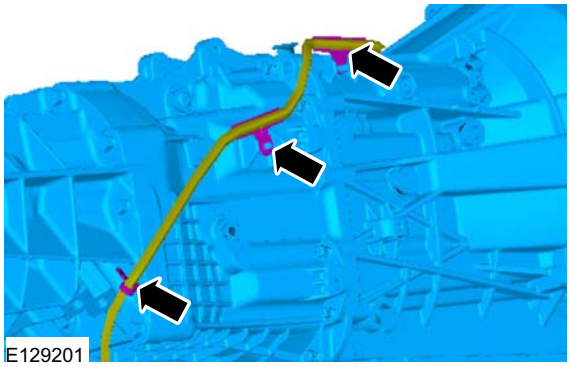

DISASSEMBLY

Transmission

Disassembly

3. Information not available at this time.

DISASSEMBLY AND ASSEMBLY OF SUBASSEMBLIES

Synchronizers

Materials	
Name	**Specification**
Grease K-HT	ESD-M1C220-A / A88SX1C220AA

Disassembly

1.

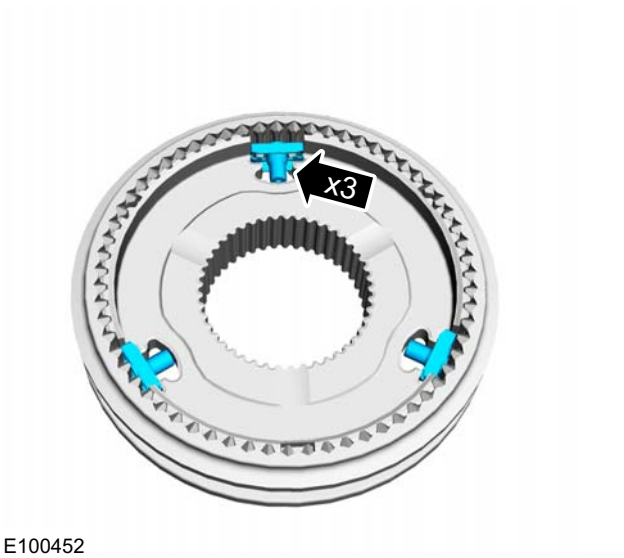

E100452

2. NOTE: Note the position of each component before removal.

NOTE: Make sure that no component falls off during removal.

1. 3rd/4th gear only

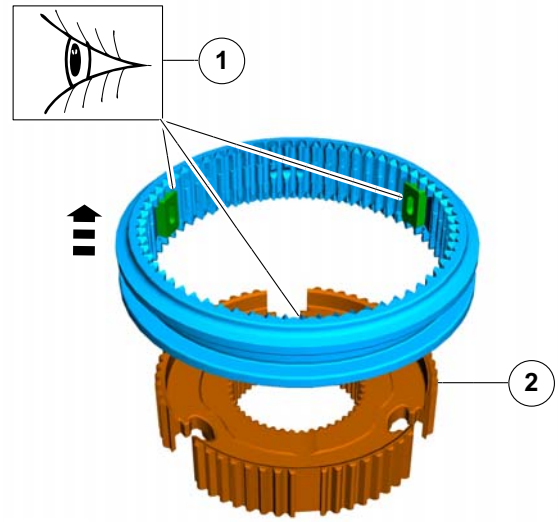

E100453

DISASSEMBLY AND ASSEMBLY OF SUBASSEMBLIES

Assembly

3. **NOTE:** Make sure that these components are installed to the noted removal position.
   1. 3rd/4th gear only

      Material: Grease K-HT (ESD-M1C220-A / A88SX1C220AA) grease

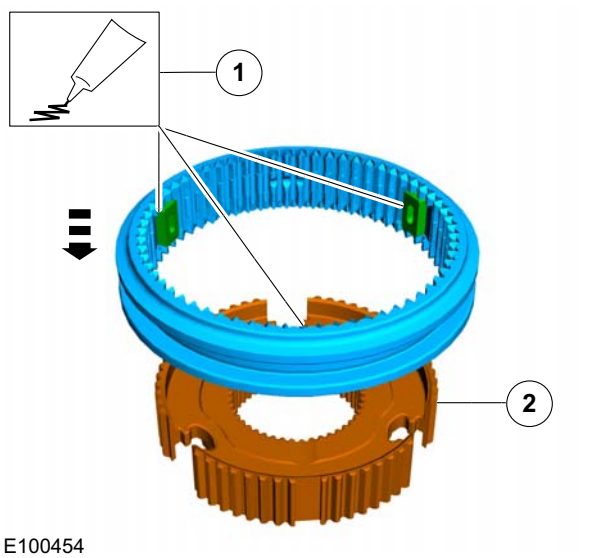

E100454

4.

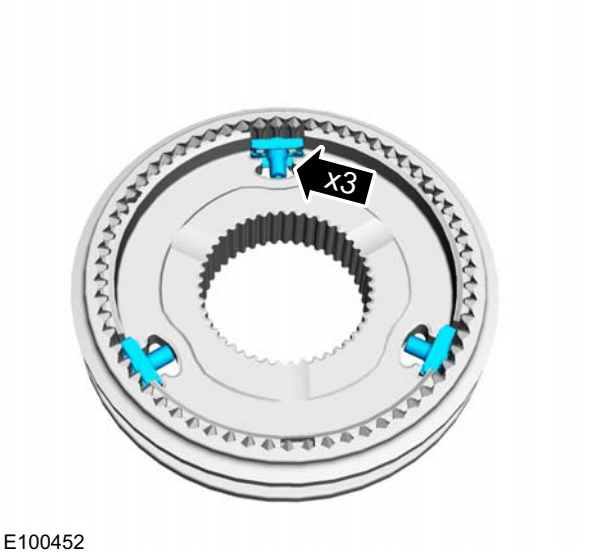

E100452

ASSEMBLY

Transmission

Assembly

4. Information not available at this time.

INSTALLATION

Transmission — 2.2L Duratorq-TDCi (88kW/120PS) - Puma/2.2L Duratorq-TDCi (96kW/130PS) - Puma/2.2L Duratorq-TDCi (110kW/150PS) - Puma/3.2L Duratorq-TDCi (148kW/200PS) - Puma, 2WD

Installation

General Equipment

Transmission Jack

1. Check the pilot bearing for damage. If damaged, install a new pilot bearing.

   Refer to: Pilot Bearing - 2.2L Duratorq-TDCi (88kW/120PS) - Puma/2.2L Duratorq-TDCi (96kW/130PS) - Puma/2.2L Duratorq-TDCi (110kW/150PS) - Puma/3.2L Duratorq-TDCi (148kW/200PS) - Puma (308-01 Clutch - Vehicles With: 6-Speed Manual Transmission - MT82, Removal and Installation).

2. **NOTE:** Do not apply grease to a newly installed pilot bearing.

   Apply approximately one gram of grease to the pilot bearing.

3. Apply a thin film of grease to the input shaft guide sleeve.

4. Shift the transmission into third gear.

Vehicles without speed control

5.

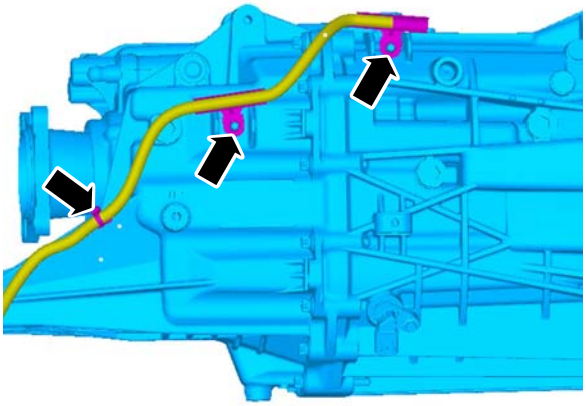

E128840

Vehicles with speed control

6.

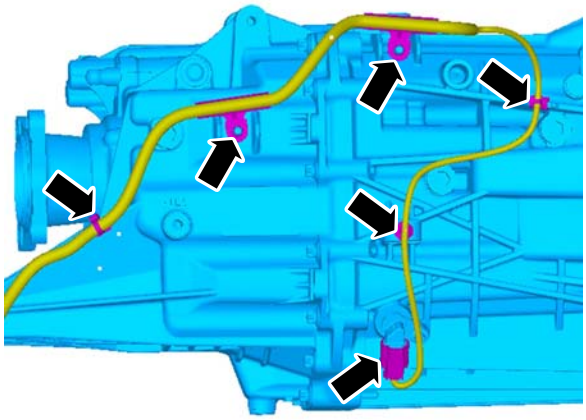

E128839

All vehicles

7.

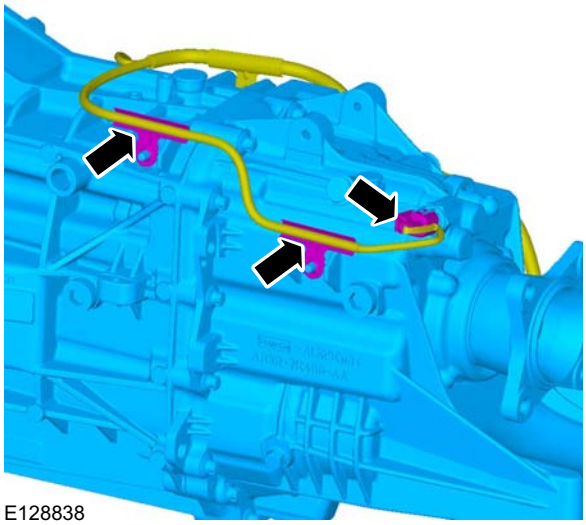

E128838

INSTALLATION

8. ⚠ **CAUTION: Do not tilt the transmission during removal. This may cause damage to the pilot bearing.**

Torque: 50 Nm

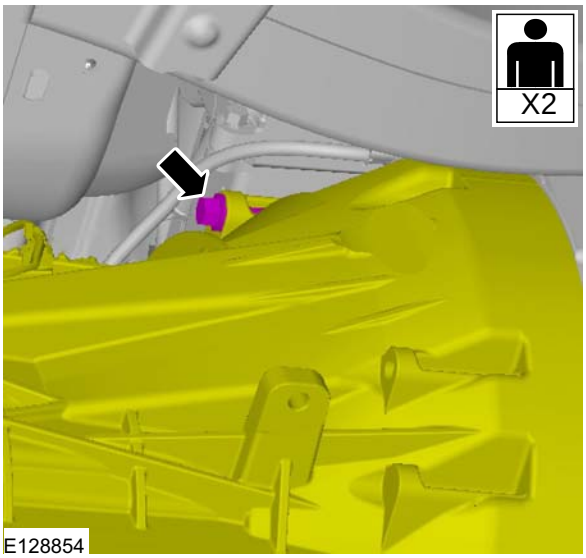

E128854

9. Torque: 50 Nm

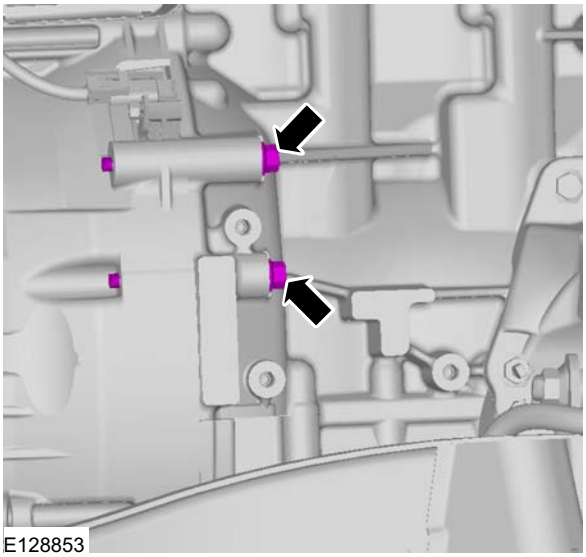
E128853

10. Torque: 50 Nm

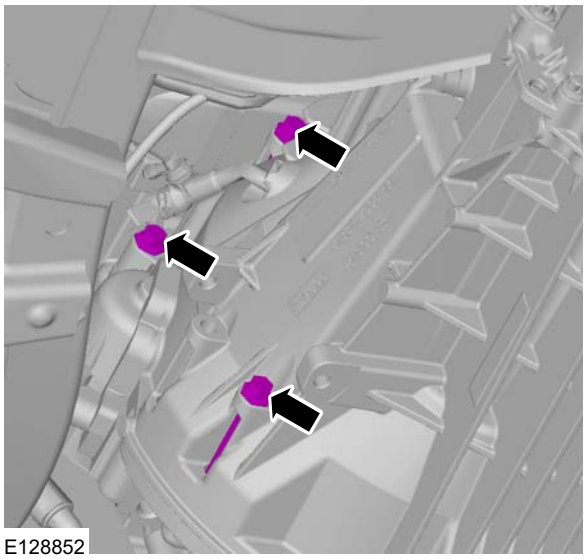
E128852

11. Torque: 50 Nm

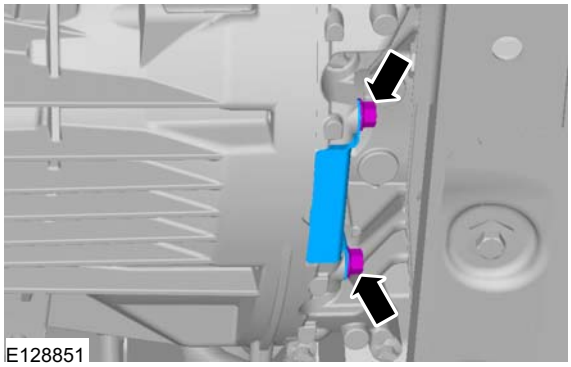
E128851

12. Torque: 50 Nm

INSTALLATION

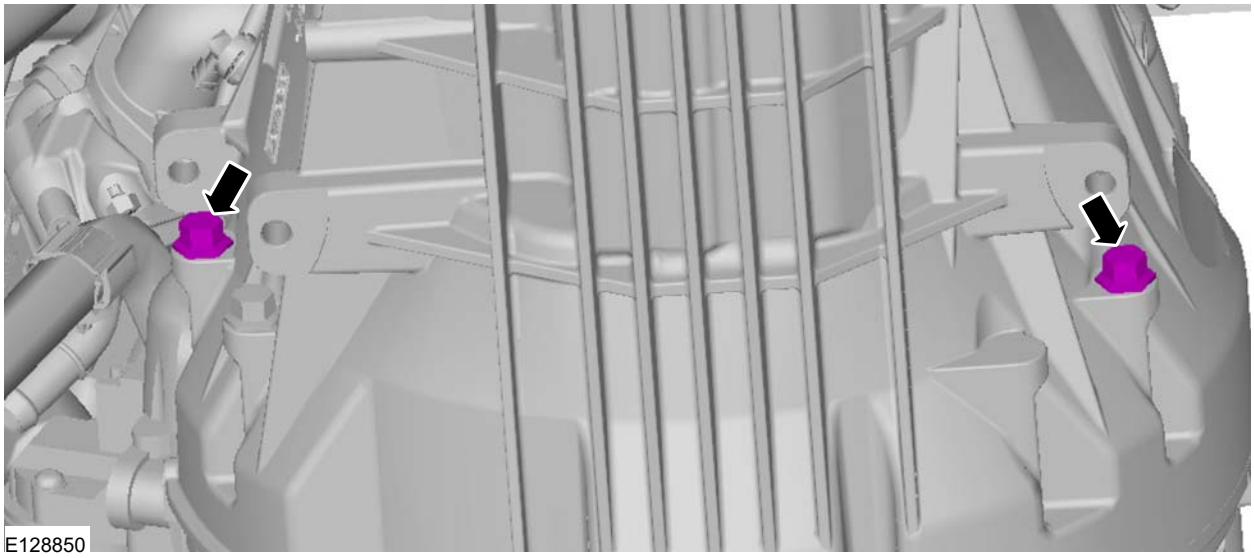

13. Torque: 90 Nm

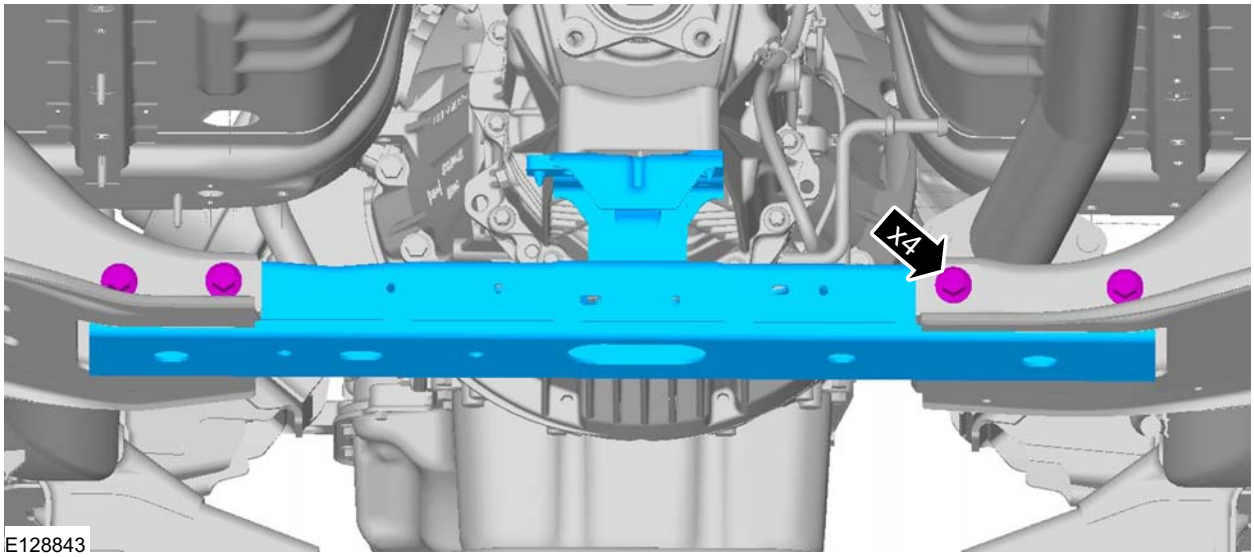

INSTALLATION

14. General Equipment: Transmission Jack

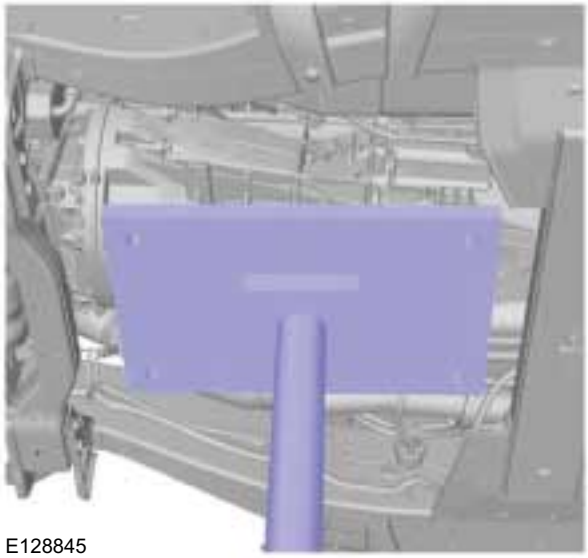
E128845

15. Torque: 95 Nm

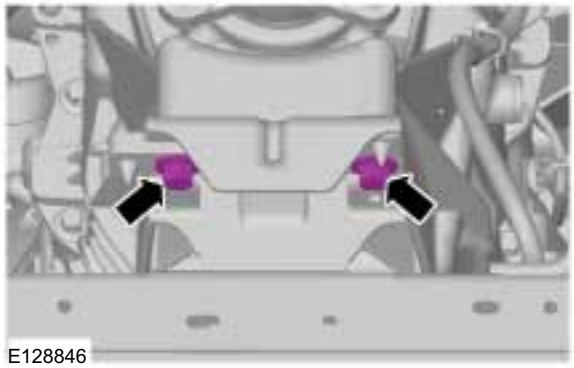
E128846

16. Torque: 50 Nm

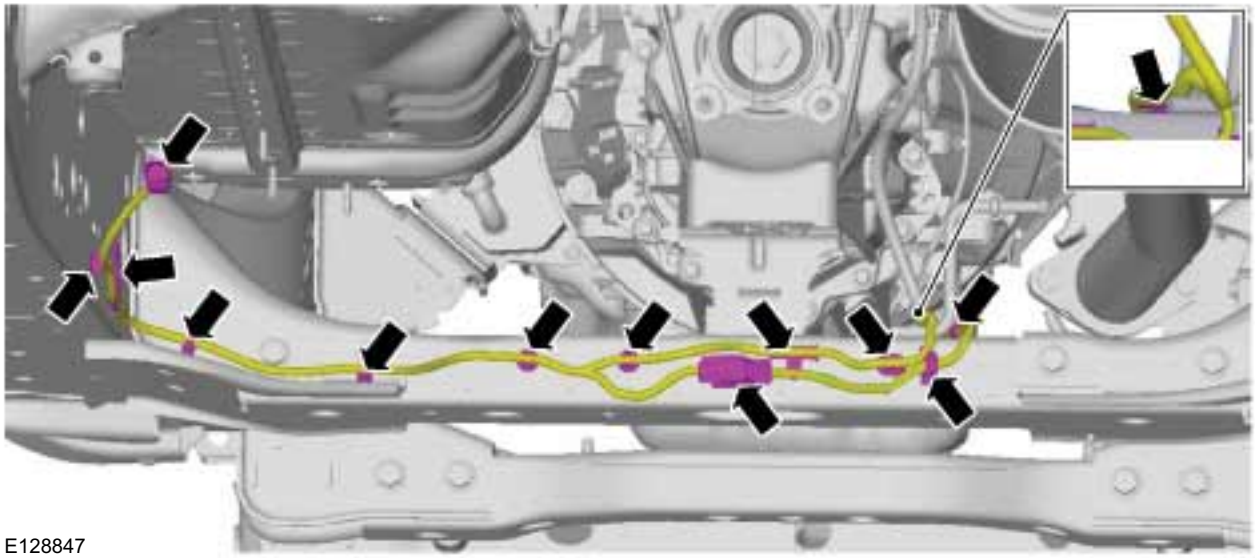
E128847

INSTALLATION

17. Torque: 35 Nm

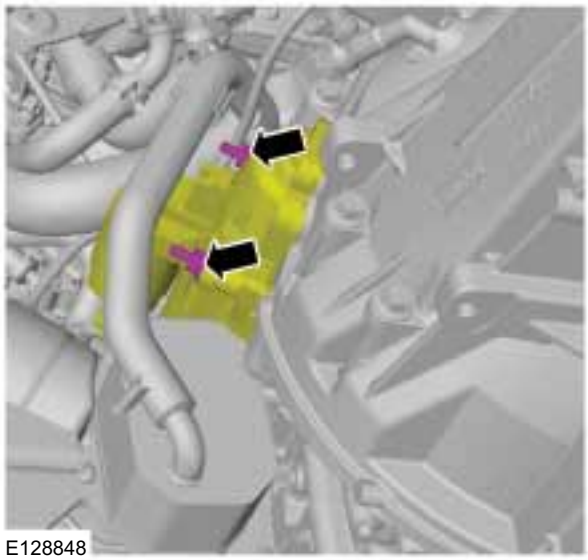
E128848

18. Torque: 35 Nm

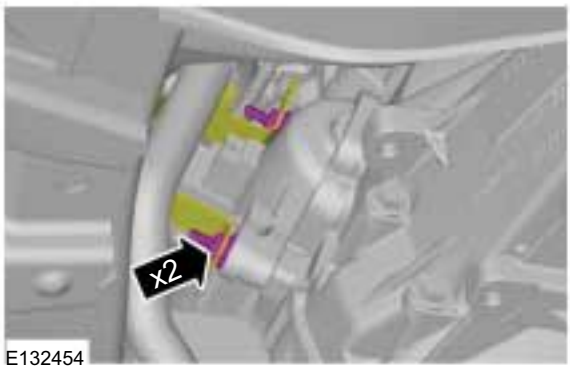

E132454

19. Torque: 25 Nm

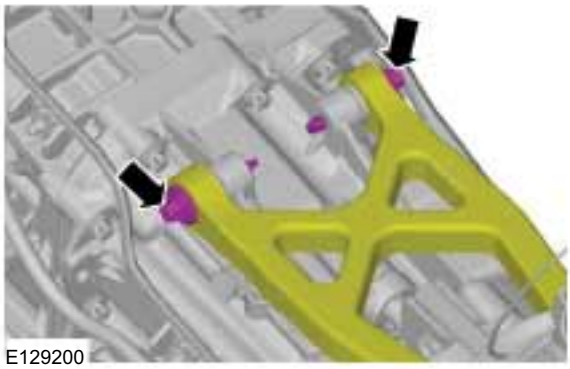
E129200

20. Torque: 25 Nm

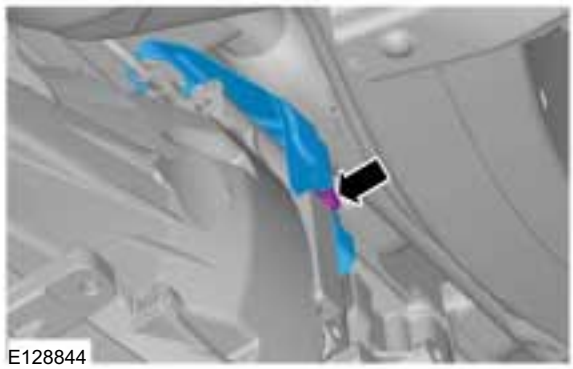
E128844

21.

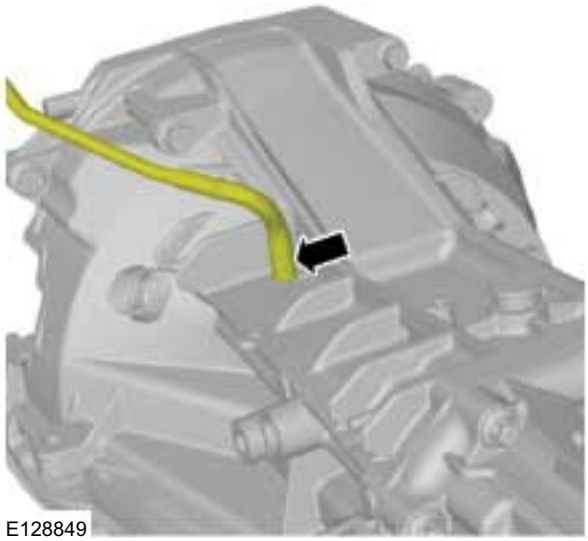
E128849

INSTALLATION

22. **NOTE:** If the clutch fluid comes into contact with the painted area, rinse off the affected areas with cold water without delay.

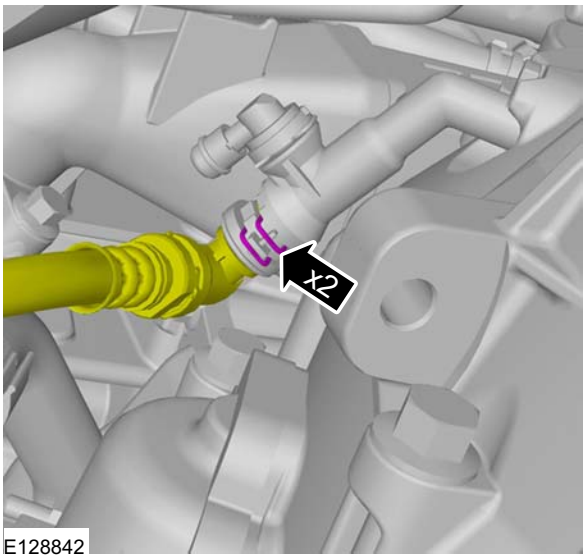

E128842

23. Refer to: Driveshaft - 2WD (205-01 Driveshaft, Removal and Installation).

24. Refer to: Catalytic Converter (309-00 Exhaust System - 2.2L Duratorq-TDCi (88kW/120PS) - Puma/2.2L Duratorq-TDCi (96kW/130PS) - Puma/2.2L Duratorq-TDCi (110kW/150PS) - Puma/3.2L Duratorq-TDCi (148kW/200PS) - Puma, Removal and Installation).

25. Torque: 40 Nm

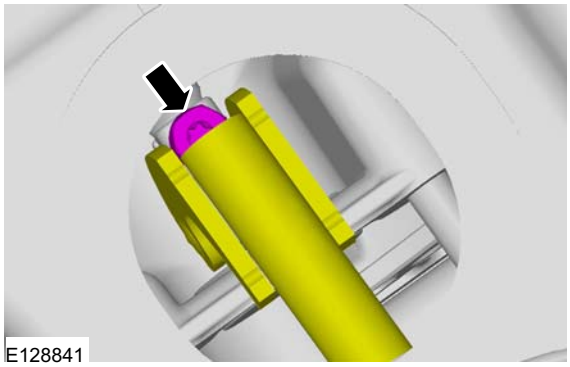
E128841

26. Refer to: Floor Console - Single Cab (501-12 Instrument Panel and Console, Removal and Installation).
Refer to: Floor Console - Double Cab (501-12 Instrument Panel and Console, Removal and Installation).

27. Refer to: Clutch System Bleeding - Vehicles With: MT82 (308-00 Manual Transmission/Transaxle and Clutch - General Information, General Procedures).

28. Refer to: Battery Disconnect and Connect (414-01 Battery, Mounting and Cables, General Procedures).

INSTALLATION

Transmission — 2.2L Duratorq-TDCi (88kW/120PS) - Puma/2.2L Duratorq-TDCi (96kW/130PS) - Puma/2.2L Duratorq-TDCi (110kW/150PS) - Puma/3.2L Duratorq-TDCi (148kW/200PS) - Puma, 4WD

Installation

General Equipment

Transmission Jack

1. Check the pilot bearing for damage. If damaged, install a new pilot bearing.

   Refer to: Pilot Bearing - 2.2L Duratorq-TDCi (88kW/120PS) - Puma/2.2L Duratorq-TDCi (96kW/130PS) - Puma/2.2L Duratorq-TDCi (110kW/150PS) - Puma/3.2L Duratorq-TDCi (148kW/200PS) - Puma (308-01 Clutch - Vehicles With: 6-Speed Manual Transmission - MT82, Removal and Installation).

2. **NOTE:** Do not apply grease to a newly installed pilot bearing.

   Apply approximately one gram of grease to the pilot bearing.

3. Apply a thin film of grease to the input shaft guide sleeve.

4. Shift the transmission into third gear.

Vehicles without speed control

5.

E129201

Vehicles with speed control

6.

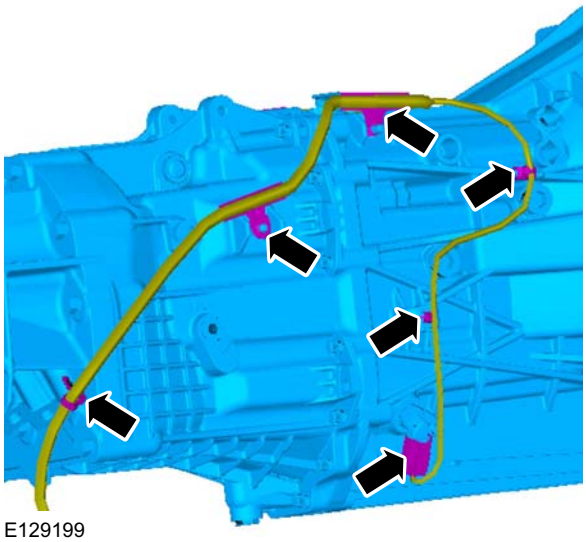
E129199

All vehicles

7.

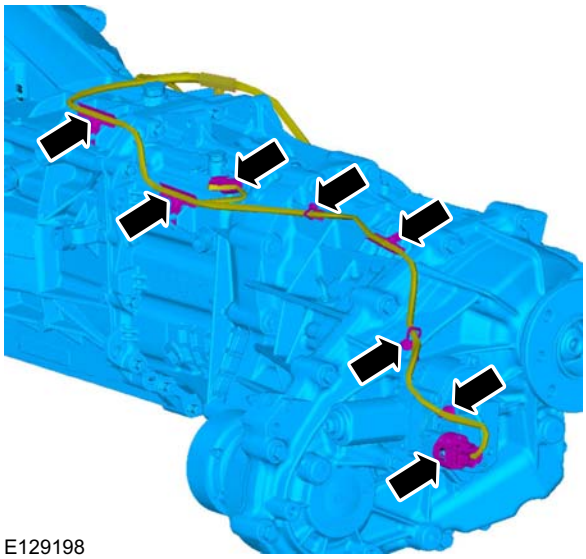
E129198

INSTALLATION

8. ⚠ **CAUTION: Do not tilt the transmission during installation. This may cause damage to the pilot bearing.**

Torque: 50 Nm

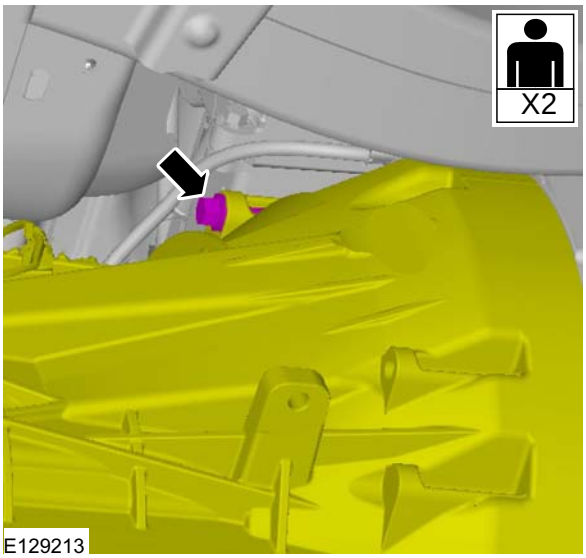

E129213

9. Torque: 50 Nm

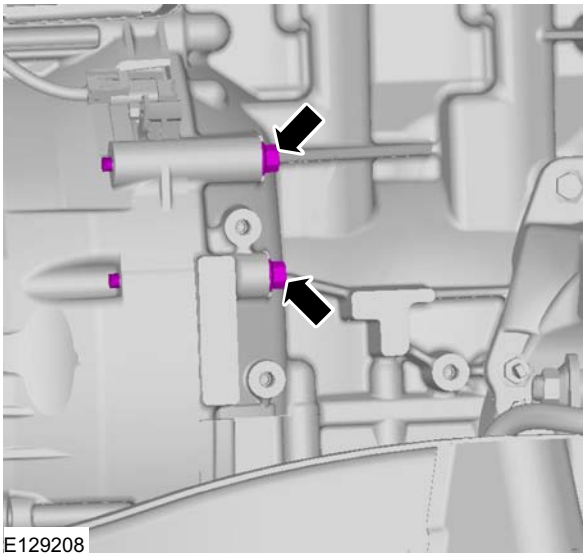
E129208

10. Torque: 50 Nm

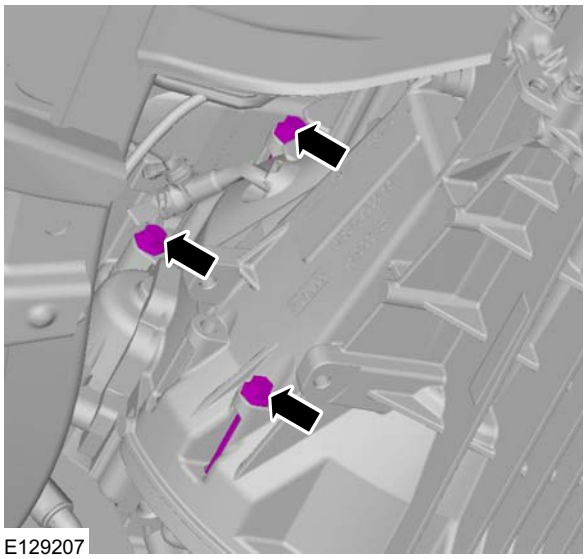
E129207

11. Torque: 50 Nm

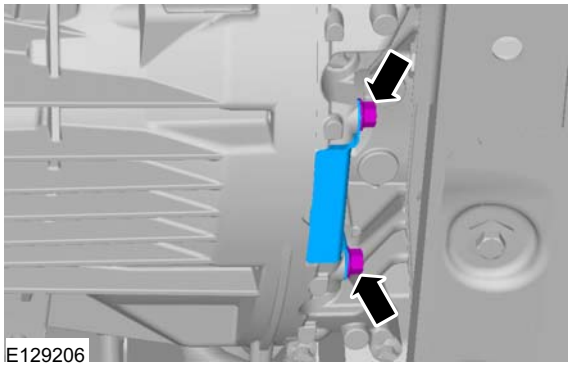
E129206

12. Torque: 50 Nm

INSTALLATION

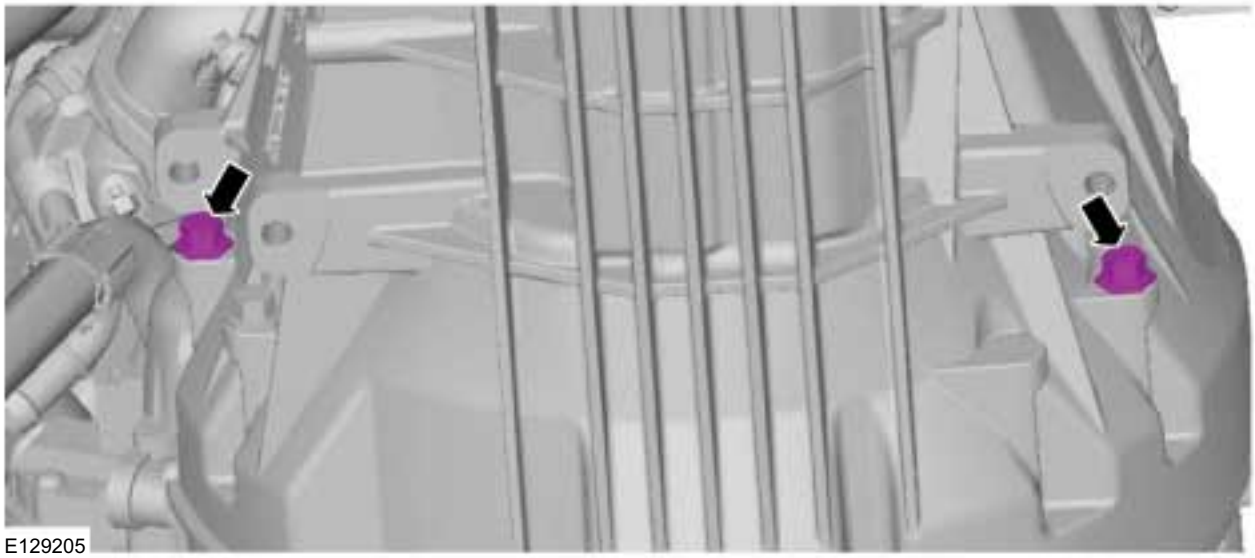

13. Torque: 90 Nm

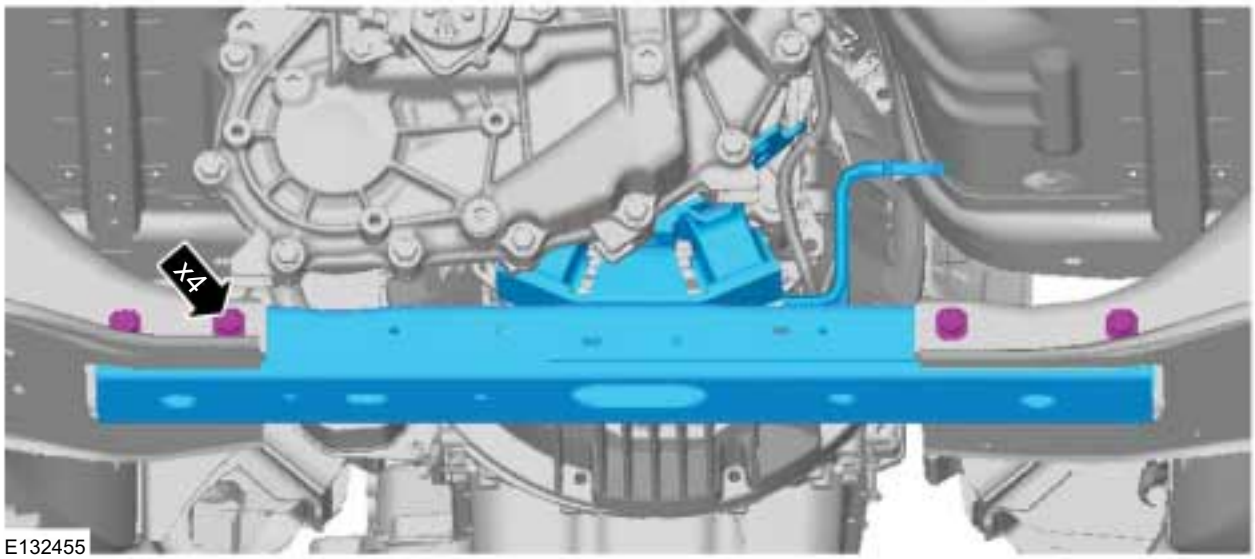

14. Torque: 95 Nm

INSTALLATION

15. General Equipment: Transmission Jack

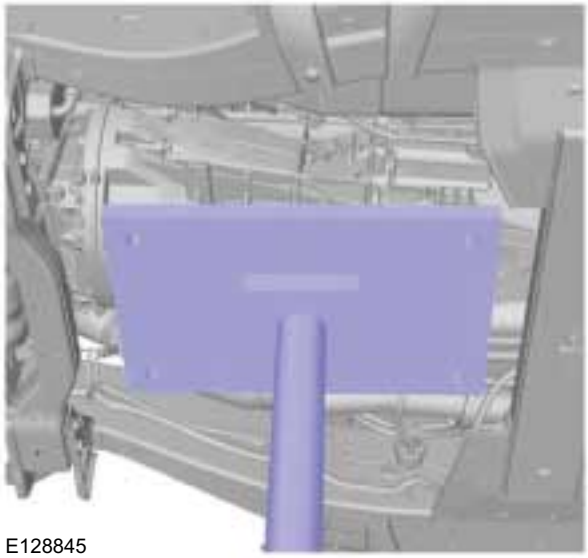

E128845

16.

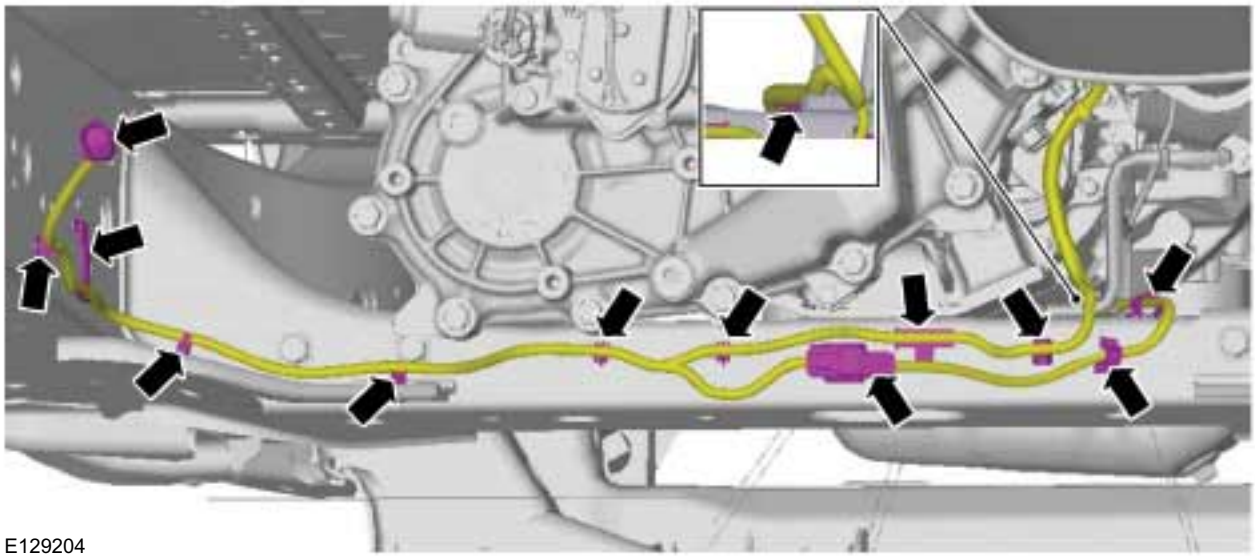

E129204

17. Torque: 50 Nm

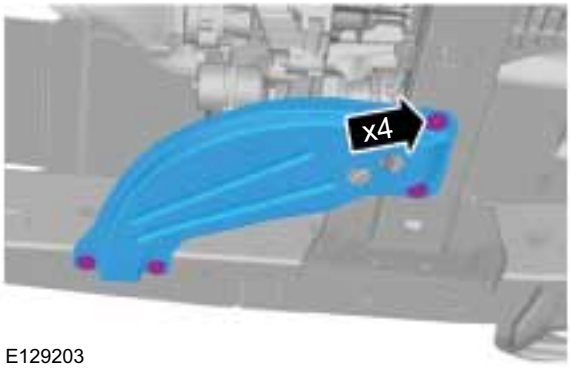

E129203

INSTALLATION

18. Torque: 35 Nm

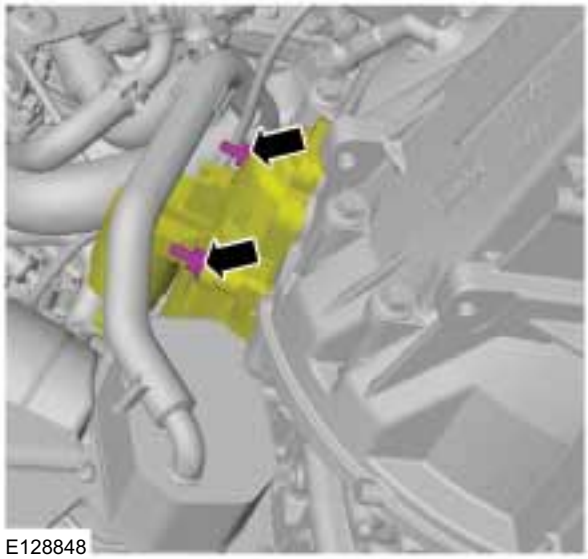
E128848

19. Torque: 35 Nm

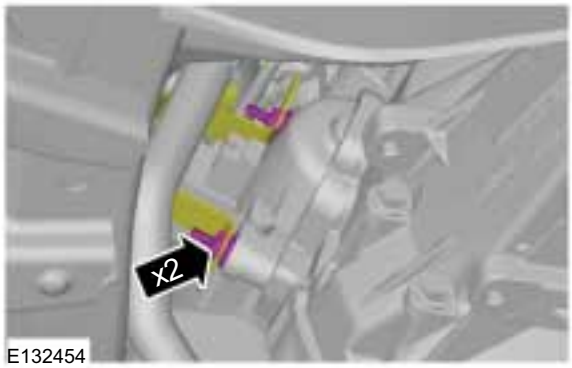

E132454

20.

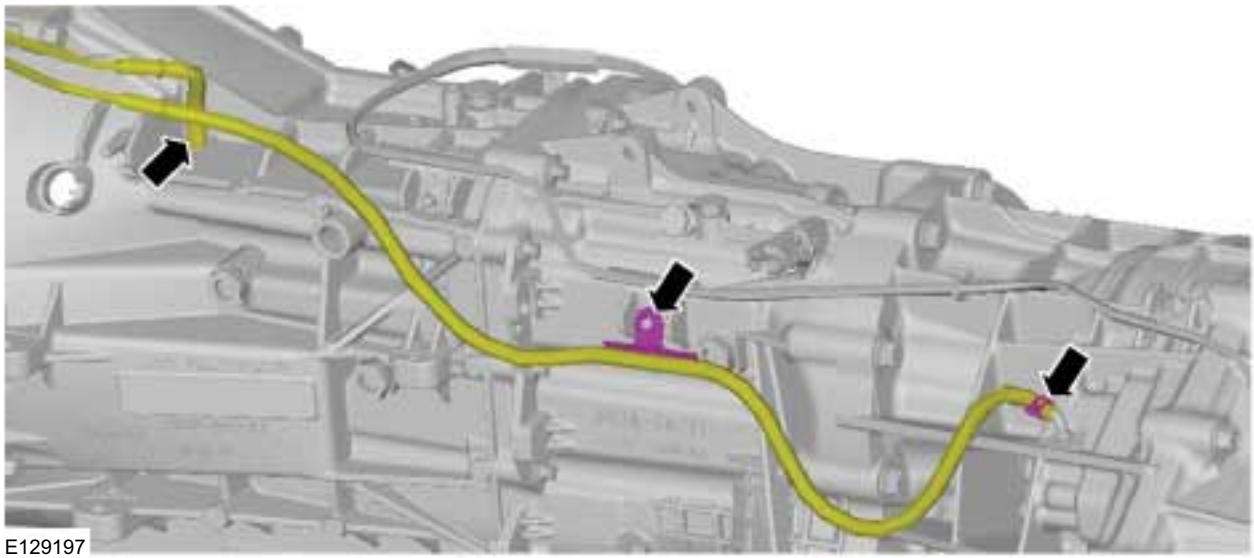
E129197

21. Torque: 25 Nm

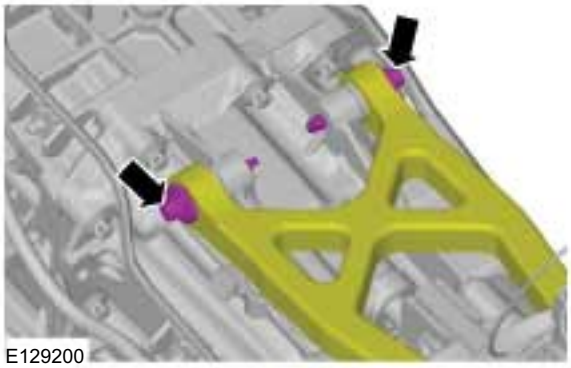
E129200

22. Torque: 25 Nm

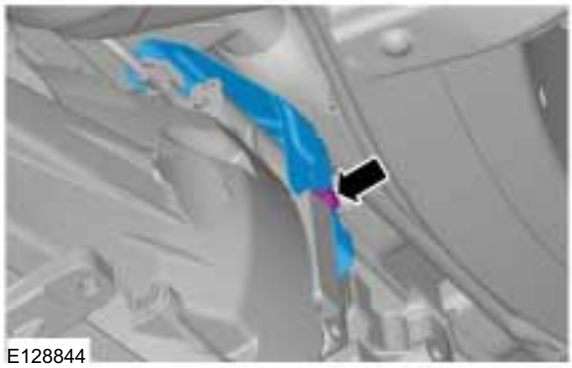
E128844

INSTALLATION

23. **NOTE:** If the clutch fluid comes into contact with the painted area, rinse off the affected areas with cold water without delay.

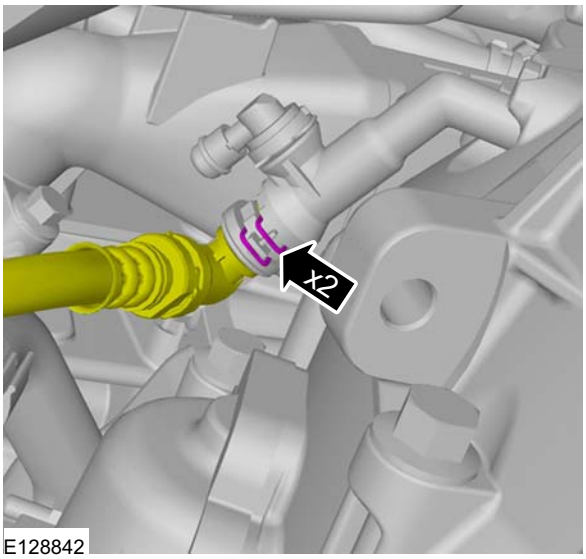

E128842

24. Refer to: Front Driveshaft - 4WD (205-01 Driveshaft, Removal and Installation).
Refer to: Driveshaft - 4WD (205-01 Driveshaft, Removal and Installation).

25. Refer to: Catalytic Converter (309-00 Exhaust System - 2.2L Duratorq-TDCi (88kW/120PS) - Puma/2.2L Duratorq-TDCi (96kW/130PS) - Puma/2.2L Duratorq-TDCi (110kW/150PS) - Puma/3.2L Duratorq-TDCi (148kW/200PS) - Puma, Removal and Installation).

26. Torque: 40 Nm

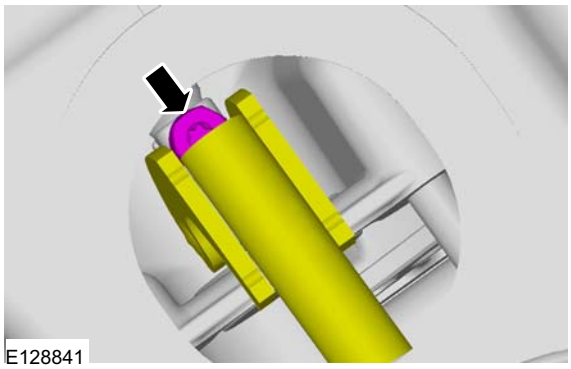
E128841

27. Refer to: Floor Console - Single Cab (501-12 Instrument Panel and Console, Removal and Installation).
Refer to: Floor Console - Double Cab (501-12 Instrument Panel and Console, Removal and Installation).

28. Refer to: Clutch System Bleeding - Vehicles With: MT82 (308-00 Manual Transmission/Transaxle and Clutch - General Information, General Procedures).

29. Refer to: Battery Disconnect and Connect (414-01 Battery, Mounting and Cables, General Procedures).

SECTION 308-06A Manual Transmission/Transaxle External Controls — Vehicles With: MT-75

VEHICLE APPLICATION: 2011.50 Ranger

CONTENTS PAGE

DESCRIPTION AND OPERATION

External Controls..... 308-06A-2
External Controls..... 308-06A-2

REMOVAL AND INSTALLATION

Gearshift Lever..... 308-06A-3

DESCRIPTION AND OPERATION

External Controls

External Controls

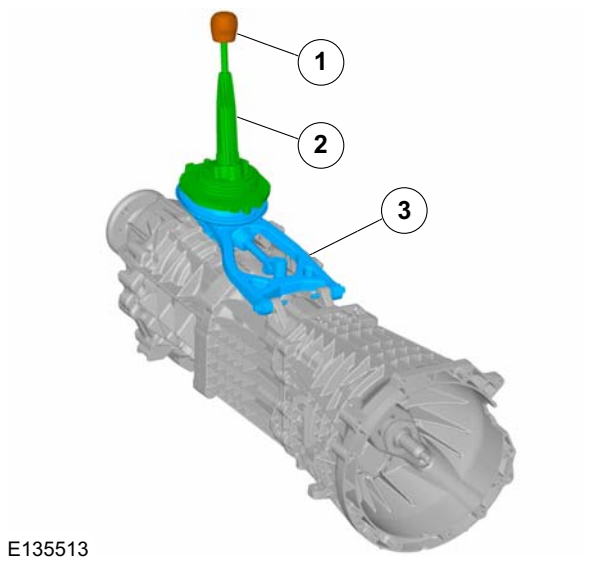

Item	Description
1	Gearshift lever knob
2	Gearshift lever
3	Selector mechanism

REMOVAL AND INSTALLATION

Gearshift Lever

Removal

All vehicles

1. Refer to: Floor Console - Single Cab (501-12 Instrument Panel and Console, Removal and Installation).
   Refer to: Floor Console - Double Cab (501-12 Instrument Panel and Console, Removal and Installation).

2.

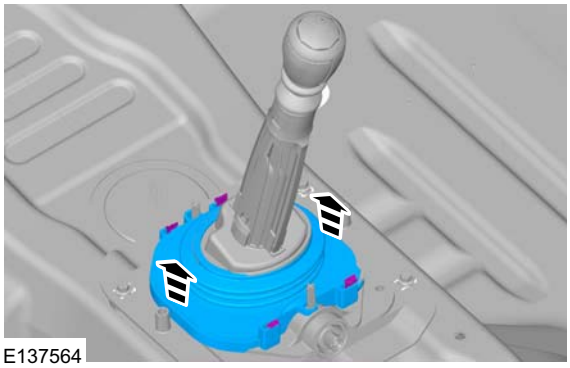
E137564

3. Torque: 28 Nm

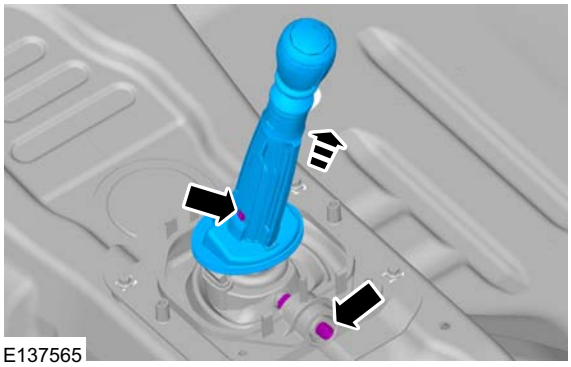
E137565

4. Refer to: Lifting (100-02 Jacking and Lifting, Description and Operation).

4x2

5. Refer to: Driveshaft - 2WD (205-01 Driveshaft, Removal and Installation).

6. Torque: 26 Nm

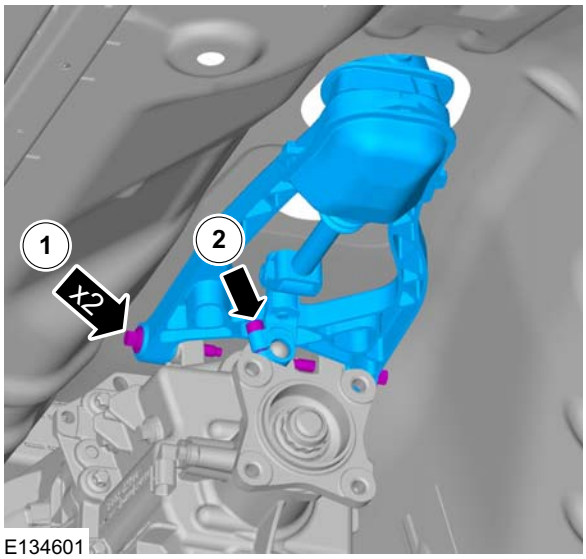

E134601

4x4

7.

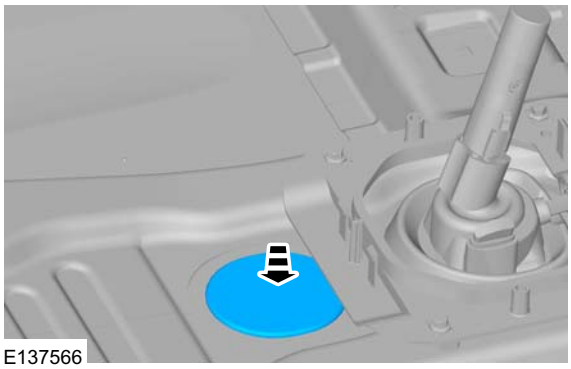
E137566

REMOVAL AND INSTALLATION

8. Torque: 31 Nm

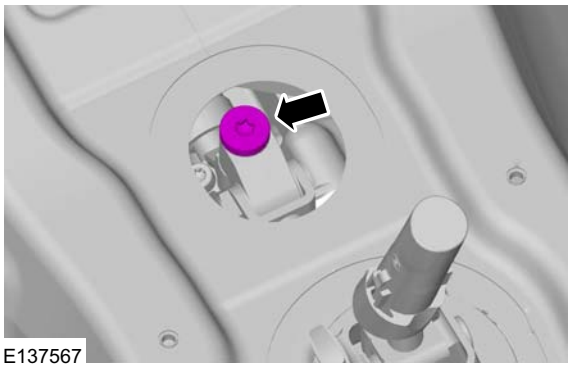
E137567

9. Refer to: Driveshaft - 4WD (205-01 Driveshaft, Removal and Installation).

10. Refer to: Transfer Case (308-07 Transfer Case - Vehicles With: 5-Speed Manual Transmission - MT75/6-Speed Manual Transmission - MT82, Removal).

11. Torque: 26 Nm

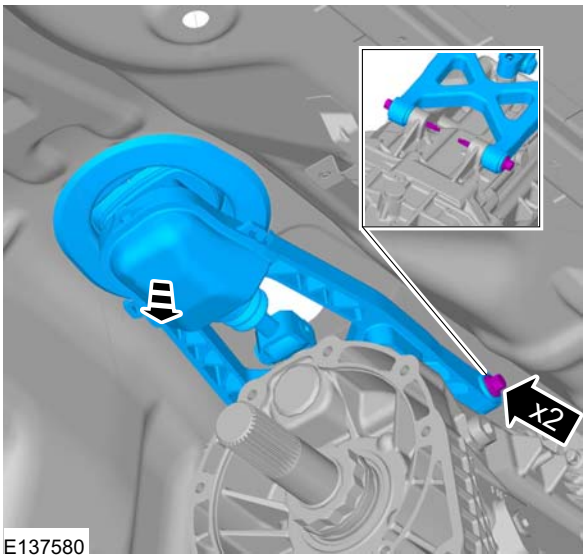

E137580

Installation

1. To install, reverse the removal procedure.

SECTION 308-06B Manual Transmission/Transaxle External Controls — Vehicles With: MT82

VEHICLE APPLICATION: 2011.50 Ranger

CONTENTS PAGE

DESCRIPTION AND OPERATION

External Controls..... 308-06B-2
External Controls..... 308-06B-2

REMOVAL AND INSTALLATION

Gearshift Lever..... 308-06B-3

DESCRIPTION AND OPERATION

External Controls

External Controls

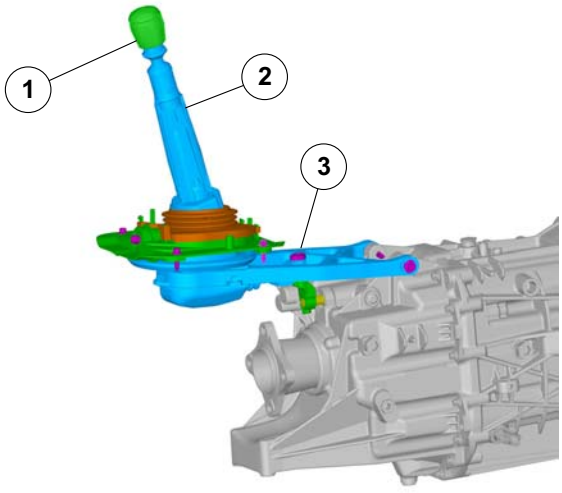

E137595

Item	Description
1	Gearshift lever knob
2	Gearshift lever
3	Selector mechanism

REMOVAL AND INSTALLATION

Gearshift Lever

Removal

All vehicles

1. Refer to: Floor Console - Single Cab (501-12 Instrument Panel and Console, Removal and Installation).
   Refer to: Floor Console - Double Cab (501-12 Instrument Panel and Console, Removal and Installation).

2.

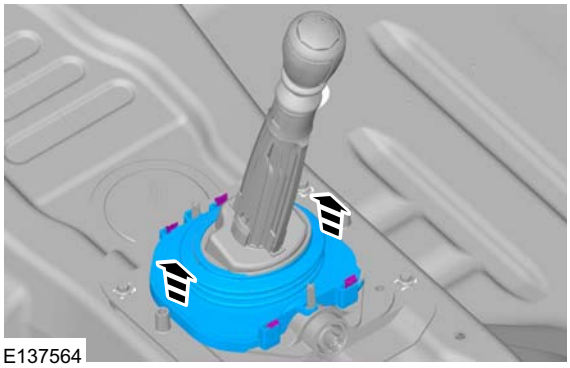
E137564

3. Torque: 28 Nm

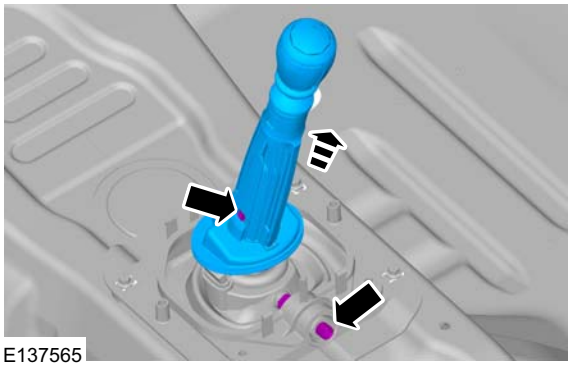
E137565

4.

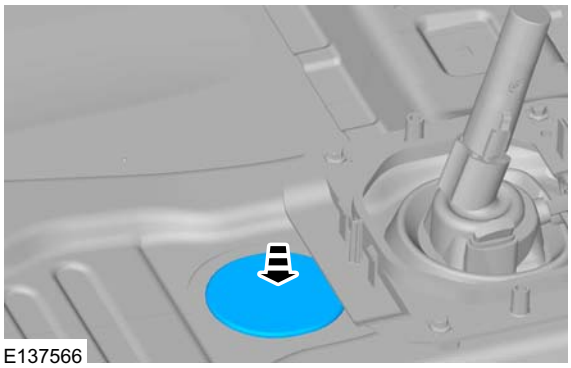
E137566

5. Torque: 31 Nm

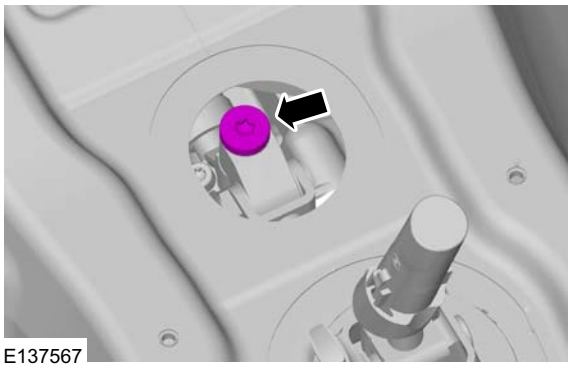
E137567

REMOVAL AND INSTALLATION

6. Refer to: Lifting (100-02 Jacking and Lifting, Description and Operation).

4x2

7. Refer to: Driveshaft - 2WD (205-01 Driveshaft, Removal and Installation).

8. Torque: 26 Nm

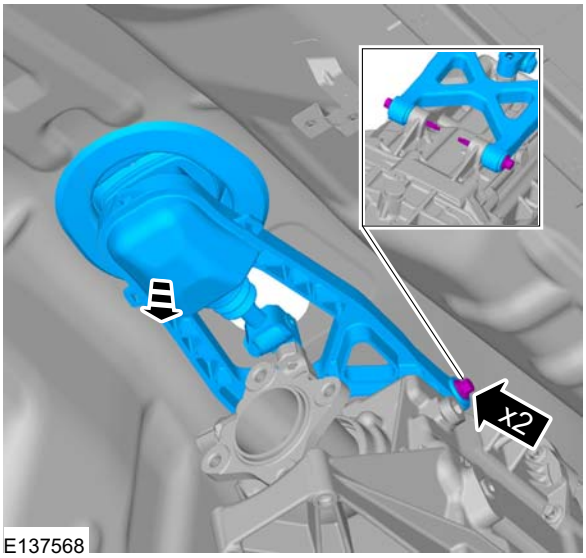

4x4

9. Refer to: Driveshaft - 4WD (205-01 Driveshaft, Removal and Installation).

10. Refer to: Transfer Case (308-07 Transfer Case - Vehicles With: 5-Speed Manual Transmission - MT75/6-Speed Manual Transmission - MT82, Removal).

11. Torque: 26 Nm

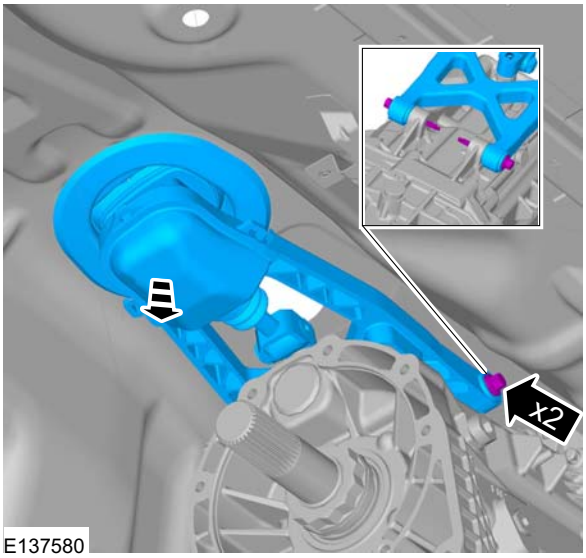

Installation

1. To install, reverse the removal procedure.

SECTION 308-07A Transfer Case — Vehicles With: 5-Speed Manual Transmission - MT75/6-Speed Manual Transmission - MT82

VEHICLE APPLICATION: 2011.50 Ranger

CONTENTS PAGE

DESCRIPTION AND OPERATION

Transfer Case..... 308-07A-2

GENERAL PROCEDURES

Transfer Case Draining and Filling..... 308-07A-3

REMOVAL

Transfer Case..... 308-07A-4

DISASSEMBLY AND ASSEMBLY

Transfer Case..... 308-07A-7

INSTALLATION

Transfer Case..... 308-07A-8

DESCRIPTION AND OPERATION

Transfer Case

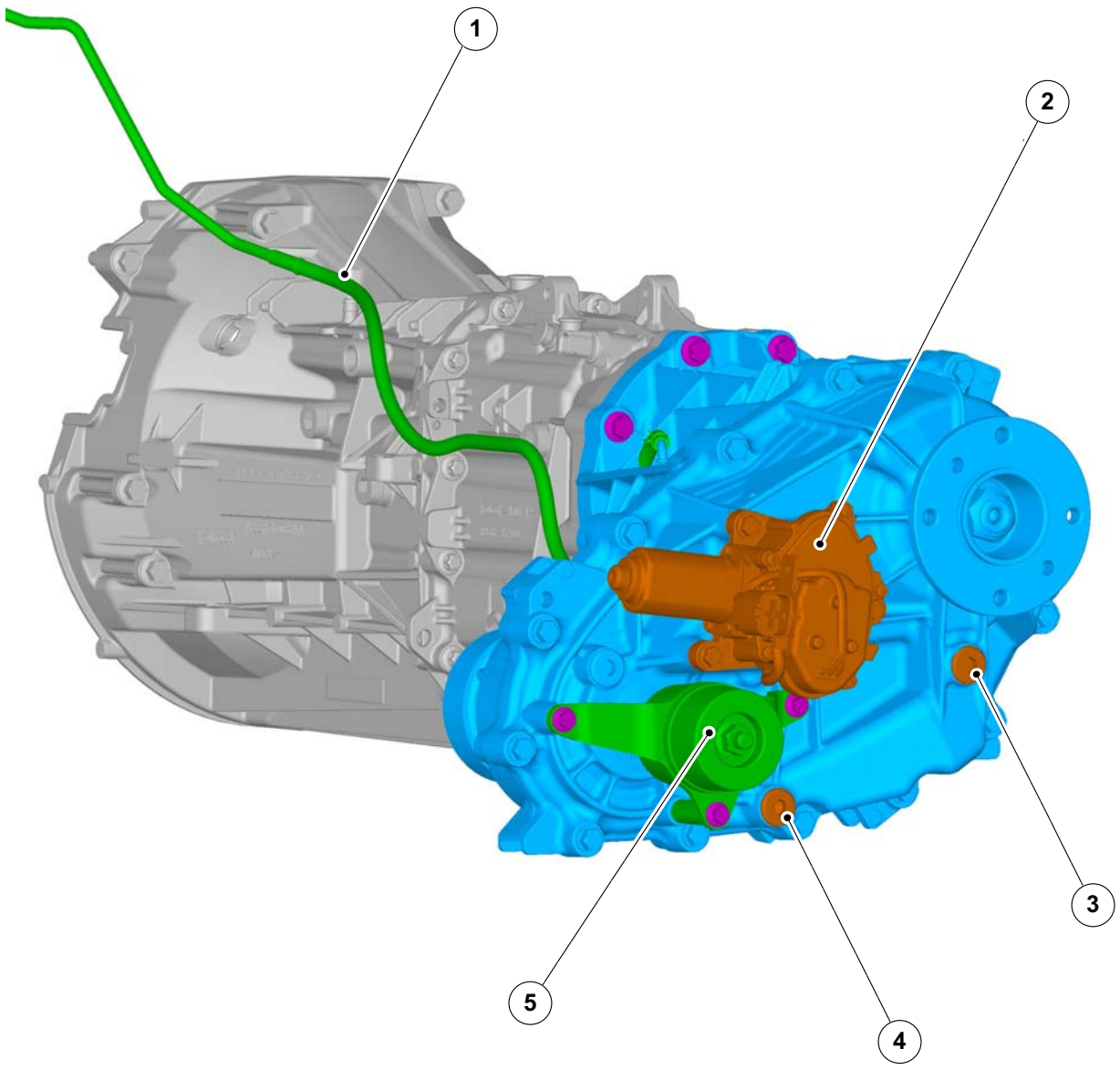

E131501

Item	Description
1	Breather tube
2	Motor
3	Oil filler plug
4	Drain plug
5	Damper

GENERAL PROCEDURES

Transfer Case Draining and Filling

1.

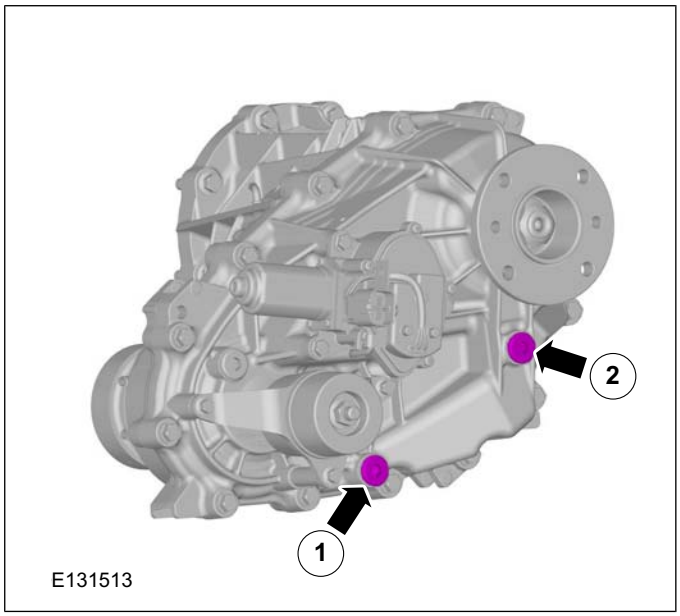

2. Remove the drain plug and the seal.

- Drain the oil into a suitable container.
- Tighten the drain plug with a new seal.
- Tightening torque 19-30 Nm.

3. Remove the filler plug and seal and add the specified amount and type of oil through the filler plug hole until the level reaches the bottom of the filler plug hole.

- Transfer oil type: Mercon® Multi-purpose AFT XT-2-QDXCapacity (approximate quantity): 1.85 L {1.95 US qt, 1.63 Imp qt}.
- Tighten the filler plug with a new seal.
- Tightening torque 19-30 Nm.

REMOVAL

Transfer Case

Removal

General Equipment

Transmission Jack

1. Refer to: Battery Disconnect and Connect (414-01 Battery, Mounting and Cables, General Procedures).

2. Refer to: Jacking (100-02 Jacking and Lifting, Description and Operation).
   Refer to: Lifting (100-02 Jacking and Lifting, Description and Operation).

3. Refer to: Driveshaft - 4WD (205-01 Driveshaft, Removal and Installation).
   Refer to: Front Driveshaft - 4WD (205-01 Driveshaft, Removal and Installation).

4.

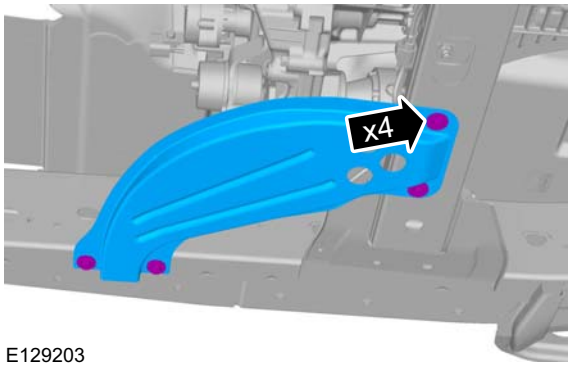

E129203

5.

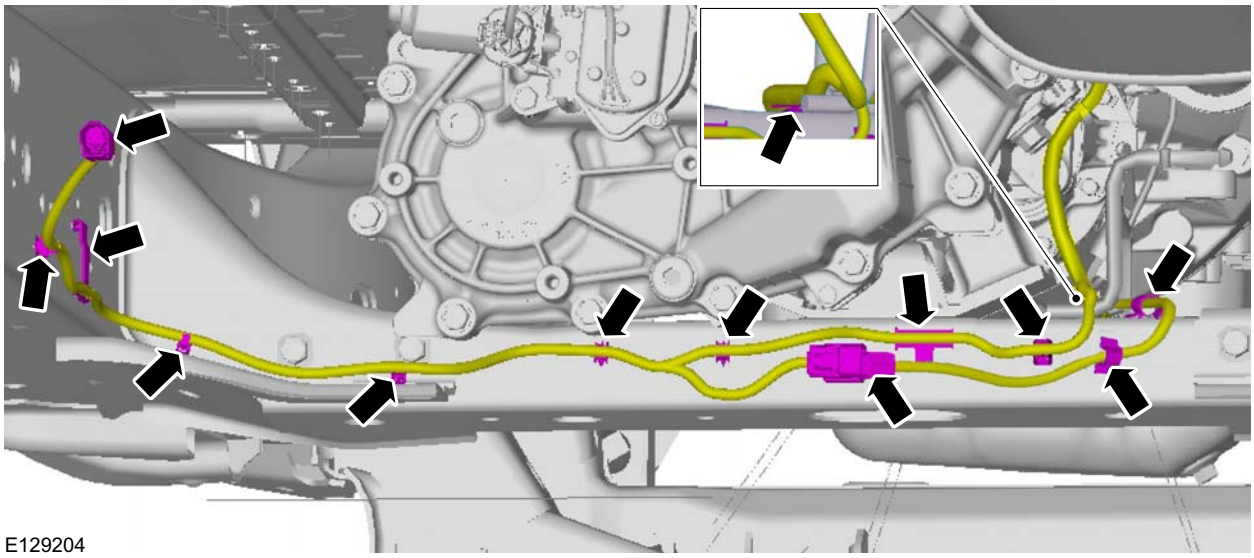

E129204

REMOVAL

6.

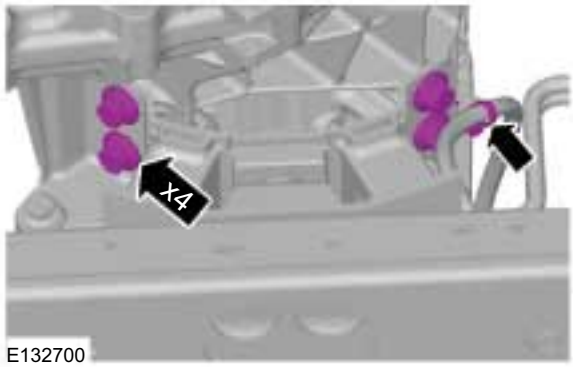

E132700

7.

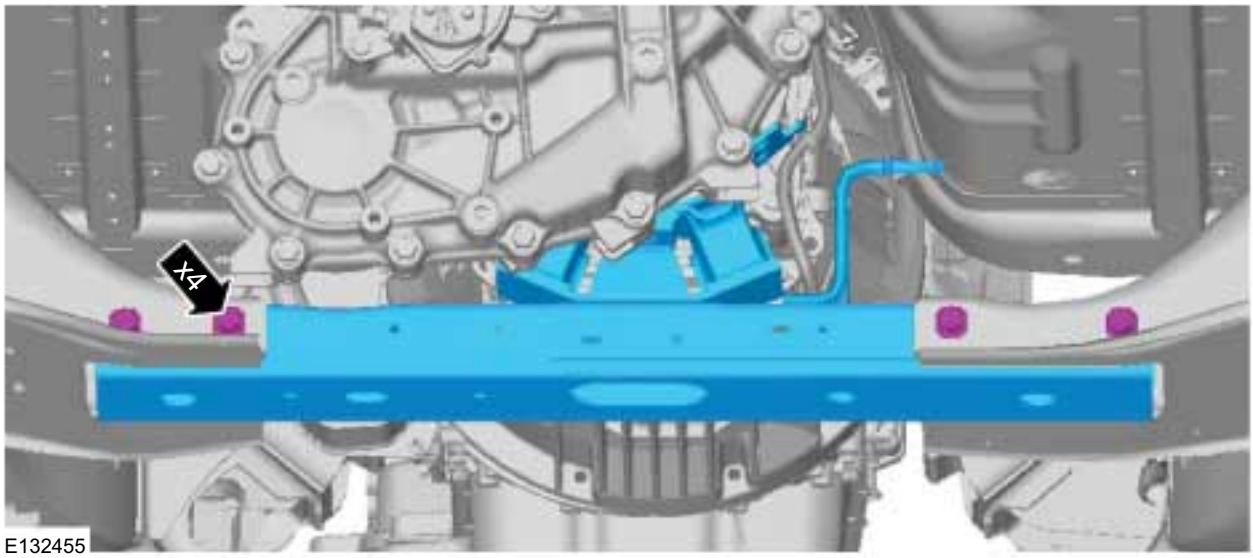

E132455

8. General Equipment: Transmission Jack

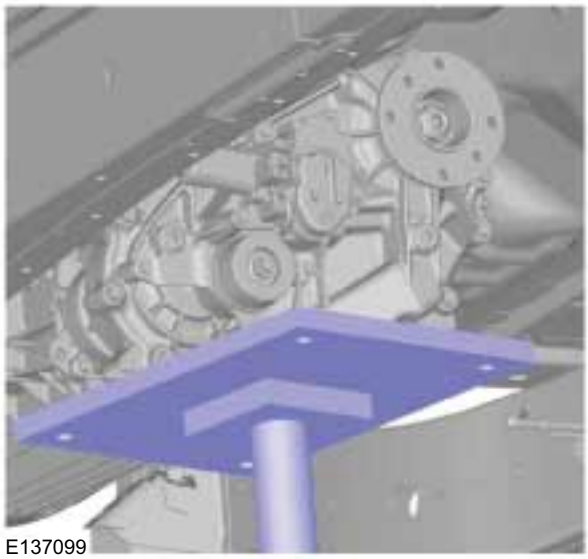
E137099

9.

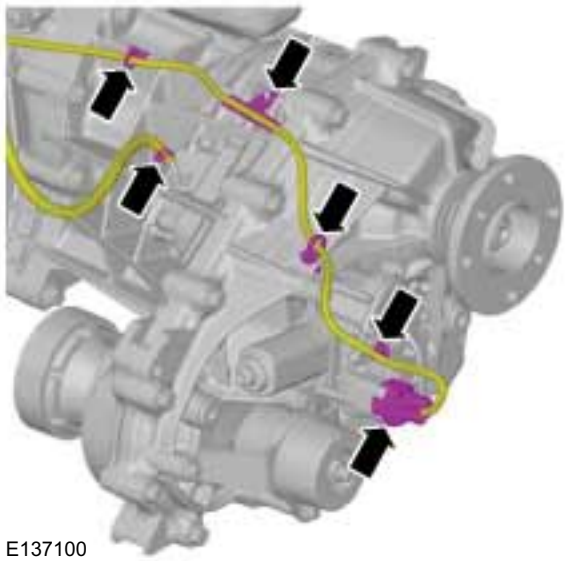
E137100

REMOVAL

10.

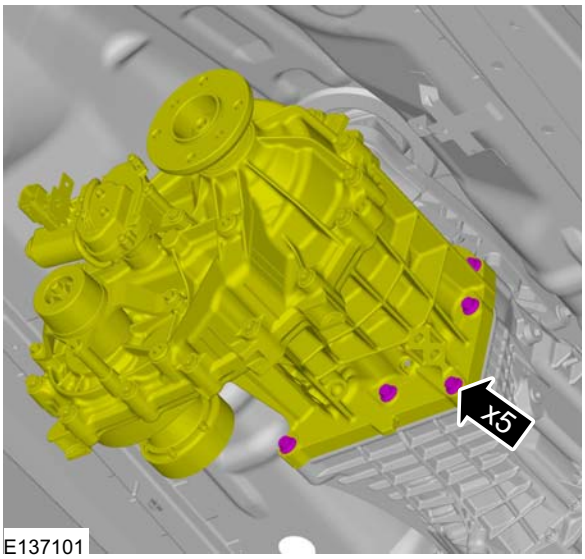

E137101

11.

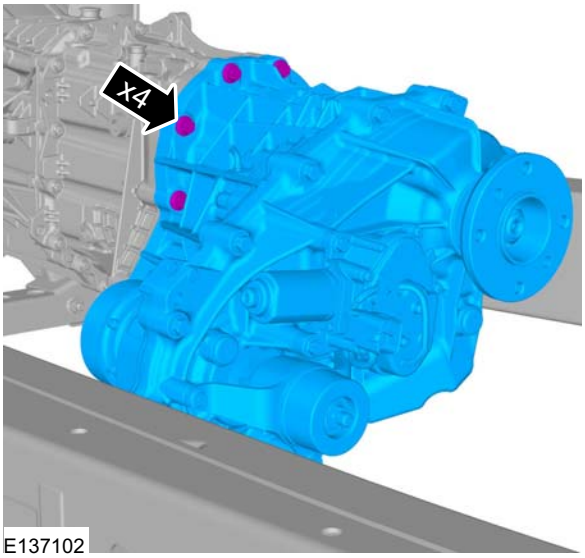

E137102

DISASSEMBLY AND ASSEMBLY

Transfer Case

4. Information not available at this time.

INSTALLATION

Transfer Case

Installation

General Equipment

Transmission Jack

1. Torque: 48 Nm

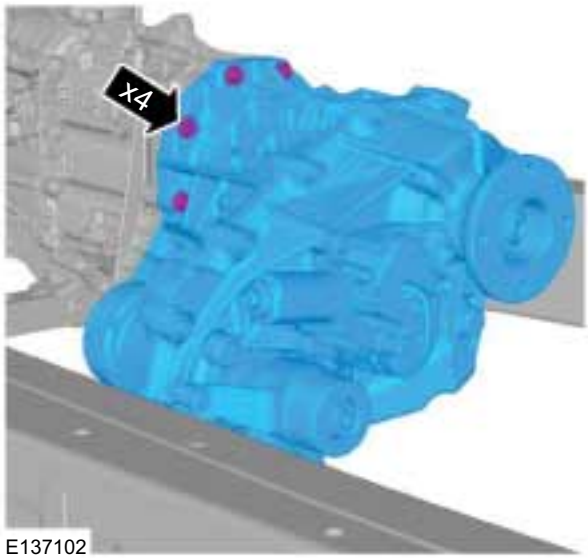

E137102

2. Torque: 48 Nm

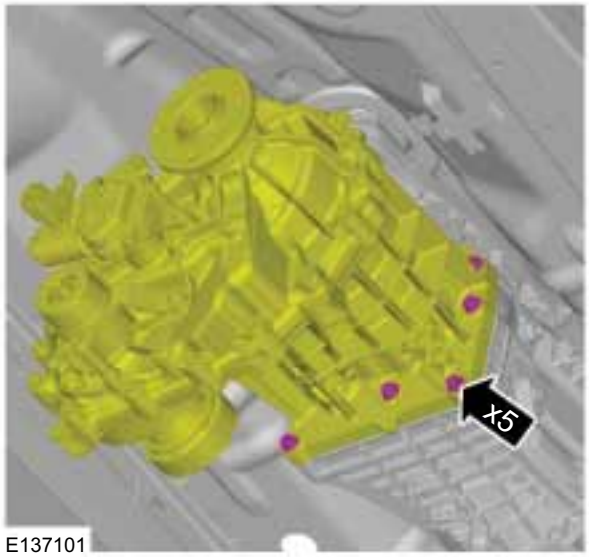

E137101

3.

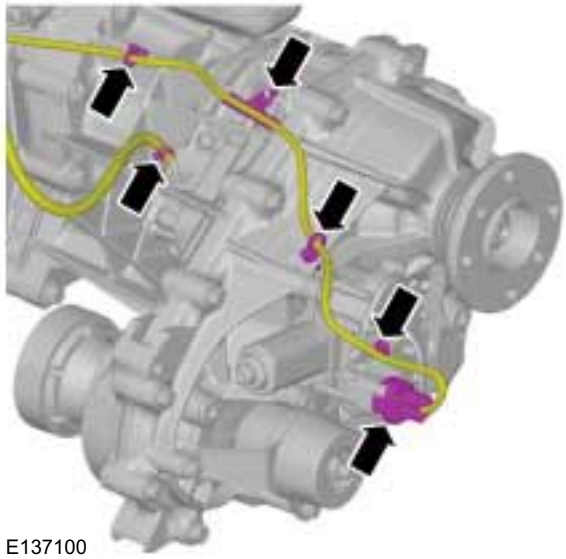
E137100

4. Lower the transmission jack.

General Equipment: Transmission Jack

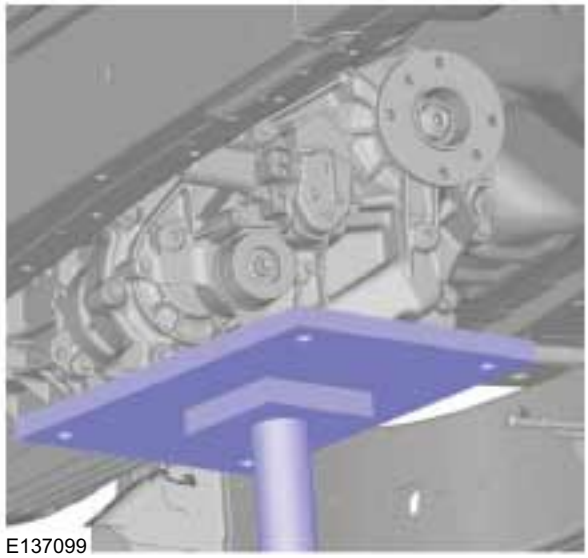
E137099

5. Torque: 90 Nm

INSTALLATION

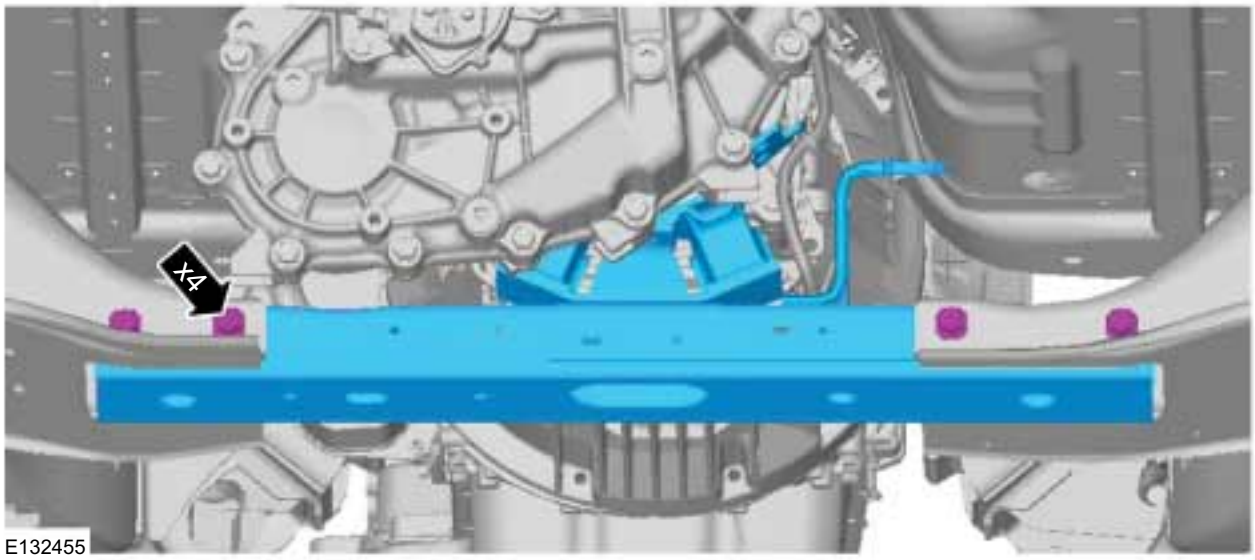

E132455

6. Torque: 90 Nm

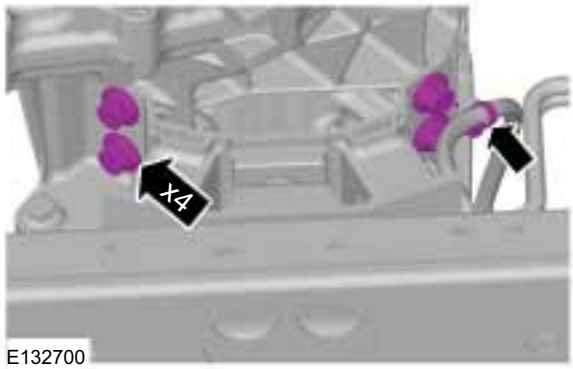

E132700

7.

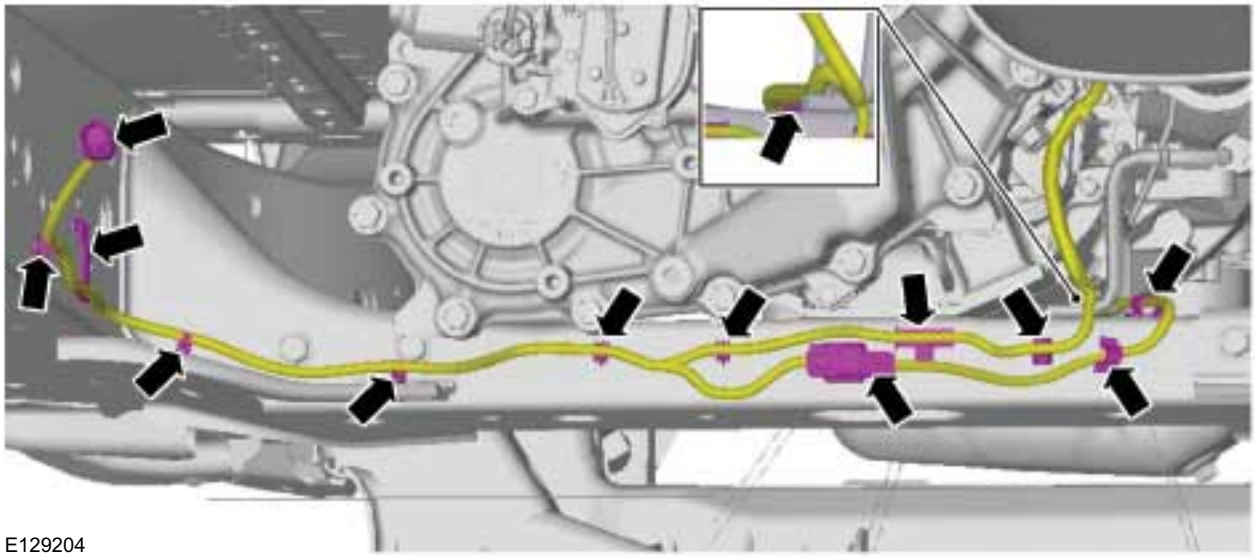
E129204

INSTALLATION

8. Torque: 48 Nm

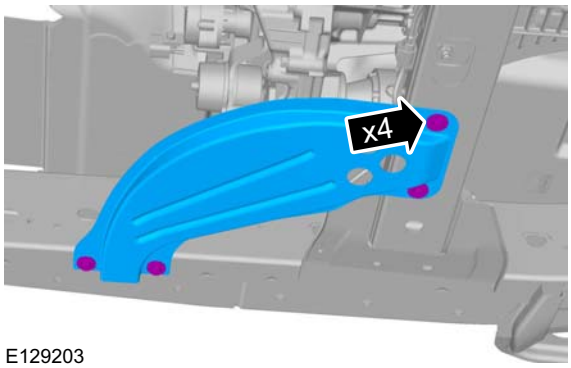

E129203

9. Refer to: Driveshaft - 4WD (205-01 Driveshaft, Removal and Installation).
   Refer to: Front Driveshaft - 4WD (205-01 Driveshaft, Removal and Installation).

10. Refer to: Jacking (100-02 Jacking and Lifting, Description and Operation).
    Refer to: Lifting (100-02 Jacking and Lifting, Description and Operation).

11. Refer to: Battery Disconnect and Connect (414-01 Battery, Mounting and Cables, General Procedures).

SECTION 308-07B Transfer Case — Vehicles With: 6-Speed Automatic Transaxle - 6R80

VEHICLE APPLICATION: 2011.50 Ranger

CONTENTS PAGE

DESCRIPTION AND OPERATION

Transfer Case..... 308-07B-2

GENERAL PROCEDURES

Transfer Case Draining and Filling..... 308-07B-3

REMOVAL

Transfer Case..... 308-07B-4

INSTALLATION

Transfer Case..... 308-07B-7

DESCRIPTION AND OPERATION

Transfer Case

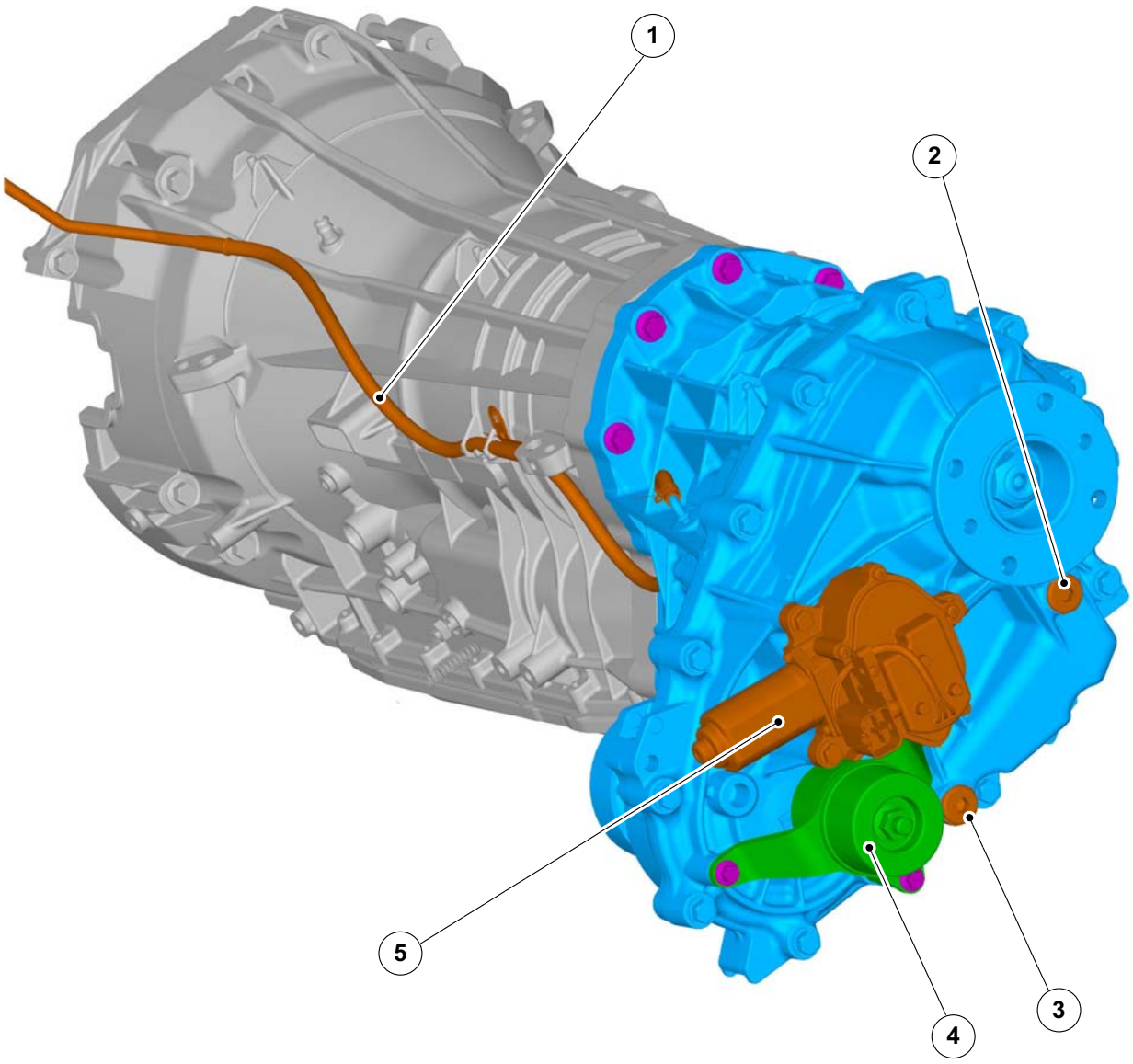

E131477

Item	Description
1	Breather tube
2	Oil filler plug
3	Drain plug
4	Damper
5	Motor

GENERAL PROCEDURES

Transfer Case Draining and Filling

Materials	
Name	**Specification**
Transmission Fluid	MERCON® V

1. **CAUTION: Do not use an impact wrench when removing the filler plug or drain plug. It may damage the transfer case.**

   Remove the drain plug and the seal.

   - Drain the oil into a suitable container.
   - Tighten the drain plug with a new seal.
   - Tightening torque 19-30 Nm.

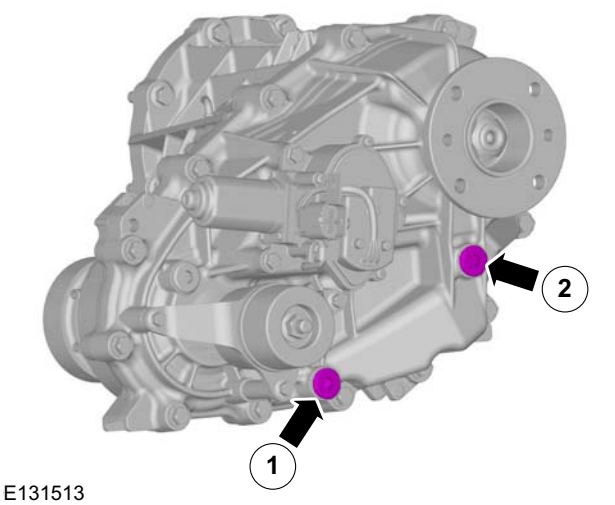

2. **CAUTION: Incorrect fluid fill can result in transfer case failure.**

   Remove the filler plug and seal and add the specified amount and type of oil through the filler plug hole until the level reaches the bottom of the filler plug hole.

   - Transfer oil type: Mercon® Multi-purpose AFT XT-2-QDXCapacity (approximate quantity): 1.2 L {1.3 US qt, 1.1 Imp qt}.
   - Tighten the filler plug with a new seal.
   - Tightening torque 19-30 Nm.

REMOVAL

Transfer Case

Removal

General Equipment

Transmission Jack

1. Refer to: Battery Disconnect and Connect (414-01 Battery, Mounting and Cables, General Procedures).

2. Refer to: Jacking (100-02 Jacking and Lifting, Description and Operation).
   Refer to: Lifting (100-02 Jacking and Lifting, Description and Operation).

3. Refer to: Driveshaft - 4WD (205-01 Driveshaft, Removal and Installation).
   Refer to: Front Driveshaft - 4WD (205-01 Driveshaft, Removal and Installation).

4.

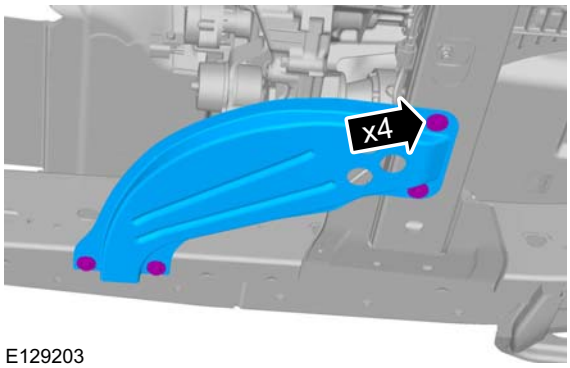

E129203

5.

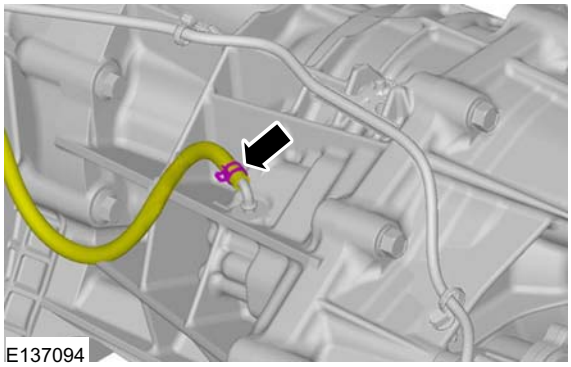
E137094

6.

REMOVAL

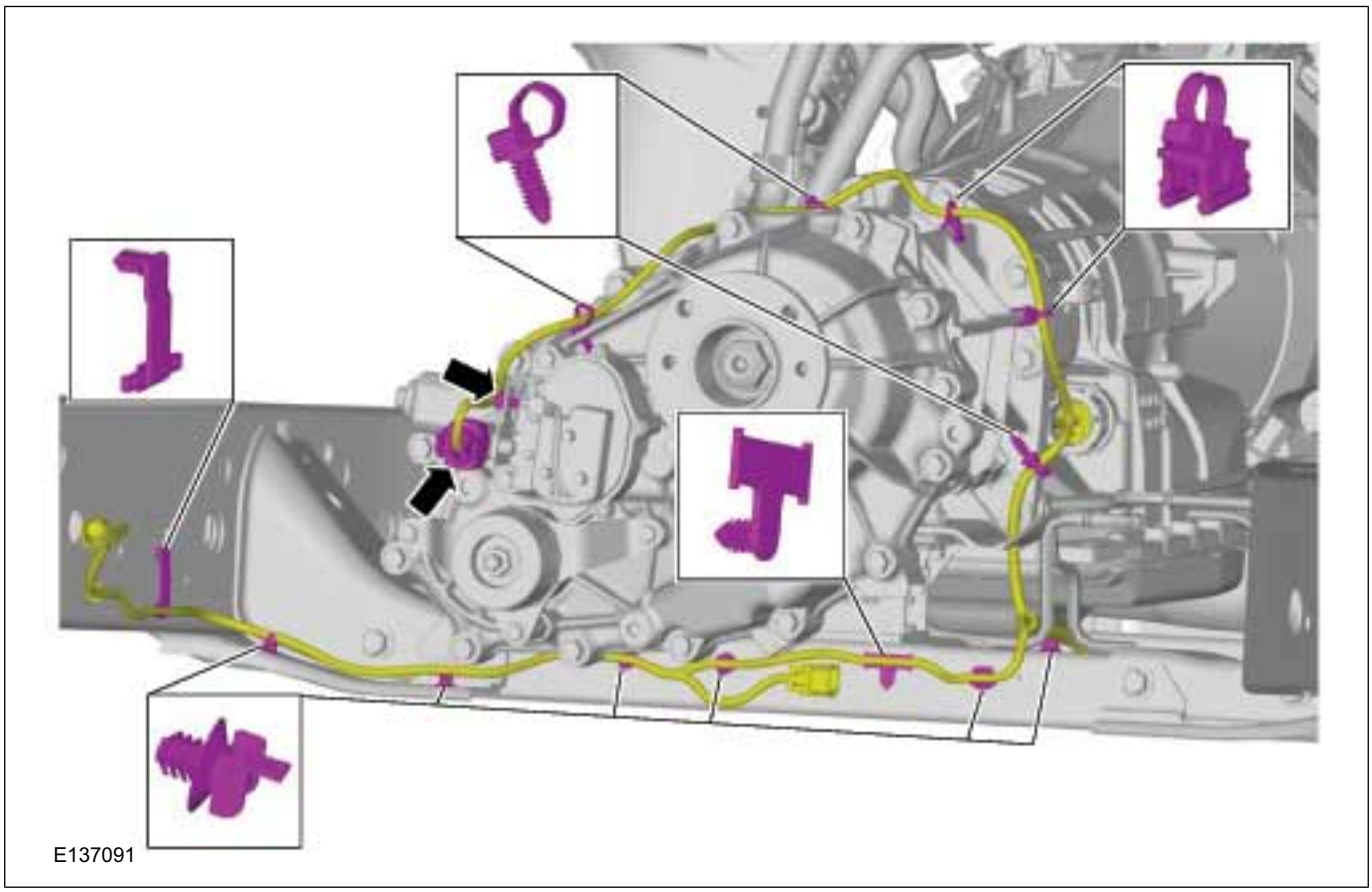

7.

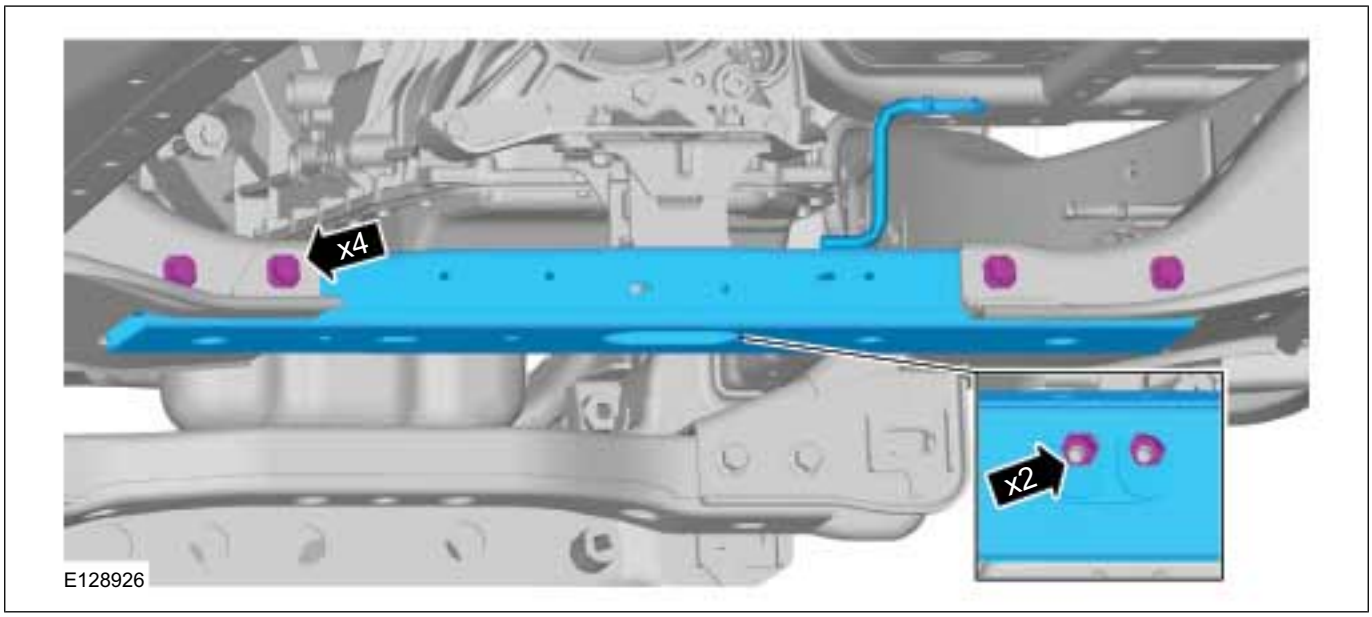

REMOVAL

8. General Equipment: Transmission Jack

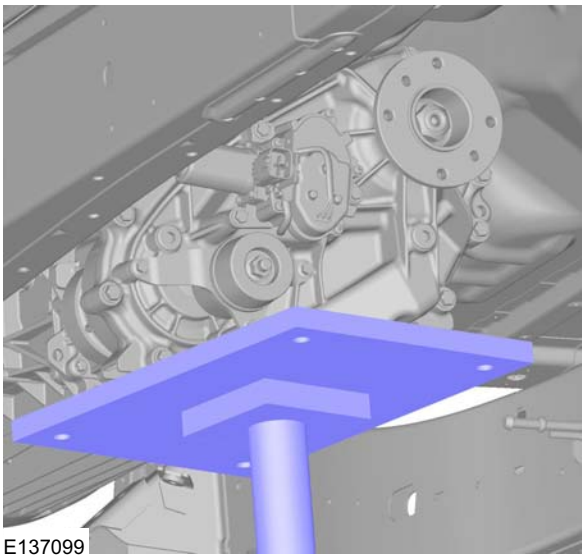
E137099

10.

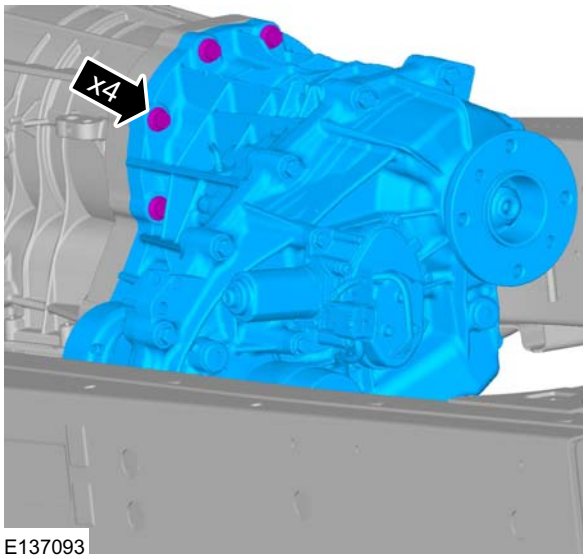

E137093

9.

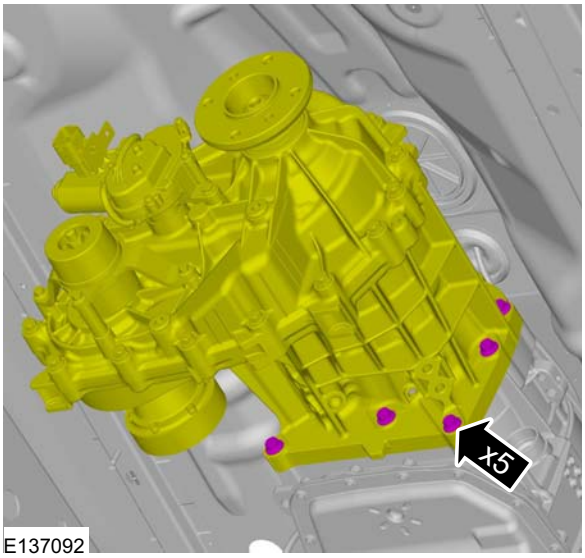

E137092

INSTALLATION

Transfer Case

Installation

General Equipment

Transmission Jack

1. Torque: 48 Nm

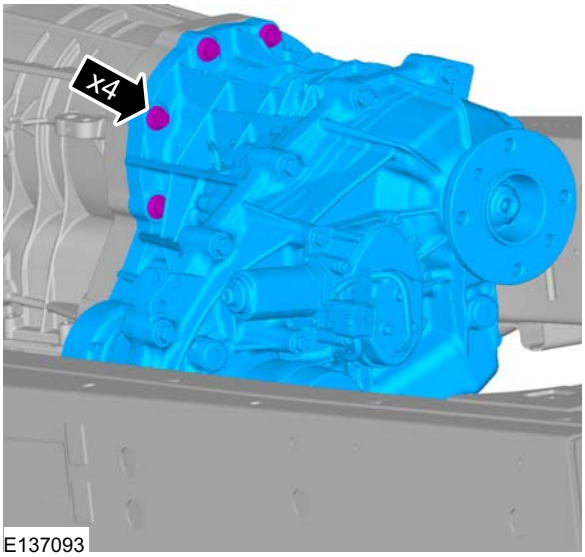

E137093

2. Torque: 48 Nm

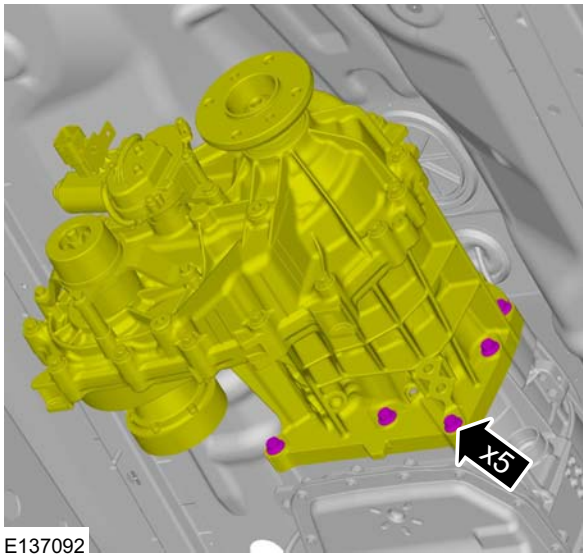

E137092

3. Lower the transmission jack.
   General Equipment: Transmission Jack

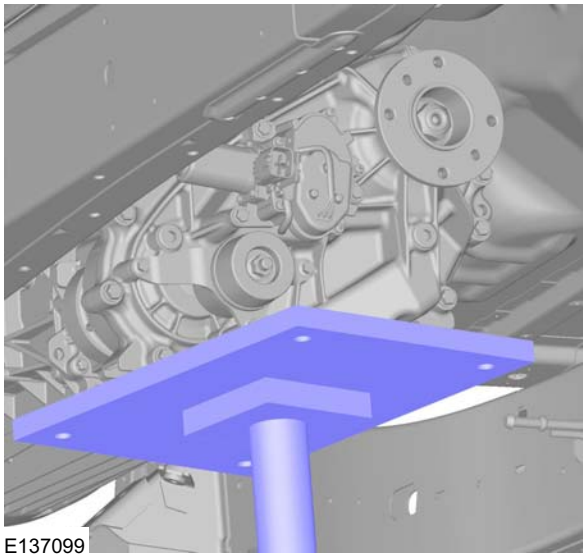
E137099

4. Torque: 90 Nm

INSTALLATION

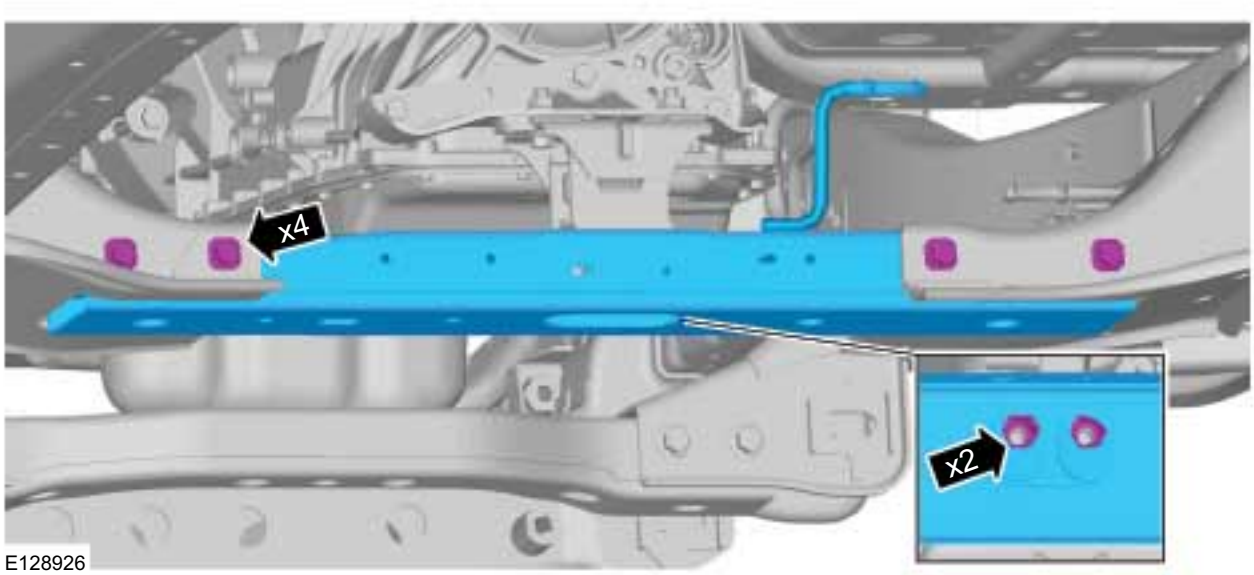

5.

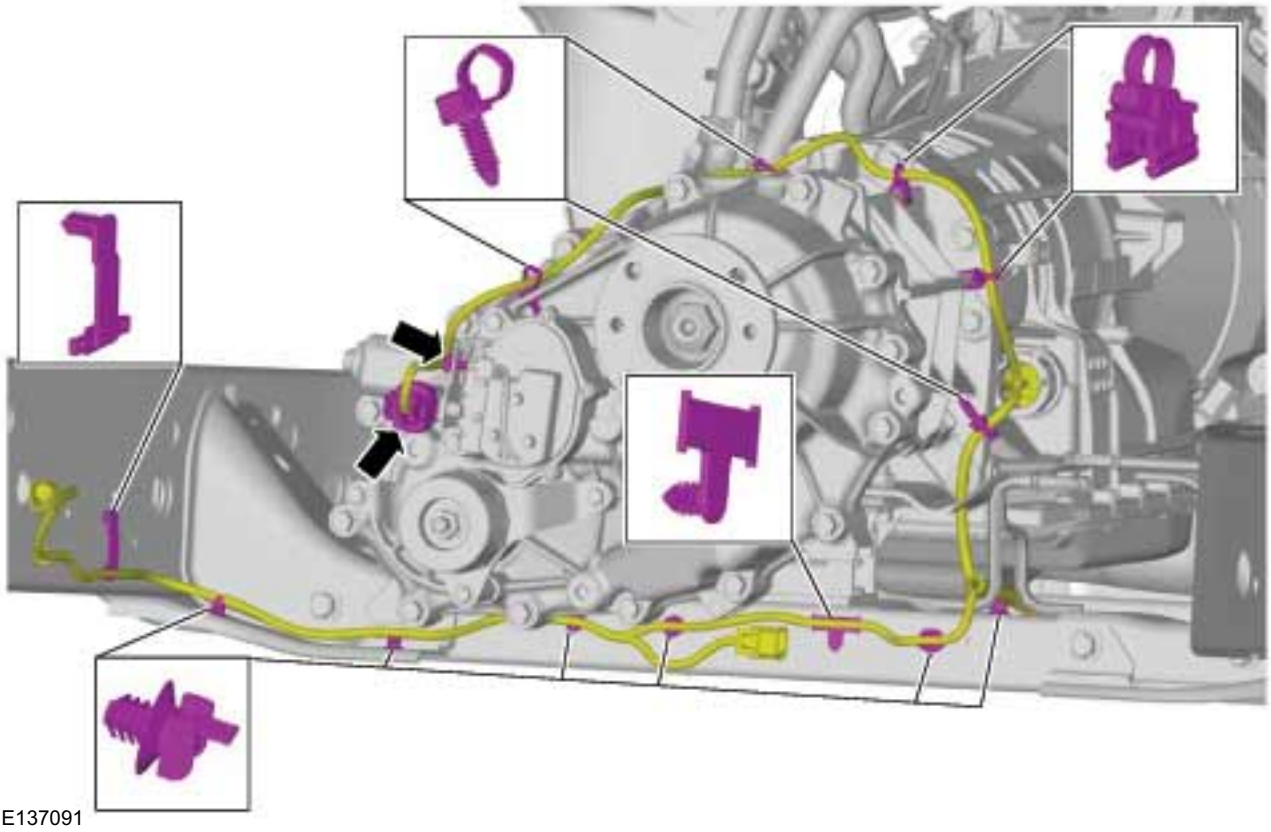

INSTALLATION

6.

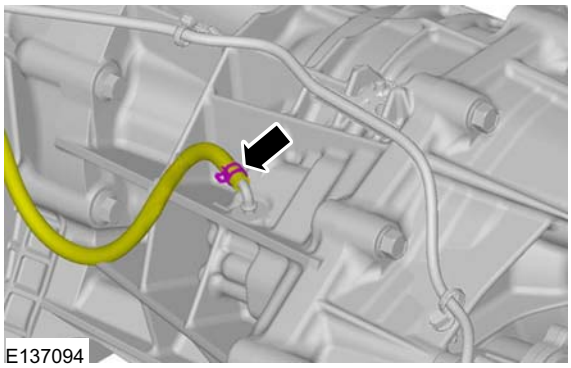

7. Torque: 48 Nm

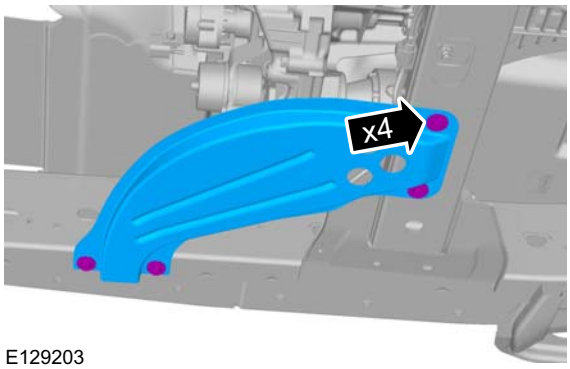

8. Refer to: Driveshaft - 4WD (205-01 Driveshaft, Removal and Installation).
Refer to: Front Driveshaft - 4WD (205-01 Driveshaft, Removal and Installation).

9. Refer to: Jacking (100-02 Jacking and Lifting, Description and Operation).
Refer to: Lifting (100-02 Jacking and Lifting, Description and Operation).

10. Refer to: Battery Disconnect and Connect (414-01 Battery, Mounting and Cables, General Procedures).

SECTION 309-00A Exhaust System — 2.5L Duratec-HE (122kW/165PS) - MI4

VEHICLE APPLICATION: 2011.50 Ranger

CONTENTS PAGE

DESCRIPTION AND OPERATION

Exhaust System..... 309-00A-2

REMOVAL AND INSTALLATION

Catalytic Converter..... 309-00A-5
Front Muffler..... 309-00A-7
Rear Muffler..... 309-00A-8

DESCRIPTION AND OPERATION

Exhaust System

Exhaust flexible pipes are very fragile and must not be subjected to any load. They must be secured against twisting and bending during any work on the exhaust system.

2.5L E100

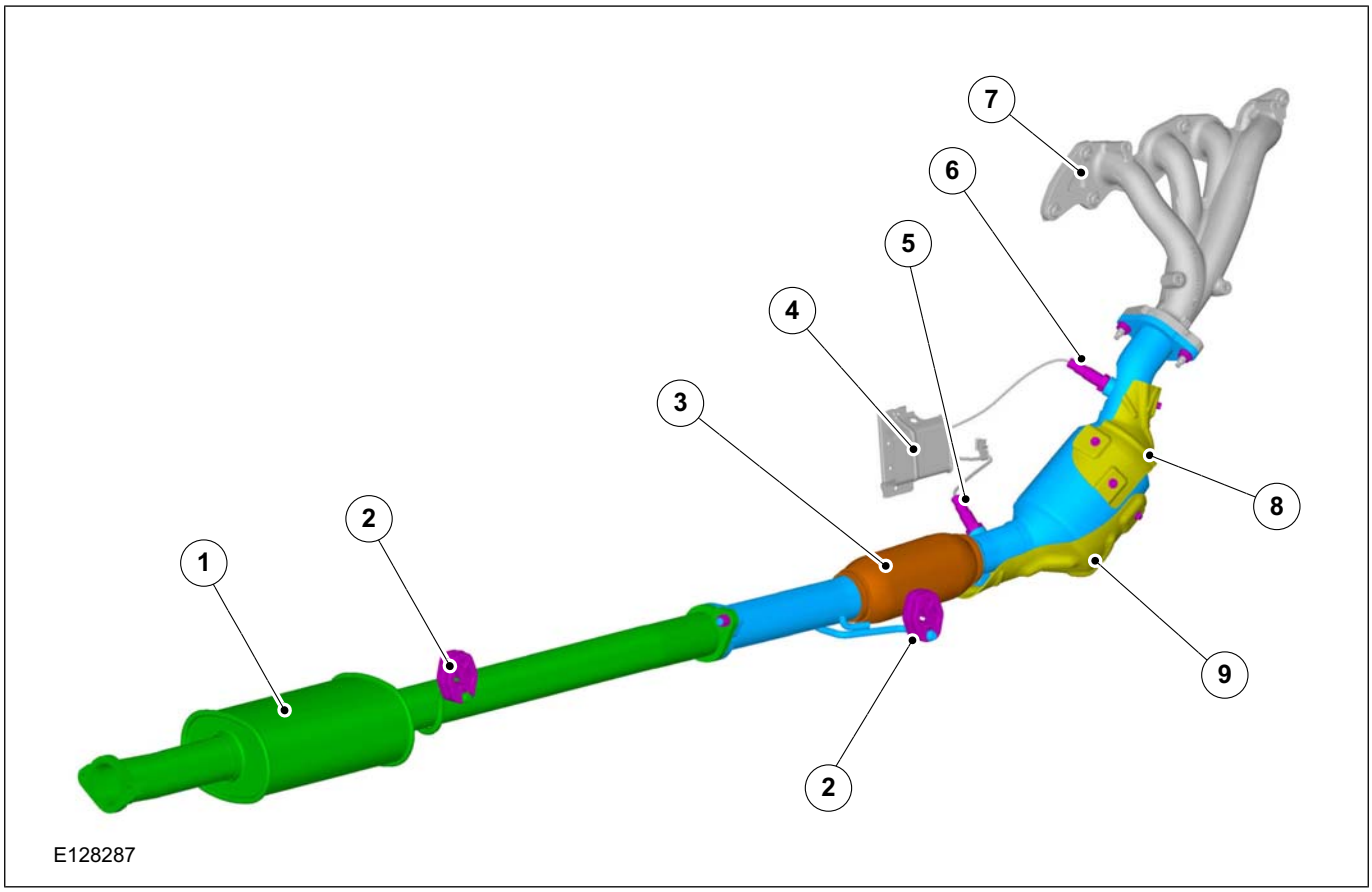

Item	Description
1	Intermidiate muffler
2	Exhaust hanger insulator
3	Exhaust flexible pipe
4	Heatsheild

Item	Description
5	Catalyst monitor sensor
6	Heated oxygen Sensor
7	Exhaust manifold
8	Heatsheild
9	Heatsheild

DESCRIPTION AND OPERATION

2.5L

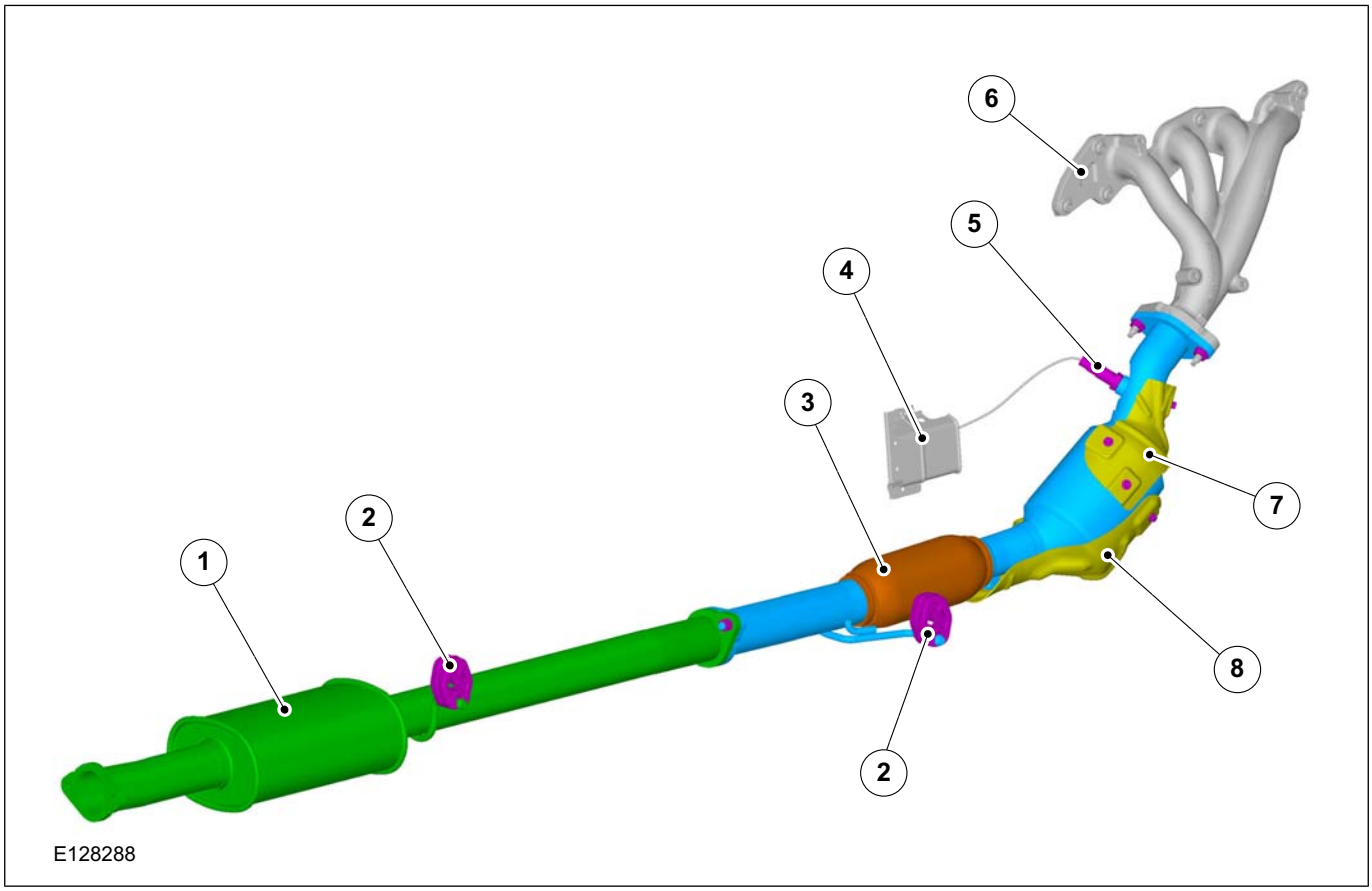

Item	Description
1	Intermidiate muffler
2	Exhaust hanger insulator
3	Exhaust flexible pipe
4	Heatsheild

Item	Description
5	Heated oxygen sensor
6	Exhaust manifold
7	Heatsheild
8	Heatsheild

All Vehicles

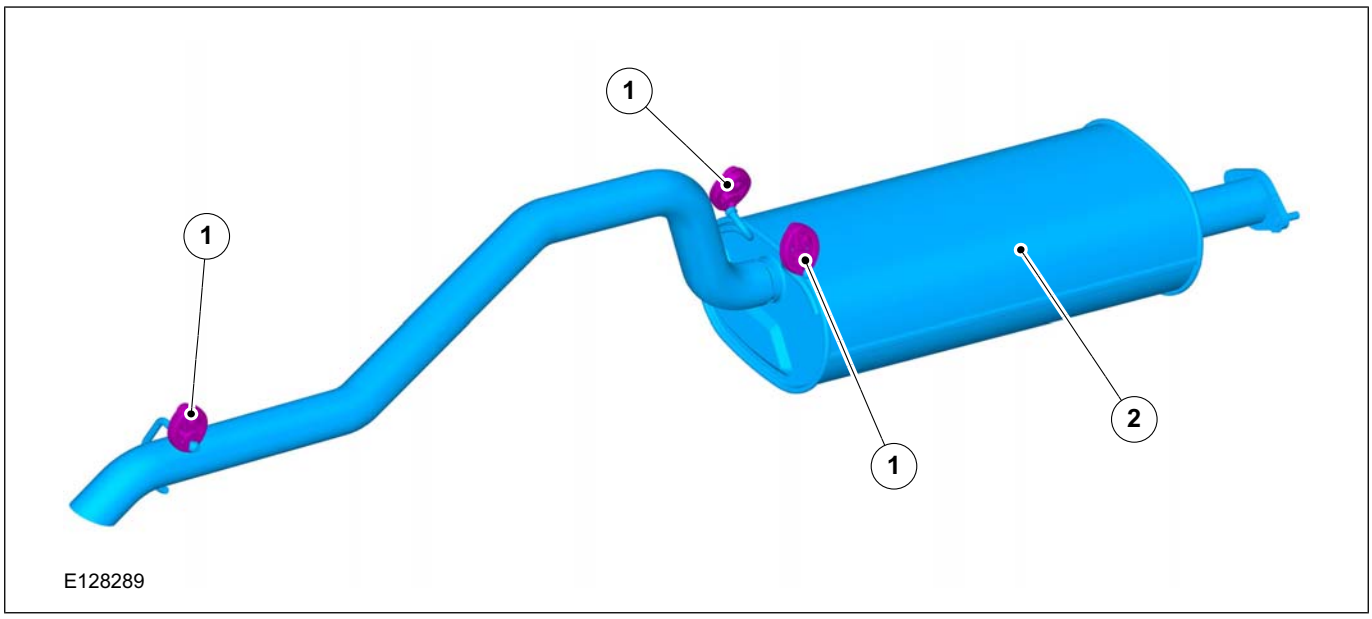

DESCRIPTION AND OPERATION

Item	Description
1	Exhaust hanger insulator
2	Rear muffler

REMOVAL AND INSTALLATION

Catalytic Converter

Removal

WARNING: When the engine and exhaust system are hot, they can cause severe burns or injury. Turn off the engine and wait until they are cool before removing the exhaust system.

NOTE: Removal steps in this procedure may contain installation details.

1. Refer to: Health and Safety Precautions (100-00 General Information, Description and Operation).
2. Refer to: Lifting (100-02 Jacking and Lifting, Description and Operation).

All vehicles

3. 1. Torque: 28 Nm

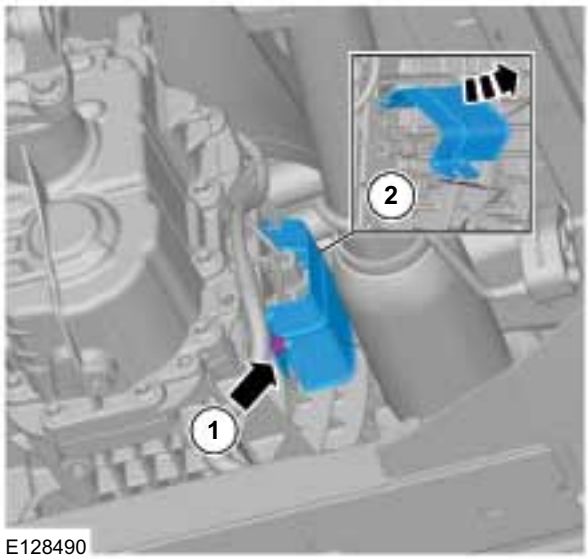

E128490

4.

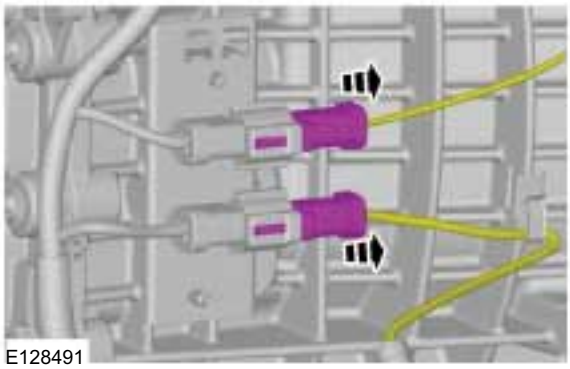
E128491

5. Torque: 10 Nm

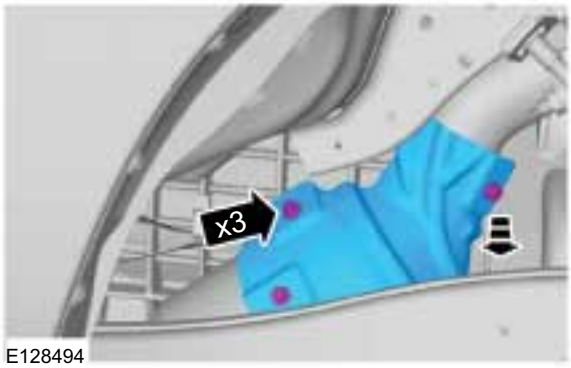

E128494

4x4

6. Torque: 10 Nm

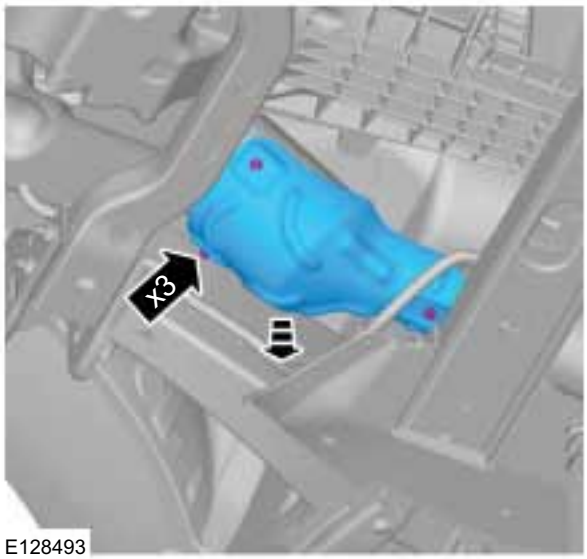

E128493

7. Torque: 48 Nm

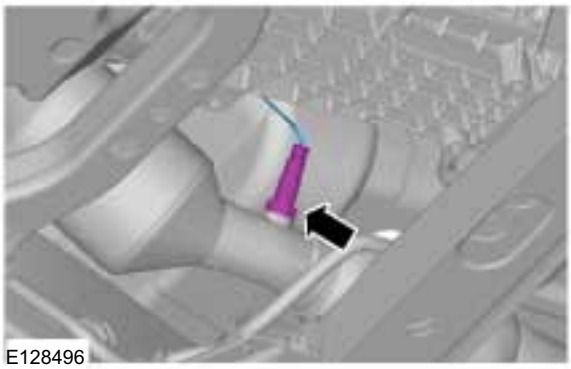
E128496

REMOVAL AND INSTALLATION

All vehicles

8. **CAUTION: Over bending the exhaust flexible pipe may cause damage resulting in failure.**

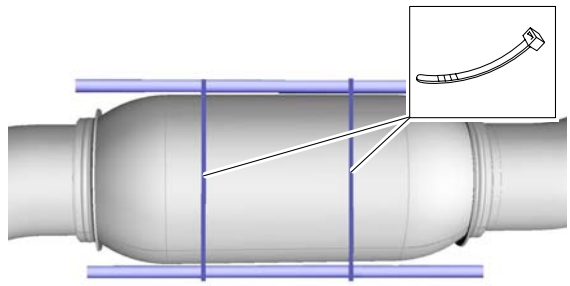

E98634

9. **CAUTION: Over bending the exhaust flexible pipe may cause damage resulting in failure.**

Torque: 48 Nm

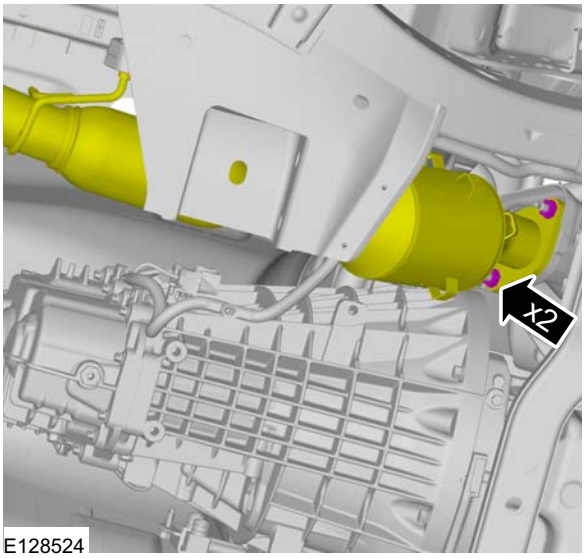

E128524

10. **CAUTION: Over bending the exhaust flexible pipe may cause damage resulting in failure.**

Torque: 48 Nm

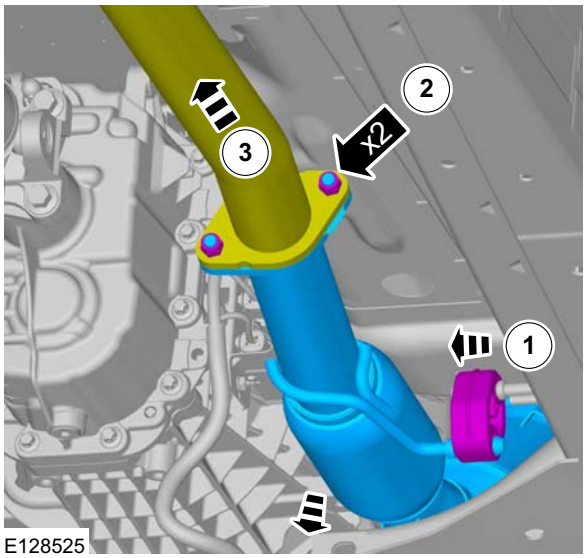

E128525

Installation

1. To install, reverse the removal procedure.

REMOVAL AND INSTALLATION

Front Muffler

Removal

WARNING: When the engine and exhaust system are hot, they can cause severe burns or injury. Turn off the engine and wait until they are cool before removing the exhaust system.

NOTE: Removal steps in this procedure may contain installation details.

1. Refer to: Health and Safety Precautions (100-00 General Information, Description and Operation).
2. Refer to: Lifting (100-02 Jacking and Lifting, Description and Operation).
3. Torque: 48 Nm

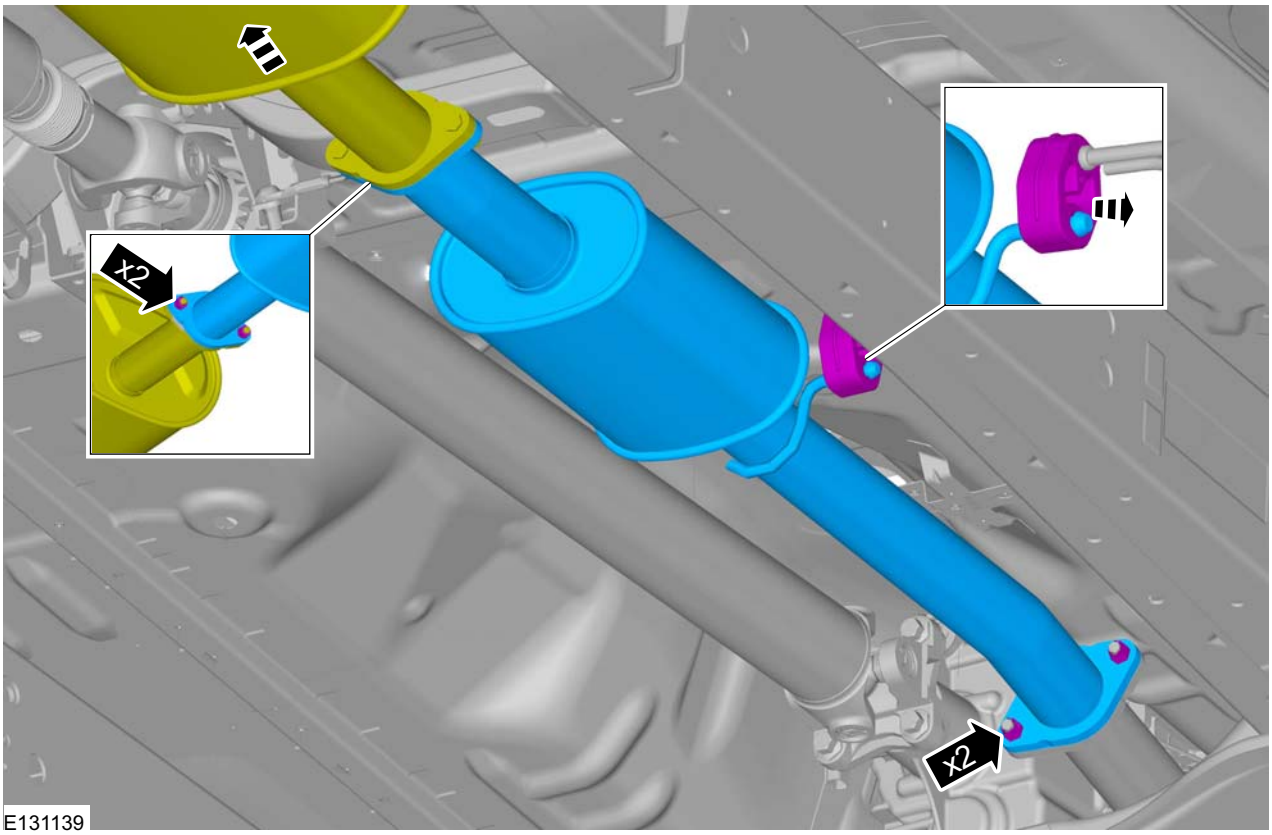

Installation

1. To install, reverse the removal procedure.

REMOVAL AND INSTALLATION

Rear Muffler

Removal

WARNING: When the engine and exhaust system are hot, they can cause severe burns or injury. Turn off the engine and wait until they are cool before removing the exhaust system.

NOTE: Removal steps in this procedure may contain installation details.

1. Refer to: Health and Safety Precautions (100-00 General Information, Description and Operation).
2. Refer to: Lifting (100-02 Jacking and Lifting, Description and Operation).
3. Torque: 48 Nm

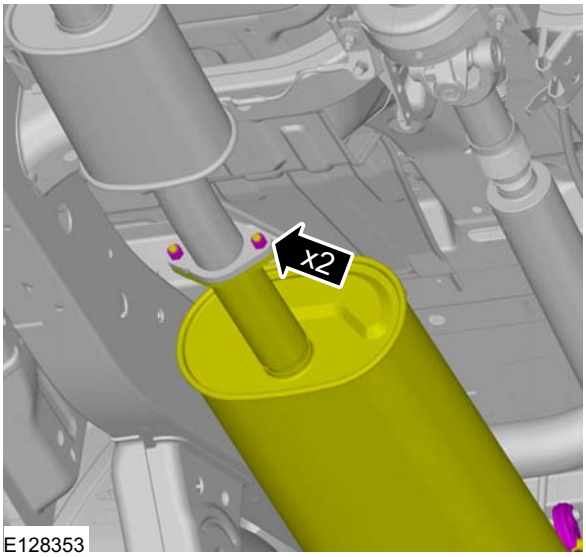

E128353

4.

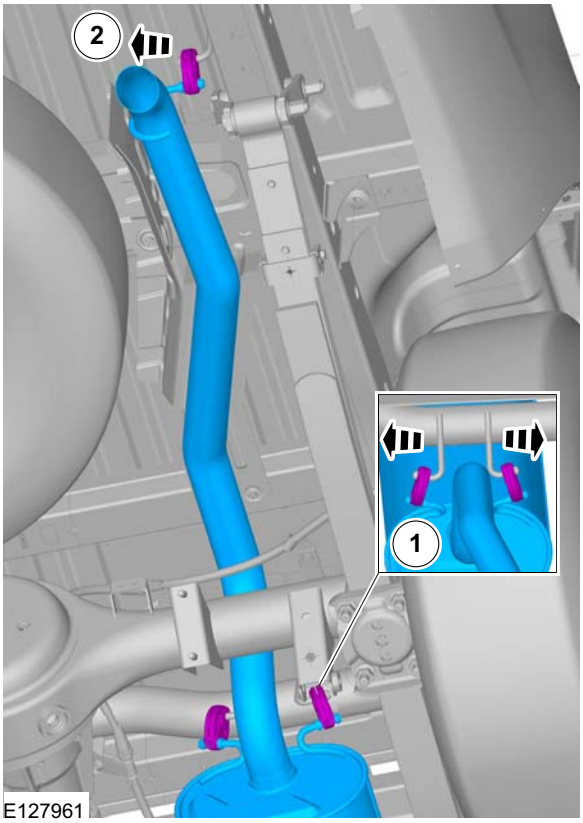

E127961

5.

REMOVAL AND INSTALLATION

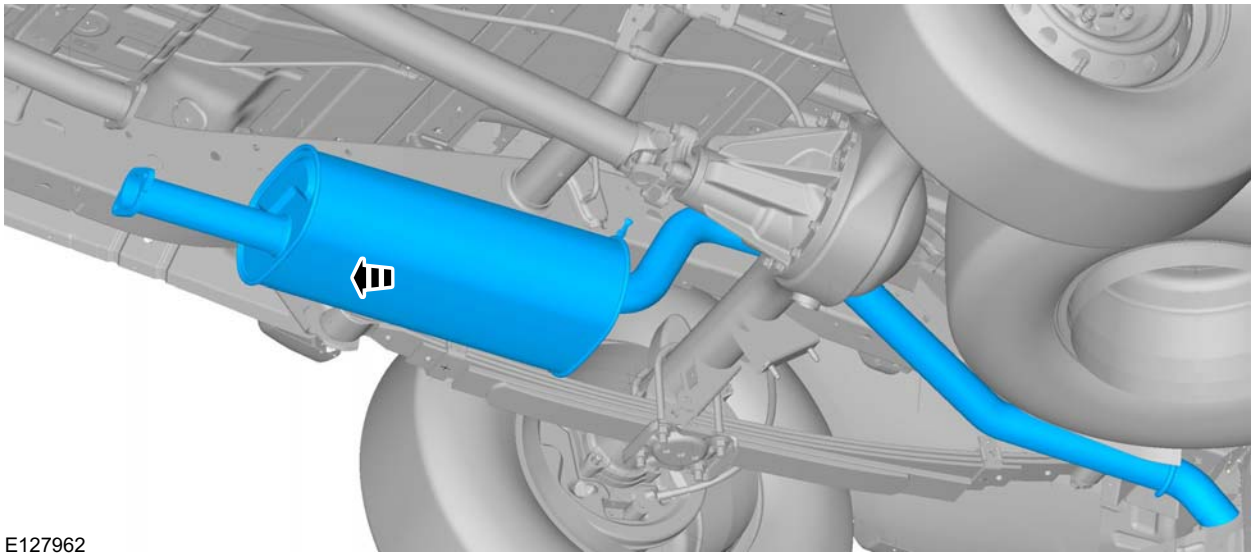

Installation

1. To install, reverse the removal procedure.

SECTION 309-00B Exhaust System — 2.2L Duratorq-TDCi (88kW/120PS) - Puma/2.2L Duratorq-TDCi (96kW/130PS) - Puma/2.2L Duratorq-TDCi (110kW/150PS) - Puma/3.2L Duratorq-TDCi (148kW/200PS) - Puma

VEHICLE APPLICATION: 2011.50 Ranger

CONTENTS PAGE

DESCRIPTION AND OPERATION

Exhaust System (Component Location)..... 309-00B-2

REMOVAL AND INSTALLATION

Catalytic Converter..... 309-00B-5
Diesel Particulate Filter (DPF)..... 309-00B-8
Exhaust Flexible Pipe..... 309-00B-10
Rear Muffler..... 309-00B-12

DESCRIPTION AND OPERATION

Exhaust System – Component Location

NOTE: Exhaust flexible pipes are very fragile and must not be subjected to any load. They must be secured against twisting and bending during any work on the exhaust system.

Vehicles with diesel particulate filter & catalytic convertor

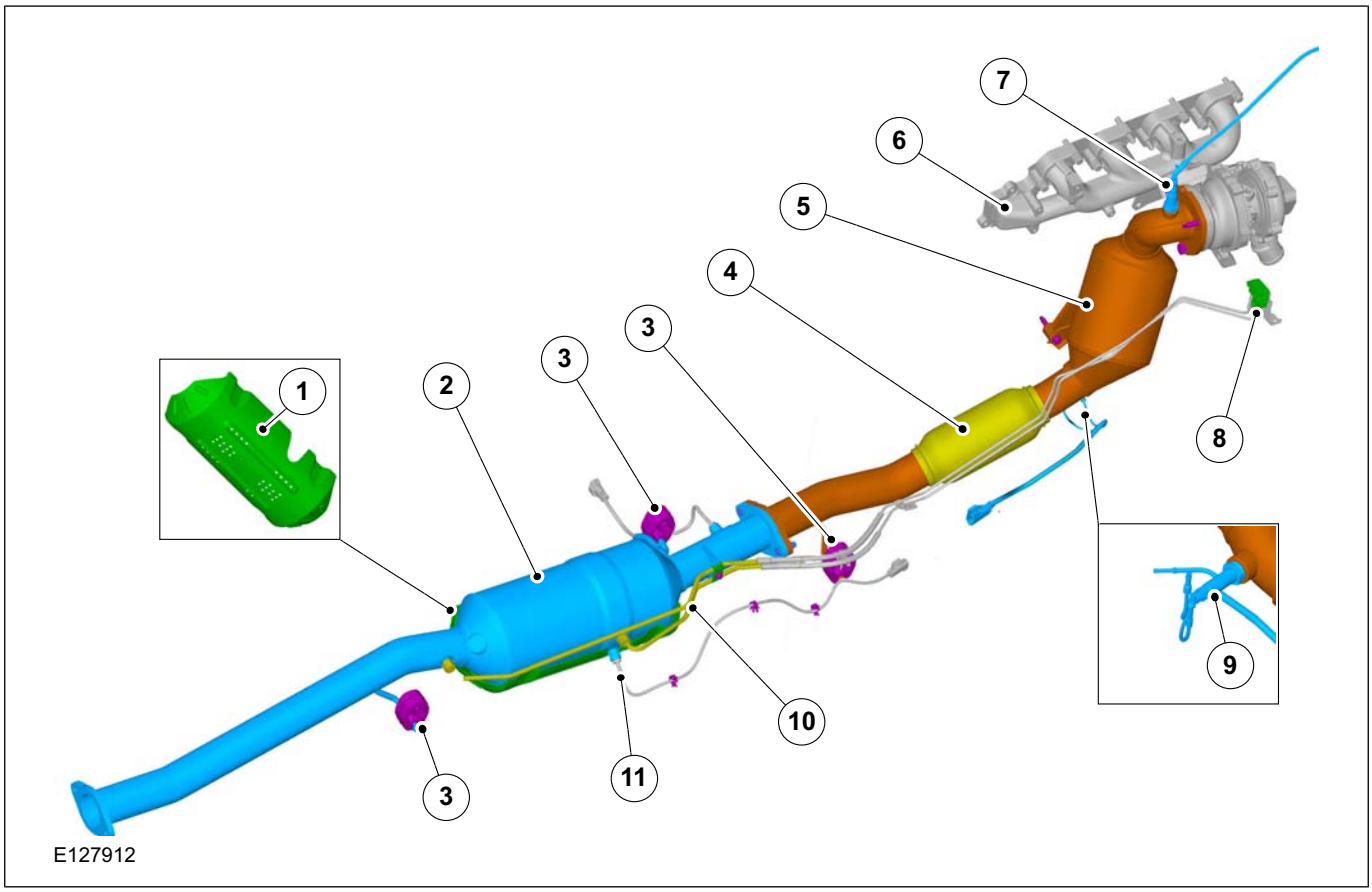

Item	Description
1	DPF Heat shield
2	DPF
3	Exhaust hanger insulator
4	Exhaust flexible pipe
5	Catalytic converter

Item	Description
6	Exhaust manifold
7	Temprature sensor
8	Pressure differential sensor
9	Fuel vapourizer
10	Pressure differential sensor lines
11	Temprature sensor

DESCRIPTION AND OPERATION

Vehicles with catalytic convertor

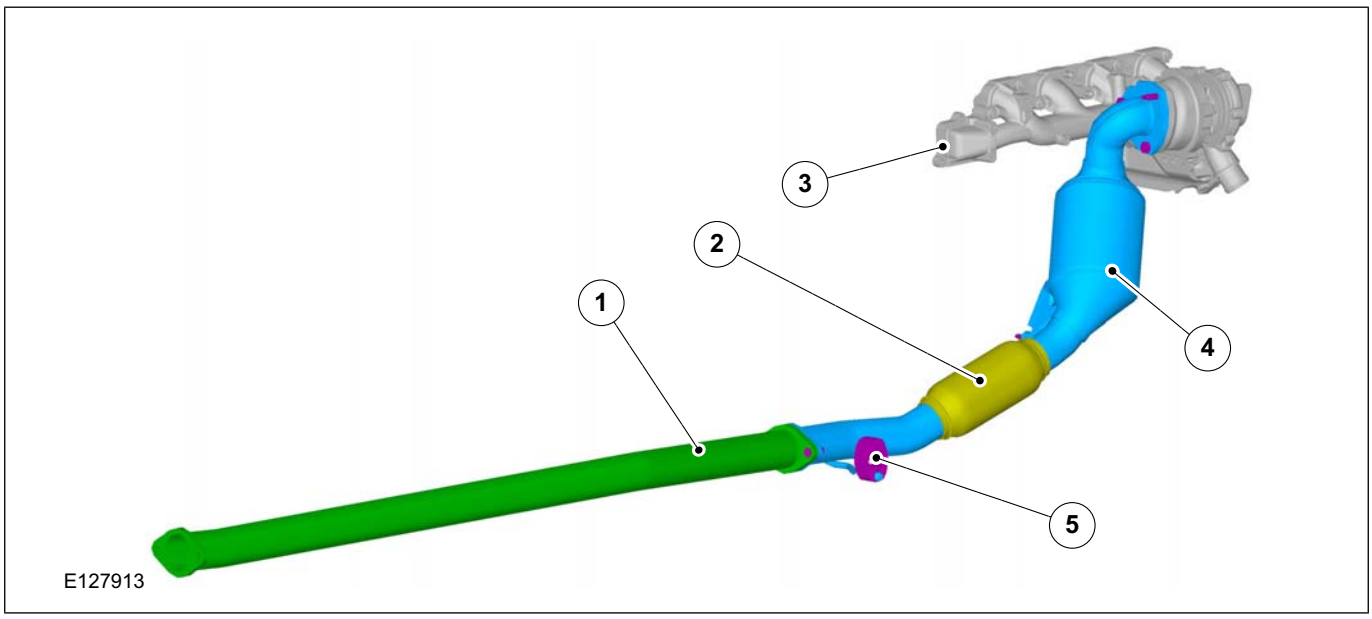

Item	Description
1	Exhaust link pipe
2	Exhaust flexible pipe

Item	Description
3	Exhaust manifold
4	Catalytic converter
5	Exhaust hanger insulator

Vehicles without diesel particulate filter & catalytic convertor

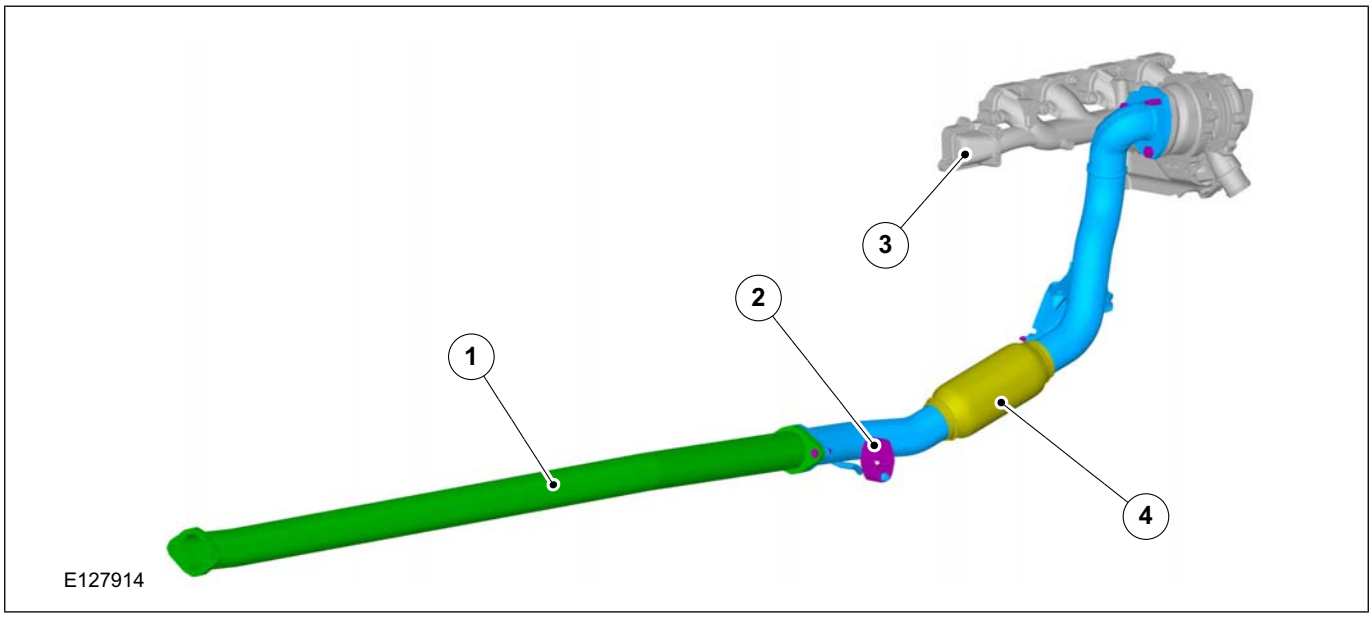

Item	Description
1	Exhaust link pipe
2	Exhaust hanger insulator

Item	Description
3	Exhaust manifold
4	Exhaust flexible pipe

DESCRIPTION AND OPERATION

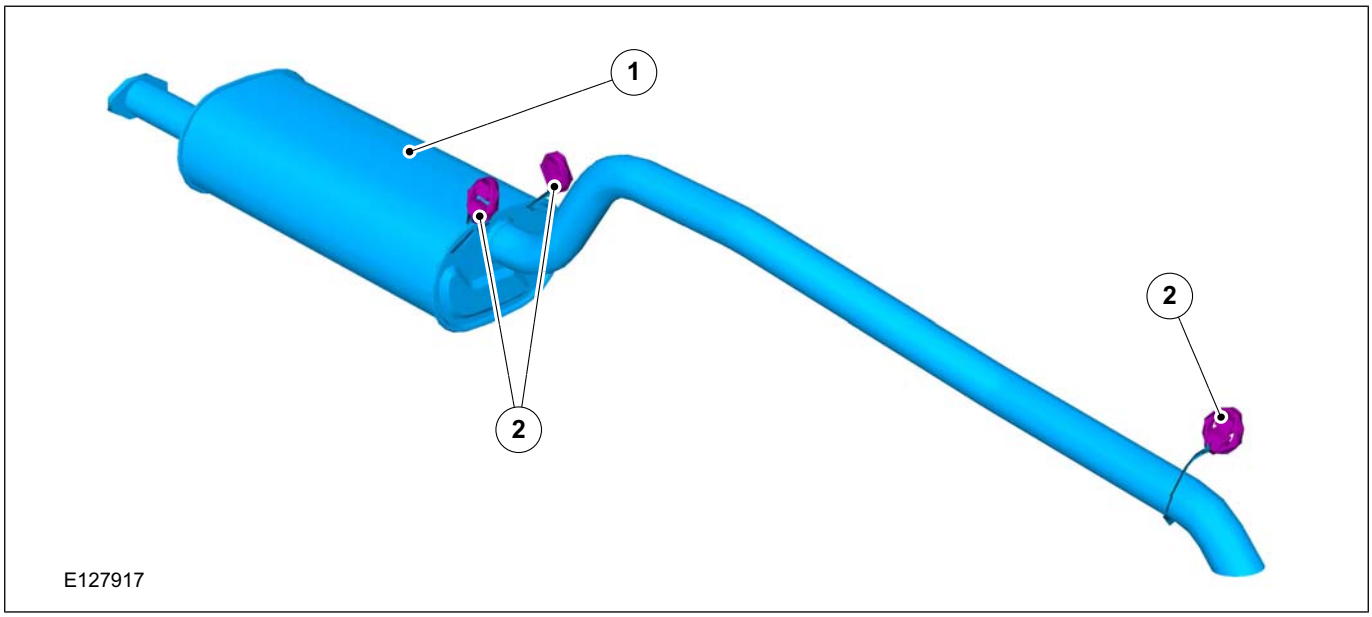

Item	Description
1	Rear muffler
2	Exhaust hanger insulator

REMOVAL AND INSTALLATION

Catalytic Converter

Removal

WARNING: When the engine and exhaust system are hot, they can cause severe burns or injury. Turn off the engine and wait until they are cool before removing the exhaust system.

NOTE: Removal steps in this procedure may contain installation details.

1. Refer to: Health and Safety Precautions (100-00 General Information, Description and Operation).

Vehicles with diesel particulate filter (DPF)

2. **NOTE:** Vehicles with 2.2L diesel engine only.

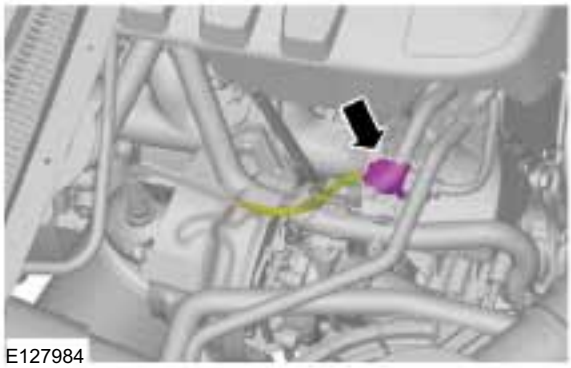
E127984

3. **NOTE:** Vehicles with 3.2L diesel engine only.

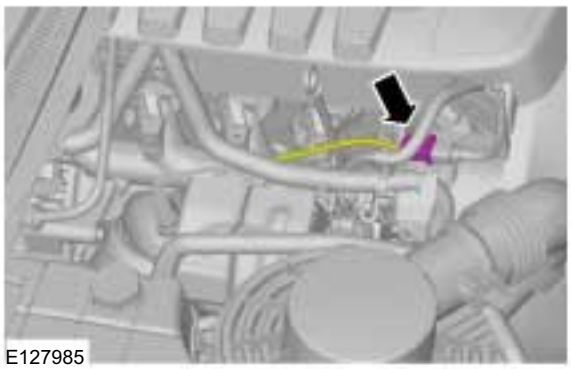
E127985

Vehicles with 2.2L diesel engine

4. 1. Torque: 47 Nm
   2. Torque: 23 Nm

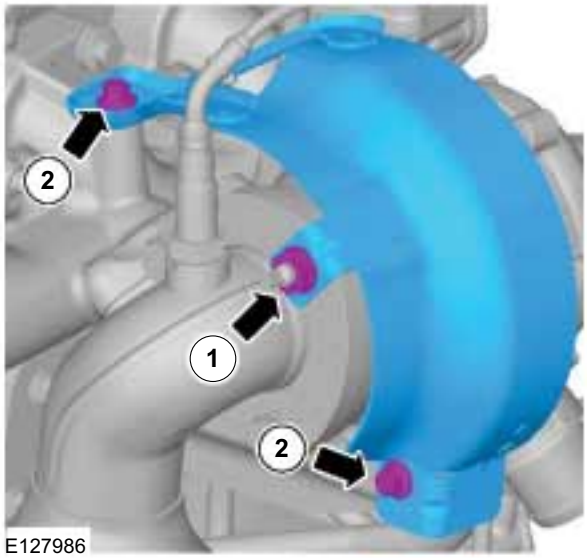

E127986

Vehicles with 3.2L diesel engine

5. 1. Torque: 47 Nm
   2. Torque: 23 Nm

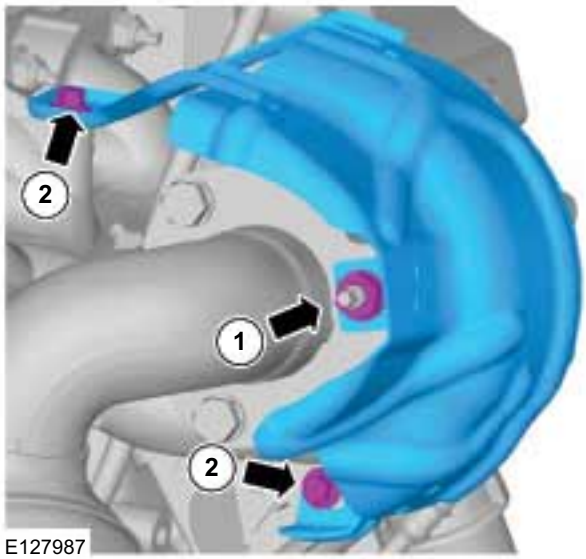

E127987

REMOVAL AND INSTALLATION

Vehicles with diesel particulate filter (DPF)

6. 1. Torque: 47 Nm
2. Torque: 47 Nm

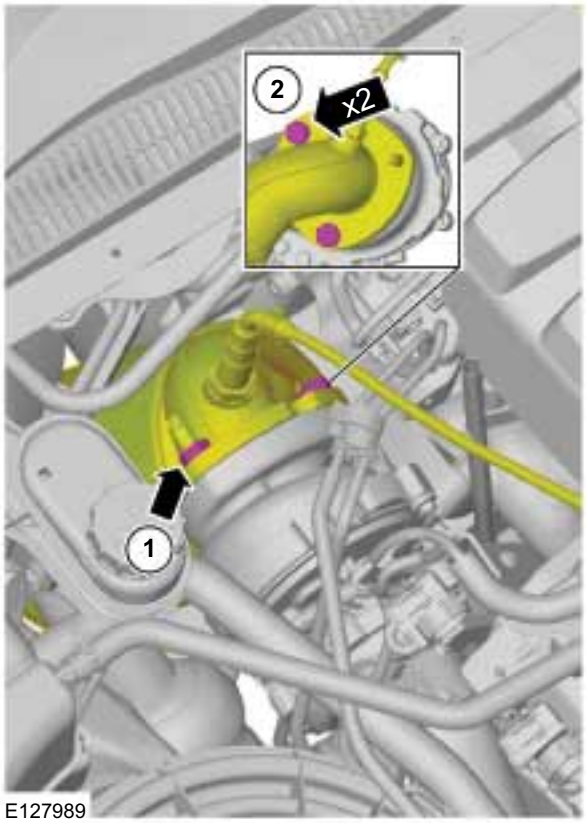

E127989

7. Refer to: Lifting (100-02 Jacking and Lifting, Description and Operation).

8.

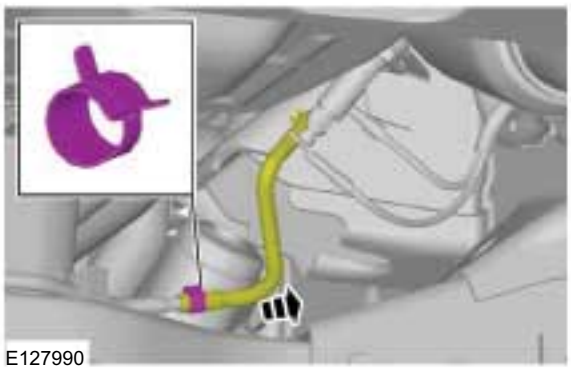
E127990

9. Torque: 48 Nm

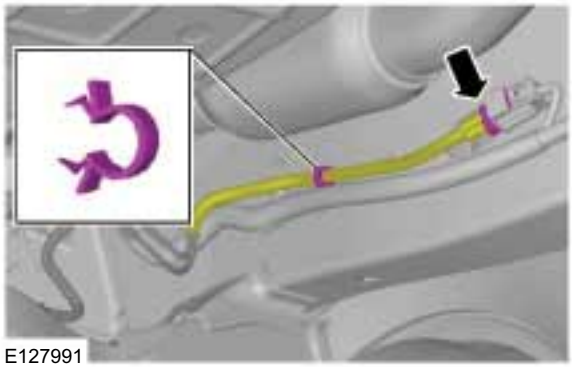
E127991

Vehicles without diesel particulate filter (DPF)

10. 1. Torque: 47 Nm
2. Torque: 47 Nm

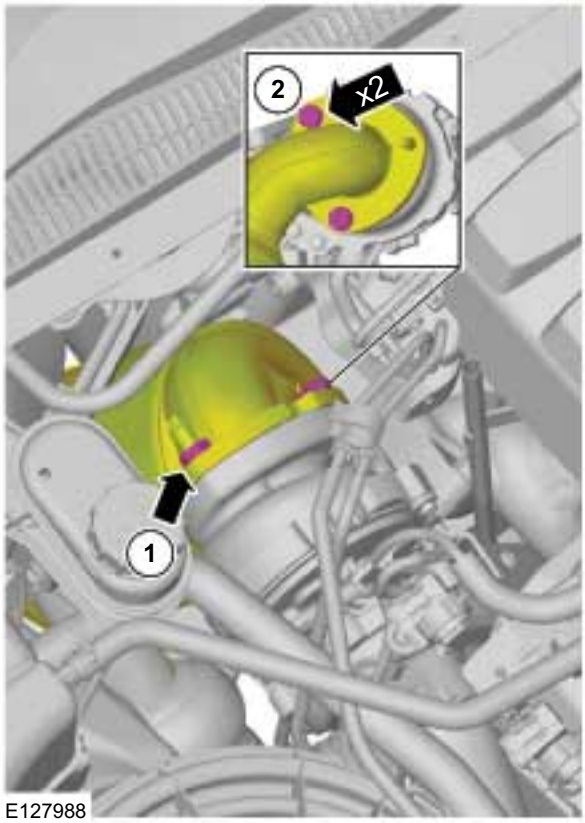

E127988

REMOVAL AND INSTALLATION

All vehicles

11. CAUTION: Over bending the exhaust flexible pipe may cause damage resulting in failure.

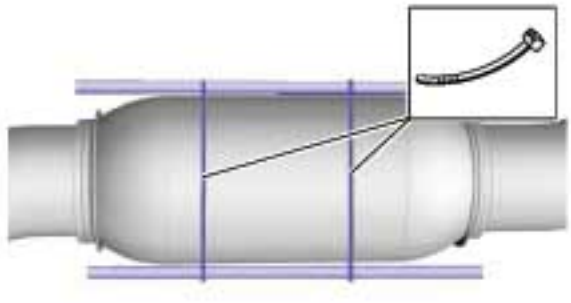

12. 1. Torque: 48 Nm

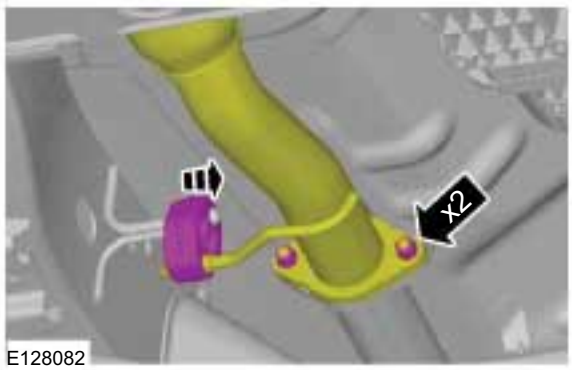

Vehicles with diesel particulate filter (DPF)

13. CAUTION: Make sure that the exhaust flexible pipe is not forcibly bent.

Torque: 25 Nm

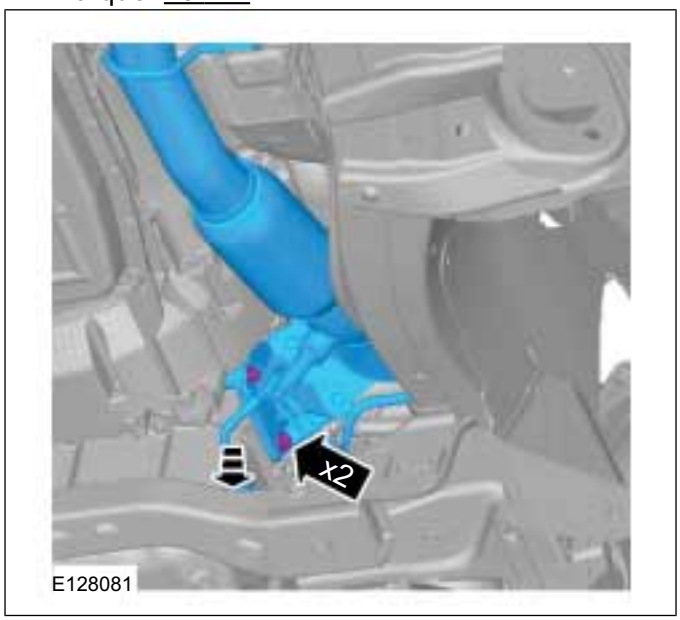

Vehicles without diesel particulate filter (DPF)

14. CAUTION: Make sure that the exhaust flexible pipe is not forcibly bent.

Torque: 25 Nm

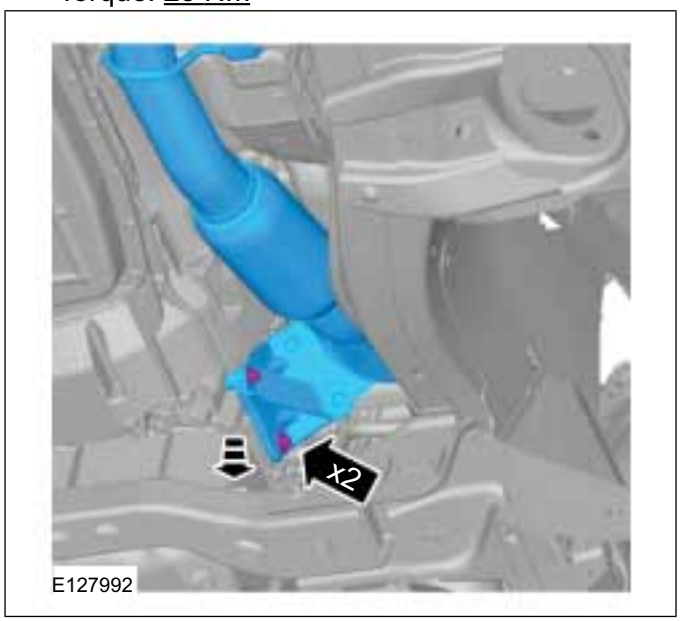

Installation

1. To install, reverse the removal procedure.

REMOVAL AND INSTALLATION

Diesel Particulate Filter (DPF)

Removal

WARNING: When the engine and exhaust system are hot, they can cause severe burns or injury. Turn off the engine and wait until they are cool before removing the exhaust system.

NOTE: Removal steps in this procedure may contain installation details.

1. Refer to: Diesel Fuel System Health and Safety Precautions (100-00 General Information, Description and Operation).
2. Refer to: Lifting (100-02 Jacking and Lifting, Description and Operation).
3. **CAUTION: Over bending the exhaust flexible pipe may cause damage resulting in failure.**

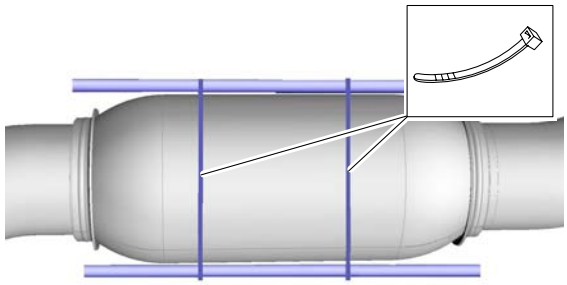

E98634

4. Torque: 40 Nm

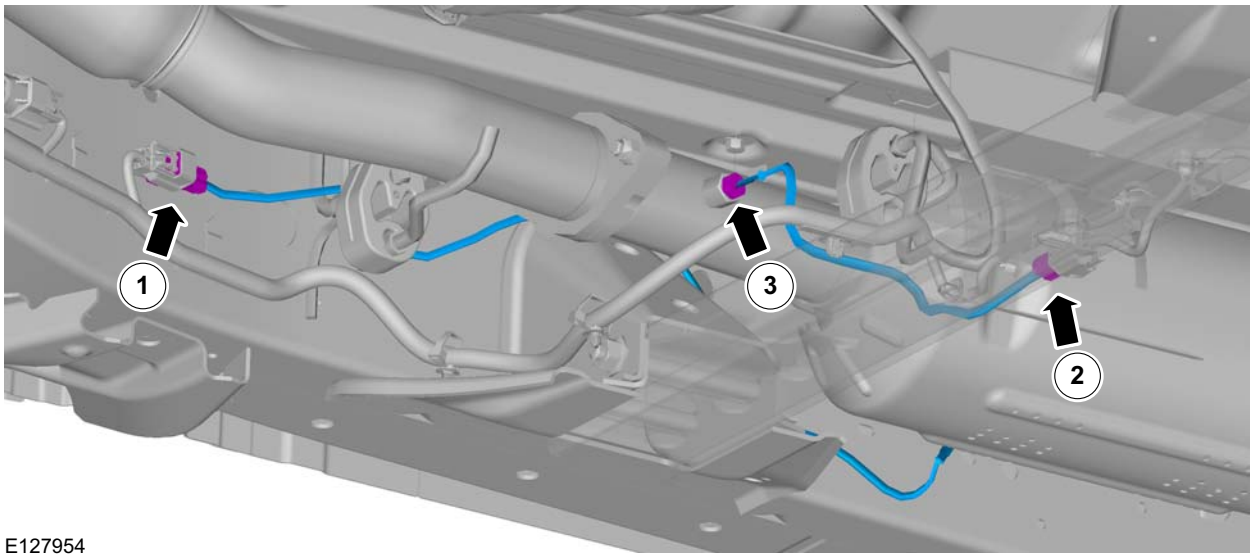

E127954

REMOVAL AND INSTALLATION

5. 1. Torque: 40 Nm
2. Torque: 40 Nm
3. Torque: 40 Nm

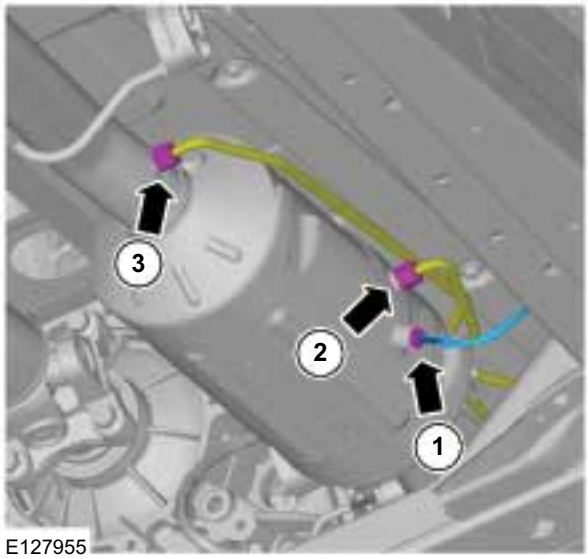

E127955

6. Torque: 40 Nm

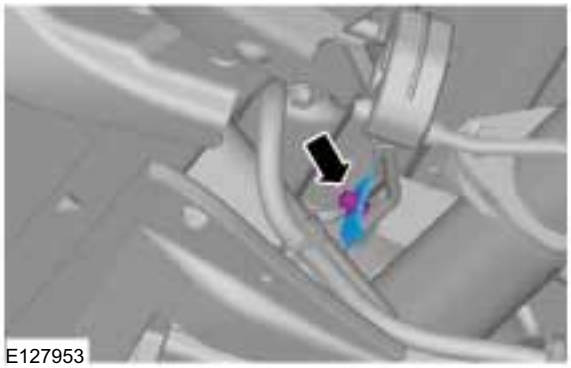
E127953

7. NOTE: Discard the gaskets at both the ends.

1. Torque: 47 Nm
2. Torque: 47 Nm

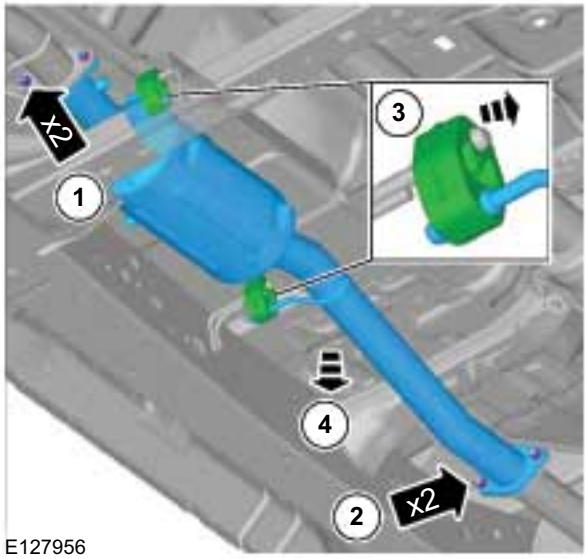

E127956

Installation

1. To install, reverse the removal procedure.

REMOVAL AND INSTALLATION

Exhaust Flexible Pipe

Removal

WARNING: When the engine and exhaust system are hot, they can cause severe burns or injury. Turn off the engine and wait until they are cool before removing the exhaust system.

NOTE: Removal steps in this procedure may contain installation details.

1. Refer to: Health and Safety Precautions (100-00 General Information, Description and Operation).
2. Refer to: Lifting (100-02 Jacking and Lifting, Description and Operation).

Vehicles with 2.2L diesel engine

3. 1. Torque: 24 Nm
   2. Torque: 24 Nm

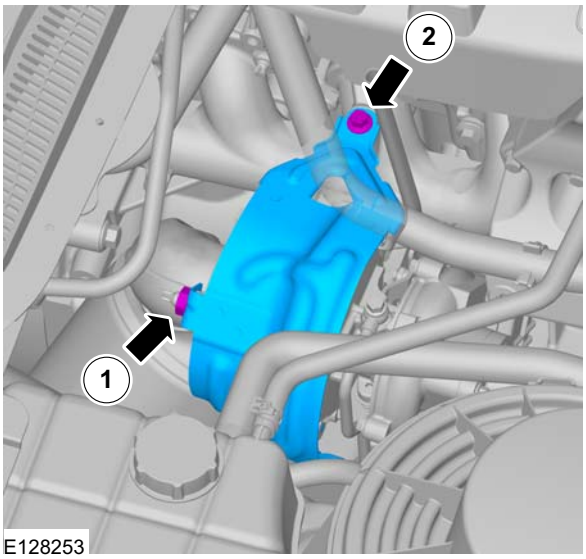

E128253

Vehicles with 3.2L diesel engine

4. Torque: 24 Nm

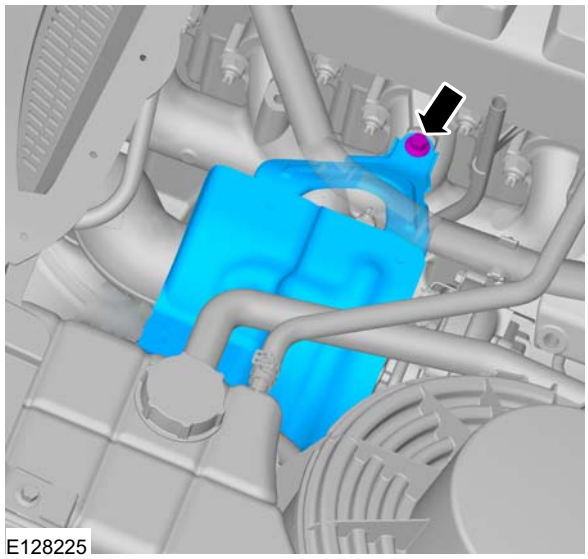
E128225

REMOVAL AND INSTALLATION

All vehicles

5. 1. Torque: 48 Nm
2. Torque: 48 Nm

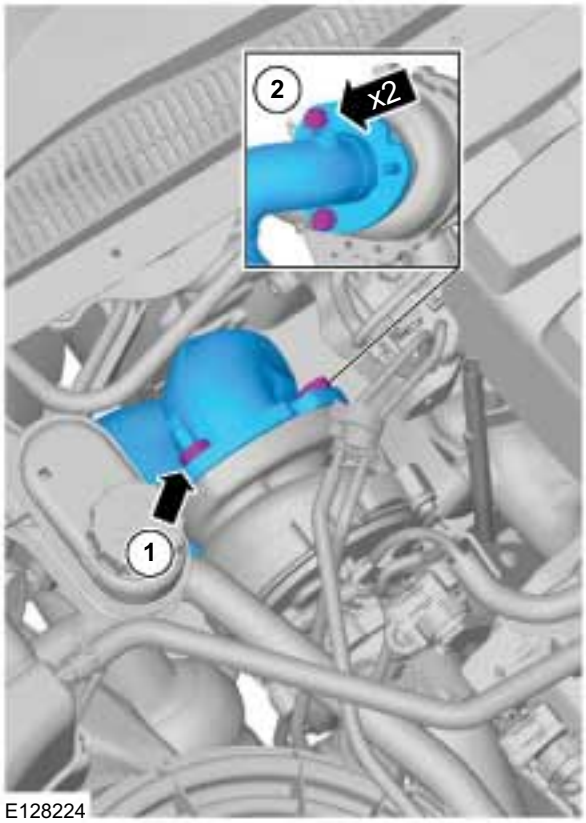

E128224

6. **CAUTION: Over bending the exhaust flexible pipe may cause damage resulting in failure.**

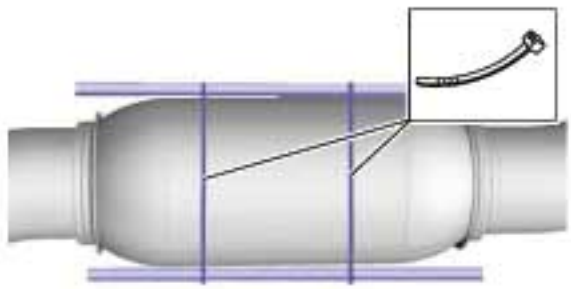
E98634

7. 1. Torque: 48 Nm

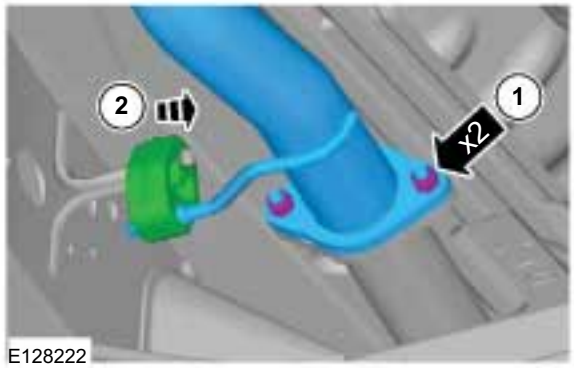

E128222

8. **CAUTION: Make sure that the exhaust flexible pipe is not forcibly bent.**

Torque: 25 Nm

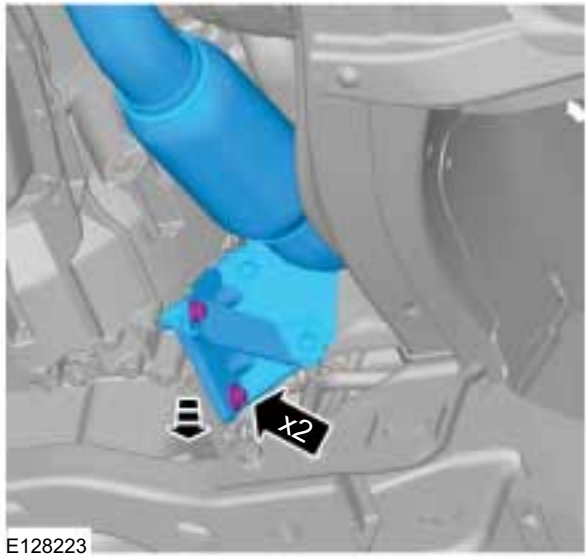

E128223

Installation

1. To install, reverse the removal procedure.

REMOVAL AND INSTALLATION

Rear Muffler

Removal

WARNING: When the engine and exhaust system are hot, they can cause severe burns or injury. Turn off the engine and wait until they are cool before removing the exhaust system.

NOTE: Removal steps in this procedure may contain installation details.

1. Refer to: Health and Safety Precautions (100-00 General Information, Description and Operation).
2. Refer to: Lifting (100-02 Jacking and Lifting, Description and Operation).
3. Torque: 48 Nm

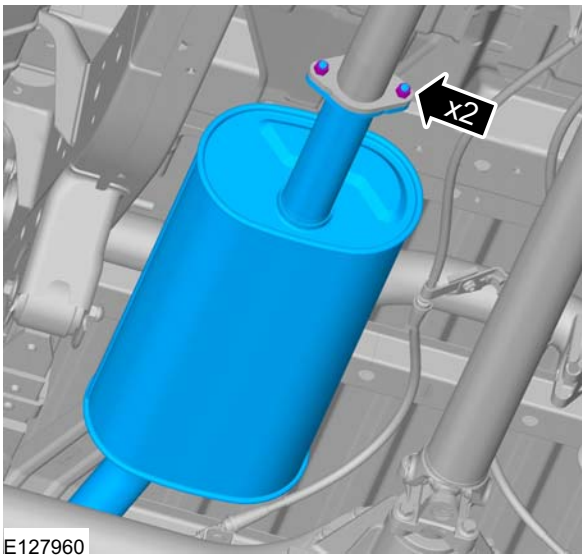

E127960

4.

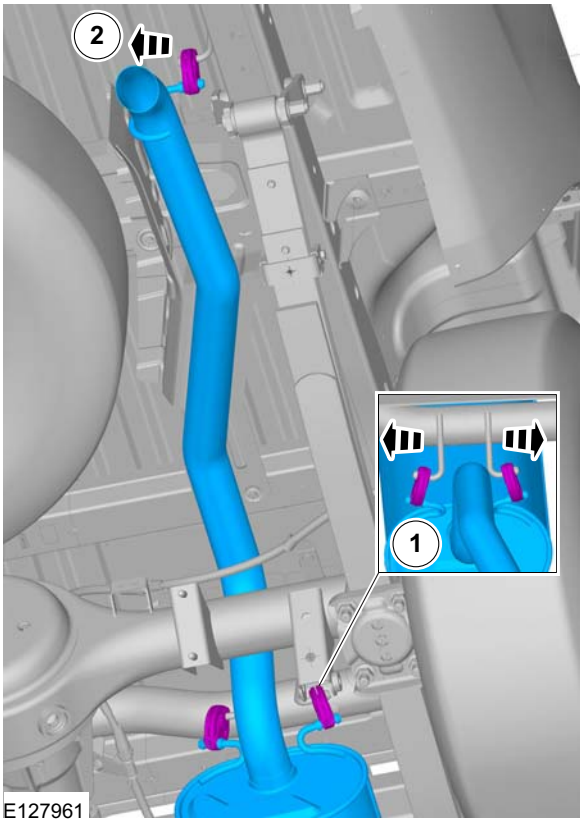

E127961

5.

REMOVAL AND INSTALLATION

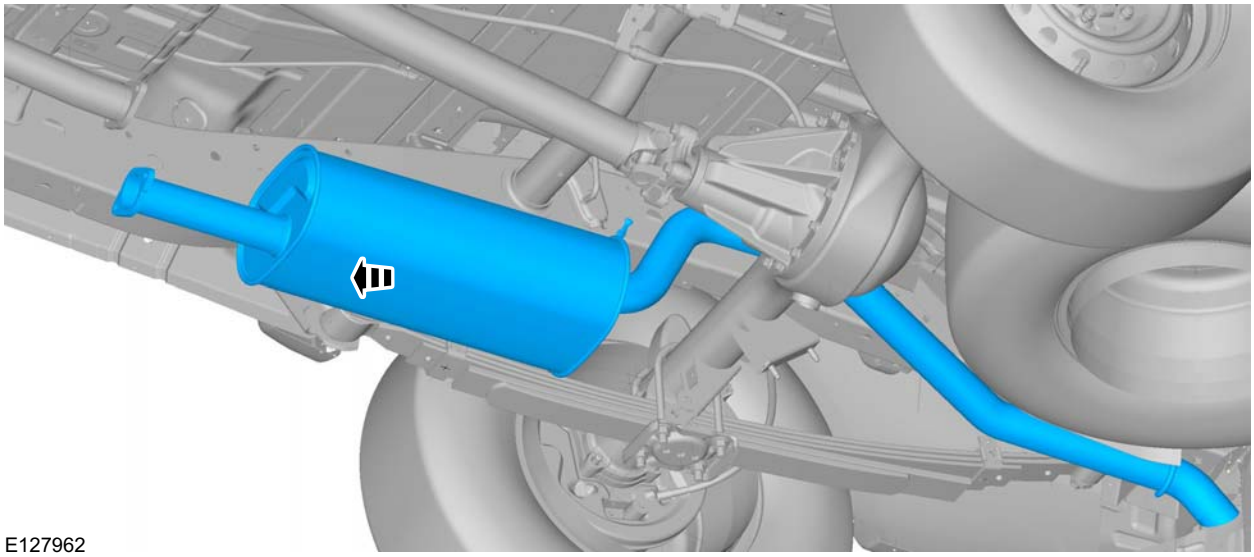

Installation

1. To install, reverse the removal procedure.

SECTION 310-00A Fuel System - General Information

— 2.5L Duratec-HE (122kW/165PS) - MI4

VEHICLE APPLICATION: 2011.50 Ranger

CONTENTS PAGE

GENERAL PROCEDURES

Fuel System Pressure Release..... 310-00A-2
Fuel Tank Draining..... 310-00A-4
Spring Lock Couplings..... 310-00A-7

GENERAL PROCEDURES

Fuel System Pressure Release

Activation

WARNINGS:

Do not smoke, carry lighted tobacco or have an open flame of any type when working on or near any fuel-related component. Highly flammable mixtures are always present and may be ignited. Failure to follow these instructions may result in serious personal injury.

Before working on or disconnecting any of the fuel tubes or fuel system components, relieve the fuel system pressure to prevent accidental spraying of fuel. Fuel in the fuel system remains under high pressure, even when the engine is not running. Failure to follow this instruction may result in serious personal injury.

Do not carry personal electronic devices such as cell phones, pagers or audio equipment of any type when working on or near any fuel-related component. Highly flammable mixtures are always present and may be ignited. Failure to follow these instructions may result in serious personal injury.

When handling fuel, always observe fuel handling precautions and be prepared in the event of fuel spillage. Spilled fuel may be ignited by hot vehicle components or other ignition sources. Failure to follow these instructions may result in serious personal injury.

1. Refer to: Petrol and Petrol-Ethanol Fuel Systems Health and Safety Precautions (100-00 General Information, Description and Operation).

2. **NOTE:** The front passenger door frame scuff plate is retained only by internal metal clips.

   NOTE: The front passenger door side interior kick panel is retained only by internal metal clips.

   NOTE: It may be necessary to reposition the lower end of the door jam weatherstripping to remove the front passenger door side interior kick panel.

   Refer to: Cowl Side Trim Panel (501-05 Interior Trim and Ornamentation, Removal and Installation).

3. Disconnect the Inertia Fuel Shutoff (IFS) switch electrical connector.

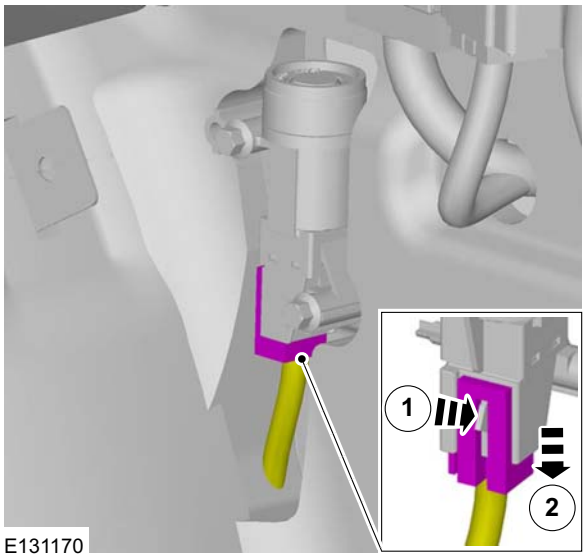

4. Start and run the engine at idle speed until the engine stops.

5. After the engine stalls, crank the engine for approximately 5 seconds to make sure the fuel rail pressure has been released.

6. Turn the ignition switch to the OFF position.

GENERAL PROCEDURES

7. When the fuel system service is complete, reconnect the Inertia Fuel Shutoff (IFS) switch electrical connector.

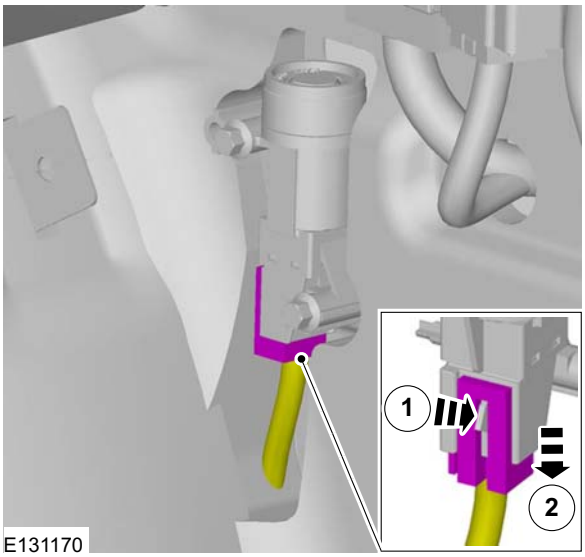

8. **NOTE:** It may take more than one key cycle to pressurize the fuel system.

   Cycle the ignition key and wait 3 seconds to pressurize the fuel system. Check for leaks before starting the engine.

9. Start the vehicle and check the fuel system for leaks.

10. **NOTE:** The front passenger door frame scuff plate is retained only by internal metal clips.

    NOTE: The front passenger door side interior kick panel is retained only by internal metal clips.

    NOTE: It may be necessary to reposition the lower end of the door jam weatherstripping to remove the front passenger door side interior kick panel.

    Install the front passenger side interior kick panel and the front passenger door frame scuff plate.

    Refer to: Cowl Side Trim Panel (501-05 Interior Trim and Ornamentation, Removal and Installation).

GENERAL PROCEDURES

Fuel Tank Draining

Check

WARNINGS:

Do not smoke, carry lighted tobacco or have an open flame of any type when working on or near any fuel-related component. Highly flammable mixtures are always present and may be ignited. Failure to follow these instructions may result in serious personal injury.

Do not carry personal electronic devices such as cell phones, pagers or audio equipment of any type when working on or near any fuel-related component. Highly flammable mixtures are always present and may be ignited. Failure to follow these instructions may result in serious personal injury.

When handling fuel, always observe fuel handling precautions and be prepared in the event of fuel spillage. Spilled fuel may be ignited by hot vehicle components or other ignition sources. Failure to follow these instructions may result in serious personal injury.

Remove the fuel filler cap slowly. The fuel system may be under pressure. If the fuel filler cap is venting vapor or if you hear a hissing sound, wait until it stops before completely removing the fuel filler cap. Otherwise, fuel may spray out. Failure to follow these instructions may result in serious personal injury.

Be prepared to collect escaping fluid.

11. Refer to: Petrol and Petrol-Ethanol Fuel Systems Health and Safety Precautions (100-00 General Information, Description and Operation).
12. Refer to: Battery Disconnect and Connect (414-01 Battery, Mounting and Cables, General Procedures).
13. Refer to: Lifting (100-02 Jacking and Lifting, Description and Operation).
14. Remove the left-hand rear wheel and tire.

    Refer to: Wheel and Tire (204-04 Wheels and Tires, Removal and Installation).
15.

GENERAL PROCEDURES

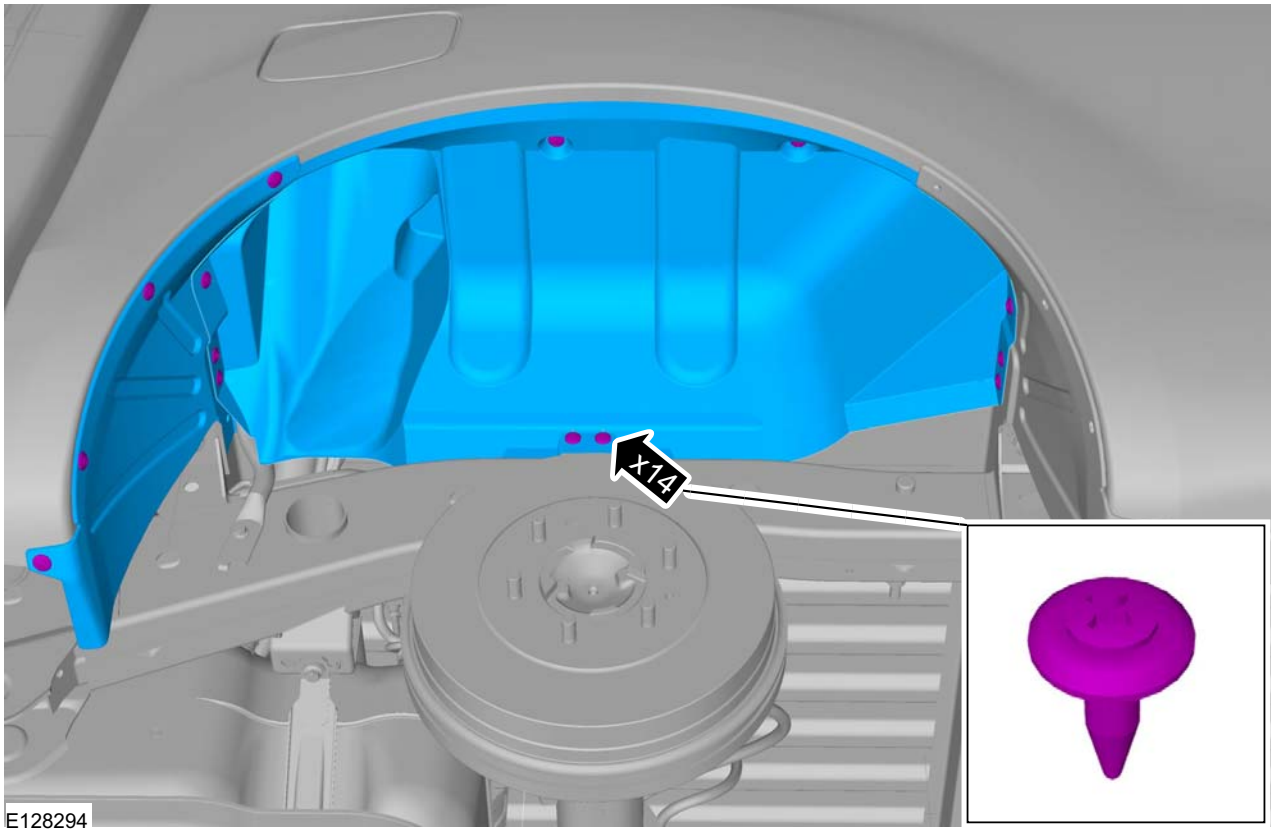

16. **NOTE:** Make sure that the clamp is installed to the same orientation as when removed.

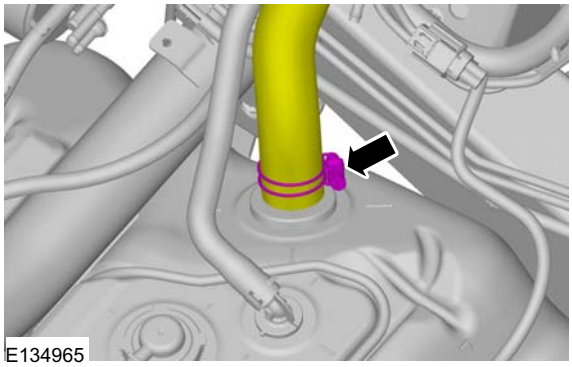

Single cab

17. **NOTE:** Make sure that the clamp is installed to the same orientation as when removed.

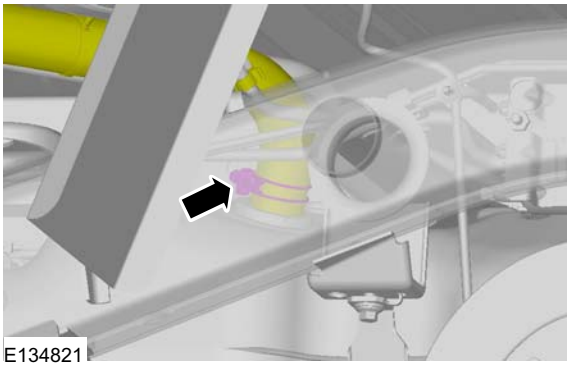

All vehicles

18. **NOTE:** Secure the hose opening above the fuel level.

GENERAL PROCEDURES

Insert the fuel tank drain Hose into the fuel tank.

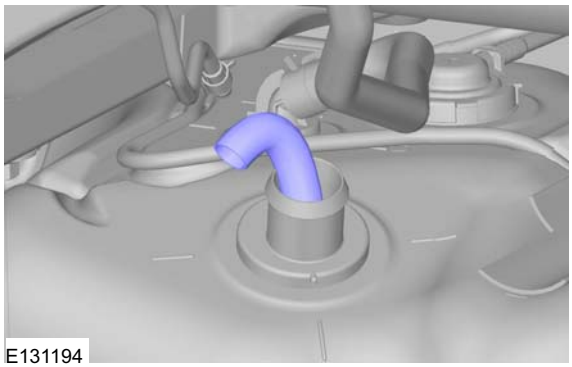

19. **NOTE:** Follow the operating instructions supplied by the equipment manufacturer.

    Attach the fuel tank drain hose to the 30 gallon gasoline hand pump storage tanker and siphon the fuel from the fuel tank.

GENERAL PROCEDURES

Spring Lock Couplings

Activation

WARNINGS:

Do not smoke, carry lighted tobacco or have an open flame of any type when working on or near any fuel-related component. Highly flammable mixtures are always present and may be ignited. Failure to follow these instructions may result in serious personal injury.

Before working on or disconnecting any of the fuel tubes or fuel system components, relieve the fuel system pressure to prevent accidental spraying of fuel. Fuel in the fuel system remains under high pressure, even when the engine is not running. Failure to follow this instruction may result in serious personal injury.

Do not carry personal electronic devices such as cell phones, pagers or audio equipment of any type when working on or near any fuel-related component. Highly flammable mixtures are always present and may be ignited. Failure to follow these instructions may result in serious personal injury.

When handling fuel, always observe fuel handling precautions and be prepared in the event of fuel spillage. Spilled fuel may be ignited by hot vehicle components or other ignition sources. Failure to follow these instructions may result in serious personal injury.

Remove the fuel filler cap slowly. The fuel system may be under pressure. If the fuel filler cap is venting vapor or if you hear a hissing sound, wait until it stops before completely removing the fuel filler cap. Otherwise, fuel may spray out. Failure to follow these instructions may result in serious personal injury.

NOTE: Fuel injection equipment is manufactured to very precise tolerances and fine clearances. It is essential that absolute cleanliness is observed when working with these components or component damage may occur. Always install blanking plugs to any open orifices or tubes.

NOTE: When reusing liquid or vapor tube connectors, make sure to use compressed air to remove any foreign material from the connector retaining clip area before separating from the tube or damage to the tube or connector retaining clip may occur. Apply clean engine oil to the end of the tube before inserting the tube into the connector.

NOTE: Fuel supply line connectors are color coded white. Fuel return line connectors are color coded red.

20. Refer to: Fuel System Pressure Release (310-00 Fuel System - General Information - 2.5L Duratec-HE (122kW/165PS) - MI4, General Procedures).

21. Refer to: Petrol and Petrol-Ethanol Fuel Systems Health and Safety Precautions (100-00 General Information, Description and Operation).

22. Refer to: Battery Disconnect and Connect (414-01 Battery, Mounting and Cables, General Procedures).

23. Refer to: Lifting (100-02 Jacking and Lifting, Description and Operation).

24. If equipped, remove the fuel tube safety clip.

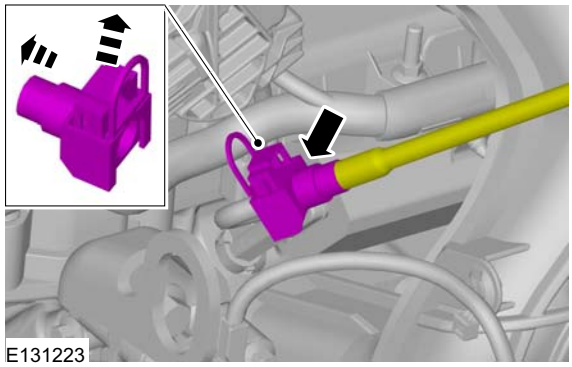

25.

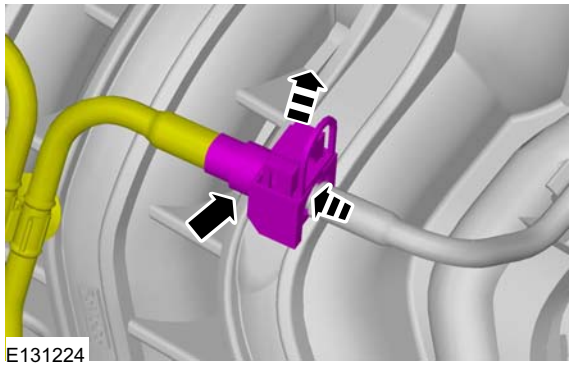

GENERAL PROCEDURES

26.

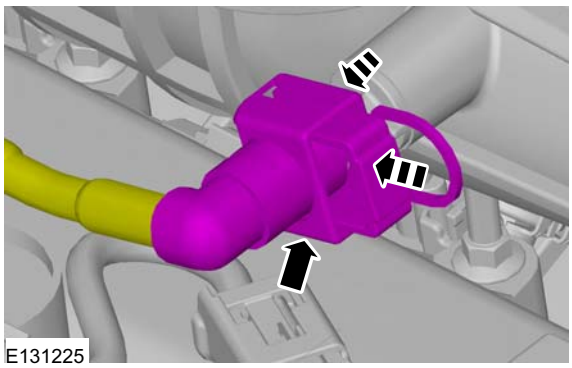

27.

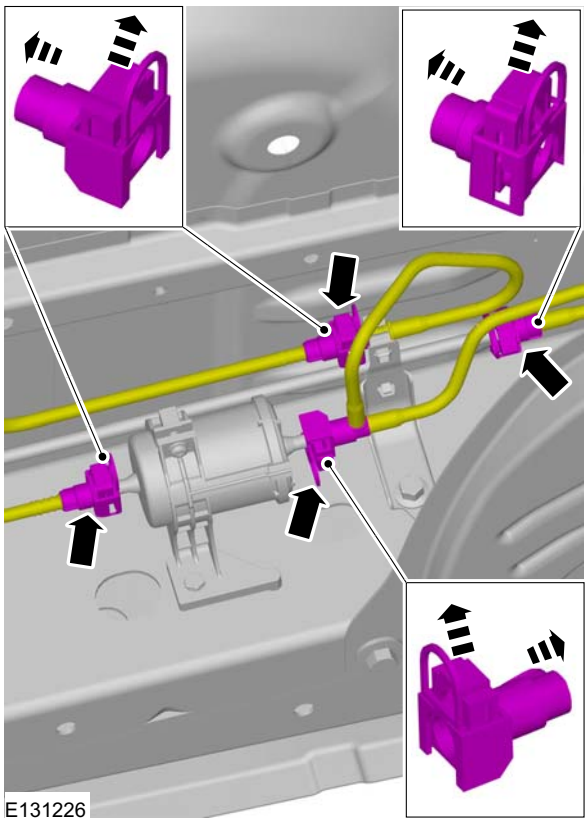

SECTION 310-00B Fuel System - General Information

— 2.2L Duratorq-TDCi (88kW/120PS) - Puma/2.2L Duratorq-TDCi (96kW/130PS) - Puma/2.2L Duratorq-TDCi (110kW/150PS) - Puma/3.2L Duratorq-TDCi (148kW/200PS) - Puma

VEHICLE APPLICATION: 2011.50 Ranger

CONTENTS PAGE

GENERAL PROCEDURES

Diesel Filter Water Drain-Off..... 310-00B-2

GENERAL PROCEDURES

Diesel Filter Water Drain-Off

WARNINGS:

Fuel vapor is hazardous. It can easily ignite, causing serious injury and damage. Always keep sparks and flames away from fuel.

A person charged with static electricity could cause a fire or explosion, resulting in death or serious injury. Before performing work on the fuel system, discharge static electricity by touching the vehicle body.

Avoid fuel line spills and leaks by completing the following procedure.

1. **For additional information, refer to: Diesel Fuel System Health and Safety Precautions (100-00 General Information, Description and Operation).**
2. **For additional information, refer to: Battery Disconnect and Connect (414-01 Battery, Mounting and Cables, General Procedures).**
3. **Remove the fuel-filler cap and release the pressure in the fuel tank.**
4.

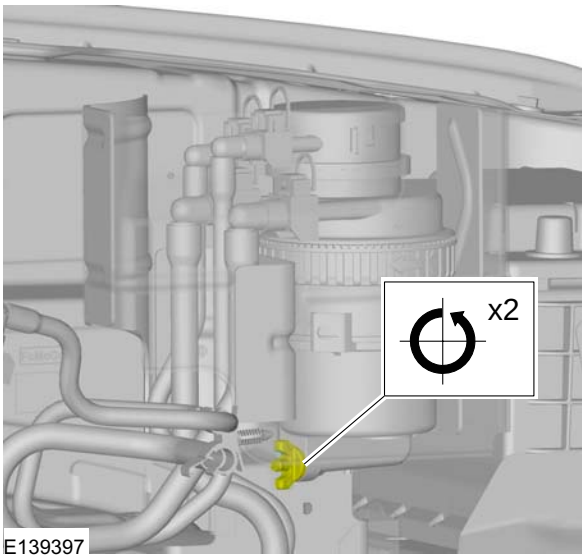

5. **After all the water has been drained, tighten the drain plug.**
6. **Reconnect the negative battery cable.**
7. **WARNING: If fuel does not pass through the fuel filter, foreign material may have penetrated in the supply pump, and this may cause a malfunction resulting in damage to the fuel injection pump.**

CAUTION: Continuously cranking the engine for over 30 s can damage the battery and the starter.

Complete the fuel line air bleeding.

SECTION 310-01A Fuel Tank and Lines

VEHICLE APPLICATION: 2011.50 Ranger

CONTENTS PAGE

DESCRIPTION AND OPERATION

Fuel Tank and Lines..... 310-01A-2

REMOVAL AND INSTALLATION

Fuel Tank..... 310-01A-6
Fuel Tank Filler Pipe..... 310-01A-8
Fuel Filter..... 310-01A-9
Fuel Pump and Sender Unit..... 310-01A-10

DESCRIPTION AND OPERATION

Fuel Tank and Lines

Vehicles with petrol engine

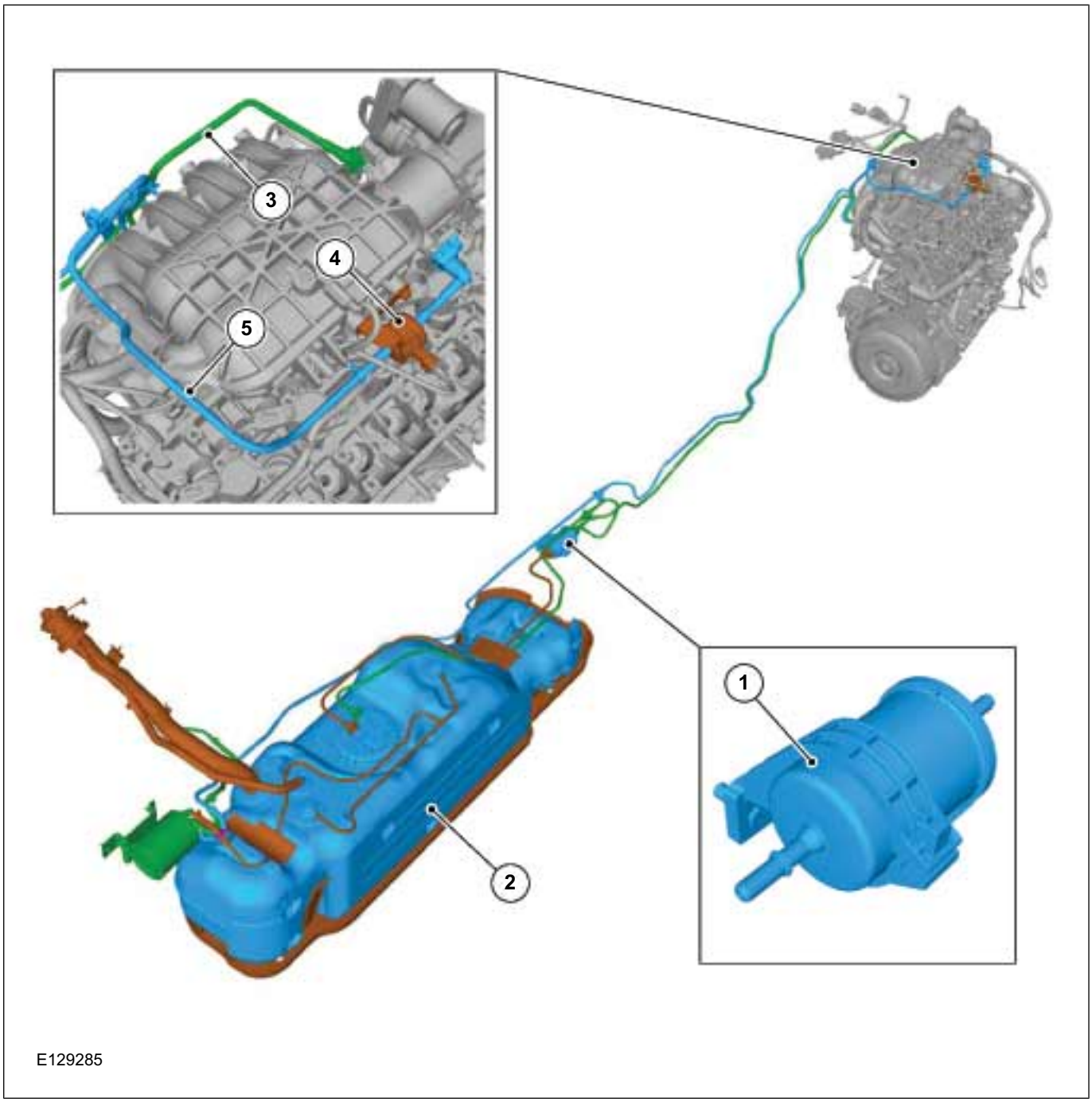

Item	Description
1	Fuel filter
2	Fuel tank
3	Supply line to injection rail

Item	Description
4	Vapor emission valve
5	Vapor return line to canister

Fuel is stored in the fuel tank and delivered to the fuel injectors by means of a submersed fuel pump through an inline fuel filter.

DESCRIPTION AND OPERATION

Fuel tank and lines

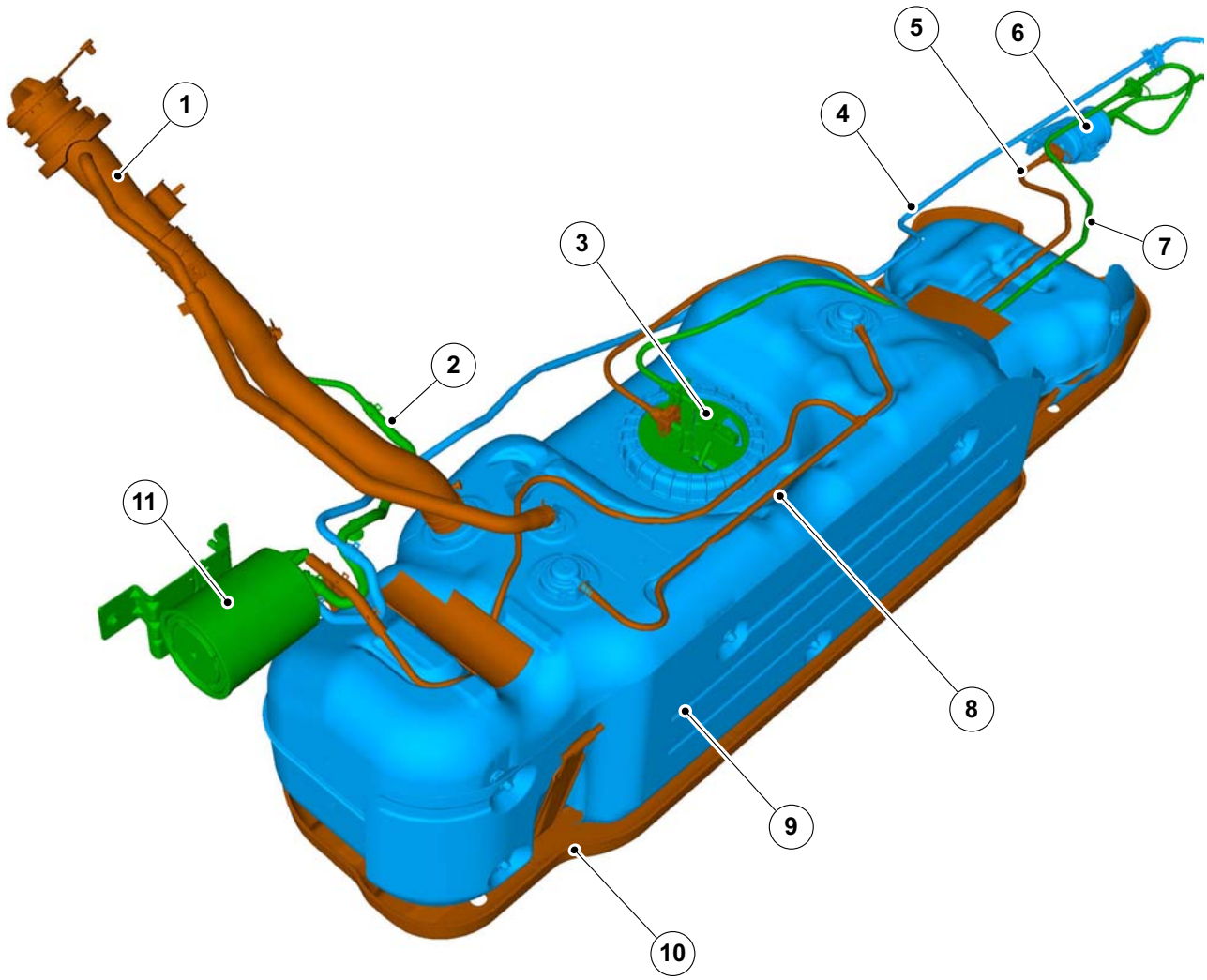

E129286

Item	Description
1	Fuel tank filler pipe
2	Vapor line between atmosphere and canister
3	Fuel level sensor
4	Vapor return line to canister
5	Supply line from fuel tank to fuel filter

Item	Description
6	Fuel filter
7	Return line from fuel filter to fuel tank
8	Fuel tank vent valve to evaporative emission canister fuel vapor line
9	Fuel tank
10	Tank protector
11	Canister

DESCRIPTION AND OPERATION

Fuel return system

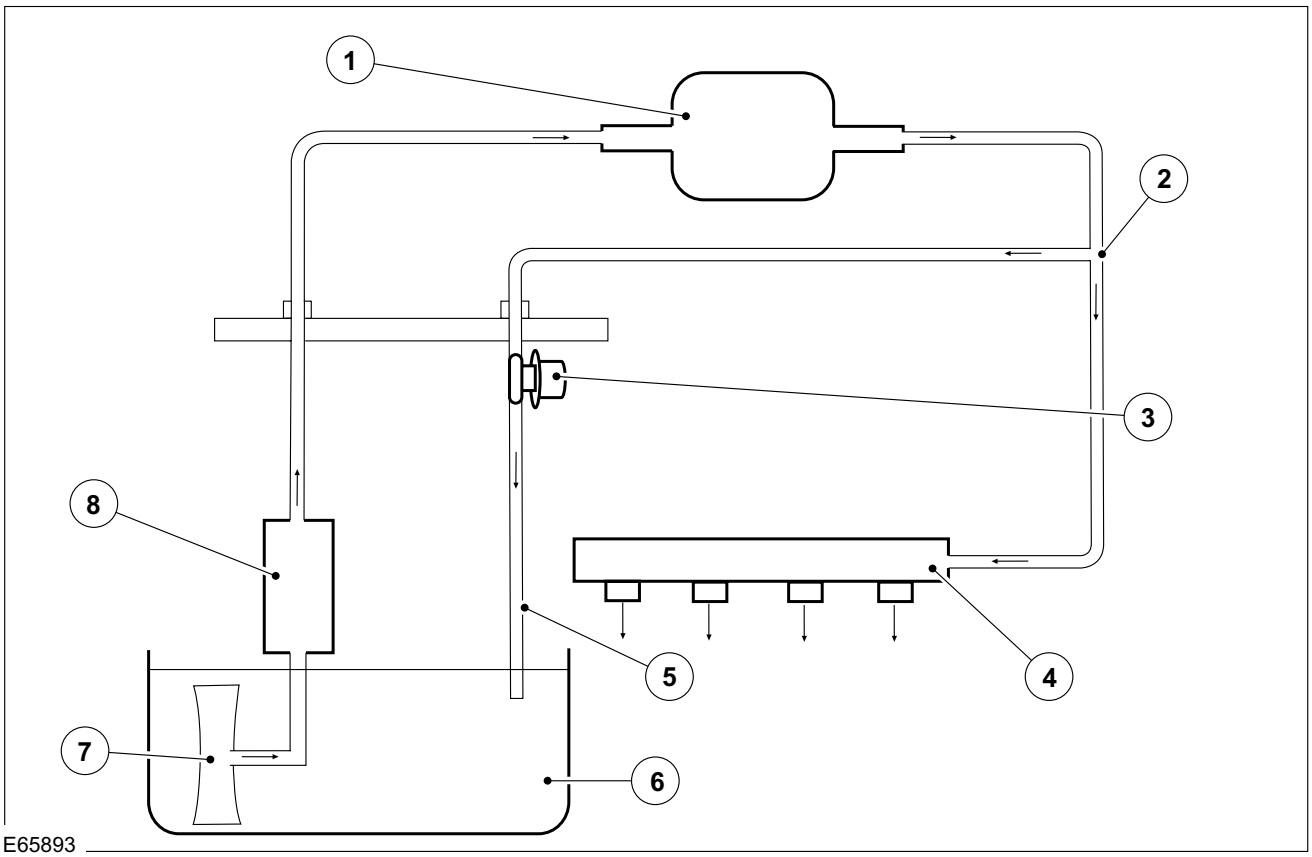

Item	Description
1	Fuel filter
2	Fuel line fuel return T-piece
3	Fuel pressure regulator
4	Fuel rail
5	Fuel return line
6	Fuel tank
7	Fuel jet pump
8	Fuel pump

The fuel pressure at the fuel injectors is controlled by a fuel pressure regulator mounted in the fuel return system.

Fuel is pumped from the fuel tank, to the fuel filter. From the fuel filter, fuel is delivered to the fuel rail. A T-piece is fitted into the fuel injector fuel supply line above the fuel tank. This T-piece acts as the fuel return line and has a fuel pressure regulator fitted in the circuit.

By allowing excess fuel pressure to return to the fuel tank, a constant pressure can be maintained at the fuel injectors.

Fuel tank vent valves

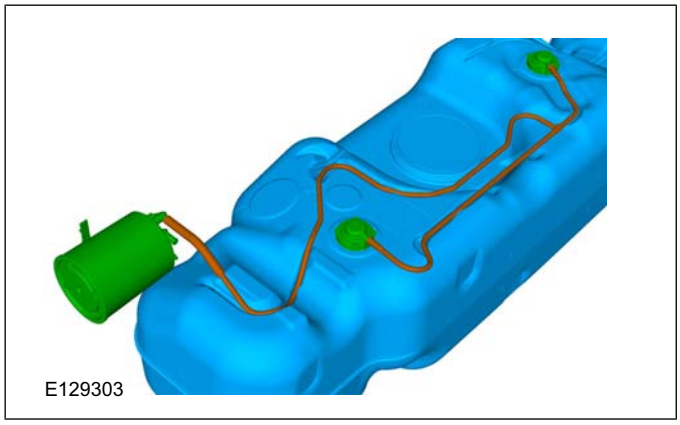

Unlike the fuel tank on vehicles with diesel engine, the fuel vapor is not permitted to vent to atmosphere. Instead the fuel vapor is collected in the evaporative emission canister until the correct driving conditions permit the fuel vapor to be burnt in the engine combustion chambers. This reduces the overall emissions from the vehicle.

If the fuel tank becomes inverted, the fuel tank vent valves close preventing the evaporative emission canister being filled with fuel.

If the fuel tank vent valves, fuel vapor lines or the evaporative emission canister become restricted,

DESCRIPTION AND OPERATION

vehicle performance will become impaired. The inability of the fuel tank to substitute the fuel demanded by the fuel pump with air, will create a negative pressure in the fuel tank which could result in deformation of the fuel tank.

Fuel pump and sender Unit

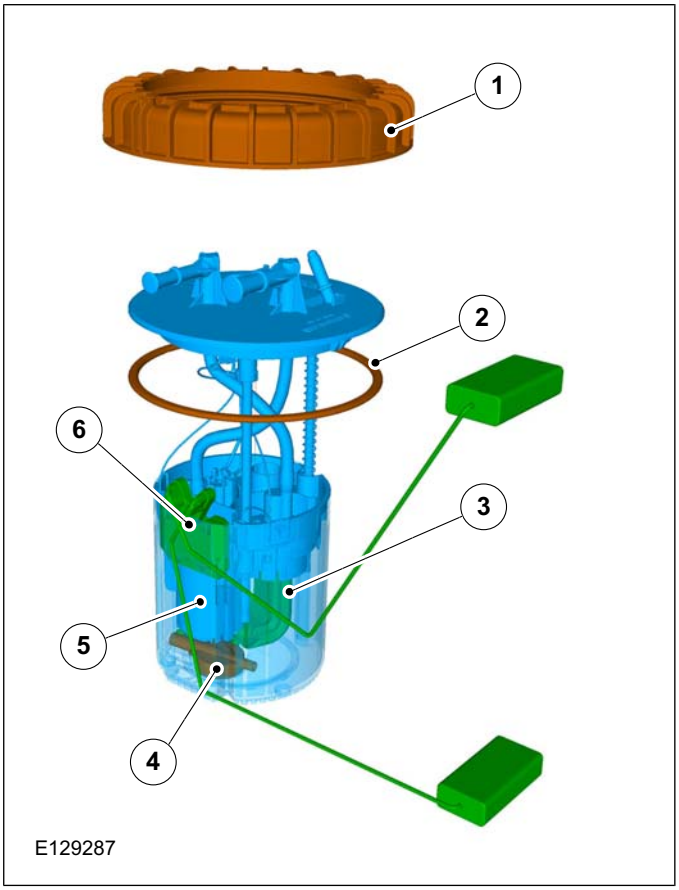

Item	Description
1	Fuel pump and sender unit locking ring
2	Fuel pump and sender unit sealing ring
3	Sock filter
4	Fuel jet pump
5	Fuel pump
6	Fuel level sensor resistor card

The fuel pump and sender are a combined unit and cannot be serviced separately.

The fuel pump and sender unit is located in the top of the fuel tank and is retained by a fuel pump and sender unit locking ring and seal.

The fuel pump and sender consists of a mechanical float attached to a variable resistor card by means of a rigid wire lever. The resistor card has two electrical elements. One element is solid and one element is a variable resistor. The resistance value created by the resistor card is sent to the central junction box (CJB) through a hard wired circuit. The CJB distributes the information from the fuel pump and sender to the instrument cluster and the powertrain control module (PCM) using the controller area network (CAN) circuits.

The fuel pump and sender resistor card can be susceptible to contaminated fuel, which can affect electrical continuity. This condition is normally temporary and self-rectifying. If the fuel pump and sender has been removed, moving the rigid wire lever from empty to full a minimum of 10 times will normally be as effective as installing a new fuel pump and sender. The most common symptom of contamination occurs after refuelling where the electrical contact moves to an area of the resistor card which has not been used for several days. This results in a very slow movement of the fuel gauge pointer from empty to full over approximately 15 minutes. In more extreme cases where the resistor card resistance is continuously outside the permitted range for more than 33 seconds, a DTC will be set in the CJB and the fuel gauge pointer will fall to its key-off position. In all cases where the fuel pump and sender is suspected of being inoperative, worn or damaged, the ford diagnostic system (FDS) diagnostic procedures must be followed before any parts are dismantled.

The fuel pump supplies fuel to the fuel charging system at a constant regulated pressure. The fuel pressure is controlled by the fuel pressure regulator, built into the fuel pump fuel return circuit.

The fuel pump and sender also incorporates a fuel jet pump. The return fuel from the fuel charging system is passed through a venturi in the jet pump which causes a pressure drop across an open orifice. This draws in fuel through the base of the unit which then passes through the sock filter to the fuel pump.

REMOVAL AND INSTALLATION

Fuel Tank

General Equipment

Transmission Jack

Removal

NOTE: Removal steps in this procedure may contain installation details.

1. Refer to: Fuel Tank Draining (310-00 Fuel System - General Information - 2.5L Duratec-HE (122kW/165PS) - MI4, General Procedures).

2.

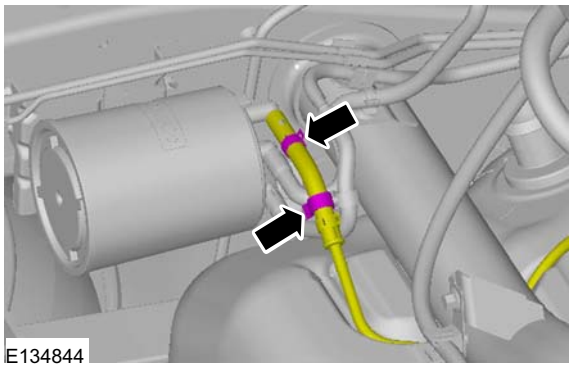
E134844

3.

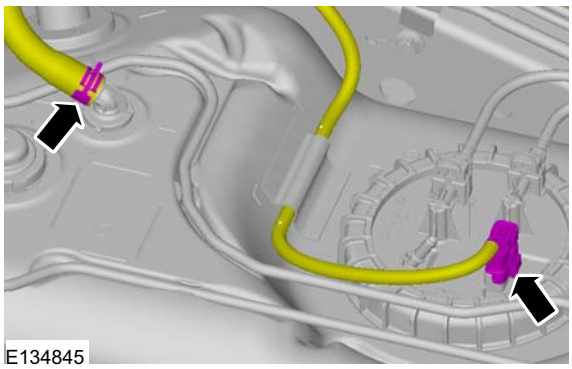
E134845

4. **WARNING: Fuel may still be present in the fuel tank after draining.**

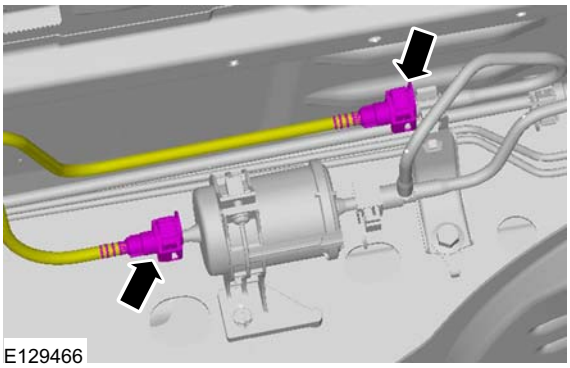
E129466

4x4

5. Torque: 15 Nm

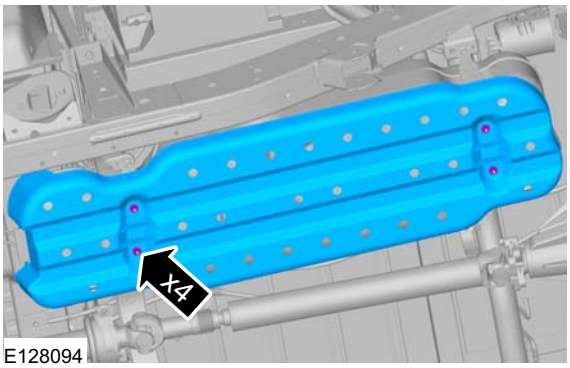

E128094

All vehicles

6. **NOTE:** Move the fuel tank to a designated safe area and slowly release the remaining fuel pressure.

   General Equipment: Transmission Jack
   Torque: 48 Nm

REMOVAL AND INSTALLATION

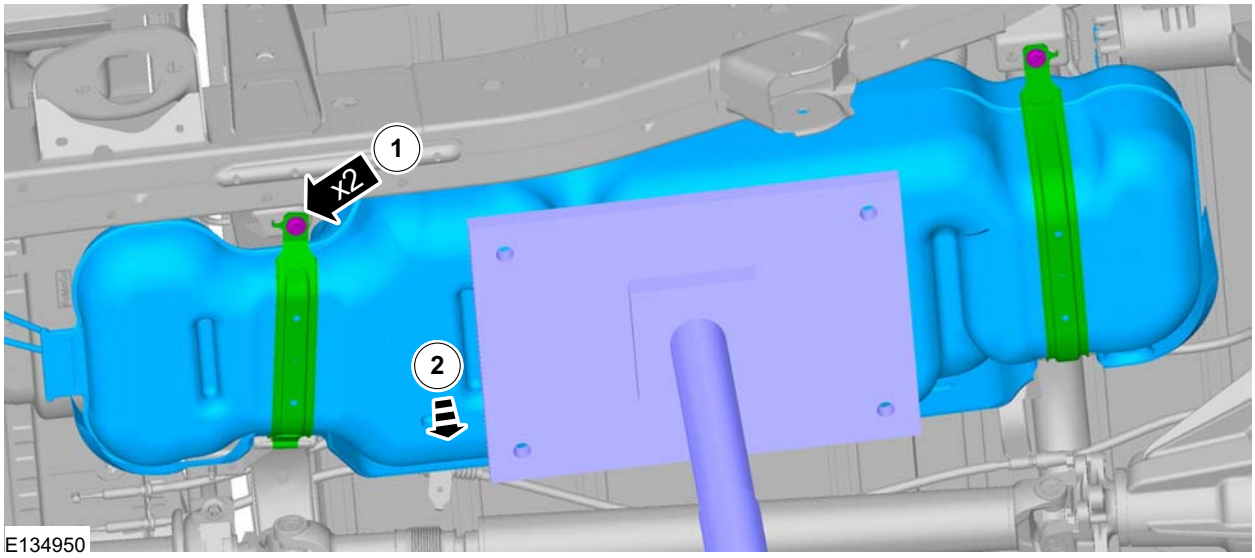

7.

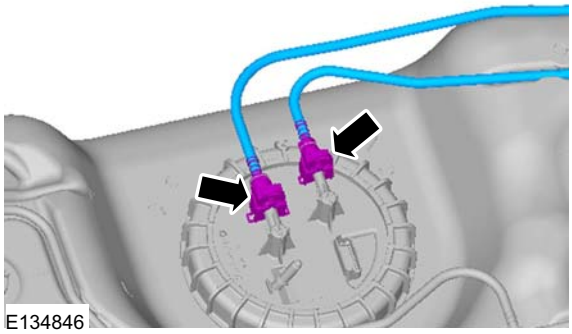

Installation

1. **CAUTION: If the fuel tank has been filled with the wrong type of fuel, the engine must not be started before the fuel system is cleaned.**

   NOTE: Fill the fuel tank with petrol fuel.

   To install, reverse the removal procedure.

REMOVAL AND INSTALLATION

Fuel Tank Filler Pipe

Removal

NOTE: Removal steps in this procedure may contain installation details.

1. Refer to: Fuel Tank Draining (310-00 Fuel System - General Information - 2.5L Duratec-HE (122kW/165PS) - MI4, General Procedures).

Single cab

2. 2. Torque: 11 Nm

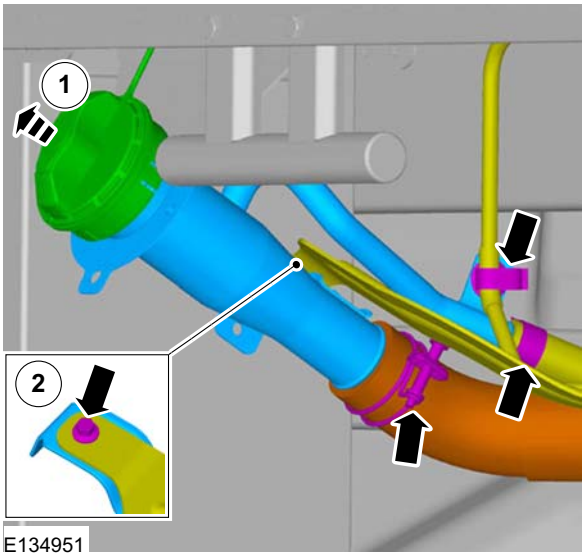

E134951

All vehicles

3.

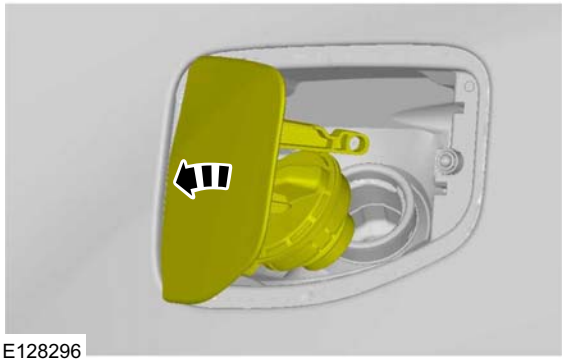
E128296

4. Torque: 11 Nm

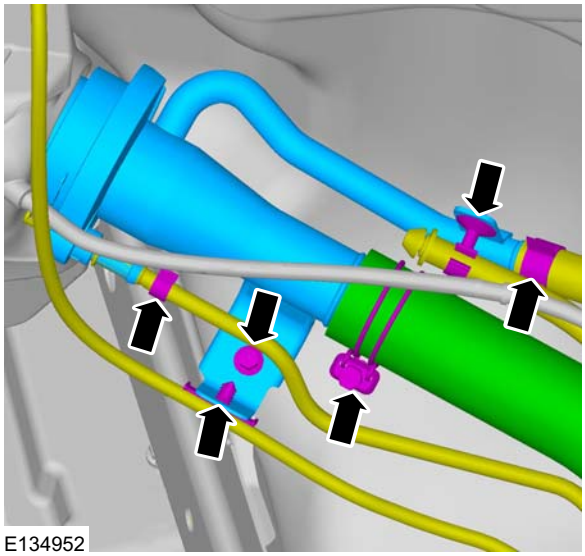
E134952

Installation

1. To install, reverse the removal procedure.

REMOVAL AND INSTALLATION

Fuel Filter

Removal

NOTE: Removal steps in this procedure may contain installation details.

1. Refer to: Petrol and Petrol-Ethanol Fuel Systems Health and Safety Precautions (100-00 General Information, Description and Operation).
2. Refer to: Lifting (100-02 Jacking and Lifting, Description and Operation).
3. Torque: 25 Nm

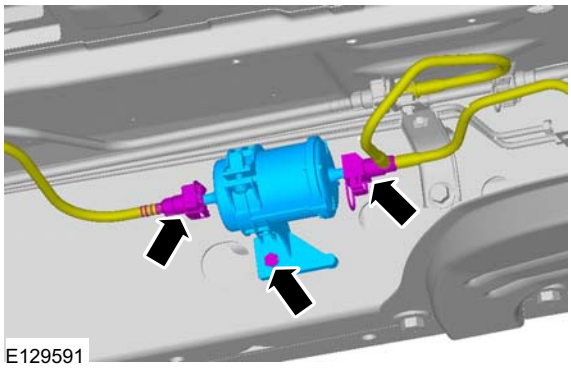

4.

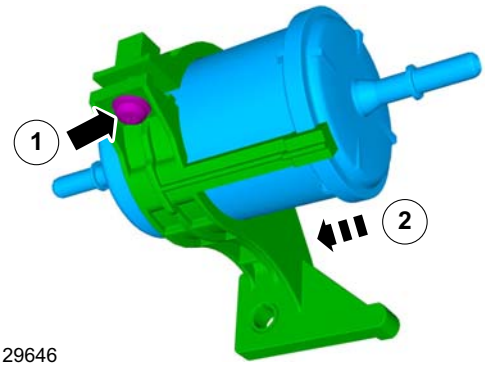

Installation

1. To install, reverse the removal procedure.

REMOVAL AND INSTALLATION

Fuel Pump and Sender Unit

Special Tool(s)

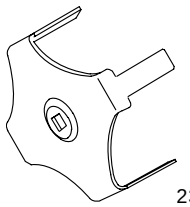 23042	310-037 Remover/Installer, Fuel Tank Sender Unit

Removal

1. Refer to: Fuel Tank (310-01 Fuel Tank and Lines, Removal and Installation).
2. **CAUTION: Take extra care not to damage the fuel tank level sensor float and arm.**

   Special Tool(s): 310-037

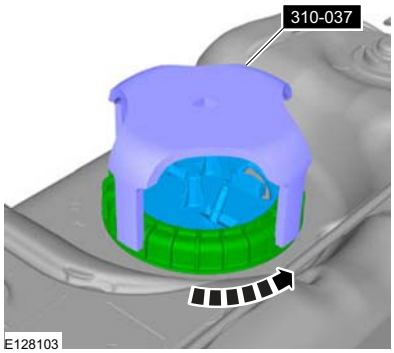

E128103

3.

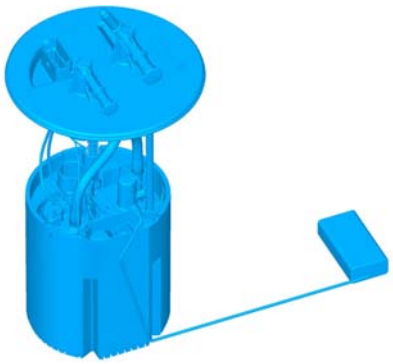
E134964

Installation

1. **CAUTION: Take extra care not to damage the fuel tank level sensor float and arm.**

   NOTE: Make sure that the seal is correctly located.

   NOTE: Make sure that the installation marks are aligned.

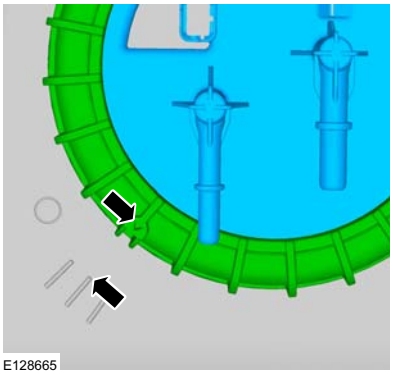
E128665

2. To install, reverse the removal procedure.

SECTION 310-01B Fuel Tank and Lines — 2.2L Duratorq-TDCi (88kW/120PS) - Puma/2.2L Duratorq-TDCi (96kW/130PS) - Puma/2.2L Duratorq-TDCi (110kW/150PS) - Puma/3.2L Duratorq-TDCi (148kW/200PS) - Puma

VEHICLE APPLICATION: 2011.50 Ranger

CONTENTS PAGE

DESCRIPTION AND OPERATION

Fuel Tank and Lines..... 310-01B-2

REMOVAL AND INSTALLATION

Fuel Tank..... 310-01B-6
Fuel Tank Filler Pipe..... 310-01B-9
Fuel Filter..... 310-01B-11
Fuel Level Sender..... 310-01B-12

DESCRIPTION AND OPERATION

Fuel Tank and Lines

Vehicles with diesel engine

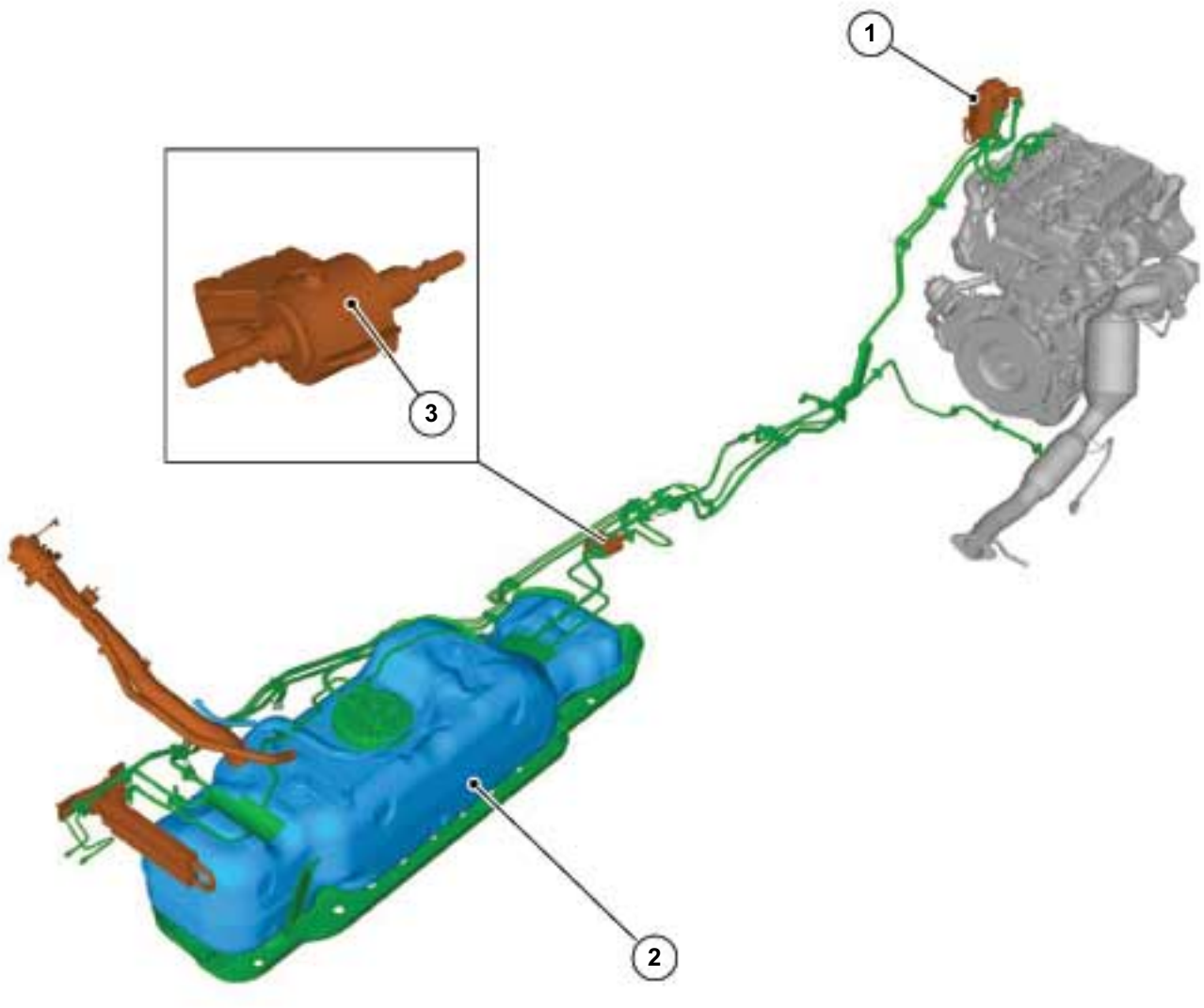

E128974

Item	Description
1	Fuel filter
2	Fuel tank
3	Primary fuel filter

DESCRIPTION AND OPERATION

Fuel tank supply and return lines

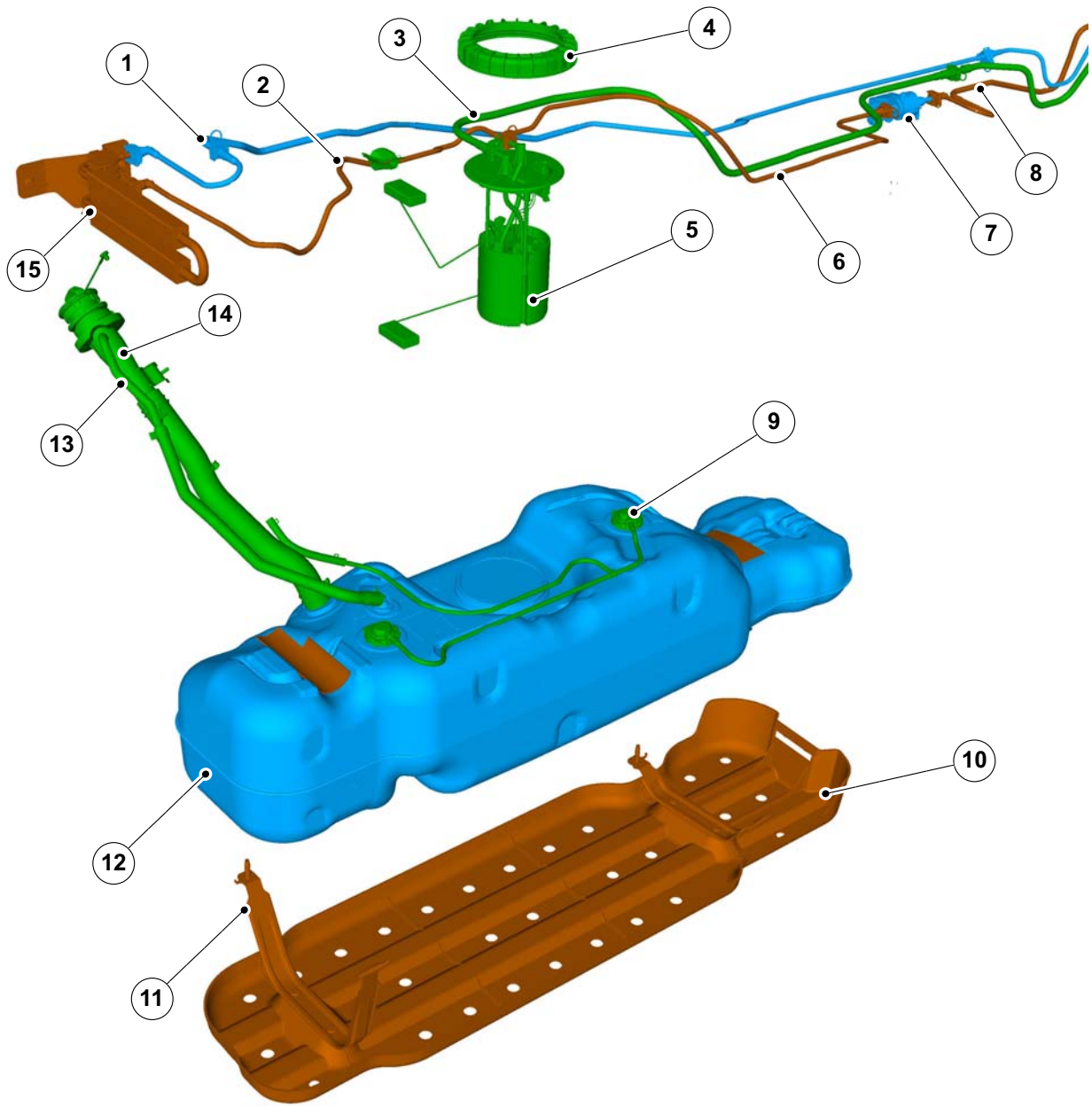

E128984

Item	Description
1	Return line from fuel filter to fuel cooler
2	Return line fuel cooler to fuel tank
3	Supply line fuel tank to fuel filter
4	Fuel level sensor locking ring
5	Fuel level sensor
6	Pipe connecting primary fuel filter to fuel tank

Item	Description
7	Primary fuel filter
8	Return line from vapouriser to primary fuel filter
9	Fuel tank vent valve(s)
10	Tank protector
11	Fuel tank support straps
12	Fuel tank

DESCRIPTION AND OPERATION

Item	Description
13	Breather pipe
14	Fuel tank filler pipe
15	Fuel cooler

Fuel tank vent valves

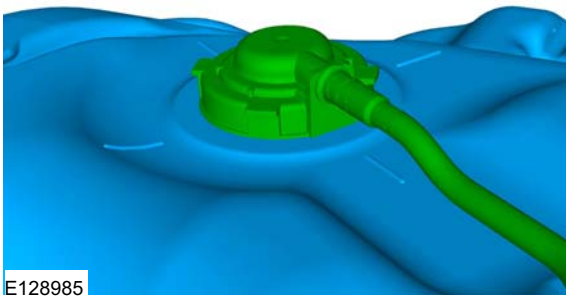
E128985

Fuel tank ventilation is achieved by two fuel tank vent valves. The fuel tank vent valves are integral to the fuel tank and will prevent fuel loss from the fuel tank if the vehicle becomes inverted.

Under normal working conditions, the pressure within the fuel tank is controlled by allowing the fuel vapor to vent through the fuel tank vent valves to atmosphere. If the fuel tank becomes inverted, the fuel tank vent valves close preventing fuel being lost from the fuel tank.

If the fuel tank vent valves or the fuel vapor lines connected to the vent valves become restricted, vehicle performance will become impaired. The inability of the fuel tank to substitute the fuel demanded by the fuel charging system with air, will create a negative pressure in the fuel tank which will result in reduced fuel flow to the fuel pump.

Fuel Level sensor

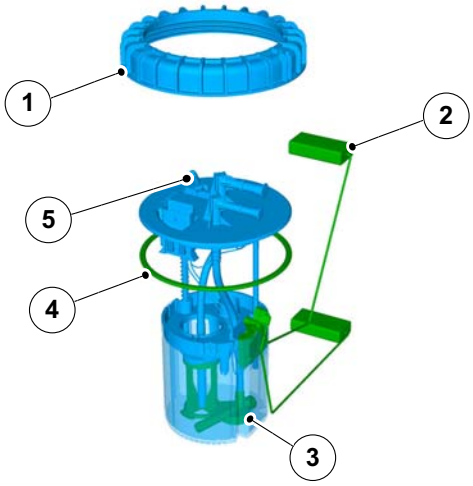

E128986

Item	Description
1	Fuel level sensor locking ring
2	Fuel level sensor resistor card
3	Fuel jet pump and filter
4	Fuel level sensor sealing ring
5	Fuel fired booster heater fuel pickup connector

The fuel level sensor is located in the top of the fuel tank and is retained by a fuel level sensor locking ring and seal.

The fuel level sensor consists of a mechanical float attached to a variable resistor card by means of a rigid wire lever. The resistor card has two electrical elements. One element is solid and one element is a variable resistor. The resistance value created by the resistor card is sent to the central junction box (CJB) through a hard wired circuit. The CJB distributes the information from the fuel level sensor to the instrument cluster and the powertrain control module (PCM) using the controller area network (CAN) circuits.

The fuel level sensor resistor card can be susceptible to contaminated fuel, which can affect electrical continuity. This condition is normally temporary and self-rectifying. If the fuel level sensor has been removed, moving the rigid wire lever from empty to full a minimum of 10 times will normally be as effective as installing a new fuel level sensor. The most common symptom of contamination occurs after refuelling where the electrical contact moves to an area of the resistor card which has not been used for several days. This results in a

DESCRIPTION AND OPERATION

very slow movement of the fuel gauge pointer from empty to full over approximately 15 minutes. In more extreme cases where the resistor card resistance is continuously outside the permitted range for more than 33 seconds, a DTC will be set in the CJB and the fuel gauge pointer will fall to its key-off position. In all cases where the fuel level sensor is suspected of being inoperative, worn or damaged, the Worldwide Diagnostic System (WDS) diagnostic procedures must be followed before any parts are dismantled.

The base of the fuel level sensor is a chamber that sits in the swirl bowl at the bottom of the fuel tank. Built into the chamber is a filter element.

The fuel level sensor also incorporates a fuel jet pump. The return fuel from the fuel charging system is passed through a venturi in the jet pump which causes a pressure drop across an open orifice. This draws in fuel through the base of the unit which then passes through the fuel supply tube.

Fuel Filter

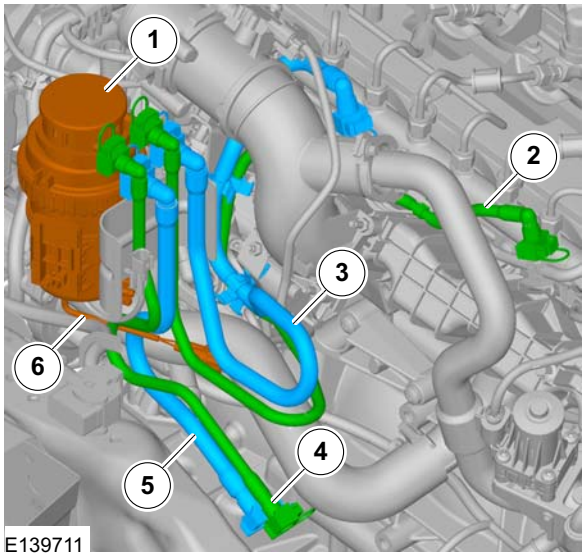

Item	Description
1	Fuel filter
2	Supply line fuel filter to engine
3	Return line from Engine to Filter
4	Return line fuel filter to fuel cooler
5	Supply line from tank to fuel filter
6	Water-in fuel sensor

Fuel is delivered through the fuel supply lines to the fuel filter. The fuel filter cleans the fuel of water and contaminants. Unused fuel is returned to the fuel tank through the fuel cooler return line.

The fuel filter is also equipped with a water-in-fuel sensor which measures the amount of water which has collected in the fuel filter element.

Fuel Tank

The fuel tank is of a plastic construction and has the capacity to hold 80 liters of fuel. The fuel tank is secured to the vehicle by two metal support straps bolted to the underside of the vehicle.

Fuel filler

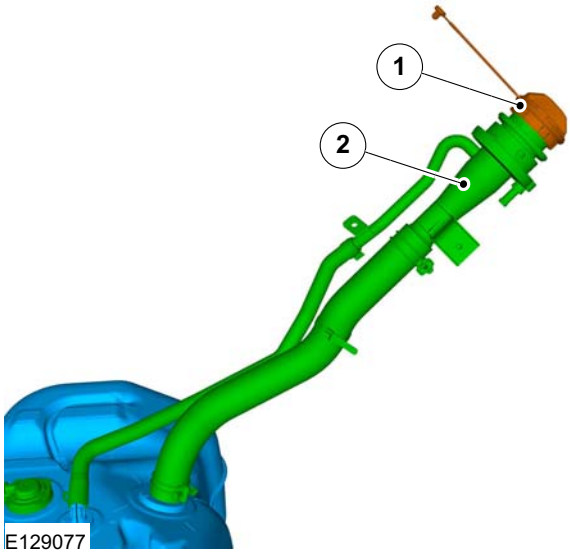

Item	Description
1	Filler cap
2	Fuel tank filler pipe

The fuel tank filler pipe incorporates a fuel tank vent pipe. The fuel tank vent pipe is connected to the top of the fuel tank and exits just below the top of the fuel tank filler pipe. The fuel tank vent pipe allows the displaced air above the fuel in the fuel tank to escape without pushing the fuel entering the fuel tank during refill back up the fuel tank filler pipe.

This vehicle uses a lockable fuel filler cap.

The fuel filler cap is sealed to the fuel filler neck. This is to prevent the escape of fuel vapor during normal operation and to prevent fuel loss in the event of a vehicle accident.

REMOVAL AND INSTALLATION

Fuel Tank

General Equipment

Transmission Jack

Removal

WARNING: Make sure that the fuel pressure has dropped to zero and that the fuel temperature is at ambient air temperature.

NOTE: Removal steps in this procedure may contain installation details.

1. Refer to: Diesel Fuel System Health and Safety Precautions (100-00 General Information, Description and Operation).
2. Refer to: Lifting (100-02 Jacking and Lifting, Description and Operation).
3. Drain the fuel into a suitable container.
4.

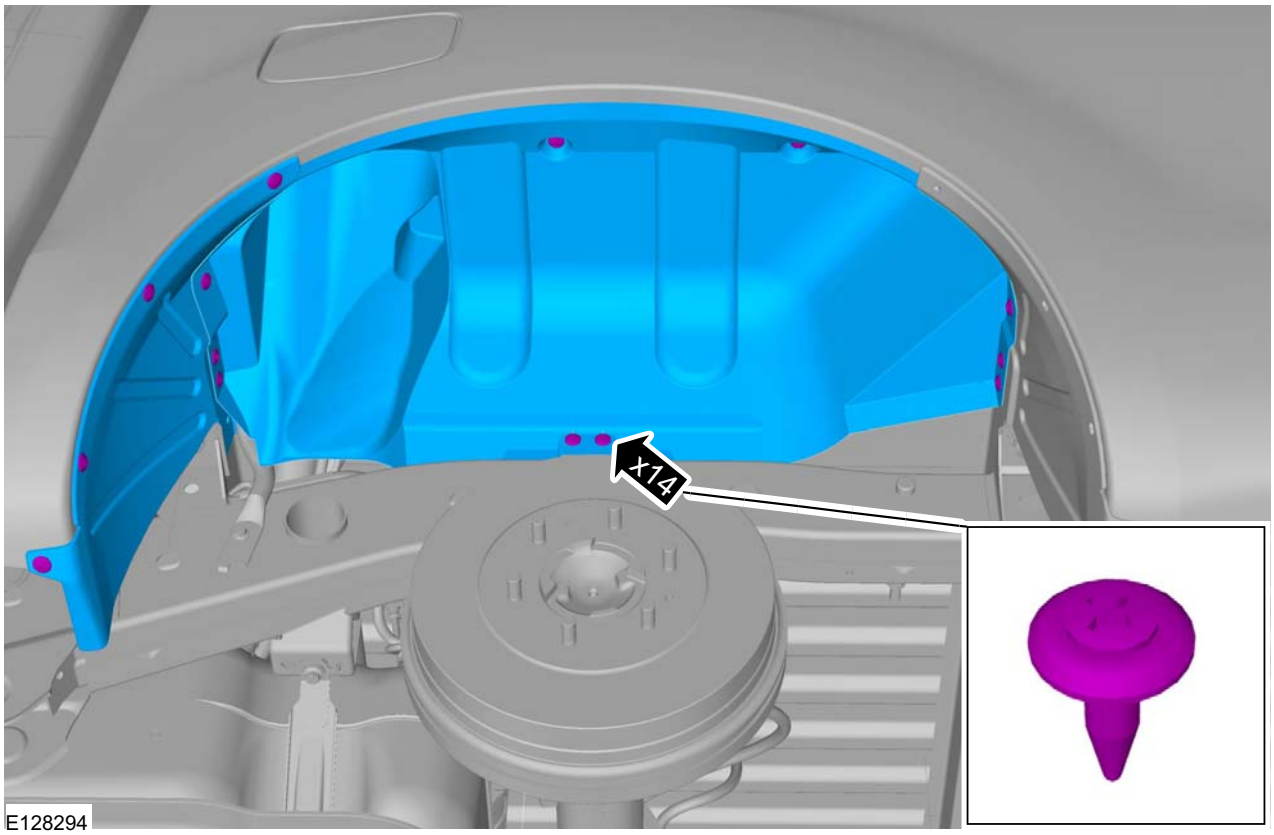

REMOVAL AND INSTALLATION

5.

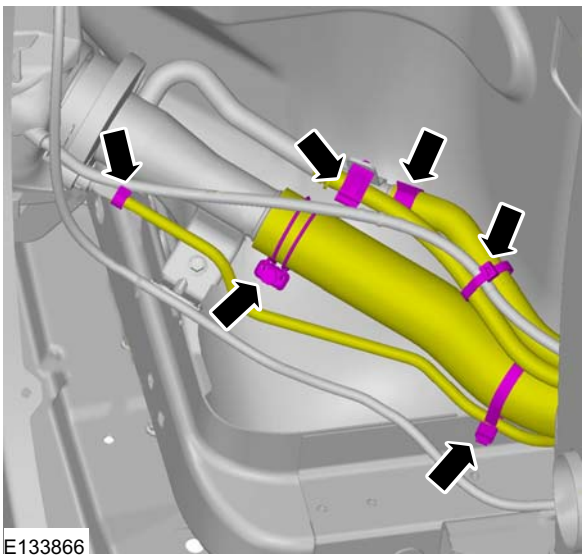

Double cab

6. Torque: 10 Nm

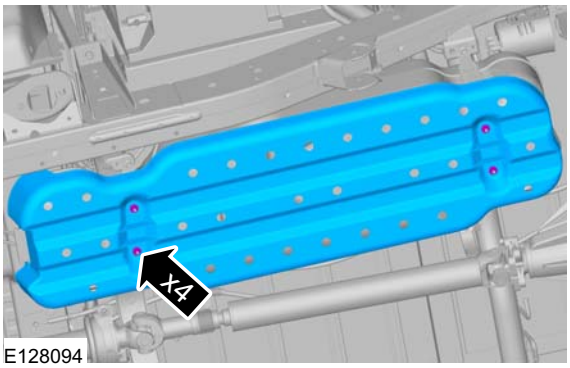

All vehicles

7. **WARNING: Fuel may still be present in the fuel tank after draining.**

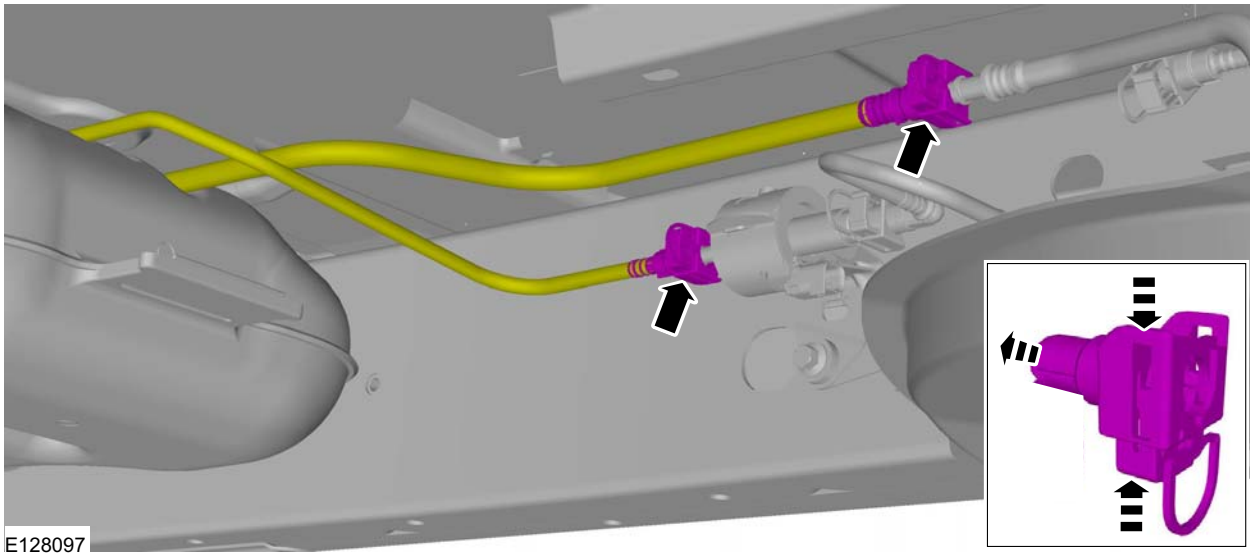

REMOVAL AND INSTALLATION

8.

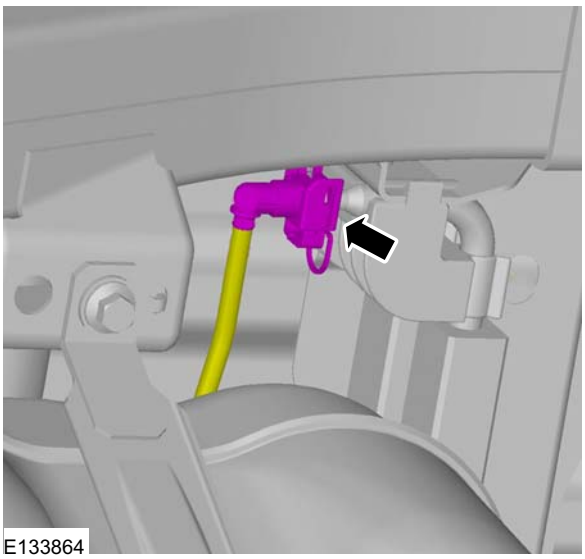

9. General Equipment: Transmission Jack
Torque: 50 Nm

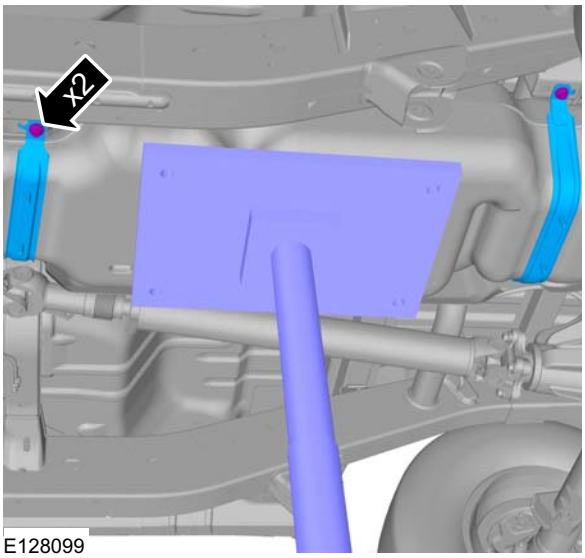

10. **NOTE:** Move the fuel tank to a designated safe area and slowly release the remaining fuel pressure.

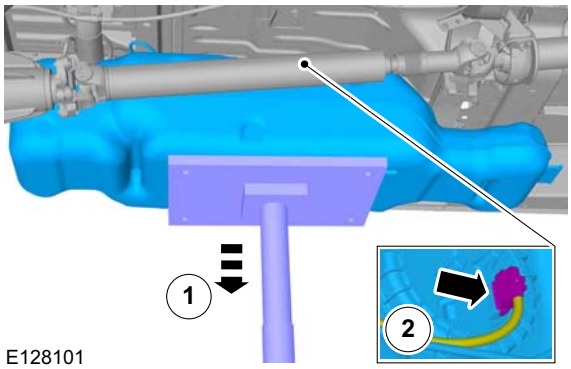

Installation

1. **CAUTION: If the fuel tank has been filled with the wrong type of fuel, the engine must not be started before the fuel system is cleaned.**

   To install, reverse the removal procedure.

REMOVAL AND INSTALLATION

Fuel Tank Filler Pipe

Removal

WARNING: Wait for a minimum of 1 minute after the engine has stopped before carrying out any repair to the fuel system.

NOTE: Removal steps in this procedure may contain installation details.

1. Refer to: Diesel Fuel System Health and Safety Precautions (100-00 General Information, Description and Operation).
2. 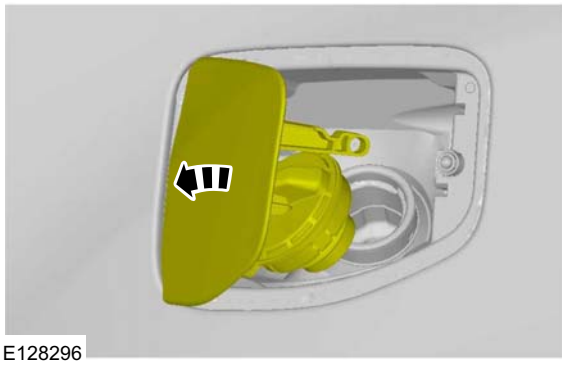

3. Refer to: Lifting (100-02 Jacking and Lifting, Description and Operation).
4. 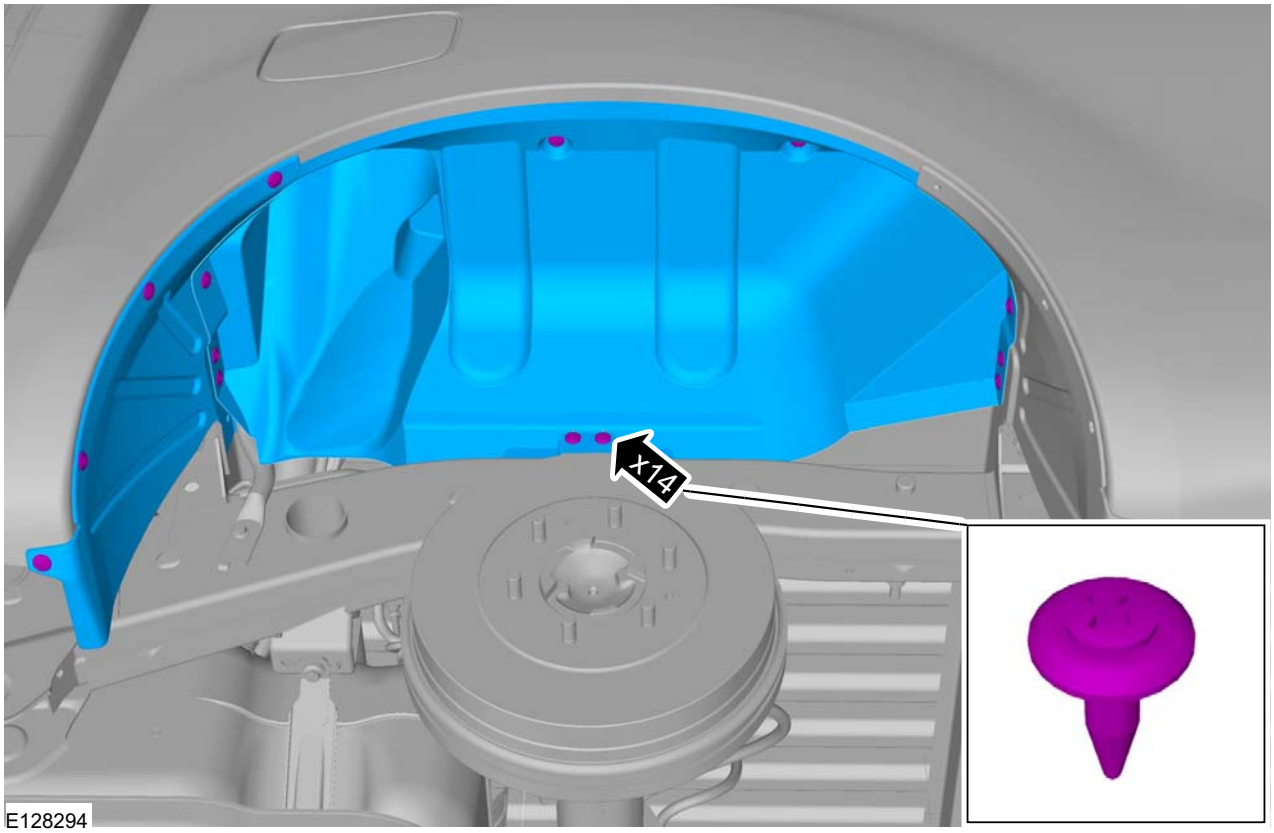

REMOVAL AND INSTALLATION

5. Torque: 11 Nm

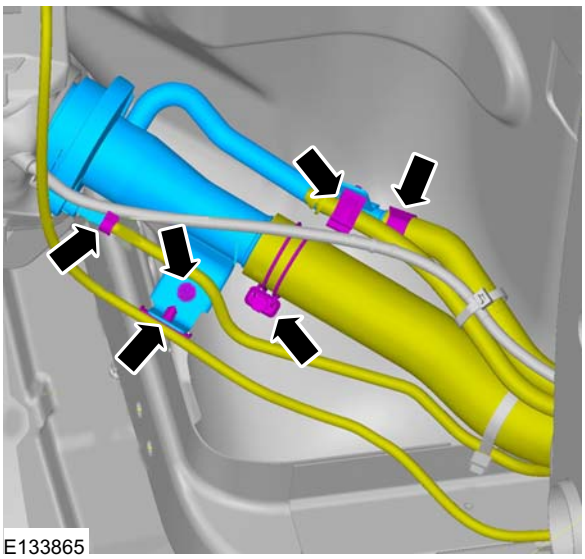

Installation

1. To install, reverse the removal procedure.

REMOVAL AND INSTALLATION

Fuel Filter

Removal

NOTE: Removal steps in this procedure may contain installation details.

1. Refer to: Diesel Fuel System Health and Safety Precautions (100-00 General Information, Description and Operation).
2. Refer to: Battery Disconnect and Connect (414-01 Battery, Mounting and Cables, General Procedures).
3. Refer to: Fuel Injection Component Cleaning (303-04 Fuel Charging and Controls - 2.2L Duratorq-TDCi (88kW/120PS) - Puma/2.2L Duratorq-TDCi (96kW/130PS) - Puma/2.2L Duratorq-TDCi (110kW/150PS) - Puma, General Procedures).
4.

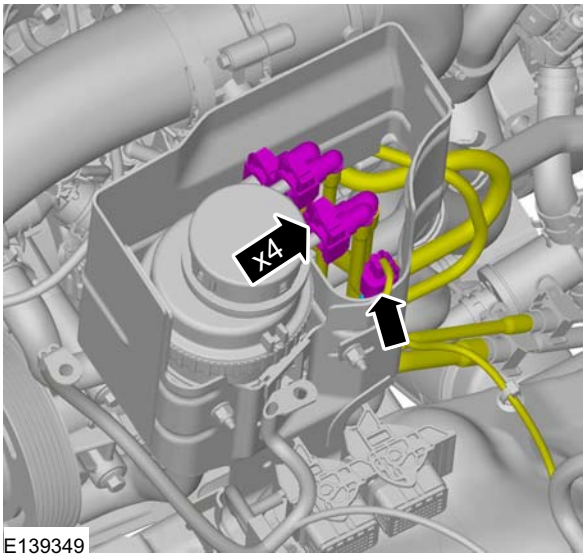

E139349

5.

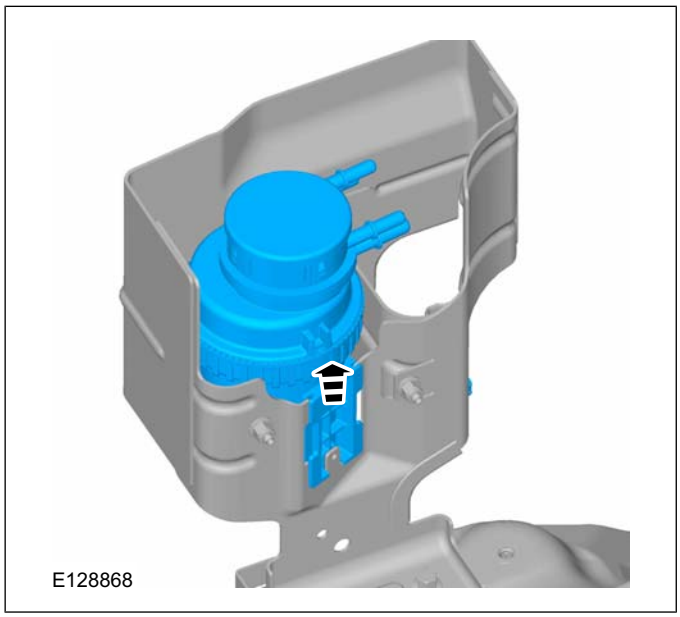
E128868

Installation

1. To install, reverse the removal procedure.

REMOVAL AND INSTALLATION

Fuel Level Sender

Special Tool(s)

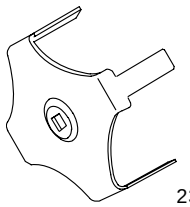 23042	310-037 Remover/Installer, Fuel Tank Sender Unit

Removal

1. Refer to: Fuel Tank (310-01 Fuel Tank and Lines - 2.2L Duratorq-TDCi (88kW/120PS) - Puma/2.2L Duratorq-TDCi (96kW/130PS) - Puma/2.2L Duratorq-TDCi (110kW/150PS) - Puma/3.2L Duratorq-TDCi (148kW/200PS) - Puma, Removal and Installation).
2. **CAUTION: Take extra care not to damage the fuel tank level sensor float and arm .**

   Special Tool(s): 310-037

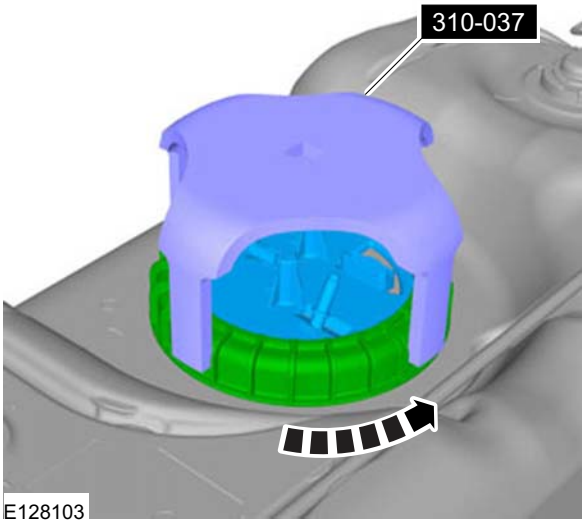

E128103

3. **CAUTION: Take extra care not to damage the fuel tank level sensor float and arm.**

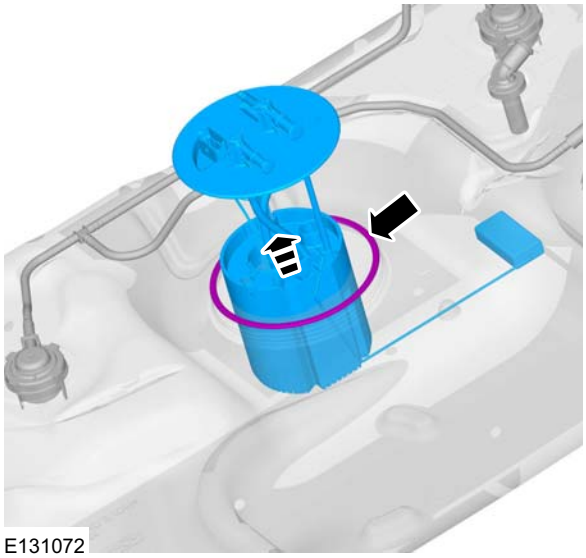
E131072

REMOVAL AND INSTALLATION

4.

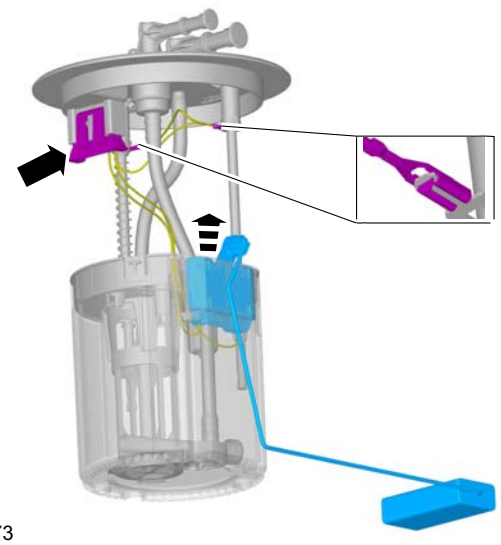

Installation

1. To install, reverse the removal procedure.
2. **CAUTION: Take extra care not to damage the fuel tank level sensor float and arm.**

   NOTE: Make sure that the seal is correctly located.

   NOTE: Make sure that the installation marks are aligned.

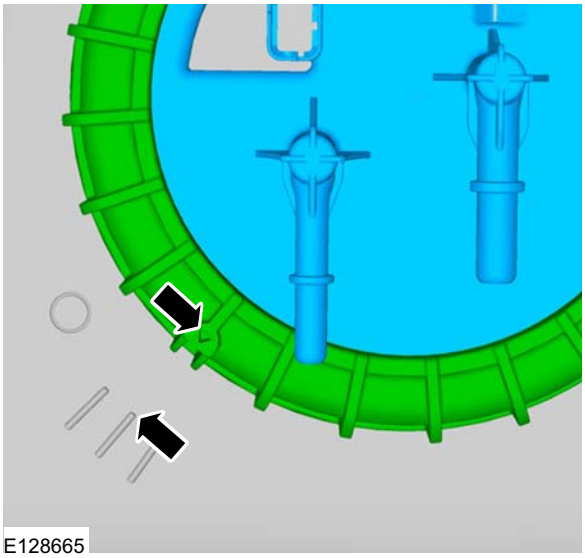

SECTION 310-02 Acceleration Control

VEHICLE APPLICATION: 2011.50 Ranger

CONTENTS PAGE

REMOVAL AND INSTALLATION

Accelerator Pedal..... 310-02-2

REMOVAL AND INSTALLATION

Accelerator Pedal

Removal

NOTE: Removal steps in this procedure may contain installation details.

1. Refer to: Health and Safety Precautions (100-00 General Information, Description and Operation).
   Refer to: Battery Disconnect and Connect (414-01 Battery, Mounting and Cables, General Procedures).
2. Torque: 11 Nm

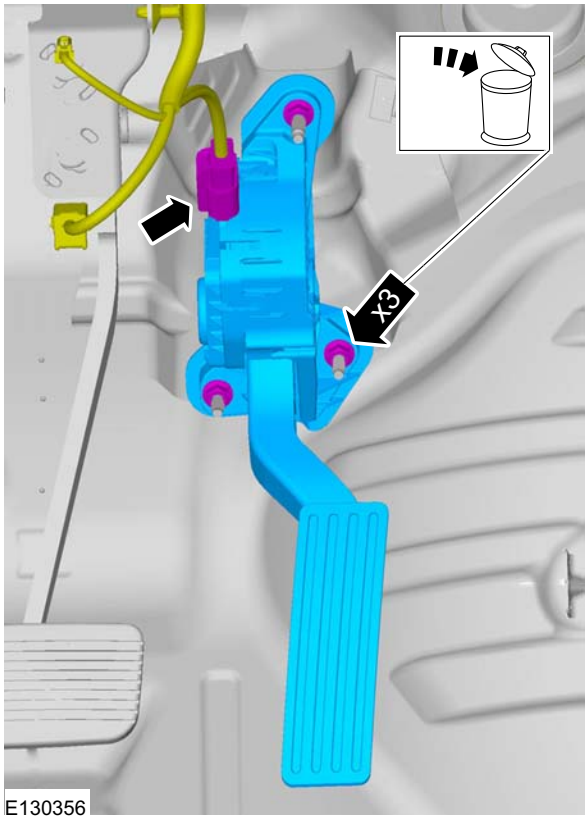

Installation

1. To install, reverse the removal procedure.

GROUP

4

Electrical

SECTION TITLE PAGE

Climate Control System
Climate Control System - General Information....412-00
Climate Control....412-01
Auxiliary Climate Control....412-02
Instrumentation and Warning Systems
Instrument Cluster....413-01
Horn....413-06
Warning Devices....413-09
Parking Aid....413-13
Battery and Charging System
Charging System - General Information....414-00
Battery, Mounting and Cables....414-01
Generator and Regulator....414-02
Information and Entertainment Systems
Information and Entertainment System - General Information....415-00
Information and Entertainment System....415-01
Lighting
Exterior Lighting....417-01
Interior Lighting....417-02
Daytime Running Lamps (DRL)....417-04
Electrical Distribution
Module Communications Network....418-00
Module Configuration....418-01
Wiring Harnesses....418-02
Electronic Feature Group
Anti-Theft - Active....419-01A
Anti-Theft - Passive....419-01B
Multifunction Electronic Modules....419-10

SECTION 412-00 Climate Control System - General Information

VEHICLE APPLICATION: 2011.50 Ranger

CONTENTS PAGE

SPECIFICATIONS

Specifications..... 412-00-2

GENERAL PROCEDURES

Air Conditioning (A/C) Clutch Air Gap Adjustment..... 412-00-3
Air Conditioning (A/C) System Recovery, Evacuation and Charging..... 412-00-4
Refrigerant Oil Adding..... 412-00-6
Contaminated Refrigerant Handling..... 412-00-7
Electronic Leak Detection..... 412-00-8
Fluorescent Dye Leak Detection..... 412-00-9
Vacuum Leak Detection..... 412-00-10

SPECIFICATIONS

Lubricants, Fluids, Sealers and Adhesives

	Specifications
Refrigerant R134a	WSH-M17B19-A
Refrigerant oil	WSH-M1C231-B

Refrigerant Capacities (When Charging)

	Grams
Air Conditioning	650 ± 10

Refrigerant Oil Capacities (When Charging)

	Milliliters
Air Conditioning	150

Addition of Refrigerant Oil (When a new compressor is installed)

	Milliliters
Air conditioning compressor if the amount of refrigerant oil taken from the faulty compressor is 50 to 90 ml	Drain 70 from new compressor.
Air conditioning compressor if the amount of refrigerant oil taken from the faulty compressor is 91 to 120 ml	Drain 40 from new compressor.
Air conditioning compressor if the amount of refrigerant oil taken from the faulty compressor is more than 121 to 150 ml	Drain 0 from new compressor.

Addition of Refrigerant Oil (When new components are installed)

	Milliliters
Condenser	add 80.
Evaporator	add 40.
Every time refrigerant is evacuated.	as taken from the system
When all new components are installed (including compressor).	add 0.
When A/C system is flushed.	150

Clutch air gap

	mm
Compressor clutch air gap	0,35 - 0,65

Torque Specifications

Item	Nm	lb-ft	lb-in
Compressor drive plate retaining bolt	13	10	–

GENERAL PROCEDURES

Air Conditioning (A/C) Clutch Air Gap Adjustment

1. Check the gap A (measure the difference between the engaged and disengaged positions of the air conditioning clutch) at 60° intervals around the circumference of the pulley. Operate the air conditioning clutch several times with the aid of a 5 A fused cable. Refer to the relevant wiring diagram for the correct electrical connection.

   Refer to: Specifications (412-00 Climate Control System - General Information, Specifications).

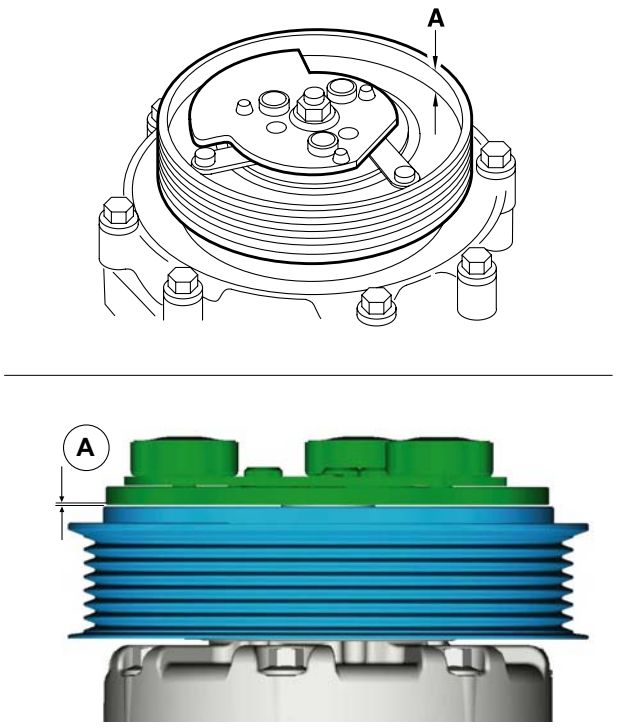

E92144

2.

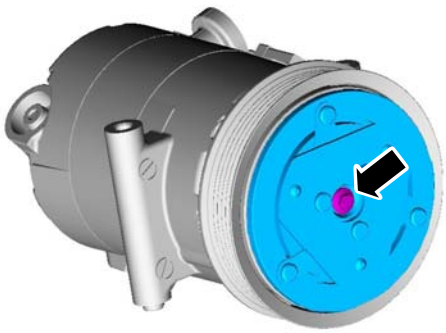

E68442

3. If necessary correct the gap A using spacer washers.

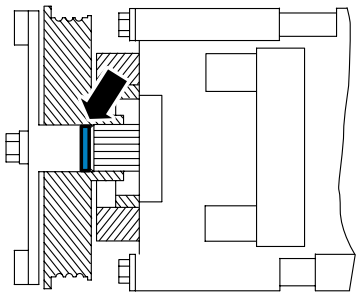

E68470

4. Refer to: Specifications (412-00 Climate Control System - General Information, Specifications).

E68442

5. Check the gap A as described in step 1. If necessary, repeat steps 2-5.

GENERAL PROCEDURES

Air Conditioning (A/C) System Recovery, Evacuation and Charging

General Equipment

Air Conditioning Service Unit
Automatic Calibration Halogen Leak Detector
Electronic Leak Detector
Refrigerant Identification Equipment
UV Leak Detector

1. Refer to: Air Conditioning (A/C) System Health and Safety Precautions (100-00 General Information, Description and Operation).

2. **CAUTION: The refrigerant analyzer must be used before recovery, otherwise the refrigerant center may become contaminated. Contaminated refrigerant must be disposed of as hazardous waste. Always follow the manufacturer's instructions when using the refrigerant center and the refrigerant analyzer.**

   Unscrew and remove the protective caps from the A/C charging connections.

   General Equipment: Air Conditioning Service Unit
   General Equipment: Refrigerant Identification Equipment

3. 1. Low-pressure connection
   2. High-pressure connection

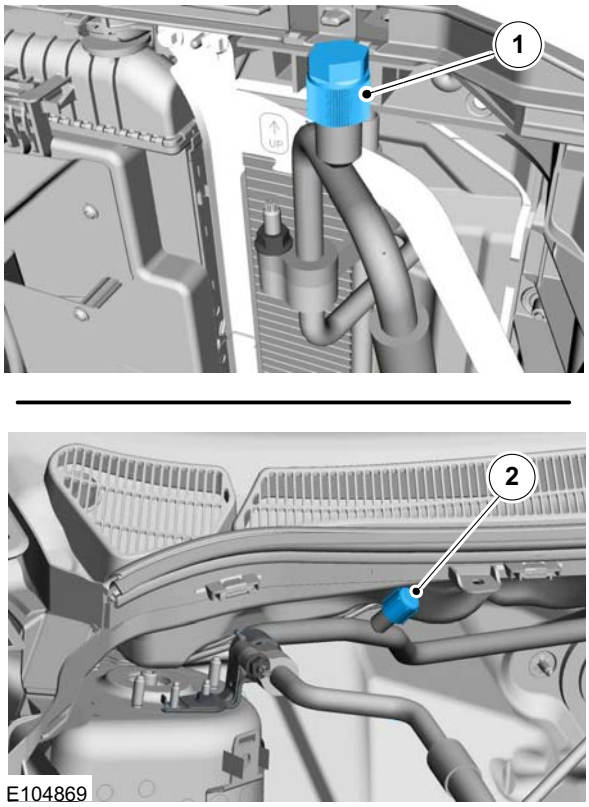

4. Connect the service unit lines to the filling connection of the air conditioning system.

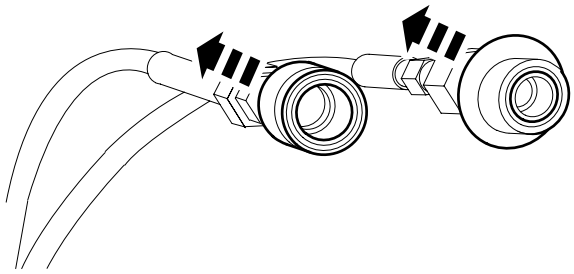

5. Drain the air conditioning system via the low-pressure port in accordance with the service unit manufacturer instructions.

6. **CAUTION: Make sure that the specified amount of refrigerant oil is added.**

   NOTE: This step is only required when installing a new component.

GENERAL PROCEDURES

Fill up with refrigerant oil.

Refer to: Specifications (412-00 Climate Control System - General Information, Specifications).
Refer to: Refrigerant Oil Adding (412-00 Climate Control System - General Information, General Procedures).

7. Evacuate the air conditioning system in accordance with the service unit manufacturer instructions.

8. **NOTE:** The system is leak-tight if the pressure increase does not exceed 20 mbar.

   Perform the leak test, by closing the hand valves on the gauge set, switching off the service unit vacuum pump and observing the low pressure gauge.

9. **NOTE:** This step is only necessary if the pressure increase exceeds 20 mbar.

   Locate and rectify any leaks in the A/C refrigerant circuit using a leak tester.

   General Equipment: UV Leak Detector
   General Equipment: Electronic Leak Detector
   General Equipment: Automatic Calibration Halogen Leak Detector

10. Add refrigerant oil to the air conditioning system.

    Refer to: Specifications (412-00 Climate Control System - General Information, Specifications).
    Refer to: Refrigerant Oil Adding (412-00 Climate Control System - General Information, General Procedures).

11. Fill the air conditioning system with liquid through the high-pressure connection.

    Refer to: Specifications (412-00 Climate Control System - General Information, Specifications).

12. 1. Open the shut-off valve on the high-pressure side.
    2. Switch the service unit to "Fill" mode and fill the system with the specified quantity of liquid refrigerant (R134a).

13. Fill the air conditioning system with gas through the low-pressure connection.

    Refer to: Specifications (412-00 Climate Control System - General Information, Specifications).

14. 1. Open the shut-off valve on the low-pressure side.
    2. Switch the service unit to "Fill" mode and fill the system with the specified quantity of gaseous refrigerant.
    3. Add the remaining amount of refrigerant with the air conditioning switched on. To do so run the engine at about 1200-1500 rev/min. Set the air conditioning system to full cooling power and fresh air mode. Set the blower motor to the highest setting. Fill with the remainder of the specified fill capacity.

15. Disconnect the service unit.

16. 1. Close the shut-off valve.
    2. Switch off the service unit.
    3. Disconnect the service unit lines from the filling connections of the air conditioning system.
    4. Screw the protective caps onto the charging connections.

17. Install all components in reverse order.

GENERAL PROCEDURES

Refrigerant Oil Adding

CAUTION: Collect the refrigerant oil in a clean measuring cylinder.

1. **NOTE:** This step only needs to be carried out when removing the A/C compressor.

   NOTE: Rotate the compressor shaft at least 6 to 8 turns when draining the refrigerant oil.

   Drain the refrigerant oil from the defective A/C compressor and dispose of it.

2. **CAUTIONS:**

   The refrigerant oil top-up quantity must not exceed the refrigerant oil fill quantity.

   If other A/C components are being renewed in addition to the A/C compressor, there is no need to top up with additional refrigerant oil, apart from filling the compressor.

   Top up with the calculated quantity of new refrigerant oil. See: Specifications (412-00 Heating, Ventilation, Air-Conditioning - General information, Specifications).

GENERAL PROCEDURES

Contaminated Refrigerant Handling

1. **CAUTION: Any R134a or R12 refrigerant which is contaminated with unsuitable refrigerant should be extracted only by means of a suitable servicing unit designed for the purpose of collecting and storing contaminated refrigerant, so that the spread to other vehicles can be prevented.**

   Use refrigerant identification equipment to check that there is contaminated refrigerant in the air conditioning system.

2. Inform the customer about the additional costs involved to repair the system because of the contamination.

3. Extract the contaminated refrigerant.

GENERAL PROCEDURES

Electronic Leak Detection

Leak detection

4. Refer to: Air Conditioning (A/C) System Health and Safety Precautions (100-00 General Information, Description and Operation).

5. **WARNINGS:**

   Before starting leak detection, make sure that the area where it is to be done is well ventilated. If the surrounding air is contaminated with refrigerant gas, the leak detector will indicate this gas all the time. Odors from cigarette smoke and other chemicals such as antifreeze, diesel fuel, disc brake cleaner, or other cleaning solvents can cause the same problem. Prevent air movement while performing leak detection.

   The refrigerant identification equipment must be used before attaching the manifold gauge set. Otherwise the manifold gauge set may become contaminated. Contaminated refrigerant must be disposed of as special waste. Follow the manufacturer's instructions when working with the service unit.

   NOTE: At 24°C with the engine switched off, both manifold gauges should show 4.1 to 5.5 bar.

   Attach the manifold gauge set to the service gauge port valves.

6. For the leak test, close the manual valves on the gauge set.

7. If little or no pressure is indicated, charge the system with approx. 300g of refrigerant.

   Refer to: Air Conditioning (A/C) System Recovery, Evacuation and Charging (412-00 Climate Control System - General Information, General Procedures).

8. **WARNING: Make sure that the surface is clean and free of foreign material.**

   NOTE: Make sure that the leak detector is calibrated and set in accordance with the operating instructions.

   Use the R-134a automatic calibration halogen leak detector to leak test the refrigerant system.

   Follow the instructions included with leak detector for handling and operation techniques.

9. **CAUTION: Do not let the detector sensing tip contact any substance as this could cause a false reading and may damage the sensor.**

   Position the sensor about 5mm from the point to be checked. Circle each fitting completely.

10. If a leak is detected, repeat the leak detection process after blowing away the chemical detected with compressed air.

11. If a leak is detected again, extract the refrigerant under suction.

    Refer to: Air Conditioning (A/C) System Recovery, Evacuation and Charging (412-00 Climate Control System - General Information, General Procedures).

GENERAL PROCEDURES

Fluorescent Dye Leak Detection

General Equipment

UV Leak Detector

Leak detection

CAUTION: Make sure that the vehicle is in a low sunlight area before performing any actions.

12. Refer to: Air Conditioning (A/C) System Health and Safety Precautions (100-00 General Information, Description and Operation).
13. **NOTE:** The exact location of leaks can be pinpointed by the bright yellow - green glow of the tracer dye. Since more than one leak can exist, always inspect each component.
    - Locate the leaks. Check all components, fittings and lines of the A/C system for leaks.

      General Equipment: UV Leak Detector
14. After the leak is found and rectified, remove any traces of dye with a general purpose solvent.
15. Check the repair by operating the system for some minutes and inspecting with the UV lamp again.

GENERAL PROCEDURES

Vacuum Leak Detection

1. Carry out the air conditioning (A/C) system recovery procedure.

   Refer to: Air Conditioning (A/C) System Recovery, Evacuation and Charging (412-00 Climate Control System - General Information, General Procedures).

SECTION 412-01 Climate Control

VEHICLE APPLICATION: 2011.50 Ranger

CONTENTS PAGE

DESCRIPTION AND OPERATION

Air Distribution and Filtering..... 412-01-2
Heating and Ventilation..... 412-01-3
Air Conditioning..... 412-01-6
Control Components..... 412-01-9

REMOVAL AND INSTALLATION

Air Conditioning (A/C) Compressor — 2.5L Duratec-HE (122kW/165PS) - MI4..... (34 626 4) 412-01-13
Air Conditioning (A/C) Compressor — 2.2L Duratorq-TDCi (88kW/120PS) - Puma/2.2L Duratorq-TDCi (96kW/130PS) - Puma/2.2L Duratorq-TDCi (110kW/150PS) - Puma..... (34 626 4) 412-01-14
Air Conditioning (A/C) Compressor — 3.2L Duratorq-TDCi (148kW/200PS) - Puma..... (34 626 4) 412-01-15
Air Conditioning (A/C) Pressure Sensor..... 412-01-16
Condenser — 2.5L Duratec-HE (122kW/165PS) - MI4..... 412-01-17
Condenser — 2.2L Duratorq-TDCi (88kW/120PS) - Puma/2.2L Duratorq-TDCi (96kW/130PS) - Puma/2.2L Duratorq-TDCi (110kW/150PS) - Puma/3.2L Duratorq-TDCi (148kW/200PS) - Puma..... 412-01-19
Receiver Drier..... 412-01-21
Blower Motor — LHD 4WD/LHD RWD..... (34 374 0) 412-01-22
Blower Motor — RHD 4WD/RHD RWD..... (34 374 0) 412-01-23
Blower Motor Resistor..... (34 382 0) 412-01-24
Climate Control Module..... 412-01-25
Pollen Filter..... 412-01-26
Sunload Sensor..... (34 665 0) 412-01-27
Heater Core and Evaporator Core Housing..... 412-01-28
Evaporator..... 412-01-31
Ambient Air Temperature Sensor..... (34 676 0) 412-01-33

DESCRIPTION AND OPERATION

Air Distribution and Filtering

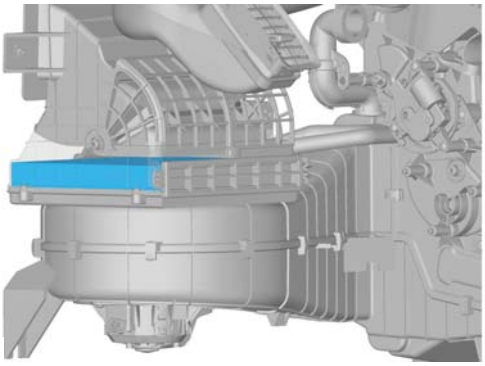

The fresh air flowing into the vehicle through the air inlet housing passes through a pollen filter which is located on the left-hand side of the climate control housing (LHD and RHD) and removes pollen and dust particles measuring 0.003 mm or more.

The pollen filter must be changed at intervals in accordance with the service schedule.

A special production pollen filter is installed in the factory and this must be cut off when the filter is changed. The service pollen filter is flexible and can be pushed together during installation or removal.

Air distribution, instrument cluster

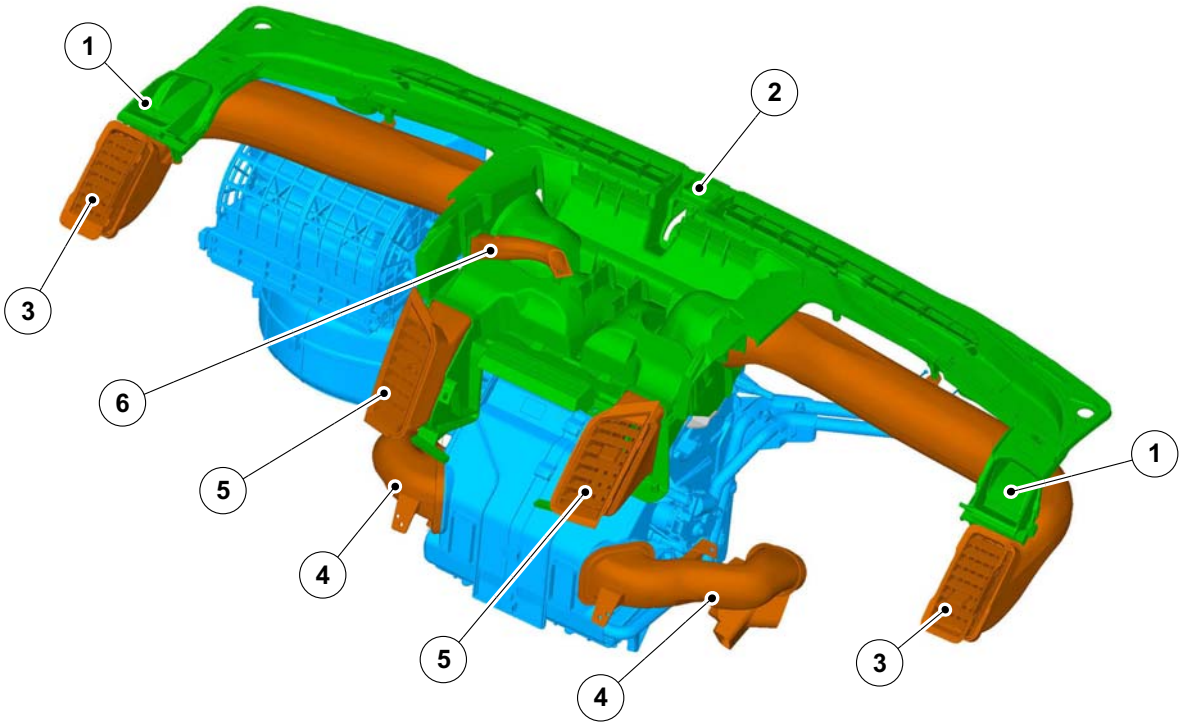

Item	Description
1	Air passages - side window defroster vents
2	Air passages – defroster vents
3	Air passages - side vents (adjustable)
4	Air ducts, front footwell
5	Center duct vent
6	Air Duct - Navigation Display (if fitted)

DESCRIPTION AND OPERATION

Heating and Ventilation

Overview of the climate control housing

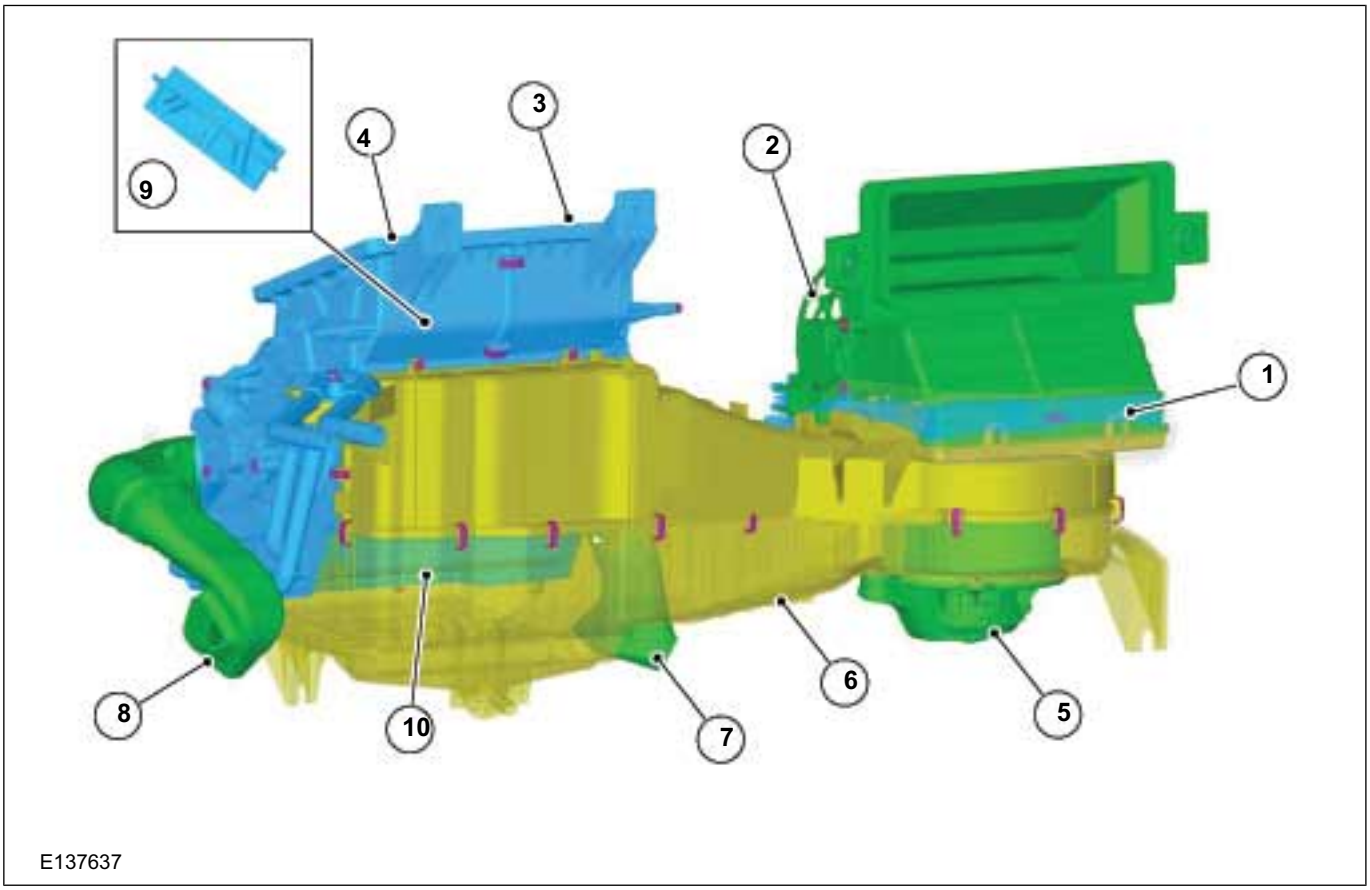

Item	Description
1	Pollen filter
2	Air inlet flap
3	Air Center vent
4	Air Defroster vent
5	Blower motor
6	Evaporator case
7	side foot well
8	Rear foot well
9	Air flip door
10	Heat exchanger

Air flow - defroster vent-Warm air

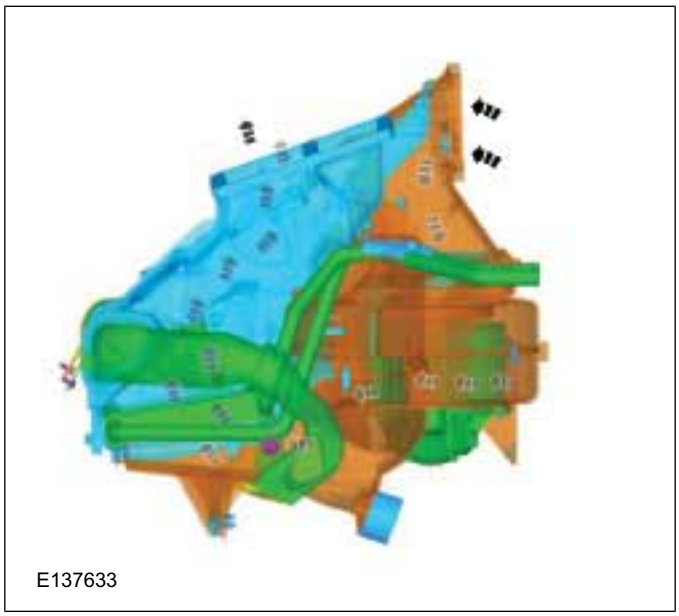

DESCRIPTION AND OPERATION

Air flow - defroster vent-Cold air

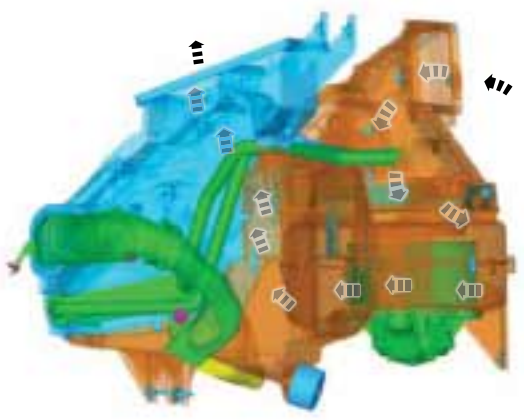

E137632

Air flow - center vent-Cold air

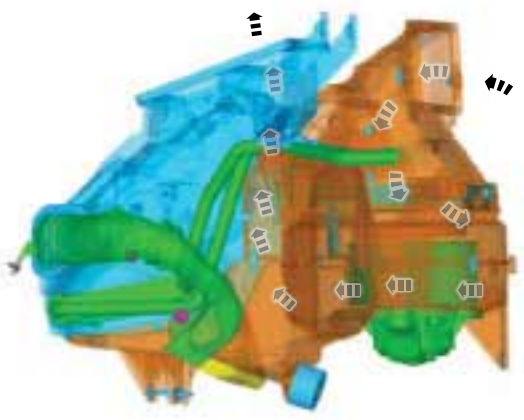

E137634

Air flow - center vent-warm air

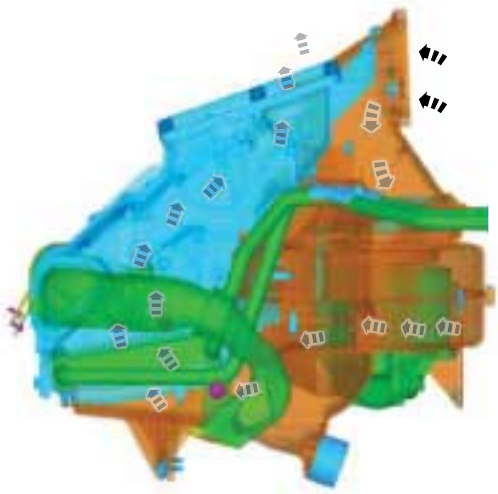

E137631

Air flow - foot well-Warm air

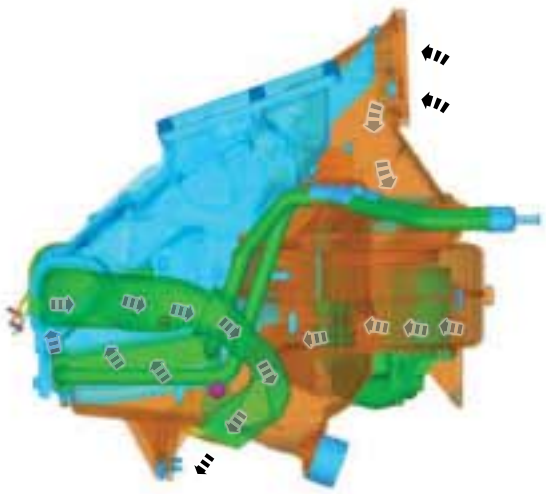

E137635

DESCRIPTION AND OPERATION

Air flow - foot well-Cold air

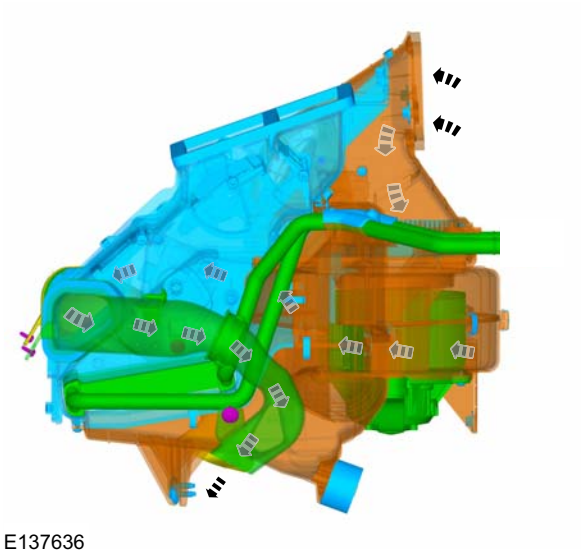

E137636

DESCRIPTION AND OPERATION

Air Conditioning

The air conditioning system is controlled by an thermostatic expansion valve. R134a refrigerant is used.

Two options are available:

- Manual climate control
- Air conditioning system with automatic temperature control (DEATC)

In order to prevent icing of the evaporator, the vehicles are equipped with a temperature sensor on the evaporator. The sensor measures the surface temperature of the cooling fins on the evaporator. If the measured temperature drops below a temperature of approx. +2 °C then the compressor clutch is deactivated. If the temperature increases above +4 °C the compressor is switched back on again. On systems with manual temperature control, the sensor signal is sent via the body control module (BCM) and the CAN bus to the powertrain control module (PCM), which then switches the compressor clutch on and off. On systems with automatic temperature control (DEATC) the sensor signal is first sent to the air conditioning module and then via the CAN bus to the PCM, which then switches the compressor clutch on and off.

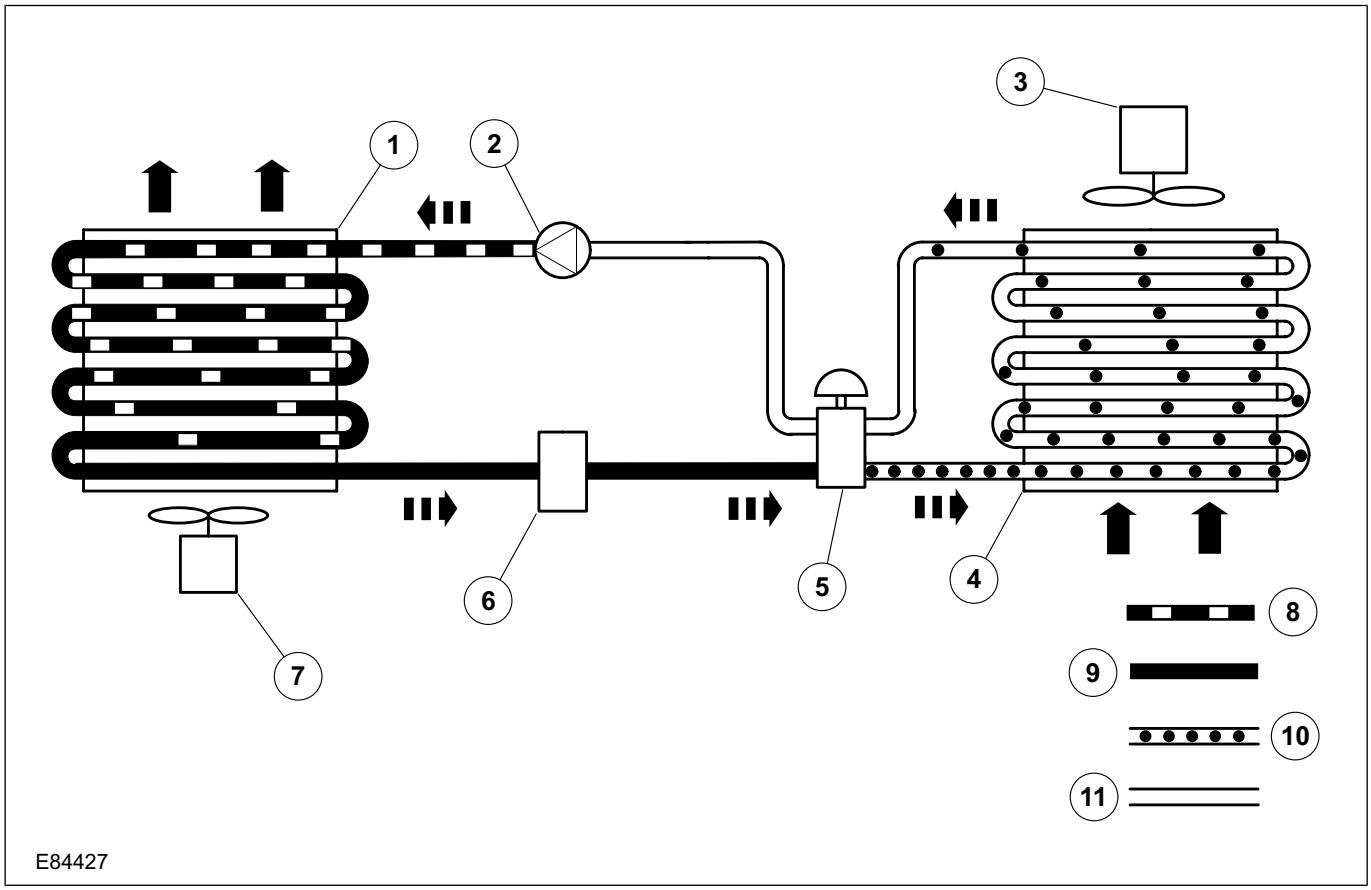

Item	Description
1	Condenser
2	A/C compressor
3	Blower motor
4	Evaporator
5	Expansion valve
6	Refrigerant drier
7	Cooling fan

Item	Description
8	High pressure (gaseous and hot)
9	High - pressure (liquid and warm)
10	Low - pressure (liquid and cool)
11	Low-pressure (gaseous and cool)

Function

The refrigerant compressor (2) which is driven by the engine sucks in the gaseous refrigerant from the evaporator (5) and compresses it. The

DESCRIPTION AND OPERATION

temperature of the refrigerant rises to a value between 70 °C and 110 °C. It passes to the condenser (1) under high pressure. At this point heat is drawn from the refrigerant by the air being forced past the cooling fins. Because of this heat loss, the refrigerant liquefies and leaves the condenser.

The refrigerant then passes under high pressure to the refrigerant drier (8). This serves as a storage medium and filters out any moisture contained in the refrigerant.

The expansion valve (6) regulates the quantity of refrigerant injected into the evaporator (5) as a function of the pressure and temperature in the evaporator. The liquid refrigerant is vaporized in the evaporator. This causes heat to be extracted from the air coming into the vehicle. The air therefore cools down and the moisture it contained is given up at the evaporator core.

The gaseous flow of refrigerant which comes out from the evaporator at low pressure enters the expansion valve at the upper opening, from where it is sucked in by the refrigerant compressor.

The A/C pressure converter sensor sends an analog signal to the PCM. After evaluating the different input signals, the PCM sends a control signal to the A/C clutch relay, which engages and disengages the compressor clutch. The PCM input signals come from the blower motor switch via the evaporator temperature sensor (vehicles with manual temperature control), via the A/C module (vehicles with automatic temperature control), the A/C pressure converter sensor and the PCM.

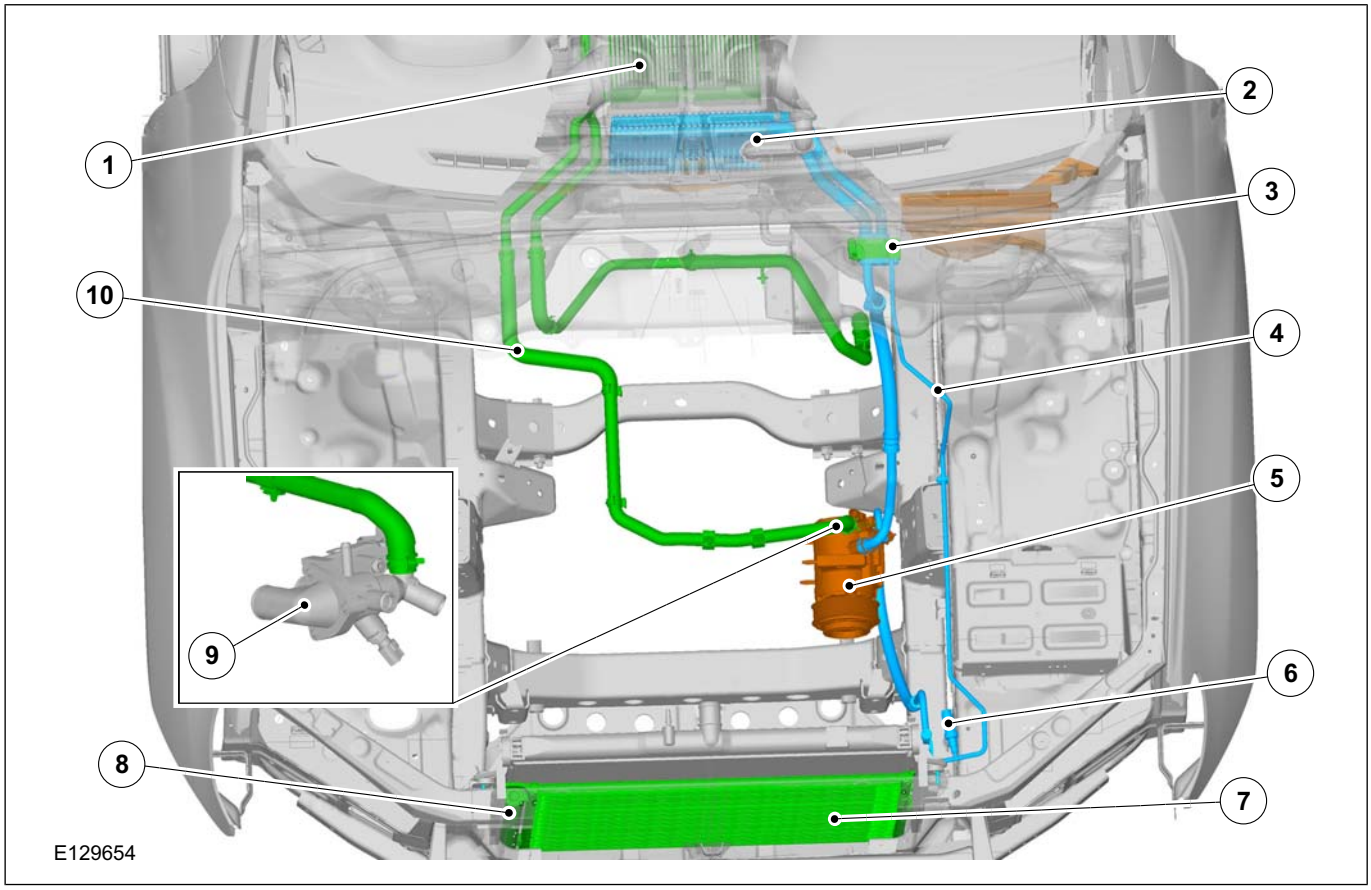

Item	Description
1	Heater core
2	Evaporator
3	Expansion valve
4	A/C lines
5	A/C compressor
6	Condenser

Item	Description
7	Refrigerant drier
8	Coolant Pump
9	Heater lines

DESCRIPTION AND OPERATION

Electronic refrigerant compressor control valve

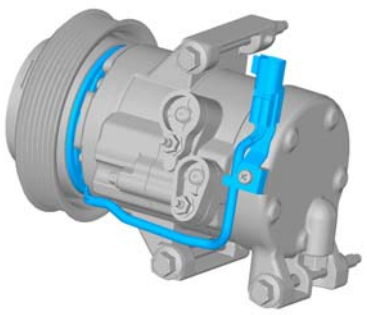

E129655

A refrigerant compressor with electronic control valve is used. The control valve regulates the delivery rate of the refrigerant compressor according to the request received from the A/C module.

DESCRIPTION AND OPERATION

Control Components

Control assembly, climate control - vehicles with manual temperature control

In vehicles with manual temperature control, the heating and A/C (air conditioning) are operated using three rotary switches. The air distribution flap and the temperature control flap are electrically actuated and controlled via potentiometer switches on the control head.

In addition, the operating switch for recirculated air, heated front screen, heated rear screen and the on/off switch for the air conditioning are located on the control assembly.

Vehicles with manual temperature control have a control assembly with the following functions:

Button operated functions include:

- Switching the air conditioning system on and off
- Switching the windshield defrost function on and off
- Recirculated air control
- Switching the heated rear screen on and off

Dial adjustments include:

- Temperature adjustment
- Air distribution
- Blower Control
- A/C max (used to cool the interior quickly)

Control assembly, climate control - vehicles with automatic temperature control

Vehicles with automatic temperature control have a control assembly with the following functions:

Button operated functions include:

- Switching the air conditioning system on and off
- Air distribution
- Switching the max defrost function on and off
- Switching automatic climate control on and off
- Recirculated air control
- Switching the front and rear demist function on and off

Dial adjustments include:

- Dual zone or mono zone temperature adjustment (between driver and passenger side)
- Switching the automatic climate control on and off
- Blower control

DESCRIPTION AND OPERATION

Overview of the climate control housing - vehicles with manual temperature control

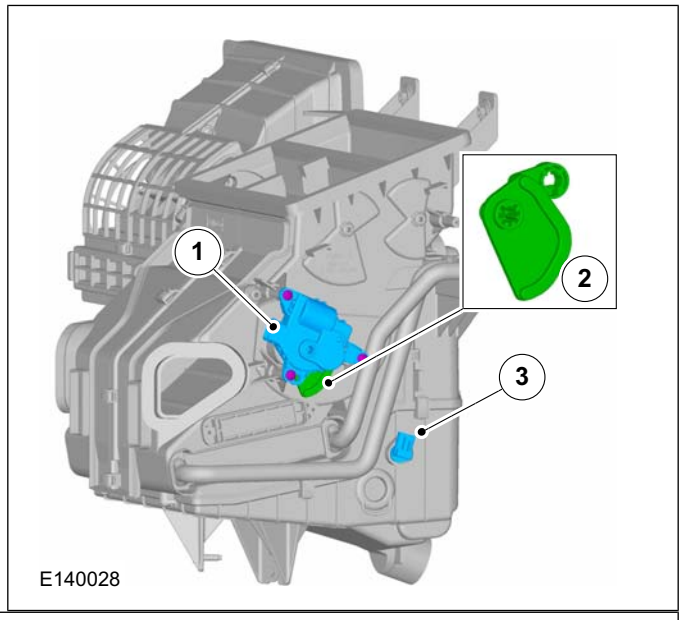

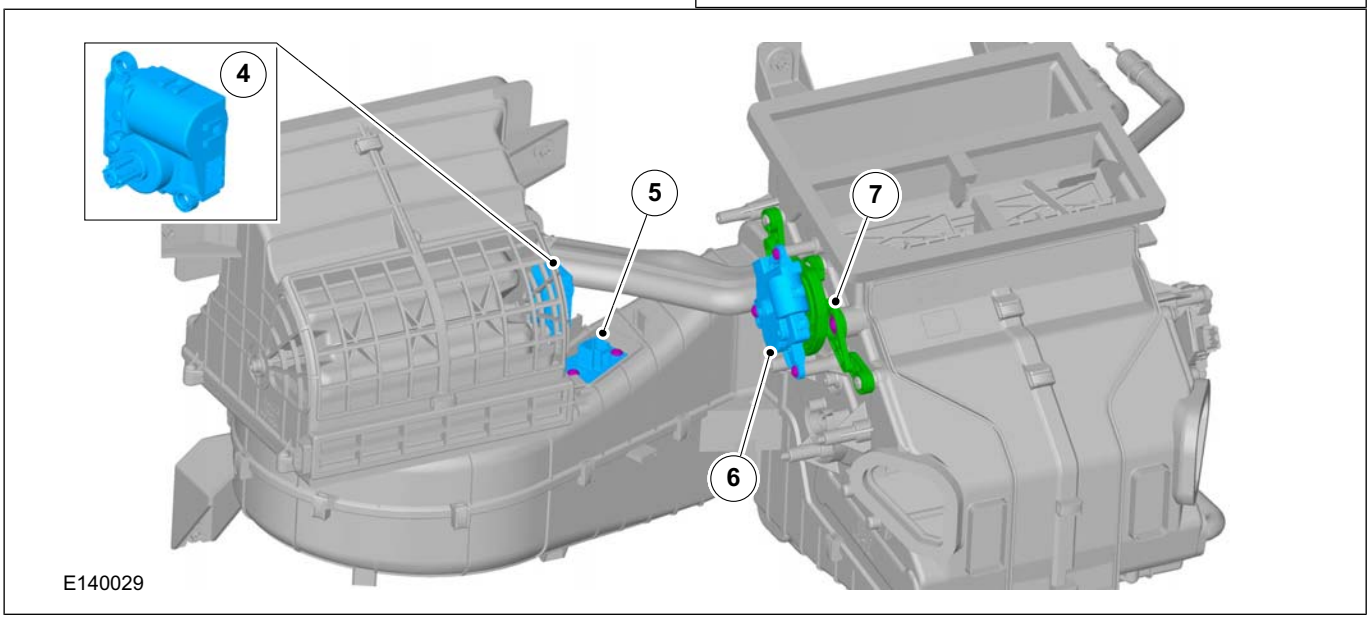

Item	Description
1	Actuator - temperature flap
2	Lever - temperature control
3	Temperature sensor - evaporator
4	Actuator - air intake flap
5	Blower motor speed controller
6	Actuator - air distribution flap
7	Cam - air distribution control

DESCRIPTION AND OPERATION

Overview of the climate control housing - vehicles with automatic temperature control

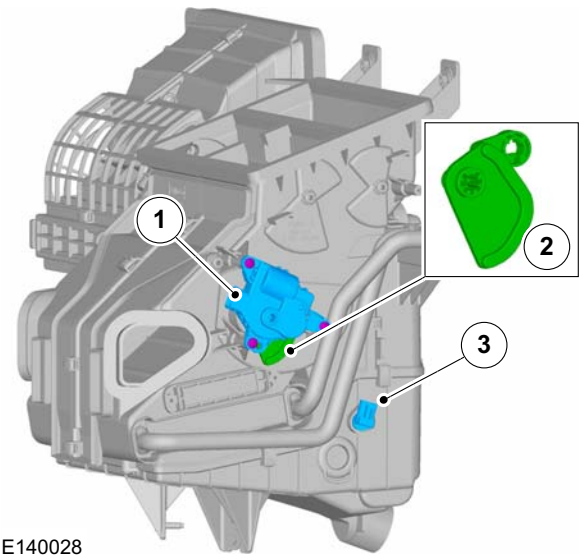

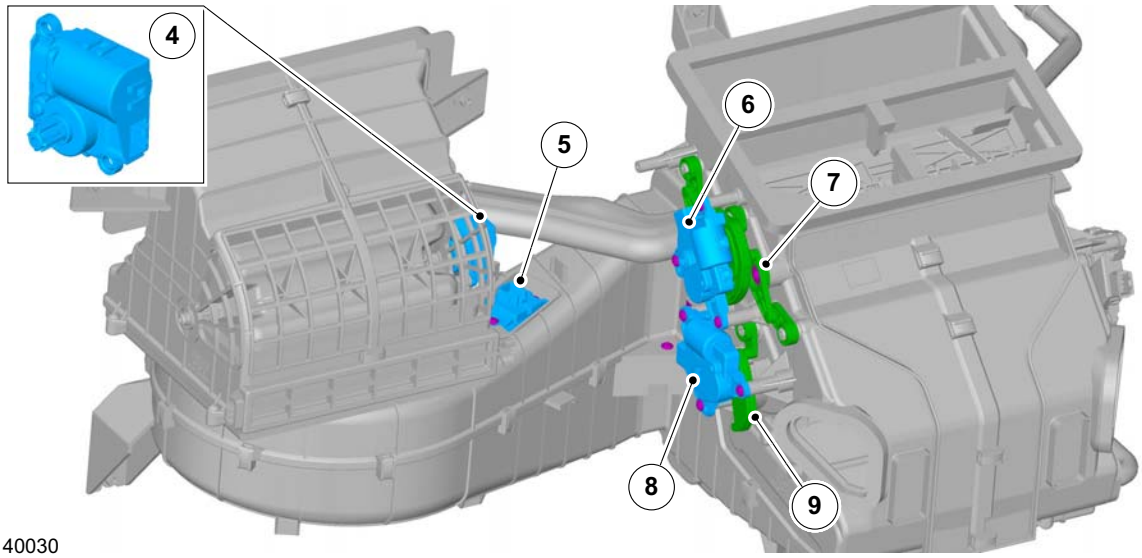

Item	Description
1	Actuator - right-hand temperature flap
2	Lever - right-hand temperature control
3	Temperature sensor - evaporator
4	Actuator - air intake flap
5	Blower motor speed controller
6	Actuator - air distribution flap
7	Cam - air distribution control
8	Actuator - left-hand temperature control
9	Lever - left-hand temperature control

Sun load sensor/interior temperature sensor - vehicles with automatic temperature control

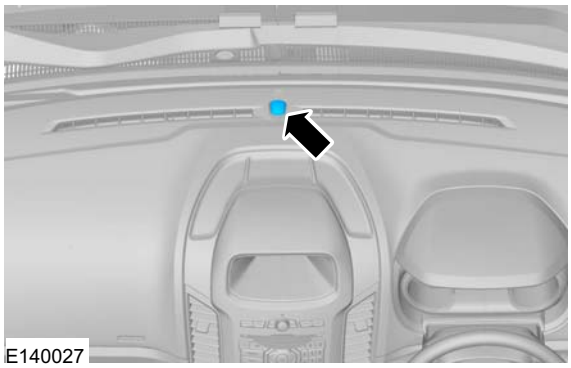

On vehicles with automatic temperature control, the sun load sensor measures the intensity of the sunlight reaching the vehicle and passes the values

DESCRIPTION AND OPERATION

on to the A/C module. Additionally, the integrated in-car temperature sensor provides the A/C module with variable feedback from the cabin. The A/C module then ensures that the cabin temperature is regulated to customer comfort.

REMOVAL AND INSTALLATION

Air Conditioning (A/C) Compressor — 2.5L Duratec-HE (122kW/165PS) - MI4(34 626 4)

Materials	
Name	**Specification**
Compressor Oil - Air Conditioning	WSH-M1C231-B / 6U7J-M1C231-AA

Removal

NOTE: Removal steps in this procedure may contain installation details.

1. Refer to: Air Conditioning (A/C) System Recovery, Evacuation and Charging (412-00 Climate Control System - General Information, General Procedures).
2. Refer to: Accessory Drive Belt (303-05 Accessory Drive - 2.5L Duratec-HE (122kW/165PS) - MI4, Removal and Installation).
3. Refer to: Lifting (100-02 Jacking and Lifting, Description and Operation).
4. Torque: 15 Nm

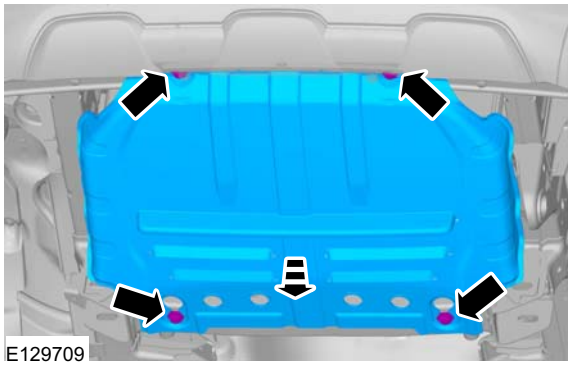
E129709

5. 1. Torque: 10 Nm
   2. Torque: 25 Nm

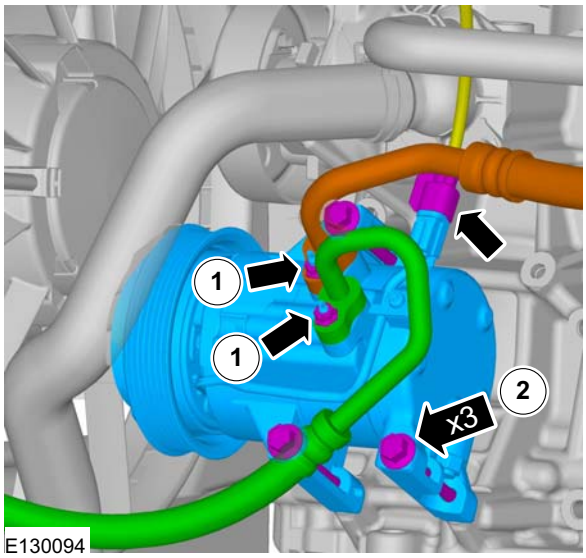

E130094

Installation

1. Coat the O-rings on the refrigerant lines.

   Material: Compressor Oil - Air Conditioning (WSH-M1C231-B / 6U7J-M1C231-AA) refrigerant oil
2. To install, reverse the removal procedure.

REMOVAL AND INSTALLATION

Air Conditioning (A/C) Compressor — 2.2L Duratorq-TDCi (88kW/120PS) - Puma/2.2L Duratorq-TDCi (96kW/130PS) - Puma/2.2L Duratorq-TDCi (110kW/150PS) - Puma(34 626 4)

Materials	
Name	**Specification**
Compressor Oil - Air Conditioning	WSH-M1C231-B / 6U7J-M1C231-AA

Removal

NOTE: Removal steps in this procedure may contain installation details.

1. Refer to: Air Conditioning (A/C) System Recovery, Evacuation and Charging (412-00 Climate Control System - General Information, General Procedures).
2. Refer to: Accessory Drive Belt - 2.2L Duratorq-TDCi (88kW/120PS) - Puma/2.2L Duratorq-TDCi (96kW/130PS) - Puma/2.2L Duratorq-TDCi (110kW/150PS) - Puma/3.2L Duratorq-TDCi (148kW/200PS) - Puma (303-05 Accessory Drive - 2.2L Duratorq-TDCi (88kW/120PS) - Puma/2.2L Duratorq-TDCi (96kW/130PS) - Puma/2.2L Duratorq-TDCi (110kW/150PS) - Puma/3.2L Duratorq-TDCi (148kW/200PS) - Puma, Removal and Installation).
3. Refer to: Lifting (100-02 Jacking and Lifting, Description and Operation).
4. Torque: 15 Nm

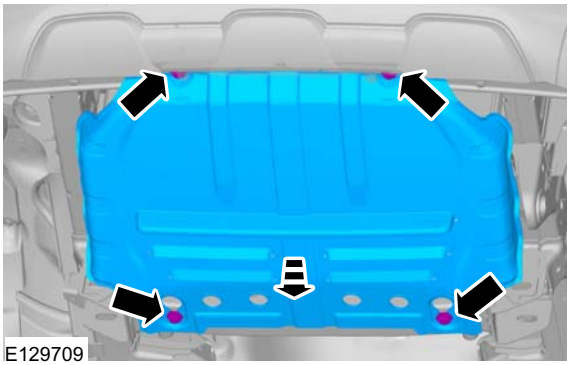
E129709

5. 1. Torque: 10 Nm
   2. Torque: 25 Nm

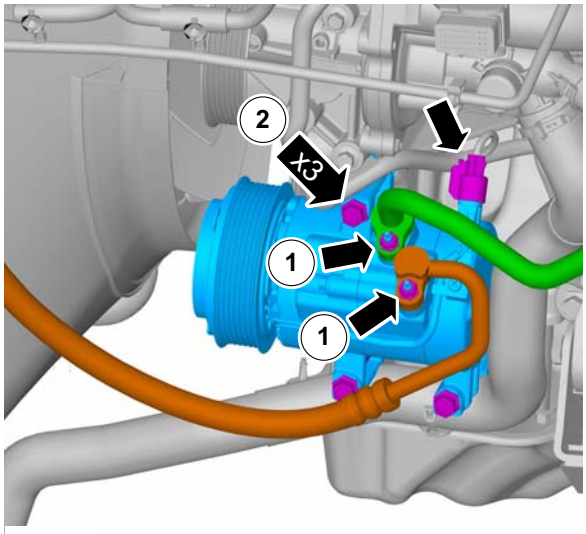

E130065

Installation

1. Coat the O-rings on the refrigerant lines.

   Material: Compressor Oil - Air Conditioning (WSH-M1C231-B / 6U7J-M1C231-AA) refrigerant oil
2. To install, reverse the removal procedure.

REMOVAL AND INSTALLATION

Air Conditioning (A/C) Compressor — 3.2L Duratorq-TDCi (148kW/200PS) - Puma(34 626 4)

Materials	
Name	**Specification**
Compressor Oil - Air Conditioning	WSH-M1C231-B / 6U7J-M1C231-AA

Removal

NOTE: Removal steps in this procedure may contain installation details.

1. Refer to: Air Conditioning (A/C) System Recovery, Evacuation and Charging (412-00 Climate Control System - General Information, General Procedures).
2. Refer to: Accessory Drive Belt - 2.2L Duratorq-TDCi (88kW/120PS) - Puma/2.2L Duratorq-TDCi (96kW/130PS) - Puma/2.2L Duratorq-TDCi (110kW/150PS) - Puma/3.2L Duratorq-TDCi (148kW/200PS) - Puma (303-05 Accessory Drive - 2.2L Duratorq-TDCi (88kW/120PS) - Puma/2.2L Duratorq-TDCi (96kW/130PS) - Puma/2.2L Duratorq-TDCi (110kW/150PS) - Puma/3.2L Duratorq-TDCi (148kW/200PS) - Puma, Removal and Installation).
3. Refer to: Lifting (100-02 Jacking and Lifting, Description and Operation).
4. Torque: 15 Nm

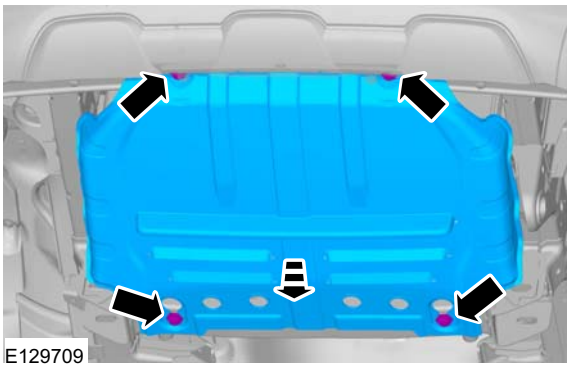
E129709

5. 1. Torque: 10 Nm
   2. Torque: 25 Nm

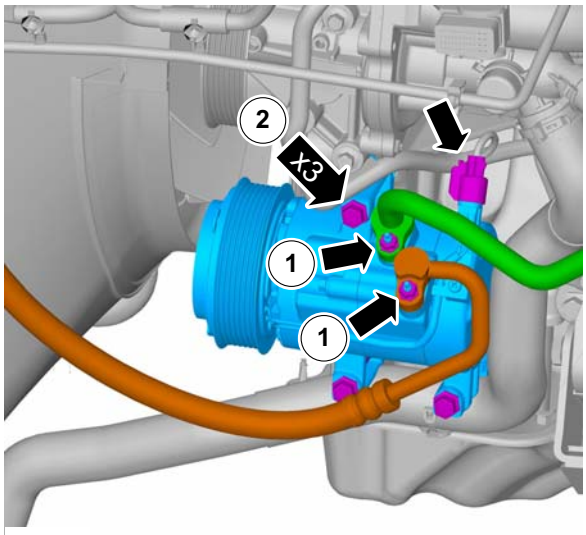

E130065

Installation

1. Coat the O-rings on the refrigerant lines.

   Material: Compressor Oil - Air Conditioning (WSH-M1C231-B / 6U7J-M1C231-AA) refrigerant oil
2. To install, reverse the removal procedure.

REMOVAL AND INSTALLATION

Air Conditioning (A/C) Pressure Sensor

Materials	
Name	**Specification**
Compressor Oil - Air Conditioning	WSH-M1C231-B / 6U7J-M1C231-AA

Removal

NOTE: Removal steps in this procedure may contain installation details.

1. Refer to: Air Conditioning (A/C) System Health and Safety Precautions (100-00 General Information, Description and Operation).
2. Refer to: Air Conditioning (A/C) System Recovery, Evacuation and Charging (412-00 Climate Control System - General Information, General Procedures).

Vehicles with automatic transmission

3.

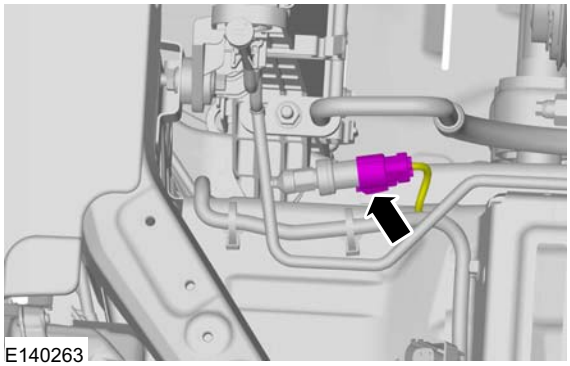
E140263

4. Torque: 8 Nm

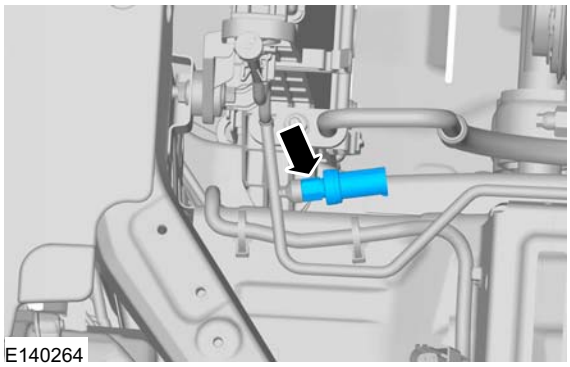
E140264

Vehicles with manual transmission

5.

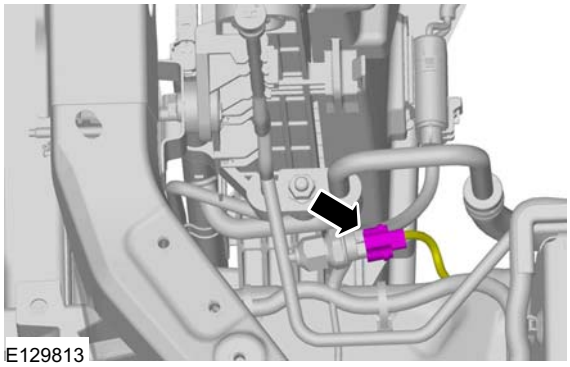
E129813

6. Torque: 8 Nm

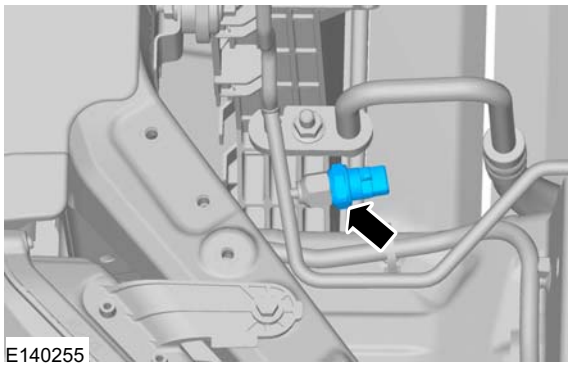
E140255

Installation

1. Coat the O-rings on the refrigerant lines.

   Material: Compressor Oil - Air Conditioning (WSH-M1C231-B / 6U7J-M1C231-AA) refrigerant oil

2. To install, reverse the removal procedure.

REMOVAL AND INSTALLATION

Condenser — 2.5L Duratec-HE (122kW/165PS) - MI4

Materials	
Name	**Specification**
Compressor Oil - Air Conditioning	WSH-M1C231-B / 6U7J-M1C231-AA

Removal

NOTE: Removal steps in this procedure may contain installation details.

1. Refer to: Air Conditioning (A/C) System Health and Safety Precautions (100-00 General Information, Description and Operation).
2. Refer to: Air Conditioning (A/C) System Recovery, Evacuation and Charging (412-00 Climate Control System - General Information, General Procedures).
3. Refer to: Radiator Grille (501-08 Exterior Trim and Ornamentation, Removal and Installation).
4. Refer to: Lifting (100-02 Jacking and Lifting, Description and Operation).
5. Torque: 45 Nm

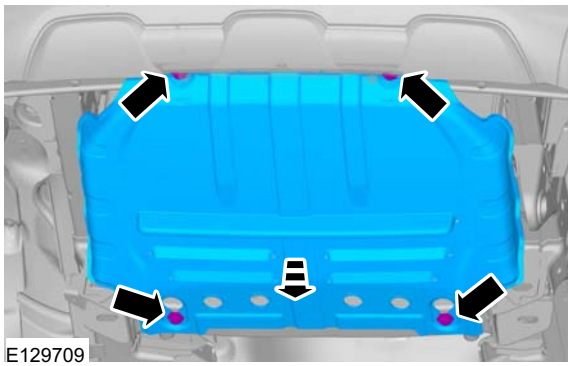
E129709

6.

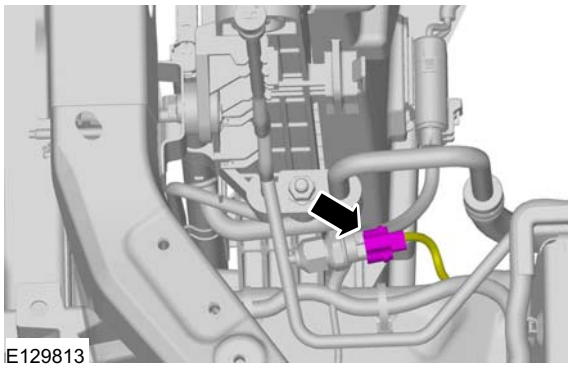
E129813

7. **CAUTION: All openings must be closed.**

Torque: 45 Nm

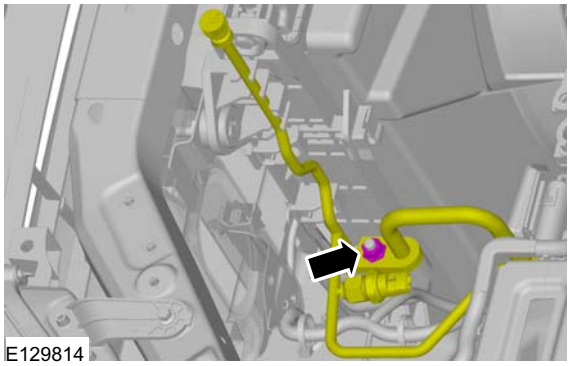
E129814

8.

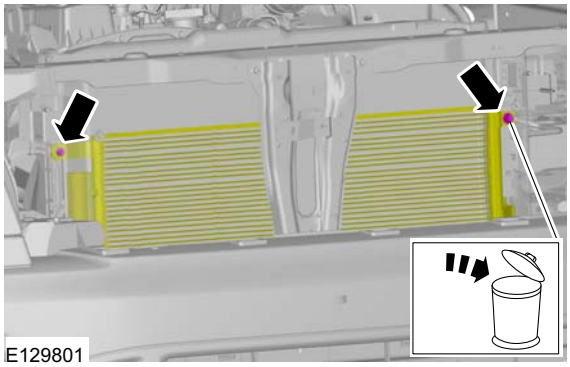
E129801

9.

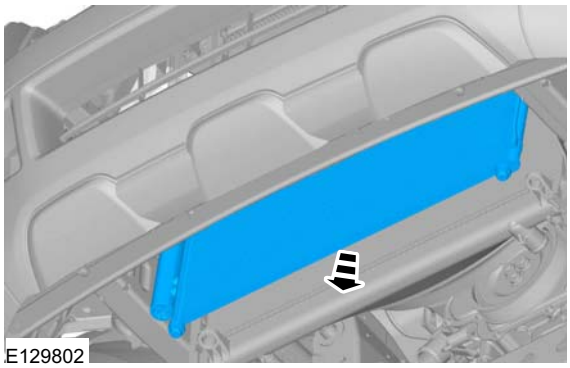
E129802

REMOVAL AND INSTALLATION

Installation

1. Coat the O-rings on the refrigerant lines.

   Material: Compressor Oil - Air Conditioning (WSH-M1C231-B / 6U7J-M1C231-AA) refrigerant oil

2. To install, reverse the removal procedure.

REMOVAL AND INSTALLATION

Condenser — 2.2L Duratorq-TDCi (88kW/120PS) - Puma/2.2L Duratorq-TDCi (96kW/130PS) - Puma/2.2L Duratorq-TDCi (110kW/150PS) - Puma/3.2L Duratorq-TDCi (148kW/200PS) - Puma

Materials	
Name	**Specification**
Compressor Oil - Air Conditioning	WSH-M1C231-B / 6U7J-M1C231-AA

Removal

NOTE: Removal steps in this procedure may contain installation details.

1. Refer to: Air Conditioning (A/C) System Health and Safety Precautions (100-00 General Information, Description and Operation).
2. Refer to: Air Conditioning (A/C) System Recovery, Evacuation and Charging (412-00 Climate Control System - General Information, General Procedures).
3. Refer to: Radiator Grille (501-08 Exterior Trim and Ornamentation, Removal and Installation).
4. Refer to: Lifting (100-02 Jacking and Lifting, Description and Operation).
5. Torque: 15 Nm

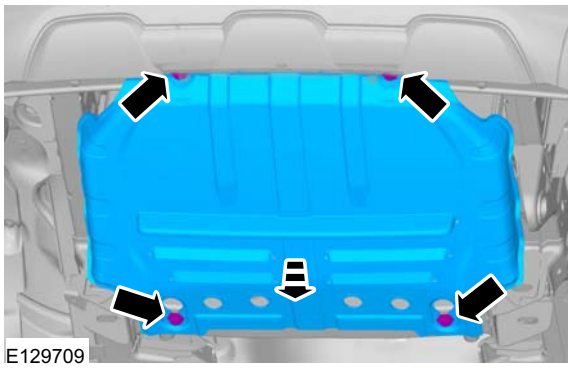
E129709

6.

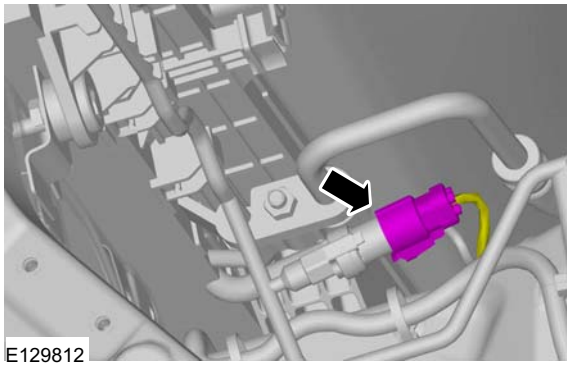
E129812

7. **CAUTION: All openings must be closed.**

   Torque: 22 Nm

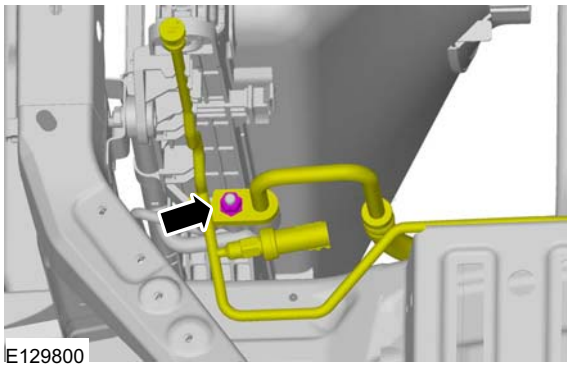
E129800

REMOVAL AND INSTALLATION

8. Refer to: Charge Air Cooler (303-12 Intake Air Distribution and Filtering - 2.2L Duratorq-TDCi (88kW/120PS) - Puma/2.2L Duratorq-TDCi (96kW/130PS) - Puma/2.2L Duratorq-TDCi (110kW/150PS) - Puma/3.2L Duratorq-TDCi (148kW/200PS) - Puma, Removal and Installation).

9.

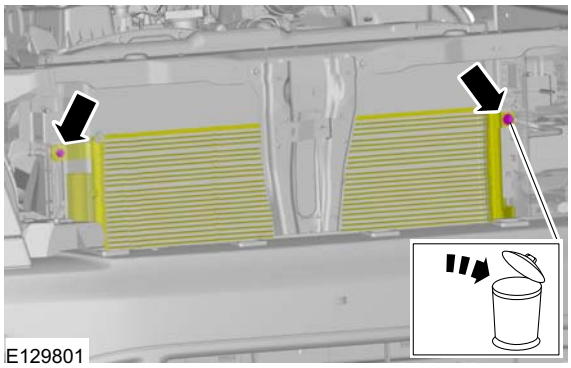

10.

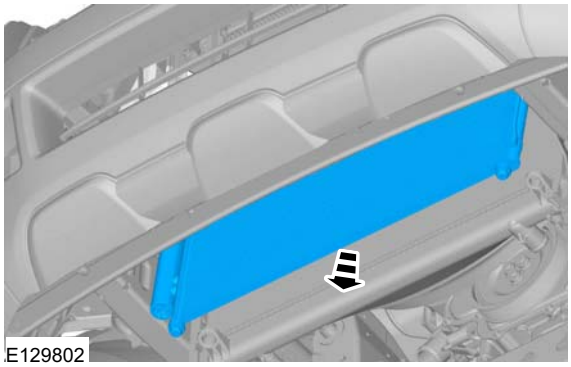

Installation

1. Coat the O-rings on the refrigerant lines.

   Material: Compressor Oil - Air Conditioning (WSH-M1C231-B / 6U7J-M1C231-AA) refrigerant oil

2. To install, reverse the removal procedure.

REMOVAL AND INSTALLATION

Receiver Drier

Removal

NOTE: Removal steps in this procedure may contain installation details.

1. Refer to: Air Conditioning (A/C) System Recovery, Evacuation and Charging (412-00 Climate Control System - General Information, General Procedures).
2. Refer to: Lifting (100-02 Jacking and Lifting, Description and Operation).
3. Torque: 15 Nm

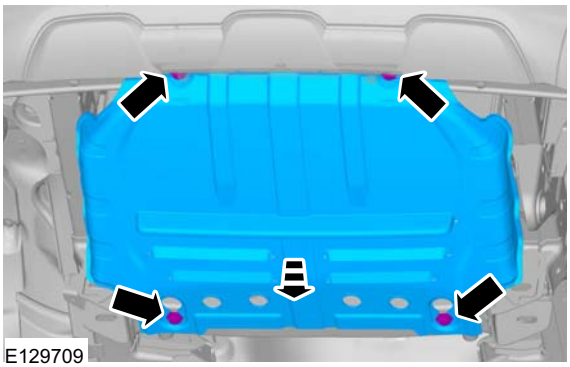

4.

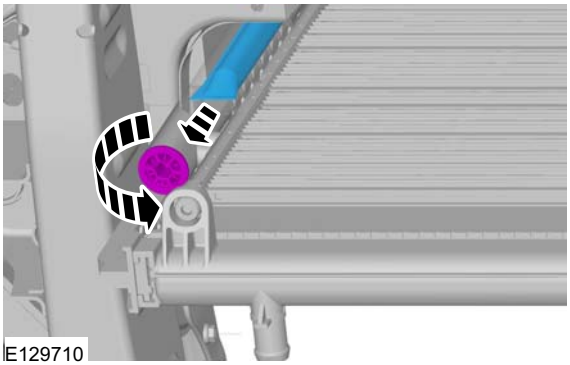

Installation

1. To install, reverse the removal procedure.

REMOVAL AND INSTALLATION

Blower Motor — LHD 4WD/LHD RWD(34 374 0)

Removal

NOTE: Removal steps in this procedure may contain installation details.

1. Refer to: Battery Disconnect and Connect (414-01 Battery, Mounting and Cables, General Procedures).
2. Refer to: Glove Compartment (501-12 Instrument Panel and Console, Removal and Installation).
3.

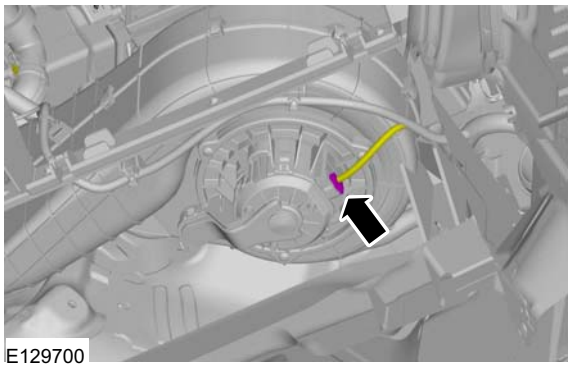
E129700

4. **CAUTION: Do not put the blower motor down on the blower motor fan wheel.**

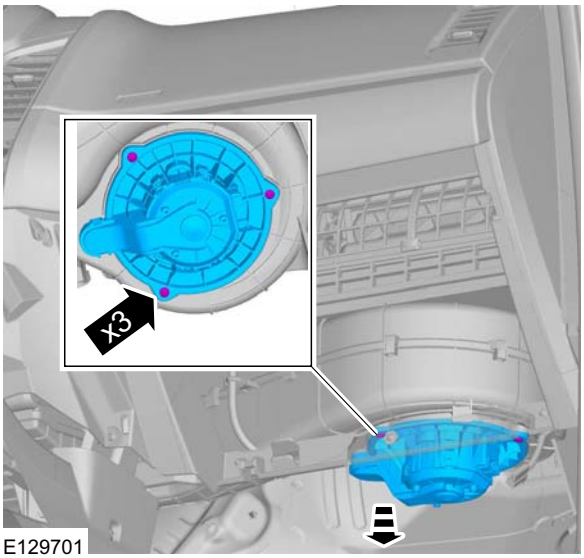

E129701

Installation

1. **NOTE:** The component can only be installed in one position.

To install, reverse the removal procedure.

REMOVAL AND INSTALLATION

Blower Motor — RHD 4WD/RHD RWD(34 374 0)

Removal

NOTE: Removal steps in this procedure may contain installation details.

1. Refer to: Battery Disconnect and Connect (414-01 Battery, Mounting and Cables, General Procedures).
2. Refer to: Glove Compartment (501-12 Instrument Panel and Console, Removal and Installation).
3.

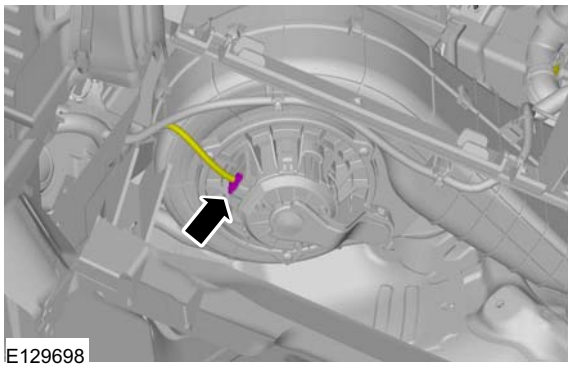
E129698

4. **CAUTION: Do not put the blower motor down on the blower motor fan wheel.**

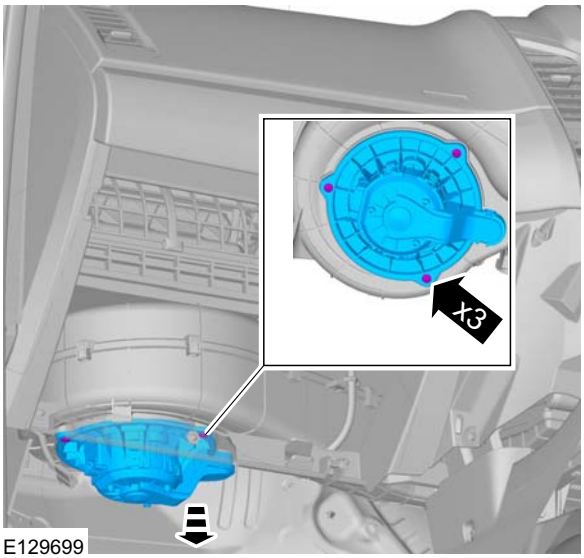

E129699

Installation

1. **NOTE:** The component can only be installed in one position.

To install, reverse the removal procedure.

REMOVAL AND INSTALLATION

Blower Motor Resistor(34 382 0)

Removal

NOTE: Removal steps in this procedure may contain installation details.

1. Refer to: Glove Compartment (501-12 Instrument Panel and Console, Removal and Installation).

2.

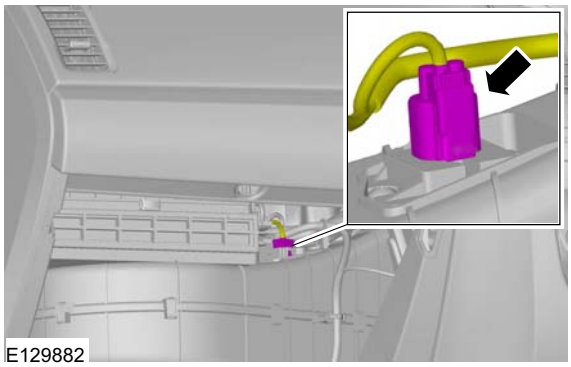

3. Torque: 15 Nm

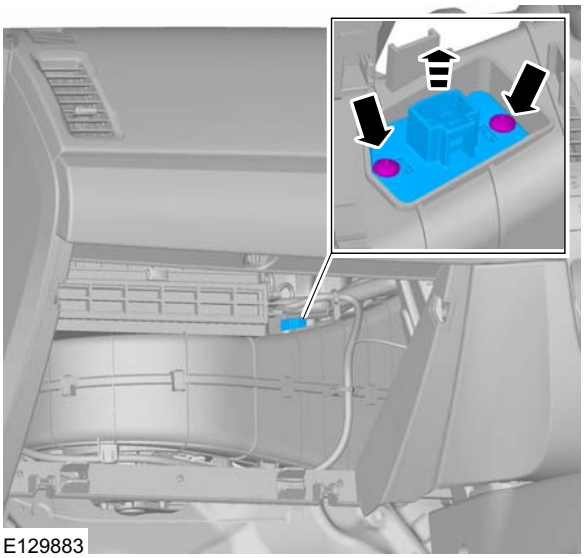

Installation

1. To install, reverse the removal procedure.

REMOVAL AND INSTALLATION

Climate Control Module

Removal

NOTE: Removal steps in this procedure may contain installation details.

1.

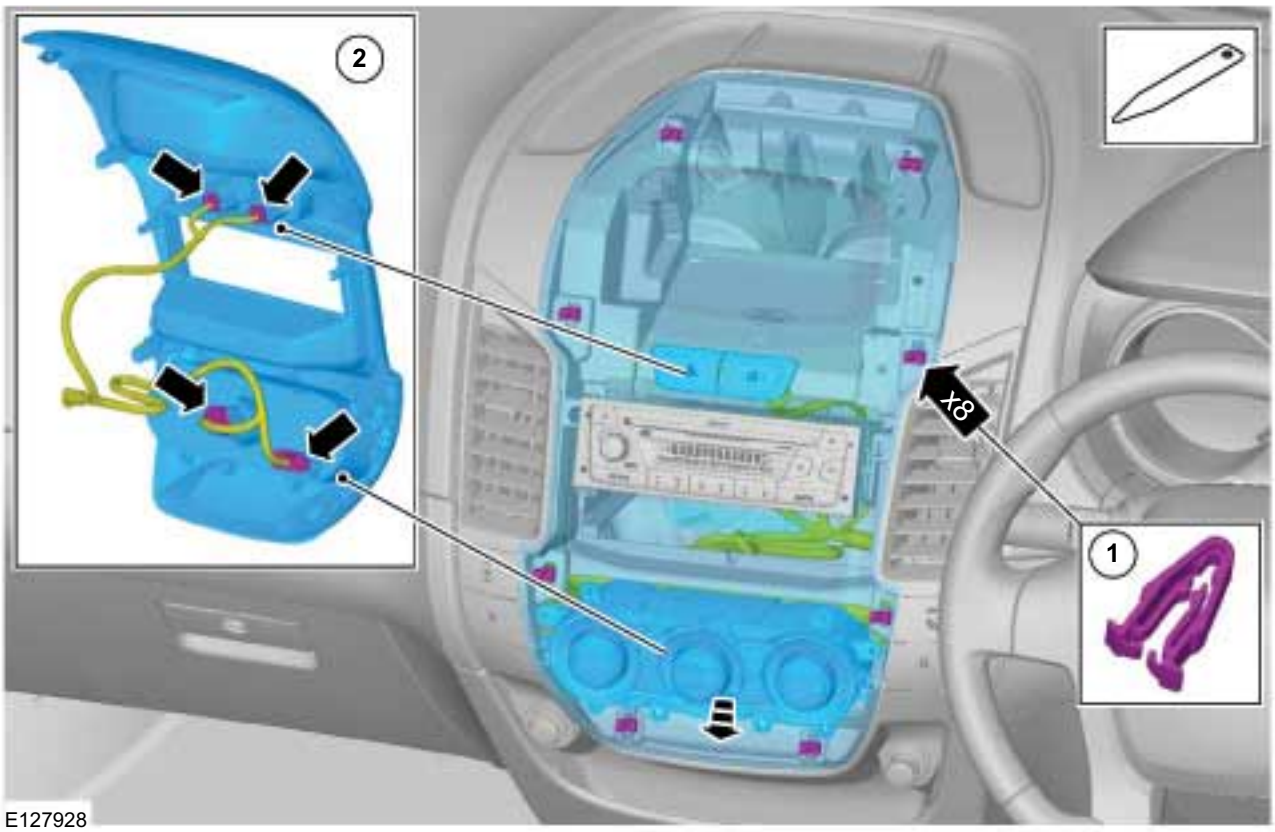

2.

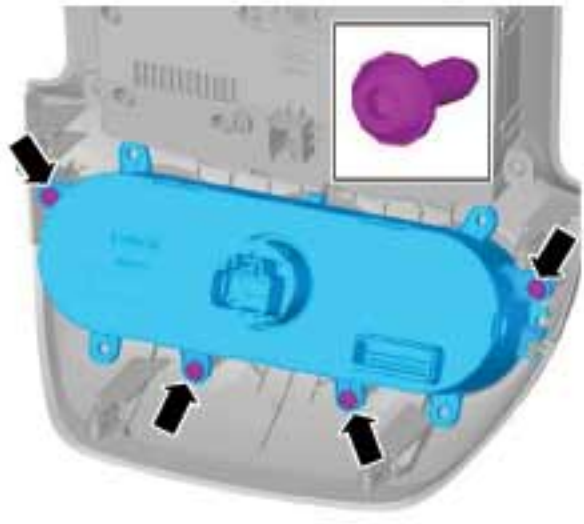

Installation

1. To install, reverse the removal procedure.

REMOVAL AND INSTALLATION

Pollen Filter

Removal

NOTE: Removal steps in this procedure may contain installation details.

1. Refer to: Glove Compartment (501-12 Instrument Panel and Console, Removal and Installation).

2.

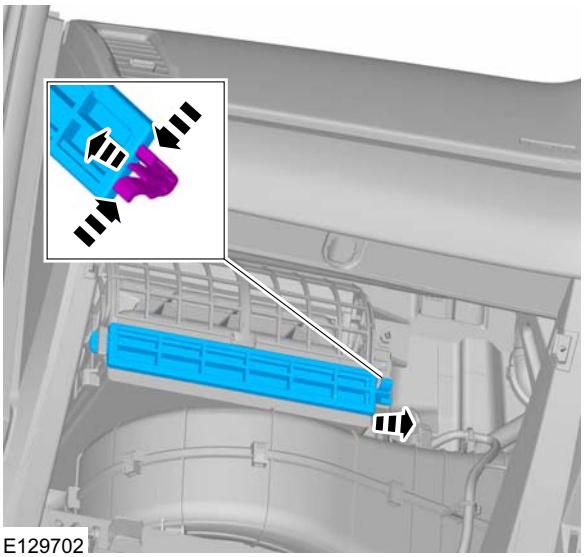

3.

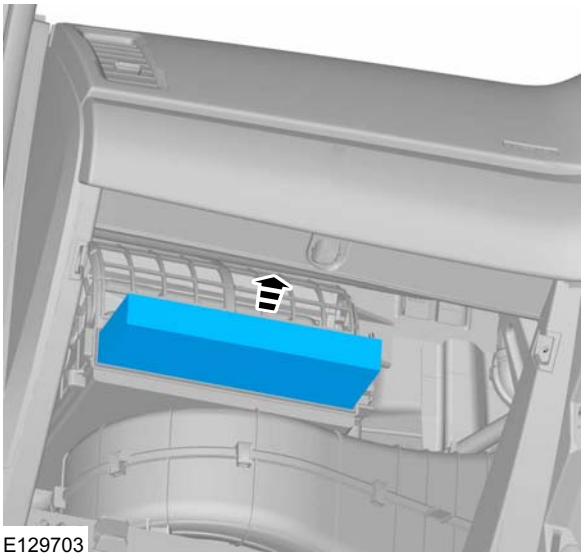

Installation

1. To install, reverse the removal procedure.

REMOVAL AND INSTALLATION

Sunload Sensor(34 665 0)

Removal

NOTE: Removal steps in this procedure may contain installation details.

1. Refer to: Battery and Battery Charging Health and Safety Precautions (100-00 General Information, Description and Operation).
2. Refer to: Battery Disconnect and Connect (414-01 Battery, Mounting and Cables, General Procedures).
3.

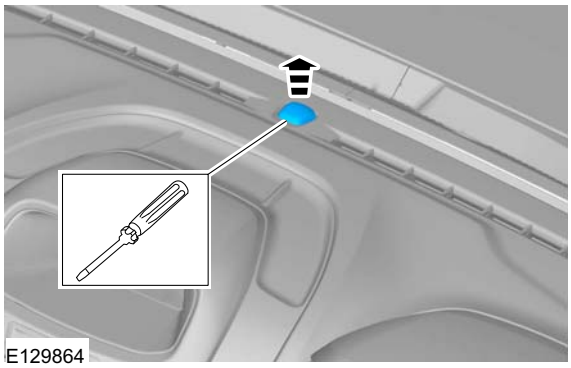

4.

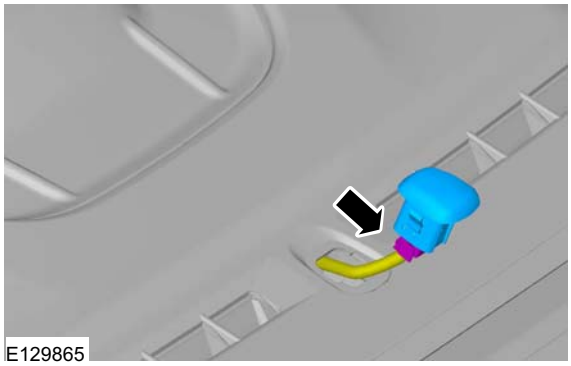

Installation

1. To install, reverse the removal procedure.

REMOVAL AND INSTALLATION

Heater Core and Evaporator Core Housing

Materials	
Name	**Specification**
Compressor Oil - Air Conditioning	WSH-M1C231-B / 6U7J-M1C231-AA

Removal

NOTE: Removal steps in this procedure may contain installation details.

1. Refer to: Air Conditioning (A/C) System Recovery, Evacuation and Charging (412-00 Climate Control System - General Information, General Procedures).
2. Refer to: Battery Disconnect and Connect (414-01 Battery, Mounting and Cables, General Procedures).
3. Refer to: Instrument Panel - RHD 4WD/RHD RWD (501-12 Instrument Panel and Console, Removal and Installation).
4.

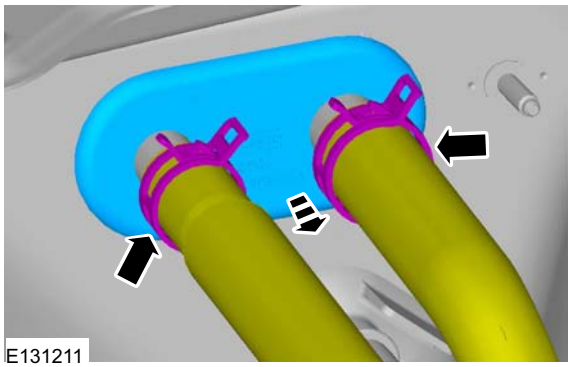

5. Torque: 24 Nm

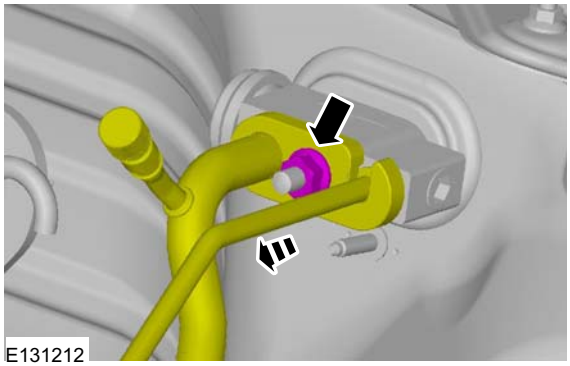

6.

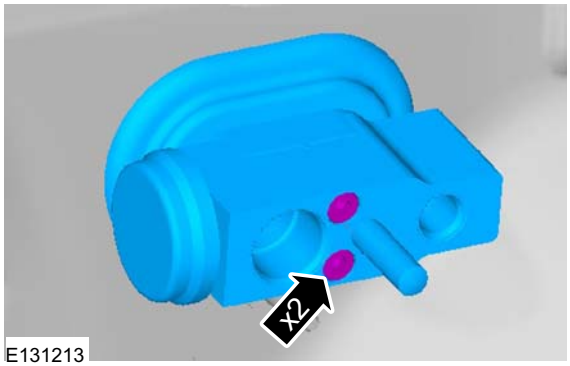

Vehicles with electronic automatic temperature control (EATC)

7.

REMOVAL AND INSTALLATION

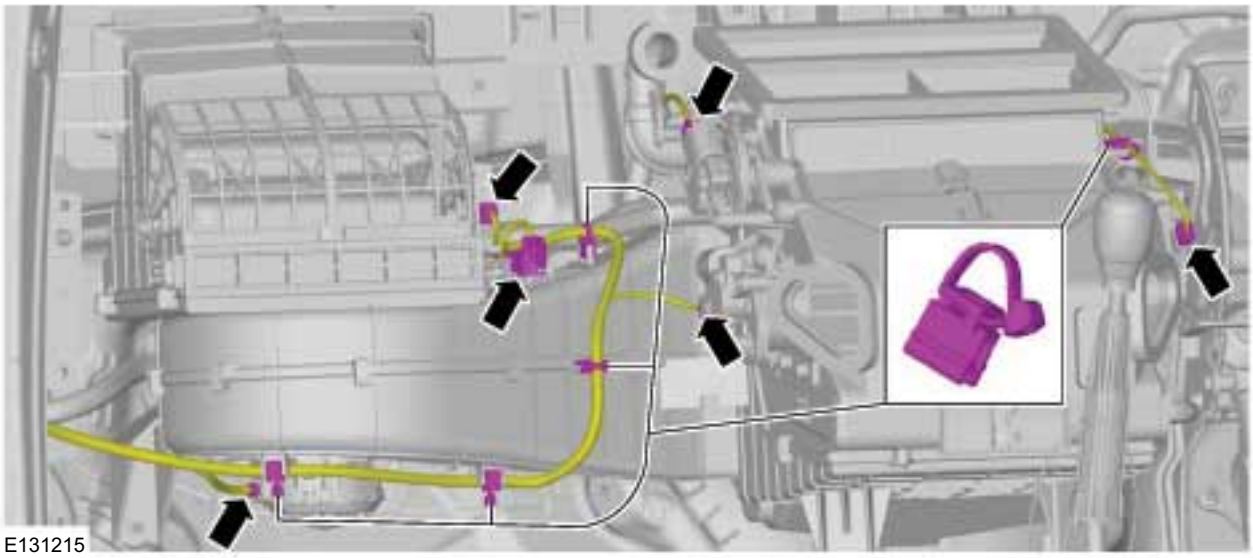

8.

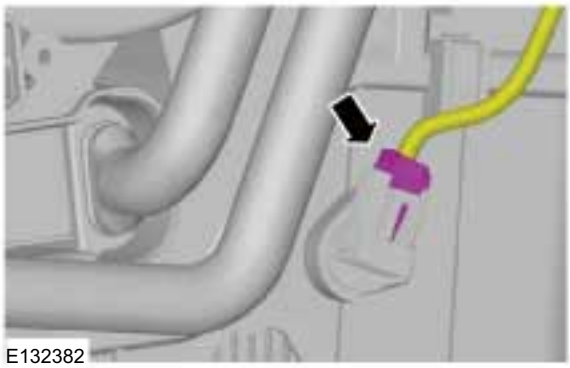

Vehicles with manual temperature control

9.

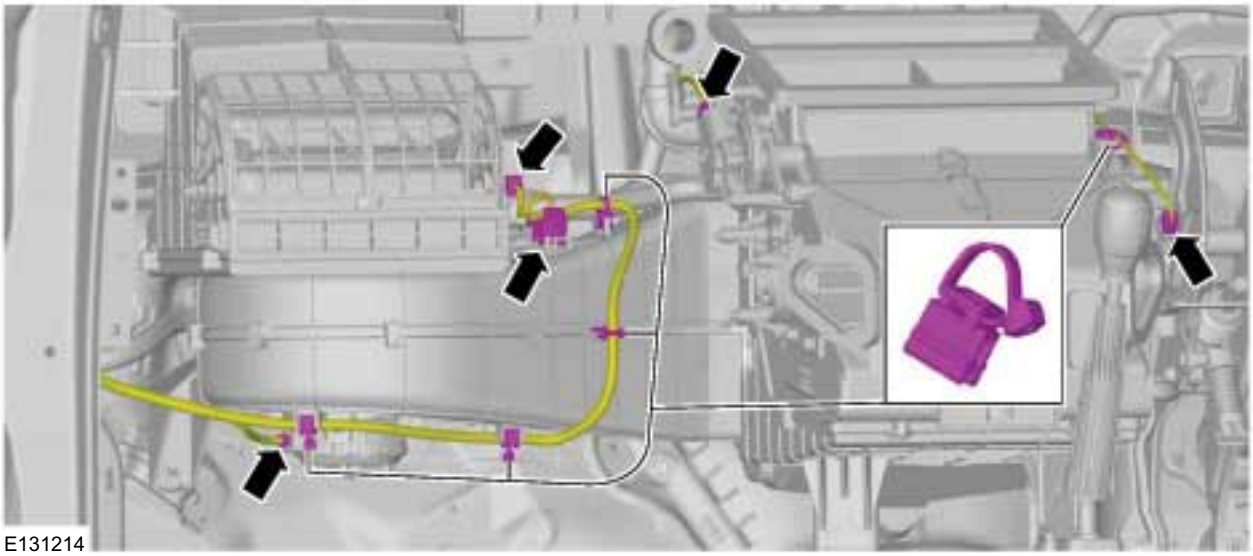

All vehicles

10. 1. Torque: 15 Nm
    2. Torque: 7 Nm

REMOVAL AND INSTALLATION

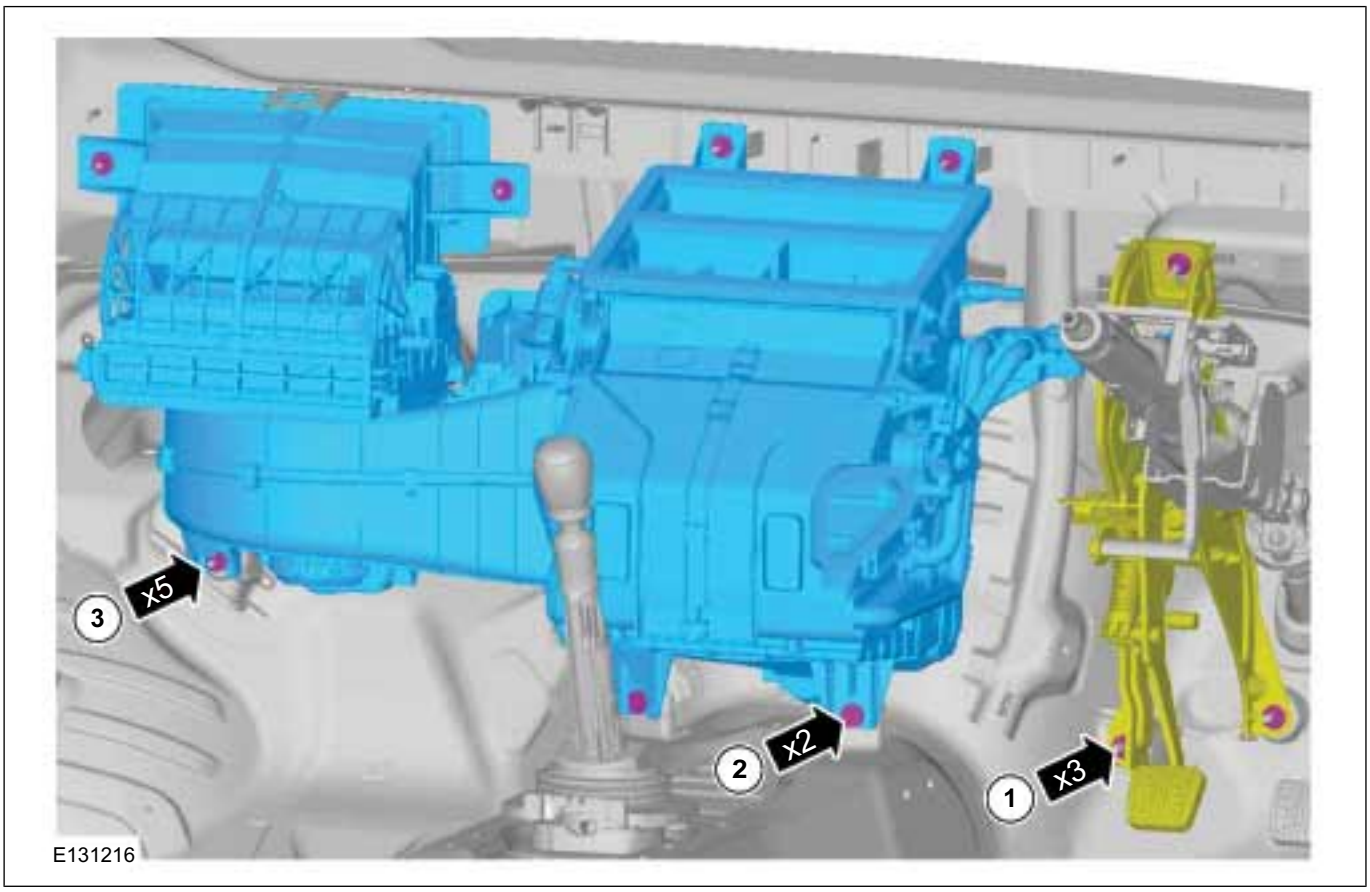

11.

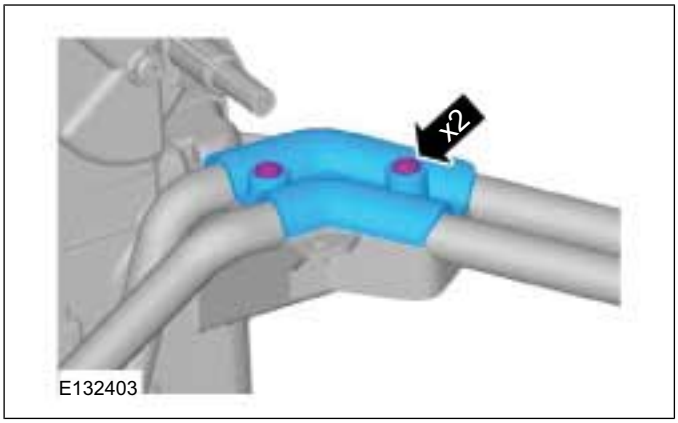

12.

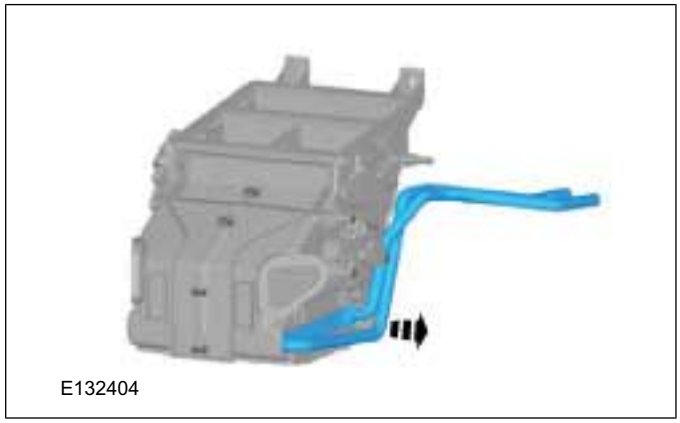

Installation

1. Coat the O-rings on the refrigerant lines.

   Material: Compressor Oil - Air Conditioning (WSH-M1C231-B / 6U7J-M1C231-AA) refrigerant oil

2. To install, reverse the removal procedure.

REMOVAL AND INSTALLATION

Evaporator

Materials	
Name	**Specification**
Compressor Oil - Air Conditioning	WSH-M1C231-B / 6U7J-M1C231-AA

Removal

NOTE: Removal steps in this procedure may contain installation details.

1. Refer to: Heater Core and Evaporator Core Housing (412-01 Climate Control, Removal and Installation).

2.

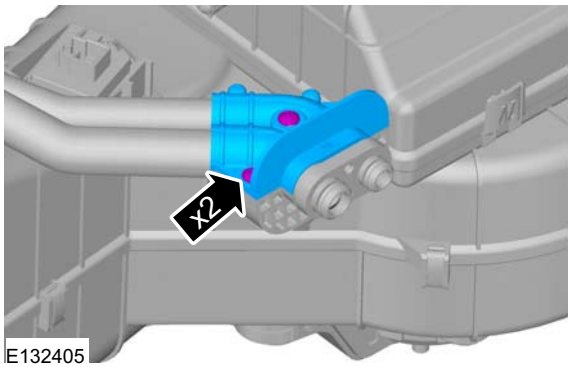

E132405

3.

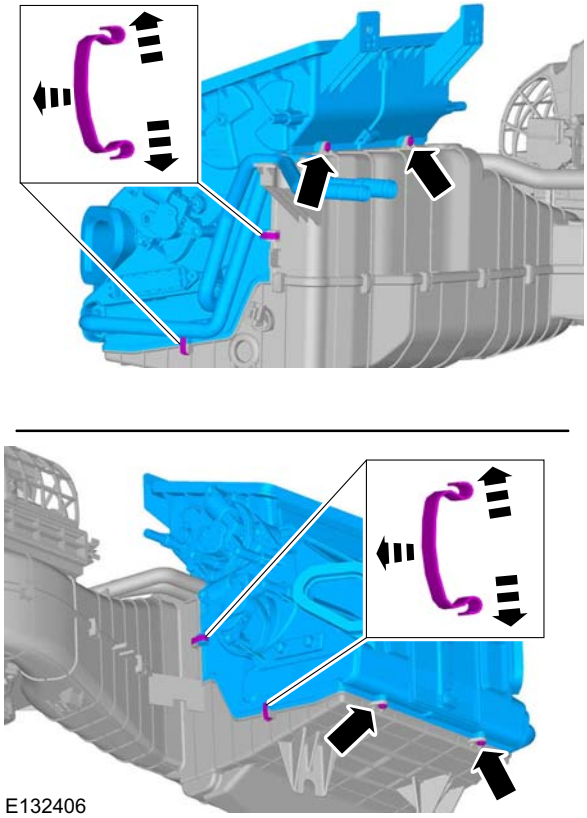
E132406

4. **NOTE:** Vehicles with electronic automatic temprature control only

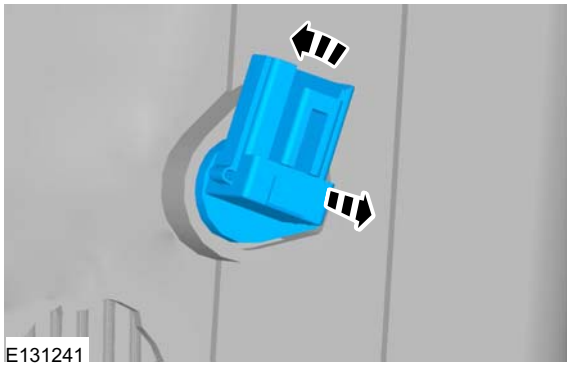
E131241

REMOVAL AND INSTALLATION

5.

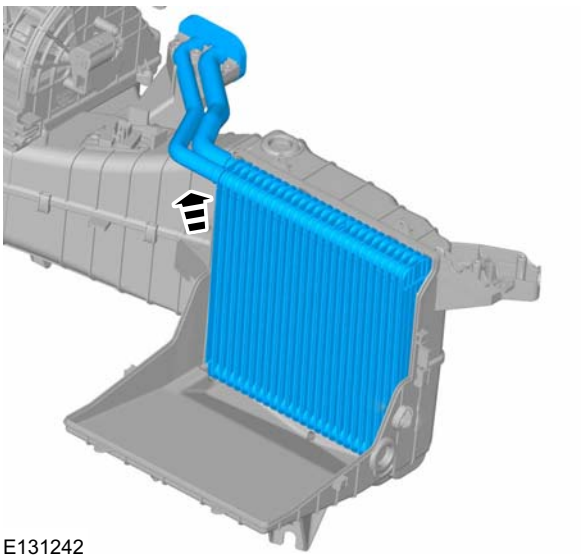

Installation

1. Coat the O-rings on the refrigerant lines.

   Material: Compressor Oil - Air Conditioning (WSH-M1C231-B / 6U7J-M1C231-AA) refrigerant oil

2. To install, reverse the removal procedure.

REMOVAL AND INSTALLATION

Ambient Air Temperature Sensor(34 676 0)

Removal

NOTE: Removal steps in this procedure may contain installation details.

1. Refer to: Battery Disconnect and Connect (414-01 Battery, Mounting and Cables, General Procedures).
2. Refer to: Lifting (100-02 Jacking and Lifting, Description and Operation).
3.

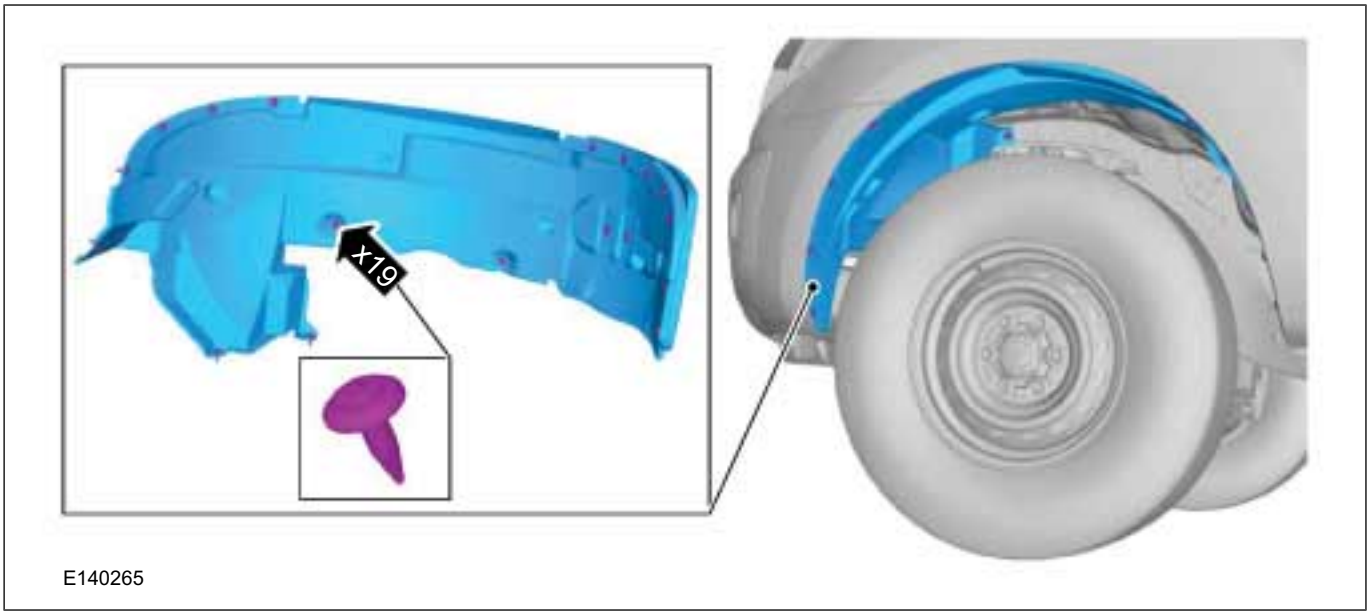

4.

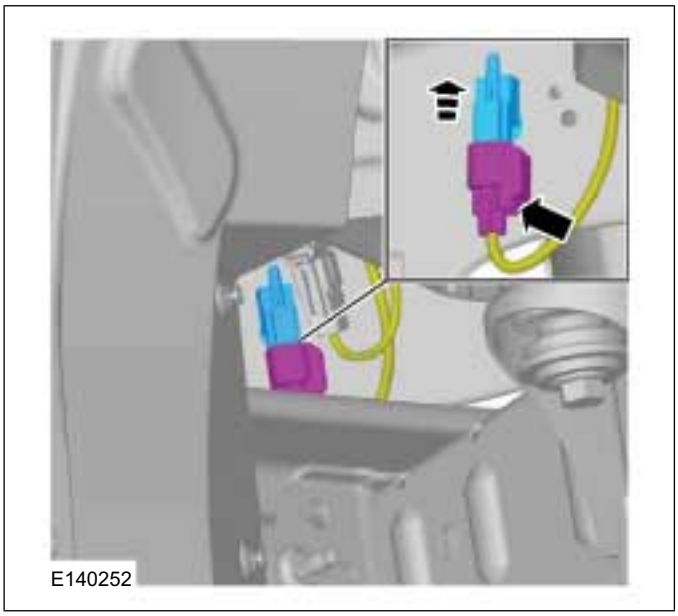

Installation

1. To install, reverse the removal procedure.

SECTION 413-01 Instrument Cluster

VEHICLE APPLICATION: 2011.50 Ranger

CONTENTS PAGE

DESCRIPTION AND OPERATION

Instrument Cluster..... 413-01-2
Instrument Cluster (System Operation and Component Description)..... 413-01-5
System Diagram..... 413-01-5
System Operation..... 413-01-6
Instrument Cluster..... 413-01-6
Component Description..... 413-01-6
Turn Signal Indicators 413-01-6
Brake Warning Indicator 413-01-7
Water-in-fuel indicator..... 413-01-7
Anti-lock Braking System (ABS) Warning Indicator 413-01-7
Engine Malfunction Indicator Lamp (MIL) 413-01-7
Airbag Warning Indicator 413-01-7
Front Fog Lamp Indicator 413-01-7
Stability control (ESP) warning lamp..... 413-01-7
Safety Belt Warning Indicator 413-01-8
Side Lamp Indicator 413-01-8
High Beam Indicator 413-01-8
Rear Fog Lamp Indicator 413-01-8
Speedo meter..... 413-01-8
Tacho meter..... 413-01-8
Fuel gauge..... 413-01-8
Liquid crystal display..... 413-01-9
Gear shift indicator lamp..... 413-01-9

REMOVAL AND INSTALLATION

Instrument Cluster..... 413-01-10

DESCRIPTION AND OPERATION

Instrument Cluster

Vehicles with Diesel Engine

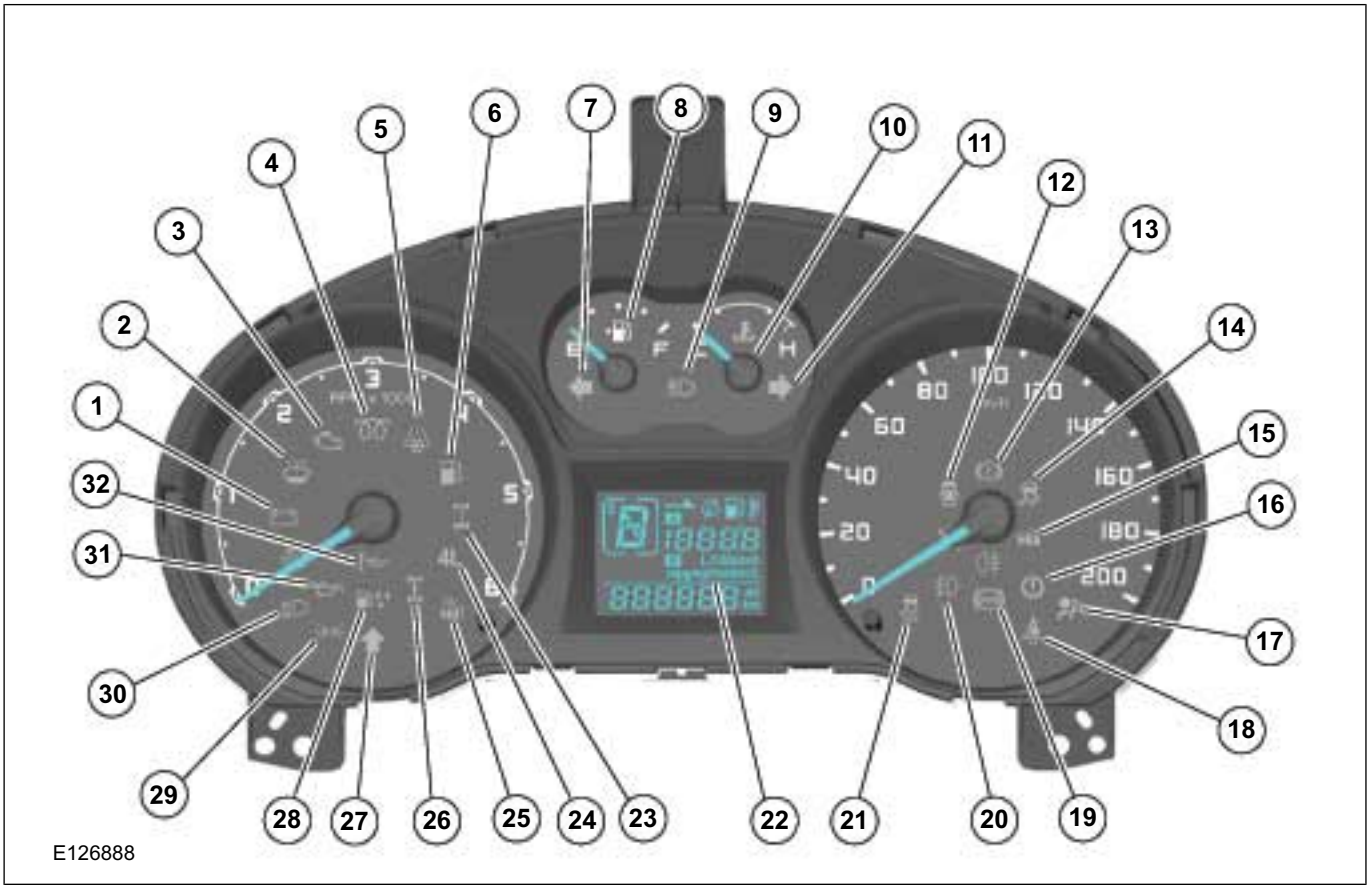

Item	Description
1	Charging system indicator
2	Washer fluid level indicator
3	Malfunction indicator lamp (MIL)
4	Glow plug indicator
5	Ice warning indicator
6	Low fuel level indicator
7	Left hand turn signal indicator
8	Fuel gauge
9	High beam indicator
10	Engine coolant temperature gauge
11	Right hand turn signal indicator
12	Door open indicator
13	Braking system indicator
14	Stability assist ON indicator
15	Vehicle immobiliser indicator

Item	Description
16	Powertrain warning indicator
17	Air bag warning indicator
18	Seat belt indicator
19	Anti lock braking system (ABS) warning indicator
20	Front fog lamp indicator
21	Stability assist OFF indicator
22	Message center
23	Two wheel drive indicator
24	Four wheel drive low ratio indicator
25	Anti theft indicator
26	Four wheel drive indicator
27	Gear shift indicator lamp
28	Water in fuel indicator
29	Head lamp indicator
30	Low beam indicator

DESCRIPTION AND OPERATION

Item	Description
31	Low engine oil pressure warning indicator
32	Engine oil change indicator

Vehicles with Petrol Engine

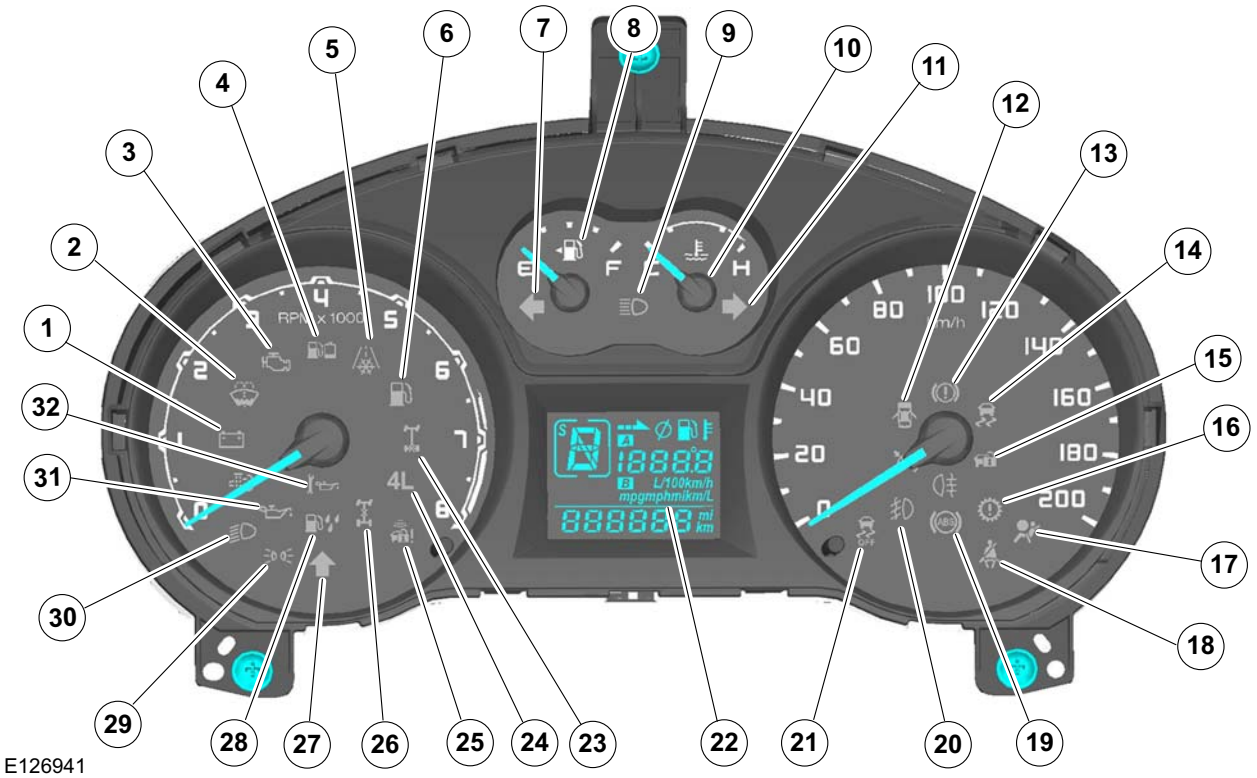

Item	Description
1	Charging system indicator
2	Washer fluid level indicator
3	Malfunction indicator lamp (MIL)
4	Fuel fired booster indicator
5	Ice warning indicator
6	Low fuel level indicator
7	Left hand turn signal indicator
8	Fuel gauge
9	High beam indicator
10	Engine coolant temperature gauge
11	Right hand turn signal indicator
12	Door open indicator
13	Braking system indicator
14	Stability assist ON indicator
15	Vehicle immobiliser indicator

Item	Description
16	Powertrain warning indicator
17	Air bag warning indicator
18	Seat belt indicator
19	Anti lock braking system (ABS) warning indicator
20	Front fog lamp indicator
21	Stability assist OFF indicator
22	Message center
23	Two wheel drive indicator
24	Four wheel drive low ratio indicator
25	Anti theft indicator
26	Four wheel drive indicator
27	Gear shift indicator lamp
28	Water in fuel indicator
29	Head lamp indicator

DESCRIPTION AND OPERATION

Item	Description
30	Low beam indicator
31	Low engine oil pressure warning indicator
32	Engine oil change indicator

Service instructions

If the instrument cluster is replaced, the data of the central module configuration must be copied using IDS (Integrated Diagnostic System) from BCM to the new instrument cluster. In addition, all vehicle keys must be relearned. At least two vehicle keys are needed for relearning.

DESCRIPTION AND OPERATION

Instrument Cluster – System Operation and Component Description

System Diagram

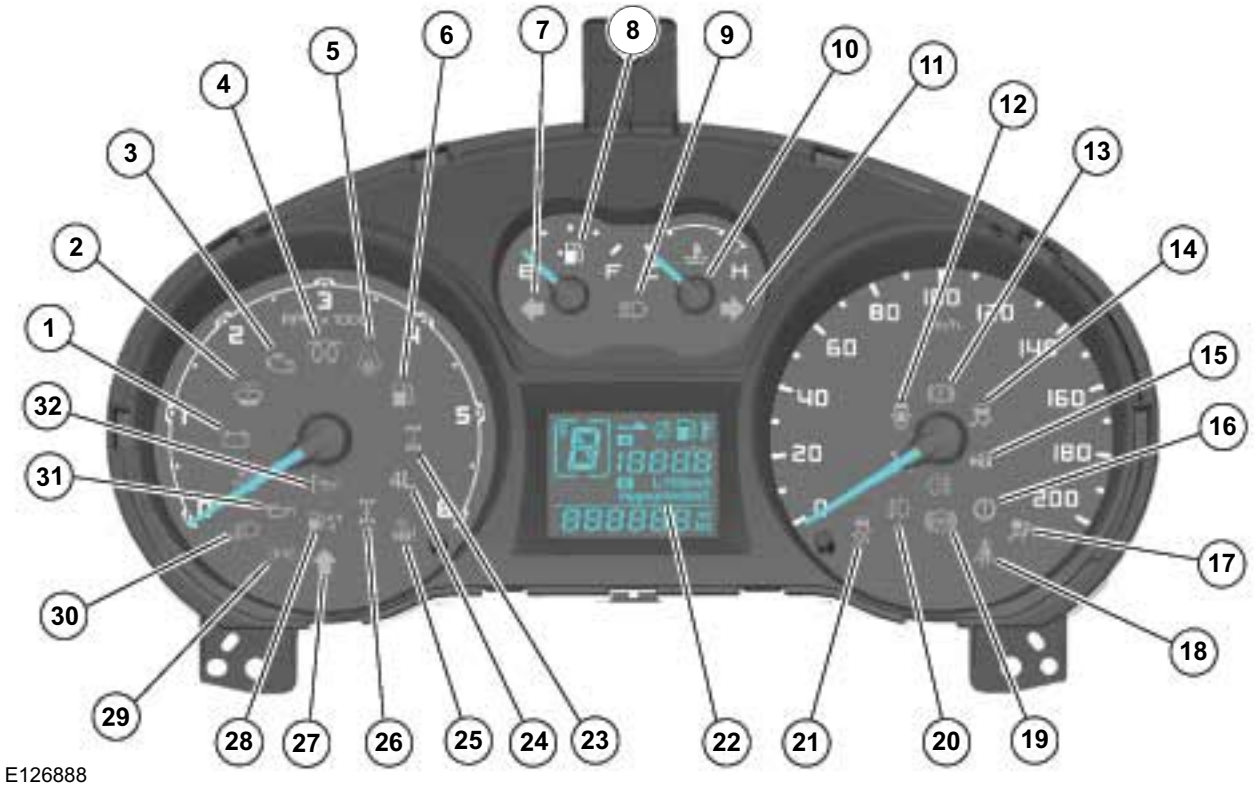

Item	Description
1	Charging system indicator
2	Washer fluid level indicator
3	MIL (malfunction indicator lamp)
4	Glow plug indicator
5	Ice warning indicator
6	Low fuel level indicator
7	Left hand turn signal indicator
8	Fuel gauge
9	High beam indicator
10	Engine coolant temperature gauge
11	Right hand turn signal indicator
12	Door open indicator
13	Braking system indicator
14	Stability assist ON indicator

Item	Description
15	Vehicle immobilize indicator
16	Powertrain warning indicator
17	Air bag warning indicator
18	Seat belt indicator
19	Anti lock braking system (ABS) warning indicator
20	Front fog lamp indicator
21	Stability assist OFF indicator
22	Message center
23	Two wheel drive indicator
24	Four wheel drive low ratio indicator
25	Anti theft indicator
26	Four wheel drive indicator
27	Gear shift indicator lamp

DESCRIPTION AND OPERATION

Item	Description
28	Water in fuel indicator
29	Head lamp indicator
30	Low beam indicator

Item	Description
31	Engine oil pressure
32	Engine oil change indicator

System Operation

Instrument Cluster

The instrument cluster contains analog displays as well as warning and control lamps for displaying the system status; in addition, there is an LCD (liquid crystal display) indicator field for driver information. The instrument cluster receives the following signals from the PCM via the high speed CAN (controller area network) Bus (HS-CAN):

• Vehicle speed

• The PCM receives the necessary signals from the ABS (anti-lock brake system) wheel sensors from the ABS control unit on the HS-CAN

• Engine coolant temperature

• Engine oil pressure

• Engine speed

• The instrument cluster receives the following signals from the BCM via the medium speed CAN bus (MS-CAN)

• Ambient temperature

• Brake fluid level

• Handbrake control

• Door latch control

• Liftgate latch control

• High beam control

• Headlamp flasher control

• Direction indicator control

The fuel level signal is sent by the two fuel level sensors in the fuel pumps in the semitrailer tank, which is wired to the instrument cluster. The sensors are connected in series, and the total resistance is determined from the two individual resistors. The instrument cluster converts the raw fuel level signal into a damped fuel level value.

The odometer shows the total distance traveled by the vehicle and is based on the same signal as is processed for the daily mileage counter. The value is recorded by the instrument cluster and stored in a protected EEPROM (Electronically Erasable Programmable Read Only Memory) area. This area of memory is protected against manipulation. If the instrument cluster detects an error in this memory area, e.g. through damage, the driver is notified with the "Odometer error" message.

Component Description

Turn Signal Indicators

The turn signal indicators are controlled by the PJB (Passenger Junction Box) on receipt of medium speed CAN bus signals from the instrument cluster.

The instrument cluster outputs a voltage to the turn signal indicator switch. The switch contains resistors of different values. When the switch is operated in either the LH or RH direction, the voltage is passed to a ground connection in the instrument cluster which detects the reduced voltage supplied via the resistors. When the turn signal indicator switch is operated in the LH or RH direction, the instrument cluster detects the ground voltage and determines whether a LH or RH selection is made.

The instrument cluster transmits a medium speed CAN message to the PJB for operation of the applicable turn signal indicators. The message can contain a number of states for each possible switch position and also an out of range low and high state for circuit faults and an initial value for the switch neutral position. The turn signal indicators are not subject to the 3 second indicator check when the ignition is switched on.

The hazard warning indicators are controlled by the PJB on receipt of a completed ground path from the hazard warning indicator switch. The PJB outputs a medium speed CAN message to the instrument cluster which operates both the LH and RH turn signal indicators simultaneously. The hazard warning indicators can operate with the ignition switched off, therefore the CAN message

DESCRIPTION AND OPERATION

from the PJB will also carry a 'wake-up' message for the instrument cluster.

Brake Warning Indicator

The indicator is controlled by high speed CAN messages from the ABS module and the parking brake control module. If it illuminates when you are driving, check that the parking brake is not engaged. If the parking brake is not engaged, this indicates a malfunction. Have the system checked by a properly trained technician immediately.

If a condition exists where the parking brake cannot be applied, the parking brake control module issues a CAN message to the instrument cluster which flashes the warning lamp on and off and is accompanied with a message 'CANNOT APPLY PARK BRAKE'. If a fault occurs in the parking brake system, the parking brake control module issues a CAN message to the instrument cluster which illuminates the warning indicator and displays the message 'PARK BRAKE FAULT' in the message center.

Water-in-fuel indicator

The water-in-fuel indicator lamp will come on if there is excess water in the fuel filter.

Anti-lock Braking System (ABS) Warning Indicator

The ABS warning indicator is controlled by the ABS module. If a fault in the ABS system is detected by the ABS module, the module issues a high speed CAN message to the instrument cluster to illuminate the ABS warning indicator and display the message 'ABS FAULT' in the instrument cluster. If it illuminates when you are driving, this indicates a malfunction. You will continue to have normal braking (without ABS). Have the system checked by a properly trained technician as soon as possible.

Engine Malfunction Indicator Lamp (MIL)

The MIL warning indicator is controlled by the ECM and illuminated by the instrument cluster on receipt of a message on the high speed CAN bus from the ECM. If either lamp illuminates when the engine is running, this indicates a fault. The engine will continue to run but it may have limited power. If it flashes when you are driving, reduce the speed of your vehicle immediately. If it continues to flash, avoid heavy acceleration or deceleration.

If both lamps illuminate together, stop your vehicle as soon as it is safe to do so (continued use may cause reduced power and cause the engine to stop). Turn the ignition off and attempt to restart the engine. If the engine restarts have the system checked by a properly trained technician immediately. If the engine does not restart the vehicle must be checked before continuing your journey.

Airbag Warning Indicator

The airbag warning indicator is controlled by the instrument cluster. If it illuminates while driving, this indicates a malfunction. The indicator remains illuminated after the 3 second period has expired until the instrument cluster receives a turn off message on the high speed CAN bus from the RCM (restraints control module).

Front Fog Lamp Indicator

The green colored front fog lamp indicator is controlled by the PJB and illuminated by the instrument cluster on receipt of a front fog lamp on message on the medium speed CAN bus from the PJB. The front fog lamp indicator will come on when you switch the front fog lamps on.

Stability control (ESP) warning lamp

The ESP supports stability when the vehicle starts to slide away from your intended path. This is performed by braking individual wheels and reducing engine torque as needed.

The system also provides an enhanced traction control function by reducing engine torque and braking if the wheels spin when you accelerate. This improves your ability to pull away on slippery roads or loose surfaces, and improves comfort by limiting wheel spin in hairpin bends.

Emergency brake assist will detect when you brake heavily by measuring the rate at which you press the brake pedal. It will provide maximum braking efficiency as long as you press the pedal. Emergency brake assist can reduce stopping distances in critical situations.

DESCRIPTION AND OPERATION

Safety Belt Warning Indicator

The safety belt warning indicator operates for both the driver and passenger safety belts. The warning indicator is controlled by the RCM and illuminated by the instrument cluster on receipt of high speed CAN bus messages. The safety belt warning indicator is not subject to the 6 second indicator check when the ignition is switched on.

The safety belt warning indicator is subject to a timer. The warning indicator is activated when the following conditions exist:

• The seat belt warning lamp will be illuminated for 6 seconds when the ignition is turned on to remind the driver to fasten the seatbelt.

• The seat belt warning lamp will be illuminated for 6 seconds when the ignition is turned on and if the drivers seat belt is not buckled.

• The seat belt reminder warning lamp illuminates and an audible warning will sound if the driver or front passenger seat belt has not been fastened and the vehicle exceeds a relatively low speed. It will also illuminate if either of the seat belt is unfastened when the vehicle is moving. The audible warning will go off after five minutes but the seat belt reminder warning lamp will remain on until the seat belt is fastened.

Side Lamp Indicator

The instrument cluster controls the orange colored side lamp indicator on receipt of a side lamp status message on the medium speed CAN bus from the PJB and the auxiliary junction box. Selections using this switch are detected by the cluster which requests the side or headlamp operation via a message to the PJB and the PJB. The PJB and the RJB responds with a side lamp active message and the cluster illuminates the side lamp indicator. The side lamp indicator is not subject to the 3 second indicator check when the ignition is switched on.

High Beam Indicator

The instrument cluster controls the blue colored high beam indicator on receipt of a high beam status message on the medium speed CAN bus from the PJB. High beam or flash selections using this switch are detected by the cluster which requests the light operation via a CAN message to the PJB. The PJB responds with a high beam active message and the cluster illuminates the high beam indicator. The high beam indicator is not subject to the 3 second indicator check when the ignition is switched on.

Rear Fog Lamp Indicator

The amber colored rear fog lamp indicator is controlled by the auxiliary junction box and illuminated by the instrument cluster on receipt of a rear fog lamp on . The rear fog lamp indicator lamp will come on when you switch the rear fog lamps on. The rear fog lamp indicator is not subject to the 3 second indicator check when the ignition is switched on. You cannot switch the rear fog lamps on unless you have switched the headlamps and front fog lamp on.

Speedo meter

The speedometer is driven by high speed CAN signals transmitted by the ABS module. The wheel speeds are measured by sensors reading the rotational speed of the rear wheels from toothed targets on the hubs. An average of the two wheel speeds are passed from the sensors to the ABS module in the form of pulsed signals. The ABS module converts these signals into a speed output on the high speed CAN to the instrument cluster. The same speed outputs from the wheel speed sensors are also used to calculate the distance the vehicle has traveled.

Tacho meter

The tachometer is driven by an engine speed signal transmitted on the high speed CAN from the ECM. The signal is derived from the CKP (crankshaft position) sensor. The signal is received by the instrument cluster microprocessor and the output from the microprocessor drives the tachometer.

Fuel gauge

The fuel gage is controlled by CAN messages from the RJB. The RJB reads the values output by the fuel level sensors every 131 ms and transmits a fuel tank contents value, corrected for battery voltage, in a CAN message to the instrument cluster. A fuel pump symbol is displayed to the left of the linear gage. Above the linear fuel gage, is a LCD (liquid crystal display) area which displays

DESCRIPTION AND OPERATION

odometer and trip readouts. When a trip computer function is selected, these are replaced by a trip computer display for the trip function selected.

Liquid crystal display

In liquid crystal display which is located in instrument cluster displays a linear fuel gage, odometer, trip distance and trip computer readouts. The trip distance and trip computer information is derived from information supplied on the high speed CAN bus to the instrument cluster from the ABS module and the ECM.

The area above the message center displays the transmission gear position information and speed control related information. The transmission information is supplied on the high speed CAN bus from the TCM (transmission control module).

Gear shift indicator lamp

The gear selector module transmits a CAN message to the instrument cluster for gear selector lever position. The module also outputs a 'not in park' signal to the instrument cluster. It will illuminate to inform you that shifting to a higher gear may give better fuel economy and lower CO2 emissions.

REMOVAL AND INSTALLATION

Instrument Cluster

General Equipment

Ford Diagnostic Equipment

Removal

NOTE: Removal steps in this procedure may contain installation details.

1. Refer to: Health and Safety Precautions (100-00 General Information, Description and Operation).
2. Refer to: Battery Disconnect and Connect (414-01 Battery, Mounting and Cables, General Procedures).
3.

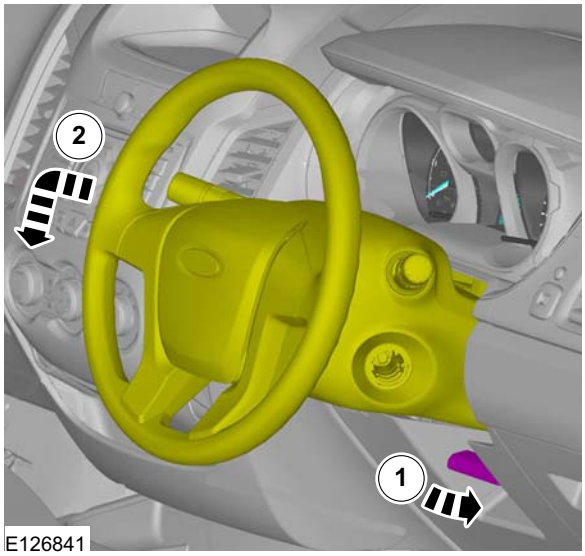

4.

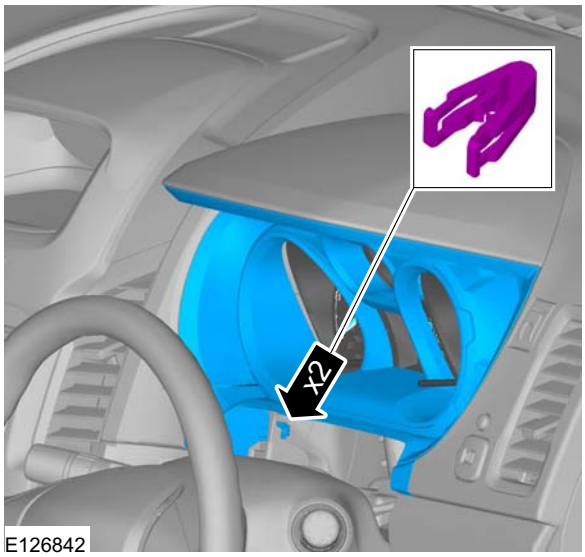

5. **NOTE:** This step is only necessary when installing a new component.

   Download the instrument cluster configuration information to the newly installed instrument cluster using the programmable modules installation routine.

6. **NOTE:** This step is only necessary when installing a new component.

   Record the odometer value from the original instrument cluster. If the odometer value cannot be obtained from the instrument cluster (display failure), the customer should supply the approximate odometer value.

REMOVAL AND INSTALLATION

7. Torque: 2 Nm

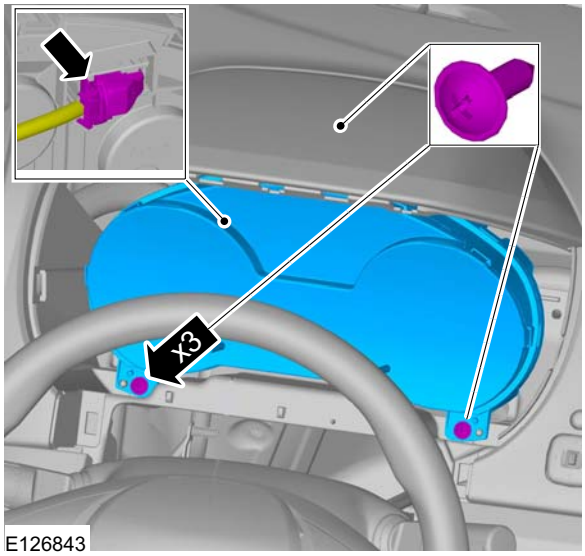

Installation

1. To install, reverse the removal procedure.
2. **NOTE:** This step is only necessary when installing a new component.

   Upload the instrument cluster configuration information using the programmable modules installation routine.

   General Equipment: Ford Diagnostic Equipment
3. **NOTE:** This step is only necessary when installing a new component.

   Configure the PATS system using the programmable modules installation routine.

SECTION 413-06 Horn

VEHICLE APPLICATION: 2011.50 Ranger

CONTENTS PAGE

REMOVAL AND INSTALLATION

Horn..... 413-06-2

REMOVAL AND INSTALLATION

Horn

Removal

NOTE: Removal steps in this procedure may contain installation details.

1. Refer to: Health and Safety Precautions (100-00 General Information, Description and Operation).
2. Refer to: Battery Disconnect and Connect (414-01 Battery, Mounting and Cables, General Procedures).
3. Refer to: Lifting (100-02 Jacking and Lifting, Description and Operation).
4. Torque: 30 Nm

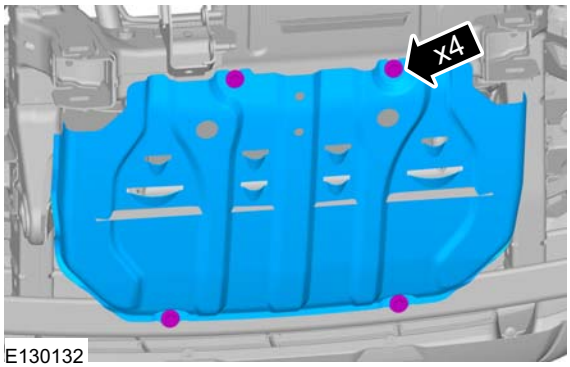

E130132

5. Single horn.
   Torque: 11 Nm

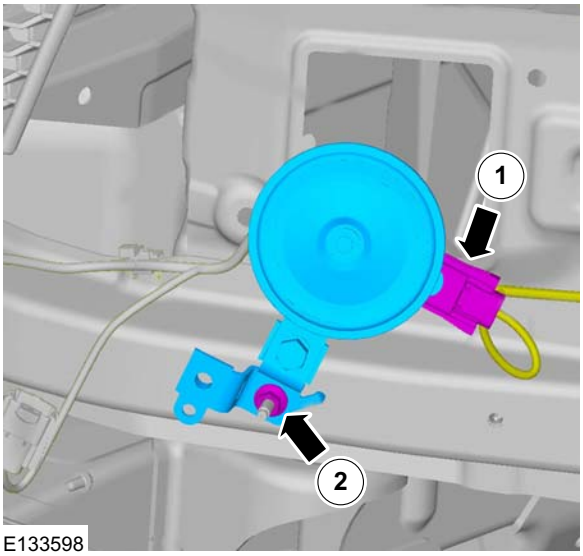

E133598

6. Dual horn.
   Torque: 11 Nm

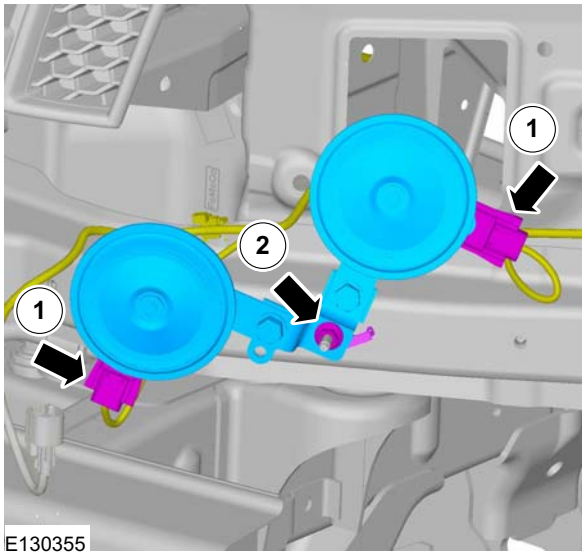

E130355

Installation

1. To install, reverse the removal procedure.

SECTION 413-09 Warning Devices

VEHICLE APPLICATION: 2011.50 Ranger

CONTENTS PAGE

GENERAL PROCEDURES

Safety Belt Minder Deactivating/Activating..... 413-09-2
Preparation..... 413-09-2
Deactivating/Activating..... 413-09-2

GENERAL PROCEDURES

Safety Belt Minder Deactivating/Activating

Preparation

1. Apply the parking brake.
2. Place the transmission selector lever in P (Park) - vehicles with automatic transmission or the neutral position - vehicles with manual transmission.
3. Turn the ignition switch to the OFF position.
4. Close all the vehicle doors from the inside of the vehicle.

Deactivating/Activating

NOTE: Deactivation of the belt minder may also be carried out using IDS. Follow the instructions on the screen.

NOTE: The belt minder can be turned off independently for the driver and the front passenger by performing the following procedure.

1. **Unbuckle** the driver's safety belt.
2. **Unbuckle** the front passenger's safety belt.
3. Turn the ignition switch to the ON position (do not start the engine).
4. **Wait until the safety belt warning indicator turns off.**
5. **NOTE:** This step must be completed within 30 seconds or the procedure must be repeated.

   Buckle then unbuckle the safety belt four times, ending with the safety belt unbuckled. Release the red unbuckle switch **completely** every cycle.
6. The safety belt warning indicator flashes momentarily to confirm the belt minder status change.
7. Turn the ignition switch to the OFF position. The deactivation/activation procedure is now complete.

SECTION 413-13 Parking Aid

VEHICLE APPLICATION: 2011.50 Ranger

CONTENTS PAGE

DESCRIPTION AND OPERATION

Parking Aid..... 413-13-2
Component location..... 413-13-2
Description and operation..... 413-13-5
Parking aid switch..... 413-13-6
Front parking aid speaker..... 413-13-7
Rear parking aid speaker..... 413-13-7
Parking aid module..... 413-13-7
Parking aid camera module..... 413-13-8
Parking Aid Camera 413-13-8
Front parking aid sensors..... 413-13-8
Rear parking aid sensors..... 413-13-9
Distance calculation..... 413-13-11
Vehicles with front and rear parking aid..... 413-13-13
Vehicles with parking aid camera..... 413-13-15
System Operation..... 413-13-16

REMOVAL AND INSTALLATION

Parking Aid Module..... 413-13-19
Parking Aid Camera..... 413-13-20

DESCRIPTION AND OPERATION

Parking Aid

Component location

4-Door and 5-Door

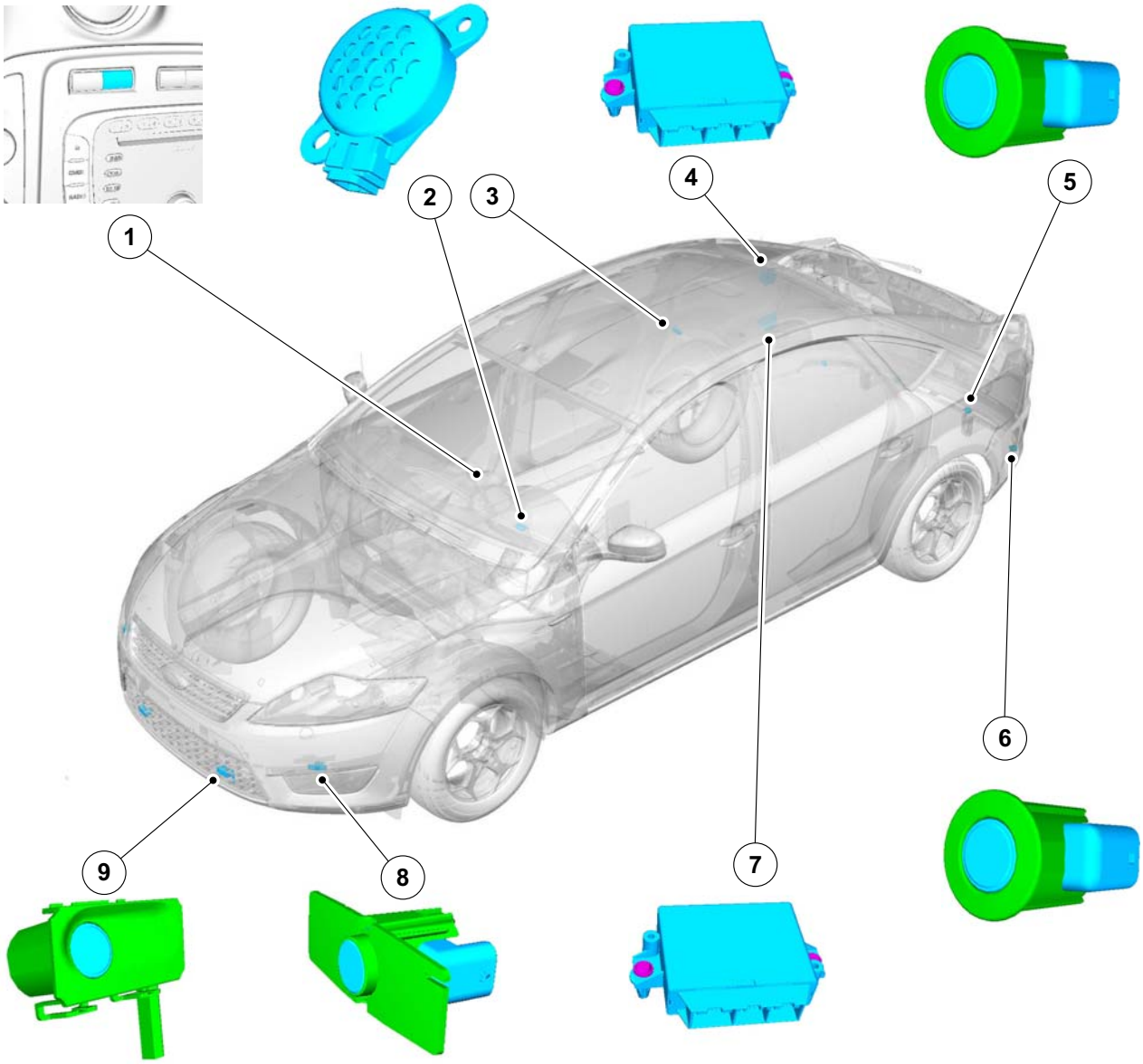

Item	Description
1	Parking aid switch (with light emitting diode (LED)).
2	Front parking aid speaker.
3	Rear parking aid speaker.

Item	Description
4	Parking aid module (4-door).
5	Rear inner parking aid sensor and holder.
6	Rear outer parking aid sensor and holder.
7	Parking aid module (5-door).

DESCRIPTION AND OPERATION

Item	Description
8	Front outer parking aid sensor and holder.

Item	Description
9	Front inner parking aid sensor and holder.

5-Door with parking aid camera

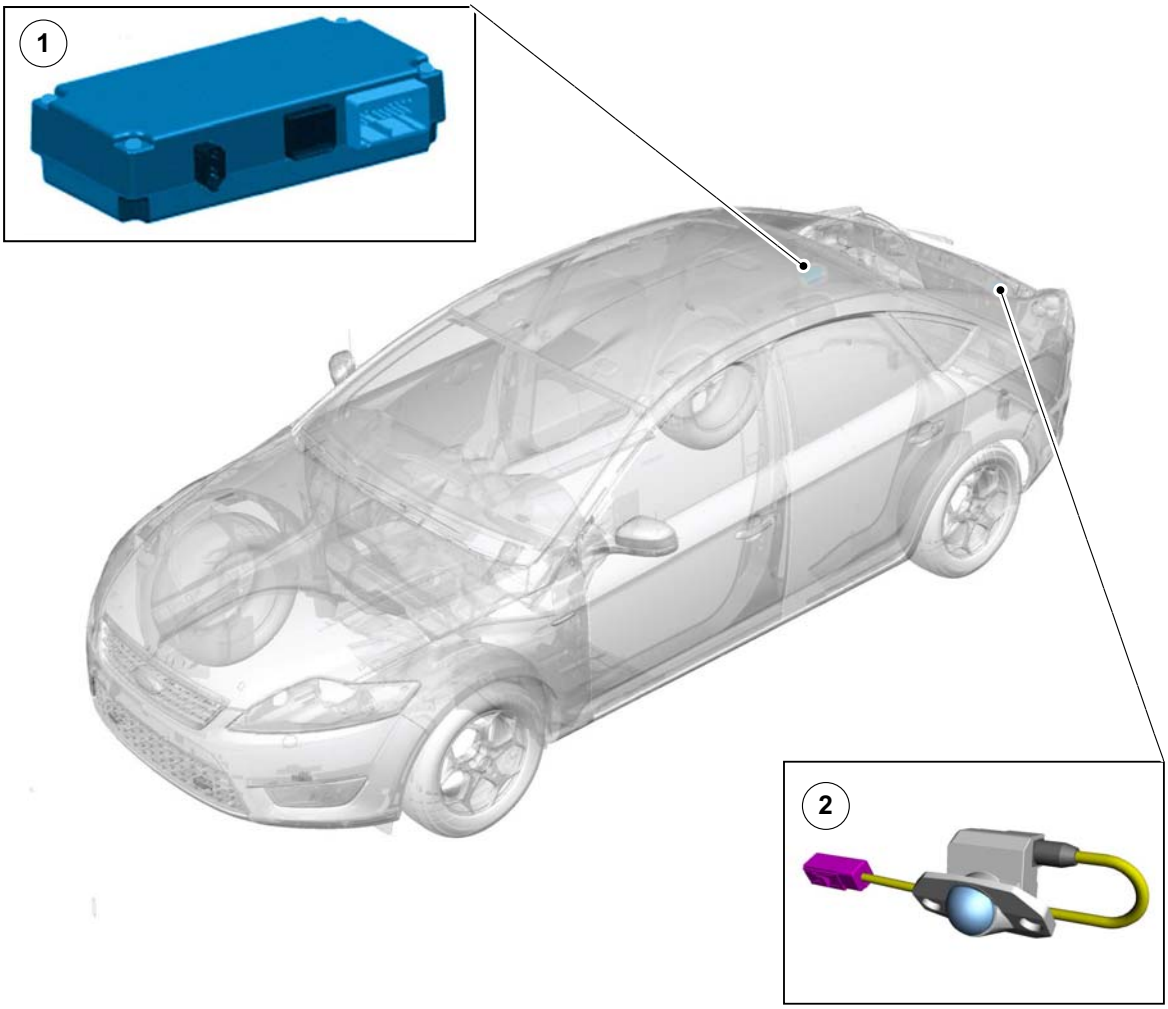

E129006

Item	Description
1	Parking aid camera module.
2	Parking aid camera.

DESCRIPTION AND OPERATION

Wagon

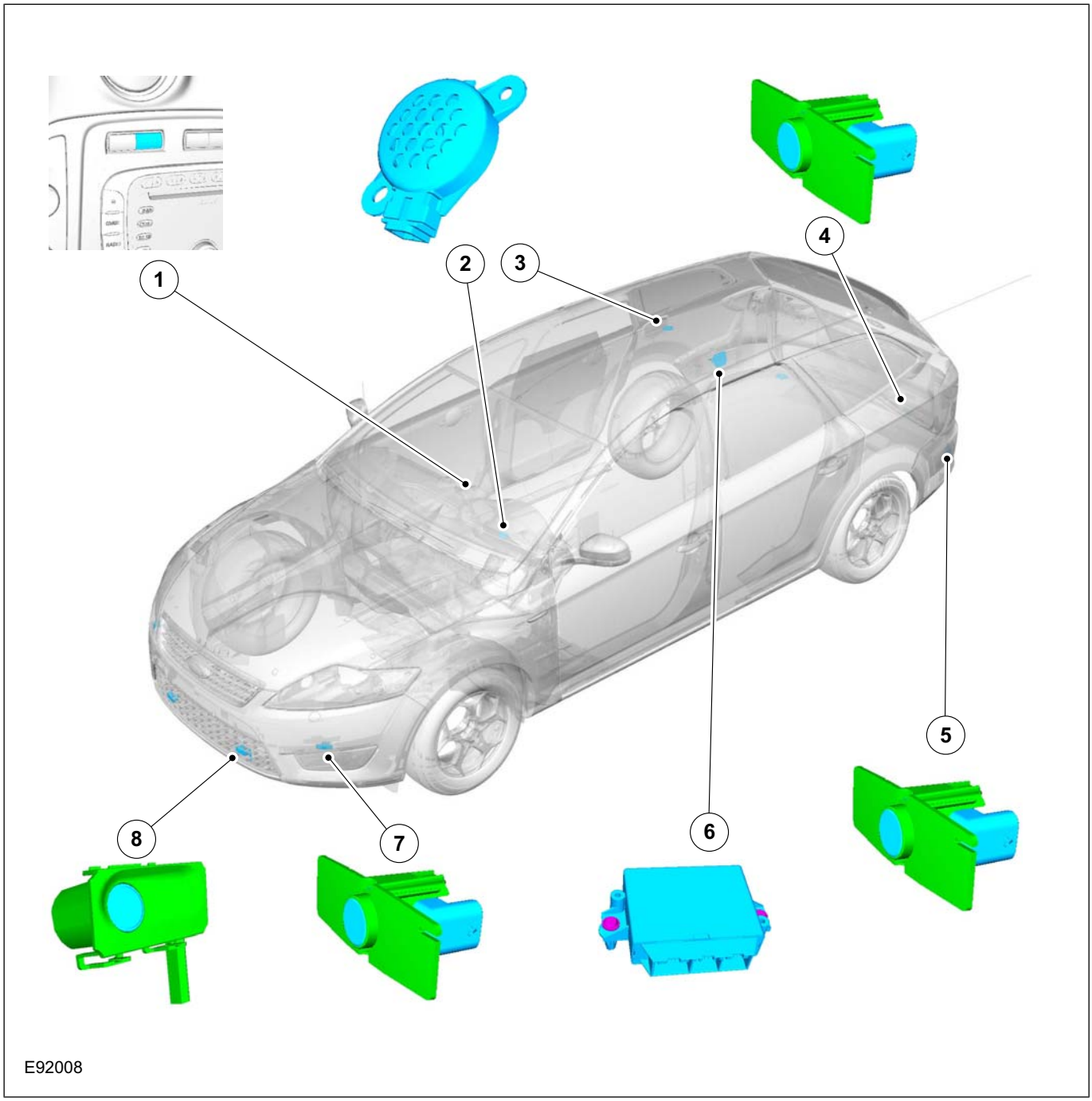

Item	Description
1	Parking aid switch (with light emitting diode (LED)).
2	Front parking aid speaker.
3	Rear parking aid speaker.
4	Rear inner parking aid sensor and holder.

Item	Description
5	Rear outer parking aid sensor and holder.
6	Parking aid module.
7	Front outer parking aid sensor and holder.
8	Front inner parking aid sensor and holder.

DESCRIPTION AND OPERATION

Wagon with parking aid camera

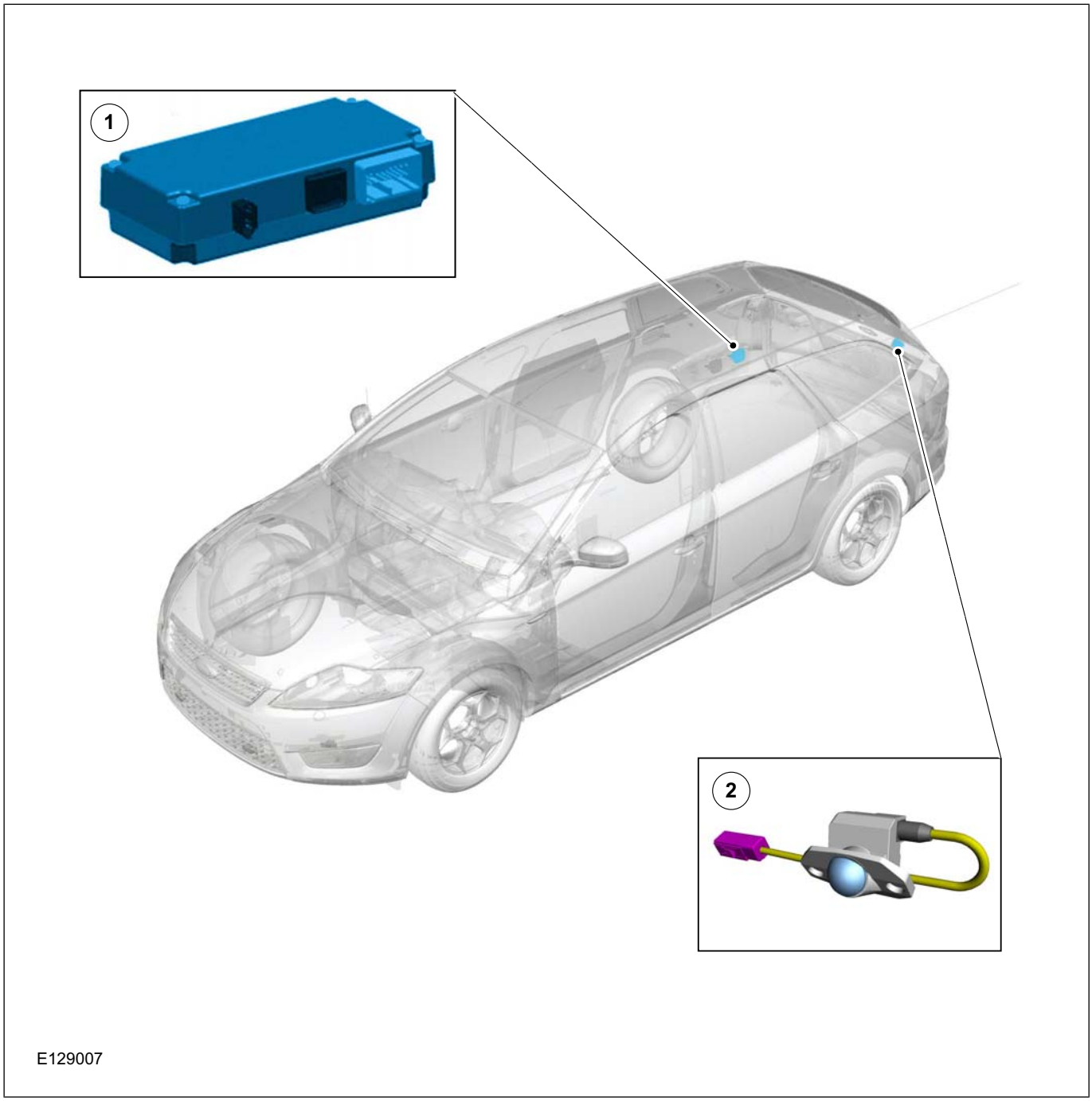

Item	Description
1	Parking aid camera module.
2	Parking aid camera.

Description and operation

Only one level of parking aid is installed to the vehicle, a front and rear system.

The parking aid provides an audible warning to the driver when any obstacles are in the path of the vehicle during forward or reverse parking manoeuvres. The system consists of four ultrasonic parking aid sensors and holders in each bumper, a parking aid module, parking aid speaker(s) and a parking aid switch.

At low speeds, the parking aid module uses the parking aid sensors to monitor the area around the front and rear bumpers. If an object is detected within a monitored area, the parking aid module outputs a warning tone using the parking aid speakers. Objects very close to the ground may

DESCRIPTION AND OPERATION

not be detected, but because of their low height will not cause damage to the vehicle.

The parking aid module communicates through discrete signals with the parking aid speakers. The parking aid speakers output the applicable warning tones when an object is detected. The medium speed controller area network (CAN) bus is used to collect vehicle data from other vehicle systems.

When the parking aid module activates the system, the parking aid switch LED is illuminated. The parking aid module processes signals received from the parking aid sensor(s) to determine if there is an object within the detection range of the parking aid sensor(s).

In the combined mode, the parking aid sensor(s) emit a series of ultrasonic impulses and switch to receiver mode to receive the echo reflected by an obstacle within the detection range. The received echo signals are amplified and converted from an analogue signal to a digital signal by the parking aid sensor. The digital signal is passed to the parking aid module and compared with pre-programmed data stored in an EEPROM within the parking aid module. The parking aid module receives this data through the signal line from the parking aid sensor and calculates the distance from the object using the elapsed time between the transmitted and received impulse.

In receiver mode, the parking aid sensor receives impulses that were emitted by adjacent parking aid sensors. The parking aid module uses this information to determine the distance of the object.

If no objects are detected there are no further warning tones. If an object is detected, repeated audible tones are emitted from either parking aid speaker(s) as appropriate. The time delay between the tones decreases as the distance between the object and the vehicle decreases, until at approximately 250 mm (10 inches), the audible tone becomes continuous.

If, after the initial detection of an object, there is no decrease in distance between the object and the vehicle, the audible warning tones remain constant if the object is detected by a inner parking aid sensor or stops after 3 seconds if the object is detected by an outer parking aid sensor.

The parking aid module continues to monitor the distance and will resume the warning tones if a decrease in distance is detected.

The parking aid is activated when the driver presses the parking aid switch and the vehicle speed is below 16 km/h (10 mph) or selects reverse gear.

Front and rear parking aid sensors are activated and deactivated together.

On vehicles with automatic transmission, the parking aid is always inactive in the PARK position.

The parking aid can detect when a trailer is connected to the vehicle by a message output on the medium speed CAN bus. When the parking aid module detects that a trailer is connected to the vehicle, the rear parking aid sensors are disabled to prevent constant warnings due to the close proximity of the trailer.

Parking aid switch

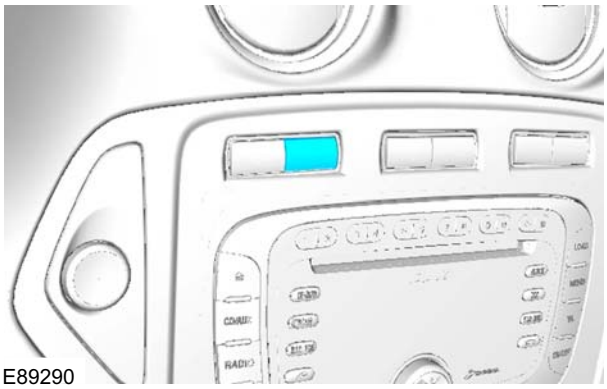

E89290

The parking aid switch is located in the instrument panel, above the audio unit or navigation system display module. The parking aid switch is equipped with an integral LED.

The parking aid switch is a non-latching push switch which allows the driver to select the parking aid on or off. When pressed, the parking aid switch momentarily connects a ground to the parking aid module. The LED indicates when the parking aid is active. The LED is controlled by the parking aid module.

The parking aid switch allows the driver to disable the parking aid when reverse gear is selected or to activate the parking aid sensors when not in reverse gear.

If a concern exists in the parking aid, the LED flashes for 3 seconds when the reverse gear is selected or the driver selects the parking aid sensors on, using the parking aid switch.

DESCRIPTION AND OPERATION

Front parking aid speaker

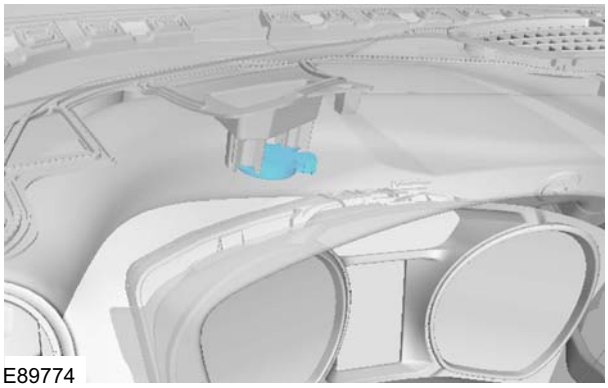
E89774

The front parking aid speaker is located within the instrument panel behind the instrument cluster.

For additional information, refer to: Front Parking Aid Speaker (413-13 Parking Aid, Removal and Installation).

Rear parking aid speaker

E89773

The rear parking aid speaker is used to indicate failure modes within the front and rear parking aids. If the rear parking aid speaker becomes defective, the front parking aid speaker will then be used to indicate failure modes.

For additional information, refer to: Rear Parking Aid Speaker - 4-Door (413-13 Parking Aid, Removal and Installation).

Parking aid module

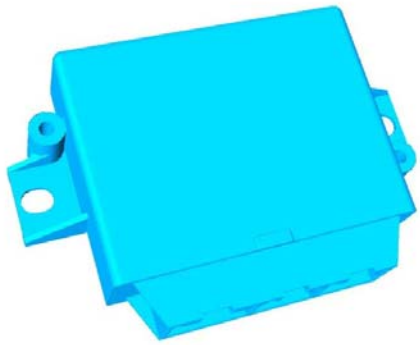
E89772

The parking aid module has three connectors which provide for power, ground and CAN bus connections, front and rear parking aid sensors, parking aid switch, LED and parking aid speakers.

The medium speed CAN bus connections provide for the receipt of the following information from other systems:

- ABS (anti-lock brake system) module - Road speed signal
- Generic electronic module (GEM) - Reverse gear engaged signal, vehicle configuration parameters, carmode and powermode
- Electronic parking brake (EPB)
- Transmission control unit - Gear selector position (automatic transmission)
- Trailer module - Trailer connection status

The parking aid module carries out self-check routines and when the parking aid is active, checks the parking aid sensor wiring for short or open circuits. If a concern is detected, a diagnostic trouble code (DTC) is stored in a memory in the parking aid module and the front and rear parking aid sensors will be disabled until the DTC is cleared and the ignition cycled. The driver is made aware of any concern condition by the parking aid switch LED flashing and a continuous high pitch warning tone being emitted for 3 seconds when the parking aid is activated, in place of the normal short tones when the parking aid is functioning normally. DTCs can be read using the Ford approved diagnostic tool through the data link connector (DLC).

For additional information, refer to: Parking Aid Module (413-13 Parking Aid, Removal and Installation).

DESCRIPTION AND OPERATION

Parking aid camera module

E97856

The data from the optional parking aid is sent to the module via the Mid Speed CAN data bus. The module is connected to the navigation device via a video-in/out cable.

It is necessary to programme the module withIDS (Integrated Diagnostic System) after changing it.

Parking Aid Camera

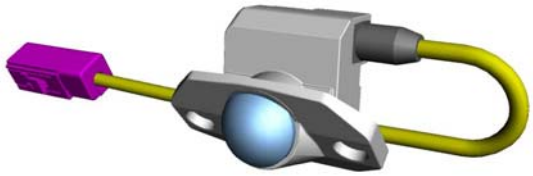

E128983

The wide angle lens camera is fixed in the handle strip of the tailgate. It is connected to the parking aid camera module via a separate line.

It is not necessary to programme the camera after changing it.

Front parking aid sensors

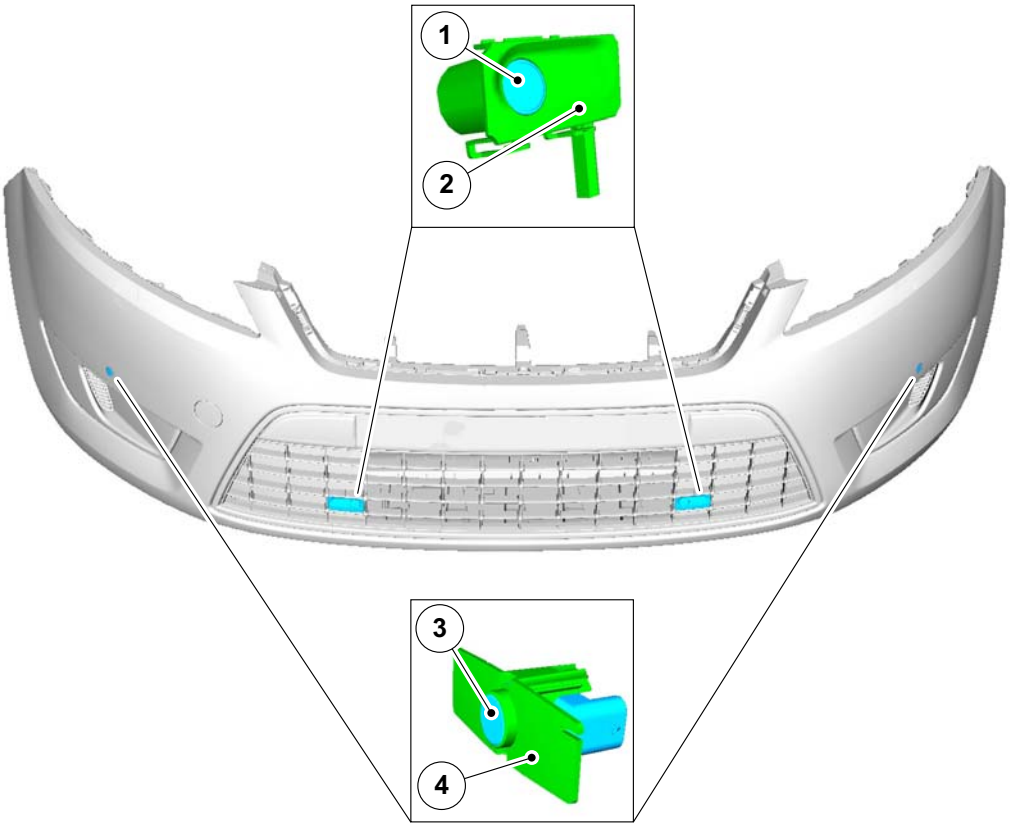

E89291

DESCRIPTION AND OPERATION

Item	Description
1	Front inner parking aid sensor(s).
2	Front inner parking aid sensor holder(s).
3	Front outer parking aid sensor(s).
4	Front outer parking aid sensor holder(s).

The parking aid sensor consists of a sensor and a holder. The holder makes sure that each parking aid sensor is correctly orientated in relation to its location in the front bumper.

For additional information, refer to: Front Parking Aid Sensor (413-13 Parking Aid, Removal and Installation).

Each parking aid sensor has a three pin connector which connects with the front bumper wiring harness, which in turn is connected to the main body wiring harness. Three pins provide for power supply, ground and signal lines to and from the parking aid module.

Each parking aid sensor consists of the following:

- a plastic housing
- an aluminium membrane which contains a piezo electric disc
- a separate decoupling ring (which must be removed before the parking aid sensors are painted and re-assembled afterwards)
- a printed circuit board assembly

The disc resonates at a frequency of ca. 50kHz, producing the ultrasonic output. The disc also receives the reflected echo signal from any objects within range.

Rear parking aid sensors

4-Door and 5-Door

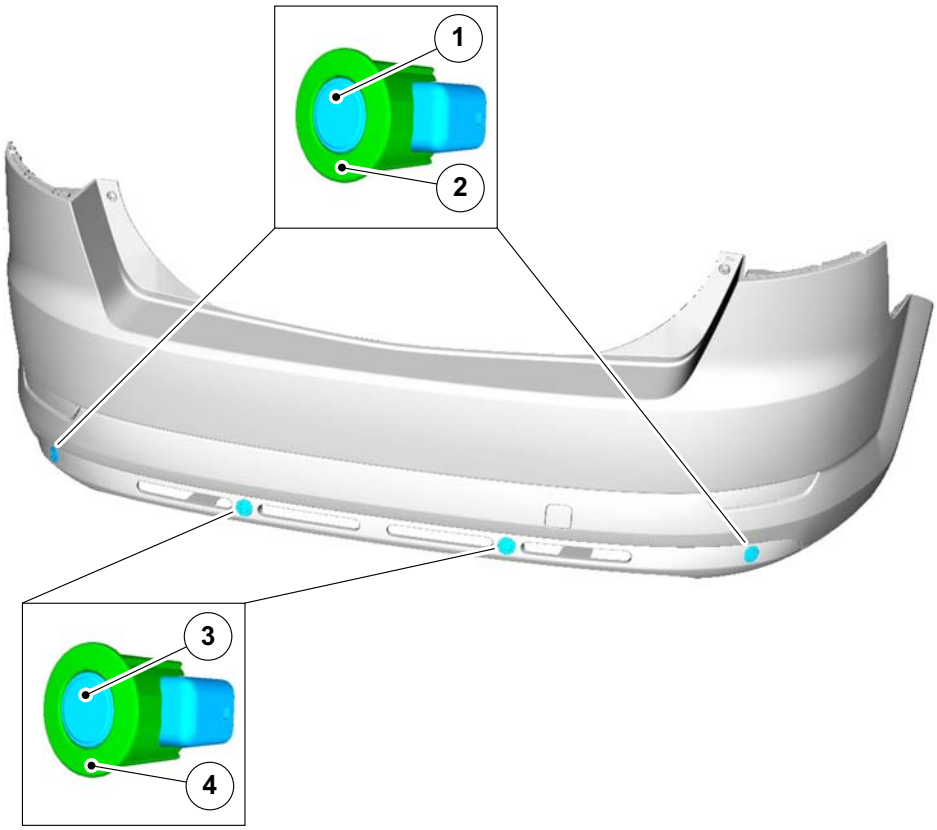

E89292

Item	Description
1	Rear outer parking aid sensor(s).
2	Rear outer parking aid sensor holder(s).

Item	Description
3	Rear inner parking aid sensor(s).
4	Rear inner parking aid sensor holder(s).

DESCRIPTION AND OPERATION

Wagon

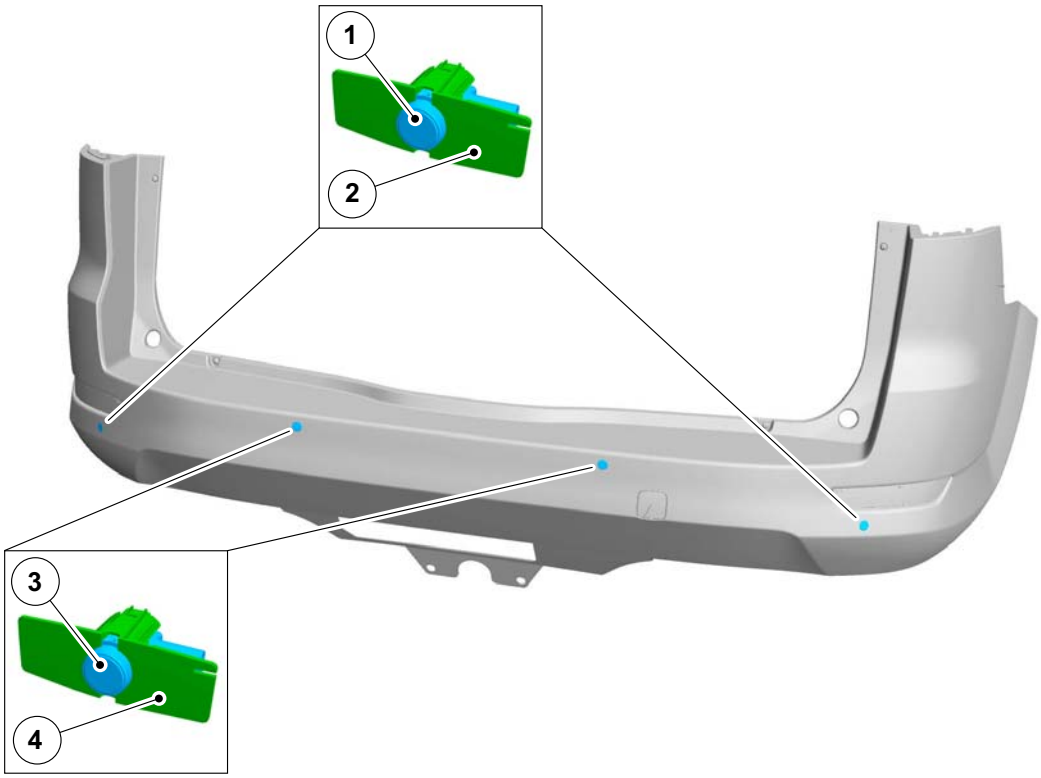

E92009

Item	Description
1	Rear outer parking aid sensor(s).
2	Rear outer parking aid sensor holder(s).
3	Rear inner parking aid sensor(s).
4	Rear inner parking aid sensor holder(s).

Design and function principles of the rear parking aid sensors are the same as on the front parking aid sensors.

DESCRIPTION AND OPERATION

Distance calculation

Front parking aid sensors

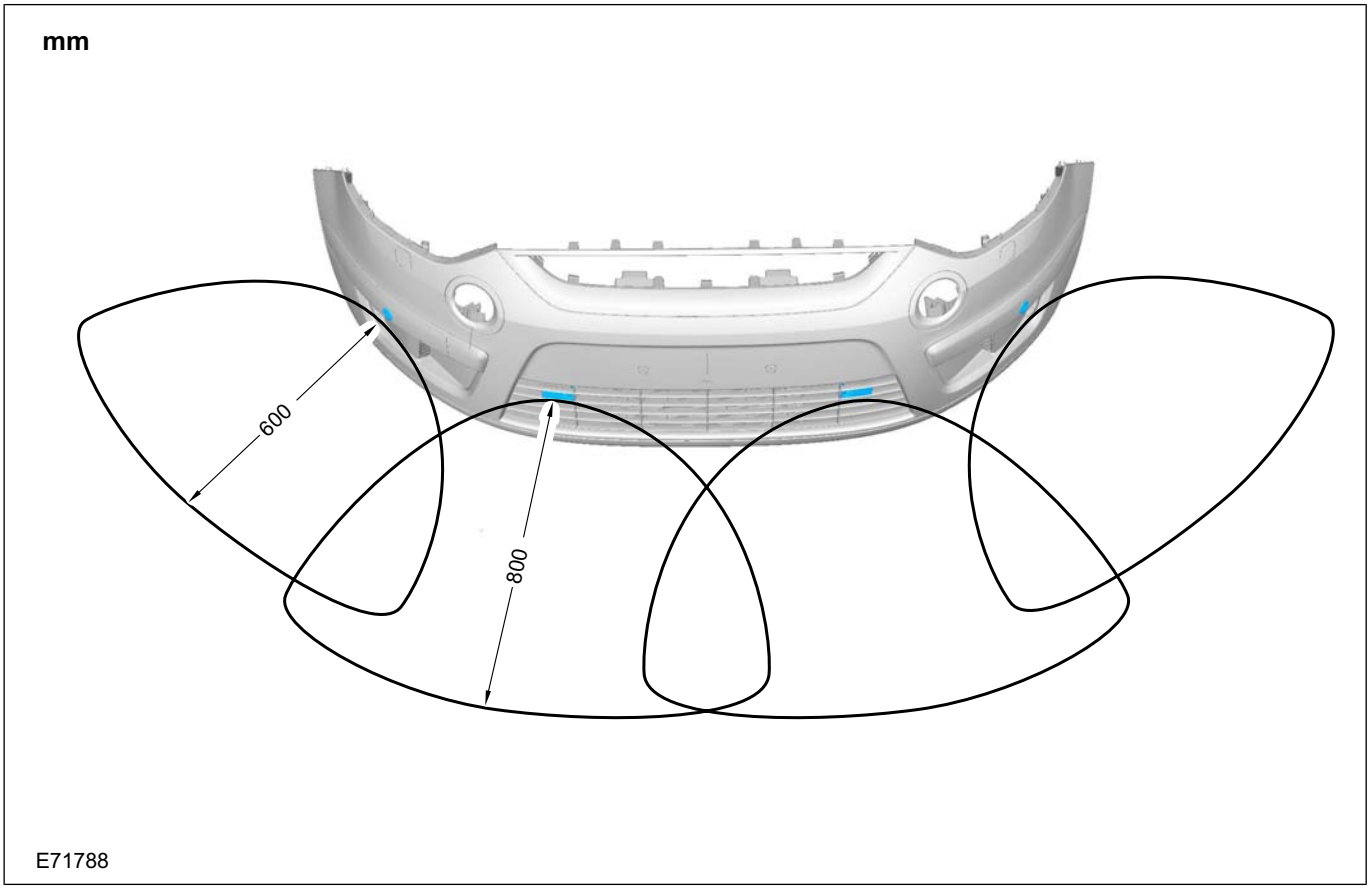

The maximum detection range for the front parking aid sensors is 800 mm (31 inches) for the central parking aid sensors and 600 mm (23.5 inches) for the corner parking aid sensors.

DESCRIPTION AND OPERATION

Rear parking aid sensors

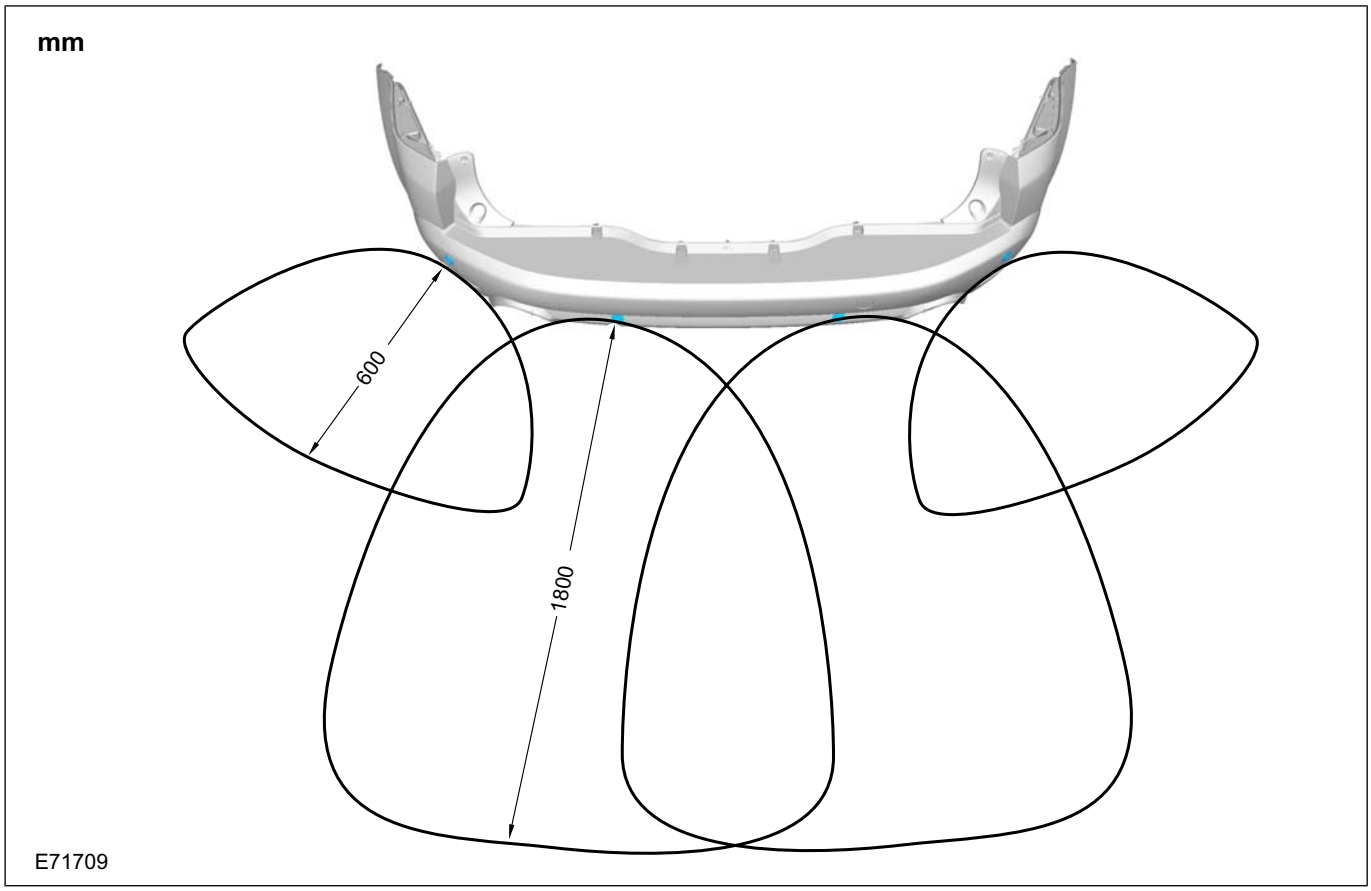

The maximum detection range for the rear parking aid sensors is 1800 mm (70 inches) for the central parking aid sensors and 600 mm (23.5 inches) for the corner parking aid sensors.

DESCRIPTION AND OPERATION

Vehicles with front and rear parking aid

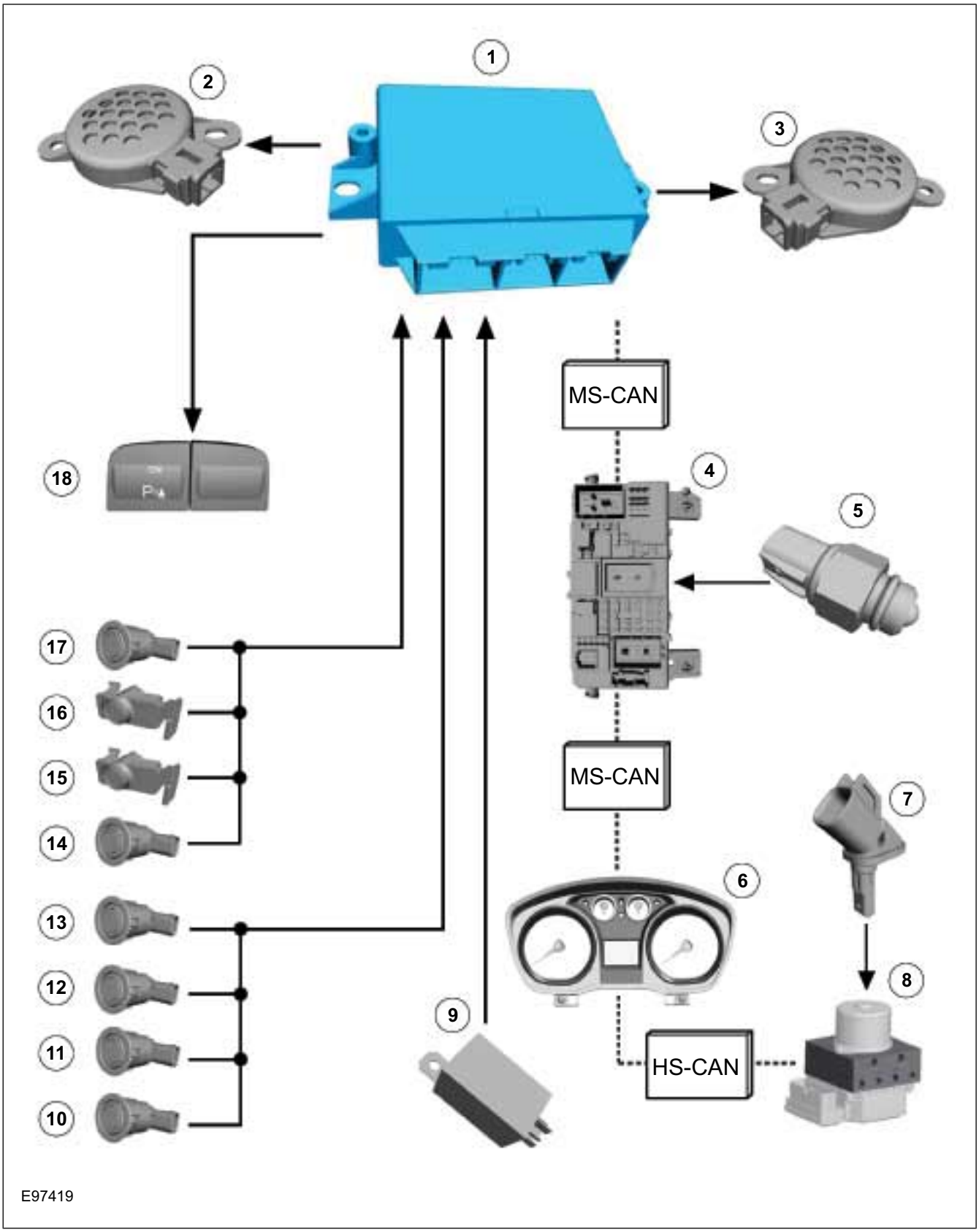

DESCRIPTION AND OPERATION

Item	Description
1	Parking aid module.
2	Front parking aid speaker.
3	Rear parking aid speaker.
4	Generic Electronic Module (GEM).
5	Reverse gear switch.
6	Instrument cluster.
7	ABS sensor assembly.
8	ABS.
9	Trailer relay.

Item	Description
10	Rear parking aid sensor.
11	Rear parking aid sensor.
12	Rear parking aid sensor.
13	Rear parking aid sensor.
14	Front parking aid sensor.
15	Front parking aid sensor.
16	Front parking aid sensor.
17	Front parking aid sensor.
18	Parking aid switch (with light emitting diode (LED)).

DESCRIPTION AND OPERATION

Vehicles with parking aid camera

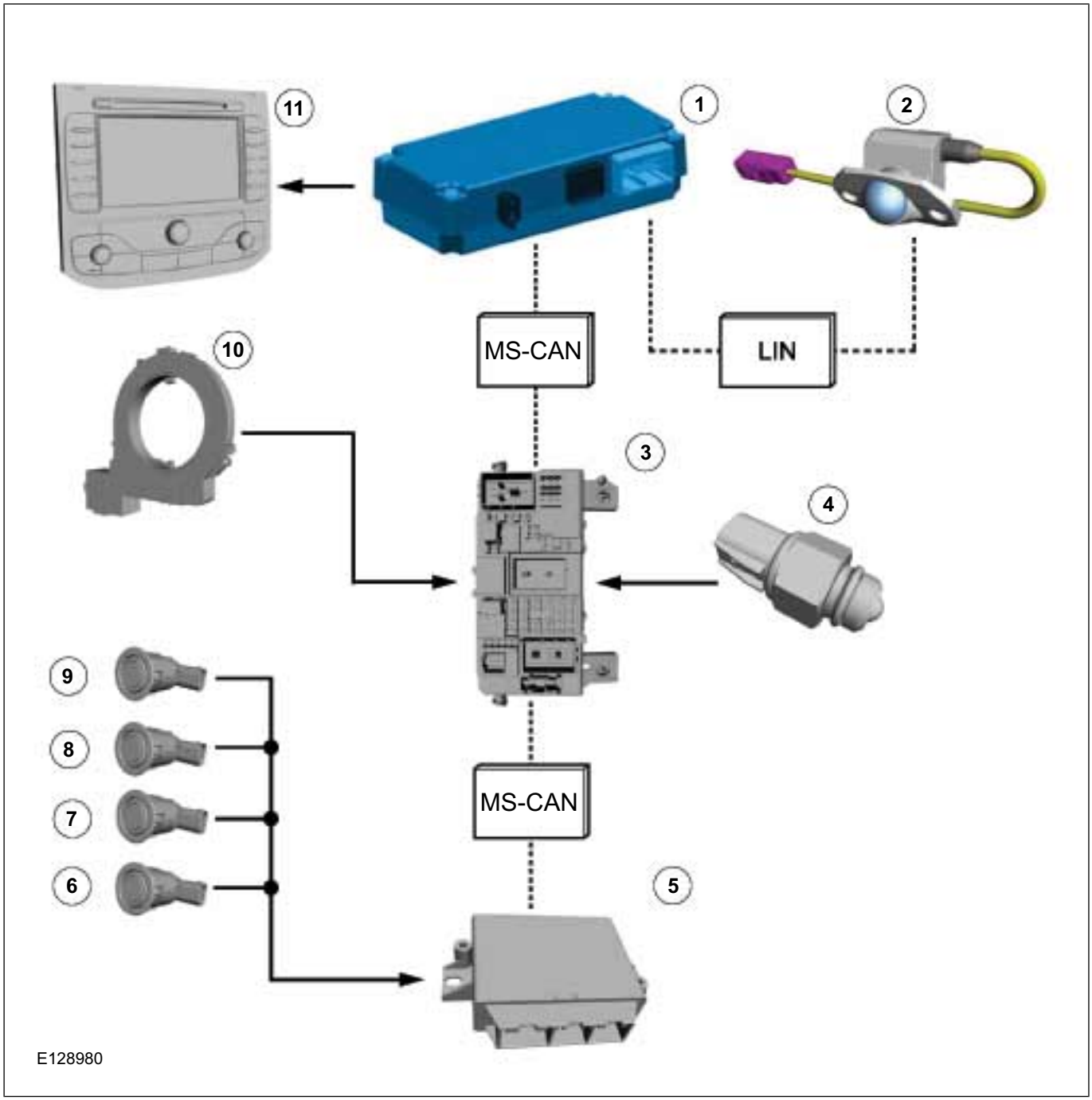

Item	Description
1	Parking aid camera module.
2	Parking Aid Camera.
3	Generic Electronic Module (GEM).
4	Reverse gear switch.
5	Parking aid module.
6	Rear parking aid sensor.
7	Rear parking aid sensor.

Item	Description
8	Rear parking aid sensor.
9	Rear parking aid sensor.
10	steering angle sensor.
11	Navigation device.

DESCRIPTION AND OPERATION

System Operation

Parking Aid

WARNING: It is the driver's responsibility to stay alert during reversing procedures. The system may fail to detect small children or animals.

CAUTION: The driver is responsible for detecting obstacles and judging the distance between these and the vehicle. The system may fail to detect some hanging objects, barriers, narrow obstacles or painted surfaces, which could damage the vehicle. Always pay attention when parking.

The parking aid provides an audible warning to the driver if there are any obstacles in front of or behind the vehicle during reverse parking maneuvers.

At low speeds, the parking aid module uses the parking aid sensors to monitor the area around the vehicle. If an object is detected within a monitored area, the parking aid module emits a warning tone using the respective parking aid speaker.

The rear parking aid is switched on with the ignition. However, it is only enabled when reverse gear is selected.

The front and rear parking aid is always switched off when the ignition is switched on. It is switched on when reverse gear is selected or if the parking aid switch in the center console is actuated up to a speed of 16 km/h.

The parking aid is switched off when the vehicle is travelling forwards at more than 16 km/h or if the parking aid switch in the center console is actuated again.

When the parking aid module activates the system, the parking aid switch LED is illuminated. If the vehicle is only fitted with the rear parking aid, there is no switch.

The parking aid sensors emit a series of ultrasonic impulses and switch to receiver mode to receive the echo reflected by an obstacle within the detection range. The received echo signals are amplified and converted from an analog signal to a digital signal by the sensor. The digital signal is passed to the parking aid module and compared with pre-programmed data stored in an EEPROM within the module. The module calculates the distance to the obstacle by measuring the time taken between the emitted and received impulses.

If no objects are detected there are no further warning tones. If an object is detected, repeated audible tones are emitted from either parking aid speaker(s) as appropriate. The time delay between the tones decreases as the distance between the object and the vehicle decreases, until at approximately 250 mm (10 inches), the audible tone becomes continuous.

If the distance between the obstacle and the vehicle does not decrease, the warning tone remains constant if the object has been detected by an internal parking aid sensor. If the obstacle was detected by an external sensor and the distance remains unchanged, the warning tone stops after 3 seconds.

The parking aid module continues to monitor the distance and will resume the warning tones if a decrease in distance is detected.

If a trailer is connected to the vehicle, a signal is sent to the GEM (generic electronic module) via the trailer relay. This signal is sent to the parking aid module via the MS CAN bus. When the parking aid module detects that a trailer is connected to the vehicle, the rear parking aid sensors are disabled to prevent constant warnings due to the close proximity of the trailer.

Parking Aid Camera

CAUTIONS:

Always keep the reversing camera free from dirt, ice and snow. Do not clean with sharp objects, fat solvents, wax or organic media. Only use a damp cloth for cleaning.

If a high-pressure cleaner is used to wash the vehicle, the jet must only be aimed at the reversing camera briefly at a distance of at least 20 cm.

The reversing camera is sensitive to pressure. The position and angle of the camera can be changed with increased pressure. It is not necessary to programme the camera after changing it.

For vehicles with a navigation system, the parking aid camera can be ordered as an optional extra. The system essentially consists of a camera with a wide angle lens, a control unit and a wiring harness which is not integrated in the vehicle wiring harness.

On the navigation display screen, the drivers sees a video image of the area behind the vehicle. Guides integrated in the camera images by the parking aid camera module and displayed on the

DESCRIPTION AND OPERATION

screen help the driver to find out about the steering angle, vehicle width, cornering and driving straight ahead. The system generates these guides using:

- Vehicle parameters (length, width)
- Steering Angle
- Vehicle position during the parking maneuver

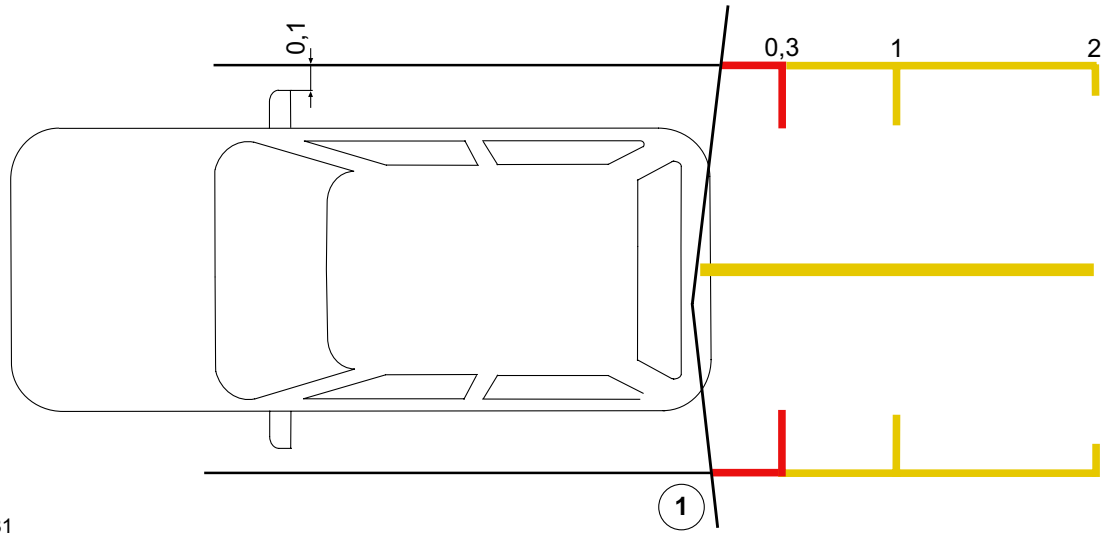

Item	Description
1	Monitoring angle.

If the vehicle is also fitted with a rear parking aid, the distances to the obstacle are displayed as a 3D illustration.

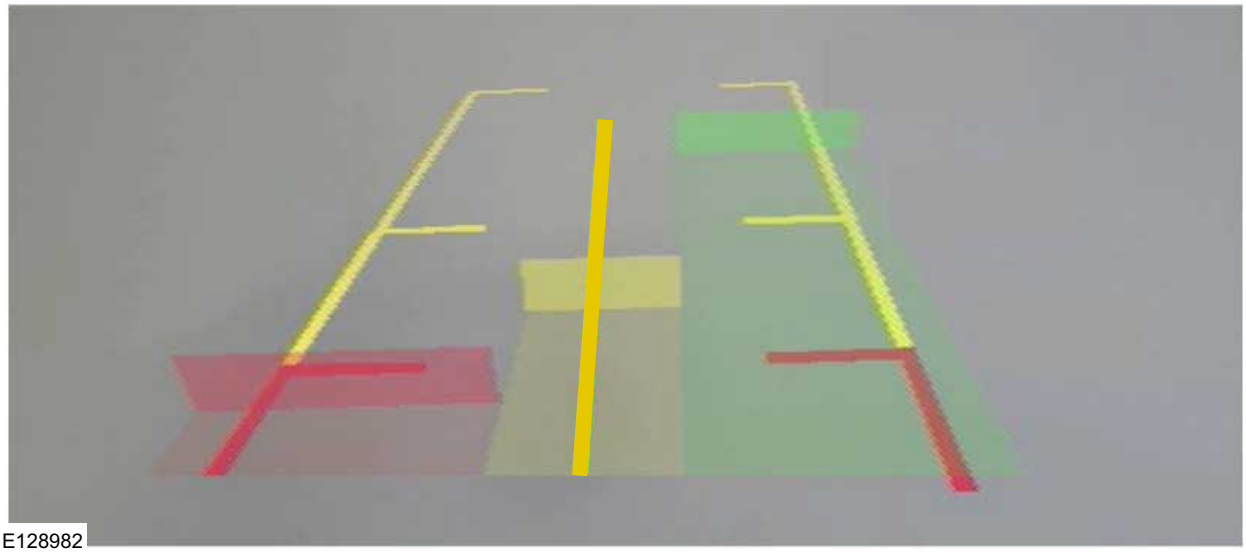

The area behind the vehicle is shown on the navigation display screen when the ignition is switched on and reverse gear is engaged (1). The rear view is always given priority, regardless of what is currently being shown on the display.

The camera view is automatically disabled 10 seconds after disengaging reverse gear (2).

DESCRIPTION AND OPERATION

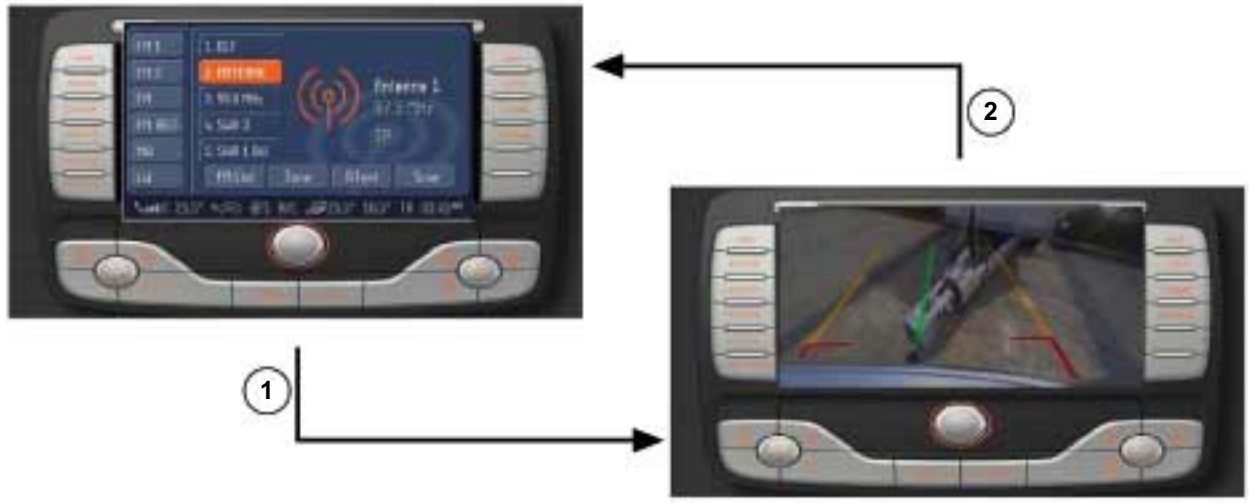

E97906

E97909

If the blue button is pressed during operation of the reversing camera, the camera view disappears from the screen. When reverse gear is engaged again, the system returns to the camera view. Exception: For incoming telephone calls, the screen shows the corresponding menu and then automatically returns to the camera view.

The green buttons can be pressed during operation of the reversing camera, and the screen retains the camera view.

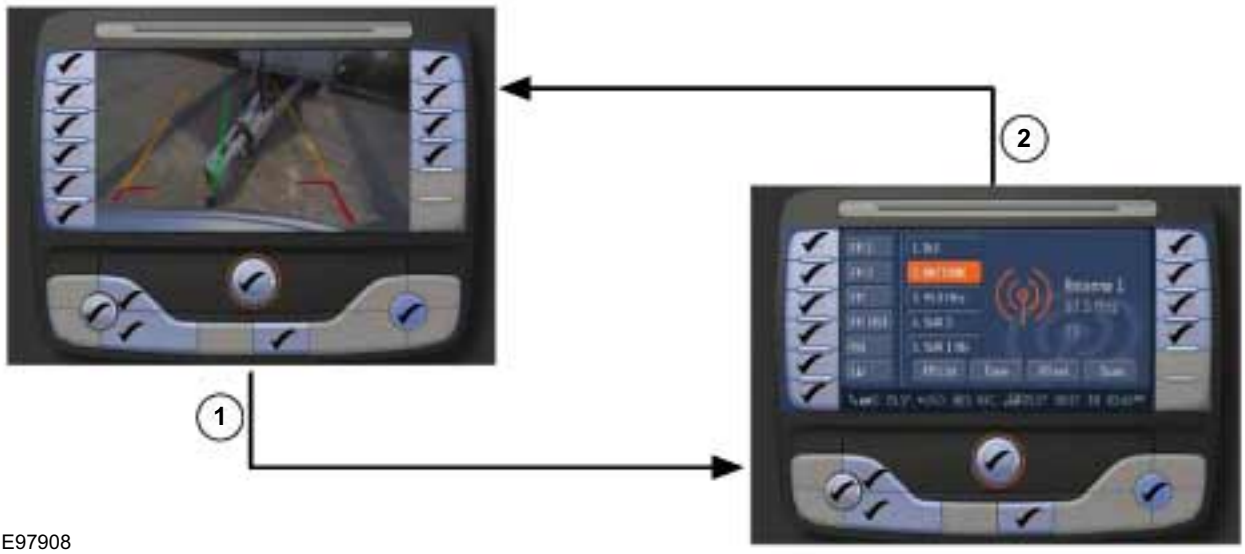

E97908

REMOVAL AND INSTALLATION

Parking Aid Module

Removal

NOTE: Removal steps in this procedure may contain installation details.

1. Passenger side.

Refer to: Front Seat (501-10 Seating, Removal and Installation).

2.

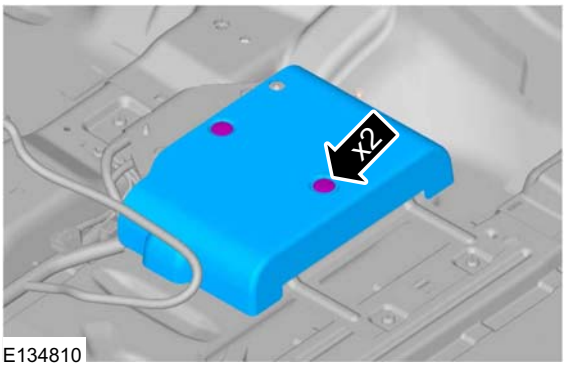

E134810

3. Torque: 10 Nm

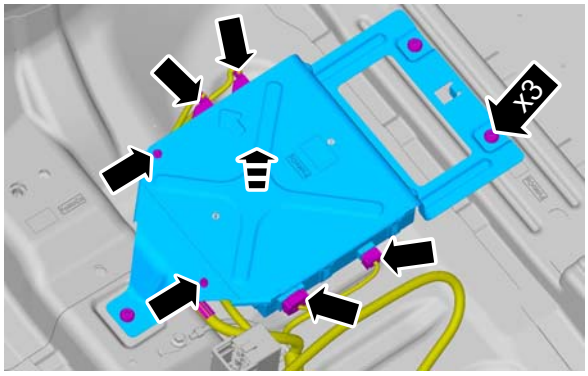

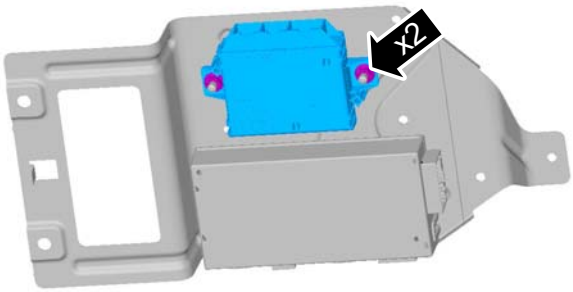

E134811

Installation

1. To install, reverse the removal procedure.

REMOVAL AND INSTALLATION

Parking Aid Camera

Removal

NOTE: Removal steps in this procedure may contain installation details.

1.

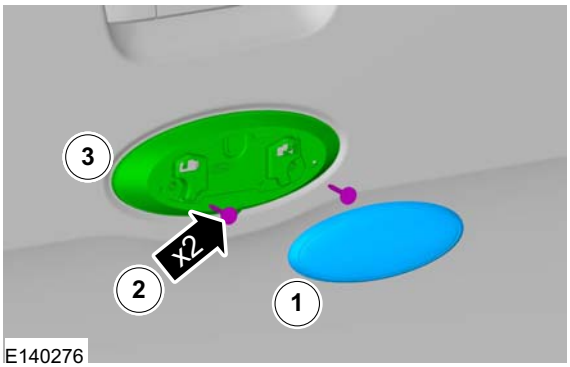

E140276

2.

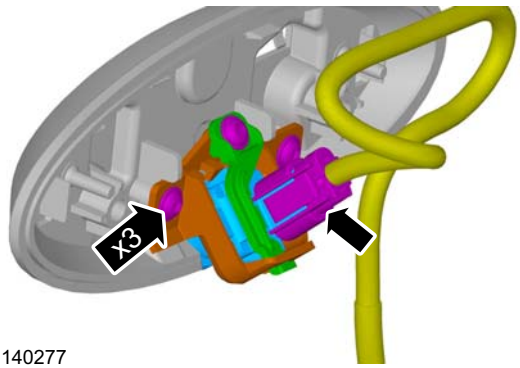

E140277

Installation

1. To install, reverse the removal procedure.

SECTION 414-00 Charging System - General Information

VEHICLE APPLICATION: 2011.50 Ranger

CONTENTS PAGE

GENERAL PROCEDURES

Battery Charging..... (31 003 0) 414-00-2

GENERAL PROCEDURES

Battery Charging(31 003 0)

General Equipment

Midtronics GR-590 Battery Management Center
Battery Charger

WARNINGS:

Always observe the battery charger equipment manufacturer's instructions.

Do not jump/slave start using a battery charging system from another vehicle.

Do not overfill a battery as this can cause acid leakage that will result in damage to the vehicle and possible personal injury.

CAUTIONS:

Do not rely on the generator to recharge a discharged battery. It would take in excess of eight hours of continuous driving with no additional loads placed on the charging system.

Make sure that the battery electrolyte reaches the indicated maximum mark.

Connect the battery charger cables to the battery before switching the battery charger on.

Switch the battery charger off before disconnecting the battery charger cables from the battery.

NOTE: Ford batteries generally require no maintenance however, in certain conditions, it is possible for the electrolyte in a battery to fall below the minimum level.

NOTE: The use of the Midtronics GR-590 Battery Management Center, which has been specifically designed for use on silver calcium type batteries is recommended. Once connected to the battery, the battery charger detects the state of battery charge and then applies the appropriate charge rate and duration. When the battery is fully charged, the battery charger switches to stand-by, keeping the battery in a fully charged state preventing excessive gassing and overcharging. The Midtronics GR-590 Battery Management Center also incorporates a software program that has the capability to assist in the recovery of deeply discharged (sulphated) batteries.

NOTE: Charging methods and types of battery chargers vary widely. Whichever method is utilized it must be carried out carefully to avoid damage to the battery and possible personal injury. Specific instructions accompanying each battery charger and must be followed exactly. Safeguards provided by the equipment manufacturer should not be disregarded by the operator.

NOTE: A battery which has been stored in a highly discharged state may be slow to accept a charge at first. In such cases the initial charging rate may be so low that the ammeter on some battery testers will not show any indication of charge for 5 to 10 minutes.

NOTE: Automatic battery chargers are also protected against reverse polarity connection and require no adjustment or monitoring.

NOTE: Slow-charging will readily restore a battery to a full state of charge and, since the charging current is relatively low, the possibility of overcharging a battery are minimized. The charge rate used should be approximately equal to 5% of the reserve capacity of the battery being charged (approximately three to six Amps depending on battery size). The charging current should be adjusted 10 minutes after initial setting and again after 1 hour before being left to charge the battery for between 8 and 12 hours.

NOTE: A constant voltage battery charger will charge a battery at a set maximum voltage. The voltage used depends upon the design and condition of the battery charger and the age and temperature of the battery. This type of battery charger initially charges at a high rate of current that reduces as battery voltage is restored. When using a constant voltage battery charger, the charging current should be recorded after five minutes and the battery charger switched off when the charging current falls to one–third of the recorded value, or after eight hours whichever occurs first.

NOTE: Multiple battery chargers are designed to charge a number of batteries, simultaneously. Of the two different types of multiple battery chargers available, only those that charge batteries in series should be used and it is important that batteries are of the same or very similar ratings and voltages. Multiple battery chargers that charge batteries in parallel are not recommended.

NOTE: The use of a fast (boost) battery charger is not recommended as it can cause damage to a battery. Fast charging will only restore a battery to a state of charge that will enable it to carry out it's critical function of cranking the engine. Fast

GENERAL PROCEDURES

charging will not restore a battery to a full state of charge and must therefore be followed by a period of slow charging. Excessively fast charging can cause damage to a battery. For this reason, charging times must be carefully controlled. Fast battery chargers vary widely in design so it is very important to strictly adhere to the equipment manufacturer's instructions. A charge of 30 amps for up to 30 minutes is the most common fast charging application. If the battery is very discharged and requires additional restoration, an additional charge of 20 amps for a period up to one and a half hours should be applied. Fast charging for a period in excess of two hours significantly increases the risk of causing damage to the battery.

NOTE: When connecting and disconnecting the battery from the vehicle, make sure that the battery ground cable is disconnected first and connected last and that all electrical items are switched off. Record the audio unit keycode and preset radio frequencies before disconnecting the battery.

1. **Remove the battery (Focus C-MAX 2003.75, Focus 2004.75, S-MAX/Galaxy 2006.50, Mondeo 2007.50 only).**
2. **Disconnect the battery ground cable (All, except the vehicles mentioned in the previous step).**
3. **NOTE: The maximum battery electrolyte level is approximately 40 mm below the very top of the battery casing. This corresponds to a point just below the lower rim of the battery casing.**

   Check that the battery electrolyte reaches the indicated maximum level. Top up with distilled/de-ionized water, as necessary.

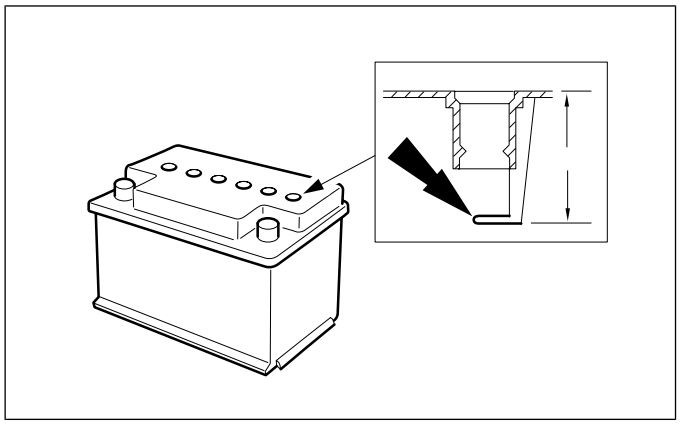

4. **Connect the positive red clamp from the battery charger to the positive battery terminal.**
5. **Connect the negative black clamp from the battery charger to the negative battery terminal.**
6. **Connect the AC power cable to the mains outlet and switch on.**
7. **Follow the instructions supplied with the battery charger to charge the battery.**
8. **To disconnect the battery charger, reverse the connection procedure.**

SECTION 414-01 Battery, Mounting and Cables

VEHICLE APPLICATION: 2011.50 Ranger

CONTENTS PAGE

GENERAL PROCEDURES

Battery Disconnect and Connect..... 414-01-2

REMOVAL AND INSTALLATION

Battery..... 414-01-3
Battery Tray..... 414-01-4

GENERAL PROCEDURES

Battery Disconnect and Connect

Activation

1. Obtain and record the audio unit keycode and preset radio frequencies.

2.

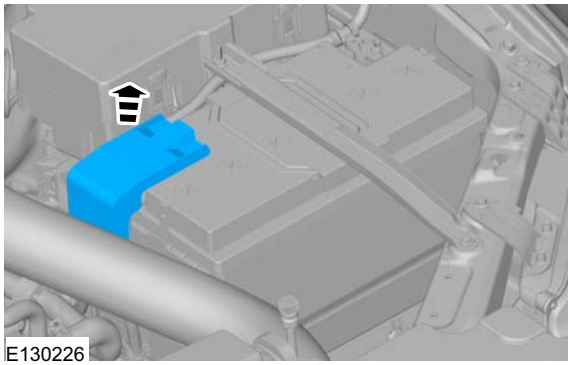

3. Torque: 27 Nm

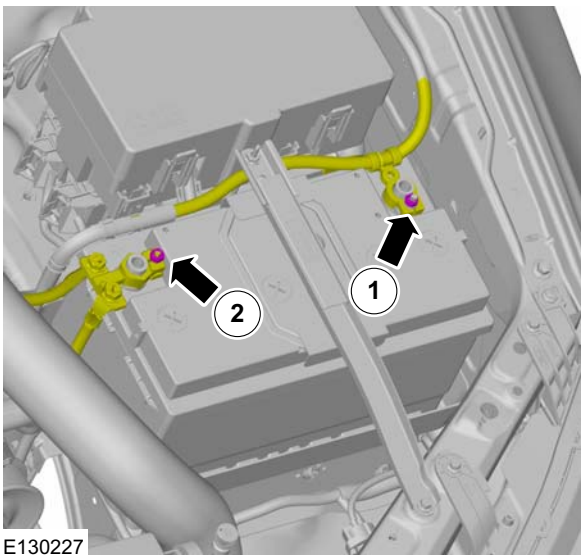

REMOVAL AND INSTALLATION

Battery

Removal

NOTE: Removal steps in this procedure may contain installation details.

1. Refer to: Battery Disconnect and Connect (414-01 Battery, Mounting and Cables, General Procedures).
2. 2. Torque: 11 Nm

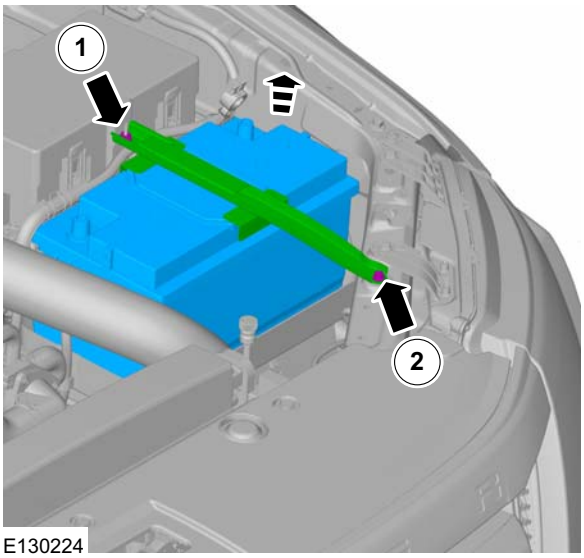

E130224

Installation

1. To install, reverse the removal procedure.

REMOVAL AND INSTALLATION

Battery Tray

Removal

NOTE: Removal steps in this procedure may contain installation details.

1. Refer to: Battery Disconnect and Connect (414-01 Battery, Mounting and Cables, General Procedures).
2. Refer to: Battery (414-01 Battery, Mounting and Cables, Removal and Installation).
3.

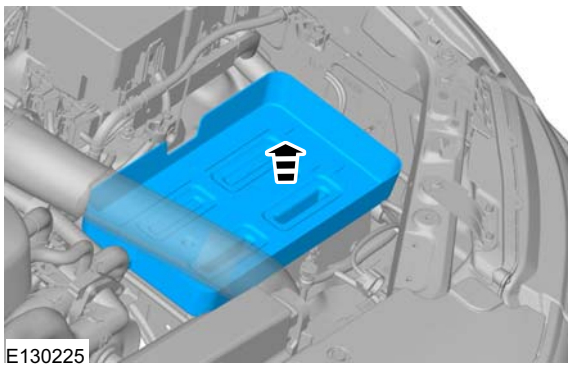

Installation

1. To install, reverse the removal procedure.

SECTION 414-02 Generator and Regulator

VEHICLE APPLICATION: 2011.50 Ranger

CONTENTS PAGE

REMOVAL AND INSTALLATION

Generator — 2.5L Duratec-HE (122kW/165PS) - MI4..... (31 414 0) 414-02-2
Generator — 2.2L Duratorq-TDCi (88kW/120PS) - Puma/2.2L Duratorq-TDCi (96kW/130PS) - Puma/2.2L Duratorq-TDCi (110kW/150PS) - Puma..... (31 414 0) 414-02-3
Generator — 3.2L Duratorq-TDCi (148kW/200PS) - Puma..... (31 414 0) 414-02-5

REMOVAL AND INSTALLATION

Generator — 2.5L Duratec-HE (122kW/165PS) - MI4(31 414 0)

Removal

NOTE: Removal steps in this procedure may contain installation details.

1. **WARNING: When the battery cables are connected, touching the vehicle body with generator terminal B will generate sparks. This can cause personal injury, fire, and damage to the electrical components. Always disconnect the battery negative cable before performing the following operation.**

   CAUTION: Do not allow any metal object to come in contact with the generator housing and internal diode cooling fins. A short circuit may result and burn out the diodes.

   Refer to: Battery Disconnect and Connect (414-01 Battery, Mounting and Cables, General Procedures).

2. Refer to: Accessory Drive Belt (303-05 Accessory Drive - 2.5L Duratec-HE (122kW/165PS) - MI4, Removal and Installation).
3. **CAUTION: Take extra care not to damage the wiring harnesses.**
   2. Torque: 15 Nm
   3. Torque: 48 Nm

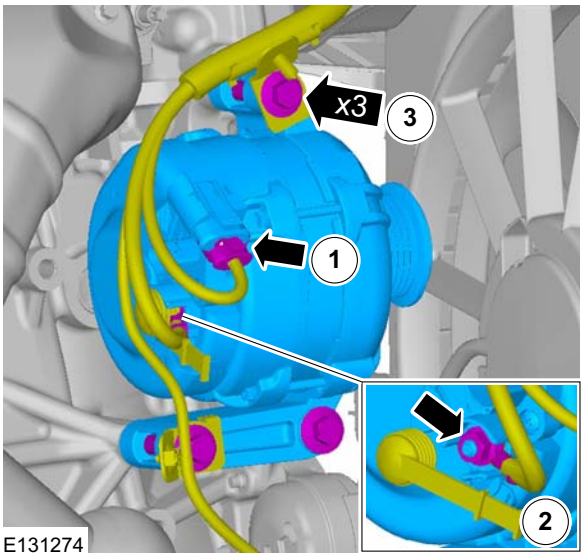

Installation

1. To install, reverse the removal procedure.

REMOVAL AND INSTALLATION

Generator — 2.2L Duratorq-TDCi (88kW/120PS) - Puma/2.2L Duratorq-TDCi (96kW/130PS) - Puma/2.2L Duratorq-TDCi (110kW/150PS) - Puma(31 414 0)

Removal

NOTE: Removal steps in this procedure may contain installation details.

1. **WARNING: When the battery cables are connected, touching the vehicle body with generator terminal B will generate sparks. This can cause personal injury, fire, and damage to the electrical components. Always disconnect the battery negative cable before performing the following operation.**

   CAUTION: Do not allow any metal object to come in contact with the generator housing and internal diode cooling fins. A short circuit may result and burn out the diodes.

   Refer to: Battery Disconnect and Connect (414-01 Battery, Mounting and Cables, General Procedures).

2. Refer to: Accessory Drive Belt - 2.2L Duratorq-TDCi (88kW/120PS) - Puma/2.2L Duratorq-TDCi (96kW/130PS) - Puma/2.2L Duratorq-TDCi (110kW/150PS) - Puma/3.2L Duratorq-TDCi (148kW/200PS) - Puma (303-05 Accessory Drive - 2.2L Duratorq-TDCi (88kW/120PS) - Puma/2.2L Duratorq-TDCi (96kW/130PS) - Puma/2.2L Duratorq-TDCi (110kW/150PS) - Puma/3.2L Duratorq-TDCi (148kW/200PS) - Puma, Removal and Installation).

3.

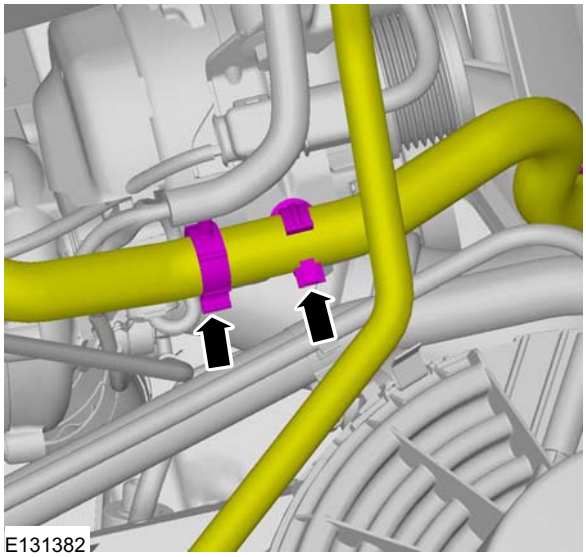

REMOVAL AND INSTALLATION

4. **CAUTION: Take extra care not to damage the wiring harnesses.**
   4. Torque: 15 Nm
   5. Torque: 48 Nm

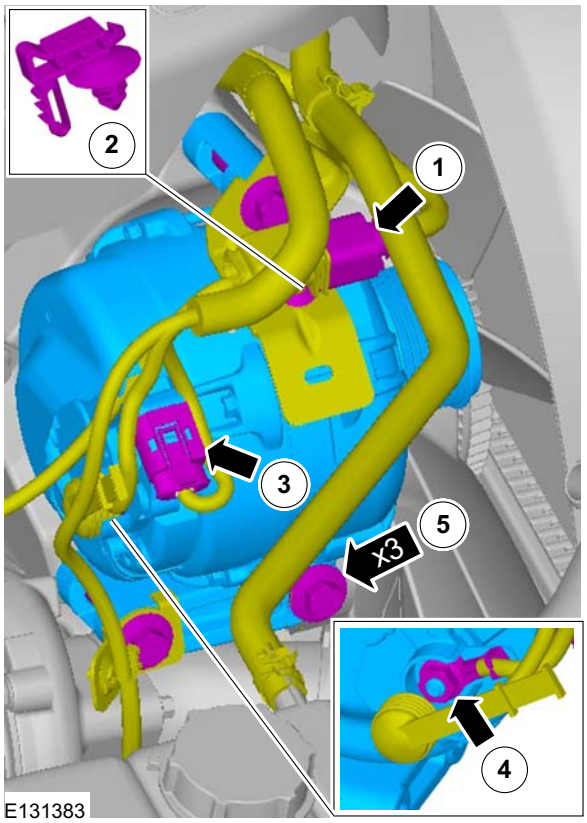

Installation

1. To install, reverse the removal procedure.

REMOVAL AND INSTALLATION

Generator — 3.2L Duratorq-TDCi (148kW/200PS) - Puma(31 414 0)

Removal

NOTE: Removal steps in this procedure may contain installation details.

1. **WARNING: When the battery cables are connected, touching the vehicle body with generator terminal B will generate sparks. This can cause personal injury, fire, and damage to the electrical components. Always disconnect the battery negative cable before performing the following operation.**

   CAUTION: Do not allow any metal object to come in contact with the generator housing and internal diode cooling fins. A short circuit may result and burn out the diodes.

   Refer to: Battery Disconnect and Connect (414-01 Battery, Mounting and Cables, General Procedures).

2. Refer to: Accessory Drive Belt - 2.2L Duratorq-TDCi (88kW/120PS) - Puma/2.2L Duratorq-TDCi (96kW/130PS) - Puma/2.2L Duratorq-TDCi (110kW/150PS) - Puma/3.2L Duratorq-TDCi (148kW/200PS) - Puma (303-05 Accessory Drive - 2.2L Duratorq-TDCi (88kW/120PS) - Puma/2.2L Duratorq-TDCi (96kW/130PS) - Puma/2.2L Duratorq-TDCi (110kW/150PS) - Puma/3.2L Duratorq-TDCi (148kW/200PS) - Puma, Removal and Installation).

3.

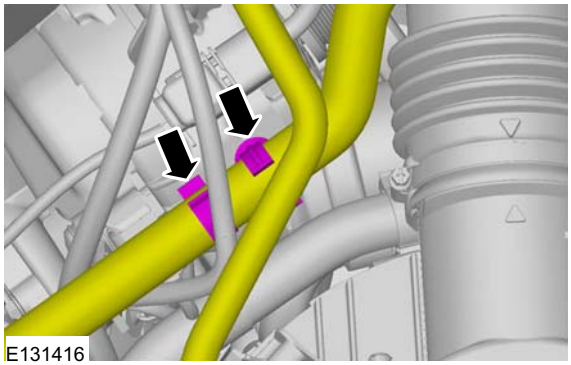

4. **CAUTION: Take extra care not to damage the wiring harnesses.**
   4. Torque: 15 Nm
   5. Torque: 48 Nm

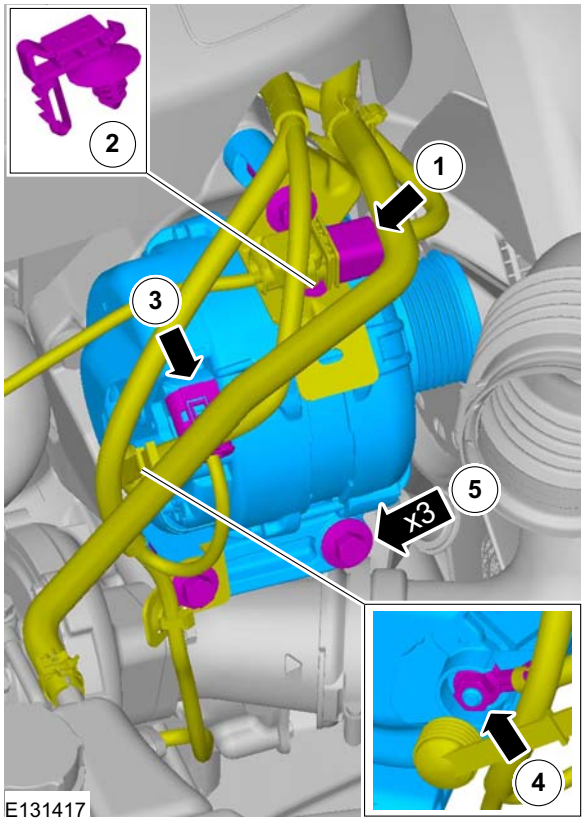

Installation

1. To install, reverse the removal procedure.

SECTION 415-00 Information and Entertainment System - General Information

VEHICLE APPLICATION: 2011.50 Ranger

CONTENTS PAGE

DESCRIPTION AND OPERATION

Information and Entertainment System..... 415-00-2
SINGLE CAB..... 415-00-2
DOUBLE CAB..... 415-00-3
STRETCH CAB..... 415-00-4

DESCRIPTION AND OPERATION

Information and Entertainment System

SINGLE CAB

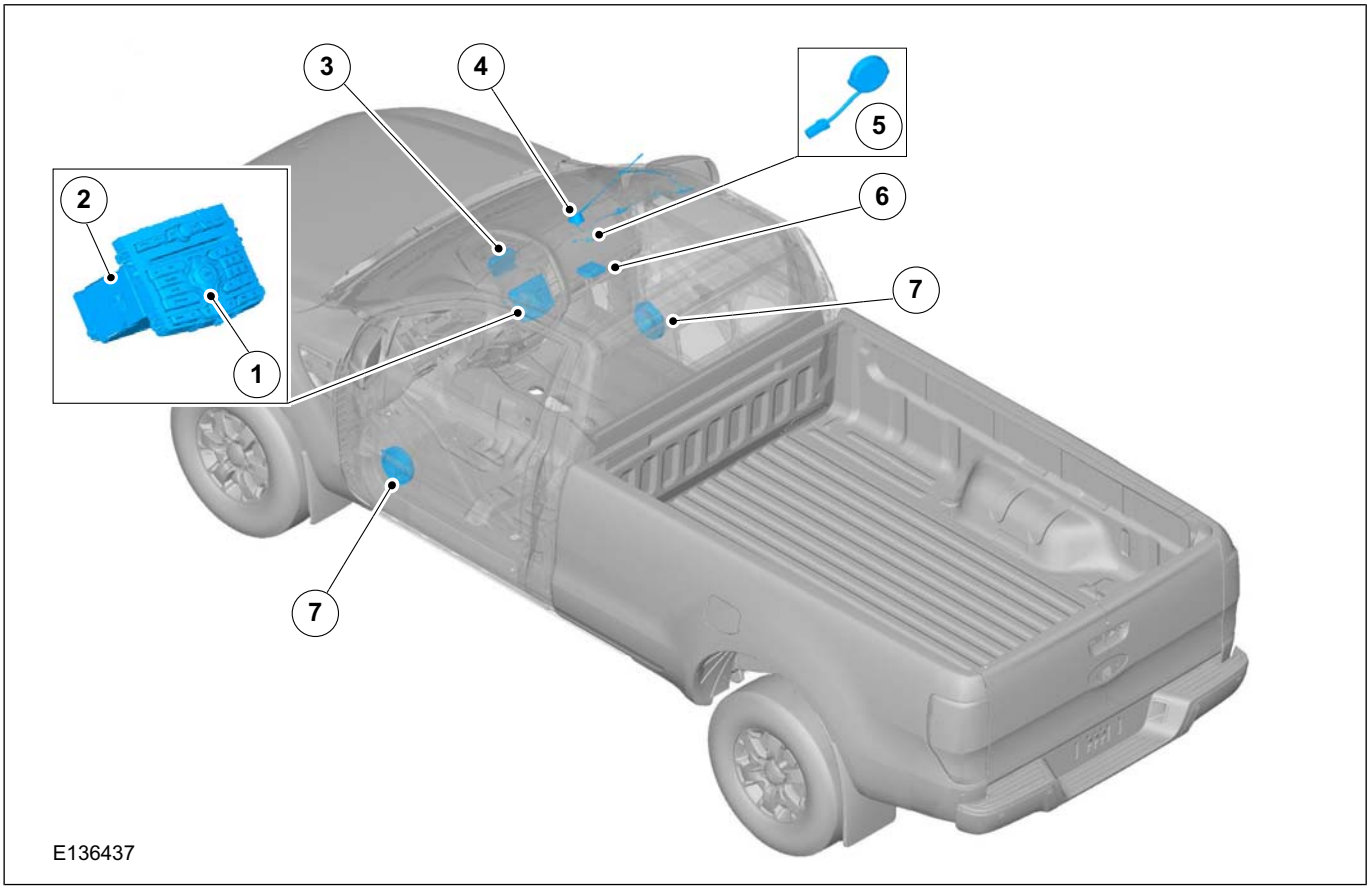

DESCRIPTION AND OPERATION

DOUBLE CAB

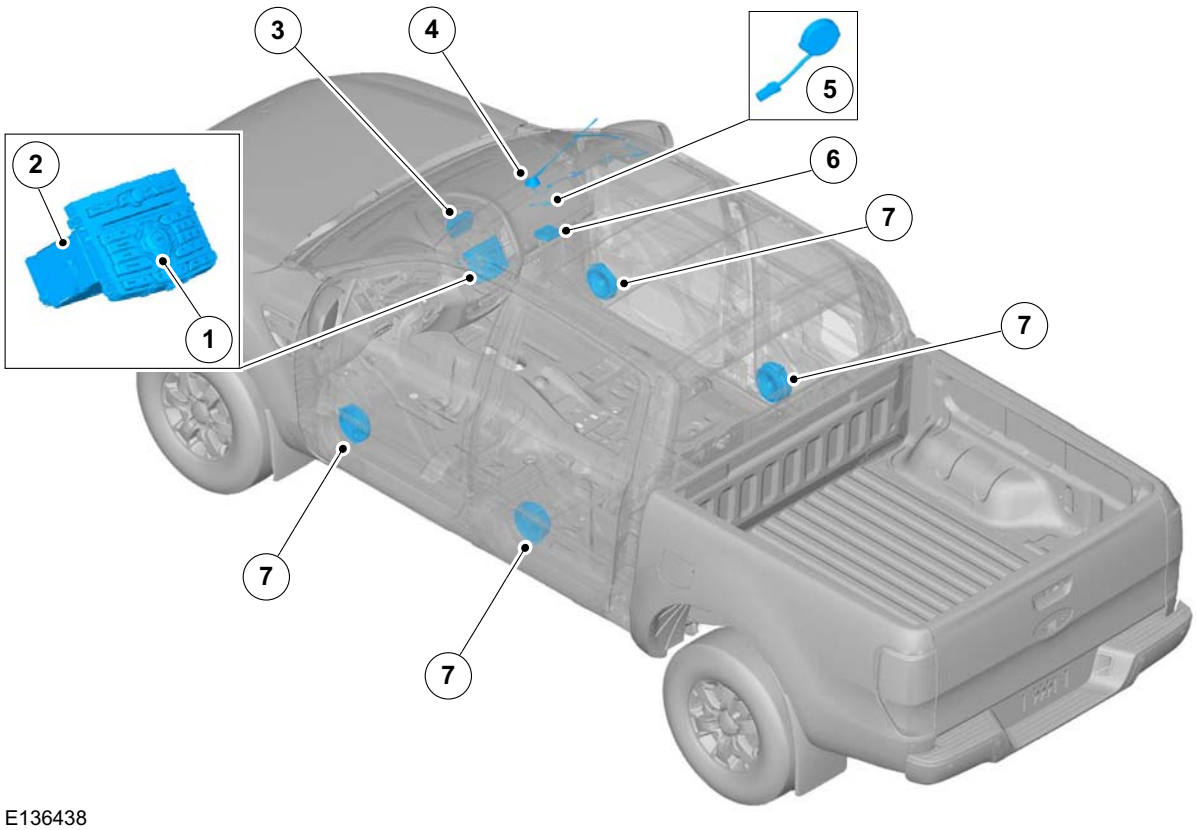

E136438

DESCRIPTION AND OPERATION

STRETCH CAB

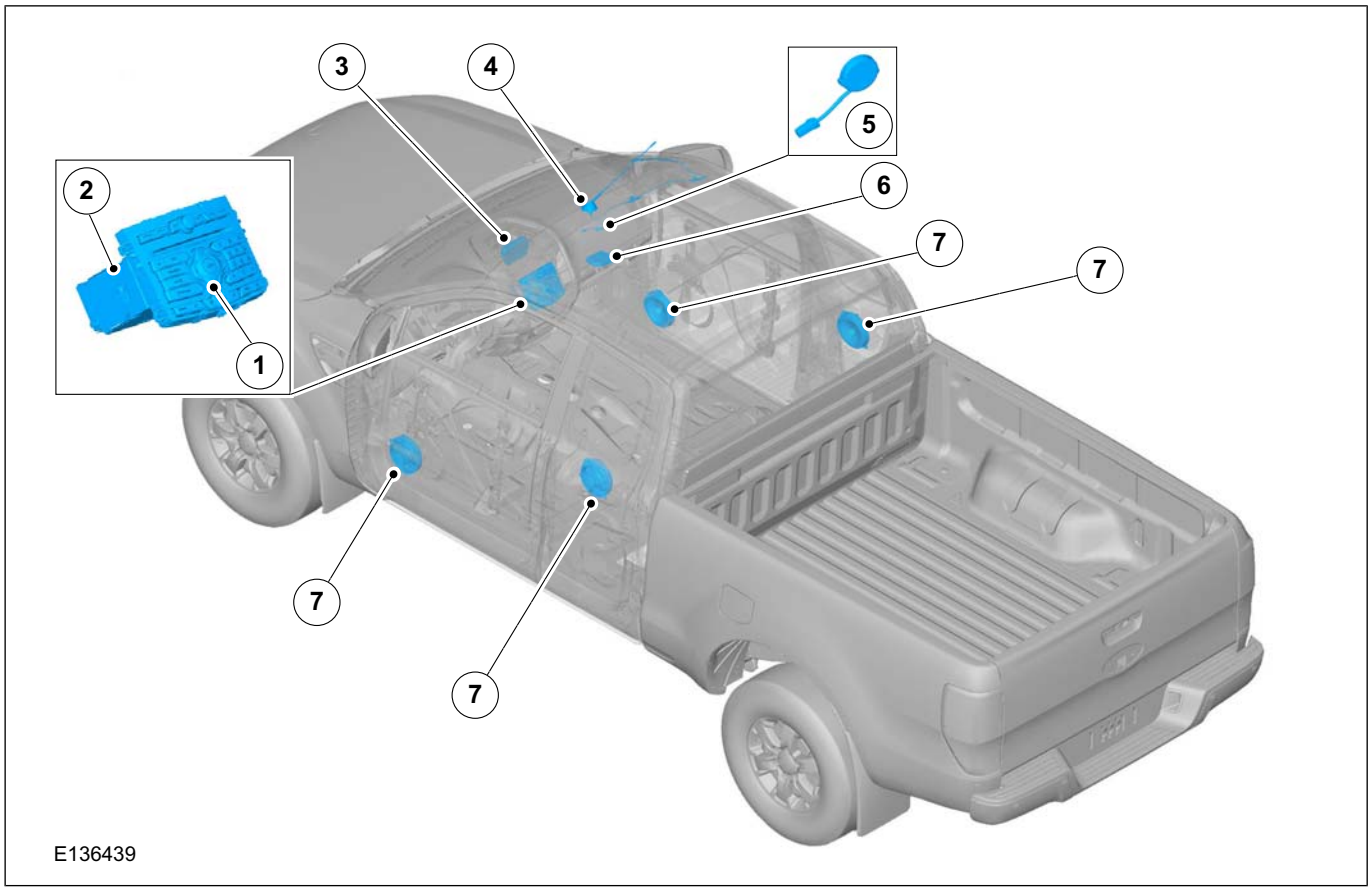

Item	Description
1	Audio Switch pack
2	Audio Unit
3	Display Screen
4	Radio Antenna
5	Microphone
6	Bluetooth
7	Speaker

SECTION 415-01 Information and Entertainment System

VEHICLE APPLICATION: 2011.50 Ranger

CONTENTS PAGE

REMOVAL AND INSTALLATION

Audio Unit..... 415-01-2
Bluetooth Module..... (33 635 0) 415-01-5
Audio Unit Antenna..... 415-01-6
Information and Entertainment Display Unit..... 415-01-10

REMOVAL AND INSTALLATION

Audio Unit

Removal

WARNING: The supplemental restraint system (SRS) is active for a certain length of time after the power supply has been disconnected. Wait for a minimum of 3 minutes before disconnecting or removing any SRS components.

NOTE: Removal steps in this procedure may contain installation details.

1. Refer to: Supplemental Restraint System (SRS) Health and Safety Precautions (100-00 General Information, Description and Operation).
   Refer to: Battery Disconnect and Connect (414-01 Battery, Mounting and Cables, General Procedures).

Vehicles with single DIN Standard audio unit

2.

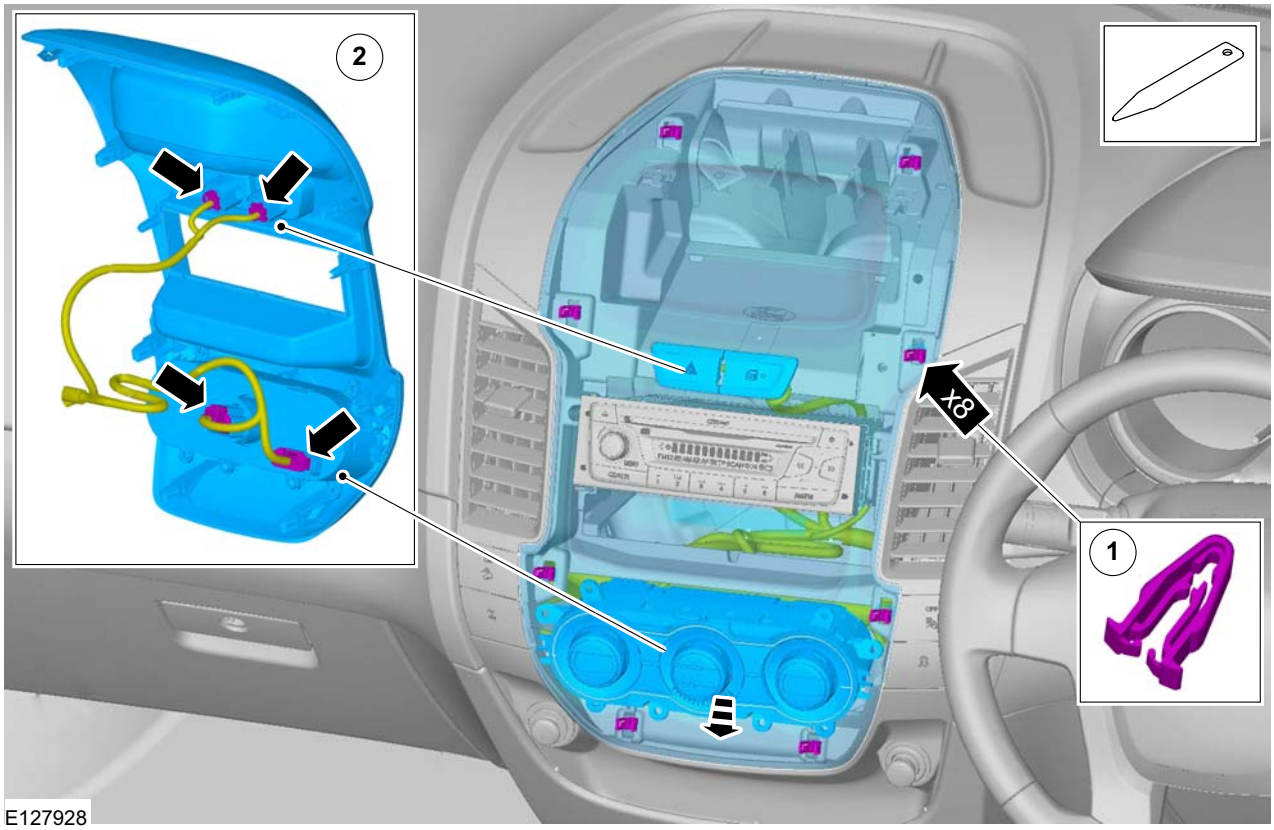

REMOVAL AND INSTALLATION

3. Torque: 3 Nm

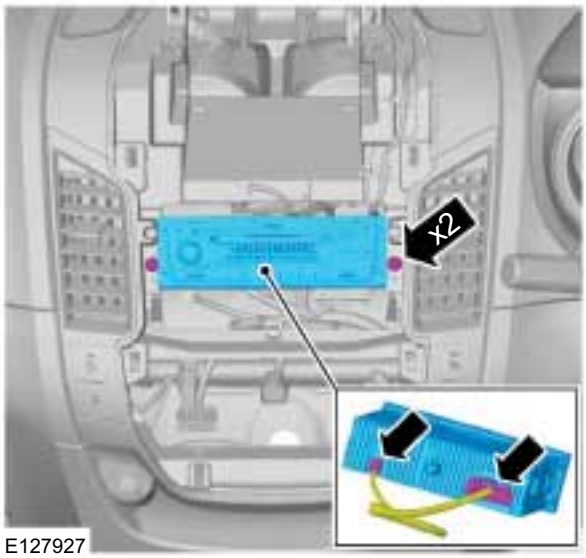

Vehicles with double DIN Standard audio unit

4.

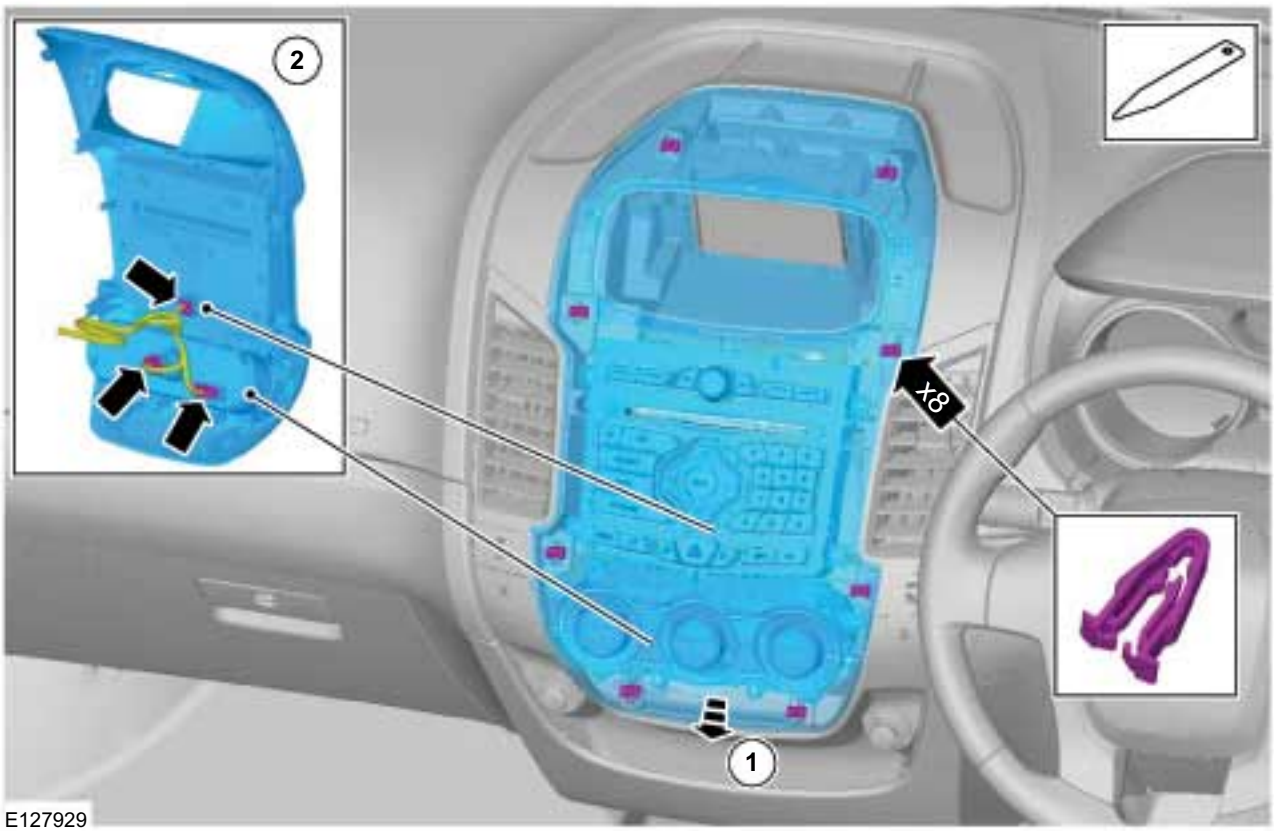

REMOVAL AND INSTALLATION

5. Torque: 2 Nm

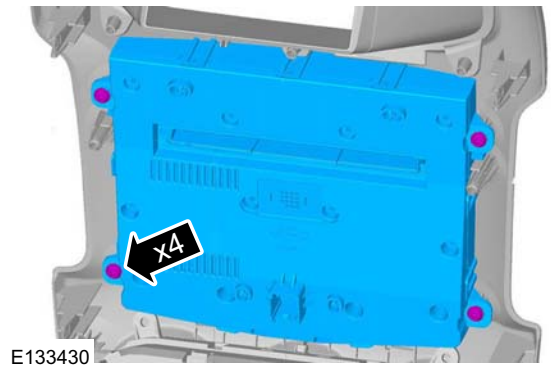

6. Torque: 3 Nm

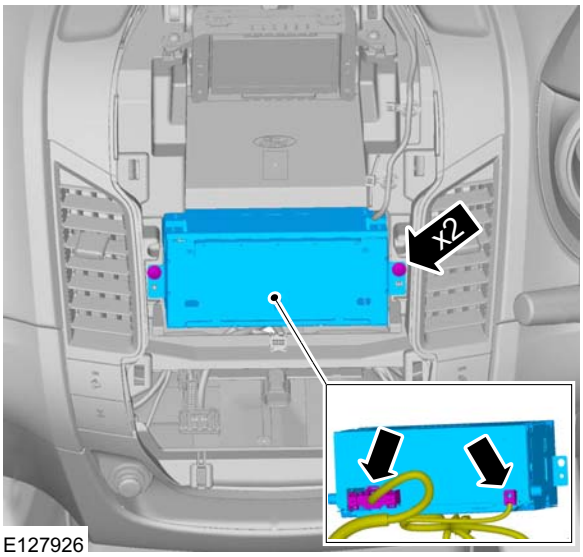

Installation

1. To install, reverse the removal procedure.

REMOVAL AND INSTALLATION

Bluetooth Module(33 635 0)

Removal

NOTE: Removal steps in this procedure may contain installation details.

1. Refer to: Glove Compartment (501-12 Instrument Panel and Console, Removal and Installation).
2. Torque: 2 Nm

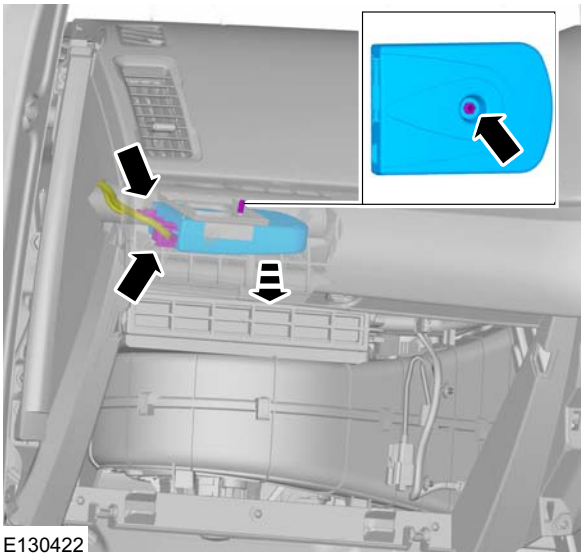

Installation

1. To install, reverse the removal procedure.

REMOVAL AND INSTALLATION

Audio Unit Antenna

Removal

NOTE: Removal steps in this procedure may contain installation details.

1. On both sides.

   Refer to: A-Pillar Trim Panel (501-05 Interior Trim and Ornamentation, Removal and Installation).

2. On both sides.

   Refer to: C-Pillar Upper Trim Panel (501-05 Interior Trim and Ornamentation, Removal and Installation).
   Refer to: C-Pillar Lower Trim Panel (501-05 Interior Trim and Ornamentation, Removal and Installation).

3.

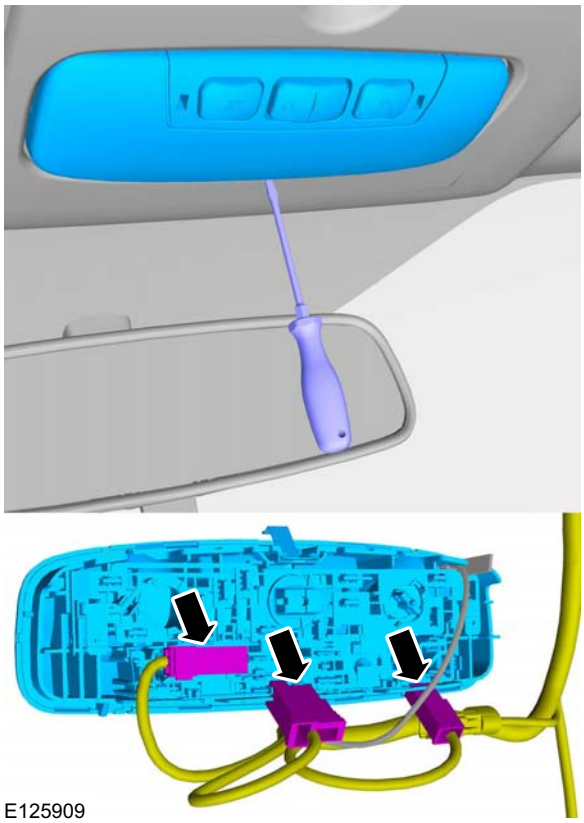

E125909

4. **NOTE:** This step is not necessary when installing a new component.

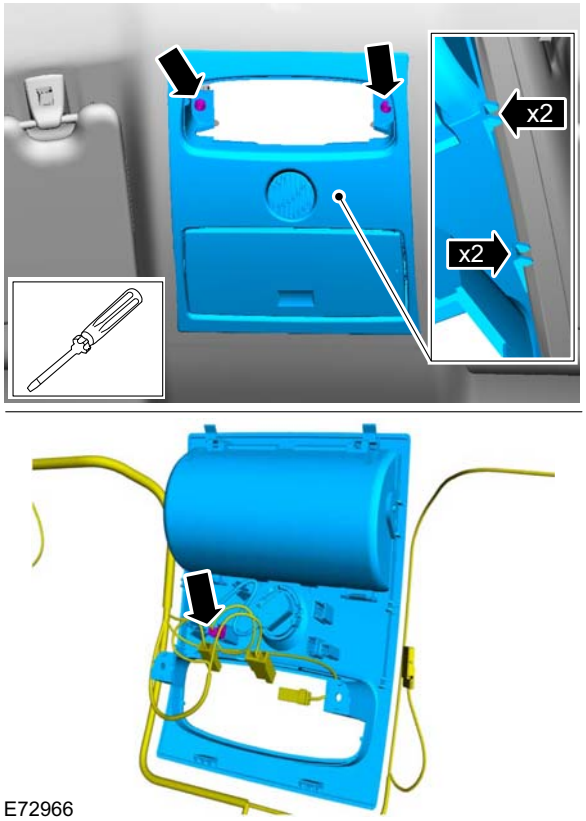

E72966

5. On both sides.

REMOVAL AND INSTALLATION

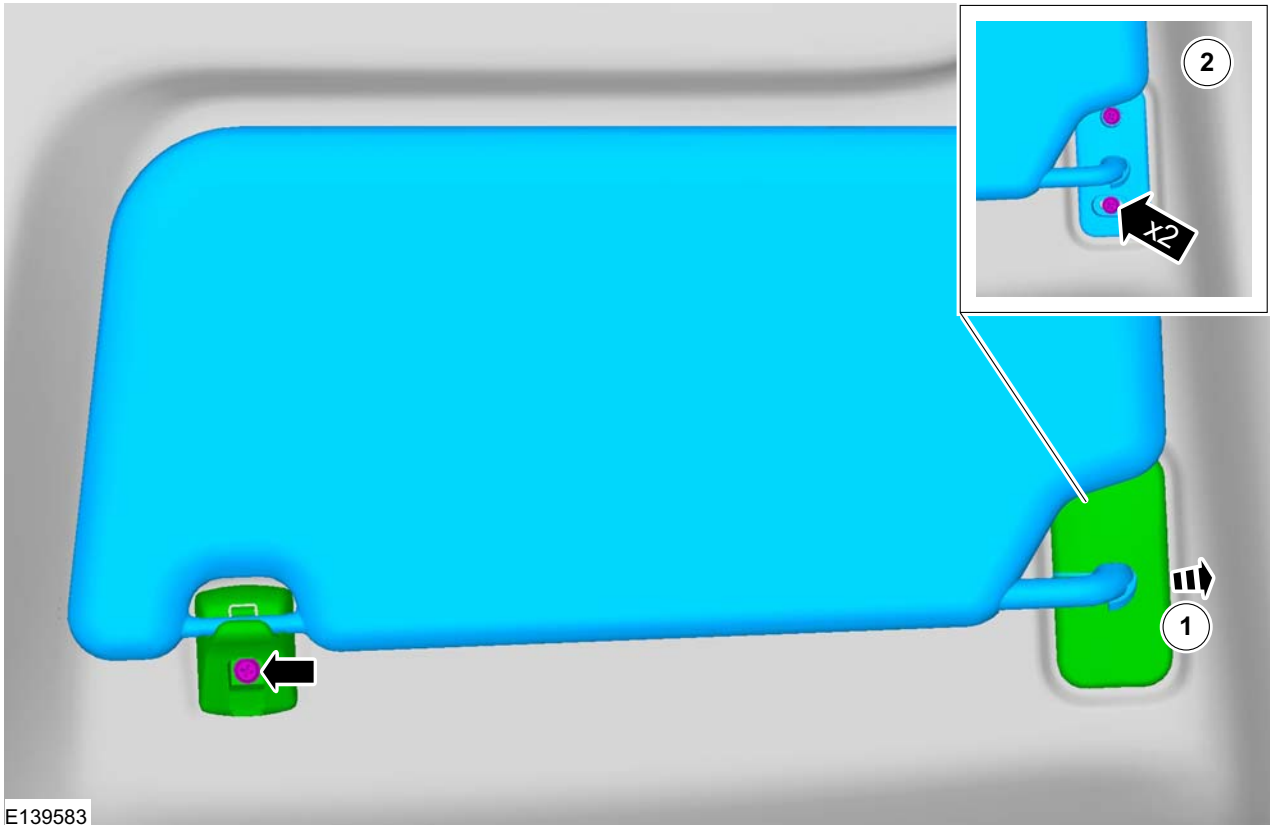

E139583

6.

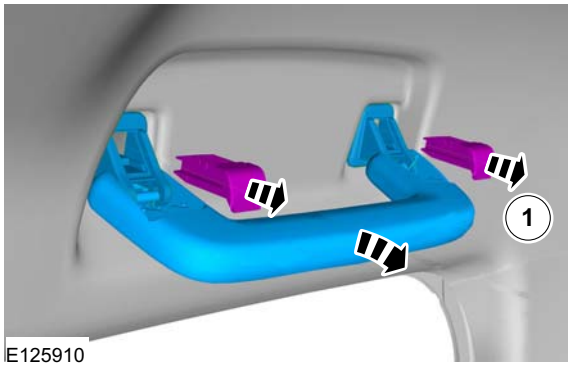

E125910

7.

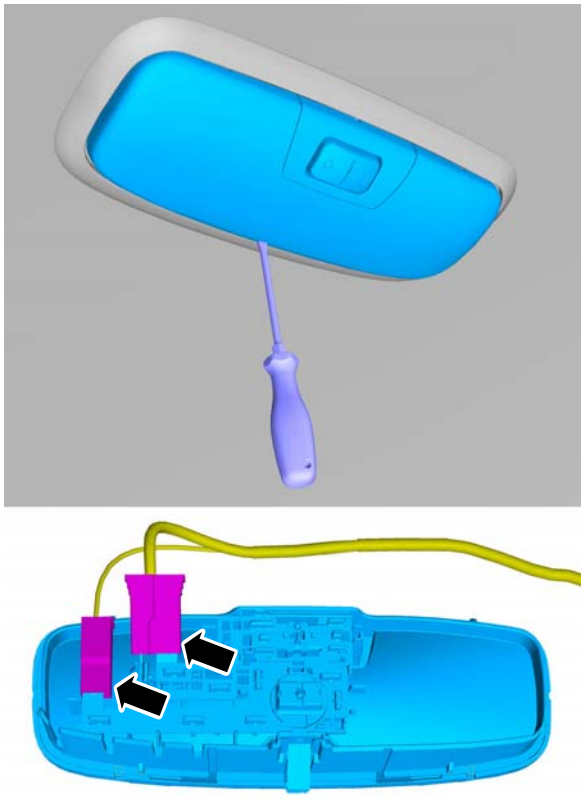
E125911

REMOVAL AND INSTALLATION

Vehicles with autolamps and rain sensor

8.

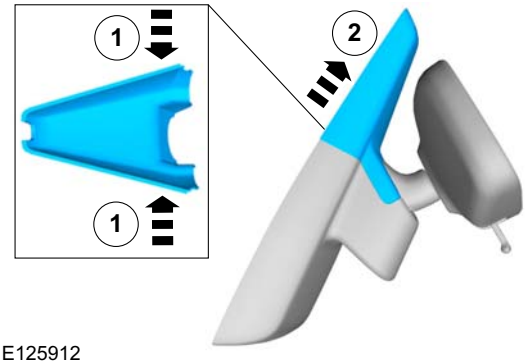

E125912

9.

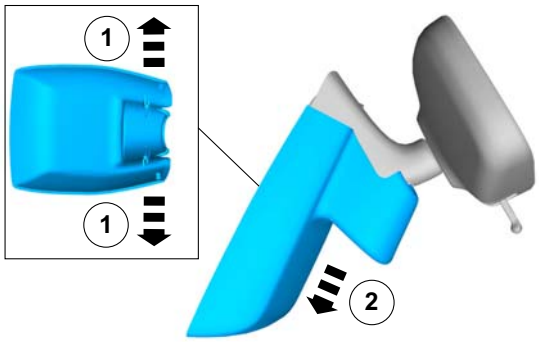

E125913

10.

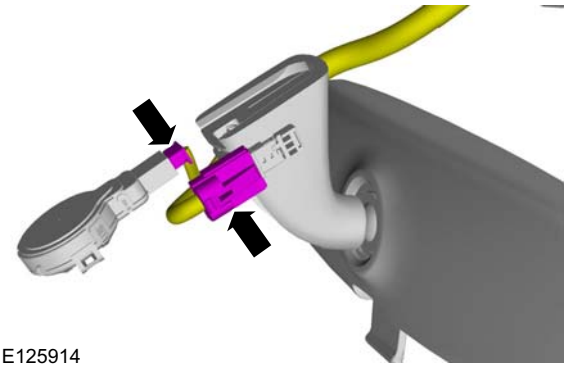
E125914

All vehicles

11. ⚠ **CAUTION: Take extra care not to crease the headliner.**

NOTE: Make a note of the routing of the antenna cable.

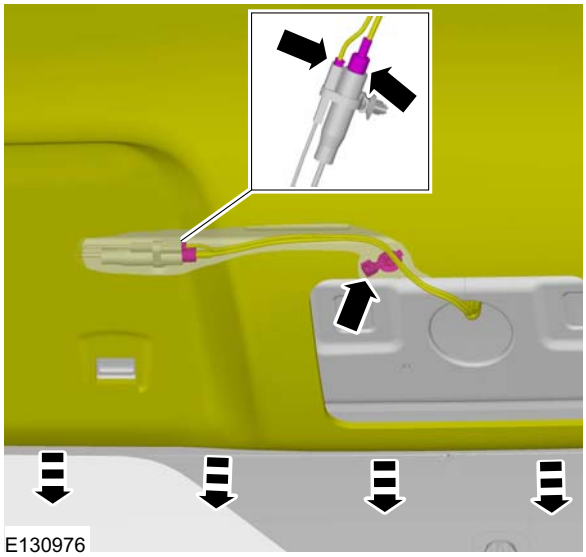
E130976

12. ⚠ **CAUTION: Take extra care not to crease the headliner.**

NOTE: Make a note of the routing of the antenna cable.

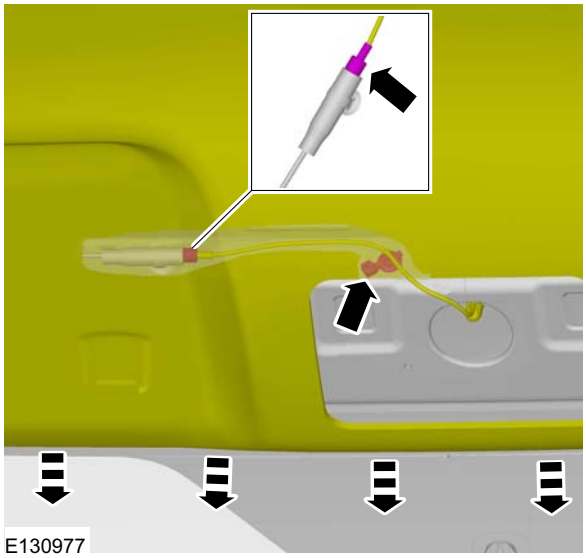
E130977

REMOVAL AND INSTALLATION

13.

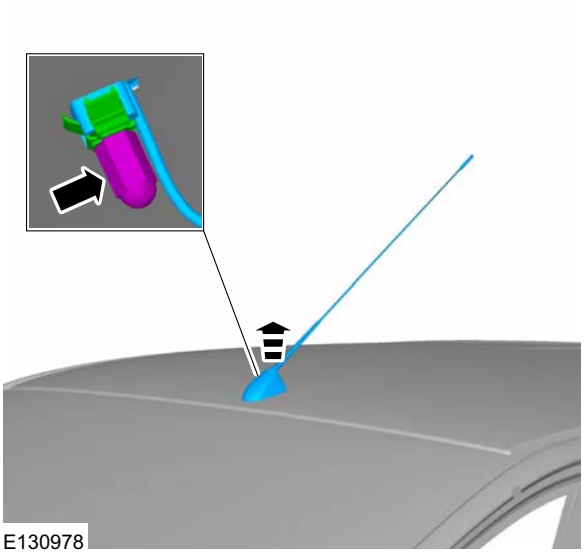

Installation

1. **NOTE:** The antenna cable must be installed to the same routing as when removed.

   To install, reverse the removal procedure.

REMOVAL AND INSTALLATION

Information and Entertainment Display Unit

Removal

NOTE: Removal steps in this procedure may contain installation details.

1. Refer to: Health and Safety Precautions (100-00 General Information, Description and Operation).
2. Refer to: Battery Disconnect and Connect (414-01 Battery, Mounting and Cables, General Procedures).
3.

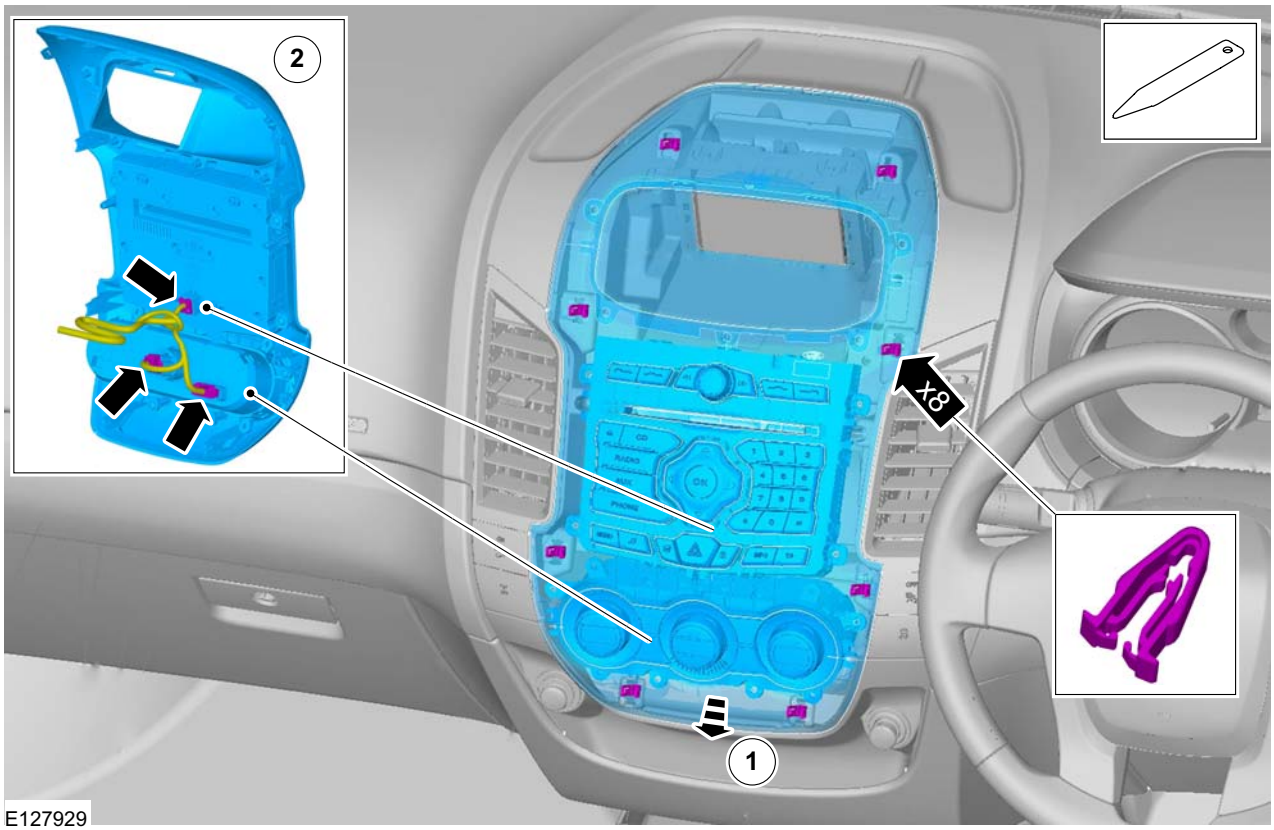

REMOVAL AND INSTALLATION

4.

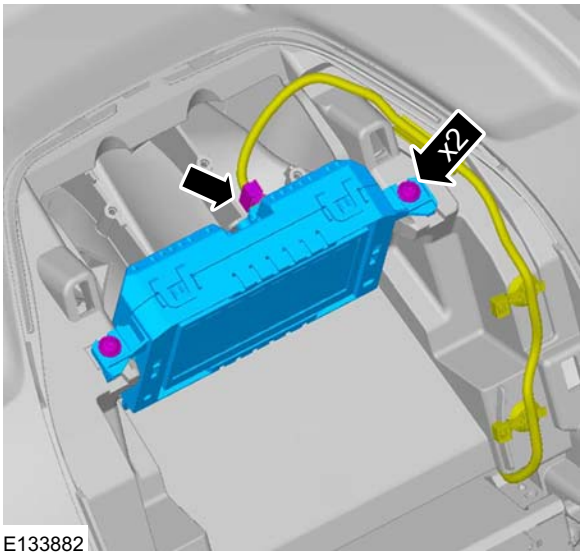

Installation

1. To install, reverse the removal procedure.

SECTION 417-01 Exterior Lighting

VEHICLE APPLICATION: 2011.50 Ranger

CONTENTS PAGE

DESCRIPTION AND OPERATION

Exterior Lighting..... 417-01-2

GENERAL PROCEDURES

Headlamp Adjustment..... 417-01-5
Front Fog Lamp Adjustment..... 417-01-7
Headlamp Masking..... 417-01-8

REMOVAL AND INSTALLATION

Headlamp Assembly..... 417-01-11
Front Fog Lamp..... 417-01-13
High Mounted Stoplamp..... 417-01-14
Rear Lamp Assembly..... 417-01-15
Trailer Module..... 417-01-17

DESCRIPTION AND OPERATION

Exterior Lighting

Front headlamps

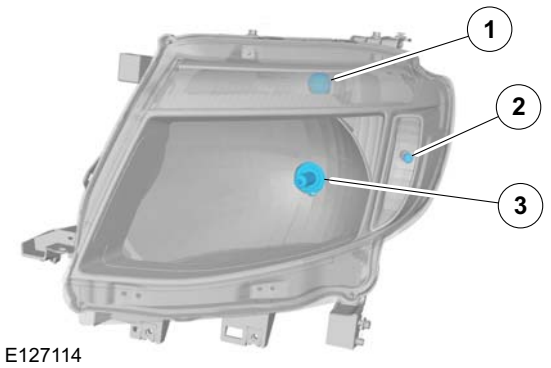

Item	Description
1	Direction indicator bulb
2	Parking / day time running lamp bulb
3	Headlamp bulb

The headlamps form a unit with the front turn signal lamps and the side lamps. They are made entirely of plastic and can only be replaced as a whole unit.

H4 bulbs with a power rating of 55W / 60W are used in the headlamps.

Front fog lamps

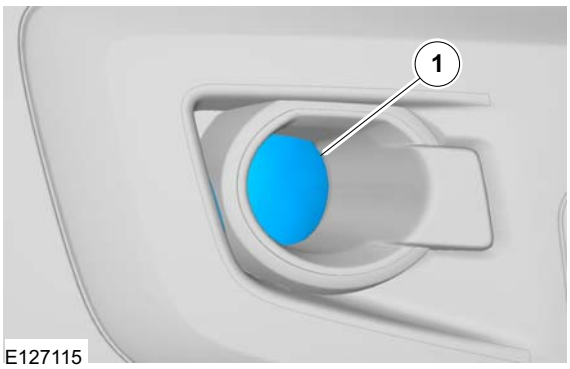

Item	Description
1	Front fog lamp bulb

Side repeater / turn signal lamps

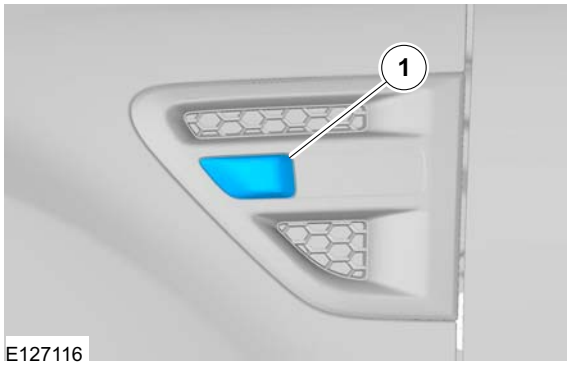

Item	Description
1	Side repeater lamp

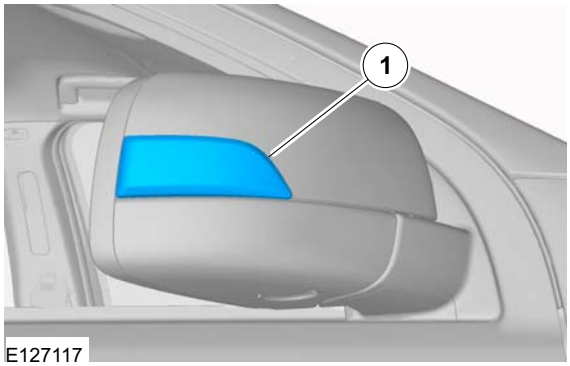

Item	Description
1	Direction indicator lamp

The direction indicator lamps are used to indicate a turn signal and for the hazard warning lights. They use a PY21W bulb colored yellow.

The sound generator for the acoustic turn signal check is integrated in the instrument cluster.

DESCRIPTION AND OPERATION

Puddle lamps

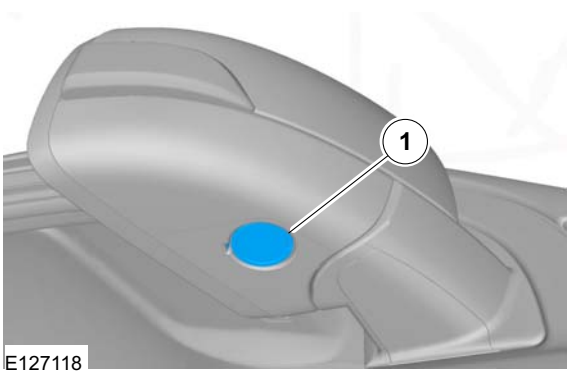

Item	Description
1	Puddle lamp

This illuminates the area where a passenger is going to step when the door is opened.

Rear combination lamps

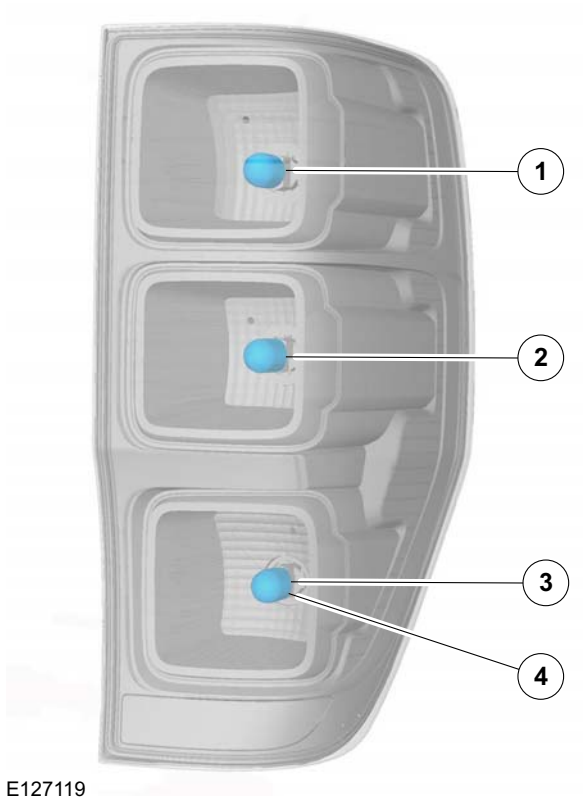

Item	Description
1	Side and brake lamp bulb
2	Direction indicator bulb
3	Reverse lamp bulb
4	Fog lamp bulb (Right for RHD)

Rear combination lamps (Chassis cab)

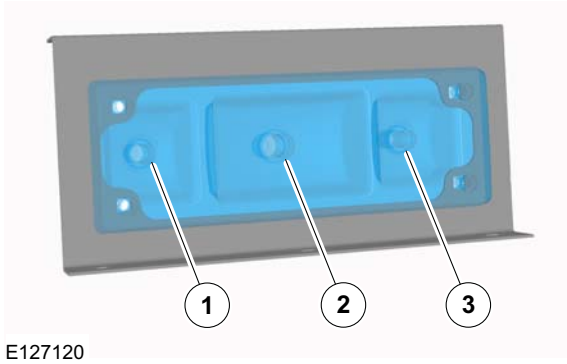

Item	Description
1	Direction indicator bulb
2	Side and brake lamp bulb
3	Reverse lamp bulb

The rear lamp clusters incorporate all rearward facing lights with exception of the license plate lamp and the additional high-mounted stoplamp.

The rear lamps can only be replaced as a complete unit.

The turn signal lamps are equipped with P21W bulbs.

Side and brake lamp bulbs are illuminated when the driver applies the brake.

The reversing lamps (21W bulb) are used to illuminate the road when reversing the vehicle. The rear fog lamp is illuminated when the front fog lamp switch is activated.

DESCRIPTION AND OPERATION

License plate lamp

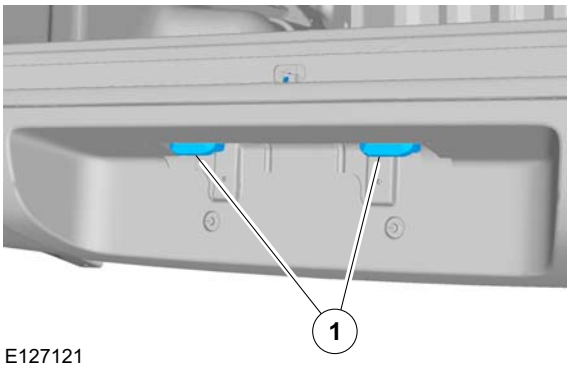

Item	Description
1	License plate lamp

Center high mounted stop lamp

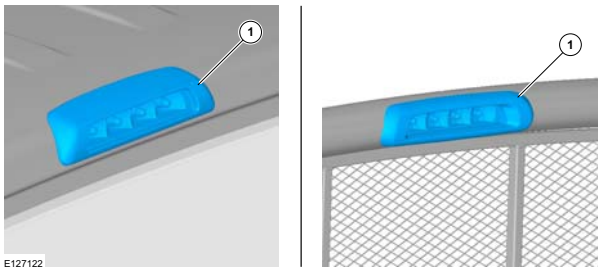

Item	Description
1	Center high mounted stop lamp

Four W5W glass base bulbs are used.

The stoplamps (21/W5W bulb) are switched on by the stoplamp switch on the brake pedal as soon as the brake pedal is depressed.

GENERAL PROCEDURES

Headlamp Adjustment

General Equipment

Headlamp Beam Setter

Activation

1. Adjust the tire pressure to the specification.
2. Position the unloaded vehicle on a flat, level surface.
3. Seat one person in the driver's seat.
4. Position the vehicle straight ahead and perpendicular to the white screen.
5. Repeatedly operate the headlamp leveling switch and then set it to "0".
6. Set the measuring screen of the beam setting equipment to the correct headlamp adjustment setting.

   General Equipment: Headlamp Beam Setter
7. **X:** 3 m [9.8 ft], **Y:** 1.2°, **Z:** 36 mm [1.4 inch].

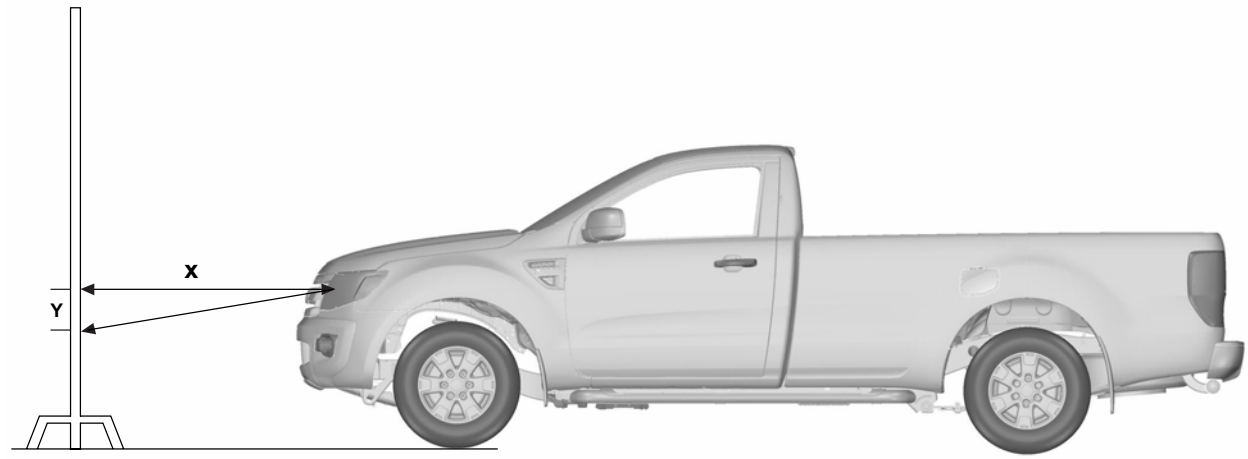

E136737

8. Place an object in front of the headlight not being adjusted to block its light beam.
9. Start the engine so that the battery remains charged.
10. Turn on the headlamp.
11. Adjust the headlight by loosening the adjusting screw as shown in the figure.

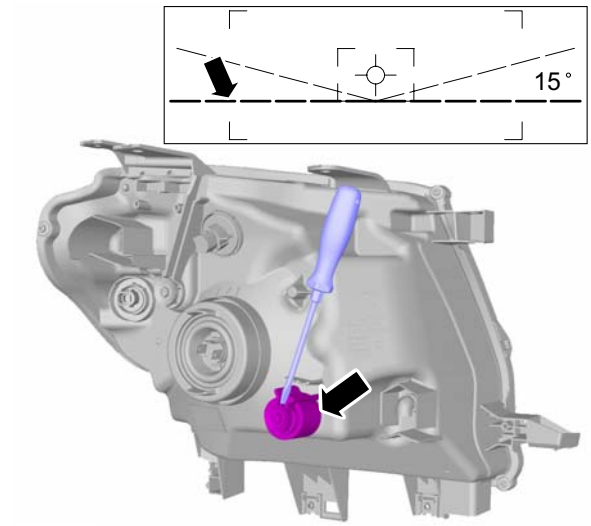

E129040

GENERAL PROCEDURES

12. Adjust the headlight by loosening the adjusting screw as shown in the figure.

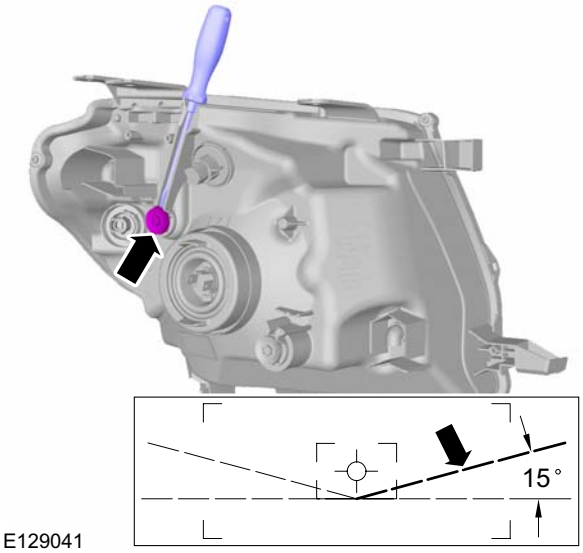

GENERAL PROCEDURES

Front Fog Lamp Adjustment

Activation

13. Make an adjustment screen using double-weight, white paper.
14. Adjust the tire pressure to the specification.
15. Position the unloaded vehicle on a flat, level surface.
16. Seat one person in the driver's seat.
17. **X:** 3 m [9.8 ft], **Y:** 2.0°, **Z:** 60 mm [2.4 inch].

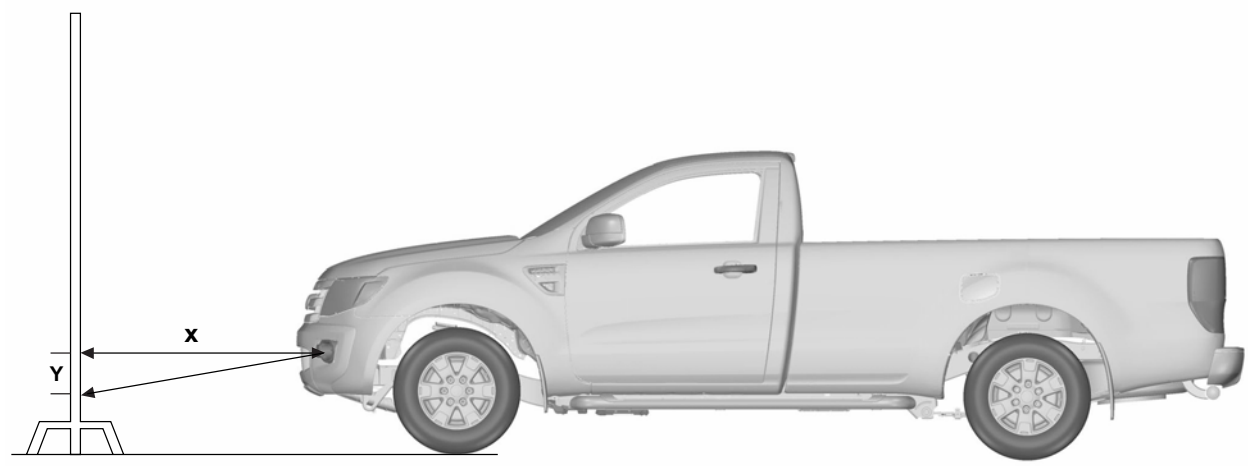

E136738

18. Place an object in front of the fog light not being adjusted to block its light beam.
19. Start the engine so that the battery remains charged.
20. Turn the front fog lights on.
21. Adjust the fog lamp so that the cut-off line touches the horizontal line.

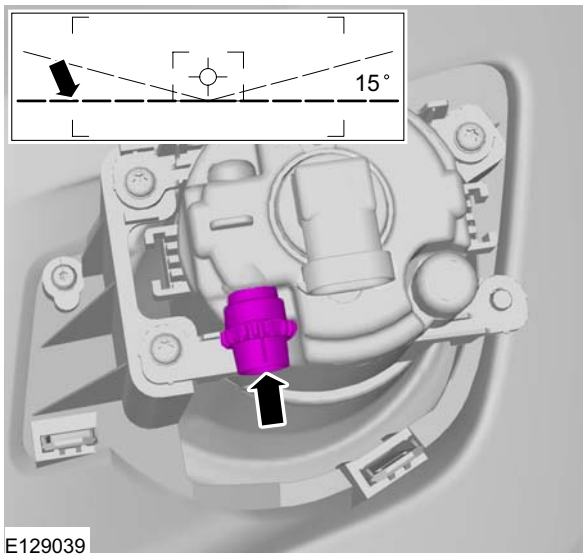

E129039

GENERAL PROCEDURES

Headlamp Masking

Activation

22. Print out the corresponding templates at the end of this operation.

23. Measure dimension X on the printout of the template.

24. Calculate the enlargement/reduction factor Y for the photocopier using the following formula: Y=Z÷X×100.

25.
- X = measurement on the printout of the template in mm.
- Y = enlargement/reduction factor in %.
- Z = original dimension in mm = 100.

26. Enlarge/reduce the printout with a photocopier by the calculated percentage.

27. Compare dimension X on the photocopy with the original dimension.

28. Cut out the prepared template for the headlamp.

Left-hand drive vehicles

29. Align the template on the lens of the headlamp.

30.
1. Inner alignment edge of the headlamp lens.
2. Upper alignment edge of the headlamp lens.
3. Alignment aid.
4. Template.

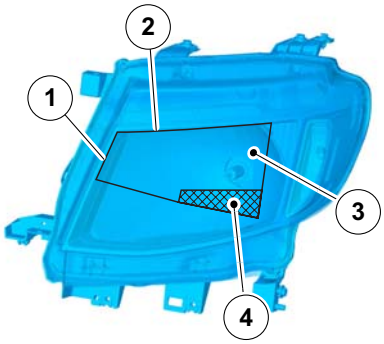

E137473

31. Align the template on the lens of the headlamp.

32.
1. Upper alignment edge of the headlamp lens.
2. Inner alignment edge of the headlamp lens.
3. Alignment aid.
4. Template.

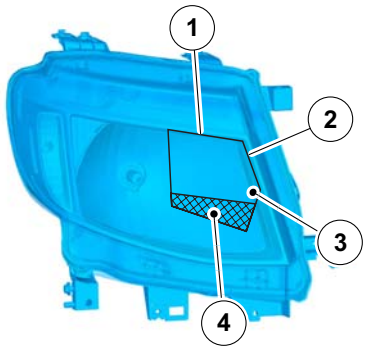

E137472

Right-hand drive vehicles

33. Align the template on the lens of the headlamp.

34.
1. Inner alignment edge of the headlamp lens.
2. Upper alignment edge of the headlamp lens.
3. Alignment aid.
4. Template.

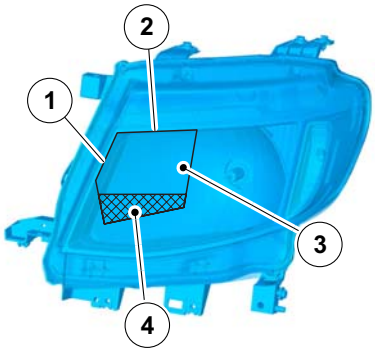

E137475

35. Align the template on the lens of the headlamp.

GENERAL PROCEDURES

36. 1. Upper alignment edge of the headlamp lens.
    2. Inner alignment edge of the headlamp lens.
    3. Alignment aid.
    4. Template.

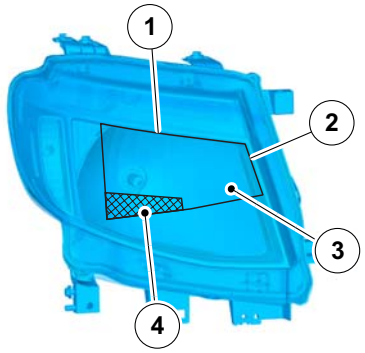

E137474

All vehicles

37. **CAUTION: Take extra care not to scratch the headlamp lens.**
    Copy the outline of the template with a white board marker onto the headlamp lens.

38. Remove the template.

39. Copy the outline of the template on to the black adhesive tape.

40. Cut out the shape of the template from the black adhesive tape.

41. Use the pre-marked outline of the template drawn on the head lamp lens as the final position of the template, and stick template into this position.

42. Repeat steps 16 to 20 for the other head lamp.

43. Template for LHD vehicles, left-hand headlamp.

44. 1. Inner alignment edge of the headlamp lens.
    2. Upper alignment edge of the headlamp lens.
    3. Alignment aid.
    4. Template.

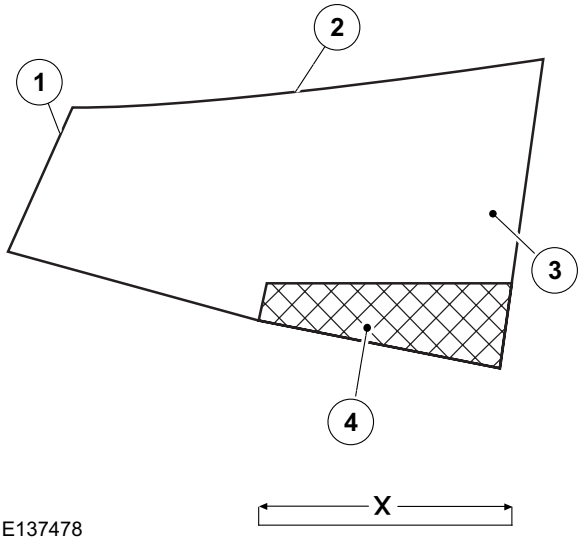

E137478

45. Template for LHD vehicles, right-hand headlamp.

46. 1. Upper alignment edge of the headlamp lens.
    2. Inner alignment edge of the headlamp lens.
    3. Alignment aid.
    4. Template.

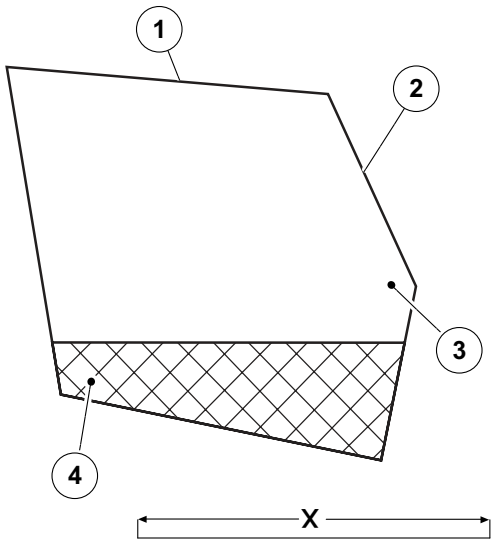

E137477

47. Template for RHD vehicles, left-hand headlamp.

GENERAL PROCEDURES

48. 1. Inner alignment edge of the headlamp lens.
    2. Upper alignment edge of the headlamp lens.
    3. Alignment aid.
    4. Template.

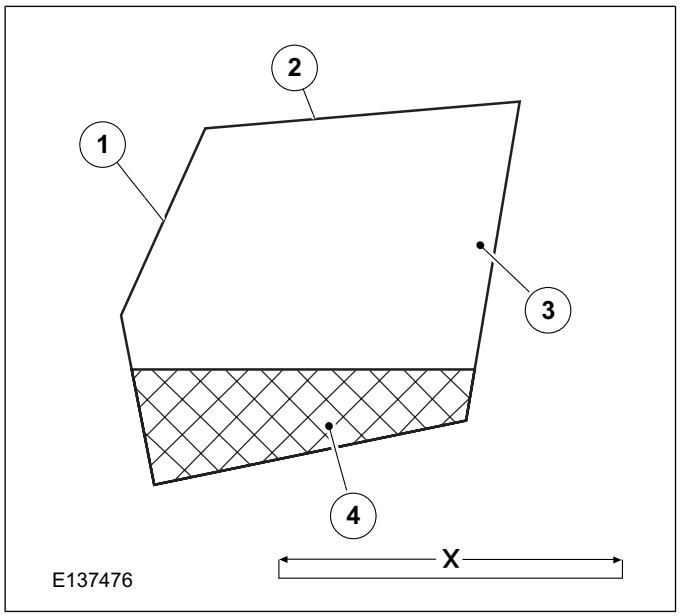

49. Template for RHD vehicles, right-hand headlamp.
50. 1. Upper alignment edge of the headlamp lens.
    2. Inner alignment edge of the headlamp lens.
    3. Alignment aid.
    4. Template.

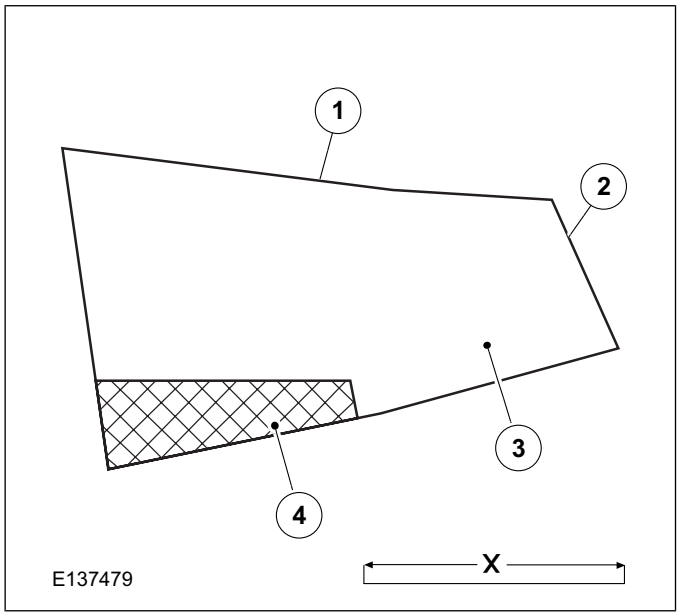

REMOVAL AND INSTALLATION

Headlamp Assembly

Removal

NOTE: Removal steps in this procedure may contain installation details.

1. Refer to: Battery Disconnect and Connect (414-01 Battery, Mounting and Cables, General Procedures).
2. Refer to: Front Bumper Cover (501-19 Bumpers, Removal and Installation).
3. 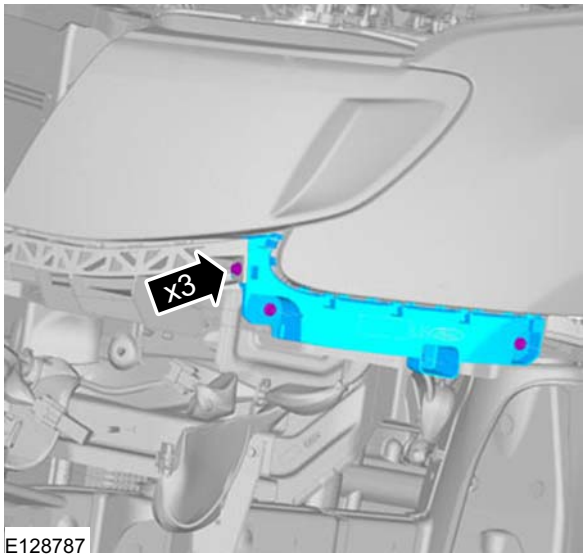

4.

REMOVAL AND INSTALLATION

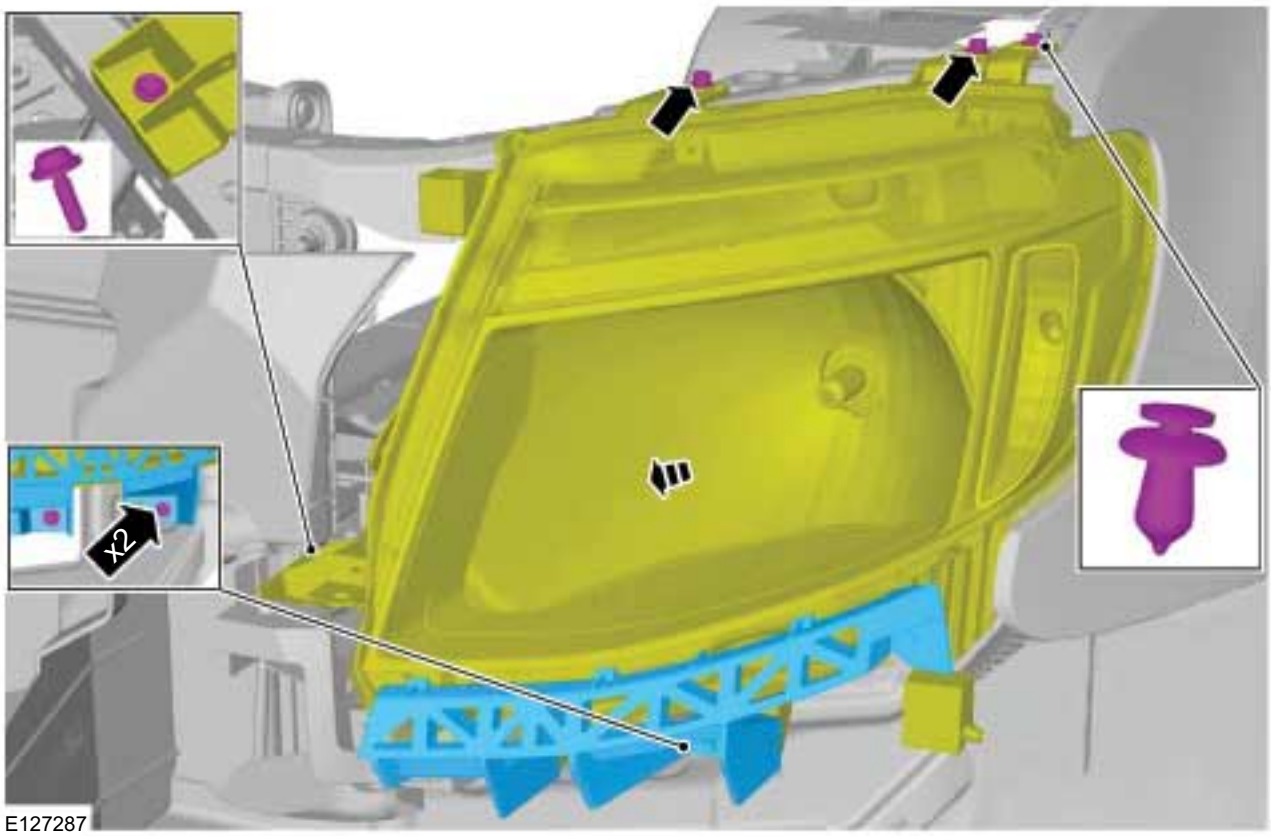

5.

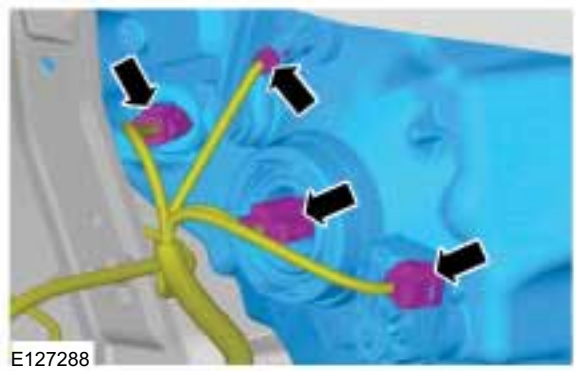

Installation

1. To install, reverse the removal procedure.
2. Refer to: Headlamp Adjustment (417-01 Exterior Lighting, General Procedures).

REMOVAL AND INSTALLATION

Front Fog Lamp

Removal

NOTE: Removal steps in this procedure may contain installation details.

1. Refer to: Battery Disconnect and Connect (414-01 Battery, Mounting and Cables, General Procedures).
2. Refer to: Lifting (100-02 Jacking and Lifting, Description and Operation).
3.

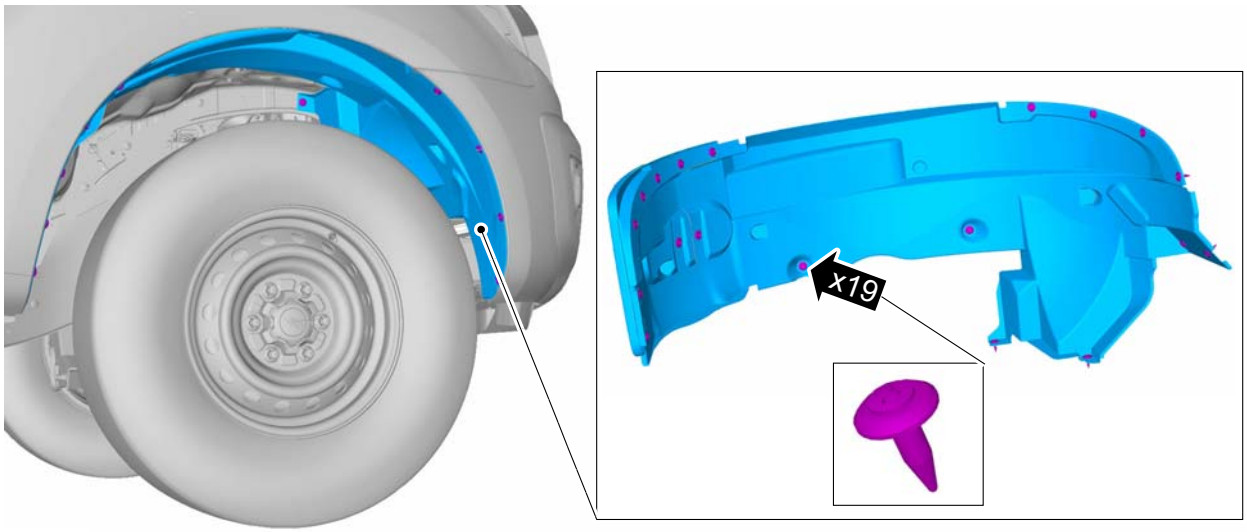

4.

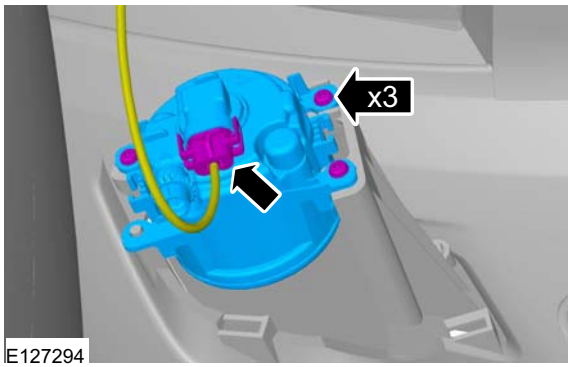

Installation

1. To install, reverse the removal procedure.
2. Refer to: Front Fog Lamp Adjustment (417-01 Exterior Lighting, General Procedures).

REMOVAL AND INSTALLATION

High Mounted Stoplamp

Removal

NOTE: Removal steps in this procedure may contain installation details.

1.

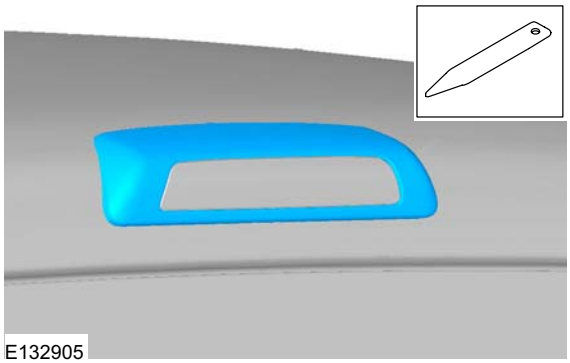

2.

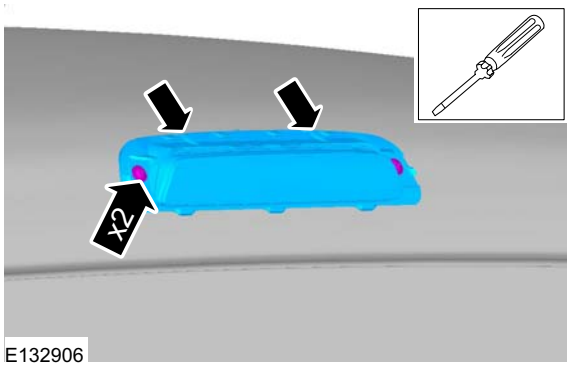

3.

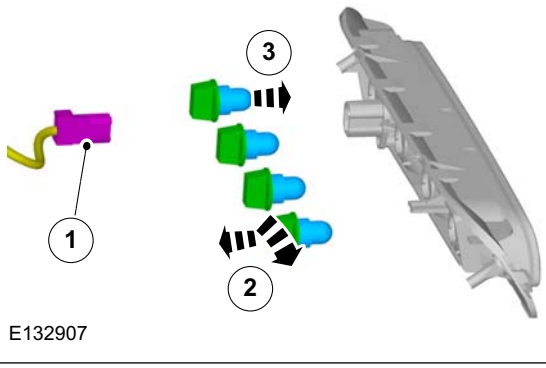

NOTE: Following steps are applicable to the vehicles fitted with tubular sports bar.

4.

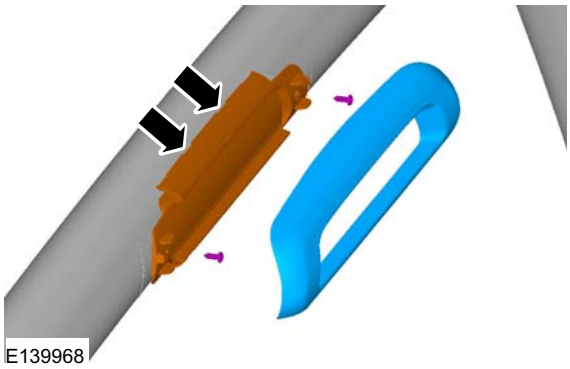

5.

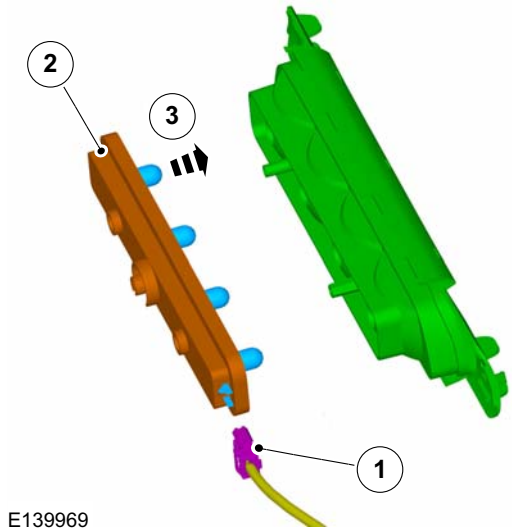

Installation

1. To install, reverse the removal procedure.

REMOVAL AND INSTALLATION

Rear Lamp Assembly

Removal

NOTE: Removal steps in this procedure may contain installation details.

1. Refer to: Battery Disconnect and Connect (414-01 Battery, Mounting and Cables, General Procedures).
2. Refer to: Lifting (100-02 Jacking and Lifting, Description and Operation).
3.

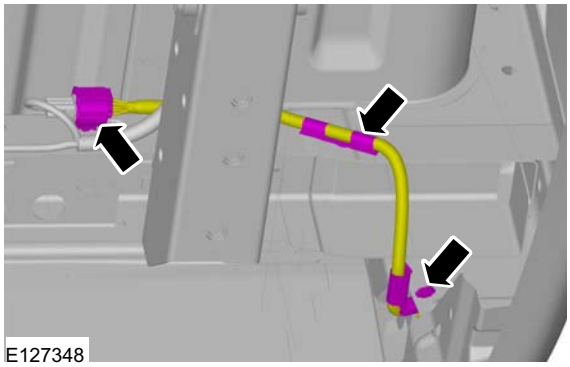

4.

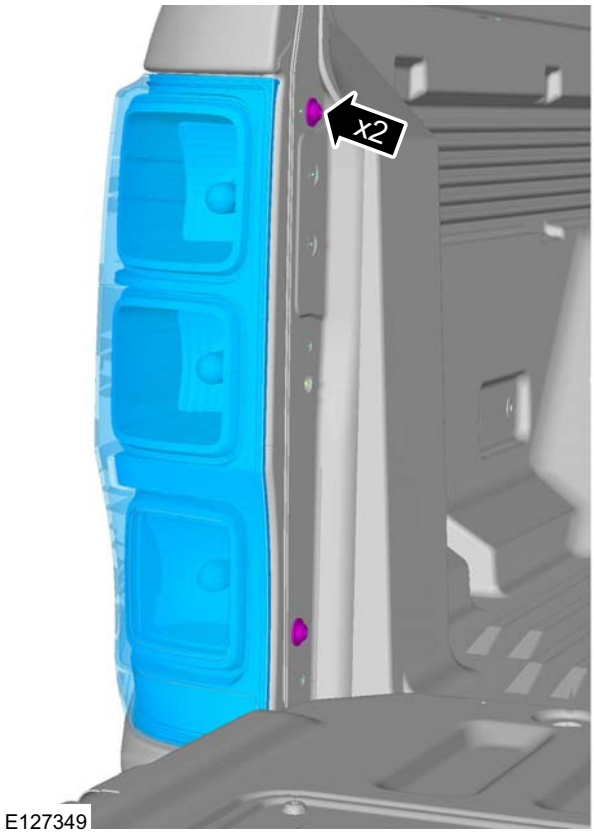

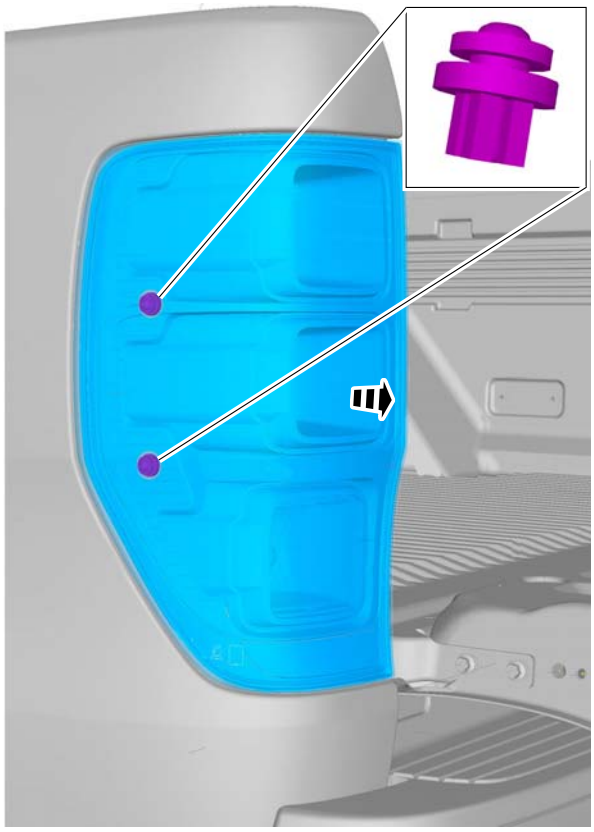

REMOVAL AND INSTALLATION

Installation

1. To install, reverse the removal procedure.

REMOVAL AND INSTALLATION

Trailer Module

Removal

NOTE: Removal steps in this procedure may contain installation details.

1. Refer to: Parking Aid Module (413-13 Parking Aid, Removal and Installation).

2.

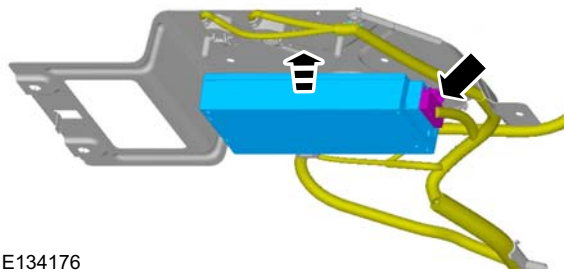

Installation

1. To install, reverse the removal procedure.

SECTION 417-02 Interior Lighting

VEHICLE APPLICATION: 2011.50 Ranger

CONTENTS PAGE

REMOVAL AND INSTALLATION

Center Interior Lamp..... 417-02-2

REMOVAL AND INSTALLATION

Center Interior Lamp

Removal

NOTE: Removal steps in this procedure may contain installation details.

1.

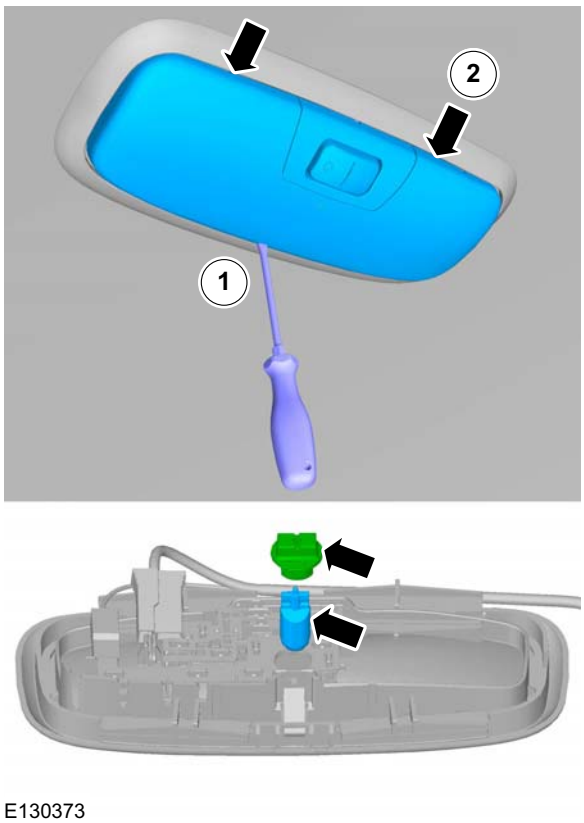

E130373

Installation

1. To install, reverse the removal procedure.

SECTION 417-04 Daytime Running Lamps (DRL)

VEHICLE APPLICATION: 2011.50 Ranger

CONTENTS PAGE

DESCRIPTION AND OPERATION

Daytime Running Lamps (DRL)..... 417-04-2

DESCRIPTION AND OPERATION

Daytime Running Lamps (DRL)

In areas in which daytime running lamps (DRL) are required by law, the body control module (BCM) switches on the DRL when the ignition is switched on.

The configuration in the BCM can be changed using the Integrated Diagnostic System (IDS). This makes aftermarket configuration of vehicles fitted with DRL possible (e.g. on customer request or in response to changes in the law).

Vehicles with DRL can be combined with autolamps.

SECTION 418-00 Module Communications Network

VEHICLE APPLICATION: 2011.50 Ranger

CONTENTS PAGE

DESCRIPTION AND OPERATION

Communications Network (Component Location)..... 418-00-2
Communications Network (Overview)..... 418-00-3
Network components..... 418-00-4
Controller area network (CAN)..... 418-00-4
Advantages of a network..... 418-00-4
The layout of the network..... 418-00-5
Network areas with high and low data transfer rates..... 418-00-5
Data transfer rates..... 418-00-5
Terminating resistor..... 418-00-6
Controller Area Network (CAN) Standard..... 418-00-6
The lines CAN H and CAN L..... 418-00-6
Priority..... 418-00-7
Two message types..... 418-00-7
Compatibility..... 418-00-8
Configurations..... 418-00-8
Error management in the Controller Area Network (CAN)..... 418-00-8
No communications from the module..... 418-00-8
Faulty communications..... 418-00-8
Local Interconnect Network (LIN)..... 418-00-9

DESCRIPTION AND OPERATION

Communications Network – Component Location

Information not available at this time.

DESCRIPTION AND OPERATION

Communications Network – Overview

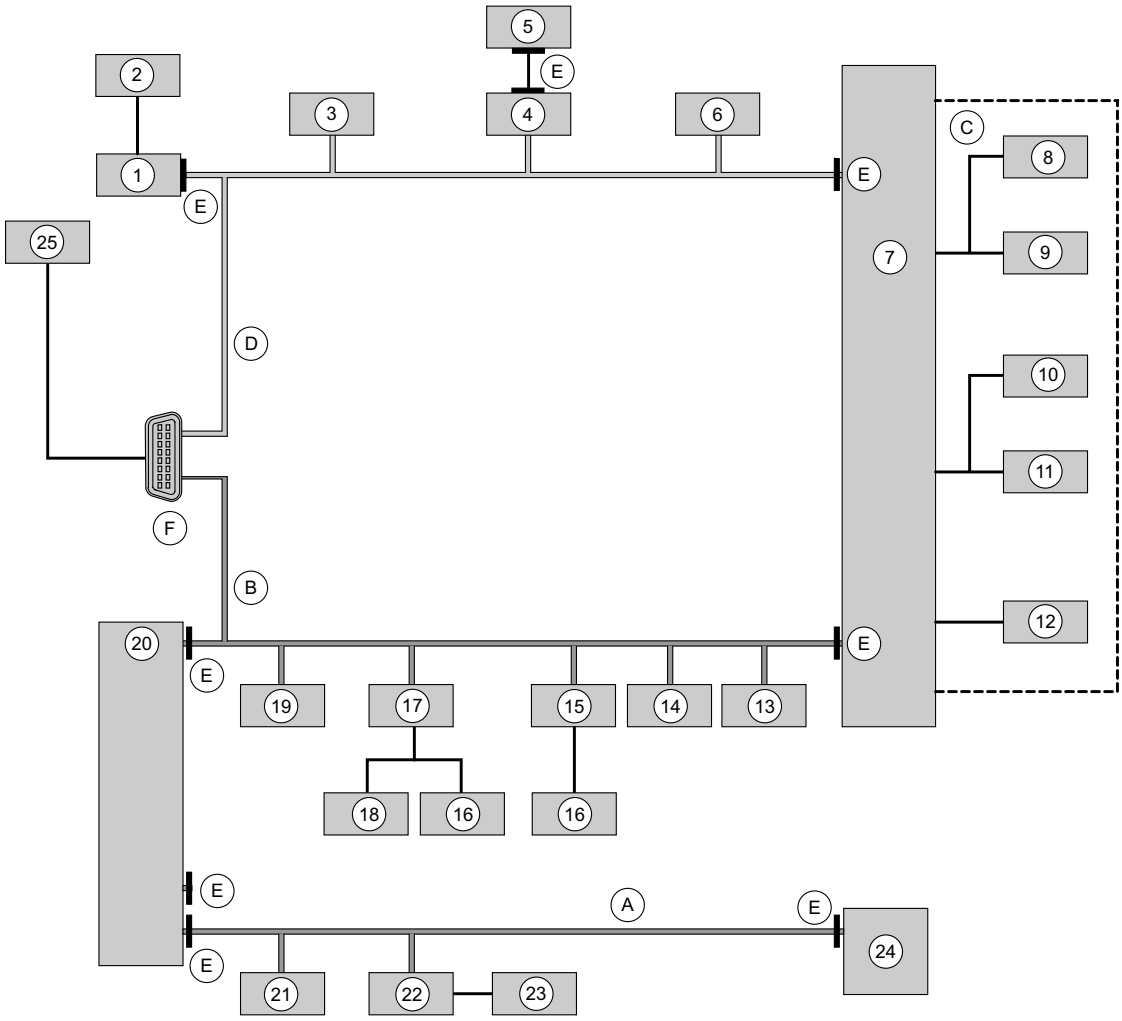

E140361

Item	Description
A	HS CAN bus (Infotainment)
B	MS CAN bus (Body side)
C	LIN bus (directly to the BCM)
D	HS CAN bus (Powertrain side)
E	Terminating resistors
F	DLC

Item	Description
1	Powertrain control module (PCM)
2	Alternator
3	Transmission control module
4	ABS module or ESP module
5	Steering angle sensor module
6	Restraints control module

DESCRIPTION AND OPERATION

Item	Description
7	Body control module (BCM)
8	Battery monitoring system
9	Rain sensor
10	Battery backed sounder
11	Interior motion sensor
12	Electric booster heater
13	Trailer module
14	Parking assist control module
15	Passenger front door module
16	Rear door module

Item	Description
17	Driver front door module
18	Multi-power window switch pack
19	Dual zone electronic temperature control
20	Instrument panel cluster
21	Bluetooth/Voice control
22	Multifunction display/Navigation multifunction display
23	Integrated control panel
24	Audio head unit
25	Tracking and blocking module

Network components

Dependent on the vehicle accessories version, two data bus systems are used:

- Controller Area Network (CAN) bus
- Local Interconnect Network (LIN) bus

Due to the increased number of modules and the resulting continued increase in data transfer, three different CAN bus systems are used. Essentially, they only differ in terms of their data transmission rates and application areas. In order to be able to distinguish between the individual CAN bus systems, the CAN bus system with the higher data transfer rate is referred to as the high-speed (HS) CAN bus, the CAN bus system(s) with the lower data transfer rate as the mid-speed (MS) CAN bus or multimedia (MM) CAN bus. The latter operate at a slower speed and are used primarily for communications in comfort electronics. Two interfaces (gateways) are used in order to exchange data between the HS CAN bus, MS CAN bus and the MM CAN bus. These provide the connection between the three CAN databus systems and are installed in the BCM and in the electronic instrument cluster.

The number of modules which are connected to the three databus systems depends on the equipment level of the vehicle.

Controller area network (CAN)

General

In the past, a separate cable was needed for every command and every message. The use of networks has enabled an increase in functionality without additional cables.

The demand for greater functionality in vehicles, both due to legal requirements and in order to meet customer demands, results in increasing complexity of vehicle systems.

The Controller Area Network (CAN) was developed as part of the effort to achieve greater flexibility of the electrical systems. It allows a large number of different control commands and messages to be sent and received on the same cable system.

The number of control commands and messages which can be processed by a network depends on factors like the data transfer rate and the length of the messages. The SMAX/Galaxy network, which is based on a Controller Area Network (CAN), is capable of transferring over 500 different signals and approx. 100 messages. These messages are also described as transmission blocks and may contain several signals.

Advantages of a network

Easy integration of additional functions and accessories

As the control modules in the network are already connected to each other and can easily accept further information, only the following steps are necessary:

DESCRIPTION AND OPERATION

- Connection of the sensors to the nearest control module
- Connection of the component which is to be actuated to the nearest control module
- Software-based adaptation of the module configuration

This means that the overall length of cabling and the number of components in a vehicle are reduced compared to before.

One example of this is the integration of the speed control system.

Before the introduction of the network, control modules, switches, vacuum pumps, vacuum servos, hoses and wiring harnesses were needed for this system.

Following introduction of the network, only one switch and the software for adaptation of the vehicle configuration are required.

Easier to introduce logical functions

The term "logical functions" is used to describe the concept whereby certain events trigger certain responses. For example, the system is programmed in such a way that if a tail lamp fails a message is sent via the Controller Area Network (CAN) to the electronic instrument cluster to warn the driver.

A logical function can be introduced by merely reprogramming the affected control modules. In the above case this would be the body control module (BCM) and the electronic instrument cluster. The number of components and cables remains the same.

Simple adaptation of systems to customer demands and market requirements

Vehicle functions can be adapted to customer demands and market requirements, e.g. in the case of the rear fog lamps. In some countries two rear fog lamps are used, whereas in other countries only one fog lamp is used on the driver's side. In the past it was necessary to stock different spare parts for different markets. Now a single part is sufficient to cover all markets - it just needs to be programmed for the specific market.

Use of similar basic systems for entire series

Similar networks (hardware) can be used for a wide variety of different vehicles.

The vehicles only differ in terms of:

- The individual components (modules, sensors, actuated components etc.) which are connected to the system.
- The task(s) of the components.
- The definition of the components as standard/optional/accessories.
- The configuration/programming of the system.

The layout of the network.

General

The network is made up of a range of control modules (these are also referred to as nodes) which are connected to each other via two communication cables. Each module has its own voltage supply and ground connection and receives messages and control commands via both communication cables.

In the event of a break in the circuit, the modules beyond the break cannot communicate with other parts of the network.

Network areas with high and low data transfer rates

The network consists of two parts. The area with the higher data transfer rate (HS CAN bus) transmits signals and messages between the body control module (BCM) and control modules which are mostly located in the engine compartment. The area with the lower data transfer rate (MS/MM CAN bus) transmits signals and messages between the body control module (BCM) and the control modules in the passenger compartment and in the luggage compartment.

The body control module (BCM) represents the interface between the two areas and converts the data transfer rate up or down to allow the two areas of the network to communicate with each other.

Data transfer rates

The Controller Area Network (CAN) uses two data transfer rates.

- The HS/MM CAN bus (high data transfer rate) transfers data at a rate of 500 kBit/s.
- The MS CAN bus (low data transfer rate) transfers data at a rate of 125 kBit/s. 1 kBit/s = 1024 Bit per second (1 Byte = 8 Bit).

DESCRIPTION AND OPERATION

Terminating resistor

In order to avoid reflections and interferences in the CAN bus network, a terminating resistor is provided for bridging purposes at both ends of the CAN. Each terminating resistor has a resistance value of 120 Ohm.

- For the HS CAN bus, the terminating resistors are located in the body control module (BCM) and in the powertrain control module (PCM).
- For the MS/MM CAN bus, the terminating resistors are located in the body control module (BCM) and in the electronic instrument cluster.

The two resistors are connected in parallel. The resistance values are as follows:

- When the CAN bus is intact, the resistance is approx. 60 Ohm in both areas of the network.
- In the event of a short circuit between the communication lines the resistance is approx. 0 Ohm.

Controller Area Network (CAN) Standard

General

The CAN bus is a standardized system for multiplex communication. This means that multiple control modules can use the same wires for communication without causing interference between the different signals.

The Controller Area Network (CAN) Standard specifies the following:

- The use of two wires (CAN H and CAN L)
- The voltage amplitudes
- The structure of the messages
- The way in which transmission faults are handled

The lines CAN H and CAN L

The lines CAN H and CAN L must not be confused with the different data transfer rates HS CAN bus and HS CAN bus. The lines CAN H and CAN L are the paths on which signals are transmitted within the multiplex communication system.

Communications take place at different voltages via two separate wires which are twisted in pairs. As a result, the network is less susceptible to interference.

The same message is put out at the same time on both wires with different voltages.

- Binary signal 0 = 2.5V on CAN H and on CAN L
- Binary signal 1 = 4V on CAN H and 1V on CAN L

The average potential difference between CAN L and ground is approx. 2.3V, or approx. 2.8V between CAN H and ground.

These measured values refer to "normal" communications in the Controller Area Network (CAN), i.e. cases in which no faults have occurred which would cause the modules to send out error messages.

NOTE: Certain modules, such as the restraints control module (the module for the SRS system) and the ABS module or ESP module communicate with their relevant sensors via a so-called internal CAN bus. The internal CAN bus systems have nothing to do with the communications on the general CAN bus. Instead, they are only used for the purpose of transmitting data between sensors and associated modules.

DESCRIPTION AND OPERATION

Messages in the Controller Area Network (CAN)

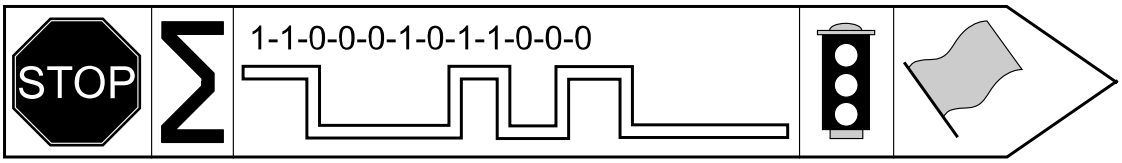

E71205

A message comprises the following parts:

- An identifier which indicates the identity and priority of the message
- Information data (value, information etc.)
- A check sum which is used to check whether the message is received in full
- And end signal which signals the end of the message

A complete CAN message is referred to as a signal frame.

Priority

Conflicts may arise in a network if several control modules try to send messages at the same time as each other. This could for example be the case if the driver applied the brakes while the front passenger adjusted the A/C settings and a rear passenger operated the electric rear window regulators. The messages need to be prioritized so that safe operation can be ensured. In addition, any delays arising as a result of the prioritization process must be kept within limits so that the customer preferably does not notice them at all.

In order to avoid conflicts and delays and to ensure perfect operation of the systems, a fixed ranking order applies to the messages.

The priority of a message is defined by the number of zeros at the start of the message; the more zeros, the higher the priority.

Prioritization takes place as follows:

- If the network is available, all modules waiting to send a message deliver the first bit of their message.
- All modules register the signals sent out on the network.
- If a zero is sent out by a module then the modules which sent out a "1" wait until the network is available again.
- The modules with a zero then send the second bit of their message.
- If a zero is sent out by a module as its second bit then the modules with a "1" wait until the network is available again. This process is repeated.

The message with the highest priority, i.e. the message with the largest number of zeros at the start, is sent first.

The end of a message is made up of seven zeros. It shows the modules that the network is free again and that messages can be sent out again according to their priority.

Two message types

Two types of message are sent in the system:

DESCRIPTION AND OPERATION

- Periodic signal frames are sent regularly to indicate the current status of a parameter. They are used for types of information which change frequently, e.g. vehicle speed signals.
- Event-related signal frames are only sent if certain conditions are met. They are used for types of information which occur more rarely, e.g. the opening or closing of a window.

The messages may also incorporate an update bit which shows how "new" the message is.

The system always assumes that the messages reach the intended recipient, so no receipt acknowledgement signals are sent out. Replies are only sent in response to direct queries from other modules.

However, a receiver module also knows how often it should receive a particular status message. If the message is not received then the receiver module can launch an emergency running program and/or set a trouble code (DTC).

Compatibility

The modules must all speak the same language and be compatible with each other. As a result, a standardized communication protocol is used.

The language of the modules is contained in the signal configuration. If the signal configuration of a module does not match the configuration of the other modules than the module cannot communicate with them. This means that all modules must have a compatible signal configuration.

In order to check this, the body control module (BCM) sends out an identification number for its signal configuration via the Controller Area Network (CAN). The other modules compare this number to their own number. If the identification does not match then the module stores a trouble code (DTC). The signal configuration is changed occasionally, so that new messages are added and old ones are removed.

Configurations

The following information is downloaded when a system is configured:

- Type of control modules contained (e.g. body control module (BCM)) - task assignments for the individual modules (e.g. this is the module for the driver's door))
- Functions contained (e.g. alarm function on or off)
- Connected components (e.g. whether or not the inclination sensor is relevant for the alarm function)
- Output an input messages for each module
- Storage locations for various data

The configuration needs to be adapted for any accessories which are installed and needs to be downloaded again if a module is replaced. The diagnostic unit is used for adaptation and downloading.

NOTE: Two vehicles which otherwise appear identical may behave differently if they have different configurations. Parameters may have been changed by the customer or by the workshop.

Error management in the Controller Area Network (CAN)

General

The Controller Area Network (CAN) is monitored by the body control module (BCM). If the BCM detects a fault in the CAN bus then a trouble code (DTC) is stored in the BCM. There are different types of DTC according to the fault type:

- No communications from the module
- Faulty communications

No communications from the module

The body control module (BCM) knows which modules are in the Controller Area Network (CAN) and checks whether all modules are communicating. If a module is not communicating a trouble code (DTC) is set in the BCM. There is a trouble code (DTC) for every module.

Faulty communications

If the Controller Area Network (CAN) is in operation then the body control module (BCM) continuously monitors the flow of information in the network. If the BCM determines that, for some reason, the communications in the CAN bus are interrupted, it can set a trouble code (DTC). The BCM has trouble codes for all parts of the CAN bus (one each for the HS CAN bus and the MS/MM CAN bus).

DESCRIPTION AND OPERATION

With the exception of the BCM, which only knows one type of DTC, each module uses two types of DTC in relation to communication faults. These are:

- Faulty messages
- Faulty configuration

As the BCM is the main module in the network, it does not have a DTC for faulty configuration.

Faulty messages

The control modules continuously monitor the flow of information in the Controller Area Network (CAN). If a module receives a message it cannot interpret it sends a fault message via the CAN bus. The modules also have function which allows them to detect any faulty messages they generate themselves. This prevents interference on the CAN bus. If there is a lot of interference in the network then any modules which cannot communicate properly can switch themselves off. This status is referred to as "databus OFF" - the module can no longer send or receive information.

To prevent the vehicle from coming to a sudden standstill or suffering a total loss of particular functions if a fault occurs in the CAN bus, certain modules have an emergency running mode. This means that modules which are required for driving or for safety aspects (e.g. the powertrain control module (PCM) or the transmission control module (TCM)) can maintain a restricted functionality on the basis of predefined or estimated data. For example, if communications to the transmission control module (TCM) are interrupted then the transmission will use a preselected gear which will enable the customer to at least drive to the nearest workshop.

A module remains in "databus OFF" mode until the power supply to the module is switched off, or a module determines that the "databus OFF" condition no longer exists. If the power supply is reconnected the module attempts to re-establish communications.

Faulty configuration

The body control module (BCM) transmits its configuration ID within the messages it sends out to other modules. To enable the modules in the Controller Area Network (CAN) to communicate with each other they must have the same configuration ID, as modules only look at messages carrying their own configuration ID. If the signal configuration of a module does not match the signal configuration of the BCM then a trouble code (DTC) is stored in the module with the faulty configuration.

NOTE: A module will save a trouble code (DTC) if it does not receive any messages from the engine control module (ECM). This also applies if there are any software errors in the module. If the circuit in the Controller Area Network (CAN) is interrupted then certain modules will also not receive any messages from the ECM.

NOTE: A module will save a trouble code (DTC) if it does not receive any messages from the body control module (BCM). This also applies if there are any software errors in the module. If the circuit in the Controller Area Network (CAN) is interrupted then certain modules will also not receive any messages from the BCM.

Local Interconnect Network (LIN)

The Local Interconnect Network (LIN) bus is a standard which has been developed for cost-effective communications between intelligent sensors and actuators in motor vehicles. LIN is used wherever the bandwidth and versatility of CAN is not required.

The LIN specification comprises the LIN protocol, a standard format for describing a complete LIN network and the interface between a LIN network and the application.

A LIN network is made up of a LIN master and one or more LIN slaves.

The LIN network utilizes the master/slave principle for the purpose of bus access control. This has the significant advantage that few resources (CPU performance, ROM, RAM) are required for bus management in the slave module. The master is implemented in a control module or a gateway which has the necessary resources. All communication is initiated by the master. Consequently, a message always consists of a header, which is generated by the master, and a response from the slave.

The data transfer rate is in the region of up to 20 Kbit/s.

The LIN master knows the time sequence of all data which are to be transmitted. These data are transmitted by the corresponding LIN slaves (e.g. ultrasonic sensors) when requested to do so by the LIN master.

LIN is a single-wire bus, i.e. the data are transmitted across a single-stranded cable. Usually the same cable is also used to provide the supply voltage. The ground connection of the supply voltage also acts as the ground connection of the

DESCRIPTION AND OPERATION

data transmission. No terminating resistors are used in the LIN network.

SECTION 418-01 Module Configuration

VEHICLE APPLICATION: 2011.50 Ranger

CONTENTS PAGE

DESCRIPTION AND OPERATION

Module Configuration (Overview)..... 418-01-2
Central module configuration..... 418-01-2

DESCRIPTION AND OPERATION

Module Configuration – Overview

Central module configuration

Previously, the modules in the vehicle have been configured with the aid of the diagnostic unit and the "Module Programming" function (Inhale/Exhale). Here, the actual status of each module is read into the diagnostic unit and then transferred into the new module.

In this vehicle, a new form of module configuration is used, known as "central module configuration".

Here, all the required configuration parameters are stored in the BCM (body control module) at the factory, and from there they are transmitted to the individual modules via the CAN (controller area network).

The diagnostic unit is equipped with a new routine for performing the central module configuration which is used to replace or subsequently change configuration data. Instead of reading the data into the diagnostic unit as was done in the past, they are transferred directly to the relevant module by the BCM. The diagnostic unit is only needed for starting and monitoring the process.

For security reasons, all the configuration data of the BCM is also stored in the instrument cluster. This means that if the BCM is replaced, the required configuration data can be read out from the instrument cluster using the diagnostic unit and transferred to the new BCM.

All modules independently check configuration data for consistency, and store a DTC (diagnostic trouble code) in the event of a fault.

In the event of a fault the functionality of a particular module may be restricted.

When installing a new BCM, it is necessary to reprogram the keys for the radio remote control and for PATS (passive anti-theft system). The procedure here remains the same.

SECTION 418-02 Wiring Harnesses

VEHICLE APPLICATION: 2011.50 Ranger

CONTENTS PAGE

REMOVAL AND INSTALLATION

Instrument Panel Wiring Harness..... 418-02-2
Passenger Compartment Wiring Harness..... 418-02-4
Engine Wiring Harness — 2.5L Duratec-HE (122kW/165PS) - MI4..... 418-02-22
Engine Wiring Harness — 2.2L Duratorq-TDCi (88kW/120PS) - Puma/2.2L Duratorq-TDCi (96kW/130PS) - Puma/2.2L Duratorq-TDCi (110kW/150PS) - Puma..... 418-02-25
Engine Wiring Harness — 3.2L Duratorq-TDCi (148kW/200PS) - Puma..... 418-02-30

REMOVAL AND INSTALLATION

Instrument Panel Wiring Harness

Removal

WARNING: Make sure that the vehicle electrical system is fully depowered and no other power source is connected.

NOTE: Removal steps in this procedure may contain installation details.

1. Refer to: Supplemental Restraint System (SRS) Health and Safety Precautions (100-00 General Information, Description and Operation).
2. Refer to: Instrument Panel - RHD 4WD/RHD RWD (501-12 Instrument Panel and Console, Removal and Installation).
3. Refer to: Instrument Panel (501-12 Instrument Panel and Console, Disassembly and Assembly).
4. 1. Torque: 11 Nm
   2. Torque: 11 Nm

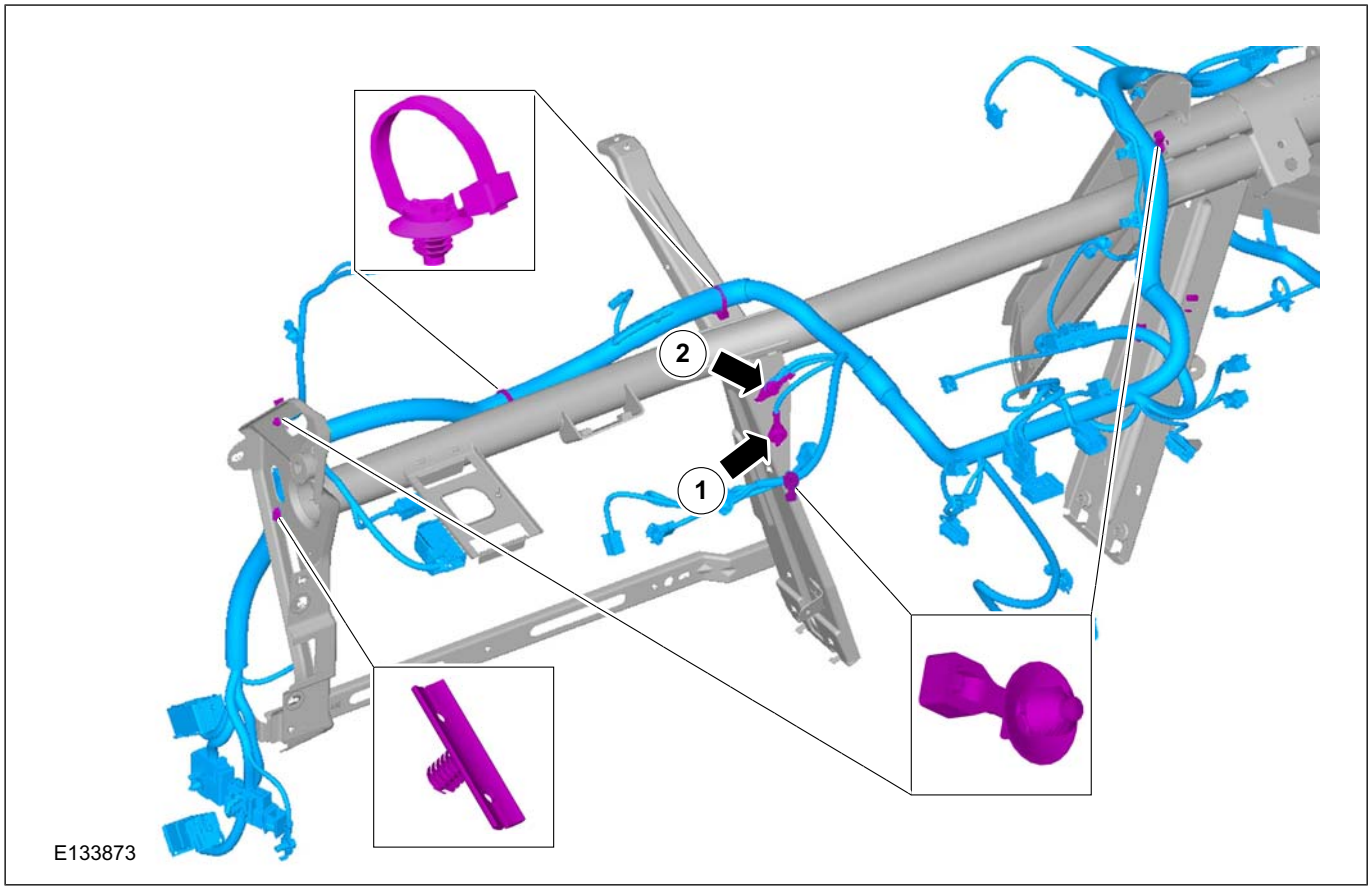

5. 1. Torque: 11 Nm

REMOVAL AND INSTALLATION

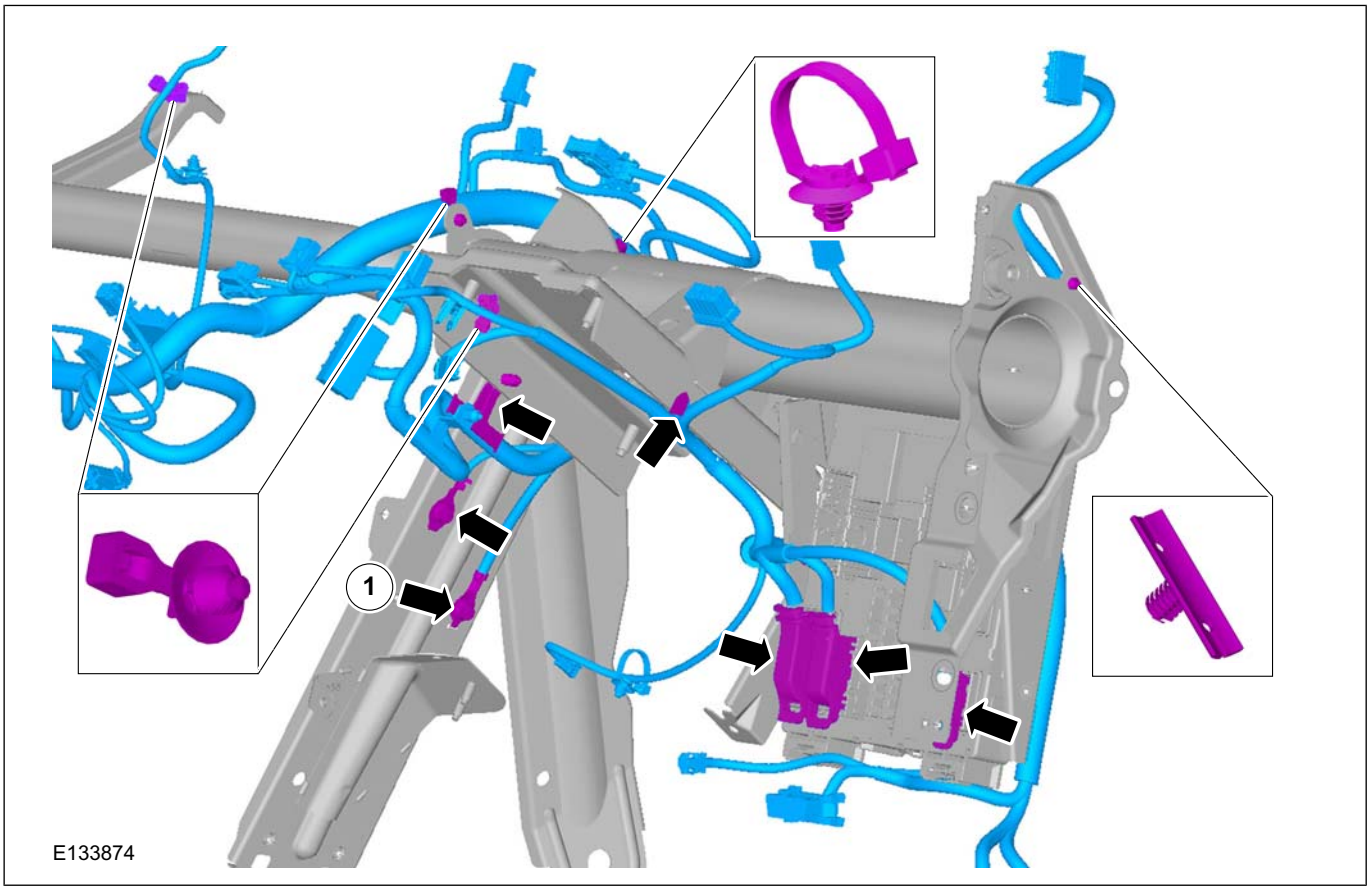

Installation

1. To install, reverse the removal procedure.

REMOVAL AND INSTALLATION

Passenger Compartment Wiring Harness

Removal

1. Refer to: Battery Tray (414-01 Battery, Mounting and Cables, Removal and Installation).

2. Refer to: Instrument Panel - LHD 4WD/LHD RWD (501-12 Instrument Panel and Console, Removal and Installation).
   Refer to: Instrument Panel - RHD 4WD/RHD RWD (501-12 Instrument Panel and Console, Removal and Installation).

3. Refer to: Heater Core and Evaporator Core Housing (412-01 Climate Control, Removal and Installation).

4. Refer to: Air Cleaner - 2.2L Duratorq-TDCi (88kW/120PS) - Puma/2.2L Duratorq-TDCi (96kW/130PS) - Puma/2.2L Duratorq-TDCi (110kW/150PS) - Puma (303-12 Intake Air Distribution and Filtering - 2.2L Duratorq-TDCi (88kW/120PS) - Puma/2.2L Duratorq-TDCi (96kW/130PS) - Puma/2.2L Duratorq-TDCi (110kW/150PS) - Puma/3.2L Duratorq-TDCi (148kW/200PS) - Puma, Removal and Installation).
   Refer to: Air Cleaner - 3.2L Duratorq-TDCi (148kW/200PS) - Puma (303-12 Intake Air Distribution and Filtering - 2.2L Duratorq-TDCi (88kW/120PS) - Puma/2.2L Duratorq-TDCi (96kW/130PS) - Puma/2.2L Duratorq-TDCi (110kW/150PS) - Puma/3.2L Duratorq-TDCi (148kW/200PS) - Puma, Removal and Installation).
   Refer to: Air Cleaner (303-12 Intake Air Distribution and Filtering - 2.5L Duratec-HE (122kW/165PS) - MI4, Removal and Installation).

5.

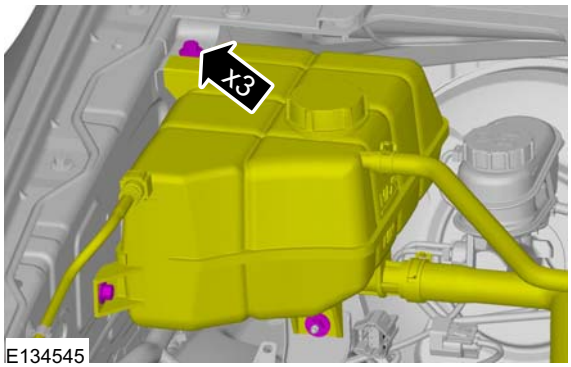

6.

REMOVAL AND INSTALLATION

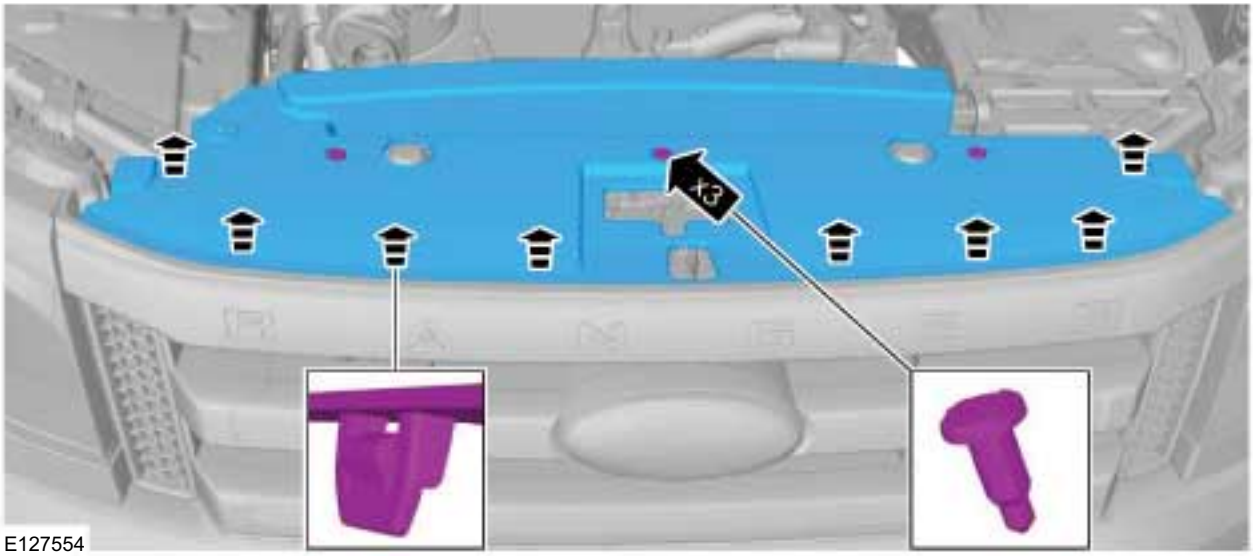

7.

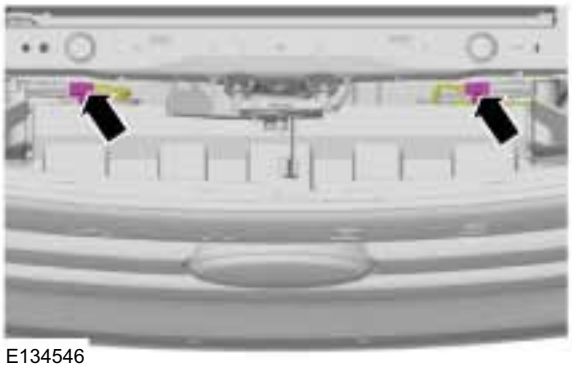

8. On both the sides.

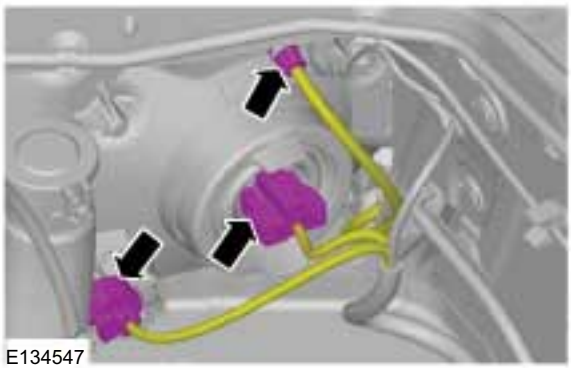

9. On both the sides.

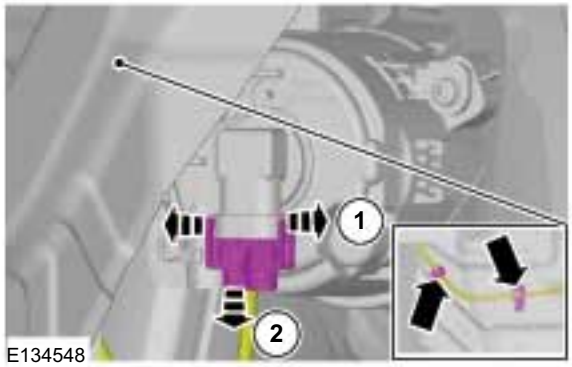

10. On both the sides.

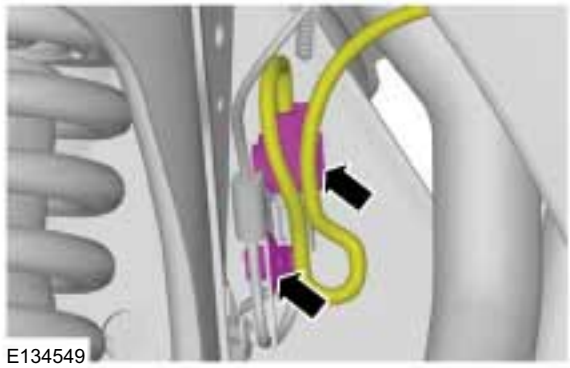

REMOVAL AND INSTALLATION

11.

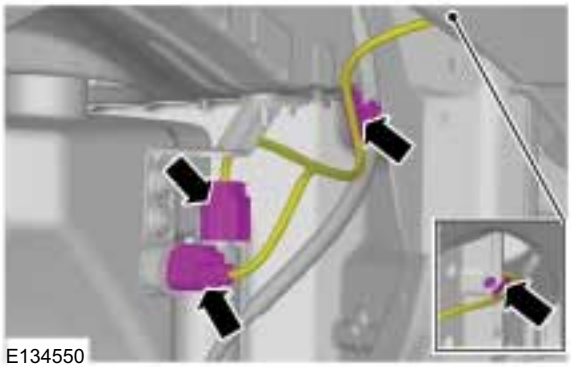

12.

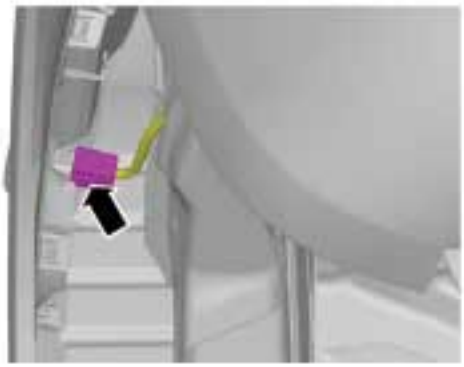

13. Torque: 10 Nm

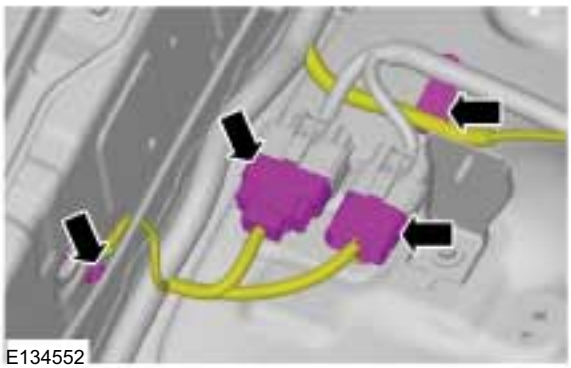

14.

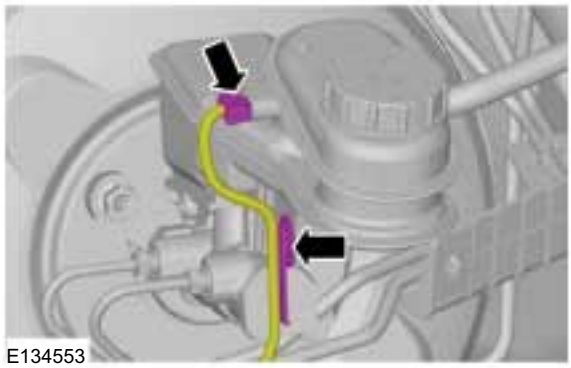

15. Torque: 10 Nm

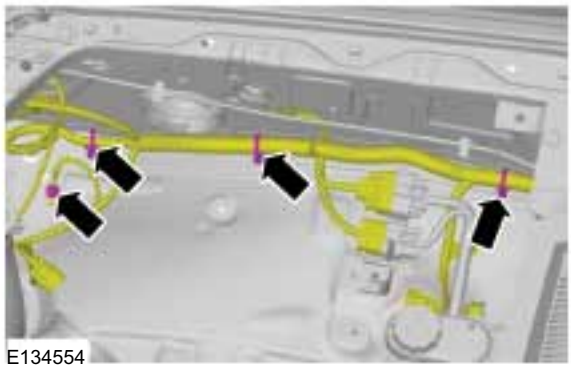

16.

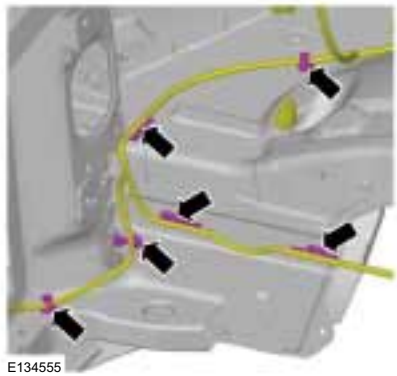

REMOVAL AND INSTALLATION

17.

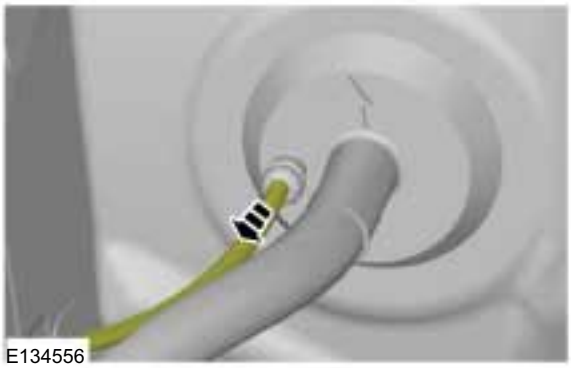

19.

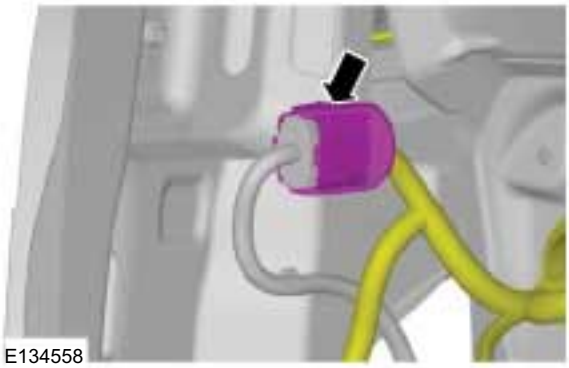

18.

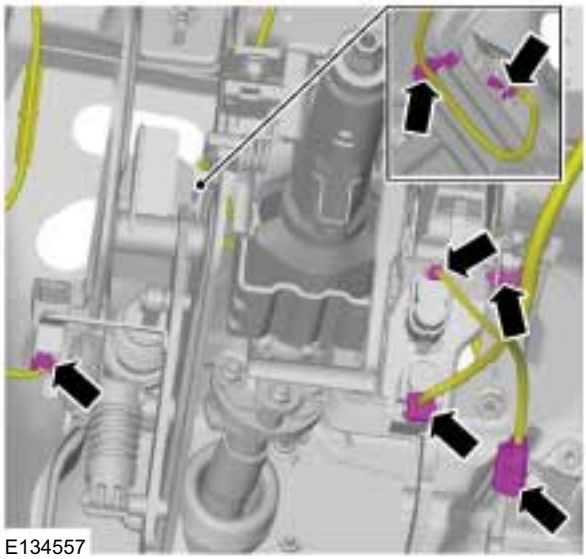

20.

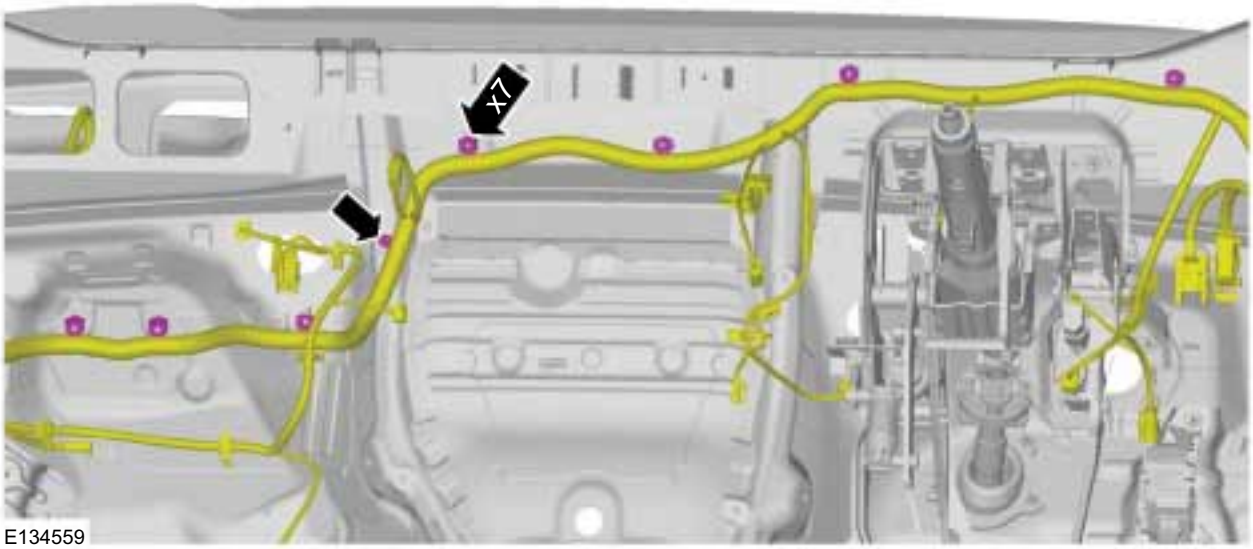

REMOVAL AND INSTALLATION

21.

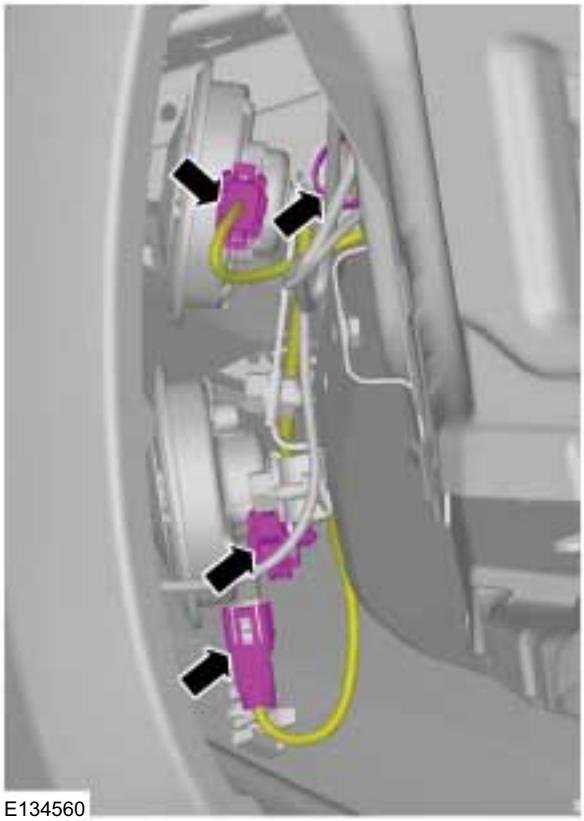

22.

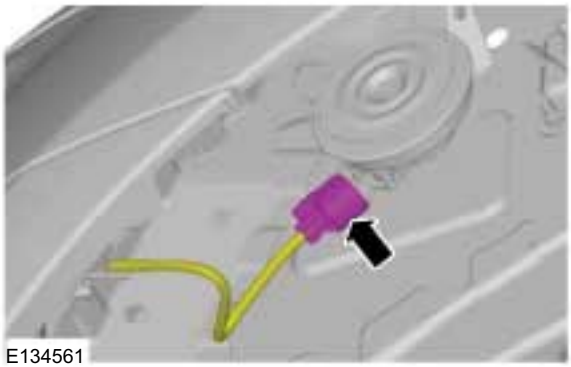

23.

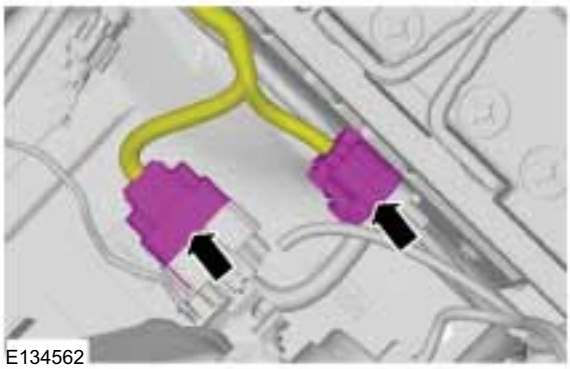

24. Torque: 10 Nm

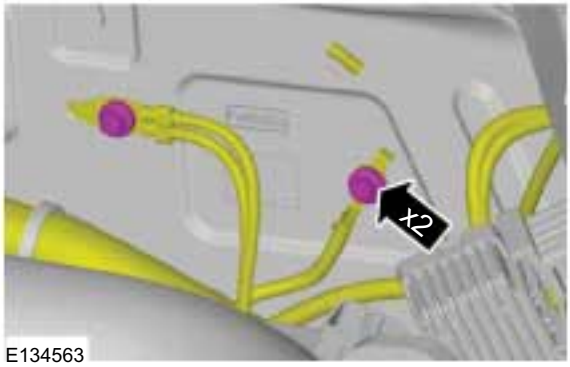

25.

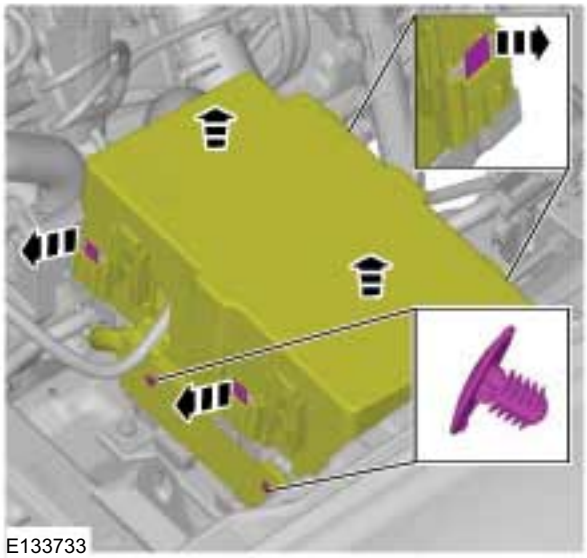

REMOVAL AND INSTALLATION

26. Torque: 10 Nm

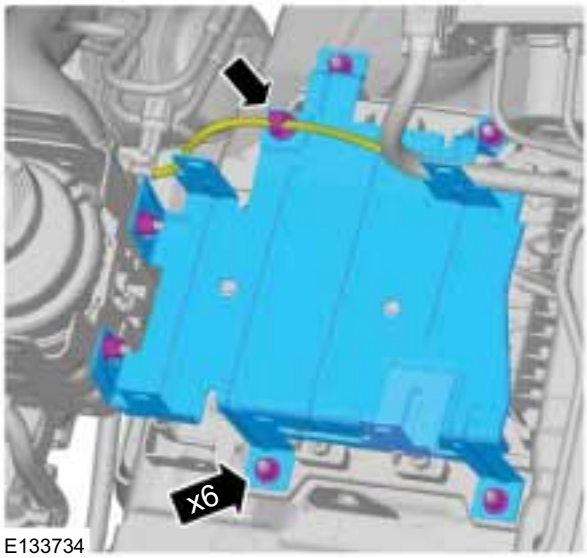

E133734

27.

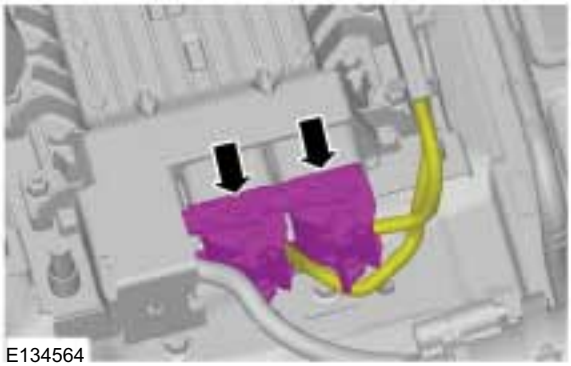
E134564

28. Torque: 13 Nm

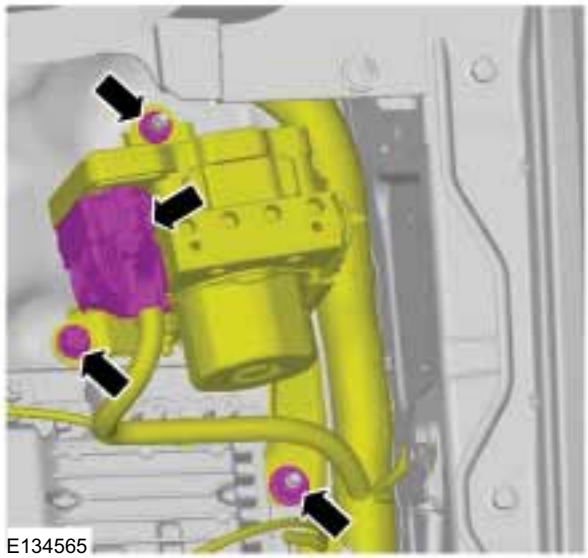
E134565

29. Torque: 10 Nm

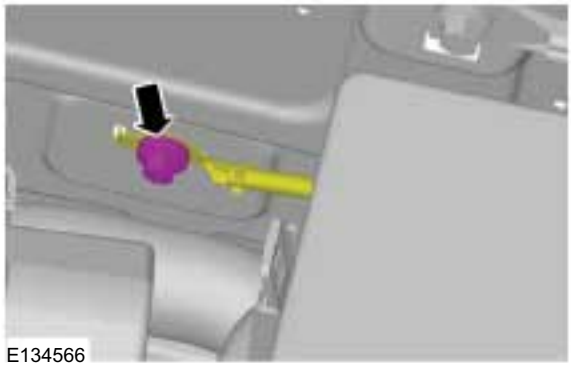
E134566

30. Refer to: Cowl Panel Grille (501-02 Front End Body Panels, Removal and Installation).

31.

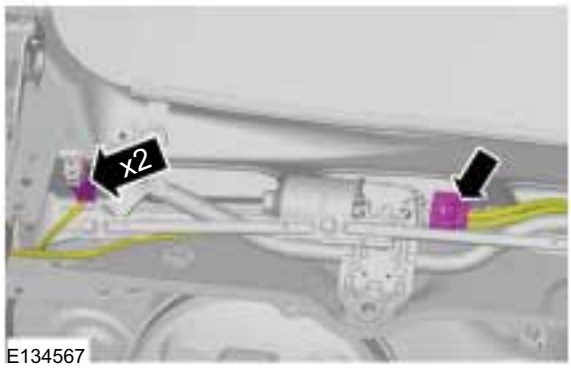

E134567

32.

REMOVAL AND INSTALLATION

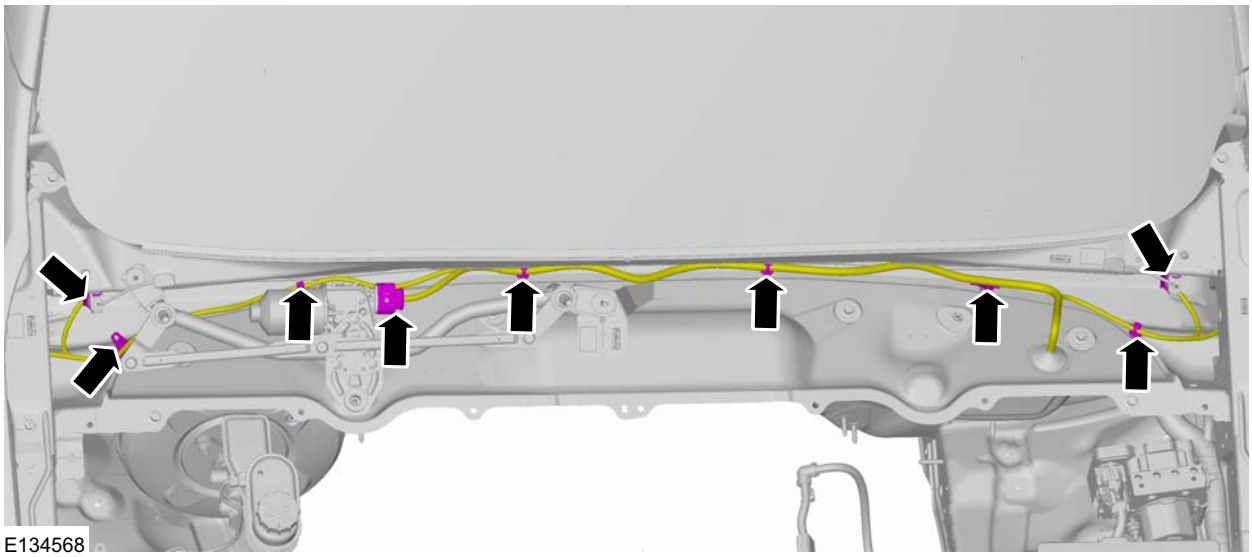

33.

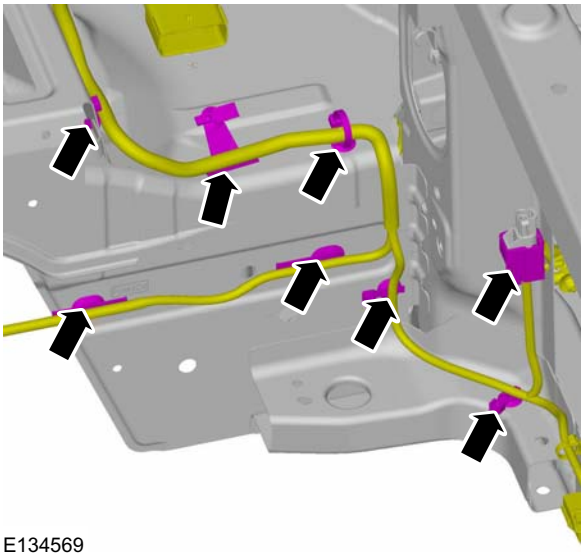

34.

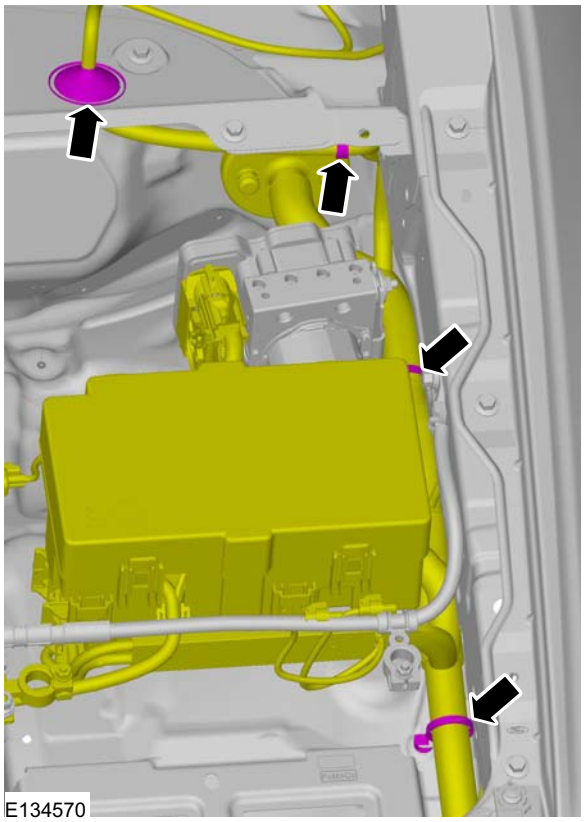

35.

REMOVAL AND INSTALLATION

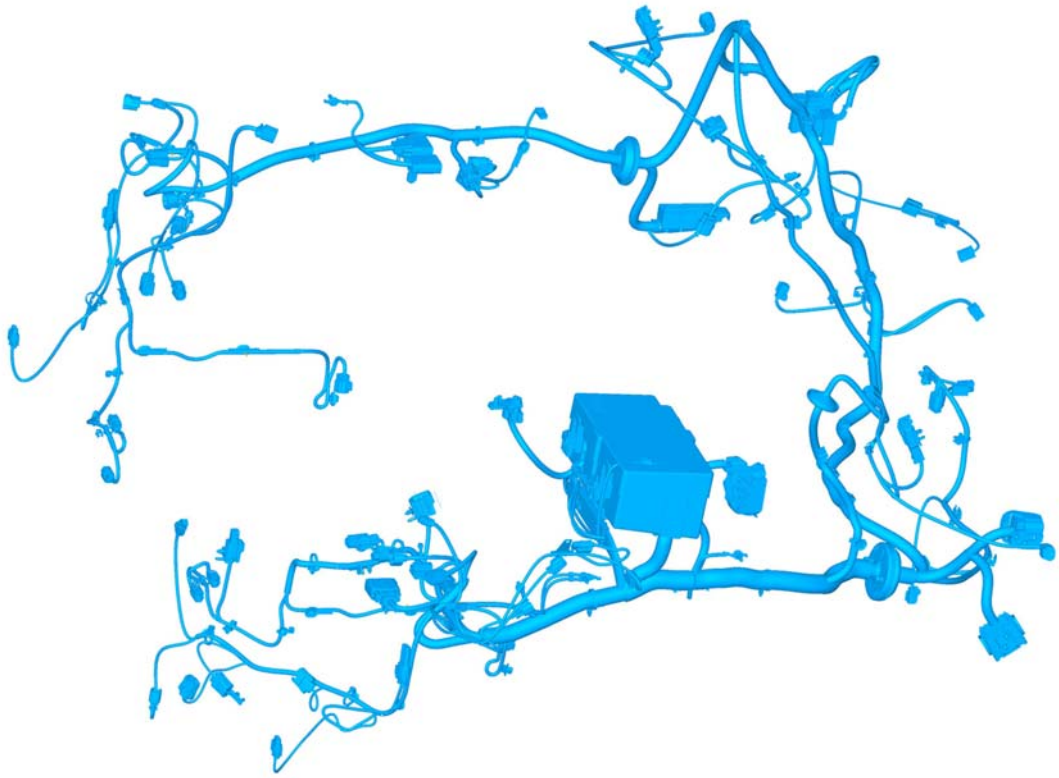

E134571

REMOVAL AND INSTALLATION

36. Refer to: Front Bench Seat (501-10 Seating, Removal and Installation).
Refer to: Front Seat (501-10 Seating, Removal and Installation).

37. Refer to: Floor Console - Single Cab (501-12 Instrument Panel and Console, Removal and Installation).
Refer to: Floor Console - Double Cab (501-12 Instrument Panel and Console, Removal and Installation).

38. Refer to: Headliner (501-05 Interior Trim and Ornamentation, Removal and Installation).

39. Refer to: Cowl Side Trim Panel (501-05 Interior Trim and Ornamentation, Removal and Installation).

Stretch cab

40.

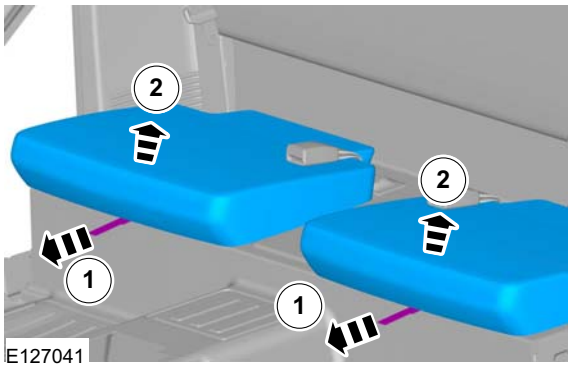

E127041

Double cab

41.

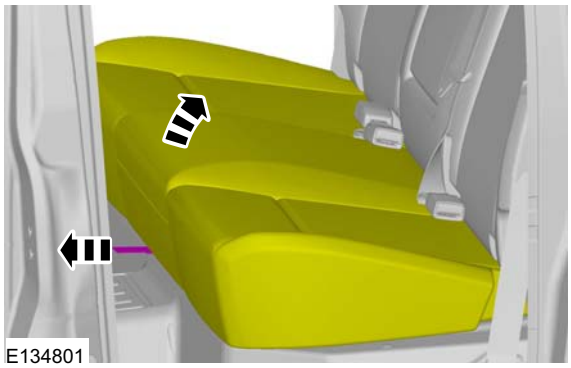
E134801

42.

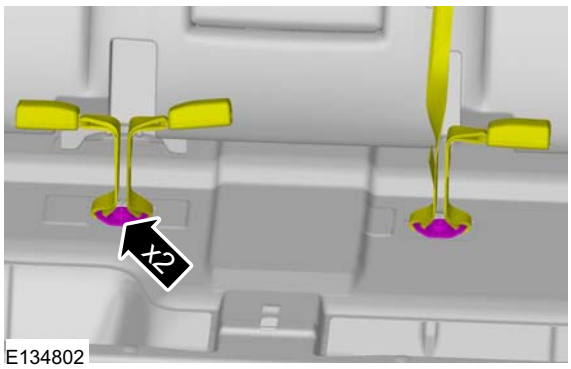

E134802

43.

E134803

Single cab oder Double cab

44.

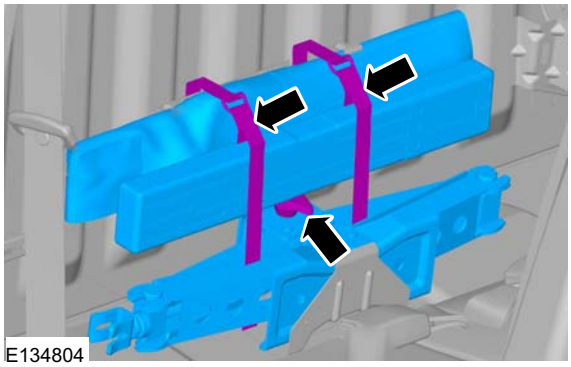
E134804

REMOVAL AND INSTALLATION

Single cab

45.

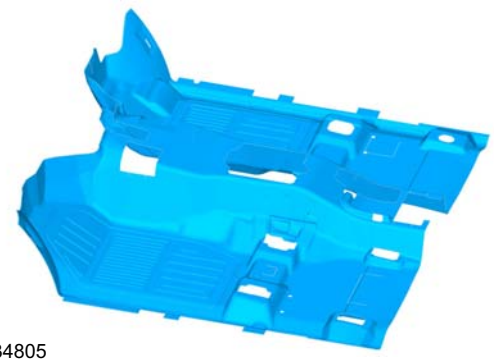

E134805

Stretch cab

46.

E134806

Double cab

47.

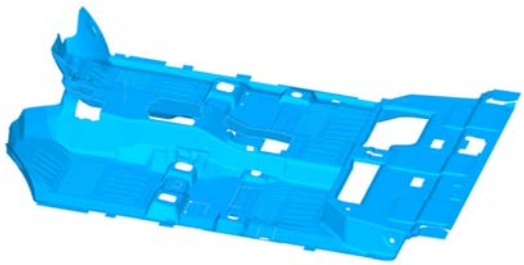

E134807

All vehicles

48.

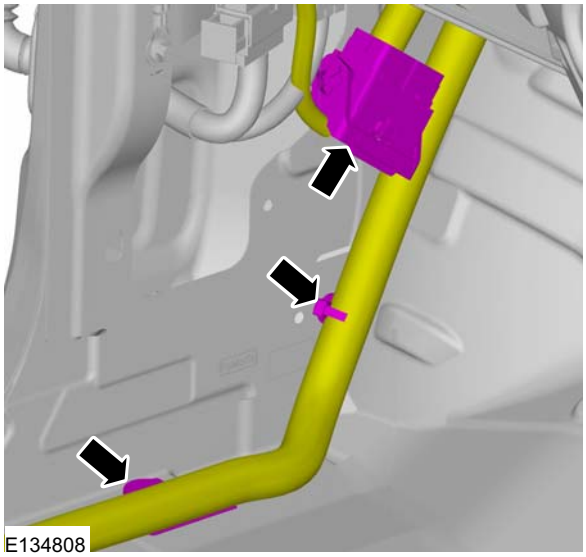

E134808

49. Refer to: Glove Compartment - Removal (501-12 Instrument Panel and Console, Removal and Installation).

50.

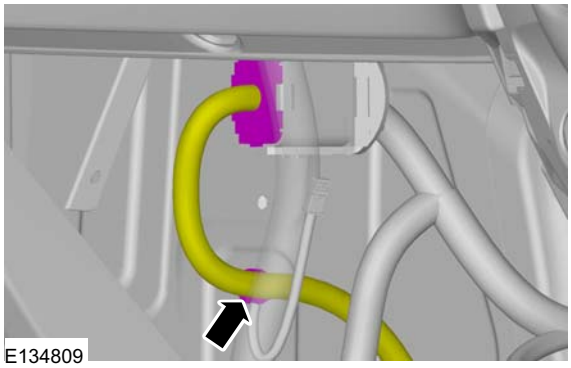

E134809

51.

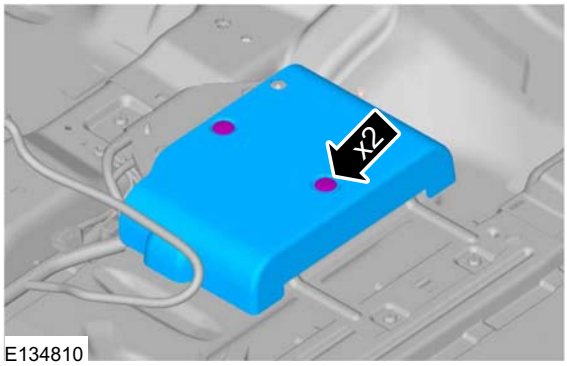

E134810

REMOVAL AND INSTALLATION

52. Torque: 10 Nm

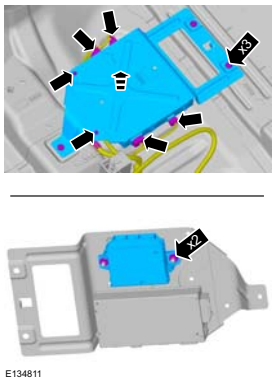

53. Torque: 10 Nm

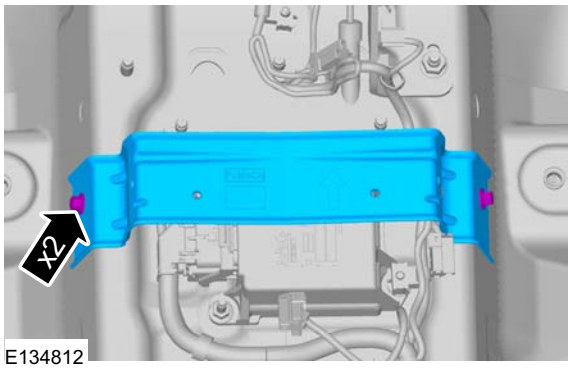

54.

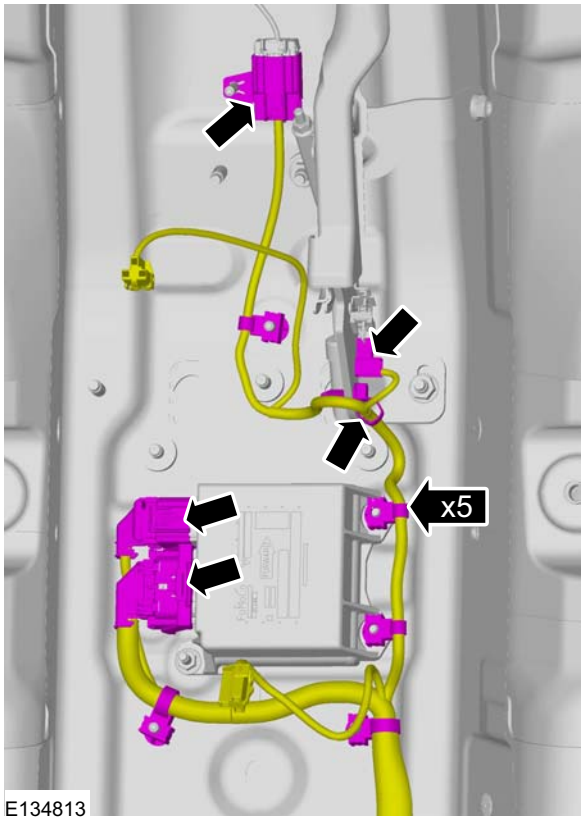

Single cab

55.

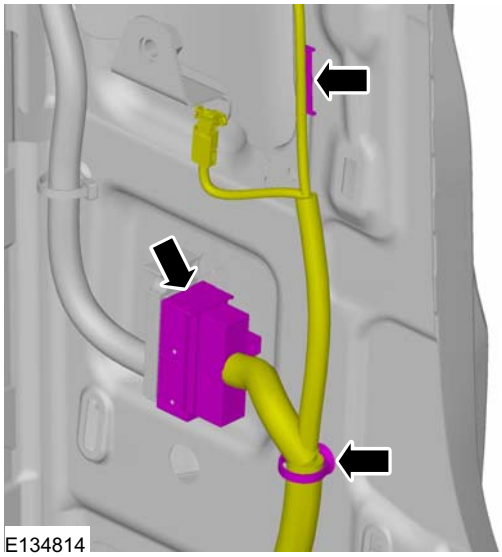

REMOVAL AND INSTALLATION

Stretch cab

56.

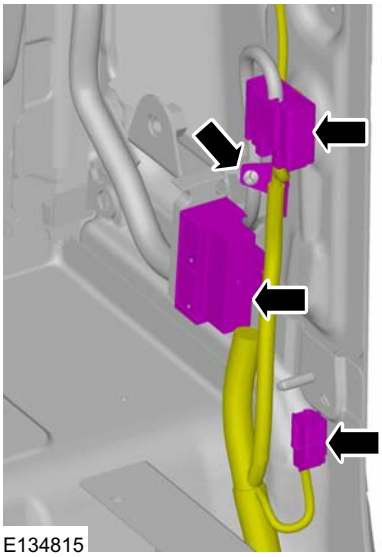
E134815

Double cab

57.

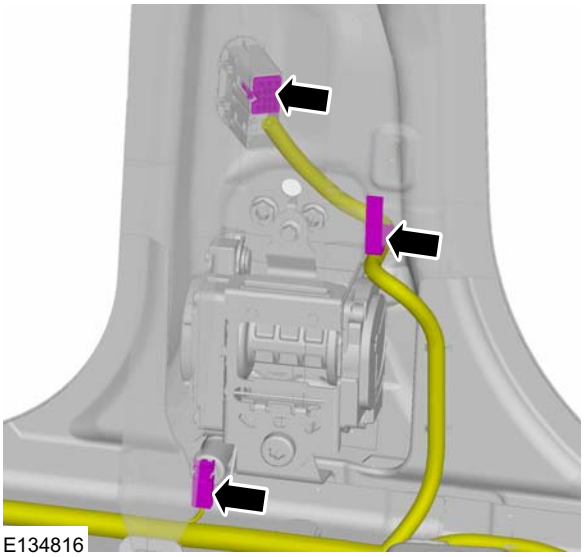
E134816

58.

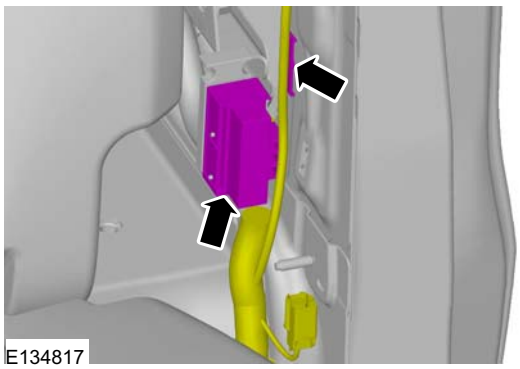
E134817

All vehicles

59.

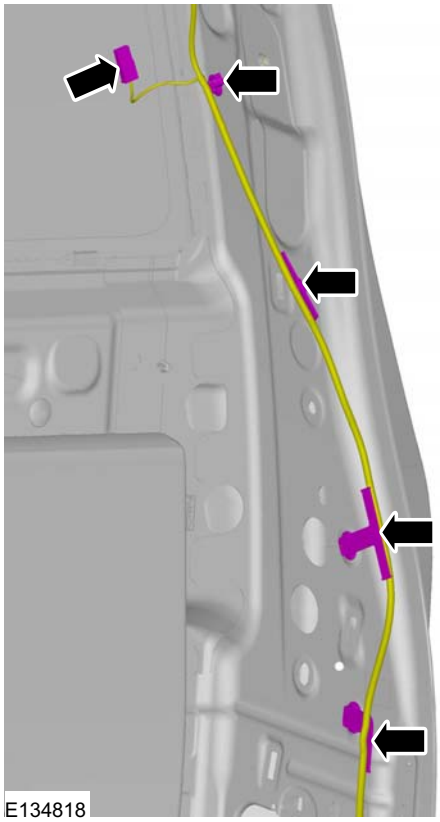
E134818

REMOVAL AND INSTALLATION

Single cab

60.

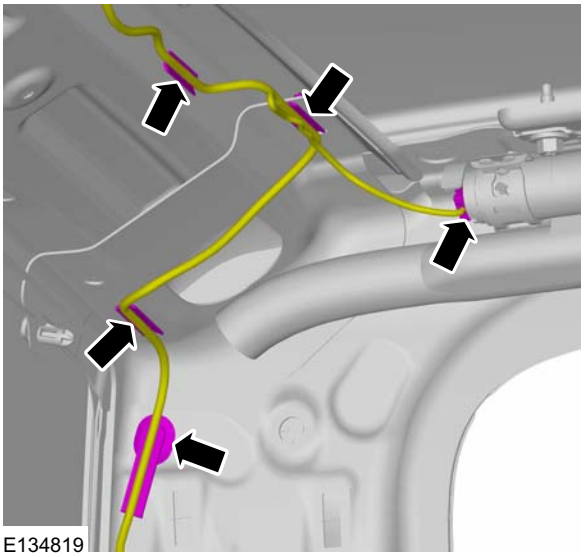

Stretch cab

61.

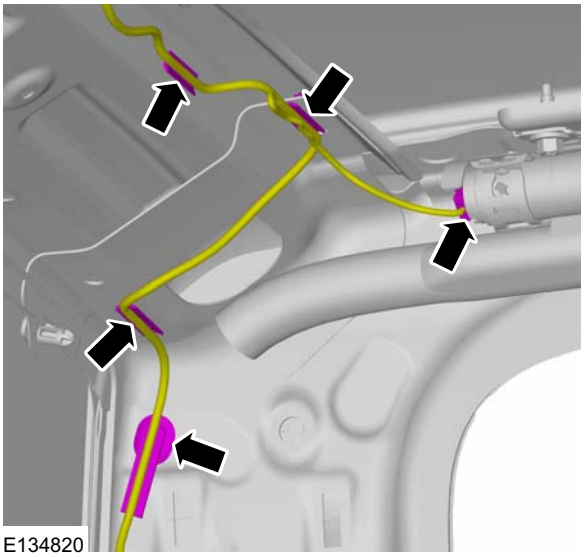

Double cab

62.

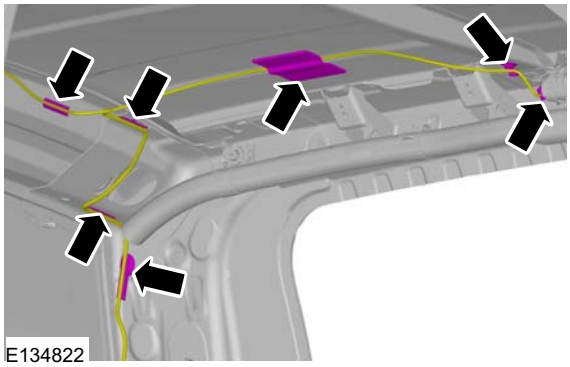

All vehicles

63.

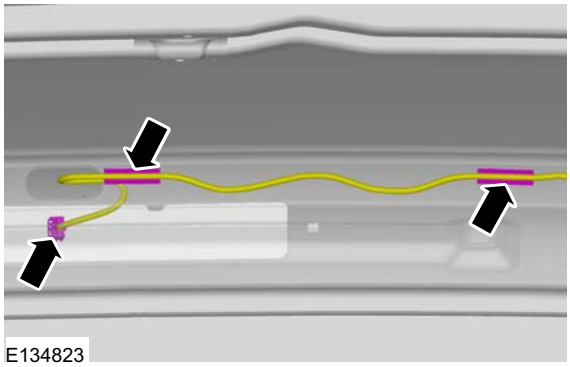

REMOVAL AND INSTALLATION

Single cab

64. Torque: 12 Nm

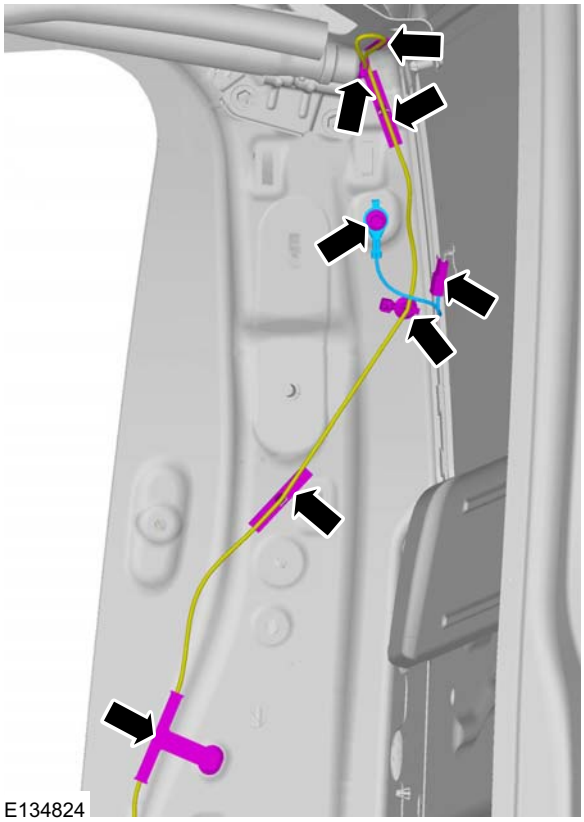

Stretch cab

66. Torque: 12 Nm

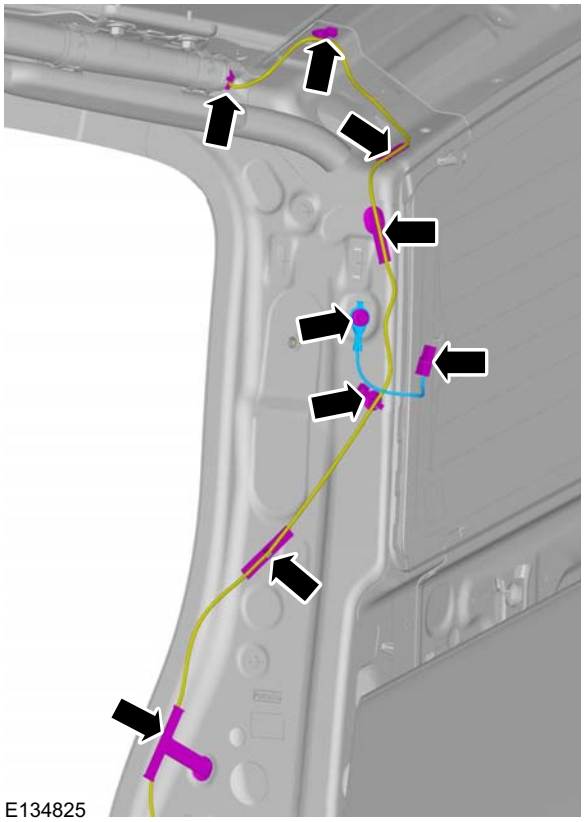

65.

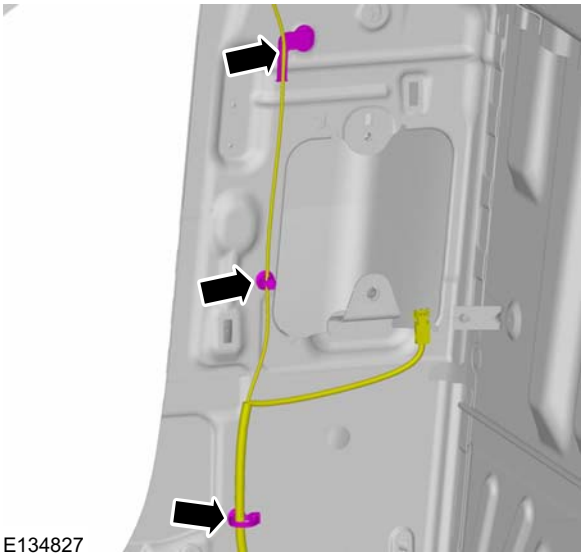

67.

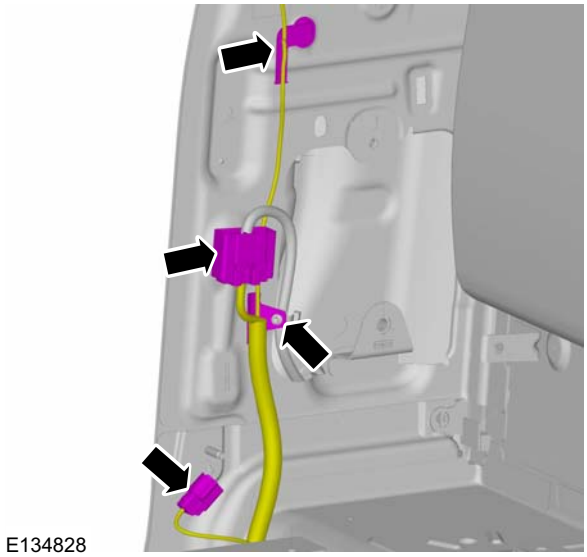

REMOVAL AND INSTALLATION

Double cab

68. Torque: 12 Nm

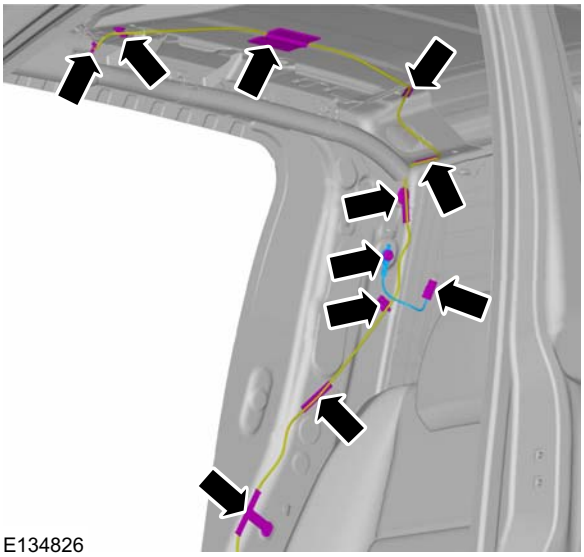

69.

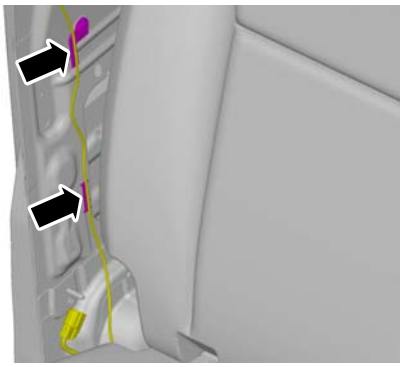

All vehicles

70. Torque: 12 Nm

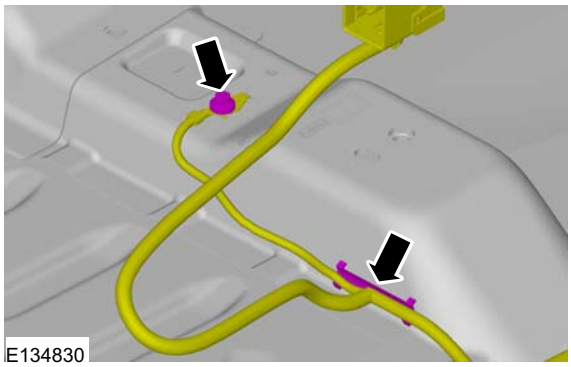

71.

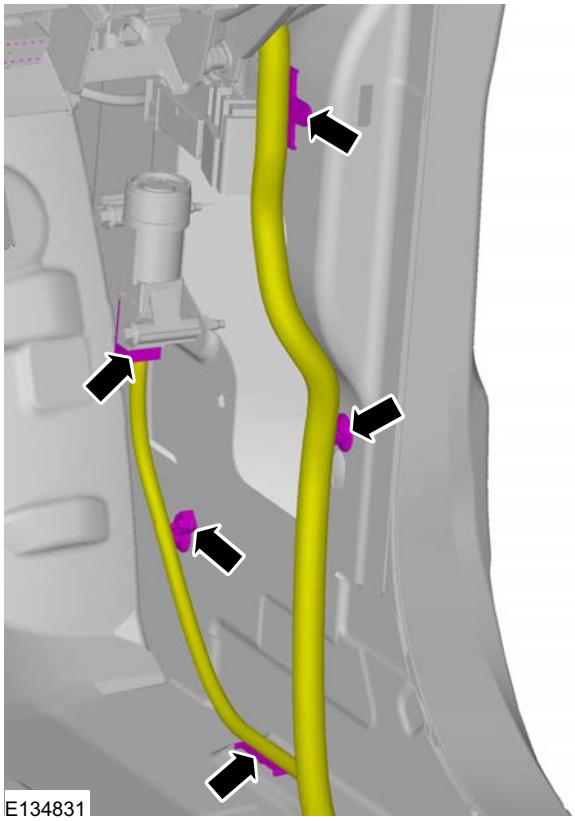

72.

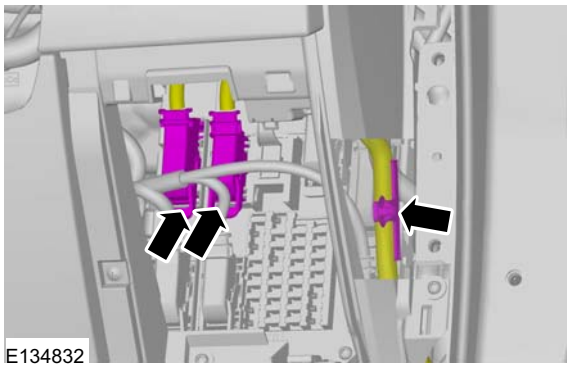

Single cab

73.

REMOVAL AND INSTALLATION

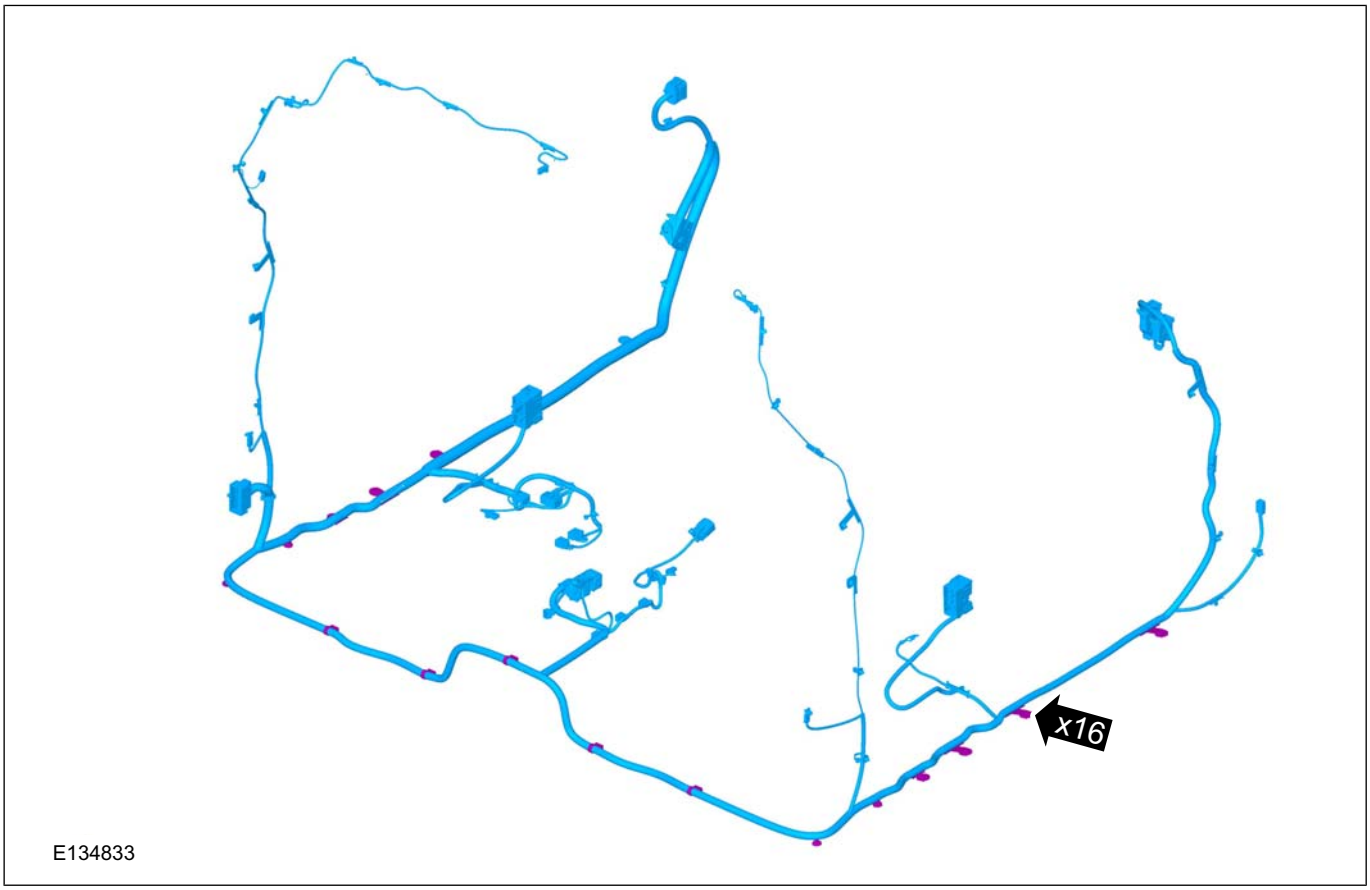

Stretch cab

74.

REMOVAL AND INSTALLATION

Double cab

75.

REMOVAL AND INSTALLATION

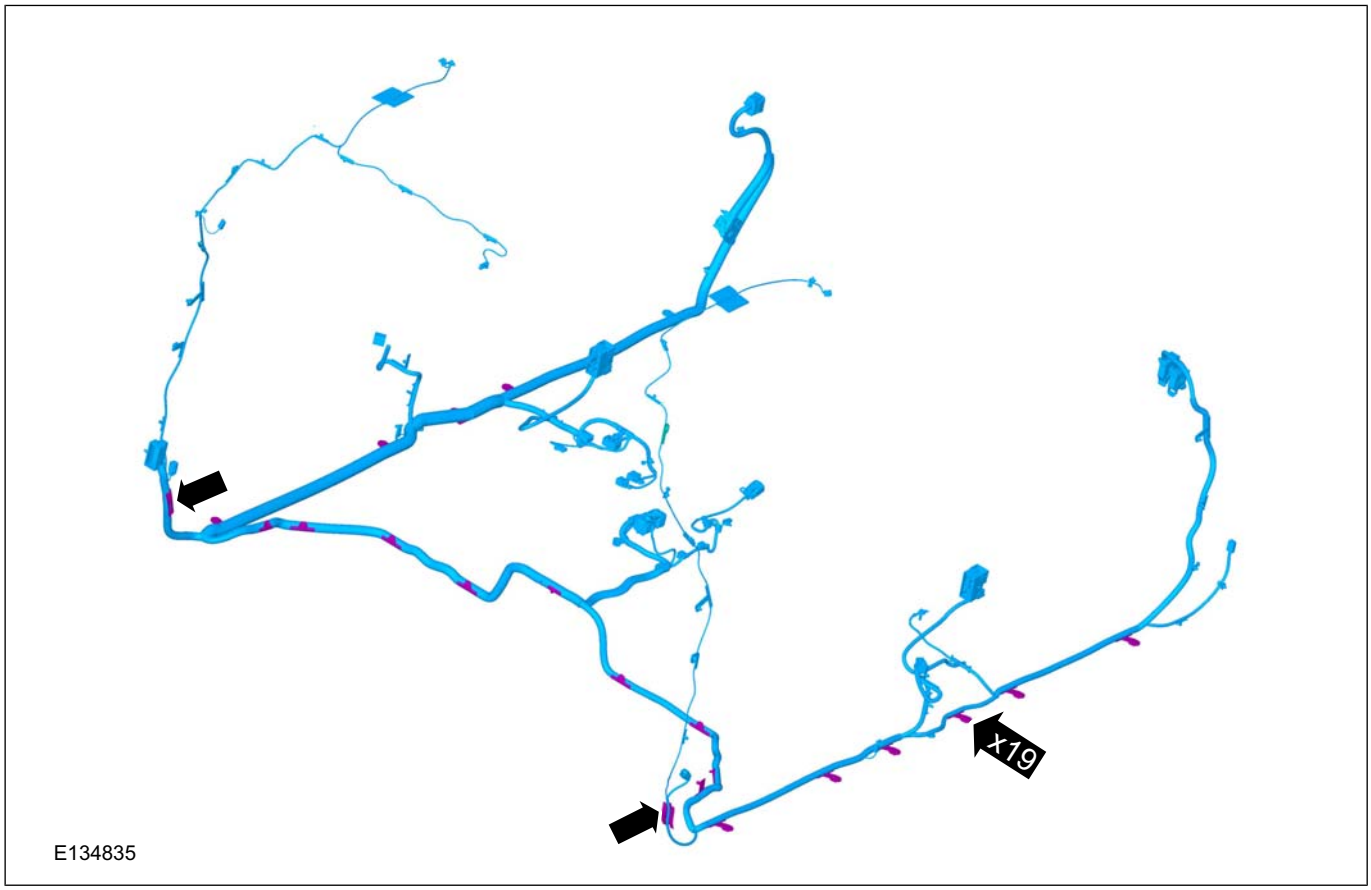

Installation

1. To install, reverse the removal procedure.

REMOVAL AND INSTALLATION

Engine Wiring Harness — 2.5L Duratec-HE (122kW/165PS) - MI4

Removal

NOTE: Removal steps in this procedure may contain installation details.

1. Refer to: Battery Tray (414-01 Battery, Mounting and Cables, Removal and Installation).

2.

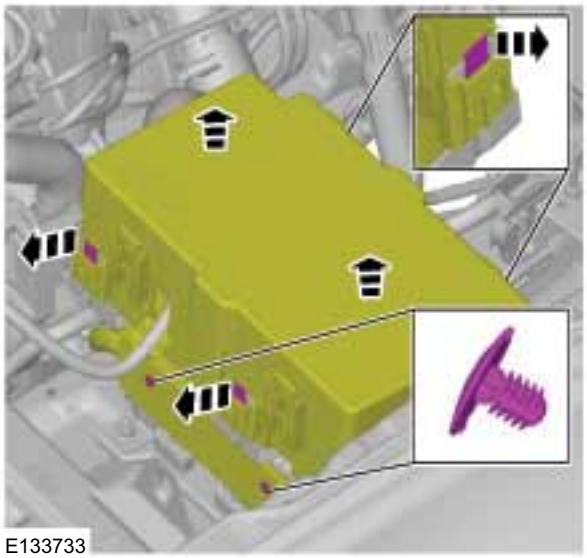

3. Torque: 10 Nm

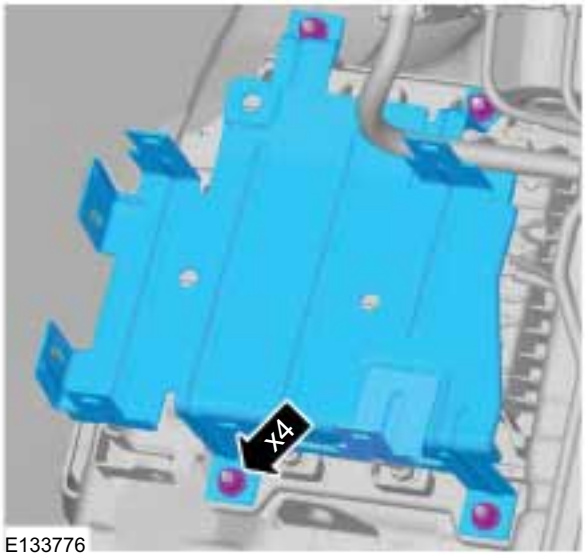

4. Refer to: Cowl Panel Grille (501-02 Front End Body Panels, Removal and Installation).

5. Torque: 10 Nm

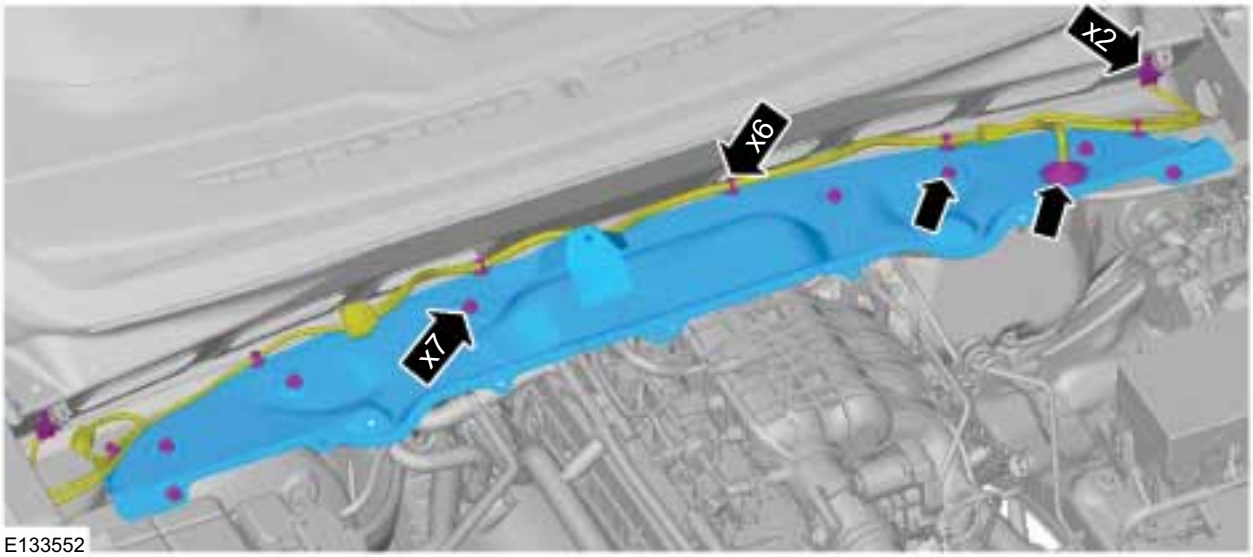

REMOVAL AND INSTALLATION

6. Refer to: Intake Manifold (303-01 Engine - 2.2L Duratorq-TDCi (88kW/120PS) - Puma/2.2L Duratorq-TDCi (96kW/130PS) - Puma/2.2L Duratorq-TDCi (110kW/150PS) - Puma, Removal and Installation).

7.

E135457

8.

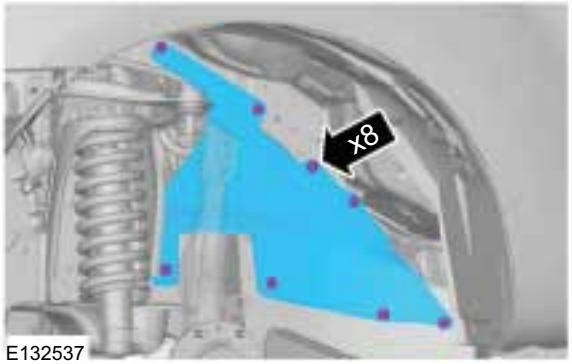

E132537

9.

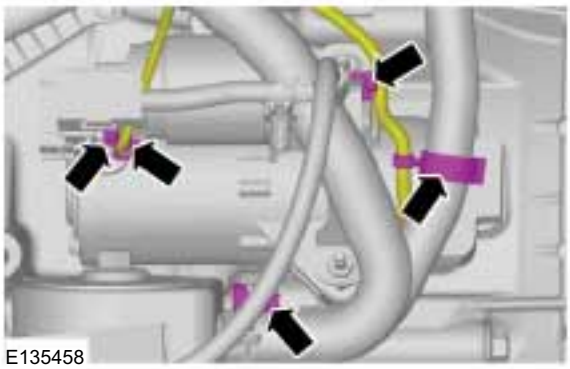
E135458

10.

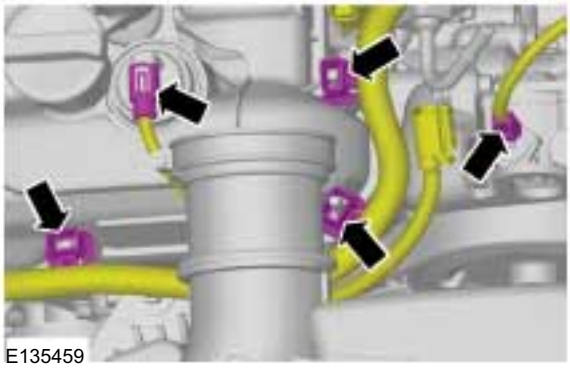
E135459

11.

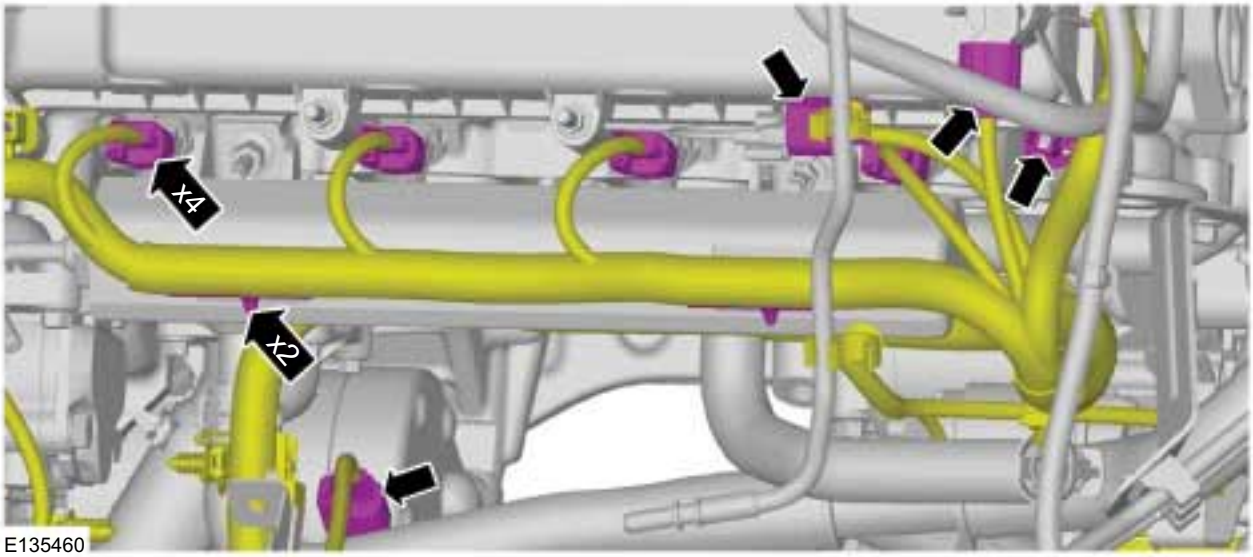

E135460

12.

REMOVAL AND INSTALLATION

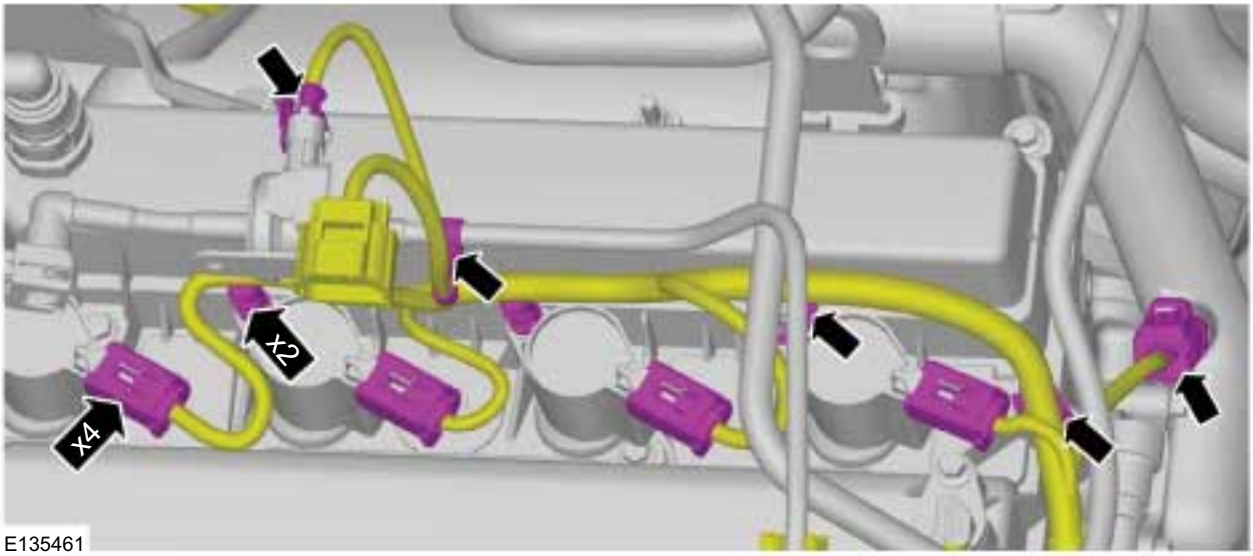

E135461

13. Refer to: Lifting (100-02 Jacking and Lifting, Description and Operation).

14.

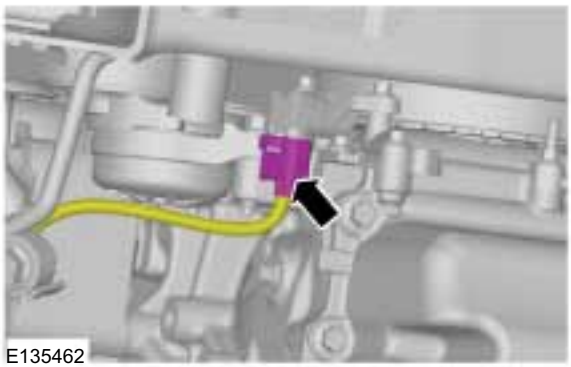
E135462

15.

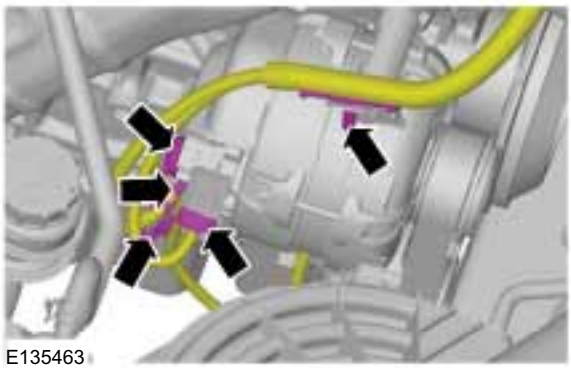
E135463

16.

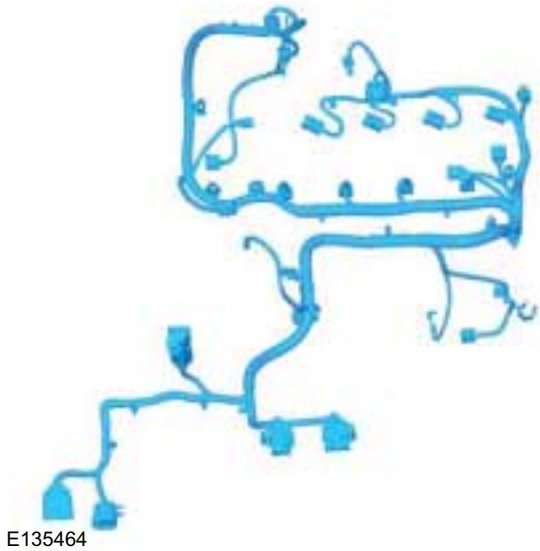
E135464

Installation

1. To install, reverse the removal procedure.

REMOVAL AND INSTALLATION

Engine Wiring Harness — 2.2L Duratorq-TDCi (88kW/120PS) - Puma/2.2L Duratorq-TDCi (96kW/130PS) - Puma/2.2L Duratorq-TDCi (110kW/150PS) - Puma

Removal

NOTE: Removal steps in this procedure may contain installation details.

1. Refer to: Battery Tray (414-01 Battery, Mounting and Cables, Removal and Installation).

2.

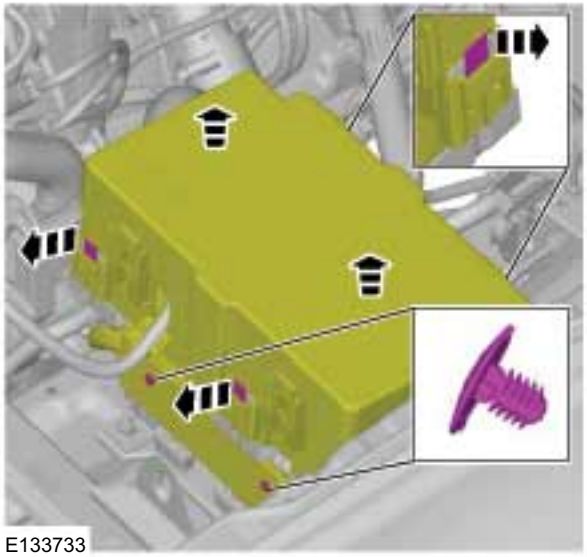

3. Torque: 10 Nm

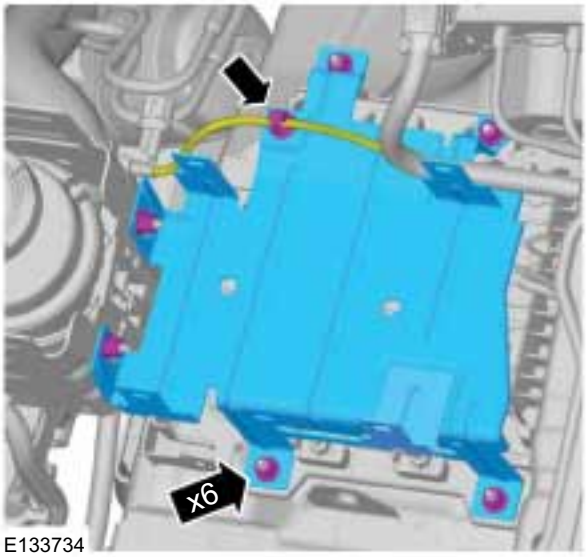

4. Refer to: Cowl Panel Grille (501-02 Front End Body Panels, Removal and Installation).

5. Torque: 10 Nm

REMOVAL AND INSTALLATION

6. Refer to: Intake Manifold (303-01 Engine - 2.2L Duratorq-TDCi (88kW/120PS) - Puma/2.2L Duratorq-TDCi (96kW/130PS) - Puma/2.2L Duratorq-TDCi (110kW/150PS) - Puma, Removal and Installation).

7.

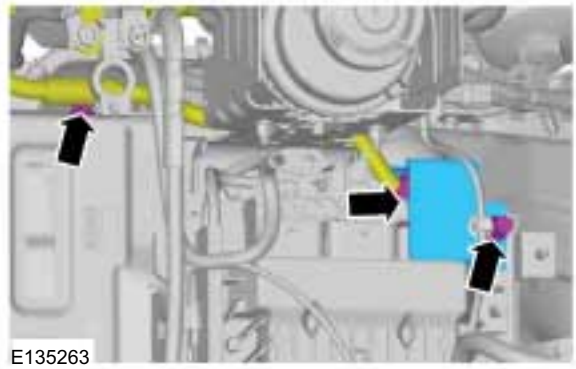

8.

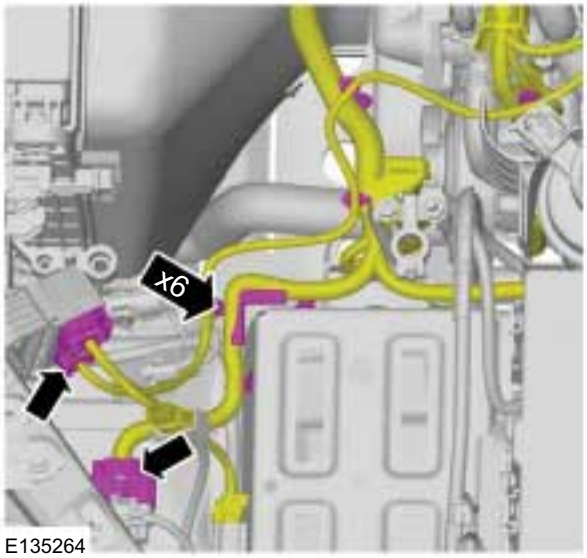

9. Torque: 13 Nm

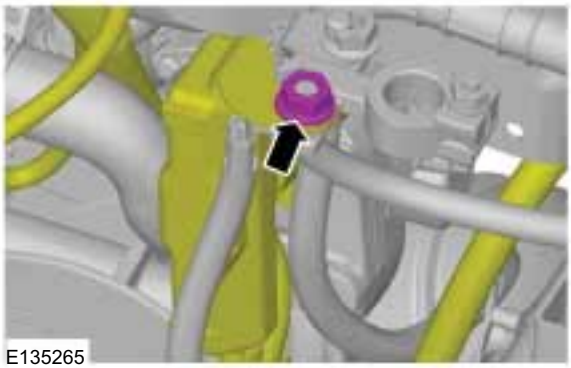

10. Refer to: Lifting (100-02 Jacking and Lifting, Description and Operation).

11.

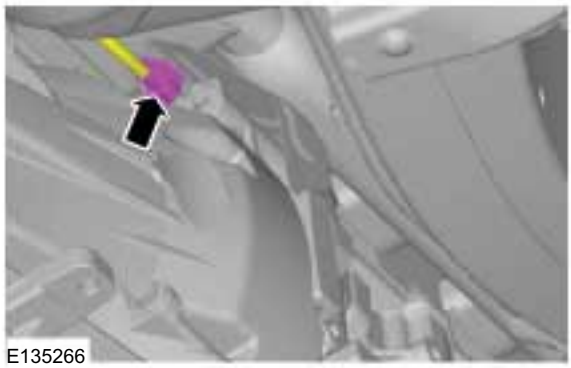

12.

13.

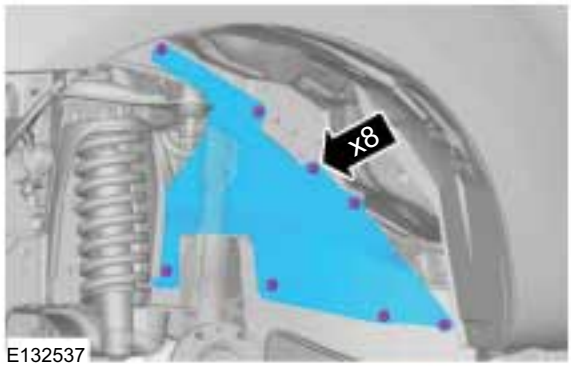

REMOVAL AND INSTALLATION

14.

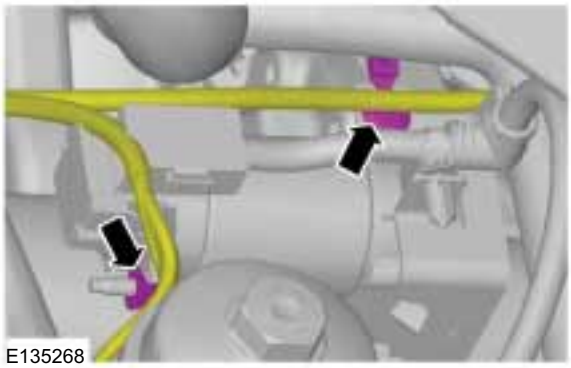

Vehicles with automated gearshift

15.

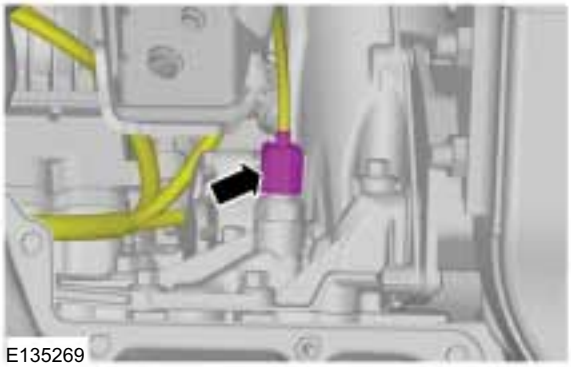

All vehicles

16.

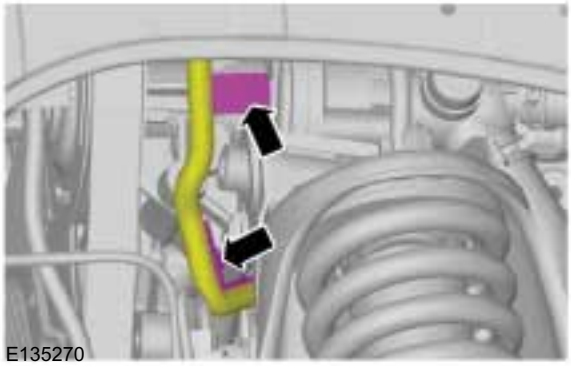

17.

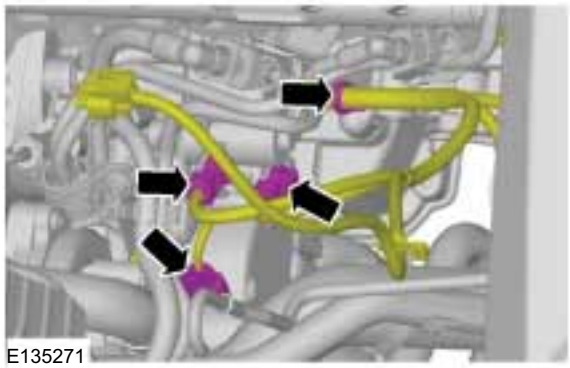

18.

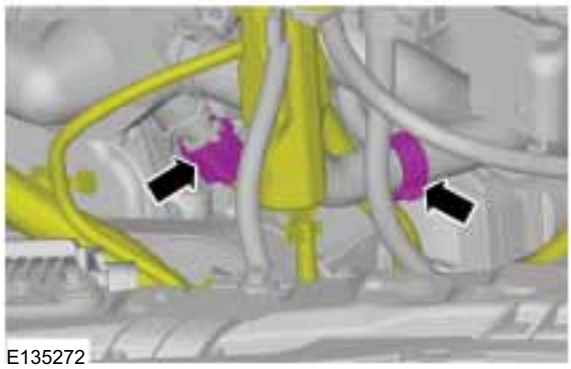

19.

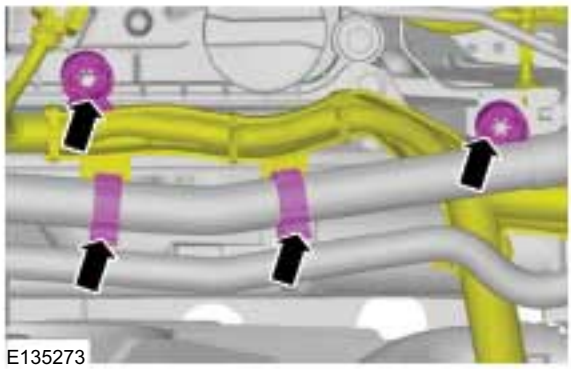

REMOVAL AND INSTALLATION

20.

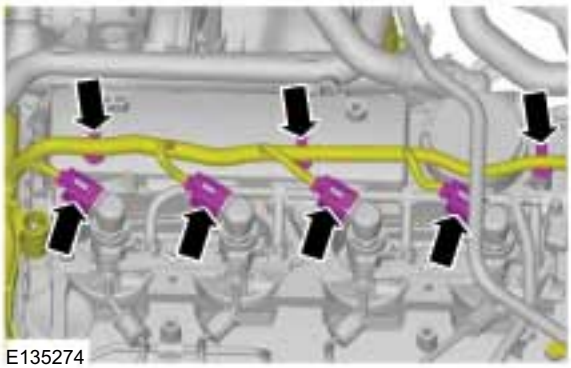
E135274

21.

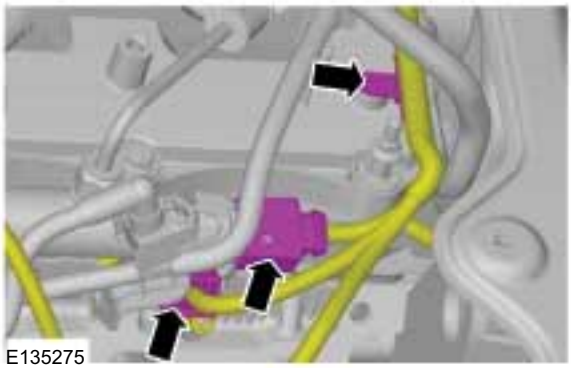
E135275

22.

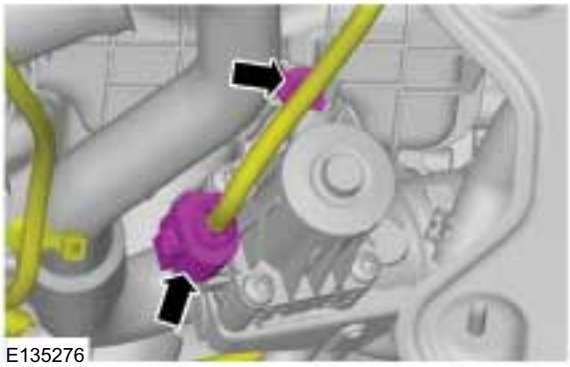
E135276

23.

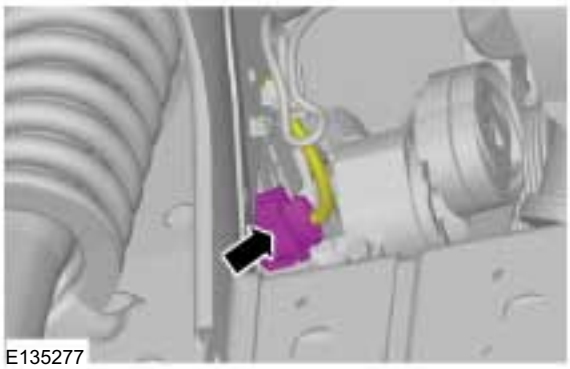
E135277

24.

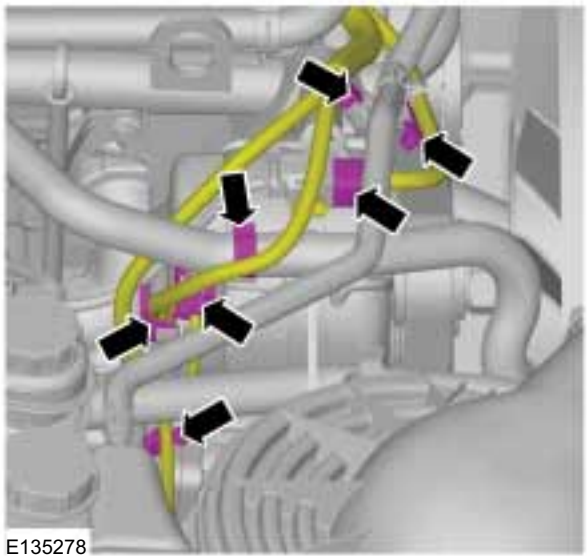
E135278

25.

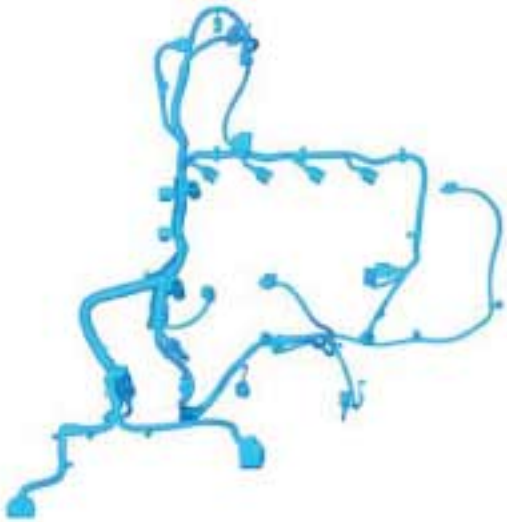
E135279

REMOVAL AND INSTALLATION

26.

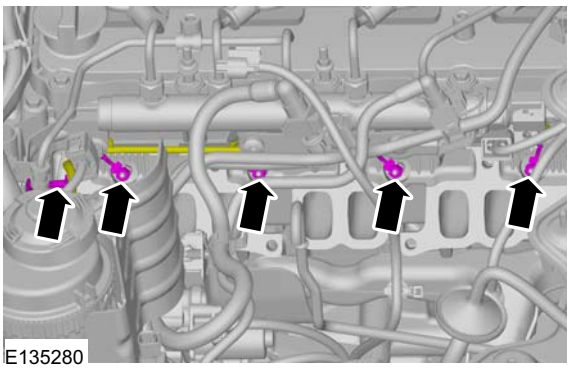

27.

Installation

1. To install, reverse the removal procedure.

REMOVAL AND INSTALLATION

Engine Wiring Harness — 3.2L Duratorq-TDCi (148kW/200PS) - Puma

Removal

NOTE: Removal steps in this procedure may contain installation details.

1. Refer to: Battery Tray (414-01 Battery, Mounting and Cables, Removal and Installation).

2.

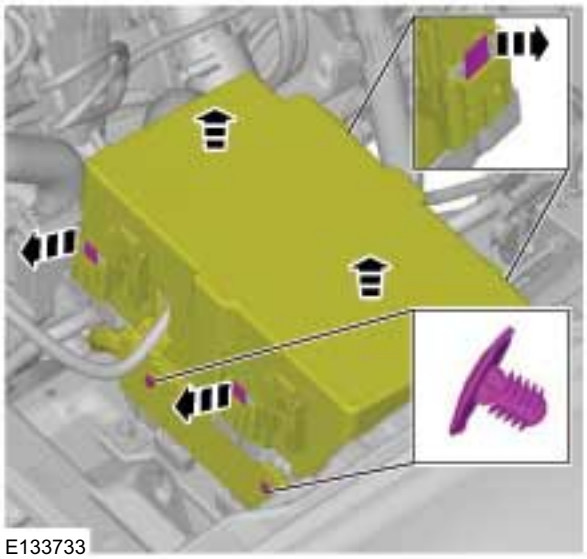
E133733

3. Torque: 10 Nm

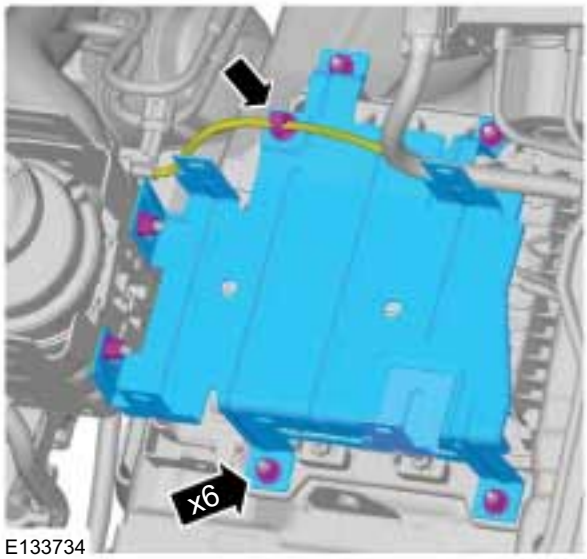

E133734

4. Refer to: Cowl Panel Grille (501-02 Front End Body Panels, Removal and Installation).

5. Torque: 10 Nm

E133552

REMOVAL AND INSTALLATION

6. Refer to: Intake Manifold (303-01 Engine - 2.2L Duratorq-TDCi (88kW/120PS) - Puma/2.2L Duratorq-TDCi (96kW/130PS) - Puma/2.2L Duratorq-TDCi (110kW/150PS) - Puma, Removal and Installation).

7.

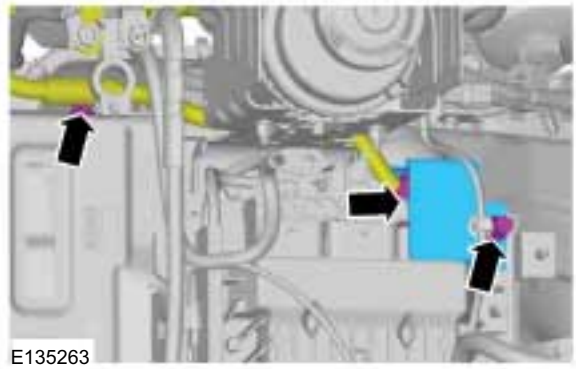

8.

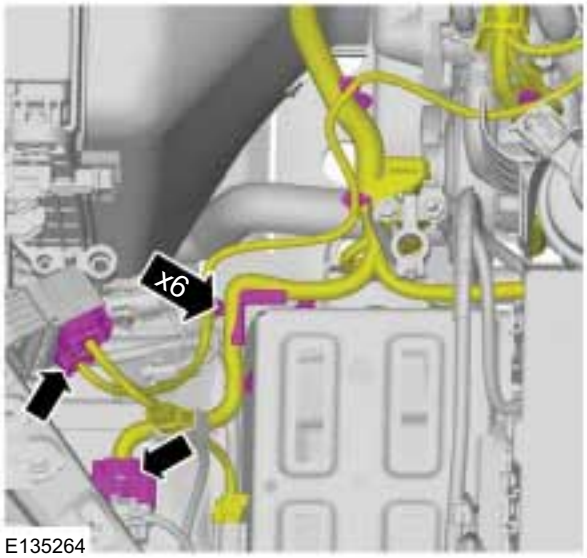

9. Torque: 13 Nm

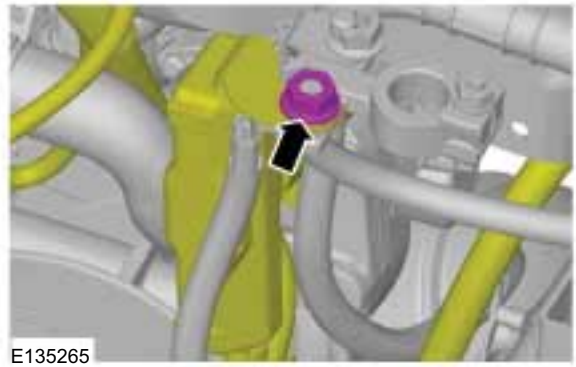

10. Refer to: Lifting (100-02 Jacking and Lifting, Description and Operation).

11.

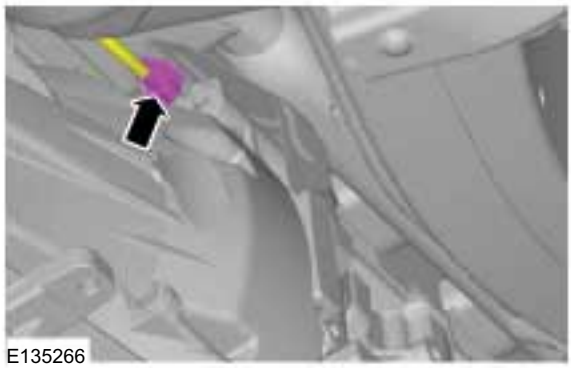

12.

13.

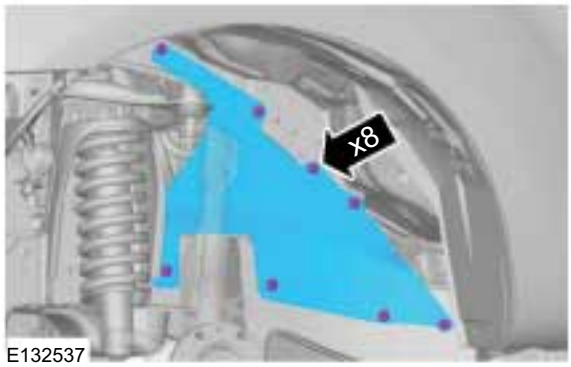

REMOVAL AND INSTALLATION

14.

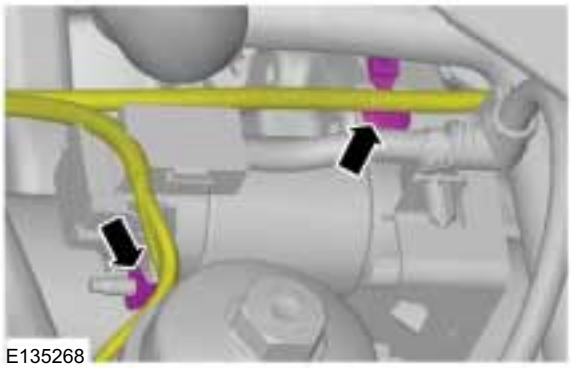

Vehicles with automated gearshift

15.

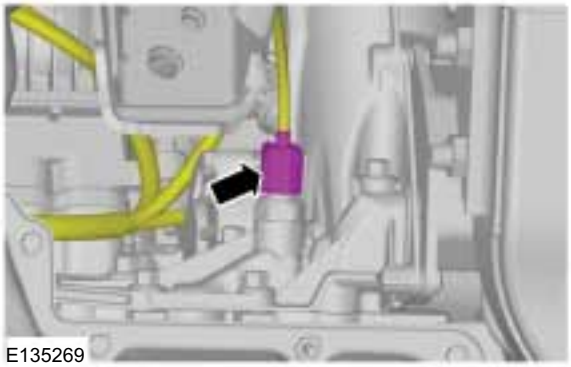

All vehicles

16.

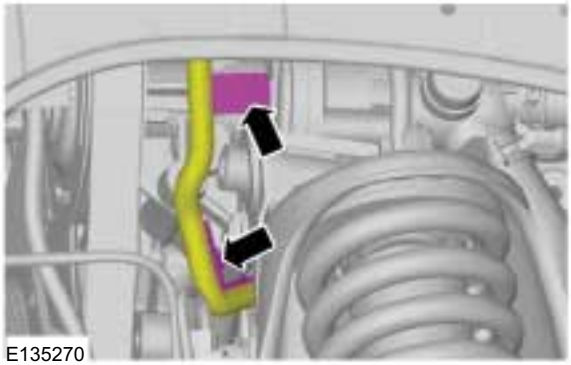

17.

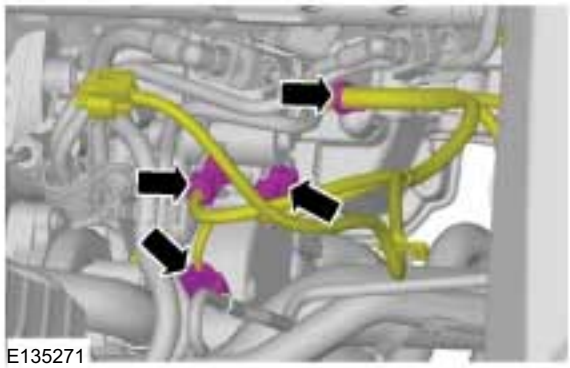

18.

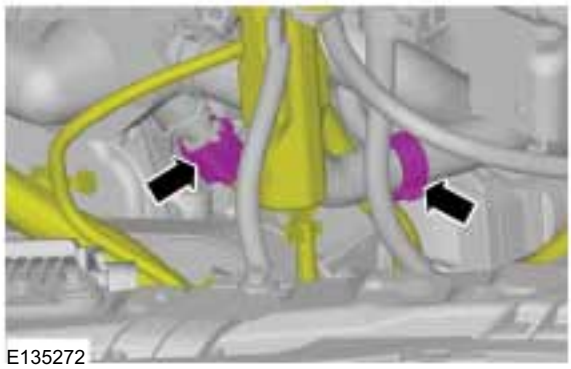

19.

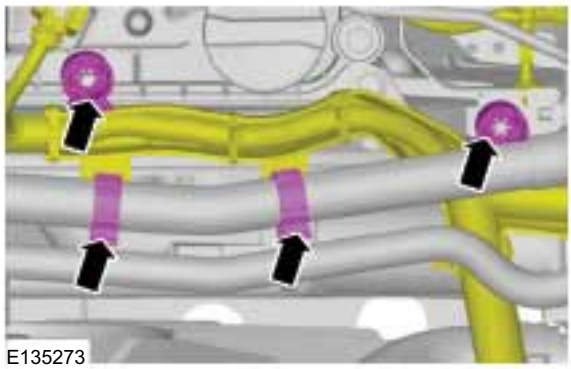

REMOVAL AND INSTALLATION

20.

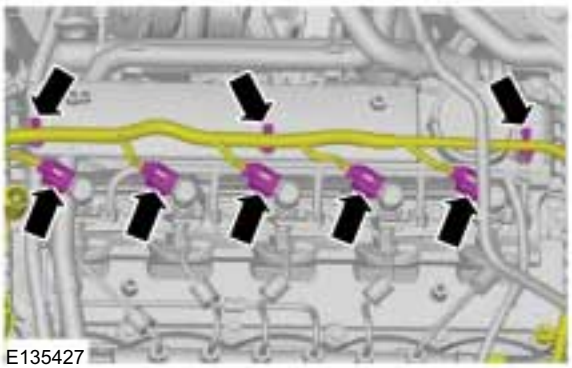
E135427

21.

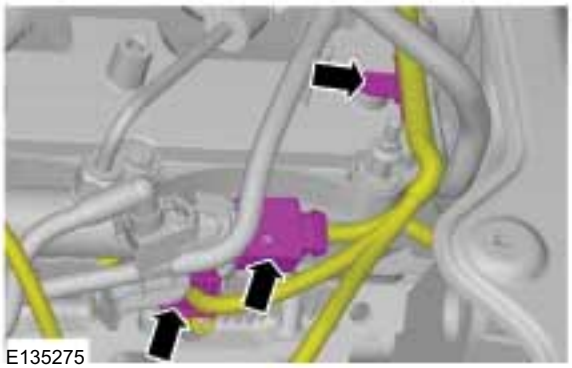
E135275

22.

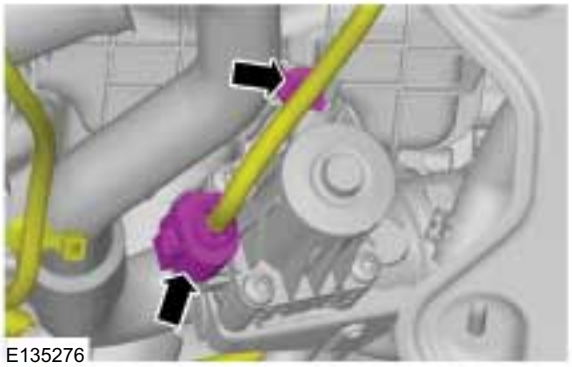
E135276

23.

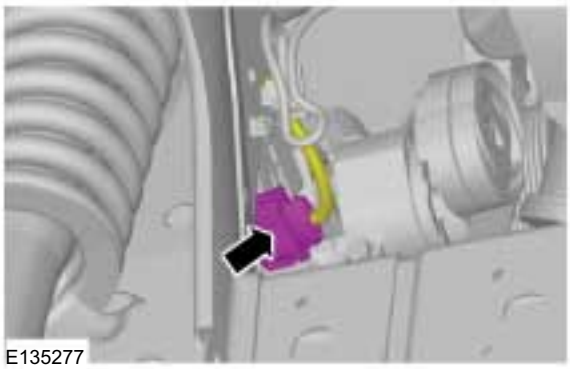
E135277

24.

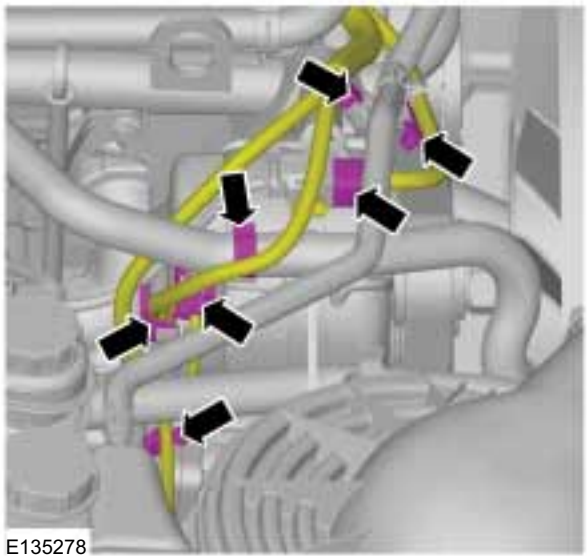
E135278

25.

E135428

REMOVAL AND INSTALLATION

26.

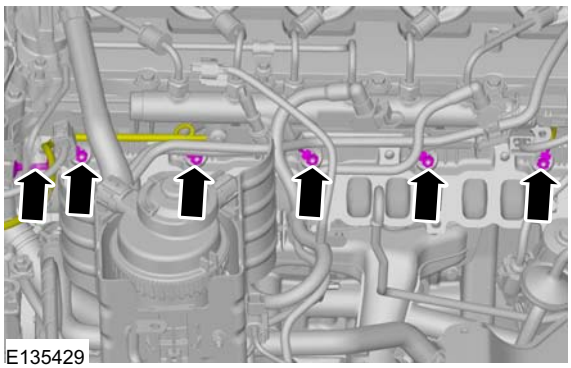

27.

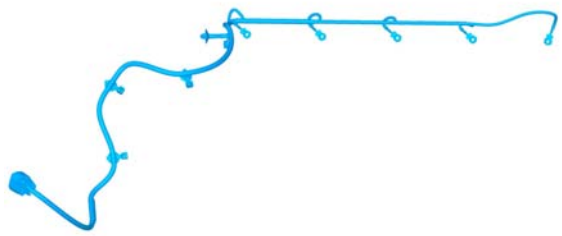

Installation

1. To install, reverse the removal procedure.

SECTION 419-01A Anti-Theft - Active

VEHICLE APPLICATION: 2011.50 Ranger

CONTENTS PAGE

DESCRIPTION AND OPERATION

Anti-Theft - Active..... 419-01A-2
System operation..... 419-01A-4
Component description..... 419-01A-5

REMOVAL AND INSTALLATION

Anti-Theft Alarm Horn..... 419-01A-6
Anti-Theft Alarm Horn with Integral Battery..... 419-01A-7
Intrusion Sensor..... 419-01A-8

DESCRIPTION AND OPERATION

Anti-Theft - Active

Single cab

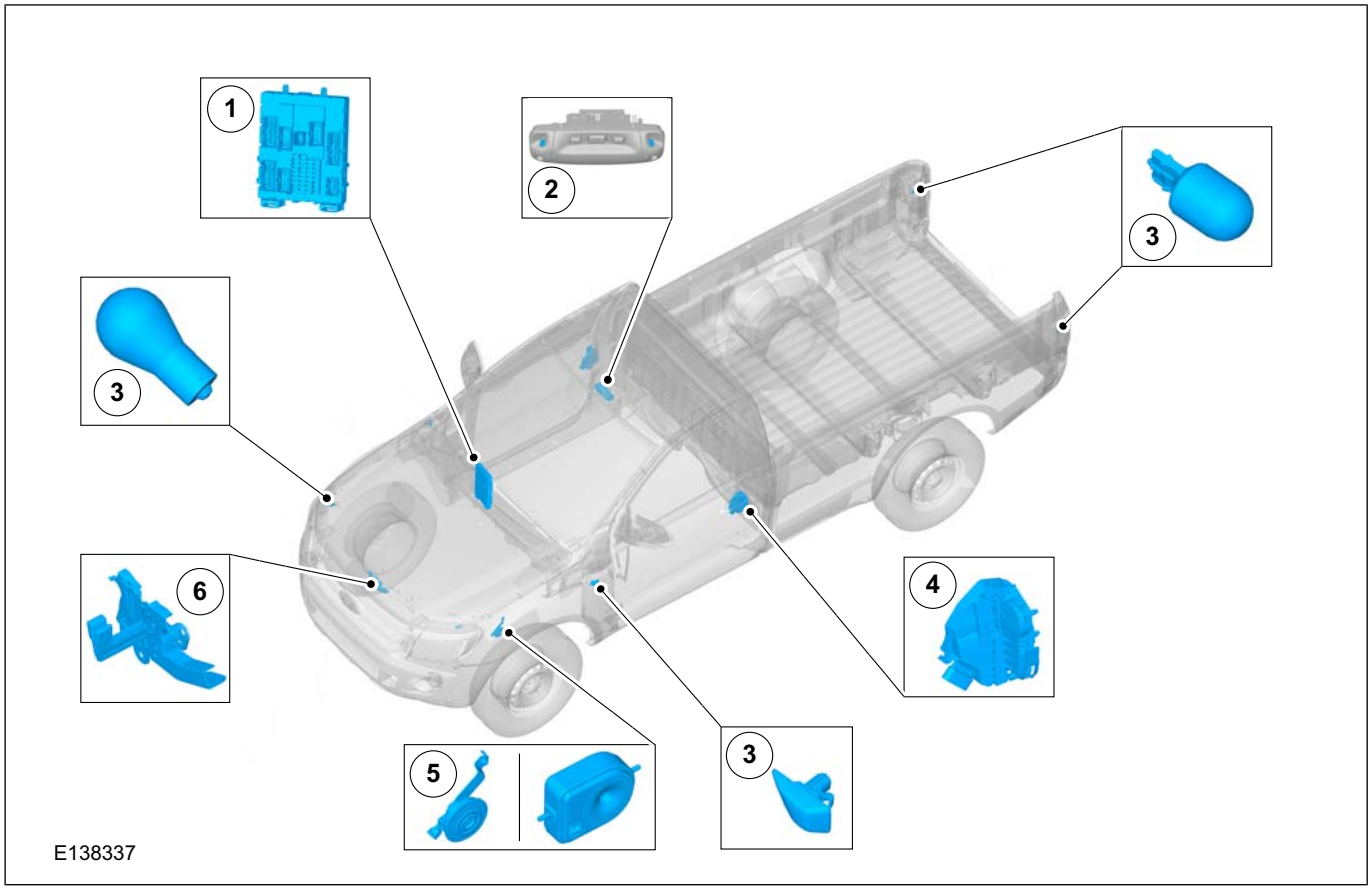

DESCRIPTION AND OPERATION

Double cab

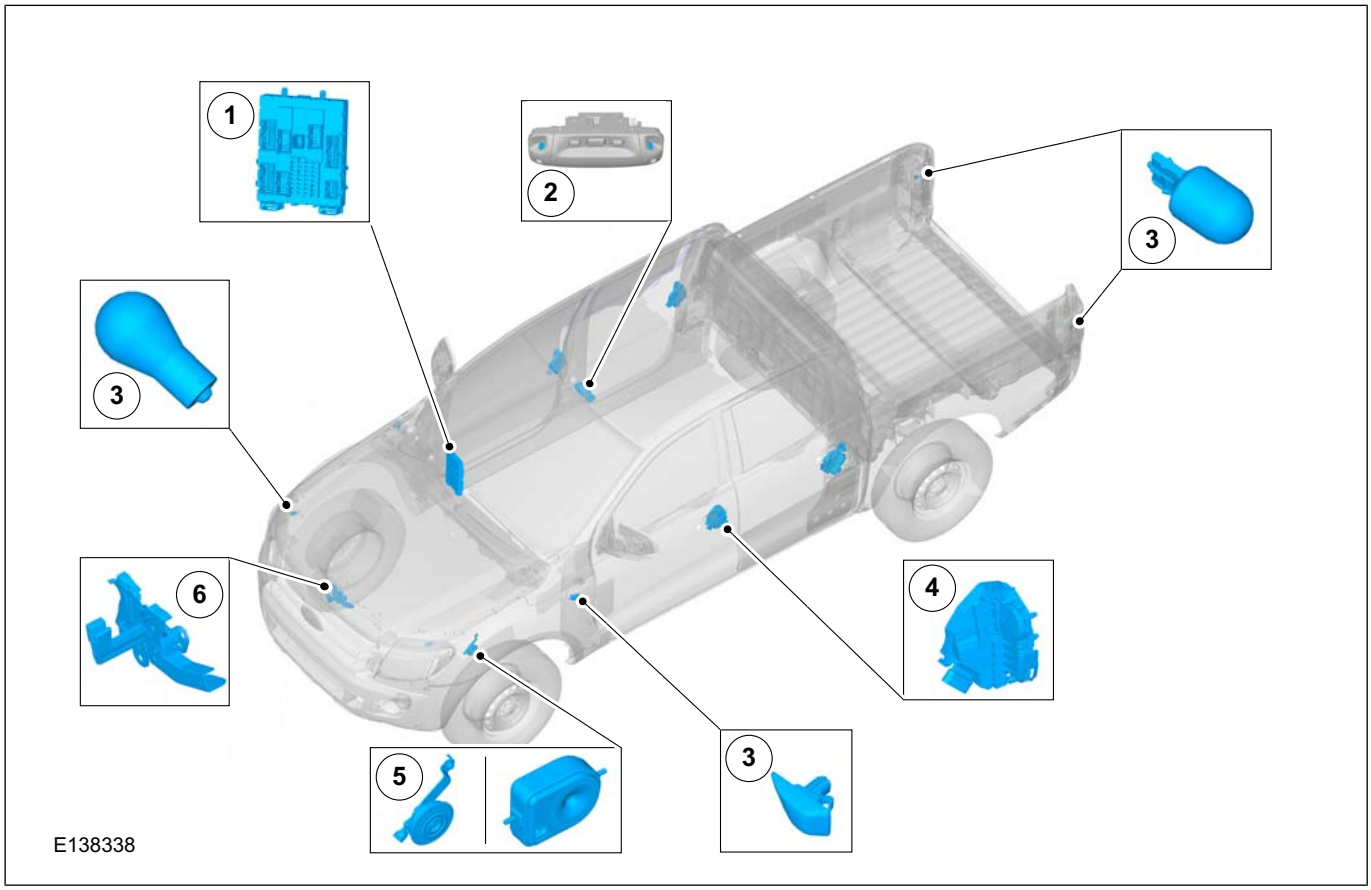

DESCRIPTION AND OPERATION

Stretch cab

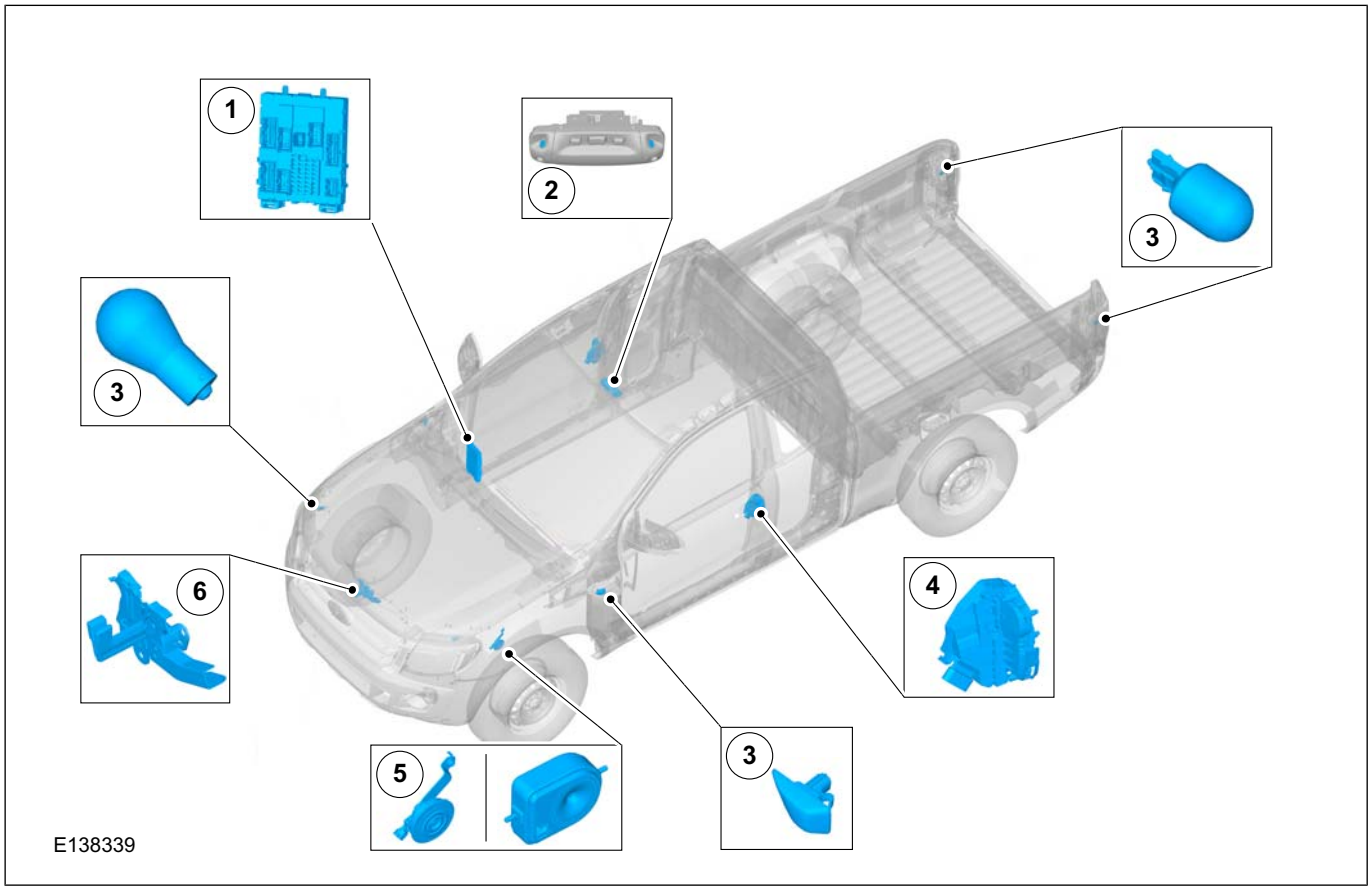

Item	Description
1	Body control module
2	Intrusion sensor(s)
3	Direction indicator(s)
4	Door latch(s)
5	Anti-theft alarm horn
6	Hood latch

System operation

Operation

Two anti-theft alarm systems are available, depending on the market and model version:

- Perimeter and interior monitoring.
- Perimeter fitted with battery back-up sounder and interior monitoring

NOTE: If a window is not closed, there is the risk that a false alarm may be triggered on vehicles with interior monitoring.

The anti-theft alarm system outputs an acoustic and visual signal if unauthorised persons attempt to gain access to the vehicle.

As a visual warning, the system switches on the hazard flashers, whilst the acoustic warning is performed via the anti-theft alarm system horn (with or without battery back-up sounder).

The anti-theft alarm system is activated after the vehicle is locked, provided the hood and all the doors are fully closed.

If the hood or one of the doors is not completely closed, it can be opened without the alarm being triggered since the system is not activated for this entry point.

The anti-theft alarm system can be switched off by unlocking the vehicle using the remote controls or by unlocking the door with the key and inserting the correctly coded key into the ignition switch within 12 seconds.

DESCRIPTION AND OPERATION

Component description

Intrusion sensors

E140259

The interior monitoring is an additional security system that triggers the alarm if any movement inside the locked vehicle is detected.

The transceivers work ultrasonically. The transmitter sends at a specific frequency into the monitoring area. The receiver receives the corresponding echo signal. Here, the signals are converted into digital values and the previously sent values are compared with the signals received. If there are significant differences between the two, a trigger signal is sent to the BCM.

As the period during which no movement is detected increases, so the sensitivity of the sensors increases.

Anti-theft alarm horn with integrated battery

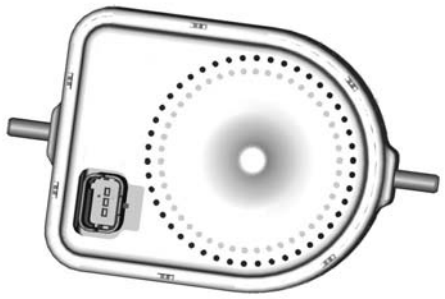

E130289

This horn has its own voltage supply from an integrated battery.

This ensures that the alarm horn will still be powered even if the vehicle battery has been disconnected.

REMOVAL AND INSTALLATION

Anti-Theft Alarm Horn

Removal

NOTE: Removal steps in this procedure may contain installation details.

1. Refer to: Battery Disconnect and Connect (414-01 Battery, Mounting and Cables, General Procedures).
2. Refer to: Lifting (100-02 Jacking and Lifting, Description and Operation).
3.

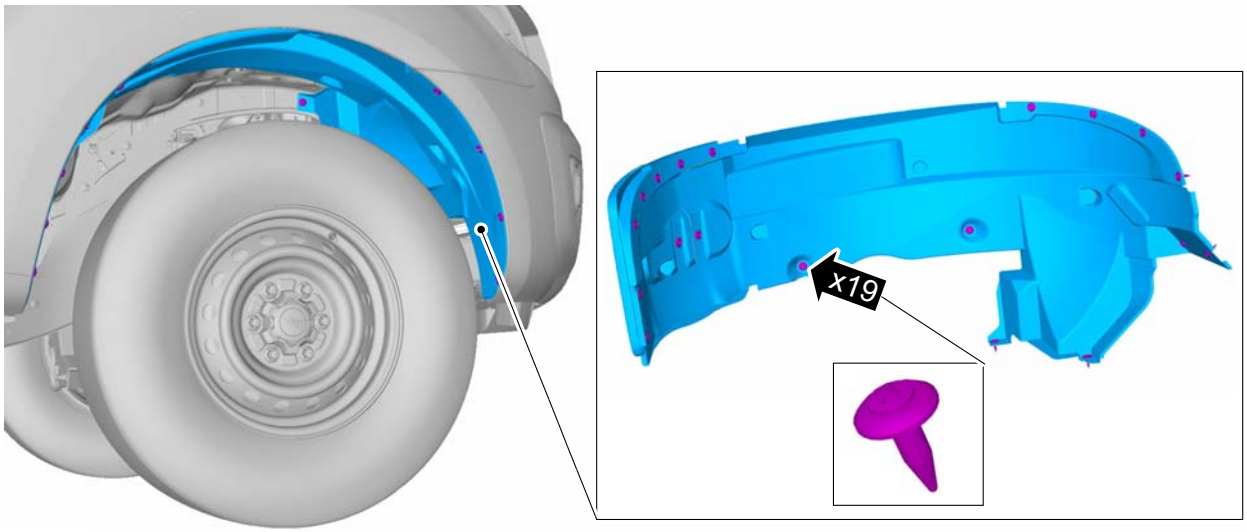

E127885

4. Torque: 8 Nm

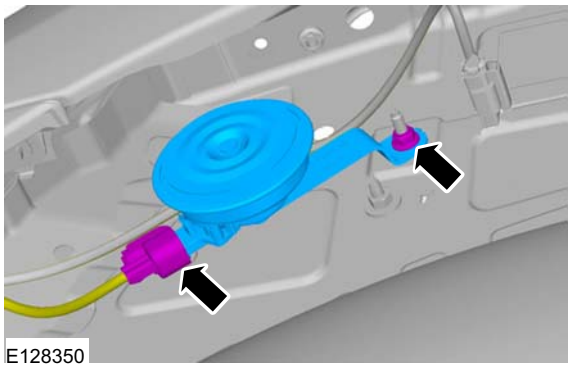
E128350

Installation

1. To install, reverse the removal procedure.

REMOVAL AND INSTALLATION

Anti-Theft Alarm Horn with Integral Battery

Removal

NOTE: Removal steps in this procedure may contain installation details.

1. Refer to: Battery Disconnect and Connect (414-01 Battery, Mounting and Cables, General Procedures).
2. Refer to: Lifting (100-02 Jacking and Lifting, Description and Operation).
3.

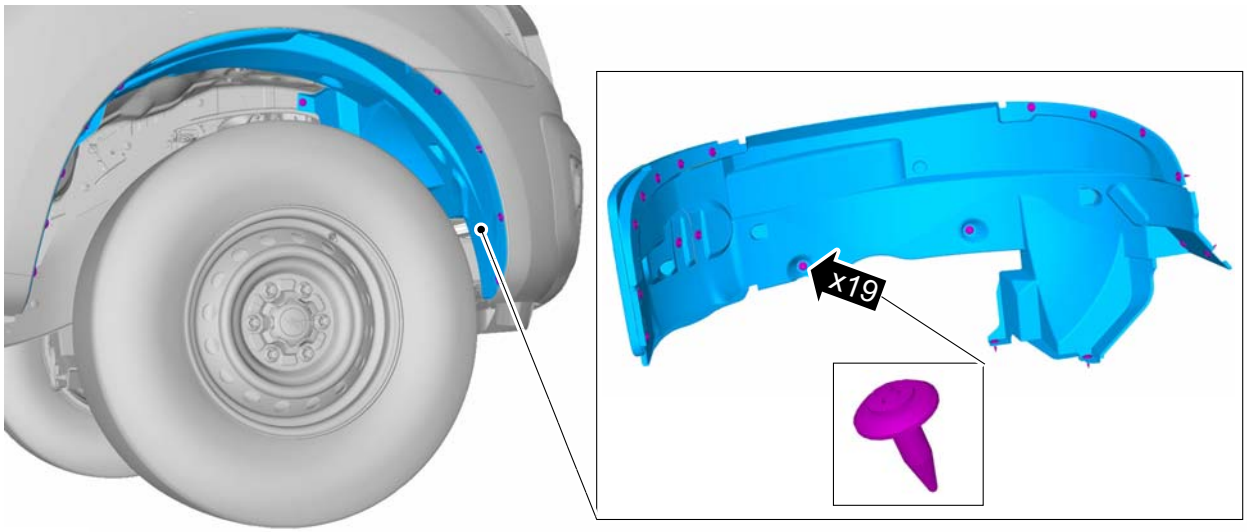

E127885

4. Torque: 8 Nm

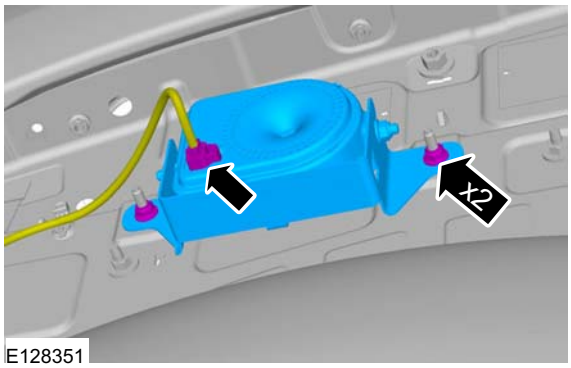

E128351

Installation

1. To install, reverse the removal procedure.

REMOVAL AND INSTALLATION

Intrusion Sensor

Removal

NOTE: Removal steps in this procedure may contain installation details.

1. Refer to: Battery Disconnect and Connect (414-01 Battery, Mounting and Cables, General Procedures).

2.

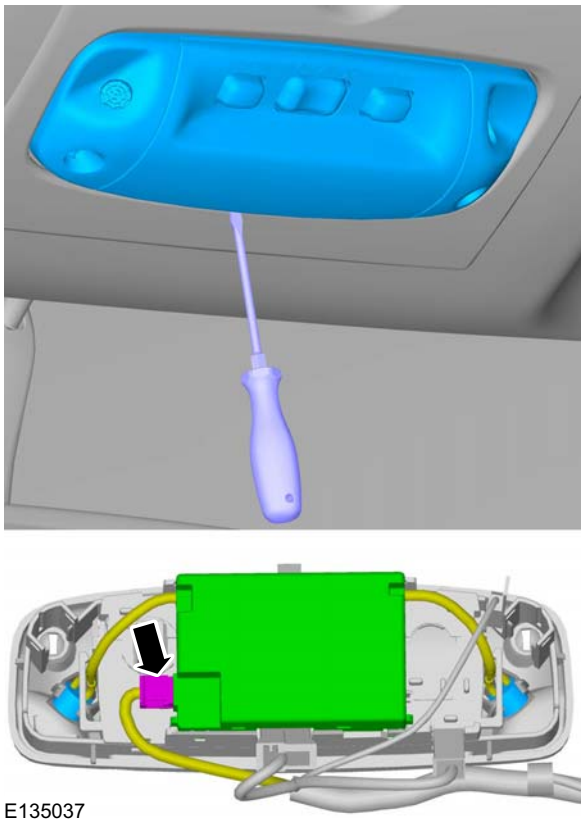

E135037

Installation

1. To install, reverse the removal procedure.

SECTION 419-01B Anti-Theft - Passive

VEHICLE APPLICATION: 2011.50 Ranger

CONTENTS PAGE

DESCRIPTION AND OPERATION

Anti-Theft - Passive..... 419-01B-2

GENERAL PROCEDURES

Anti-Theft Security Access..... 419-01B-3
Key and Remote Transmitter Programming Using Diagnostic Equipment..... 419-01B-4
Erasing All Key Codes Using Diagnostic Equipment..... 419-01B-5
Key Programming Using Two Programmed Keys..... (33 005 0) 419-01B-6

REMOVAL AND INSTALLATION

Passive Anti-Theft System (PATS) Transceiver..... 419-01B-7

DESCRIPTION AND OPERATION

Anti-Theft - Passive

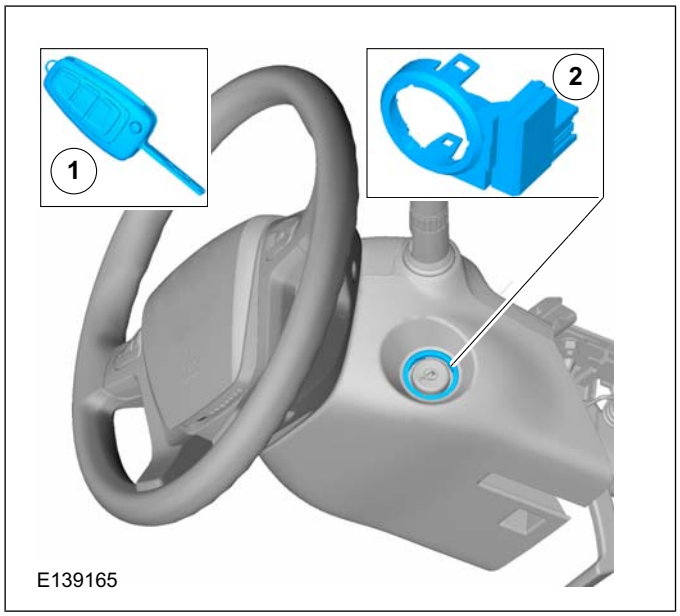

Item	Description
1	Passive anti-theft (PATS) transponder
2	PATS transceiver

PATS

The PATS is a passive system designed to increase the anti-theft security of the vehicle.

The driver does not need to actively do anything to protect the vehicle. The PATS is activated automatically after the ignition is switched off.

The PATS system uses specially encoded keys. If a valid key is inserted into the ignition lock cylinder and turned to position II, the code from the PATS transponder is received by the PATS transceiver. The code is then sent to the passenger junction box (PJB) which checks that a correct key has been inserted and communicates with the powertrain control module (PCM) to enable the engine to start.

If the code received by the PATS transceiver does not agree with any of the codes programmed to the vehicle, or if errors occur in the PATS, the engine cannot be started.

To indicate a concern in the PATS, the Vehicle immobiliser indicator glow in the instrument cluster.

GENERAL PROCEDURES

Anti-Theft Security Access

General Equipment

Ford Diagnostic Equipment

NOTE: This procedure requires access to the Global Secure Vehicle Information System (GSEVIN) database in order to obtain the coded security access.

1. From the diagnostic tool menu Select: Body/Security/PATS Functions. Follow the instructions on the screen.

   General Equipment: Ford Diagnostic Equipment

2. • When installing a new passenger junction box (PJB), the following sequence must be completed:
   • 1. Ignition Key Programming.
   • 2. Module Initialization.
3. • When installing a new powertrain control module (PCM) the following must be completed:
   • 1. Module Initialization.

GENERAL PROCEDURES

Key and Remote Transmitter Programming Using Diagnostic Equipment

General Equipment

Ford Diagnostic Equipment

NOTE: This procedure requires access to the Global Secure Vehicle Information System (GSEVIN) database in order to obtain the coded security access.

NOTE: This procedure will not erase programmed ignition keys from the passive anti-theft system (PATS).

NOTE: A maximum of 8 ignition keys can be programmed to a vehicle equipped with a passive anti-theft system (PATS).

1. From the diagnostic tool menu Select: Body/Security/PATS Functions. Follow the instructions on the screen.

   General Equipment: Ford Diagnostic Equipment

2. From the diagnostic tool menu Select: Ignition Key Programming. Follow the instructions on the screen.

GENERAL PROCEDURES

Erasing All Key Codes Using Diagnostic Equipment

General Equipment

Worldwide Diagnostic System (WDS) (418-F224)

NOTE: This procedure is used when a customer needs ignition keys programmed into the system. This procedure is also useful when programmed ignition key(s) have been lost or when the ignition lock cylinder has been replaced or when it is necessary to erase a key(s) from the passive anti-theft alarm system (PATS) memory.

NOTE: During this procedure it will be necessary to utilize the Anti-Theft System (PATS) Security Access Procedure. PATS security access must be granted to erase or program ignition keys. The anti-theft security access procedure requires access to the GSEVIN database in order to obtain the coded security access.

NOTE: This procedure will erase all programmed ignition keys from the passive anti-theft alarm system (PATS) memory and the engine will not start until two keys have been reprogrammed to the system.

For additional information, refer to Key Programming Using Diagnostic Equipment - in this section.

NOTE: Two PATS encoded keys with the correct mechanical cut must be available to carry out this procedure. One or both of them may be the original keys.

NOTE: If the remaining keys are with the customer and are not available with the vehicle, instruct the customer that the remaining keys are no longer valid to start the vehicle. If the customer wants to have these keys to be valid for the vehicle, the keys must be programmed using WDS.

For additional information, refer to Key Programming Using Diagnostic Equipment - in this section.

1. **Turn the ignition lock cylinder from the 0 position to the II position.**
2. **From the diagnostic tool menu Select: Body/Security/PATS Functions from the menu. Follow the instructions on the screen.**
3. **From the diagnostic tool menu Select: Ignition Key Erase. Follow the instructions on the screen.**
4. **From the diagnostic tool menu Select: Ignition Key Programming. Follow the instructions on the screen.**

GENERAL PROCEDURES

Key Programming Using Two Programmed Keys(33 005 0)

NOTE: A maximum of 8 ignition keys can be programmed to a vehicle equipped with a passive anti-theft system (PATS).

1. **NOTE: This procedure works only if 2 or more programmed keys are available.**

   For additional information, refer to: Key and Remote Transmitter Programming Using Diagnostic Equipment (419-01 Anti-Theft - Passive, General Procedures).

2. **NOTE: This procedure only works if the customer spare key programming is enabled.**

   For additional information, refer to: Key and Remote Transmitter Programming Using Diagnostic Equipment (419-01 Anti-Theft - Passive, General Procedures).

3. **Insert the first programmed passive anti-theft system (PATS) key into the ignition and turn the key from the OFF position to the ON position (maintain the key in the ON position for approximately 3 seconds).**
4. **Turn the first key to the OFF position and remove the key from the ignition.**
5. **Within 10 seconds of turning the key to the OFF position, insert a second programmed passive anti-theft system (PATS) key into the ignition and turn the key from the OFF position to the ON position (maintain the key in the ON position for approximately 3 seconds).**
6. **Turn the second key to the OFF position and remove the key from the ignition.**
7. **Within 10 seconds of turning the second key to the OFF position, insert the new, unprogrammed passive anti-theft system (PATS) key into the ignition and turn the key from the OFF position to the ON position (maintain the key in the ON position for approximately 6 seconds).**
8. **Turn the new key to the OFF position and remove the key from the ignition.**
9. **If it is desired to program additional keys, repeat steps 3 - 9 for each additional key.**

REMOVAL AND INSTALLATION

Passive Anti-Theft System (PATS) Transceiver

Removal

NOTE: Removal steps in this procedure may contain installation details.

1. Refer to: Battery Disconnect and Connect (414-01 Battery, Mounting and Cables, General Procedures).

2.

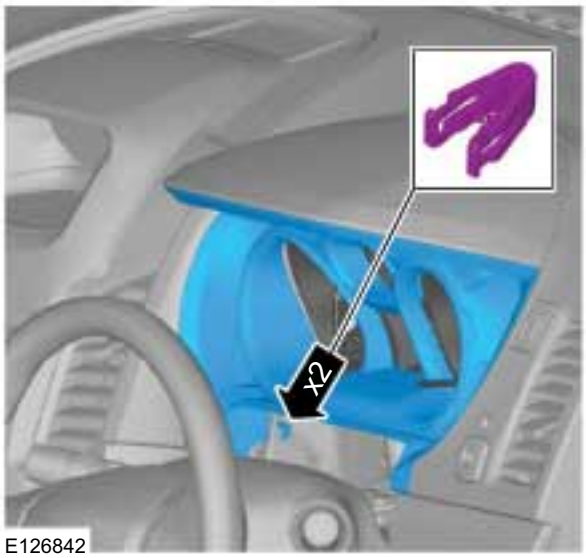

E126842

3.

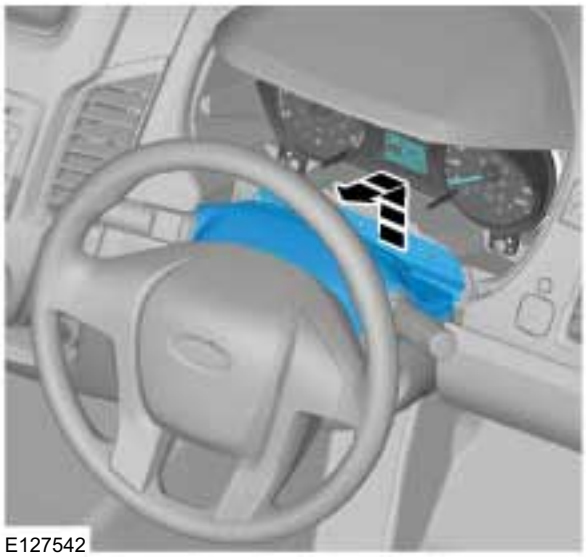
E127542

4.

E128174

5.

E128175

REMOVAL AND INSTALLATION

6.

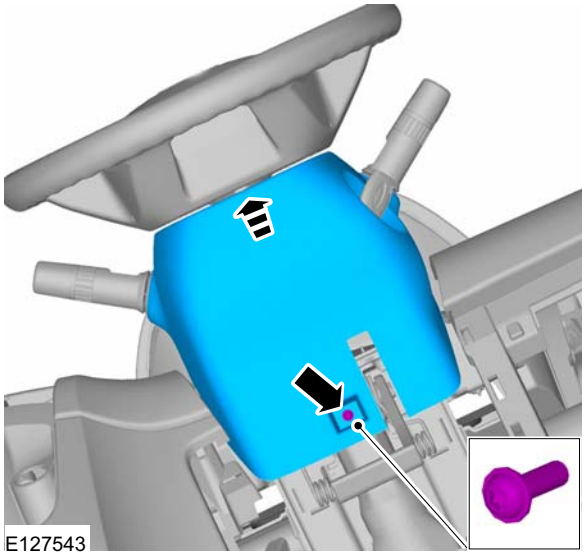

7.

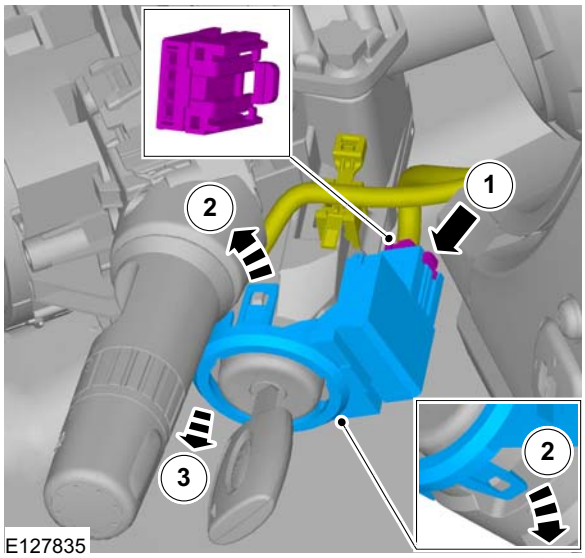

Installation

1. To install, reverse the removal procedure.

SECTION 419-10 Multifunction Electronic Modules

VEHICLE APPLICATION: 2011.50 Ranger

CONTENTS PAGE

DESCRIPTION AND OPERATION

Module Controlled Functions..... 419-10-2
Overview..... 419-10-2
Body control module (BCM)..... 419-10-3
Emergency function..... 419-10-3
Light switch..... 419-10-4
Combined rain sensor/light sensor..... 419-10-4
Sunload Sensor..... 419-10-4
Automatic headlamps..... 419-10-4
Headlamp switch-off delay..... 419-10-5
Interior lighting..... 419-10-5
Heated windscreen..... 419-10-5
Heated rear window and heated external mirrors..... 419-10-6
Windshield wash/wipe system..... 419-10-6
Central door locking..... 419-10-7
Smart Charge system..... 419-10-9
Ignition overload protection..... 419-10-9
Electric window regulators..... 419-10-9
Speed control..... 419-10-10
Brake fluid level..... 419-10-10
Power management..... 419-10-10
Immobiliser..... 419-10-10
Central module configuration..... 419-10-11
VIN identification..... 419-10-11
Climate control..... 419-10-11

REMOVAL AND INSTALLATION

Body Control Module (BCM)..... 419-10-12

DESCRIPTION AND OPERATION

Module Controlled Functions

Overview

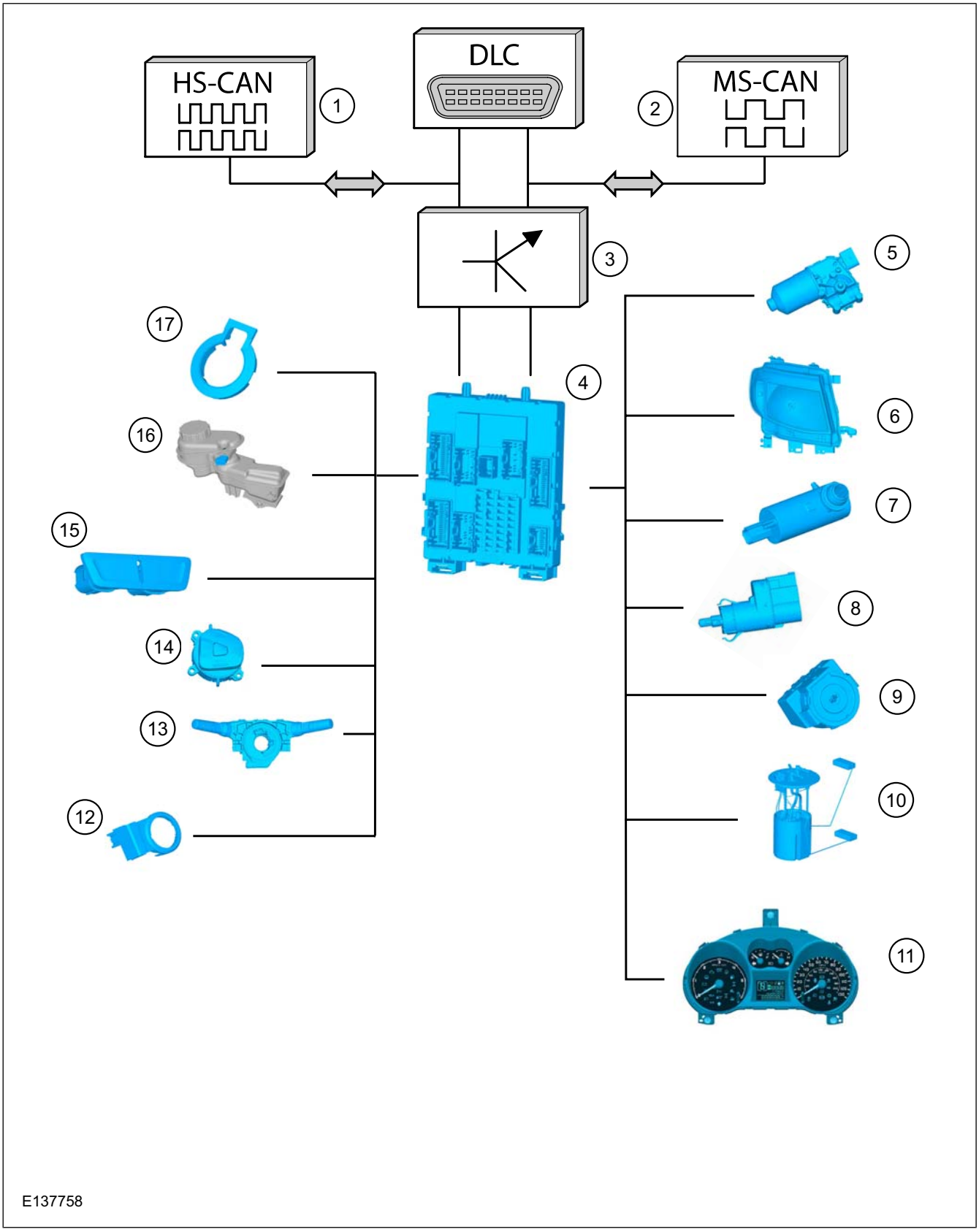

DESCRIPTION AND OPERATION

Item	Description
1	HS CAN bus
2	MS CAN bus
3	Gateway (BCM)
4	BCM
5	Front window wiper motors
6	Headlamp
7	Window washer pump
8	Stoplamp switch
9	Ignition lock
10	Fuel level sensor
11	Instrument cluster
12	PATS transceiver (vehicles without keyless vehicle module only)
13	Multifunction switch
14	Speed control switch
15	Hazard flasher switch
16	Brake fluid level switch
17	Light/rain sensor

Body control module (BCM)

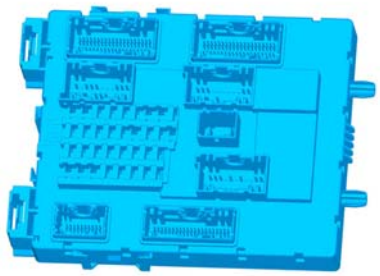

E139764

The body control module is installed on the driver's side of the vehicle underneath the dash panel.

It replaces separate components such as the central locking module, the timer relay and the fuse box in the passenger compartment.

It consists of a power distribution section (including fuses and relays) and an electronic control module, which controls the operation of most of the vehicle's electronic systems.

New vehicles are supplied with different versions of the BCM (depending on the equipment specification of the vehicle). When installing a replacement BCM it needs to be configured for the specific vehicle.

The following functions are controlled or executed by the BCM if the battery voltage is between 9 and 16 V.

- Battery saving function
- Current distribution
- Exterior lighting
- Interior lighting
- Wiper system
- Washer fluid level indicator
- Window heating (heated windshield, heated rear window, heated exterior mirrors)
- Speed control system (reads the speed control switches and transmits signals on the CAN bus)
- Locking / Unlocking
- Anti-theft
- Air conditioning controls (partial)
- Handbrake (it monitors the switch and transmits the signal on the CAN bus)
- Monitoring of the brake fluid level.
- Electric fuel pump (mechanical fuel pump on diesel engines is not BCM controlled)
- Fuel level indicator
- Battery charging (smart charge, partially)
- Electric booster heater
- Brake pedal position (BPP) switch.
- Communications via the high speed CAN bus (HS-CAN) and mid-speed CAN bus (MS-CAN)
- Main module in the LIN bus system
- PATS (interface for transceiver)
- BTSI (brake transmission shift interlock)
- Central module configuration
- Power management (vehicle mode)

The BCM can be diagnosed via the diagnostic tool. Furthermore, an integrated service mode enables testing of the input and output signals without the need for further tools.

Emergency function

The BCM is equipped with restricted emergency running functions on all vehicles.

A monitoring function within the BCM is sent a control signal at regular intervals by the

DESCRIPTION AND OPERATION

microcontroller. If this control signal is not sent, the BCM goes into emergency running mode after a specified time.

In this case, vehicle electrical functions will be restricted to the following:

- Stop light will function normally.
- Horn will function normally.
- Dipped beam and position lamps will be switched on permanently, irrespective of light switch position.
- Windscreen wipers will perform continuous wiping at normal wipe speed, irrespective of wiper switch position.

The emergency running mode is switched off when the ignition is switched to "0". When the ignition is switched on again, the BCM will try to recover. If recovery fails, the vehicle cannot be started.

Light switch

If the ignition lock is in position "0" for more than 3 minutes then the front fog lamps, rear fog lamp and the main beam headlamps are deactivated when the ignition is next switched on (if they were previously activated).

Combined rain sensor/light sensor

The combined rain sensor/light sensor is attached to the windshield, near the interior rear view mirror.

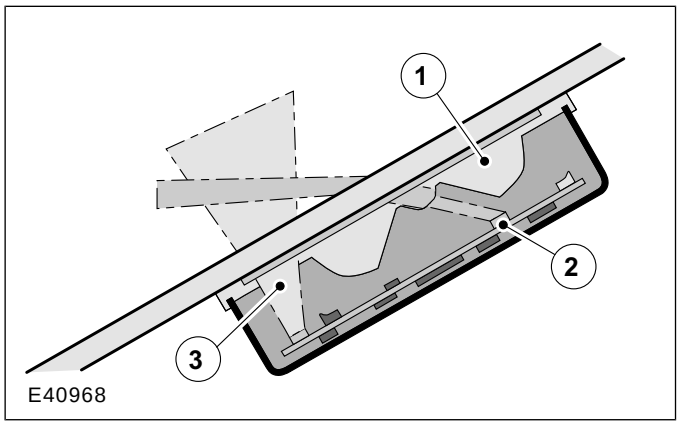

Item	Description
1	Lens
2	Front light sensor
3	Ambient light sensor

The ambient light sensor determines the general light intensity.

For this purpose, it detects the light over as wide an angle as possible, without taking the direction of incidence into account.

The front light sensor determines the light intensity directly in front of the vehicle.

Sunload Sensor

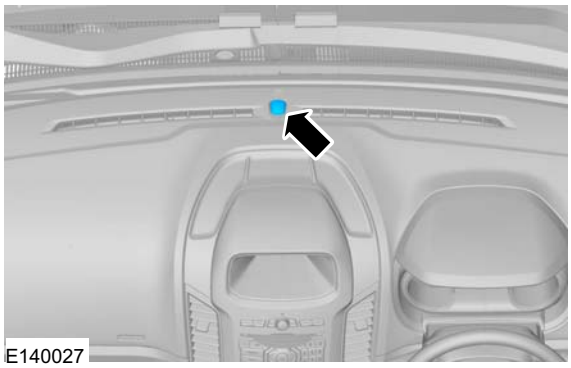

The sunload sensor is positioned centrally on the dashboard.

The sunload sensor measures the intensity of the sunlight reaching the vehicle.

Automatic headlamps

The low beams, side lamps, license plate lamps as well as the instrument cluster and instrument panel illumination are switched on automatically if all the following conditions are met:

- Ignition switch in the "II" or "III" position
- Light switch in the "AUTO" position
- Detected ambient light conditions below a stored threshold value

They are switched on or off by the BCM depending on the input signals of the combined rain sensor/light sensor(s).

If both the ambient light sensor and the front light sensor simultaneously detect a sudden reduction in light intensity then algorithm-based calculations are performed to determine that the vehicle has entered a tunnel, multi-storey car park or a long underpass.

In this type of case a request to switch on the exterior lights and the display lamps in the instrument cluster is transmitted to the BCM.

If the vehicle is suddenly thrown into the shade by a large truck, the two sensors will register different light intensities. In this case, the algorithm-based

DESCRIPTION AND OPERATION

calculation will not result in the lights being switched on.

Headlamp switch-off delay

The headlamp switch-off delay utilizes the low beam together with the peripheral lights (if equipped) to illuminate the area surrounding the vehicle. The function is activated by operating the high beam lever when the ignition switch is in the "0" position and the light switch is in the "AUTO" position.

After the last door has been closed, the function remains active for a further 30 seconds and then switches off automatically.

When a door or the tailgate is open, the switch-off time is extended to 180 seconds. After the last door has been closed, the switch-off time is reset to 30 seconds.

The headlamp switch-off delay can be deactivated prematurely by operating the high beam lever again or by switching on the ignition.

The switch-off time is set to the above values at the factory, and can be changed in the central module configuration by a Ford dealer.

Interior lighting

Depending on the vehicle specification, the interior lighting which is controlled by the BCM may include:

- Left and right-hand footwell lamps
- Front and rear dome lamps (in "door contact" switch position)

Depending upon vehicle specification, the interior lamps which can be switched by the operator include:

- Front and rear dome lamps (in "On" switch position)
- Map lights
- Glove compartment lamp

The BCM-controlled interior lighting is switched on with dimmed brightness if one of the following conditions is satisfied:

- One of the vehicle's doors is opened.
- The ignition key is in the "0" or "I" position and the vehicle is unlocked.
- The ignition key is turned from the "II" to the "I" or "0" position.

The BCM-controlled interior lighting is switched off if all of the doors are closed and one of the following conditions is satisfied:

- 25 seconds have elapsed since the last door was closed.
- The ignition key is turned from the "0" or "I" to the "II" position.
- The ignition key is in the "0" or "I" position while the vehicle is locked.

The duration of the dimmer function is 1.7 seconds in both the switch-on and switch-off phases.

The dimmer function is not used if the interior lighting is switched off by the battery saving function after 30 minutes.

Heated windscreen

The heated windshield is switched on by the BCM under the following conditions:

- The heated windshield switch is operated, the ignition switch is in position "II" and the charge warning lamp is switched off.
- The "Defrost" function of the climate control has been activated, the ignition switch is in position "II" and the charge warning lamp is switched off.

The heated windshield is switched off by the BCM under the following conditions:

- More than 4 minutes have elapsed since the switch for the heated windshield was operated.
- The engine is switched off.
- The "Defrost" function is deactivated or the switch for the heated windshield is pressed again while the heated windshield is still switched on.
- The charging system warning indicator is switched on.
- The battery voltage has dropped below 10.3 V for more than 20 seconds (power management strategy). Manual requests for switching on the heated windshield by pressing the switch, are ignored at this time.

If the battery voltage returns to the normal range then the disabling of the heated windshield is cancelled - the heated windhsield is then in a switched-off state.

DESCRIPTION AND OPERATION

Heated rear window and heated external mirrors

The heated rear window and the heated exterior mirrors are switched on by the BCM under the following conditions:

- The heated rear window switch is operated, the ignition switch is in position "II" and the charge warning lamp is switched off.
- The "Defrost" function of the climate control has been activated, the ignition switch is in position "II" and the charge warning lamp is switched off.

The heated rear window and the heated exterior mirrors are switched off by the BCM under the following conditions:

- More than 4 minutes have elapsed since the switch for the heated rear window was operated.
- The engine is switched off.
- While the heated rear window is switched on, the switch for the heated rear window is pressed or the "Defrost" function of the climate control is deactivated.
- The battery voltage has dropped below 10.3 V for more than 20 seconds (power management strategy). Manual requests for switching on the heated rear window by pressing the switch, are ignored at this time.

If the battery voltage returns to the normal range then the disabling of the heated rear window is cancelled - the heated rear window is then in a switched-off state.

Windshield wash/wipe system

The windshield wiper system is equipped with just one wiper motor, and this motor is connected to the BCM via a simple cable connection.

The windshield wash/wipe system will only operate if the ignition switch is in the position "I" or "II".

Four wipe functions are available: "Single Wipe", "Speed 1", "Speed 2" and "Intermittent Wipe" or "Automatic Wipe" (depending on the specification of the vehicle)".

In "Speed 1" or "Speed 2" mode, the wipers are operating continuously at either normal speed or fast speed.

When the intermittent wipe mode is switched on the windshield wipers operate at normal speed with the following wiper delays:

- Wiper delay 1: 1 second
- Wiper delay 2: 3.5 seconds
- Wiper delay 3: 6 seconds
- Wiper delay 4: 9.5 seconds
- Wiper delay 5: 15.5 seconds
- Wiper delay 6: 22 seconds

In the event of a failure, the default time for the wiper delay is 3.5 seconds.

When the windshield washer switch is operated washer fluid is sprayed onto the windshield. After a short delay designed to protect the wiper blades the wipers perform 2 or 3 wipes at low speed.

If when the windshield washer switch is activated the windshield wipers are switched off, a single wipe is performed 4 seconds after the wipers have returned to the home position after performing the 2 or 3 wipes.

If the wipers are set to intermittent wipe and the window washer switch is actuated, the wipes are only performed if no further wipe request has been selected via a shorter delay time within the 4-second delay time.

The post wipe function on the windshield ensures that any water remaining on the windshield after washing is wiped away. It is only required if the wipers are switched off or they are set to intermittent mode.

Rain sensor

The automatic windshield wipers must be switched off before the vehicle is driven into a car wash.

If the windshield is iced up, the wipers may only be activated by the rain sensor after the windshield has been completely defrosted.

The rain sensor is an optical measuring instrument. Contamination such as oil, grease, dust or faulty wiper blades will prevent the system from working properly. Before switching on the automatic windshield wipers, the windshield must be clean in the area of the rain sensor.

The rain sensor is built into a housing which is mounted behind the rear view mirror on the windshield.

DESCRIPTION AND OPERATION

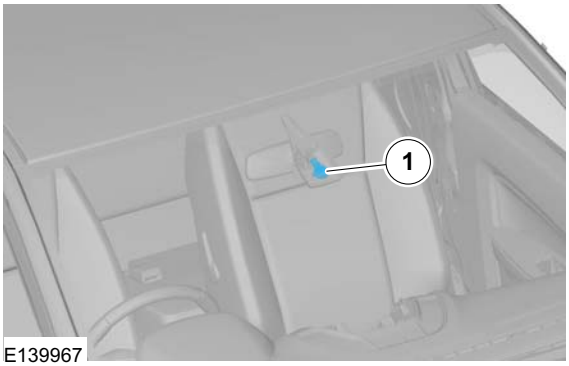

The rain sensor (1) consists of an opto-electronic measuring and evaluation circuit. The sensor can calculate the amount of precipitation falling on the windshield and request that the windshield wipers are switched on.

On the basis of the information provided by the rain sensor, the windshield wipers are then set to the required wipe speed by the generic electronic module (BCM).

Mode of operation of the rain sensor

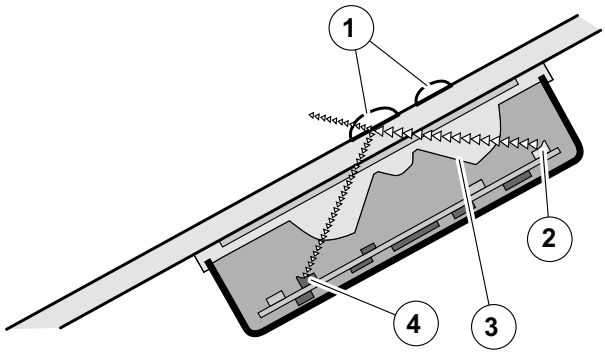

Item	Description
1	Raindrop
2	LED
3	Lens
4	Photodiode

The rain sensor consists of three optical components:

- an LED
- a photodiode
- a lens

The photodiode emits an infrared light beam of known intensity; the emitted light exits through the lens and is reflected by the windshield.

The reflected light beam enters back through the lens and then reaches the photodiode. The corresponding value taken without moisture on the windshield is used as the reference value for the automatic calibration process.

Subsequent deviations from this value cause the windshield wipers to be switched on.

If rain lands on the windshield then the light reflected by the windshield has a lower intensity. This loss of intensity is registered by the photodiode and, proportionally to the loss of intensity, the module switches on the windshield wipers with the required wipe speed (in intermittent or continuous mode).

When the automatic wipe function is switched on (wiper lever to intermittent position) the wipers are only activated automatically if the rain sensor registers water on the windshield.

It is not necessary to calibrate the rain sensor, as this has already been done at the factory.

The sensitivity of the rain sensor can be changed by adjusting the control resistor for the intermittent mode of the windshield wipers.

- Adjusting ring position - wide symbol: High sensitivity
  - The wipers wipe even if only a small amount of water has been measured on the windshield.
- Adjusting ring position - narrow symbol: Low sensitivity
  - The wipers only wipe if a large amount of water has been measured on the windshield.

Central door locking

Locking/unlocking – central locking

The central locking system locks all doors, so that none of these can be opened from the outside of the vehicle. The door lock motors are directly activated by the BCM.

DESCRIPTION AND OPERATION

The central locking is actuated if one of the following conditions is satisfied:

- A key is inserted into one of the door locks and turned to the "locking" position.
- The locking button on the remote control is pressed once.
- The lock/unlock button is pressed inside the vehicle.

If one of the doors is not properly closed when the central locking function is performed then all doors are locked and unlocked again.

The turn signal lamps will show one short flash when the vehicle has been successfully centrally locked.

Locking/unlocking – double locking

The double locking system locks all doors so that they cannot be opened from outside the vehicle. In addition to the central locking function, the double locking system also disconnects the door opening levers from the locking mechanism. This means that the doors can no longer be opened from inside the vehicle.

The double locking mechanism only works when the ignition key is not in the ignition lock.

The double locking is activated if one of the following conditions is satisfied:

- A key is inserted into a door lock and turned to the "locking" position twice within 3 seconds.
- The locking button on the remote control is pressed twice within the space of 3 seconds (if the vehicle is configured for activation of the double locking upon a double press of the locking button on the remote control).

If the ignition key has been turned to position "I" then the vehicle is centrally locked but not double-locked.

If on a double-locked vehicle the corresponding ignition key is inserted into the ignition, the system switches over from double locking to central locking.

The turn signal lamps will show two short flashes to confirm when the vehicle has been double locked.

Locking/unlocking – central unlocking

The central unlocking system unlocks all of the doors on the vehicle including the liftgate.

The central locking is actuated if one of the following conditions is satisfied:

- The door lock is turned to the unlocking position.
- The release button on the radio remote control is pressed once (provided that the vehicle is not configured to unlock the driver's door only).
- The release button on the radio remote control is pressed twice within 3 seconds.
- The door opening lever on a front door is pulled to the unlocking position on a centrally locked vehicle (provided the vehicle is not double locked).
- The lock/unlock button is pressed inside the vehicle, whilst a key is in the ignition or up to 10 seconds after a key has been removed from the ignition.

If the vehicle has been configured for unlocking via the driver's door lock and the "unlocking" button on the remote control is only pressed once, then just the driver's door is unlocked.

If the "unlocking" button on the remote control is then pressed again within 3 seconds the remaining doors are unlocked via the central unlocking function.

If the vehicle was double locked beforehand, then the other doors are centrally locked, whereas the driver's door is unlocked.

Unlocking of the vehicle with the ignition switched off, is confirmed by one long flash of the turn signal lamps.

Locking/unlocking - automatic re-locking function

The automatic re-locking function returns the locking system of the vehicle to its last status if it was centrally locked or double locked and the following conditions are satisfied:

- The vehicle is unlocked via remote control.
- A door has not been opened within 45 seconds.
- The ignition is not switched on.

This feature may be turned off at the Ford dealer.

DESCRIPTION AND OPERATION

Smart Charge system

In addition to the familiar functions, the Smart Charge system also performs the following functions:

- Automatic deactivation of non-critical high power electrical consumers when the battery voltage is low in order to reduce the level of current drawn.
- Automatic activation of non-critical high power electrical consumers when the battery voltage is excessively high in order to protect components which are sensitive to increased voltages.

When the Smart Charge system is active, a slight variation in blower fan speed may be noticed.

The battery charging current is optimized through continuous calculation of the battery temperature and monitoring of the alternator output voltage.

By receiving the forwarded alternator load signal, the PCM is given early warning whenever an electric consumer is switched on or off. This means that the PCM receives information about imminent changes in the torque drawn by the alternator. By evaluating this information the PCM can provide a higher level of idling stability.

The two remaining functions of the Smart Charge System are controlled by the BCM.

Electrical consumers are switched off due to low voltage when the BCM determines (on the basis of the message received from the PCM on the CAN bus via the instrument cluster) that the battery voltage has dropped below the threshold.

When the threshold for low battery voltage is reached the BCM automatically deactivates the following consumers - in this order and with a gap of 5 seconds between each:

- Electric booster heater (vehicles with diesel engines)
- Heated exterior mirrors and heated windscreen
- Heated rear window

If the battery voltage rises back above the lower threshold then the BCM re-enables all of the electrical consumers which were previously disabled. They then have switched off status and must be switched back on by the driver.

Electrical consumers are switched on due to excessively high voltage if the BCM determines that the battery voltage is above the threshold for overvoltage and the charge control lamp has been switched on.

When the threshold is reached the BCM automatically activates the following consumers - in this order and with a gap of 5 seconds between each:

- Heated rear window
- Heated exterior mirrors and heated windscreen
- Electric booster heater (vehicles with diesel engines)

If the battery voltage drops back below the threshold then the BCM automatically deactivates any consumers that were switched on. However, if they were switched on by the driver before the automatic activation, they will then be switched on again in turn with a 5-second time interval.

Ignition overload protection

The ignition overload protection intermittently disconnects certain circuits in order to restrict the current being drawn from the battery while the starter motor is operating.

The position of the ignition switch is transmitted by the BCM on the MS CAN/HS CAN bus.

The ignition overload protection relay is located in the battery junction box, and is activated by the BCM when the ignition switch is in position III.

The activated ignition overload protection then switches off the following electrical consumers:

- Exterior lighting
- Windscreen/rear window wash/wipe systems
- Backup lamps

Electric window regulators

The ignition key must be in position "II" before the electric window regulators can be operated. The electric window regulator open or close the door windows when the switch is moved to the corresponding position.

The movement of the window glass stops when the window regulator button is released or when the ignition key is moved from position "II" to position "I", "III" or "0".

The driver door window can only be operated via the driver door switch; the other windows can be opened and closed via the driver door switch panel or the relevant door switch.

If the window on the front passenger's door is operated via the switch on the switch panel in the driver's door, then the driver's door module

DESCRIPTION AND OPERATION

receives the cable-transmitted signal from the switch and forwards it on the CAN bus to the door module of the front passenger's door, which then moves the window glass to the corresponding position.

The rear doors are each connected via a LIN bus to the door modules of the front doors.

The disabling switch in the switch panel on the driver's door can be used to disable the window regulator switches in the rear doors.

Speed control

The BCM acts as the provider of the signals of the speed control system. The signals which come from the switch unit in the steering wheel are converted to CAN and sent on to the PCM via the HS CAN bus.

The PCM then adjusts the power output of the engine to maintain the selected vehicle speed.

Brake fluid level

If the brake fluid level is normal the brake fluid level switch is closed and sends a ground signal via cable to the BCM.

If the brake fluid level is below the threshold and the level switch opens for more than two seconds then the BCM generates a CAN signal which it sends to the instrument cluster.

Power management

The power management system offers various modes which can be used in different situations to ensure an effective power supply to individual modules.

The power management function is integrated in the BCM.

Four different vehicle modes are used depending on the operating status of the vehicle:

Factory mode:

- Factory mode is activated while the vehicle is in production. In this mode, power supply is reduced to a minimum by switching off relays. Once the vehicle leaves the factory the factory mode is deactivated, and transport mode is activated instead.

Transport mode:

- Transport mode is activated while the vehicle is en route from the factory to the dealer. In this mode, the vehicle can be driven without any adverse effects on vehicle safety.
- Individual modules and electrical systems (e.g. anti-theft alarm system, clock and remote control) are deactivated.
- This ensures that the battery is sufficiently charged when the vehicle is handed over to the customer.

If the engine is started while the vehicle is in transport mode then the transport mode is temporarily suspended. It is reactivated once the ignition is switched off.

Transport mode must be deactivated by the **dealer**. To do this, the dealer needs to press the brake five times and operate the hazard warning lights switch twice within the space of 10 seconds.

When the transport mode is deactivated the BCM automatically changes into normal mode.

Normal mode:

- The full functionality of all electrical systems is available in normal mode.

Crash mode:

- Crash mode is activated as soon as the restraints control module (RCM) registers a sufficiently severe vehicle impact.
- The vehicle is then centrally unlocked if it was locked at the time of the crash.
- In addition the hazard warning lights are activated.
- Crash mode is deactivated if the ignition key is turned to position "0" and then back to position "II" after at least 500 ms. The hazard warning switch needs to be operated to deactivate the hazard warning lights.

Immobiliser

The PATS function is integrated in the BCM. Correspondingly, the send/receive unit is directly connected to the BCM (previously it was connected to the powertrain control module (PCM)).

After reading in the key code (in ignition lock position "0", "I" or "II"), a corresponding message is placed by the BCM on the HS CAN databus for the PCM.

DESCRIPTION AND OPERATION

Depending on the outcome of this query and the status of the key, the PCM then issues the start enable.

Central module configuration

The modules in the vehicle were previously configured with the aid of the diagnostic unit and the "Module Programming" (inhale/exhale) function. Here, the actual status of each module is read into the diagnostic unit and then saved in the new module.

Ranger vehicles utilize a new form of module configuration called "central module configuration".

Here, all of the necessary configuration parameters are stored in the BCM at the factory, and from there they are transmitted via the CAN bus network to the individual modules.

The diagnostic unit is equipped with a new routine for performing the central module configuration which is used to replace or subsequently change configuration data. Instead of reading the data into the diagnostic unit as was done in the past, they are transmitted by the BCM to the relevant module. The diagnostic unit is only used to initiate and monitor the process.

For safety reasons all configuration data which are stored in the BCM are also stored in parallel in the instrument cluster. If the BCM then needs to be replaced, this means that the required configuration data can be read out from the instrument cluster with the aid of the diagnostic unit and then transferred to the new BCM.

The BCM checks the configuration data for consistency and stores DTCs in the event of any faults (diagnostic unit trouble codes).

In the event of a fault the functionality of a particular module may be restricted.

When the BCM is replaced it is necessary to re-learn the keys for the remote control and for the PATS system. The procedure for doing this is the same as on the current vehicles.

VIN identification

During the VIN identification, the VIN is saved in individual modules at the factory.

As soon as a module is identified when the ignition is switched on (even after the battery has been disconnected), it can be operated without further inputs.

If no VIN or an invalid VIN is read in from a module then this is stored in a memory. Subsequently the functionality of the module may be restricted depending on its use.

Climate control

Evaporator temperature

On vehicles with air conditioning the evaporator temperature is measured via the evaporator temperature sensor, located in climate the climate controls. The temperature is then communicated to the BCM.

If a temperature below +2.9 °C is determined then the BCM sends a signal to the PCM via the HS CAN bus which then shuts off the air conditioning clutch. If the temperature is above +3.9 °C the BCM sends a signal to the PCM and the air conditioning clutch is switched back on again.

Electric booster heater

If the interior temperature is set to "HI" on the heater / air conditioning control assembly or the temperature control switch is set to its highest setting then the climate control module sends an "electric booster heater ON" request signal via the MS CAN bus to the BCM. If a manual air conditioning system is installed, the signal is transmitted via a conventional cable connection.

The BCM controls the electric booster heater according to the available alternator capacity.

In contrast to other Ford vehicles, there is no link to the coolant temperature or the ambient temperature.

The electric booster heater electronics activates depending on a LIN signal generated by the BCM. The output stages switch the three heating elements of the electric booster heater ON or OFF individually, whereby the heating periods of the individual elements can overlap. Due to the variable switch-on duration, continuously variable temperature control is possible. The overall heating power of the three heating elements is linearly proportional to the LIN signal. If the LIN signal equals 10%, the electric booster heater is not activated.

REMOVAL AND INSTALLATION

Body Control Module (BCM)

Removal

NOTE: Removal steps in this procedure may contain installation details.

1. Refer to: Steering Column (211-04 Steering Column, Removal and Installation).

2.

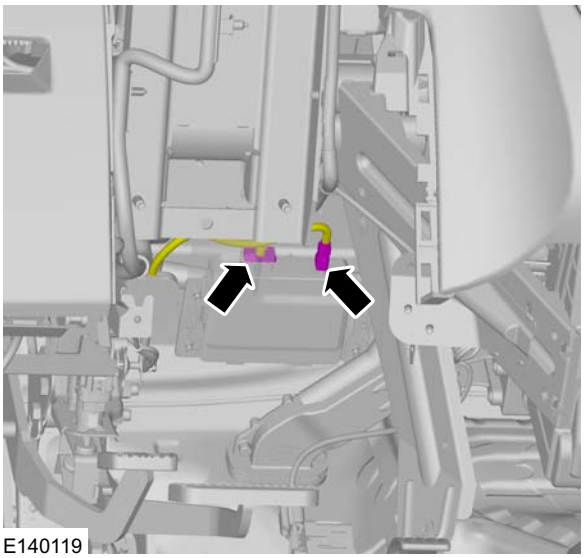

3.

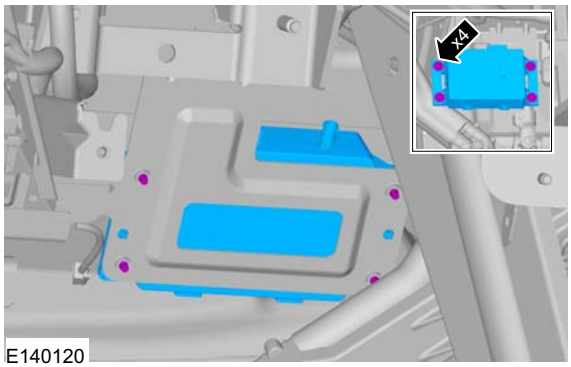

Installation

1. To install, reverse the removal procedure.

REMOVAL AND INSTALLATION

Cowl Panel Grille

Removal

NOTE: Removal steps in this procedure may contain installation details.

1. Torque: 35 Nm

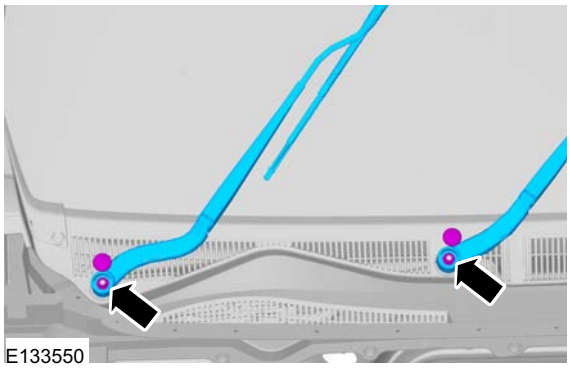

2.

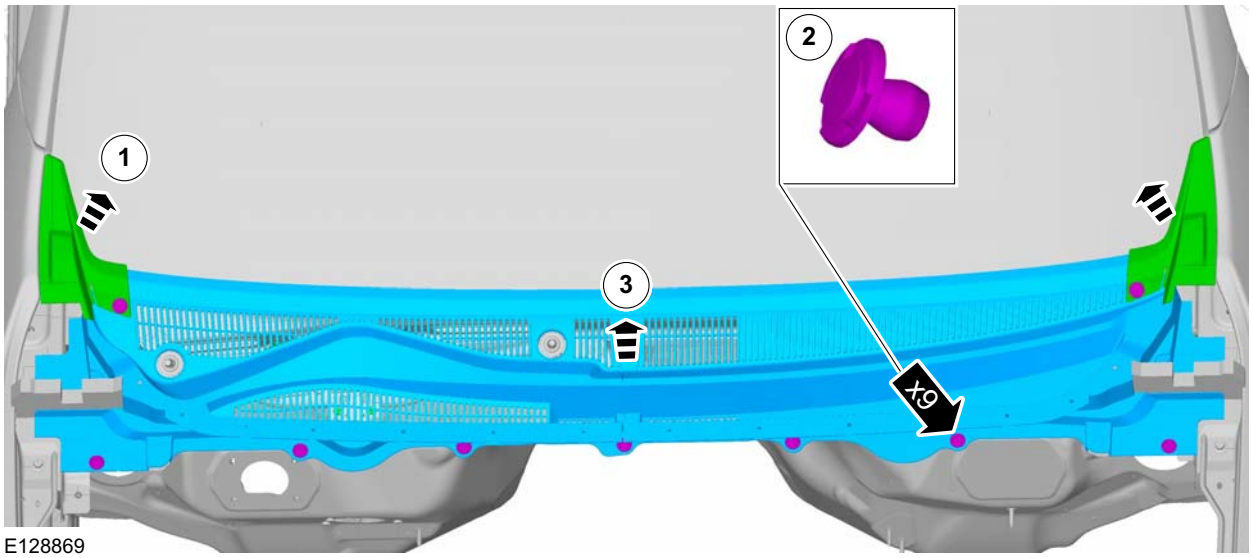

Installation

1. **CAUTION: Make sure that the motor is in the park position.**

   To install, reverse the removal procedure.

2. Check the angle of the wiper arms to the windscreen.

   Refer to: Windshield Wiper Blade and Pivot Arm Adjustment (501-16 Wipers and Washers, General Procedures).

REMOVAL AND INSTALLATION

A-Pillar Trim Panel

Removal

NOTE: Removal steps in this procedure may contain installation details.

1. Torque: 10 Nm

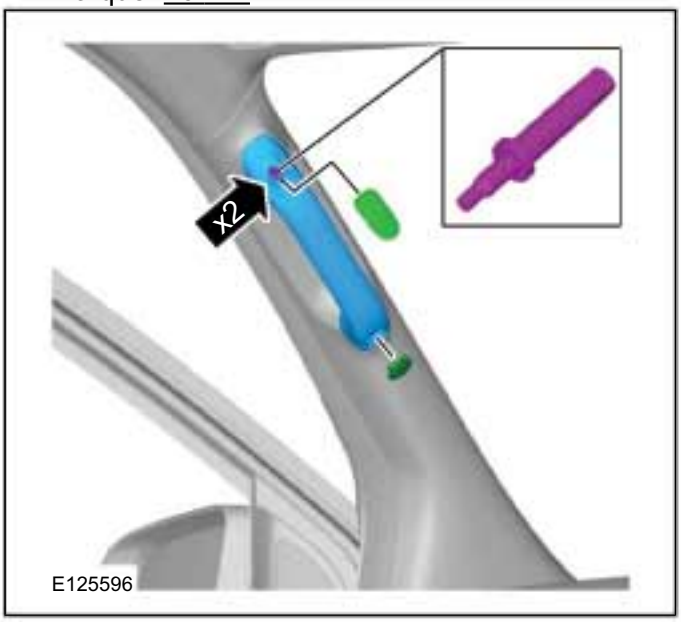

2.

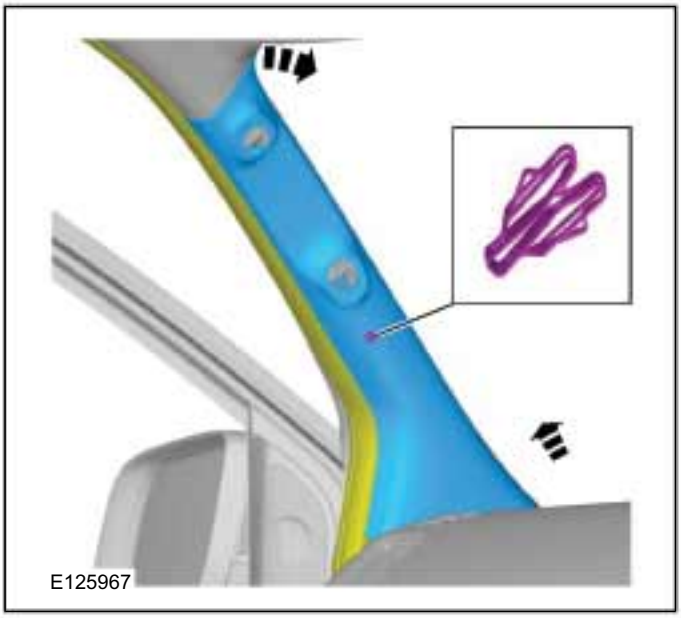

3.

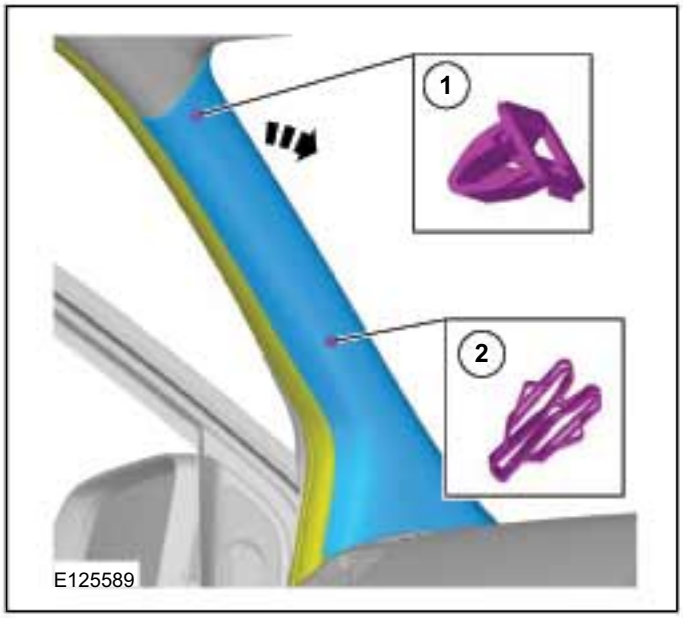

4.

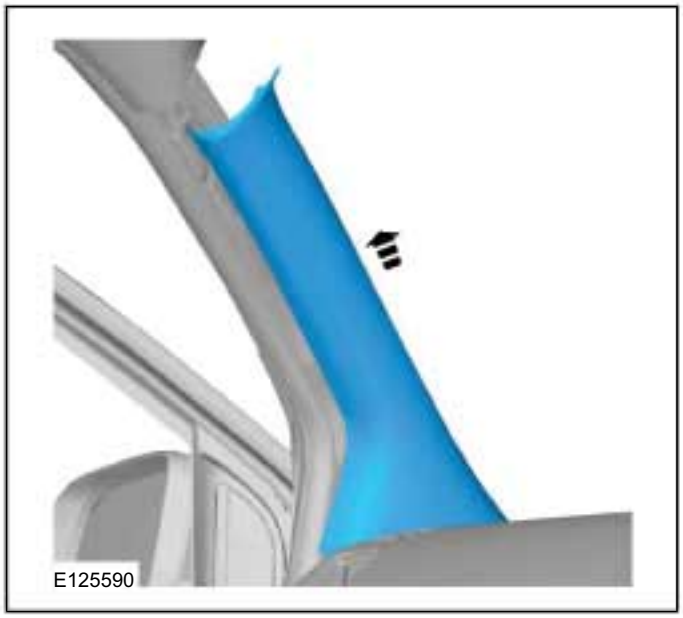

Installation

1. To install, reverse the removal procedure.

REMOVAL AND INSTALLATION

B-Pillar Upper Trim Panel

Removal

NOTE: Removal steps in this procedure may contain installation details.

1. Torque: 47 Nm

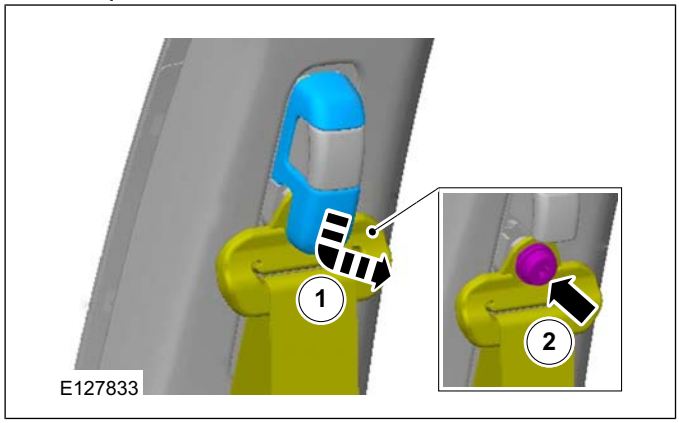

2. Refer to: B-Pillar Lower Trim Panel (501-05 Interior Trim and Ornamentation, Removal and Installation).

3.

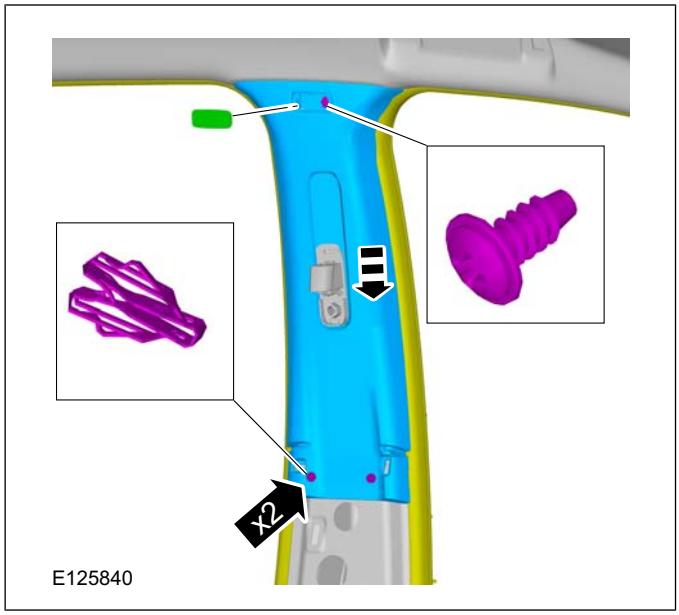

Installation

1. To install, reverse the removal procedure.

REMOVAL AND INSTALLATION

B-Pillar Lower Trim Panel

Removal

NOTE: Removal steps in this procedure may contain installation details.

1. Refer to: Front Scuff Plate Trim Panel (501-05 Interior Trim and Ornamentation, Removal and Installation).
2. Refer to: Rear Scuff Plate Trim Panel (501-05 Interior Trim and Ornamentation, Removal and Installation).
3.

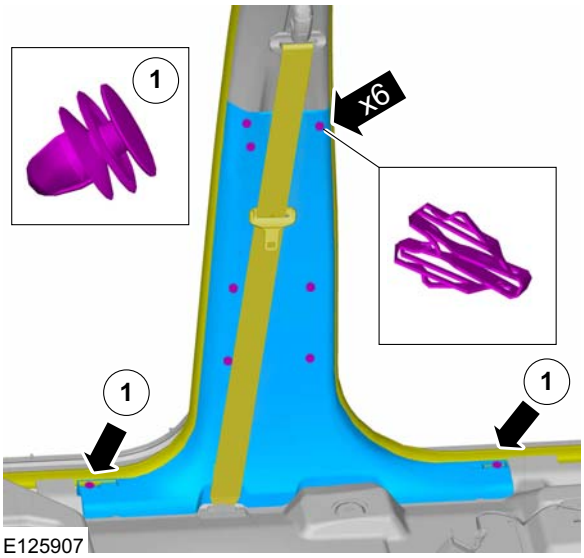

Installation

1. To install, reverse the removal procedure.

REMOVAL AND INSTALLATION

C-Pillar Upper Trim Panel

Removal

NOTE: Removal steps in this procedure may contain installation details.

1. Refer to: Rear Safety Belt Retractor (501-20 Safety Belt System, Removal and Installation).
2. Refer to: C-Pillar Lower Trim Panel (501-05 Interior Trim and Ornamentation, Removal and Installation).

Single cab

3.

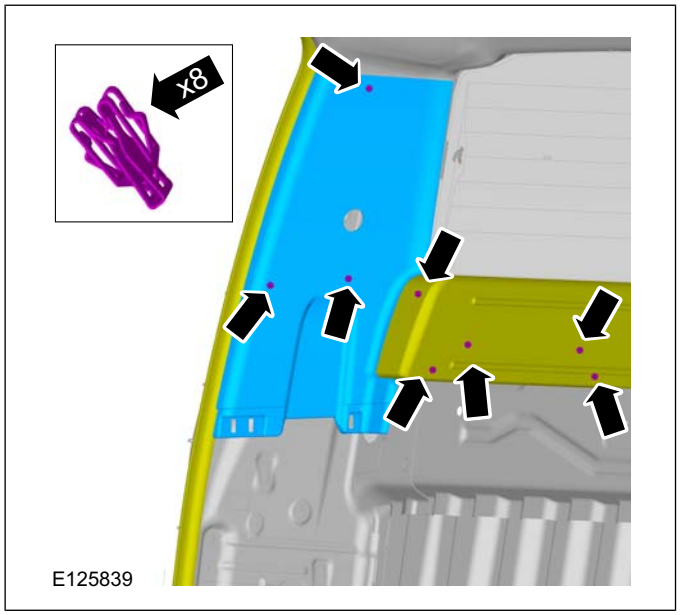

Stretch cab

4.

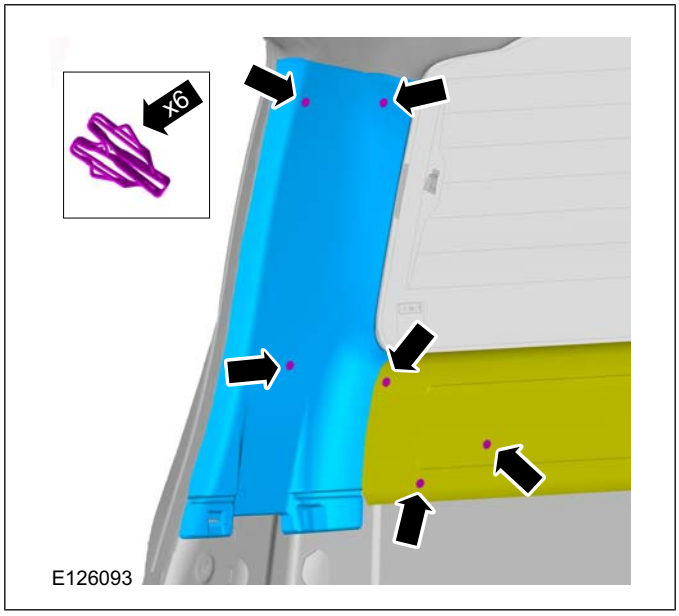

5.

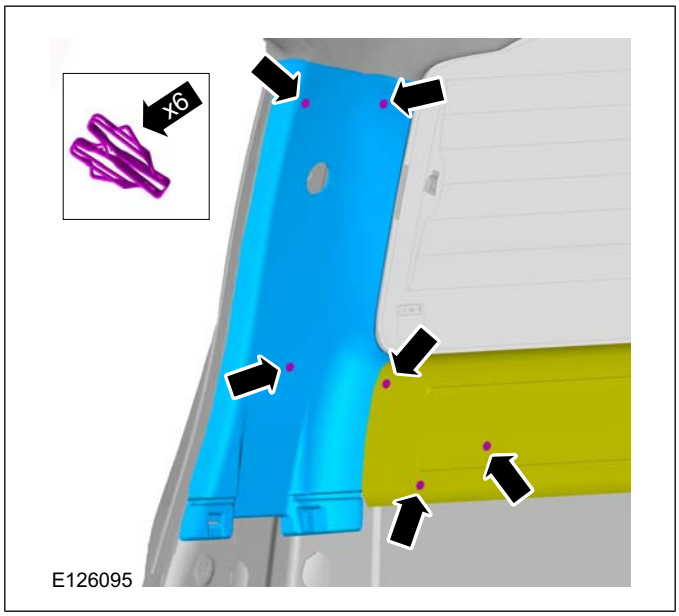

REMOVAL AND INSTALLATION

Double cab

6.

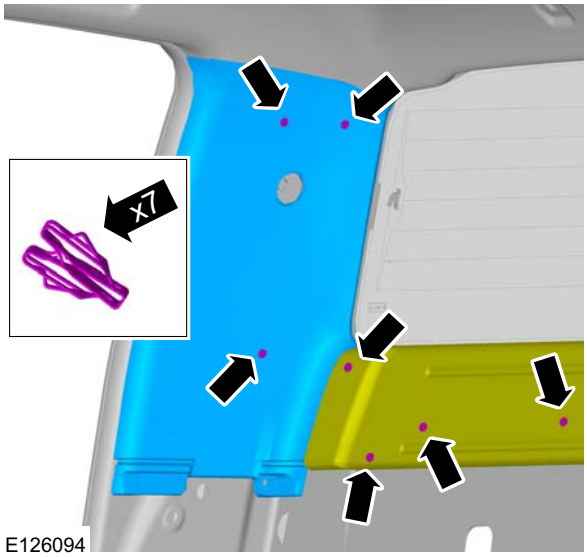

Installation

1. To install, reverse the removal procedure

REMOVAL AND INSTALLATION

C-Pillar Lower Trim Panel

Removal

NOTE: Removal steps in this procedure may contain installation details.

Single cab

1. Remove scuff plate

Refer to: Front Scuff Plate Trim Panel (501-05 Interior Trim and Ornamentation, Removal and Installation).

2.

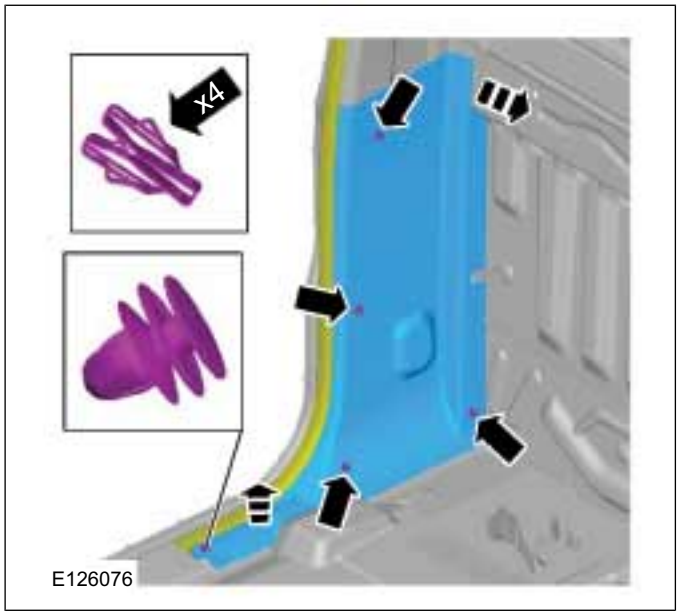

Stretch cab

3.

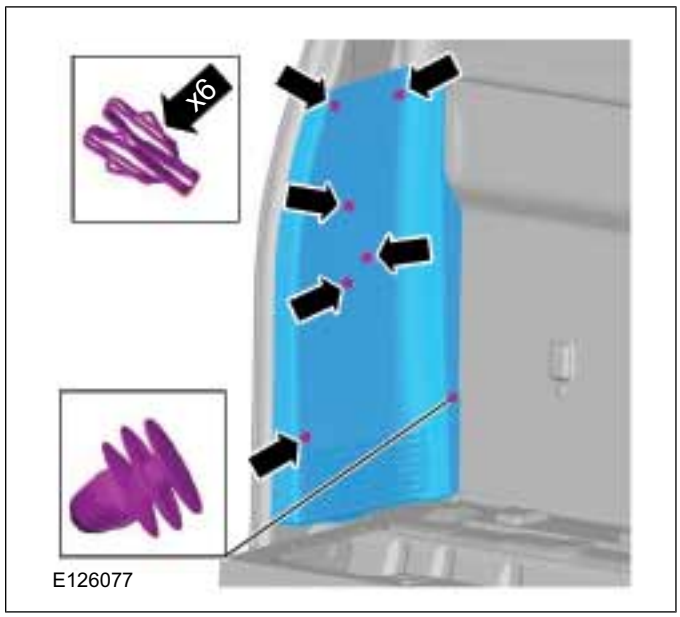

Double cab

4. Remove rear scuff plate

Refer to: Front Scuff Plate Trim Panel (501-05 Interior Trim and Ornamentation, Removal and Installation).

5.

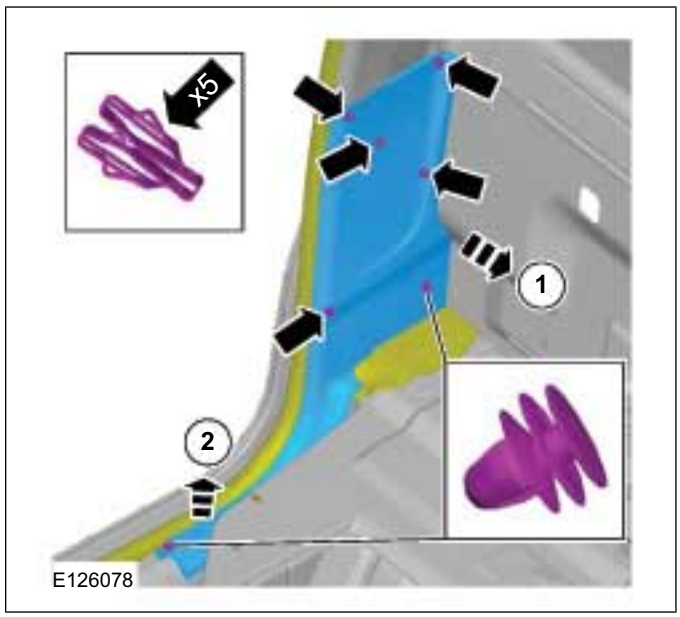

REMOVAL AND INSTALLATION

Installation

1. To install reverse the removal procedure

REMOVAL AND INSTALLATION

Cowl Side Trim Panel

Removal

NOTE: Removal steps in this procedure may contain installation details.

1. Refer to: Front Scuff Plate Trim Panel (501-05 Interior Trim and Ornamentation, Removal and Installation).

2.

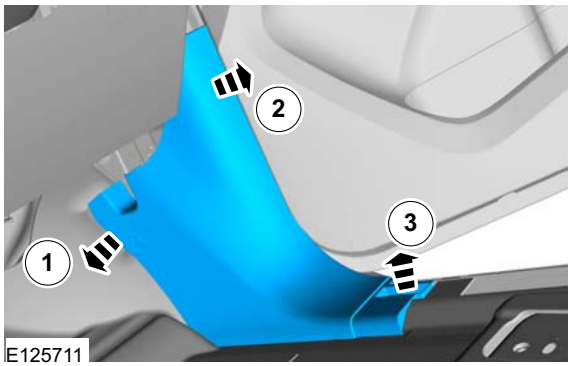

Installation

1. To install, reverse the removal procedure.

REMOVAL AND INSTALLATION

Front Door Trim Panel

Special Tool(s)

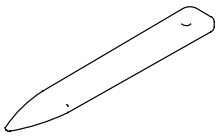 E84511	501-125 Remover, Grab Handle Cover

Removal

NOTE: Removal steps in this procedure may contain installation details.

1.

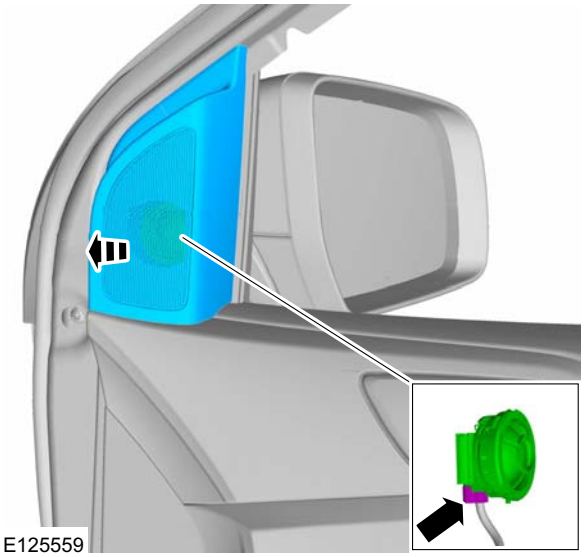

2.

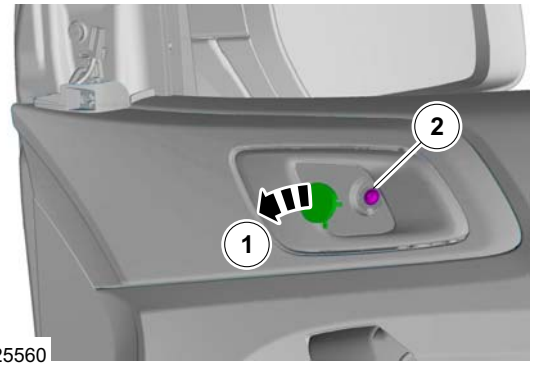

3. ⚠ **CAUTION: Take extra care not to damage the edges of the component.**

Special Tool(s): 501-125

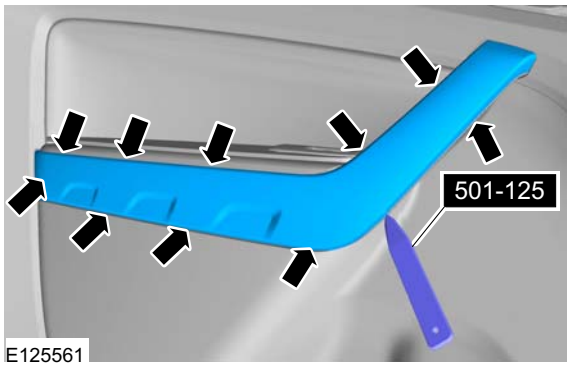

4.

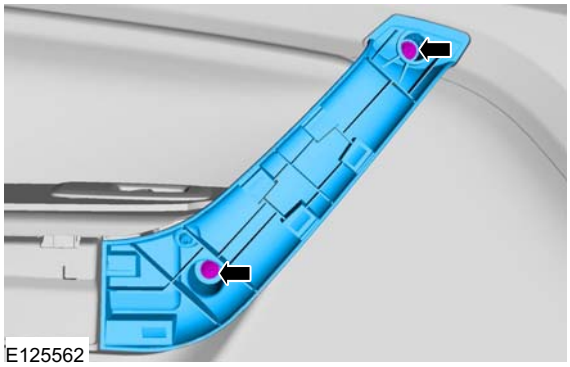

REMOVAL AND INSTALLATION

Vehicles with manual windows

5.

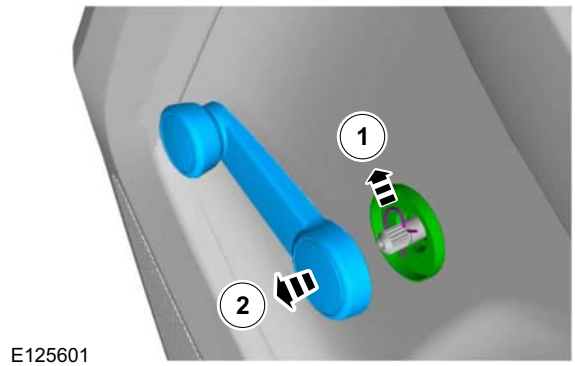

All vehicles

6.

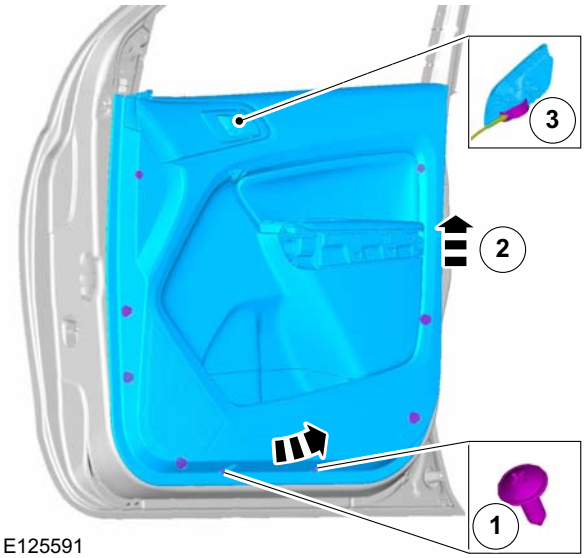

Vehicles with power windows

7.

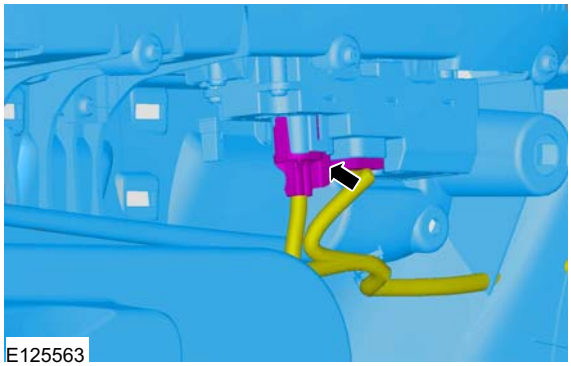

Installation

1. To install, reverse the removal procedure.

REMOVAL AND INSTALLATION

Rear Door Trim Panel — Double Cab

Removal

NOTE: Removal steps in this procedure may contain installation details.

1.

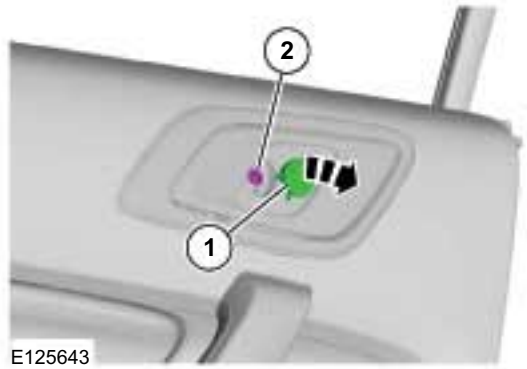

E125643

2. **CAUTION: Take extra care not to damage the edges of the component.**

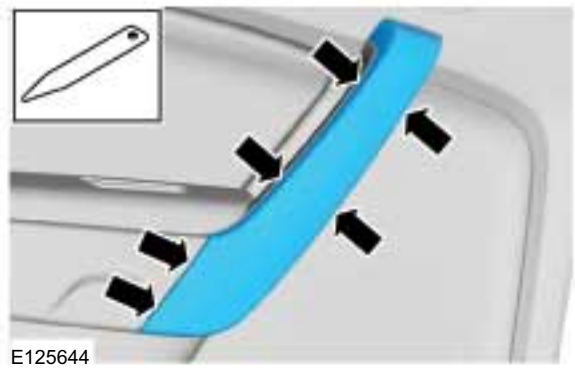
E125644

3.

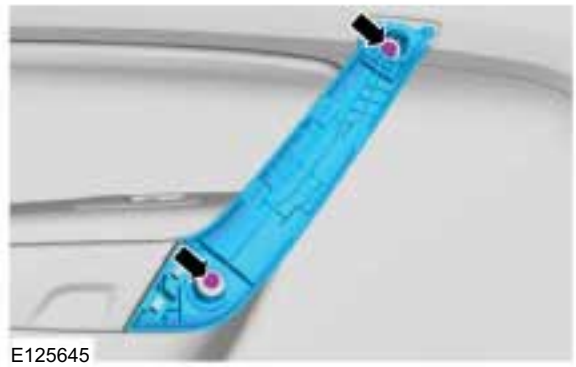
E125645

Vehicles with manual windows

4.

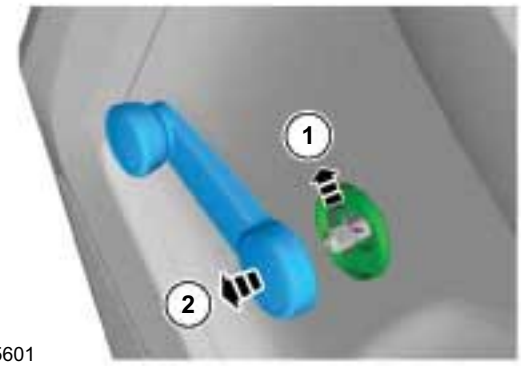

E125601

All vehicles

5.

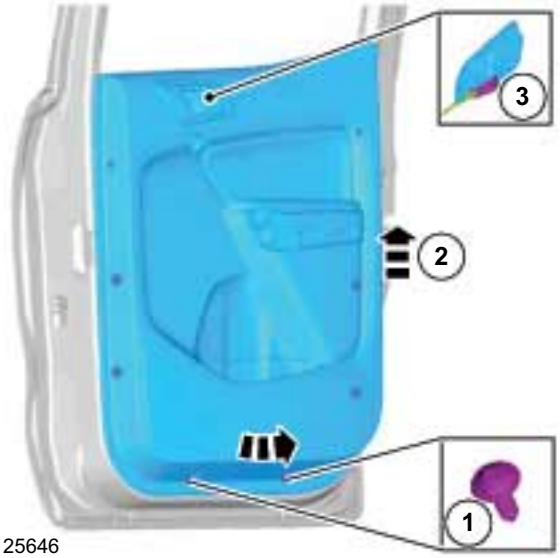

E125646

REMOVAL AND INSTALLATION

Vehicles with power windows

6.

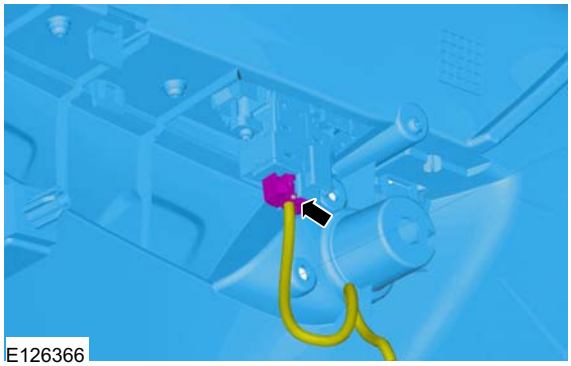

Installation

1. To install, reverse the removal procedure.

REMOVAL AND INSTALLATION

Rear Door Trim Panel — Super Cab

Removal

NOTE: Removal steps in this procedure may contain installation details.

1. Refer to: Front Safety Belt Retractor - Super Cab (501-20 Safety Belt System, Removal and Installation).

2.

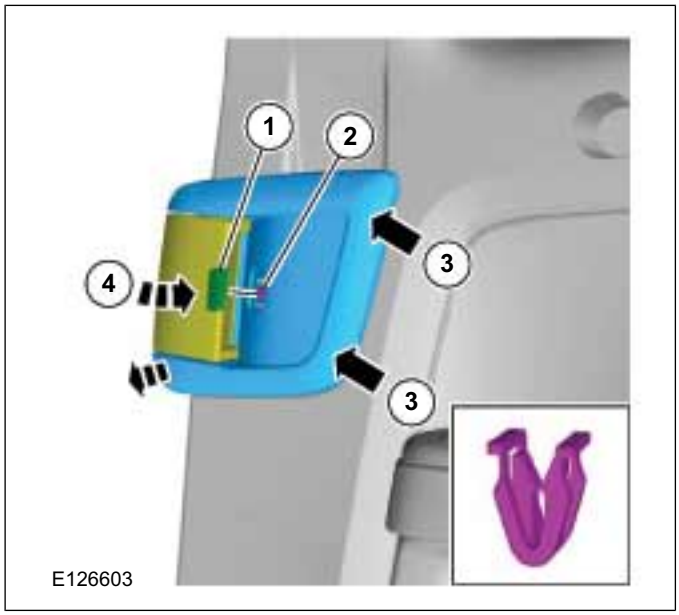

3.

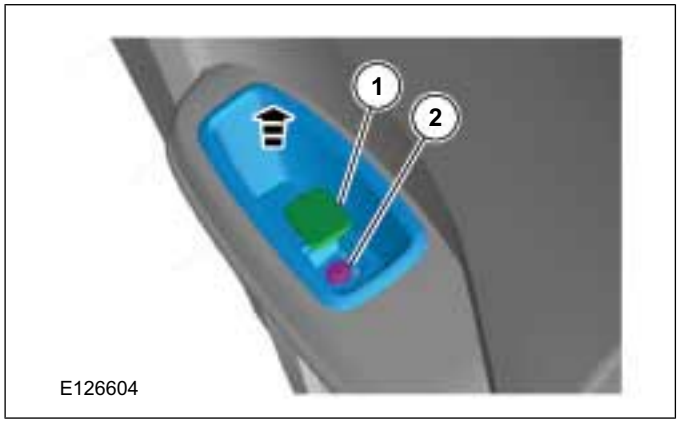

4.

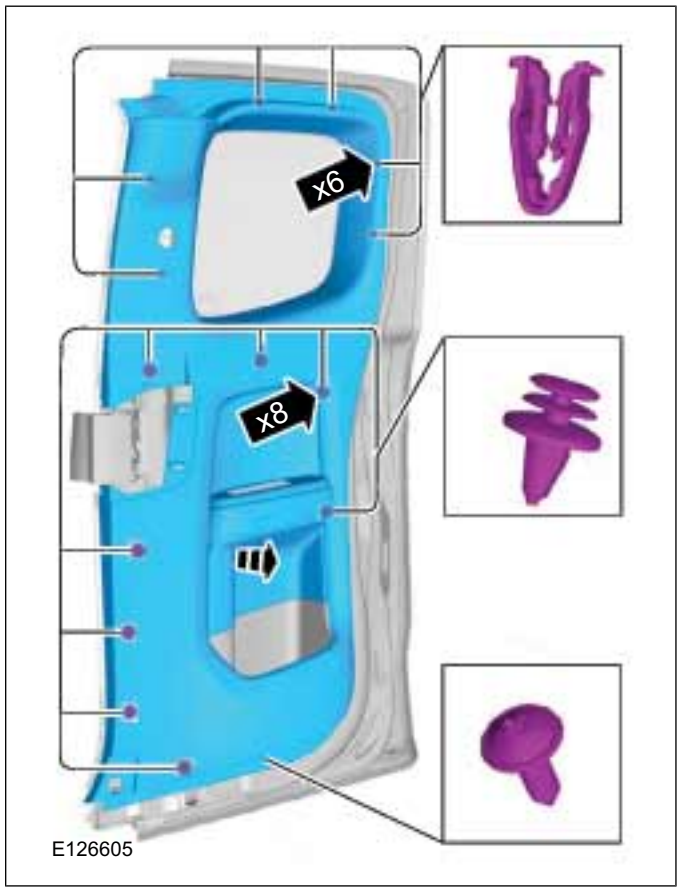

Installation

1. To install, reverse the removal procedure.

REMOVAL AND INSTALLATION

Front Scuff Plate Trim Panel

Removal

NOTE: Removal steps in this procedure may contain installation details.

1.

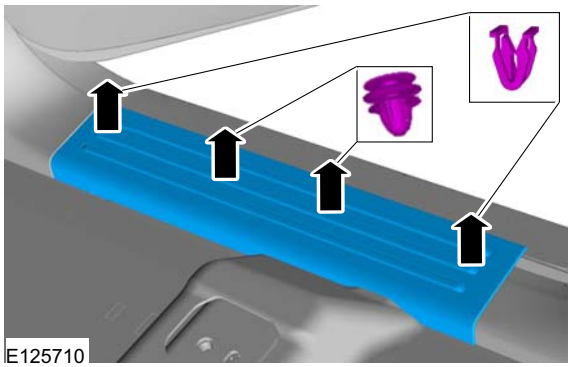

Installation

1. To install, reverse the removal procedure.

REMOVAL AND INSTALLATION

Rear Scuff Plate Trim Panel

Removal

NOTE: Removal steps in this procedure may contain installation details.

1. **NOTE:** Note the position of each fastener.

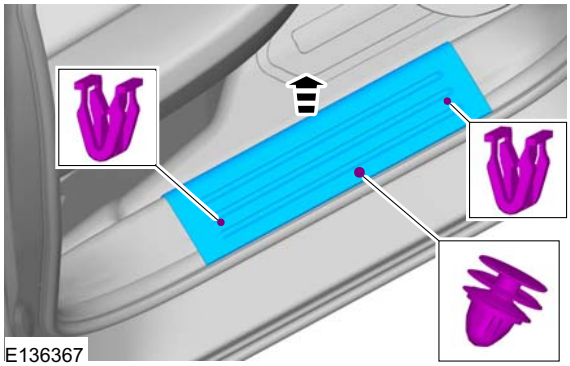

Installation

1. **NOTE:** Make sure that the fasteners are installed to the position noted before removal.

   To install, reverse the removal procedure.

REMOVAL AND INSTALLATION

Headliner

Removal

NOTE: Removal steps in this procedure may contain installation details.

1. On both the sides.

Refer to: A-Pillar Trim Panel (501-05 Interior Trim and Ornamentation, Removal and Installation).

2. On both the sides.

E125920

3.

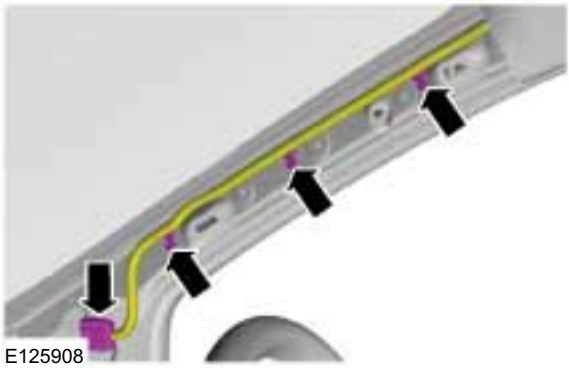
E125908

4. On both the sides.

Refer to: B-Pillar Upper Trim Panel (501-05 Interior Trim and Ornamentation, Removal and Installation).

5. On both the sides.

Refer to: C-Pillar Upper Trim Panel (501-05 Interior Trim and Ornamentation, Removal and Installation).
Refer to: C-Pillar Lower Trim Panel (501-05 Interior Trim and Ornamentation, Removal and Installation).

6.

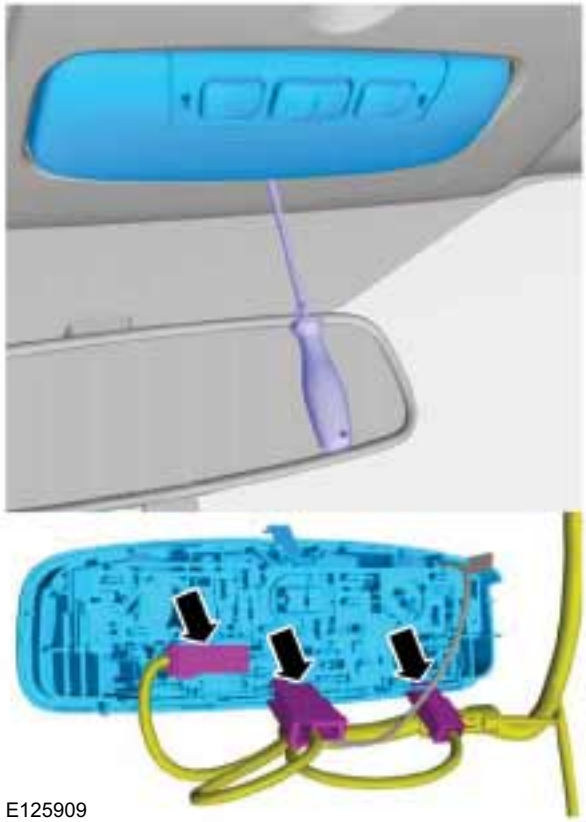
E125909

REMOVAL AND INSTALLATION

7. **NOTE:** This step is not necessary when installing a new component.

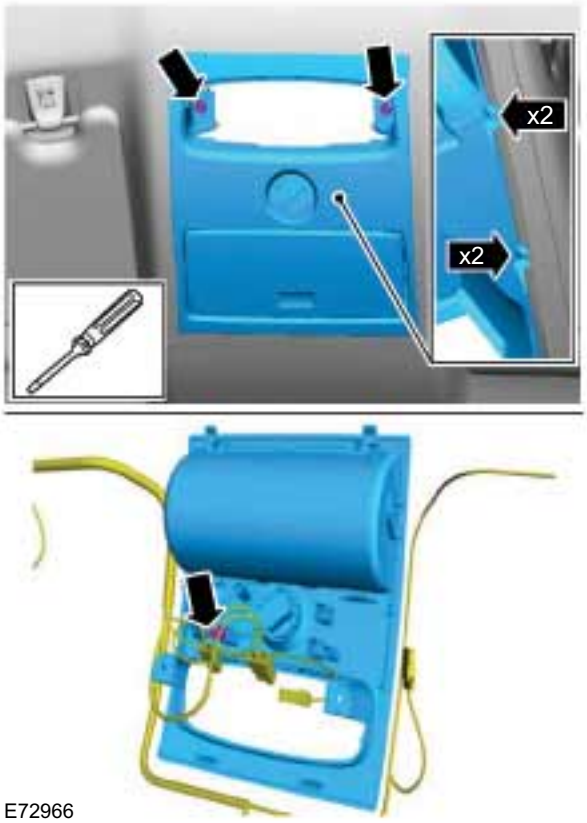

8. On both the sides.

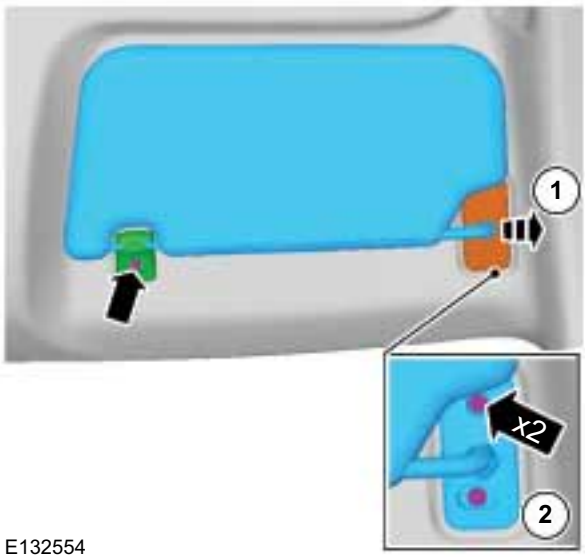

9.

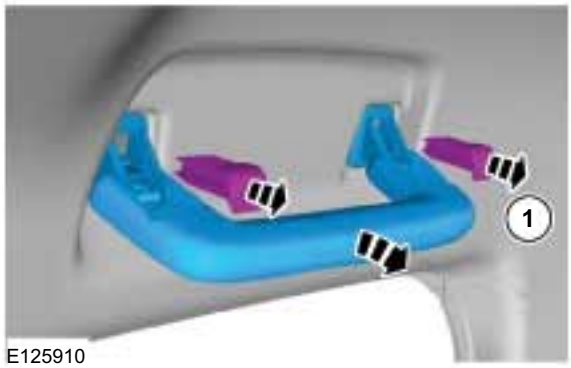

Stretch cab oder Double cab

10.

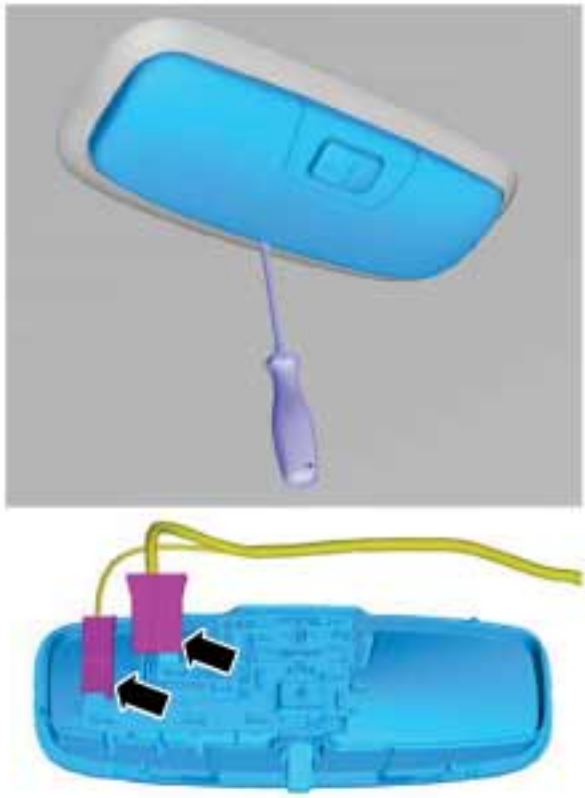

REMOVAL AND INSTALLATION

Vehicles with autolamps and rain sensor

11.

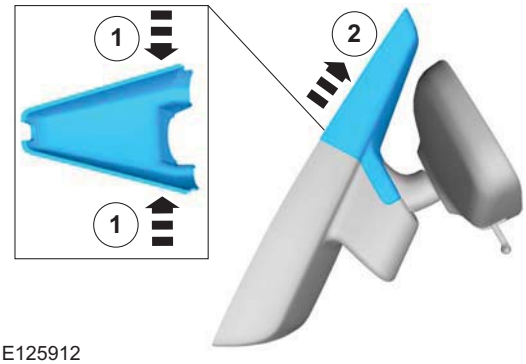

E125912

12.

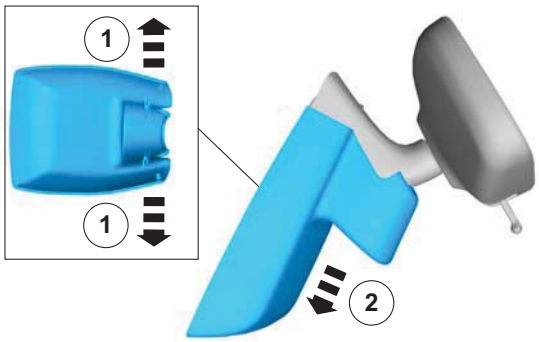

E125913

13.

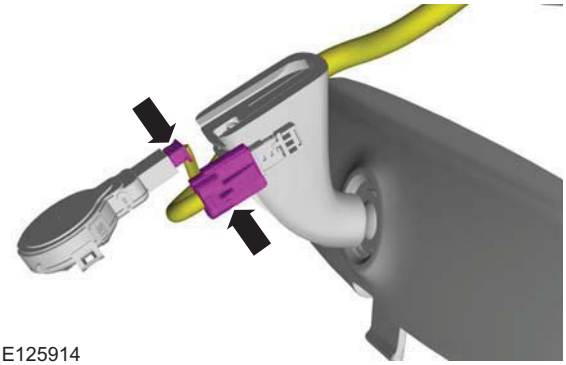
E125914

Stretch cab

14.

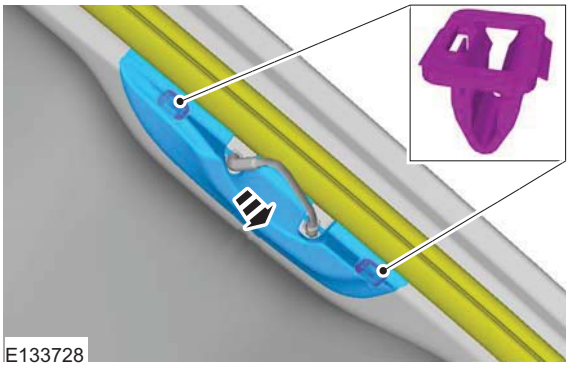
E133728

Double cab

15. Support the headliner.

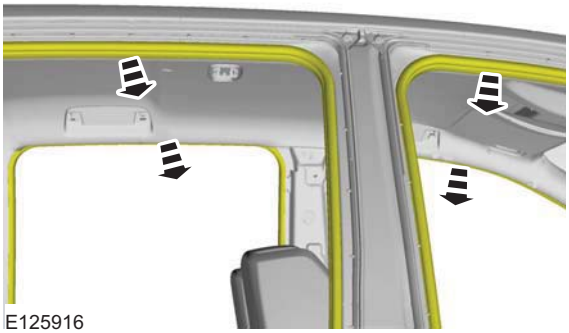
E125916

Stretch cab oder Double cab

16.

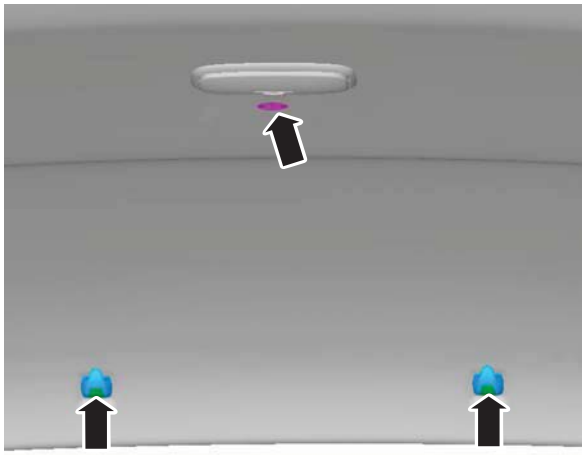
E125915

17. **NOTE:** Right-hand drive vehicles.

REMOVAL AND INSTALLATION

NOTE: Note the position of each component before removal.

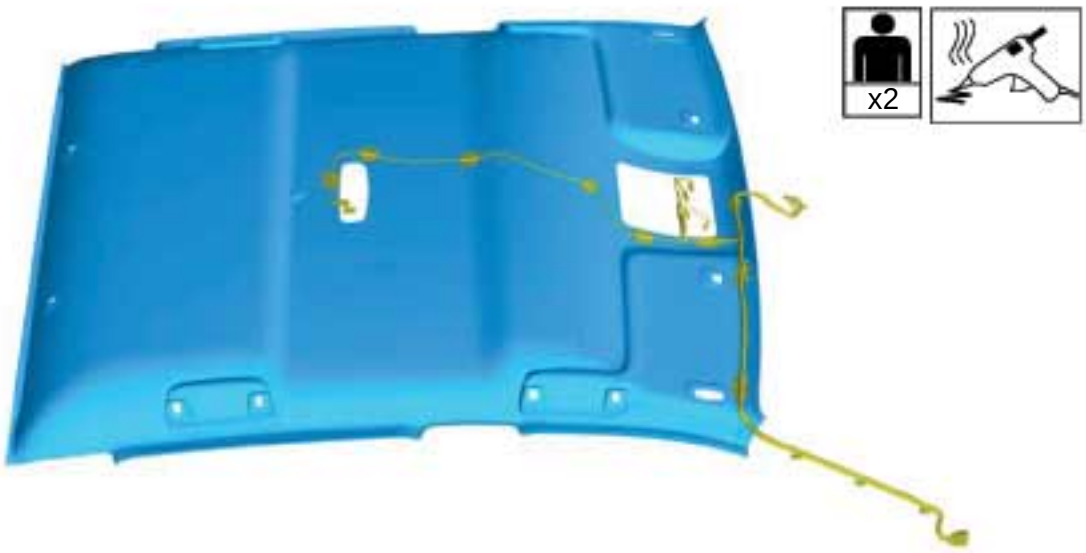

E125917

18. **NOTE:** Left-hand drive vehicles.

NOTE: Note the position of each component before removal.

E125918

REMOVAL AND INSTALLATION

Single cab

19.

20. **NOTE:** Right-hand drive vehicles.

    NOTE: Note the position of each component before removal.

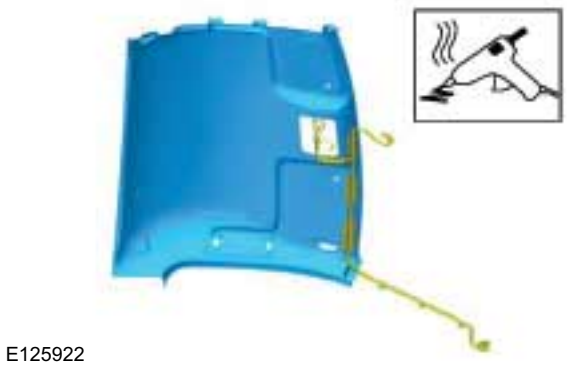

21. **NOTE:** Left-hand drive vehicles.

    NOTE: Note the position of each component before removal.

All vehicles

22. **CAUTION: Take extra care not to crease the headliner.**

Installation

1. **NOTE:** Make sure that this component is installed to the noted removal position.

   Using a suitable adhesive, bond the roof wiring harness to the headliner.

2. To install, reverse the removal procedure.

REMOVAL AND INSTALLATION

Radiator Grille

Removal

NOTE: Removal steps in this procedure may contain installation details.

1.

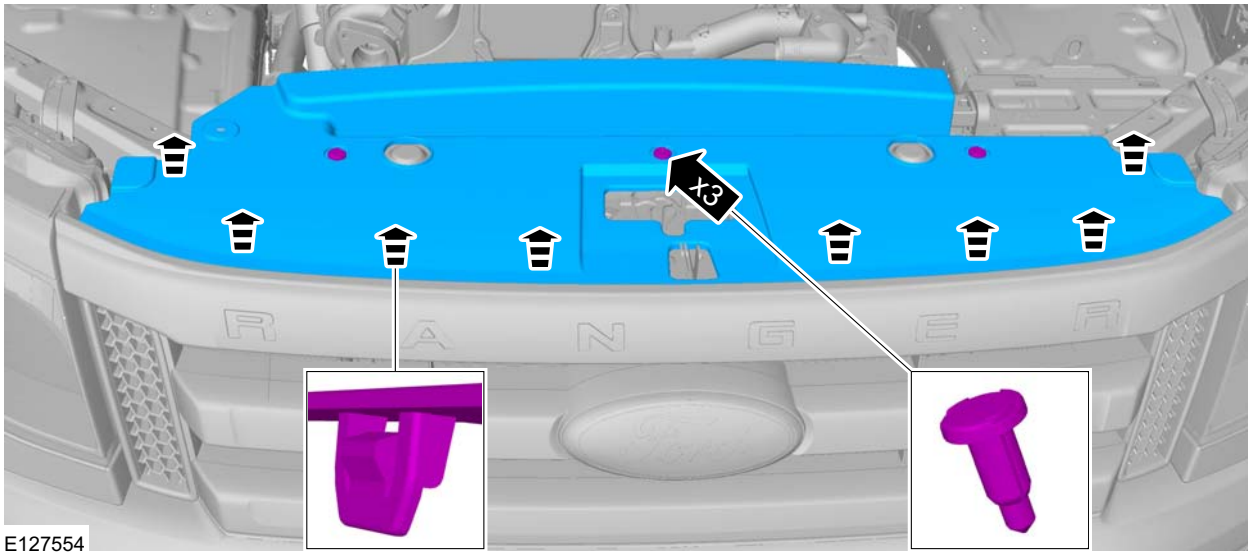

2.

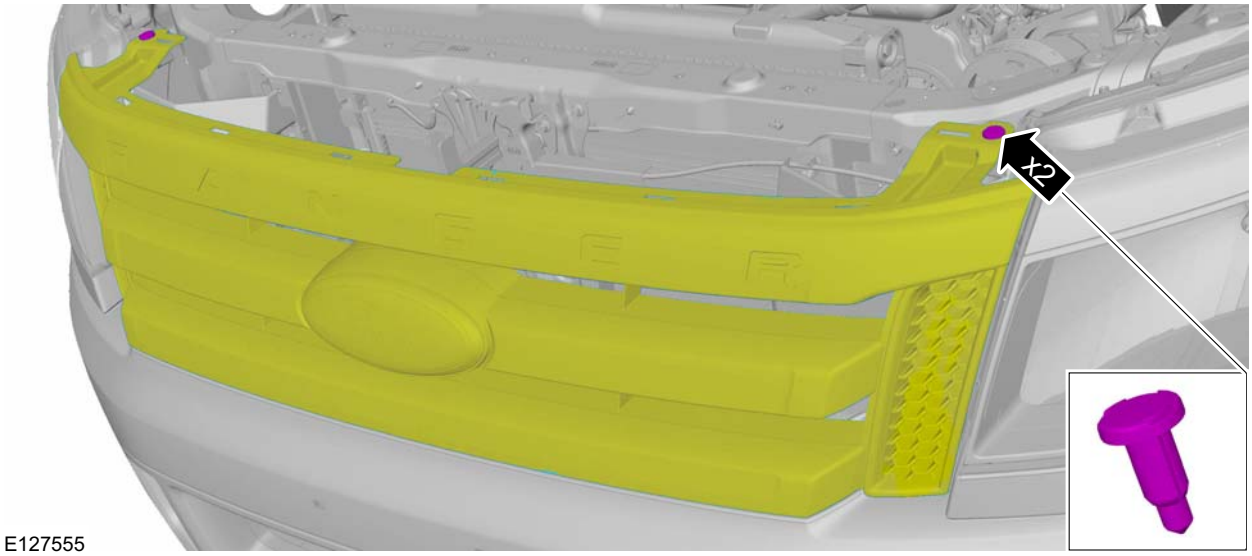

REMOVAL AND INSTALLATION

3. Refer to: Lifting (100-02 Jacking and Lifting, Description and Operation).

4. Torque: 30 Nm

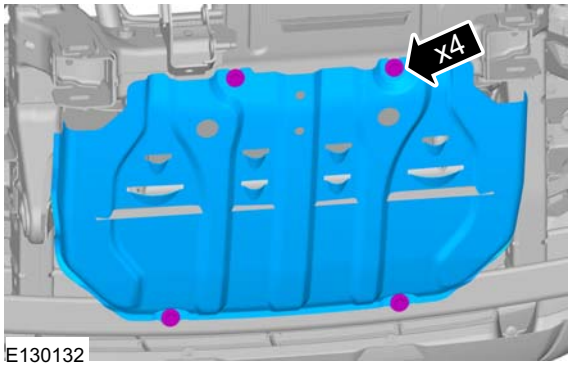

5.

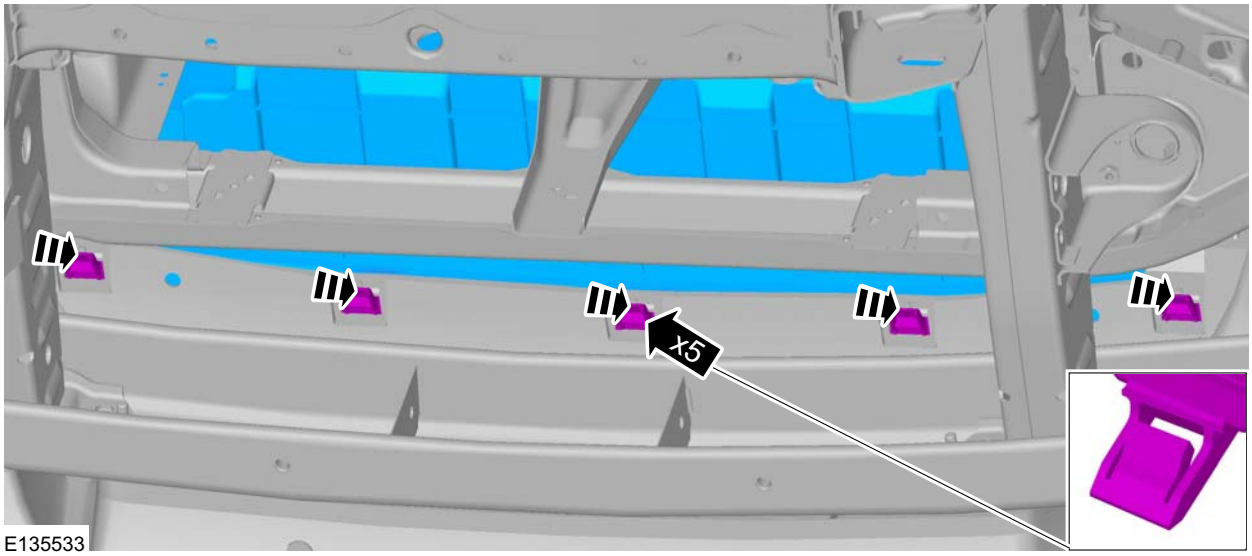

Installation

1. To install, reverse the removal procedure.

REMOVAL AND INSTALLATION

Front Bench Seat

Removal

NOTE: Removal steps in this procedure may contain installation details.

1.

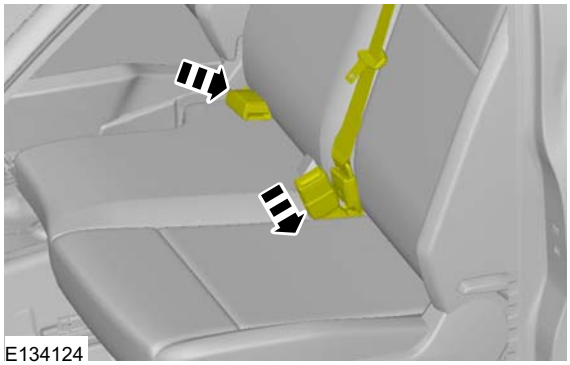

2. 1. Torque: 48 Nm
2. Torque: 30 Nm

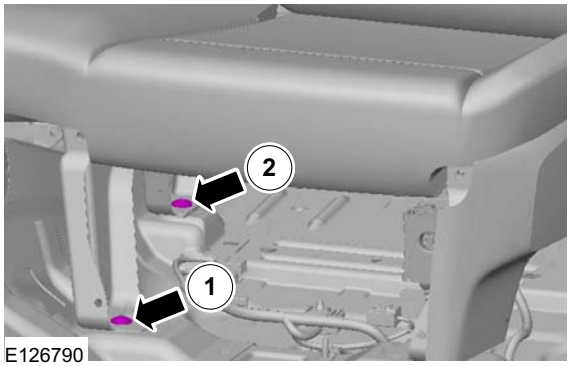

3. 1. Torque: 48 Nm
2. Torque: 30 Nm

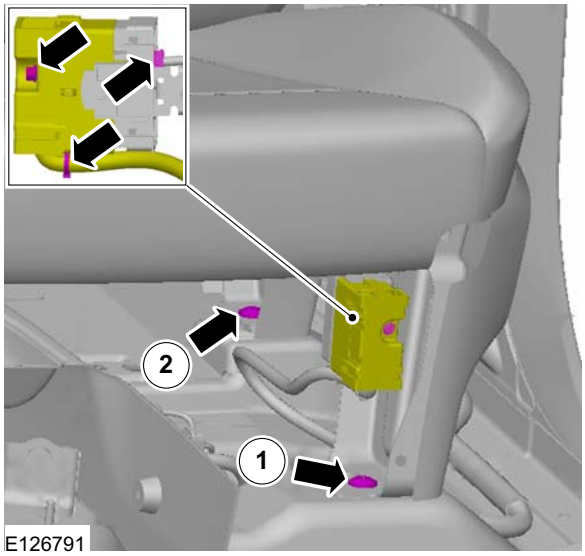

4.

Installation

1. To install, reverse the removal procedure.

REMOVAL AND INSTALLATION

Front Seat(40 100 0; 40 100 4; 40 101 0)

Removal

NOTE: Removal steps in this procedure may contain installation details.

All vehicles

1. **WARNINGS:**

   The supplemental restraint system (SRS) is active for a certain length of time after the power supply has been disconnected. Wait for a minimum of 3 minutes before disconnecting or removing any SRS components.

   Make sure that the vehicle electrical system is fully depowered and no other power source is connected.

   Refer to: Supplemental Restraint System (SRS) Health and Safety Precautions (100-00 General Information, Description and Operation).

2. Refer to: Battery Disconnect and Connect (414-01 Battery, Mounting and Cables, General Procedures).
3. 2. Torque: 48 Nm

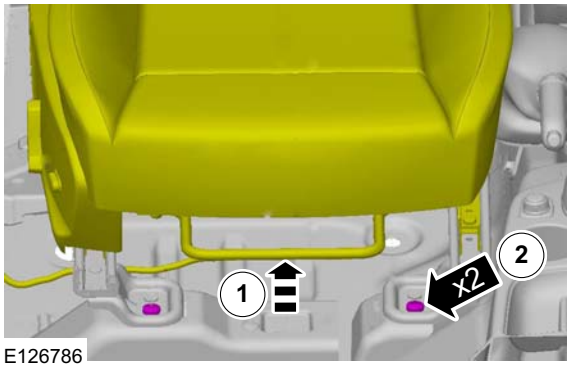

E126786

4. 2. Torque: 48 Nm

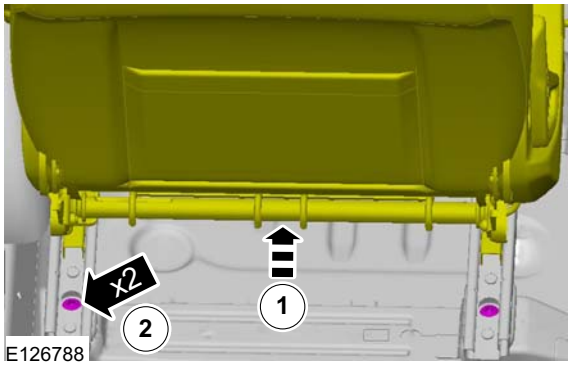

E126788

Single cab

5. 2. Torque: 30 Nm

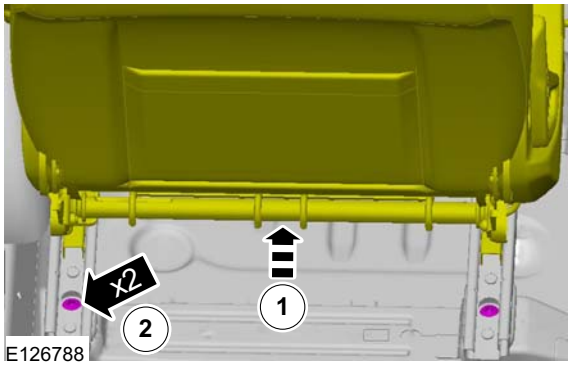

E126788

REMOVAL AND INSTALLATION

All vehicles

6. Disconnect the heated seat and side air bag module electrical connectors (if equipped).

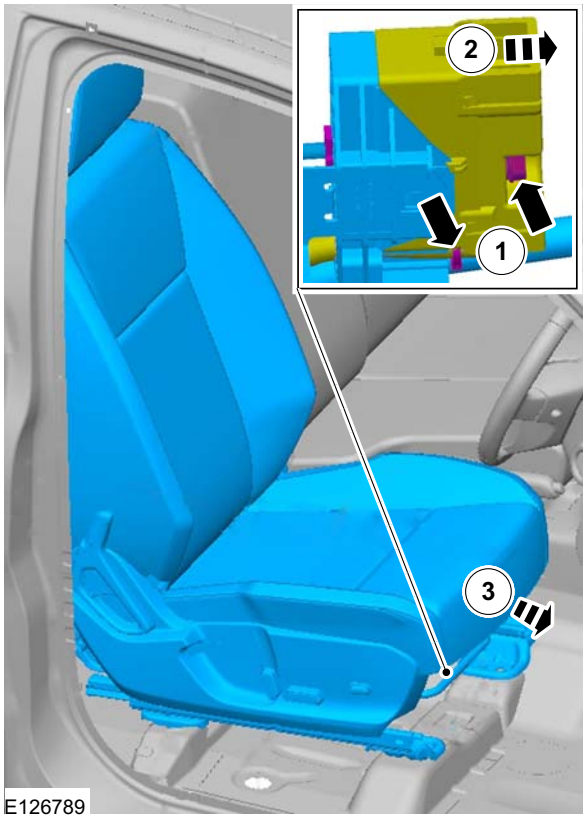

Installation

1. To install, reverse the removal procedure.

DESCRIPTION AND OPERATION

Instrument Panel

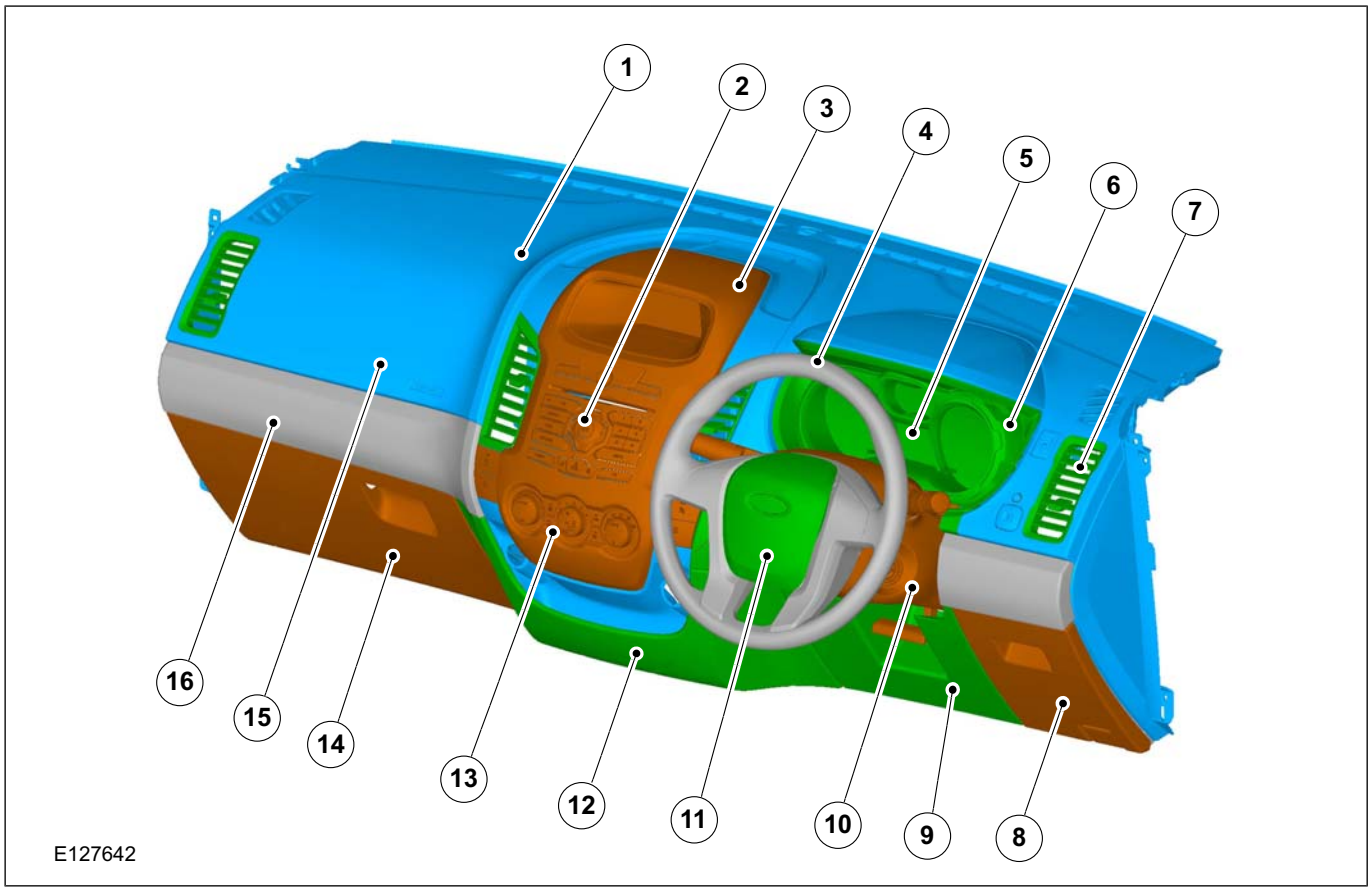

Item	Description
1	Instrument panel
2	Audio control
3	Center finishing panel
4	Steering wheel
5	Instrument cluster
6	Instrument cluster bezel
7	Ventilator grille
8	Driver glove compartment
9	Driver lower airbag module
10	Steering column cover
11	Driver air bag module
12	Lower finishing panel
13	Heater / AC control
14	Passenger glove compartment
15	Passenger air bag module
16	Side finishing panel

REMOVAL AND INSTALLATION

Instrument Panel — LHD 4WD/LHD RWD

General Equipment

Ford Diagnostic Equipment

Removal

WARNINGS:

The supplemental restraint system (SRS) is active for a certain length of time after the power supply has been disconnected. Wait for a minimum of 3 minutes before disconnecting or removing any SRS components.

Make sure that the vehicle electrical system is fully depowered and no other power source is connected.

NOTE: Removal steps in this procedure may contain installation details.

1. Refer to: Supplemental Restraint System (SRS) Health and Safety Precautions (100-00 General Information, Description and Operation).
   Refer to: Battery Disconnect and Connect (414-01 Battery, Mounting and Cables, General Procedures).

Single cab

2. Refer to: Floor Console - Single Cab (501-12 Instrument Panel and Console, Removal and Installation).

Double cab

3. Refer to: Floor Console - Double Cab (501-12 Instrument Panel and Console, Removal and Installation).

Vehicles with manual transmission

4.

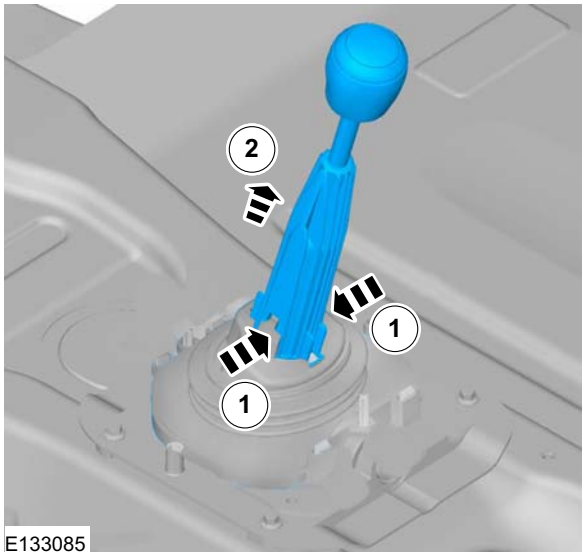

REMOVAL AND INSTALLATION

Vehicles with driver lower air bag

5. Refer to: Driver Lower Air Bag Module (501-20 Supplemental Restraint System, Removal and Installation).

Vehicles without driver lower air bag

6.

7.

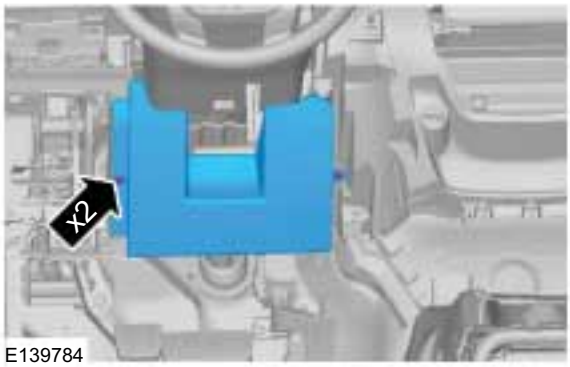

All vehicles

8. Refer to: Glove Compartment (501-12 Instrument Panel and Console, Removal and Installation).

9. Refer to: Cowl Side Trim Panel (501-05 Interior Trim and Ornamentation, Removal and Installation).

10.

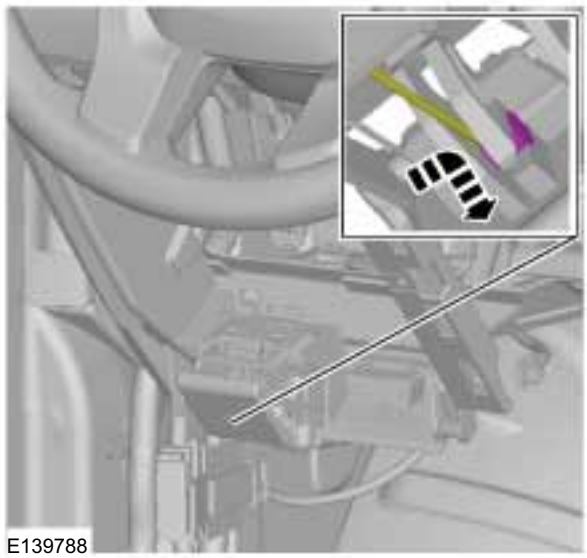

11.

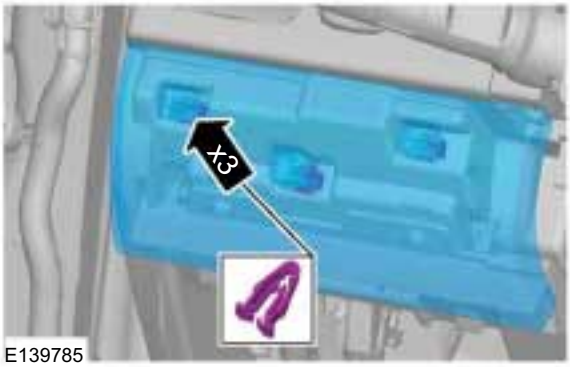

REMOVAL AND INSTALLATION

12.

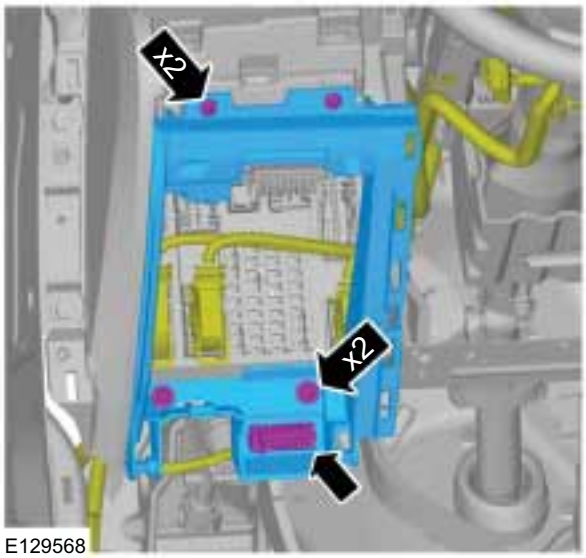

13. Torque: 10 Nm

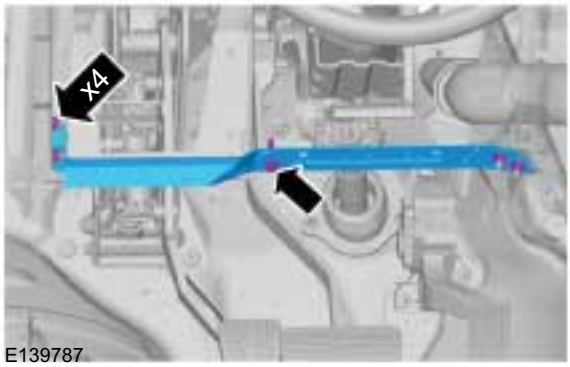

14. Refer to: Ignition Switch (211-05 Steering Column Switches, Removal and Installation).

15. Refer to: Steering Wheel (211-04 Steering Column, Removal and Installation).

16.

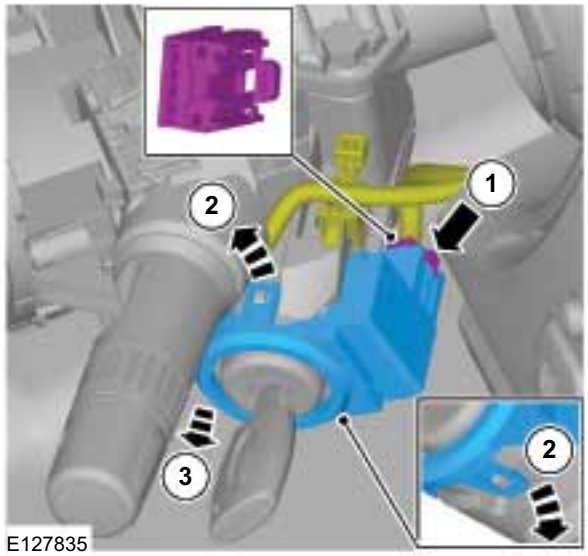

17. 1. Torque: 7 Nm

REMOVAL AND INSTALLATION

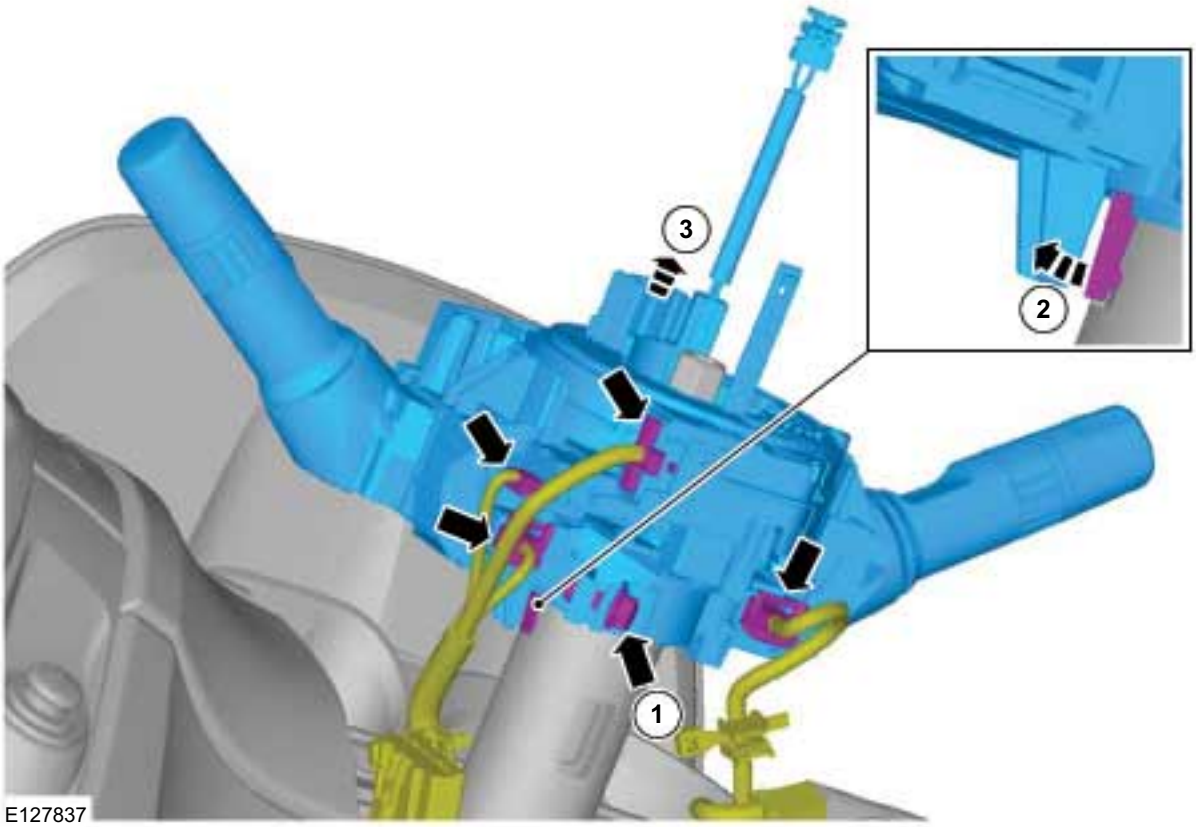

18. Torque: 15 Nm

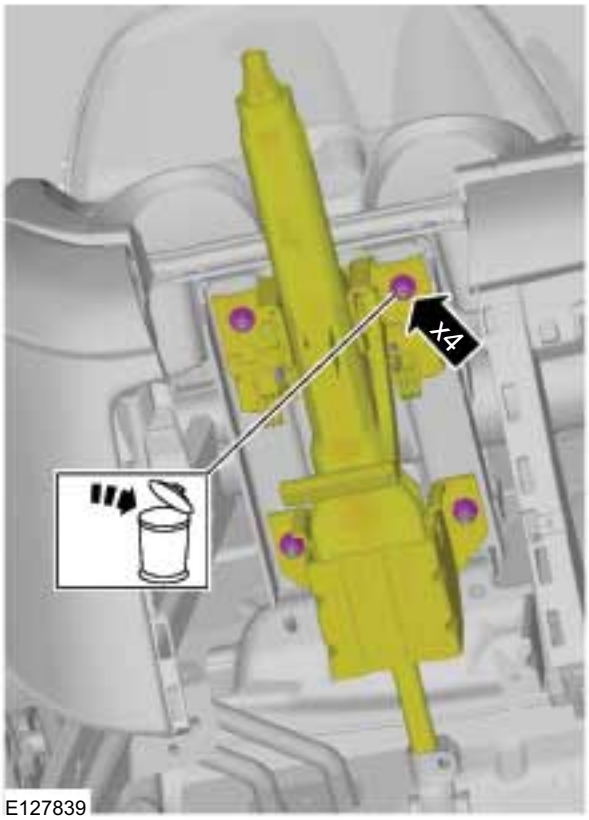

19. Refer to: A-Pillar Trim Panel (501-05 Interior Trim and Ornamentation, Removal and Installation).

20. Torque: 10 Nm

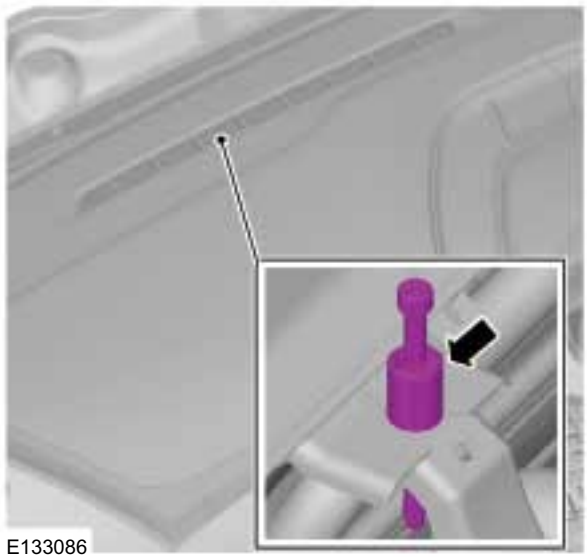

REMOVAL AND INSTALLATION

21.

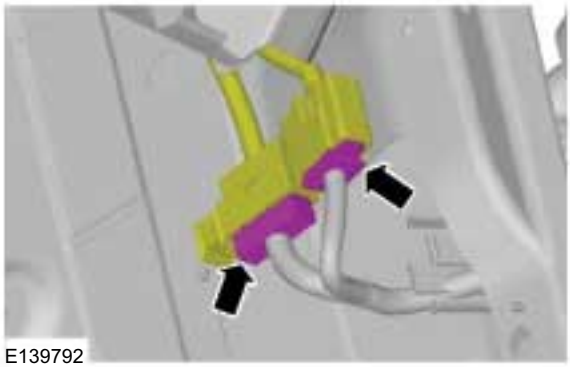
E139792

22.

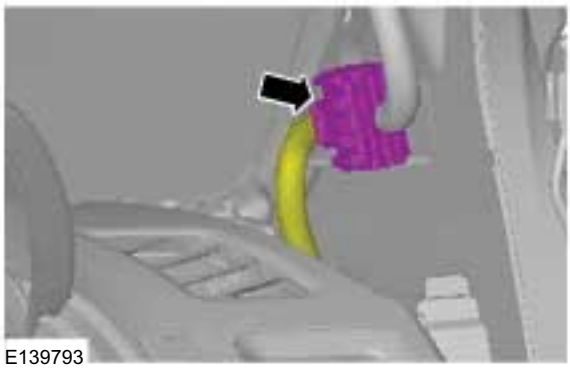
E139793

23.

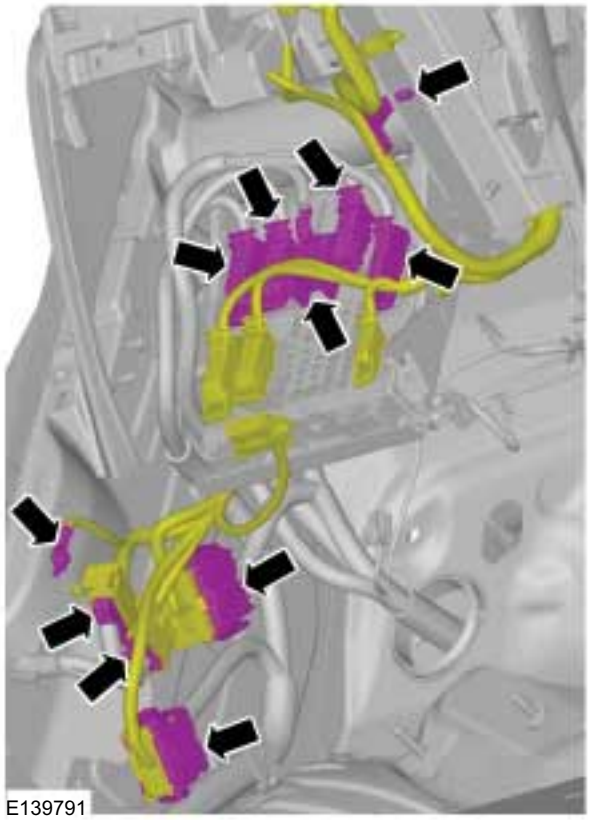
E139791

24.

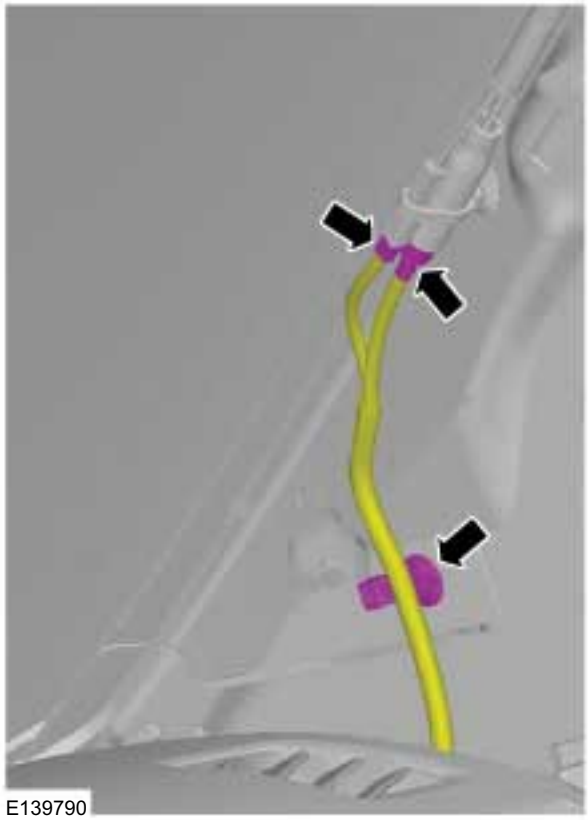
E139790

REMOVAL AND INSTALLATION

25. On both sides.

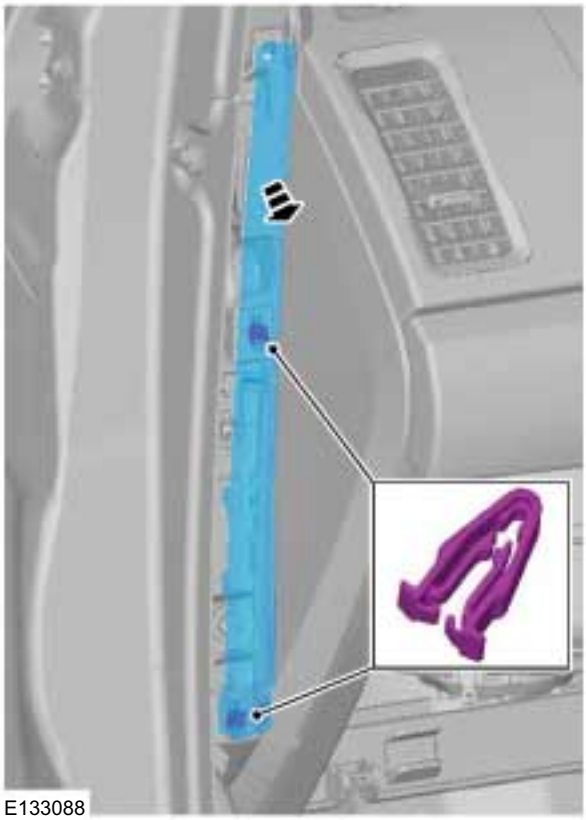
E133088

26. Torque: 25 Nm

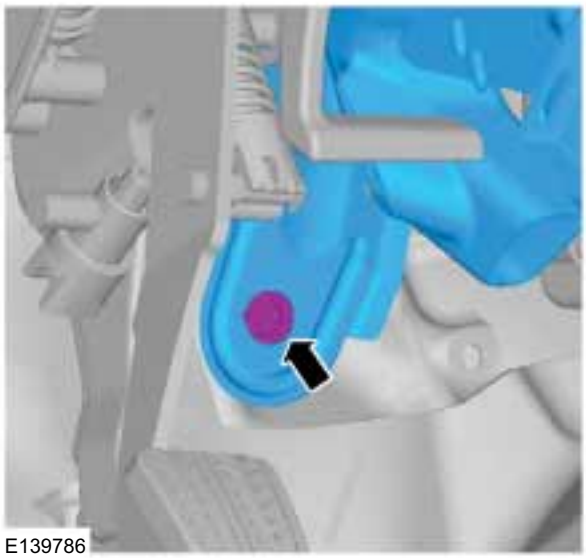
E139786

27. On both sides.
Torque: 25 Nm

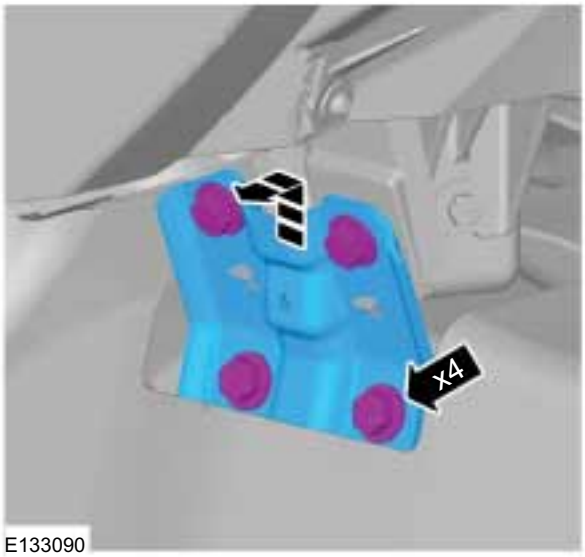

E133090

28. 1. On both sides.
Torque: 25 Nm
2. On both sides.
Torque: 25 Nm

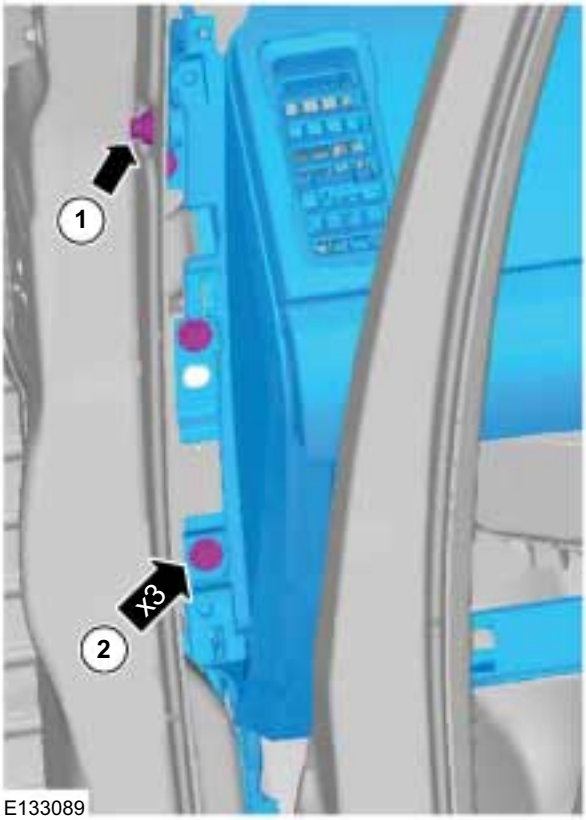

E133089

29. **NOTE:** Note the position of the component before removal.

REMOVAL AND INSTALLATION

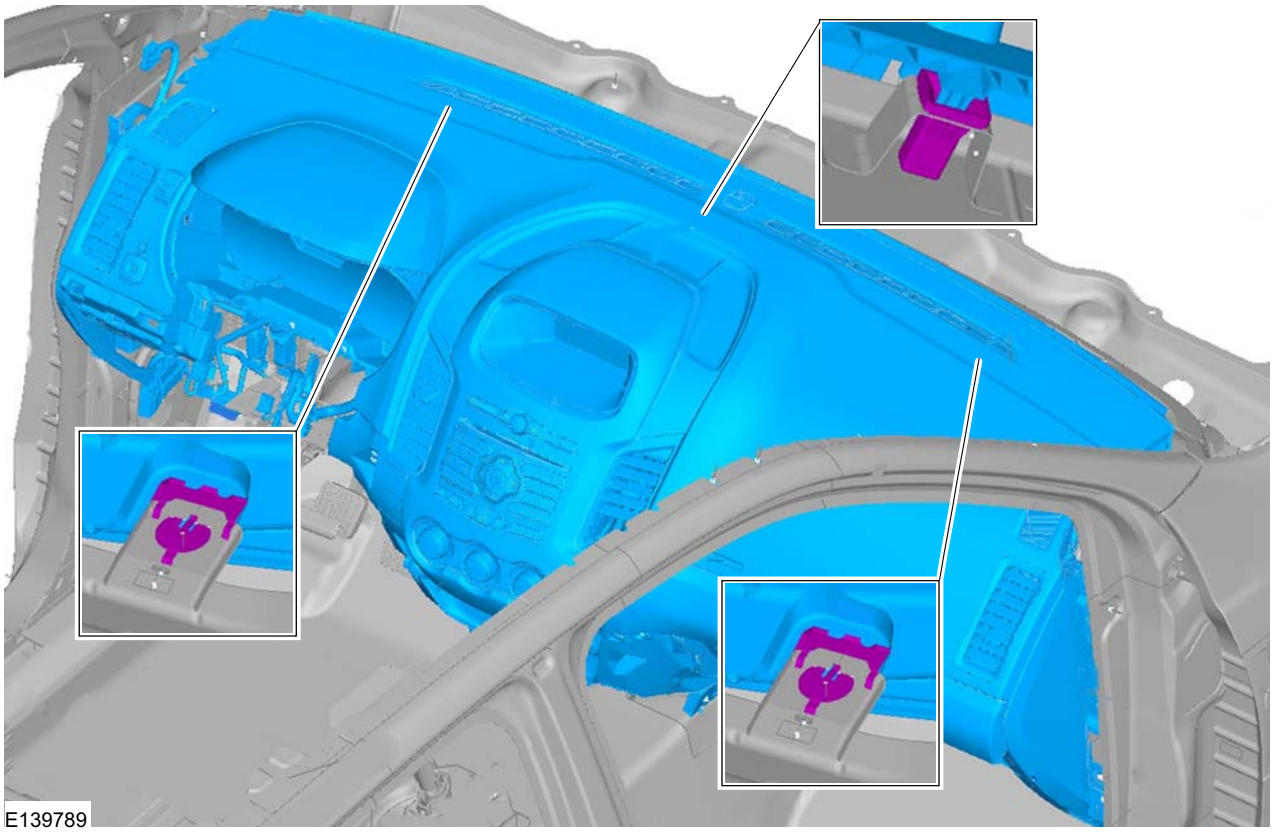

Installation

1. **CAUTION: Make sure that the three locking positions are locked correctely.**

NOTE: Make sure that the adjuster is correctely alighned.

REMOVAL AND INSTALLATION

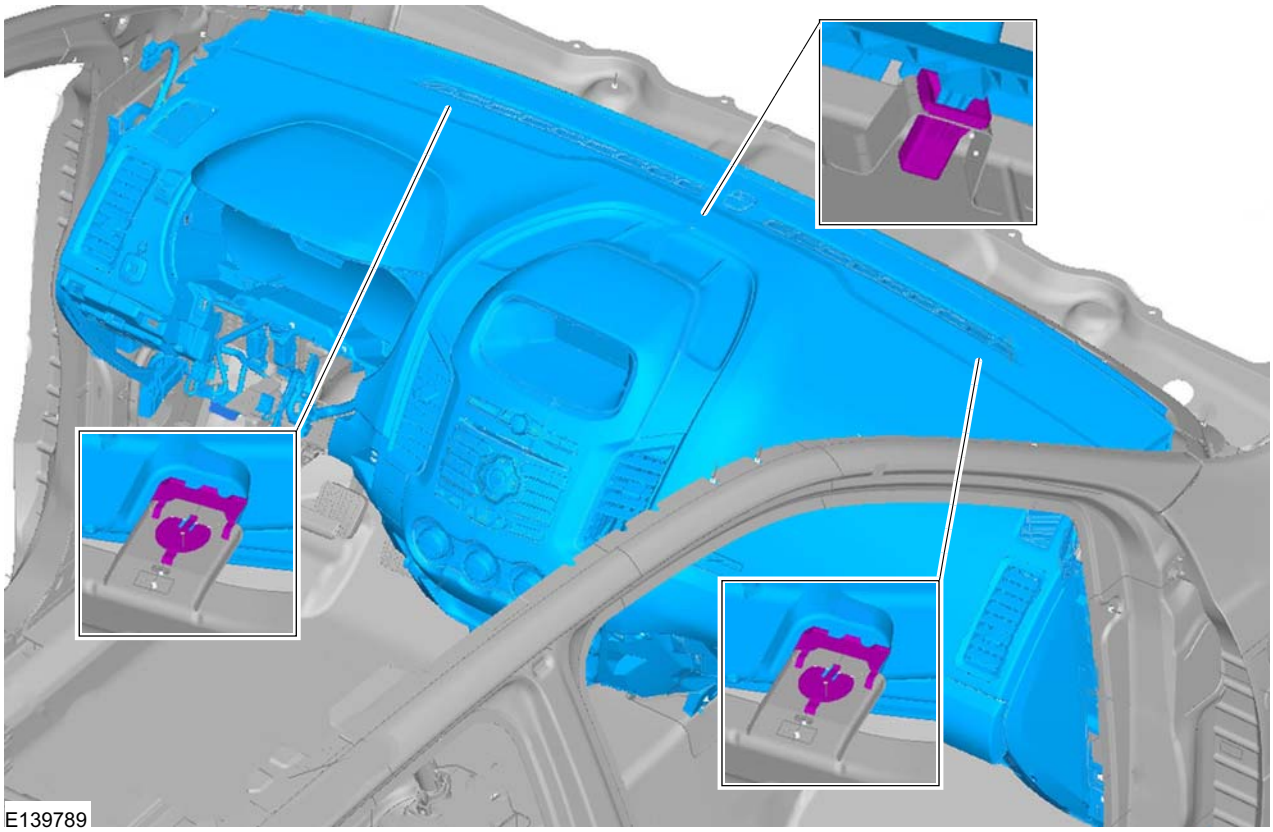

2. To install, reverse the removal procedure.
3. Configure the steering column module.
   General Equipment: Ford Diagnostic Equipment

REMOVAL AND INSTALLATION

Instrument Panel — RHD 4WD/RHD RWD

General Equipment

Ford Diagnostic Equipment

Removal

WARNINGS:

The supplemental restraint system (SRS) is active for a certain length of time after the power supply has been disconnected. Wait for a minimum of 3 minutes before disconnecting or removing any SRS components.

Make sure that the vehicle electrical system is fully depowered and no other power source is connected.

NOTE: Removal steps in this procedure may contain installation details.

1. Refer to: Supplemental Restraint System (SRS) Health and Safety Precautions (100-00 General Information, Description and Operation).
   Refer to: Battery Disconnect and Connect (414-01 Battery, Mounting and Cables, General Procedures).

Single cab

2. Refer to: Floor Console - Single Cab (501-12 Instrument Panel and Console, Removal and Installation).

Double cab

3. Refer to: Floor Console - Double Cab (501-12 Instrument Panel and Console, Removal and Installation).

Vehicles with manual transmission

4.

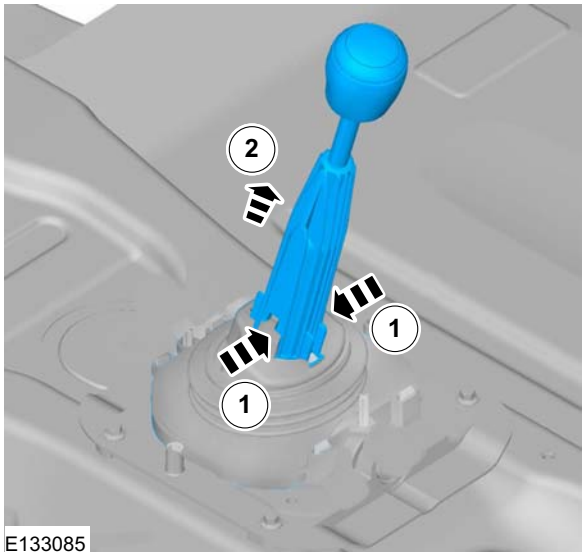

REMOVAL AND INSTALLATION

Vehicles with driver lower air bag

5. Refer to: Driver Lower Air Bag Module (501-20 Supplemental Restraint System, Removal and Installation).

Vehicles without driver lower air bag

6.

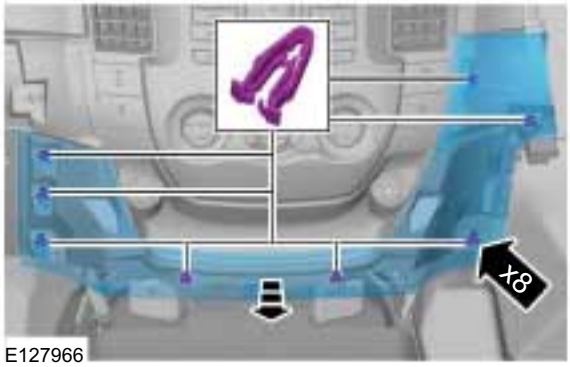

E127966

7. Torque: 2 Nm

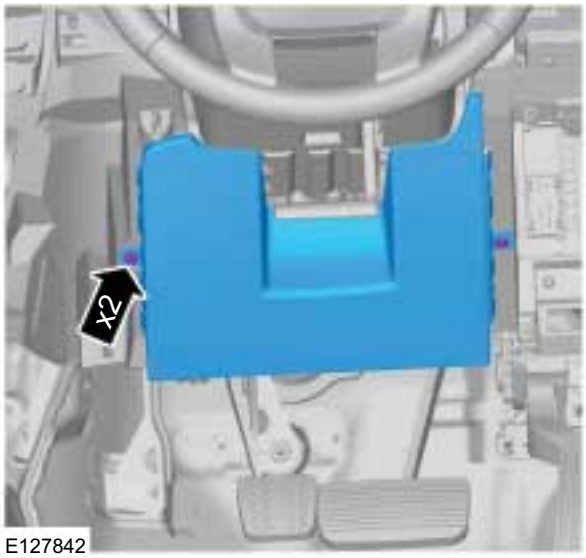

E127842

All vehicles

8. Refer to: Glove Compartment (501-12 Instrument Panel and Console, Removal and Installation).

9. Refer to: Cowl Side Trim Panel (501-05 Interior Trim and Ornamentation, Removal and Installation).

10.

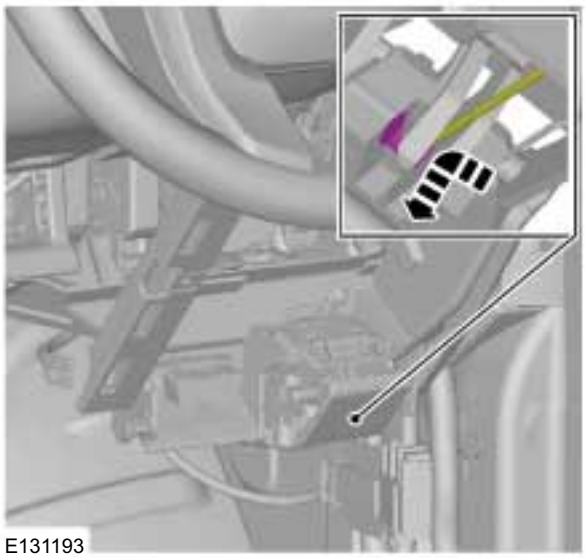
E131193

11.

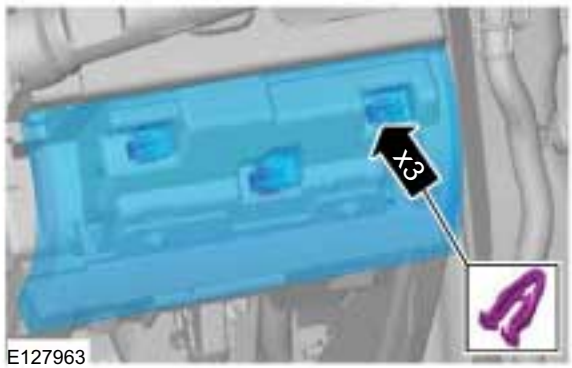

E127963

REMOVAL AND INSTALLATION

12. 1. Torque: 3 Nm
    2. Torque: 2 Nm

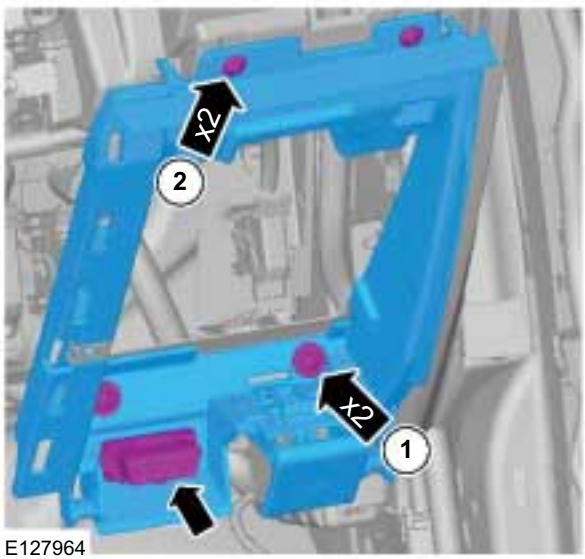

E127964

13. Torque: 10 Nm

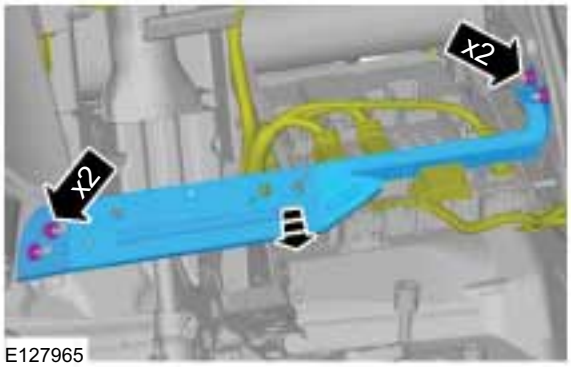

E127965

14. Refer to: Ignition Switch (211-05 Steering Column Switches, Removal and Installation).

15. Refer to: Steering Wheel (211-04 Steering Column, Removal and Installation).

16.

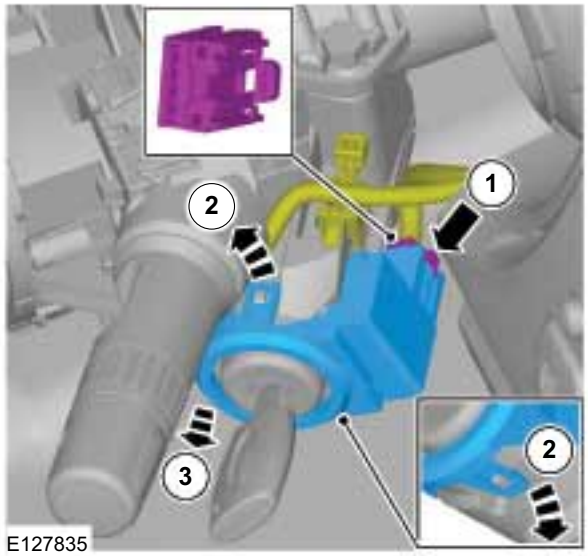

E127835

17. Torque: 7 Nm

REMOVAL AND INSTALLATION

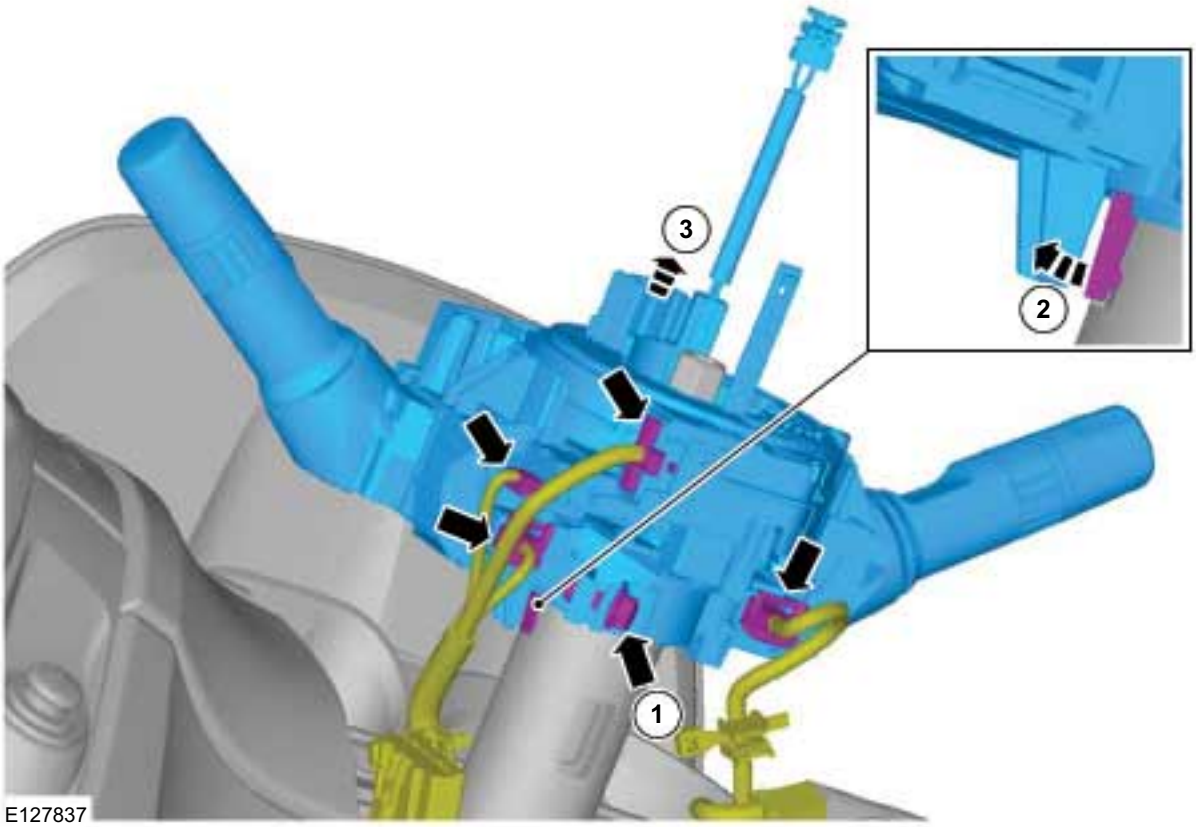

18. Torque: 15 Nm

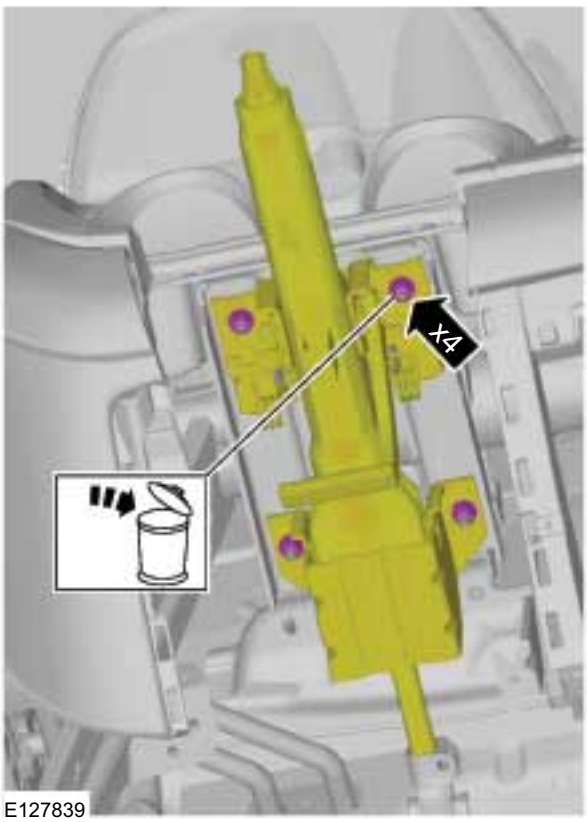

19. Refer to: A-Pillar Trim Panel (501-05 Interior Trim and Ornamentation, Removal and Installation).

20.

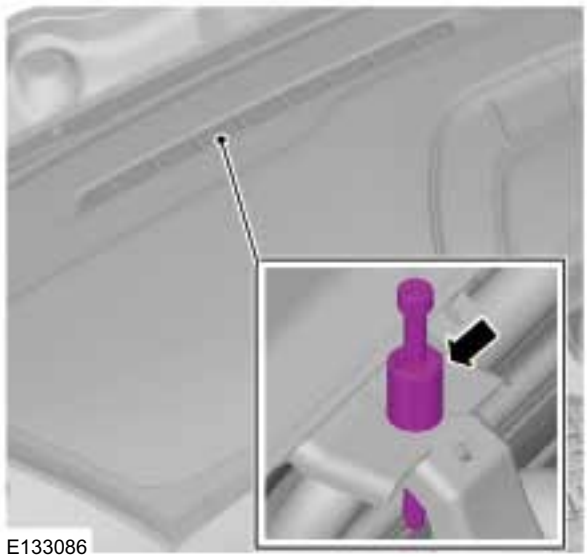

REMOVAL AND INSTALLATION

All vehicles

6.

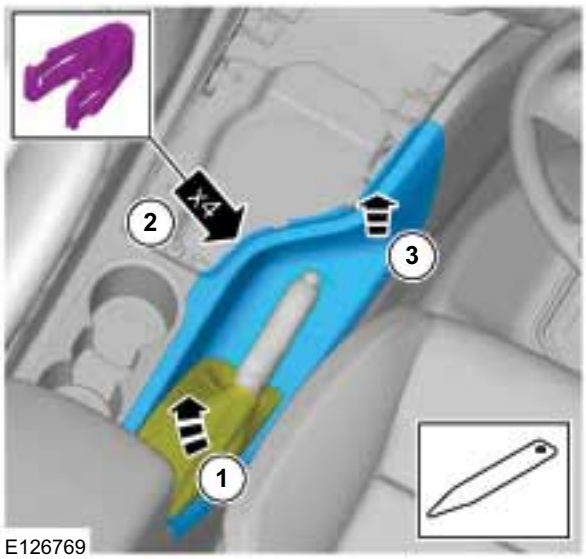

7. 2. Torque: 6 Nm

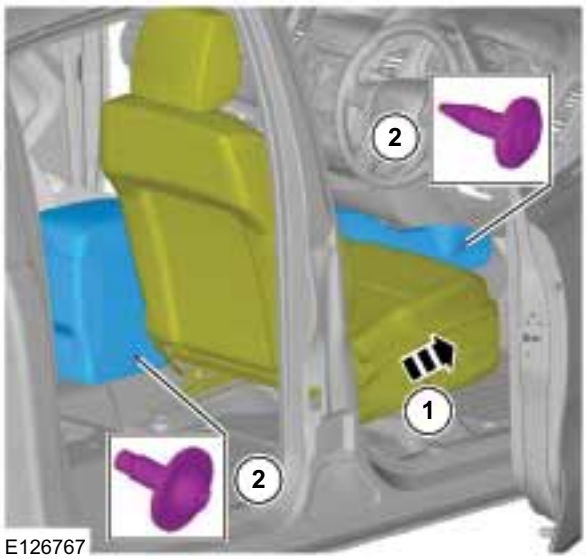

8. 2. Torque: 6 Nm

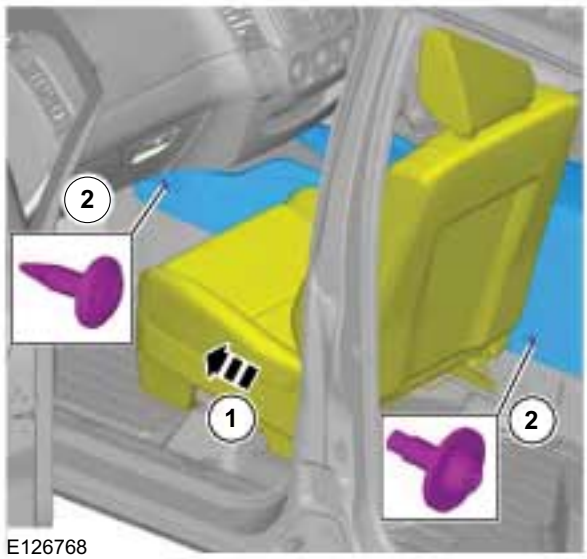

9.

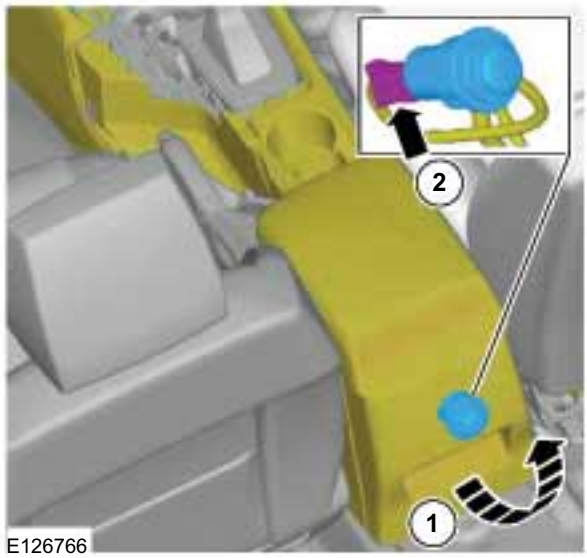

REMOVAL AND INSTALLATION

25. Torque: 25 Nm

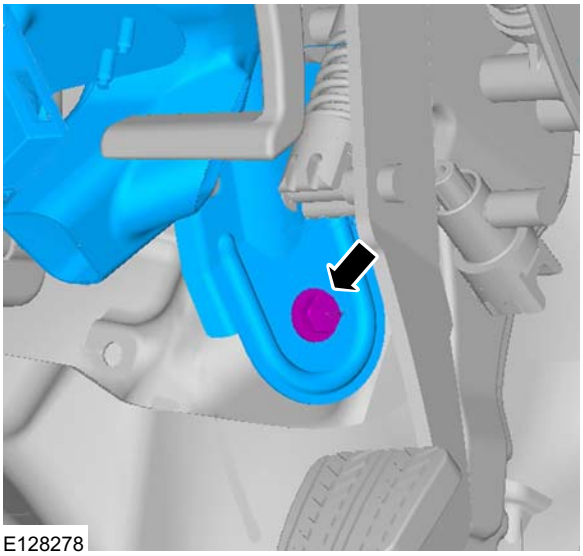
E128278

26. On both sides.
Torque: 25 Nm

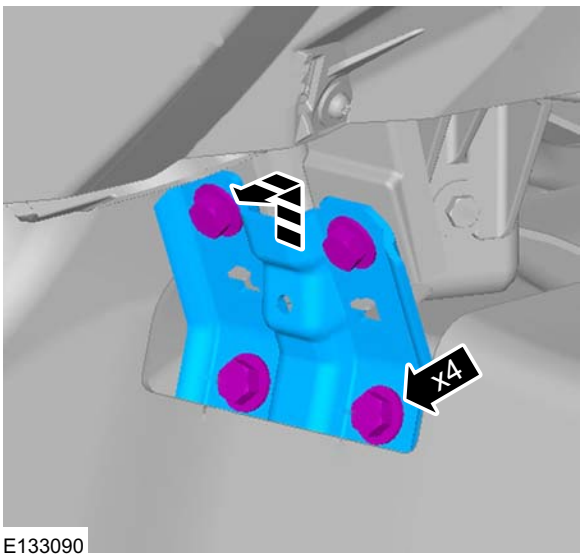

E133090

27. 1. On both sides.
Torque: 25 Nm
2. On both sides.
Torque: 25 Nm

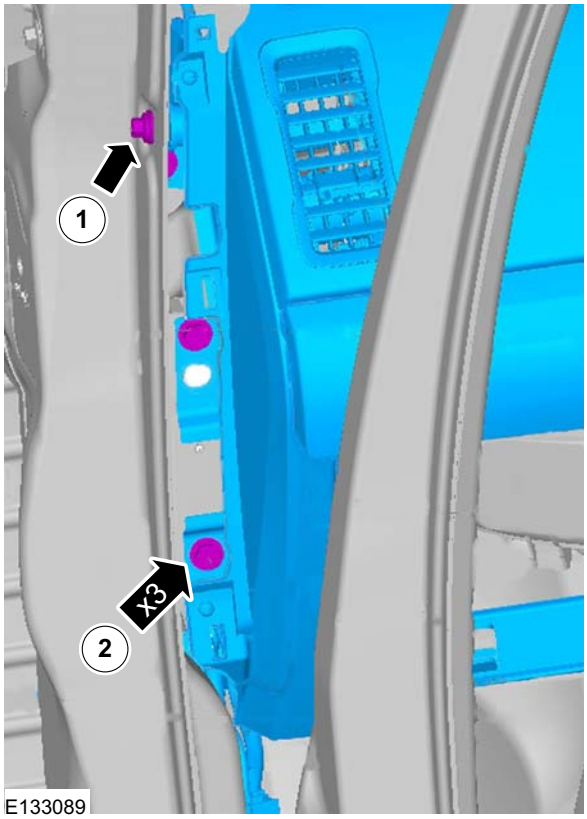

E133089

28. **NOTE:** Note the position of the component before removal.

REMOVAL AND INSTALLATION

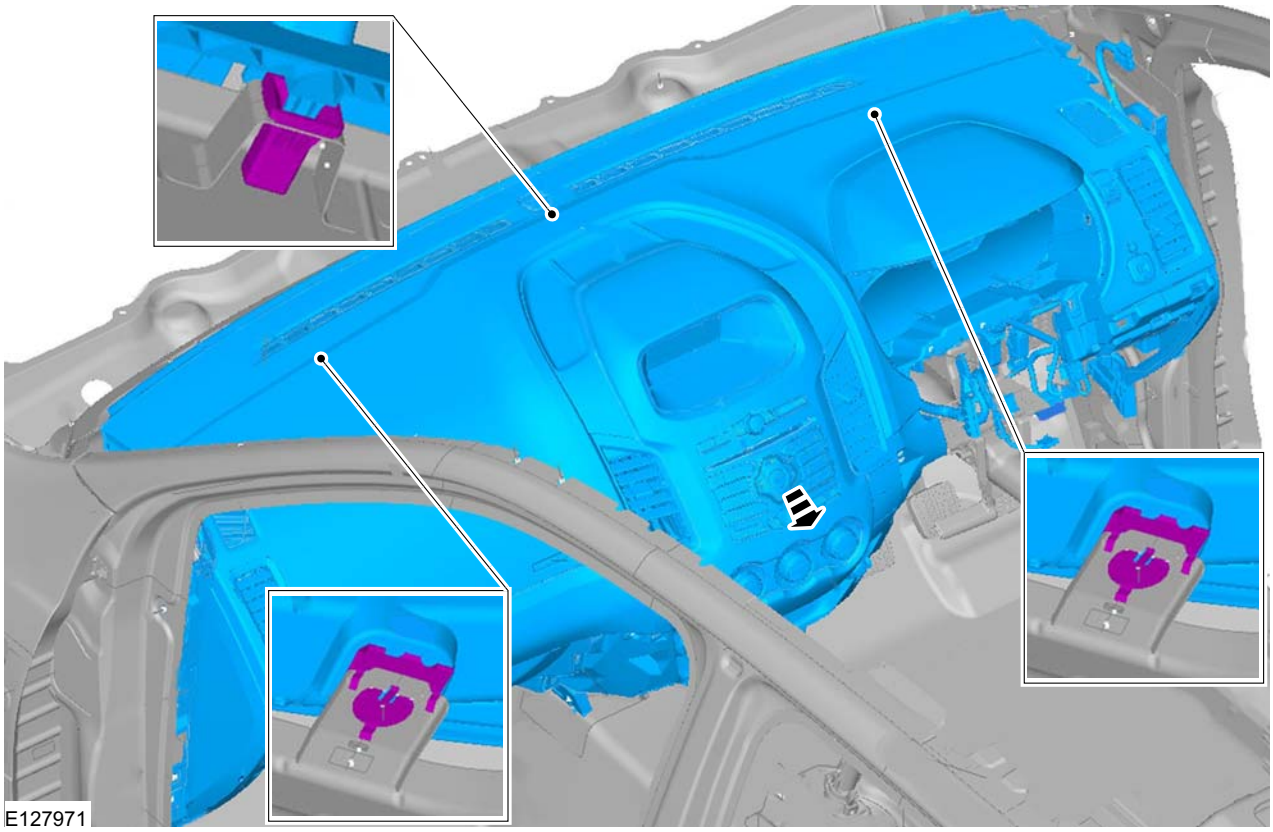

Installation

1. **CAUTION: Make sure that the three locking positions are locked correctely.**

NOTE: Make sure that the adjuster is correctely alighned.

REMOVAL AND INSTALLATION

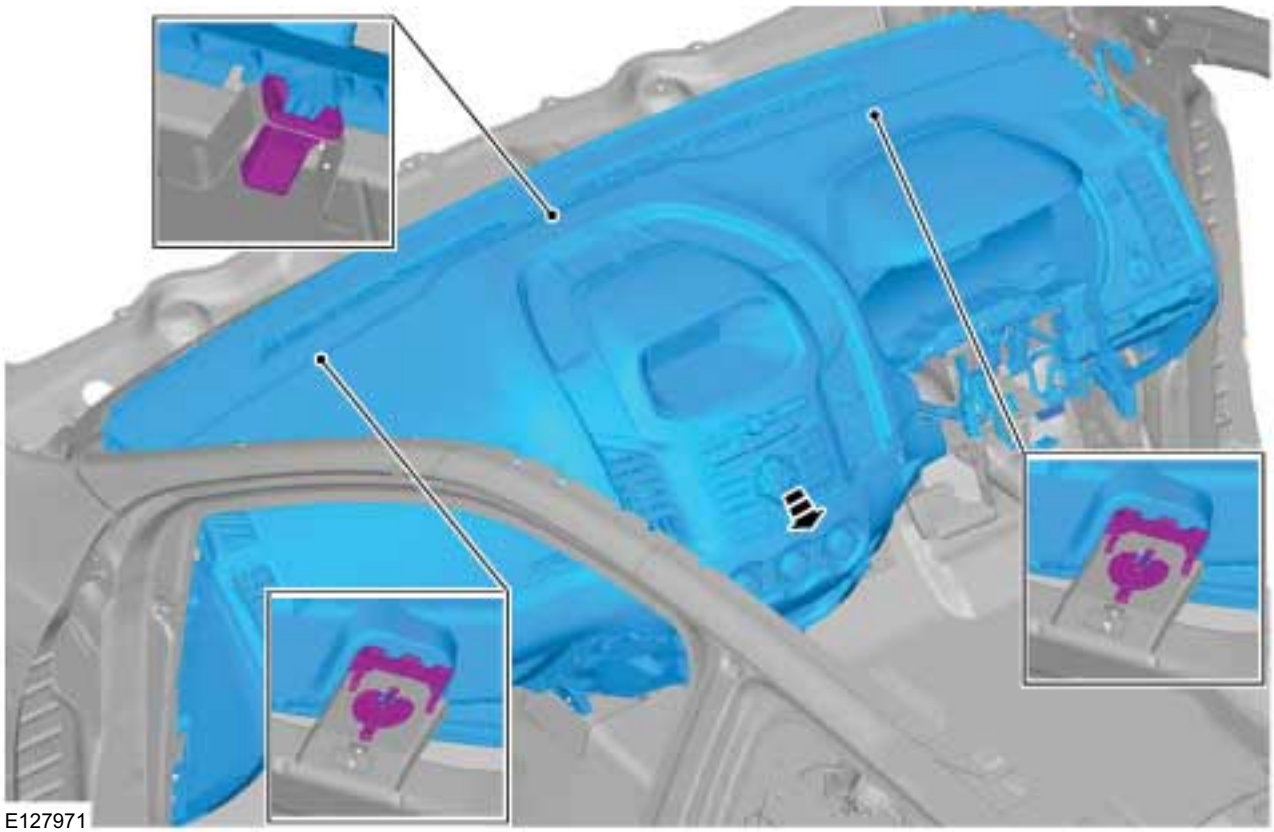

2. To install, reverse the removal procedure.
3. Configure the steering column module.
   General Equipment: Ford Diagnostic Equipment

REMOVAL AND INSTALLATION

Floor Console — Single Cab

Removal

NOTE: Removal steps in this procedure may contain installtion details.

1. Refer to: Health and Safety Precautions (100-00 General Information, Description and Operation).
2. Refer to: Battery Disconnect and Connect (414-01 Battery, Mounting and Cables, General Procedures).

Driver and passenger seat

3. Refer to: Floor Console - Double Cab (501-12 Instrument Panel and Console, Removal and Installation).

Vehicles with front bench seat

4. Torque: 50 Nm

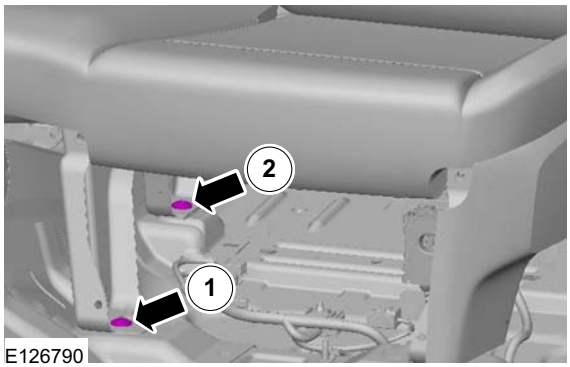

5. Torque: 50 Nm

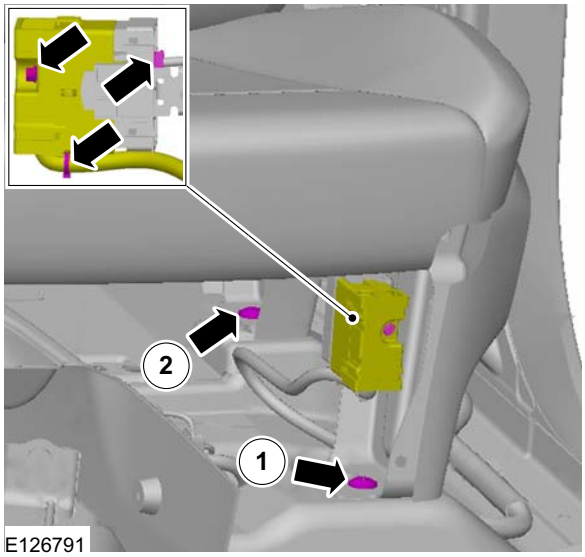

6.

REMOVAL AND INSTALLATION

7.

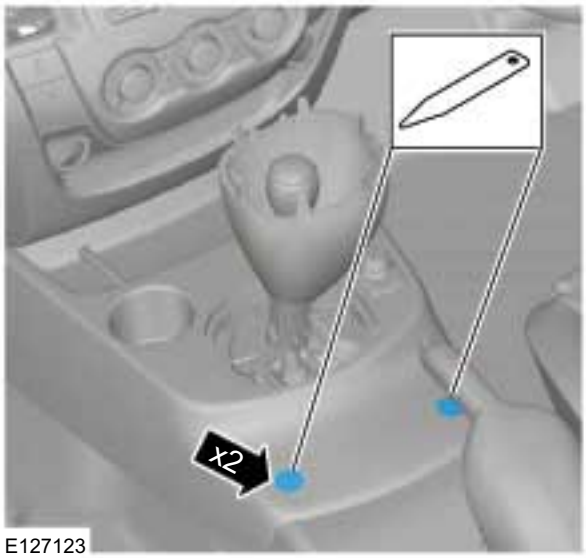

E127123

8. Torque: 6 Nm

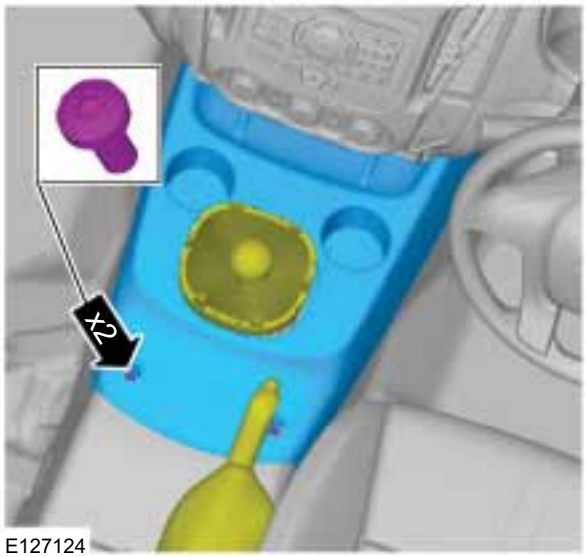

E127124

9.

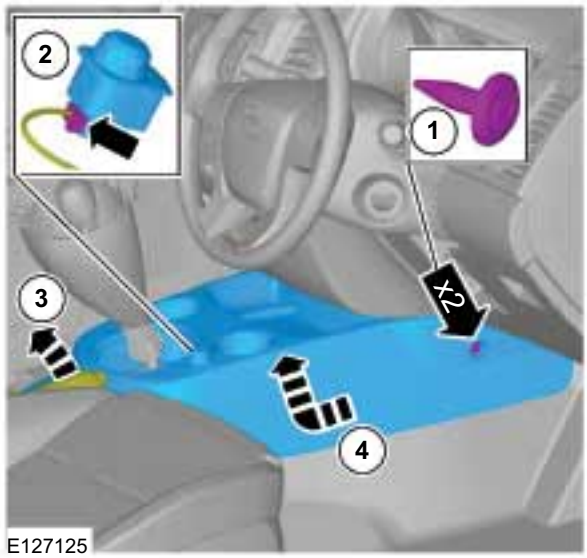

E127125

Installation

1. To install, reverse the removal procedure.

REMOVAL AND INSTALLATION

Floor Console — Double Cab

Removal

NOTE: Removal steps in this procedure may contain installation details.

1. Refer to: Health and Safety Precautions (100-00 General Information, Description and Operation).
2. Refer to: Battery Disconnect and Connect (414-01 Battery, Mounting and Cables, General Procedures).

Vehicles with manual transmission

3.

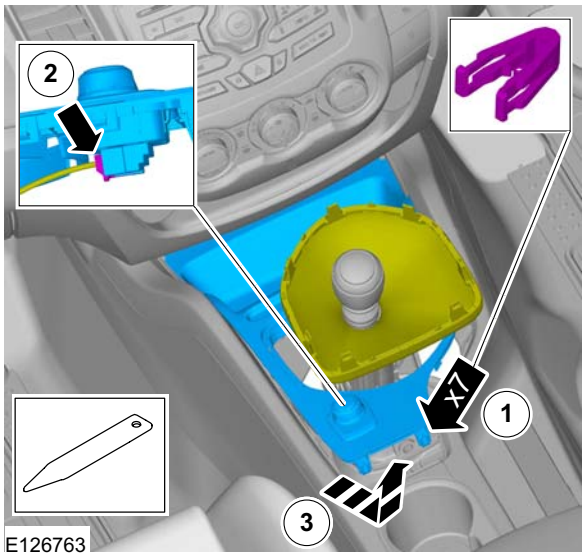

Vehicles with automatic transmission

4.

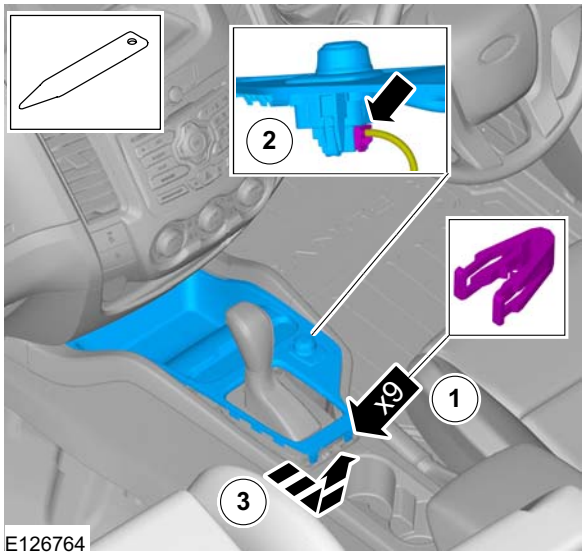

5. Torque: 2 Nm

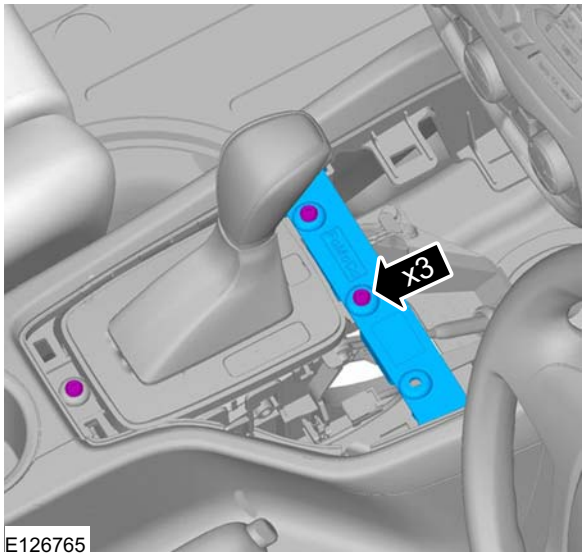

REMOVAL AND INSTALLATION

All vehicles

6.

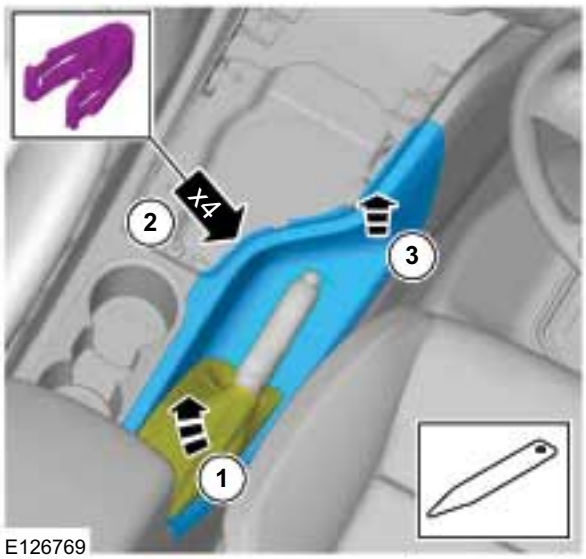

7. 2. Torque: 6 Nm

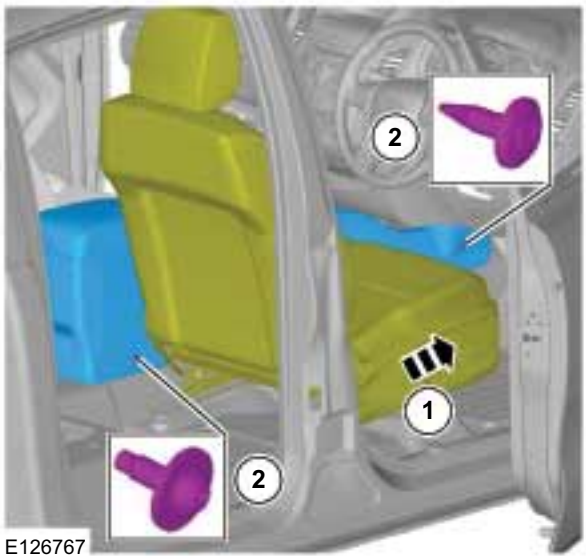

8. 2. Torque: 6 Nm

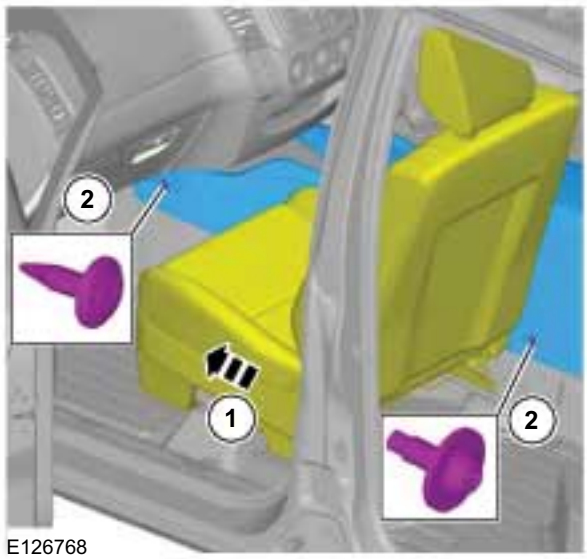

9.

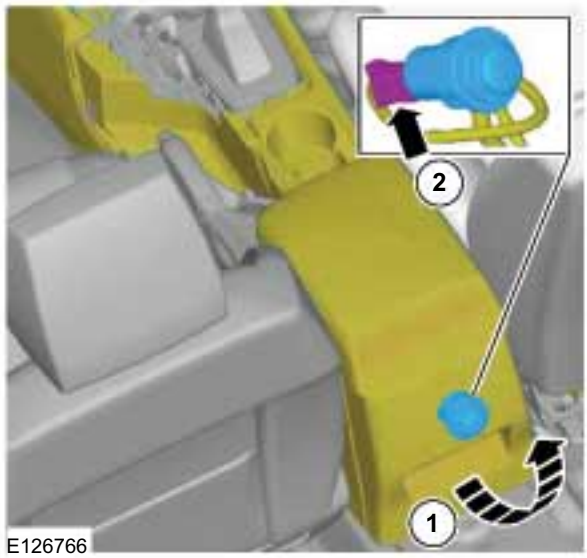

REMOVAL AND INSTALLATION

10.

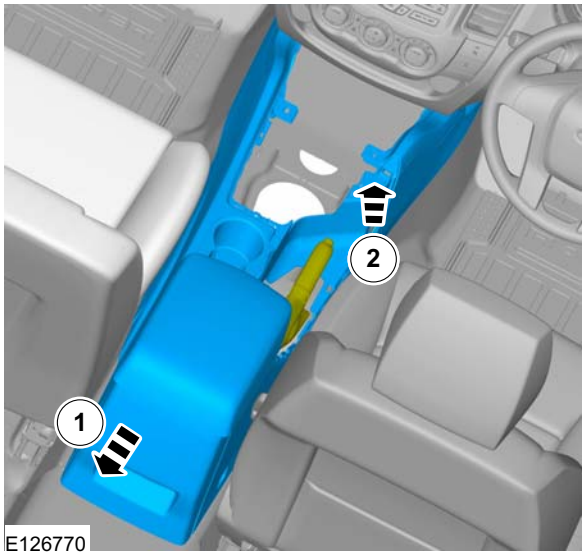

Installation

1. To install, reverse the removal procedure.

REMOVAL AND INSTALLATION

Glove Compartment

Removal

NOTE: Removal steps in this procedure may contain installtion details.

1. Refer to: Health and Safety Precautions (100-00 General Information, Description and Operation).
   Refer to: Battery Disconnect and Connect (414-01 Battery, Mounting and Cables, General Procedures).

2.

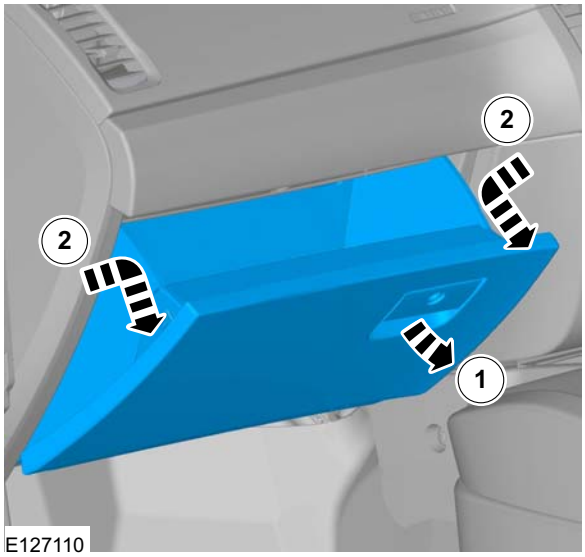

3.

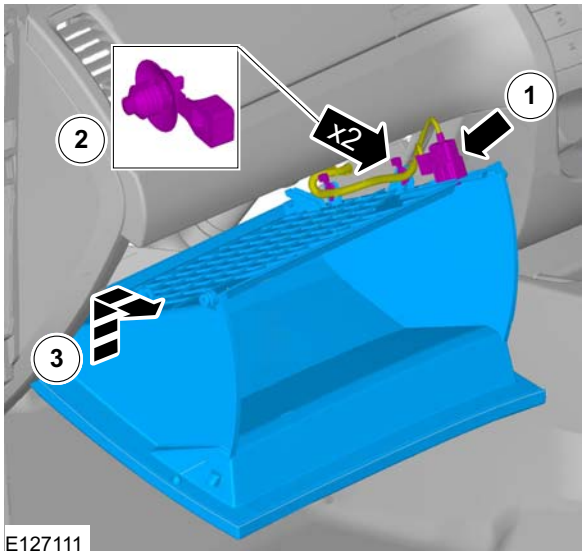

4.

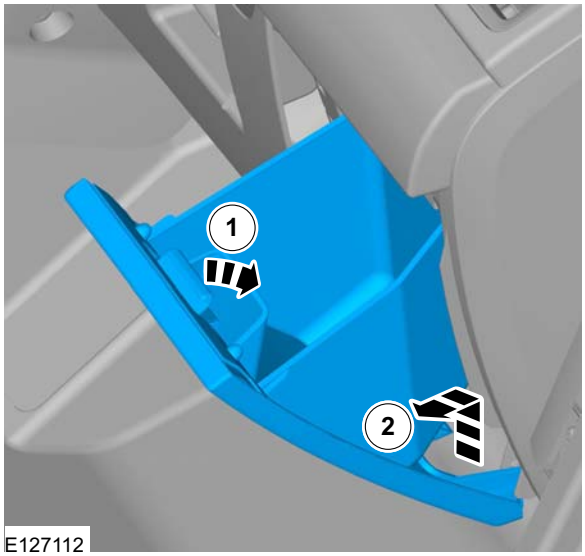

Installation

NOTE: Make sure that the passenger glove box lamp is correctly located.

1. To install, reverse the removal procedure.

GENERAL PROCEDURES

Windshield Wiper Blade and Pivot Arm Adjustment

1. **Operate the windshield wipers, and then turn off the windshield wiper motor to set the wipers in the park position.**
2. **NOTE: If the hollowed mark in the ceramic coating cannot be located, measure the distance from the cowl grille end line, and adjust the windshield wiper arm and blade.**

   Slide the serrated connecting part and adjust the windshield wiper arm and blade so that its end is aligned with the hollowed mark in the ceramic coating.

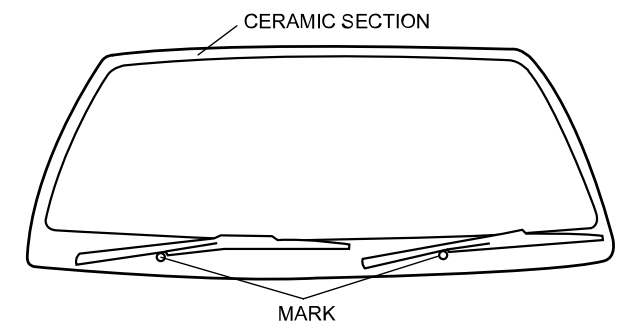

DCF919ZWB002

REMOVAL AND INSTALLATION

Front Bumper Cover

Removal

NOTE: Removal steps in this procedure may contain installation details.

1. Refer to: Battery Disconnect and Connect (414-01 Battery, Mounting and Cables, General Procedures).

2.

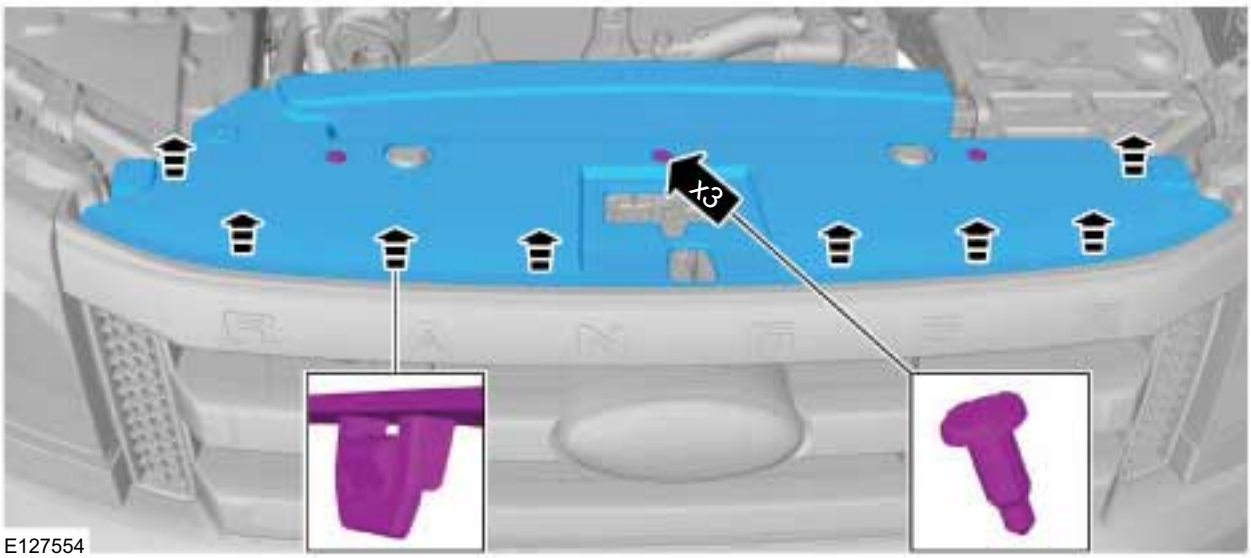

3.

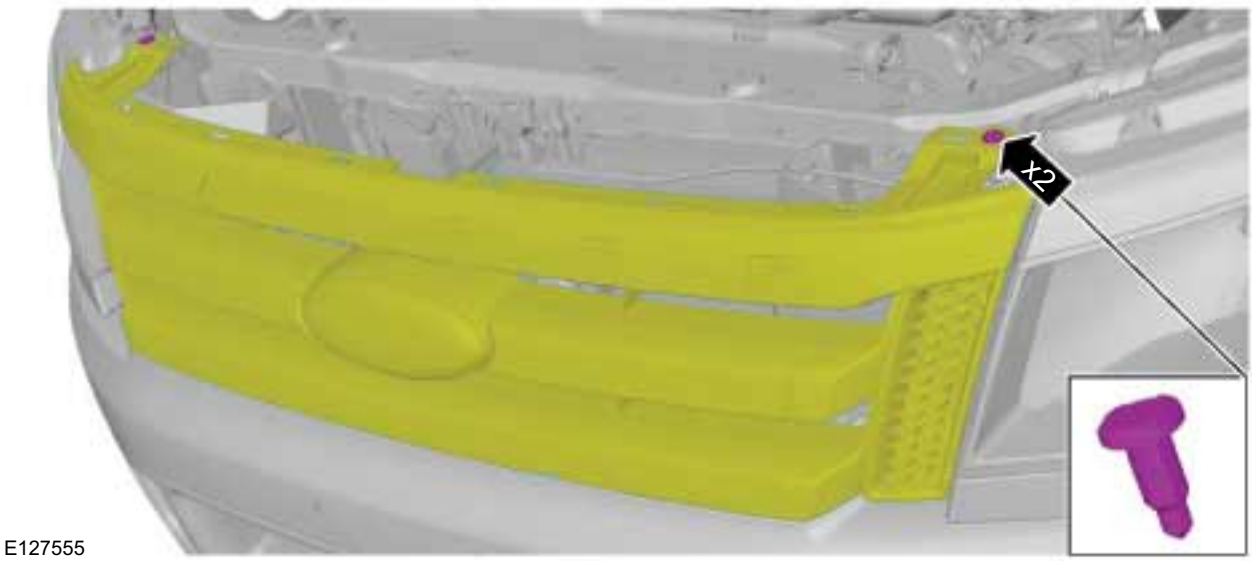

4. Refer to: Lifting (100-02 Jacking and Lifting, Description and Operation).

5.

REMOVAL AND INSTALLATION

6.

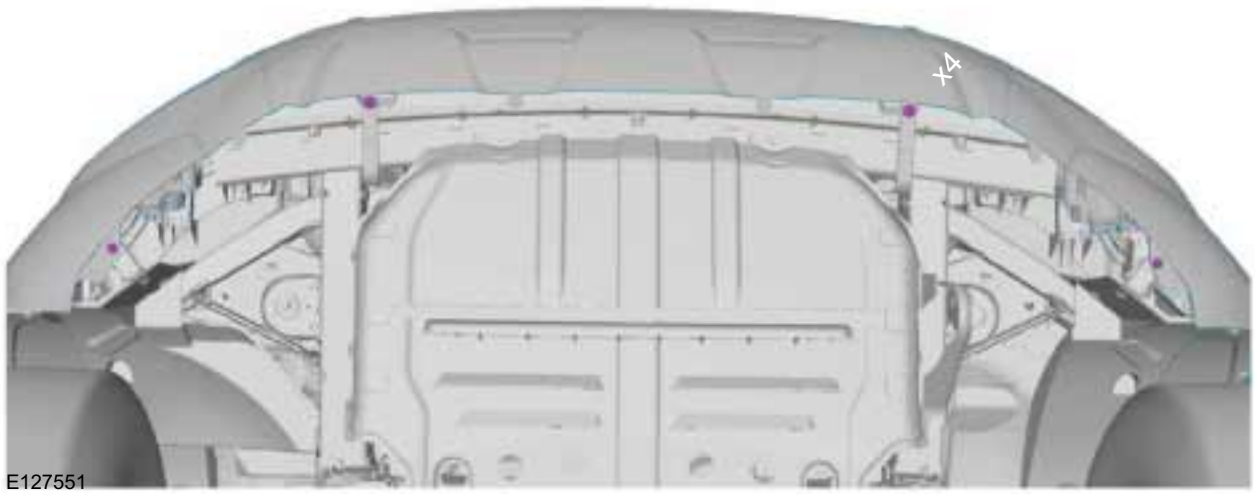

7. Torque: 30 Nm

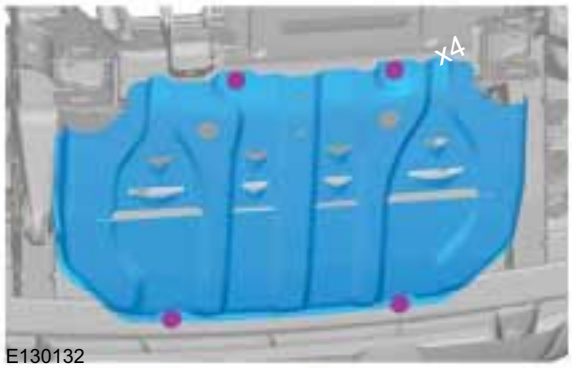

8.

REMOVAL AND INSTALLATION

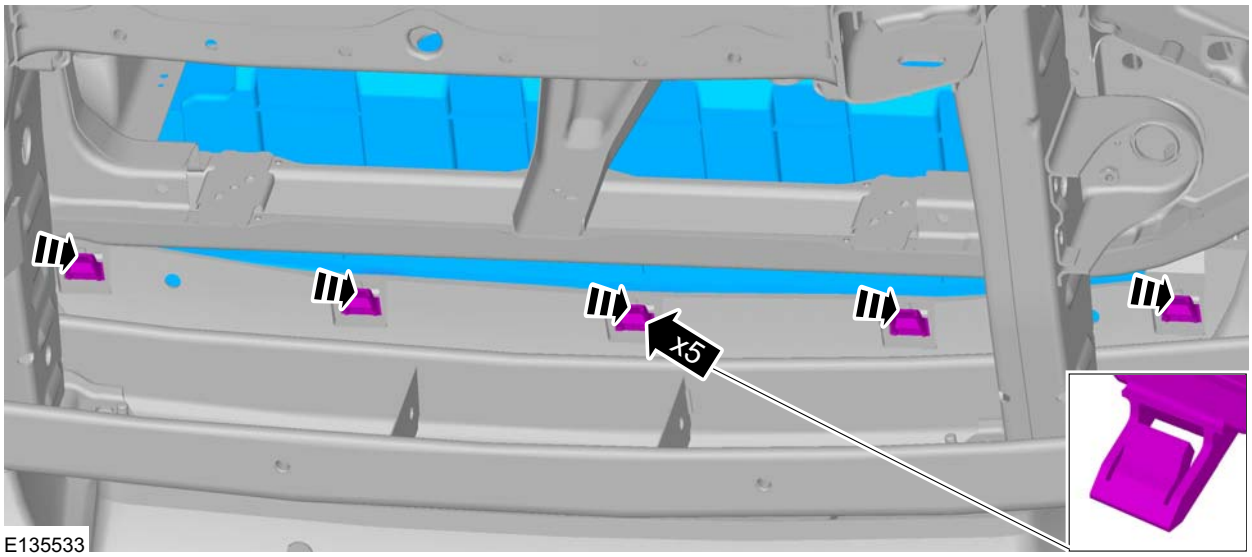

9. On both the sides.

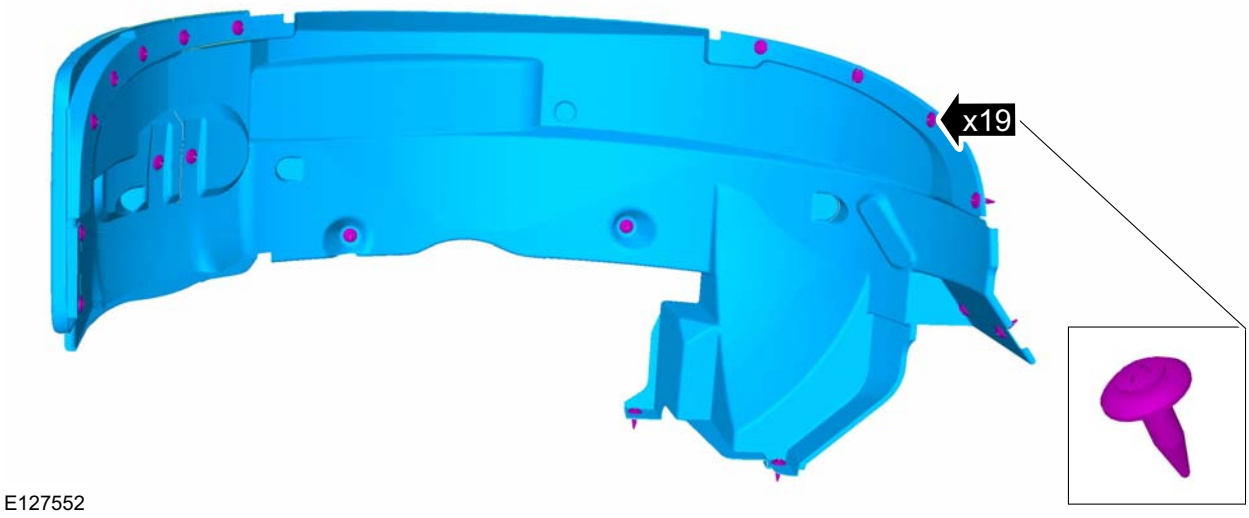

REMOVAL AND INSTALLATION

10. On both the sides.

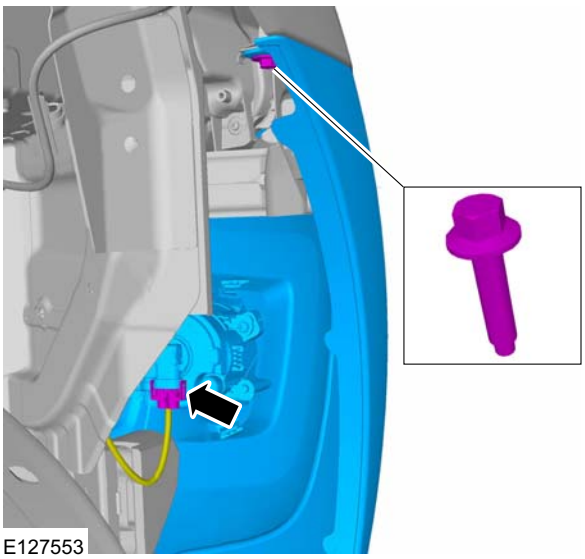

11. Torque: 10 Nm

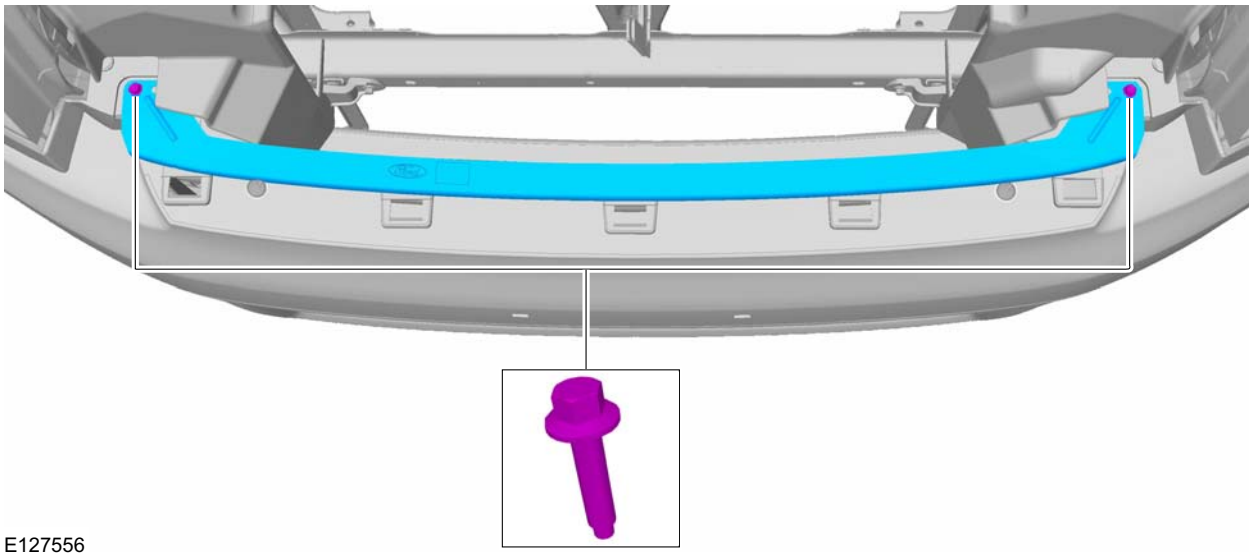

12.

REMOVAL AND INSTALLATION

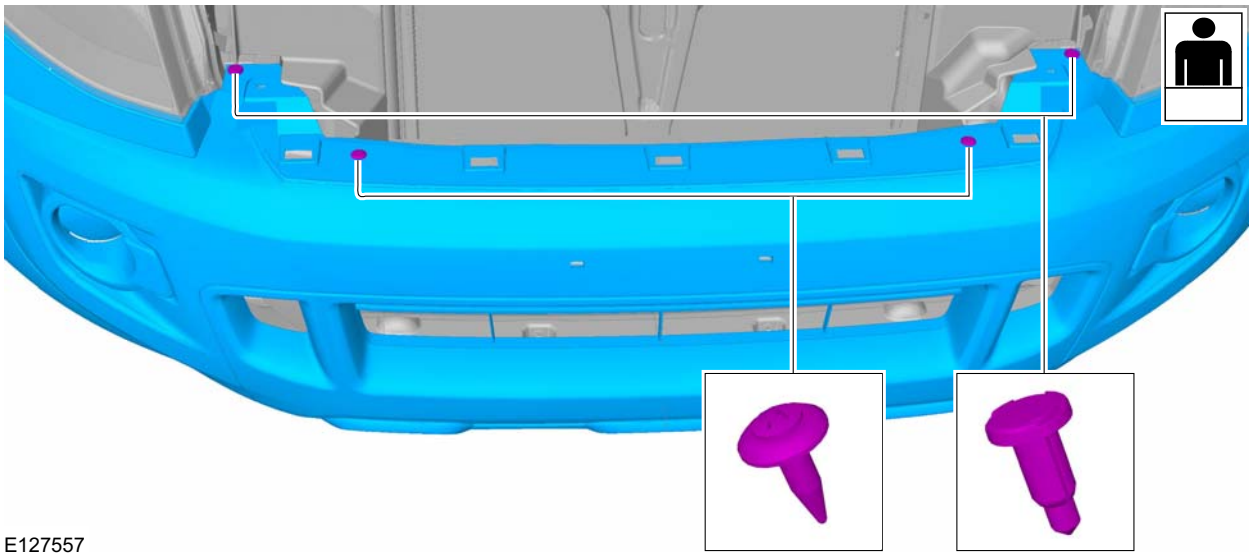

Installation

1. To install, reverse the removal procedure.

REMOVAL AND INSTALLATION

Front Safety Belt Retractor — Super Cab

Removal

NOTE: Removal steps in this procedure may contain installation details.

1. **WARNINGS:**

   The supplemental restraint system (SRS) is active for a certain length of time after the power supply has been disconnected. Wait for a minimum of 3 minutes before disconnecting or removing any SRS components.

   Handling the seat belt (pre-tensioner seat belt) improperly can accidentally deploy the pre-tensioner seat belt, which may seriously injure you. Read the service warnings and cautions before handling the seat belt (pre-tensioner seat belt).

   Make sure that the vehicle electrical system is fully depowered and no other power source is connected.

   CAUTION: The ELR (emergency locking retractor) has a spring that will unwind if the retractor cover is removed. The spring cannot be rewound by hand. If this occurs, the ELR will not work properly. Therefore, do not disassemble the retractor.

   Refer to: Supplemental Restraint System (SRS) Health and Safety Precautions (100-00 General Information, Description and Operation).

2. Refer to: Battery Disconnect and Connect (414-01 Battery, Mounting and Cables, General Procedures).

3. **NOTE:** Note the position of the component before removal.

   Torque: 48 Nm

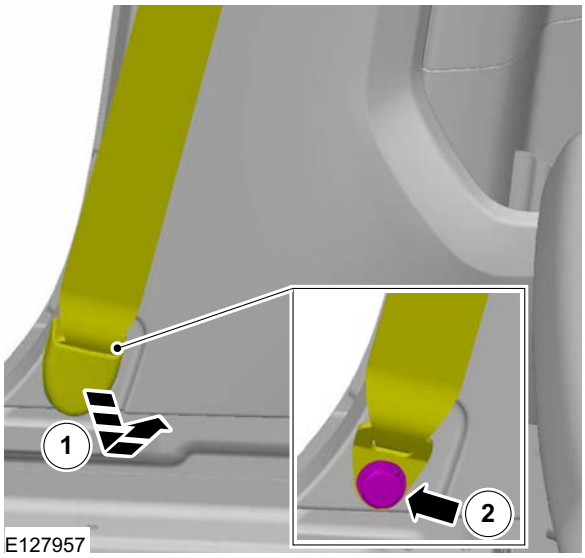

4. Torque: 48 Nm

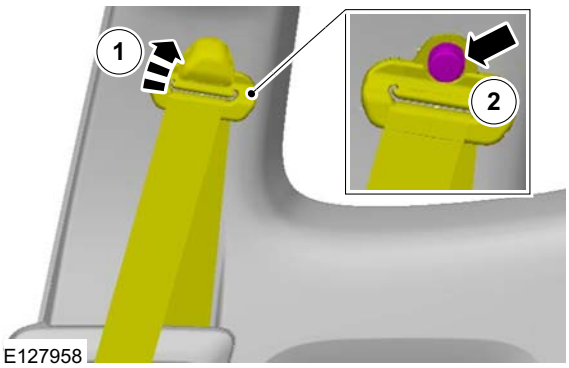

REMOVAL AND INSTALLATION

5. Refer to: Rear Door Trim Panel - Super Cab (501-05 Interior Trim and Ornamentation, Removal and Installation).

6.

7. 2. Torque: 11 Nm
   3. Torque: 48 Nm

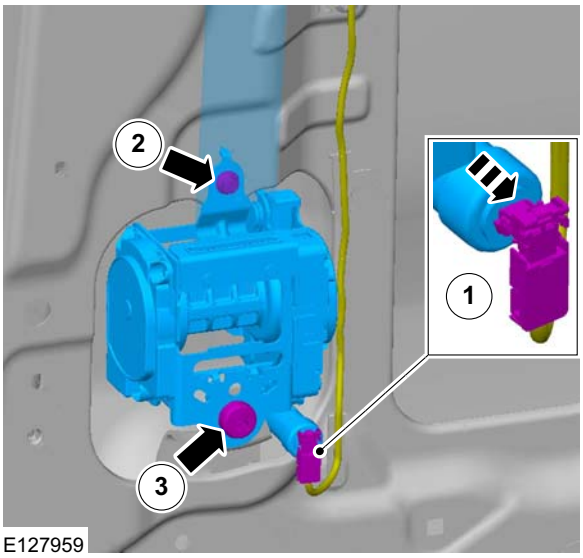

Installation

1. To install, reverse the removal procedure.

REMOVAL AND INSTALLATION

Rear Safety Belt Retractor

Removal

NOTE: Removal steps in this procedure may contain installation details.

1. Refer to: C-Pillar Lower Trim Panel (501-05 Interior Trim and Ornamentation, Removal and Installation).

Double cab

2. **NOTE:** Note the position of the component before removal.

   Torque: 48 Nm

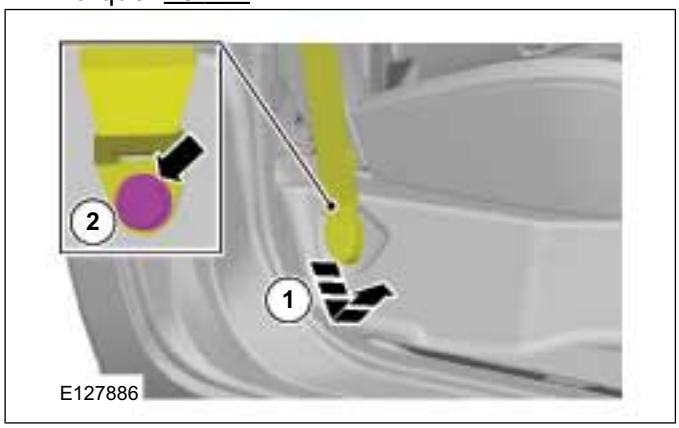

3. 1. Torque: 11 Nm
   2. Torque: 48 Nm

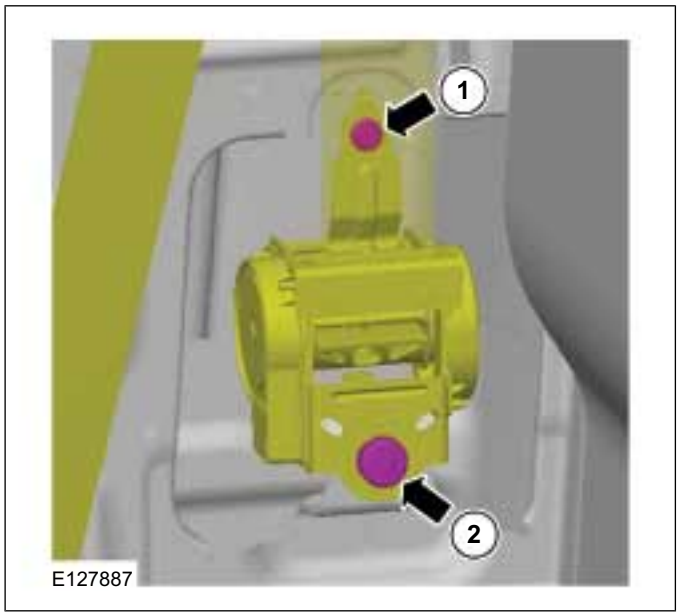

4. Torque: 48 Nm

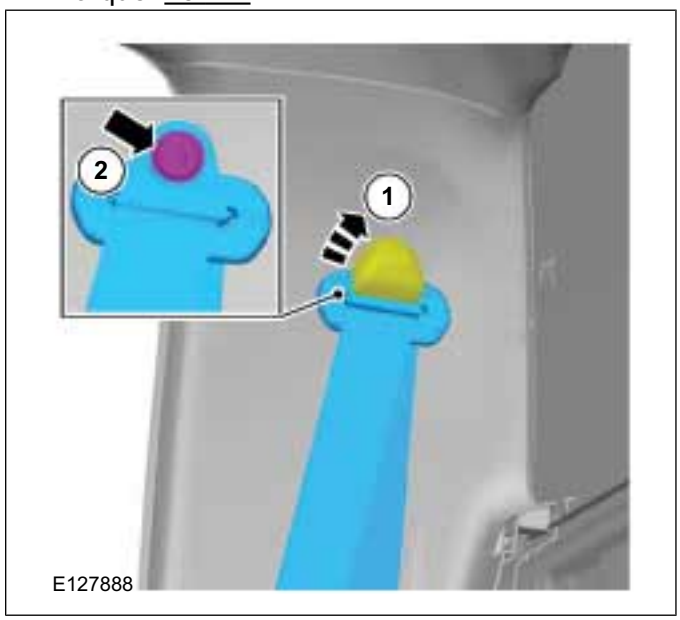

Stretch cab

5. 1. Torque: 48 Nm
   2. Torque: 11 Nm
   3. Torque: 48 Nm

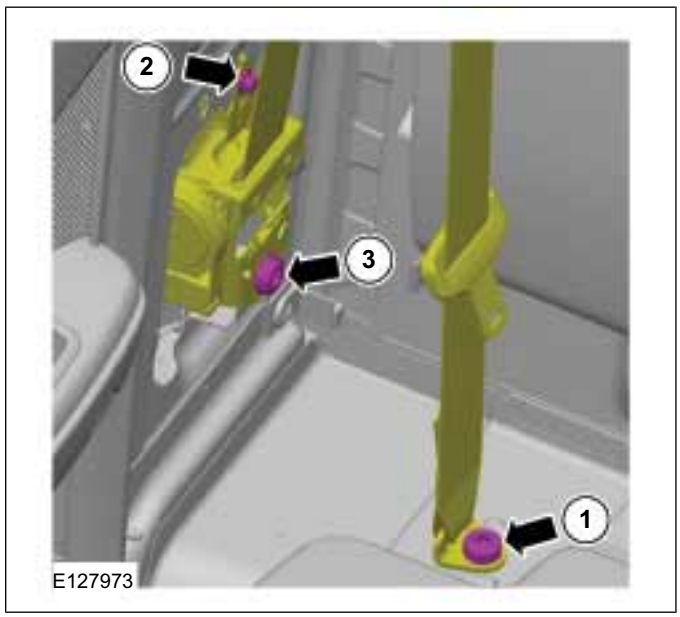

REMOVAL AND INSTALLATION

6. Torque: 48 Nm

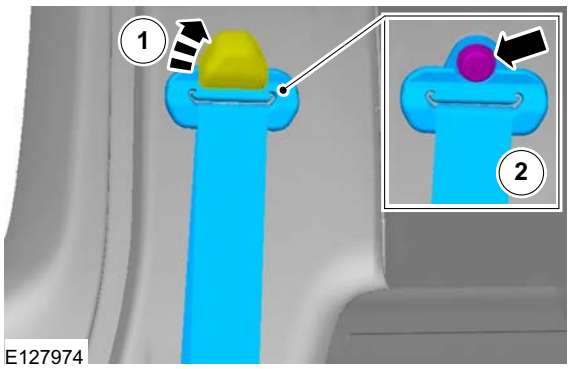

Installation

1. To install, reverse the removal procedure.

REMOVAL AND INSTALLATION

Driver Air Bag Module

General Equipment

Flat Headed Screw Driver

Removal

WARNING: The supplemental restraint system (SRS) is active for a certain length of time after the power supply has been disconnected. Wait for a minimum of 3 minutes before disconnecting or removing any SRS components.

NOTE: Removal steps in this procedure may contain installation details.

1. Refer to: Supplemental Restraint System (SRS) Health and Safety Precautions (100-00 General Information, Description and Operation).
2. Refer to: Battery Disconnect and Connect (414-01 Battery, Mounting and Cables, General Procedures).
3. **NOTE:** Make sure that the road wheels are in straight ahead position.

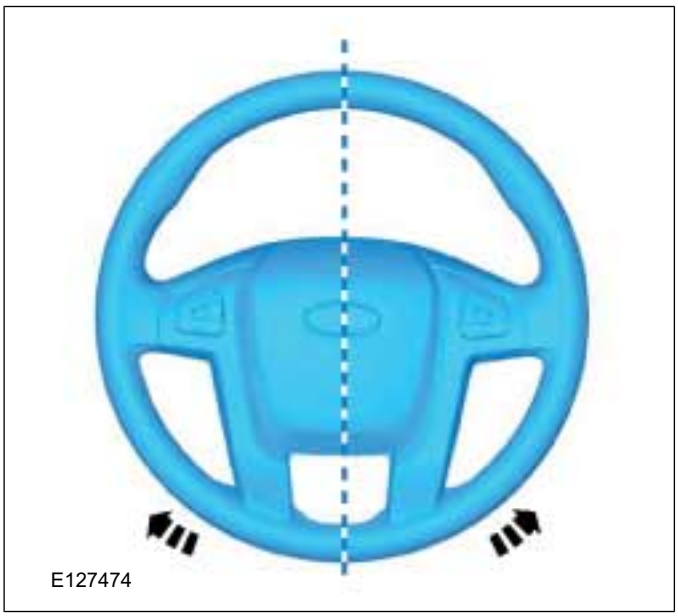

4. Depending on the vehicle variant, steering wheels with a different design for cut marks can be fitted.

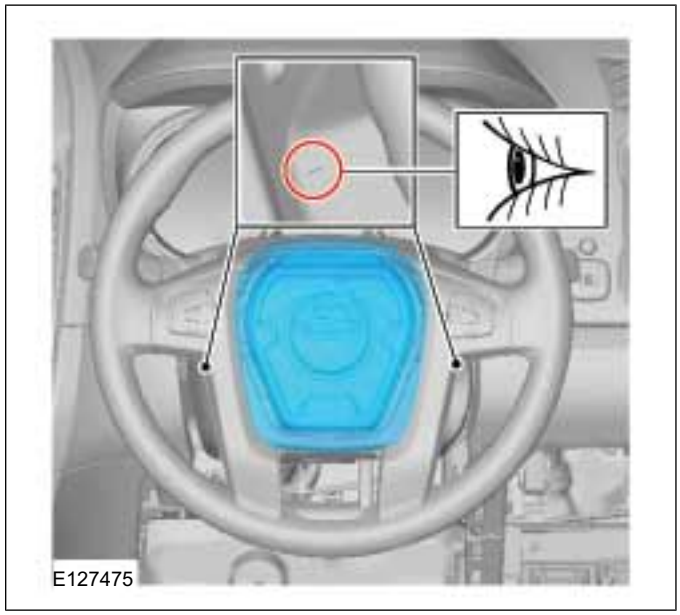

5. General Equipment: Flat Headed Screw Driver

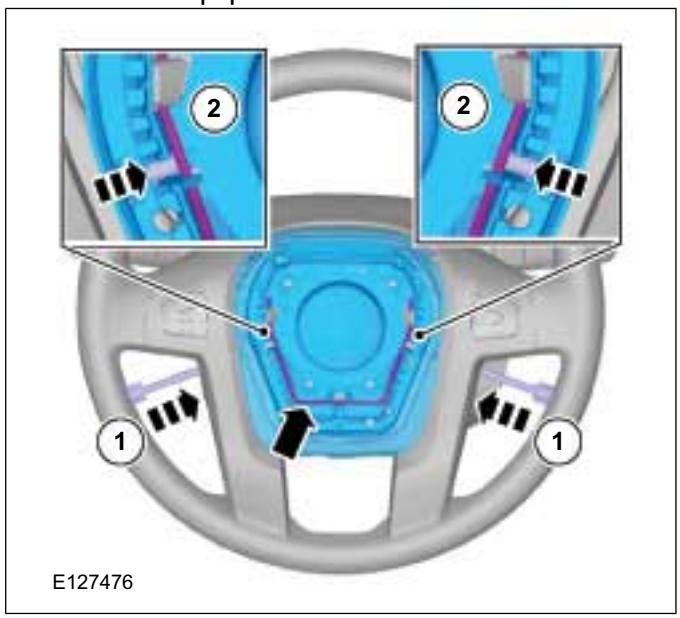

REMOVAL AND INSTALLATION

6.

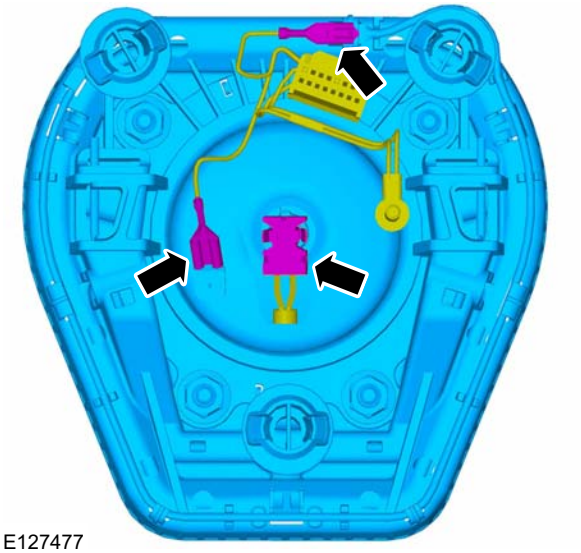

Installation

1. To install, reverse the removal procedure.

REMOVAL AND INSTALLATION

Driver Lower Air Bag Module

Removal

WARNINGS:

The supplemental restraint system (SRS) is active for a certain length of time after the power supply has been disconnected. Wait for a minimum of 3 minutes before disconnecting or removing any SRS components.

Make sure that the vehicle electrical system is fully depowered and no other power source is connected.

NOTE: Removal steps in this procedure may contain installation details.

1. Refer to: Supplemental Restraint System (SRS) Health and Safety Precautions (100-00 General Information, Description and Operation).

2. Refer to: Battery Disconnect and Connect (414-01 Battery, Mounting and Cables, General Procedures).

3.

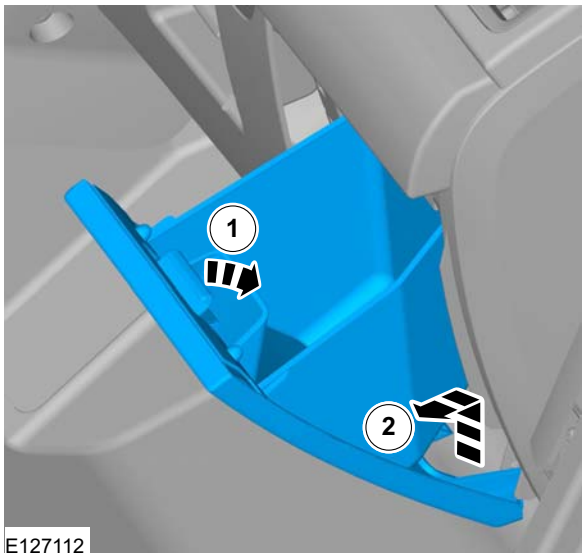

4.

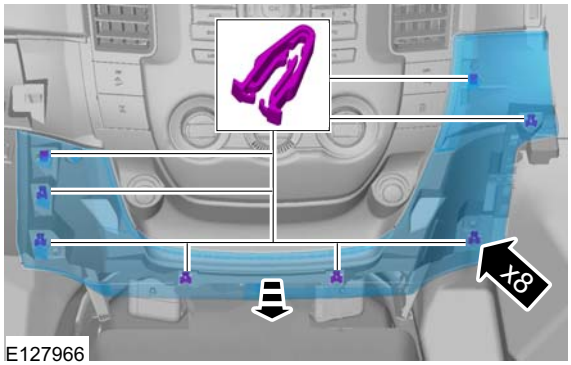

5. **NOTE:** Make sure that the steering column adjustment arm is in normal position.

   3. Torque: 9 Nm

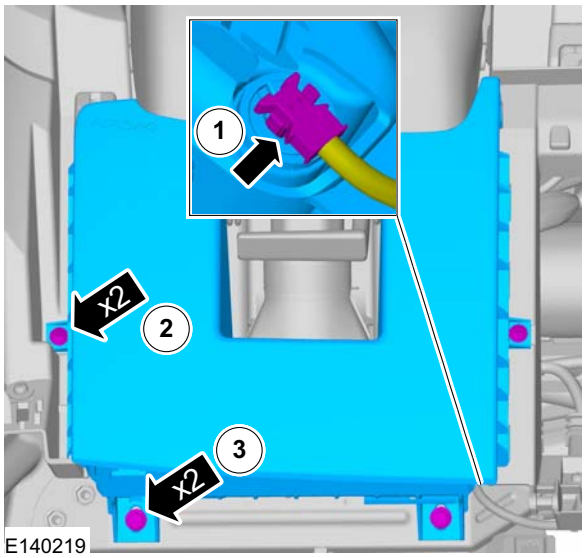

REMOVAL AND INSTALLATION

6. 1. On both sides.

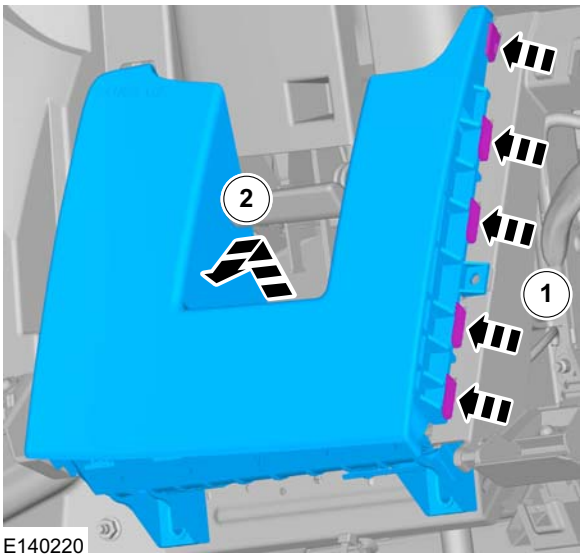

Installation

1. To install, reverse the removal procedure.

REMOVAL AND INSTALLATION

Clockspring

Removal

NOTE: Removal steps in this procedure may contain installation details.

1.

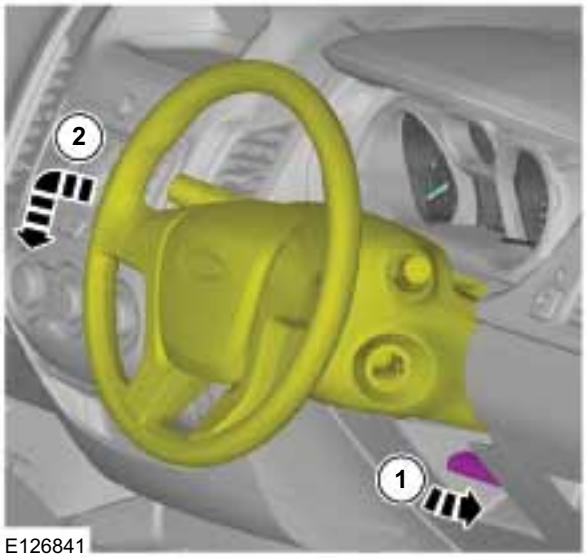

E126841

2.

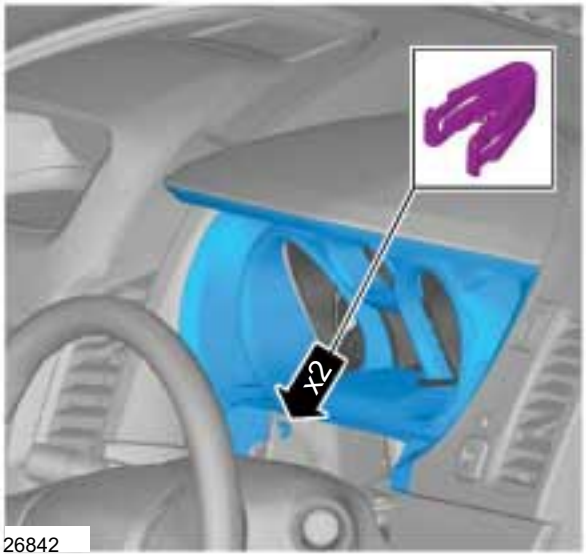

E126842

3.

E127542

4.

E128174

REMOVAL AND INSTALLATION

5.

6.

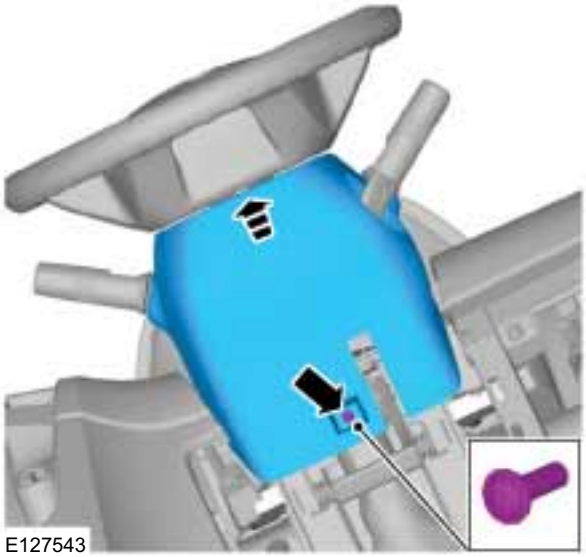

7. Refer to: Steering Wheel (211-04 Steering Column, Removal and Installation).

8.

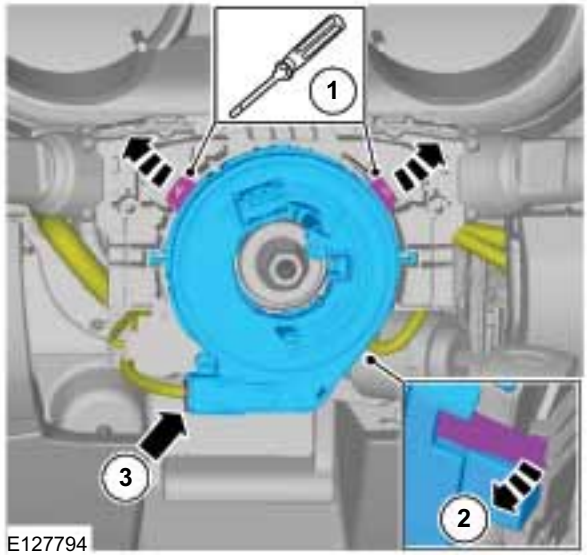

Installation

1. To install, reverse the removal procedure.
2. Refer to: Clockspring Adjustment (501-20 Supplemental Restraint System, General Procedures).

GENERAL PROCEDURES

Clockspring Adjustment

General Equipment

Adhesive Tape

WARNINGS:

If there is a break between installing the clockspring and steering wheel rotation sensor assembly and installing the steering wheel, the centralizing of the clockspring must be repeated.

If the centralization of the clockspring is in doubt, the centralizing of the clockspring must be repeated.

NOTE: Make sure that the road wheels are in the straight ahead position.

1.
1. Turn the clockspring in a clockwise direction until a resistance is felt.
2. Turn the clockspring in a counterclockwise direction 2.5 revolutions, until the arrow marked on the rotor of the clockspring aligns with the raised 'V' section on the outer cover of the clockspring.

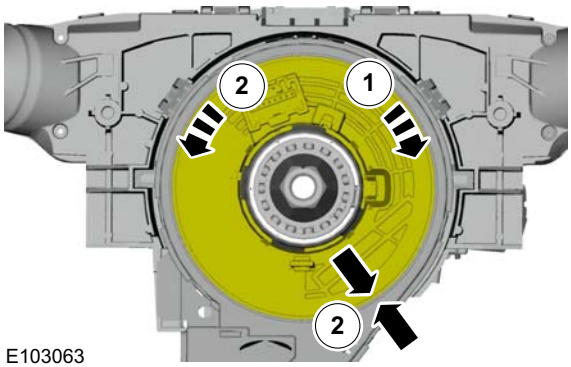

E103063

2. **CAUTION: Make sure that the clockspring rotor does not rotate.**

General Equipment: Adhesive Tape

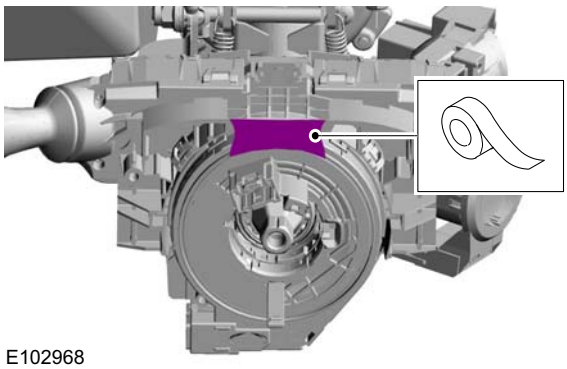
E102968

FORD RANGER T6

REPAIR MANUAL

WIRING DIAGRAM

BODY & EQUIPMENT MOUNTING MANUAL