Service Training

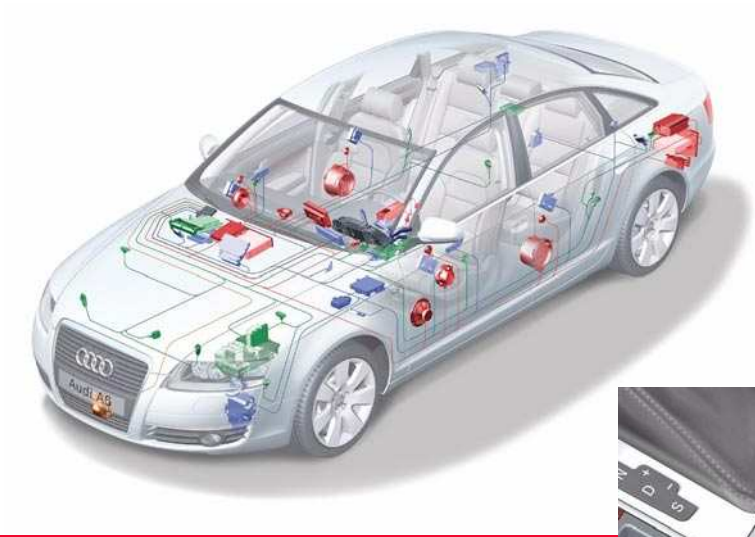

Audi A6 '05 – Electrics

Self-Study Programme 326

The Audi A6 – the most progressive vehicle takes the lead

The new Audi A6 – the most progressive vehicle takes the lead.

The new Audi A6 consistently adopts the highly networked electronic architecture, which is already used in the Audi A8. Overall, new technologies allow the A6 to match up with its "model" vehicle, the Audi A8. Features, which were previously reserved for luxury vehicles, are now also available in the top-class segment.

In combination with these diverse capabilities, the underlying technology has, of course, been enhanced considerably.
The use of the most modern network technologies, such as CAN, LIN, MOST and Bluetooth, and the related distributed vehicle functions signals the arrival of a new generation of vehicle electrics in this class.
Some of these are safety-related features, such as the combined rain/light sensor or the pivoting cornering headlight. Comfort features of the top class, such as the MMI operating system or sophisticated functionalities for the mobile baseplate, which is available ex-works, are part and parcel of these new saloons.

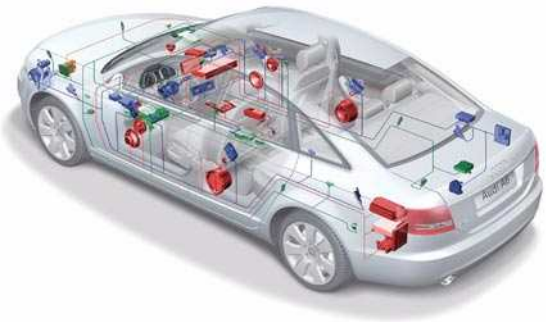

The new Audi A6 has everything that is needed to become the Number One model in the top-class range.
It combines many different, attractive components to form one unit. Design and performance go hand-in-hand. The new Audi A6 will take over as the most progressive vehicle.

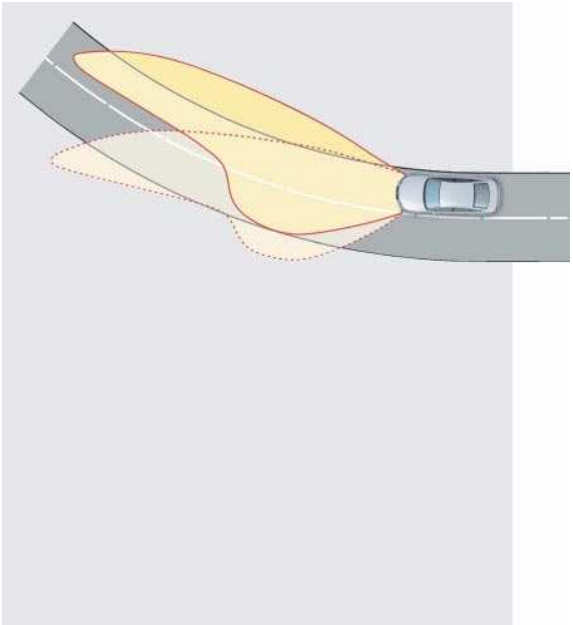

Number One: With Design & Performance

Contents

Overview

Control unit installation positions 4
Bus topology. 6
Installation positions of fuses and relays 8

Convenience electrics

Control unit for power management J644 10
Access and start authorisation 13
Immobiliser and component protection 30
External lights 32
Control unit in dash panel insert J285 40
Control unit for on-board power supply J519 42
Control unit 2 for on-board power supply J520 52
Central control unit for convenience system J393 55
Door control units J386 - J389 63
Control units for seat adjustment. 65

Infotainment

Multimedia interface 68
Antenna systems 75
Control unit for front information J523. 76
Sound systems. 81
Available telephone systems 86

The Self-Study Programme provides information on the fundamentals of design and function of new vehicle models, new vehicle components or new technologies.

The Self-Study Programme is not a Workshop Manual!
Specified values serve only to make the information easier to understand and relate to the software version that was valid at the time the Self-Study Programme (SSP) was created.

For maintenance and repair work, please make sure to use the current technical documentation.

Reference

Note

Control unit installation positions

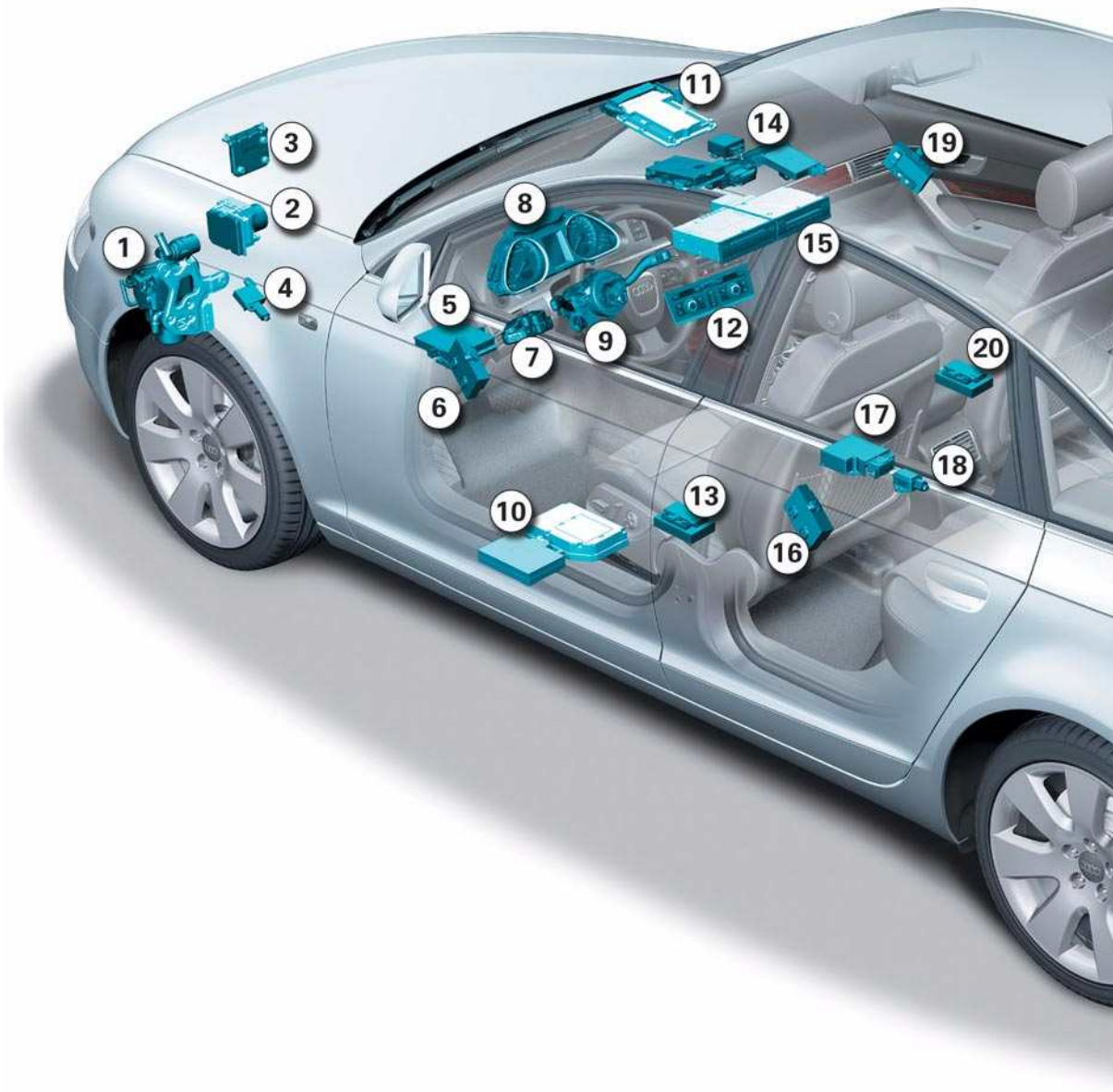

1 Auxiliary heating control unit J364
2 Control unit for ABS with EDL J104
3 Control unit for distance control J428
4 Transmitter unit in wheel well for tyre pressure monitoring, front left G431
5 Control unit for on-board power supply J519
6 Door control unit, driver's side J386
7 Control unit for access and start authorisation J518
8 Control unit in dash panel insert J285
9 Control unit for steering column electronics J527
10 Control unit for telephone, telematics J526
Telephone transmitter and receiver R36
11 Engine control unit J623
12 Climatronic control unit J255
13 Control unit for seat adjustment with steering-column adjustment memory J136
14 Level control unit J197
Control unit for headlight range control J431
Control unit for tyre pressure monitoring J502
Control unit 2 for onboard power supply J520
Control unit for display and operating unit for front information J523
Data bus diagnosis interface J533
Antenna read-in unit for keyless access authorisation J723
15 CD changer R41
CD ROM drive R92
16 Door control unit, rear left J388
17 Airbag control unit J234

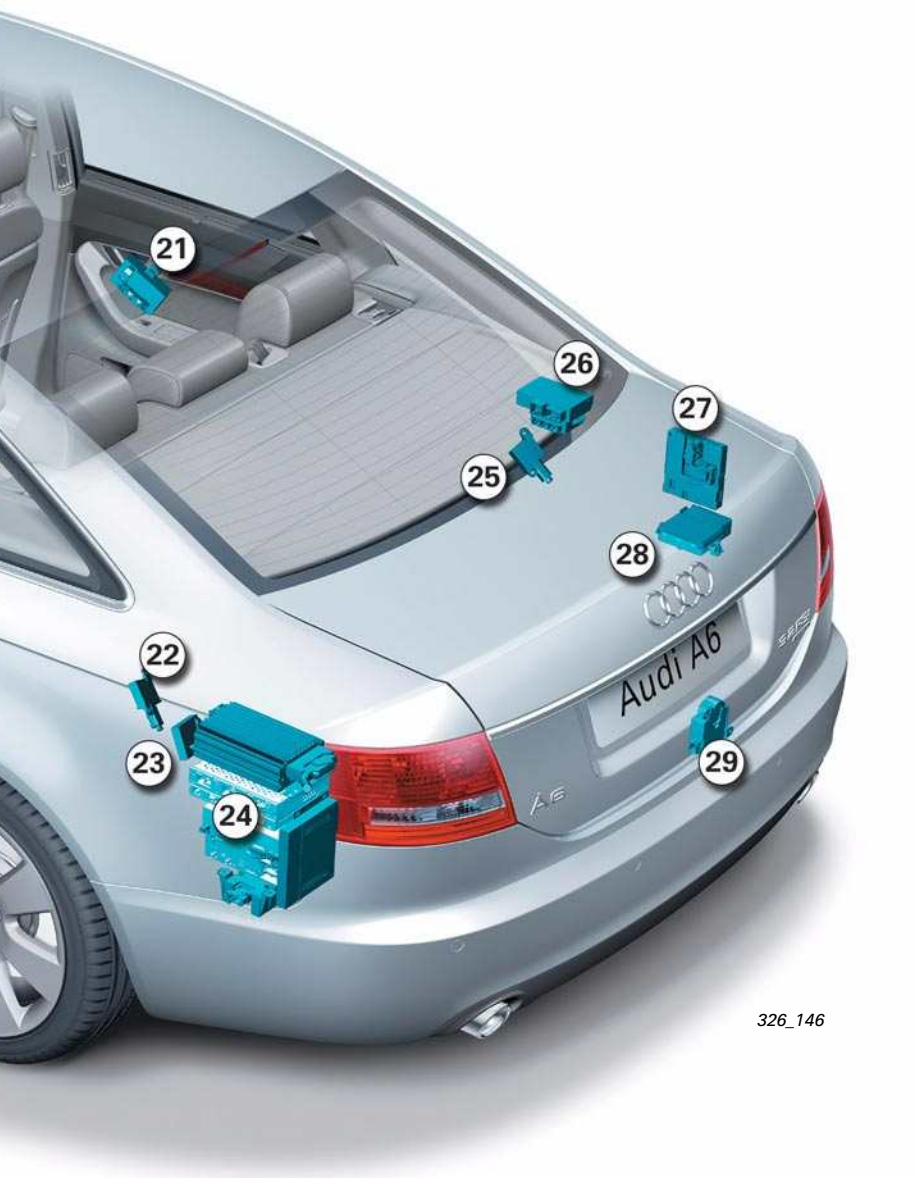

326_146

18 Rotation rate sensor 202
19 Door control unit, passenger's side J387
20 Control unit for seat adjustment with memory, passenger's side, J521
21 Door control unit, rear right J389
22 Transmitter unit in wheel well for tyre pressure monitoring, rear left G433
23 Radio receiver for auxiliary heating R64
24 Control unit for navigation with CD drive J401
Control unit for voice input J507
Digital sound package control unit J525
Radio R
TV tuner R78
Digital radio R147
25 Transmitter unit in wheel well for tyre pressure monitoring, rear right G434
26 Parking aid control unit J446
Control unit for trailer detection J345
27 Central control unit for convenience system J393
28 Control unit for electric parking and hand brake J540
29 Control unit for power management J644

Bus topology

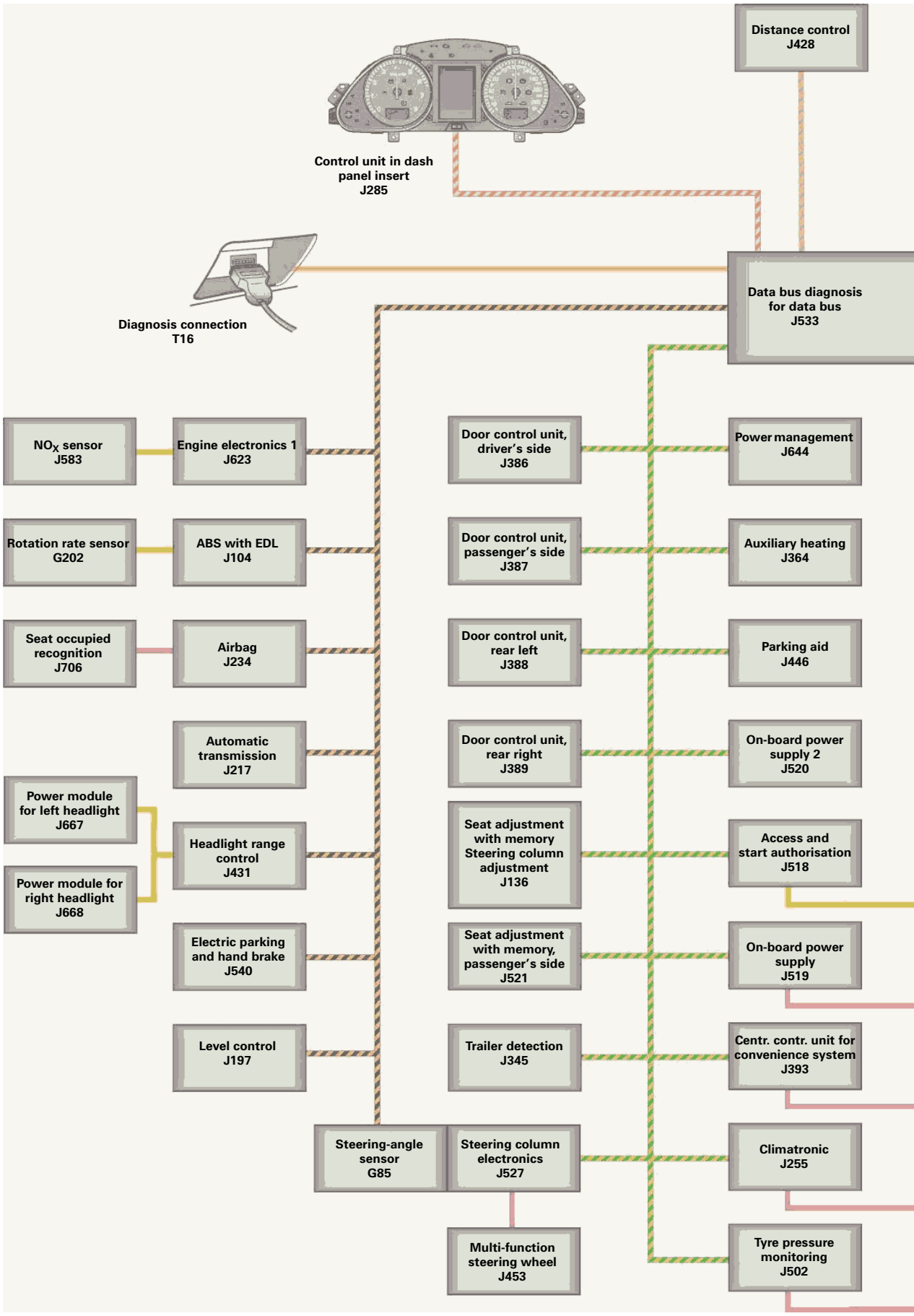

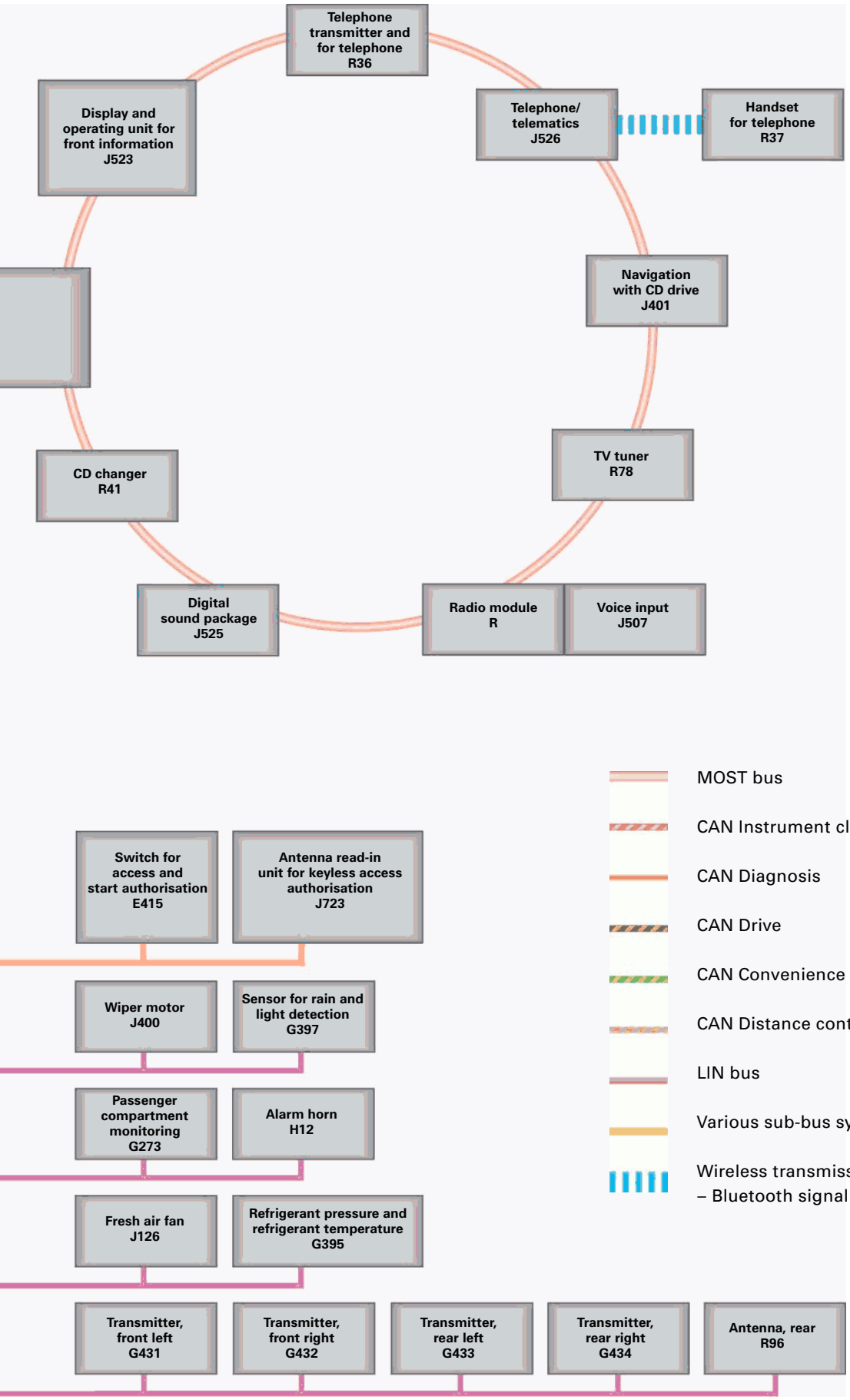
Telephone transmitter and for telephone R36
Display and operating unit for front information J523
Telephone/ telematics J526
Handset for telephone R37
Navigation with CD drive J401
CD changer R41
TV tuner R78
Digital sound package J525
Radio module R
Voice input J507
MOST bus
CAN Instrument cluster
CAN Diagnosis
CAN Drive
CAN Convenience
CAN Distance control
LIN bus
Various sub-bus systems
Wireless transmission – Bluetooth signal
Switch for access and start authorisation E415
Antenna read-in unit for keyless access authorisation J723
Wiper motor J400
Sensor for rain and light detection G397
Passenger compartment monitoring G273
Alarm horn H12
Fresh air fan J126
Refrigerant pressure and refrigerant temperature G395
Transmitter, front left G431
Transmitter, front right G432
Transmitter, rear left G433
Transmitter, rear right G434
Antenna, rear R96

326_027

Installation positions of fuses and relays

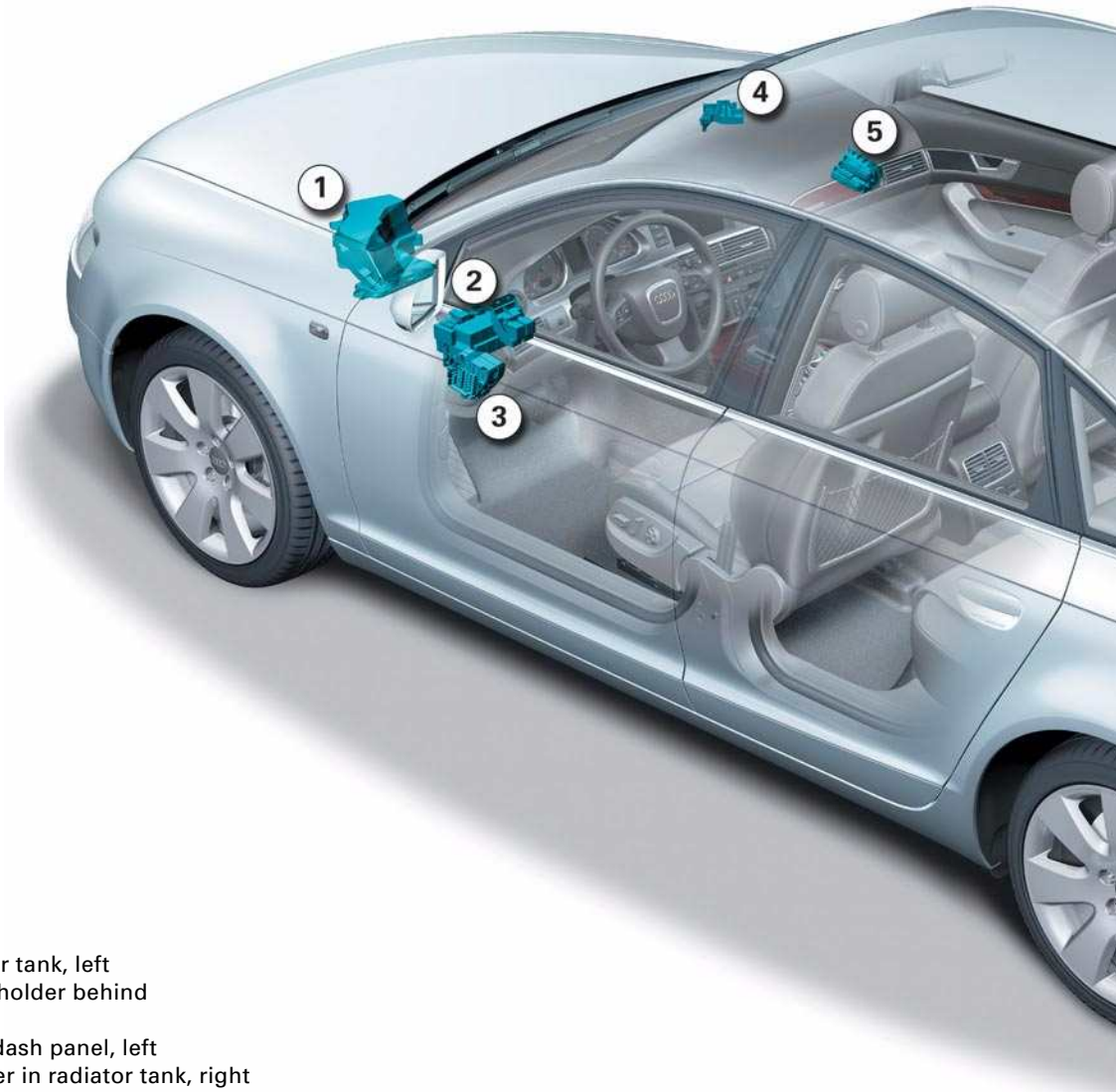

1 E box in radiator tank, left
2 Relay and fuse holder behind dash panel, left
3 Fuse holder in dash panel, left
4 Main fuse carrier in radiator tank, right
5 Fuse holder in dash panel, right
6 Relay and fuse holder in the boot, right

6
Audi A6

Control unit for power management J644

The basic design of the control unit for power management is the same as the control unit used in the Audi A8 '03.
It is installed in the boot well, next to the battery.

This control unit has been adapted for use in the Audi A6 '05 in that it now has revised software, which shows the battery condition rather than the battery charge level in the MMI display.

Furthermore, the diagnosis tester can be used to read out history data, i.e. data relating to the condition of the on-board power supply in the past.

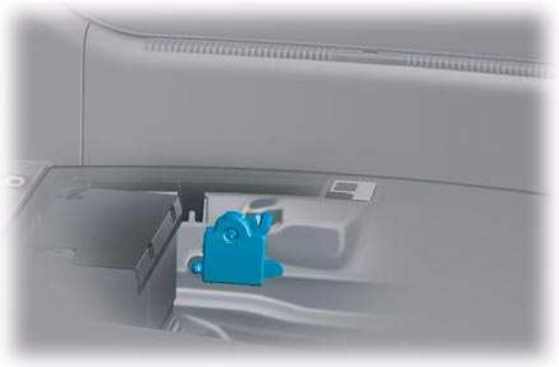

326_094

Reference

The basic functions of the control unit for power management J644 are described in the SSP 287.

Battery condition

The battery condition indicates how efficient the battery is. The efficiency is determined from the battery charge level and the ability to start.

Advantages of the battery condition:

- The cut-off stages can be allocated directly to the battery condition.
- The messages in the central display of dash panel insert J285 always appear for the same battery condition reading.
- A 100 % display indicates that no cut-off stage will be set the next time the engine is switched off.

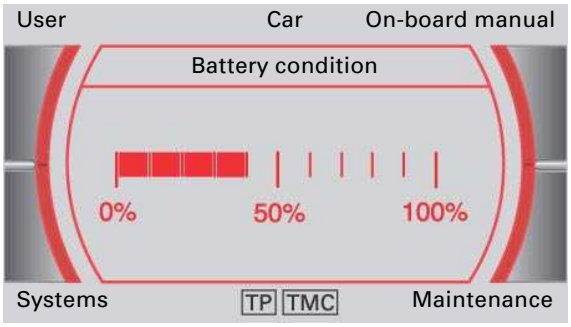

326_072

Steady battery discharge

The battery condition is 100 % when the battery is charged.
As soon as cut-off level 1 is activated, the MMI "Battery condition" display drops to 90 % and then goes down to 60 % in steps. If cut-off level 1, 2 or 5 is set when the display reads 90 %, the message "Power-saving mode active" appears for a short time on the central display of dash panel insert J285.
In addition, the battery symbol in the dash panel insert indicates power-saving mode for the entire load switch-off duration.

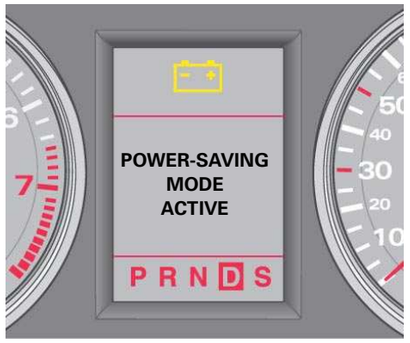

326_061

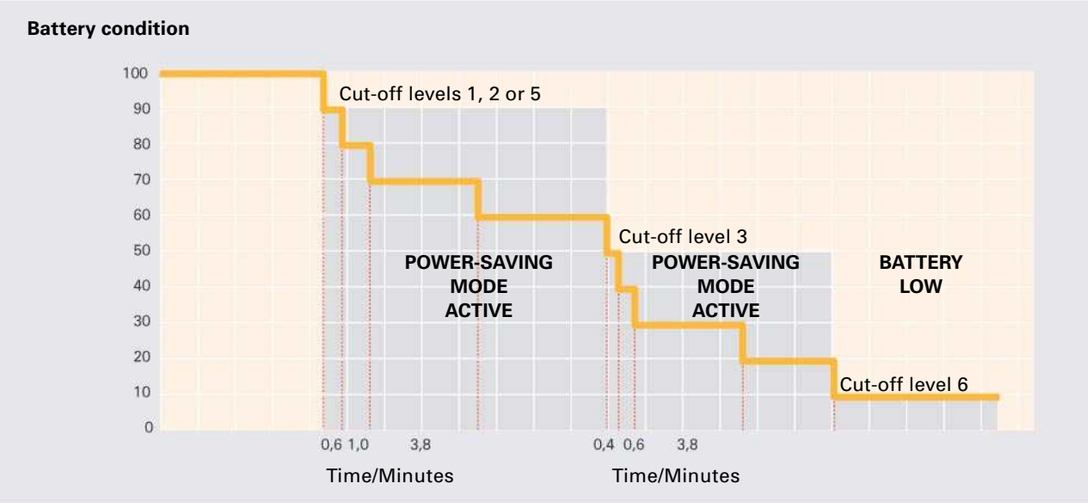

326_036

As soon as cut-off level 3 is activated, the "Battery condition" display drops to 50 % and then goes down to 20 % in steps.

If the battery condition drops to 10 %, cut-off level 6 is active. In cut-off level 6, the message "BATTERY LOW" appears in the central display of the dash panel insert after the ignition is switched on.

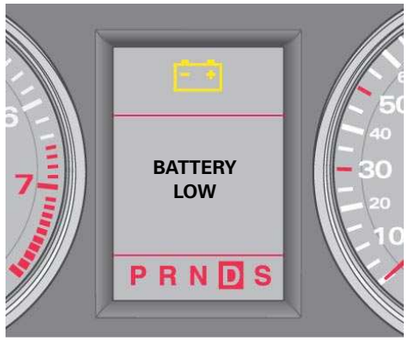

326_061

History data

The diagnosis tester can be used to read out data from the control unit for power management, which makes it much easier to analyse the on-board power supply and the battery.

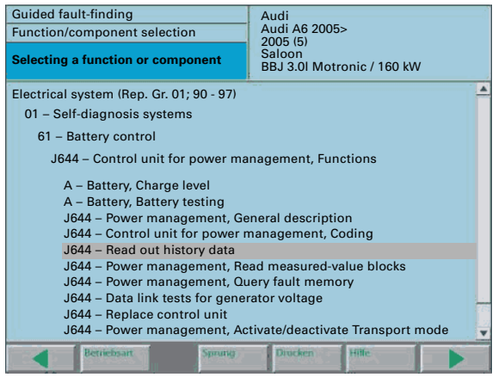

326_123

Open-circuit voltage history

If the battery open-circuit voltage is less than the threshold values of 12.5 volts, 12.2 volts and 11.5 volts, an entry is written to the history data. The last four entries can always be read out.

Voltage measurement starts when
- CAN Convenience is in Sleep mode and
- terminal 15 is switched off for at least 2 hours and
- the vehicle's power consumption is < 100 mA.

Voltage measurement ends when
- the voltage increases or
- the current increases or
- the control unit triggers Sleep mode or
- the control unit detects a new battery.

Closed-circuit current history

If the closed-circuit current exceeds the threshold value of 50 mA, an entry is written to the history data. The last ten entries can be read out.

Current measurement starts when
- CAN Convenience is in Sleep mode and
- terminal 15 is switched off for at least 2 hours and
- the vehicle's power consumption is > 50 mA.

Current measurement ends when
- the current decreases or
- the control unit triggers Sleep mode.

Breakdown analysis

If the control unit for power management detects the status "Cannot start vehicle", an entry is written to the history data.

Cut-off level history

Data for the last 15 cut-off levels is stored.

Battery change history

Data for the last three battery changes is stored.

Power balance history – driving (= engine on)

The power balance and duration of the last five journeys are logged.

Power balance history – idle (= engine off)

The power balance and duration of the last five idle times are logged.

Other data is not relevant for Customer Service.

Access and start authorisation

Function diagram

Legend

E369 Central locking button for outer door handle, driver's side*
E370 Central locking button for outer door handle, passenger's side*
E371 Central locking button for outer door handle, rear left*
E372 Central locking button for outer door handle, rear right*
E408 Button for access and start authorisation
E415 Switch for access and start authorisation

F272 Outer door handle switch, driver's door*
F273 Outer door handle switch, passenger's door*
F274 Outer door handle switch, rear left*
F275 Outer door handle switch, rear right*
F305 Switch for gearbox position P**

G415 Sensor for outer door handle contact, driver's side*
G416 Sensor for outer door handle contact, passenger's side*
G417 Sensor for outer door handle contact, rear left*
G418 Sensor for outer door handle contact, rear right*

J53 Starter relay
J329 Voltage supply relay, terminal 15
J386 Door control unit, driver's side
J387 Door control unit, passenger's side
J388 Door control unit, rear left
J389 Door control unit, rear right
J518 Control unit for access and start authorisation
J623 Engine control unit
J694 Voltage supply relay, terminal 75x
J695 Starter relay 2
J723 Antenna read-in unit for keyless access authorisation*

R47 Antenna for central locking and anti-theft warning system
R134 Antenna on driver's side for access access and start authorisation*
R135 Antenna on passenger's side for access access and start authorisation*
R137 Luggage compartment antenna for access access and start authorisation*
R138 Passenger compartment antenna 1 for access and start authorisation*

* only for vehicles with Advanced Key
** only for vehicles with automatic transmission

1 Terminal 50 (to starter B)
2 CAN Convenience High
3 CAN Convenience Low
4 P/N signal from control unit for automatic transmission J217**
5 Terminal 58s (lighting)*
6 Signal from brake light switch F*

Positive supply
Input signal
Output signal
Ground
Bi-directional line

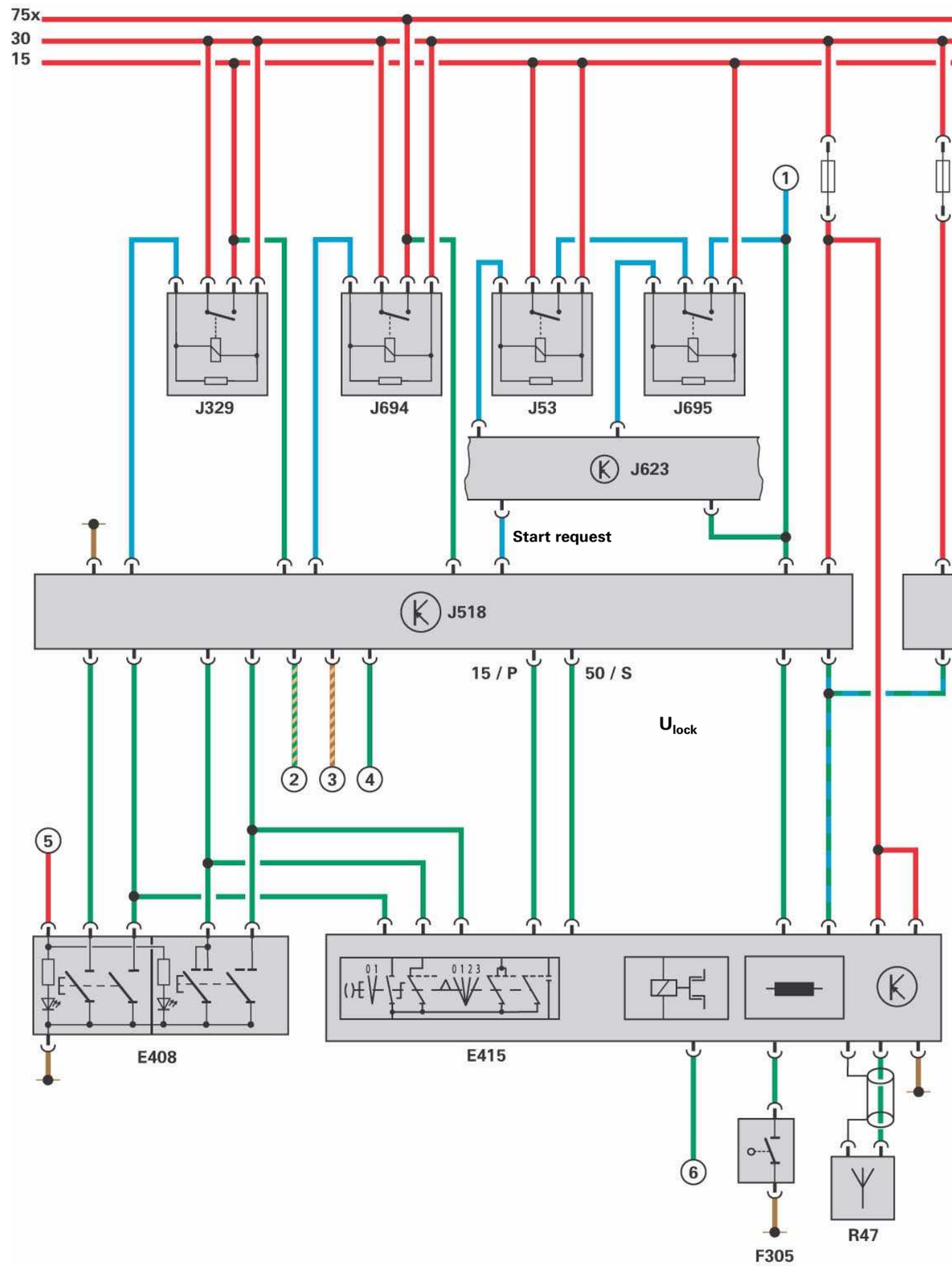

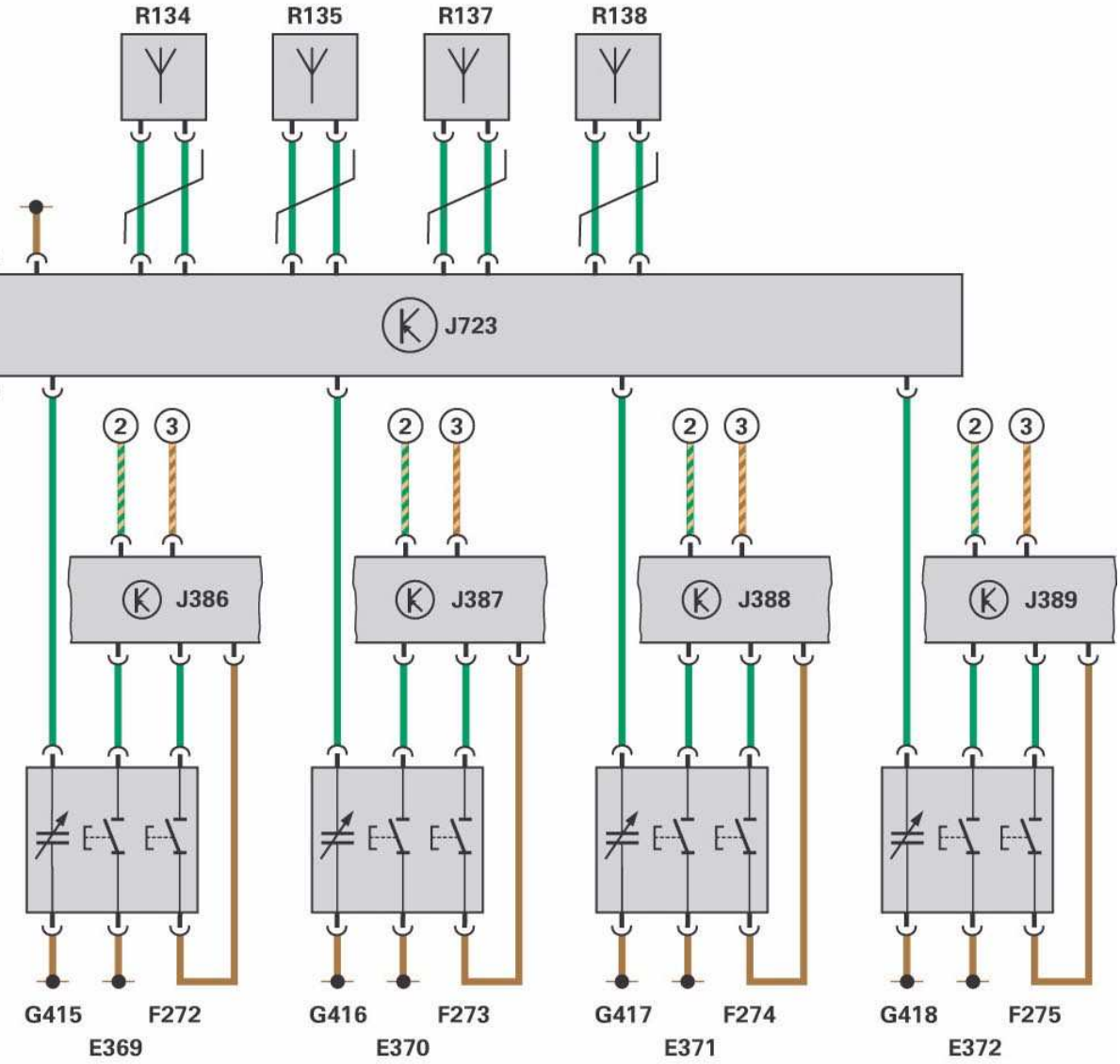
R134
R135
R137
R138
J723
2
3
J386
J387
J388
J389
G415
F272
E369
G416
F273
E370
G417
F274
E371
G418
F275
E372

326_038

System overview

The Advanced Key system was introduced with the Audi A8 '03 and has been fundamentally revised for the Audi A6 ’05.
The most important new feature is that the control unit for access and start authorisation has been combined with the actuator for steering column locking.

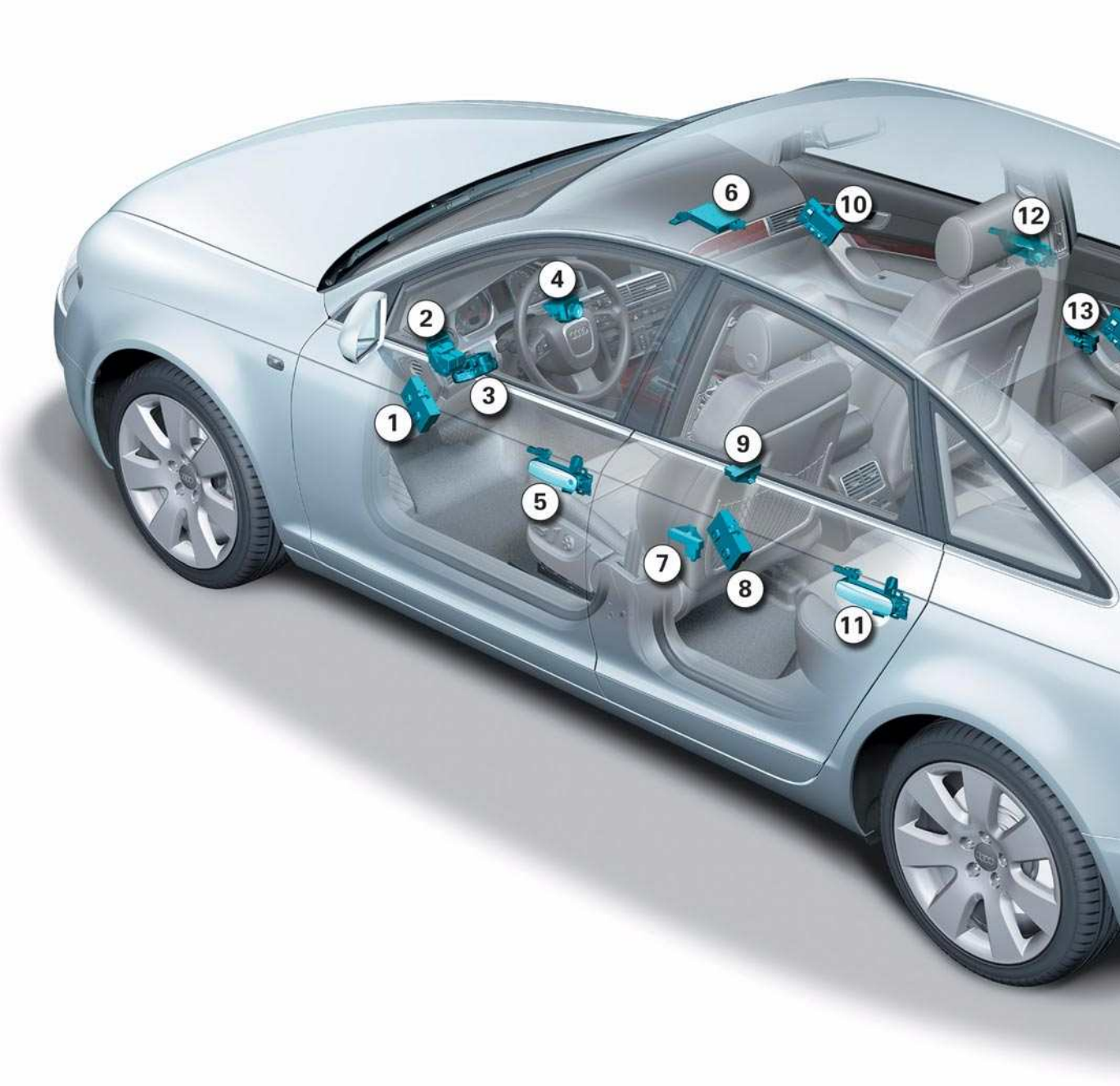

1 Door control unit, driver's side J386
2 Control unit for on-board power supply J519
3 Control unit for access and start authorisation J518
4 Switch for access and start authorisation E415
5 Central locking button for outer door handle, driver's side E369
Outer door handle switch in driver’s door F272
Sensor for outer door handle contact, driver’s side G415
6 Antenna read-in unit for keyless access authorisation J723
7 Antenna on driver’s side for access and start authorisation R134
8 Door control unit, rear left J388
9 Passenger compartment antenna 1 for and start authorisation R138
10 Door control unit, passenger's side J387
11 Central locking button for outer door handle, rear left E371
Outer door handle switch, rear left F274
Sensor for outer door handle contact, rear left G417
12 Central locking button for outer door handle, passenger’s side E370
Outer door handle switch in passenger’s door F273
Sensor for outer door handle contact, passenger's side G416
13 Antenna on passenger’s side for access and start authorisation R135
14 Door control unit, rear right J389
15 Antenna for central locking and anti-theft warning system R47
16 Central locking button for outer door handle, rear right E372
Outer door handle switch, rear right F275
Sensor for outer door handle contact, rear right G418
17 Boot antenna for access and start authorisation R137

326_147

Division of functions

System control is broken down into three basic modules:

- the control unit for access and start authorisation J518,
- the antenna read-in unit for keyless access authorisation J723 and
- the switch for access and start authorisation E415.

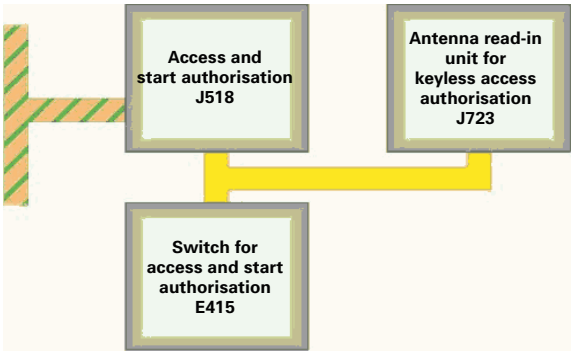

326_064

All three components communicate with each other over a local single-wire bus.
The control unit for access and start authorisation is the master of the system and a participant on Convenience. The same control unit is installed for all system versions.

The antenna read-in unit for keyless access authorisation is only installed with the Advanced Key option. It serves as the interface between the antennae, sensors and the control unit for access and start authorisation.

The switch for access and start authorisation is installed in various versions, depending on the transmission, radio frequency of the central locking system and the Advanced Key option. An evaluation electronic device is also integrated into the switch.

Switch for access and start authorisation E415

Versions

The switch for access and start authorisation is available in the following versions:

- with and without Advanced Key function
- with and without ignition key anti-removal lock
- for radio frequencies of 315 MHz, 433 MHz or 868 MHz

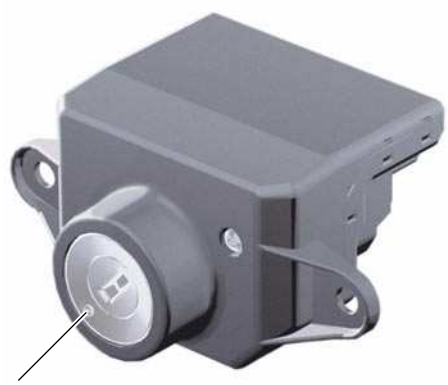

326_122

Functions

The switch for access and start authorisation includes other functions apart from the ignition switch function:

- Evaluation of the key position of the ignition switch:

  The ignition switch evaluates the ignition key position using four switches.
  The switch information is transferred to the control unit for access and start authorisation in binary code via the local bus and also for monitoring purposes, via two lines.
  The lock barrel in the ignition switch is not coded mechanically, which means that the turning movement can be performed with every A6 '05 key.

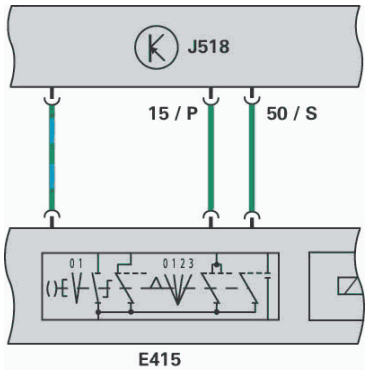

326_066

- Safety branch for the steering lock of the control unit for access and start authorisation:

  In addition to the switch-offs in the control unit for access and start authorisation, the voltage supply for the motor of the electromechanical steering lock is interrupted in the switch for access and start authorisation in order to prevent the steering column locking automatically.
  If terminal 15 is switched on, the voltage supply is always switched off.

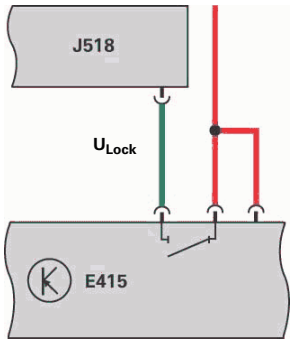

326_067

– Reading in position P of the automatic transmission from the switch for gearbox position P F305:

  The signal is used to activate the integrated, magnetic ignition key anti-removal lock. If the vehicle battery is flat, the key can be removed by pressing the mechanical emergency release.

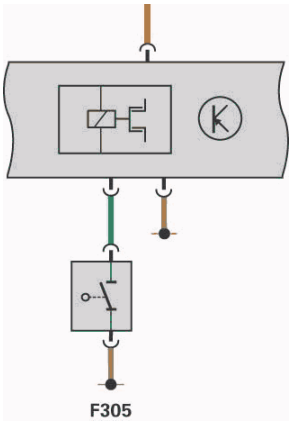

326_068

– Reading in the information from the button for access and start authorisation E408 (only for vehicles with Advanced Key):

  For safety reasons, the positions of the button for access and start authorisation are evaluated by the switch for access and start authorisation.

–

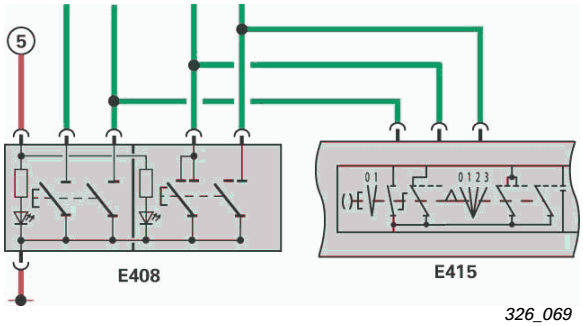

326_069

– Reading in the information from the antenna for central locking and anti-theft warning system R47:

  The switch for access and start authorisation passes the data, which the vehicle key sends via remote control, on to the control unit for access and start authorisation. The control unit evaluates the data.

– Reading in the signal from the brake light switch F (only for vehicles with Advanced Key):

  To start the vehicle using the button for access and start authorisation, the brake pedal must be actuated.

– Exchanging data with the key using the integrated read coil:

  If a key is inserted into the switch for access and start authorisation (= S contact on), the electronics system transmits electric power into the key via the read coil. The key then sends the key identification into the switch via the transponder and the read coil. This sends the information to the control unit for access and start authorisation.

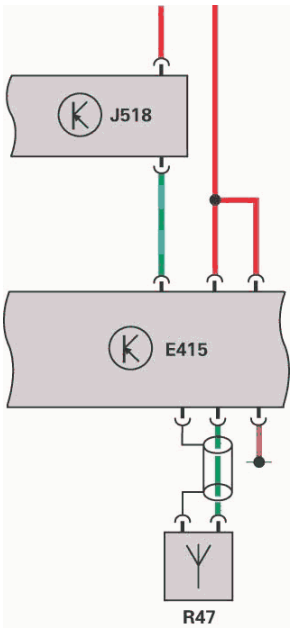

326_065

Control unit for access and start authorisation J518

The electromechanical steering column lock was integrated into the control unit for access and start authorisation.

Functions

– Terminal control:

  The control unit for access and start authorisation puts the information about terminal 15, 75x, 50, S and P on CAN Convenience.
  The control unit also activates the relays for terminal 15 and 75x and passes the start request signal on to the engine control unit.

– Locking the steering column:

  The motor and gears for locking the steering column are integrated into the control unit for access and start authorisation.
  The position of the lock is checked using two integrated micro switches. Terminal 15 is only switched on after the steering is unlocked fully.

– Immobiliser and component protection:

  The control unit is the master for these functions.

326_095

– CAN Communication:

  The control unit is a participant on CAN Convenience. Data exchange between all the components of the access and start authorisation system is performed via the control unit.
  It is also the diagnosis interface for the components involved. All data, e.g. code, immobiliser data, etc. is stored in the control unit for access and start authorisation.

– Reading in the P/N signal from the control unit for automatic transmission J217:

  The signal is used to activate the displays relating to engine start in dash panel insert J285.

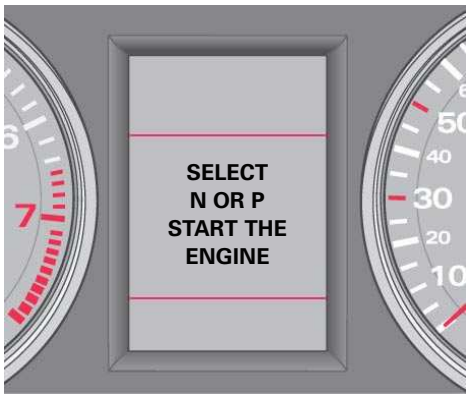

326_062

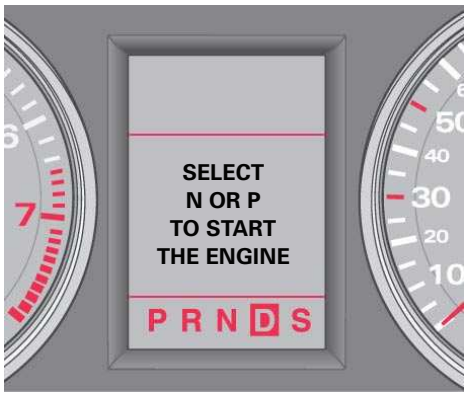

326_063

Vehicle key

The key has a mechanically coded hinged bit for the lock cylinder in the driver's door and the tailgate/ boot lid. The transponder function is integrated into the electronics and also works without a battery. An integrated battery powers the electronics for the radio remote control and Advanced Key functions.

326_138

A new feature here is the bi-directional data exchange between the radio-control key and the control unit for access and start authorisation via the antenna for central locking and anti-theft warning system R47. This is used to transfer the status of the central locking system into the key.
If a button outside of the function range of the key is pressed, the LED integrated in the key shows the lock status of the vehicle. The lock status displayed is always the status, which was achieved using this key when central locking was last actuated.
If the vehicle is opened or locked in the interim period using a second key, this does not change the lock status in the first key.

Furthermore, the radio frequency is changed from 433 MHz to 868 MHz for the first time in many countries. This radio frequency is ideal for data communication between vehicle keys and the control unit.
Since this frequency can only be used for very short transmission pulses, any interference from long-term radio transmitters, such as baby phones, wireless headsets, etc. is eliminated.

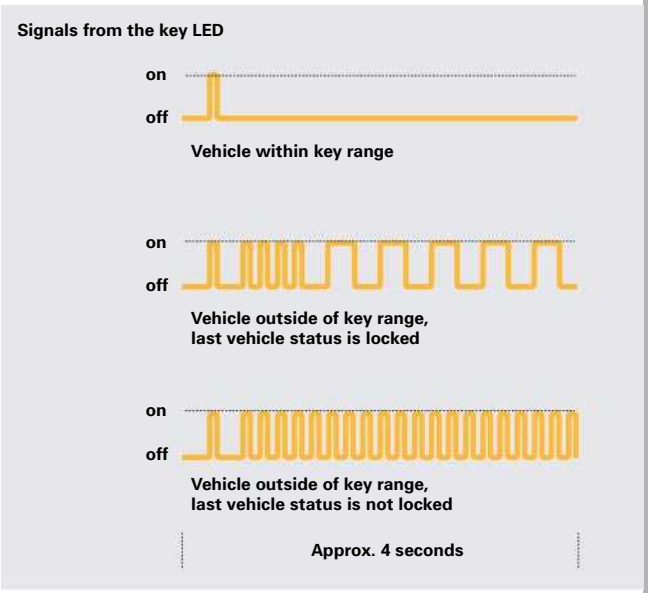

326_058

Antenna read-in unit for keyless access authorisation J723

The control unit is only installed together with the Advanced Key option.
It is located at the right of the dash panel, behind the glove compartment.

It evaluates the signals from the outer door handle sensors and then activates the antennae for access and start authorisation.

326_096

Sensors for outer door handle contact G415 - G418

The capacity-based operating sensors in the outer door handle detect any contact on the handle and send a signal shortly afterwards to the antenna read-in unit for keyless access authorisation.
The antenna read-in unit evaluates the signal and then sends a query to the vehicle key via the antennae for access and start authorisation.

The sensors switch off after approx. 80 hours once the vehicle is locked or after 20 actuations without an authorised key.

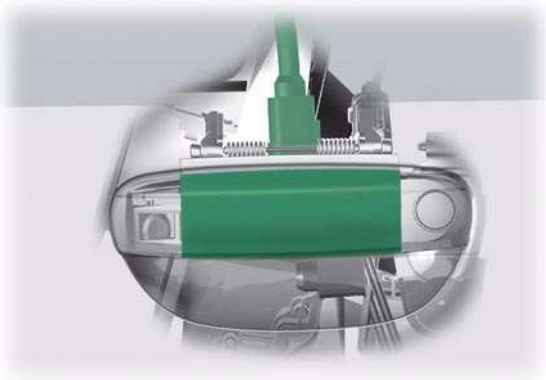

326_097

Antennae for access and start authorisation E134 - R138

Four transmitting antennae are distributed in the vehicle and are used by the vehicle for radio communication with the vehicle key. The antennae transmit on a frequency of 24.5 kHz. The vehicle key evaluates all four signals and determines the position in or on the vehicle based on the field strength of the individual antennae.

The antennae are located:
– in the rear doors
– in the centre console
– in the rear bumper

326_098

Button for access and start authorisation E408

The start/stop button works in the same way as the button module, which was first used in the A8 '03. For safety reasons, the button positions are evaluated both by the control unit for access and start authorisation and by the switch for access and start authorisation signal.

326_086

Opening the vehicle

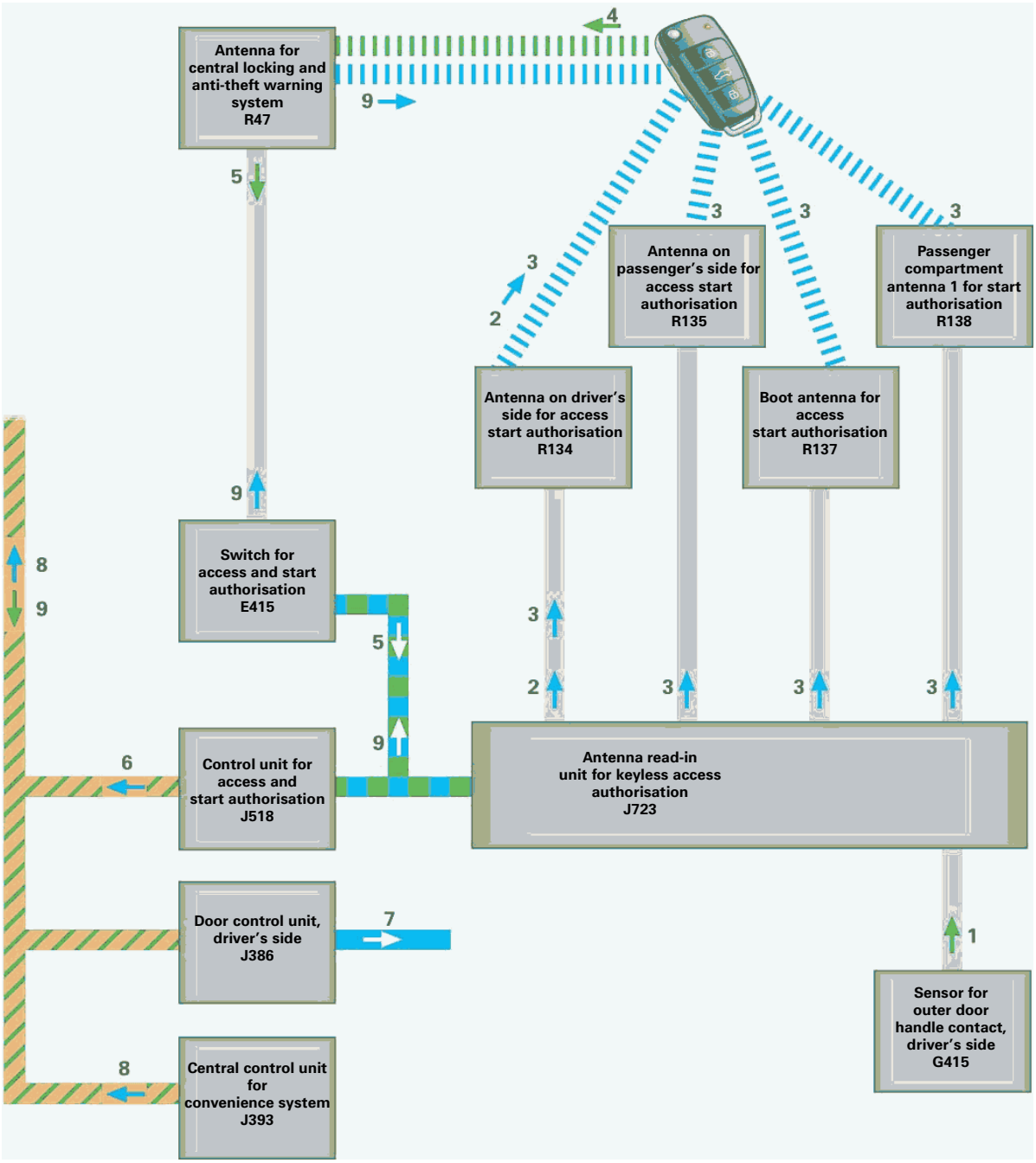

326_055

1 The driver puts his/her hand into the finger well of the door handle. The sensor for outer door handle contact G415 sends the information "Finger in finger well" to the antenna read-in unit for keyless access authorisation J723.

2 The antenna read-in unit sends an alarm signal to the vehicle key via the antenna for access and start authorisation R134.

3 The antenna read-in unit sends a signal to the vehicle key via all the antennae for access and start authorisation.

4 Based on the signals, the vehicle key determines the position on the vehicle and sends information to the antenna for central locking and anti-theft warning system R47.

5 The antenna for central locking and anti-theft warning system receives the information. The information is forwarded by the switch for access and start authorisation E415 to the control unit for access and start authorisation J518, where it is evaluated.

6 The control unit for access and start authorisation sends the information "Opening vehicle" on to the central control unit for the convenience system J393 and to the door control unit, whose door handle initiated the key query.

7 The door control unit, which received the instruction from the control unit for access and start authorisation, activates the lock unit, which unlocks the door.

8 The central control unit for the convenience system J393 sends the information "Opening vehicle – Advanced Key" to CAN Convenience.

9 The normal unlocking process takes place. This involves disarming, unlocking, acknowledgement flashing and switching on of the interior light. In addition to acknowledgement flashing, the control unit for access and start authorisation also sends the lock status to the vehicle key via the switch for access and start authorisation and the antenna for central locking and anti-theft warning system R47.

Starting the vehicle using the button

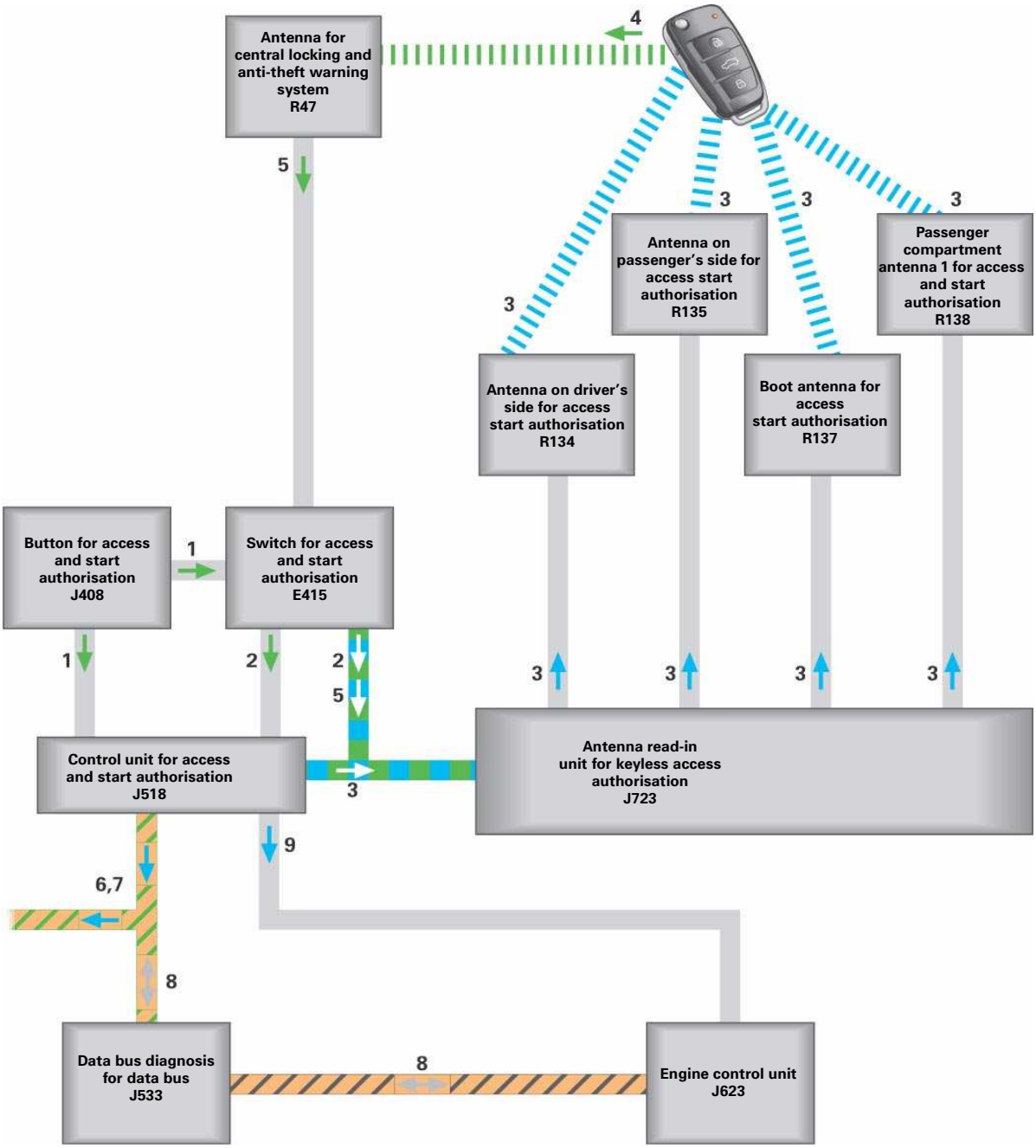

326_056

1 The driver presses the button for access and start authorisation E408 down fully. The button sends the information about "Ignition on" and "Engine start" both to the switch for access and start authorisation E415 and to the control unit for access and start authorisation J518.

2 The switch for access and start authorisation passes the information from the button on to the control unit for access and start authorisation via the data lead. The two button information messages are compared there.

3 The control unit J518 sends a key query to the antenna read-in unit for keyless access authorisation J723.
The antenna read-in unit sends a signal to the vehicle key via all the antennae for access and start authorisation.

4 Based on the signals, the vehicle key determines the position in the vehicle and sends its information to the antenna for central locking and anti-theft warning system R47.

5 The antenna for central locking and anti-theft warning system receives the information.
The switch for access and start authorisation E415 passes the information on to the control unit for access and start authorisation, which then evaluates it.

6 Based on the key evaluation, the S contact is sent to CAN Convenience and the steering is unlocked.

7 As soon as the steering is fully unlocked, terminal 15 is switched on.

8 Once terminal 15 has been switched on, data is exchanged between the engine control unit and the control unit for access and start authorisation via the CAN bus. The immobiliser is then deactivated.

9 The control unit for access and start authorisation sends the "Start request" signal to the engine control unit. The engine control unit checks whether the clutch is depressed or whether P or N is selected in the case of an automatic gearbox and then performs the fully automatic engine start.

Immobiliser and component protection

Immobiliser 4

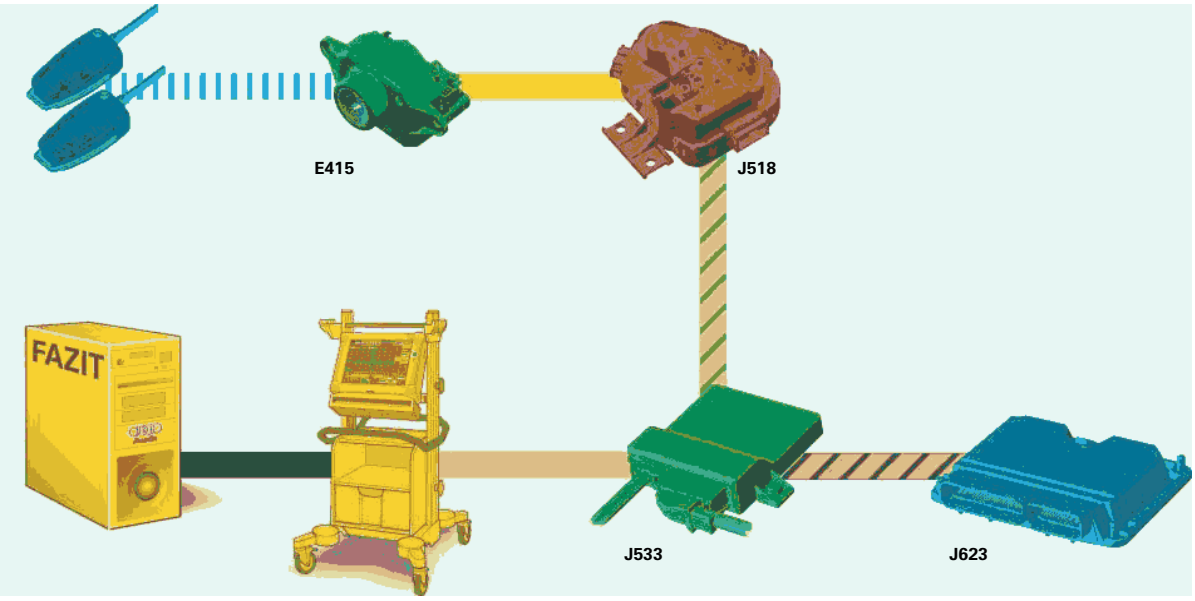

326_099

The immobiliser 4 technology is used in the Audi A6 ’05.

This means that all components must be "taught" online, as is already the case with the Audi A8 ´03 and the Audi A3 ´04.

The following components are integrated into the immobiliser:

- The control unit for access and start authorisation
- The engine control unit
- The vehicle keys

Control unit, which is not integrated into the immobiliser

Control unit, which is integrated into the immobiliser

Master control unit

PC/mainframe

New identity

As is already the case with the Audi A8 ‘03 , if a control unit is stolen, it is no longer necessary (for safety reasons) to also replace the remaining control units, which are integrated in the immobiliser.
In this case, the "New Identity" function must be used for the control unit for access and start authorisation and the engine control unit.
It is only a matter of installing a new lock set before using the "New Identity" function.

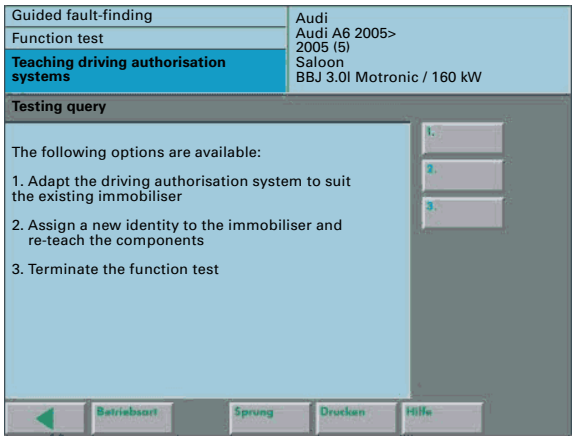

326_075

Switch for access and start authorisation E415

The switch for access and start authorisation E415 reads in the key code in electronic form only.
The hinged bit coding is not evaluated signal.
The ignition switch is not part of the lock set for this reason.

326_122

Component protection

As is already the case with the Audi A8 ‘03, the Convenience and Infotainment control units are also integrated within the "Component protection" safety system.
As a result, these control units must be adapted to the specific vehicle once they have been installed.

The data bus diagnosis interface is integrated into the "Component protection" function for the first time. Since component protection works via a number of control units, the Startup menu in "Guided fault-finding" is not assigned to any one control unit and can be found directly under the self-diagnosis systems.

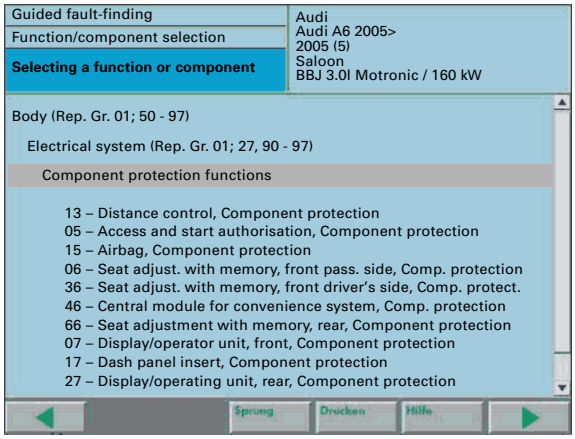

326_074

External lights

Front headlights

Three different front headlights are used in the Audi A6 ’05:

- Halogen headlights
- Bi-xenon headlights
- Adaptive light

Halogen headlights

Halogen headlights come as standard.
The following lamps are fitted in the halogen on the vehicle equipment:

- W5W lamp for parking light
- H1 lamp for high beam headlight and headlight flasher
- H7 lamp for dipped beam headlight and dimmed as a daytime driving light
- An orange PY21W bulb as the direction indicator light

326_087

The daytime driving light in the halogen headlight is only available for Canada and the Northern countries (Scandinavia). It is active when terminal 15 is switched on and the parking light or dipped beam light is off.

The following country-specific variants exist:
- The daytime driving light is part of the fog lights for Canada and
- 3457NA flasher lamps are used for USA and Canada.

A manual headlight range control system – with potentiometer – is installed for halogen headlights.

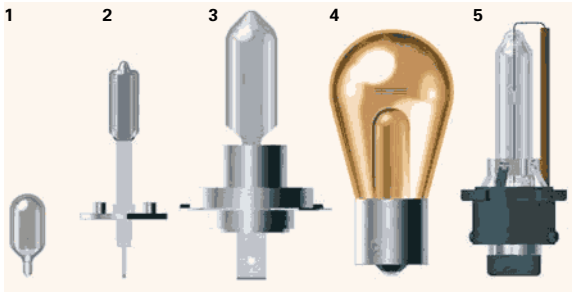

326_149

1 W5W lamp
2 H1 lamp
3 H7 lamp
4 PY21W lamp
5 D2S lamp

Bi-xenon headlights

Bi-xenon headlights are installed with the "XenonPlus" option.
The following lamps are fitted in the bi-xenon headlight:

- A blue W5W lamp for the parking light. The colour of the parking light thus corresponds to the xenon light.
- A D2S lamp for high beam headlight, headlight flasher and dipped beam headlight. The covers for dipped beam are also activated for high beam and headlight flasher operation.
- A P21W lamp for the daytime driving light. This comes on dimmed to 90 %.
- A PY21W bulb coated with a reflecting layer of silver is used as the direction indicator light. Only longlife lamps are used. A super-longlife lamp is used as the daytime driving light.

326_088

The following country-specific variants exist:

- No daytime driving lamp is fitted for Japan.
- 3457NA flasher lamps are used for USA and Canada.

The headlights are changed over to left-hand drive via a lever on the projection module.

A dynamic headlight range control system is installed for bi-xenon headlights.
The dynamic headlight range control system uses the well-known level sensors. This send the information about the vehicle level to the control unit for headlight range control J431 via a pulse width-modulated signal.
The same level sensor is fitted on both the front and rear axle.

Headlights are also available with dynamic corner-sensitive lights.

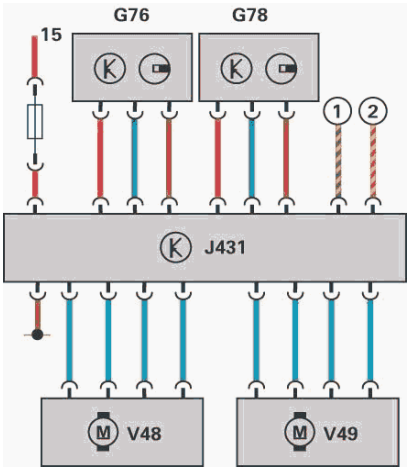

326_124

Adaptive light

The adaptive light works as a dynamic corner-sensitive headlight. With the dynamic cornering headlight, the headlight projection module is pivoted horizontally by an integrated motor.
The headlight lenses and the bracket do not turn.
The pivot angle is approx. 15° on the inner curve side and 7.5° on the outer curve side.

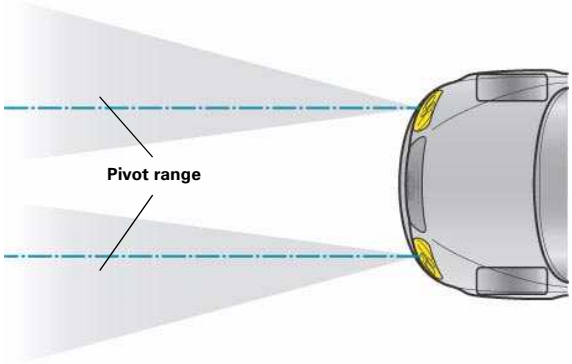

326_076

The various pivot angles have advantages in that they provide better lighting for corner routes.
In this case, the inner-curve module pivots in twice as much as the outer-curve module.
This achieves the maximum possible illumination width with homogeneous light distribution.

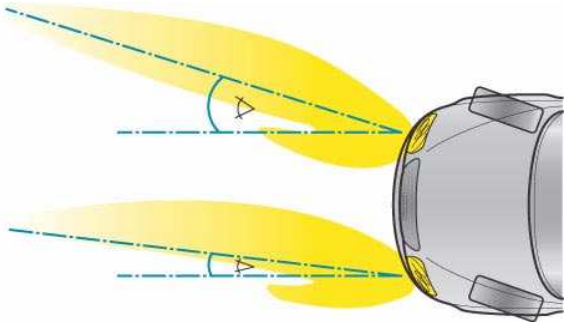

326_077

No pivoting when vehicle is stationary

The projection modules are not pivoted at driving speeds of < 6 km/h.
The pivot angle essentially depends on the steering wheel angle at speeds of more than 10 km/h.
This complies with the legal requirement that the headlights must not be pivoted when the vehicle is stationary. At the same time, a slight transition to headlight pivoting occurs during acceleration from idle when the steering lock remains constant.

Internal structure

The pivot angle is monitored by an inductive pickup in the pivot module. The pickup value is evaluated immediately in the relevant power module for headlights as a pulse width-modulated signal.
If the motor or pickup does not function, the power module sends an error message to the control unit for headlight range control J431.
This is communicated to the driver in a display in dash panel insert J285.

The same lamps that are used in the bi-xenon headlight are also used in the adaptive light headlight.

CAN Communication

The values marked with (*) are used as input variables in calculating the pivot angle.
All other input variables are only needed for dynamic headlight range control.

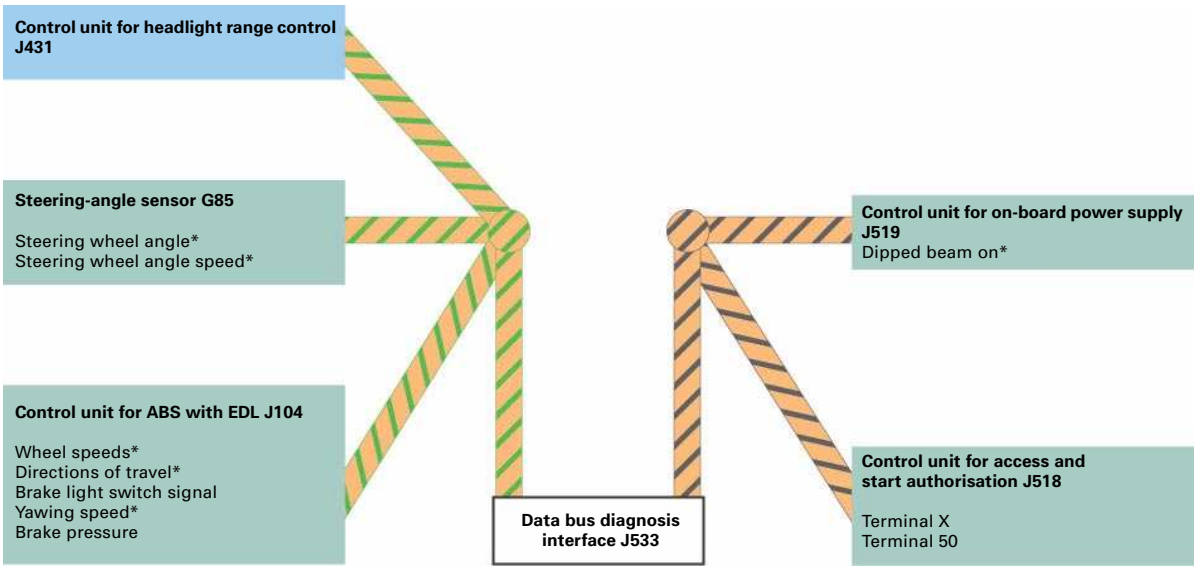

326_079

Signal and data exchange

The same sensors that are used for dynamic headlight range control for bi-xenon headlights are also used as level sensors. They send a pulse width-modulated signal to the control unit for headlight range control. Data is exchanged between the control unit for headlight range control J431 and the power modules in the headlight on the left J667 and right J668 via a 500-kBaud CAN.

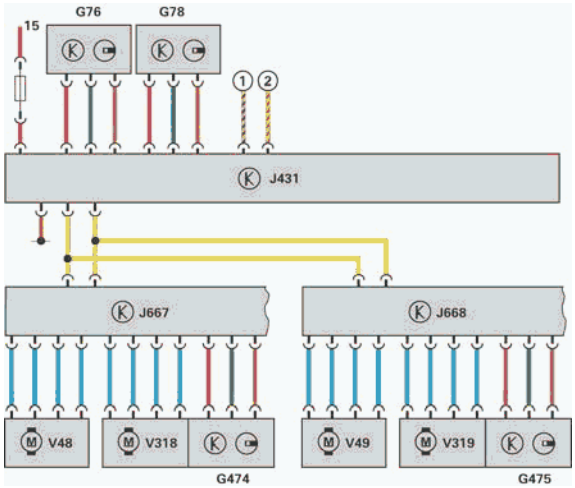

326_085

Show Room function

The Show Room function can be used to pivot the headlights by moving the steering wheel – even when the vehicle is stationary – for presentation. The function can be adapted using the diagnosis tester in the control unit for headlight beam adjustment.
If the vehicle is then driven at more than 30 km/h, the function is permanently disabled. The function can be switched on again at any time using the diagnosis tester.

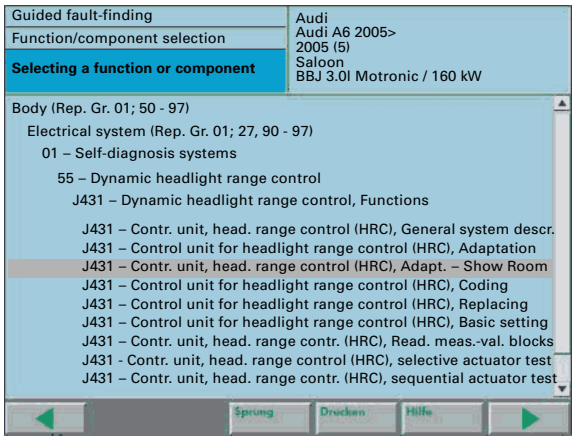

326_074

Back lights

Different tail lights are used in the Audi A6 ’05, depending on the equipment variant.

This is differentiated into the following:

– Basic variant ECE
– High variant ECE
– High variant SAE

Basic variant ECE

The tail light in the basic variant only uses lamps with a 15-mm bayonet socket for the lights.
There are three sections for tail light activation.
To ensure that the different-sized sections look from the outside to be equally illuminated, the central control unit for the convenience system J393 activates each lamp with a different dimming ratio.

The two inner lamps in each back light are also used as the brake light.

The outer lamp functions as the "rear fog light".
If the rear fog light is on, only the inner lamp is active as the brake light.

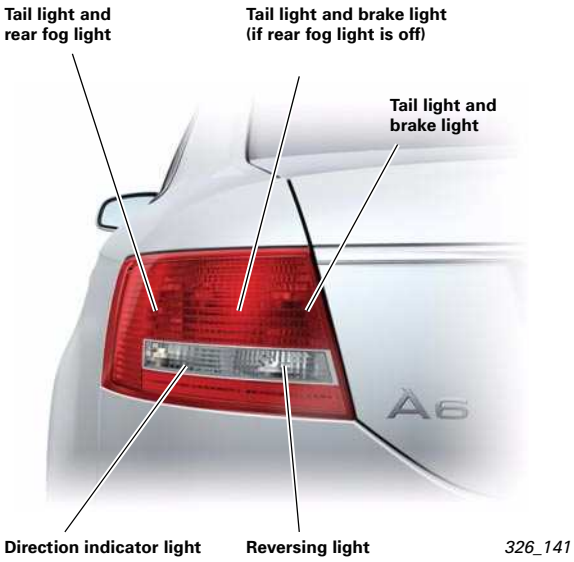

High variant ECE

These back lights are installed if bi-xenon headlights at least are fitted as the front headlights.
The external feature of the High back lights is the use of LEDs for the brake light.
The LEDs, which are fixed in the reflector housing, are activated by two contacts from the lamp bracket.

The rear fog light is located at the bottom of the back light. Here, the lamp on the driver's side is used as the rear fog light, while the lamp on the passenger's side serves as the reversing light.
This means that the same lamp bracket can be used for both the High back light and the Basic back light.

High variant SAE

The back lights for the North American market have standard LED units. The LED units are used for the indicator and brake light function.
The three sections underneath are for the tail light lamps.
The SAE back lights have two rear fog lights and two reversing lights.

326_142

LED unit diagnosis

The failure of an LED is detected by the electronics in the lamp housing. All LEDs are then switched off so that the central control unit for the convenience system J393 can set the relevant fault memory entry.

Control unit in dash panel insert J285

326_145

The control unit in dash panel insert J285 is available in two variants.
The High-Line variant with colour display only comes in vehicles with adaptive cruise control.
As in the A8 '03, the anti-drive-off feature and gateway are no longer integrated into the dash panel insert.
The handy position of the rotary light switch has meant that the indicator lights for dipped beam headlight, fog light and rear fog light could also be fitted directly in the rotary light switch.
Likewise, the buttons for instrument lighting, the auto-check system and the daily mileage counter are now positioned to the right, next to the dash panel insert, in the button module (operating buttons for dash panel insert E493).

Lamp failure

If an exterior lighting lamp fails, a symbol appears in the central display indicating which lamp has failed. If you now press the Check button, the failed lamp is also described by a text message in the central display.

Outside temperature indicator

The instrument cluster evaluates both the temperature sensor for outside temperature G17 and the outside temperature signal from the Climatronic control unit J255. The lower of the two values is displayed.

Function diagram

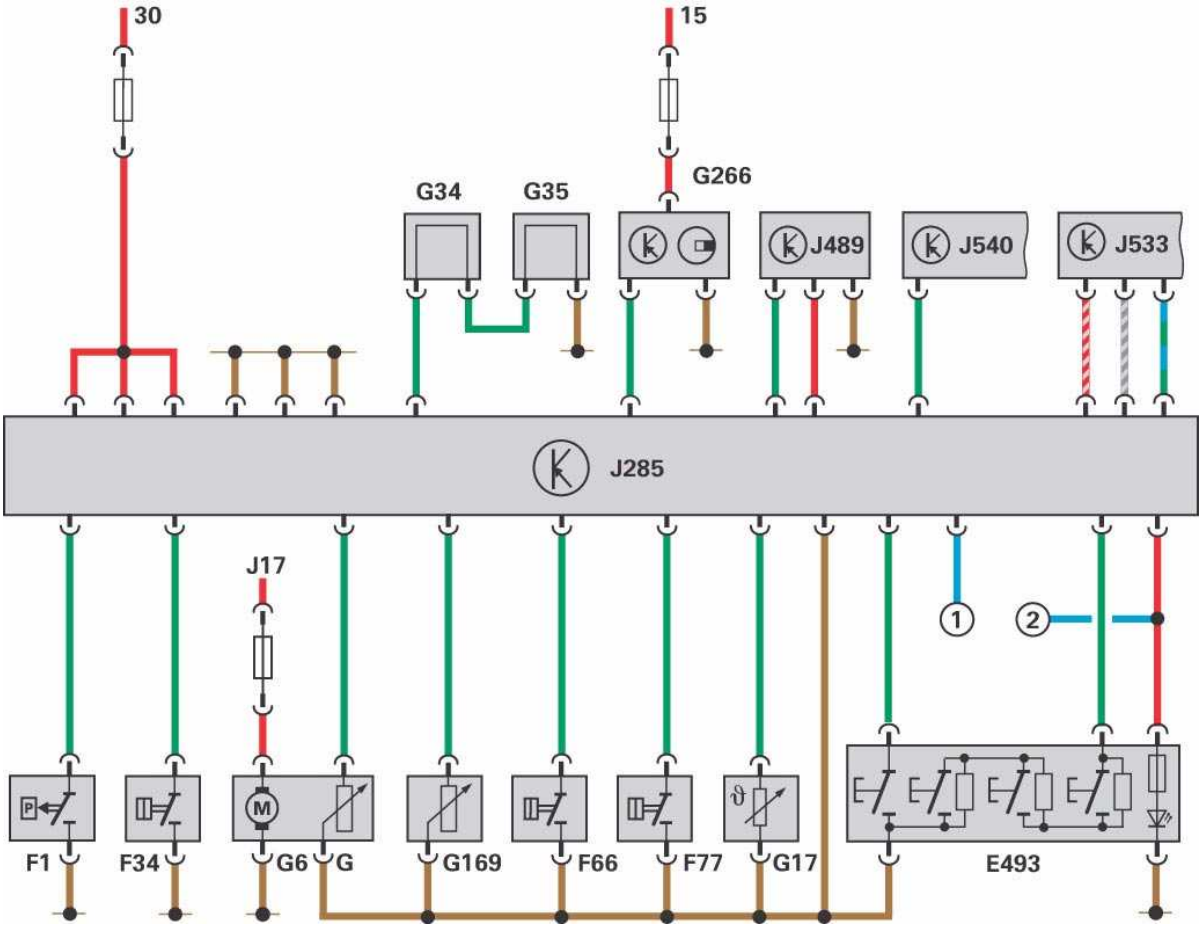

326_037

Legend

E493	Operating button for dash panel insert
F1	Oil pressure switch
F34	Warning contact for brake fluid level
E66	Switch for low coolant display
F77	Warning contact for windscreen washer level
G	Sender for fuel level indicator
G6	Pre-feed fuel pump
G17	Temperature sensor for outside temperature
G34	Sensor for brake pad wear, front left
G35	Sensor for brake pad wear, front right
G169	Fuel level sensor 2*
G266	Oil level and oil temperature sensor
J17	Fuel pump relay
J285	Control unit in dash panel insert
J489	Receiver for radio clock
J533	Data bus diagnosis interface
J540	Control unit for electric parking and hand brake

Additional signal

1	Terminal 58d
2	Terminal 58s

* only for vehicles with quattro drive

Control unit for on-board power supply J519

Functions

The main function of the control unit for on-board power supply is to read in switch information and activate power outputs.
It is familiar from the Audi A8 ‘03 and has been adapted to new functionalities in the Audi A6 ´05.

326_107

Master functions

The following master functions are implemented in the control unit for on-board power supply.

- External lighting control
- LIN master for the control unit for wiper motor J400
- LIN master for the sensor for rain and light detection G397 (for details of function, see Sensor for rain and light detection)

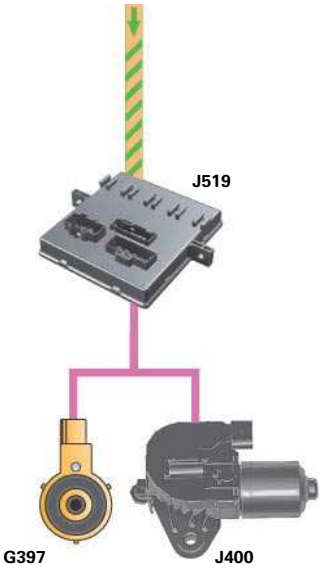

326_108

Stand-by master function

If the central control unit for the convenience system J393 fails, the control unit for on-board power supply J519 takes over the stand-by master function. It sends the information for direction indicators to the CAN bus.

Reference

Further information on this can be found in the SSP 288, Audi A8 ‘03 – Distributed Functions.

Emergency function

The software for the control unit for on-board power supply can be used to implement emergency functions. If a fault is detected in the rotary light switch or if there is an open circuit in the line to the rotary light switch, the control unit for on-board power supply switches the driving light on.

Other functionalities

In addition to the master functions, the following functions are also available in the control unit for on-board power supply.

- Steering column adjustment
- Footwell lighting
- Selector gate lighting
- Direction indicator control, front and side
- Signal horn activation
- Windscreen washer pump activation
- Steering column memory

Versions

There are three functional versions of the control unit for on-board power supply:

- Low-Line version (with no electric steering column adjustment, no xenon, no daytime driving lights)
- Mid-Line version (with no electric steering column adjustment, with xenon and daytime driving lights)
- High-Line version (with electric steering column adjustment, xenon and daytime driving lights)

Installation position

The control unit for on-board power supply is installed on the left behind the dash panel. It can be accessed by removing the footwell cover.

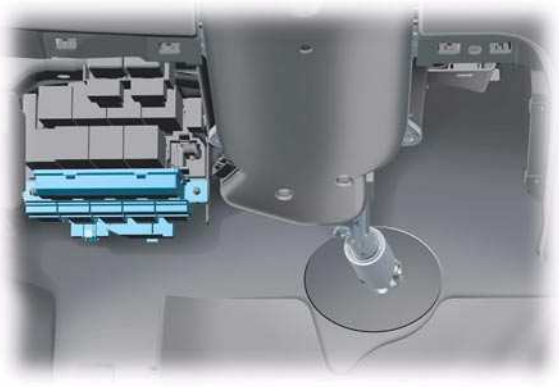

326_134

Function diagram

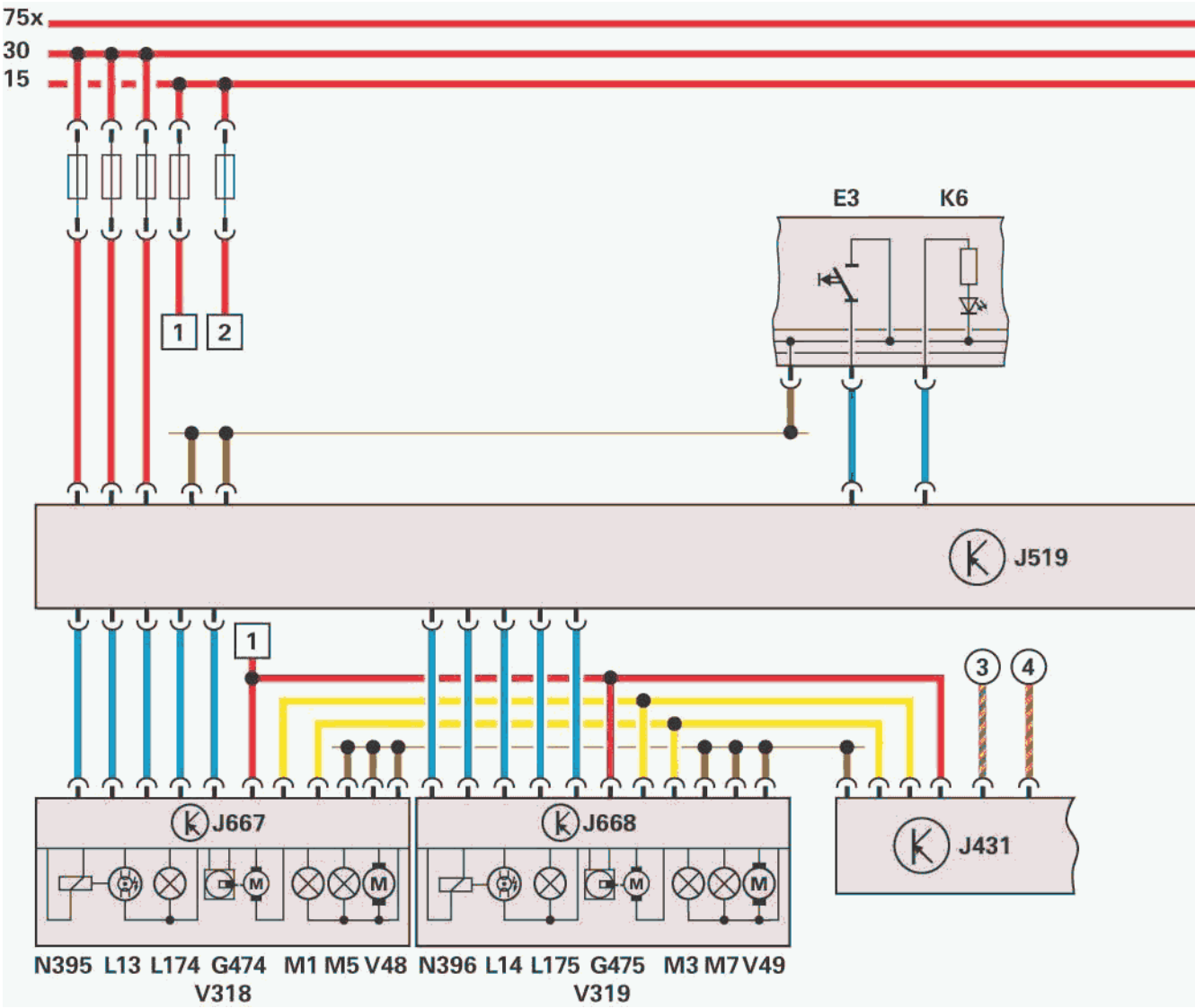

E1 Light switch
E3 Hazard warning light switch
E7 Fog light switch
E18 Switch for rear fog light

F4 Reversing light switch
F266 Contact switch for bonnet

G357 Sender for vertical steering column adjustm.
G358 Sender for axial steering column adjustment
G397 Sensor for rain and light detection
G474 Sensor for pivot module position, left
G475 Sensor for pivot module position, right

H2 High-pitch horn
H7 Low-pitch horn

J4 Relay for dual-pitch horn
J400 Control unit for wiper motor
J431 Control unit for headlight range control
J519 Control unit for on-board power supply
J667 Power module for left headlight
J668 Power module for right headlight

K4 Indicator light for parking light
K6 Indicator light for hazard warning lights
K13 Indicator light for rear fog light
K17 Indicator light for fog lights

L9 Lamp for light-switch lighting
L13 Gas discharge light, left
L14 Gas discharge light, right
L22 Lamp for left fog light
L23 Lamp for right fog light
L174 Lamp for daytime driving light, left
L175 Lamp for daytime driving light, right

M1 Lamp for parking light, left
M3 Lamp for parking light, right
M5 Lamp for direction indicator light, front left
M7 Lamp for direction indicator light, front right
M18 Lamp for side direction indicator light, left
M19 Lamp for side direction indicator light, right

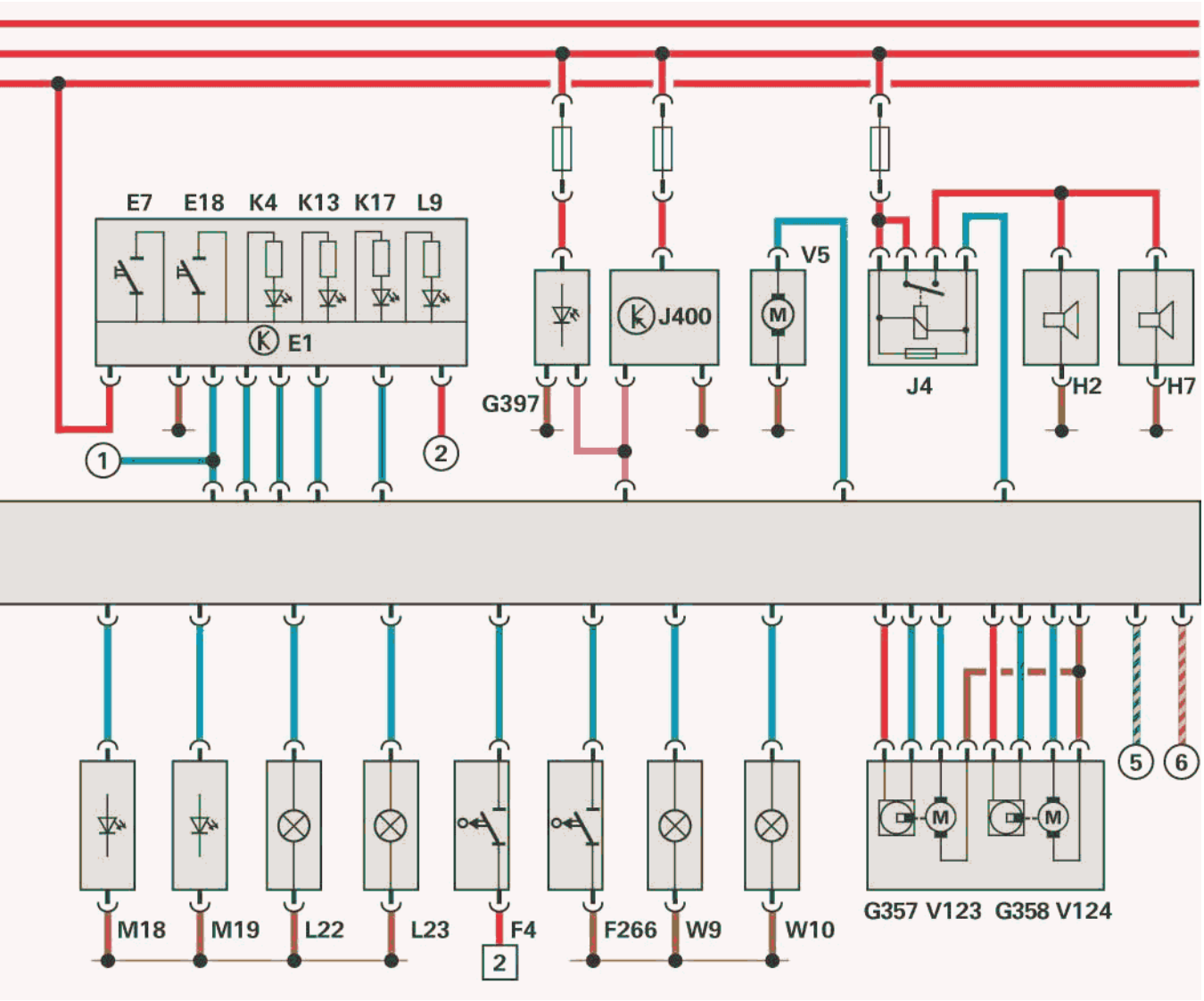

326_111

N395 Magnet for cover adjustment, left headlight
N396 Magnet for cover adjustment, right headlight

V5 Windscreen washer pump
V48 Left control motor for headlight range control
V49 Right control motor for headlight range control
V123 Motor for vertical steering column adjustment
V124 Motor for axial steering column adjustment
V318 Control motor for dynamic cornering light, left
V319 Control motor for dynamic cornering light, right

W9 Footwell light, left
W10 Footwell light, right

Additional signals

1 Terminal 58

2 Terminal 58s

3 CAN Drive High

4 CAN Drive Low

5 CAN Convenience High

6 CAN Convenience Low

System overview

The control unit for on-board power supply J519 evaluates the following input signals:

- Hall sender 1 for vertical adjustment of the steering column
- Hall sender 2 for axial adjustment of the steering column
- Bonnet switch for anti-theft warning system
- Rotary light switch
- Hazard warning button
- Switch for reversing light (manual transmission)
- Sensor for rain and light detection (via LIN bus)

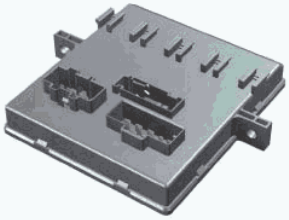

The control unit for on-board power supply J519 controls the following loads:

- Front direction indicator lights, left and right
- Side direction indicator lights, left and right
- Front parking light, left and right
- Dipped beam headlight, left and right
- High beam headlight, left and right
- Fog lights, left and right
- Relay for headlight cleaning system
- Windscreen washer pump
- Control unit for wiper motor (via LIN bus)
- Supply, terminal 58
- Front footwell lights, left and right
- Relay for dual-pitch horn
- Steering column adjustment (vertical/axial)
- Selector lever lighting
- Indicator light for hazard warning lights
- Magnets for cover adjustment Headlights (left and right)

326_110

Diagnosis

Basic settings

After the control unit for on-board power supply J519 or the steering column or the switch for steering column adjustment E167 is replaced, a basic setting in axial and vertical position must be implemented for the steering column.

Actuator test

An actuator test can be used to carry out the following checks:

- Indicator light for hazard warning lights K6
- Lamp for parking light, left M1
- Lamp for parking light, right M3
- Lamp for dipped beam headlight, left M29
- Lamp for dipped beam headlight, right M31
- Lamp for high beam headlight, left M30
- Lamp for high beam headlight, right M32
- Lamp for left fog light L22
- Lamp for right fog light L23
- Lamp for daytime driving light, left L174
- Lamp for daytime driving light, right L175
- Direction indicator lights, left
- Direction indicator lights, right
- Footwell light, left W9
- Footwell light, right W10
- Wiper, top turning position
- Wiper, bottom turning position
- Windscreen washer pump V5
- Relay for dual-pitch horn
- Terminal 58

Coding

The control unit for on-board power supply J519 can be coded for the functions

- Daytime driving light,
- Driving light assistant,
- Headlight type,
- Footwell lighting and
- Country versions

using the diagnosis tester.

Note

The actuator test can be performed either sequentially (in sequence) or selectively (individual selection).

Sensor for rain and light detection G397

A combined sensor for rain and light detection is used for the first time in the Audi A6 '05.
The sensor includes a light-control assistant function, which relieves the driver of the job of having to switch the driving light on manually, as well as a wiper control function, which depends on the amount of moisture on the front windscreen.
The development goal here was to integrate these functions in a compact housing.

The sensor is connected as a LIN slave to the control unit for on-board power supply J519.

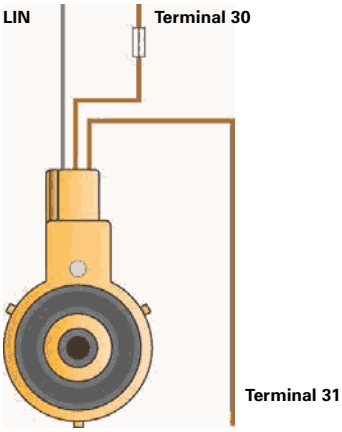

326_090

Installation position

The sensor for rain and light detection is located on the windscreen in the attachment base of the interior mirror.

326_153

Tasks of the light sensor

- Switch the driving light on and off automatically
- Activate the Coming Home/Leaving Home function
- Day/night detection for rain sensor

Switch-on conditions

The light sensor supplies the control unit for on-board power supply with information for switching on the driving light in the following situations:

- Dawn/dusk
- Darkness
- Entering/travelling through tunnels
- Travelling through forests

Note

Allowances are made for disruptive influences, such as external light, dirt, vibrations or smears caused by wiper blades.

Function of the light sensor

In order to detect certain ambient conditions, such as tree-lined avenues or routes through tunnels, the light sensor registers the light intensity in two areas.
The global field describes the direct brightness on the vehicle, while the fore-field describes the lighting conditions in the section of road lying ahead of the vehicle. This is activated using the "Auto" setting on the rotary light switch.

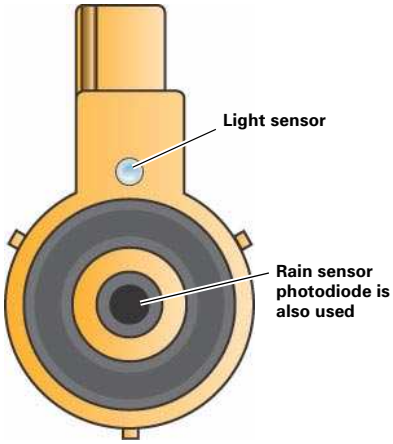

326_091

Tasks of the rain sensor

The following functions are implemented, depending on the amount of water on the windscreen:

- Switch the wiper on and off automatically at seven different speeds
- Activate the driving light when it is raining

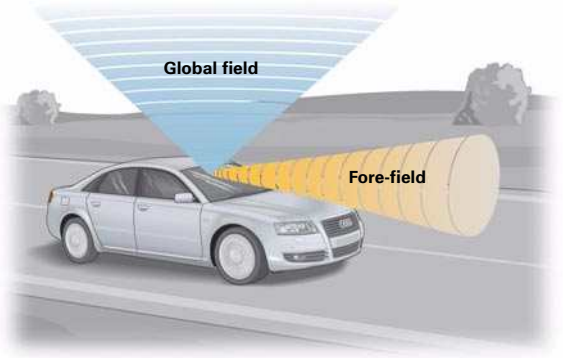

326_092

Activation

The rain sensor is activated by positioning the wiper stalk to the "Intermittent" setting. The driver can then set four sensitivity ranges using the regulator for windscreen wiper intermittent operation.
A reference wiper function (wiper action when the rain/light sensor is activated) is no longer necessary with this system. This means that the wiper stalk can always remain at the "Intermittent" setting.
For safety reasons, however, the rain sensor operation is only activated in this case when a driving speed of more than 16 km/h is reached, or when the sensitivity on the regulator for windscreen wiper intermittent operation is changed.

Note

Manually switched wiper intervals have priority

Function of the rain sensor

The rain sensor uses the physical light refraction principle to register the amount of moisture on the windscreen. The circular LEDs integrated in the sensor emit infrared light through the windscreen from within the interior of the vehicle.

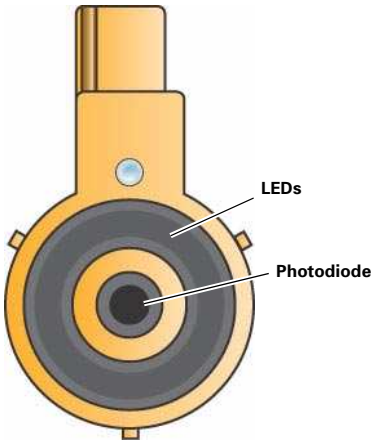

326_091

If the windscreen is dry, the infrared light is reflected on the surface of the glass.
The photodiode integrated in the centre of the sensor thus records a high light intensity.

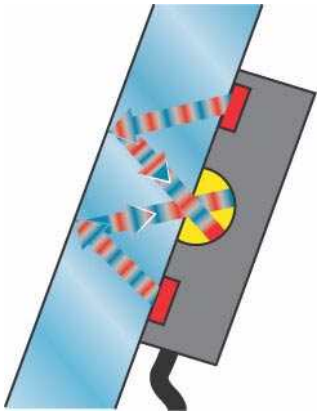

326_080

If the windscreen is covered with moisture, the optical properties on the surface of the glass change. Light now emerges from the windscreen surface through the light refraction caused by water drops. As a result, less light is reflected back and the photodiode records a lower light intensity (light dispersion principle).

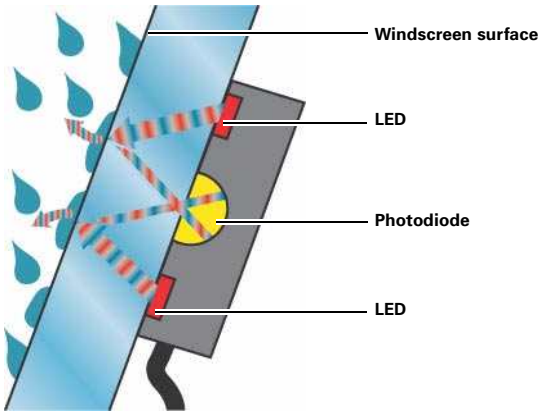

326_093

Diagnosis

The control unit for on-board power supply J519 is used for diagnostic procedures on the sensor for rain and light detection.

Control unit for wiper motor J400

The control unit for wiper motor J400 was redesigned for use in the new Audi A6 ’05. As is already the case in the Audi A8 ‘03 and Audi A3 ’04, the control unit and wiper motor are integrated into one housing.

It is linked to the control unit for on-board power supply J519 as a LIN-slave control unit.

326_104

Functions

- Intermittent
- Intermittent stages (four)
- One-touch wiping
- Wiper function stage 1
- Wiper function stage 2
- Wipe over again 5 seconds after the last wash-and-wipe action (at vehicle speed > 5 km/h only)
- Rain sensor function (see Sensor for rain and light detection G397)
- Service setting
- Alternating parking position (can be coded)

Function diagram

G397 Sensor for rain and light detection
J400 Control unit for wiper motor
J519 Control unit for on-board power supply

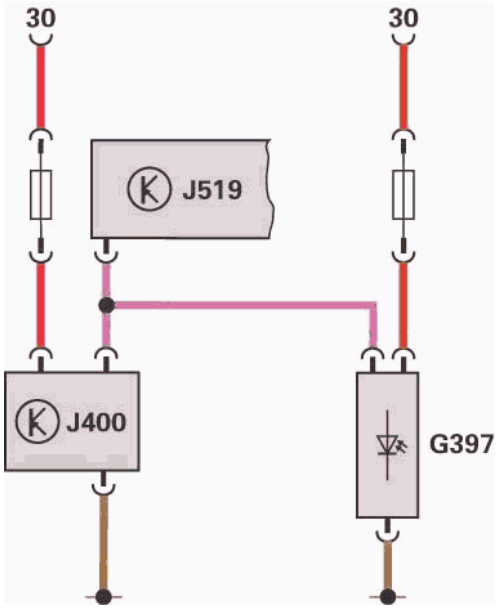

326_081

Note

The control unit for on-board power supply J519 now activates the windscreen washer pump V5.

Reference

For further information on the control unit for wiper motor J400, please refer to the SSP 287, Audi A8 ‘03 – Electrical Components.

Control unit 2 for on-board power supply J520

An additional on-board power supply control unit is needed in the Audi A6 ´05 because of the huge range of functions it offers.

326_103

Functions

Control unit 2 for on-board power supply J520 includes the following functions:

- Activate the solenoid valve for Servotronic N119
- Sliding roof convenience opening/closing
- Speed signal for sliding roof
- Tilt sensor for anti-theft warning system
- Glove compartment release

Installation position

Control unit 2 for on-board power supply is located behind the glove compartment in the module carrier on the passenger's side.

Versions

Two different versions of control unit 2 for on-board power supply are available, depending on the vehicle equipment.

- Low version
  (only includes glove compartment release and Servotronic function only)

- High version
  (also with sliding roof/anti-theft warning system)

Function diagram

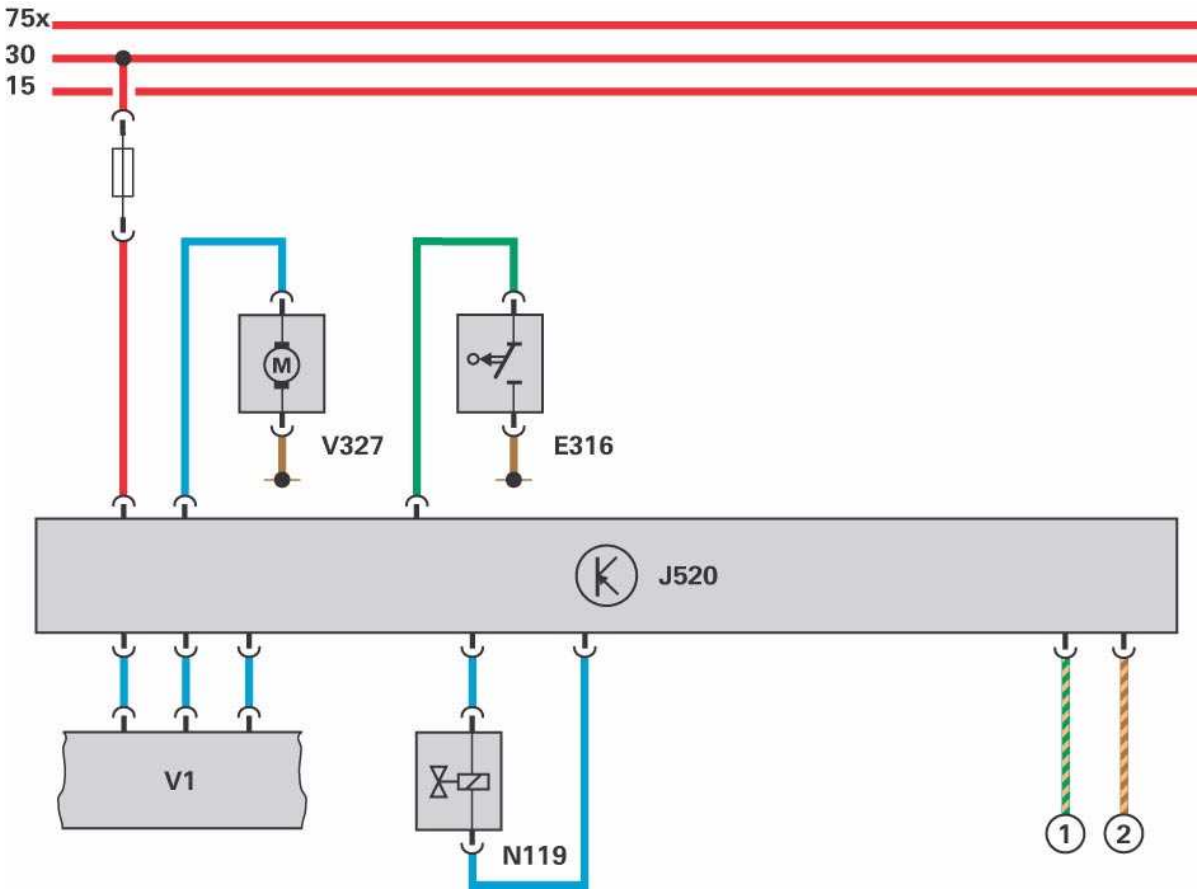

326_082

Legend

E316 Glove compartment button
J520 Control unit 2 for on-board power supply
N119 Solenoid valve for Servotronic
V1 Motor for sliding roof
V327 Motor for glove compartment release

Additional signals

1 CAN Convenience High

2 CAN Convenience Low

Tilt sensor for anti-theft warning system

The tilt sensor for the anti-theft warning system is integrated directly in control unit 2 for on-board power supply J520 in the new Audi A6 '05.
The fluid-filled sensor registers changes in the vehicle tilt both transversely and longitudinally, thereby preventing incorrect triggering as a result of shaking through viscous fluid and electronic delay.
The current tilt values can be read out using measured-value blocks.

Note

The tilt sensor function can be switched off using a button in the driver's door panel.

Reference

For further information on the tilt sensor function, please refer to the SSP 254, Audi A4 '01 – Technology.

Diagnosis

– Measured-value blocks

  Measured-value blocks are available for the following functions:

  – Servotronic
  – Sliding roof
  – Tilt angle

– Actuator test

  Checks can be carried out for the following functions, depending on the version:

  – Glove compartment release
  – Servotronic valve
  – Sliding roof activation (can be measured using a multimeter on the on-board power supply control unit, sliding roof does not open, however, if it is not released by the central control unit for the convenience system)

– Coding

  The High-Line version of control unit 2 for on-board power supply J520 must be coded for the following functions:

  – Tilt sensor (with or without)
  – Sliding roof (with or without)

Central control unit for convenience system J393

The central control unit for the convenience system J393, with which you may be familiar from the Audi A8 '03, is used in the Audi A6 ’05. The tasks and functions have been adapted according to requirements.
The control unit is a participant on the CAN Convenience data bus.

326_113

Master functions

The master functions of the central control unit for the convenience system are as follows:

- Direction indicator master
- Central locking master
- Interior lighting master
- LIN master for alarm horn H12 and sensor for passenger compartment monitoring G273

Other functionalities

In addition to the master functions, other functions are also available in the central control unit for the convenience system. The power outputs integrated in the control unit activate the following loads:

- Back lights
- Rear sun blind
- Rear window heating
- Rear footwell lights
- Boot light
- Tailgate/boot lid release

Versions

Two versions of the central control unit for the convenience system are available:

- Basic
- High-Line (with rear sun blind/anti-theft warning system/light package for ambient lighting/area lighting)

Installation position

The central control unit for the convenience system is installed above the battery in the rear right of the boot.

326_114

System overview

The central control unit for the convenience system J393 receives the following input signals:

- Tailgate/boot lid "softtouch"
- Tailgate/boot lid locking cylinder closed
- Brake light switch
- Brake light signal from control unit for ABS with EDL J104
- Garage door opener (adaptation flashing)
- Crash input
- Tailgate/boot lid contact
- Tank plug lock detection (USA)
- Alarm horn H12 (via LIN bus)
- Sensor for passenger compartment monitoring G273 (via LIN bus)

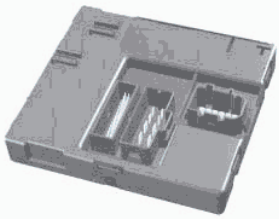

The central control unit for the convenience system J393 activates the following loads:

- Rear footwell lights, left and right
- Boot light
- Motor for rear sun blind V91
- Motor for tank cap locking V155
- Motor for tailgate/boot lid central locking V53
- Interior lighting roof module
- Passenger compartment light
- Alarm horn H12 (via LIN bus)
- High-level brake light (LED)
- Tail light, left and right
- Brake light, left and right
- Reversing light, right
- Rear fog light, left
- Number plate light
- Heated rear window Z1
- Rear direction indicator light, left and right
- Level control unit J197 (doors open/closed)

326_121

Interior lighting control

Standard equipment function

The standard function includes activating the inside light in the roof lining, the front footwell lights, the glove compartment light and the boot light.
The central control unit for the convenience system J393 activates the inside light in the roof lining, the boot light and the glove compartment light directly via its own outputs and inputs. The control unit for on-board power supply J519 activates the front footwell lights via CAN messages from the central control unit for the convenience system J393.

Additional equipment function (light package)

The light package additional equipment also includes a door contour light in every door as well as footwell lights (front and rear), which are based on LED technology. The door contour lighting is activated by the door control unit, which receives the CAN messages for this from the central control unit for the convenience system J393.

Function diagram

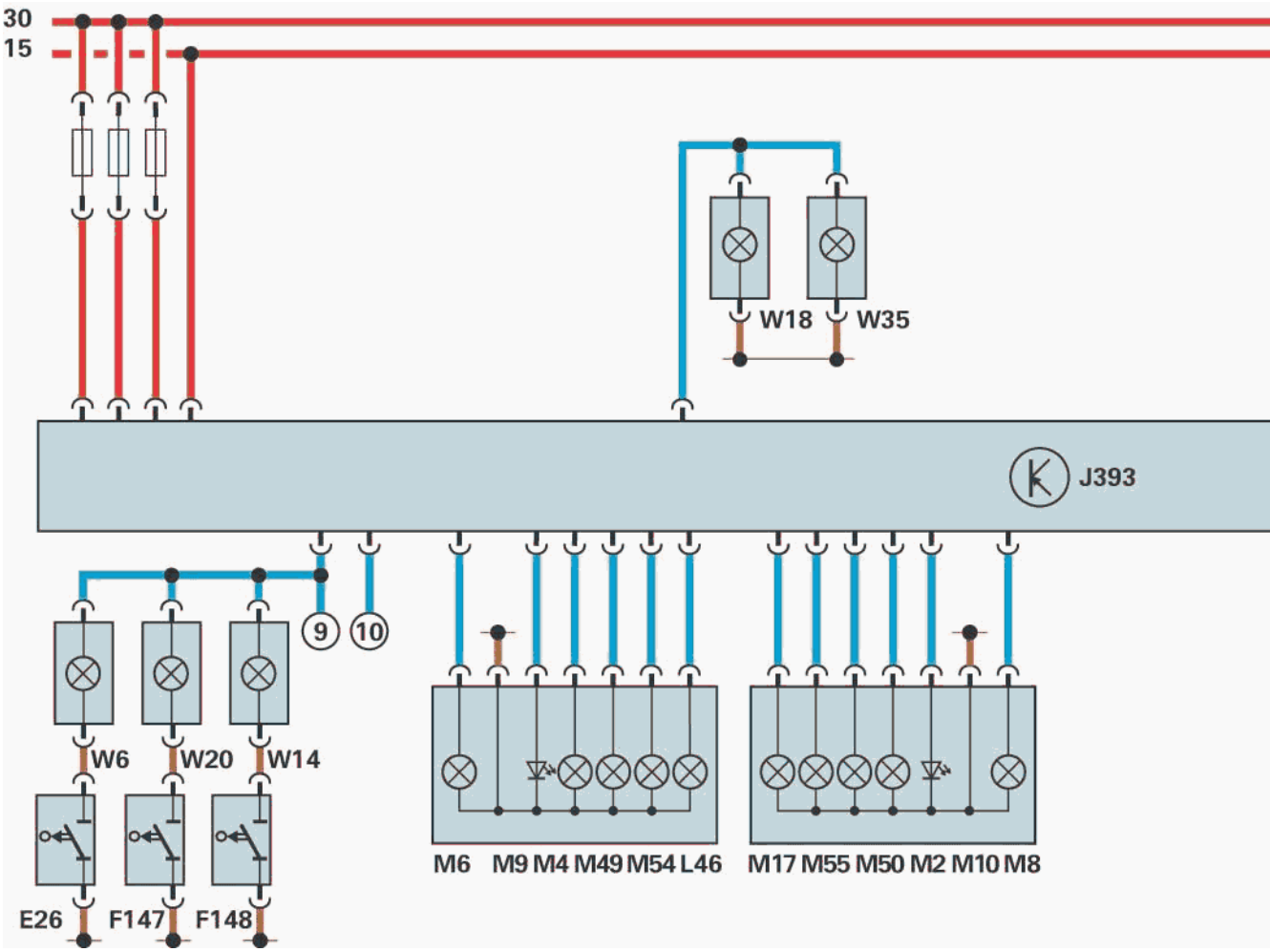

C18 Interference filter for windscreen antenna

E26 Switch for glove compartment light

F124 Contact switch for lock cylinder for tailgate/boot lid, anti-theft warning system, central locking
F147 Contact switch for make-up mirror driver's side
F148 Contact switch for make-up mirror passenger's side
F218 Switch for tailgate/boot lid central locking
F248 Button for tailgate/boot lid lock cylinder release

G273 Sensor for passenger compartment monitoring

H12 Alarm horn

J9 Relay for rear window heater
J393 Central control unit for convenience system

L46 Lamp for rear fog light, left

M2 Lamp for tail light, right
M4 Lamp for tail light, left
M6 Lamp for direction indicator light, rear left
M8 Lamp for direction indicator light, rear right
M9 Lamp for left brake light
M10 Lamp for right brake light
M17 Lamp for reversing light, right
M25 Lamp for high-level brake light
M49 Lamp for tail light 2, left
M50 Lamp for tail light 2, right
M54 Lamp for tail light 3, left
M55 Lamp for tail light 3, right

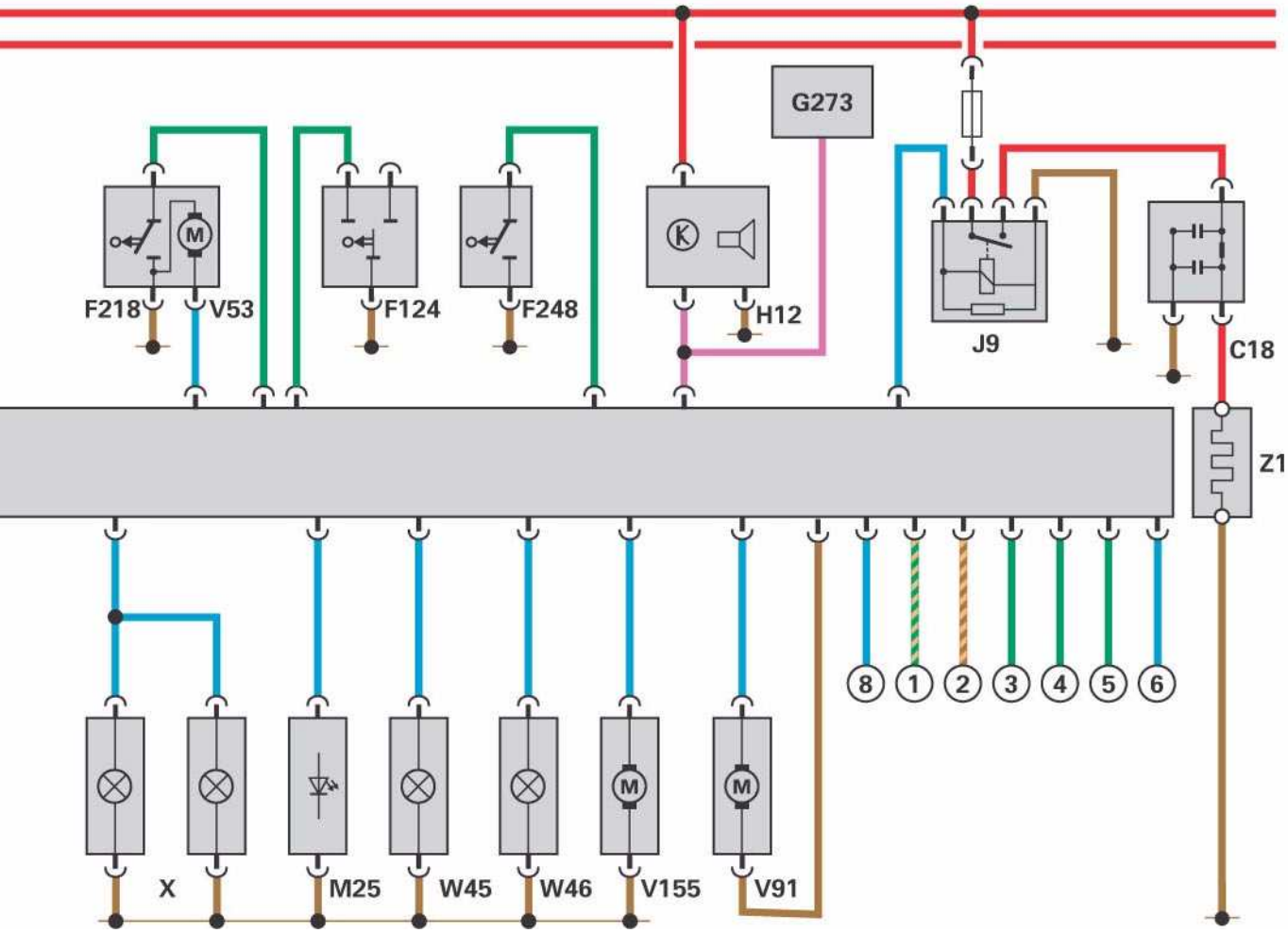

326_120

V53 Motor for tailgate/boot lid central locking
V91 Motor for rear sun blind
V155 Motor for tank cap locking

W6 Glove compartment light
W14 Illuminated make-up mirror, passenger's side
W18 Boot light, left
W20 Illuminated make-up mirror, driver's side
W35 Boot light, right
W45 Footwell light, rear left
W46 Footwell light, rear right

X Number plate light

Z1 Heated rear window

Additional signals

1 CAN Convenience High

2 CAN Convenience Low

3 Brake light switch F

4 ESP brake signal from control unit for ABS with EDL J104

5 Crash signal from airbag control unit J234

6 "Doors OPEN" signal to level control unit J197

7 "Adaptation flashing" signal from control unit for garage door opening J530

8 "Release" signal to motor for sliding roof V1

9+10 "Interior light" activation signal to roof module W1

Diagnosis

The central control unit for convenience system, J393, has the usual diagnostic functions, such as read fault memory, read measured value blocks, adaptation, coding, as well as selective and sequential actuator test at its disposal.

Actuator test

The selective actuator test initiated by the diagnosis tester can be used to check the following actuators:

- Indicator light for safe central locking K133 (in door rim)
- Lock central locking signal (once)
- Activate safe locking for doors (once)
- Unlock central locking signal
- Lock filler flap
- Unlock filler flap
- Lamp for left brake light M9
- Lamp for right brake light M10
- Lamp for high-level brake light M25
- Lamps for tail light, left
- Lamp for parking light, left M43
- Lamps for tail light, right
- Lamp for parking light, right M44
- Lamp for reversing light, left M16
- Lamp for reversing light, right M17
- Lamp for direction indicator light, rear left M6
- Lamp for direction indicator light, rear right M8
- Lamp for rear fog light, left L46
- Lamp for rear fog light, right L47
- Number plate light X
- Boot light W3
- Footwell light, rear left W45
- Footwell light, rear right W46
- Activation of rear lid remote unlocking (rotary latch opens, closing aid moves up)
- Motor for rear sun blind (rear sun blind moves in both directions)
- Signal for rear window heater activation
- Interior lighting

Note

In addition to the selective actuator test, the diagnosis software also includes the option of a sequential actuator test.

Coding

This diagnostic option can be used to perform coding, for example, for these functions:

- Anti-theft warning system
- Central locking (normal/selective)
- Tilt sensor
- Passenger compartment sensor
- Convenience function via radio
- Right-hand traffic
- Avant detection
- Rear sun blind
- Acknowledgement of anti-theft warning system horn
- RoW/USA
- Light package
- Tank cap lock detection
- Equipment (Basic/High-Line)
- Sliding roof
- Multi-function control unit (taxi/emergency doctor/fire brigade, installed/not installed)

Parking aid control unit J446

You may already be familiar with the acoustic parking aid function "APS" from the Audi A3 ´04. For use in the Audi A6 ´05, a 4-channel system with sensors on the rear bumper and an 8-channel system with sensors on the front and rear bumpers are available.

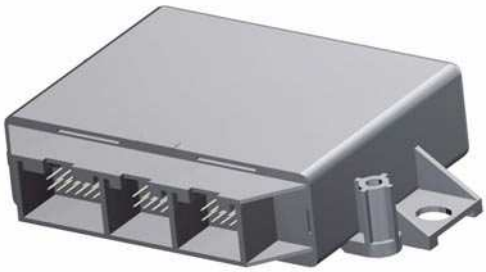

326_100

Versions

The parking aid control unit will be available as 4-channel system and 8-channel system versions. Only the 4-channel version is available on the Audi A6 ’05 for the US market.

Installation position

The parking aid control unit is installed above the right wheel housing in the boot. It is secured in a frame under the control unit for trailer detection.

326_101

Function

The area around the vehicle is monitored by four ultrasound converters integrated into the front bumper (8-channel system only) and four ultrasound converters integrated into the rear bumper. The acoustic message comes from a tone generator in the front area of the vehicle and a tone generator in the back area of the vehicle (only at the back for the 4-channel system). A parking aid switch can be used to activate or deactivate the parking aid manually (8-channel system only). The MMI allows the customer to adjust the volume and frequency of the acoustic output of the parking aid.
If the control unit for trailer detection reports the presence of a trailer on the vehicle via the CAN bus, the four sensors in the rear bumper are switched off. The front area of the vehicle is still monitored, however.

Input and output signals

The parking aid control unit J446 requires CAN bus messages from various control units.

4-channel system control units:

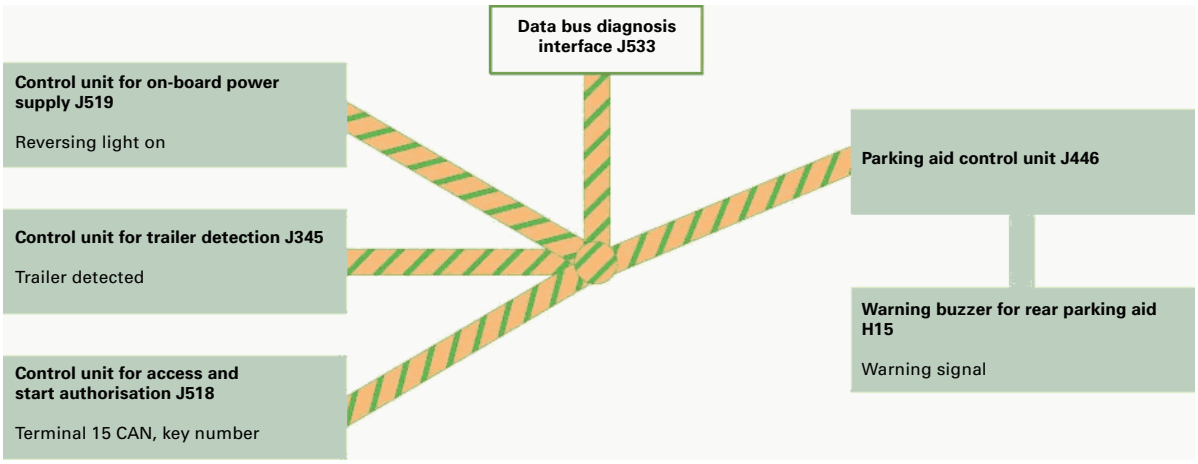

326_119

8-channel system control units:

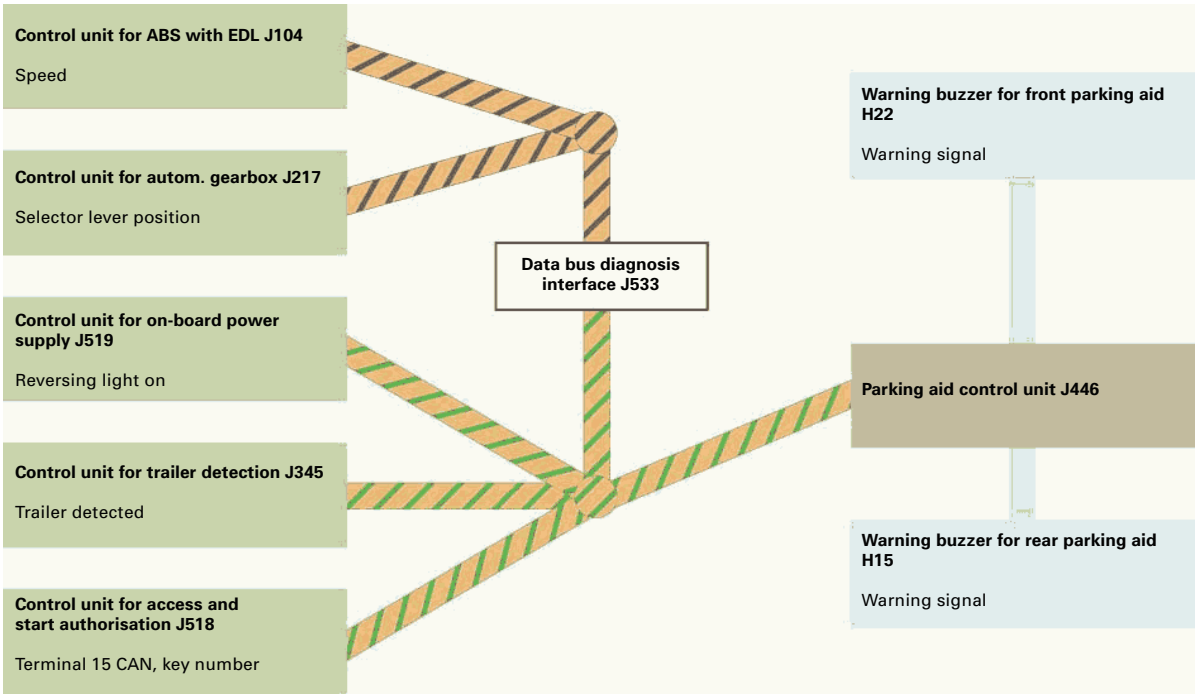

326_083

Reference

For further information on the parking aid control unit J446, please refer to the SSP 312, Audi A3 ’04 – Electrics.

Door control units J386 - J389

The door control units have a similar functionality to those used in the Audi A8 ´03 and are used in the Audi A6 ’05 with appropriately adapted functions and actuation features.
The separate installation of the door control unit and the power windows motor is new here.

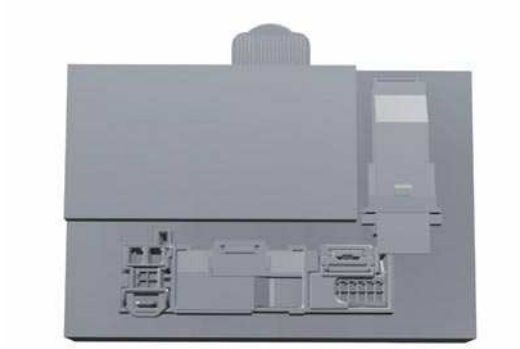

326_102

Stand-by master function

As in the Audi A8 ´03, the door control unit on the driver’s side J386 controls central locking if the central control unit for the convenience system J393 fails. If there is no communication between the driver’s-side door control unit J386 and the central control unit for the convenience system J393, the other door control units evaluate the information from the driver’s-side door control unit directly.
In this case, it is no longer possible to open the vehicle via remote control or Advanced Key.

326_139

Installation position of driver’s-side door control unit J386

Diagnosis

The address words 42, 52, 62 and 72 "Door electronics" offer diagnostic options, such as measured-block reading, coding or the selective / sequential actuator test (the selective actuator test is used for the targeted activation of actuators).

Versions

Low-Line and High-Line versions of the door control units are used.
The High-Line version includes the following functions, for example:

- Advanced Key
- Memory switch block
- Ambient lighting
- Area lighting
- Folding mirrors
- Automatic anti-dazzle mirror
- Electric child-lock

System overview

The door control units receive the following input signals:

- Power windows switch
- Internal locking switch
- Actuating elements for central locking
- Actuating elements for central locking (Safe mode)
- Outer door handle switch (optional)
- Central locking button for outer door handle
- Boot release switch E164
- Switch for remote unlocking and filler flap E204
- Child-lock button E318
- Mirror adjustment change-over switch E48
- Mirror adjustment switch E43
- Mirror adjustment switch with folding function E168
- Switch for alarm system off E217 (optional)
- Switch for passenger compartment monitoring (optional) E183

Additional signals for front doors

- Operator unit for memory
- Mirror position sensor

Additional loads for driver's door

- Contact switch in lock barrel driver's side F241

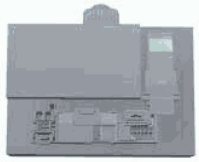

The door control units activate the following loads:

- Central locking motors
- Central locking motors (Safe mode)
- Door warning lights
- Entry lights
- Lighting for inside door handle
- Ambient lighting for doors (optional)

Additional loads for front doors

- Mirror adjustment motors
- Mirror folding motors
- Heated door mirrors
- Automatic anti-dazzle mirror
- Entry light in door mirror, driver's side and passenger's side

Additional loads for rear doors

- Lamp for rear ashtray light

Additional loads for driver's door

- Lock status LED for passenger's door
- Indicator light for safe central locking
- Indicator light for tilt sensor K188 (optional)
- Indicator light for passenger compartment monitoring deactivation K162 (optional)
- Indicator light for memory SET

326_109

Control units for seat adjustment

The control units for seat adjustment can be used to set up to 8 individual seat positions for an electrically adjustable seat. The seat positions can be stored in memory and can be set again if necessary using the memory keypad or by entering a radio code.

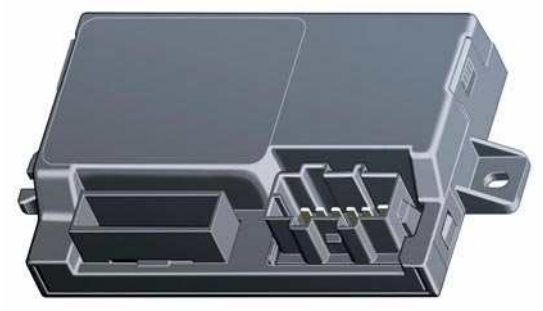

326_115

Installation position

The control units for seat adjustment are located in the floor area under the driver's and passenger's seat.

The control unit can be used both for the driver's seat and for the passenger's seat by assigning a PIN code in the connecting plug.
The unlearned/uncoded control unit is thus coded automatically for either the driver's seat or passenger's seat installation position – depending on the pin – when it is first connected to the seat. This operation can only be performed once, but can be released again by means of the diagnostic function (in the Conditioning menu item).

Diagnosis

The following diagnostic functions are available under the address words 36 Seat adjustment, driver's side and 06 Seat adjustment, passenger's side:

- Read measured-value blocks
- Coding
- Actuator test
- Adaptation

Input and output signals
(driver's seat)

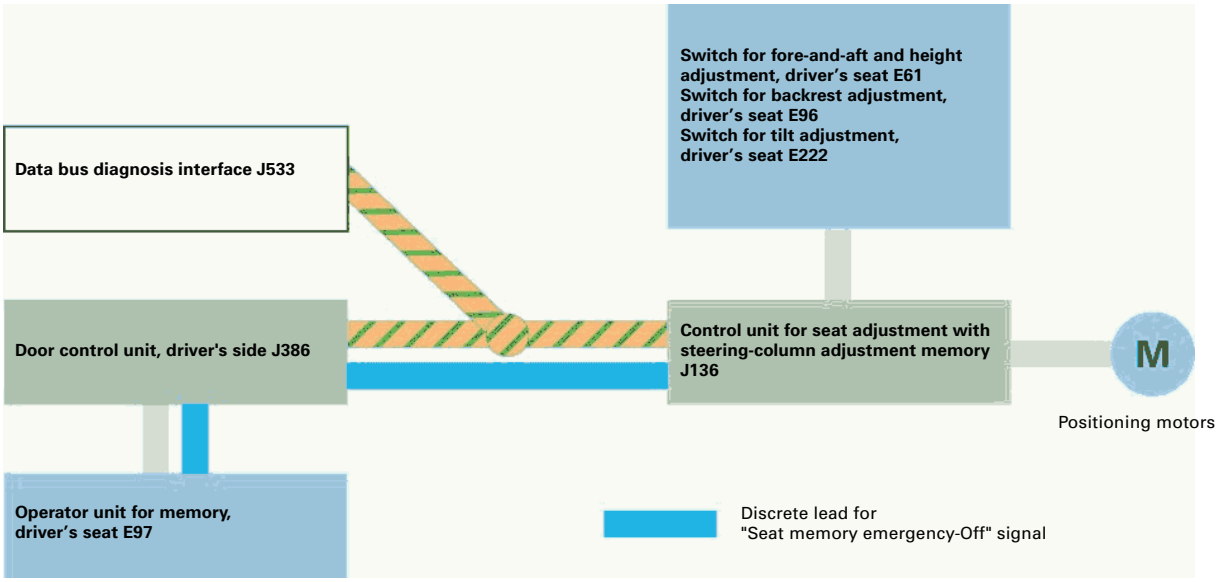

326_117

Function

The control unit for seat adjustment powers the positioning motors in the seat directly using its load outputs. The position detection function of the positioning motors is implemented using hall sensors. The driver's-side door control unit reads in switch information from the operator unit for memory, driver's seat E97 as voltage-coded information and sends this via CAN Convenience to the control unit for seat adjustment with steering-column adjustment memory J136.
The control unit for seat adjustment with steering-column adjustment memory reads in information from the switch for fore-and-aft and height adjustment, driver's seat E61, the switch for backrest adjustment, driver's seat E96 and the switch for tilt adjustment, driver's seat E222 directly.
The driver's-side door control unit J386 reads in the button information "Seat memory emergency-Off" and supplies this discretely as well as in the form of a CAN Convenience message to the control unit for seat adjustment with steering-column adjustment memory J136. Comfort functions, such as seat symmetry positioning and comfort side view as well as radio code allocation to a memory location, are implemented using settings in the Multimedia Interface (MMI).

Seat symmetry positioning

The "Symmetry positioning, driver's seat/ passenger's seat" option, which is available in the MMI, can be used to move the passenger's seat into a symmetrical position in relation to the driver's seat. The MMI sends a corresponding instruction to the driver's seat control unit via the CAN Convenience bus. The control unit then sends the current seat position and a control instruction to the passenger's seat control unit, which positions its motors accordingly.

Comfort side view

The "Comfort side view" option moves the passenger's seat into a position that hides the vehicle's B-pillar, thereby ensuring that the driver has the best possible view out of the vehicle. The function can be selected via the MMI, where the signal is transmitted in the same way as for the "Seat symmetry positioning" function.

Memory retrieval

The stored memory settings can be retrieved in the following ways.

Personal button memory

Settings are retrieved and stored using the memory buttons in the door panel.

326_116

Radio code memory

Memory settings are retrieved using the radio code.

326_138

Multimedia Interface (MMI)

Equipment versions

As in the current Audi A8 ’03, the MMI operating concept is now also integrated as standard in the new Audi A6 ’05. Data is transferred between the individual Infotainment control units via MOST bus technology and the process is technically identical to the Infotainment system in the current Audi A8 ‘03. Driver-relevant functions, such as on-board computer or navigation, are displayed in the centre display of dash panel insert J285. Selected functions for the telephone, radio and CD control and volume control can be operated using the multi-function steering wheel.

Unlike the current Audi A8 ‘03, several versions of the control unit for the front display unit J523, the master control unit in the optical Infotainment bus, are installed in the Audi A6 ´05, depending on the optional equipment selected.
The Basic, Basic Plus and Basic Navigation versions have the same hardware platform, which is expanded to include the required optional extras. The MMI High version, on the other hand, uses the same hardware as the current Audi A8 ‘03. Furthermore, the data bus diagnosis interface J533, which assures communication with the other networked components in the vehicle, is connected to the MOST bus.

Display elements in the optimum field of vision

Separation of display and operation
– optimum readability
– optimum ease of operation

326_143

Operating elements within primary reach

Note

Information on the MOST bus can be found in the SSP 286 – New data bus systems, LIN, MOST, Bluetooth.

Reference

For information on the Infotainment system with optical data transfer, please refer to the SSP 293, Audi A8 ’03 – Infotainment.

MMI Basic

Standard equipment in the new Audi A6 includes MMI Basic with the MMI operating concept, a 7" monochrome display (J685) in the dash panel insert as well as an integrated, analogue radio tuner and 4x antenna diversity, CD drive and a 2x20-watt amplifier.

In principle, these drivers are available in all versions of the control unit for front information J523.
In the MMI Basic version, the loudspeakers that are integrated into the front doors are connected directly to the control unit for front information J523.
If the Standard Sound System or BOSE option is installed, this internal amplifier is deactivated via coding. The loudspeakers are then connected to the relevant digital sound package control unit J525.

Digital tuner technology will be available in the Audi A6 at a later date. Depending on the market in question, a satellite radio receiver or a receiver for terrestrially emitted, but digitally coded transmissions will then be available.

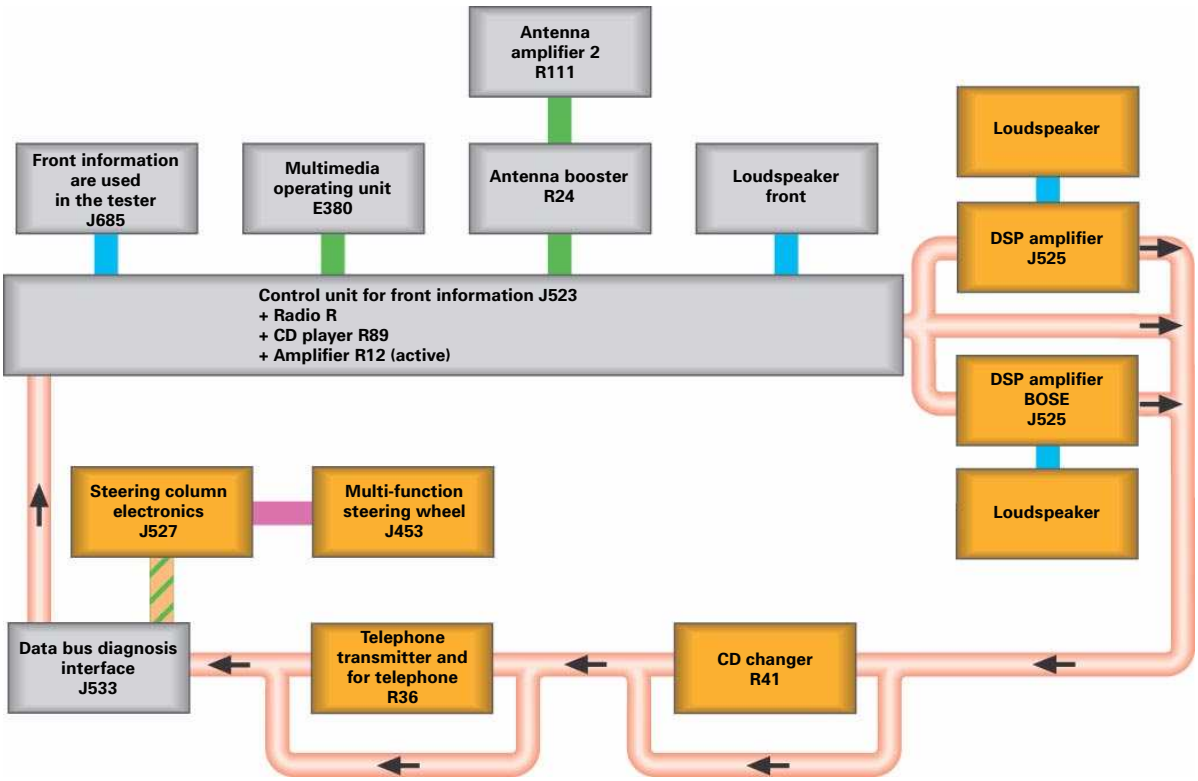

326_042

Legend

The orange symbols represent the possible optional equipment. If a relevant option is missing, simply follow the route indicated by arrows to close the MOST ring.

MMI Basic Plus

As an option, the MMI Basic system can be equipped with additional functions in the radio and sound field in the form of a "Plus" version.
This includes, for example, a TP Memo function, which enables the recording of traffic announcements for a duration of eight minutes in total.
A programmable recording period can be used to provide up-to-date traffic announcements before starting a journey. Stored traffic messages are automatically deleted after six hours to ensure that they are always up-to-date. Instead of the integrated amplifier, the standard sound system with its own digital sound package control unit J525 will be used as standard as of this MMI version.
The internal amplifier can be deactivated via coding in this and later MMI versions.

Reference

Please refer to the Driver's Manual for information on operating the enhanced TP Memo function!

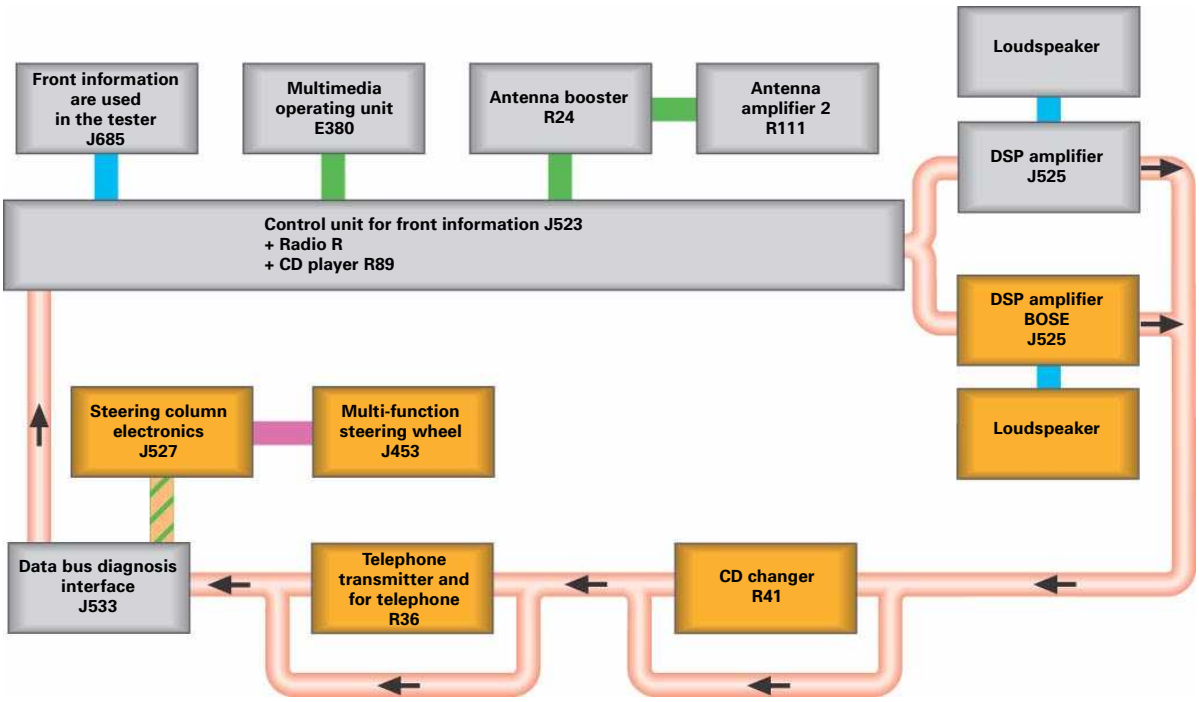

326_043

Legend

The orange symbols represent the possible optional equipment. If a relevant option is missing, simply follow the route indicated by arrows to close the MOST ring.

MMI Basic Navigation

The MMI Basic Plus is available on request with a basic navigation function. For this purpose, a navigation module is integrated into the information control unit J523. Optical route guidance is provided on the central display in the dash panel insert. The destination is entered using the MMI operating system with its central knob/ pushbutton.
Audible directions for route guidance are also output via the sound system.
The data required for navigation is read in via the integrated CD drive.

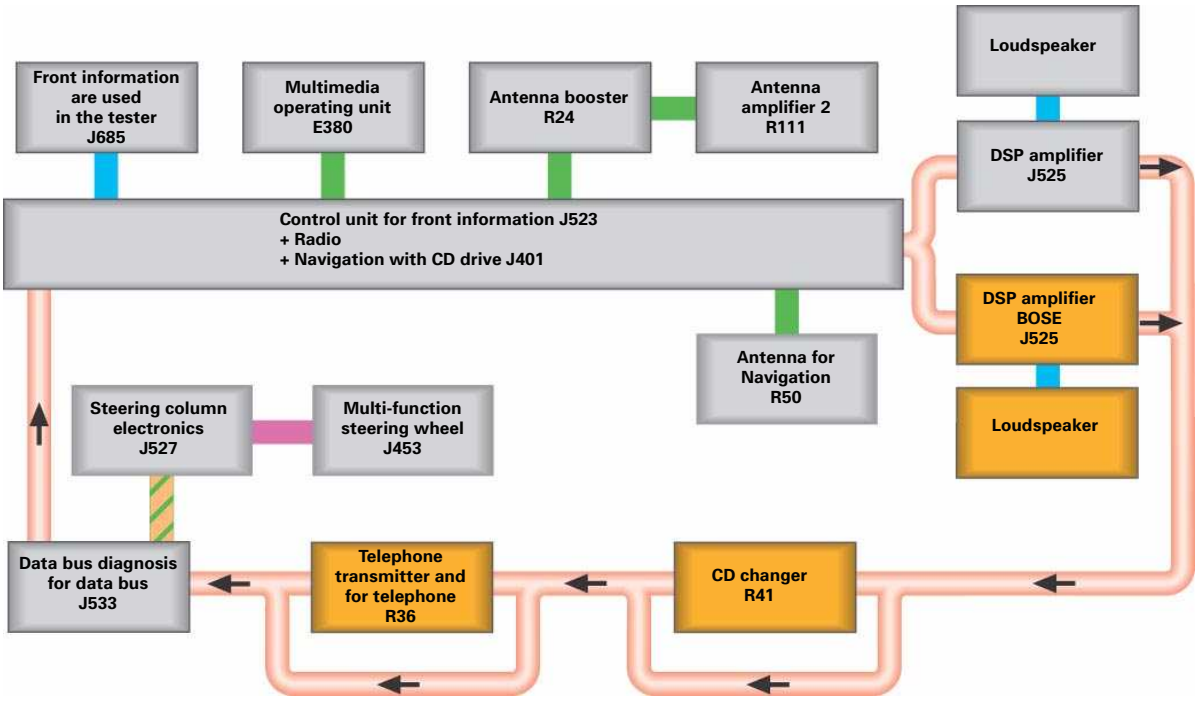

326_041

Legend

The orange symbols represent the possible optional equipment. If a relevant option is missing, simply follow the route indicated by arrows to close the MOST ring.

MMI High

The MMI High comes with the 7" colour display. The standard equipment of the Top system in Audi A6 ‘05 Infotainment includes an RDS dual-tuner, the standard sound system and a 6x CD changer in the glove compartment. As an optional extra, this MMI version is also available with DVD navigation, which is already used in the current A8 ‘03, as well as the voice operator system with the voice input control unit J507 as a plug-in module of the radio module R.

Only in this MMI version can drivers choose between the fixed telephone module and the mobile baseplate. The well-known analogue TV tuner R78 is also available at present as an optional extra.

Reference

Information on the DVD-based navigation system can be found in the SSP 293, Audi A8 ´03 – Infotainment.

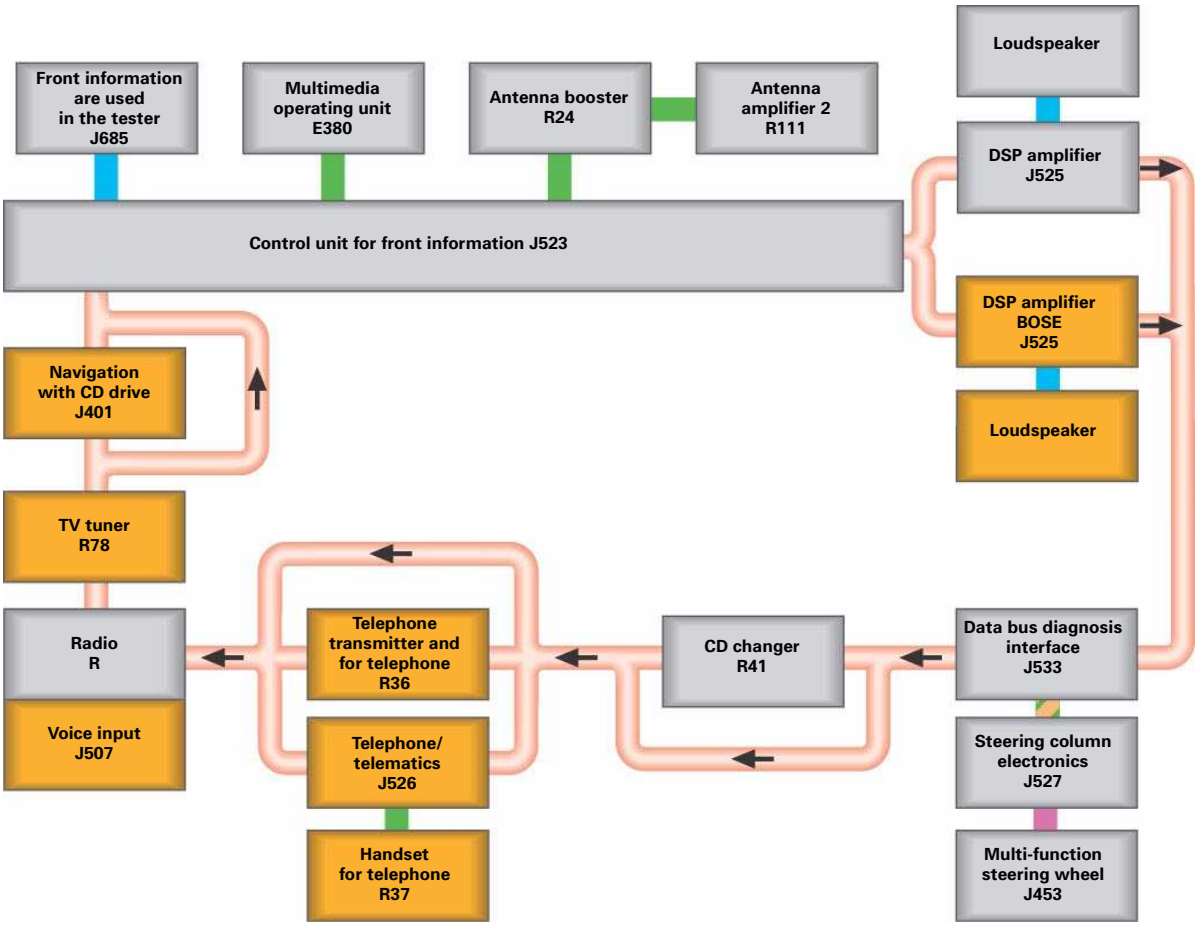

326_044

Legend

The orange symbols represent the possible optional equipment. If a relevant option is missing, simply follow the route indicated by arrows to close the MOST ring.

Function overview and menu structure of the MMI operator system

- **Radio main menu**
  - Dynamic transmitter list

❍ Memory
- Memory list

❍ Band
- FM (ultra-short wave)
- MW (medium wave)
- LW (long wave)
- DAB* (Digital Radio)

❍ Sound
- <see Setup – Softkey sound>

❍ Manual
- Manual forward
- Search forward
- Save transmitter
- Play transmitter
- Search back
- Manual back

- **Radio setup**
  - Traffic programme
  - Regional setting
  - Transmitter reception
  - Transmitter display
  - Alternative frequency
  - PTY filter
  - Delete last transmitter

- **CD/TV main menu**
  - CD title
  - TV transmitter

❍ Changer
- CD list

❍ Source
- CD
- TV
- External AV source

❍ Sound
- <see Setup – Softkey sound>

❍ Manual
- Forward
- Back
- One title back
- One title forward
- Title mix
- Play title
- Name CD

- **CD/TV setup**
  - **CD**
    - Repeat
    - Show CD text
  - **TV**
    - Brightness
    - Contrast
    - Colour
    - Picture format
    - TV standard

- **Address Book main menu**
  - Find entry
  - View list
  - New entry
  - Delete address book

- **Telephone main menu**
  - Enter PIN
  - Telephone menu

❍ Memory
- Address book
- Numbers dialled
- Calls received
- Missed calls
- SIM card number
- Save current number

❍ SMS
- New SMS
- Templates
- SMS input
- SMS output
- SMS memory
- Delete all read SMS
- Delete all SMS

❍ Dial

❍ Hang up

- **Telephone setup**
  - Telephone settings
  - Call options
  - Security settings
  - Mailbox
  - Call divert
  - Network selection

Legend

- **Hardkey**

❍ Softkey

- **Sub-menu**
- Function

* available later

- **Navigation**
  Navigation
  - **<Single-destination mode>**
    - Country
    - City/Postal code
    - Street
    - Special dest.
    - Route guidance Start
  - **<Route map mode>**
    - Z-destination 1...3
    - Destination

❍ Memory
- Last destinations
- Top special dest.
- Destination from address book
- Save current dest.
- Save route
- Load route

❍ Route
- Route criteria
- Distance list
- Route with stop-off destinations
- Route without stop-off destinations
- Block route from here

❍ Map
- Zoom
- Map menu

❍ Nav Info
- Destination
- Location
- GPS dates

- **Navigation setup**
- Map colours
- Alignment
- Junction zoom
- Map type
- Map contents
- Audible directions
- Demo mode
- Delete last destinations
- Manual location
- Version information

- **Info main menu**
- TMC message list

❍ TP memo
- **Message retrieval**

❍ Sources
- <Radio source>
- <Telephone source*>

- **Info setup**
- TP memo timer
- TMC display filter

- **Car main menu**

❍ User
- User 1 - 4
- User management

❍ On-board manual
- Short Guide
- Driver's Manual
- Audi MMI

❍ Maintenance

❍ Maintenance
- Ambient lighting
- Acoustic Parking System
- External lighting
- Battery charge level
- Vehicle registration number
- Windows
- Instrument cluster
- Tyre pressure control system
- Windscreen wiper
- Seat adjustment
- Mirror adjustment
- Central locking

- **Setup main menu**
- Radio setup

❍ Settings
- Menu language
- Units of measure
- Time setting
- System sounds
- Voice operation
- Factory setting

❍ Sound
- Balance
- Fader
- Treble
- Base
- Subwoofer
- **DSP**
  - Standard
  - BOSE
- Volume settings
  - Navigation instructions
  - Traffic programme broadcast
  - Voice dialogue system
  - Telephone volume

❍ Display
- Brightness

Legend

- **Hardkey**
❍ Softkey
- **Sub-menu**
- Function

* available later

Antenna systems

The antenna system in the new Audi A6 ´05 is integrated as a module in the top area of the rear window, to the left and next to the third brake light, on the right.
The modules are responsible for the various systems, e.g. remote central locking, radio, TV or the radio receiver for the auxiliary heater.
Only the modules that are required for the requested optional extras are installed.

The table shows the relevant modules for the available vehicle equipment. These are indicated for the various, worldwide country versions.
The modules "DAB" and "SDARS" relate to the digital radio systems, which will be available later and are based on either a satellite-controlled system (SDARS) or a terrestrial system (DAB).

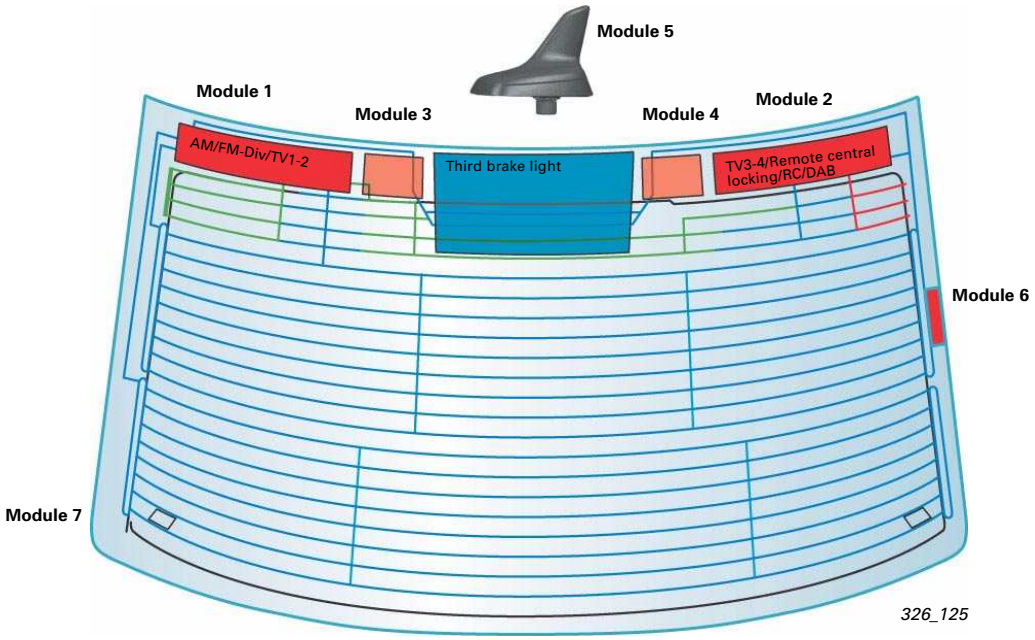

Module 1: **Radio/antenna amplifier R24**
Module 2: **Remote central locking/antenna amplifier 2 R111**
Module 3: **GPS/antenna for GPS navigation R50**
Module 4: **Mobile phone antenna USA/Antenna for telephone, navigation, auxiliary heater R66**
Module 5: **Roof antenna/antenna for radio, telephone, navigation R52**
Module 6: **Block circuit**
Module 7: **Telepass antenna**

Installed antenna modules for possible vehicle equipment

Module	Designation	Available in market version
1	Radio AM/FM	ECE
1	Radio AM/FM-Diversity	ECE/US
1	Radio AM/FM-Div/TV	ECE/US
1	Radio AM/FM-Div/TV	Japan
2	Remote central locking	ECE/US
4	Remote control for auxiliary heater	ECE
2	Remote locking/TV	ECE/US
2	Remote locking/TV/DAB	ECE
2	Remote central locking/TV	Japan
3	Navigation	RoW
4	Mobile phone-US	US
5	Telephone ECE	ECE
5	Telephone (fixed or mobile)/Navigation	ECE
5	Telephone/Navigation	US
5	Satellite radio	US
7	Block circuit	
8	Telepass	Italy

Control unit for front information J523

If you order the Audi A6 ´05 with the MMI versions Basic, Basic Plus or Basic Navigation, the functionalities like sound system or a CD-based navigation module are integrated into the control unit for front information J523, depending on the vehicle equipment.

The control unit for front information J523 is installed in the glove compartment in the standard version.
The "High" version, which was adopted from the current Audi A8 ’03, is located behind the display unit for front information J685, the colour MMI display.

	MMI Basic	MMI Basic Plus	MMI Basic Navigation
1-DIN housing	X	X	X
Interface MOST	X	X	X
Power supply	X	X	X
AM/FM tuner for ECE and North America	X	X	X
CD drive	X	X	X
2x20-watt drivers	X		
ZF output for antenna diversity	X	X	X
Traffic programme recording (8 minutes)		X	X
Integrated GPS receiver			X
Navigation computer with memory			X
Voice output for navigation			X

The control unit for front information J523 includes an enhanced TP recording system in the Standard Plus and Standard Navigation versions. This is a programmable traffic programme recording function, which is possible via the MMI operating system.
Two different start times can be set. The traffic broadcasts that are received are recorded for a duration of 2 hours from the relevant start time.

This setting remains unchanged until the timer function is switched off or the programmed times are changed. A memory with a recording capacity of 8 minutes is available for the recording. When the memory is full, the oldest messages are overwritten.

The CD-based navigation function is integrated as an optional module in the display and operating unit for front information J523.
If this equipment is installed, the vehicle comes with the antenna module R50, the antenna for GPS navigation in the top area of the rear window (see Chapter Antenna systems). This antenna delivers the GPS signal. If the mobile baseplate was also requested, the vehicle has a roof antenna (antena for radio, telephone, navigation R52), which supplies the GSM and GPS signal. All other input signals are only supplied by networking the relevant control units. Playback of the stored messages can also be controlled via the MMI. It is possible to select here whether you want to play the entire sequence or only one particular message.

Functional features of the standard navigation function:

- Position-finding through interactive destination entry/selection
- Interactive journey planner/management with stop-off destinations
- Selection of route options
- Route guidance (acoustic and optical via arrows in display on dash panel insert J285)
- Dynamic route guidance via RDS TMC and online data
- Audible navigation directions via digital sound package control unit J525
- Storage and management of destinations
- Output of position data to the CAN bus (e.g. for Audi telematics)
- Search for imported destinations from the address book

Navigation input signals from the vehicle network:
Distance signal from control unit for ABS with EDL J104, signal from reversing light switch

Output signals to the vehicle network:
GPS time including date, voice output to the digital sound system control unit J525

Diagnosis on the control unit for front information J523

Although functional modules are integrated into the control unit for front information J523, the related address words for diagnosis in the VAG tester are retained.

The control unit for front information J523 does not support the Basic setting and actuator test functions. The control unit for information J523 can be flashed via the integrated CD drive.

Overview of the address words of the modules in the control unit for front information, which are used in the tester

	Control unit for front information J523	Amplifier, 2x20-watt	Radio R	CD ROM drive R92	Navigation with CD drive J401
Address word	07	47	56	0E	37

Overview of the available diagnostic functions for each module

	Modules				
Overview of the available diagnostic functions for each module	Control unit for front information J523	Amplifier, 2x20-watt	Radio R	CD ROM drive R92	Navigation with CD drive J401
Control unit identification			X		
Measured-value blocks			X		
Basic setting					
Actuator test					
Coding	X	X			
Adaptation	X			X	X
Flash programming			X		
Read fault memory			X		
Erase fault memory			X		

Overview of the measured-value blocks available for the individual modules

Module	Designation
General measured-value blocks for all modules	General: Battery positive voltage, terminal status
	MOST: Address, MOST FOT temperature, optical lowering
	Status of ring break diagnosis line
	Control unit identification: Serial number, flash date, hardware and software version
Control unit for front information J523	Multimedia operating unit E380: Status of main buttons, status of knobs/pushbuttons, volume controller status
	Display: LCD display temperature
	Signals: Terminal 58D, terminal 58S
Integrated amplifier, 2x20-watt	Status of input signals, status of mute lead, speed (GALA), temperature
Radio R	Remote-feed antenna: Open circuit, OK, short circuit
	Remote-feed ZF output: Open circuit, OK, short circuit
	Transmitter receive-level (0... 100 dBµV)
CD ROM drive R92	CD status: Button status (Play, Stop, etc.), Eject button status, status of functions (Repeat, Scan, etc.)
Control unit for navigation with CD drive J401	Route Info: Speed, direction of travel
	GPS: Satellites received, status of remote-feed GPS antenna OK, short circuit, open circuit
	GPS FIX: GPS information on satellite reception and position-finding
	Drive: Status of CD drive, incorrect or no navigation CD inserted, Load Eject error, CD drive overheating
	Status of navigation CD
	Longitude corrected: Arc degree, arc minute, arc second
	Latitude corrected: Degree of longitude, minute of longitude, second of longitude
	Height and angle of direction corrected: Height in metres, angle of direction in degrees
	GPS date: Day, month, year or "invalid" if there is no GPS reception
	GPS time: Hour, minute, second or "invalid" if there is no GPS reception
	Front axle distance pulses, status
	GPS level 1: Satellite ID with best and second-best reception
	GPS level 2: Satellite ID with third-best reception

Coding variants of the control unit for front information J523

Versions: Basic, Basic Plus and
Basic Navigation

Decimal place	Description
1.	Country version: D, GB, USA, F, E, I, P
2.	Equipment: ACC, Internal light package, Acoustic parking system, front
3.	Equipment: Acoustic parking system, rear, Tyre pressure control system, Air suspension
4.	Equipment: Seat memory, front/rear, Left-hand drive
5.	Equipment: Standard sound system installation, Body variant, Leather equipment
6.	Equipment: On-board computer
7.	Reserved

Infotainment control unit holder

In the new Audi A6 ’05, the control units responsible for Infotainment are mainly stored in a compact holder behind the left wheel cut-out in the boot. Only the control unit for front information J523 is installed in the dash panel, either in a visible position in the glove compartment (Basic version) or behind the glove compartment (High version). The dual-band compensator, the mobile phone amplifier R86, is fitted on the rear right wheel well.

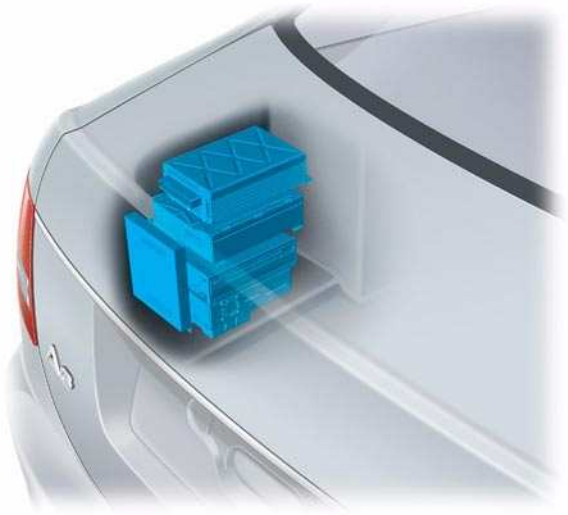

326_105

Reference

Please refer to the relevant Workshop Manual for details of the exact individual installation positions.

Sound systems

Different sound system versions are available for the new Audi A6 ´05. A general feature of the systems is the two subwoofers integrated into the front doors. A central subwoofer is not installed in the rear storage area in the Audi A6 ´05 – a standard feature in other model series.

The base frequencies, which cannot be localised for the human ear, are amplified by the two tuners in the doors and are used to round off the audio pattern in the interior of the vehicle. This saves space in the rear area, which increases the boot volume and leaves more room for installing other control units.

326_140

Audi A6 ‘05 front door with subwoofer and loudspeaker installation positions

The new Audi A6 ´05 is equipped with a two-way loudspeaker system in the front doors as standard. The related amplifier with two 20-watt drivers is integrated into the control unit for information J523.

Diagnosis of the standard amplifier module is performed using the address word 47 in the VAS diagnosis tester. The possible diagnostic functions are contained in the list of diagnostic options for the control unit for front information J523 on page 78 in this chapter.

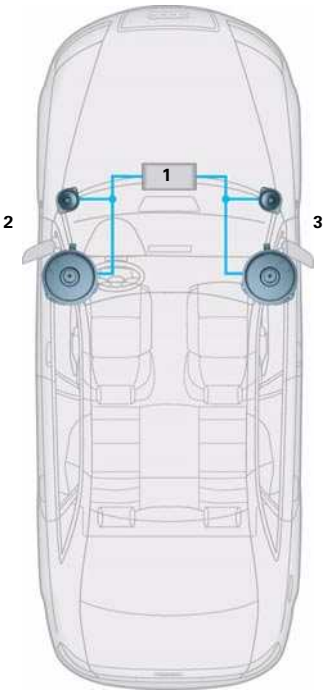

326_059

1 Control unit for front information J523 including 2x20-watt drivers, front display unit J685 and Multimedia operating unit E380
2 High-pitch loudspeaker, front left R20 and mid/low-pitch loudspeaker, front left R101
3 High-pitch loudspeaker, front right R22 and mid/low-pitch loudspeaker, front right R102

Standard sound system

If the optional Standard sound system is selected, the vehicle will not have the 2x20-watt amplifier module in the control unit for front information J523. This sound system has an external 7-channel DSP amplifier, the digital sound system control unit J525, which is integrated into the MOST bus. It controls the three-way systems in the front doors, the two subwoofers in the front doors, the 2-way systems in the back doors and the centre loudspeaker in the dash panel. The standard sound system comes as standard in the MMI versions Basic Plus and MMI High.

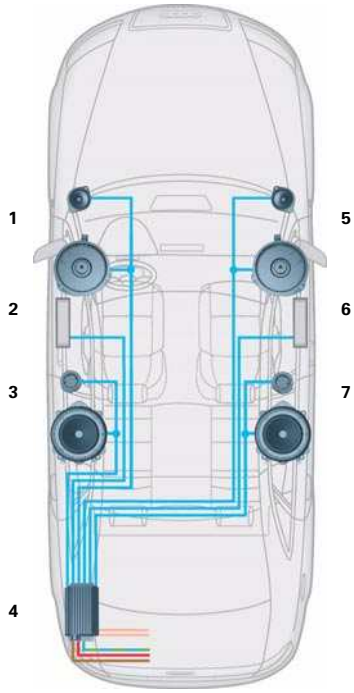

326_073

1 Mid/high-pitch loudspeaker, front left R26
2 Low-pitch loudspeaker, front left R21
3 High-pitch loudspeaker, rear left R14 and mid/low-pitch loudspeaker, rear left R159
4 Control unit for digital sound package J525
5 Mid/high-pitch loudspeaker, front right R27
6 Low-pitch loudspeaker, front right R23
7 High-pitch loudspeaker, rear left R16 and mid/low-pitch loudspeaker, rear right R160

Reference

Information on the functional features of the digital sound system can be please refer to the SSP 293, Audi A8 ´03 – Infotainment.

Standard sound system diagnosis

The diagnosis process is effected via address word 47 as in the case of the series equipment, however, the separate control unit for digital sound system, J525, is now addressed. In addition to reading the measured-value blocks and the fault memory for all loudspeaker channels involved, selective actuator tests are also available.
The digital sound system control unit participates in component protection.

Measured-value block	Designation
01	General: Battery positive voltage, terminal status
02	MOST: MOST address, FOT temperature, optical lowering (0 dB, -3 dB)
03	Status of ring break diagnosis line
04	System: Analogue/digital unit temperatures in amplifier, fan speed
05	Microphone: Voltage readings at microphone inputs
50	Control unit identification: Year of manufacture, manufacturer code
51	Control unit identification: Serial number

Available actuator tests

No.	Designation	Actuator test	
		Sequential	Selective
1	Mid/high-pitch loudspeaker, front left R26	X	X
2	Mid/high-pitch loudspeaker, front right R27	X	X
3	High-pitch loudspeaker, rear left R14	X	X
4	Mid/low-pitch loudspeaker, rear left R159	X	X
5	High-pitch loudspeaker, rear right R16	X	X
6	Mid/low-pitch loudspeaker, rear right R160	X	X
9	Low-pitch loudspeaker, front left R21	X	X
10	Low-pitch loudspeaker, front right R23	X	X

BOSE sound system

The new Audi A6 ´05 comes with a BOSE sound system, which mainly comprises components from the current Audi A8 ‘03. The division of the subwoofer function into two individual subwoofers integrated into the front doors means that the well-known 7-channel DSP BOSE amplifier must provide an additional output for the second subwoofer driver in the front right-hand door. The line-out output of the amplifier is used for this purpose. This output signal feeds an external 100-watt driver, which is integrated into the subwoofer in the front right-hand door.

The current BOSE amplifier is replaced by a new development with the launch of the Avant.
All eight drivers for the BOSE sound system are then integrated into this new Avant amplifier.
Given this, it will be important to note the exact part numbers and the related model year when replacing components of the BOSE sound system in the future, so that the functionality of the BOSE sound system is not lost!

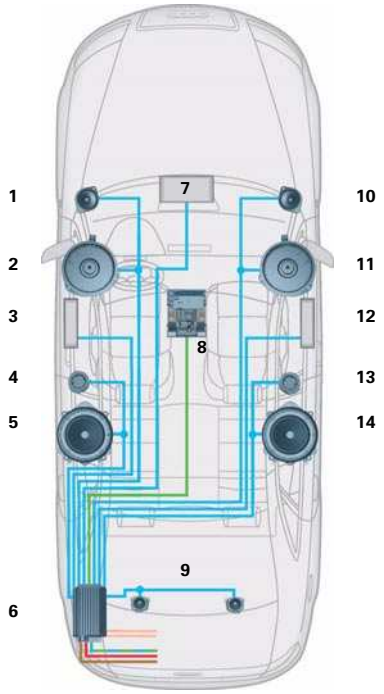

326_060

1 High-pitch loudspeaker, front left R20
2 Middle-pitch loudspeaker, front left R103
3 Low-pitch loudspeaker, front left R21
4 High-pitch loudspeaker, rear left R14
5 Mid/low-pitch loudspeaker, rear left R159
6 Control unit for digital sound package J525
7 Mid-range/treble loudspeaker, centre, R158
8 Microphone unit in front roof module R164
9 Loudspeaker in parcel shelf R150
10 High-pitch loudspeaker, front right R22
11 Middle-pitch loudspeaker, front right R104
12 Low-pitch loudspeaker, front right R23
13 High-pitch loudspeaker, rear right R16
14 Mid/low-pitch loudspeaker, rear right R160

BOSE sound system diagnosis

Diagnosis of the BOSE sound system is also performed using the address word 47 in the VAS tester.
A basic setting is not required.
The available actuator tests can be performed either selectively or sequentially.

The AudioPilot microphone, which is integrated into the BOSE sound system, can be used to absorb the acoustic pressure produced during the loudspeaker actuator tests and output this on the VAS diagnosis tester as a voltage signal.
If a voice operating system is installed, the microphone for this is also included in the test.
The technician must then compare this voltage reading with a default reading set at the factory and evaluate the completed test as either OK or Not OK.

Note

Always note the exact part numbers when replacing components of the BOSE sound system!

Measured-value block	Designation
01	General: Battery positive voltage
02	MOST: MOST address, FOT temperature
03	Status of ring break diagnosis line
04	System: Analogue/digital unit temperatures in amplifier, fan speed
05	Microphone: Microphone voltage(s) for AudioPilot microphone and optical microphone for voice operating system
50	Control unit identification: Manufacturer code
51	Control unit identification: Serial number

Available actuator tests

No.		Brief description and designation of the component to be tested	Actuator diagnosis	
			Sequential	Selective
1	R21	Low-pitch loudspeaker, front left	X	X
2	R23	Low-pitch loudspeaker, front right	X	X
3	R20	High-pitch loudspeaker, front left	X	X
4	R22	High-pitch loudspeaker, front right	X	X
5	R14	High-pitch loudspeaker, rear left	X	X
6	R16	High-pitch loudspeaker, rear right	X	X
7	R103	Middle-pitch loudspeaker, front left	X	X
8	R104	Middle-pitch loudspeaker, front right	X	X
9	R158	Centre loudspeaker	X	X
10	R150	Loudspeaker in parcel shelf	X	X
11	R159	Mid/low-pitch loudspeaker, rear left	X	X
12	R160	Mid/low-pitch loudspeaker, rear right	X	X
13		Fan in control unit		X
14	J525	Self-test for digital sound package control unit		X

Available telephone systems

Two different telephone systems are available ex-works for the new Audi A6 ´05.
Firstly, there is the fixed system with Bluetooth operator handset, with which you may be familiar from the current Audi A8 ´03, but which can only be ordered with the High version of the MMI.

Secondly, there is the newly developed mobile baseplate. This mobile baseplate has a similar control unit architecture and functionality to the system used in the Audi A3 ´04.
However, it has now been incorporated into the MOST bus for Infotainment.

Reference

For information on the telephone system, please refer to the SSP 293, Audi A8 ´03 – Infotainment

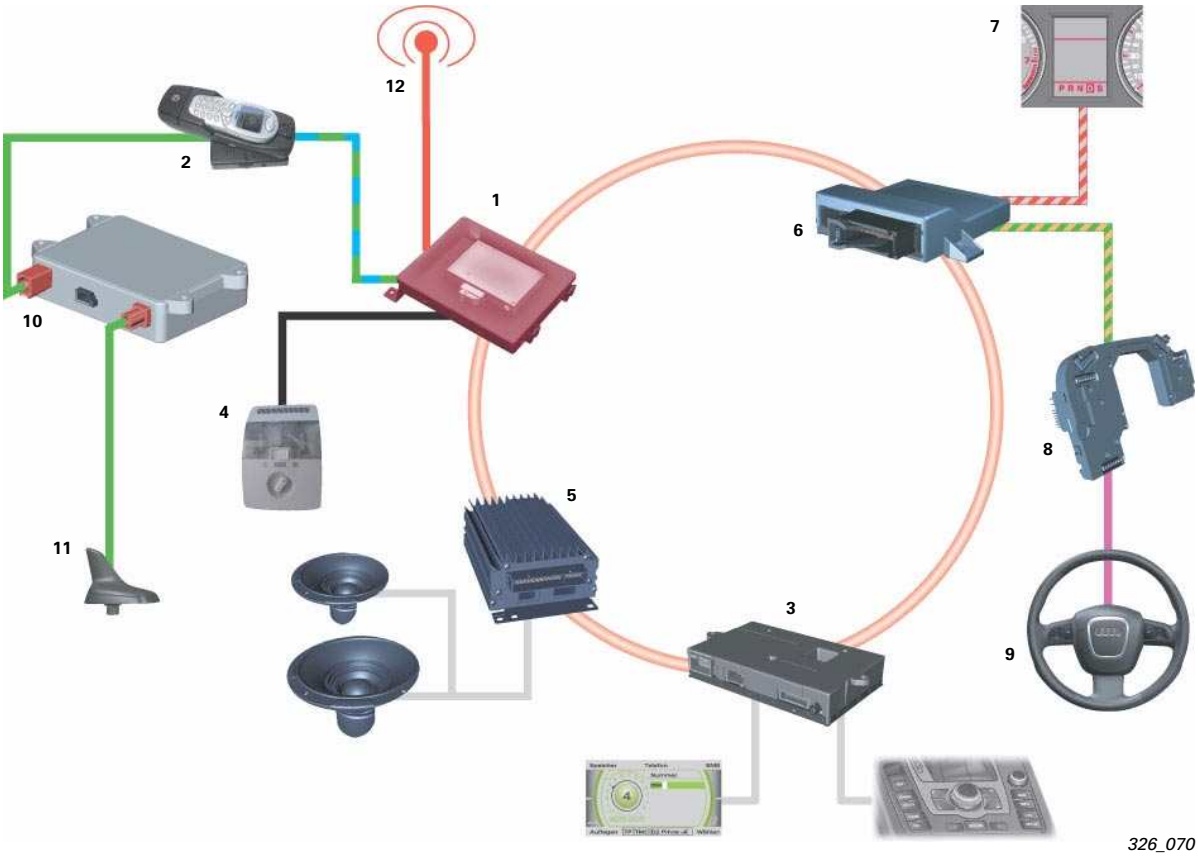

1 Telephone transmitter and receiver R36
2 Telephone holder R126
3 Control unit for information J523
4 Microphone R140
5 Control unit for digital sound package J525 Basic or BOSE sound system
6 Data bus diagnosis interface J533
7 Control unit in dash panel insert J285
8 Control unit for steering column electronics J527
9 Control unit for multi-function steering wheel J453
10 Mobile phone amplifier (compensator) R86
11 Antenna for GPS navigation R50
12 Bluetooth antenna R152

The mobile baseplate is operated via the MMI in the "TEL" menu. The telephone holder R126, which is required for whichever type of mobile phone is to be used, is available from the Parts Service. As you may already know from the introduction of the new mobile baseplate in other model series (Audi A3, A4, TT), this mobile phone holder no longer has a connection cable. It is connected to the telephone transmitter and receiver R36 via a contact panel.

The telephone transmitter and receiver R36 is fitted as standard with a Bluetooth module.
In principle, the Bluetooth functionality is always available, even if a mobile phone holder is not connected. For reasons of electromagnetic compatibility, Bluetooth is only active at present when the mobile phone is inserted into the relevant holder. The phonebook stored on the mobile phone SIM card is read into the memory of the Telephone transmitter and receiver R36 whenever the mobile phone is inserted. Mobile-internal phonebooks cannot be read in because the data formats differ from model to model.

Voice operation

The new mobile baseplate can be voice-operated using the operating unit in the steering wheel E221. The handsfree volume can also be set using the multi-function steering wheel and names or telephone numbers can be dialled in the phonebook. The operating unit in the steering wheel E221 passes the data signals for this on to the steering column electrics J527 as LIN signals. This control unit converts the data into CAN messages and transfers these messages to the data bus diagnosis interface J533 on CAN Convenience. Here, the digital data messages are converted into MOST data records and are passed to the telephone transmitter and receiver R36 via the MOST ring. The adapter set always includes a Push-to-talk button (PTT), which enables voice operation even without the multi-function steering wheel option. This button is included on every available mobile phone adapter.

The PTT button has different functionalities, depending on the MMI used:
- MMI High: Accept/Hang up
- MMI Basic/Basic Plus/Basic Navigation: Accept/Hand up and also
  Activate internal voice operation of the telephone transmitter and receiver R36.

This internal voice operation function is only available in the MMI Basic versions. Voice operation in the MMI High version is implemented via the optional control unit for voice input J507.

326_106

This illustration depicts the service handset for the fixed telephone installation (MMI High) and the alternative universal mobile baseplate with the mobile adapter. A vehicle cannot be fitted with both systems!

Handsfree operation

The telephone transmitter and receiver R36 sends the signals for handsfree operation (Voice, Phone Mute, etc.) via the MOST Infotainment bus to the relevant sound system, which is either integrated into the control unit for front information J533 or the independent digital sound system control unit J525. Here, the digital data is converted into analogue data and is output on the loudspeaker.

Echo and noise compensation

The telephone transmitter and receiver R36 is fitted as standard with a DSP-based echo compensation system. If the optional voice operating system is also ordered, the echo and noise compensation function of the control unit for voice input J507 is used. Among other things, this results in an improved handsfree quality, even for the passenger.

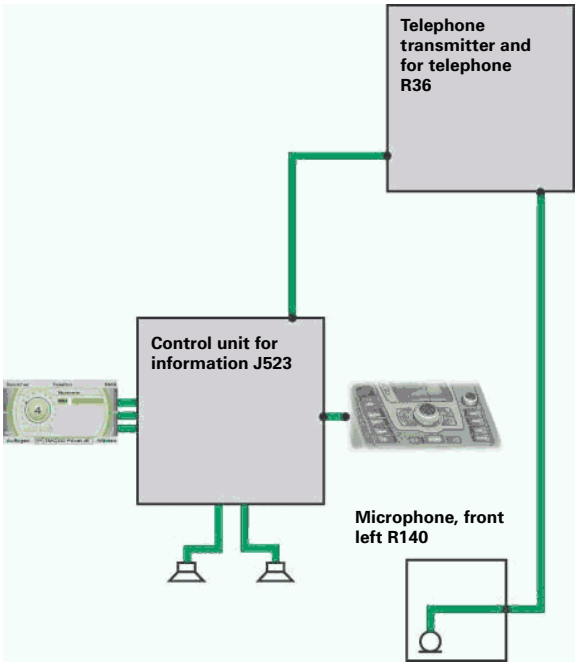

326_136

Microphone arrangement in the MMI versions Basic, Basic Plus and Basic Navigation.

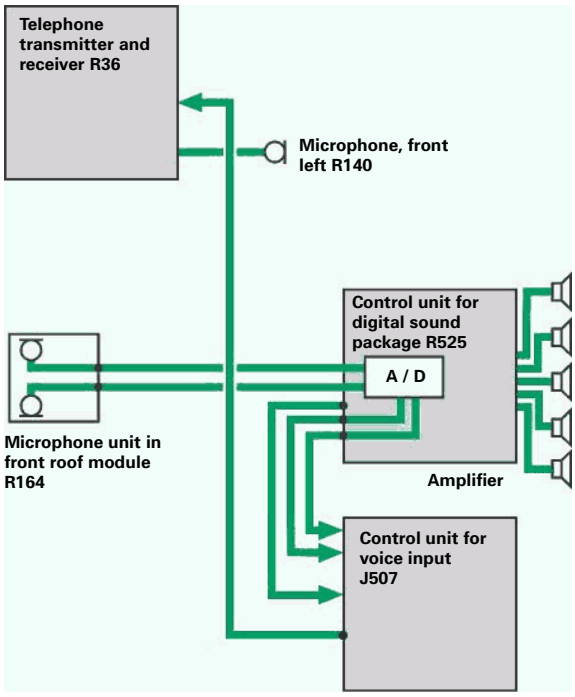

326_137

Microphone arrangement in the MMI High version

Mobile baseplate diagnosis

The mobile baseplate is diagnosed as standard using the address word 77 in the VAS tester. A selective or sequential actuator test can be performed to check the output of the audio signal to the relevant sound system, radio mute operation, and whether or not a switched-on phone was detected.

Measured-value blocks

Measured-value block	Designation
01	General: Battery positive voltage
02	MOST: MOST address, FOT temperature
03	Status of ring break diagnosis line
05	Input signals: PTT, Mobile inserted, Mobile switched on, Communication active
10	Reception field strength of the mobile phone
11	Status of external antenna for mobile baseplate
14	Currently connected Bluetooth devices
19	Microphone: Microphone voltage, microphone power consumption
20	Number of bonded (known) Bluetooth devices
48	Cut-off level of control unit for power management J644
80	Control unit identification: Manufacturer codes
81	Control unit identification: Serial number
130	Status of Bluetooth antenna

Actuator test

The actuator tests listed in the table can be called up using the guided fault-finding function in the diagnosis tester. Most of these can be activated selectively (individually).

Possible actuator tests

No.	Designation	Actuator test	
		Sequential	Selective
1	"Phone on" signal	X	X
2	Audio lead adapter set		X
3	Communication lead to adapter set		X

Mobile baseplate adaptation

Adaptation channel	Designation
128	Basic audio volume
129	Mobile after-run time, from 30 seconds to 30 minutes in seven intervals
130	Reference channel wait time for synchronisation with audio components
131	Microphone-sensitivity
133	Bluetooth on/off
134	Bluetooth: Handsfree operation only with mobile phone inserted
135	Change Bluetooth PIN
136	Beep Delay value: Time gap between pressing button and acknowledgement beep

Notes

Self-study programmes for the Audi A6 ‘05

SSP 323 Audi A6 ´05

- Introduction to the vehicle
- Body technology
- Passenger protection
- Air conditioning

Order No.: A04.5S00.06.00

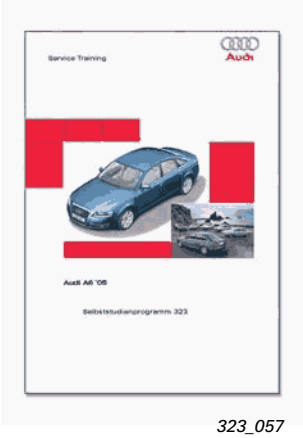

323_057

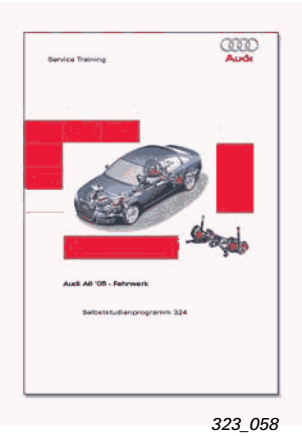

323_058

SSP 324 Audi A6 ´05 Chassis

- Front axle technology
- Rear axle technology
- Steering system
- ESP
- Electromechanical parking brake EPB

Order No.: A04.5S00.07.00

SSP 325 Audi A6 ´05 Engines and Gears

- 3.0 V6 TDI Common Rail
- 3.2 V6 FSI
- Manual gearbox 01X, 02X, 0A3
- 6-stage automatic transmission 09L
- Multitronic 01J

Order No.: A04.5S00.08.00

323_059

323_056

SSP 326 Audi A6 ´05 Electrics

- Networking
- Bus topologies
- Convenience electrics
- Infotainment

Order No.: A04.5S00.09.00

Vorsprung durch Technik **www.audi.co.uk**

326

All rights reserved.
Subject to
technical change.

Copyright
AUDI AG
I/VK-35
Service.training@audi.de
Fax +49-841/89-36367

AUDI AG
D-85045 Ingolstadt
Technical release 01/04

Printed in Germany
A04.5S00.09.20