Fastener Tightening Specifications

Application	Specification	
	Metric	English
Front Floor Console Accessory Trim Plate Screw	2 N·m	18 lb in
Front Floor Console Armrest Screw	2 N·m	18 lb in
Front Floor Console Bolt	8 N·m	70 lb in
Front Floor Console Extension Panel Screws	2 N·m	18 lb in
Front Floor Console Screw	2 N·m	18 lb in
HVAC Module Nuts	4 N·m	35 lb in
Instrument Panel Accessory Bezel Screws	3 N·m	27 lb in
Instrument Panel Bolts	20 N·m	15 lb ft
Instrument Panel Compartment Door Lock Screw	3 N·m	27 lb in
Instrument Panel Compartment Screw	3 N·m	27 lb in
Instrument Panel Inflatable Restraint Lower Bolt	10 N·m	89 lb in
Instrument Panel Molding Screws	3 N·m	27 lb in
Instrument Panel Retainer Nuts	20 N·m	15 lb ft
Instrument Panel Trim Panel Bolt	10 N·m	89 lb in
Instrument Panel Trim Panel Screws	3 N·m	27 lb in
Knee Bolster Reinforcement Bolts	20 N·m	15 lb ft
Knee Bolster Screw	3 N·m	27 lb in

cardiagn.com

Instrument Panel Trim Panel Replacement

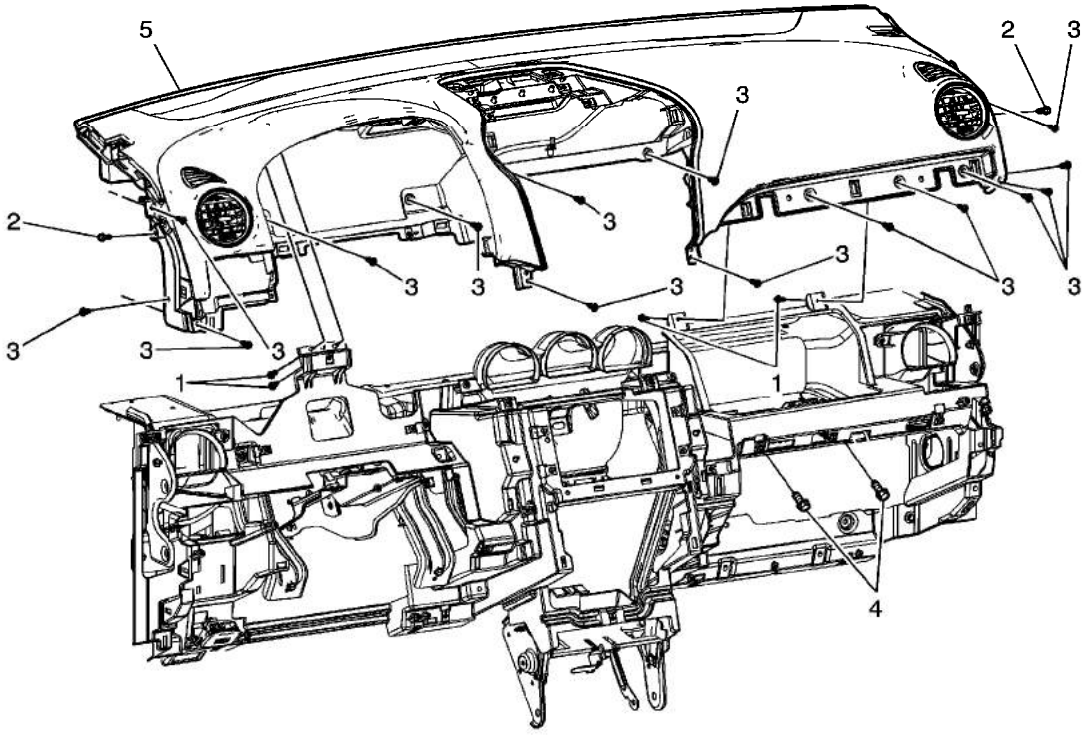

Callout	Component Name
Caution: To avoid damage to the vehicle and/or the components of the instrument panel because of hidden fasteners and retainers the instrument panel must be removed from the vehicle as an assembly. **Preliminary Procedures** 1. Remove the instrument panel assembly. Refer to Instrument Panel Assembly Replacement. 2. Remove the HVAC module assembly. Refer to HVAC Module Assembly Replacement.	
1	Instrument Panel Trim Panel Screw (Qty: 4) **Caution:** Refer to Fastener Caution in the Preface section. **Tip** These 4 screws are driven from the front of car rearward, and are not clearly accessible. **Tighten** 3 N·m (27 lb in)
	[redacted]

cardiagn.com

2	**Tighten** 10 N·m (89 lb in)
3	Instrument Panel Trim Panel Screw (Qty: 15) **Tighten** 3 N·m (27 lb in)
4	Instrument Panel Inflatable Restraint Lower Bolt (Qty: 2) **Tighten** 10 N·m (89 lb in)
5	Instrument Panel Trim Panel Assembly **Procedure** 1. Note the location and routing of the electrical harness to ensure proper reinstallation. 2. Disconnect the electrical connections. 3. When replacing the instrument panel trim panel assembly, transfer all necessary components.

cardiagn.com

Driver Knee Bolster Replacement

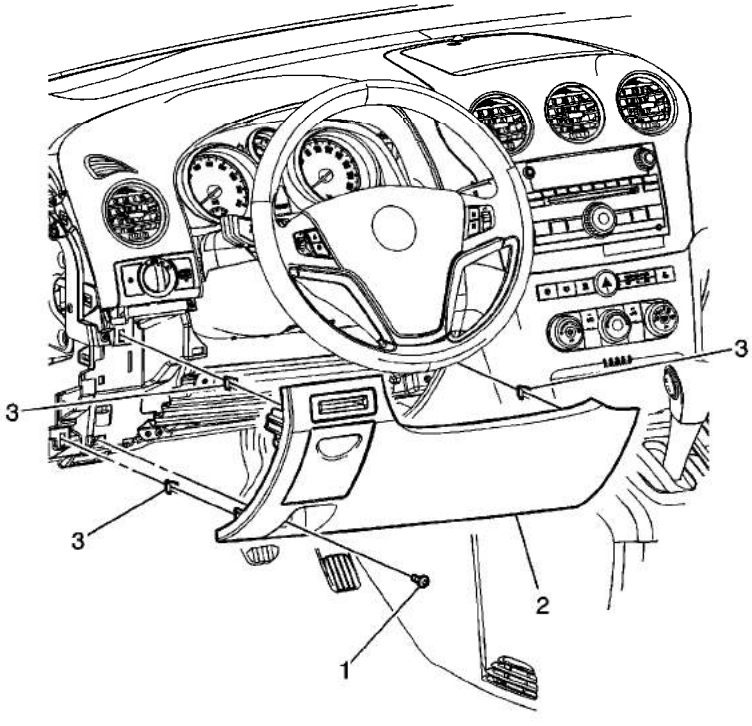

Callout	Component Name
Preliminary Procedure Remove the hood release cable. Refer to Hood Primary Latch Release Cable Handle Replacement.	
1	Knee Bolster Screw **Caution:** Refer to Fastener Caution in the Preface section. **Tighten** 3 N·m (27 lb in)
2	Knee Bolster Assembly
3	Retainer Clip (Qty: 5)

cardiagn.com

Driver Knee Bolster Reinforcement Replacement

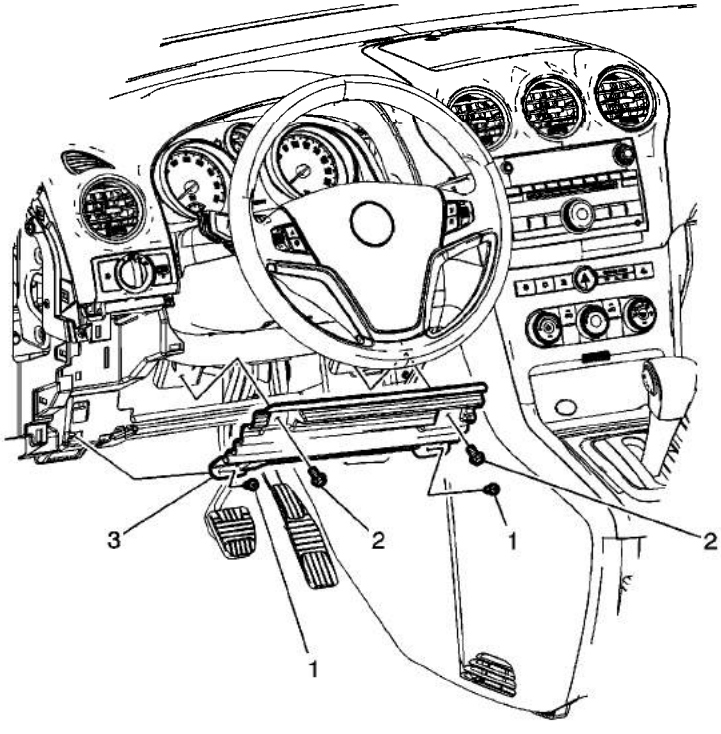

Callout	Component Name
Preliminary Procedure Remove the knee bolster assembly. Refer to Driver Knee Bolster Replacement.	
1	Knee Bolster Reinforcement Upper Bolt (Qty: 2) **Caution:** Refer to Fastener Caution in the Preface section. **Tighten** 20 N·m (15 lb ft)
2	Knee Bolster Reinforcement Lower Bolt (Qty: 2) **Tighten** 20 N·m (15 lb ft)
3	Knee Bolster Reinforcement Assembly

cardiagn.com

Instrument Panel Side Trim Panel Replacement

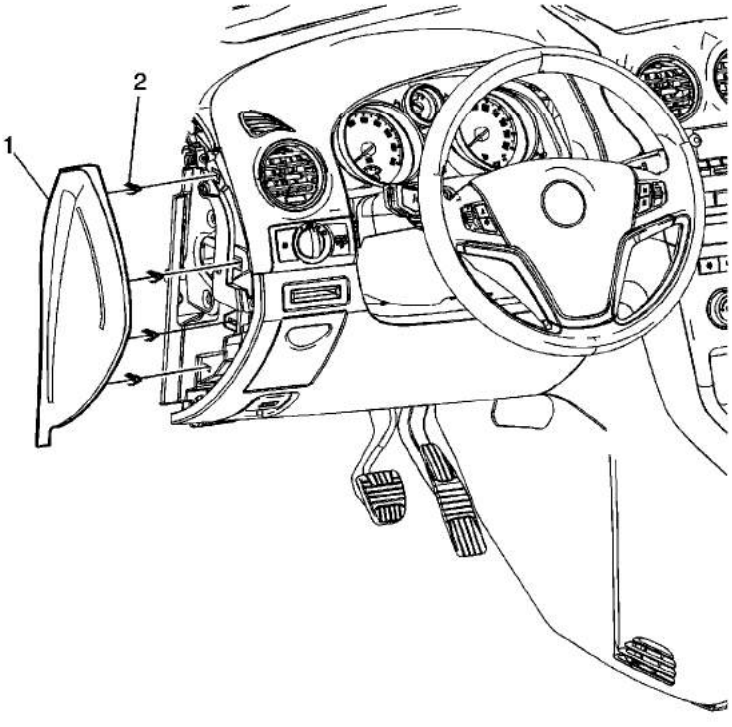

Callout	Component Name
1	Instrument Panel Side Trim Panel Assembly
2	Retainer Clips Qty: (4)

cardiagn.com

Instrument Panel Accessory Bezel Replacement (with U61)

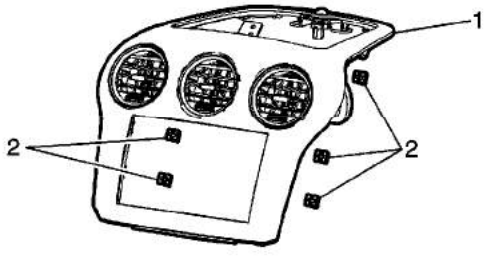

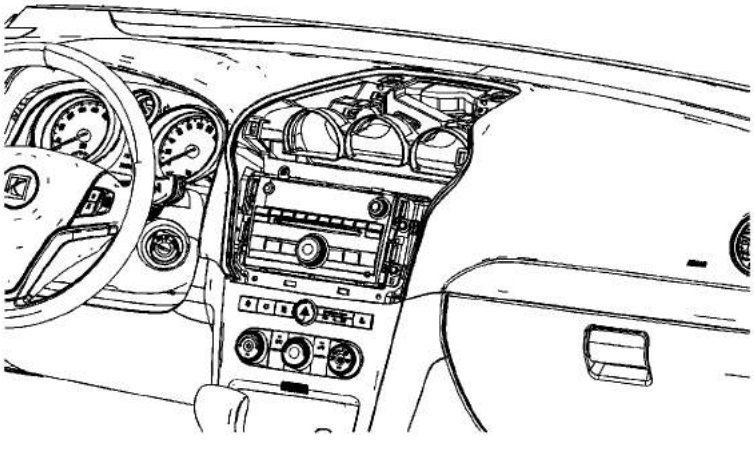

Callout	Component Name
Preliminary Procedure 1. Remove the radio front speaker grill. Refer to Radio Front Speaker Grille Replacement . 2. Remove the radio front speaker. Refer to Radio Front Speaker Replacement . 3. Remove the front floor console accessory trim plate. Refer to Front Floor Console Accessory Trim Plate Replacement .	
1	Instrument Panel Accessory Bezel Assembly **Procedure** 1. Use a flat-bladed plastic trim tool in order to release the accessory bezel from the instrument panel. 2. Disconnect the electrical connectors. 3. When replacing the accessory bezel, transfer all necessary components.
2	Retainer Clip (Qty: 8)

cardiagn.com

Instrument Panel Accessory Bezel Replacement (without U61)

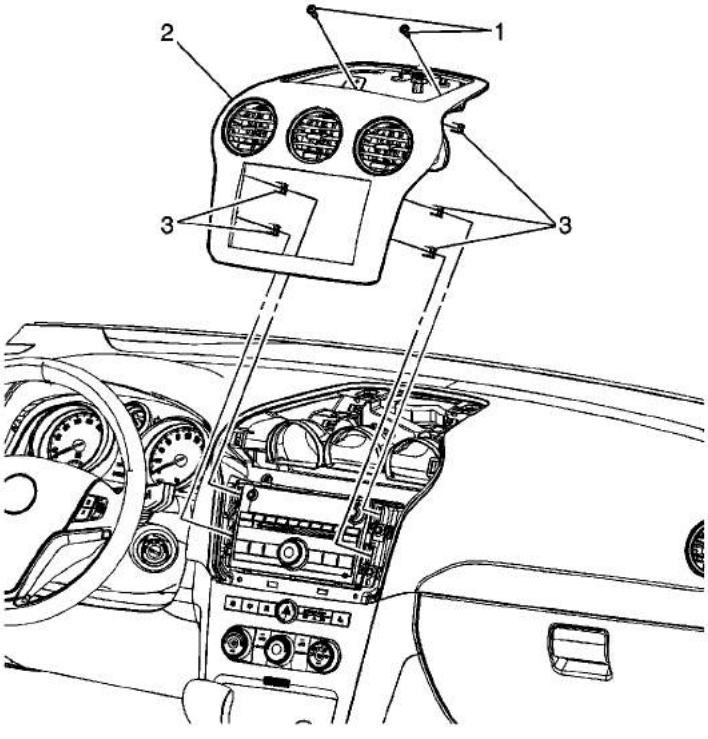

Callout	Component Name
Preliminary Procedures 1. Remove the radio front speaker grill. Refer to Radio Front Speaker Grille Replacement. 2. Remove the front floor console accessory trim plate. Refer to Front Floor Console Accessory Trim Plate Replacement.	
1	Instrument Panel Accessory Bezel Screws (Qty: 2) **Caution:** Refer to Fastener Caution in the Preface section. **Tighten** 3 N·m (27 lb in)
2	Instrument Panel Accessory Bezel Assembly **Procedure** 1. Use a flat-bladed plastic trim tool in order to release the accessory bezel from the instrument panel.

© 2010 General Motors Corporation. All rights reserved.

cardiagn.com

3	Retainer Clip (Qty: 8)

cardiagn.com

Instrument Panel Compartment Replacement

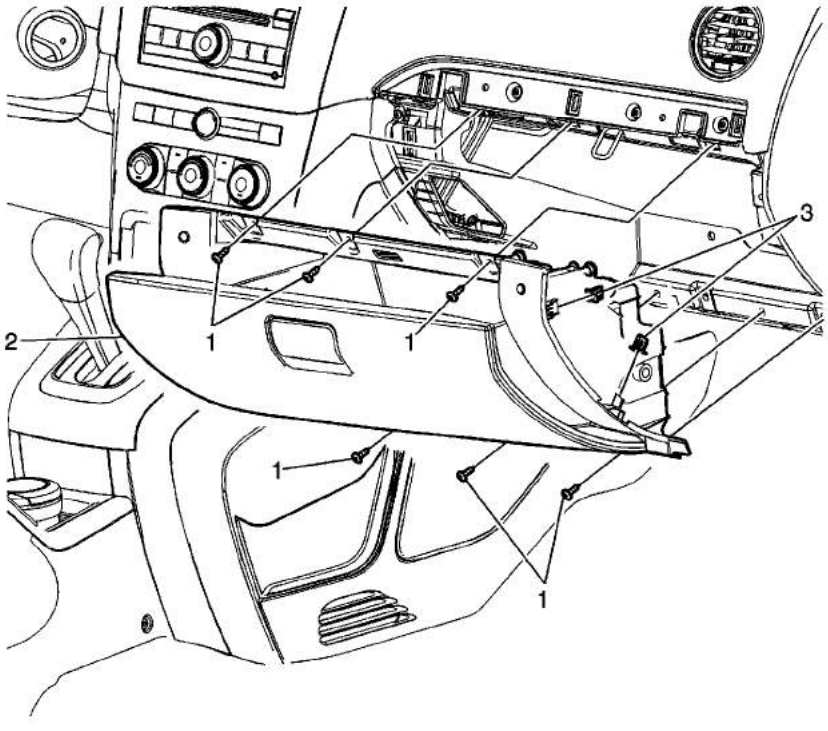

Callout	Component Name
Preliminary Procedure Remove the instrument panel molding assembly. Refer to Instrument Panel Molding Replacement.	
1	Instrument Panel Compartment Screw (Qty: 6) **Caution:** Refer to Fastener Caution in the Preface section. **Tighten** 3 N·m (26 lb in)
2	Instrument Panel Compartment Assembly **Procedure** 1. Disconnect the electrical connections. 2. When replacing the instrument panel compartment assembly, transfer all necessary components.
3	Retainer Clip (Qty: 4)

[redacted]

cardiagn.com

Instrument Panel Lower Compartment Replacement

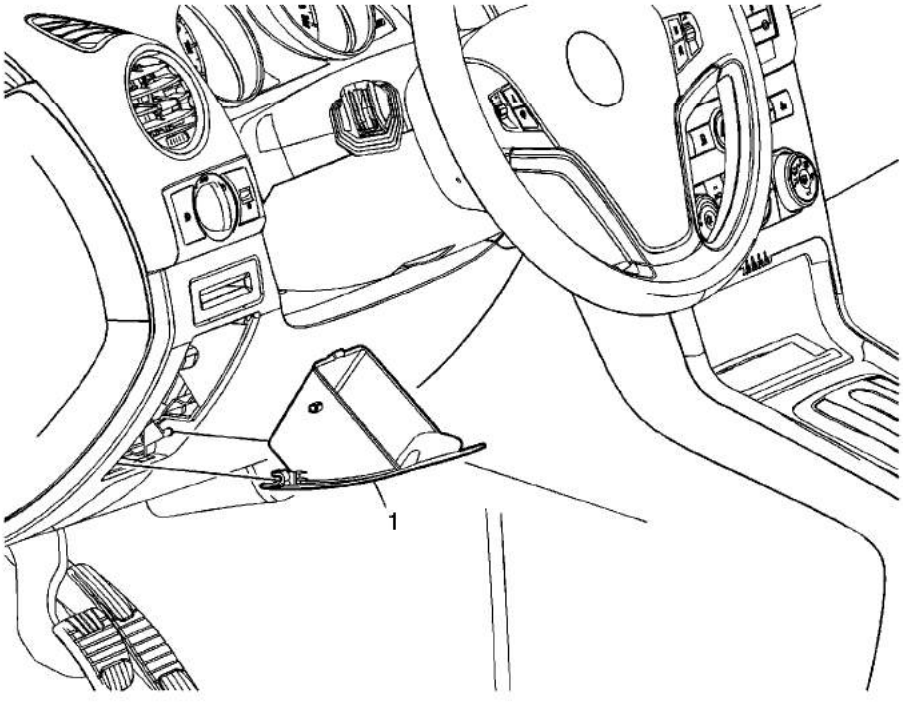

Callout	Component Name
1	Instrument Panel Lower Compartment **Procedure** 1. Open the compartment. 2. Squeeze the sides of the compartment and open past the stops. 3. Unsnap the compartment from the knee bolster area.

cardiagn.com

Instrument Panel Compartment Door Lock Replacement

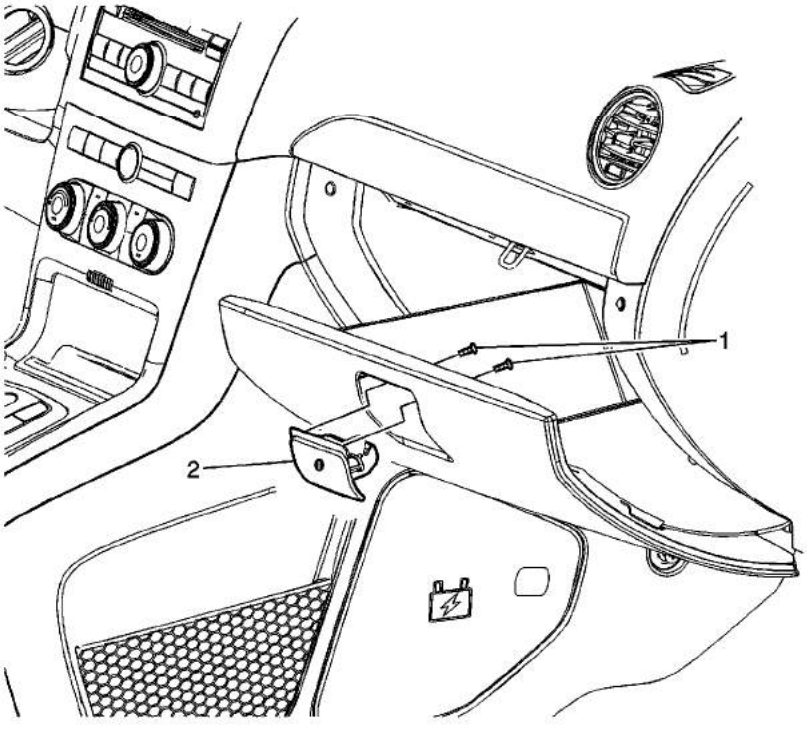

Callout	Component Name
1	Instrument Panel Compartment Door Lock Screw (Qty: 2) **Caution:** Refer to Fastener Caution in the Preface section. **Tighten** 3 N·m (27 lb in)
2	Instrument Panel Compartment Door Lock Assembly

cardiagn.com

Instrument Panel Molding Replacement

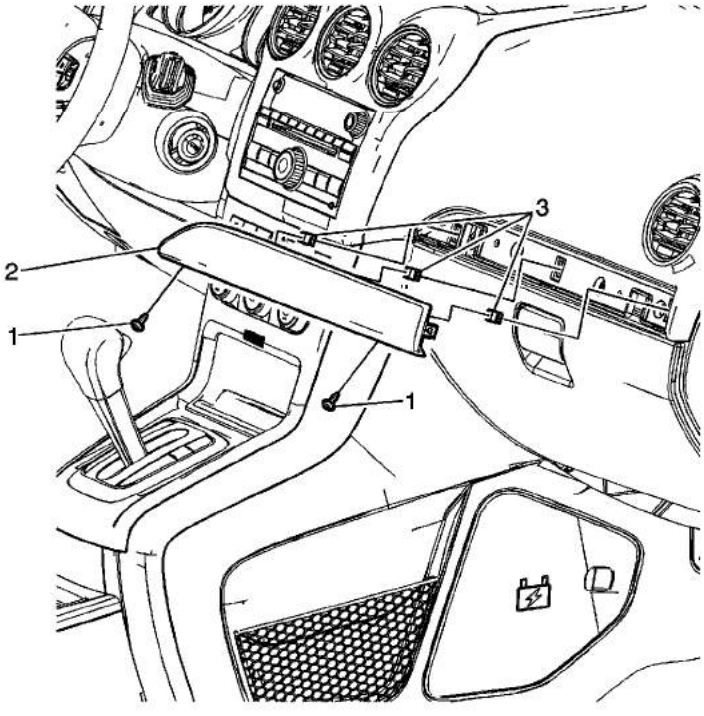

Callout	Component Name
1	Instrument Panel Screw (Qty: 2) **Caution:** Refer to Fastener Caution in the Preface section. **Procedure** Open the instrument panel compartment door to access the screws. **Tighten** 3 N·m (27 lb in)
2	Instrument Panel Molding Assembly **Procedure** Use a flat-bladed plastic trim tool in order to release the molding from the instrument panel.
3	Retainer Clip (Qty: 3)

cardiagn.com

Instrument Panel Assembly Replacement

Removal Procedure

1. Disable the SIR system. Refer to SIR Disabling and Enabling.
2. Disconnect the battery negative cable. Refer to Battery Negative Cable Disconnection and Connection.
3. Remove the heater hoses from the heater core. Refer to Heater Inlet Hose Replacement and Heater Outlet Hose Replacement.
4. Remove the air conditioning lines from the thermal expansion valve. Refer to Liquid Line Replacement and Evaporator Outlet Hose Replacement.

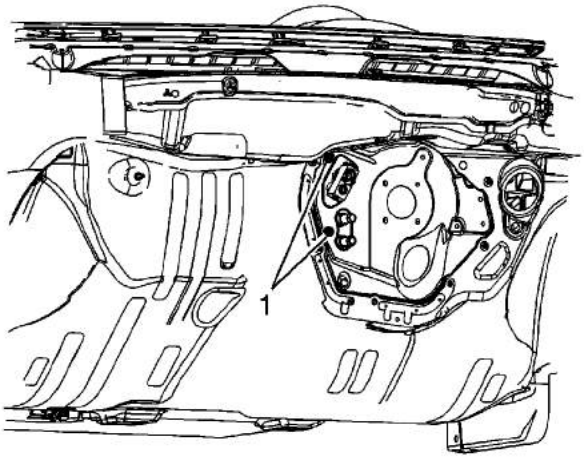

5. Remove the nuts (1) securing the HVAC module to the mod plate.
6. Remove the front seats. Refer to Front Seat Replacement - Bucket.
7. Remove the front floor console. Refer to Front Floor Console Replacement.
8. Remove the front floor console extension panel assembly. Refer to Front Floor Console Extension Panel Replacement.
9. Remove the transmission control bracket. Refer to Transmission Control Bracket Replacement for the 4T45-E transaxle or Transmission Control Bracket Replacement for the 6T70/6T75 transmission.
10. Remove the windshield pillar garnish moldings. Refer to Windshield Pillar Garnish Molding Replacement.
11. Remove the front floor carpet retainers. Refer to Front Side Door Opening Floor Carpet Retainer Replacement.

cardiagn.com

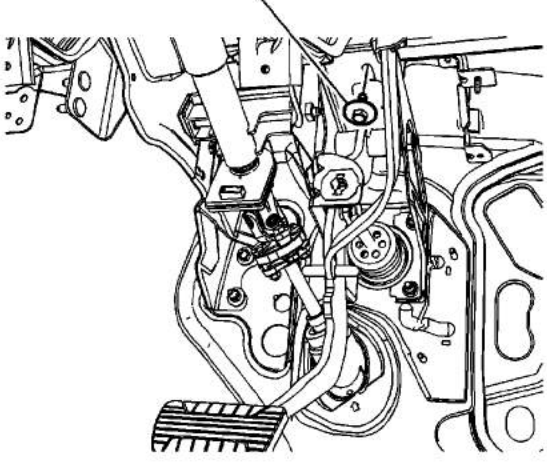

12. Remove the brake pedal bracket to tie bar bolt (1).
13. Remove the steering column assembly. Refer to Steering Column Replacement.

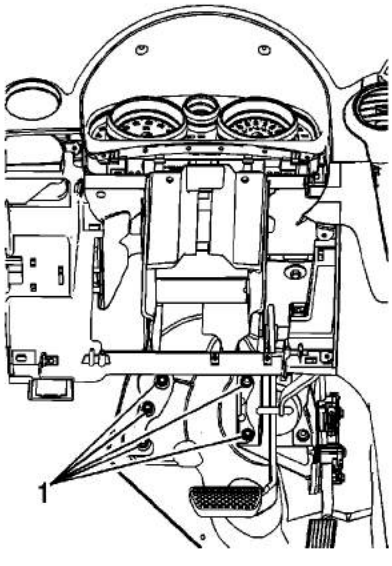

14. Remove the nuts (1) securing the instrument tie bar to the mod plate.
15. Remove the instrument panel cluster assembly. Refer to Instrument Cluster Replacement.
16. Remove the radio. Refer to Radio Replacement.

Note: Note the location and routing of the electrical harness prior to disconnecting or removing in order to ensure the proper reinstallation.

17. Disconnect the instrument panel wiring harness connectors and ground straps at the following locations.
    - At both windshield pillars
    - At both "H" pillars

cardiagn.com

Junction Block Replacement.

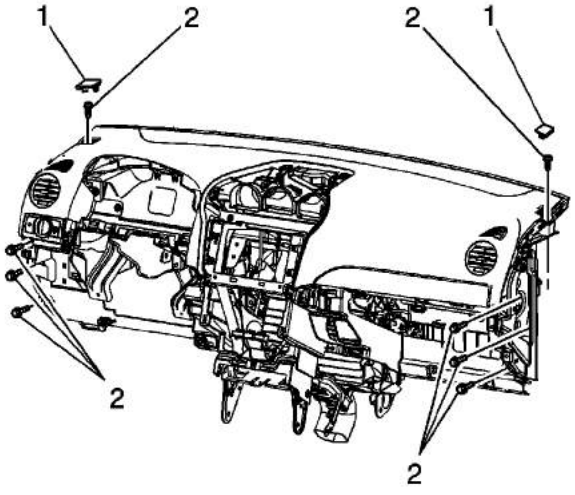

19. Remove the instrument panel bolt covers (1).
20. Remove the instrument panel bolts (2).
21. With the aid of an assistant remove the instrument panel assembly from the vehicle.
22. Once the assembly is outside the vehicle, adequately support the assembly to avoid damage.

Installation Procedure

Note: Installing the instrument panel assembly to the vehicle requires 3 people. Two within the passenger compartment and one in the engine compartment.

1. The two people within the passenger compartment will be supporting the assembly, while aligning it to the vehicle.
2. Slowly push the assembly forward while the person in the engine compartment guides the heater core tubes, thermal expansion valve and the HVAC module locating studs through the openings in the mod plate.

   Caution: Refer to Fastener Caution in the Preface section.

cardiagn.com

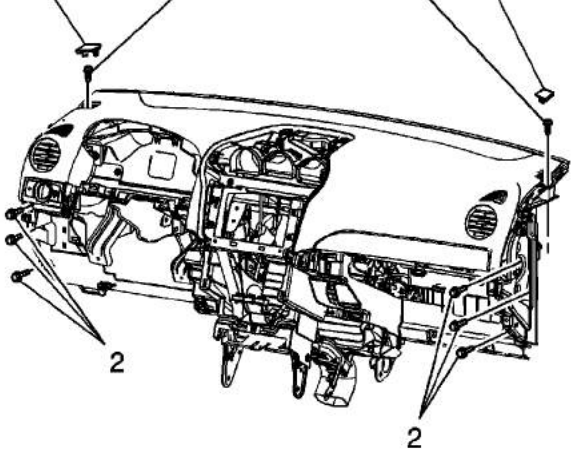

3. Install the instrument panel bolts (2).

   Tighten
   Tighten the bolt to 20 N·m (15 lb ft).

4. Install the instrument panel bolt covers (1).
5. Install the instrument panel electrical center. Refer to Instrument Panel Wiring Harness Junction Block Replacement.
6. Connect the instrument panel electrical connectors and ground straps at the following locations.
   - At the steering column bracket
   - At both "H" pillars
   - At both windshield pillars
7. Install the radio. Refer to Radio Replacement.
8. Install the instrument panel cluster assembly. Refer to Instrument Cluster Replacement.

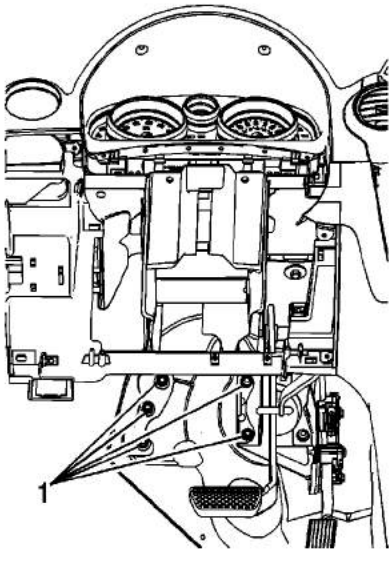

cardiagn.com

9. Install the instrument panel tie bar to mod plate nuts (1).

   Tighten
   Tighten the nuts to 25 N·m (18 lb ft).

10. Install the steering column. Refer to Steering Column Replacement.

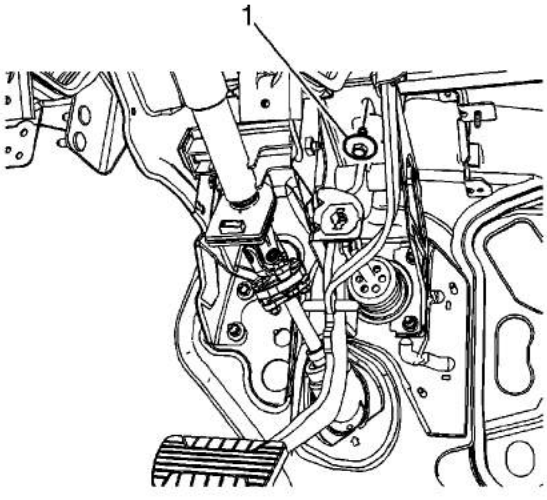

11. Install the brake pedal bracket to instrument panel tie bar bolt (1).

    Tighten
    Tighten the bolt to 25 N·m (18 lb ft).

12. Install the front carpet retainers. Refer to Front Side Door Opening Floor Carpet Retainer Replacement.
13. Install the windshield pillar garnish moldings. Refer to Windshield Pillar Garnish Molding Replacement.
14. Install the transmission control bracket. Refer to Transmission Control Bracket Replacement for the 4T45-E transaxle or Transmission Control Bracket Replacement for the 6T70/6T75 transmission.
15. Install the front floor console extension panel assembly. Refer to Front Floor Console Extension Panel Replacement.
16. Install the front floor console. Refer to Front Floor Console Replacement.
17. Install the front seats. Refer to Front Seat Replacement - Bucket.

cardiagn.com

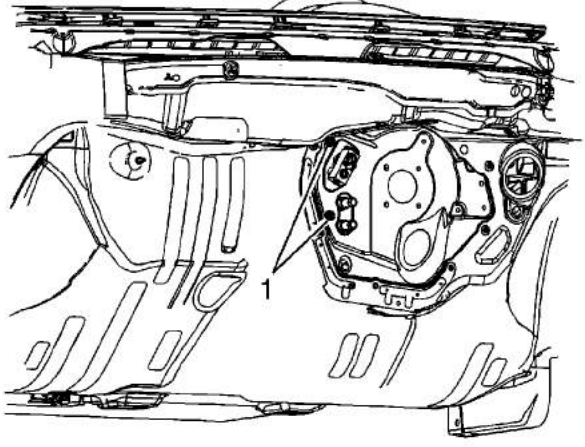

18. Install the HVAC module nuts (2).

    Tighten
    Tighten the bolt to 4 N·m (35 lb in).

19. Install the air conditioning lines to the thermal expansion valve. Refer to Liquid Line Replacement and Evaporator Outlet Hose Replacement.
20. Install the heater hoses to the heater core. Refer to Heater Inlet Hose Replacement and Heater Outlet Hose Replacement.
21. Connect the battery negative cable. Refer to Battery Negative Cable Disconnection and Connection.
22. Enable the SIR system. Refer to SIR Disabling and Enabling.
23. Reprogram the HVAC system, radio and body control module. Refer to Control Module References.

cardiagn.com

Instrument Panel Retainer Replacement

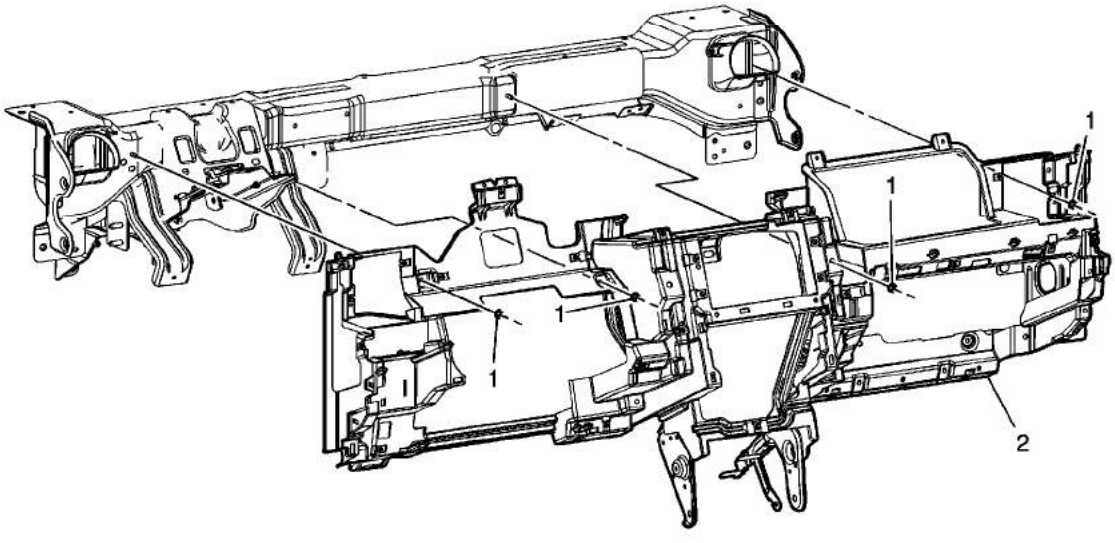

Callout	Component Name
Caution: To avoid damage to the vehicle and/or the components of the instrument panel because of hidden fasteners and retainers the instrument panel must be removed from the vehicle as an assembly. **Preliminary Procedures** 1. Remove the instrument panel assembly. Refer to Instrument Panel Assembly Replacement. 2. Remove the HVAC module assembly. Refer to HVAC Module Assembly Replacement. 3. Remove the instrument panel trim panel assembly. Refer to Instrument Panel Trim Panel Replacement.	
1	Instrument Panel Retainer Nut (Qty: 4) **Caution:** Refer to Fastener Caution in the Preface section. **Tighten** 20 N·m (15 lb ft)
	Instrument Panel Retainer Assembly

© 2010 General Motors Corporation. All rights reserved.

cardiagn.com

2	1. Note the location and routing of the instrument panel wiring harness to ensure proper reinstallation. 2. Disconnect the instrument panel wiring harness from the instrument panel retainer. 3. When replacing the instrument panel retainer assembly, transfer all necessary components.

cardiagn.com

Instrument Panel Tie Bar Replacement

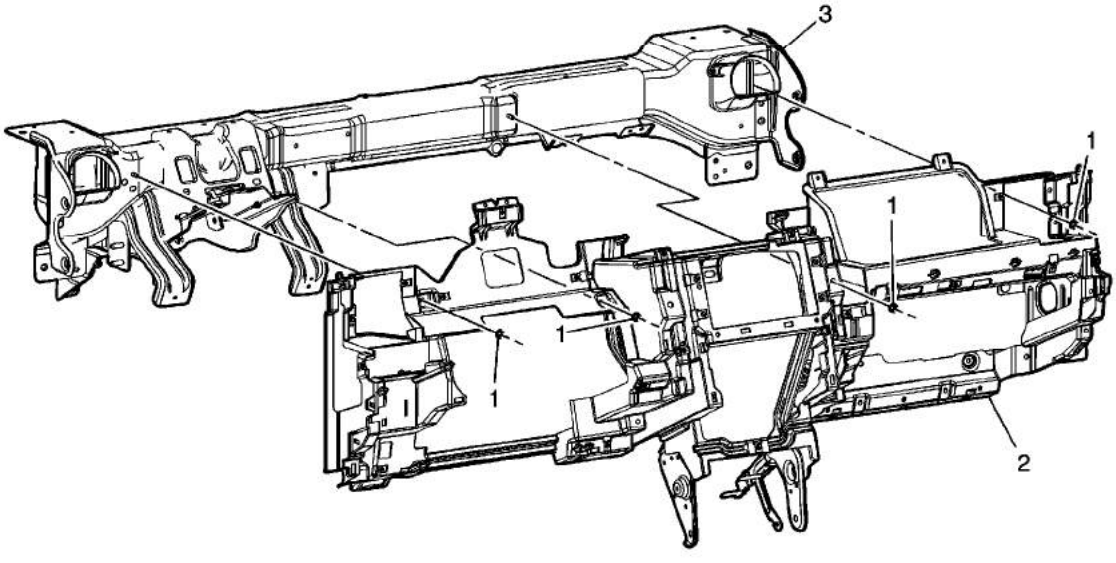

Callout	Component Name
Caution: To avoid damage to the vehicle and/or the components of the instrument panel because of hidden fasteners and retainers the instrument panel must be removed from the vehicle as an assembly. **Preliminary Procedures** 1. Remove the instrument panel assembly. Refer to Instrument Panel Assembly Replacement. 2. Remove the HVAC module assembly. Refer to HVAC Module Assembly Replacement. 3. Remove the instrument panel trim panel assembly. Refer to Instrument Panel Trim Panel Replacement.	
1	Instrument Panel Retainer Nut (Qty: 4) **Caution:** Refer to Fastener Caution in the Preface section. **Tighten** 20 N·m (15 lb ft)
	Instrument Panel Retainer Assembly

© 2010 General Motors Corporation. All rights reserved.

cardiagn.com

2	1. Note the location and routing of the instrument panel wiring harness to ensure proper reinstallation. 2. Disconnect the instrument panel wiring harness from the instrument panel retainer. 3. When replacing the instrument panel retainer assembly, transfer all necessary components.
3	Instrument Panel Tie Bar Assembly **Procedure** When replacing the instrument panel tie bar assembly, transfer all necessary components.

cardiagn.com

Front Floor Console Storage Tray Replacement

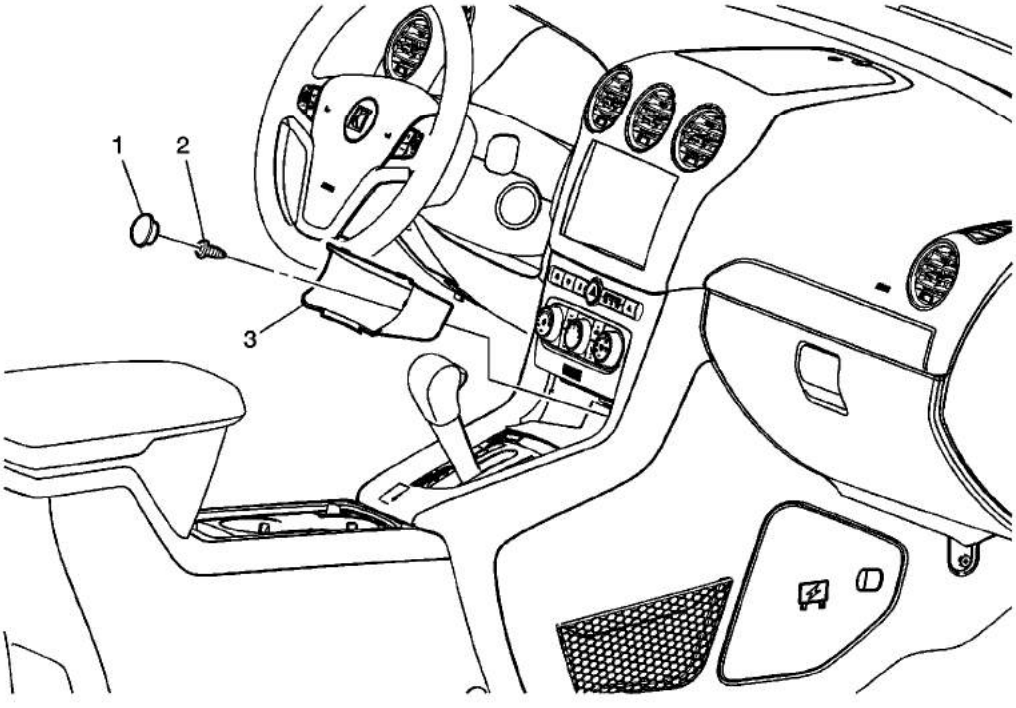

Callout	Component Name
1	Fastener Cover (Qty: 1)
2	Front Floor Console Storage Tray Fastener (Qty: 1) **Tighten** 2 N·m (18 lb in)
3	Front Floor Console Storage Tray Assembly

cardiagn.com

Front Floor Console Compartment Replacement

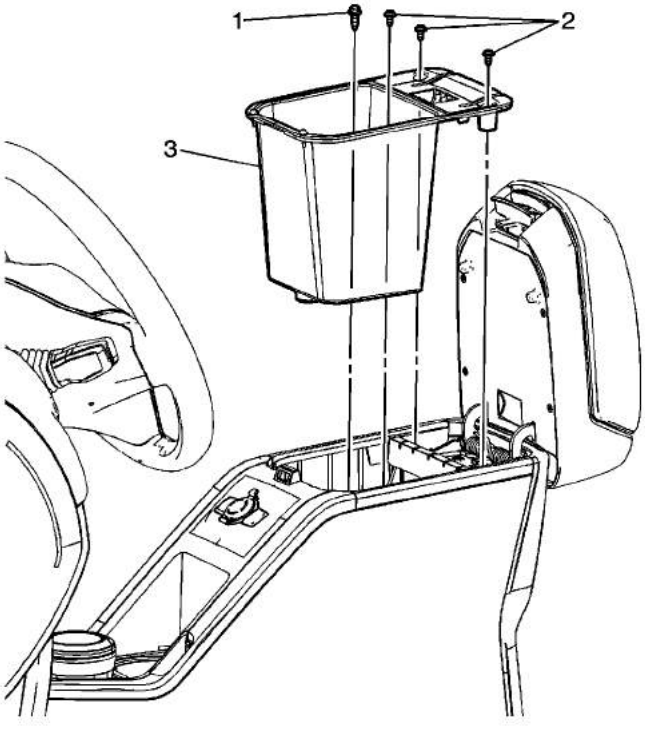

Callout	Component Name
1	Front Floor Console Bolt (Qty: 1) **Caution:** Refer to Fastener Caution in the Preface section. **Tighten** 8 N·m (71 lb in)
2	Front Floor Console Screw (Qty: 3) **Tighten** 2 N·m (18 lb in)
3	Front Floor Console Bin Assembly

cardiagn.com

Front Floor Console Accessory Trim Plate Replacement

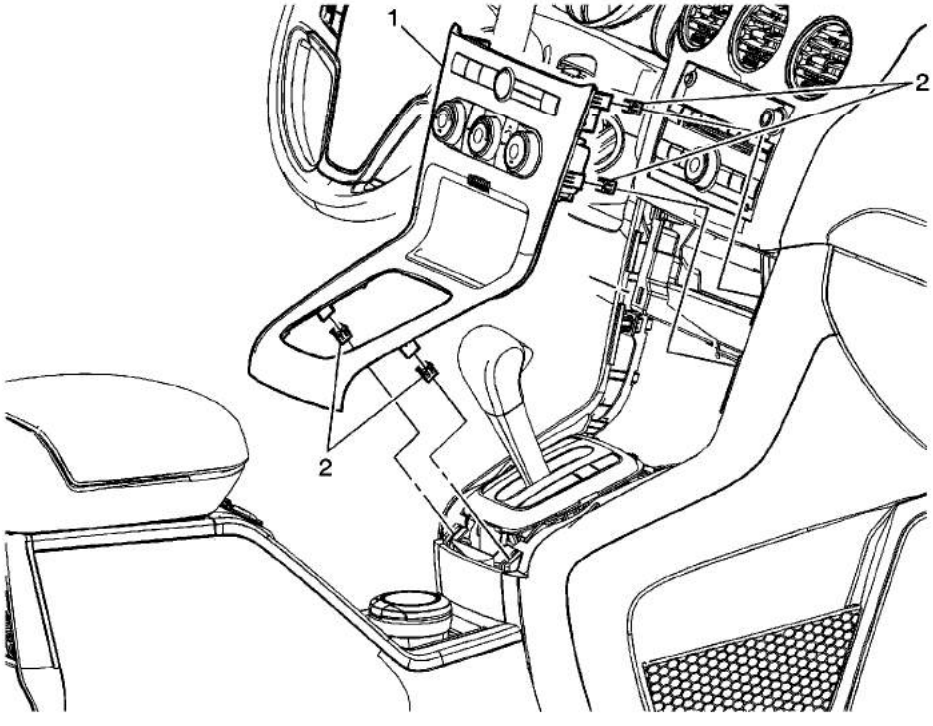

Callout	Component Name
Preliminary Procedure Remove the front floor console storage bin. Refer to Front Floor Console Storage Tray Replacement.	
1	Front Floor Console Accessory Trim Plate Assembly **Procedure** 1. Starting in the lower left corner of the accessory trim, insert a flat bladed plastic trim tool between the trim plate and the edge of the console, pull on the accessory trim outward as you slide the trim tool upward until all clips are disengaged. 2. Repeat step 1 on the right side of the accessory trim plate. 3. Disconnect the electrical connections. 4. When replacing the front floor console accessory trim plate, transfer all necessary components.
2	Retainer Clip (Qty: 8)

cardiagn.com

Front Floor Console Extension Panel Replacement

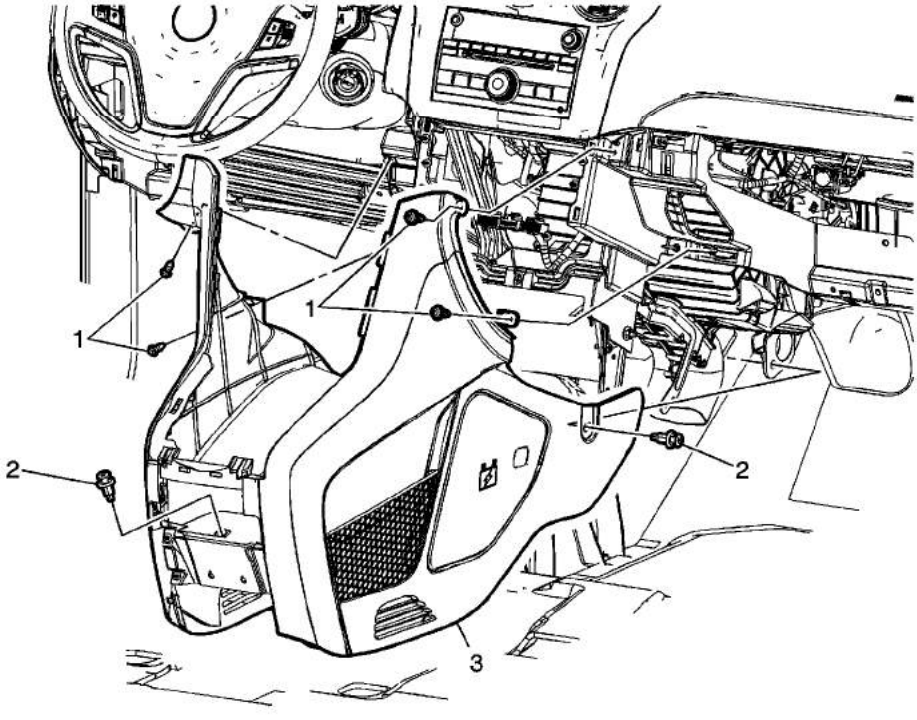

Callout	Component Name
Preliminary Procedures 1. Remove the knee bolster assembly. Refer to Driver Knee Bolster Replacement. 2. Remove the instrument panel compartment assembly. Refer to Instrument Panel Compartment Replacement. 3. Remove the front floor console. Refer to Front Floor Console Replacement. 4. Remove the front floor console accessory trim plate. Refer to Front Floor Console Accessory Trim Plate Replacement.	
1	Front Floor Console Extension Panel Screw (Qty: 4) **Caution:** Refer to Fastener Caution in the Preface section. **Tighten** 2 N·m (18 lb in)
2	Front Floor Console Extension Panel Push Pin Retainer (Qty: 3)
3	Front Floor Console Extension Panel Assembly

cardiagn.com

Front Floor Console Replacement

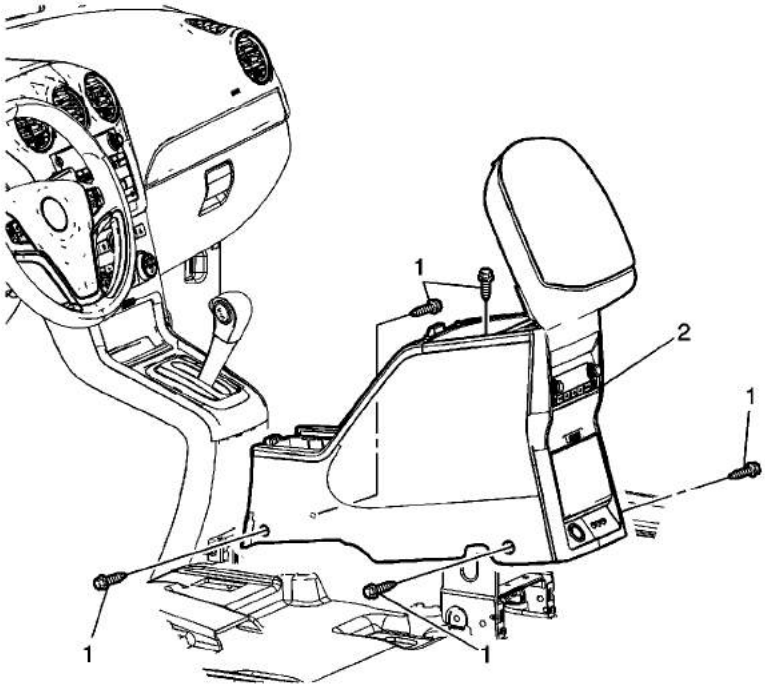

Callout	Component Name
Preliminary Procedures 1. Remove the front floor console front cover replacement. Refer to Front Floor Rear Console Front Cover Replacement. 2. Remove the front floor console trim plate. Refer to Front Floor Console Trim Plate Replacement. 3. Remove the front seats. Refer to Front Seat Replacement - Bucket.	
1	Front Floor Console Bolt (Qty: 5) **Caution:** Refer to Fastener Caution in the Preface section. **Tighten** 8 N·m (71 lb in)
2	Front Floor Console Assembly **Procedure** 1. Disconnect the electrical connections. 2. When replacing the front floor console, transfer all necessary components.

cardiagn.com

Front Floor Console Armrest Replacement

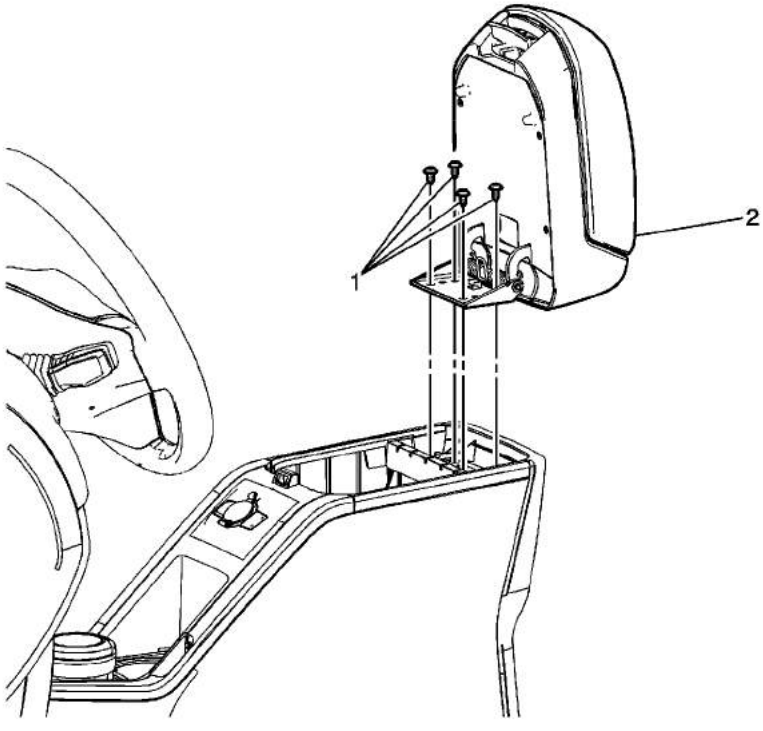

Callout	Component Name
Preliminary Procedure Remove the Front Floor Console Bin Assembly. Refer to Front Floor Console Compartment Replacement.	
1	Front Floor Console Armrest Screw (Qty: 4) **Caution:** Refer to Fastener Caution in the Preface section. **Tighten** 2 N·m (18 lb in)
2	Front Floor Console Armrest Assembly

cardiagn.com

Front Floor Console Trim Plate Replacement

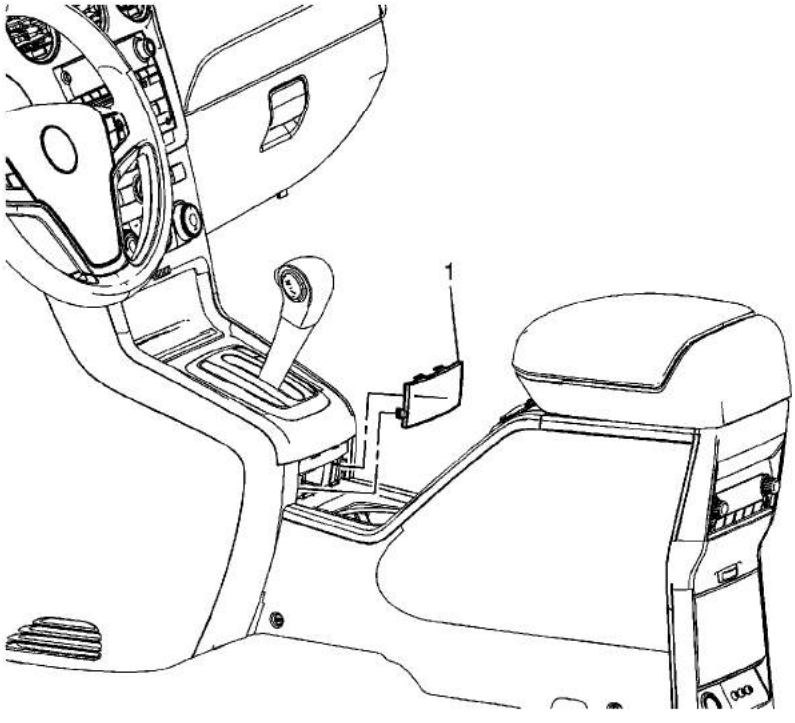

Callout	Component Name
1	Front Floor Console Trim Plate **Procedure** Use a flat bladed plastic trim tool in order to disengage the console trim plate from the console assembly.

cardiagn.com

Front Floor Console Rear Cover Replacement

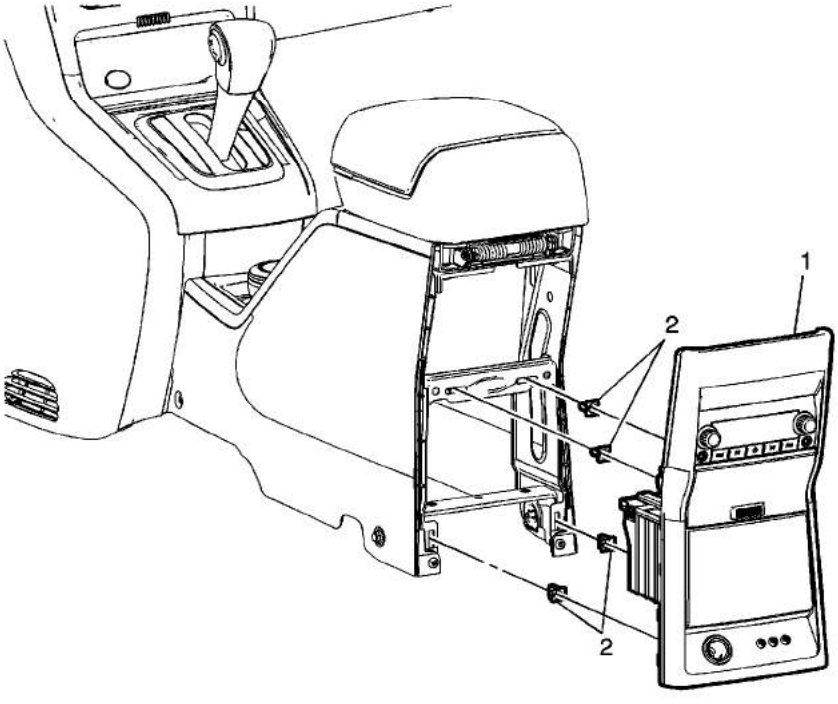

Callout	Component Name
Preliminary Procedure Remove the console bin. Refer to Front Floor Console Compartment Replacement.	
1	Front Floor Rear Console Rear Cover Assembly **Procedure** 1. Disconnect the electrical connections. 2. When replacing the rear cover assembly, transfer all necessary components.
2	Retainer Clips (Qty: 4)

cardiagn.com

Front Floor Rear Console Front Cover Replacement

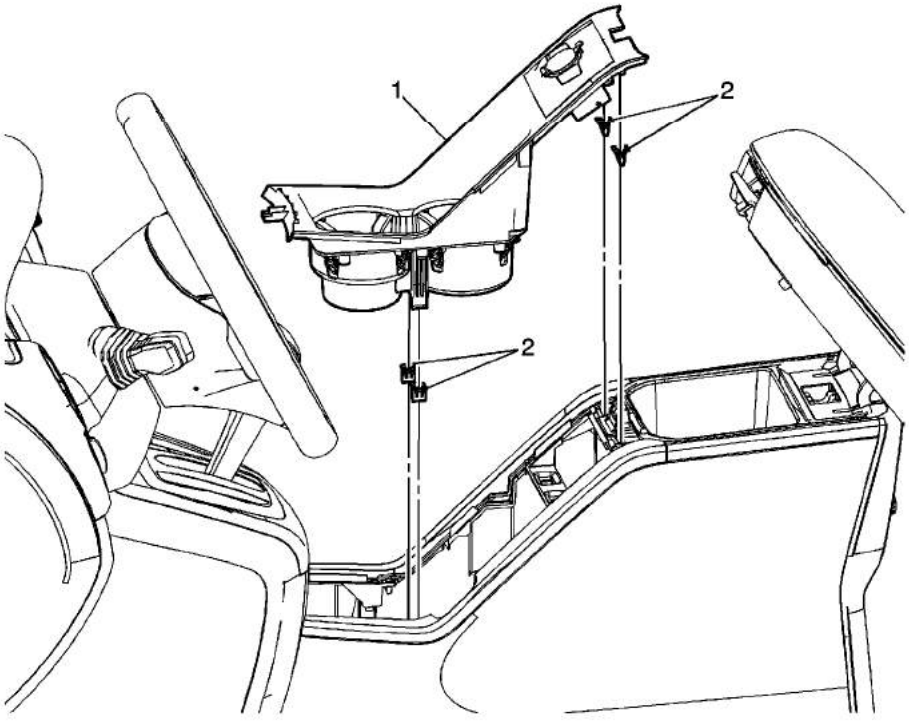

Callout	Component Name
1	Front Floor Console Front Cover Assembly **Preliminary Procedure** 1. Disconnect the electrical connections. 2. When replacing the front floor console front cover, transfer all necessary components.
2	Retainer Clips (Qty: 6)

cardiagn.com

Roof Rear Console Replacement

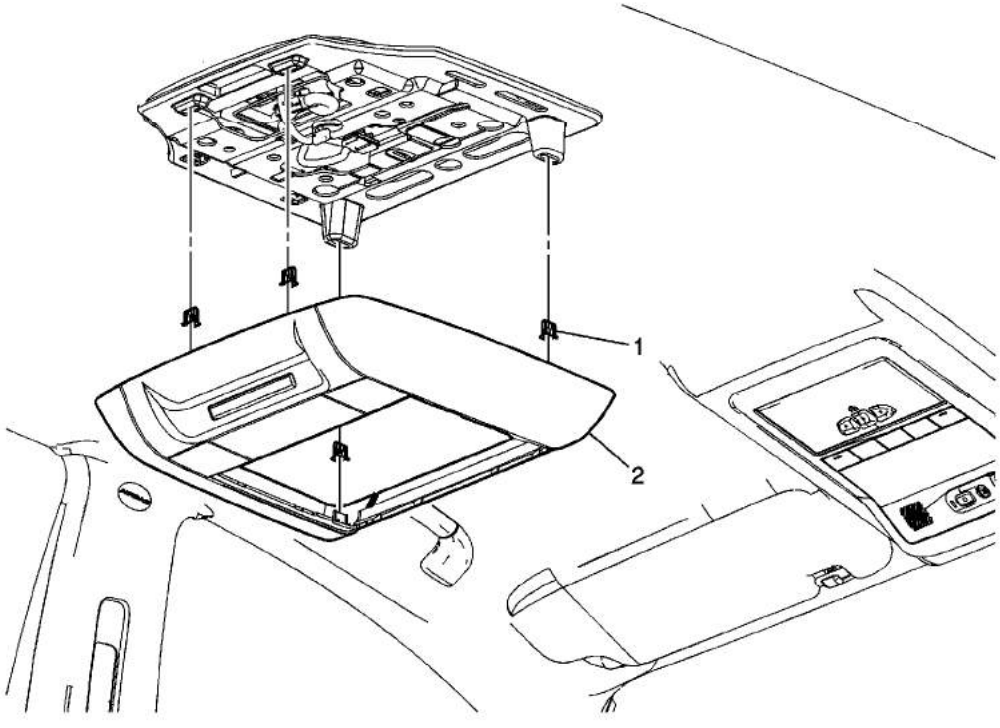

Callout	Component Name
Preliminary Procedure Remove the video display assembly. Refer to Video Display Replacement .	
1	Roof Console Retainer (Qty: 4)
2	Roof Console Assembly **Procedure** 1. Pull down to disengage the retainer clips. 2. Disconnect the electrical connectors. 3. If replacing the rear roof console, transfer all necessary components.

cardiagn.com