Service Training

Audi A4 ‘08

Self-Study Programme 409

Engine-gearbox combinations

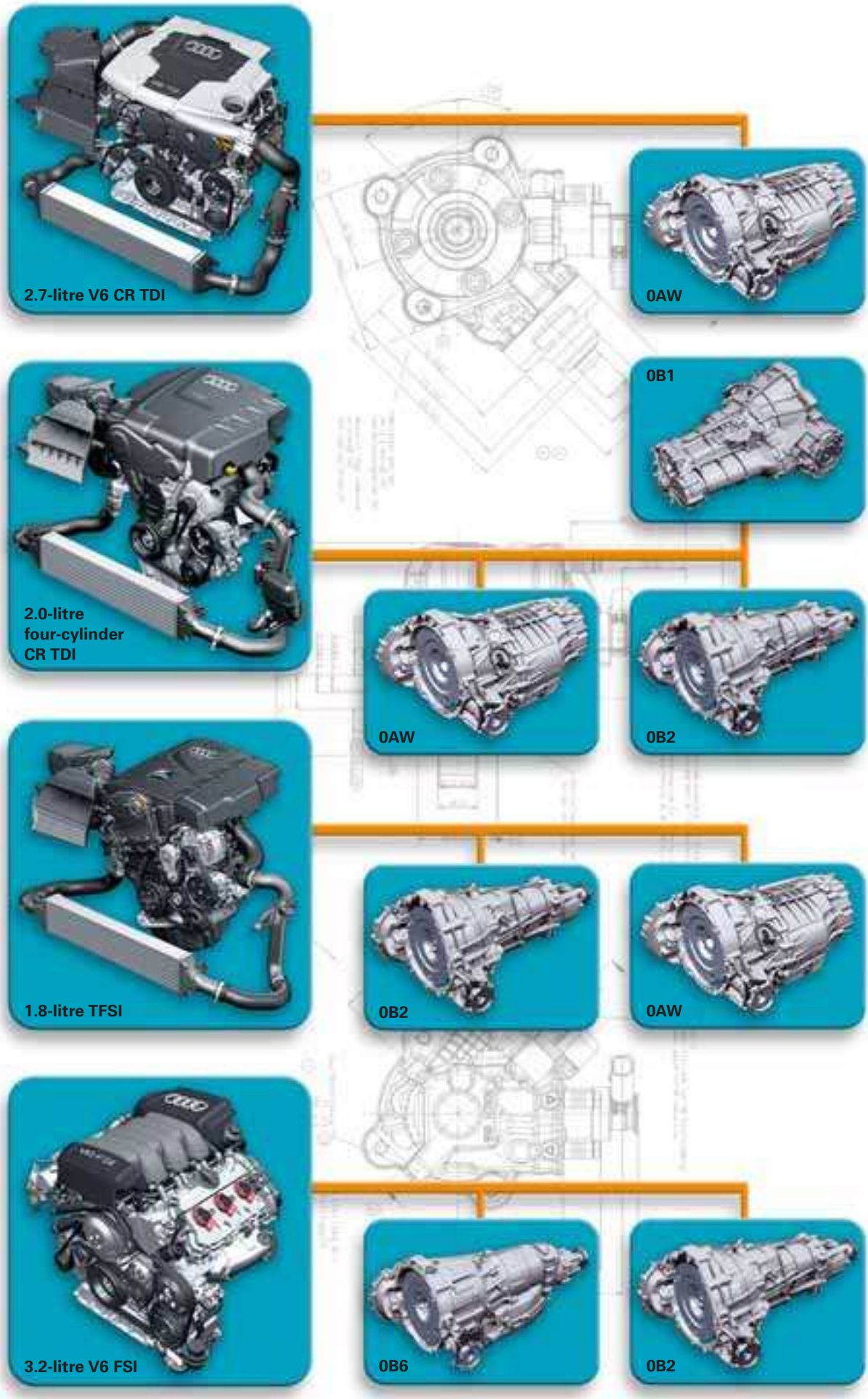

Contents

Introduction 4

Body 6

Occupant protection 8

Engine 14

Gearbox 24

Suspension 39

Electrical system 46

Infotainment 62

Air conditioning 64

Service 72

The Self-Study Programme teaches the design and function of new vehicle models, automotive components or technologies.

The Self-Study Programme is not a Repair Manual!
The values given are intended as a guideline only and refer to the software version valid at the time of publication of the SSP.

For information about maintenance and repair work, always refer to the current technical literature.

Reference

Note

Overview

Dimensions

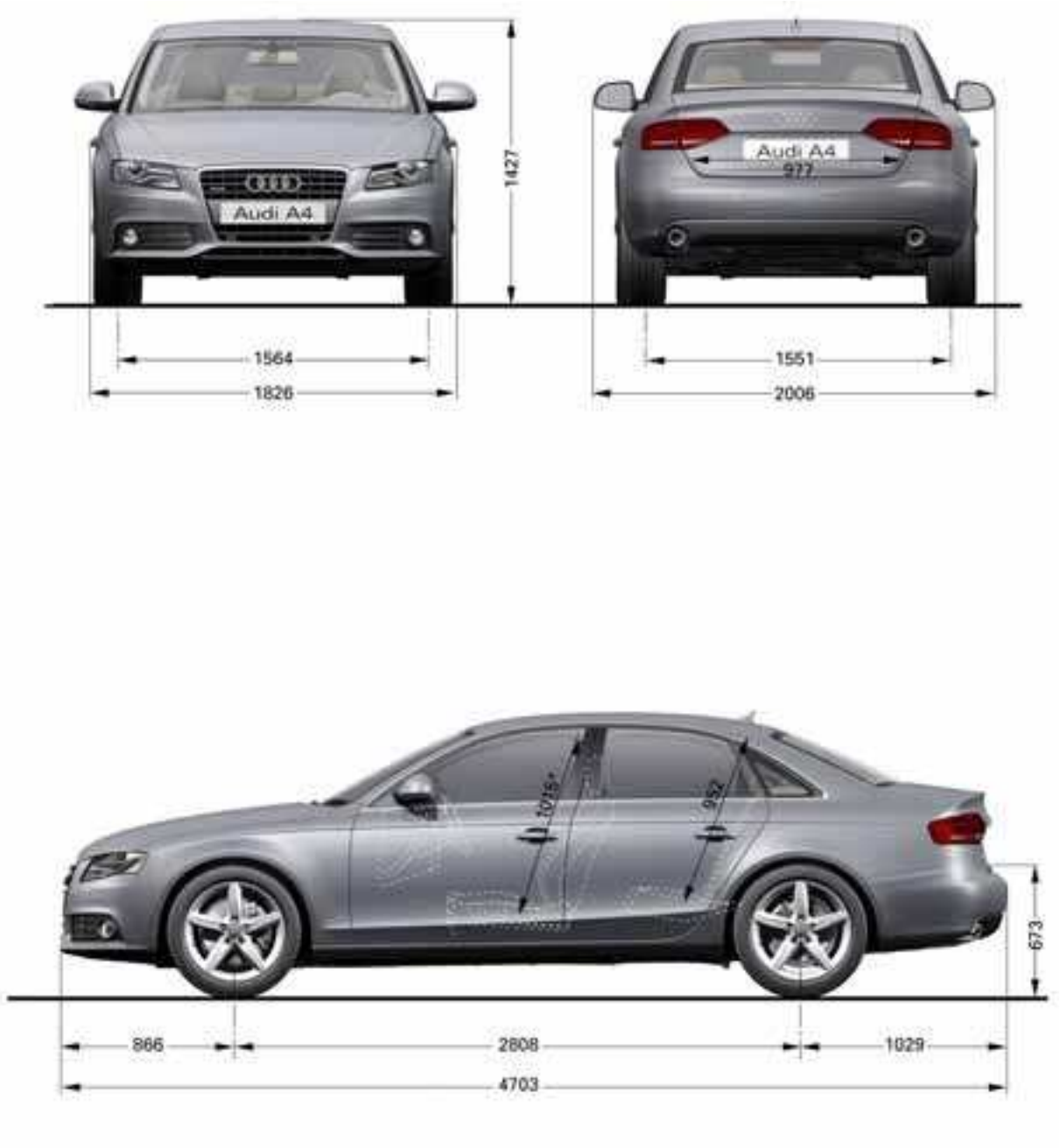

409_109

* max. headroom

409_109

Length in mm	4703	**Front inner width** in mm	1410
Width in mm	1826	**Rear inner width** in mm	1380
Height in mm	1427	**Front headroom** in mm	1015
Front track width in mm	1564	**Rear headroom** in mm	952
Rear track width in mm	1551	**Through-loading width** in mm	1000
Wheelbase in mm	2808	**Loading sill height**in mm	673
Trailer load in kg	750 / 1900	**Luggage capacity** in l	480
Kerb weight in kg	1460	**Tank capacity** in l	70
Max. allowable gross weight in kg	2010	**Drag coefficient** in cw	0.27

Explosion/materials

- Soft deep-drawn steel
- High-strength steel
- Higher-strength steel
- Ultra high-strength steel
- Hot-formed (die-quenched) steel
- Aluminium

409_057

Occupant protection system on the Audi A4 '08

The restraint systems in the Audi A4 '08 have largely similar components and functions to the systems on the Audi A5. Due to the new body design, however, several components have been adapted to meet the new requirements.
For further information regarding the restraint systems, please refer to Self-Study Programme 392 "Audi A5".
The diagrams and figures shown in the chapter on "Occupant protection" are intended to aid understanding.

The occupant protection system on the Audi A4 '08 is comprised of the following components and systems:

- Airbag control unit
- Driver airbag, adaptive
- Front passenger airbag, adaptive
- Front side airbags
- Head airbags (sideguard)
- Front airbag crash sensors (upfront sensors)
- Crash sensors for side impact detection in the doors
- Crash sensors for side impact detection on the C-post
- Front belt tensioners with switchable belt force limiter
- Battery disconnect device
- Seat belt reminder for driver and front passenger
- Seat belt switch, driver and front passenger side
- Seat occupancy sensor in the front passenger seat
- Driver and front passenger seat position sensors
- backguard

The vehicle may also be equipped with rear side airbags and/or a key-operated switch for deactivating the front passenger front airbag with associated warning lamp.

Due to the different market-specific requirements and statutory provisions incumbent upon vehicle manufacturers, equipment specifications may vary. This applies in particular to the US market.

Legend:

E24	Driver side belt switch
E25	Front passenger side belt switch
E224	Airbag disabling key switch, front passenger side (optional)
G128	Seat occupancy sensor, front passenger side
G179	Side airbag crash sensor, driver side (driver door)
G180	Side airbag crash sensor, front passenger side (front passenger door)
G256	Rear side airbag crash sensor, driver side (C-post)
G257	Rear side airbag crash sensor, front passenger driver side (C-post)
G283	Driver side front airbag crash sensor (left front end)
G284	Front passenger side front airbag crash sensor (right front end)
G551	Belt force limiter, driver side
G552	Belt force limiter, front passenger side
G553	Seat position sensor, driver side
G554	Seat position sensor, front passenger side
J234	Airbag control unit
J285	Control unit with display in dash panel insert
J393	Convenience system central control unit
J533	Data bus diagnostic interface (gateway)
J623	Engine control unit
K19	Seat belt warning system warning lamp
K75	Airbag warning lamp
K145	Passenger airbag OFF warning lamp (optional)
N95	Airbag igniter, driver side
N131	Front passenger side airbag igniter 1
N132	Front passenger side airbag igniter 2
N153	Driver seat belt tensioner igniter -1-
N154	Front passenger seat belt tensioner igniter -1-
N199	Side airbag igniter, driver side
N200	Side airbag igniter, front passenger side
N250	Driver side airbag igniter -2-
N251	Driver side curtain airbag igniter
N252	Front passenger side curtain airbag igniter
N253	Battery isolation igniter
T16	16-pin connector, diagnostic port

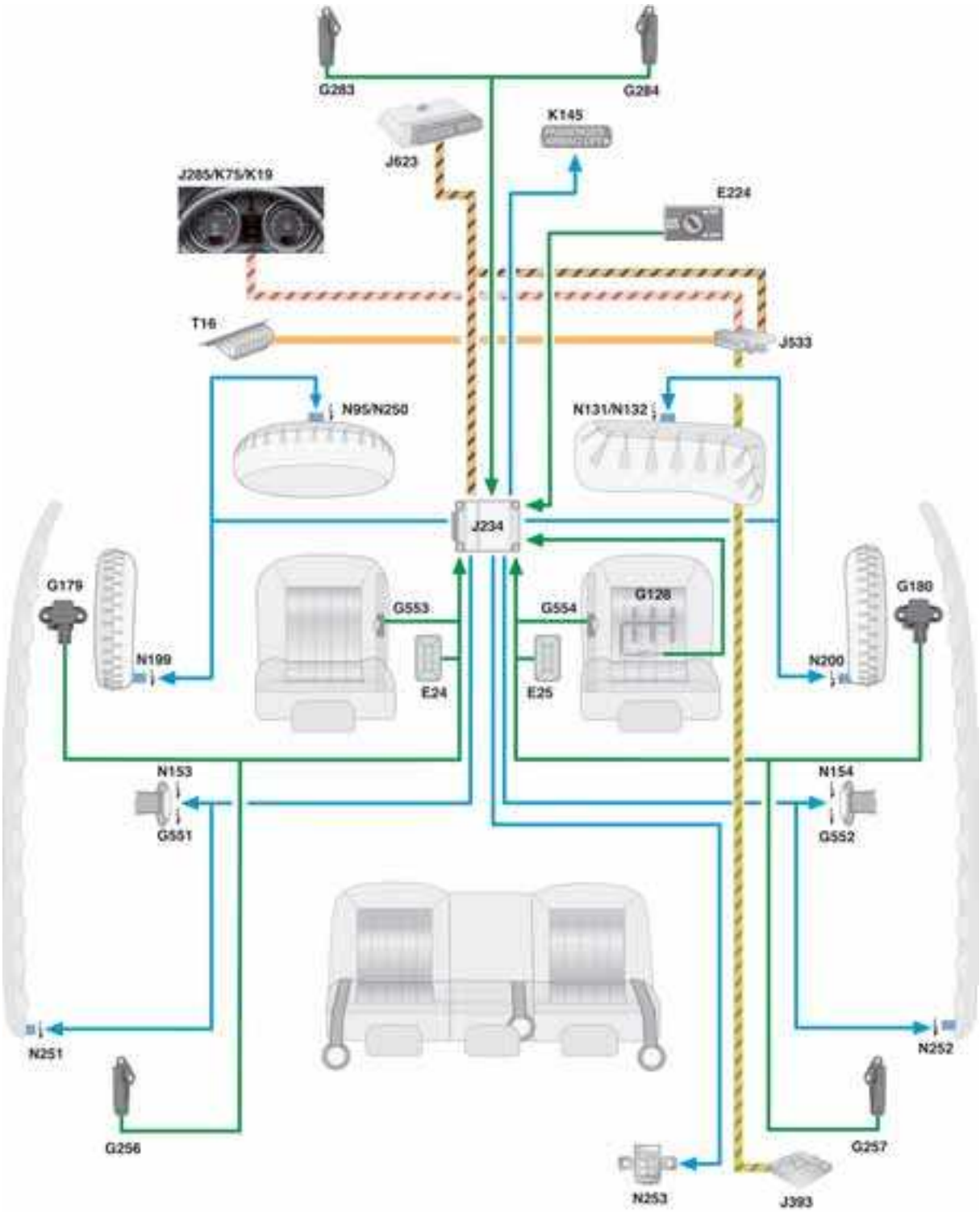
G283
G284
K145
J623
J285/K75/K19
E224
T16
J533
N95/N250
N131/N132
J234
G179
G180
G553
G554
G128
N199
N200
E24
E25
N153
N154
G551
G552
N251
N252
G256
G257
N253
J393

409_010

Airbag control unit J234

The airbag control unit J234 basically has the task of identifying a crash, evaluating all input information and activating the necessary systems.
The airbag control unit is located between the front seats, below the centre console.

Inertia-reel seatbelts

The inertia-reel seatbelts on all Audi A4 '08 models world-wide are equipped with band tensioners for the driver and front passenger. The front inertia-reel seat belts also have a dual-stage belt force limiter.

Side airbags

The side airbags are so-called "Soft Cover Modules", as installed in other Audi models.
These modules are equipped with solid fuel generators.

Seat position sensor

Using the information provided by the seat position sensors, the airbag control unit J234 determines whether the driver and front passenger seats in at the front or back of the seat adjustment range. The airbag control unit J234 utilises this information to activate the adaptivity function of the belt force limiter and the front airbags at the right moment in time.

Head airbags

So-called sideguards are used as head airbags. This type of airbag covers almost the entire side window area. Depending on body type, the gas generator is located in the C-post area or in the roof area between the C and D posts.

Battery disconnect device

A pyrotechnic battery disconnect device is used.

Airbag igniter, driver side N95
Driver side airbag igniter -2- N250

All Audi A4 '08 models distributed world-wide are equipped as standard with an adaptive driver airbag.
This is a single-stage solid fuel generator with an additional igniter for adaptivity.

The airbag control unit J234 activates igniter 1, thereby in turn igniting the ignition charge.

The actual propellant charge is subsequently ignited via nozzle ports. When the gas pressure produced by combustion of the propellant charge exceeds a predetermined value, the gas generator housing changes shape, thereby providing a clear path to the airbag via the inner housing and the metal filter. The airbag unfolds and is inflated.

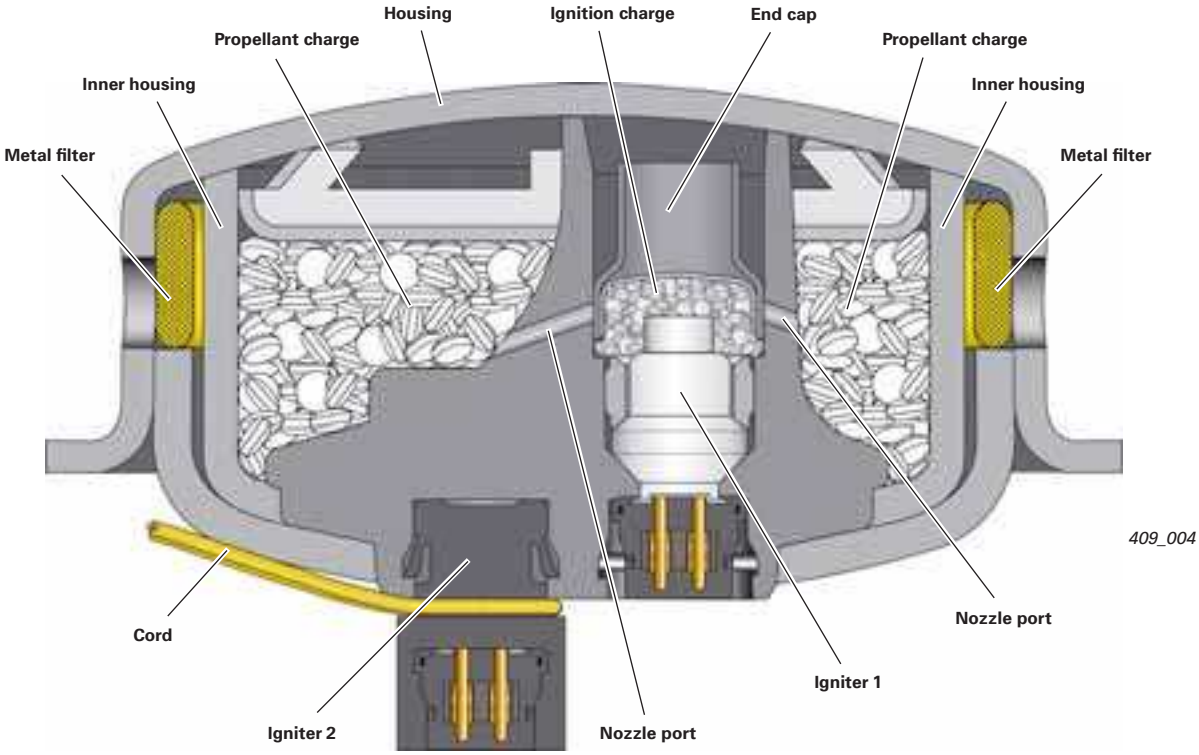

An additional igniter - driver side airbag igniter -2- N250 - is located on the back of the airbag outside the gas generator. A cord which seals an additional discharge port is wound around this igniter.

The discharge port is kept sealed as long as the cord is held in place by the igniter.

409_007

Depending on the severity of the accident and the driver's seat position, the airbag control unit J234 activates the igniter 2. The igniter housing ruptures and the cord is released.
The volume of the airbag increases by approx. 4 litres, and the additional discharge port is opened. This discharge port allows more gas to escape from the airbag. The airbag is "adapted" to suit the occupants.

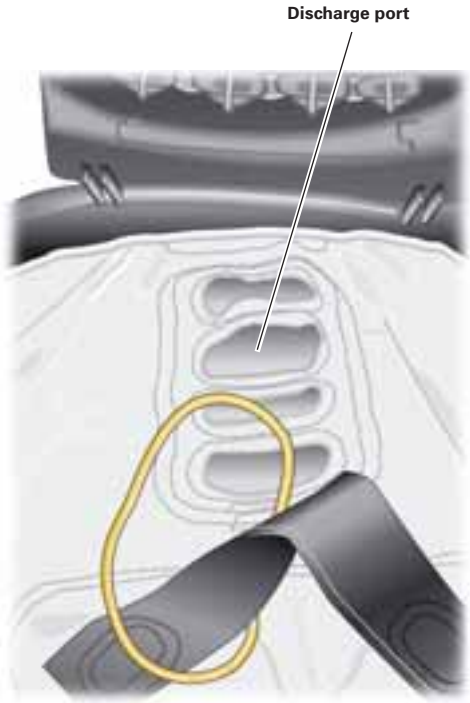

409_006

Depending on model, the gas generators of the driver airbag module mounted in a rubber ring in an oscillating manner.
In this way, steering wheel vibration can be kept to a minimum.

Front passenger side airbag igniter 1 N131
Front passenger side airbag igniter 2 N132

Like the driver airbag, the front passenger airbag is equipped with an adaptive gas generator. It is a single-stage hybrid gas generator with a second discharge port.

With this type of gas generator, the front passenger airbag can be inflated to varying degrees.
This airbag module was installed for the first time on the Audi A5. The airbag control unit J234 determines from the accident severity and the front passenger seat position the interval between the activation of both igniters.

The pressurised gas bottle contains a pyrotechnic propellant charge, which is activated by airbag control unit J234. The so-called cold gas in the pressurised gas bottle is kept under a pressure of approx. 400 bar and is a mixture of approx. 95 % argon and approx. 5 % helium.

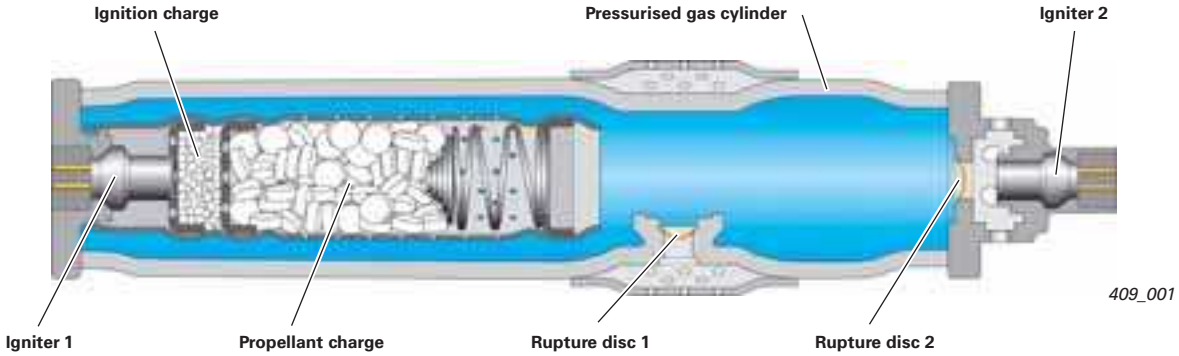

The ignition charge fired by igniter 1 ignites the actual propellant charge. This causes the pressure inside the pressurised gas bottle to increase until rupture disc 1 bursts. The gas mixture inflates and unfolds the airbag.

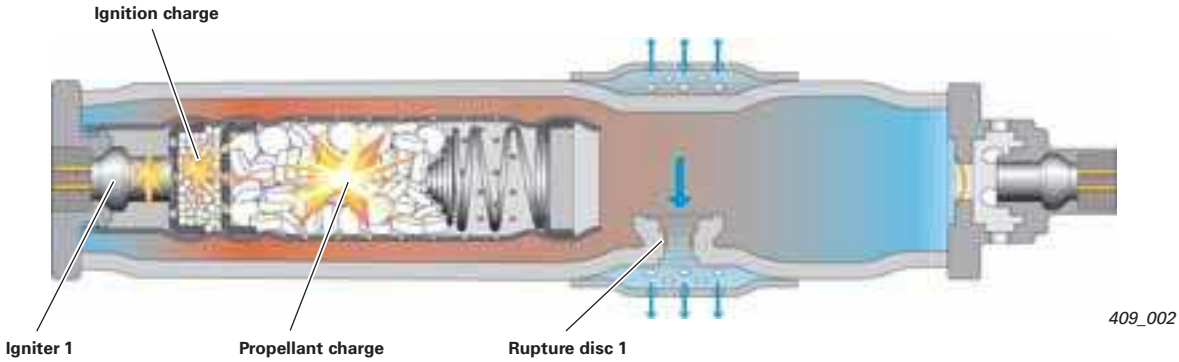

After a defined time period has elapsed, the airbag control unit J234 activates igniter 2. A targeted pressure pulse from igniter 2 causes rupture disc 2 to burst. Some of the remaining gas discharged from the pressurised gas bottle now dissipates into the atmosphere and no longer into the airbag.

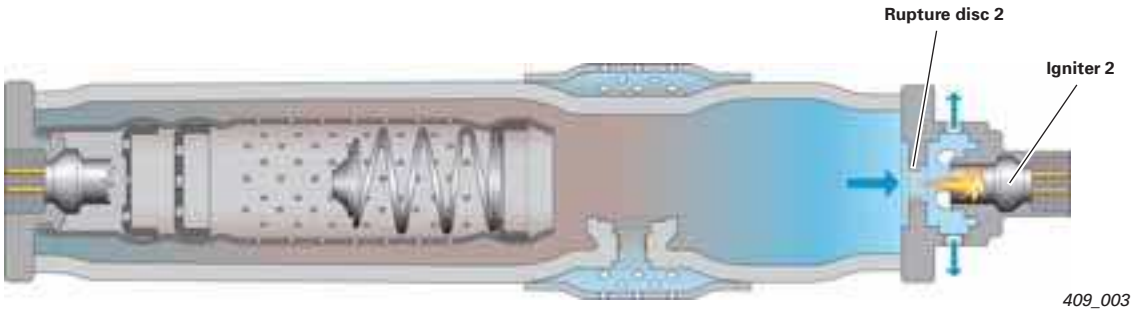

1.8l Turbo FSI

Technical features

- Four-cylinder four-valve turbo engine
- Balancer shafts in the cylinder block
- Valve train configured as chain drive
- Intake manifold with tumble flaps
- Fuel system demand-controlled on low and high pressure sides
- Homogeneous direct injection

409_028

Torque/power curve

Max. torque in Nm

Max. power output in kW

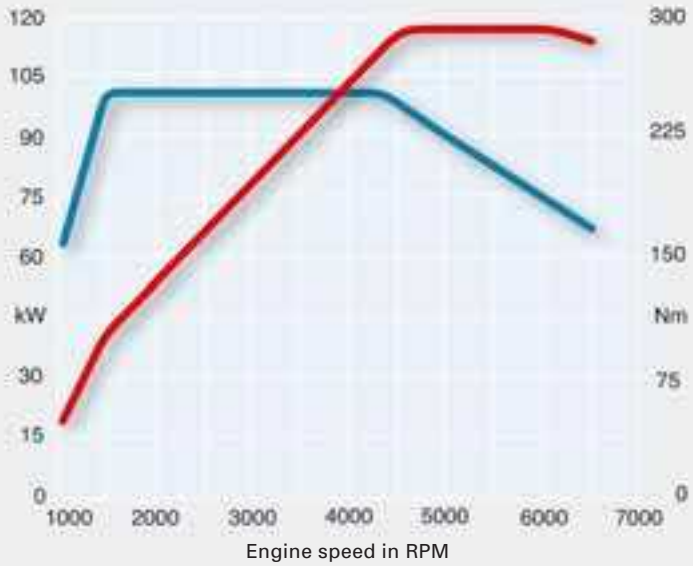

Specifications	
Engine code	CABB
Type of engine	Inline petrol engine
Displacement in cm^3	1798
Max. power output in kW (bhp)	118 (160) at 5000 - 6200 rpm
Max. torque in Nm	250 at 1500 - 4200 rpm
Number of valves per cylinder	4
Bore in mm	82.5
Stroke in mm	84.2
Compression ratio	9.6 : 1
Firing order	1–3–4–2
Engine management	Bosch MED 17.5
Fuel grade	95/91 RON
Exhaust emission standard	EU 4

3.2l V6 FSI

Technical features

- V6 four-valve engine with 90° bank angle
- Audi Valvelift System (AVS)
- Volume regulated oil pump
- Optimised chain drive with trioval chain sprockets
- No intake manifold flaps (tumble flaps)

409_039

Torque/power curve

Max. torque in Nm

Max. power output in kW

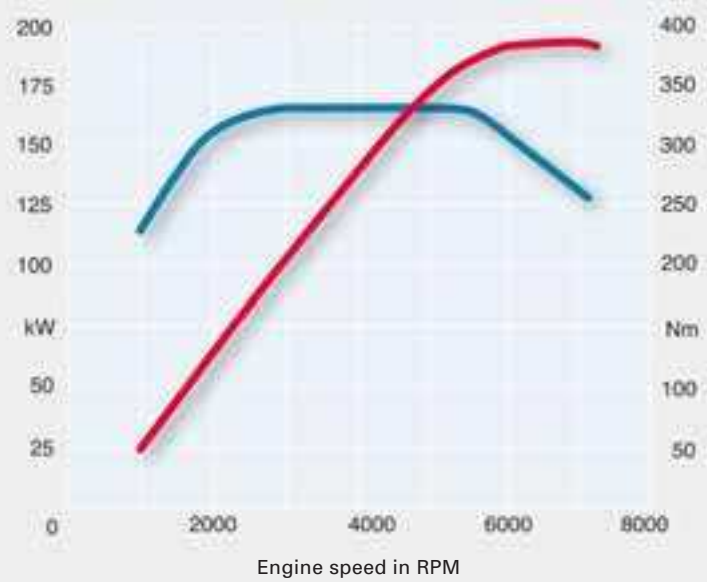

Specifications	
Engine code	CALA
Type of engine	6-cylinder V-engine with 90° included angle
Displacement in cm^3	3197
Max. power output in kW (bhp)	195 (265) at 6500 rpm
Max. torque in Nm	330 at 3000 – 5000 rpm
Number of valves per cylinder	4
Bore in mm	84.5
Stroke in mm	92.8
Compression ratio	12.5 : 1
Firing order	1–4–3–6–2–5
Engine management	Simos 8.1
Fuel grade	at least 98 RON*)
Exhaust emission standard	EU 4

*) premium unleaded with 95 RON can also be used, but this can cause a slight loss of power.

2.0l TDI with common rail injection system

Technical features

- New pistons for common rail injection system
- Engine timing control by timing belt
- Timing belt driven high-pressure pump rated for fuel pressures of up to 1800 bar
- Low temperature exhaust gas recirculation
- Diesel particulate filter with separate integrated oxidising catalytic converter

409_103

Torque/power curve

Max. torque in Nm

Max. power output in kW

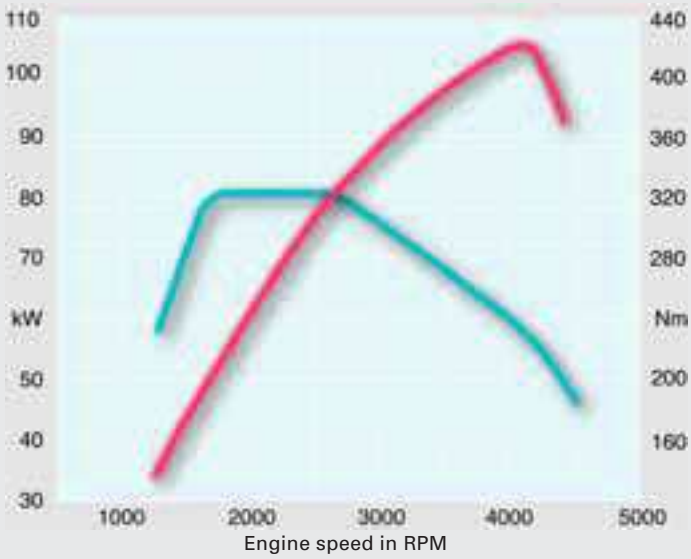

Specifications	
Engine code	CAGA
Type of engine	Four-cylinder inline engine
Displacement in cm^3	1968
Max. power output in kW (bhp)	105 (143) at 4200 1/min
Max. torque in Nm	320 at 1750 - 2500 rpm
Number of valves per cylinder	4
Bore in mm	81
Stroke in mm	95.5
Compression ratio	16.5 : 1
Firing order	1–3–4–2
Engine management	EDC 17 CR
Fuel grade	Diesel to EN 590
Exhaust emission standard	EU 5

2.7l/3.0l V6 TDI with common rail injection system

Technical features

- Optimised chain drives B and D
- Horizontal charge-air cooler upstream of the main cooler
- Garrett VTG charger
- Optimised piezo common rail injection system rated for injection pressures of up to 1800 bar
- Exhaust gas recirculation system with thermostatically regulated auxiliary water pump

409_041

Torque/power curves

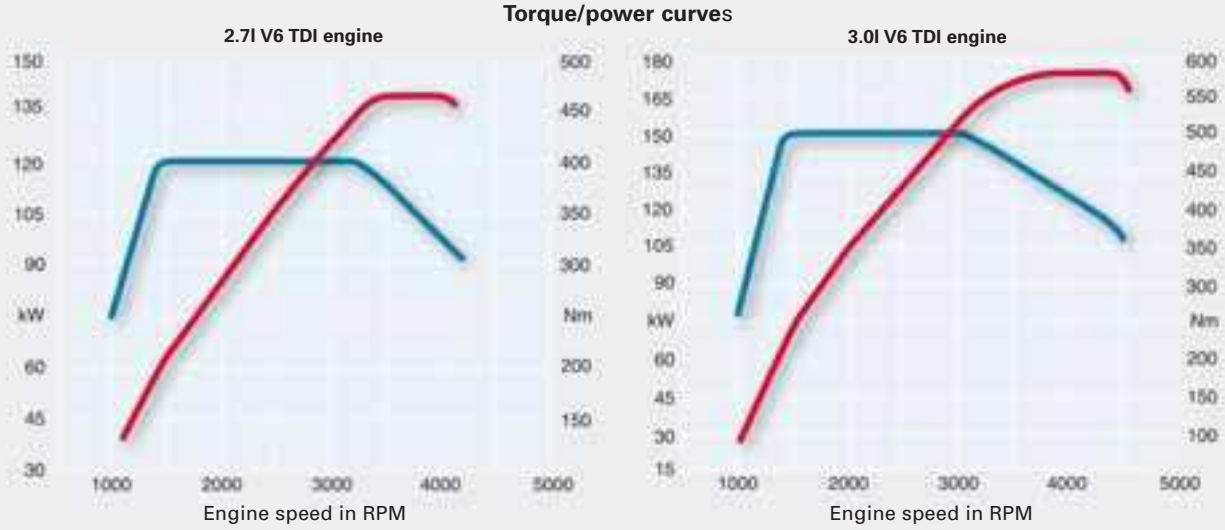

Max. power in kW

Max. torque in Nm

Specifications

	2.7 litres	3.0 litres
Engine codes	CAMA	CAPA
Type of engine	6-cylinder V-engine	6-cylinder V-engine
Displacement in cm^3	2698	2967
Max. power output in kW (bhp)	140 (190) at 3500 – 4000 rpm	176 (231) at 4000 – 4400 rpm
Max. torque in Nm	400 at 1400 – 3250 rpm	500 at 1500 – 3000 rpm
Number of valves per cylinder	4	4
Bore in mm	83	83
Stroke in mm	83.1	91.4
Compression ratio	16.8 : 1	16.8 : 1
Firing order	1–4–3–6–2–5	1–4–3–6–2–5
Engine management	EDC 17 CP	EDC 17 CP
Fuel grade	Diesel to EN 590	Diesel to EN 590
Exhaust emission standard	EU 5	EU 5

Short summary of the 2.0l four-cylinder TDI engine with common rail injection system

Recessed pistons for common rail injection

The piston ring assembly has been carried over from the pump injector system.

previous (pump injector) new (common rail)

409_080

Four-valve cylinder head with timing belt drive

The driven exhaust camshaft drives the inlet camshaft internally by gears with backlash compensation.

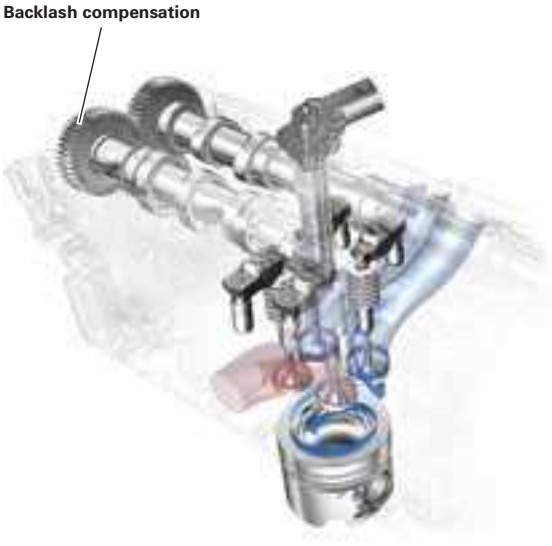

409_079

409_078

Balancer shaft module

The balancer shaft module is installed below the crankshaft and driven at double crankshaft speed via a gear module.

Common rail injection system

409_076

Fuel high-pressure pump CP 4.1

409_070

409_074

New high-pressure pump CP 4.1 rated for pressures of up to 1800 bar

This single-piston high-pressure pump with twin-cam camshaft actuates the high pressure piston via a roller tappet. The pump camshaft is driven via the timing belt. The high-pressure pump is supplied with fuel with a pressure of approx. 4.5 bar by an electrically driven auxiliary fuel pump in the underbody area.

Engine timing control via toothed belt drive

409_075

Reference

For further information, refer to SSP 420 "2.0l TDI Engine with Common Rail Injection System".

Modifications - 2.7l/3.0l V6 TDI

- Powertrain friction has been reduced by using pistons with an improved piston ring configuration
- Optimisation of chain drives B and D
- Installation of a horizontal charge-air cooler upstream of the main water cooler
- Use of a new Garrett VTG exhaust gas turbocharger with quicker response
- Improved piezo common rail injection system with new high-pressure pump rated for injection pressures of up to 1800 bar
- Injection nozzles with hydraulically optimised 8-port injectors
- Thermostatically regulated exhaust-gas recirculation cooler with auxiliary water pump

Thermostatically regulated exhaust gas recirculation cooling system

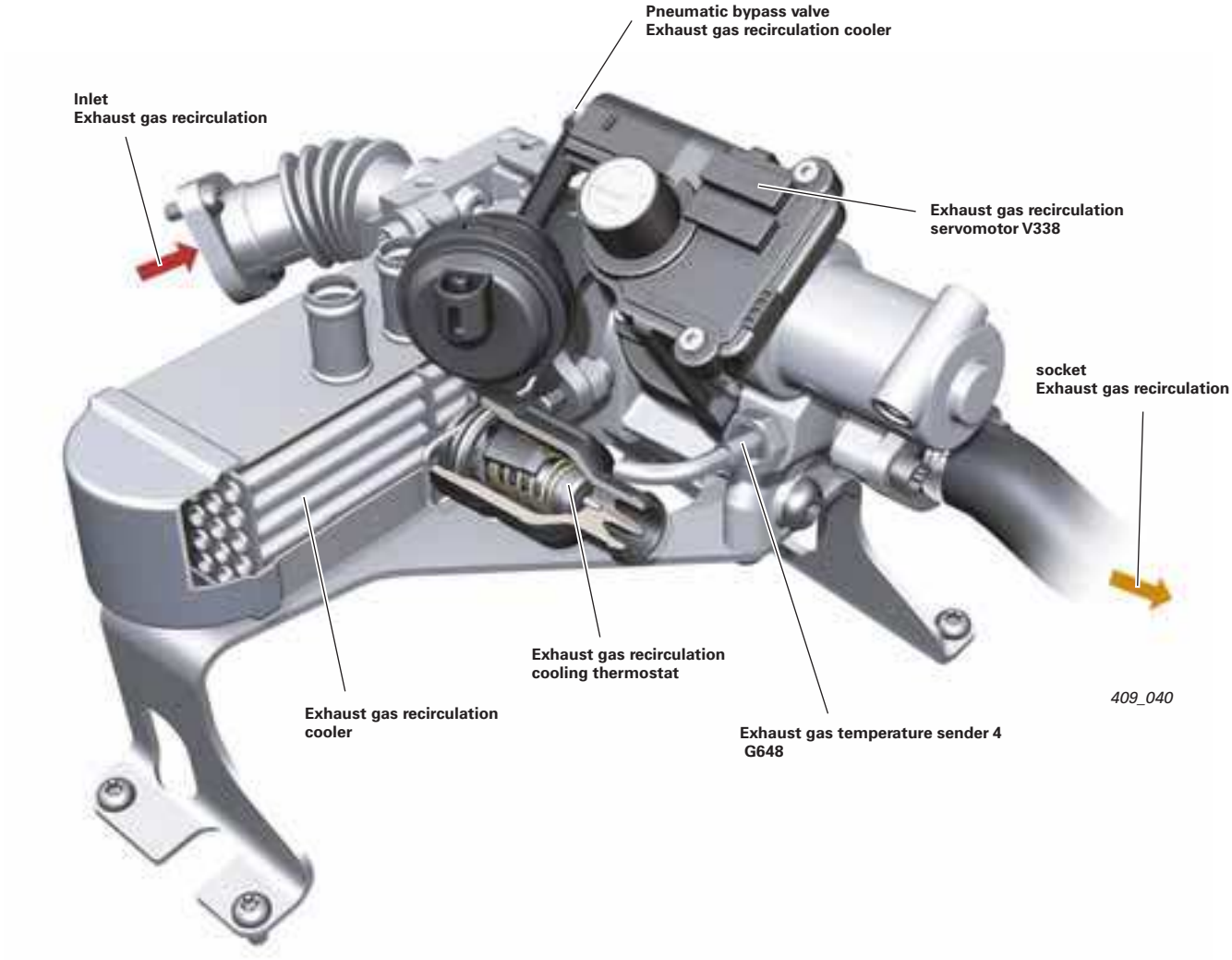

Coolant circuit

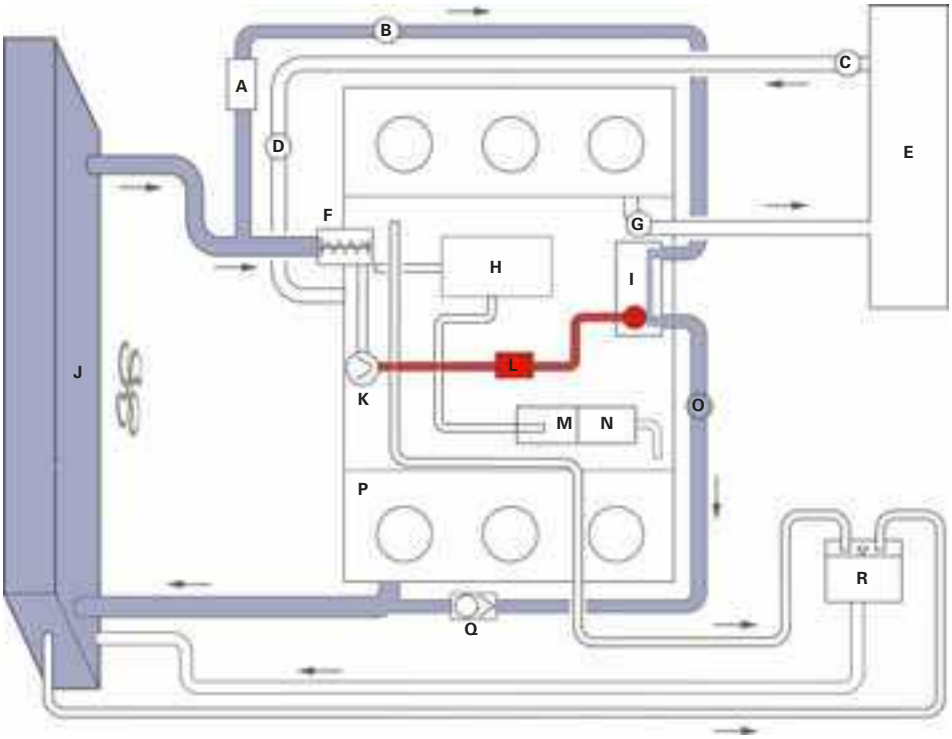

409_083

Legend

A	Exhaust gas recirculation cooler pump V400
B	Coolant temperature sender - cooler socket G83
C	Vent orifice
D	Vent screw
E	Heater heat exchanger
F	Coolant thermostat
G	Coolant temperature sender G62
H	Oil cooler
I	Exhaust gas recirculation cooler
J	Cooler
K	Coolant pump
L	Exhaust gas recirculation coolant thermostat
M	Exhaust gas recirculation servomotor V338
N	Exhaust gas recirculation change-over flap
O	Vent screw
P	Cylinder head and cylinder block
Q	Non-return valve
R	Coolant expansion tank

The exhaust-gas recirculation cooler is supplied with cooled cooling water directly from the cooler socket. Due to the lower coolant temperature, the exhaust gases can be cooled further, resulting in lower NOx emissions inside the combustion chamber.

The auxiliary water pump for exhaust gas recirculation starts up when the exhaust gas recirculation is active and the bypass valve is closed.
If the coolant temperature at the cooler socket exceeds 70 ˚C, the auxiliary water pump is deactivated, and is not reactivated until the coolant temperature drops below 63 ˚C.

The exhaust gas recirculation coolant thermostat opens when the coolant temperature at the cooler socket sender G83 is greater than 70 ˚C.
The coolant thermostat also serves to protect the exhaust-gas recirculation cooler against overheating (e.g. in the event of failure of the exhaust gas recirculation pump).

The exhaust-gas recirculation cooler goes into "non-cool mode (bypass open)" when:

- the engine temperature is lower than 55 ˚C
- the temperature of the coolant in the water cooler at the cooler socket is less than 18 ˚C or greater than 70 ˚C
- the engine is idling
- the exhaust gas temperature downstream of the exhaust-gas recirculation cooler is less than 120 ˚C
- the ambient temperature is less than 16 ˚C

Modifications - 2.7l/3.0l V6 TDI

High-pressure pump CP 4.2

The new high-pressure pump CP 4.2 is used. It produces injection pressures of up to 1800 bar. In the pump, two separate pistons are driven alternately by a twin cam camshaft.

409_111

Fuel system

New fuel system components will be used in conjunction with the new high-pressure pump. The fuel filter is no longer located in the engine bay, but in the right-hand underbody area. The high-pressure pump is supplied with fuel by an electrically operated auxiliary fuel pump V393.
The electrical auxiliary fuel pump V393 is located downstream of the pump inside the fuel tank. A new fuel preheating valve in the right-hand underbody area replaces the valve previously integrated in the fuel filter.

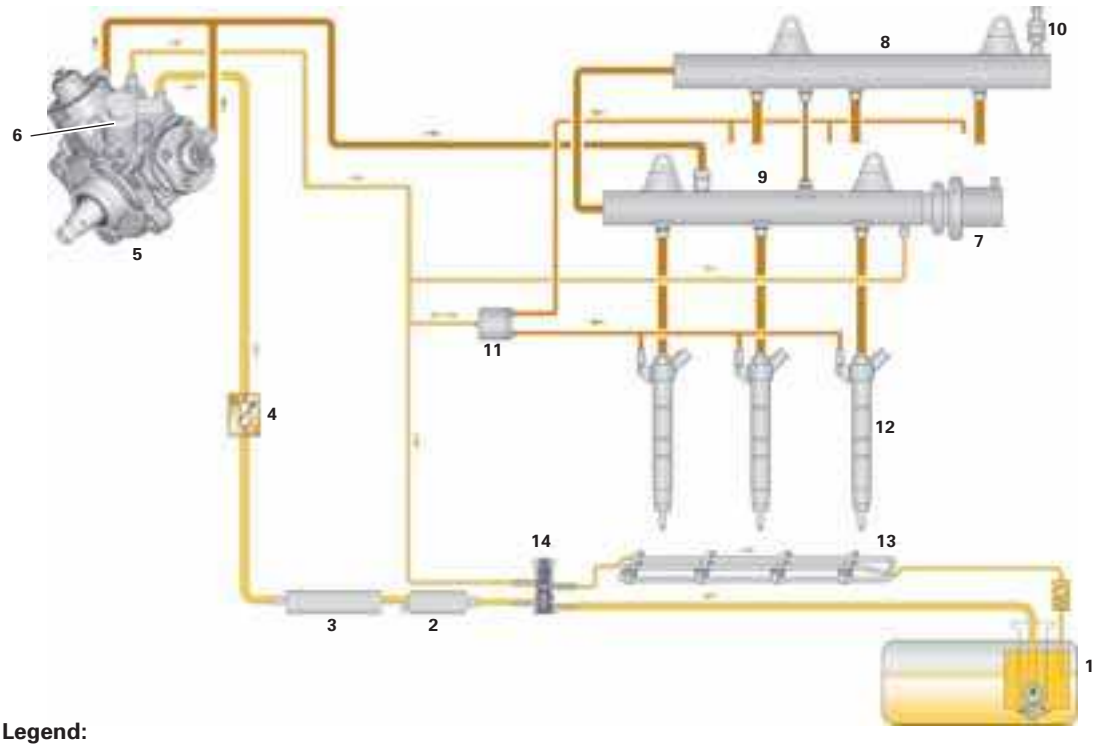

409_133

Legend:

1 Fuel tank with fuel pump G6
2 Electrical auxiliary fuel pump V393
3 Fuel filter
4 Fuel temperature sender G81
5 High-pressure pump CP 4.2
6 Fuel metering valve N290
7 Fuel pressure regulating valve N276
8 High-pressure accumulator 1 (rail)
9 High-pressure accumulator 2 (rail)
10 Fuel pressure sender G247
11 Pressure retention valve
12 Injectors N ...
13 Fuel cooler
14 Fuel pre-heating valve

Charge air system

Vehicles equipped with one of the two V6 TDI engines come with a new charge-air cooler, which is mounted transversely in front of the main water cooler.
The new charge-air cooler has been optimised for flow and thus achieves higher thermal efficiency than previously used models. This modification has improved the volumetric efficiency of the cylinders, resulting in increased power output and torque.

409_068

Diesel particulate filter

A close-coupled diesel particulate filter is fitted as standard.
A small oxidising catalytic converter is located directly downstream of the turbocharger, which reduces the time it takes for the catalyst to reach its light-off temperature (approx. 200 - 250 °C).
As a result, a higher temperature and almost complete oxidation of HC and CO are achieved in the catalysed soot filter.
This means that less energy is needed to heat the exhaust system during the thermal filter regeneration cycle (less fuel has to be post-injected).

409_067

Fuel tank system

The fuel tank systems of the Audi A4 '08 are identical to those of the Audi A5.

409_170

New features of the power transmission system

Overview of the new features of the power transmission system compared to the B8 series

New engine-gearbox configuration and new gearbox generation with front axle drive (differential) upstream of the clutch or upstream of the torque converter (refer to SSP 392).

All models with quattro drive feature self-locking centre differentials with an asymmetric-dynamic torque split, as used in the current S models and in the Audi Q7. The basic torque split is 40 % to the front axle and 60 % to the rear axle (refer to SSP 363).

Prop shaft with new sealing and assembly concept (refer to page 30 ff.).

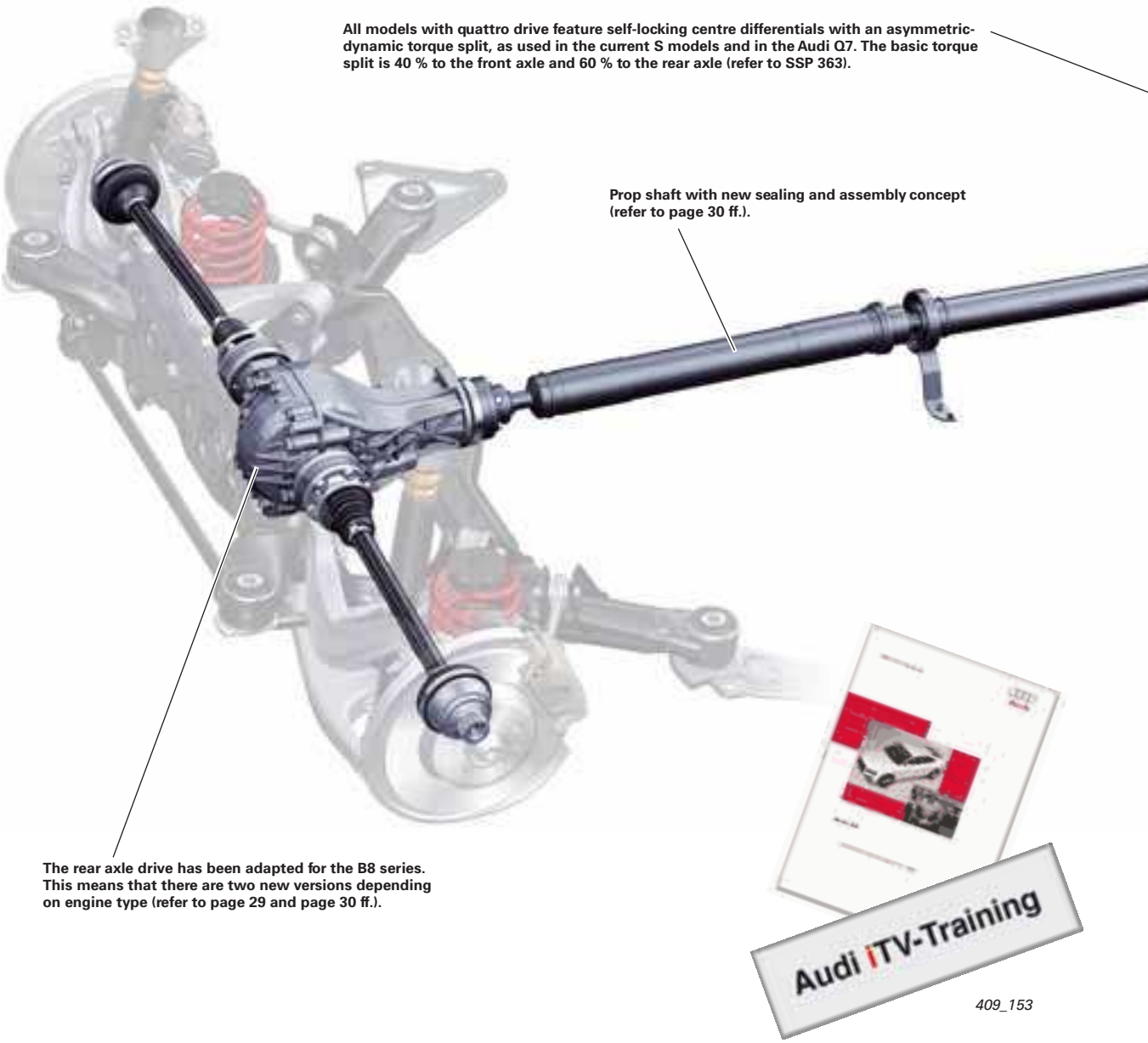

The rear axle drive has been adapted for the B8 series. This means that there are two new versions depending on engine type (refer to page 29 and page 30 ff.).

409_153

Reference

The new engine-gearbox configuration and the new gearbox generation have already been used on the Audi A5/S5 and are described in SSP 392, page 30 ff.
You will also find in SSP 392 information about the gearboxes and the clutch module.

The special features of the power transmission system on the Audi A5 were previously presented in the Audi iTV broadcast of 04.07. This information applies likewise to the new Audi A4 ’08 (B8 series). See recording of this broadcast

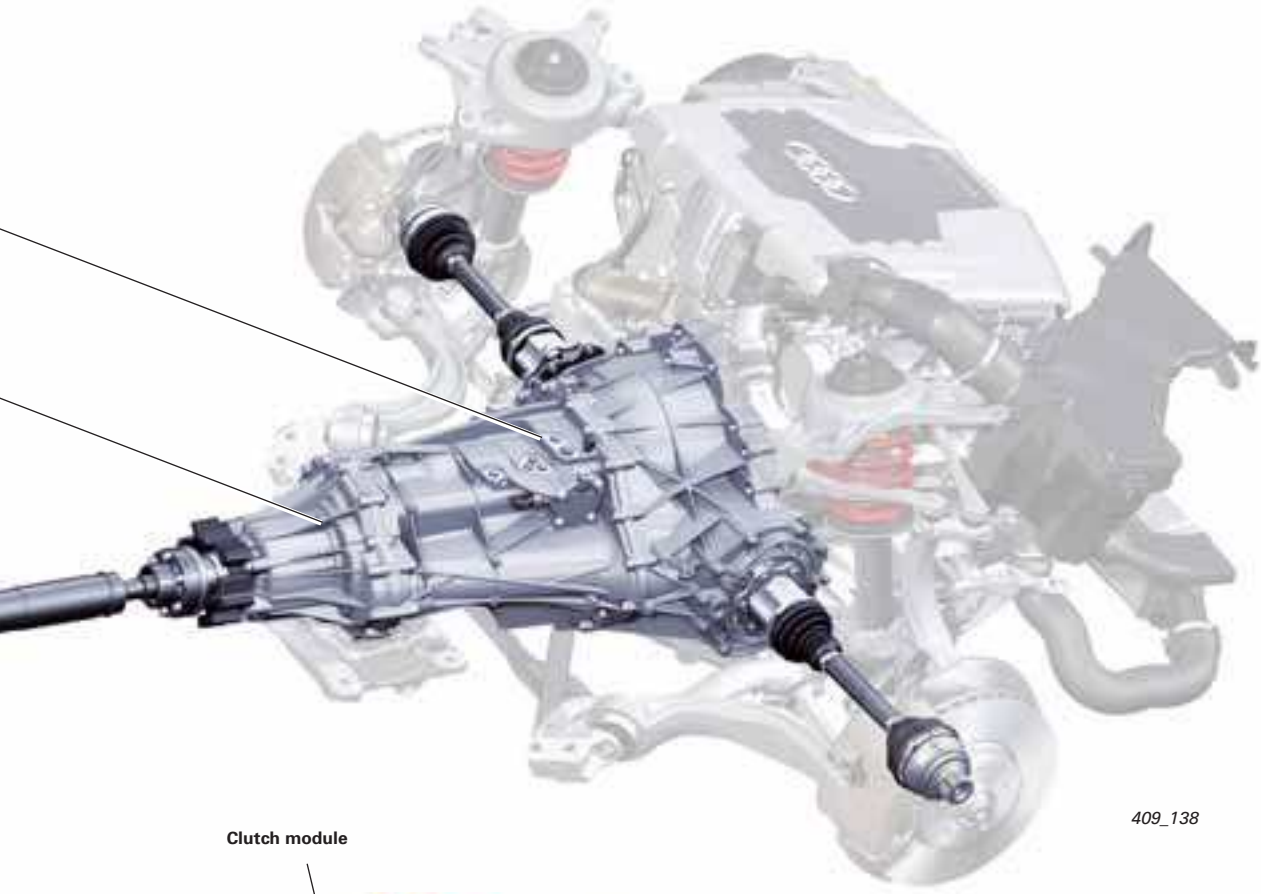

409_138

409_139

The new engine-gearbox configuration was made possible by shifting the front axle drive (differential) in front of the clutch or in front of the torque converter.

This, in turn, means that the gearbox for the B8 series had to be redesigned. The result is a completely new generation of manual and automatic gearboxes.

In the new-generation gearboxes, the distance between the engine/gearbox flange and the centre of the flange shaft has been reduced to 43 mm (this was previously 181 mm in manual gearboxes, for example). In addition, the flange shaft is now approx. 25 mm higher in order to create space for the new position of the steering gear.

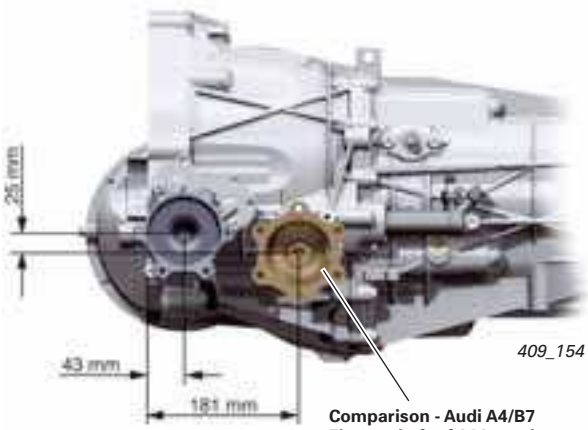

409_154

Comparison - Audi A4/B7
Flange shaft of 0A3 gearbox

Power transmission

The new engine-gearbox configuration

In addition to meeting ecological and economical requirements, the development of the new Audi A4 '08 was focussed on meeting the following objectives:

A - improved pedestrian safety,
B - extension of the wheelbase,
C - optimisation of axle load distribution
D - and implementation of a short front overhang

These objectives were met by modifying the layout of the engine-gearbox assembly in relation to the front axle.

Fig. 409_119 shows a comparison of the engine-gearbox configuration on the Audi A4 (B7 series) and the new engine-gearbox configuration on the Audi A4 (B8 series), both models being powered by the 3.0l TDI engine. For this purpose, the vehicle contours of both series have been superimposed on the common front wheel centre point (= same front axle position).

Explanation of the development objectives

A - The larger the distance between the bonnet and engine, the larger the crumple zone. This is a key requirement for the improvement of pedestrian safety.

B - Extending the wheelbase increases ride comfort and creates more space inside the vehicle. Compare Fig. 409_119 with Fig. 409_135.

C - Moving the entire drive unit backwards (relative to centre of axle) optimises the axle load distribution and improves driving dynamics.

D - The new engine-gearbox configuration makes possible a shorter front overhang, which is beneficial from a design viewpoint.

Comparison of the axle positions (wheel centre point) with the same engine-gearbox configuration

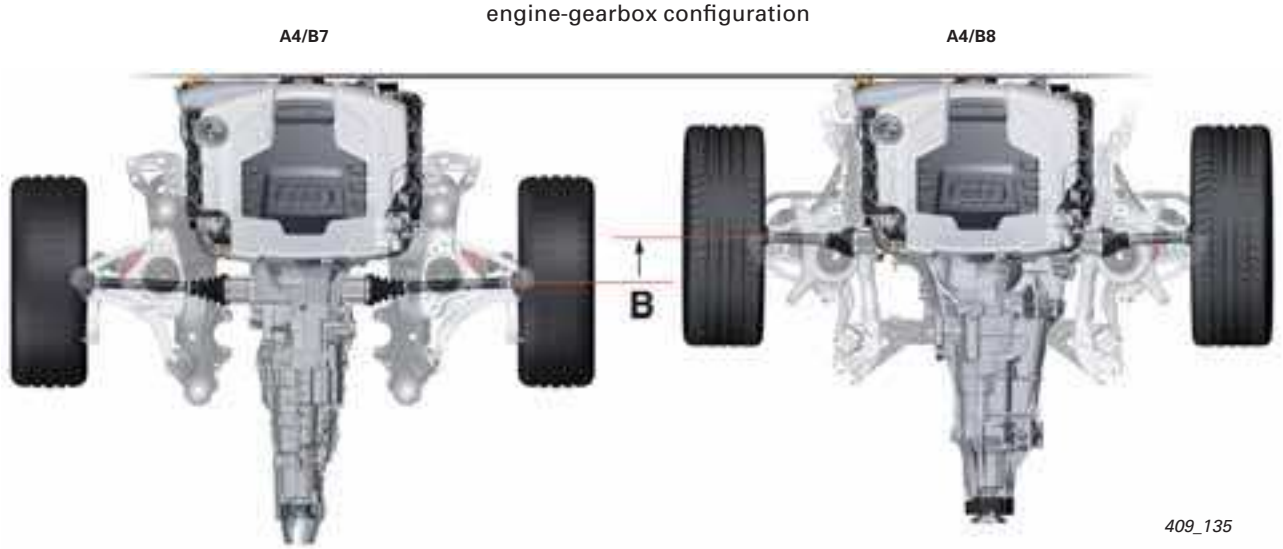

409_135

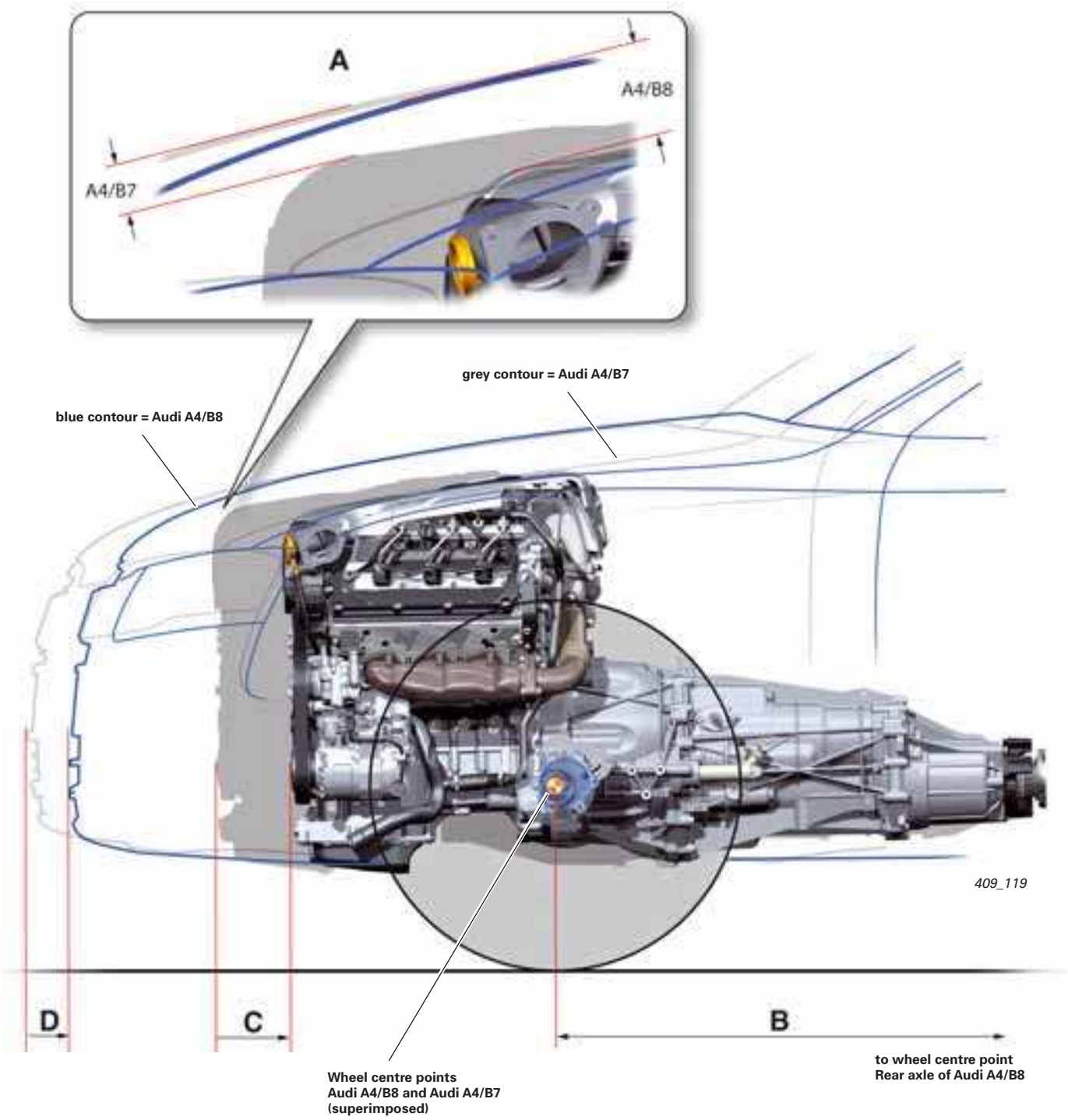

The top-view comparison of the B7 series and the new B8 series in Fig. 409_135 highlights again the effects of shifting the axle centre forwards.

Explanation:

Model series	Model	Type	from model year
B7	Audi A4	8E	2001
B8	Audi A4	8K	2008
B8	Audi A5/S5	8T	2008

The new gearbox generation

Manual gearboxes

New-generation 6-speed manual gearboxes are used on all B8 models. The main feature of these new-generation gearboxes is the aforementioned relocation of the differential and the clutch module. At the start of production of the Audi A4 '08, the 0B1 and 0B2 gearboxes will be added to the 0B4 gearbox first used on the Audi A5/S5.
The 0B3 gearbox will be launched at a slightly later date.

0B1 – for front-wheel drive and all engines rated for **up to** 350 Nm

0B2 – for quattro drive and all engines rated for **up to** 350 Nm

0B3 – for front-wheel drive and all engines rated for **over** 350 Nm

0B4 – for quattro drive and all engines rated for **over** 350 Nm

409_140

Reference

For technical specifications and further information regarding the gearboxes and the new clutch module, refer to SSP 392 and the recorded Audi iTV broadcast "Audi A5 Power Transmission" (July 2007).

Automatic transmission

All vehicles with automatic gearbox and front-wheel drive will be equipped with multitronic 0AW. Vehicles with quattro drive feature the new six-speed automatic gearbox 0B6.

0AW – for front-wheel drive and all engines rated for **up to** 400 Nm

409_141

0B6 – for quattro drive and all engines rated for **up to** 580 Nm (petrol engines) and **up to** 650 Nm (diesel engines)

Final drive (real axle drive)

Two new final drives (0BD and 0BC) have been introduced for the B8 series. Final drive 0BD has the same basic design as final drives 08V, while final drive 0BC has the same basic design as the 0AR. The new final drives differ from the previous final drives (08V and 0AR) in the following respects:

- Various modifications have been made to the housing and housing cover due to the modified engine-gearbox mounting
- The input flange shaft (connection to prop shaft) has been modified to accommodate the new sealing and assembly concept

Final drives 0BD and 0BC have identical connecting dimensions. Where compatible with regard to torque capacity and reduction ratio, they are interchangeable.

409_142

0BD – for engines rated for **up to** approx. 400 Nm
Development/manufacturer – ZF (Gotha)

409_143

0BC – for engines rated for **up to** approx. 600 Nm
Development/manufacturer – Audi/VW-Kassel plant

quattro drive

Fitting the prop shaft

A new sealing and assembly concept has been adopted in combination with the quattro drive in the B8 series.

What has changed:

A - The universal joints are sealed using rubberised metal seals.

B - Modified flange shafts are used on the gearbox and on the final drive.

C - The concept and method of compensating for residual imbalance at the final drive (see "Triangular matching").

D - The method of tightening the universal joint screws.

E - The screws on the rear universal joint must be tightened in a specific order.

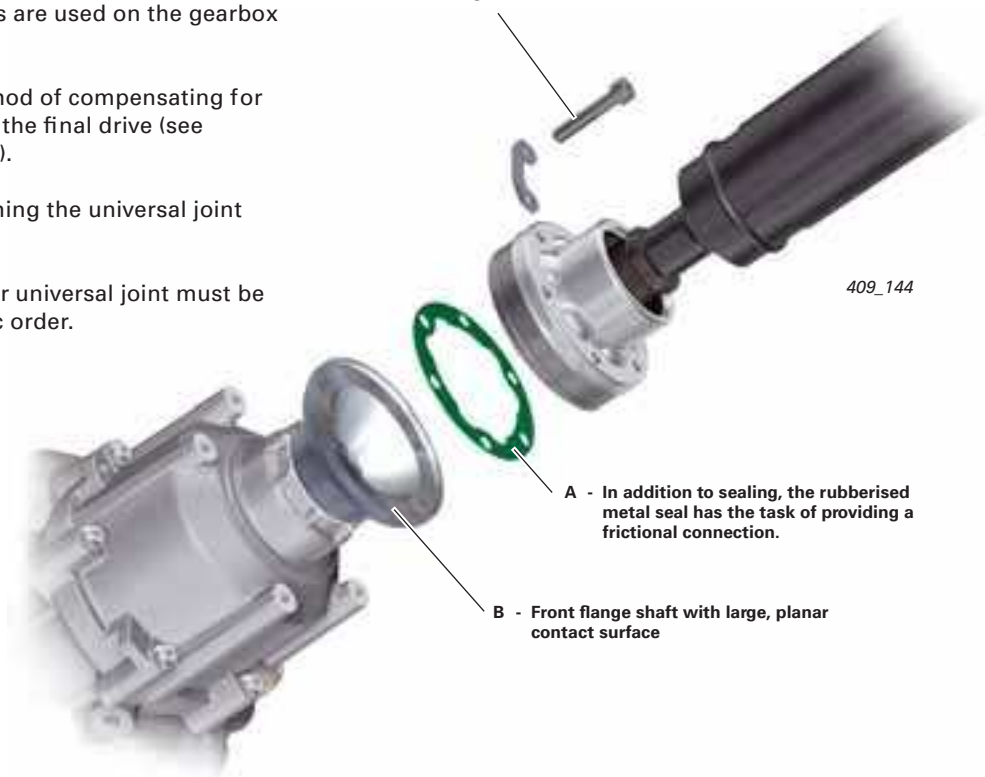

To aid comprehension, Figs. 409_144 and 409_145 show a comparison of the design features of the previous and new prop shaft mounting concepts.

Flange shafts, **previous** version (all models except Audi A4/A5 -B8)

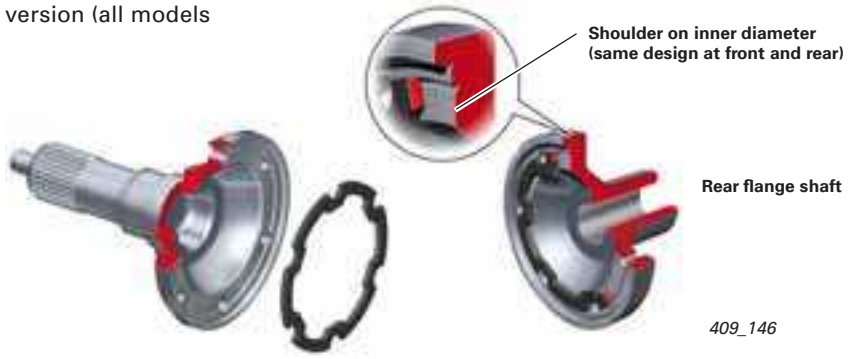

With the previous sealing and assembly concept, the rubber seal only had the task of sealing the joint. When fitting the prop shaft, the rubber seal is compressed until the joint comes into contact with the flange. The frictional connection is made directly between the joint and the flange shaft.

Fitting the prop shaft on the final drive:

1. The hole pattern of the prop shaft joint and the axle flange must be joined together in such a way that the coloured marks align. They must not be rotated by more than 30° relative to one another.
2. The screw nearest the coloured mark must be tightened first to the specified torque.
3. The remaining screws are then tightened all round.
   Follow the instructions given in the Workshop Manual.

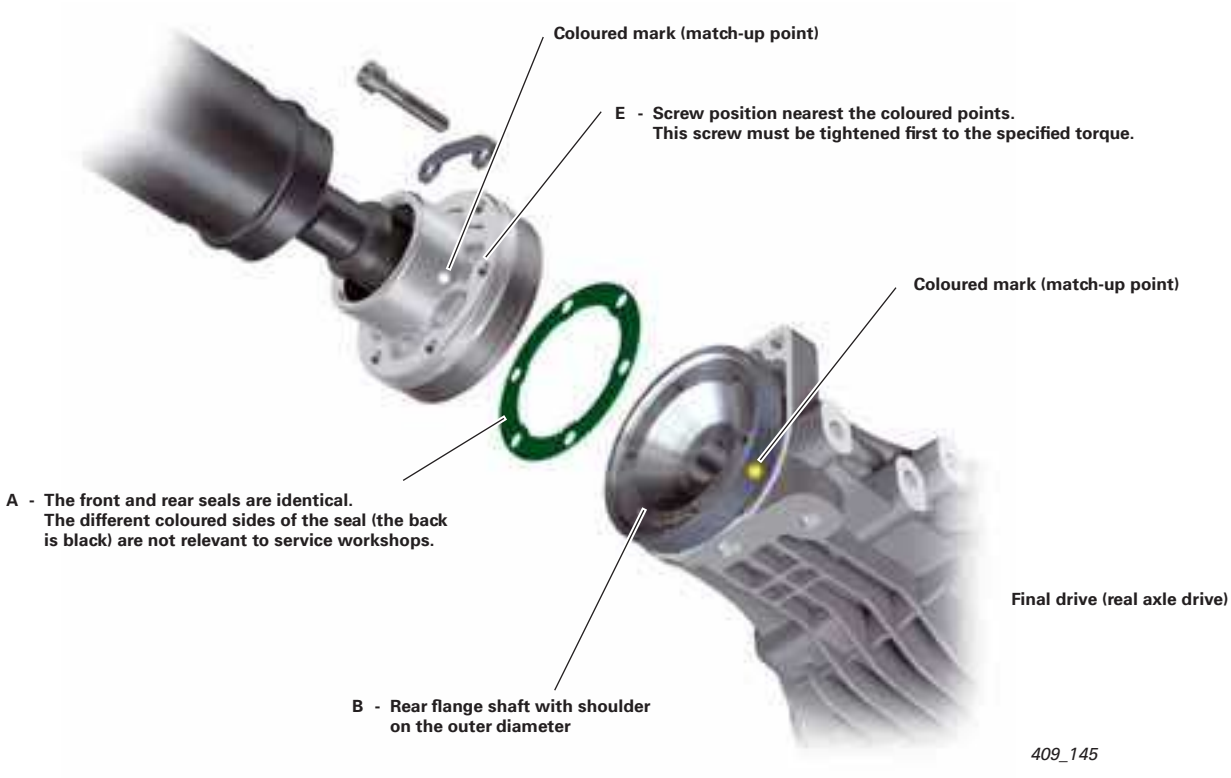

Flange shafts (**new** type)
(Audi A4/A5 -B8)

In the new sealing and assembly concept, the seal is a component part of the screw connection and participates directly in the power transmission process. This means that engine power is transmitted through the seal face.

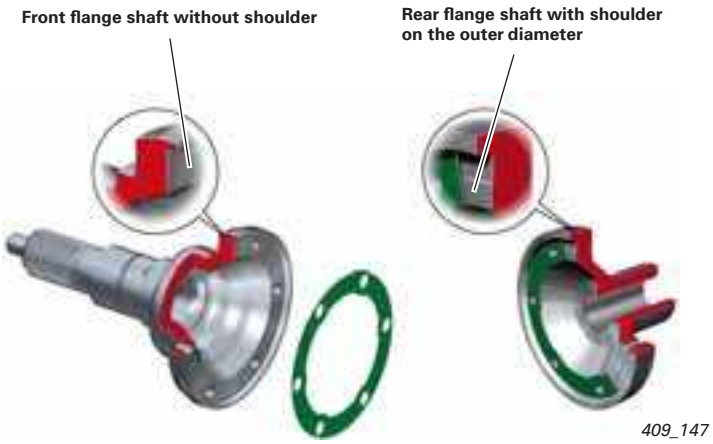

Note

When fitting the prop shaft, do not use the previous rubber seal under any circumstances!
The rubber seal cannot transmit traction forces, and will be destroyed. The screws will loosen, and the prop shaft can become completely detached while driving!
The rubberised metal seal may be reused several times provided that the rubber coating is not damaged.

Triangular matching

Previously, the residual imbalance of the prop shaft and final drive were compensated for by opposing the respective imbalances at an angle of 180˚ during assembly. For previous vehicles, this method is sufficient to compensate for the overall residual imbalance. During installation, it is only necessary to make sure that the coloured marks on the prop shaft joint and on the flange shaft of the final drive align.

This method is not longer sufficient for the new B8 series, since better balancing of residual imbalances is necessary due to the use of light-weight design and the engine-gearbox mounting configuration.

A new assembly method, known as " triangular matching ", is used for the B8 series, whereby three imbalances are arranged at an angle of 120˚ to one another.

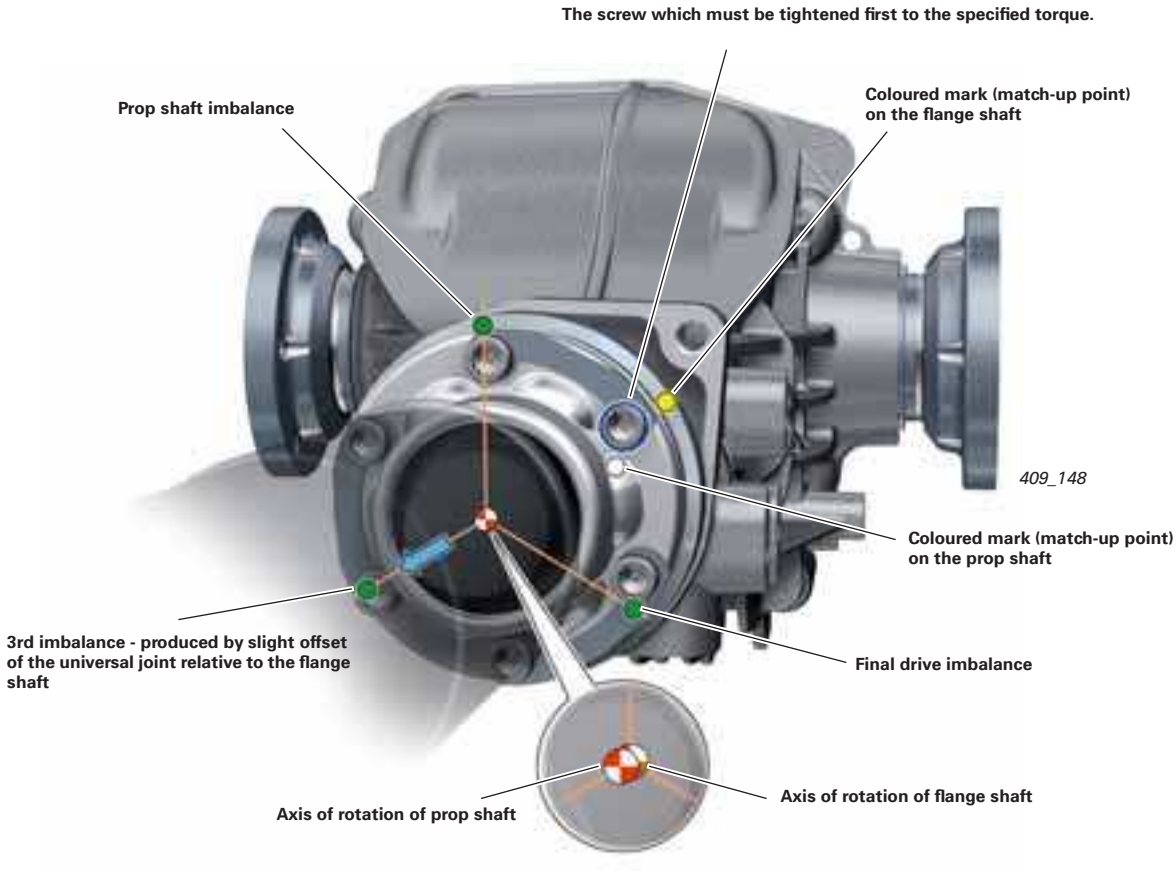

Notes on triangular matching

The white coloured dot on the prop shaft joint is positioned with an offset of 60˚ **clockwise** relative to the residual imbalance of the prop shaft.

The yellow coloured dot of the final drive is positioned with an offset of 60˚ **counter-clockwise** relative to the residual imbalance of the final drive.

If both coloured dots align when the prop shaft is fitted to the final drive, the two imbalances are at an angle 120˚ relative to one another.

Tightening the screw nearest the coloured dots tilts the joint and moves it exactly to the opposite side. This means that the joint is slightly offset relative to the axis of rotation. This produces an "artificial" 3rd imbalance, which in turn is positioned at an angle of 120˚ to the other two imbalances.

The imbalances are now arranged in an isosceles triangle configuration, hence the term "triangular matching".

Triangular matching provides better residual imbalance compensation and thereby minimises the overall residual imbalance.

Notes on the displacement of the prop shaft joint

The figure shows a cutaway view of the prop shaft and the flange shaft, which are fitted together but not bolted. It can be seen that the prop shaft joint has a small amount of radial play relative to the flange shaft collar. The seal and the shoulder on the flange shaft can also be clearly recognised.

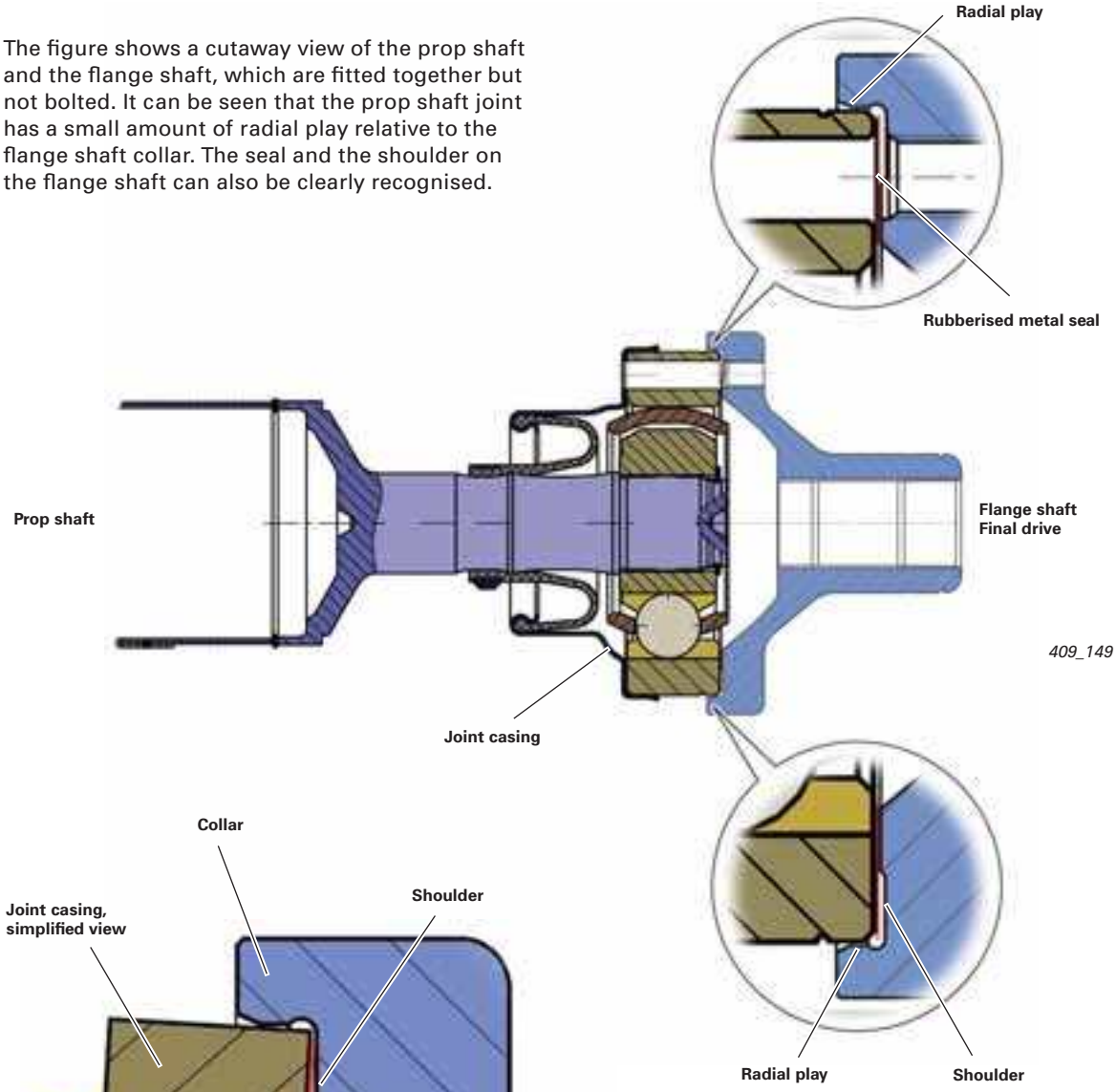

409_149

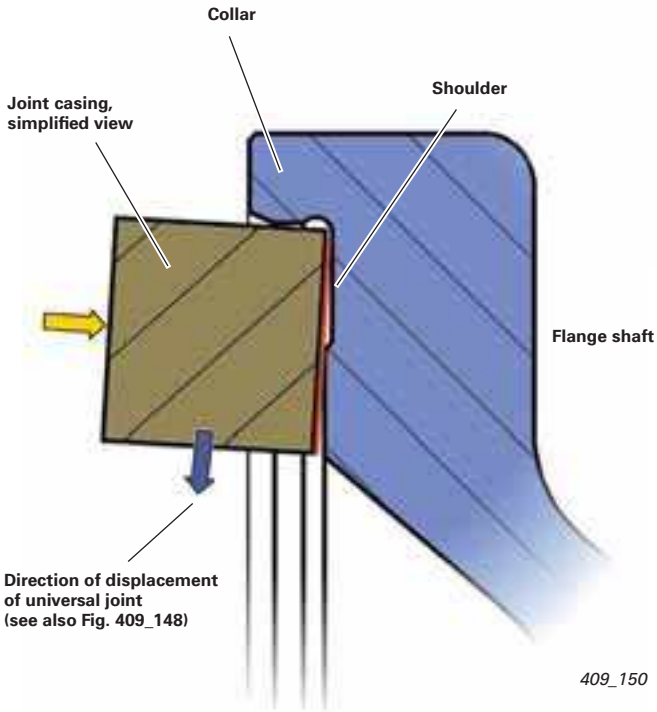

409_150

How it works:

The joint has been replaced in Fig. 409_150 by a geometrically more simple part to allow better representation of its function. Tightening the first screw to the specified torque automatically tilts the joint towards the shoulder. The joint rests against the flange shaft collar and displaces it exactly to the opposite side. The effect of this is described on the previous page. When the remaining screws are tightened, the joint returns to its position facing the flange shaft.

New feature of vehicles with automatic gearbox

Audi drive select

A new feature of the B8 series is the optional Audi drive select system, which allows different vehicle set-ups to be configured by the driver (refer to page 56).

The sport program of the automatic gearbox can be set in the DYNAMIC driving mode.

Vehicles **with** the "Audi drive select" package no longer have selector lever position "S" (sport setting).

Vehicles **without** Audi drive select still have a shift gate with the selector lever position "S" for selecting the sport program.

Operating unit -Audi drive select Charisma switch module E592

409_151

Gearshift mechanism

The gearshift mechanism shown here was previously phased into the Audi A6 from model year 2006, and is now also featured on the B8 series models. This means that the B and C series now have a standardised gearshift mechanism.

The key features of this new, standardised gearshift mechanism are:

- Longitudinally split housing (dismantling is not intended, and not necessary for routine repair work).
- The gear selector position P switch F305 and the shift lock solenoid N110 are combined as a unit, which can easily be removed without any further assembly of the gearshift mechanism.
- Easy removal, installation and setting of the selector lever cable.

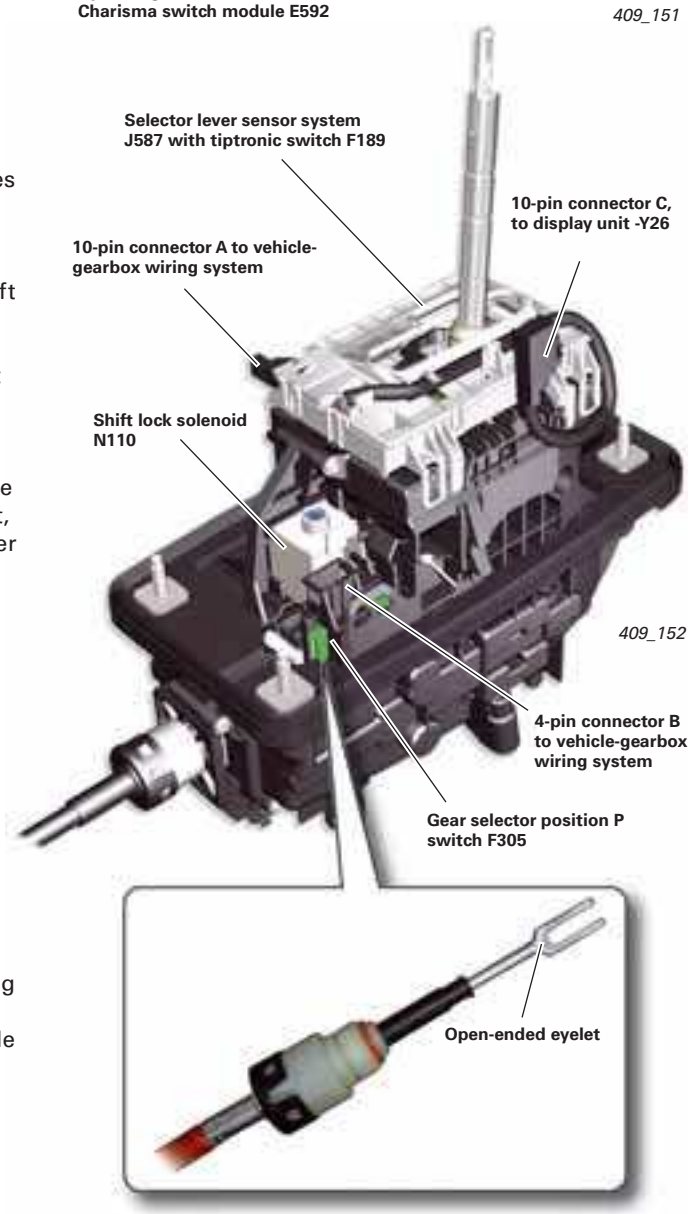

409_152

Selector lever cable with open-ended eyelet

No extensive assembly work is required on the gearshift mechanism when removing and installing the cable pull. The selector lever cable can be set easily at the open-ended eyelet, which is accessible from the inside of the vehicle.

Ignition key removal lock

The B8 series (A4, A5) now also features the electrical ignition key removal lock system already in use on the A3, A6, and A8 models. Again, gear selector position P switch F305 provides the information for enabling the ignition key. For further information about the ignition key removal lock, refer to page 26 ff. of SSP 393.

Selector lever sensor system J587*

* For further information about the selector lever sensor system J587, the P/R/N/D/S signal and the tiptronic signal, refer to page 66 ff. of SSP 367.

Pin assignments
Connector C

Pin 1	Term. 31	
Pin 2	LEDs	+/–
Pin 3	LED	P
Pin 4	LED	R
Pin 5	LED	N
Pin 6	LED	D
Pin 7	LED	S
Pin 9	----	
Pin 10	----	

Function diagram of gearshift mechanism with display unit Y26

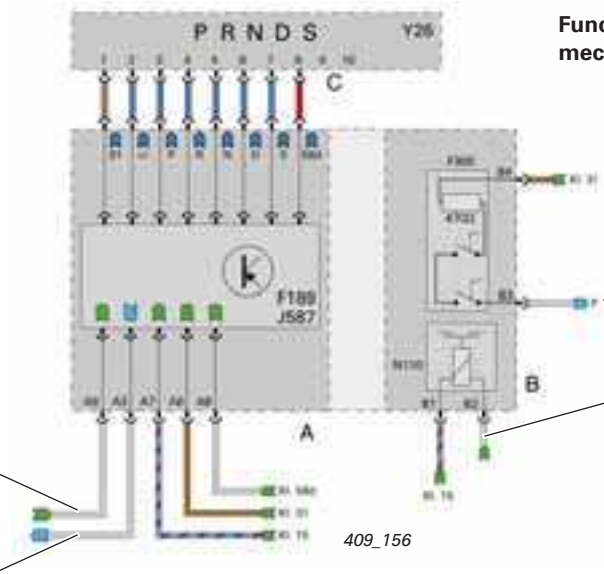

409_156

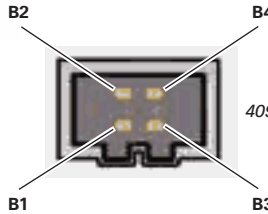

Coding Connector B
(at terminal N110/F305)

409_157

Gear selector position P switch F305

Switch F305 is comprised of two reed switches, which are connected in series with a resistor. Both switches must be closed to permit a ground signal to be applied to the convenience system central control unit J393.

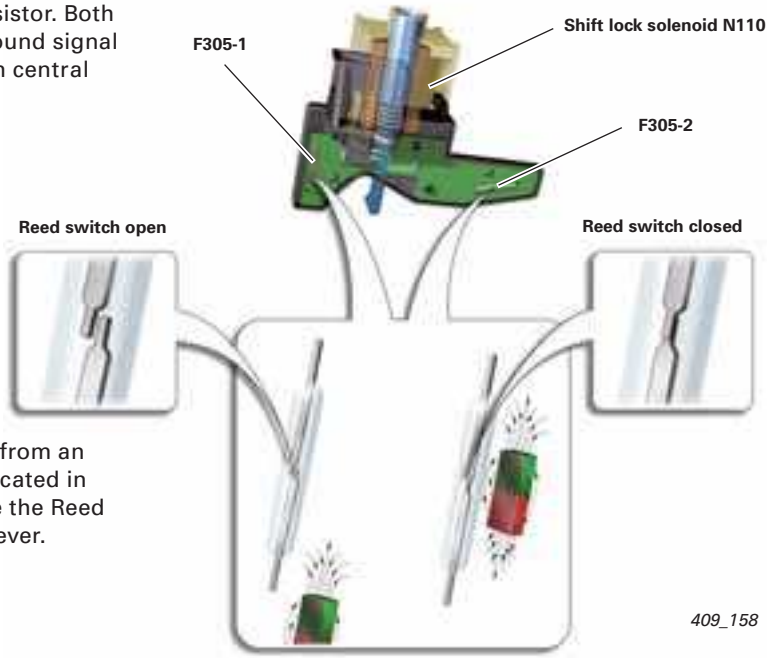

Reed switches are actuated by the field from an external permanent magnet, which is located in selector lever position "P" directly above the Reed switches on the gate or on the locking lever.

409_158

Shift locks (P lock and P/N lock)

A basic distinction is made between two types of shift lock: the P/N lock, which is engaged during vehicle operation and when the ignition is "on", and the P lock which is engaged when the selector lever is in the "P" position and the ignition key is removed from the ignition lock. The kinematics of the locking mechanism are designed in such a way that locking is possible both when N110 is energised (position "N") and deenergised (position "P").

Shift lock "P"and P signal for ignition key removal lock

When the selector lever is moved into position "P", the permanent magnet 1 of the gate is positioned in front of Reed switch 1 (switch closed). As soon as the locking lever is in its basic setting (N110 not activated), permanent magnet 2 is positioned in front of Reed switch 2. Both switches are now closed and supply the signal for enabling the ignition key removal lock (P signal to convenience system central control unit J393).

- Selector lever position "P "
- Brake applied
- N110 energised
- Gate or selector lever released

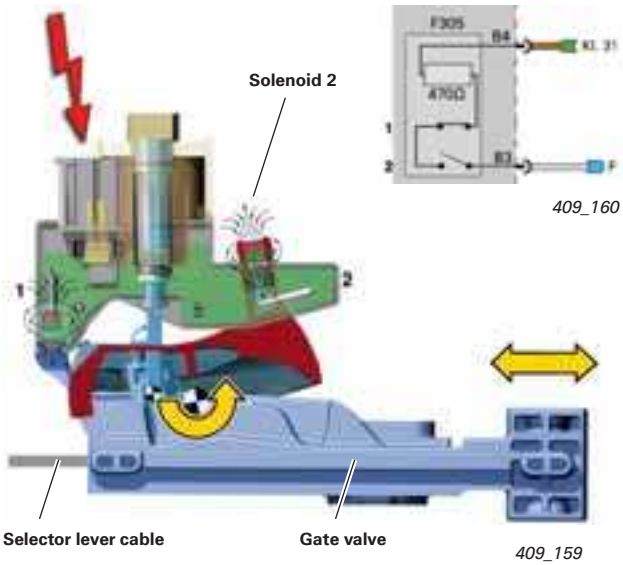

409_160

409_159

- Selector lever position "P "
- Brake not applied
- N110 deenergised
- Gate or selector lever locked

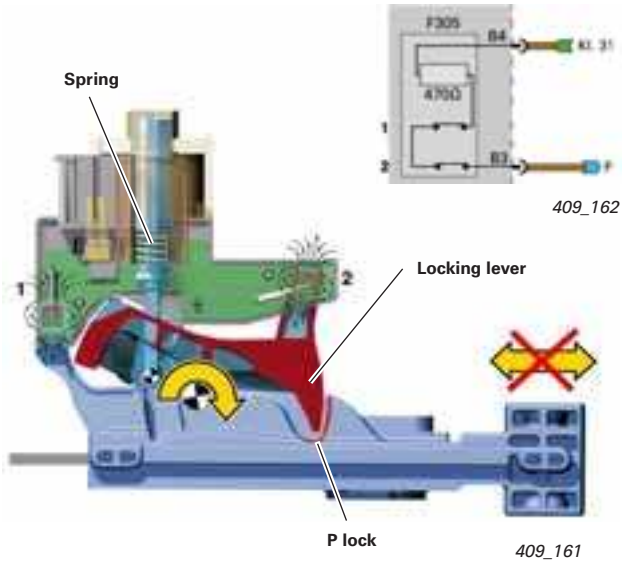

409_162

409_161

Shift lock "N"

- Selector lever position "N"
- Brake not applied
- N110 energised
- Gate or selector lever locked

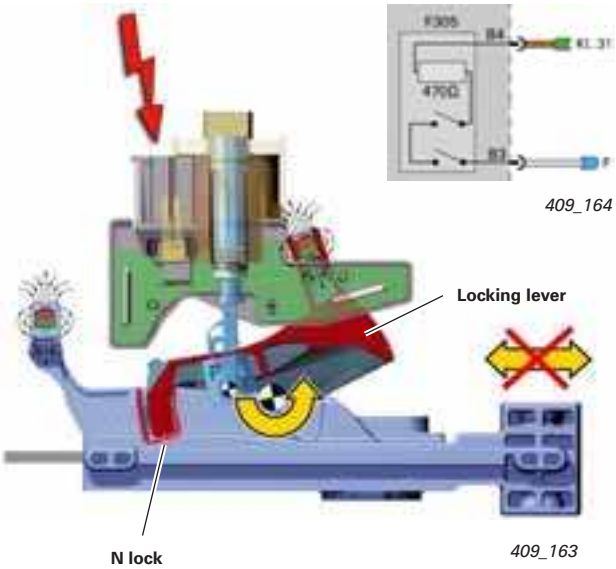

409_164

409_163

- Selector lever position "N"
- Brake applied
- N110 deenergised
- Gate or selector lever released

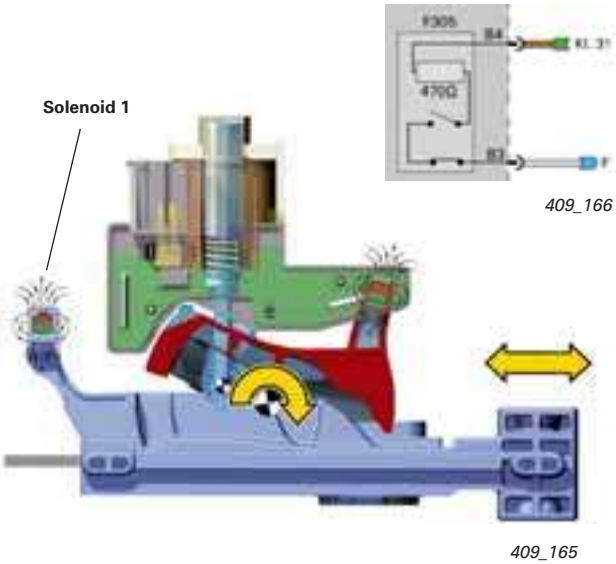

409_166

409_165

Note

Switch F305 can easily be checked using the diagnostic tester or an ohmmeter. If F305 is faulty, it can, as mentioned already, easily be replaced.
However, please note the following: If the distance between the permanent magnet and its Reed switch is too large, or if a permanent magnet is missing - for example, because it has dropped out of its mounting - F305 will be unable to generate a shift signal. In such a case, the gearshift mechanism must be replaced.

Emergency release

Due to the fact that the P-lock is only released when solenoid N110 is activated , the selector lever stays locked in position "P" in the event of a malfunction (e.g. flat battery, failure of solenoid N110, etc.).

In order to move the vehicle in such an event, an emergency release procedure must be performed.

The emergency release mechanism can be accessed by removing the ashtray insert and the trim clip behind it.

Solenoid N110 can be actuated with an aid (e.g. with a ball-point pen), and the locking lever released. At the same time, the button on the selector lever must be pressed and the selector lever pulled back.

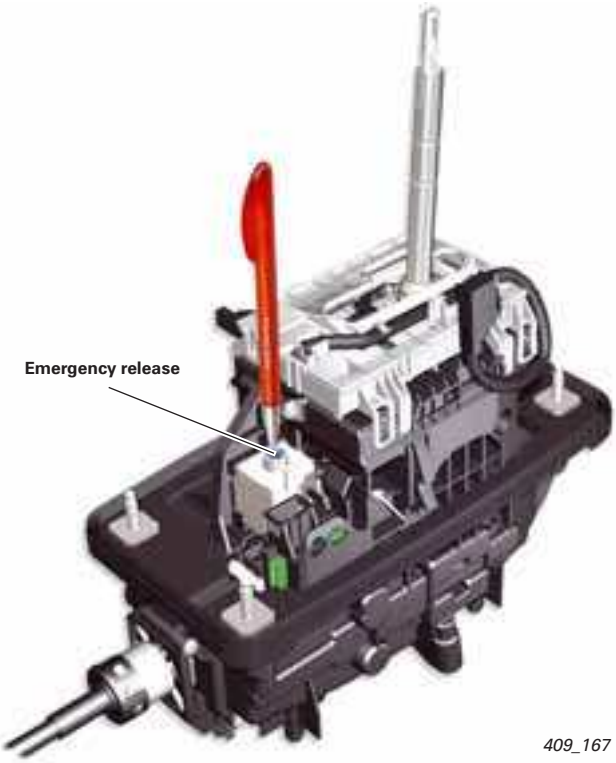

409_167

Actuation of the emergency release

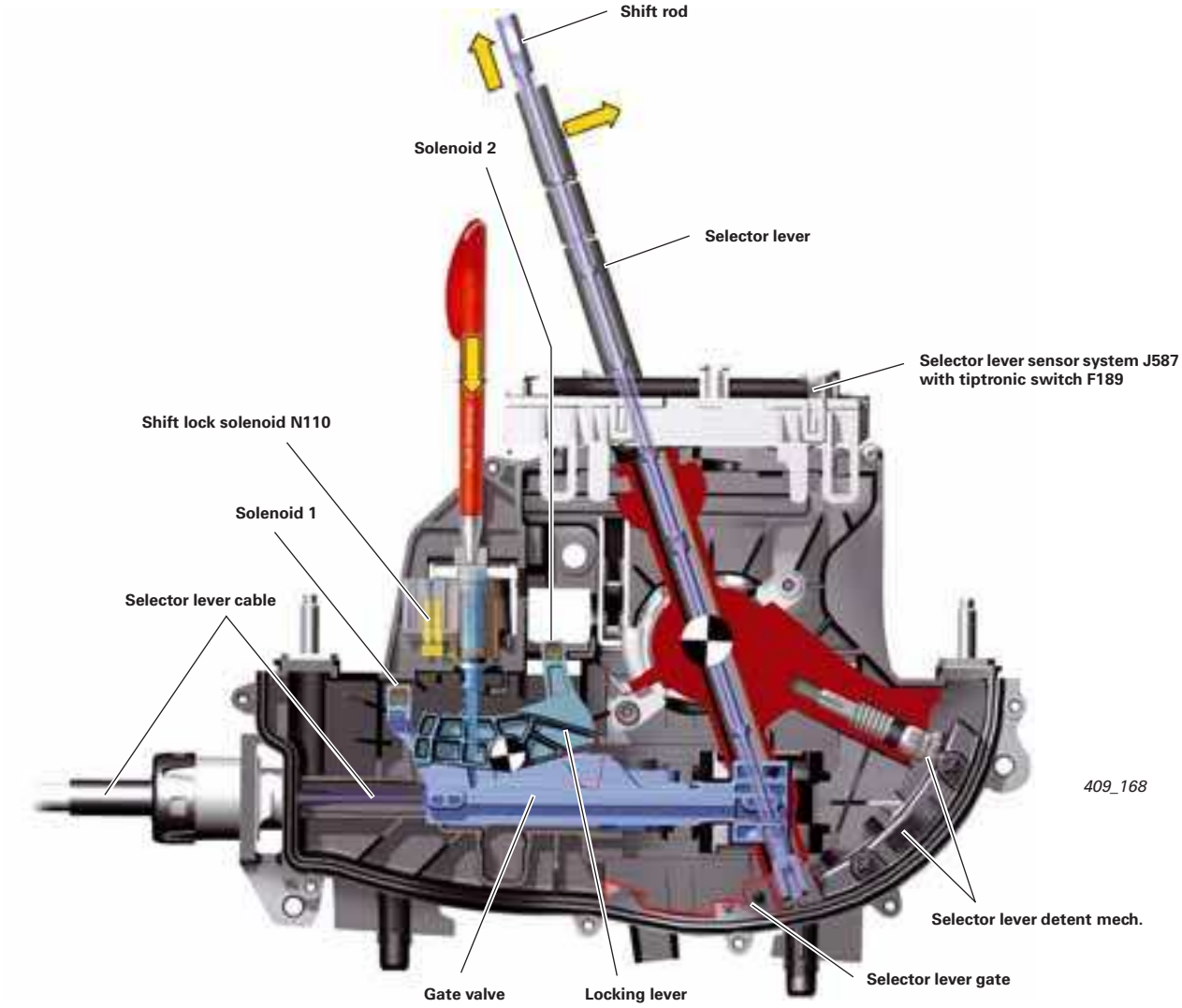

409_168

Overview

Four alternative suspension systems are used on the Audi A4 '08.
Standard suspension 1BA represents the basic version. A sports suspension 1BE is optional. The sports suspension has 20 mm lower ride height than the standard suspension. Different springs, shock absorbers and anti-roll bars are employed. The third variant is the heavy-duty suspension 1BR with 13 mm higher ride height than the standard suspension.

The heavy-duty suspension has a special set-up for use on poor roads. This suspension also features an engine guard on the front axle.
A suspension system with electronic damping control 1BL is available as a fourth variant. This suspension has the same ride height as the sports suspension. quattro GmbH offers an S-Line sports suspension with the designation 1BV.

409_060

Reference

For further information about the design and function of the suspension system, refer to SSP 394 Audi A5 – Suspension System.

Axles

The front and rear axle components have been carried over from the Audi A5, except for the springs, shock absorbers and anti-roll bars. Track widths are slightly smaller than on the Audi A4 '08 due to the larger offset depths of the wheels.

Brake system

The brake, ESP and EPB systems are identical to those of the Audi A5.

409_124

Steering system

The conventional hydraulic power steering system with mechanically adjustable steering column has been adopted from Audi A5 as basic equipment. A servotronic function is optionally available.

409_126

Dynamic steering

The newly-developed dynamic steering system is available as optional equipment.

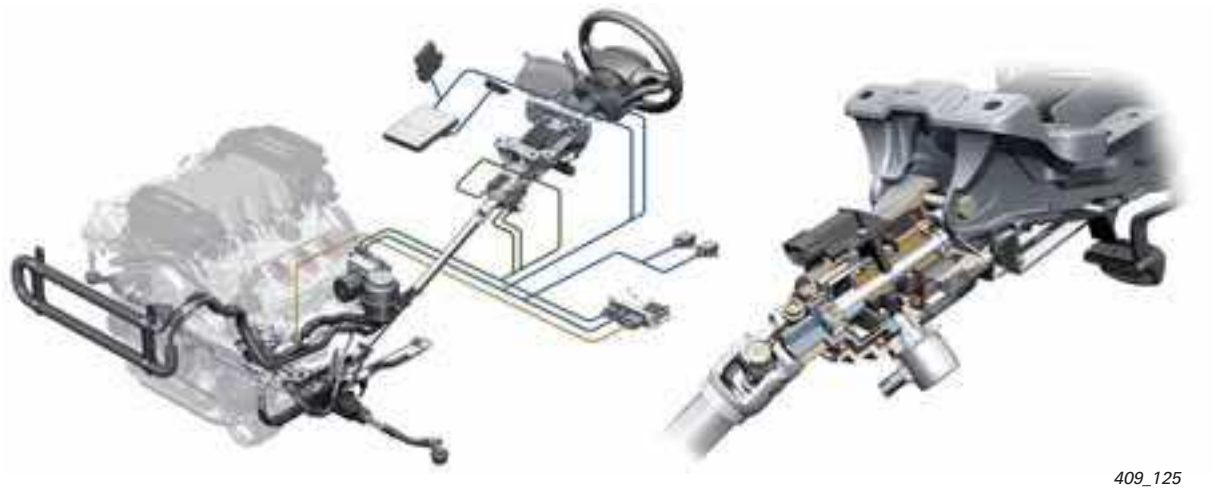

409_125

Reference

For further information regarding the design and function of the dynamic steering system, refer to SSP 402 Dynamic Steering System.

Electronic damping control

An electronic damping control system 1BL is available for the Audi A4 '08 in combination with Audi drive select. This suspension variant is based on the sports suspension 1BE. A suspension set-up with conventional, non-controlled shock absorbers always represents a compromise.
Generally speaking, sportiness, high driving dynamics and comfort are all conflicting requirements. The damping control system achieves an optimum balance between these objectives.

The different characteristics of the shock absorbers are shown in the diagram. Suspension systems fitted with conventional damping components have a fixed damping force to damping rate ratio.
The advantage of controlled dampers is that the damping force can be varied over a broad range.
The rebound and compression damping adjustment range lies between the red limiting characteristics.

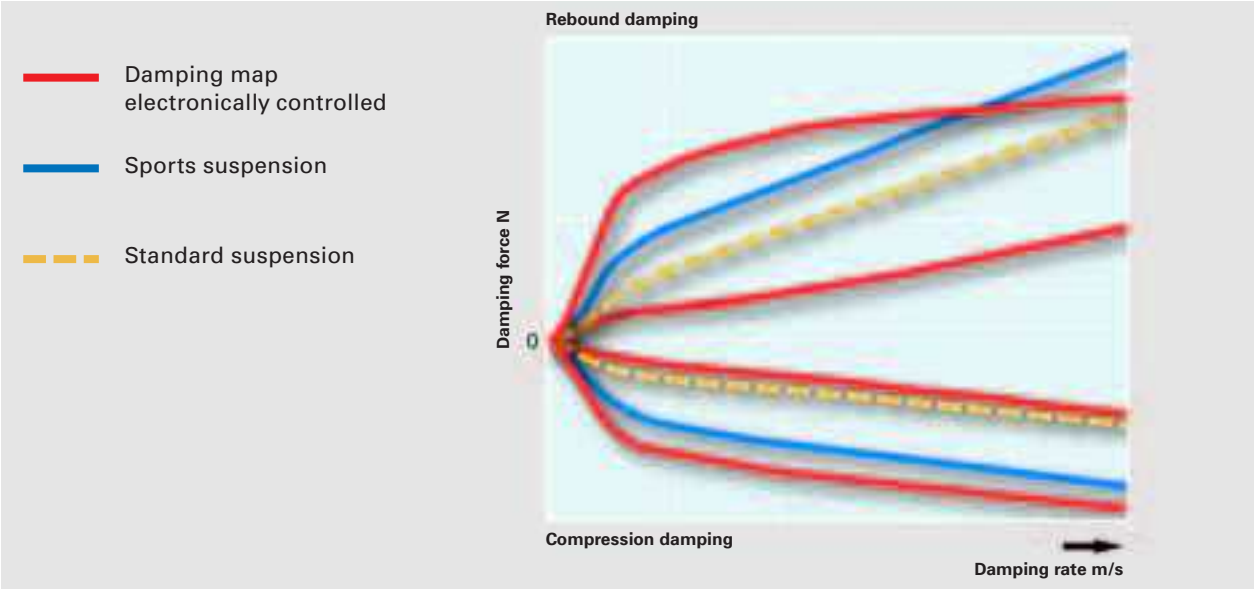

The driver can choose from the following three different damping characteristics:

- The **COMFORT** setting provides a damping control characteristic for comfortable ride.
- The **DYNAMIC** setting provides a damping control characteristic for sporty driving.
- The **AUTO** setting provides balanced damping control.

The controlled shock absorbers have the same design and functional principle as the shock absorbers on the Audi Q7 with adaptive air suspension (aas).

409_128

Reference

For further information regarding controlled shock absorbers, refer to SSP 362 Audi Q7 - Suspension System.

The ECD control unit (electronically controlled damping) J250 determines the vehicle dynamics on the basis of various measured data. It receives data for road speed, transverse acceleration and steering angle from the ESP control unit J104. The measured data generated by the vehicle level sender is used to determine the acceleration values of the unsprung masses (axle components and wheels).

The three body acceleration senders measure the acceleration of the vehicle body. The control unit uses this measured value to calculate the activation current for each shock absorber in the form of a PWM signal.

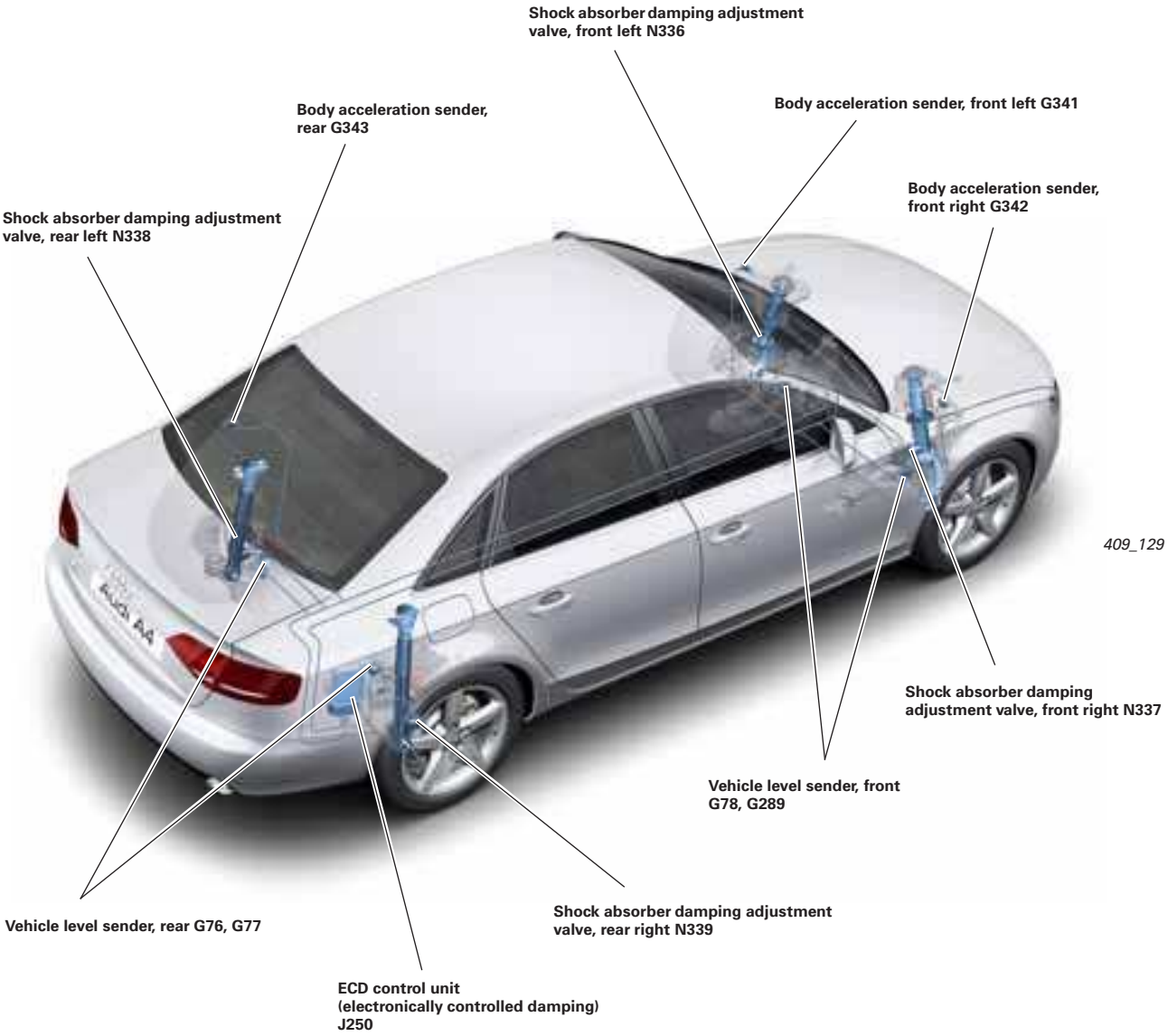

Note

After replacing the control unit or a vehicle level sender, it is necessary to readapt standard suspension position. The procedure is the same as for vehicles with adaptive air suspension (aas).

adaptive cruise control (acc)

In the Audi A4 '08, acc is used for the first time in this model series. The system is identical in design and functional principle to that of the Audi A6. The difference to the Audi A6 is the eccentric installation position at the front right. In addition, the radar sensor is installed in an open position, i.e. it is not covered by an ornamental grille.

409_130

Note

The radar sensor is set using existing special tools VAS 6190, VAS 6430 and VAS 6041 + VAS 6041/1A.
For detailed information regarding the design and mode of operation of the acc, refer to SSP 344 and SSP 289.

Low tyre pressure indicator

An indirect measuring tyre pressure monitoring system is used on the Audi A4 '08. Its functional principle is identical to that of the current Audi TT. The difference to the Audi TT is that a special software module in the ESP control unit performs the evaluation and control functions for the Audi A4 '08. A direct measuring system will continue to be available for the North American market.

Reference

For further information regarding the low tyre pressure indicator, refer to SSP 381 Audi TT Coupè - Suspension System.

Wheels and tyres

16“ basic wheels	16" optional wheels	17" optional wheels	18“ optional wheels
7,0J x 16 ET39 (1) Steel wheel with full wheel trim 205/60 R16 7.5J x 16 ET45 (2) Forged aluminium wheel painted 225/55 R16	7.5J x 16 ET45 (3) Cast aluminium wheel, painted 225/55 R16	7.5J x 17 ET45 (4) Cast aluminium wheel, painted 225/50 R17 7.5J x 17 ET45 (5) Cast aluminium wheel, painted 225/50 R17 8J x 17 ET47 (6) Cast aluminium wheel, painted 245/45 R17	8J x 18 ET47 (7) Cast aluminium wheel, painted 245/40 R18

16" winter wheels	17" winter wheels	18" winter wheels
7J x 16 ET39 (1) Steel wheel with full wheel trim 205/60 R16 7J x 16 ET46 (8) Cast aluminium wheel, painted 225/55 R16	7J x 17 ET46 (9) Cast aluminium wheel, painted 225/50 R17	8J x 18 ET47 (7) Cast aluminium wheel, painted 245/40 R18

Fuses and relays

The electrical system of the Audi A4 '08 is identical to that of the Audi A5.
This also applies to the installation locations of the fuseboxes, relay panels, CAN node connectors and control units.
The information regarding the gateway, the battery monitor control unit, the alternator and the external starter connection can also be taken from the Audi A5.

Reference

For further information, refer to SSP 395 Audi A5 – Electrical System and Networking.

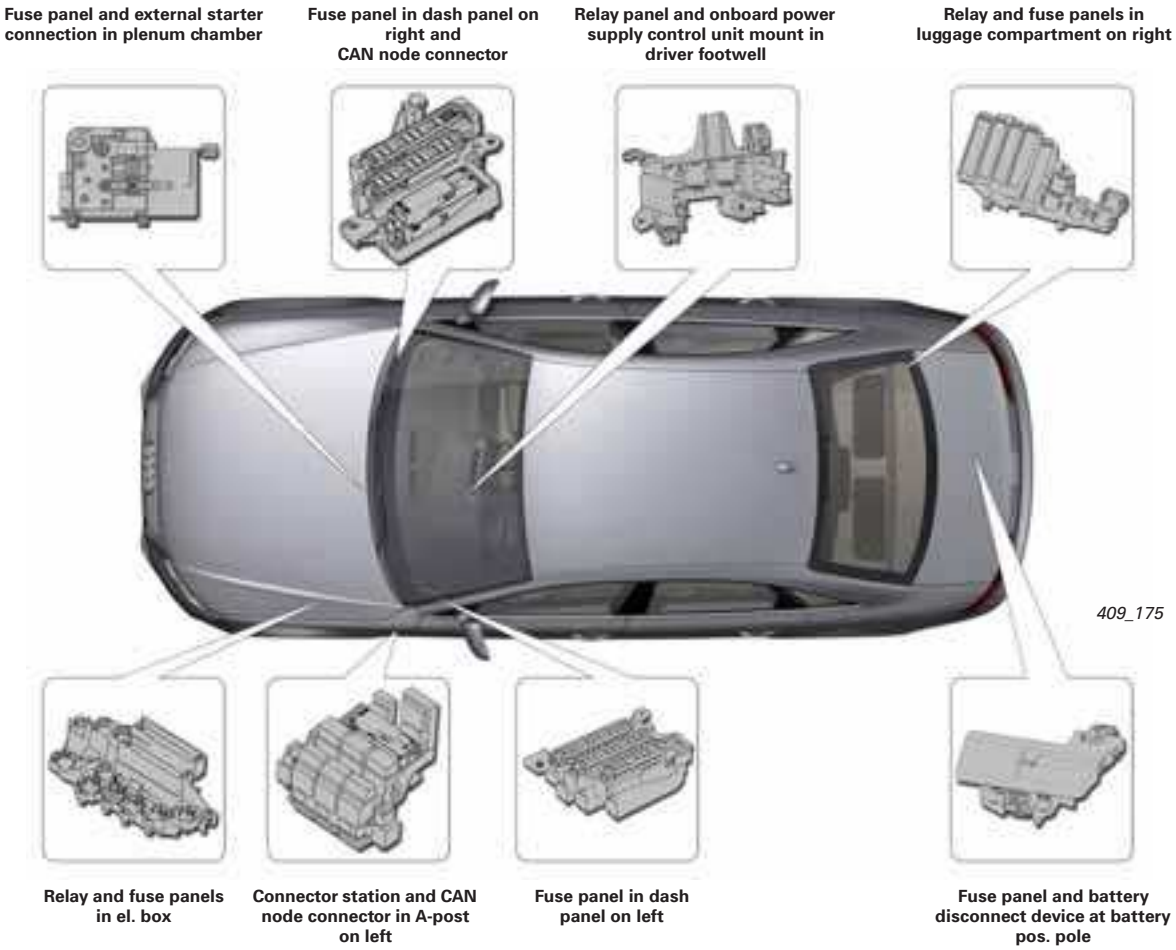

Several switches, sensors and control units have been added for the Audi A4 '08:

- Rear door control units J388 and J389*
- Front seat ventilation control units J799 and J800**
- Charisma switch module E592**
- ESP sensor unit -2- G536**
- ECD control unit (electronically controlled damping) J250**
- Lane departure warning system control unit J759**
- Active steering control unit J792**

* only fitted on the Audi A4 '08
** dependent on specification, also used on the Audi A5

Outside lights

As with the Audi A5, a distinction is made between three headlight versions on the Audi A4 '08:

- Halogen headlight
- Bi-xenon headlight
- Bi-xenon headlight with adaptive light (dynamic cornering light)

Lamp configuration in the halogen headlight version

409_177

Lamp configuration in the bi-xenon version and in the bi-xenon version with adaptive light

409_178

* ECE for the European market
** SAE version for the North American market

The fitted fog lights, side indicator lamps and tail lights are identical to those on the Audi A5.

Reference

For further information regarding the configuration of the lamps, the bulbs used and the light bulb replacement, refer to SSP 395 Audi A5 - Electrical System and Networking.

Networking - vehicles with infotainment CAN bus

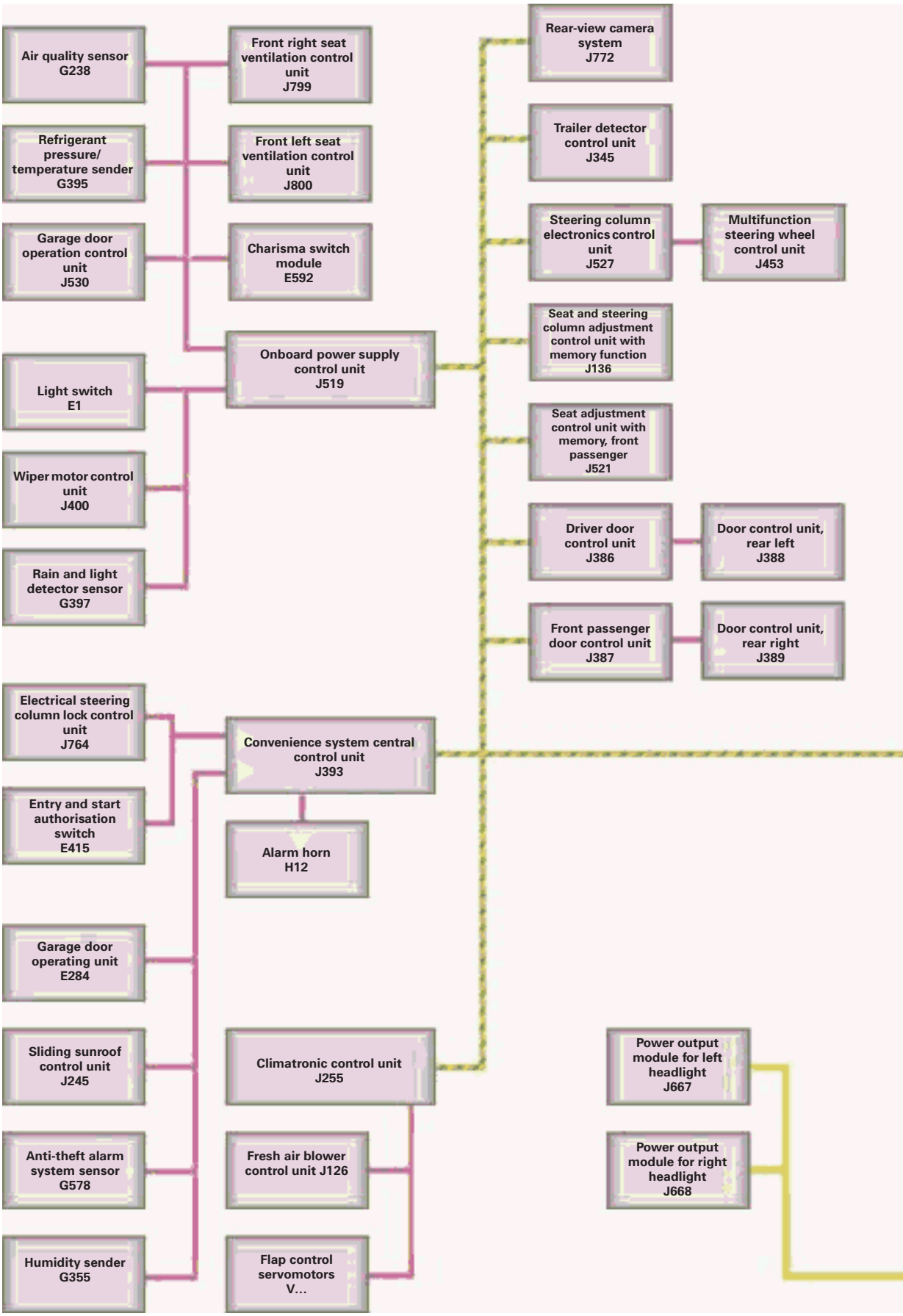

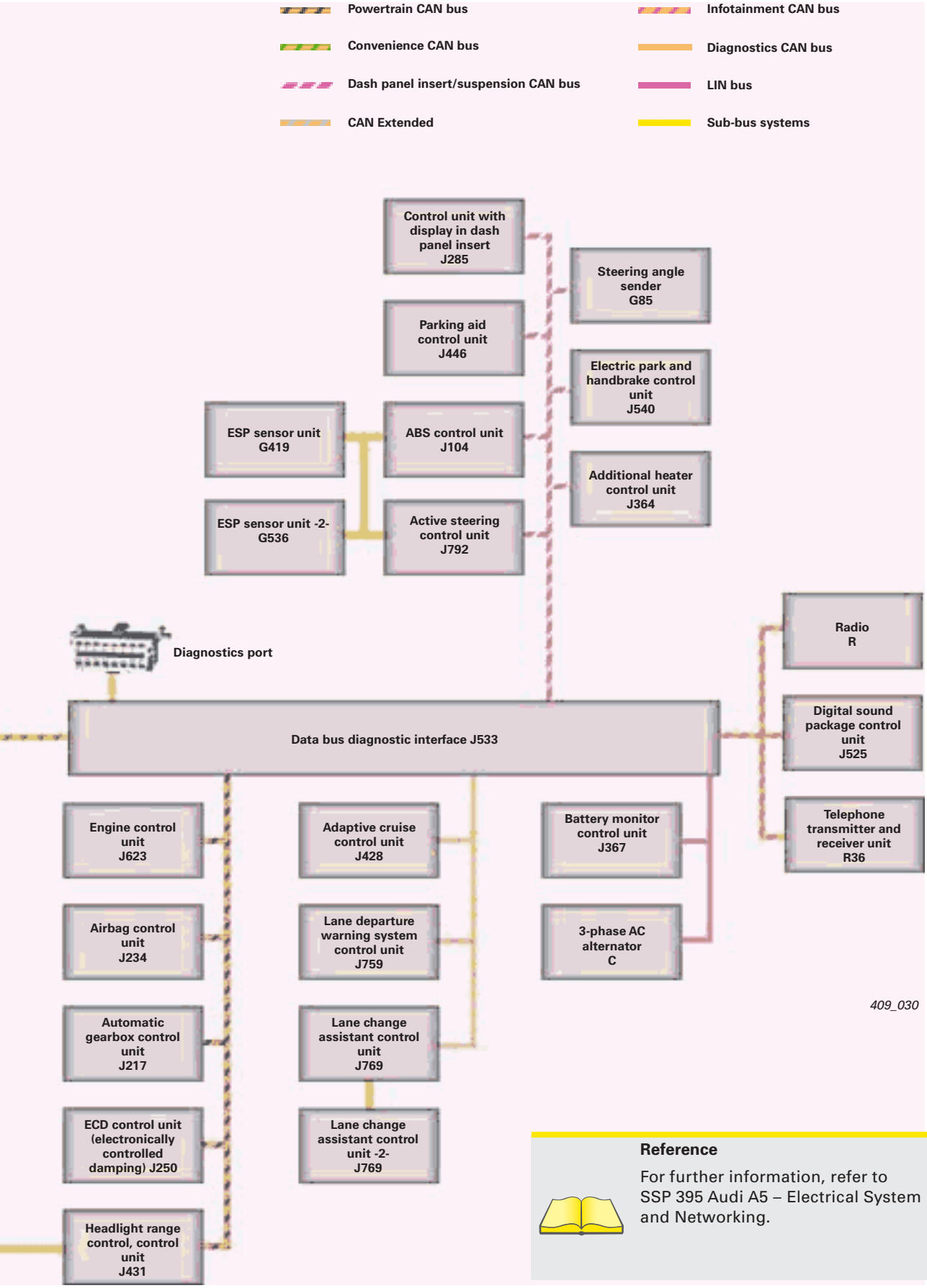

Reference

For further information, refer to SSP 395 Audi A5 – Electrical System and Networking.

Networking – vehicles with MOST bus

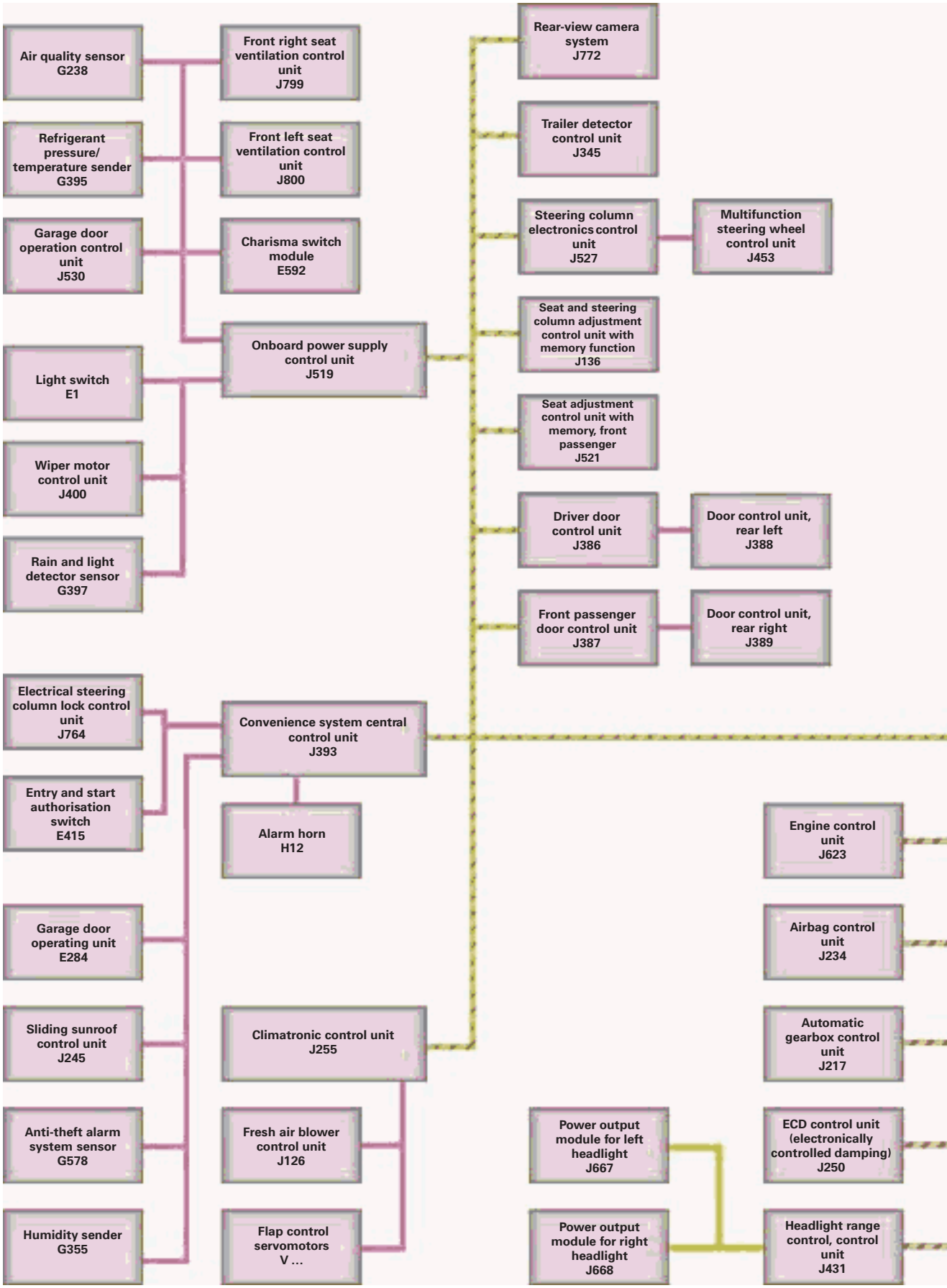

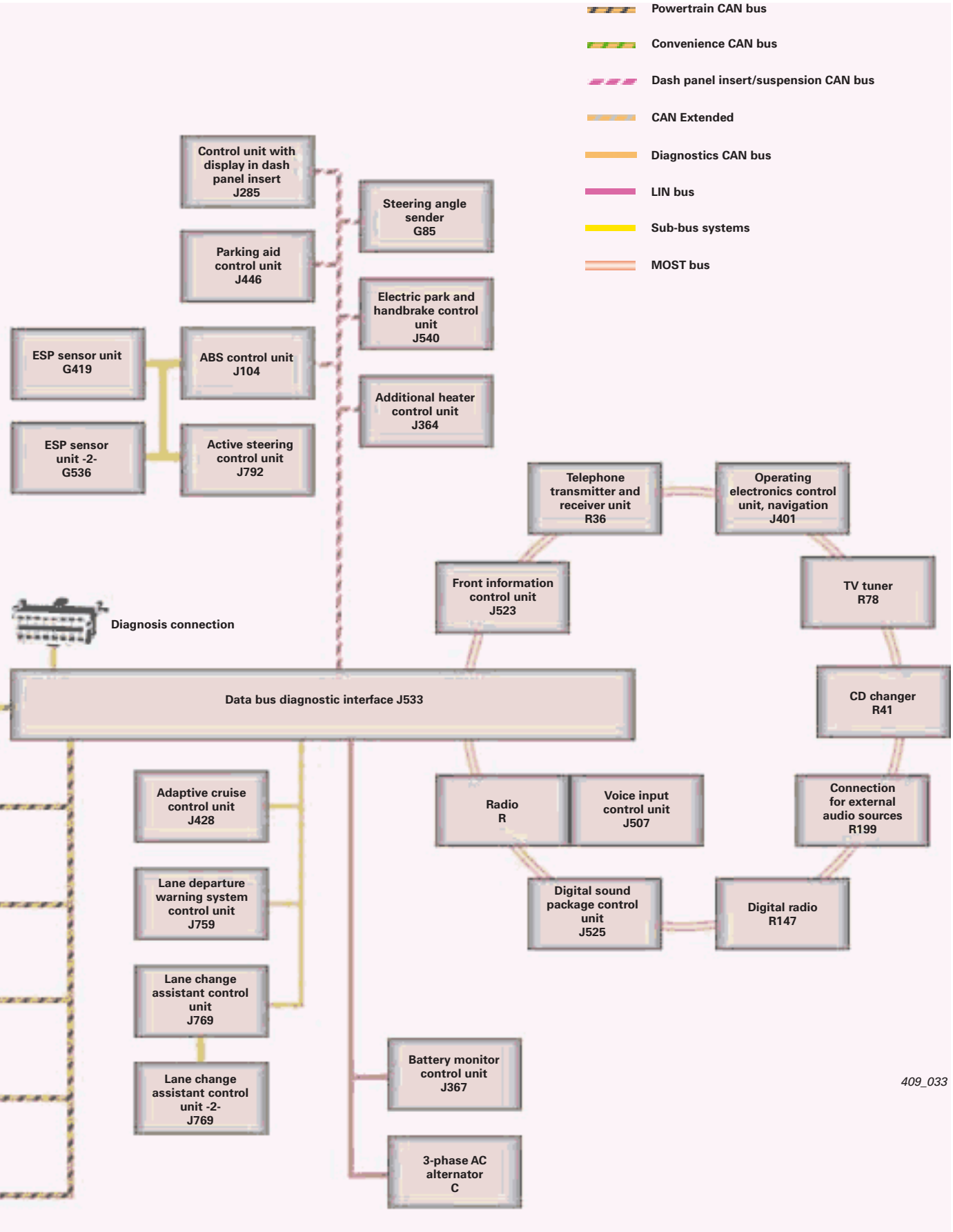
Powertrain CAN bus
Convenience CAN bus
Dash panel insert/suspension CAN bus
CAN Extended
Diagnostics CAN bus
LIN bus
Sub-bus systems
MOST bus
Control unit with display in dash panel insert J285
Steering angle sender G85
Parking aid control unit J446
Electric park and handbrake control unit J540
ESP sensor unit G419
ABS control unit J104
Additional heater control unit J364
ESP sensor unit -2- G536
Active steering control unit J792
Telephone transmitter and receiver unit R36
Operating electronics control unit, navigation J401
Front information control unit J523
TV tuner R78
Diagnosis connection
Data bus diagnostic interface J533
CD changer R41
Adaptive cruise control unit J428
Radio R
Voice input control unit J507
Connection for external audio sources R199
Lane departure warning system control unit J759
Digital sound package control unit J525
Digital radio R147
Lane change assistant control unit J769
Battery monitor control unit J367
Lane change assistant control unit -2- J769
3-phase AC alternator C
409_033

Installation overview - control units

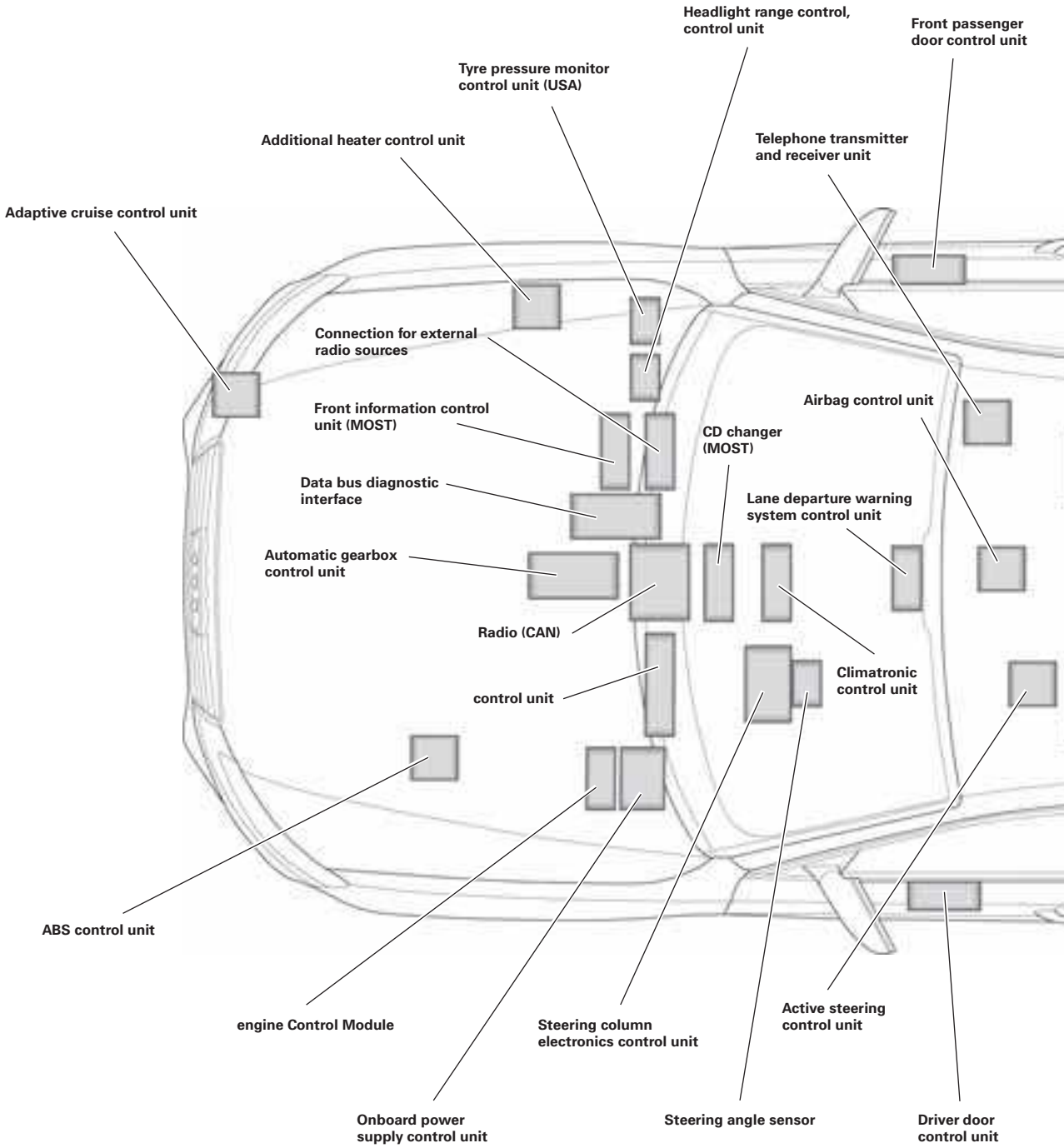

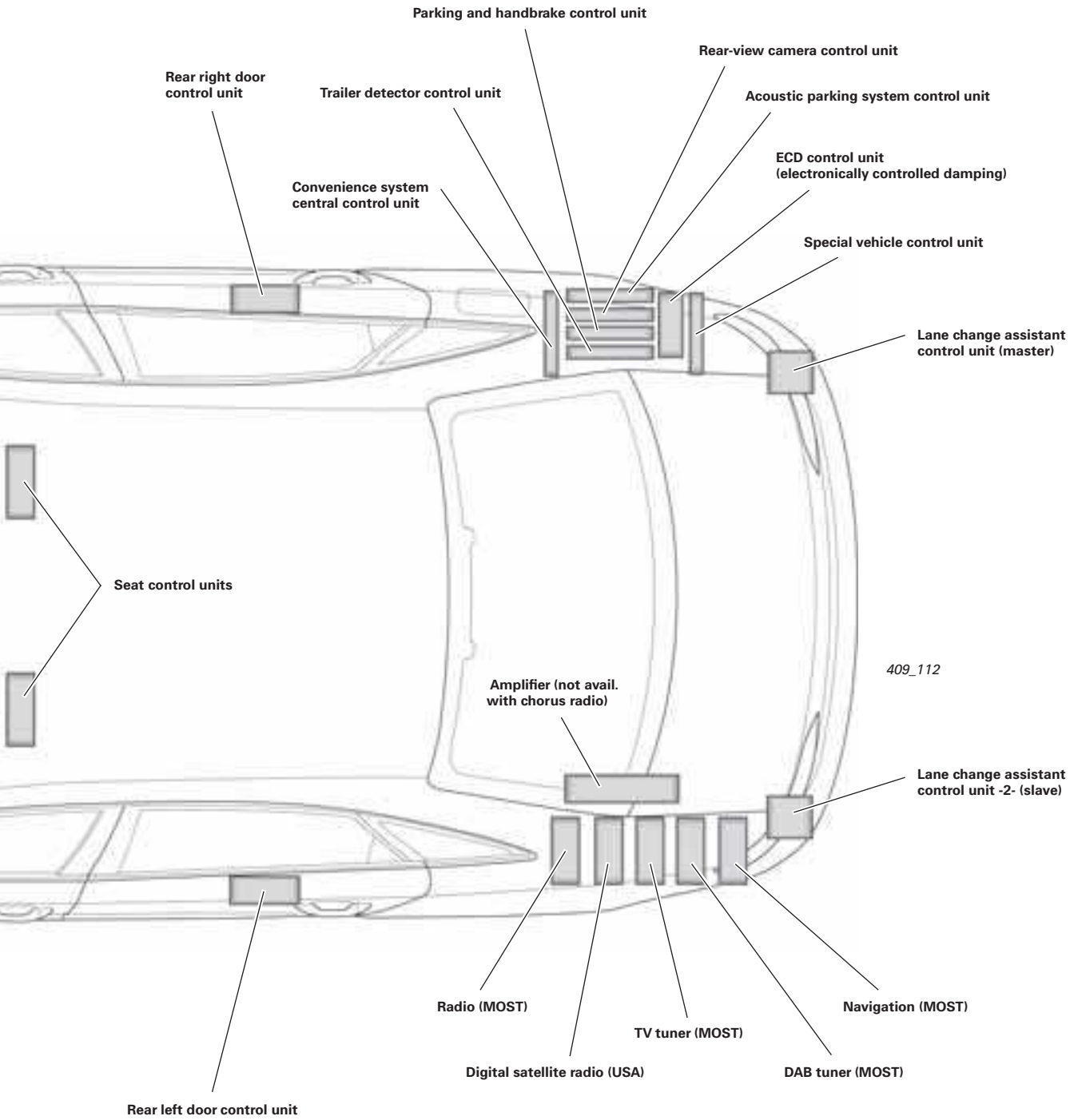
Parking and handbrake control unit
Rear-view camera control unit
Rear right door control unit
Trailer detector control unit
Acoustic parking system control unit
ECD control unit (electronically controlled damping)
Convenience system central control unit
Special vehicle control unit
Lane change assistant control unit (master)
Seat control units
409_112
Amplifier (not avail. with chorus radio)
Lane change assistant control unit -2- (slave)
Radio (MOST)
Navigation (MOST)
TV tuner (MOST)
Digital satellite radio (USA)
DAB tuner (MOST)
Rear left door control unit

Lane departure warning system

Function

The lane departure warning system helps the driver to keep the vehicle in lane. A camera is used to detect lane marking lines. The lane departure warning system is ready for operation when it detects marking lines on both sides of the lane in which the vehicle is travelling.
If the vehicle approaches a detected marking line and appears to be leaving the lane, the steering wheel begins to vibrate in order to warn the driver. If he indicator is turned on before crossing a marking line when the system is ready, the warning is suppressed because the system assumes that the lane change is intentional.

409_064

A steering wheel vibration warning is given once only when the vehicle approaches or crosses a detected lane marking line. A second warning is only given if, after the first warning, the vehicle moves far enough away from the detected marking line and subsequently approaches it again. This avoid warnings being issued constantly when driving in parallel with a lane marking.

The system is designed for use on motorways and well-developed country roads. That is why it does not begin to operate until the vehicle is travelling a speed of approx. 65 kph or more.

Bad ambient conditions such as a dirty or snow-covered road surfaces, narrow lanes and unclear or confusing traffic lane markings, e.g. at motorway roadworks, can cause the system to be deactivated temporarily. The current system status is indicated to the customer in the dash panel insert.

409_065

Note

The lane departure warning system is a driver assistance system. The system helps to prevent a vehicle from inadvertently leaving its lane by alerting the driver before the vehicle crosses detected lane marking lines. However, the responsibility for keeping in lane still ultimately rests with the driver!

Warning lamp in dash panel insert

409_066

Possible states of the warning lamp

	If the warning lamp in the dash panel insert is lit green, the system is **"on"** and **activated (ready to issue warnings)**.
	If the warning lamp is lit yellow, the system is **"on"**, but **deactivated (not ready)** due to the prevailing conditions. In this state, the driver is not assisted by the lane departure warning system and the system **does not** issue any warnings. Possible reasons for deactivation are given below.
	If the warning lamp of the lane departure warning system is not lit, the **system is "off"**. To activate the system, the lane departure warning system button in the indicator lever must be operated.

Reference

For further information regarding the design and function of the lane departure warning system, refer to SSP 398 Lane departure warning system - Audi lane assist.

Audi drive select

409_104

The Audi A4 '08 and the Audi A5 can be optionally equipped with the innovative Audi drive select system.
Previously, systems such as the automatic gearbox or damping control system could only be adjusted in the "Sport" setting.
The advantage of Audi drive select is that multiple systems, the engine, the automatic gearbox, the damping control system, the servotronic and the dynamic steering system can now be adjusted at the touch of a button. This means that completely personalised vehicle characteristics can now be obtained.

The characteristics of these systems are controlled electronically, and can be adjusted from comfortable to sporty.

Audi drive select is also referred to as "Charisma", both in-house and in the service literature. The core element of the system is the Charisma switch module E592, which imports the driver input and supplies this information to the onboard power supply control unit J519.

Vehicle with radio

If the vehicle is equipped with a radio, the Charisma switch module E592 is located on the shift gate. The COMFORT, AUTO and DYNAMIC settings can be selected by pressing the up/down arrow buttons. The selected setting is lit bright red.
If the DYNAMIC setting is selected by pressing the right-hand control button, the left-hand control button must be pressed to change the setting.

409_171

Vehicles with MMI

In vehicles with MMI the switch module is located on the centre console. Besides the COMFORT, AUTO and DYNAMIC settings, this switch module has an additional INDIVIDUAL setting. The four settings can be selected in a circular pattern using the control buttons.

Both switch module versions allow settings to be changed both when the vehicle is stationary and while driving. To activate the change of setting for the engine, too, the accelerator pedal must be briefly depressed.
If the ignition is turned "off", the AUTO setting is selected by default after restarting.

409_169

INDIVIDUAL settings on the MMI

The INDIVIDUAL setting options can be configured in the "CAR" menu on the MMI screen.
The engine and gearbox are a grouped together, as are the servotronic and the dynamic steering system. The damping control system comprises the third group.

The individual settings for these three groups are assigned to the ignition key when the ignition is turned off.

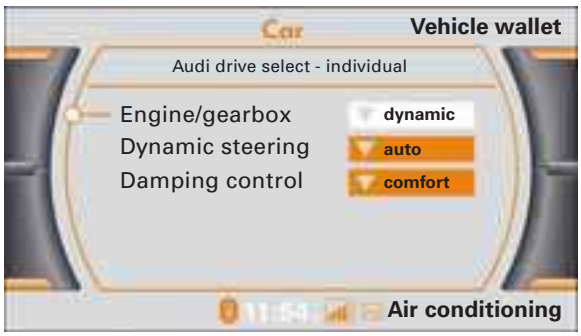

409_106

Audi drive select is, by default, in AUTO mode after the engine is started. This is a balanced operating mode, which is equally suitable for all driving situations and conditions.

The AUTO mode is, however, by no means an inflexible driving program. The automatic gearbox still uses the dynamic shift program, which adapts the shift points to the driver's profile, while the damping control system adjusts the stiffness of the shock absorbers depending on the driving situation.

When AUTO mode is selected, neither the most comfortable characteristic nor the most sporty characteristic is obtained.

The COMFORT mode provides a markedly comfortable set-up, and is ideal for relaxed long-distance driving.
The damping control characteristic is softer, and the steering has an easier action and is less direct.
The engine and automatic gearbox reactions are otherwise identical to those in selector lever position "D".

The DYNAMIC mode is suited to sporty driving on windy roads. The damping control system permits, on average, higher damping forces, and the steering is firmer and more direct.
The engine has more instantaneous response to accelerator pedal inputs, and the gearbox uses the shift program otherwise available in selector lever position "S".

	COMFORT	AUTO	DYNAMIC
Engine	normal	normal	'Sport' mode
Automatic gearbox	normal same as in selector lever position "D"	normal same as in selector lever position "D"	Sport program
Servotronic	easy action	normal	firm
Dynamic steering	comfortable & indirect	normal	sporty & direct
Damping control	comfortable & soft	normal	sporty & firm

Distributed functions

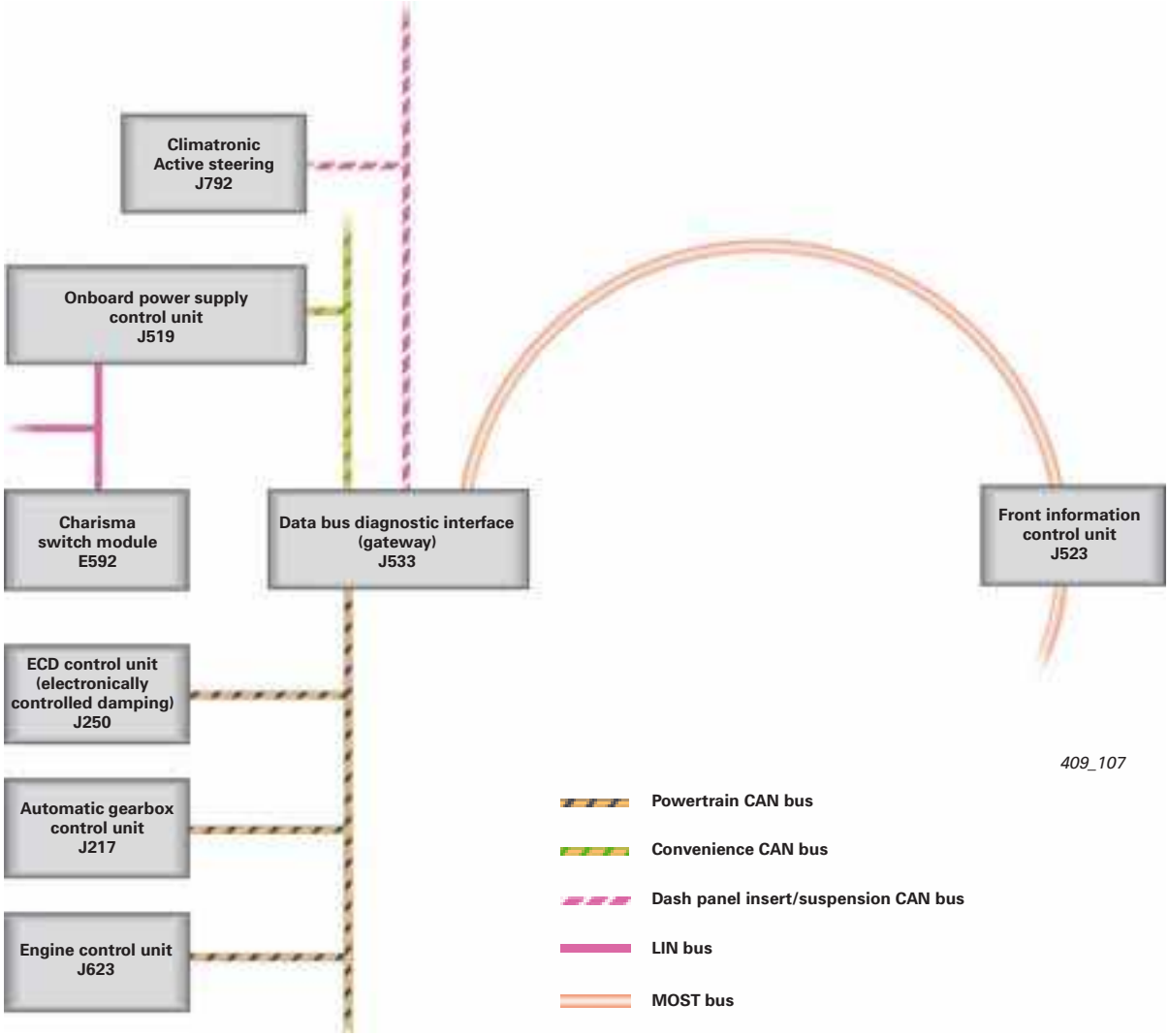

Onboard power supply control unit J519 plays a central function in the Audi drive select system. The onboard power supply control unit is connected via LIN bus to the Charisma switch module E592 and imports the selected switch position. The settings selected for the INDIVIDUAL mode in the CAR menu of the MMI are signalled to gateway via the MOST-bus. This information is then provided to the onboard power supply control unit via the convenience CAN bus.

This information is used to generate an activation current for the servotronic valve. At the same time, a command is sent to the gateway via the convenience CAN-bus.
The gateway sends this command to the dash panel insert/suspension CAN, and to the powertrain CAN bus for the control units participating in Audi drive select.

The function as well as the switch position of the Charisma switch module can be checked in the data blocks.Most participating control units store measurement data which can be used to check whether the information has been received from the onboard power supply control unit and implemented.

230-volt power socket

The Audi A4 '08 and Audi A5 can be equipped with a 230-volt Euro-standard power socket. The power socket on the back of the centre console can be used for electrical accessories with a power inputs of up to 150 watts. It can also handle peak power loads of up to 300 watts for a short period of time (approx. 2 minutes). The 230 volt power socket can be used while the ignition is on.
The Euro-standard power socket has an integrated childproof device. The socket is not energised until the Euro-standard plug is fully inserted.

An integrated LED indicator indicates the operating state of the power socket. A continuous green light indicates that the socket is energised.

A flashing red LED denotes that a fault has occurred in the socket. This can be caused if the power output exceeds 150 watts for a lengthy period of time (overtemperature cut-out) or if the power demand exceeds 300 watts (overcurrent cut-out).

409_134

Inverter

The 230-volt AC voltage is generated by a built-in inverter hard-wired to the power socket. This unit is located in the centre console.

The inverter does not produce a "normal" sine-wave curve typical of 230-volt AC voltage, but a sine-wave-like square-wave voltage. However, some power consumers (e.g. fluorescent lamps) require an exact sine-wave AC voltage, and therefore cannot be operated through this power socket.

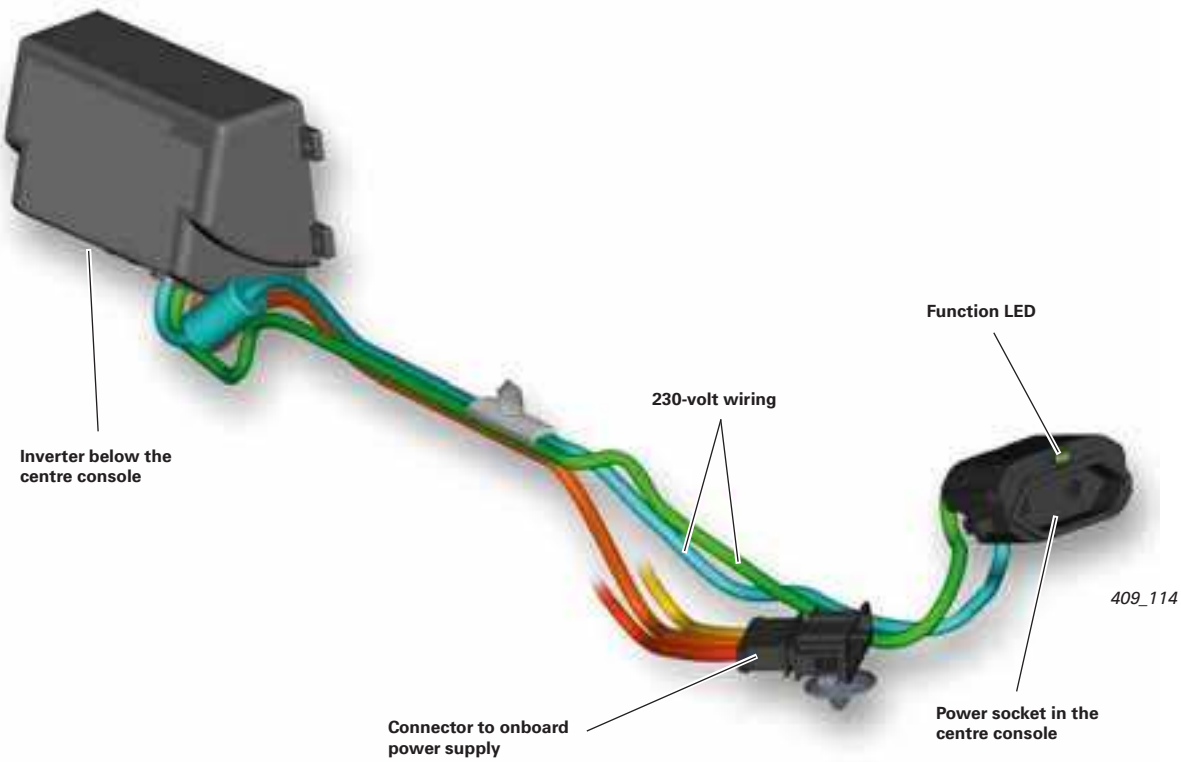

409_114

Protective mechanisms for inverter with 230-volt power socket:

- Covered power socket
- Integrated childproof device with microswitch
- Integrated overtemperature and overvoltage protection (with automatic reactivation after cooling)
- Dual-insulated 230-volt wiring
- 230-volt part is disconnected from vehicle in a potential-free state

Inverter versions:

- 230V/50 Hz for Europe
- 115V/60 Hz for North America
- 100V/50 Hz for Japan

Function

The inverter, i.e. the 230-volt power socket, does not start to operate until the ignition is turned on and the microswitch integrated in the power socket is actuated.
The microswitch is actuated when the Euro-standard plug is inserted. In addition to the terminal 30 and terminal 31 lines, the inverter is connected to a control line routed from the power socket relay J807.
This control line does not become live until relay J807 has closed. This relay is, in turn, activated by the convenience system central control unit J393 after the ignition is turned on.
The fuses and the power socket relay J807 are mounted on the relay and fuse panels in the luggage compartment on the right.
The convenience electronics central control unit J393 is also located in the luggage compartment on the right.

Connecting to the onboard power supply

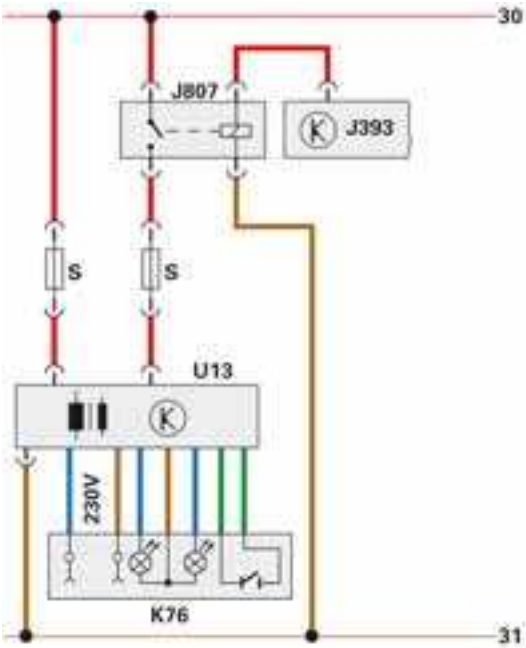

409_113

Legend:

J393	Convenience system central control unit
J807	Power socket relay
K76	Electric socket with warning lamp
U13	Inverter

Note

Repairs must not be performed on the 230-volt systems. If a power socket or an inverter is faulty, the complete module must be replaced. For further safety instructions and fuse assignments, refer to the valid Workshop Manual or current flow diagram.

Infotainment systems overview

The Audi A4 '08 uses the same infotainment systems as on the Audi A5. All Audi A4 '08 models are equipped as standard with at least a radio combined with basic sound system. The concert and symphony radios as well as MMI systems with CD navigation and DVD navigation are optionally available.

Standard	Optional radios	
chorus radio	concert radio	symphony radio
Standard equipment		
Control panel in radio		
Car menu	CAR menu incl. driver assist	
Phase diversity		
	TP memory function	
	SD/MMC memory card reader	
Single-CD drive in radio	Single-CD drive (MP3/WMA) in radio	CD changer (MP3/WMA) in radio
Amplifier in radio with 2 x 20 watts output for 4 front loudspeakers	Amplifier in radio with 4 x 20 watts output for 8 front and rear loudspeakers	
Options		
VDA interface for aftersales mobile phone retrofitting (exclusively available to key accounts in Germany)		
	Mobile phone adaptor on the infotainment CAN bus	
	Digital radio tuner (DAB, integrated in radio)	
		Digital satellite radio (North America only)
	Audi sound system 10 loudspeakers in combination with a 6-channel amplifier on the infotainment CAN bus	
	Bang & Olufsen sound system 14 loudspeakers in combination with a 10-channel amplifier on the infotainment CAN bus	

The Audi Sound System, as well as the Bang & Olufsen Sound System from the Audi A5, are optional. The aerial system on the Audi A4 '08 is identical to the aerial system on the Audi A5. For details of the infotainment systems on the Audi A5, refer to page 58 ff. of Self-Study Programme 392.

Radio navigation systems

CD navigation system incl. MMI basic plus	DVD navigation system incl. MMI
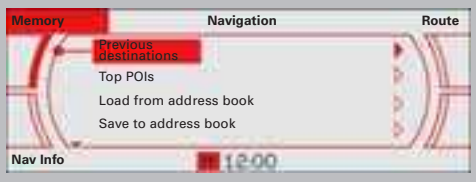	
MMI control panel in the centre console	
CAR menu incl. driver assist	
Diversity radio antenna	
TP memory function	
	Dual tuner
CD changer (MP3/WMA) in dash panel	CD changer (MP3/WMA) in dash panel
4 x 20 watts amplifier on MOST data bus 8 loudspeakers, front and rear	
Driver information system, monochrome	Driver information system, colour
VDA interface for aftersales mobile phone retrofitting (exclusively available to key accounts in Germany)	
Mobile phone adaptor on MOST data bus	
Bluetooth car phone	
Digital radio tuner (DAB)	
	Digital satellite radio (North America only)
Audi sound system 10 loudspeakers in combination with a 6-channel amplifier on the MOST data bus	
Bang & Olufsen sound system 14 loudspeakers in combination with a 10-channel amplifier on the MOST data bus	
	Audi music interface
	Speech dialogue system
	TV tuner

Overview

The Audi A4 '08 is equipped as standard with a deluxe automatic air conditioning system. The deluxe automatic air conditioning is a combination of a heating and ventilation system and a cooling system, which is responsible for dehumidifying and cooling the interior.

The customer can choose between two different automatic air conditioning system versions:

- Single-zone deluxe automatic air conditioning system
- Three-zone deluxe automatic air conditioning system plus

Both systems are automatic air conditioning systems. They can be distinguished at first glance by their different air conditioning control units. The single-zone automatic air conditioning system is the standard version.

Deluxe automatic air conditioning system

409_036

Deluxe automatic air conditioning plus system

409_034

409_056

Air conditioner, complete

Coaxial line (low and high pressure lines combined in a single line)

409_055

Coaxial line connection point with quick-release couplings

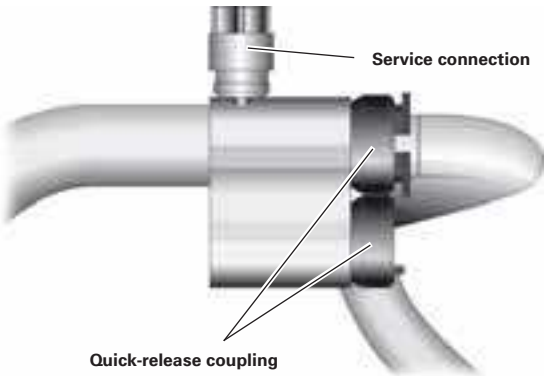

409_054

Air distributor housing

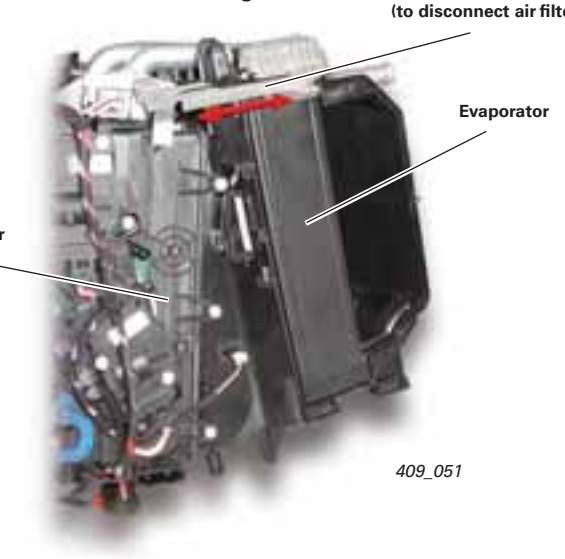

409_051

Note

The standard evaporator is comprised of welded tubes which have to be cut off in order to perform repairs.

409_035

409_052

The LIN bus series circuit of the flap servomotors

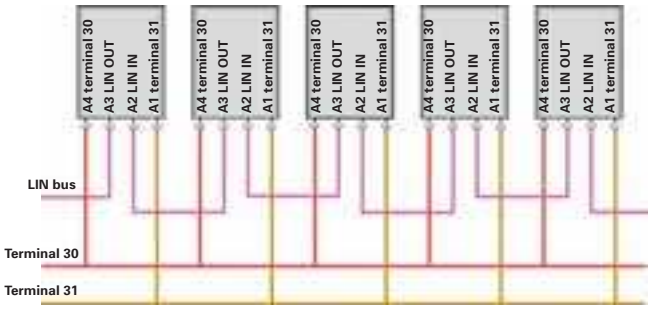

409_053

Reference

For further information, refer to SSP 392 Audi A5.

Automatic air conditioning system - electrics

In the Audi A4 '08, not all sender and sensor signals are read directly into the climatronic control unit J255.
For instance, the data from the refrigerant pressure/ temperature sender G395 and the humidity and windscreen temperature sender G458 is processed in the onboard power supply control unit or in the convenience system central control unit.
The participating control units supply their data to the climatronic control unit J255 via the networking CAN bus.

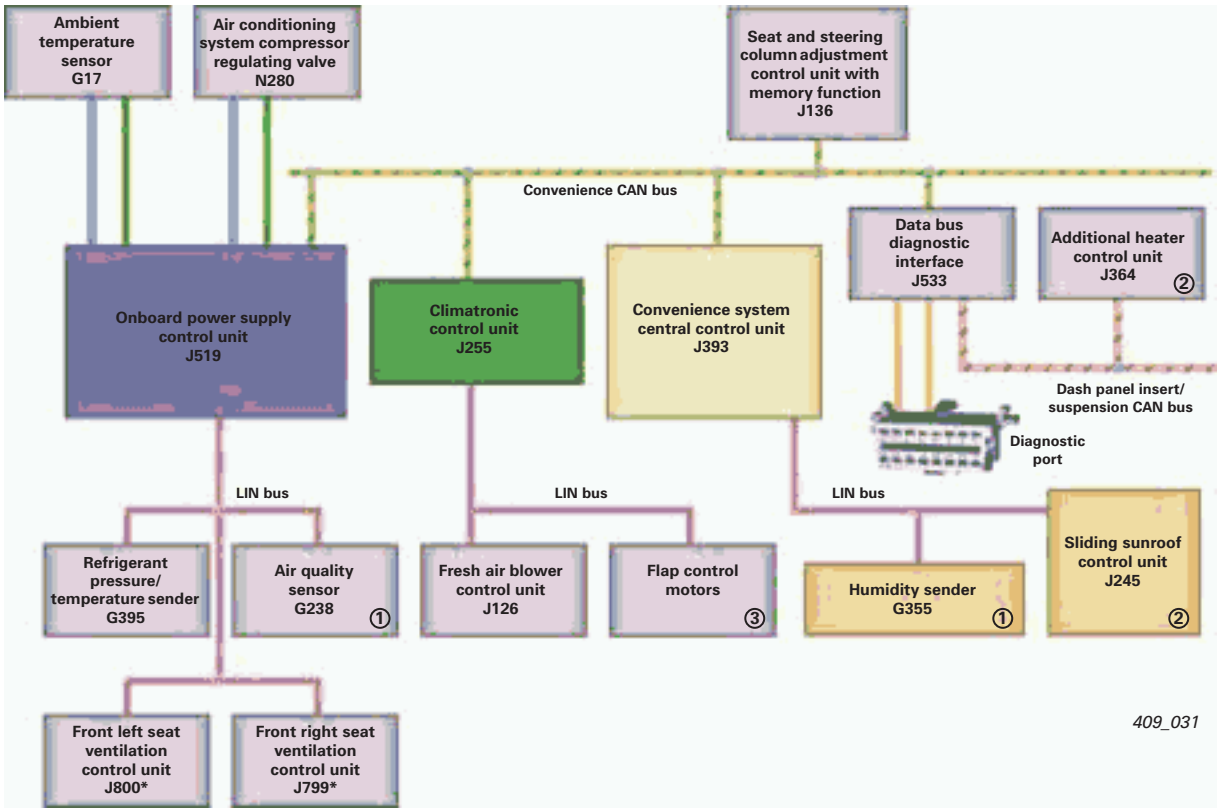

* varies depending on vehicle specification

① Only available with deluxe automatic air conditioning plus
② Optional equipment
③ The deluxe automatic air conditioning system and the deluxe automatic air conditioning plus system have different numbers of servomotors

Sensors and actuators

Ambient temperature sensor G17

Only one ambient temperature sensor is used for ambient temperature evaluation.
The ambient temperature sensor G17 is located at the front end of the vehicle, behind the bumper and directly before the condenser.
The onboard power supply control unit J519 supplies data from the ambient temperature sensor via CAN bus to the control unit with display in dash panel insert J285 and the climatronic control unit J255.
In the event of a fault in the ambient temperature sensor G17, the AC function is deactivated.
The deactivated AC LED indicates that the air conditioner compressor is not in operation and that the automatic air conditioning system is off.

Air quality sensor G238
(only available with deluxe automatic air conditioning plus)

The signal from the air quality sensor G238 is utilised by the climatronic control unit J255 for automatic air recirculation control. In case of failure of the sensor, the automatic air recycle function will be unavailable.

Humidity sender G355
(only available with deluxe automatic air conditioning plus)

The humidity and windscreen temperature sender G458 is designed to prevent the windscreen from misting. Windscreen misting occurs when the temperature at the windscreen drops below the dewpoint, and also in conditions of high relative humidity inside the occupant cell and at low ambient temperatures. For this purpose, the sender measures the moisture content of the ambient air and the temperature directly at the windscreen using a capacitive thin film sensor.
The relative humidity and temperature at the windscreen are measured using a capacitive thin film sensor.
The humidity and windscreen temperature sender G355 functions in much the same way as a plate condenser. The measured capacitance indicates the degree of air humidity.
The sensor electronics convert the measured capacitance to a voltage. The windscreen temperature is measured directly through contact between the humidity sender G355 and the windscreen.

Refrigerant pressure/temperature sender G395

The refrigerant pressure/temperature sender G395 is used on the Audi A4 '08.
The sender interchanges data with the onboard power supply control unit J519 by means of LIN bus signals.
The data is transferred from J519 to the climatronic control unit J255 via CAN bus.
The refrigerant temperature value measured by the refrigerant pressure/temperature sender G395 is not at present evaluated, but can still be exported to the measured data blocks.

Seat air conditioning

The demands on seating comfort in automobile manufacturing are constantly increasing. This is not surprising considering that no other automotive component is in contact with the occupants over as wide an area and for as long as the seat.
The trend today is clearly toward equipping all vehicle classes with seat ventilation systems, a feature previously exclusive to mainly luxury class vehicles.

Seat ventilation systems have considerable benefits and added value, particularly for long-distance drivers, as they enable the driver to stay fit and alert for much longer. Seating comfort is enhanced.

At the points of contact between the seat and the occupants, air cannot flow through the surface of the seat - the seat can only be ventilated.
A spacer web integrated between the cover and cushioning allows air to flow in parallel with the surface.

The Audi A4 '08 is the first model in this class to feature a deluxe air-conditioned seat. Two axial fans are integrated in the seatback and in the backrest cushioning respectively.
The axial principle is notable for allowing high flow rates, whereby the air passing through the fan flows largely parallel to the fan's axis of rotation, i.e. in an axial direction.
Axial fans are compactly built, and therefore take up little space inside the seat and operate very quietly.

409_174

Description of deluxe air-conditioned seat system

Air is blown out of the seat only. For this purpose, air is drawn in from the footwell (for the fans in the seat squab) or from the rear passenger compartment (for the fans in the backrests).
If the seat ventilation system is activated at high interior temperatures, there is a short delay until a comfortable seat climate is achieved because, due to the operating principle of the system, heated air is initially drawn in from the footwell area until the air conditioning system has cooled down the occupant cell.

The seat air conditioning system is activated via the onboard power supply control unit J519. Seat air conditioning is requested by the climatronic control unit J255 on the basis of its settings. After operating the seat heating/seat air-conditioning button, front passengers can choose between the seat heating function or seat air conditioning function.

The heating and ventilation settings can be selected via the two rotary temperature controls on the climatronic control unit J255.
The seat heater is switched on by turning the rotary switch clockwise (red band).
The seat air conditioning is activated by turning the rotary switch counter-clockwise (blue band).
Both adjustment ranges are available for the driver and the front passenger. There is a choice of six different seat heating and seat ventilation settings. The settings are indicated through the radio or MMI central display. The set values are also indicated on the display of the climatronic control unit J255.

Deluxe automatic air conditioning plus system

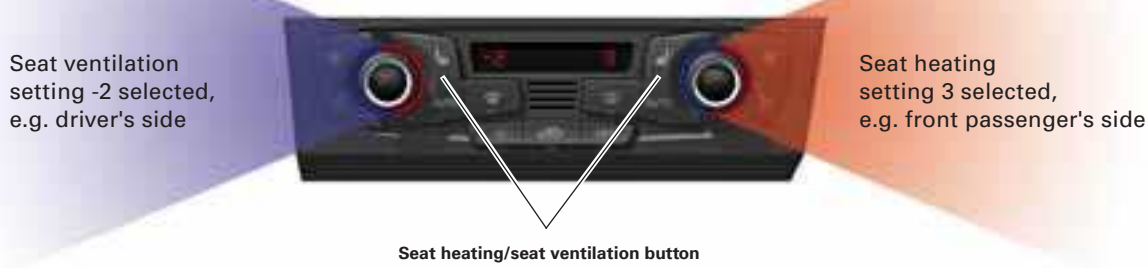

409_081

Design of the deluxe air-conditioned seat

The components of the seat ventilation system are integrated in the deluxe air-conditioned seat. The backrest is comprised of the foam cushioning, in which the fan motors with protective screens are integrated.
A spacer web and the heating mat of the seat heater are located between the cover and the protective screens, whereby the spacer web* and the heating mat are bonded together.
The seat fans are not anchored in the foam cushioning, but are attached to the seat frame by screws. The task of the spacer web is to ensure that air is able to circulate within the seat so that it can diffuse over a wider surface area.

* web structure

409_082

Heating of the seat bolsters

There are differences between the seat heating and the seat air conditioning functions with regard to heating the seats.
If the seat heating function is selected, the complete seat is heated.
If the seat air conditioning function is selected, the four axial fans in the seat squab and in the backrest are activated.
To prevent chilling, supplementary seat heating is automatically provided depending on the selected setting. If the seat temperature is less than approx. 15 °C, the fan motors cannot be activated and the seat ventilation function cannot be switched on.

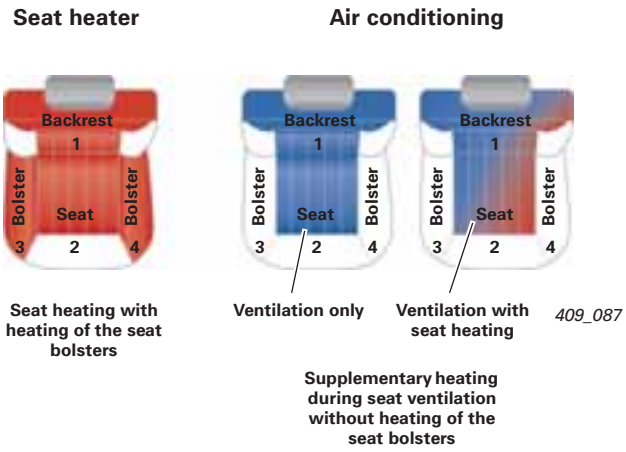

Note

The backrest bolsters are not heated on the Audi A4 '08.

Activation of seat heating/seat ventilation on the Audi A4 '08

In the case of the deluxe automatic air conditioning plus system, the buttons for activating/deactivating the seat heating function and (where applicable) the seat ventilation function are located on the climatronic control unit J255. J255 issues heating/cooling requests by CAN data protocol.
Seat air conditioning is only available as optional equipment for the front seats on the Audi A4 '08.
There are three different modes of activating the seat heating/seat ventilation system on the Audi A4 '08, depending on trim version.

Variant 1:

The vehicle has the seat heating option only.

On the Audi A4 '08, the heating mats integrated in the seats are activated discretely by the onboard power supply control unit J519.

Seat heating (with or without seat memory)

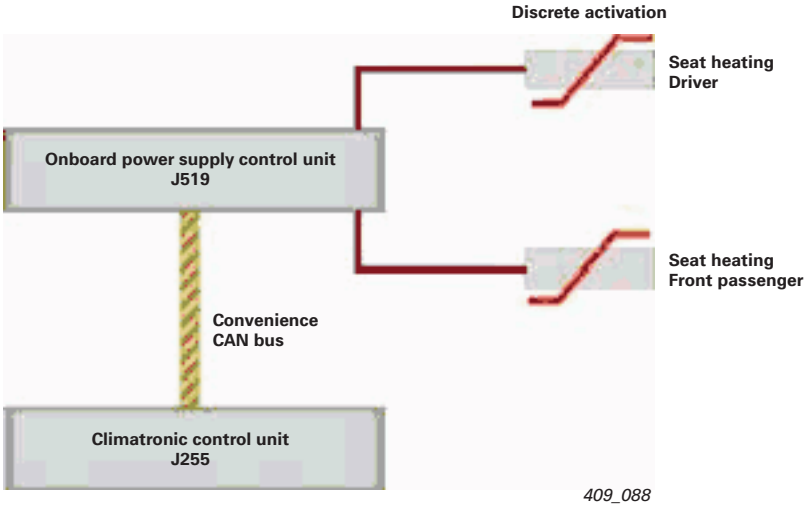

Variant 2:

The vehicle has the seat heating and seat ventilation option, but does **not** have a driver's seat memory function.

The front right seat ventilation control unit J799 and the front left seat ventilation control unit J800 are LIN bus users of the onboard power supply control unit J519.

Seat heating and seat ventilation without seat memory

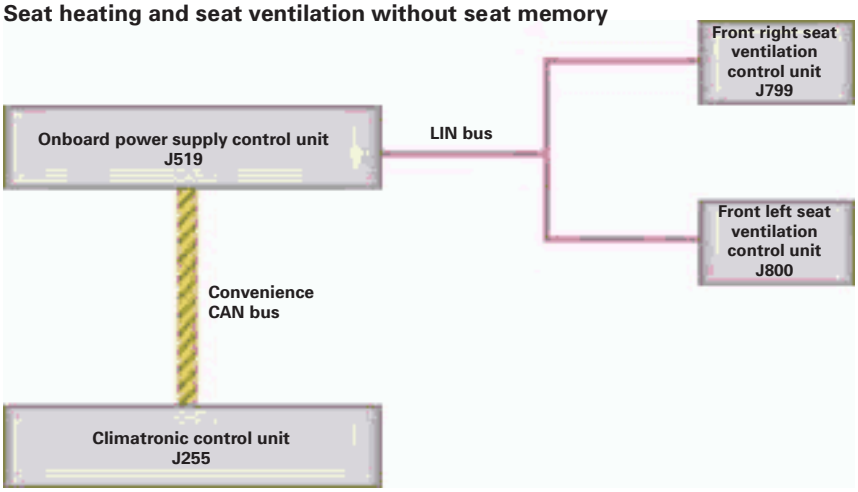

409_089

Variant 3:

The vehicle has the seat heating and seat ventilation option, in addition to a driver's seat memory function.

The seat and steering column adjustment control unit with memory function J136 is required on the driver's side; it controls the seat heating/seat ventilation in a discrete manner.

On the passenger's side there is no memory function. The right seat heating/seat ventilation can therefore it be connected to the control unit for seat ventilation front right (J799) as a LIN component.

Seat heating and seat ventilation with seat memory

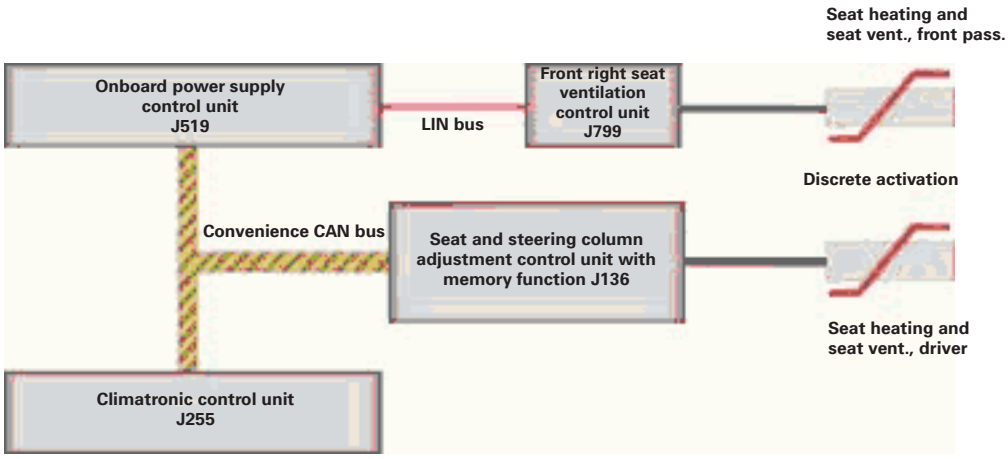

409_090

Maintenance concept

An improved maintenance concept featuring reorganised maintenance content and maintenance intervals will be rolled out at the launch of the Audi A4 '08 in order to meet the different customer driving profiles.

A key component of the improved maintenance concept is that a distinction is made between "oil change" and "inspection", instead of tying service events to oil change intervals as previously.

The Service Interval Display now informs the customer not only when the oil change, a flexible event, is due, but also when time and mileage-based service events are due.
As usual, this is indicated to the customer via the dash panel insert.
Additional information can be retrieved via the "Car" menu, the MMI display or the radio display.

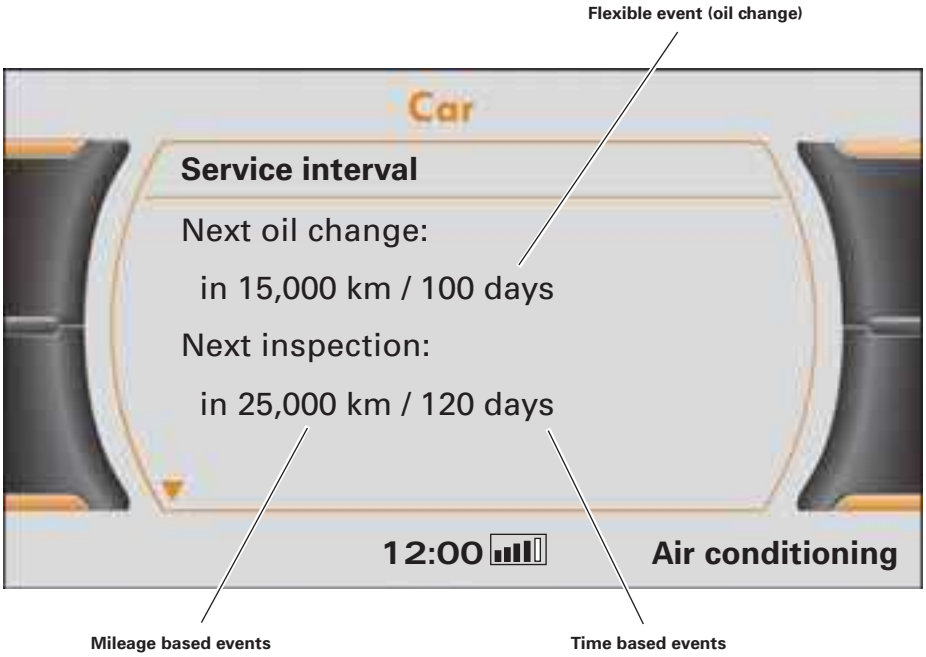

409_032

Process reliability is now higher since time and mileage based service events are now indicated. This means that there is no danger of service events being missed without the customer receiving prior warning. The prerequisite for this is that the Service Interval Display is reset correctly.

Maintenance table

	Audi A4 1.8-litre TFSI	Audi A4 3.2-litre FSI	Audi A4 2.7-litre TDI	Audi A4 3.0-litre TDI quattro	Audi A4 2.0-litre common rail
Engine oil change	flexible, 15,000–30,000 km/2 years				
Inspection	30,000 km/3, 5, 7, ... years				
Pollen filter	30,000 km/2 years				
Air filter	90,000 km/6 years	90,000 km/6 years	60,000 km/6 years	60,000 km/6 years	60,000 km/6 years
Spark plugs	90,000 km/6 years	90,000 km/6 years			
Fuel filter			60,000 km	60,000 km	60,000 km
multitronic ATF change	60,000 km		60,000 km		60,000 km
Chain/timing belt	Chain: lifetime				Timing belt 180,000 km
Brake fluid	first change after 3 years (depending on market), thereafter every 2 years (in accordance with the regular main inspection and exhaust emissions test cycle)				

Note

As a rule, the specifications given in the current service literature apply.

Brake fluid

As can be seen from the maintenance table, the first brake fluid change interval has been extended. The first brake fluid change is now after three years, and thereafter every two years in conjunction with the main inspection and the exhaust emissions test.
The combined main inspection/emission test interval applies only to Germany.

Oil change

The oil change cycle has been reduced, because, unlike before, oil can be extracted from all engine types.
It is therefore not necessary to remove the sound-proofing. The soundproofing now only needs to be removed every 60,000 km in order to check the drive shafts, for example.

Observance of maintenance intervals

The current maintenance intervals are based on extensive series of tests and fully utilise the lubricating ability of the engine oil over the specified period.

The defined oil tolerance limits will be exceeded if the maintenance intervals are not observed. Excessive ageing can impair the lubricating ability of the engine oil, due to the accumulation of combustion wastes in the engine.
This can lead to increased wear of engine parts which are dependent on lubrication (cylinder liners, piston rings, camshafts, tappets, chain drives etc.).
The Mobility Guarantee does not cover engine damage caused in this way.

Special tools

T40178 Oil gauge tester

409_176

Lane departure warning system calibration tools

409_179

VAS 6430/1 Calibrating device, basic kit

409_180

VAS 6430/4 Audi lane assist calibration board

Reference

For further information regarding the design and function of the lane departure warning system, refer to SSP 398 Lane departure warning system - Audi lane assist.

Self-Study Programmes relating to the Audi A4 '08

The following self-study programmes have been prepared for the Audi A4 '08:

- SSP 409 Audi A4 ‘08
- SSP 398 Lane departure warning system - Audi lane assist
- SSP 402 Dynamic Steering System.

SSP 409 Audi A4 ‘08

- Bodyshell
- Occupant protection
- Engine
- Transmission
- Suspension
- Electrical system
- Infotainment
- Air conditioning
- Service

Order number: A07.5S00.40.00

SSP 402 Dynamic Steering System.

- Steering pump
- Dynamic steering system control unit
- Dynamic steering lock
- Actuator

Order number: A07.5S00.39.00

SSP 398 Lane departure warning system - Audi lane assist

- Displays
- Lane departure warning system control unit
- Vibrating steering wheel
- Calibration

Order number: A07.5S00.38.00

Vorsprung durch Technik **www.audi.co.uk**

409

All rights reserved. Technical specifications subject to change without notice.

Copyright
AUDI AG
I/VK-35
Service.training@audi.de
Fax +49-841/89-36367

AUDI AG
D-85045 Ingolstadt
Technical status: 08/07

Printed in Germany
A07.5S00.40.20