Service Training

6-speed Automatic Gearbox 09G

Self-Study Programme 291

Dynamics and economy

The 6-speed automatic gearbox 09G sets new standards in the segment of transversely mounted multi-step automatic gearboxes

- ► Low weight
- ► Wide *ratio spread**
- ► Compact gearbox dimensions
- ► High shifting speed
- ► High level of shift comfort

Brief technical description

6-speed automatic gearbox using the Lepelletier planetary gear set concept.

The wide *ratio spread** of 6.05 provides flexibility in use (sport or economy mode).

Only five gear shifting components are required.

Highly compact, lightweight and powerful.

There are three gearshift modes to choose from: sport program and manual gear selection by tiptronic.

In triponic mode, it is possible to start in second gear.

* you will find an explanation of the terms/ paragraphs marked with an asterisk as of page 72

This Self-Study program gives general descriptions of the 09G gearbox and shows the special features in combination with the Audi A3 '04 and Audi TT.

291_117

The basics for this Self-Study Programme are covered in the multimedia training course "Power Transmission 2" and in the previously published self-study programmes on multi-step automatic gearboxes.

The Self-Study Programme is not a Repair Manual!
The values given are intended as a guideline only and refer to the software version valid at the time of publication of the SSP.

For maintenance and repair work, always refer to the current technical literature.

Reference

Note

Contents

General

Introduction 04
Specifications 05
Sectional view of gearbox 09G 06

Gearbox periphery

Gear selector of the Audi A3 ‘04 08
Selector lever locks on the Audi A3 ‘04 10
Ignition key removal lock on the Audi A3 ‘04 12
Gear selector of the Audi TT 16
Tiptronic steering wheel 17

Gearbox subassemblies

Torque converter 20
Torque converter lock-up clutch 22
Oil supply/lubrication 24
Planetary gear/shifting components 27
Hydraulic control 30
Shift logic 32
Description of gears/torque curve 33
Parking lock 41

Gearbox control

Function diagram 42
Automatic gearbox control unit J217 46
Sensors 48
Interfaces/auxiliary signals 62
CAN information exchange 64
Distributed functions in the Audi A3 ‘04/Dynamic Shift Program DSP 68
Tiptronic gearshift strategy/sport program 69

Service

Emergency running/towing 70
Special tools 71

Glossary

Terms 72

Introduction

The 6-speed automatic gearbox 09G is used in the Audi A3 '04 and Audi TT.

The gearbox is a conventional multi-step automatic with hydrodynamic torque converter and electrohydraulically operated planetary gear.

The 09G gearbox is developed and manufactured by the Japanese transmissions specialist AISIN AW CO., LTD.

In association with Audi's development engineers, the gearbox has been adapted to suit the characteristics specific to each vehicle and engine*.

Compared to the predecessor gearbox (model 09A), the weight of gearbox 09G has been reduced by 19.5 kg from 102 kg to 82.5 kg, even though a sixth gear has been added.
This was achieved by using the Lepelletier gear set concept and through selective optimisation of component parts.

With the additional gear, the *spread** has been increased to 6.05. This figure surpasses that of all front/transversely mounted multi-step automatic gearboxes currently on the market and matches the ratio spread of variable automatic gearboxes.

The Lepelletier gear set concept, as found previously in the Audi A8 gearbox 09E, is used in gearbox 09G.

The advantage of the Lepelletier gear set concept is its simple, space-saving and low-weight design.
It combines a simple planetary gear train with a Ravigneaux gear seat further down. This allows a harmonious 6-speed transmission to be achieved using only five gear shifting components.

The six forward gears and reverse gear are engaged by three multi-plate clutches and two plate brakes.

Reference

For further information on the Lepelletier gear set concept, refer to SSP 283.

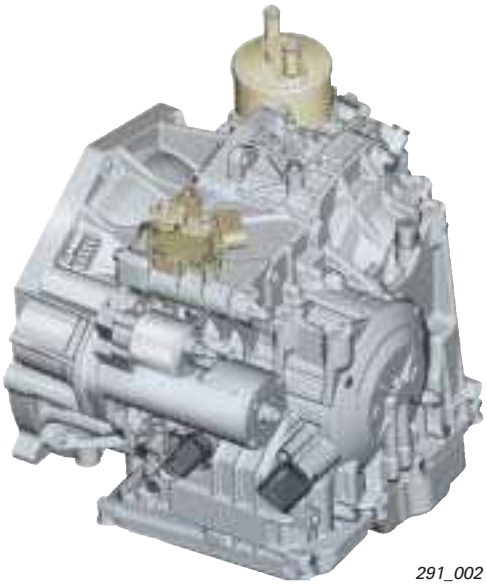

291_002

291_001

Specifications	
Developer/manufacturer	AISIN AW CO, LTD Japan
Designations	Manufacturer: TF-60SN Audi AG: AQ250-6F Service: 09G
Gearbox type	electrohydraulically controlled 6-speed planetary gear (multi-step automatic gearbox) with hydrodynamic torque converter and slip-controlled converter lock-up clutch for front-wheel drive and transverse installations
Control	hydraulic control unit integrated in the oil sump with external electronic control unit Dynamic Shift Program DSP with separate sport program in "Position S" and the tiptronic shift program for manual gearshifts (optionally available with tiptronic steering wheel)
Torque in Nm	up to over 300 Nm depending on type
Ratios: **Planetary gear** **(for engine codes** **GSY 1.6 l and** **GJZ 2.0 l FSI)**	First gear 4.148 Second gear 2.370 Third gear 1.556 Fourth gear 1.155 Fifth gear 0.859 Sixth gear 0.686 Reverse gear 3.394
Idler	Z52/49 1.061 (GSY and GJZ)
Final drive	Z61/15 4.067 (GSY) or Z58/15 3.867 (GJZ)
i constant*	4.316 (GSY) or 4.102 (GJZ)
Spread* **(GSY/GJZ)**	6.05
ATF specification	G 052 025 A2, Esso JWS 3309
Capacity	7.0 litre (refilling) lifetime filling
Weight in kg	approx. 82,5
Overall length in mm	approx. 350

The gearbox in the Audi A3 '04 (with 1.6 l FSI and 2.0 l FSI engines) is configured as a so-called 5+E gearbox. Max. speed is reached in fifth gear. Sixth gear is an overdrive gear which reduces engine revs, improves driving comfort and increases fuel economy.

The gearbox in the Audi TT is configured as a so-called sport gearbox.
Max. speed is attained in sixth gear.
Sixth gear provides closer ratios and enhanced driving dynamics.

Reference

* You can find an explanation of the marked terms/paragraphs as of page 72.

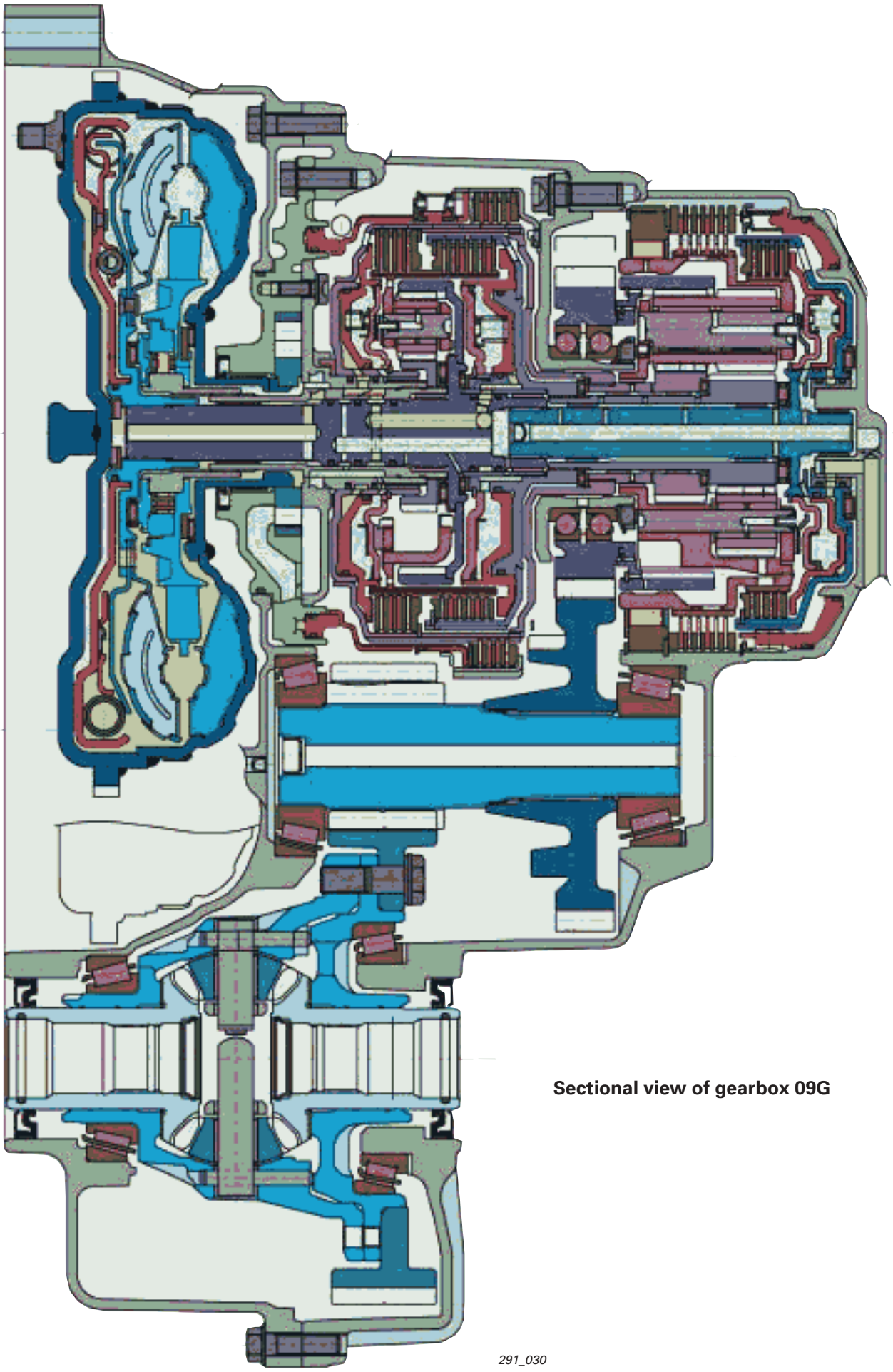

Sectional view of gearbox 09G

291_030

Components overview:

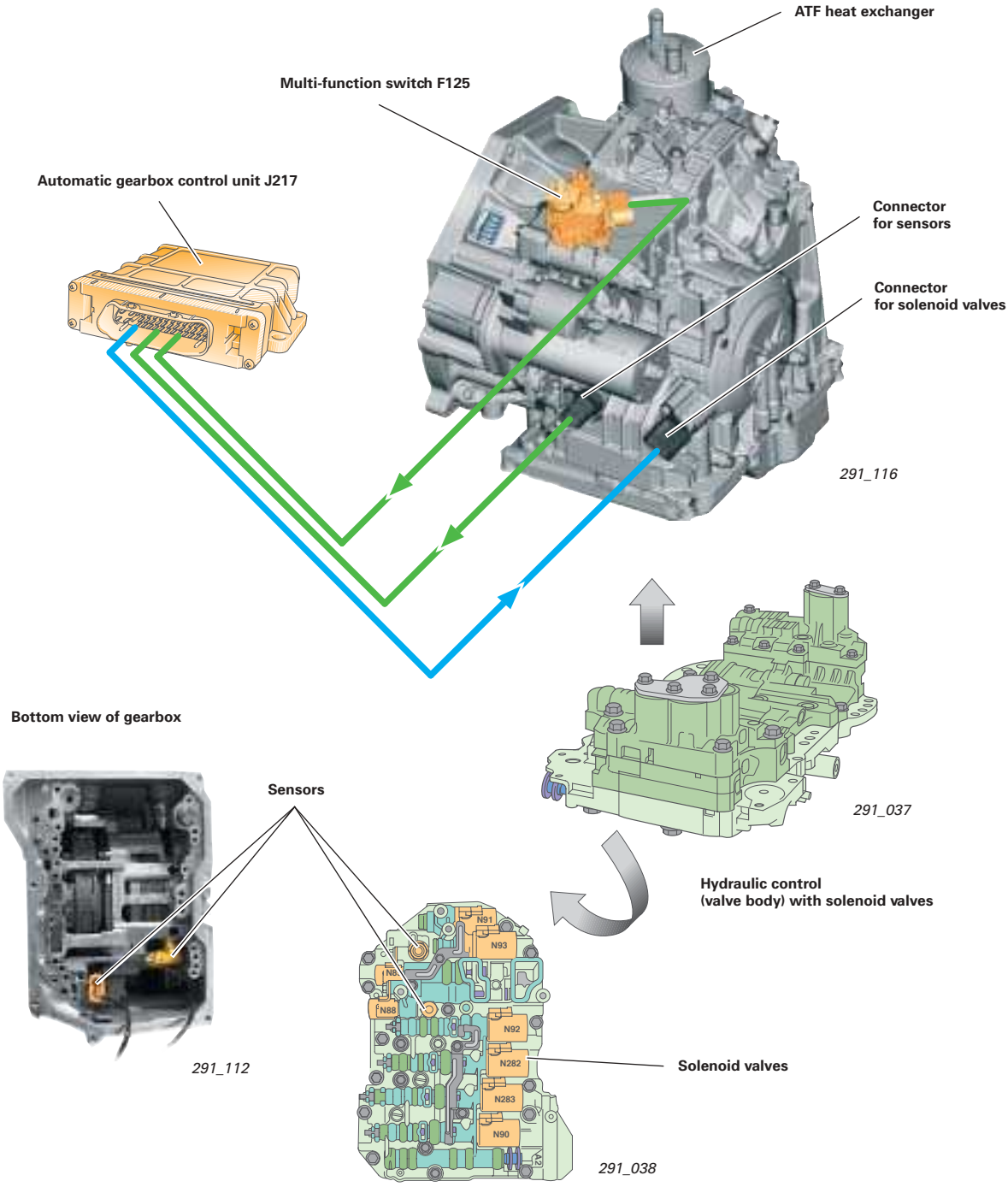

Legend to sectional view of gearbox

- Hydraulic parts, hydraulic control, ATF
- Components of the planetary gear sets
- Shafts, gears
- Multi-plate clutches, bearings, washers, circlips
- Plastics, seals, rubber, washers
- Components of the shifting components Cylinders, pistons, air sensor plates
- Housings, screws, bolts
- Electrical components
- Input signal
- Output signal

Gear selector of the Audi A3 '04

Selector gate cover/selector lever gate

Selector gate cover

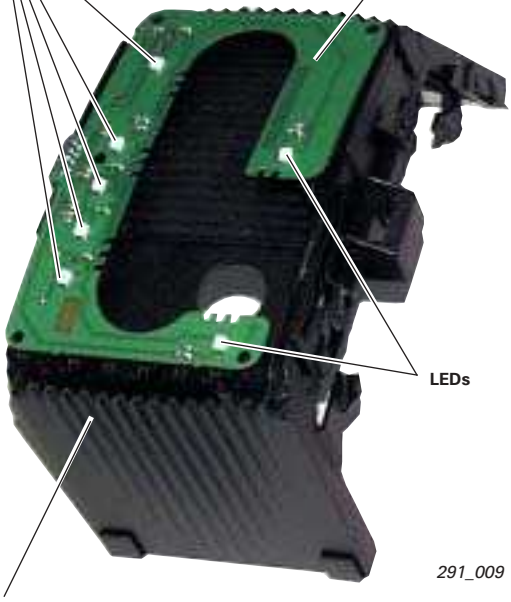

Selector lever gate

The "D–S" gear selector, as found in higher vehicle classes, is used in combination with the new automatic gearbox variants.

On the selector lever gate PCB, there are LEDs for illuminating the various selector lever and tiptronic positions on the selector gate cover. These LEDs are activated by the selector lever sensors integrated in the gear selector.

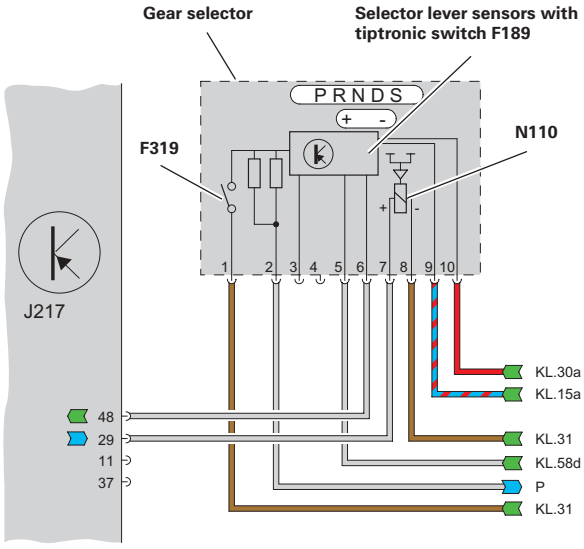

Legend

F319	Selector lever locked in position P switch
J217	Automatic gearbox control unit
N110	Selector lever lock solenoid
P	signal to steering column electronics control unit J527

Output

Input

Gear selector/design

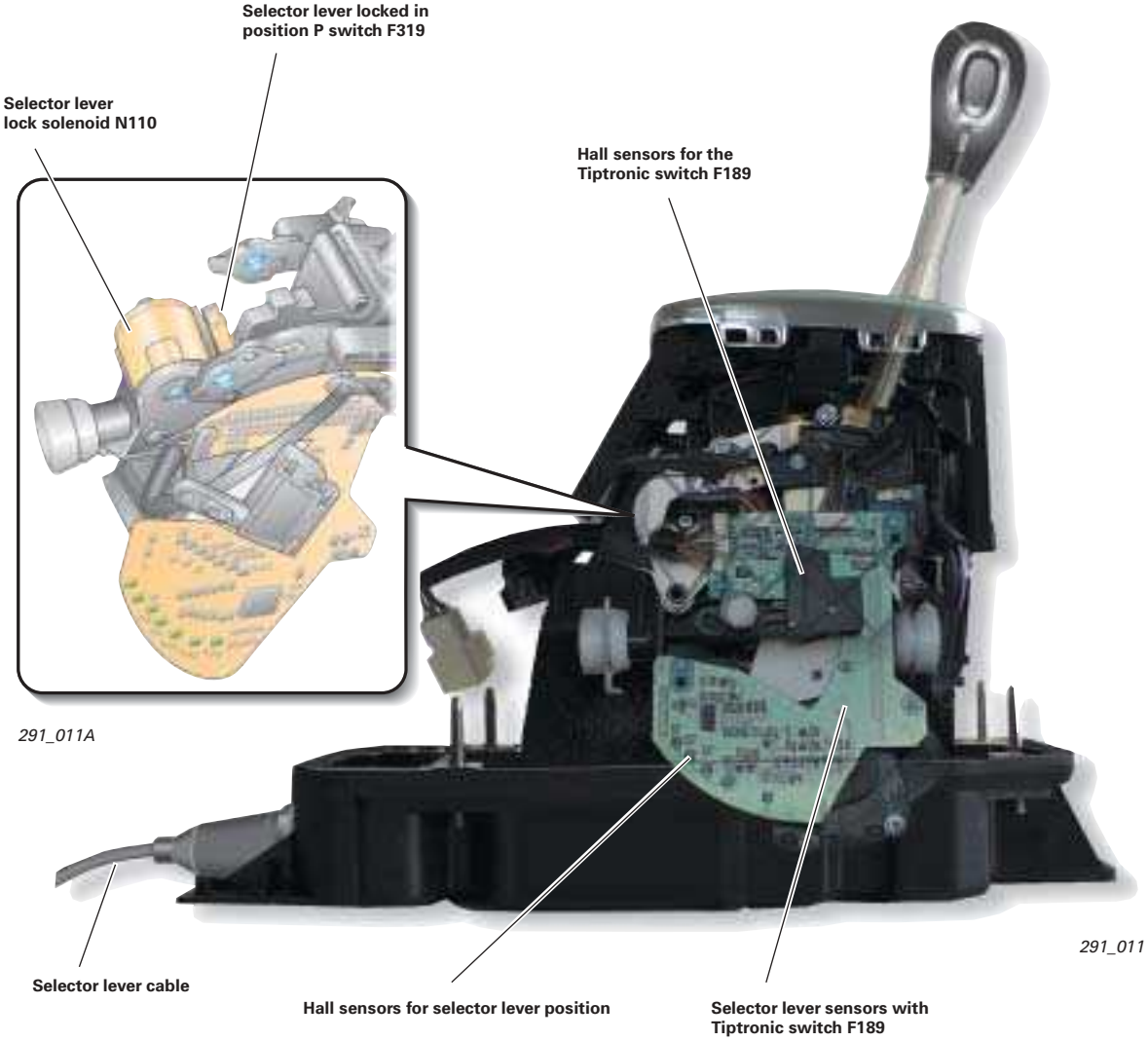

Integrated in the gear selector of the Audi A3 '04 are the sensors for the selector lever positions and the tiptronic function (F189).
The various selector lever positions are determined by Hall sensors which are operated by permanent magnets and processed by the evaluation electronics.
The evaluation electronics activate the LEDs on the selector gate cover according to the selector lever position.

The signals from the tiptronic switch F189 are also evaluated by the selector lever sensors and transferred to the gearbox control unit through a separate interface in the form of a frequency-modulated square-wave signal (FMR signal).

Reference

You can find further information about this subject on page 50 of this Self-Study Programme.

Selector lever locks on the Audi A3 '04

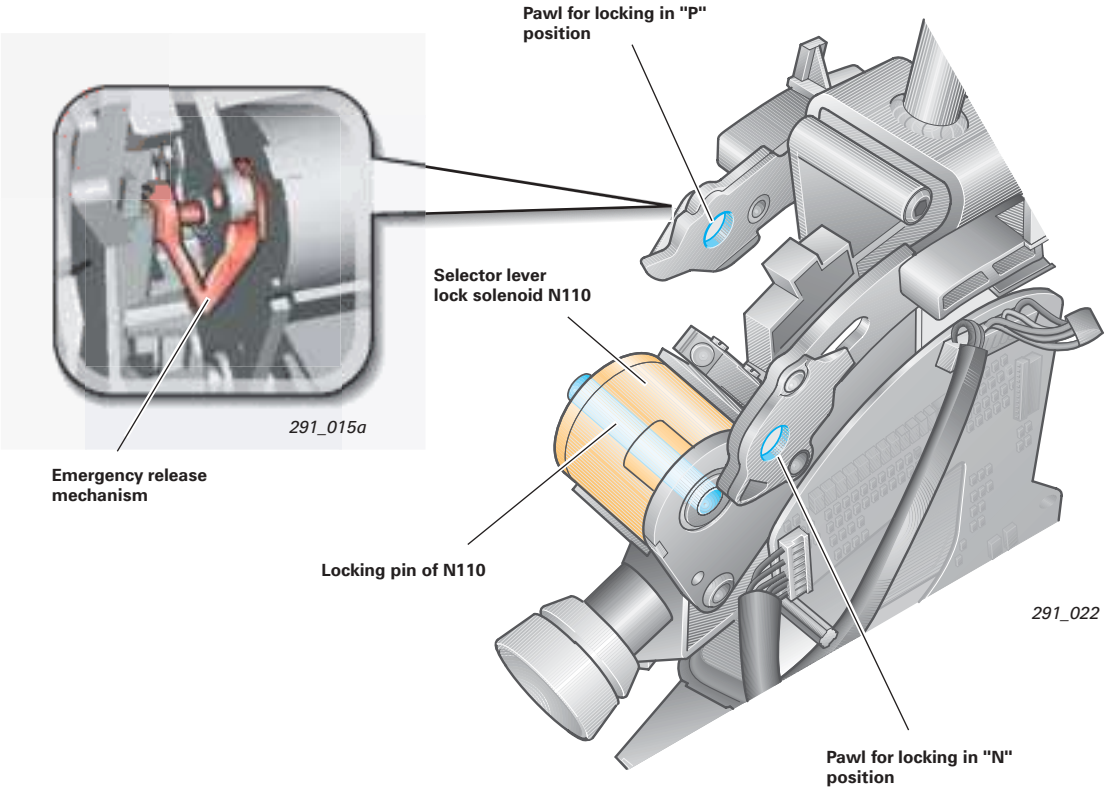

The selector lever lock function is new:

Basically, there is a distinction to make between, first, P/N lock application when driving or with the ignition ON and, second, locking of the selector lever in the "P" position with the ignition key removed (P-lock).

The P-lock function was previously performed by the steering lock by means of a gear selector cable. The electromechanical ignition key removal lock has eliminated the need for a cable pull and a mechanical connection between the steering lock and gear selector.

The P-lock function is carried out by the locking pin of the selector lever lock solenoid N110.
The selector lever pawls and the locking pin kinematics of N110 are such that the P-lock can be applied regardless of whether solenoid N110 is energised (position "N") or deenergised (position "P").

Emergency release

Based on the functional principle, the selector lever remains locked in position "P" if malfunctioning occurs or the voltage supply fails (e.g. flat battery), see Fig. 088.
The selector lever lock has an emergency release mechanism which enables the vehicle to be moved (e.g. towed).

Selector lever position "P" locked:

Solenoid N110 is deenergised; the locking bolt is engaged by spring pressure in the park (P) pawl. The selector lever is locked.

Emergency release

The emergency release mechanism can be accessed after removing the gearshift console cover (see Operating instructions).
When the emergency release is operated, the locking bolt of the N110 is forced out of the "P" (park) pawl against the pressure of the spring.
The selector lever can now be moved out of the park ("P") position.

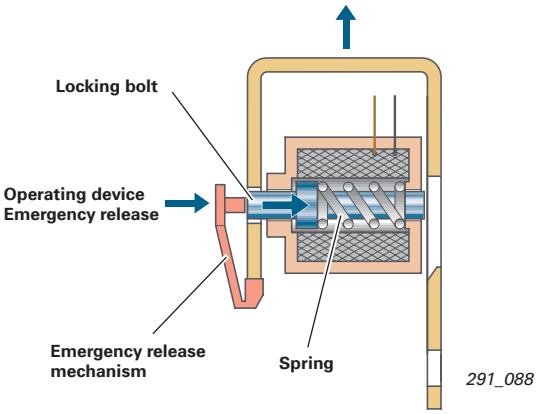

Selector lever position "P" unlocked:

Solenoid N110 is energised by J217; the locking bolt is pulled out of the park ("P") pawl against the pressure of the spring.
The selector lever lock is released.

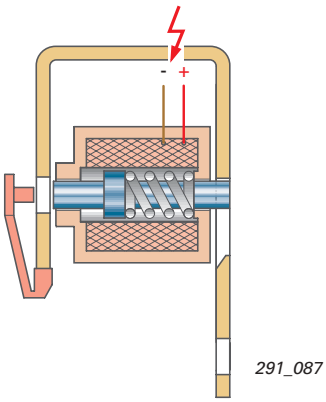

Selector lever position "N" locked:

If the selector lever is in the "N" position for longer than 2 sec. with the ignition on, then solenoid N110 will be energised by J217. The locking bolt is pressed into the "N" (neutral) position against the pressure of the spring.
The N lock is not activated at road speeds of higher than approx. 5 kph.

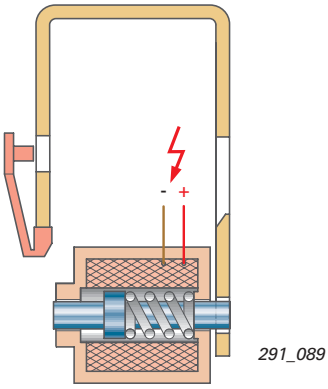

Selector lever position "N" unlocked:

The N110 is deenergised when the brake is applied and when the ignition is OFF. The locking bolt is pulled out of the neutral ("N") pawl by the pressure of the spring.

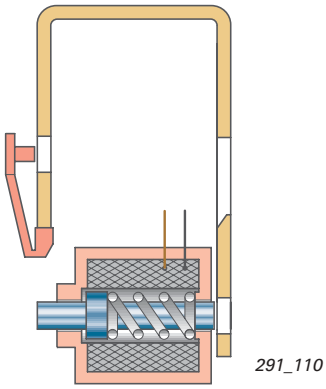

Ignition key removal lock Audi A3 '04

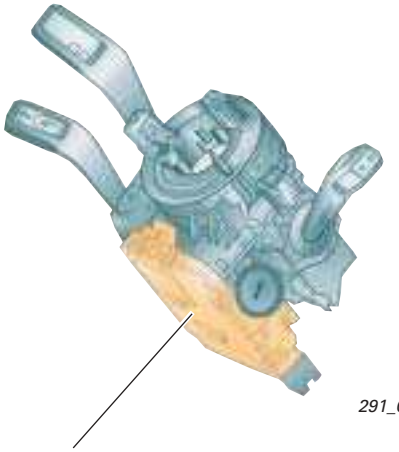

291_004

Steering column electronics control unit J527

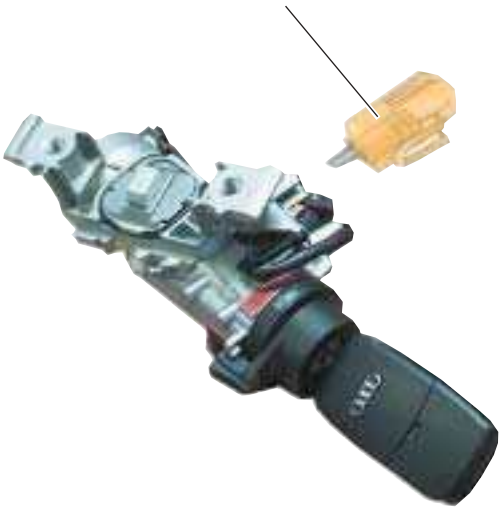

Ignition key with drawal lock solenoid N376

291_003

The ignition key withdrawal lock is implemented in such a way that the ignition key cannot be fully turned anticlockwise to the end position (withdrawal position) when the selector lever is not in the "P" position.

On the Audi TT, this function is performed mechanically by the steering lock by means of a cable pull (locking cable).
The ignition key withdrawal lock function in the Audi A3 '04 is carried out electromechanically by means of the ignition key withdrawal lock solenoid N376.
Solenoid N376 is activated by the steering column electronics control unit J527. For this purpose, J527 requires the information "selector lever position P locked".

This information is acquired by multi-function switch F125 and sent to via CAN bus to control unit J527 by gearbox control unit J217.

At the same time, the microswitch F319 selector lever locked in position P switch is active in the gear selector. The signal from this switch is also evaluated by control unit J527 and checked for plausibility against the CAN information from J217.

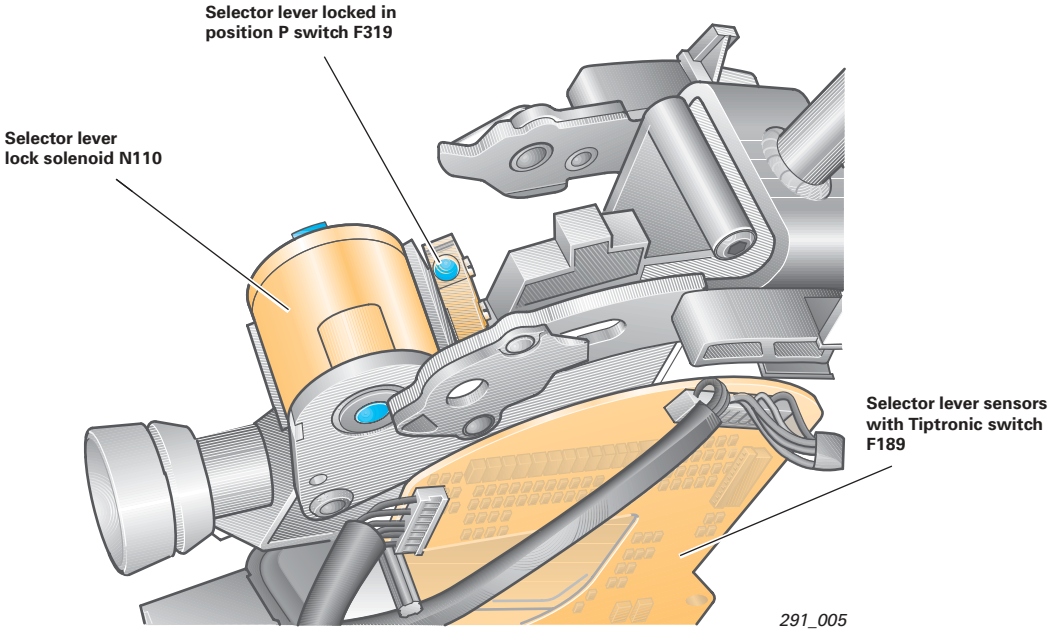

The F319 is designed as an NC contact.
Switch F319 is operated if the lock button on the gear shift knob is released in selector lever position "P" (circuit state "open").

The switch is closed in selector lever positions "R", "N", "D", "S" and tiptronic (and in "P" **with** lock button pressed).

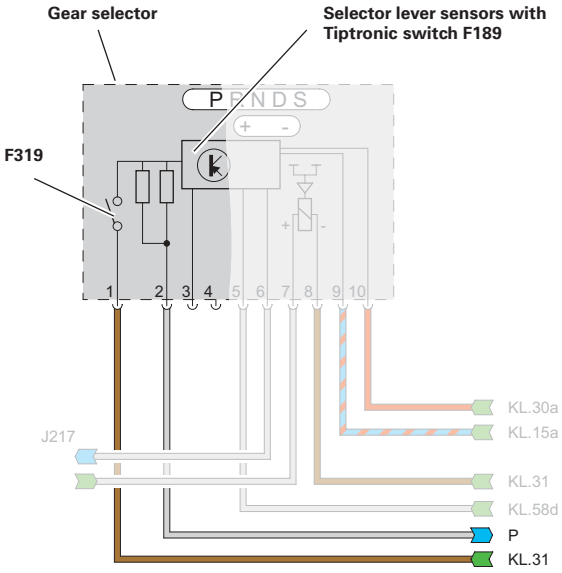

Legend

F319	Selector lever locked in position P switch
J217	Automatic gearbox control unit
P	signal for ignition key withdrawal lock (to J527 steering column electronics control unit)

Output

Input

Note

To improve diagnosis of the F319, two resistors are connected in series to switch F319.

The ignition key withdrawal lock function

If the selector lever is not in the "P" (park) position, the ignition key withdrawal lock solenoid N376 will be energised by J527.
The locking bolt of the N376 is forced into the steering lock against the pressure of the spring.
As long as the N376 is energised (locking bolt retracted), the ignition lock cannot be turned to the withdrawal position. The ignition key cannot be removed.

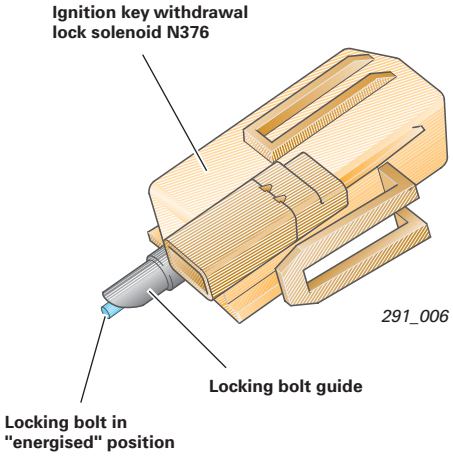

N376 "energised"

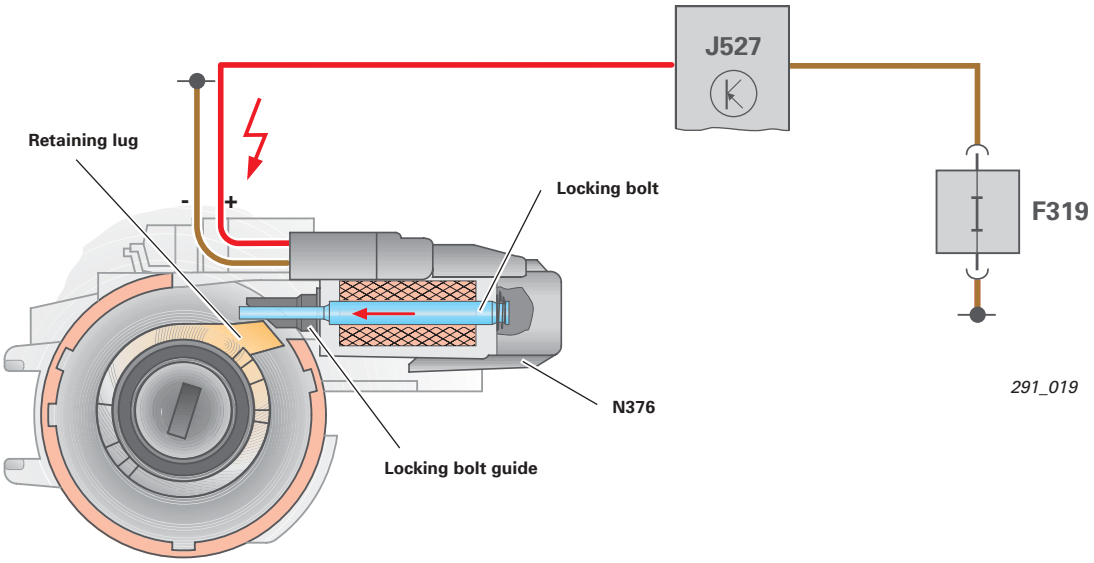

Key position: "ignition OFF"
Ignition key withdrawal lock applied

Legend

F319	Selector lever locked in position P switch
J527	Steering column electronics control unit
N376	Ignition key withdrawal lock solenoid

With the ignition OFF and in the "P" position of the selector lever (button on selector lever is not pressed), the J527 switches off the solenoid N376. As a result, the locking bolt is pulled back by the spring in the N376. The ignition key can now be turned to the withdrawal position and removed.

N376 "not energised"

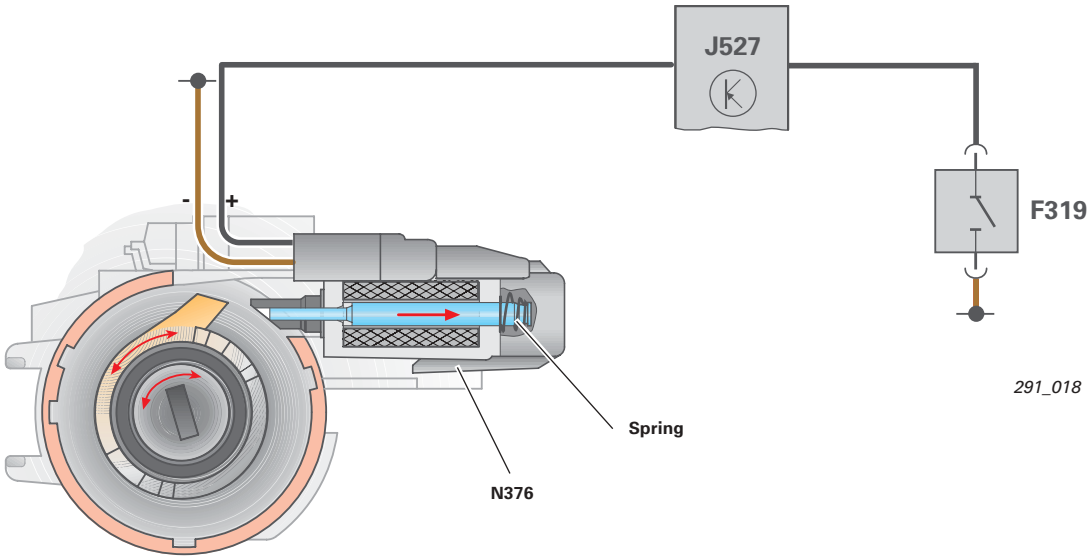

Key position: "withdrawal position"
Ignition key withdrawal lock released

Note

As long as the selector lever out of the "Park" position after ignition off, the J527 energises solenoid N376.
If the vehicle is parked for an extended period of time with the selector lever out of the "P" position, this will cause battery to become discharged in the long term.

Gear selector of the Audi TT

The gear selector of the Audi TT is identical in function and design to the selector of the Audi A3 Typ8L. When the ignition key is removed, the P-lock and the ignition key withdrawal lock are operated in a conventional manner by means of a cable pull (locking cable).

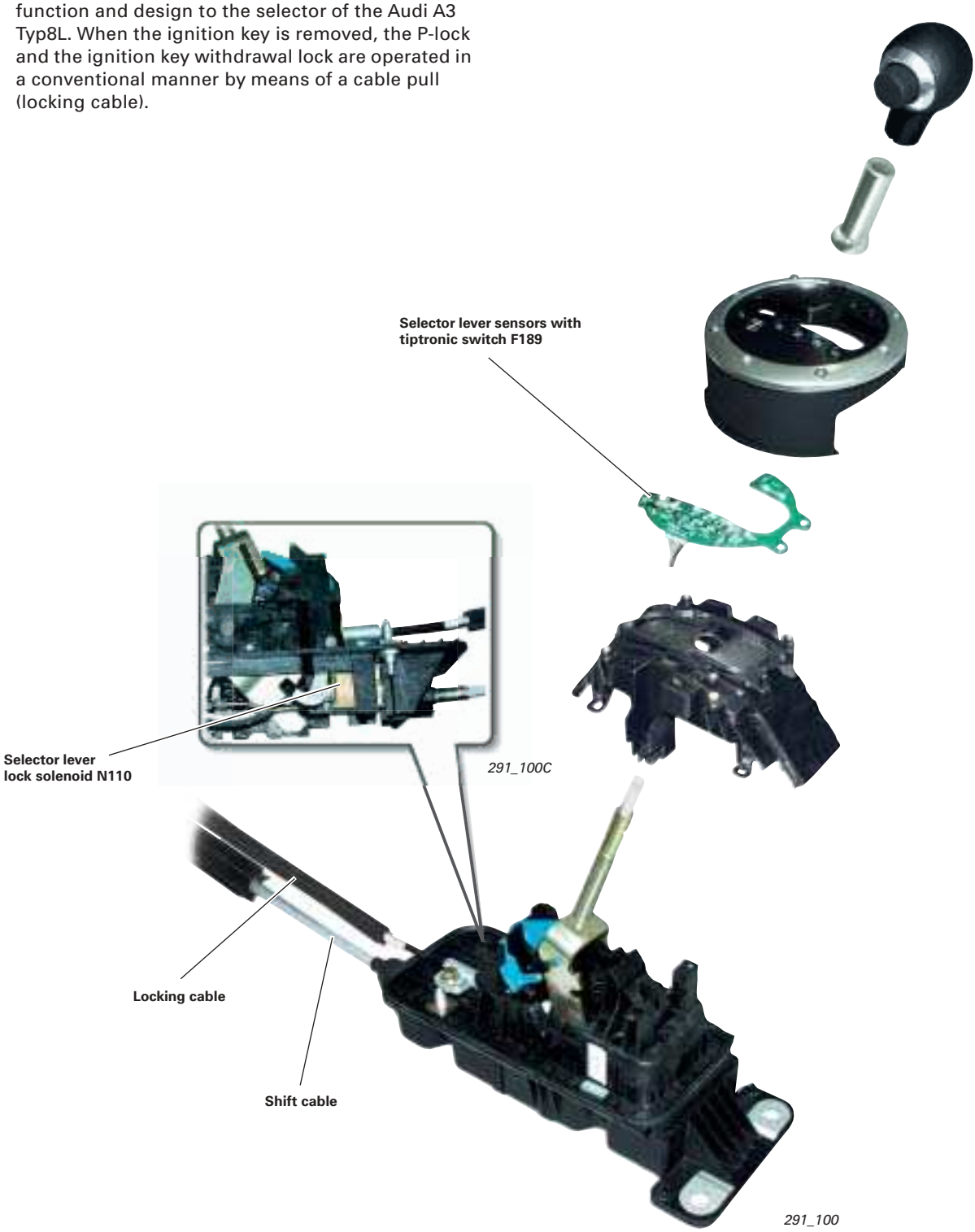

Reference

For information on the function of tiptronic switch F189, please refer to page 52 of this Self-Study Programme.

tiptronic steering wheel

In combination with the tiptronic steering wheel, the "Tiptronic" function is also available in selector lever position "D" or "S".

The tiptronic function is selected by pressing one of the two tip-shift paddles on the steering wheel (selector lever in position "D" or "S").

The system then switches to tiptronic mode for approx. 8 sec.
All gears can be selected within the permissible engine speed range.
It is possible to skip gears, e.g. to shift down from sixth to third, by pressing the shift paddle several times.

The system returns to normal automatic operation approximately 8 sec. after the last tip shift request.

Special feature: the countdown of approx. 8 sec. until return to normal automatic operation is discontinued while the vehicle is cornering or in overrun.
The countdown time is extended depending on the vehicle's driving dynamics. However, the system will switch from tiptronic mode to automatic mode within 40 seconds at the latest.

In the Audi A3 '04 the shift pulses are transferred from the tiptronic buttons or multi-function buttons to the steering column electronics control unit J527 via LIN data bus.

4-spoke multifunction steering wheel with tiptronic (Audi A3)

3-spoke sport steering wheel with tiptronic (Audi A3)

3-spoke sport steering wheel with tiptronic (Audi TT)

Note

In export vehicles for the USA, the tiptronic steering wheel function is disabled in selector lever position "D" or "S".

Function in the Audi A3 '04

The shift pulse from the tiptronic switches E389 (earth signal) is evaluated by multifunction steering wheel control unit J453 and sent via LIN data bus to the steering column electronics control unit J527.

The J527 sends the information by convenience CAN bus to data bus diagnostic interface J533 (gateway). The data is sent from J533 to the driveline CAN bus, and thereby to the automatic gearbox control unit J217.

Multifunction tiptronic steering wheel with multifunctional capability in the Audi A3 '04

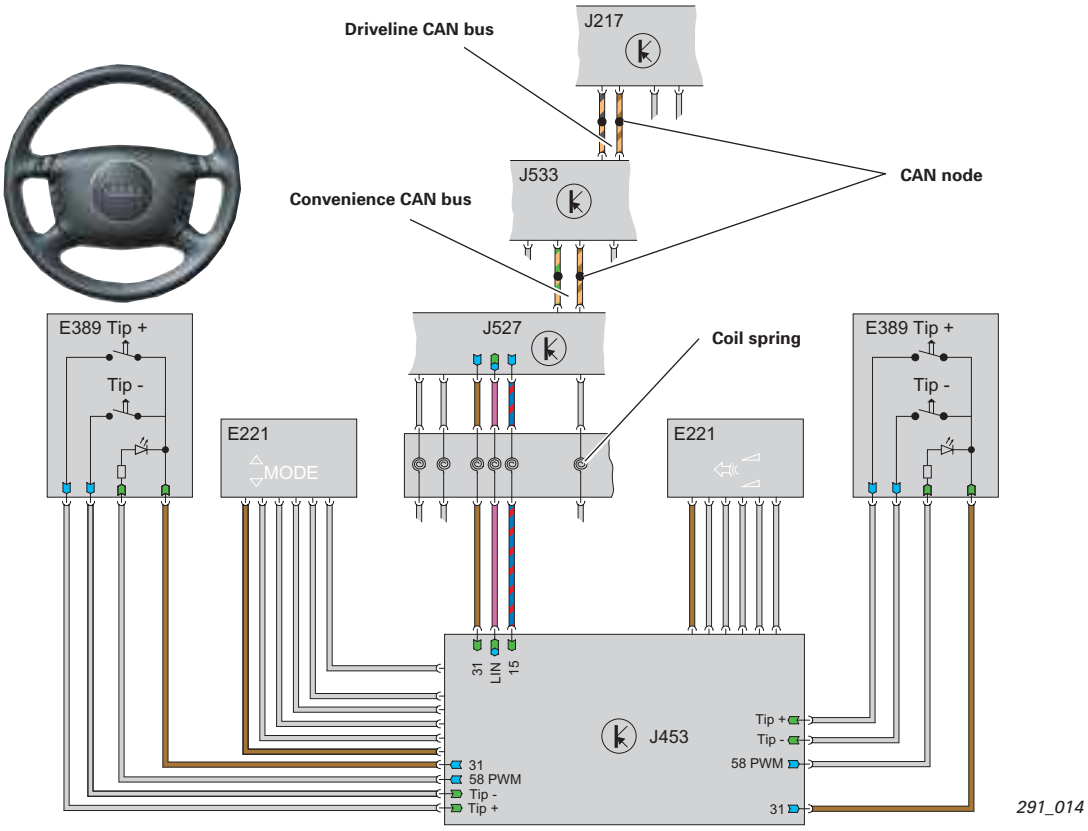

Legend

E221	Operating unit in steering wheel
E389	Tiptronic switch in steering wheel
J217	Automatic gearbox control unit
J453	Multi-function steering wheel control unit
J527	Steering column electronics control unit
J533	Data bus diagnostic interface (gateway)
LIN	LIN single-wire bus system
58 PWM	Pulse-width modulated dimming of the switch light

Output

Input

Multifunction tiptronic steering wheel without multifunctional capability in the Audi A3 '04

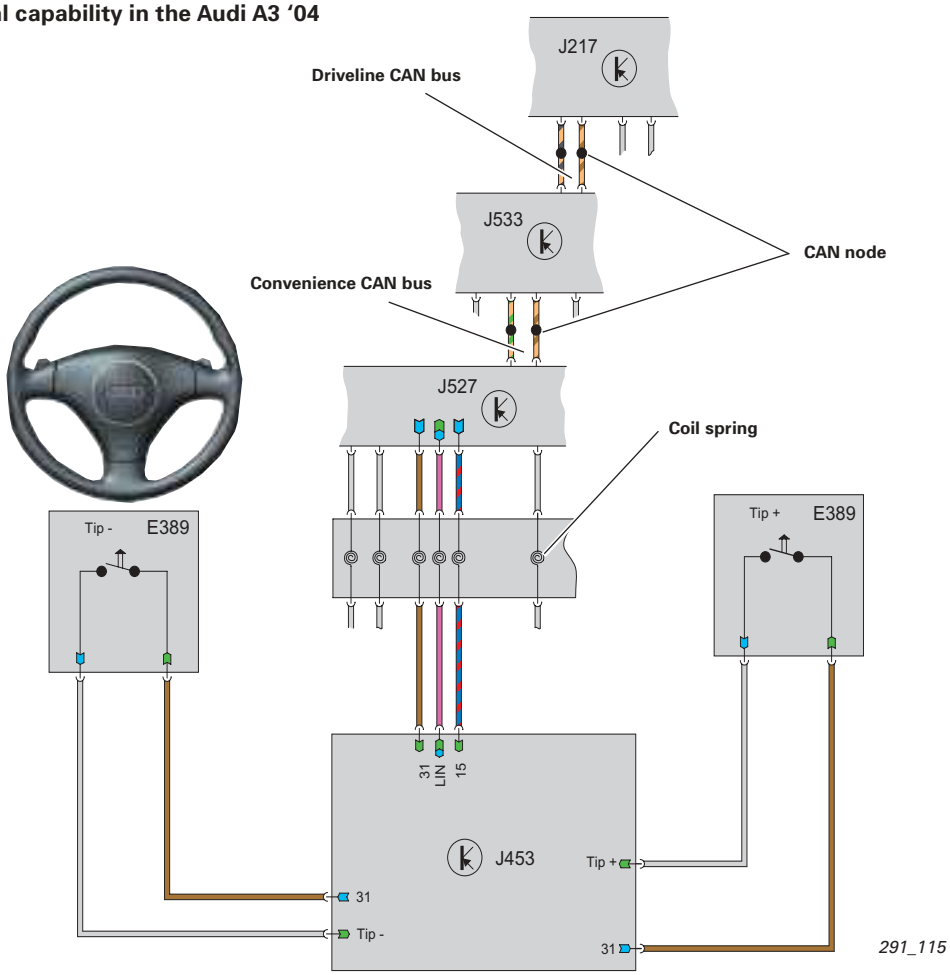

Tiptronic steering wheel in the Audi TT

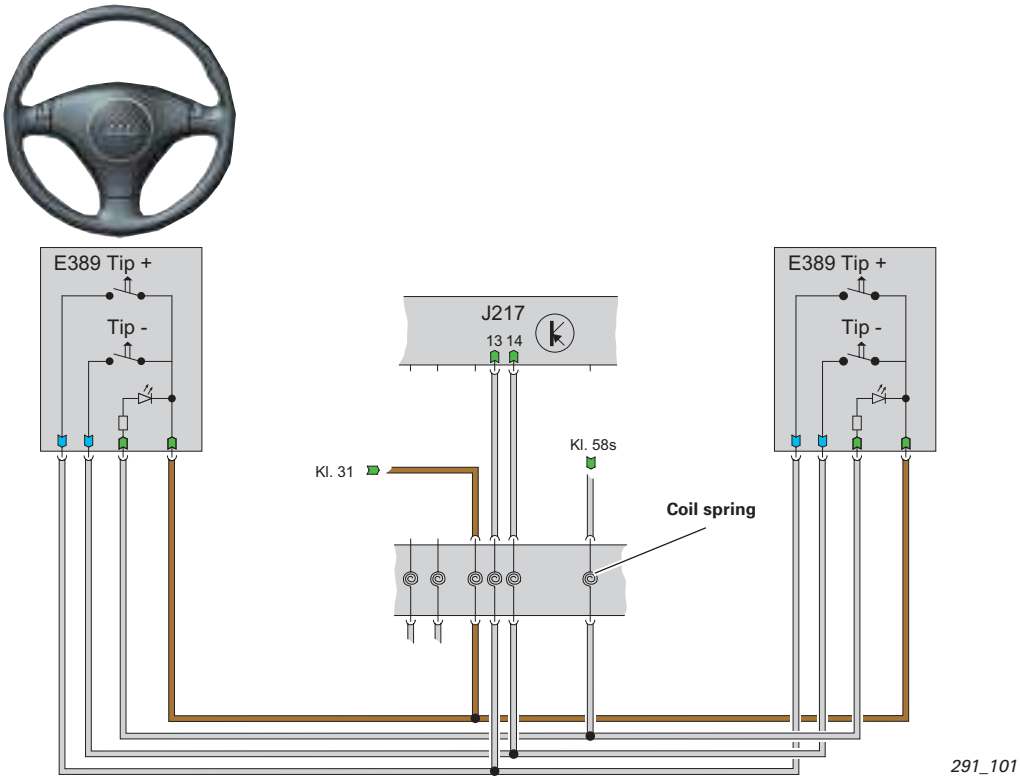

Torque converter

291_023

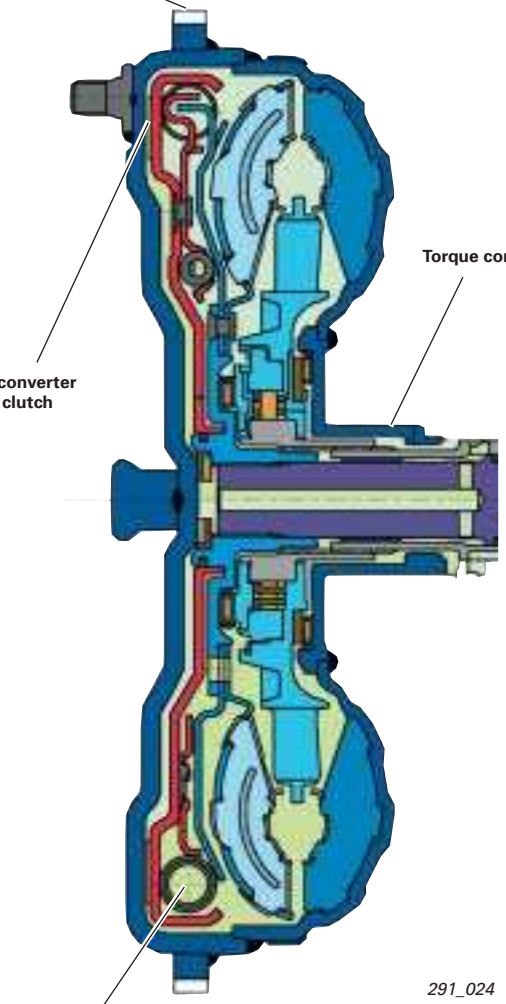

291_024

The starter sprocket is welded onto the torque converter housing, and therefore is a component part of the torque converter.
This construction detail contributes to the compact design of the gearbox.

The torque converter hub is mounted on the ATF pump by means of a low-friction bearing (torque converter bearing).
The ATF pump is driven via the drive slots in the torque converter hub.

This can be adapted to the characteristics of various engines by using different torque converter types, whereby the torque conversion characteristic (torque multiplication) is adapted.
For example: factor 1.95 for gearbox GJZ or factor 2.20 for gearbox GSY.

Mounting instructions

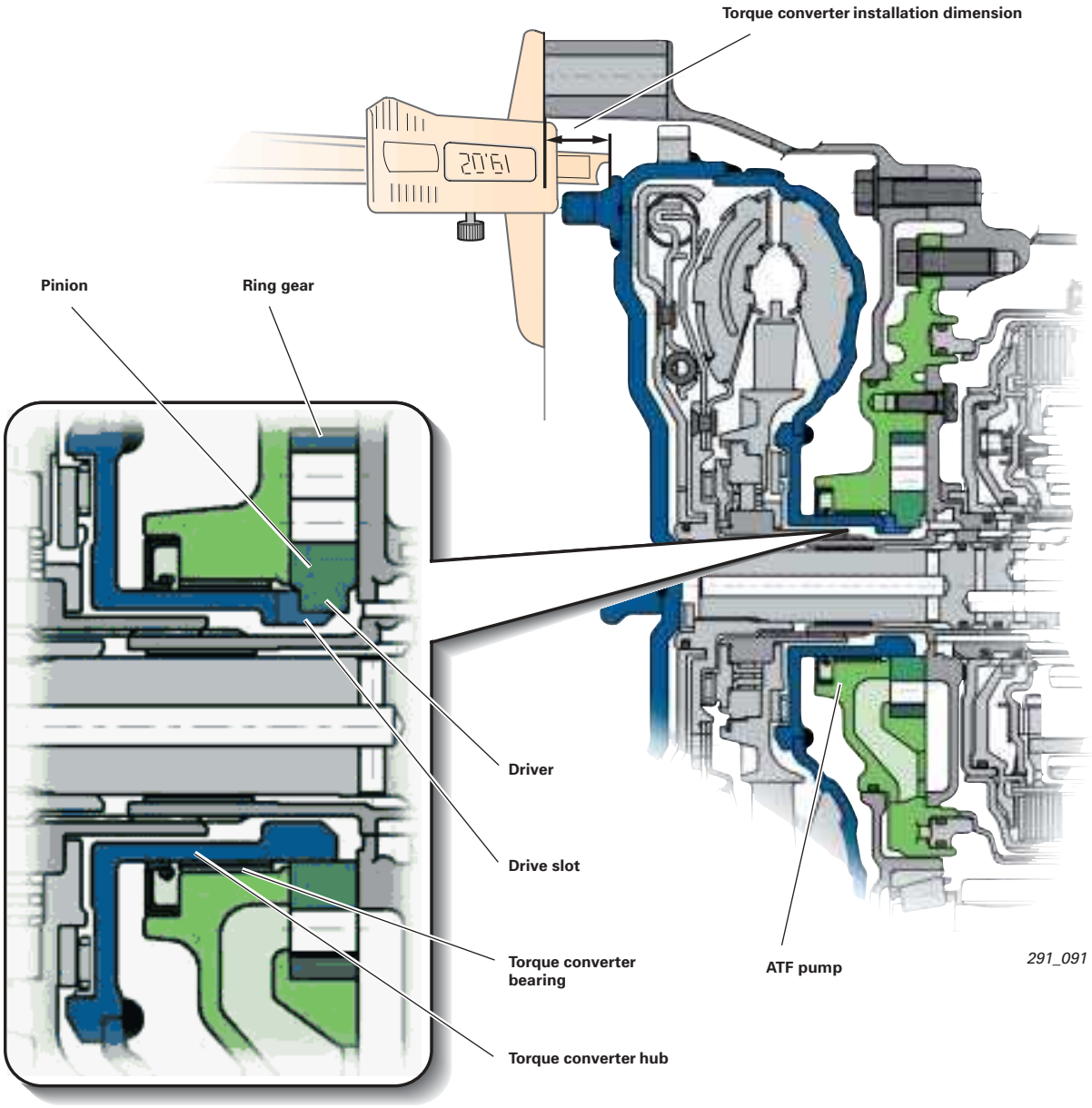

Note

When mounting the torque converter and before installing the gearbox, special care must be taken to ensure that the ATF pump drivers engage correctly into the drive slots in the torque converter hub. This can be checked by measuring the installation position of the torque converter (refer to Workshop Manual).

Note

Care must always be taken to ensure that the bushing press fits are correctly installed between the engine and gearbox.
Failure to fit bushing press fits will cause irreparable damage to the low-friction bearing and the torque converter hub due to the offset between the engine and the gearbox.

Torque converter lock-up clutch

Design

The torque converter has a torque converter lock-up clutch with built-in torsion dampers.
The torsion dampers reduce torsional vibration when the torque converter lock-up clutch is closed. This allows the operating range "torque converter lock-up clutch closed" to be extended.

Basically, a distinction is made between a distinction is made between the following functional states:

- converter lock-up clutch - open
- converter lock-up clutch - controlled operation
- converter lock-up clutch - closed

During normal vehicle operation, the torque converter lock-up clutch is operated from third gear.

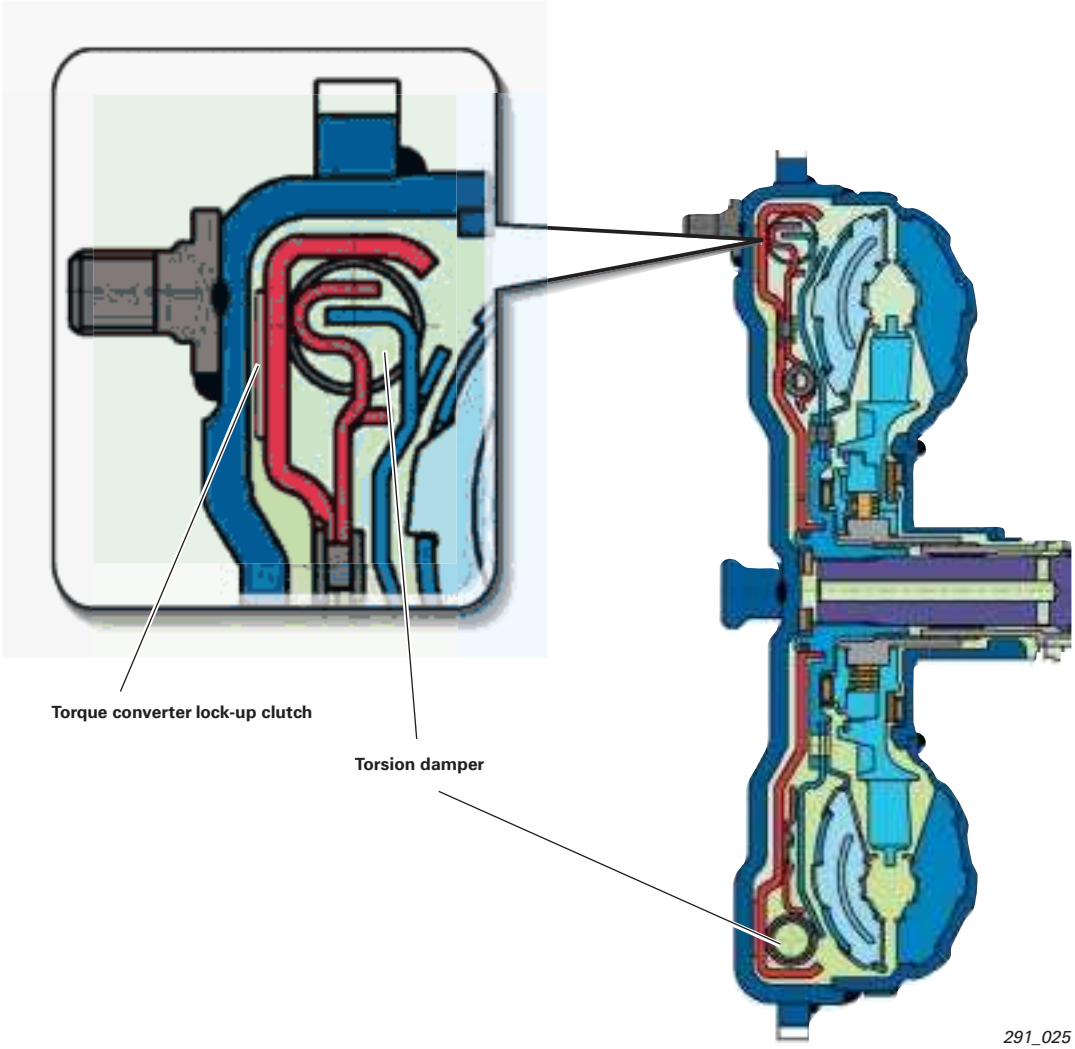

Reference

For more detailed information about the basic design and function of the torque converter lock-up clutch, refer to SSP 283.

Controlled operation

The torque converter lock-up clutch is operated with a minimum of slip at defined operating points (controlled operation).
Controlled operation offers, first, better fuel economy than operation with the torque converter lock-up clutch open and, second, better ride comfort than operation with the torque converter lock-up clutch closed.

Torque converter lock-up clutch operating ranges in "D"

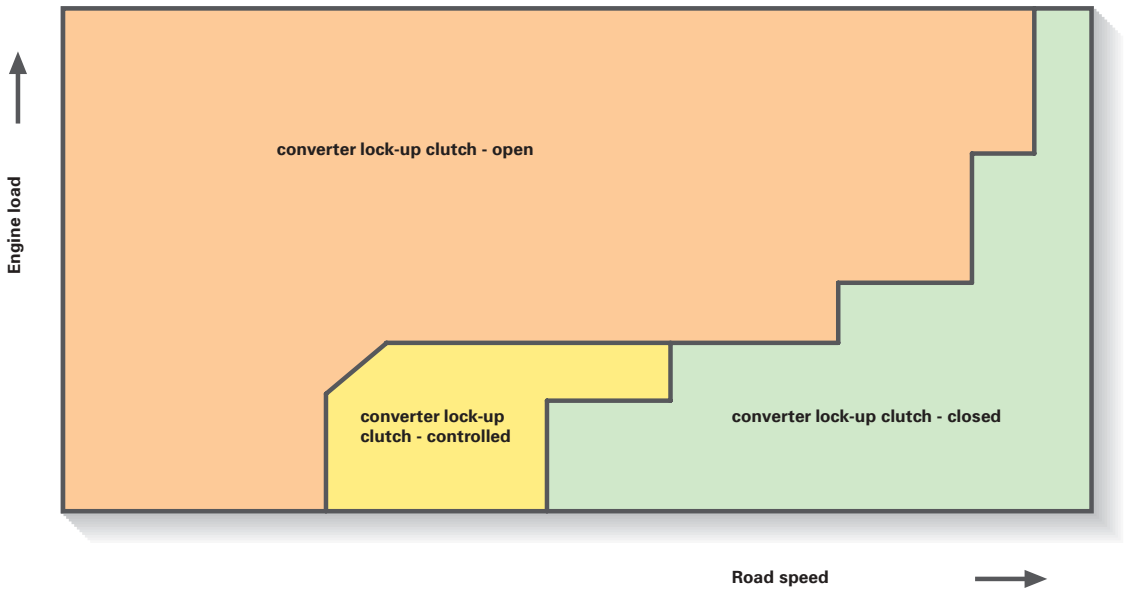

291_026

In tiptronic mode and in the "S" programme, the converter lock-up clutch is closed at the earliest possible moment. The positive, direct connection between the engine and gearbox emphasises the sporty driving feel.

In the hill-climbing program, the torque converter lock-up clutch is closed in second gear.

In the Hotmode programme, the converter lock-up clutch is operated in a controlled manner, but is closed early. This reduces the heat transfer caused by converter lock-up clutch friction or hydrodynamic power transmission.

Hotmode programme: see page 60

Oil supply/lubrication

ATF (Automatic Transmission Fluid)

The stringent requirements with regard to shift quality, functional reliability and ease of maintenance place extremely high demands on the ATF, too.
The ATF is a key factor in determining the friction coefficient of the clutches/brakes.

For this reason, the ATF is developed parallel to design and testing. It therefore stands to reason that the 09G gearbox uses a special advanced ATF type.

Use of the prescribed ATF is therefore a requirement for proper functioning of the gearbox.

The 09G gearbox is lubricated with ATF G 052 025 (Esso JWS 3309). The gearbox and ATF type are adapted to match each other.
Only the approved ATF type should be used.
The filling system (V.A.G 1924) must be free of foreign ATF residues.

The planetary gear, final drive and differential share the same oil supply.

There is no need to change the ATF within the designated maintenance intervals (lifetime filling).

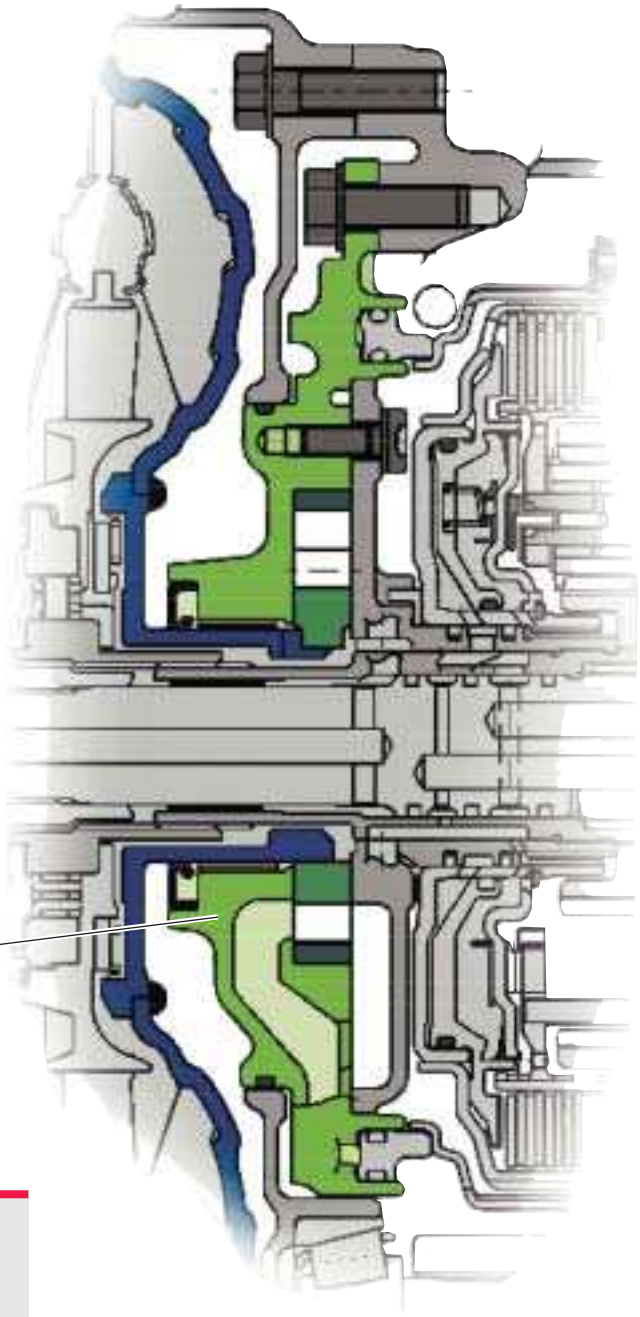

291_027A

Note

The ATF is red-coloured. There is a danger of mixing up with other ATF oils.

A separate filling system should therefore be used for each ATF.

ATF pump

One of the key components of an automatic gearbox is the ATF pump.
The gearbox does not function correctly without an ample supply of oil.

The ATF pump is designed as an internal gear pump (Duocentric pump).

It is driven directly by the engine (engine speed) via the torque converter housing and the torque converter hub. Two drive slots in the torque converter hub engage the pinion drivers. The torque converter hub is mounted on the pump housing using a low-friction bearing.

Note

During installation of the torque converter and before installing the gearbox, special care must be taken to ensure that the ATF pump drivers engage correctly in the slots in the torque converter hub. This can be checked by measuring the installation position of the torque converter (refer to Workshop Manual).

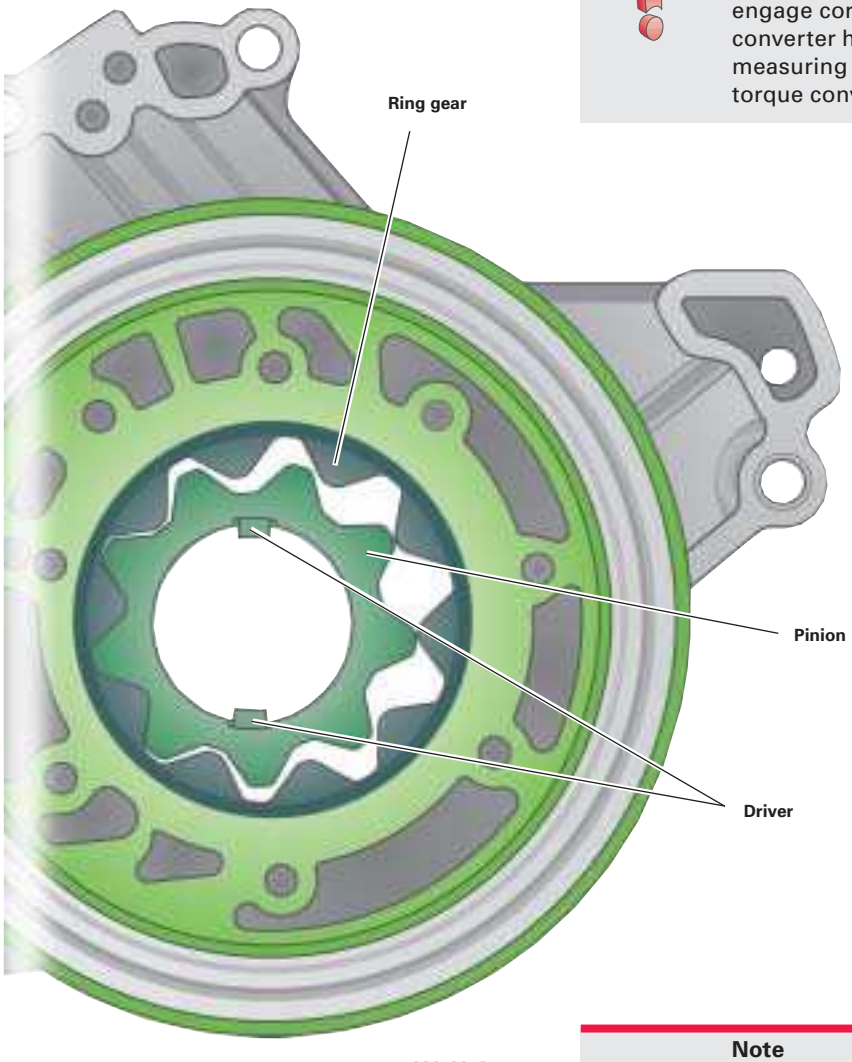

291_027B

Note

Also, care must always be taken to ensure that the bushing press fits are correctly fitted between the engine and gearbox.
Failure to fit bushing press fits will cause irreparable damage to the low-friction bearing and the torque converter hub due to the offset between the engine and the gearbox.

ATF cooling

The ATF is cooled by an ATF cooler (coolant-oil heat exchanger) which is directly flanged onto the gearbox and integrated into the engine's cooling circuit.

The direct connection between the ATF cooler and the gearbox allows cooling capacity to be adapted more easily. The elimination of ATF lines greatly reduces the number of potential fault sources with regard to leak-tightness.

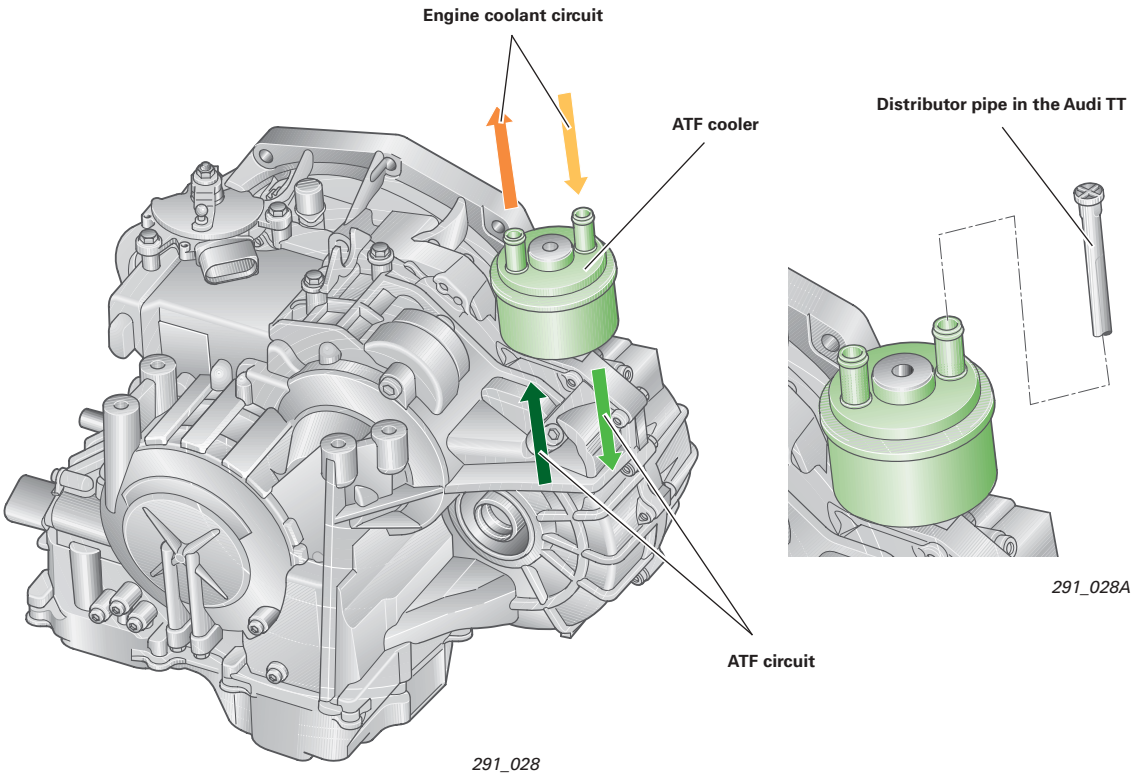

The "closed-circuit oil supply" makes it easier to fill the gearbox with ATF and check the oil level. There is no need to disconnect ATF lines when removing and installing the gearbox.

In this way, ingress of dirt into the gearbox is minimised. The ATF cooler is included in the scope of supply of the gearbox.
It is no longer necessary to clean the cooler and the oil lines when replacing a damaged gearbox.

For flow reasons, a distributor pipe is installed in the supply line to the ATF heat exchanger in the Audi TT.

Note

Do not install the distributor pipe in the return line of the ATF heat exchanger.

Planetary gear/gear shifting components

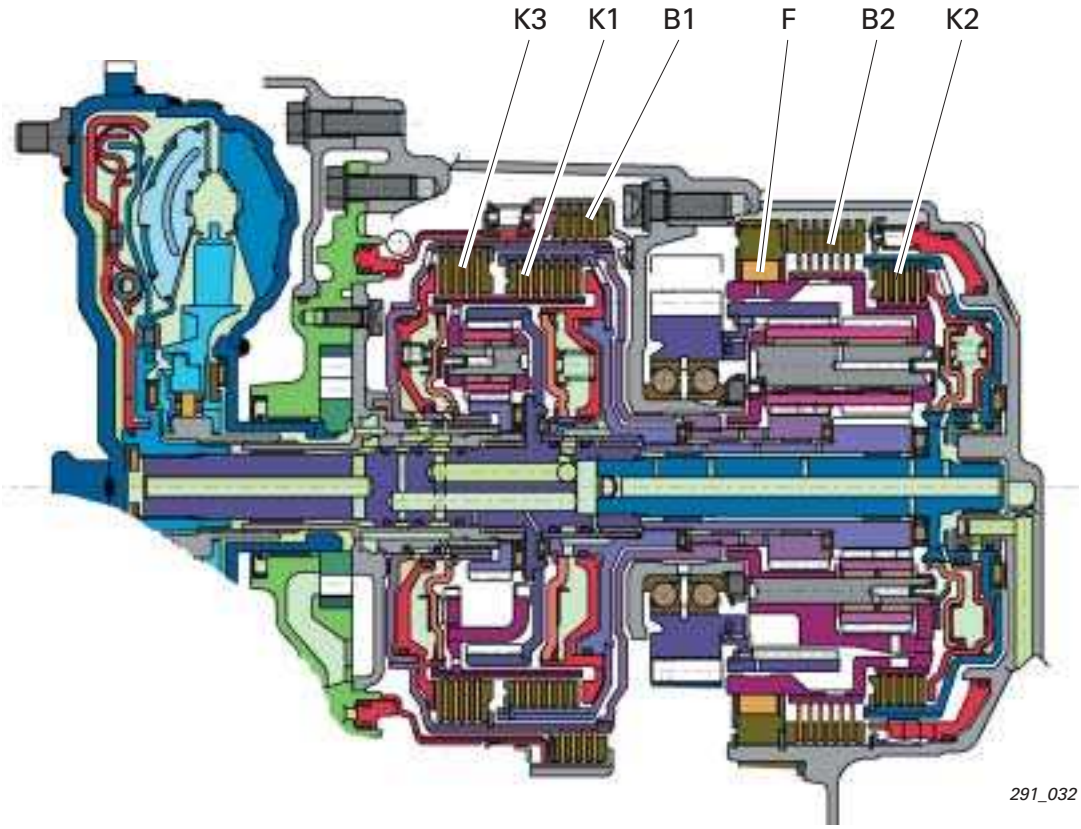

The Lepelletier planetary gear set concept is used in the 09G planetary gear.

Thanks to the special design of the Lepelletier planetary gear train, only fix shifting components are required to select the six forward gears and reverse gear.

The gear shifting components (clutches/brakes) allow gear-shifting under load without any interruption in engine drive power.

The five gear shifting components are:

- three planetary multi-plate clutches K1, K2 and K3
- two fixed plate brakes B1 and B2

The clutches have a dynamic pressure equalisation feature which provides control response independent of engine speed.
Clutches K1, K2 and K3 transmit the engine torque to the planetary gear. Brakes B1 and B2 and the freewheel multiply the engine torque at the gearcase.
All clutches and brakes are activated indirectly by the electrical pressure control valves.

The freewheel F, likewise a gear shifting component, is positioned parallel to brake B2. During automatic operation, the freewheel assumes the function of B2. Freewheel F simplifies electrohydraulic gearshift control when selecting gears and while shifting from first to second or second to first.

Reference

You can find further details in SSP 283 (from page 50) and in the multimedia training course "Power Transmission 2".

Components - planetary gears/shifting components

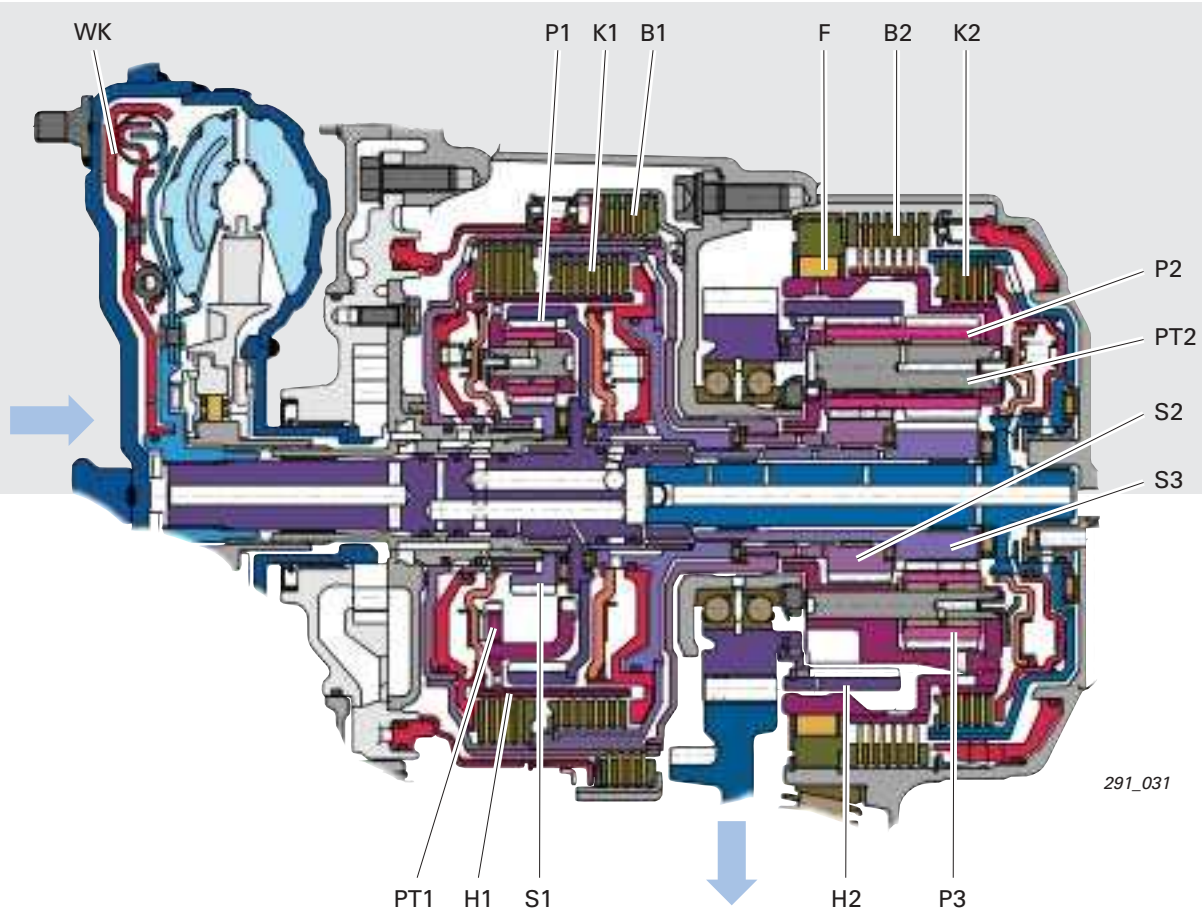

Schematic representation of diagram section with grey background 291_031

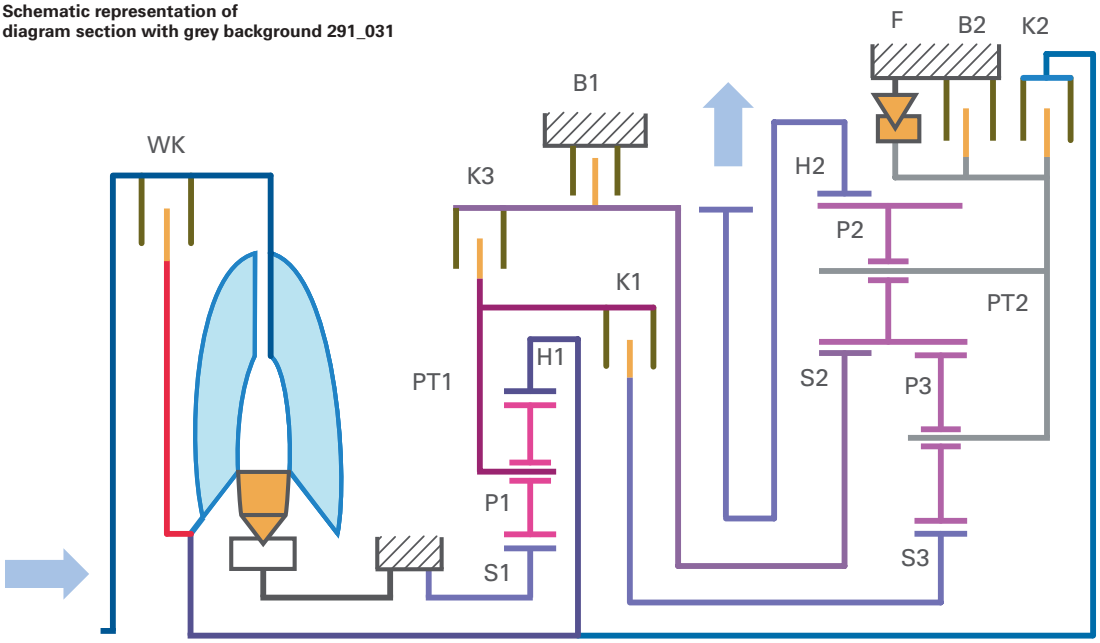

Primary planetary gear train

Component:			connected to:
H1	-	ring gear 1	turbine shaft (input)/clutch K2
P1	-	planetary gears 1	power transmission in planetary gear train
S1	-	sun gear 1	fixed
PT1	-	planet carrier 1	clutches K1 and K3

Secondary planetary gear train

Component:			connected to:
H2	-	ring gear 2	output
P2	-	planetary gears 2, long	power transmission in planetary gear train
P3	-	planetary gears 3, short	power transmission in planetary gear train
S2	-	sun gear 2, large	clutch K3/brake B1
S3	-	sun gear 3, small	clutch K1
PT2	-	planet carrier 2	clutch K2/brake B2/freewheel F

Clutches, brakes, freewheel

Component:			connected to:
K1	-	clutch 1	Planet carrier PT1 (primary gear train) is connected to small sun gear S2 (secondary gear train). Engaged in first, second, third and fourth gear.
K2	-	clutch 2	Turbine shaft (input) is connected to planet carrier PT2 of the secondary planetary gear train. Engaged in fourth, fifth and sixth gear.
K3	-	clutch 3	Planet carrier PT1 (primary gear train) is connected to large sun gear S2 (secondary gear train). Engaged in third, fifth and reverse gear.
B1	-	brake 1	Holds in place the large sun gear S2 (secondary gear train). Engaged in first gear (with engine brake) and reverse (R) gear.
B2	-	brake 2	Holds in place planet carrier PT2 (secondary gear train). Engaged in first gear (with engine brake) and reverse (R) gear.
F	-	freewheel	Holds in place planet carrier PT2 (secondary gear train) in the opposite direction to the engine. Is used for accelerating in first gear (not as engine brake).

Converter lock-up clutch

Hydraulic control

Valve body

The clutches and brakes (shifting components) are controlled by the valve body by means of hydraulically operated valves (so-called shift valves). The shift valves are controlled by electromagnetic valves, which in turn are activated by automatic gearbox control unit J217.

In addition to the shifting components, the valve body controls the torque converter lock-up clutch and regulates the various pressures inside the gearbox (e. g. primary pressure, control pressure, torque converter pressure and lubricating pressure). It is to a large extent responsible for oil supply, and therefore proper operation of the gearbox.

The valve body houses the following components:

- the mechanically operated gear selector valve
- the hydraulically controlled switch valves
- two electrically controlled solenoid valves (3/2-way valves)
- six electrically controlled pressure control valves (modulating valves)
- two pressure switches (hydraulic pressure sender) and
- the gearbox oil temperature sensor

Automatic gearbox control unit J217

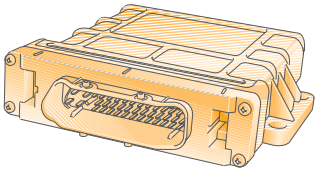

291_053

Valve body

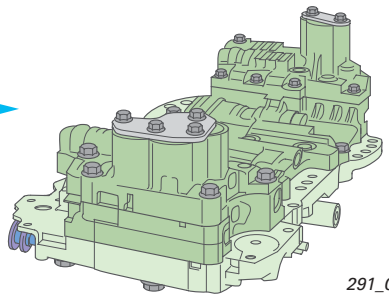

291_037

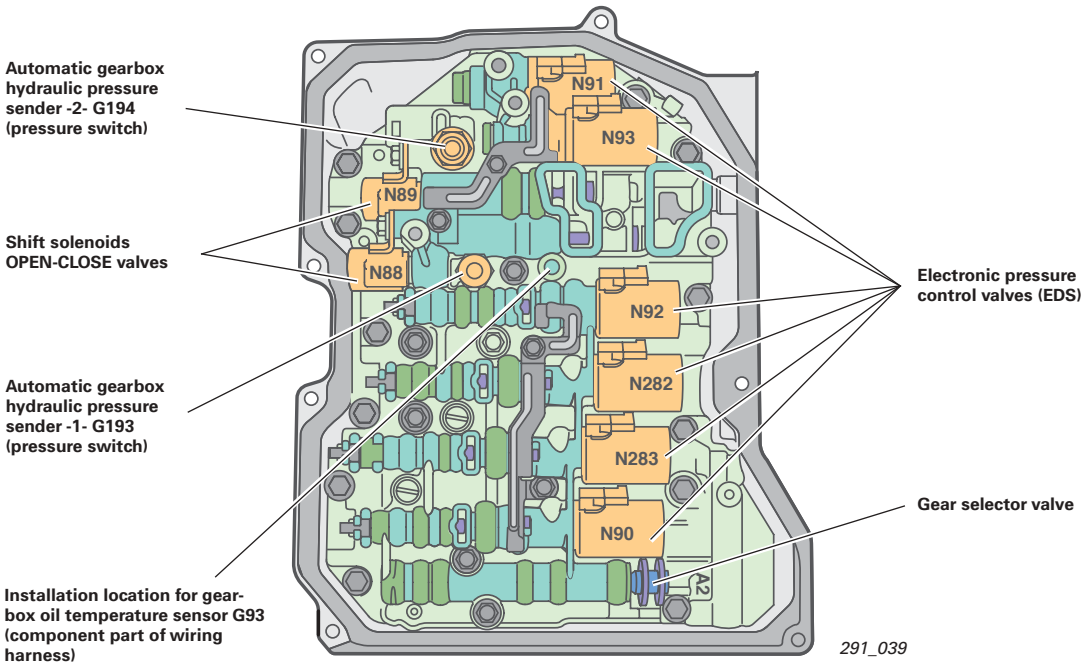

291_039

Bottom view of valve body

Electromagnetic valves

In the case of electromagnetic valves, a distinction is made between shift solenoids with two switch positions (OPEN-CLOSE) and electrical pressure control valves (referred to as EDS or modulating valves).

The shift solenoids (N88/N89) are so-called 3/2 valves or OPEN-CLOSE valves.
3/2 valve means the valves has 3 terminals and 2 switch positions (open/closed or OPEN-CLOSE).
The shift solenoids are used for switching the hydraulic valves.

The electronic pressure control valves (EDS) convert an electrical current to a proportional hydraulic control pressure.

Two types of EDS valve are installed.

EDS valves with a rising characteristic curve increase the pilot pressure (P) with rising control current (I) - deenergised - zero pilot pressure (0 mA = 0 bar).

EDS valves with a falling characteristic curve reduce the pressure with rising pilot current - deenergised - max. pilot pressure.

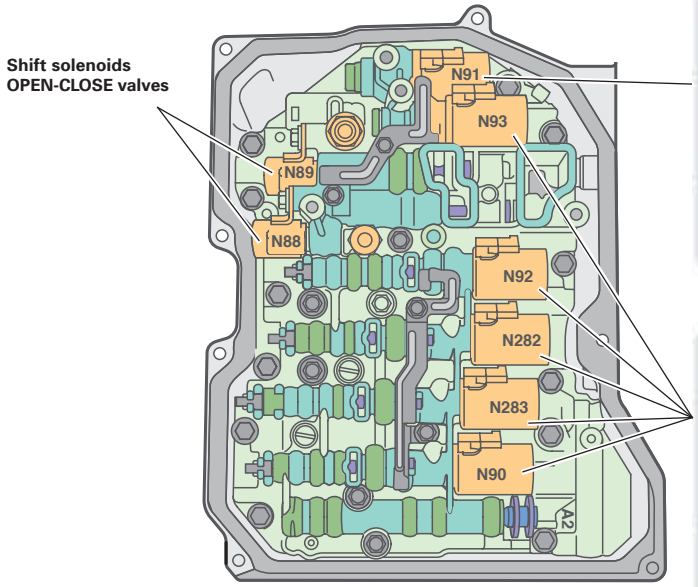

291_039

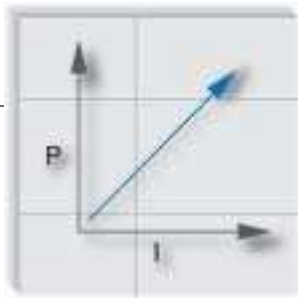

EDS with rising characteristic curve

291_122

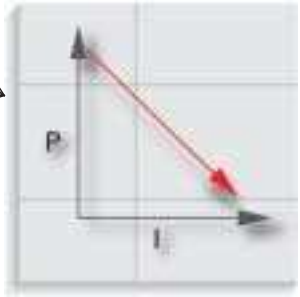

EDS with falling characteristic curve

291_121

Effects of fault:

If the self-diagnosis detects a faulty electro-magnetic valve, the emergency mode will usually be activated. You can find more information about the emergency mode on page 70. Electrical and mechanical faults have very different effects due to the complexity of the electrohydraulic control system.
They may affect for instance only the faulty system in question (e.g. the torque converter lock-up clutch in the case of N91), but can also lead to activation of the emergency mode if safe operation can no longer be guaranteed.

If the EDS N93 fails, the gearbox operates at maximum system pressure. This can result in harsh engagement when shifting from P or N to D/S or R and during all gearshifts.

If the EDS N91 fails, the torque converter lock-up clutch cannot be activated and therefore remains open.

Shift logic

	Solenoid logic								Gear shifting component logic					
	3/2 valves		Electronic pressure control valves (EDS)						Clutches, brakes, freewheel					
	N89	N88	N92	N282	N90	N283	N93	N91	K1	K2	K3	B1	B2	F
P														
N														
Reverse (R) gear														
First gear	T	T											T	
Second gear														
Third gear	T/Z	Z												
Fourth gear	T/Z	Z												
Fifth gear	T/Z	Z												
Sixth gear		Z												

291_036

Functional assignments of the solenoid valves

N90 controls clutch K3,
N91 controls the torque converter lock-up clutch,
N92 controls clutch K1,
N93 controls the primary pressure/system pressure
N282 controls clutch K2 and
N283 controls brake B1.

Solenoid valves N88 and N89 control shifting of gears 4 to 6 and are activated (energised) temporarily and alternately during gearshifts.

In addition, solenoid valves N88 and N89 control brake B2 in first gear - tiptronic mode (for the engine brake).

Legend for solenoid valve logic:

- Solenoid valve is not activated (current: approx. 100 mA) or Gear shifting component open
- Solenoid valve is activated
- Solenoid valve is activated (current: approx. 1.0 A)
- Corresponding clutch closed
- Corresponding brake closed
- Freewheel locked
- Solenoid valve is energised differently depending on operating state

Note

The function is inverse to applied current, since EDS N92, N93, N282 and N283 have a falling characteristic curve. This means that the respective shifting component is operated if the EDS is not activated.

T - in tiptronic mode (first gear with enginebrake)

Z - solenoid valves are activated for a short time only during gearshifts

Description of gear/torque curve

First gear i = 4.148

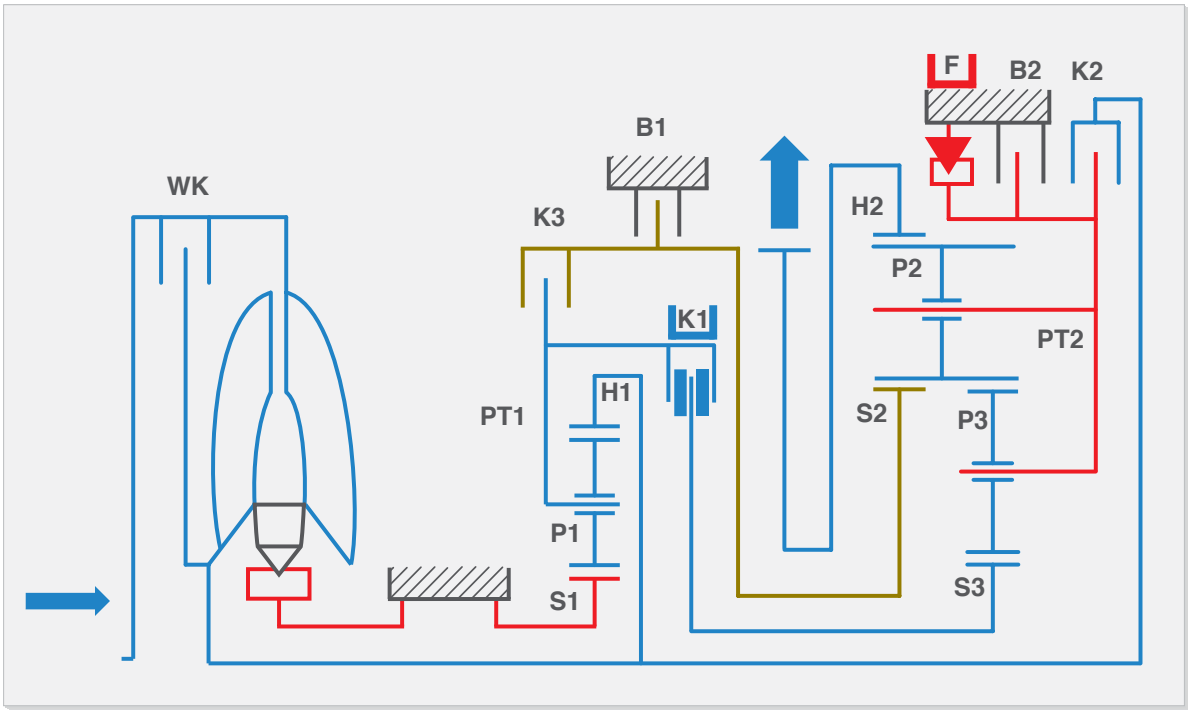

291_041

Gear shifting components: clutch K1 - freewheel F

The turbine shaft drives ring gear H1 of the primary planetary gear train. Ring gear H1 drives the planetary gears P1, which rotate around the fixed sun gear S1.
Planet carrier PT1 is driven in this way.
Clutch K1 connects PT1 to sun gear S3 and thus transmits the torque to the secondary planetary gear train.
Freewheel F locks planet carrier PT2.
Torque is transferred from sun gear S3 to the short planetary gears P3, and in turn to the long planetary gears P2.

The torque, multiplied by planet carrier PT2, is transmitted to ring gear H2, which is connected to the output spur gear.

Since first gear is implemented using freewheel F, no power is transmitted during overrun in first gear. In overrun, the gears drive the engine. Freewheel F rotates towards its locking direction (in freewheel direction); the engine brake effect cannot be utilised.

Reference

You will find notes on the schematic diagram on page 28 and in SSP 283 on page 55.

Torque curve/power flow

Parts are stationary or held in place

Parts rotate without contributing to power flow

First gear in tiptronic mode (with engine brake)

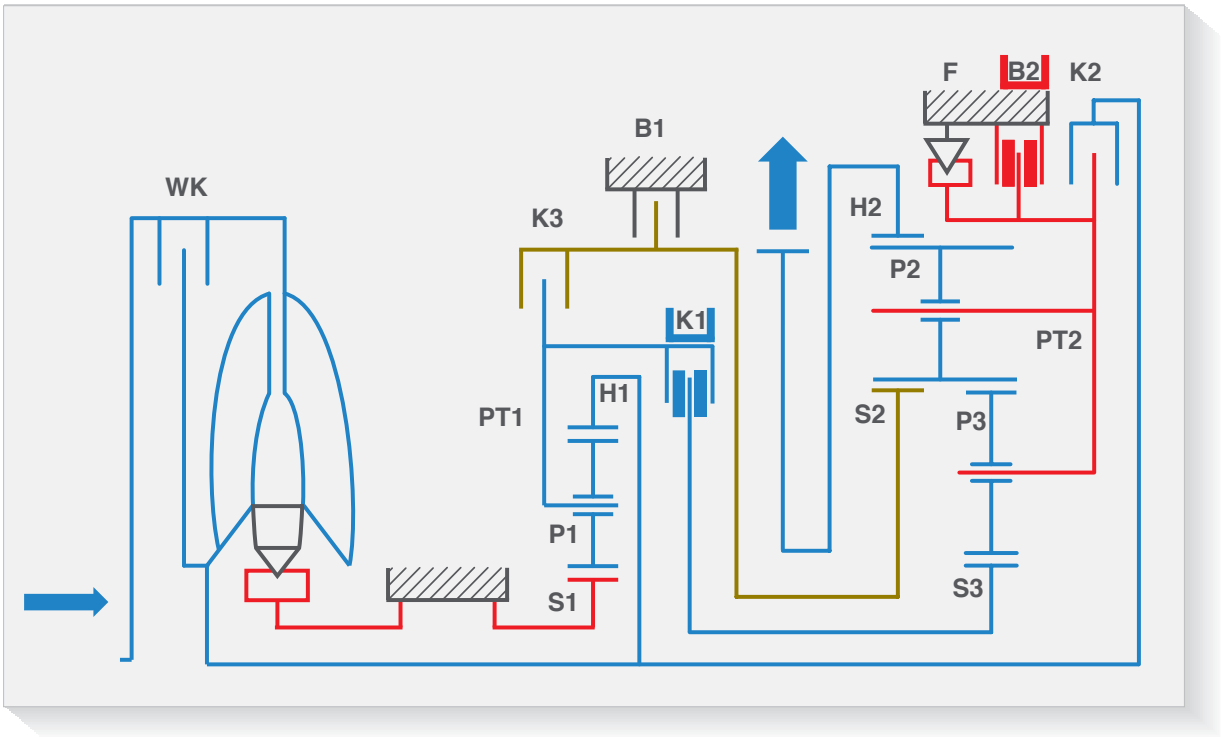

291_042

Gear shifting components: clutch K1 - brake B2

The engine brake effect in first gear can be utilised in special driving situations - e.g. on steep downhill gradients - by selecting first gear in tiptronic mode (B2 closed).

The torque curve is as described for first gear (on the previous page).
The engine brake effect can only be utilised in the first gear by closing brake B2.

As with F, brake B2 locks the planet carrier PT2 in place. Unlike F, however, B2 holds PT2 in place in both directions of rotation. This is necessary for reverse gear and for utilising the engine brake effect in the first gear.

Second gear i = 2.370

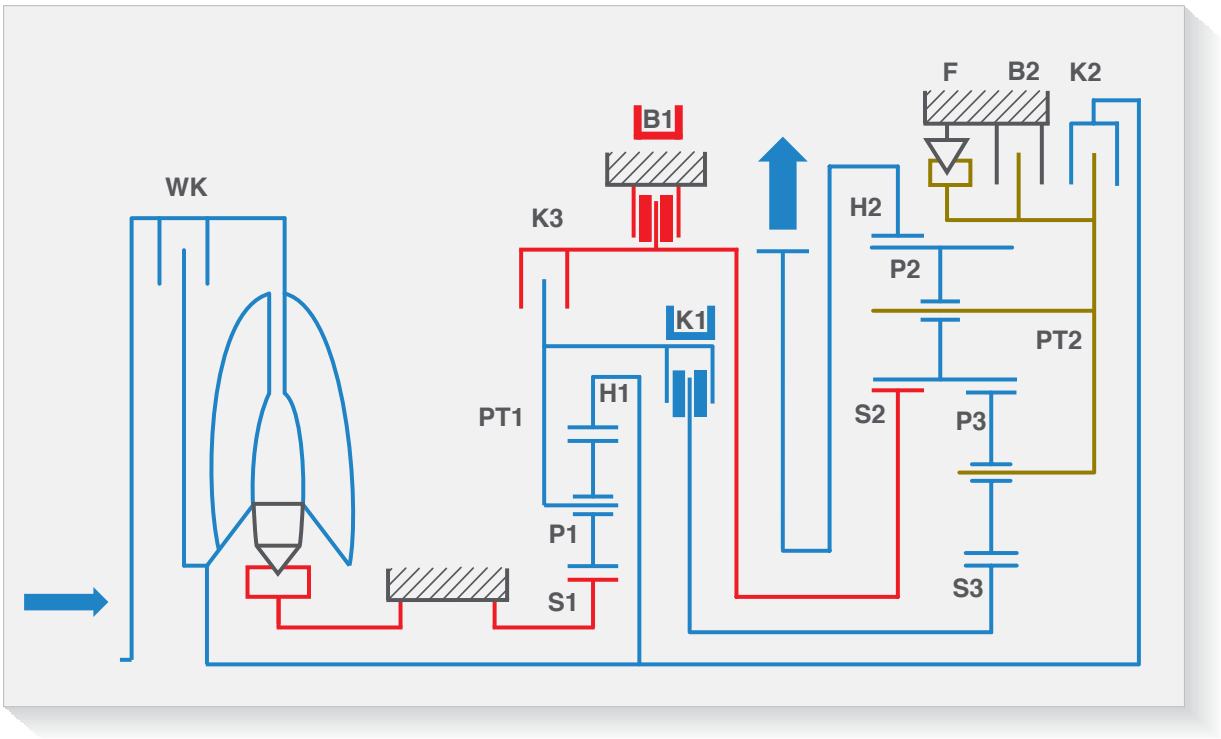

291_043

Gear shifting components: clutch K1 - brake B1

The turbine shaft drives ring gear H1 of the primary planetary gear train. Ring gear H1drives the planetary gears P1, which rotate around the fixed sun gear S1. Planet carrier PT1 is driven in this way. Clutch K1 connects PT1 to sun gear S3 and thus transmits the torque to the secondary planetary gear train.

Brake B1 locks the large sun gear S2 in place. Torque is transferred from sun gear S3 to the short planetary gears P3, and in turn to the long planetary gears P2.
The long planetary gears P2 orbit around fixed sun gear S2 and drive ring gear H2, which is connected to the output spur gear.

Third gear i = 1.556

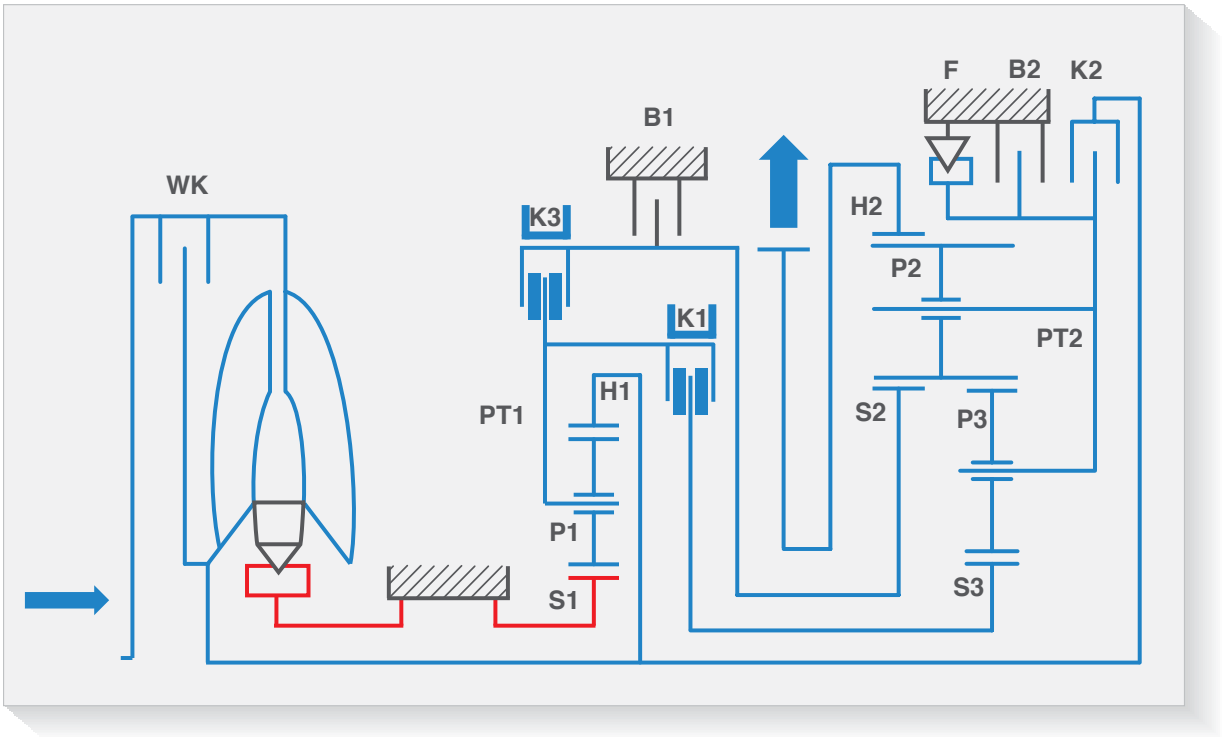

291_044

Gear shifting components: clutch K1 - clutch K3

The turbine shaft drives ring gear H1 of the primary planetary gear train. Ring gear H1 drives the planetary gears P1, which rotate around the fixed sun gear S1. Planet carrier PT1 is driven in this way. Clutch K1 connects PT1 to sun gear S3 and thus transmits the torque to the secondary planetary gear train.

Clutch K3 likewise transmits the torque to the secondary planetary gear train acting on sun gear S2. The secondary planetary gear train is locked in place by the closing of clutches K1 and K3. Torque is now transmitted directly from the primary planetary gear train to the output spur gear.

Fourth gear i = 1.155

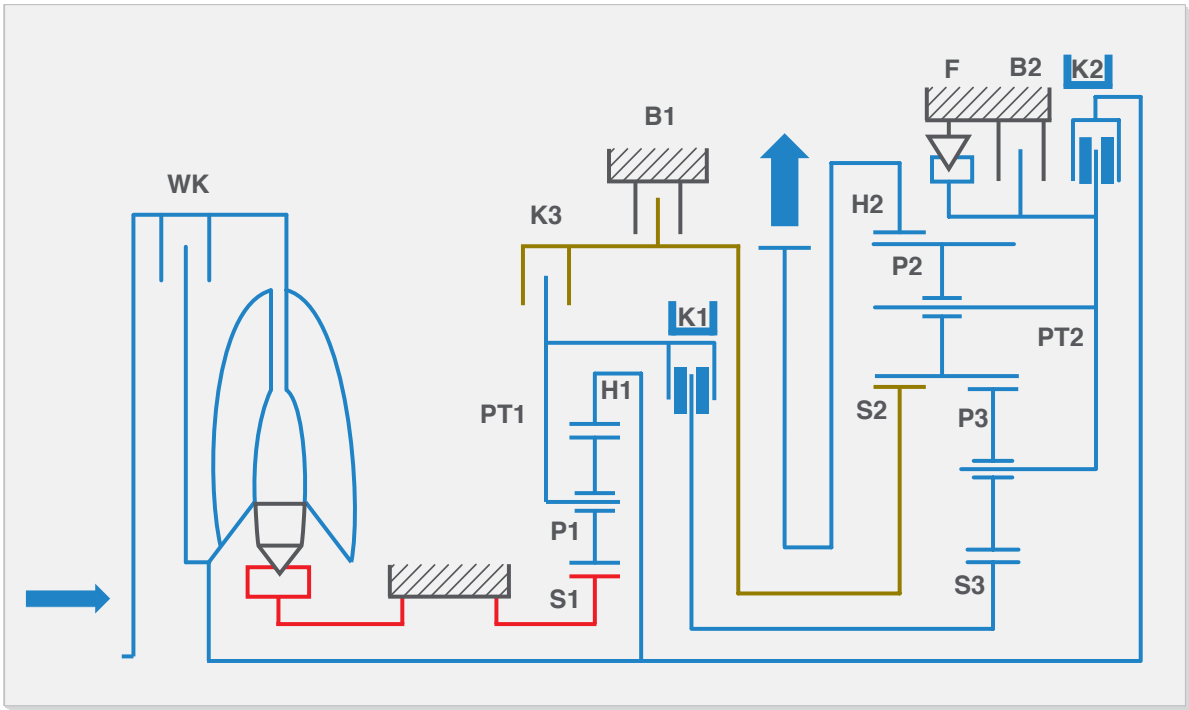

291_045

Gear shifting components: clutch K1 – clutch K2

The turbine shaft drives the ring gear H1 of the primary planetary gear train and the external disc carrier of clutch K2.
Ring gear H1 drives the planetary gears P1, which rotate around the fixed sun gear S1. Planet carrier PT1 is driven in this way.

Clutch K1 connects PT1 to sun gear S3 and thus transmits the torque to the secondary planetary gear train.
The clutch K2 connects the turbine shaft to the planet carrier PT2 and thus transfers the torque to the secondary planetary gear train.
The long planetary gears P2, which are in mesh with the short planetary gears P3, together with the planet carrier PT2, drive the ring gear H2, which is connected to the output spur gear.

Fifth gear i = 0.859

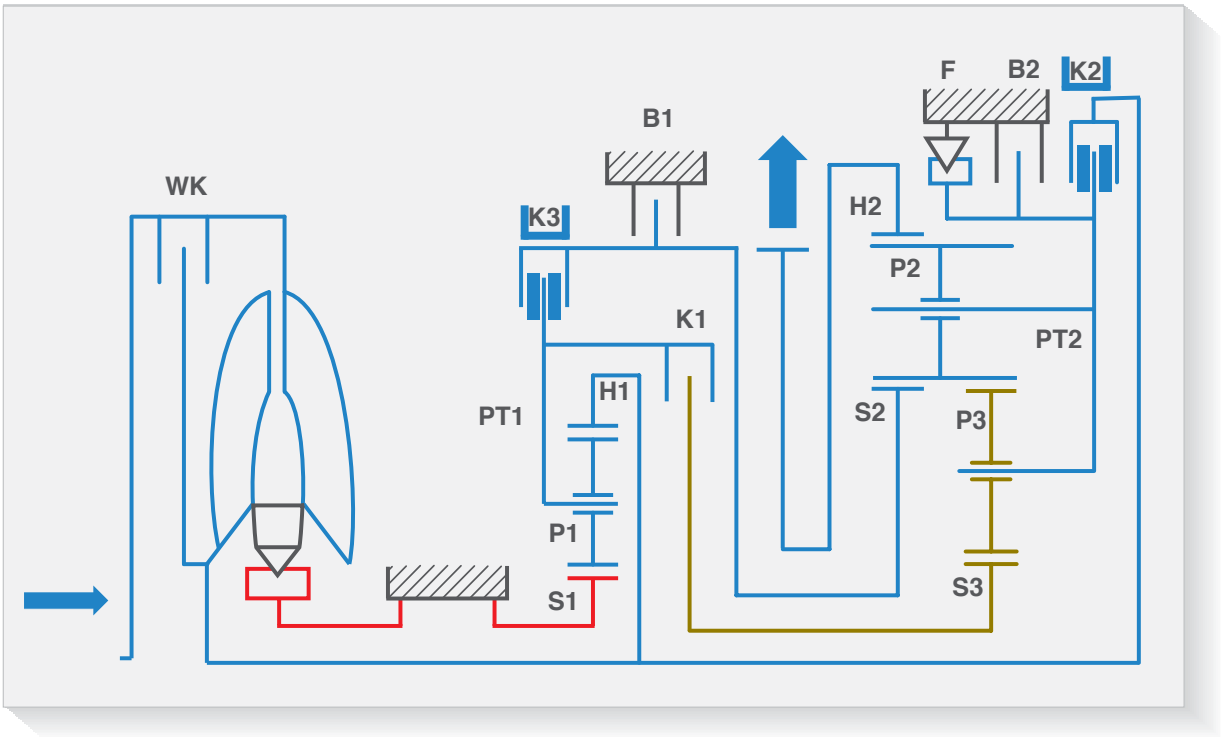

291_046

Gear shifting components: clutch K2 - clutch K3

The turbine shaft drives ring gear H1 of the primary planetary gear train and the external disc carrier of clutch K2.
Ring gear H1 drives the planetary gears P1, which rotate around the fixed sun gear S1.
Planet carrier PT1 is driven in this way.
Clutch K3 connects the PT1 to the sun gear S2 and thus transmits the torque to the secondary planetary gear train.

Clutch K2 connects the turbine shaft to the planet carrier of the secondary planetary gear train PT2 and thus transmits the torque to the secondary planetary gear train.
The long planetary gears P2, together with the planet carrier PT2 and the sun gear S2, drive the ring gear H2, which is connected to the output spur gear.

Sixth gear i = 0.686

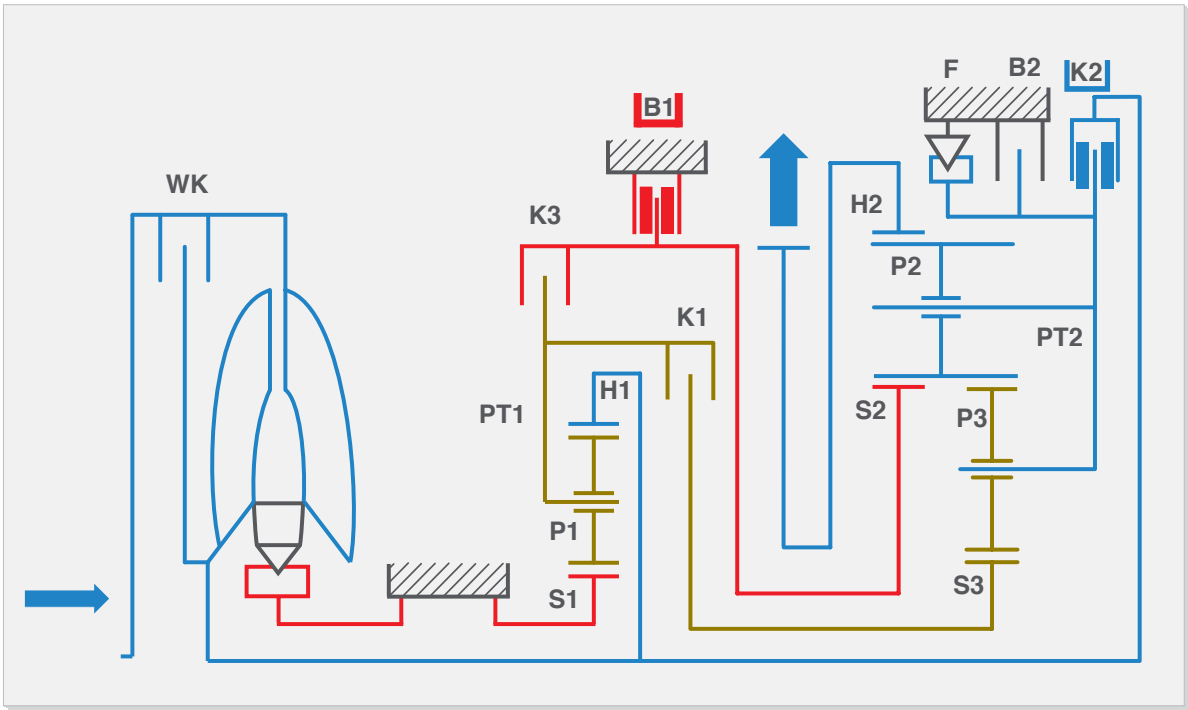

291_047

Gear shifting components: clutch K2 – brake B1

Brake B1 locks in place sun gear S2.
Clutch K2 connects the turbine shaft to the planet carrier of the secondary planetary gear train PT2 and thus transmits the torque to the secondary planetary gear train.

The long planetary gears P2 orbit around fixed sun gear S2 and drive ring gear H2, which is connected to the output spur gear.
Clutches K1 and K3 are open. The primary planetary gear train does not contribute to power transmission.

Reverse (R) gear i = 3.394

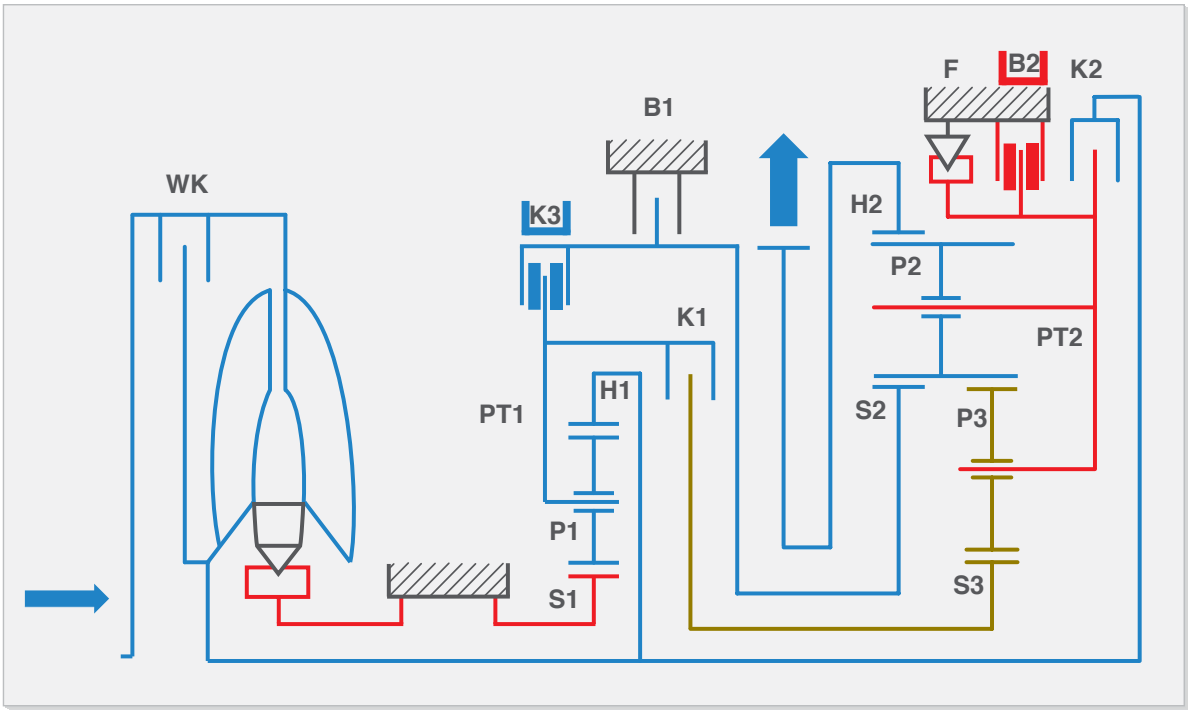

291_048

Gear shifting components: clutch K3 - brake B2

The turbine shaft drives ring gear H1 of the primary planetary gear train. Ring gear H1 drives the planetary gears P1, which rotate around the fixed sun gear S1. Planet carrier PT1 is driven in this way. Clutch K3 connects the PT1 to the sun gear S2 and thus transmits the torque to the secondary planetary gear train.

The brake B2 locks the planet carrier PT2 in place. Torque is transmitted from the sun wheel S2 to the long planetary gears P2.
The torque, multiplied by PT2, is transmitted to the ring gear H2, which is connected to the output shaft.
At the same time, the ring gear H2 (output) is driven against the direction of rotation of the engine.

Parking lock

The parking lock is a device which prevents the vehicle from rolling when parked. The parking lock is designed in a conventional fashion, i.e. it is operated by the selector lever by means of a Bowden cable (mechanical only).

The parking lock gear is a component part of the driven intermediate shaft gearwheel. It also acts as a sender wheel for the gearbox output speed sender G195.

The pawl meshes with the parking lock gear and thereby locks the final drive. A constant wheel height is maintained when the axle is raised on one side only.

It is therefore not possible to prevent rolling when the front axle is raised on one side (e.g. when changing a wheel using the car jack). In this case, the handbrake must be applied.

To reduce the load on the selector lever cable and to allow the selector lever to be operated more easily, the handbrake should be applied on steep gradients before the selector lever is engaged in the "P" position.

This eliminates tension between the pawl and the parking lock gear. Before driving away, first shift the selector lever out of "P" and then release the handbrake.

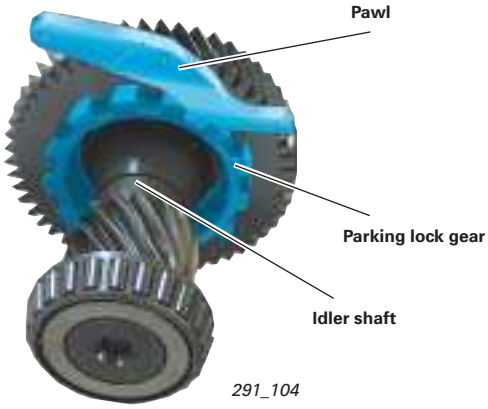

291_104

Position "parking lock engaged"

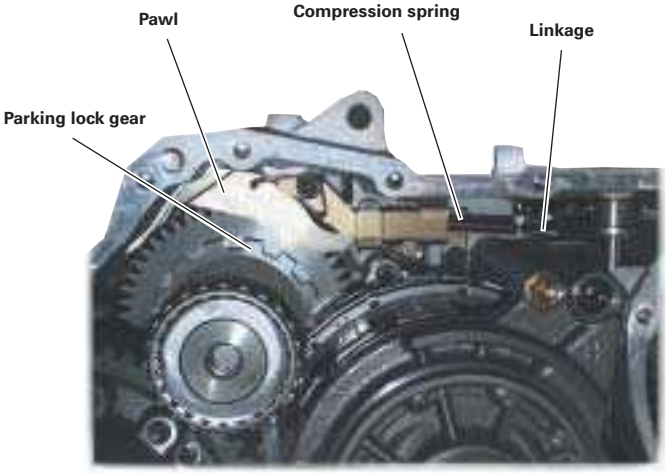

291_108

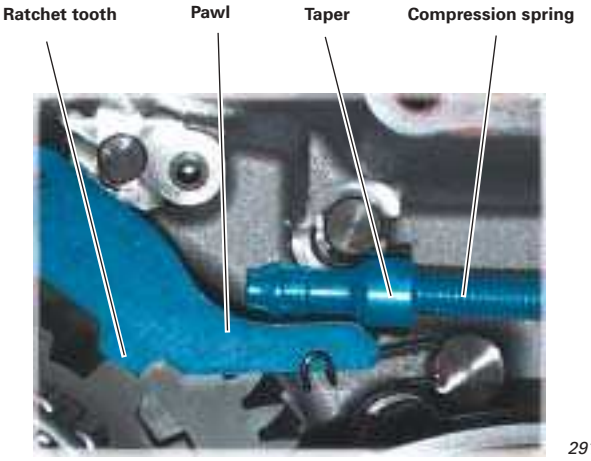

291_108A

Position "compression spring preloaded"

When the ratchet tooth meshes directly with a tooth of the parking lock gear (tooth to tooth), the taper is preloaded by the compression spring. If the parking lock gear turns slightly further, the pawl is forced into the next tooth space.

Function diagram of Audi A3 ´04 (as per March ‘04)

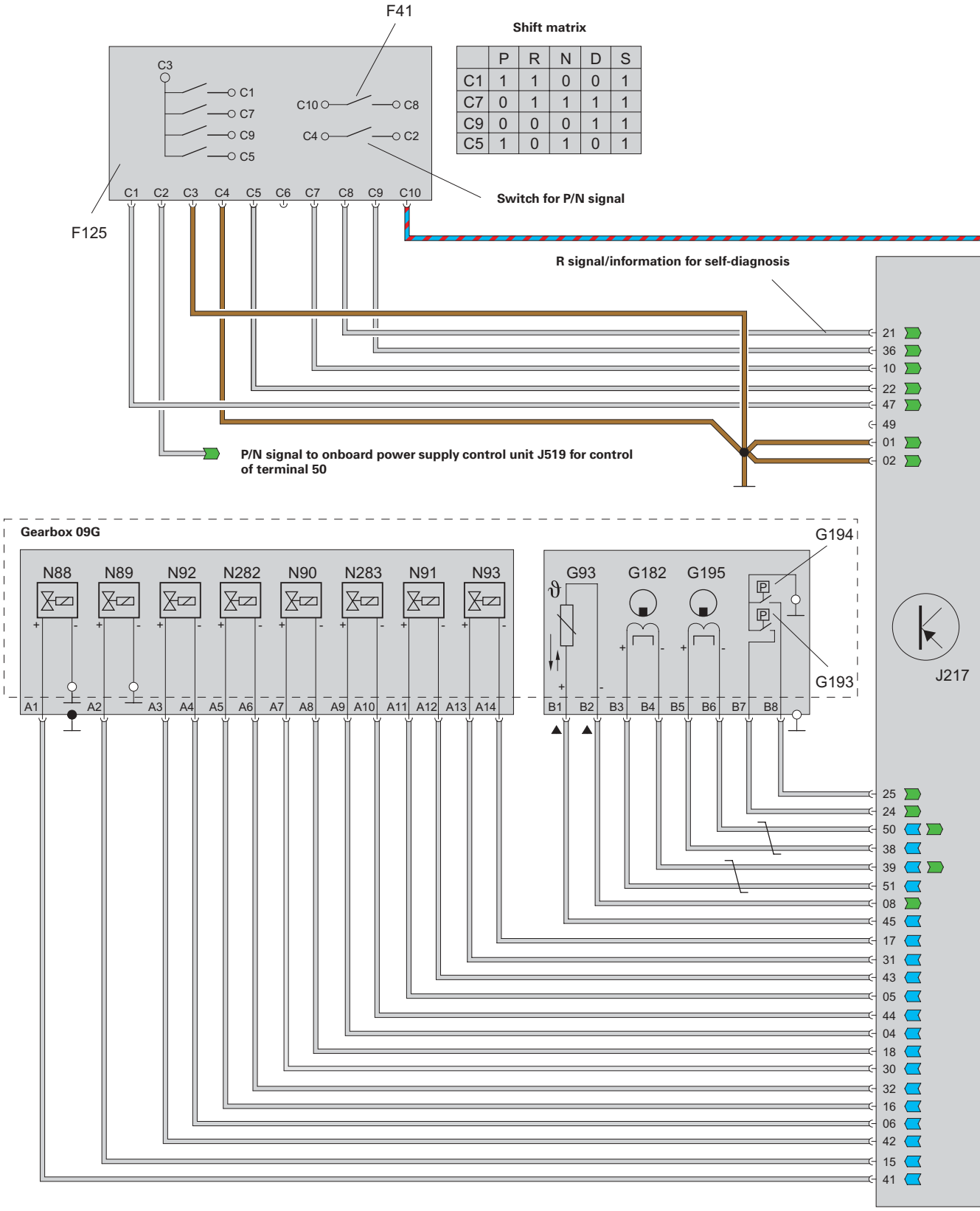

Shift matrix

	P	R	N	D	S
C1	1	1	0	0	1
C7	0	1	1	1	1
C9	0	0	0	1	1
C5	1	0	1	0	1

F41	Reversing switch
F125	Multi-function switch
F189	Tiptronic switch
F319	Selector lever locked in position P switch
G93	Gearbox oil temperature sensor
G182	Gearbox input speed sender
G193	Automatic gearbox hydraulic pressure sender -1-
G194	Automatic gearbox hydraulic pressure sender -2-
G195	Gearbox output speed sender
J217	Automatic gearbox control unit
N88	Solenoid valve 1
N89	Solenoid valve 2
N90	Solenoid valve 3
N91	Solenoid valve 4
N92	Solenoid valve 5
N93	Solenoid valve 6
N110	Selector lever lock solenoid
N282	Solenoid valve 9
N283	Solenoid valve 10

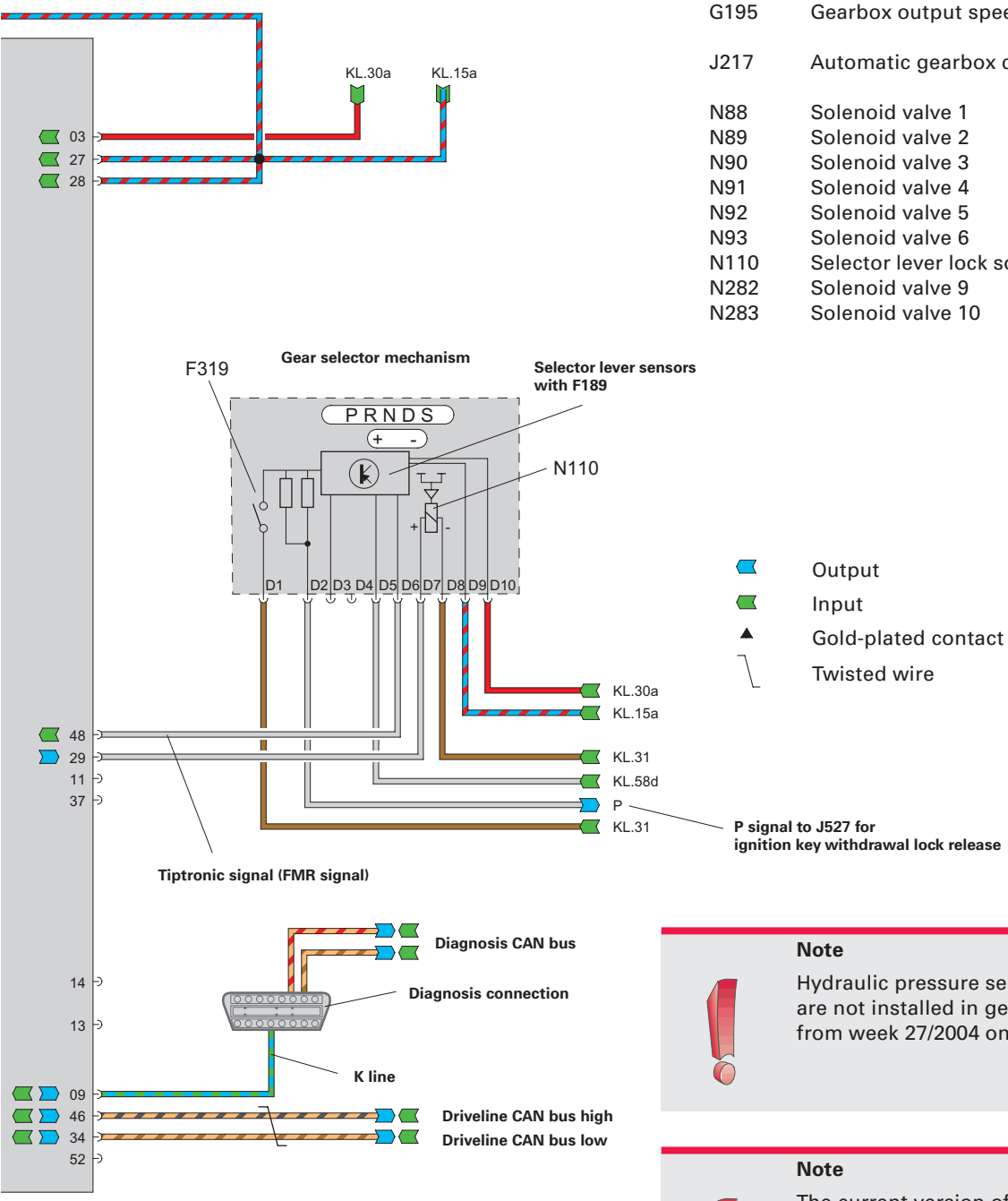

Output
Input
Gold-plated contact
Twisted wire

291_049

Note

Hydraulic pressure senders G193 and G194 are not installed in gearboxes with build dates from week 27/2004 on.

Note

The current version of the current flow diagram must be used for fault-finding on vehicle.

Function diagram of Audi TT (as per March '04)

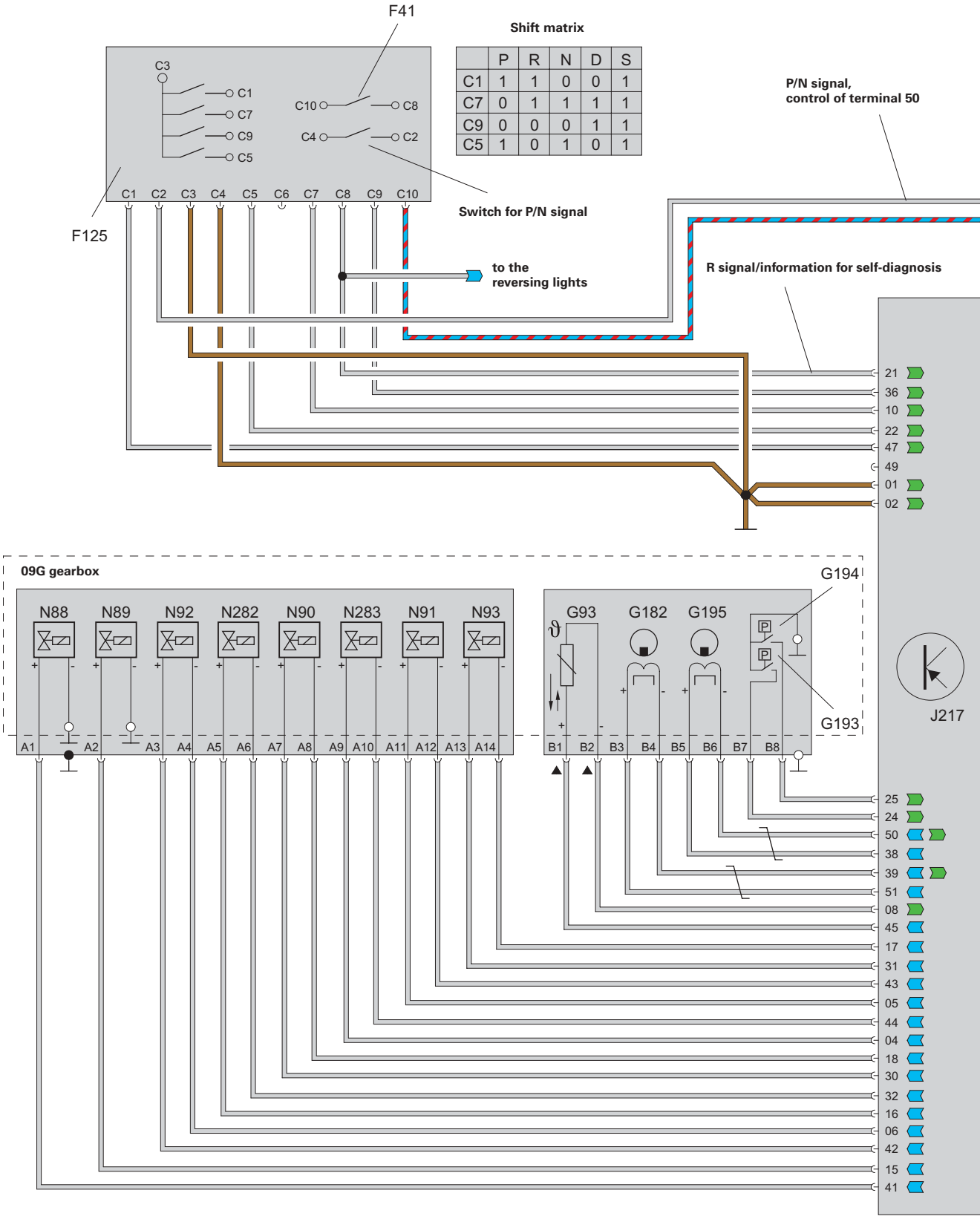

	P	R	N	D	S
C1	1	1	0	0	1
C7	0	1	1	1	1
C9	0	0	0	1	1
C5	1	0	1	0	1

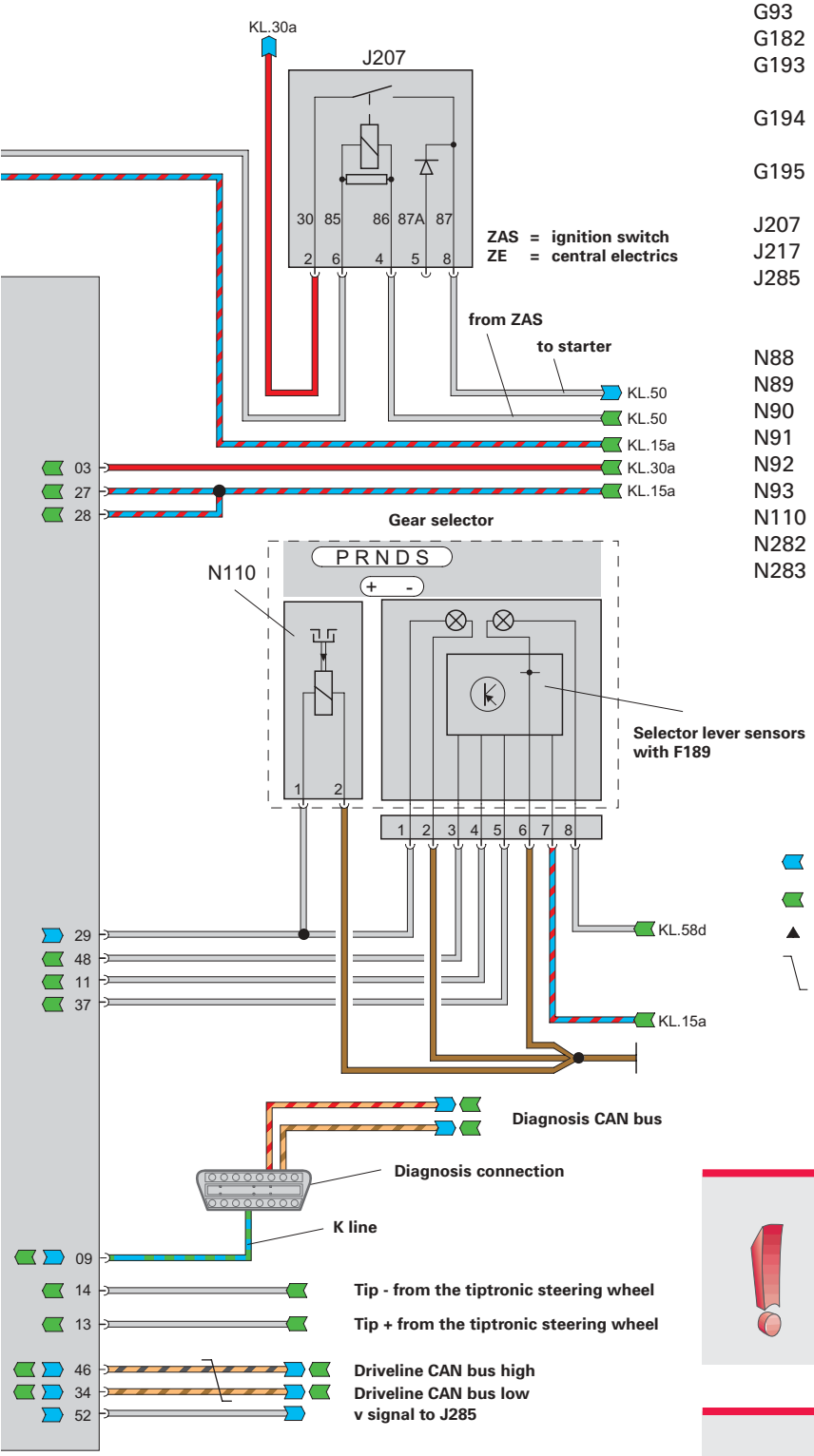

291_050

F41	Reversing switch
F125	Multi-function switch
F189	Tiptronic switch
G93	Gearbox oil temperature sensor
G182	Gearbox input speed sender
G193	Automatic gearbox hydraulic pressure sender -1-
G194	Automatic gearbox hydraulic pressure sender -2-
G195	Gearbox output speed sender
J207	Starter inhibitor relay
J217	Automatic gearbox control unit
J285	Control unit with display in dash panel insert
N88	Solenoid valve 1
N89	Solenoid valve 2
N90	Solenoid valve 3
N91	Solenoid valve 4
N92	Solenoid valve 5
N93	Solenoid valve 6
N110	Selector lever lock solenoid
N282	Solenoid valve 9
N283	Solenoid valve 10

Output

Input

Gold-plated contact

Twisted wire

Note

Hydraulic pressure senders G193 and G194 are not installed in gearboxes with build dates from week 27/2004 on.

Note

The current version of the current flow diagram must be used for fault-finding on vehicle.

Automatic gearbox control unit J217

The control unit is located in the wheel housing at the front left on the Audi A3 '04 or in the plenum chamber on the Audi TT.

It is connected by a 52-pin plug. VAS adapter cable 1598/48 is available for static and dynamic measurements on the system.

The control unit is made by ASIN AW Japan.

Update programming is possible with the VAS 5051.

Installation location on Audi A3 '04

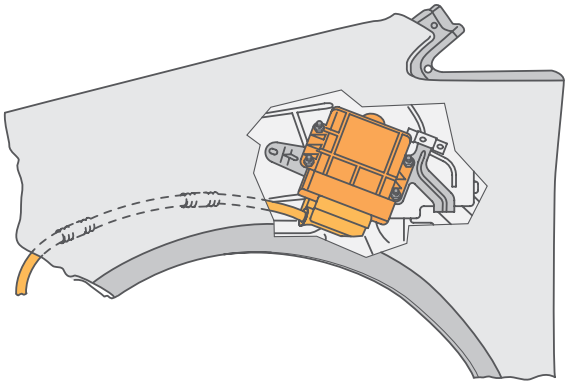

291_051

Installation location on Audi TT

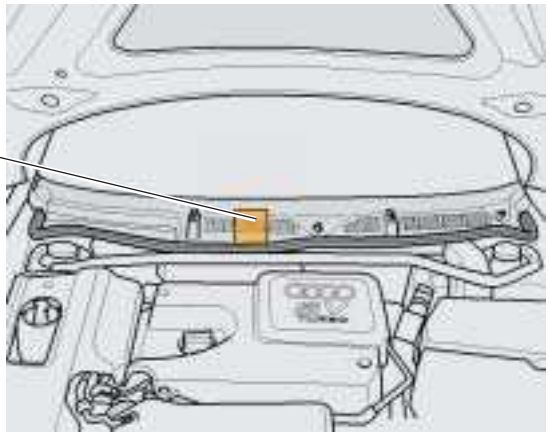

291_111

Automatic gearbox control unit J217

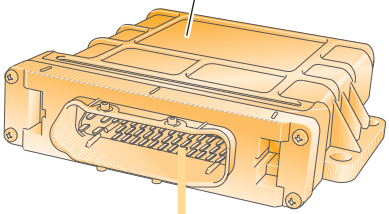

291_053

pin assignments of the interfaces (see table on page 47)

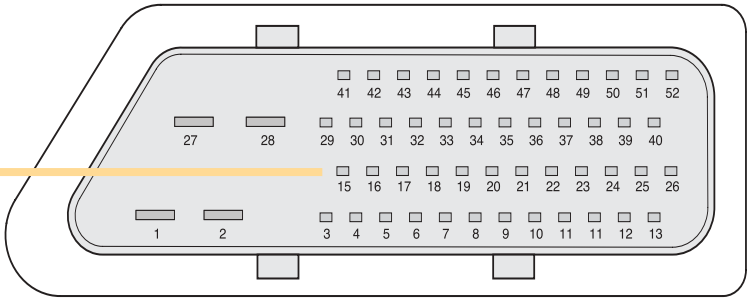

291_054

pin assignments on control unit J217. Connector A/B/C/D to gearbox or peripheral devices

pin	pin	Designation	pin	pin	Designation
1		Ground terminal 31	27		Voltage supply terminal 15
2		Ground terminal 31	28		Voltage supply terminal 15
3		Voltage supply terminal 30	29	D7*/ 1**	Selector lever lock solenoid N110 (+)
4	A9	Solenoid valve N283 (+)	30	A7	Solenoid valve N90 (+)
5	A11	Solenoid valve N91 (+)	31	A13	Solenoid valve N93 (+)
6	A4	Solenoid valve N92 (–)	32	A6	Solenoid valve N282 (–)
7		unassigned	33		unassigned
8	B2	Gearbox oil temperature sensor G93 (-/signal)	34		CAN-low
9		K line	35		unassigned
10	C7	Multi-function switch F125	36	C9	Multi-function switch F125
11	4**	unassigned*, Tip + on Audi TT**	37	5**	unassigned*, Tip - on Audi TT**
12		unassigned	38	B5	Gearbox output speed sender G195 (+)
13		unassigned*, steering wheel Tip + on Audi TT**	39	B4	Gearbox input speed sender G182 (-/signal)
14		unassigned*, steering wheel Tip - on Audi TT**	40		unassigned
15	A2	Solenoid valve N89 (+)	41	A1	Solenoid valve N88 (+)
16	A5	Solenoid valve N282 (+)	42	A3	Solenoid valve N92 (+)
17	A14	Solenoid valve N93 (–)	43	A12	Solenoid valve N91 (–)
18	A8	Solenoid valve N90 (–)	44	A10	Solenoid valve N283 (–)
19		unassigned	45	B1	Gearbox oil temperature sensor G93 (+)
20		unassigned	46		CAN-high
21	C8	Reverse (R) gear signal/feedback for self-diagnosis	47	C1	Multi-function switch F125
22	C5	Multi-function switch F125	48	D6*/ 3**	Tiptronic information (FMR signal)*/ Tiptronic gate**
23		unassigned	49		unassigned
24	B7	Hydraulic pressure sender 1 G193	50	B6	Gearbox output speed sender G195 (–/signal)
25	B8	Hydraulic pressure sender 2 G194	51	B3	Gearbox input speed sender G182 (+)
26		unassigned	52		unassigned*, v signal on Audi TT**

Note

Hydraulic pressure senders G193 and G194 are not installed in gearboxes with build dates from week 27/2004 on.

* in the Audi A3 '04
** in the Audi TT

pin on control unit J217

pin on connector A/B/C/D

Sensors

Multi-function switch F125

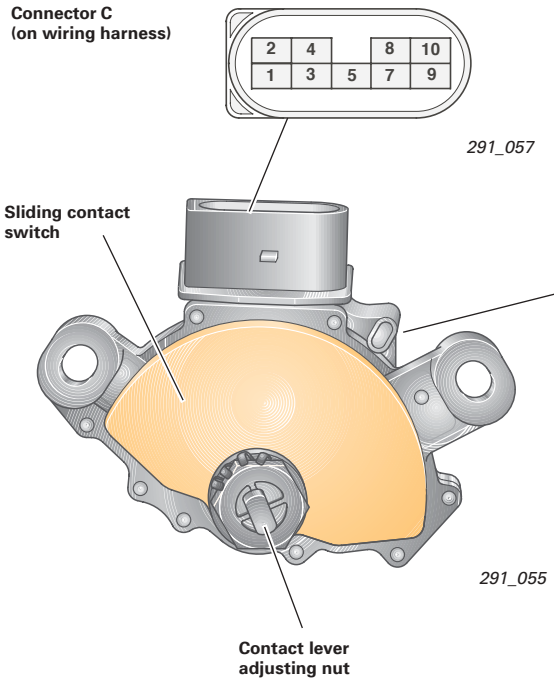

Note

The contact lever adjusting nut must not be slackened!

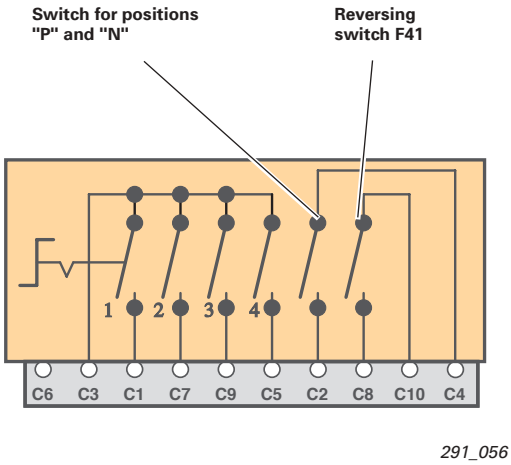

Reference

The multi-function switch must be set after installation or if the wrong gear is indicated on the dash panel insert (refer to Workshop Manual).

The multi-function switch is a mechanical multi-position switch with 6 sliding contacts:

- 4 selector valve position switches
- 1 reversing switch F41
- 1 switch for positions "P" and "N" for starting control

Shift logic F125

	P/N signal		R signal		Position signal					Data block 9/4. Value	
	C2	C4	C10	C8	C3	C1	C7	C9	C5	Switch position	Intermediate position
P	○	○			○	●			●	1001	
											1101
R			○	○	○	●	●			1100	
											1101
N	○	○			○		●		●	0101	
											0111
D					○		●	●		0110	
											0111
S					○	●	●	●	●	1111	

291_058

The task of the multi-function switch F125 is to transfer selector lever positions to the gearbox control unit J217.
The information on selector lever position is required to realise the following functions:

- Starter inhibitor control (see function diagram)
- Reversing lights control (see function diagram)
- P/N lock control (activation of solenoid N110)
- Sport program recognition
- Transfer of selector lever position (P/R/N/D/S) by CAN BUS network as information for other control units

Tiptronic switch F189, Audi A3 '04

The tiptronic switch F189 consists of 3 Hall sensors and is integrated in the selector lever sensors (see page 9). Switch F189 is operated by 2 permanent magnets.
The signals from F189 are evaluated by the selector lever sensors and sent through a separate interface to the gearbox control unit J217 in the form of a frequency-modulated square-wave signal.

The FM square-wave signal consists of a high pulse with a fixed time of approx. 3 ms and a low pulse time assigned to each selector lever position.

A distinction is made only between selector lever in automatic gate (P, R, N, D, S), selector lever in tiptronic gate, selector lever in Tip + and selector lever in Tip - (see DSO images).

The interface pin 48 to the selector lever sensors is monitored continuously by the self-diagnosis system.

The system can diagnose and differentiate between open circuit, short circuit to positive and short circuit to ground.

Note

Intermediate positions of the selector lever or faults can produce deviating signal patterns. Faults are saved to the fault memory.

DSO image - signal from F189.
Selector lever in P, R, N, D or S

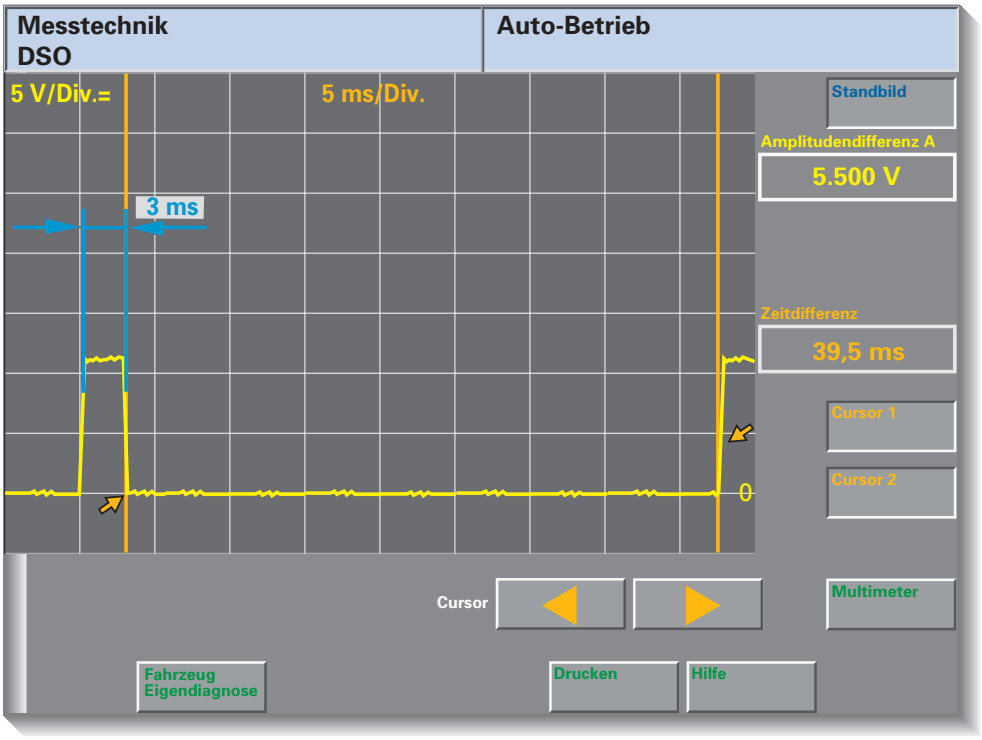

291_096

DSO connection:

- black probe tip pin 1(J217)
- red probe tip pin 48 (J217)

Test conditions: ignition "on"

Auxiliaries:

- VAS 5051
- V.A.G 1598/48 with
- V.A.G 1598/42

DSO images - signal from F189

Selector lever in
P, R, N, D or S

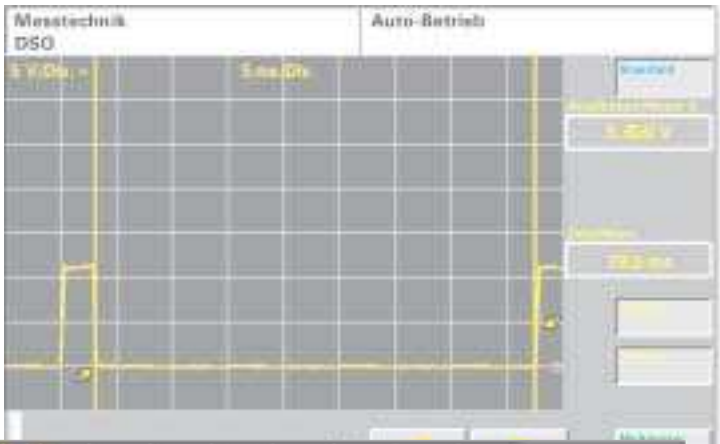

Selector lever in
tiptronic gate

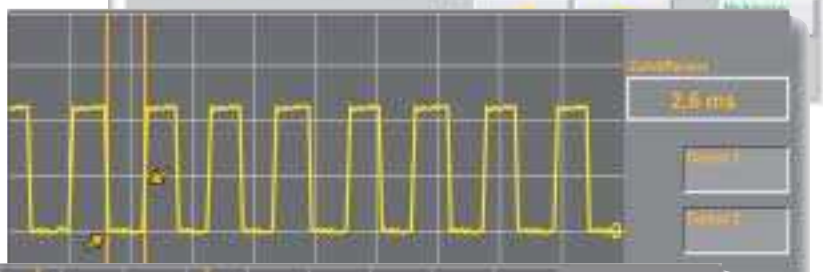

291_096

Selector lever in
Tip -

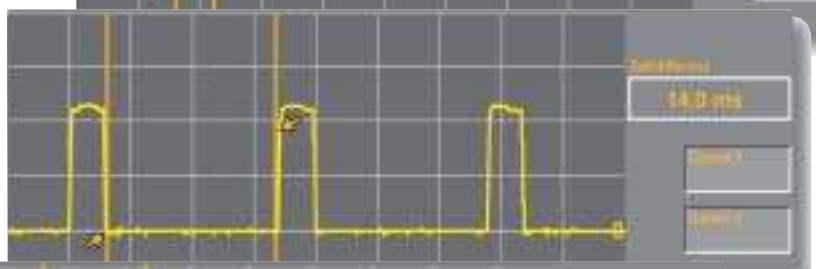

291_097

Selector lever in
Tip +

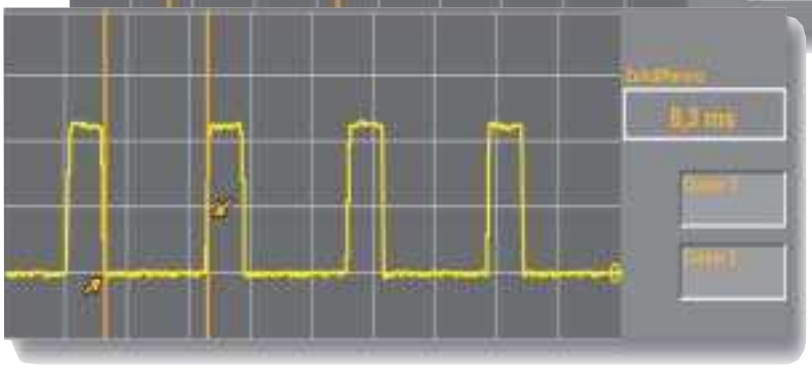

291_098

291_099

The selector lever sensors diagnose the tiptronic switch F189 continuously, even when the selector lever is not in the tiptronic gate or being operated.

This additional safety was made necessary by the elimination of selector lever positions 4, 3 and 2. With the D/S selector lever gate, the tiptronic function must be used to prevent upshifting (move the shift selector lever into the tiptronic gate).

For reasons of reliability, a malfunction of the F189 will be diagnosed even if the tiptronic has not previously been operated.

Tiptronic switch F189, Audi TT

The tiptronic switch F189 is integrated in the selector lever gate pcb. It consists of three Hall sensors which are operated by permanent magnets on the masking panel.

The F189 generates a square-wave signal with a fixed frequency at the outputs (pins 3, 4 and 5) of the shift gate. Depending on the "switch position" (tiptronic gate, Tip + and Tip -), the signal will be modified or the voltage level will be set to plus or minus.

Solenoid 2 is used for continuous diagnosis of the F189 in selector lever positions "D" and "S".

This additional safety was made necessary by the elimination of selector lever positions 5, 4, 3 and 2.

With the new selector lever gate, the tiptronic function must be used to prevent upshifting (shift selector lever into tiptronic gate), e.g. to utilise the engine brake effect when driving downhill).

For reasons of reliability, a malfunction of the F189 will be diagnosed even if the tiptronic has not previously been operated.

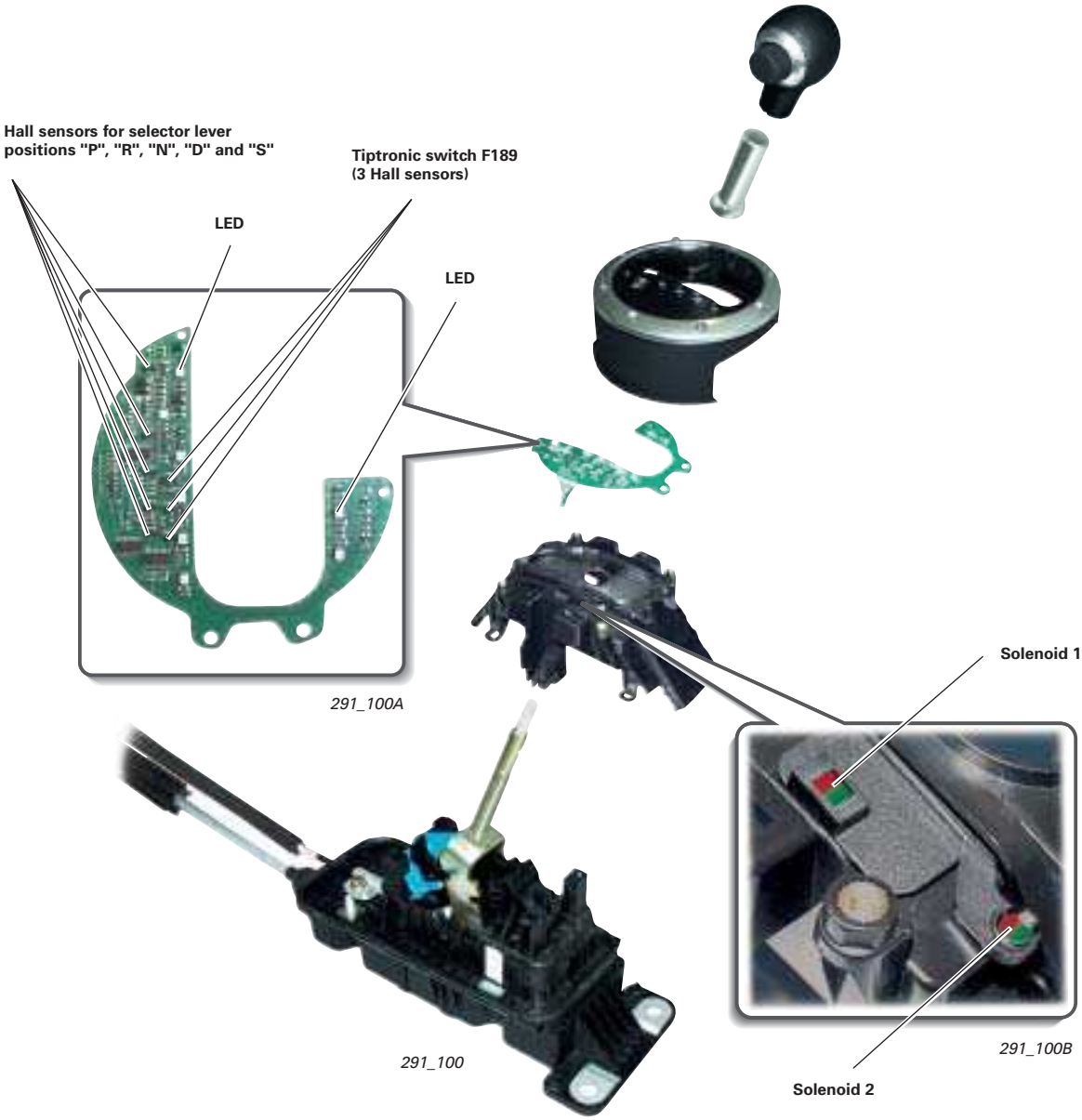

Function diagram

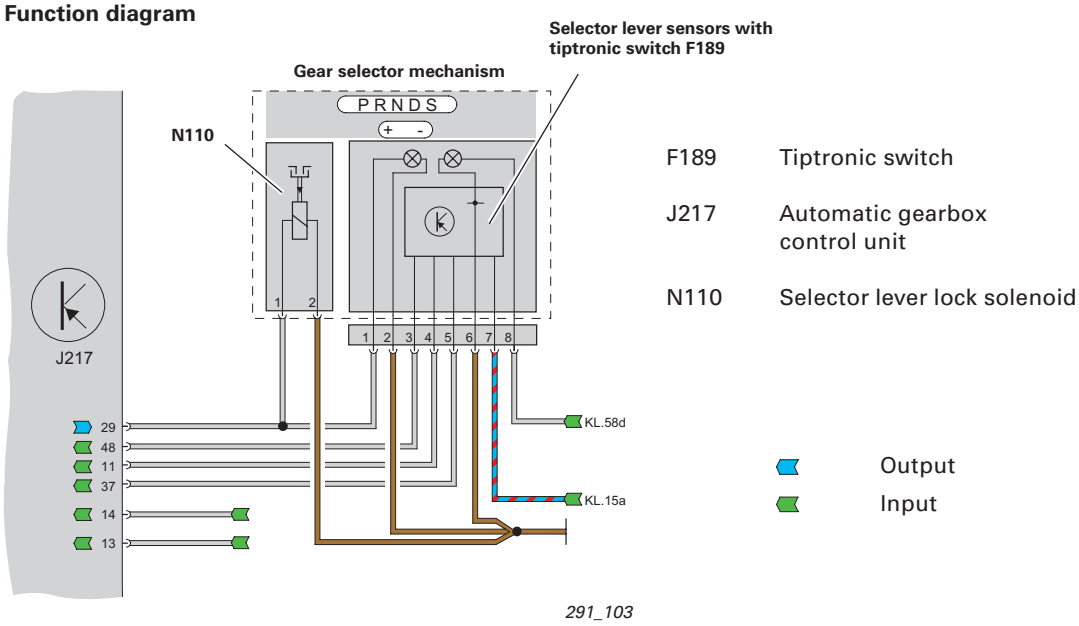

291_103

DSO image - signal from F189 (Audi TT)

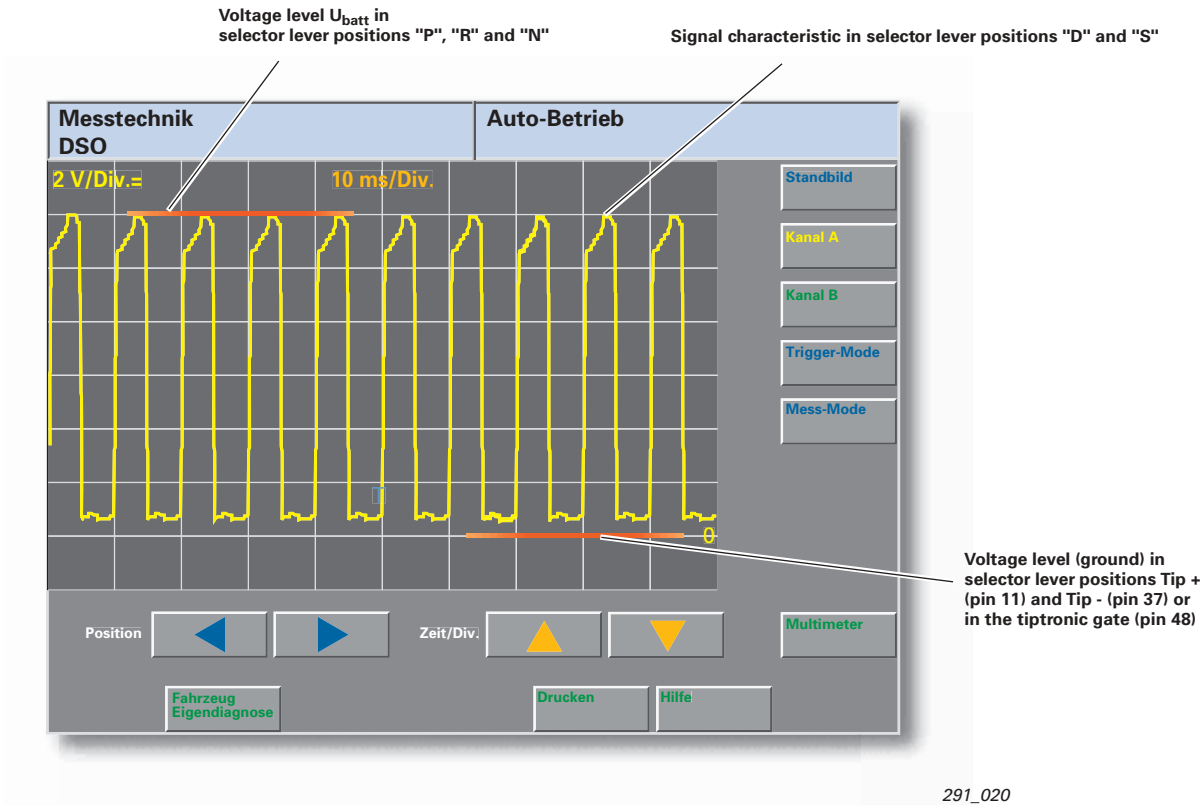

291_020

DSO connection:

- black probe tip pin 1 (J217)
- red probe tip pin 11, 37 or 48 (J217)

Test conditions: "ignition "on" (engine not running)

Auxiliaries:

- VAS 5051
- V.A.G 1598/48 with
- V.A.G 1598/42

Gearbox input speed sender G182

The G182 determines the gearbox input speed (turbine speed) at the external disc carrier of clutch K2.

The electronic gearbox control requires the exact turbine speed to realise the following functions:

- Control, adaption and monitoring of gear shift operations and gear selection
- Control and monitoring of the torque converter lock-up clutch
- Diagnosis of the shifting components and plausibilisation of engine speed and gearbox output speed

Note

Due to torque converter slip, the gearbox input speed (turbine speed) is not equivalent to the engine speed (except when the torque converter lock-up clutch is fully closed).

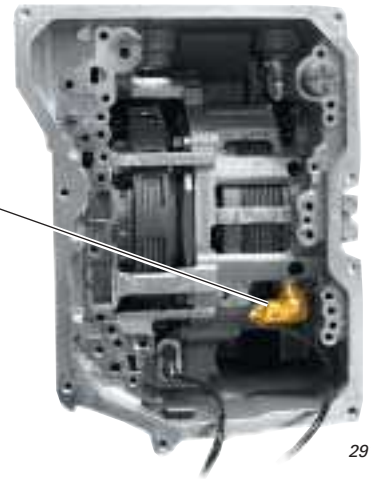

291_119

Bottom view of gearbox

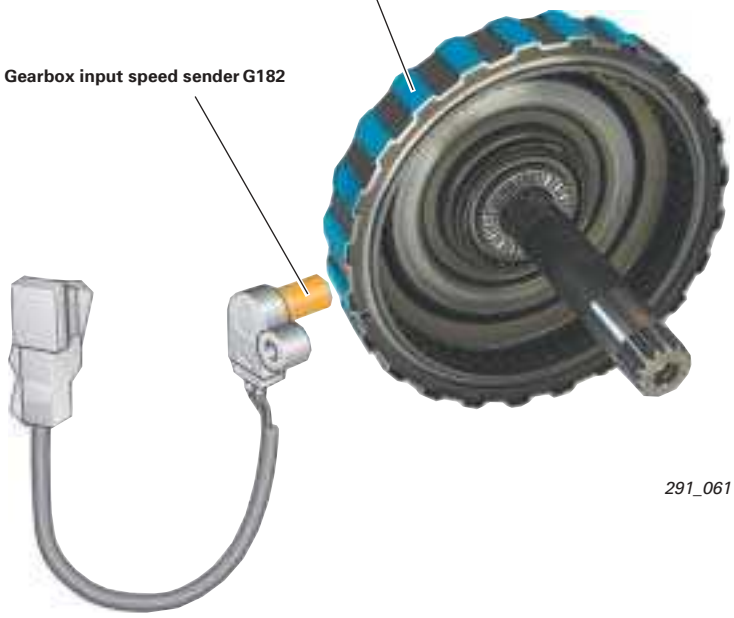

291_061

Protective and substitute function in case of failure:

- The engine speed is used as a substitute value
- No adaption of gear shift operations
- No controlled operation of the torque converter lock-up clutch (open or closed only)
- No pressure control when selecting gears (e.g. N-D or N-R), harsh engagement

Function - sender G182

Sender G182 is based on the Hall principle.
The output signal is a square-wave signal whose frequency is proportional to turbine speed.

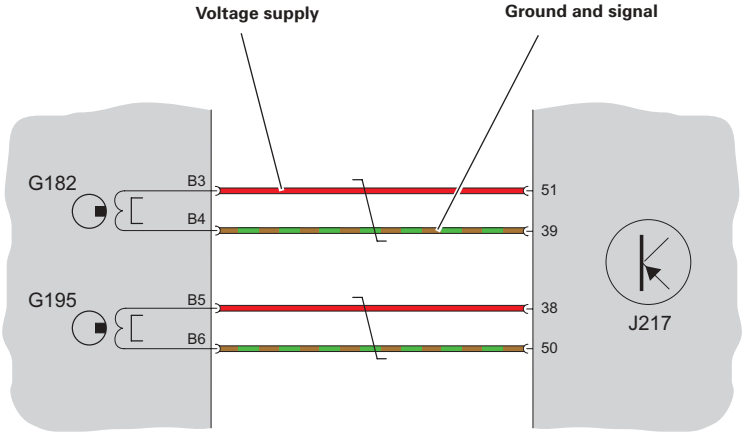

291_064

DSO image - signal from G182

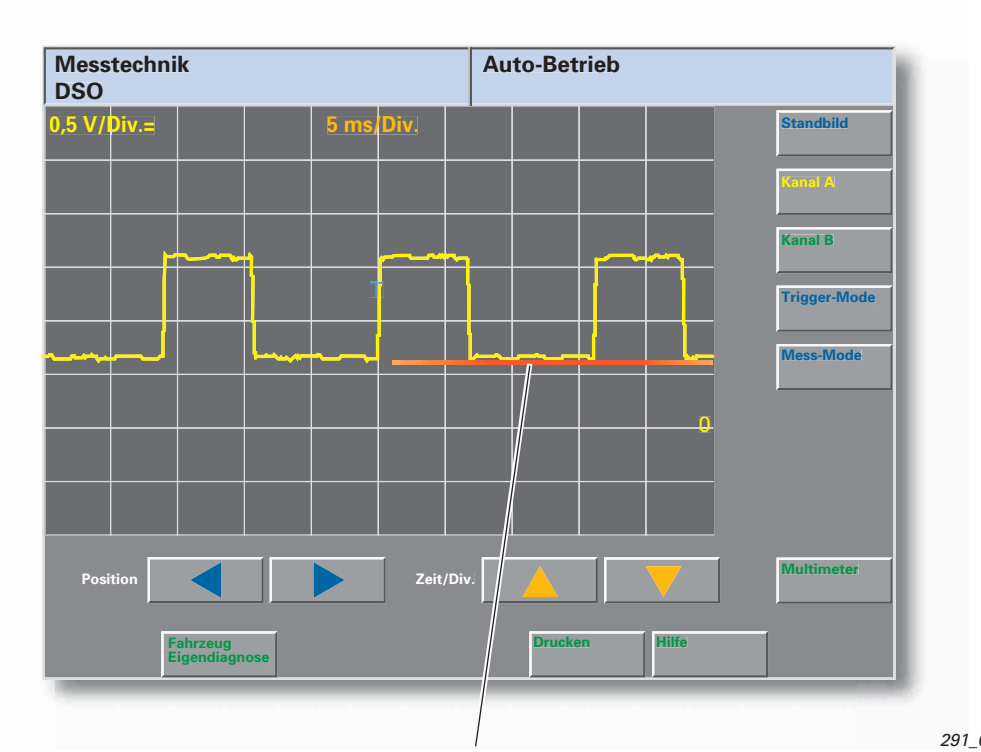

291_065

Voltage level when turbine shaft is stationary (gear selected/road speed 0 kph)

DSO connection for G182

- black probe tip pin 1
- red probe tip pin 39

Test conditions:

- Engine idling
- Selector lever in position N or P

Auxiliaries:

- VAS 5051
- V.A.G 1598/48 with
- V.A.G 1598/42

Gearbox output speed sender G195

The G195 determines the gearbox output speed (gearbox output speed) at the parking lock gear.

The parking lock gear is a component part of the driven intermediate shaft gearwheel. On account of the ratio between planetary gear output and intermediate shaft, both speeds are proportional to each other. The control unit computes the actual gearbox output speed based on the programmed reduction ratio.

One of the most important signals generated by the electronic gearbox control is the gearbox output speed. There is a defined relationship between gearbox output speed and vehicle road speed.

The gearbox output speed is required to realise the following functions:

- Shift point selection
- Functions of the Dynamic Shift Program DSP (e.g. driving condition evaluation)
- Diagnosis of shifting components and plausibilisation of engine and turbine speed (gear monitoring)

291_118

Bottom view of gearbox

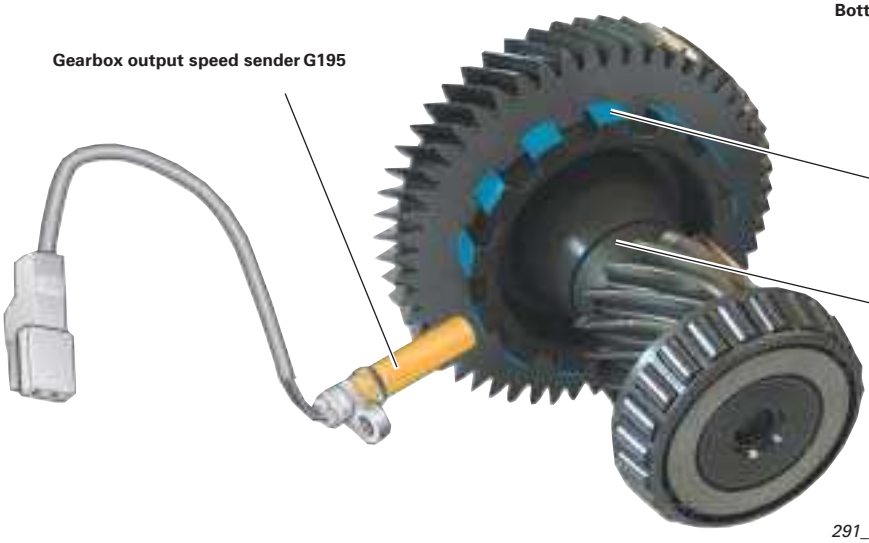

291_063

Protective and substitute function in case of failure:

- The wheel speeds from the ESP control unit are used as a substitute value (transmitted by CAN-BUS)
- Limited DSP capability

Note

Pay attention to correct assignment of parts and coding due to the dependence of road speed (v signal) on final drive ratio.

Function - sender G195

Sender G195 is based on the Hall principle.
The output signal is a square-wave signal whose frequency is proportional to gearbox output speed (road speed).

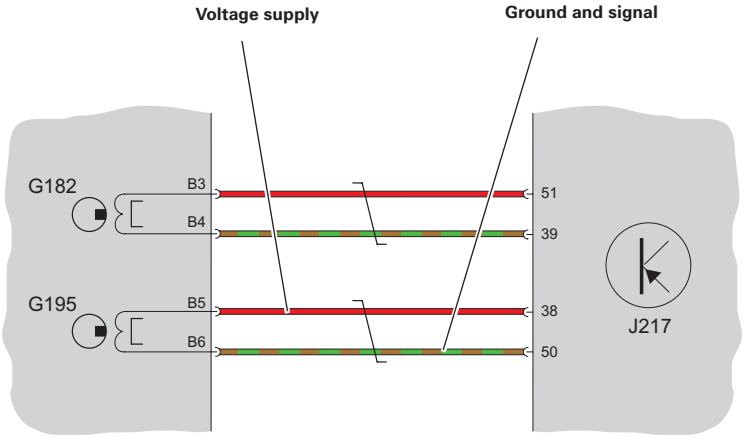

291_064

DSO image - signal from G195

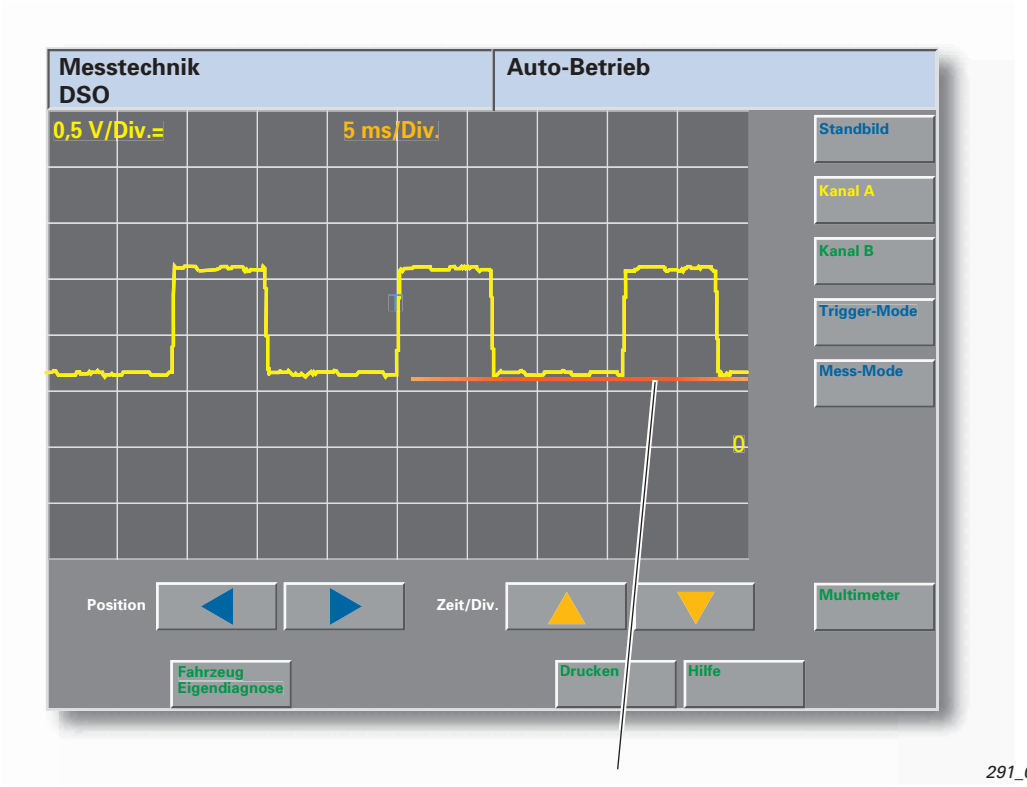

291_065

Voltage level at a road speed of 0 kph

DSO connection for G195

- black probe tip pin 1
- red probe tip pin 50

Test conditions:

- Road speed 10 kph
- Selector lever in position D, engine idling (vehicle raised on auto-hoist)

Auxiliaries:

- VAS 5051
- V.A.G 1598/48 with
- V.A.G 1598/42

Hydraulic pressure senders G193 and G194

Bottom view of valve body on gearbox

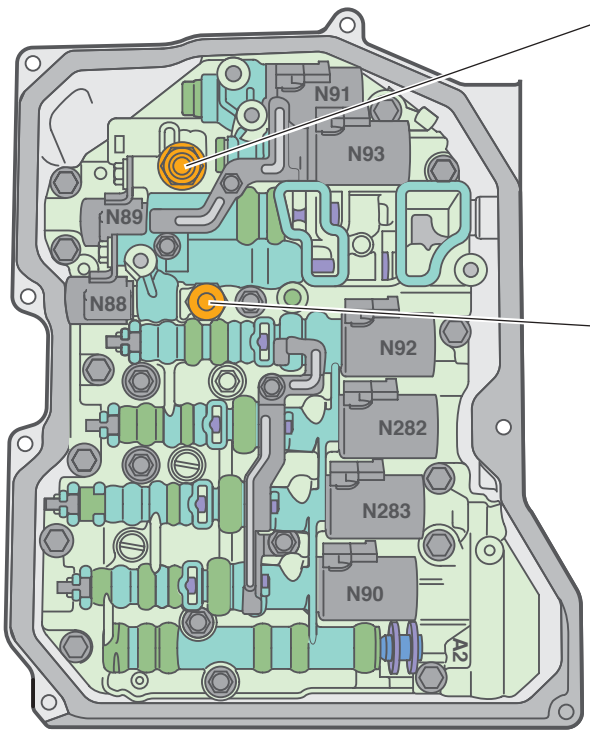

291_039A

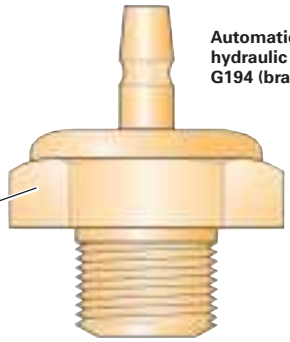

Automatic gearbox hydraulic pressure sender -2- G194 (brake B2)

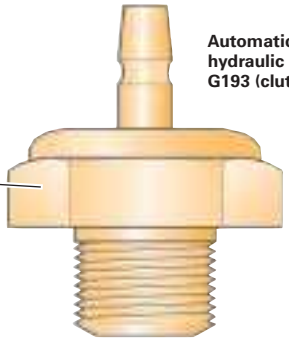

Automatic gearbox hydraulic pressure sender -1- G193 (clutch K1)

291_067

G193 and G194 are diaphragm pressure switches and connect to ground when pressure exceeds approx. 3 bar.
Both switches are identical.
The switching signals are used to monitor the electrohydraulic control.

They provide the control unit J217 with feedback on the circuit state or electrohydraulic activation of shifting components K1 and B2.
As a result, malfunctions of the electrohydraulic control can be diagnosed more accurately and the appropriate safety precautions taken.

Protective and substitute function in case of failure:

– If the malfunction occurs, then the emergency running mode is activated and/or engine torque is reduced depending on the situation.

Note

Hydraulic pressure senders G193 and G194 are not installed in gearboxes with build dates from week 27/2004 on.

The G193 responds to the hydraulic activation of clutch K1.
G194 responds to the electrohydraulic activation of brake B2. Therefore, G194 shifts to tiptronic mode only - first gear.

Since reverse gear is only engaged by the gear selector valve (mechanical and hydraulic), G194 is not closed in reverse (R) gear (see shift logic on page 32 and description of gear on page 40).

Switch "closed"
ATF pressure > approx. 3 bar

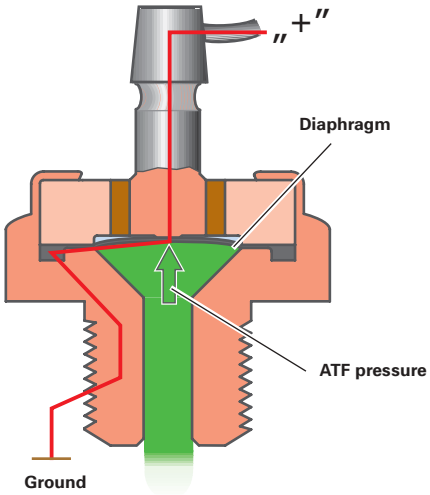

291_068

Switch "open"
ATF pressure < approx. 3 bar

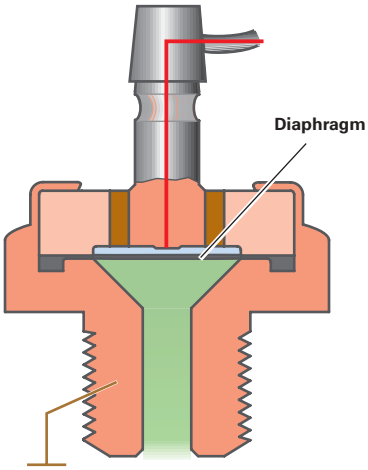

291_069

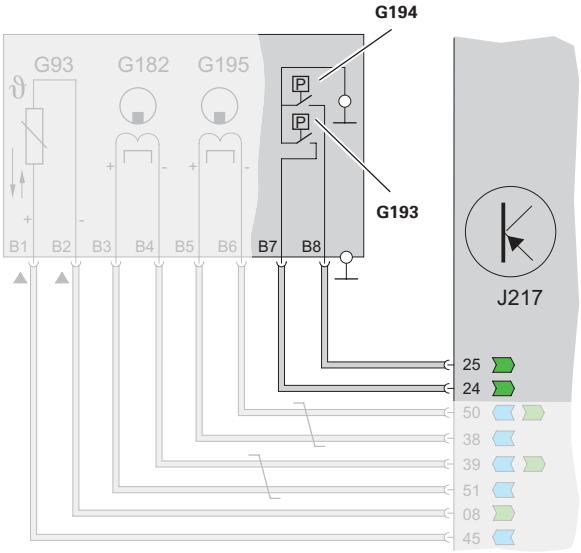

291_106

Legend

G193	Automatic gearbox hydraulic pressure sender -1-
G194	Automatic gearbox hydraulic pressure sender -2-
J217	Automatic gearbox control unit

Output

Input

Gearbox oil temperature sensor G93

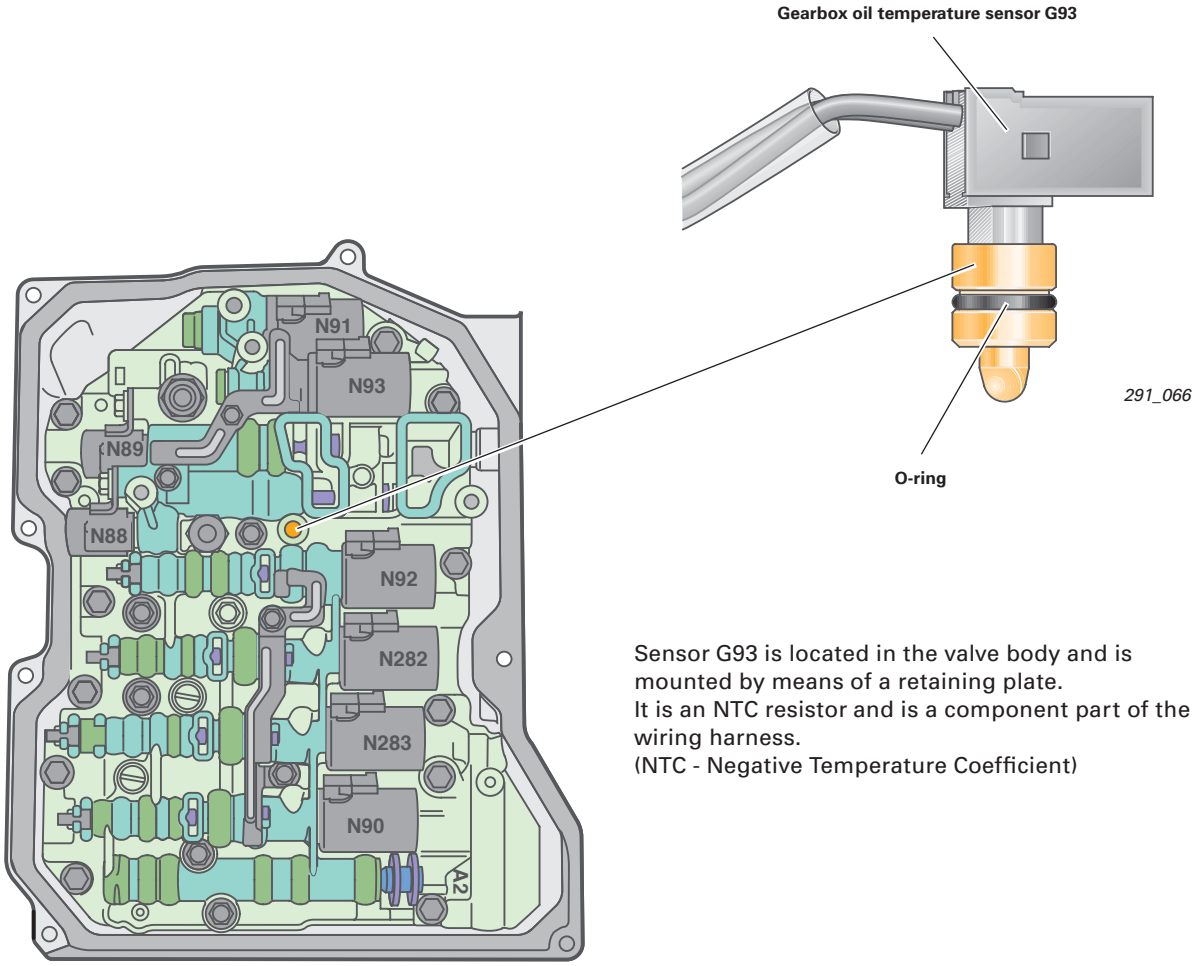

Sensor G93 is located in the valve body and is mounted by means of a retaining plate.
It is an NTC resistor and is a component part of the wiring harness.
(NTC - Negative Temperature Coefficient)

The ATF temperature is required to realise the following functions:

- Adaptation of shift pressures (system pressure) as well as pressure increase and pressure reduction during gearshifts.
- Activation and deactivation of temperature-dependent functions (warm-up program, torque converter lock-up clutch, etc.).
- Activation of gearbox protection measures if the ATF temperature is too high (Hotmode).
- Adaptation of shift pressures (EDL pilot current)

As protection against overheating, counter-measures (Hotmode) are initiated if defined temperature threshold values are exceeded:

Hotmode 1. Stage (approx. 127 °C):
The DSP function is used to bias the shift characteristics towards higher engine speeds.
The operating range in which the torque converter lock-up clutch is closed is extended.

Hotmode 2. Stage (approx. 150 °C): Engine torque is reduced.

Wiring harness with G93

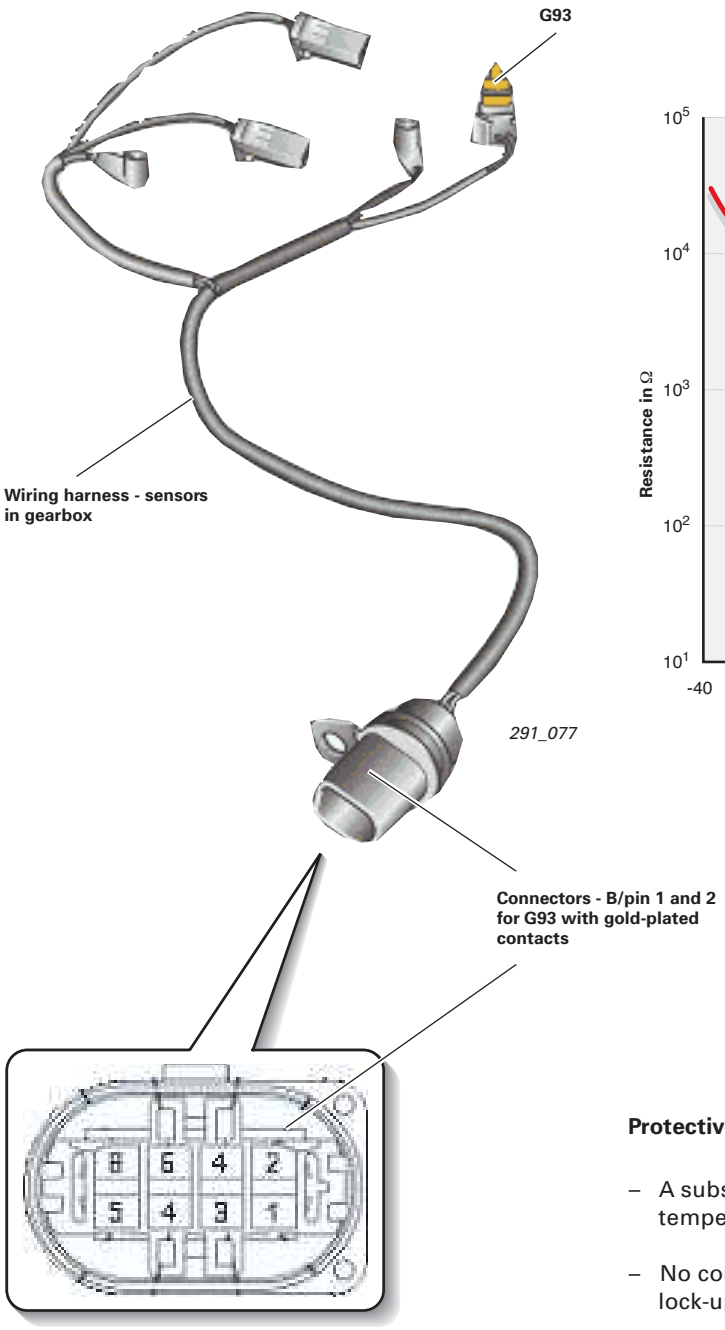

291_077

291_078

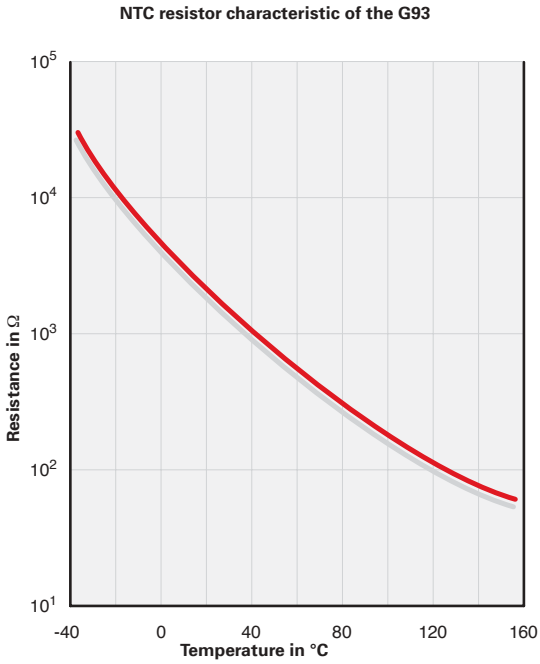

291_123

Protective and substitute function in case of failure:

- A substitute value is generated from the engine temperature and the operating time.
- No controlled operation of the torque converter lock-up clutch (open or closed only)
- No adaptation of shift pressures (which generally results in more harsh engagement)

Interfaces/auxiliary signals

Kick-down information

There is no separate switch for kick-down information. A "force element" is integrated in the accelerator position sender in place of the stop buffer (for manual gearboxes). The force element produces a "mechanical pressure point" which conveys an authentic "kickdown feel" to the driver. When the driver operates the kickdown, the full-load voltage of the accelerator position senders G79 and G185 is exceeded.

If a voltage defined in the engine control unit is attained in the process, this is interpreted as a kickdown and transferred to the automatic gear box (via driveline CAN bus).
The kick-down point can only be checked using the diagnostic tester.

Accelerator pedal of Audi A3 ´04

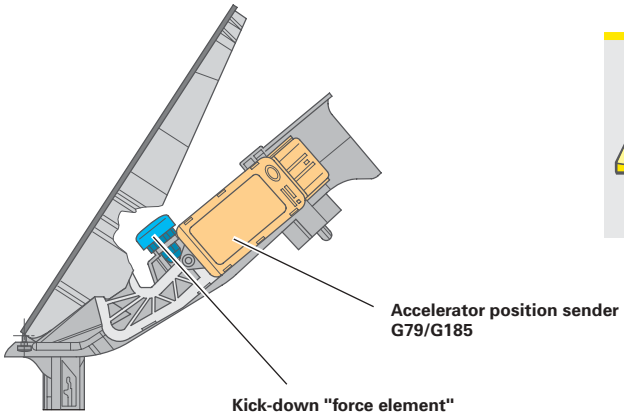

291_071

Reference

For a description of the function of the accelerator pedal module in the Audi A3 ‘04, refer to SSP 290 (from page 27).

Note

If the accelerator pedal module or the engine control unit in the Audi TT is replaced, the kick-down point must be readapted.

Accelerator pedal of the Audi TT

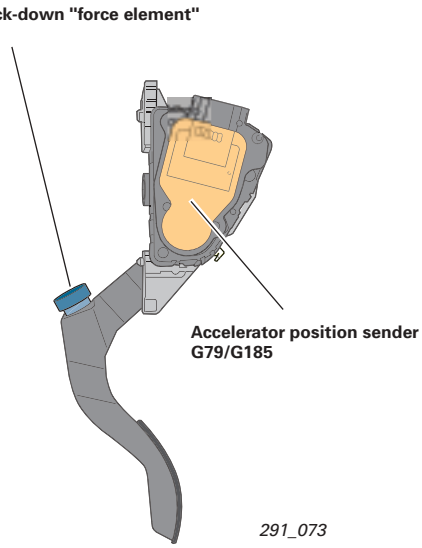

291_073

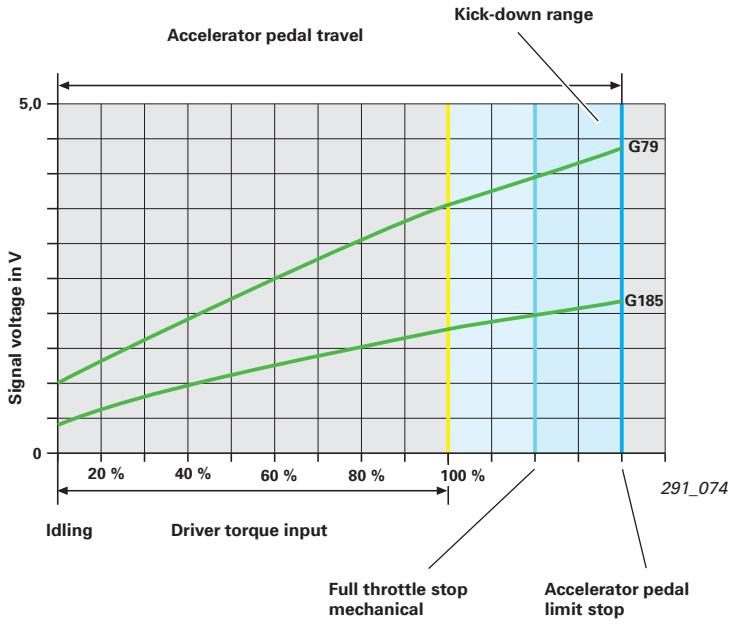

291_074

Road speed signal - Audi TT (v signal)

To allow use of the 09G gearbox in the Audi TT, the J217 generates a road speed signal for the dash panel insert.
The v signal is a square-wave signal which replaces a separate speedometer sender, as found on some vehicles with manual transmission.

The v signal is required only for the Audi TT, since, unlike the Audi A3 '04, the dash panel insert does not process road speed signals via CAN-Bus.

DSO image - v signal

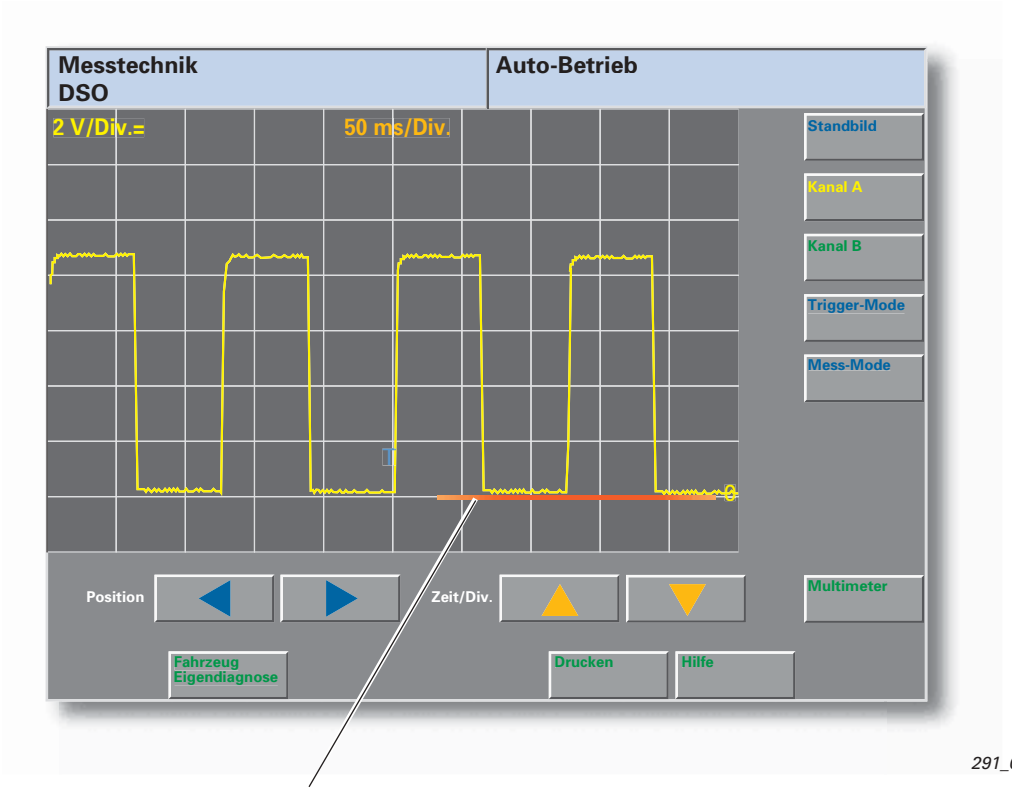

Voltage at v = 0 kph

DSO connection for v signal

- black probe tip pin 1
- red probe tip pin 52

Test conditions:

- Road speed approx. 10 kph

Auxiliaries:

- VAS 5051
- V.A.G 1598/48 with
- V.A.G 1598/42

Communication via CAN bus on Audi A3 '04

J217 - Automatic gearbox control unit

- System status
- Fault memory entry
- Torque converter loss
- Selector mechanism active
- Coding in engine control unit
- momentary gear or target gear
- Selector lever position
- Motion resistance index
- Information on emergency running mode and self-diagnosis
- OBD status
- Fault memory status
- Nominal idling speed
- Torque gradient limitation (torque converter/gearbox protection)
- Torque converter/gearbox protection status
- Selector lever position display
- Nominal engine torque (gearbox intervention)
- selected gear
- CAN sleep indication
- Torque converter lock-up clutch status
- Self-diagnosis/measured data

J285 - Control unit with display in dash panel insert

- Tyre circumference

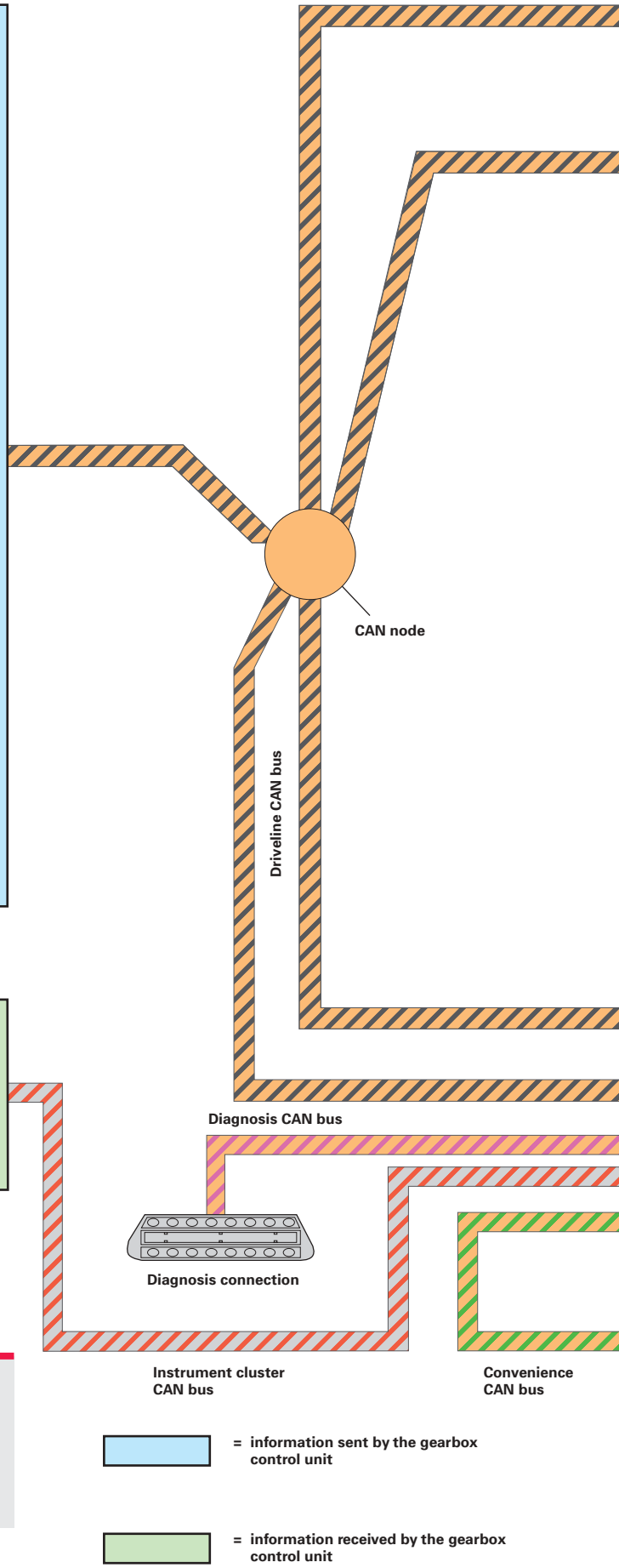

Note

Communication via CAN bus on Audi A3 '04 (gearbox-specific)

J220 - Motronic control unit

- Accelerator pedal angle
- Kick-down
- Engine torque data (nominal/actual)
- Engine speed
- Driver torque input
- Coolant temperature
- Brake light/brake pedal switch
- Air conditioning system activation
- CCS status
- Altitude info
- System status
- Coding
- Gearbox control unit coding
- A/C activation

J104 - ESP control unit

- Lateral acceleration
- ESP intervention
- TCS shift control
- Wheel speeds (front left, front right, rear left, rear right)
- System status

J527 - Steering column electronics control unit

Control unit J527 serves as a LIN master for control unit J453.

G85 - Steering angle sender

- Steer angle
- Steer angle speed
- System status

LIN data bus

CAN node

J533 - Data bus diagnostic interface (gateway)

- Mileage (km)
- Time, date
- CAN sleep acknowlege

J453 - Multi-function steering wheel control unit

- Tiptronic status
- Tiptronic shift request +
- Tiptronic shift request -

J519 - Onboard power supply control unit

Status and recognition of terminal 15.
Term. 15 NL, term. P, term. S, term. X

291_094

Communication via CAN bus on Audi TT

J217 - Automatic gearbox control unit

- System status
- Fault memory entry
- Torque converter loss
- Selector mechanism active
- Coding in engine control unit
- Momentary gear or target gear
- Selector lever position
- Aerodynamic drag index
- Information on emergency running mode and self-diagnosis
- OBD status
- Fault memory status
- Nominal idling speed
- Torque gradient limitation (torque converter/gearbox protection)
- Torque converter/gearbox protection status
- Selector lever position display
- Nominal engine torque (gearbox intervention)
- selected gear
- CAN sleep indication
- Torque converter lock-up clutch status
- Self-diagnosis/measured data

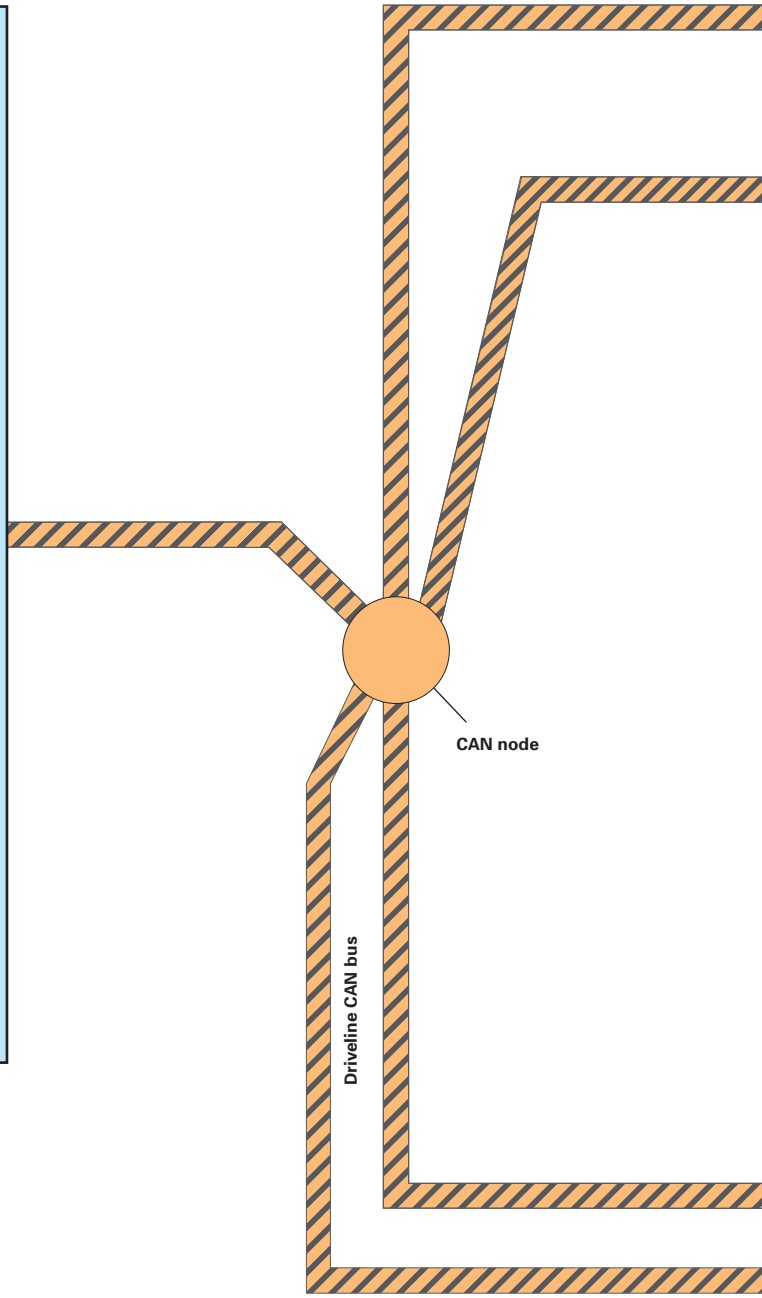

Note

Communication via CAN bus on Audi TT (gearbox-specific)

J220 – Motronic control unit

- Accelerator pedal angle
- Kick-down
- Engine torque data (nominal/actual)
- Engine speed
- Driver torque input
- Coolant temperature
- Brake light/brake pedal switch
- Air conditioning system activation
- CCS status
- Altitude info
- System status
- Coding
- Gearbox control unit coding
- A/C activation

J104 – ESP control unit

- Lateral acceleration
- ESP intervention
- TCS shift control
- Wheel speeds (front left, front right, rear left, rear right)
- System status

G85 – Steering angle sender

- Steer angle
- Steer angle speed
- System status

291_095

J285 – Control unit with display in dash panel insert

- Tyre circumference

= information sent by the gearbox control unit

= information received by the gearbox control unit

Distributed functions in the Audi A3 '04

Starter inhibitor, reversing light

The functions, starter inhibitor (control of terminal 50) and reversing lights in the Audi A3 '04 are controlled by the onboard power supply control unit J519.

The P/N signal (ground) for control of terminal 50 is transferred from multi-function switch F125 to J519 (discrete wired).
Control unit J519 controls the terminal 50 voltage supply relay J682.
See function diagram on page 42.

The information "reverse gear selected" is initially sent from F125 to the gearbox control unit J217. Control unit J217 relays this information to the driveline CAN bus. The information is then sent via the convenience CAN bus through the data bus diagnostic interface J533 (gateway) to J519, which activates the reversing lights (see current flow diagram).

Reference

For further information about the J519, refer to SSP 312 (from page 12).

Dynamic Shift Program DSP

As a modern automatic gearbox, the 09G also features the latest generation of Dynamic Shift Program (DSP).

DSP evaluates vehicle operating parameters such as motion resistance (e.g. uphill gradient), route (e.g. corner) and driver type (driving style).

The main parameters used to compute the gear to be selected have not changed fundamentally compared to previous automatic gearboxes.
Due to the increasing degree of networking between the gearbox control system and other in-vehicle systems, such as engine, ESP or steering angle sensor, there is a larger amount of information available on momentary vehicle operating status and driving style.

Reference

For a detailed description of the function of the DSP, refer to SSP 284 (from page 36).

Tiptronic shift strategy

- Automatic upshift when engine speed reaches maximum threshold
- Automatic downshift when engine speed falls below minimum threshold
- Kick-down
- Driving away in second gear by selecting second gear before starting off[1)]
- Upshift prevention and downshift prevention[2)]

1) Driving away is normally performed in first gear. **It is possible to drive away in second gear** by shifting up into second gear before starting off (select using tiptronic steering wheel or selector lever).
This makes it easier to drive away on road surfaces with a low frictional coefficient, e.g. on icy or snow-covered roads.

2) In addition to allowing gearshifts to be performed manually, the tiptronic function is required to utilise the engine brake effect.
Due to the elimination of positions 4, 3 and 2 (new selector lever gate with positions "D" and "S"), the tiptronic function must be used to prevent upshifting (move the selector lever into the tiptronic gate).

Sport program "S"

In the "S" position of the selector lever, a sporty shift program is available.

When the electronic control unit receives the information "selector lever in "S" position", the shift characteristic is biased towards higher engine speeds. This enhances the vehicle's driving dynamics.

In the "S"selector lever position, the DSP adapts to the driver 's chosen style and the driving situation.

The "S" programme has the following special features:

- If the selector lever is moved to the "S" position while maintaining a constant accelerator position, a downshift is performed within defined bounds.
- To achieve a more direct throttle response to movements of the accelerator pedal, the vehicle is, where possible, operated with the torque converter lock-up clutch closed.
- If the sixth gear is configured as an overdrive gear, only gears 1 to 5 are selected.

Emergency running mode

In the event of faults/malfunctions which activate the mechanical emergency running mode, third gear is always engaged if the vehicle is being driven in any gear up to third.

If the gearbox is already in fourth, fifth or sixth gear, the currently selected gear is held until the selector lever is moved into a neutral position or the engine is shut off.

When the vehicle is restarted in selector lever position "D" or "S", third gear will always be engaged.

Reverse gear can be engaged (reverse (R) gear lock is inactive).

Maximum shift pressure is applied to the shifting components, resulting in harsh gear changes.

The torque converter lock-up clutch remains open.

291_093

Reference

For further information, refer to SSP 284 (as of page 34).

Towing

While the vehicle is being towed, the oil pump does not run, with the result that there is no supply of lubricant to rotating components.

To avoid serious damage to the gearbox, the following conditions must be observed:

- The selector lever must be in position "N".
- A max. towing speed of 50 kph must not be exceeded.
- The vehicle must not be towed for a distance exceeding 50 km.

It is not possible to jump-start the engine by towing (e.g. if battery charge level is too low).

If the battery is disconnected or flat, the selector lever emergency release must be operated in order to move the selector lever from "P" to "N" (see page 10).

Special tools

Setting - multi-function switch F125

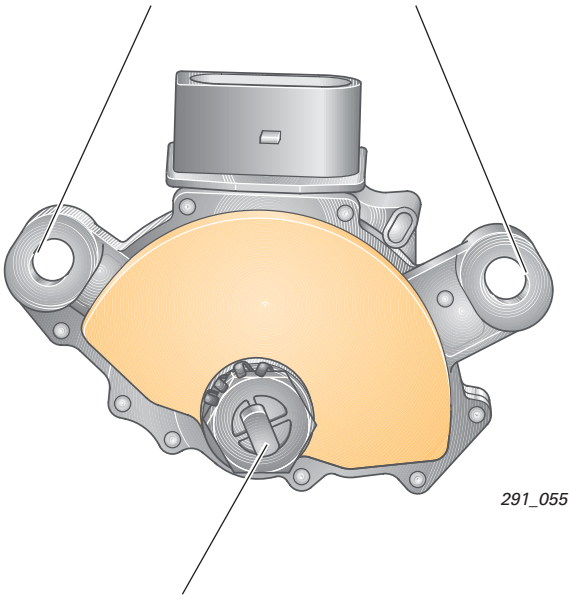

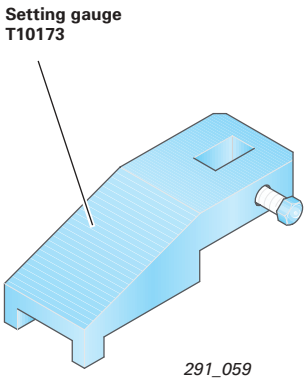

Removal - drive shafts

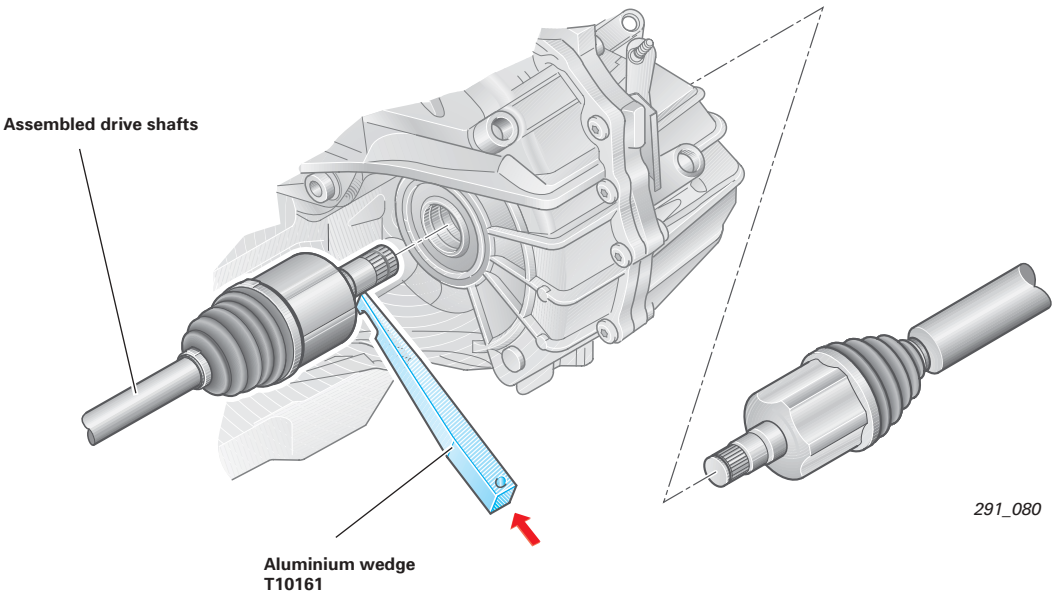

Glossary

i constant

The letter "i" is the formula symbol for gear ratio.
i constant is the constant gear ratio which applies to all gears.
In this case, the idler and the final drive are affected.
i constant simplifies the calculation of i overall (overall gear ratio).

Spread

In the context of gearboxes, the "spread" is the "ratio range" of a gearbox.
The spread value is the difference between the ratios of the lowest and highest gears (first and sixth). The spread is calculated by dividing the first gear ratio by the ratio of the highest gear (in this case: 6th gear).

Example using 09G gearbox:

i First gear 4.148
i Sixth gear 0.686 4.148 : 0.686 = 6.05 (value rounded up)

The advantages of a wide spread are:
in addition to a high starting torque ratio (for high pulling power), a low end torque multiplication ratio is achieved. This results in a reduced engine speed, which in turn lowers noise emission and improves fuel economy.

A wide spread requires a certain number of gears in order to avoid overly large speed differentials during gearshifts (ratio steps).
When changing gears, the engine speed must not be allowed to enter low torque rpm ranges which will inhibit or prevent acceleration.

The best solutions are multiple gears or, better still, a continuously variable overall gear, as used on the multitronic.

Gearbox adaption

A gearbox type is adapted to different engine variants depending on torque and engine type by:

- the number of disc pairs for clutches and brakes
- adapting the ATF pressure to the clutches and brakes
- the configuration of the gear pairs, planetary gear sets (e.g. four planetary gears vs. three), shafts and mountings
- gearcase reinforcements
- the overall gears of the final drive and idlers
- torque converter size
- the torque converter characteristic curve (torque conversion factor or torque converter multiplication).

The overall gears of the individual gears generally remain constant.

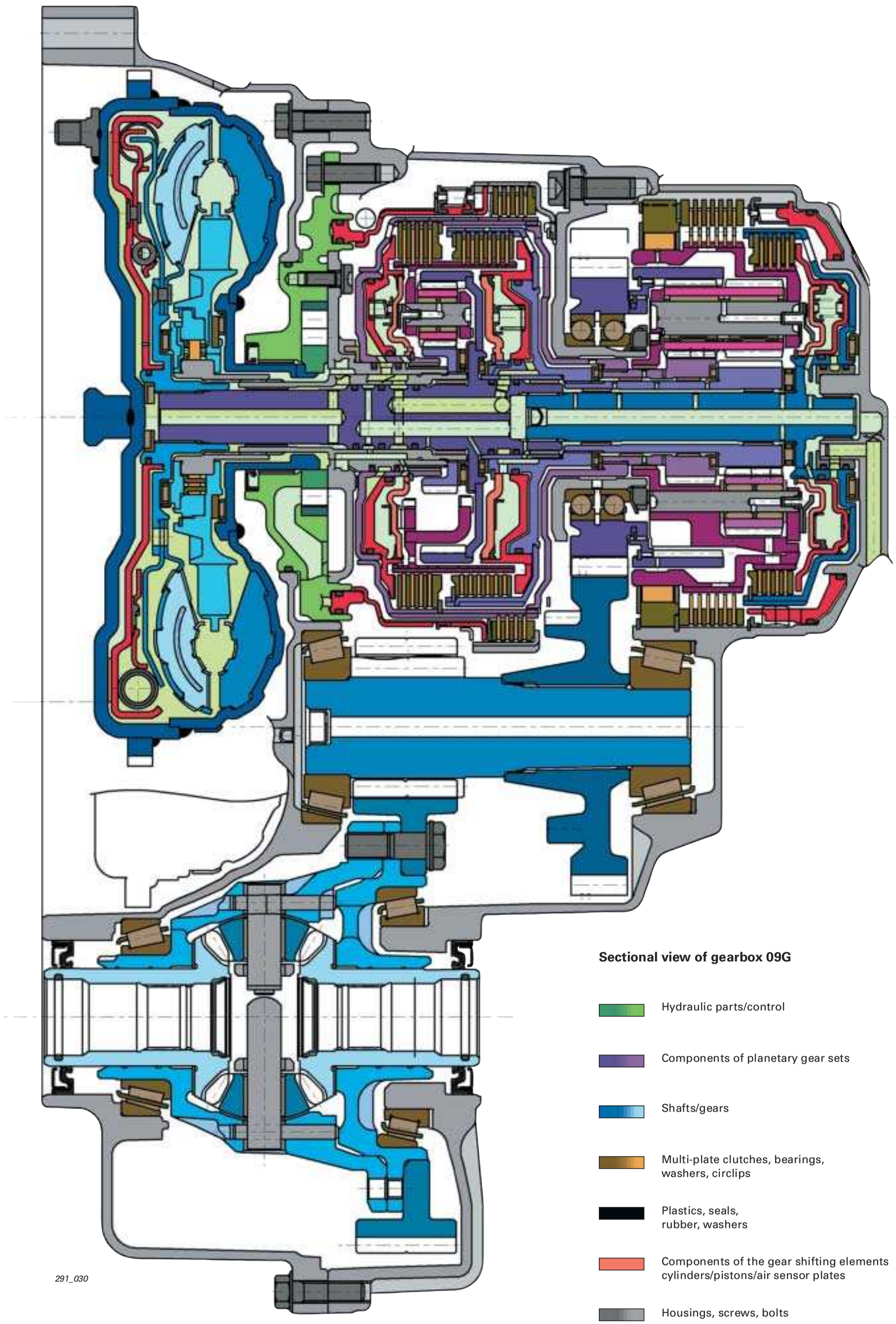

Sectional view of gearbox 09G

- Hydraulic parts/control
- Components of planetary gear sets
- Shafts/gears
- Multi-plate clutches, bearings, washers, circlips
- Plastics, seals, rubber, washers
- Components of the gear shifting elements cylinders/pistons/air sensor plates
- Housings, screws, bolts

Vorsprung durch Technik **www.audi.co.uk**

291

All rights reserved.
Technical specifications subject to change without notice.

Copyright
AUDI AG
I/VK-35
Service.training@audi.de
Fax +49-841/89-36367

AUDI AG
D-85045 Ingolstadt
Technical status: 03/04

Printed in Germany
A03.5S00.02.20