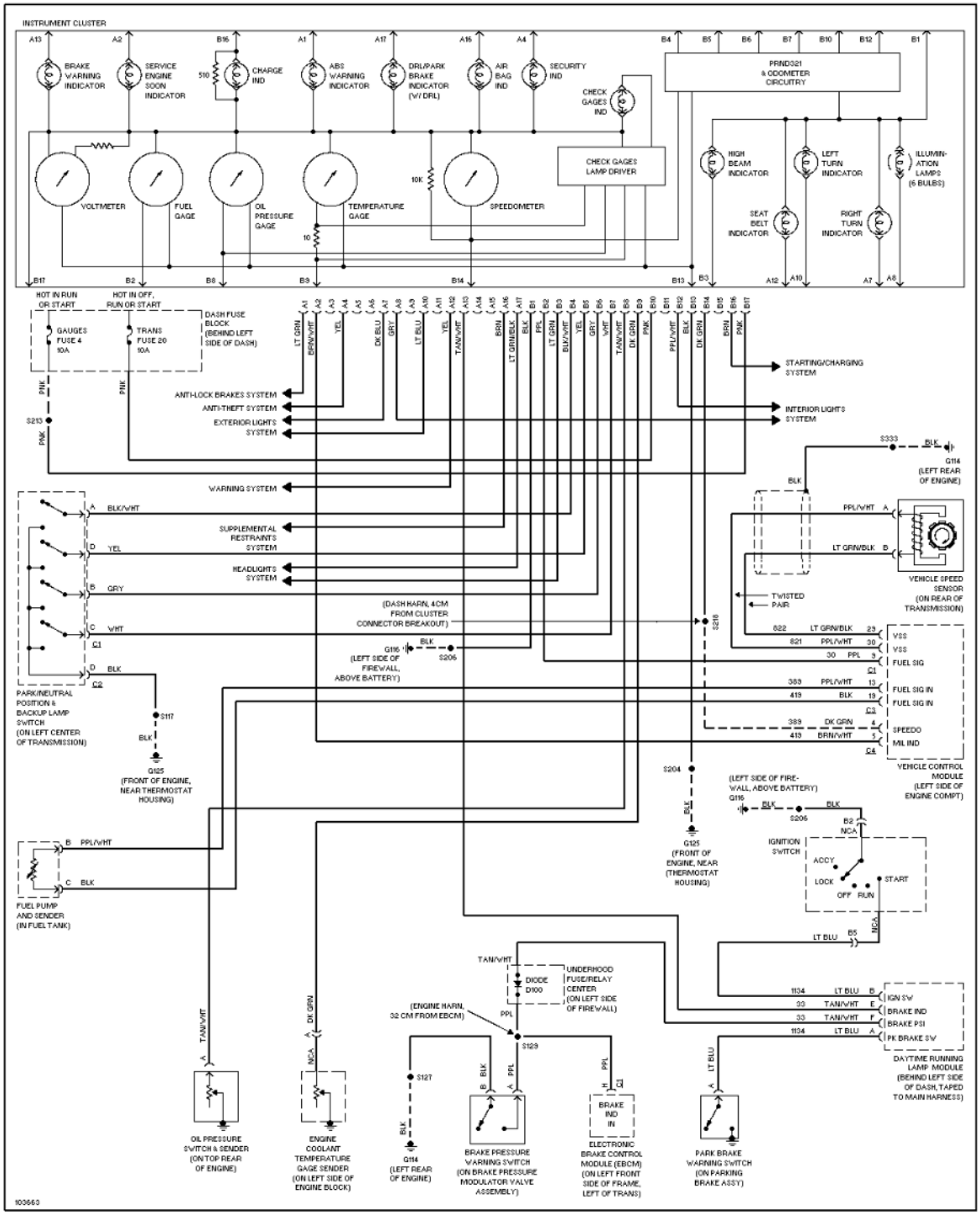

Fig. 21: Instrument Cluster Circuit

cardiagn.com