SPECIFICATIONS

FASTENER TIGHTENING SPECIFICATIONS

Fastener Tightening Specifications

Application	Specification	
	Metric	English
Brake Booster Mounting Nuts	27 N.m	20 lb ft
Brake Caliper Inlet Fitting Bolt	45 N.m	33 lb ft
Brake Pedal Pivot Nut	29 N.m	21 lb ft
Brake Pipe to Flexible Brake Hose Tube Nut	18 N.m	13 lb ft
Brake Pipe to Master Cylinder Tube Nut	24 N.m	18 lb ft
Master Cylinder Mounting Nuts	29 N.m	21 lb ft
Telescoping Column Motor Mounting Bracket Screw	7 N.m	62 lb in
Washer Solvent Container Retaining Nuts	7.5 N.m	66 lb in

BRAKE COMPONENT SPECIFICATIONS

Brake Component Specifications

Application	Specification	
	Metric	English
Brake Caliper Bleeder Valve (Front)	12 N.m	106 lb in
Brake Caliper Bleeder Valve (Rear)	12 N.m	106 lb in

BRAKE SYSTEM SPECIFICATIONS

Brake System Specifications

Application	Specification	
	Metric	English
Brake Pedal Travel • Maximum specification with 310 N (70 lbs) of force applied to the brake pedal with the ignition OFF and the booster power reserve depleated	74 mm	2.91 in

SCHEMATIC AND ROUTING DIAGRAMS

BRAKE WARNING SYSTEM SCHEMATICS

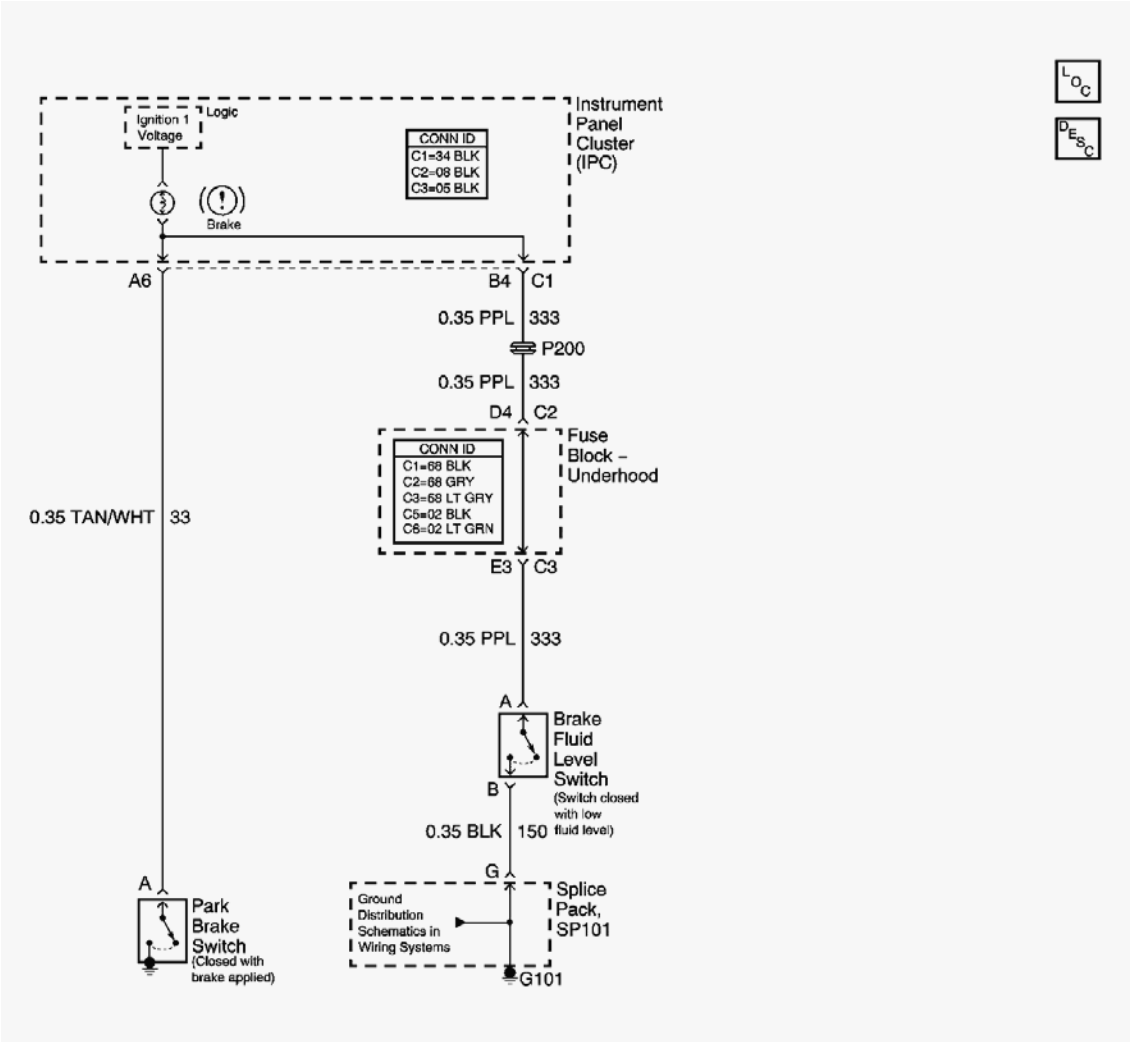

Fig. 1: Brake Warning System Schematics
Courtesy of GENERAL MOTORS CORP.

COMPONENT LOCATOR

HYDRAULIC BRAKES COMPONENT VIEWS

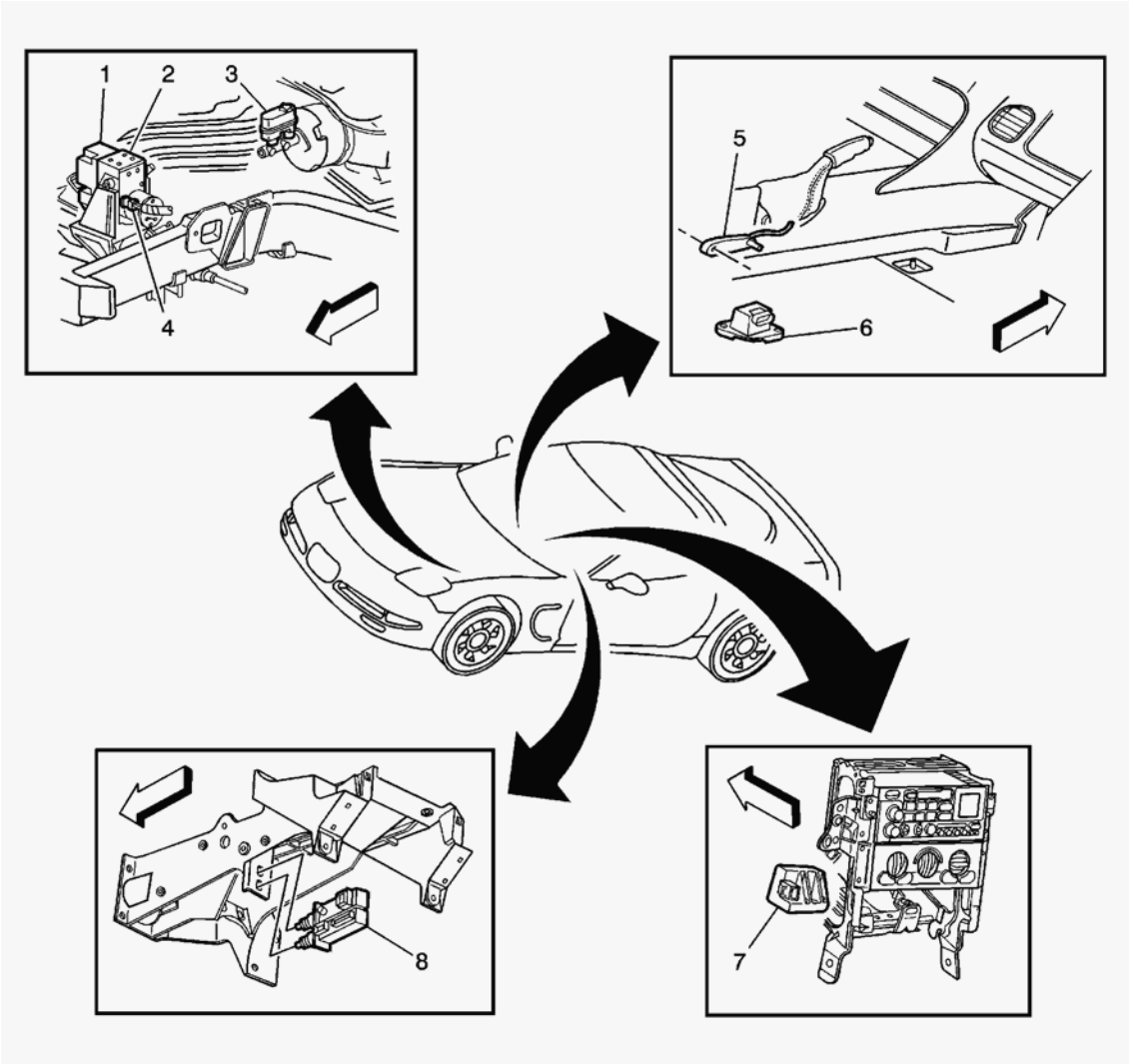

Fig. 2: ABS Components View - Switches, Sensors And Modules
Courtesy of GENERAL MOTORS CORP.

Callouts For Fig. 2

Callout	Component Name
1	Electronic Brake Control Module (EBCM)
2	Brake Pressure Modular Valve (BPMV)
3	Brake Fluid Level Switch
4	Brake Fluid Pressure Sensor
5	Park Brake Switch
6	Lateral Accelerometer Sensor
7	Yaw Rate Sensor
8	Stoplamp Switch

HYDRAULIC BRAKES CONNECTOR END VIEWS

Brake Fluid Level Switch Terminal Identification

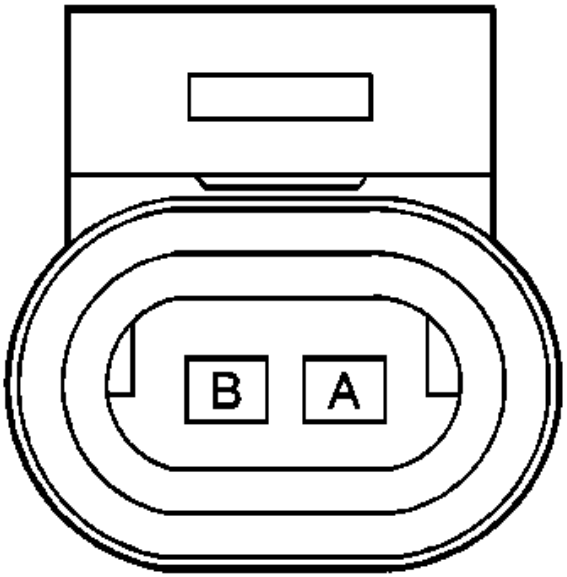

Connector Part Information		• 12162192 • 2 Way F Metri-Pack 150.2 Series (BLK)	
Pin	**Wire Color**	**Circuit No.**	**Function**
A	PPL	333	Brake Fluid Level Sensor Signal
B	BLK	150	Ground

Park Brake Switch Terminal Identification

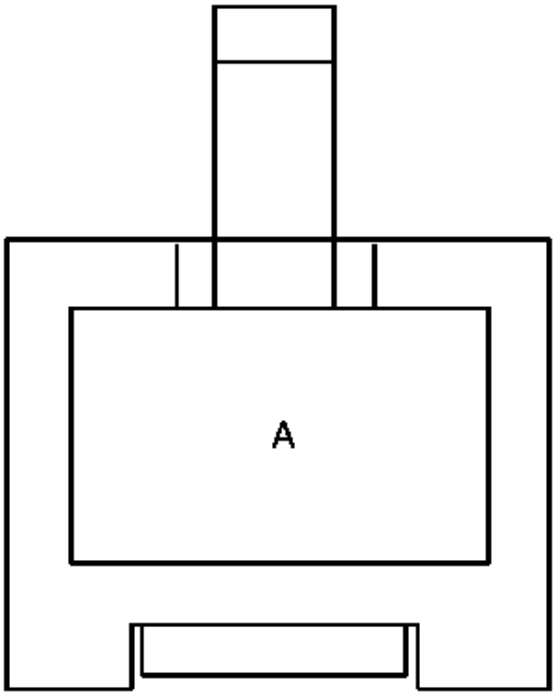

Connector Part Information		• 08911256 • 1 Way F 56 Series (NAT)	
Pin	**Wire Color**	**Circuit No.**	**Function**
A	TAN/WHT	33	Brake Warning Indicator Control

DIAGNOSTIC INFORMATION AND PROCEDURES

DIAGNOSTIC STARTING POINT - HYDRAULIC BRAKES

Begin the hydraulic brake system diagnosis with the **Diagnostic System Check - Hydraulic Brakes** . The Diagnostic System Check will provide the following information:

- The identification of the control module(s) which command the system.
- The ability of the control module(s) to communicate through the serial data circuit.
- The identification of any stored diagnostic trouble codes (DTCs) and their status.

The use of the Diagnostic System Check will identify the correct procedure for diagnosing the system and where the procedure is located.

DIAGNOSTIC SYSTEM CHECK - HYDRAULIC BRAKES

Test Description

The numbers below refer to the step numbers on the diagnostic table.

2: Lack of communication may be due to a partial malfunction of the serial data circuit or due to a total malfunction of the serial data circuit. The specified procedure will determine the particular condition.

4: The presence of DTCs which begin with "U" indicate some other module is not communicating. The specified procedure with compile the available information before tests are performed.

Diagnostic System Check - Hydraulic Brakes

Step	Action	Yes	No
1	Install a scan tool. Does the scan tool power up?	Go to **Step 2**	Go to **Scan Tool Does Not Power Up** in Data Link Communication
2	1. Turn ON the ignition, with the engine OFF. 2. Attempt to establish communication with the following control modules: • Electronic brake control module (EBCM) • Instrument panel cluster (IPC) Does the scan tool communicate with all control modules?	Go to **Step 3**	Go to **Scan Tool Does Not Communicate with Class 2 Device** in Data Link Communication
3	Select the display DTCs function on the scan tool for the following control modules: • Electronic brake control module (EBCM) • Instrument panel cluster (IPC) Does the scan tool display any DTCs?	Go to **Step 4**	Go to **Symptoms - Hydraulic Brakes**
4	Does the scan tool display any DTCs which begin with a "U"?	Go to **Scan Tool Does Not Communicate with Class 2 Device** in Data Link Communication	Go to **Diagnostic Trouble Code (DTC) List**

SCAN TOOL DATA LIST

Instrument Panel Cluster (IPC)

Scan Tool Parameter	Data List	Units Displayed	Typical Data Value
Ignition ON, engine OFF, brake fluid level normal, and park brake released.			
Brake Fluid Level	Inputs	OK/Low	OK
Park Brake Switch	Inputs	On/Off	Off

SCAN TOOL DATA DEFINITIONS

Brake Fluid Level

The scan tool displays OK or Low. The status of the brake fluid level sensor signal.

Park Brake Switch

The scan displays Off or On. The status of the park brake switch signal.

DIAGNOSTIC TROUBLE CODE (DTC) LIST

Diagnostic Trouble Code (DTC) List

DTC	Diagnostic Procedure	Module(s)
C1247	**DTC C1247**	EBCM
C1248	**DTC C1248** in Antilock Brake System	EBCM

DTC C1247

Circuit Description

The brake fluid level switch monitors the level of brake fluid in the master cylinder. When the IPC sees the brake fluid level switch input grounded, it turns ON the red Brake indicator and sends a serial data message to the EBCM that tells the EBCM that the brake fluid level is low.

Conditions for Running the DTC

The ignition is ON.

Conditions for Setting the DTC

The EBCM receives a serial data message from the IPC indicating that the brake fluid level is low.

Action Taken When the DTC Sets

- The EBCM disables the TCS/VSES until the DTC becomes a history DTC.
- The red Brake warning indicator turns ON.

- The Traction Control and Active Handling indicator turns ON.
- The DIC displays the following messages:
  - Low Brake Fluid
  - Service Traction System
  - Service Active Handling
- The ABS remains functional.

Conditions for Clearing the DTC

- The condition for the DTC is no longer present and the DTC is cleared with a scan tool.
- The EBCM automatically clears the history DTC when a current DTC is not detected in 100 consecutive drive cycles.

Diagnostic Aids

Inspect the master cylinder reservoir for the proper brake fluid level.

DTC C1247

Step	Action	Yes	No
Schematic Reference: Brake Warning System Schematics **Connector End View Reference: Hydraulic Brakes Connector End Views or Instrument Panel, Gages, and Console Connector End Views**			
1	Did you perform the Hydraulic Brake Diagnostic System Check?	Go to **Step 2**	Go to **Diagnostic System Check - Hydraulic Brakes**
2	Inspect the brake fluid level. Is the brake fluid level OK?	Go to **Step 3**	Go to **Brake Fluid Loss**
3	1. Install a scan tool. 2. Turn ON the ignition, with the engine OFF. 3. With a scan tool, observe the Brake Fluid Level parameter in the Instrument Panel Cluster data list. Does the scan tool indicate that the Brake Fluid Level parameter is OK?	Go to **Testing for Intermittent Conditions and Poor Connections** in Wiring Systems	Go to **Step 4**
4	1. Turn OFF the ignition. 2. Disconnect the brake fluid level switch. 3. Turn ON the ignition, with the engine OFF. 4. With a scan tool, observe the Brake Fluid Level parameter. Does the scan tool indicate that the Brake Fluid		

	Level parameter is OK?	Go to **Step 6**	Go to **Step 5**
5	Test the signal circuit of the brake fluid level switch for a short to ground. Refer to **Circuit Testing** and **Wiring Repairs** in Wiring Systems. Did you find and correct the condition?	Go to **Step 10**	Go to **Step 7**
6	Inspect for poor connections at the harness connector of the brake fluid level switch. Refer to **Testing for Intermittent Conditions and Poor Connections** and **Connector Repairs** in Wiring Systems. Did you find and correct the condition?	Go to **Step 10**	Go to **Step 8**
7	Inspect for poor connections at the harness connector of the instrument cluster (IPC). Refer to **Testing for Intermittent Conditions and Poor Connections** and **Connector Repairs** in Wiring Systems. Did you find and correct the condition?	Go to **Step 10**	Go to **Step 9**
8	Replace the brake fluid level switch. Refer to **Master Cylinder Fluid Level Sensor Replacement** . Did you complete the repair?	Go to **Step 10**	-
9	Replace the instrument cluster (IPC). Refer to **Instrument Panel Cluster (IPC) Replacement** in Instrument Panel, Gauges and Console. Did you complete the repair?	Go to **Step 10**	-
10	Operate the system in order to verify the repair. Did you correct the condition?	System OK	Go to **Step 2**

SYMPTOMS - HYDRAULIC BRAKES

IMPORTANT: The following steps must be completed before using the symptom tables.

1. Perform **Diagnostic System Check - Hydraulic Brakes** before using the brake indicator symptom tables in order to verify that all of the following are true:
   - There are no DTCs set.
   - The control module(s) can communicate via the serial data link.
2. Perform the **Brake System Vehicle Road Test** before using the hydraulic brake symptom tables in order to duplicate the customer's concern.
3. Review the system operation in order to familiarize yourself with the system functions. Refer to the following:
   - **Brake Warning System Description and Operation**
   - **Hydraulic Brake System Description and Operation**
   - **Brake Assist System Description and Operation**
   - **Disc Brake System Description and Operation** in Disc Brakes

Visual/Physical Inspection

- Inspect for aftermarket devices which could affect the operation of the brake warning system. Refer to **Checking Aftermarket Accessories** in Wiring Systems.
- Inspect the easily accessible or visible system components for obvious damage or conditions which could cause the symptom.

Intermittent

Faulty electrical connections or wiring may be the cause of intermittent conditions. Refer to **Testing for Intermittent Conditions and Poor Connections** in Wiring Systems.

Symptom List

Refer to a symptom diagnostic procedure from the following list in order to diagnose the symptom:

- **Brake Warning Indicator Always On**
- **Brake Warning Indicator Inoperative**
- **Brake Pulsation**
- **Brake System Noise**
- **Braking Action Uneven - Pulls to One Side**
- **Braking Action Uneven - Front to Rear**
- **Brake Pedal Excessive Travel**
- **Brake Pedal Excessive Effort**
- **Brakes Drag**
- **Brake System Slow Release**
- **Brake Fluid Loss**

BRAKE WARNING INDICATOR ALWAYS ON

Brake Warning Indicator Always On

Step	Action	Yes	No
Schematic Reference: Brake Warning System Schematics **Connector End View Reference: Hydraulic Brakes Connector End Views or Instrument Panel, Gages, and Console Connector End Views**			
1	Did you perform the Hydraulic Brake Diagnostic System Check?	Go to **Step 2**	Go to **Diagnostic System Check - Hydraulic Brakes**
2	1. Turn ON the ignition, with the engine OFF. 2. Release the park brake. 3. With a scan tool, observe the Park Brake Switch parameter in the Instrument Panel Cluster data list.	Go to **Testing for**	

	Does the scan tool indicate that the Park Brake Switch parameter is Off?	**Intermittent Conditions and Poor Connections** in Wiring Systems	Go to **Step 3**
3	1. Turn OFF the ignition. 2. Disconnect the park brake switch. 3. Turn ON the ignition, with the engine OFF. 4. With a scan tool, observe the Park Brake Switch parameter. Does the scan tool indicate that the Park Brake Switch parameter is Off?	Go to **Step 5**	Go to **Step 4**
4	Test the signal circuit of the park brake switch for a short to ground. Refer to **Circuit Testing** and **Wiring Repairs** in Wiring Systems. Did you find and correct the condition?	Go to **Step 9**	Go to **Step 6**
5	Inspect for poor connections at the harness connector of the park brake switch. Refer to **Testing for Intermittent Conditions and Poor Connections** and **Connector Repairs** in Wiring Systems. Did you find and correct the condition?	Go to **Step 9**	Go to **Step 7**
6	Inspect for poor connections at the harness connector of the instrument cluster (IPC). Refer to **Testing for Intermittent Conditions and Poor Connections** and **Connector Repairs** in Wiring Systems. Did you find and correct the condition?	Go to **Step 9**	Go to **Step 8**
7	Replace the park brake switch. Refer to **Park Brake Warning Lamp Switch Replacement** in Park Brake. Did you complete the repair?	Go to **Step 9**	-
8	Replace the instrument cluster (IPC). Refer to **Instrument Panel Cluster (IPC) Replacement** in Instrument Panel, Gauges and Console. Did you complete the repair?	Go to **Step 9**	-
9	Operate the system in order to verify the repair. Did you correct the condition?	System OK	Go to **Step 2**

BRAKE WARNING INDICATOR INOPERATIVE

Brake Warning Indicator Inoperative

Step	Action	Yes	No
Schematic Reference: Brake Warning System Schematics **Connector End View Reference: ABS Connector End Views or Instrument Panel, Gages, and**			

Console Connector End Views in Instrument Panel, Gages, and Console			
1	Did you perform the Hydraulic Brake Diagnostic System Check?	Go to **Step 2**	Go to **Diagnostic System Check - Hydraulic Brakes**
2	1. Turn OFF the ignition. 2. Turn ON the ignition, with the engine OFF. 3. Observe the red Brake indicator. Does the red Brake indicator illuminate briefly during the displays test?	Go to **Step 3**	Go to **Step 11**
3	Apply the park brake. Does the red Brake indicator illuminate?	Go to **Step 4**	Go to **Step 5**
4	1. Turn OFF the ignition. 2. Release the park brake. 3. Disconnect the brake fluid level switch. 4. Connect a 3 amp fused jumper wire between the signal circuit of the brake fluid level switch and the ground circuit of the brake fluid level switch. 5. Turn ON the ignition, with the engine OFF. Does the red Brake indicator illuminate?	Go to **Step 10**	Go to **Step 7**
5	1. Turn OFF the ignition. 2. Disconnect the park brake switch. 3. Connect a 3 amp fused jumper wire between the signal circuit of the park brake switch and a good ground. 4. Turn ON the ignition, with the engine OFF. Does the red Brake indicator illuminate?	Go to **Step 9**	Go to **Step 6**
6	Test the signal circuit of the park brake switch for a high resistance or a open. Refer to **Circuit Testing** and **Wiring Repairs** in Wiring Systems. Did you find and correct the condition?	Go to **Step 15**	Go to **Step 11**
7	Test the signal circuit of the brake fluid level switch for a high resistance or a open. Refer to **Circuit Testing** and **Wiring Repairs** in Wiring Systems. Did you find and correct the condition?	Go to **Step 15**	Go to **Step 8**
8	Test the ground circuit of the brake fluid level switch for a high resistance or an open. Refer to **Circuit Testing** and **Wiring Repairs** in Wiring Systems. Did you find and correct the condition?	Go to **Step 15**	Go to **Step 11**
	Inspect for poor case ground or poor connections at the harness connector of the park brake switch. Refer to **Testing for**		

9	**Intermittent Conditions and Poor Connections** and **Connector Repairs** in Wiring Systems. Did you find and correct the condition?	Go to **Step 15**	Go to **Step 12**
10	Inspect for poor connections at the harness connector of the brake fluid level switch. Refer to **Testing for Intermittent Conditions and Poor Connections** and **Connector Repairs** in Wiring Systems. Did you find and correct the condition?	Go to **Step 15**	Go to **Step 13**
11	Inspect for poor connections at the harness connector of the IPC. Refer to **Testing for Intermittent Conditions and Poor Connections** and **Connector Repairs** in Wiring Systems. Did you find and correct the condition?	Go to **Step 15**	Go to **Step 14**
12	Replace the park brake switch. Refer to **Park Brake Warning Lamp Switch Replacement** in Park Brake. Did you complete the repair?	Go to **Step 15**	-
13	Replace the brake fluid level switch. Refer to **Master Cylinder Fluid Level Sensor Replacement** . Did you complete the repair?	Go to **Step 15**	-
14	Replace the instrument panel cluster (IPC). Refer to **Instrument Panel Cluster (IPC) Replacement** in Instrument Panel, Gages and Console. Did you complete the repair?	Go to **Step 15**	-
15	Operate the vehicle in order to verify the repair. Did you correct the condition?	System OK	Go to **Step 2**

BRAKE PULSATION

Test Description

The numbers below refer to the step numbers on the diagnostic table:

2: Suspension components that are not operating properly may cause a disturbance to the vehicle during application of the brake system.

3: Antilock brake system operation could produce feedback through the brake pedal during application of the brake system.

Brake Pulsation

Step	Action	Yes	No
1	Were you sent here from the Hydraulic Brake Symptom table?	Go to **Step 2**	Go to **Diagnostic Starting Point - Hydraulic Brakes**
2	Inspect the suspension system for proper operation. Refer to **Diagnostic Starting Point - Suspension General Diagnosis** in Suspension General Diagnosis. Did you find and correct a condition?	Go to **Step 6**	Go to **Step 3**

3	Inspect the antilock brake system for proper operation. Refer to **Diagnostic Starting Point - Antilock Brake System** in Antilock Brake System. Did you find and correct a condition?	Go to **Step 6**	Go to **Step 4**
4	Inspect the disc brake system for proper operation. Refer to **Disc Brake System Diagnosis** . Did you find and correct a condition?	Go to **Step 6**	Go to **Step 5**
5	Inspect the hydraulic brake system for proper operation. Refer to **Hydraulic Brake System Diagnosis** . Did you find and correct a condition?	Go to **Step 6**	Go to **Diagnostic Starting Point - Hydraulic Brakes**
6	Road test the vehicle in order to confirm proper operation. Refer to **Brake System Vehicle Road Test** . Is the condition still present?	Go to **Step 2**	System OK

BRAKE SYSTEM NOISE

Brake System Noise

Step	Action	Yes	No
1	Were you sent here from the Hydraulic Brake Symptom table?	Go to **Step 2**	Go to **Diagnostic Starting Point - Hydraulic Brakes**
2	Inspect the disc brake system for proper operation. Refer to **Disc Brake System Diagnosis** . Did you find and correct a condition?	Go to **Step 9**	Go to **Step 3**
3	Inspect the brake assist system for proper operation. Refer to **Brake Assist System Diagnosis** . Did you find and correct a condition?	Go to **Step 9**	Go to **Step 4**
4	Inspect the hydraulic brake system for proper operation. Refer to **Hydraulic Brake System Diagnosis** . Did you find and correct a condition?	Go to **Step 9**	Go to **Step 5**
5	Is the vehicle equipped with a drum-in-rotor type of park brake system?	Go to **Step 6**	Go to **Step 8**
6	Ensure the park brake shoes are not adjusted too tightly, possibly causing a noise under certain conditions. Are the park brake shoes adjusted too tightly?	Go to **Step 7**	Go to **Step 8**
7	1. Clean and inspect the park brake shoes for excessive wear and/or damage. 2. Inspect the drum portion of the rotors for excessive wear, blueing discoloration, heat spots, and excessive radial runout. 3. If any of these conditions are present, replace the affected components. 4. Adjust the park brake system. Did you find and correct a condition?	Go to **Step 9**	Go to **Step 8**

8	Inspect the park brake system for proper operation. Refer to **Park Brake System Diagnosis** in Park Brake. Did you find and correct a condition?	Go to **Step 9**	Go to **Diagnostic Starting Point - Hydraulic Brakes**
9	Road test the vehicle in order to confirm proper operation. Refer to **Brake System Vehicle Road Test** . Is the condition still present?	Go to **Step 2**	System OK

BRAKING ACTION UNEVEN - PULLS TO ONE SIDE

Test Description

The numbers below refer to the step numbers on the diagnostic table:

2: Suspension components that are not operating properly may cause a disturbance to the vehicle during application of the brake system.

3: Steering components that are not operating properly may cause a disturbance to the vehicle during application of the brake system.

Braking Action Uneven - Pulls to One Side

Step	Action	Yes	No
1	Were you sent here from the Hydraulic Brake Symptom table?	Go to **Step 2**	Go to **Diagnostic Starting Point - Hydraulic Brakes**
2	Inspect the suspension system for proper operation. Refer to **Diagnostic Starting Point - Suspension General Diagnosis** in Suspension General Diagnosis. Did you find and correct a condition?	Go to **Step 6**	Go to **Step 3**
3	Inspect the steering system for proper operation. Refer to **Diagnostic Starting Point - Power Steering System (w/o Electro-Hydraulic Steering)** in Power Steering System. Did you find and correct a condition?	Go to **Step 6**	Go to **Step 4**
4	Inspect the hydraulic brake system for proper operation. Refer to **Hydraulic Brake System Diagnosis** . Did you find and correct a condition?	Go to **Step 6**	Go to **Step 5**
5	Inspect the disc brake system for proper operation. Refer to **Disc Brake System Diagnosis** . Did you find and correct a condition?	Go to **Step 6**	Go to **Diagnostic Starting Point - Hydraulic Brakes**
6	Road test the vehicle in order to confirm proper operation. Refer to **Brake System Vehicle Road Test** . Is the condition still present?	Go to **Step 2**	System OK

BRAKING ACTION UNEVEN - FRONT TO REAR

Test Description

The number below refers to the step number on the diagnostic table:

2: Suspension components that are not operating properly may cause a disturbance to the vehicle during application of the brake system.

Braking Action Uneven - Front to Rear

Step	Action	Yes	No
1	Were you sent here from the Hydraulic Brake Symptom table?	Go to **Step 2**	Go to **Diagnostic Starting Point - Hydraulic Brakes**
2	Inspect the suspension system for proper operation. Refer to **Diagnostic Starting Point - Suspension General Diagnosis** in Suspension General Diagnosis. Did you find and correct a condition?	Go to **Step 6**	Go to **Step 3**
3	Inspect the hydraulic brake system for proper operation. Refer to **Hydraulic Brake System Diagnosis** . Did you find and correct a condition?	Go to **Step 6**	Go to **Step 4**
4	Inspect the disc brake system for proper operation. Refer to **Disc Brake System Diagnosis** . Did you find and correct a condition?	Go to **Step 6**	Go to **Step 5**
5	Inspect the brake assist system for proper operation. Refer to **Brake Assist System Diagnosis** . Did you find and correct a condition?	Go to **Step 6**	Go to **Diagnostic Starting Point - Hydraulic Brakes**
6	Road test the vehicle in order to confirm proper operation. Refer to **Brake System Vehicle Road Test** . Is the condition still present?	Go to **Step 2**	System OK

BRAKE PEDAL EXCESSIVE TRAVEL

Brake Pedal Excessive Travel

Step	Action	Yes	No
1	Were you sent here from the Hydraulic Brake Symptom table?	Go to **Step 2**	Go to **Diagnostic Starting Point - Hydraulic Brakes**
2	Inspect for proper brake pedal travel. Refer to **Brake Pedal Travel Measurement and Inspection** . Is the brake pedal travel distance within the acceptable limits?	Go to **Step 5**	Go to **Step 3**
	1. Inspect for worn, missing, misaligned, bent or damaged brake pedal system components. • For the brake pedal pushrod component inspection, refer to **Brake Pedal Pushrod Inspection** . • Inspect the brake pedal bushings for excessive wear and/or damage and inspect the brake pedal for a misaligned, bent, and/or damaged condition.		

3	2. Replace the brake pedal system components that are worn, missing, misaligned, bent or damaged. Refer to the following procedures as necessary: • **Brake Pedal Assembly Replacement** • **Vacuum Brake Booster Replacement** - for pedal pushrod replacement Did you find and replace any worn, missing, misaligned, bent or damaged brake pedal system components?	Go to **Step 4**	Go to **Step 5**
4	Inspect for proper brake pedal travel. Refer to **Brake Pedal Travel Measurement and Inspection** . Is the brake pedal travel distance within the acceptable limits?	Go to **Step 8**	Go to **Step 5**
5	Inspect the hydraulic brake system for proper operation. Refer to **Hydraulic Brake System Diagnosis** . Did you find and correct a condition?	Go to **Step 8**	Go to **Step 6**
6	Inspect the disc brake system for proper operation. Refer to **Disc Brake System Diagnosis** . Did you find and correct a condition?	Go to **Step 8**	Go to **Step 7**
7	Inspect the brake assist system for proper operation. Refer to **Brake Assist System Diagnosis** . Did you find and correct a condition?	Go to **Step 8**	Go to **Diagnostic Starting Point - Hydraulic Brakes**
8	Road test the vehicle to confirm proper operation. Refer to **Brake System Vehicle Road Test** . Is the condition still present?	Go to **Step 2**	System OK

BRAKE PEDAL EXCESSIVE EFFORT

Brake Pedal Excessive Effort

Step	Action	Yes	No
1	Were you sent here from the Hydraulic Brake Symptom table?	Go to **Step 2**	Go to **Diagnostic Starting Point - Hydraulic Brakes**
2	Inspect the brake assist system for proper operation. Refer to **Brake Assist System Diagnosis** . Did you find and correct a condition?	Go to **Step 5**	Go to **Step 3**
3	Inspect the hydraulic brake system for proper operation. Refer to **Hydraulic Brake System Diagnosis** . Did you find and correct a condition?	Go to **Step 5**	Go to **Step 4**
4	Inspect the disc brake system for proper operation. Refer to **Disc Brake System Diagnosis** . Did you find and correct a condition?	Go to **Step 5**	Go to **Diagnostic Starting Point - Hydraulic Brakes**
5	Road test the vehicle to confirm proper operation. Refer to **Brake System Vehicle Road Test** . Is the condition still present?	Go to **Step 2**	System OK

BRAKES DRAG

Brakes Drag

Step	Action	Yes	No
1	Were you sent here from the Hydraulic Brake Symptom table?	Go to **Step 2**	Go to **Diagnostic Starting Point - Hydraulic Brakes**
2	Is the vehicle equipped with an adjustable stop lamp switch and/or an adjustable cruise control release switch?	Go to **Step 3**	Go to **Step 4**
3	1. Inspect the stop lamp switch for proper adjustment to ensure that the brake pedal is fully releasing. 2. Inspect the cruise control release switch, if equipped, for proper adjustment to ensure that the brake pedal is fully releasing. Did you find and correct a condition?	Go to **Step 14**	Go to **Step 4**
4	Is the vehicle equipped with a drum-in-rotor type of park brake system?	Go to **Step 5**	Go to **Step 7**
5	Ensure the park brake shoes are not adjusted too tightly, possibly causing drag under certain conditions. Are the park brake shoes adjusted too tightly?	Go to **Step 6**	Go to **Step 7**
6	1. Clean and inspect the park brake shoes for excessive wear and/or damage. 2. Inspect the drum portion of the rotors for excessive wear, blueing discoloration, heat spots, and excessive radial runout. 3. If any of these conditions are present, replace the affected components. 4. Adjust the park brake system Did you find and correct a condition?	Go to **Step 14**	Go to **Step 7**
7	Inspect the park brake system for proper operation. Refer to **Park Brake System Diagnosis** in Park Brake. Did you find and correct a condition?	Go to **Step 14**	Go to **Step 8**
8	Inspect the disc brake system for proper operation. Refer to **Disc Brake System Diagnosis** . Did you find and correct a condition?	Go to **Step 14**	Go to **Step 9**
9	1. Separate the brake booster pushrod from the brake pedal. 2. Inspect the brake corners to determine if the brake drag condition is still present. Do the brake corners still exhibit the brake drag condition?	Go to **Step 11**	Go to **Step 10**
10	Replace the brake pedal assembly.	Go to	-

	Did you complete the replacement?	**Step 14**	
11	1. Separate the master cylinder from the brake booster. Do not disconnect any brake pipes. 2. Inspect the brake corners to determine if the brake drag condition is still present. Do the brake corners still exhibit the brake drag condition?	Go to **Step 13**	Go to **Step 12**
12	Replace the brake booster assembly. Did you complete the replacement?	Go to **Step 14**	-
13	Inspect the hydraulic brake system for proper operation. Refer to **Hydraulic Brake System Diagnosis** . Did you find and correct a condition?	Go to **Step 14**	Go to **Diagnostic Starting Point - Hydraulic Brakes**
14	1. Install or connect components that were removed or disconnected during diagnosis. 2. Road test the vehicle in order to confirm proper operation. Refer to **Brake System Vehicle Road Test** . Is the condition still present?	Go to **Step 2**	System OK

BRAKE SYSTEM SLOW RELEASE

Brake System Slow Release

Step	Action	Yes	No
1	Were you sent here from the Hydraulic Brake Symptom table?	Go to **Step 2**	Go to **Diagnostic Starting Point - Hydraulic Brakes**
2	Inspect the hydraulic brake system for proper operation. Refer to **Hydraulic Brake System Diagnosis** . Did you find and correct a condition?	Go to **Step 5**	Go to **Step 3**
3	Inspect the brake assist system for proper operation. Refer to **Brake Assist System Diagnosis** . Did you find and correct a condition?	Go to **Step 5**	Go to **Step 4**
4	Inspect the disc brake system for proper operation. Refer to **Disc Brake System Diagnosis** . Did you find and correct a condition?	Go to **Step 5**	Go to **Diagnostic Starting Point - Hydraulic Brakes**
5	Road test the vehicle to confirm proper operation. Refer to **Brake System Vehicle Road Test** . Is the condition still present?	Go to **Step 2**	System OK

BRAKE FLUID LOSS

Brake Fluid Loss

Step	Action	Yes	No
	Were you sent here from the Hydraulic Brake Symptom table?		Go to **Diagnostic**

1		Go to **Step 2**	**Starting Point - Hydraulic Brakes**
2	Inspect the hydraulic brake system for proper operation. Refer to **Hydraulic Brake System Diagnosis** . Did you find and correct a condition?	Go to **Step 6**	Go to **Step 3**
3	Inspect the disc brake system for proper operation. Refer to **Disc Brake System Diagnosis** . Did you find and correct a condition?	Go to **Step 6**	Go to **Step 4**
4	1. Separate the master cylinder from the vacuum brake booster. Do not disconnect any brake pipes. Refer to **Master Cylinder Replacement** . 2. Inspect the rear of the master cylinder for a brake fluid leak. 3. Inspect for brake fluid in the vacuum brake booster. Did you find a brake fluid leak?	Go to **Step 5**	Go to **Diagnostic Starting Point - Hydraulic Brakes**
5	Replace the brake master cylinder and the vacuum brake booster. Refer to **Master Cylinder Replacement** and **Vacuum Brake Booster Replacement** . Did you complete the replacement?	Go to **Step 6**	-
6	1. Install or connect components that were removed or disconnected during diagnosis. 2. Road test the vehicle to confirm proper operation. Refer to **Brake System Vehicle Road Test** . Is the condition still present?	Go to **Step 2**	System OK

DISC BRAKE SYSTEM DIAGNOSIS

Test Description

The numbers below refer to the step numbers on the diagnostic table:

9: Lubricant leaks from non-brake system components may come in contact with and contaminate brake system components.

10: Lubricant leaks from non-brake system components may come in contact with and contaminate brake system components.

13: Disc brake rotor thickness variation that exceeds the maximum acceptable level can cause brake pulsation.

17: Disc brake rotor thickness variation that exceeds the maximum acceptable level can cause brake pulsation.

20: Disc brake rotor assembled lateral runout (LRO) that exceeds the maximum acceptable level can lead to thickness variation.

Disc Brake System Diagnosis

Step	Action	Yes	No
DEFINITION: This diagnostic table is designed to diagnose ONLY the components of the DISC brake system in order to determine if the DISC brake system is operating properly. You will be directed by the appropriate Symptom table to go to other brake system diagnostic tables as appropriate.			
1	Were you sent here from a Brake Symptom table?	Go to **Step 2**	Go to **Diagnostic Starting Point - Hydraulic Brakes**
2	Visually inspect the disc brake pads for the following conditions: Refer to **Brake Pad Inspection** in Disc Brakes. • Lining thickness below specifications • Uneven and/or abnormal wear - edge-to-edge and/or side-to-side • Looseness or damage - including pad hardware • Evidence of contamination from an external substance Did you find any conditions to indicate a concern with any of the front and/or rear disc brake pads?	Go to **Step 3**	Go to **Step 12**
3	Are any of the front and/or rear disc brake pads contaminated?	Go to **Step 8**	Go to **Step 4**
4	Are any of the front and/or rear disc brake pads worn unevenly?	Go to **Step 7**	Go to **Step 5**
5	Are any of the front and/or rear disc brake pads and/or pad hardware loose or damaged?	Go to **Step 7**	Go to **Step 6**
6	1. Remove and inspect the worn disc brake pads for glazing, looseness, heat spots or damage. 2. Replace the worn disc brake pads as a complete axle set. Refer to **Brake Pads Replacement - Front** and/or **Brake Pads Replacement - Rear** in Disc Brakes. Did you complete the inspection and replacement?	Go to **Step 12**	-
	NOTE: **Support the brake caliper with heavy mechanic's wire, or equivalent, whenever it is separated from its mount and the hydraulic flexible brake hose is still connected. Failure to support the caliper in this manner will cause the flexible brake hose to bear the weight of the caliper, which may**		

7	**cause damage to the brake hose and in turn may cause a brake fluid leak.** **IMPORTANT:** **Do NOT disconnect the hydraulic brake flex hoses from the calipers.** 1. Remove the front and/or rear disc brake calipers, as appropriate, from the mounting brackets and support the calipers. Refer to **Brake Caliper Replacement - Front** and/or **Brake Caliper Replacement - Rear** in Disc Brakes. 2. Inspect the disc brake caliper mounting bracket and the mounting/sliding hardware for the following conditions: Refer to **Disc Brake Mounting and Hardware Inspection - Front** and/or **Disc Brake Mounting and Hardware Inspection - Rear** in Disc Brakes. • Binding or seized hardware • Worn, damaged or missing hardware components • Loose, bent, cracked, or damaged caliper mounting bracket 3. Replace components as required. Refer to the following procedures in Disc Brakes, as required: • **Brake Caliper Bracket Replacement - Front** • **Brake Caliper Bracket Replacement - Rear** • **Disc Brake Hardware Replacement - Front** • **Disc Brake Hardware Replacement - Rear** 4. Replace the unevenly-worn, loose or damaged disc brake pads as a complete axle set. Refer to **Brake Pads Replacement - Front** and/or **Brake Pads Replacement - Rear** in Disc Brakes. Did you complete the inspection and replacement?	Go to **Step 12**	-
8	1. Inspect the disc brake calipers, brake hoses and brake pipes for evidence of an external brake fluid leak. 2. Replace any components found to be leaking brake fluid. Refer to the following procedures as required: • **Brake Caliper Overhaul - Front** or **Brake Caliper Replacement - Front** in Disc Brakes • **Brake Caliper Overhaul - Rear** or **Brake Caliper Replacement - Rear** in Disc Brakes • **Brake Hose Replacement - Front**		

	• **Brake Hose Replacement - Rear** • **Brake Pipe Replacement** Did you find and correct the source of the leak causing contamination of the pads?	Go to **Step 11**	Go to **Step 9**
9	1. Inspect the wheel drive shaft outer seals for damage and evidence of a grease leak. 2. Replace any wheel drive shaft seal that is found to be leaking grease which may be the source of the contamination to the pads. Refer to **Wheel Drive Shaft Outer Joint and Seal Replacement** in Wheel Drive Shafts. Did you find and correct the source of the leak causing contamination of the pads?	Go to **Step 11**	Go to **Step 10**
10	1. Inspect the automatic transmission cooling system lines, if equipped, for damage and evidence of an external fluid leak which may be the source of the contamination to the pads. 2. Inspect the power steering system hoses for damage and evidence of an external fluid leak which may be the source of the contamination to the pads. 3. Replace any components found to be leaking fluid which may be the source of the contamination to the pads. Did you find and correct the source of the leak causing contamination of the pads?	Go to **Step 11**	-
	1. Clean the remaining disc brake system components to remove any traces of the contaminant. **NOTE:** **Support the brake caliper with heavy mechanic's wire, or equivalent, whenever it is separated from its mount and the hydraulic flexible brake hose is still connected. Failure to support the caliper in this manner will cause the flexible brake hose to bear the weight of the caliper, which may cause damage to the brake hose and in turn may cause a brake fluid leak.** **IMPORTANT:** **Do NOT disconnect the hydraulic brake flex hoses from the calipers.** 2. Remove the front and/or rear disc brake calipers, as appropriate, from the mounting brackets and support the calipers. Refer to **Brake Caliper Replacement - Front** and/or		

11	**Brake Caliper Replacement - Rear** in Disc Brakes. 3. Inspect the disc brake caliper mounting/sliding hardware for the following conditions: Refer to **Disc Brake Mounting and Hardware Inspection - Front** and/or **Disc Brake Mounting and Hardware Inspection - Rear** in Disc Brakes. • Binding or seized hardware • Distorted, worn, damaged or missing hardware components 4. Replace the caliper mounting/sliding hardware components as required. Refer to **Disc Brake Hardware Replacement - Front** and/or **Disc Brake Hardware Replacement - Rear** in Disc Brakes. 5. Replace the contaminated disc brake pads as a complete axle set. Refer to **Brake Pads Replacement - Front** and/or **Brake Pads Replacement - Rear** in Disc Brakes. Did you complete the cleaning, inspection and replacement?	Go to **Step 12**	-
12	1. Check the thickness of each of the disc brake rotors. **IMPORTANT:** **Make the following determination AND ANSWER the question INDIVIDUALLY for EACH rotor.** 2. Make a determination for each brake rotor if the rotor can be REFINISHED and REMAIN ABOVE the minimum requirements. Refer to **Brake Rotor Thickness Measurement** in Disc Brakes.Does the disc brake rotor meet the minimum requirements for REFINISHING?	Go to **Step 13**	Go to **Step 16**
13	**IMPORTANT:** **Perform the following inspection AND ANSWER the question INDIVIDUALLY for EACH rotor.** Inspect each of the disc brake rotors for thickness variation that exceeds the maximum acceptable level. Refer to **Brake Rotor Thickness Variation Measurement** in Disc Brakes.Does the brake rotor exhibit thickness variation that exceeds the maximum acceptable level?	Go to **Step 15**	Go to **Step 14**
	1. Inspect each of the disc brake rotors for the following surface and wear conditions:		

14	Refer to **Brake Rotor Surface and Wear Inspection** in Disc Brakes. • Heavy rust and/or pitting • Cracks and/or heat spots • Excessive blueing discoloration • Deep or excessive scoring beyond maximum acceptable level **IMPORTANT:** **Make the following determination AND ANSWER the question INDIVIDUALLY for EACH rotor.** 2. Make a determination for each brake rotor if the rotor requires refinishing based upon the results of the inspection. If the brake rotor exhibits any of the conditions listed previously, it requires refinishing. Does the brake rotor require REFINISHING?	Go to **Step 15**	Go to **Step 20**
15	1. Refinish the brake rotor. Refer to **Brake Rotor Refinishing** in Disc Brakes. 2. Inspect the brake rotor thickness. Refer to **Brake Rotor Thickness Measurement** in Disc Brakes. Were you able to REFINISH the brake rotor within the minimum requirements?	Go to **Step 20**	Go to **Step 19**
16	Is the brake rotor at or below the DISCARD requirements?	Go to **Step 19**	Go to **Step 17**
17	**IMPORTANT:** **Perform the following inspection AND ANSWER the question INDIVIDUALLY for EACH rotor.** Inspect each of the disc brake rotors for thickness variation that exceeds the maximum acceptable level. Refer to **Brake Rotor Thickness Variation Measurement** in Disc Brakes.Does the brake rotor exhibit thickness variation that exceeds the maximum acceptable level?	Go to **Step 19**	Go to **Step 18**
	1. Inspect each of the disc brake rotors for the following surface and wear conditions: Refer to **Brake Rotor Surface and Wear Inspection** in Disc Brakes.		

18	• Heavy rust and/or pitting • Cracks and/or heat spots • Excessive blueing discoloration • Deep or excessive scoring beyond maximum acceptable level **IMPORTANT:** **Make the following determination AND ANSWER the question INDIVIDUALLY for EACH rotor.** 2. Make a determination for each brake rotor if the rotor requires replacement based upon the results of the inspection. If the brake rotor exhibits any of the conditions listed previously, it requires replacement. Does the brake rotor require REPLACEMENT?	Go to **Step 19**	Go to **Step 20**
19	**IMPORTANT:** **Whenever a brake rotor is replaced, the assembled lateral runout (LRO) of the rotor must be measured to ensure optimum performance of the disc brakes.** Replace the brake rotor. Refer to **Brake Rotor Replacement - Front** or **Brake Rotor Replacement - Rear** in Disc Brakes.Did you complete the replacement?	Go to **Step 22**	-
20	**IMPORTANT:** **Perform the following inspection AND ANSWER the question INDIVIDUALLY for EACH rotor.** Inspect each of the disc brake rotors for assembled lateral runout (LRO) that exceeds the maximum acceptable level. Refer to **Brake Rotor Assembled Lateral Runout (LRO) Measurement** in Disc Brakes.Does the brake rotor exhibit assembled LRO that exceeds the maximum acceptable level?	Go to **Step 21**	Go to **Step 22**
21	Correct the LRO for each brake rotor that was determined to have LRO exceeding the maximum acceptable level. Refer to **Brake Rotor Assembled Lateral Runout (LRO) Correction** in Disc Brakes. Did you complete the operation?	Go to **Step 22**	-
22	Install or connect components that were removed or disconnected during diagnosis. Did you complete the operation?	Disc Brake System OK Return to Symptom Table	-

HYDRAULIC BRAKE SYSTEM DIAGNOSIS

Hydraulic Brake System Diagnosis

Step	Action	Yes	No
DEFINITION: This diagnostic table is designed to diagnose ONLY the components of the HYDRAULIC brake system in order to determine if the HYDRAULIC brake system is operating properly. You will be directed by the appropriate Symptom table to go to other brake system diagnostic tables as appropriate.			
1	Were you sent here from a Brake Symptom table?	Go to **Step 2**	Go to **Diagnostic Starting Point - Hydraulic Brakes**
2	Inspect and adjust the brake fluid level in the brake master cylinder. Refer to **Master Cylinder Reservoir Filling** . Was the brake fluid level low?	Go to **Step 3**	Go to **Step 4**
3	1. Inspect the brake fluid for the following conditions, indicating brake fluid contamination: • Fluid separation, indicating two types of fluid are present ▪ Swirled appearance - oil-based substance ▪ Layered appearance - silicone-based substance • Fluid discoloration ▪ Cloudy appearance - moisture ▪ Dark appearance/suspended particles in fluid - dirt, rust, corrosion, brake dust 2. Inspect the master cylinder reservoir cap diaphragm and the reservoir-to-master cylinder grommets for swelling, indicating fluid contamination. Do any of the above conditions exist?	Go to **Step 5**	Go to **Step 6**
4	1. Inspect the brake fluid for the following conditions, indicating brake fluid contamination: • Fluid separation, indicating two types of fluid are present ▪ Swirled appearance - oil-based substance ▪ Layered appearance - silicone-based substance • Fluid discoloration ▪ Cloudy appearance - moisture ▪ Dark appearance/suspended particles in fluid - dirt, rust, corrosion, brake dust 2. Inspect the master cylinder reservoir cap diaphragm and the reservoir-to-master cylinder grommets for swelling, indicating fluid contamination.		

	Do any of the above conditions exist?	Go to **Step 5**	Go to **Step 12**

5	1. Flush the hydraulic brake system. Refer to **Hydraulic Brake System Flushing** .
	2. If the brake fluid WAS contaminated with an oil-based or a silicone-based fluid, indicated by fluid separation and/or a swollen master cylinder reservoir cap diaphragm and/or swollen reservoir-to-master cylinder grommets, perform the following steps. Refer to the procedures indicated.
	  1. Remove ALL of the following components listed. Each component contains internal rubber seals/linings which have been contaminated.
	  2. Clean out the hydraulic brake pipes using denatured alcohol, or equivalent.
	  3. Dry the brake pipes using non-lubricated, filtered air.
	  4. Repair or replace ALL of the following components listed. Each component contains internal rubber seals/linings which have been contaminated.
	  • **Master Cylinder Overhaul** or **Master Cylinder Replacement**
	  • Brake master cylinder reservoir: Clean the brake master cylinder reservoir using denatured alcohol, or equivalent, then dry the reservoir using non-lubricated, filtered air, or if necessary, replace the brake master cylinder reservoir.
	  • Replace the brake master cylinder reservoir cap diaphragm.
	  • **Brake Hose Replacement - Front**
	  • **Brake Hose Replacement - Rear**
	  • **Brake Caliper Overhaul - Front** or **Brake Caliper Replacement - Front** in Disc Brakes
	  • **Brake Caliper Overhaul - Rear** or **Brake Caliper Replacement - Rear** in Disc Brakes
	  • **Brake Pressure Modulator Valve (BPMV) Replacement** in Antilock Brake System
	3. If the brake fluid was NOT contaminated with an oil-based fluid, but WAS contaminated with water or dirt, rust, corrosion, and/or brake dust, replace the brake master cylinder reservoir cap diaphragm which may have allowed moisture or dirt to enter the system.
	4. Refill and bleed the hydraulic brake system. Refer to **Hydraulic Brake System Bleeding (Manual)** or **Hydraulic Brake System Bleeding (Pressure)** .
			-

	Did you complete the operation and any required repairs and/or replacements?	Go to **Step 9**	
6	1. Inspect the following hydraulic brake system components for external fluid leaks Repair or replace any of the components found to be leaking brake fluid. Refer to the appropriate procedures: • **Master Cylinder Overhaul** or **Master Cylinder Replacement** Brake master cylinder reservoir cap diaphragm • **Brake Hose Replacement - Front** • **Brake Hose Replacement - Rear** • **Brake Pipe Replacement** • **Brake Caliper Overhaul - Front** or **Brake Caliper Replacement - Front** in Disc Brakes • **Brake Caliper Overhaul - Rear** or **Brake Caliper Replacement - Rear** in Disc Brakes • **Brake Pressure Modulator Valve (BPMV) Replacement** in Antilock Brake System 2. If you repaired or replaced any of the brake system components listed, bleed the hydraulic brake system. Refer to **Hydraulic Brake System Bleeding (Manual)** or **Hydraulic Brake System Bleeding (Pressure)** . While bleeding the hydraulic brake system, observe for the following conditions: • The presence of air in the system at a bleeder valve location other than at the repair location, except if the brake master cylinder was replaced • An unrestricted and even flow of brake fluid per axle during the bleeding procedure Did you find and correct a condition?	Go to **Step 7**	Go to **Step 12**
7	Was there air in the system at a bleeder valve location other than at the repair location, except if the brake master cylinder was replaced?	Go to **Step 19**	Go to **Step 8**
8	Was the flow of brake fluid unrestricted and even per axle during the bleeding procedure?	Go to **Step 9**	Go to **Step 10**
9	Inspect the hydraulic function of the brake calipers for proper operation. Refer to **Hydraulic Brake Component Operation Visual Inspection** . Was the hydraulic function of the brake calipers operating properly?	Go to **Step 21**	Go to **Step 14**
10	Was the flow of brake fluid restricted or uneven through front axle hydraulic components during the bleeding procedure?	Go to **Step 13**	Go to **Step 11**
	Was the flow of brake fluid restricted or uneven through rear axle	Go to **Step**	

11	hydraulic components during the bleeding procedure?	**17**	-
12	Inspect the hydraulic function of the brake calipers for proper operation. Refer to **Hydraulic Brake Component Operation Visual Inspection** . Was the hydraulic function of the brake calipers operating properly?	Go to **Step 15**	Go to **Step 13**
13	Determine if the brake caliper is restricting the flow of brake fluid and/or not operating properly: 1. Raise and support the vehicle. Refer to **Lifting and Jacking the Vehicle** in General Information. 2. Remove the tire and wheel assemblies. Refer to **Tire and Wheel Removal and Installation** in Tires and Wheels. 3. Open the suspected caliper bleeder valve. 4. Using a large C-clamp, compress the caliper piston and observe for an unrestricted flow of brake fluid and for free movement of the caliper piston. 5. Close the caliper bleeder valve. Was the flow of brake fluid unrestricted and did the caliper piston move freely?	Go to **Step 17**	Go to **Step 14**
14	Repair or replace any brake caliper that was not operating properly. Refer to the appropriate procedure. • **Brake Caliper Overhaul - Front** or **Brake Caliper Replacement - Front** in Disc Brakes • **Brake Caliper Overhaul - Rear** or **Brake Caliper Replacement - Rear** in Disc Brakes Did you complete the repair and/or replacement?	Go to **Step 21**	-
15	Bleed the hydraulic brake system to observe for the presence of air in the system and to observe for an unrestricted and even flow of brake fluid per axle during the bleeding procedure. Refer to **Hydraulic Brake System Bleeding (Manual)** or **Hydraulic Brake System Bleeding (Pressure)** . Was there air in the system?	Go to **Step 19**	Go to **Step 16**
16	Was the flow of brake fluid unrestricted and even per axle during the bleeding procedure?	Go to **Step 21**	Go to **Step 17**
	1. Inspect the hydraulic brake pipes and flexible brake hoses for signs of a fluid restriction; such as being bent, kinked, pinched or damaged. Refer to **Brake Pipe and Hose Inspection** . 2. Replace any of the hydraulic brake pipes and/or flexible brake hoses found to be bent, kinked, pinched, or damaged. Refer to		

17	the following procedures as necessary: • **Brake Hose Replacement - Front** • **Brake Hose Replacement - Rear** • **Brake Pipe Replacement** 3. If none of the hydraulic brake pipes or flexible brake hoses were visibly bent, kinked, pinched, or damaged, replace the hydraulic brake flex hose at the restricted location. Did you find and correct a condition?	Go to **Step 21**	Go to **Step 18**
18	Replace the brake pressure modulator valve (BPMV), in order to correct the hydraulic brake dynamic rear proportioning mechanical operation. Refer to **Brake Pressure Modulator Valve (BPMV) Replacement** in Antilock Brake System. Did you complete the replacement?	Go to **Step 21**	-
19	1. Inspect the hydraulic brake system components for brake fluid seepage at a seal and/or fitting location, which may have drawn air into the system. 2. Inspect the hydraulic brake system components for evidence of a recent repair, which may have introduced air into the system. 3. Repair or replace any of the components found to be installed incorrectly or seeping brake fluid. Did you find and correct a condition?	Go to **Step 21**	Go to **Step 20**
20	1. Inspect the brake master cylinder for internal fluid leaks. Refer to **Brake System Internal Leak Test** . 2. Repair or replace the brake master cylinder if it is found to be leaking brake fluid internally. Refer to **Master Cylinder Overhaul** or **Master Cylinder Replacement** . Did you find and correct a condition?	Go to **Step 21**	Return to Symptom Table
21	Install or connect components that were removed or disconnected during diagnosis. Did you complete the operation?	Hydraulic Brake System OK Return to Symptom Table	-

BRAKE ASSIST SYSTEM DIAGNOSIS

Brake Assist System Diagnosis

Step	Action	Yes	No
DEFINITION: This diagnostic table is designed to diagnose ONLY the components of the brake ASSIST system in order to determine if the brake ASSIST system is operating properly. You will be			

directed by the appropriate Symptom table to go to other brake system diagnostic tables as appropriate.			
1	Were you sent here from a Brake Symptom table?	Go to **Step 2**	Go to **Diagnostic Starting Point - Hydraulic Brakes**
2	Inspect for proper brake pedal travel. Refer to **Brake Pedal Travel Measurement and Inspection** . Is the brake pedal travel distance within the acceptable limits?	Go to **Step 5**	Go to **Step 3**
3	1. Inspect for worn, missing, misaligned, bent or damaged brake pedal system components. • For the brake pedal pushrod component inspection, refer to **Brake Pedal Pushrod Inspection** . • Inspect the brake pedal bushings for excessive wear and/or damage and inspect the brake pedal for a misaligned, bent and/or damaged condition. 2. Replace the brake pedal system components that are worn, missing, misaligned, bent or damaged. Refer to the following procedures as necessary. • **Brake Pedal Assembly Replacement** • **Vacuum Brake Booster Replacement** - for a bent or damaged pedal pushrod replacement Did you find and replace any worn, missing, misaligned, bent or damaged brake pedal system components?	Go to **Step 4**	Go to **Step 5**
4	Reinspect for proper brake pedal travel. Refer to **Brake Pedal Travel Measurement and Inspection** . Is the brake pedal travel distance within the acceptable limits?	Go to **Step 8**	Go to **Step 5**
5	Check the engine vacuum source that supplies vacuum to the vacuum brake booster. Refer to **Brake System Vacuum Source Test** . Is the vacuum reading within the acceptable limits?	Go to **Step 6**	Go to **Diagnostic Starting Point - Engine Mechanical** in Engine Mechanical - 5.7L
6	During the vacuum source inspection, did the vacuum booster check valve operate properly?	Go to **Step 8**	Go to **Step 7**
7	Replace the vacuum booster check valve. Refer to **Vacuum Brake Booster Check Valve and/or Hose Replacement** . Did you complete the replacement?	Go to **Step 8**	-
	1. Pump the brake pedal several times until the brake pedal effort increases significantly. 2. Maintain moderate foot pressure on the brake		

8	pedal and start the engine. Observe pedal operation. Did the brake pedal drop slightly, then remain firm after the engine was started?	Go to **Step 9**	Go to **Step 12**
9	1. Release the brake pedal. 2. Turn the ignition OFF, then wait 15 seconds. 3. Pump the brake pedal two times to check for vacuum booster available vacuum reserve. Observe pedal effort. If operating properly, the vacuum brake booster should maintain assist for at least two pedal applications. Did the brake pedal effort increase significantly?	Go to **Step 12**	Go to **Step 10**
10	Inspect the brake pedal pushrod and the brake pedal for misalignment, a bent condition and/or damage. Is the brake pedal pushrod and/or the brake pedal misaligned, bent or damaged?	Go to **Step 11**	Go to **Step 13**
11	Replace the brake pedal pushrod and/or the brake pedal, as necessary. Refer to the following procedures: • **Brake Pedal Assembly Replacement** • **Vacuum Brake Booster Replacement** - for a bent or damaged pedal pushrod replacement Did you complete the replacement?	Go to **Step 13**	-
12	Replace the vacuum brake booster. Refer to **Vacuum Brake Booster Replacement** . Did you complete the replacement?	Go to **Step 13**	-
13	Install or connect any components that were removed or disconnected during diagnosis. Did you complete the operation?	Brake Assist System OK Return to Symptom Table	-

BRAKE SYSTEM VEHICLE ROAD TEST

Preliminary Inspections

1. Visually inspect easily accessible brake system components for obvious damage and/or leaks which may indicate that the vehicle should not be driven until further inspections have been completed.
2. Inspect the brake master cylinder reservoir fluid level and adjust only if necessary for brake system road

testing. Refer to **Master Cylinder Reservoir Filling** .

3. Inspect the tire inflation pressures and adjust as necessary.
4. Inspect the tire tread patterns to ensure that they are the same or very similar, especially per axle.
5. Ensure that the vehicle is not loaded unevenly prior to brake system road testing.

Road Testing Procedure

CAUTION: Road test a vehicle under safe conditions and while obeying all traffic laws. Do not attempt any maneuvers that could jeopardize vehicle control. Failure to adhere to these precautions could lead to serious personal injury and vehicle damage.

1. Start the engine and allow it to idle.
2. Check to see if the brake system warning lamp remains illuminated.
3. If the brake system warning lamp remains illuminated, DO NOT proceed to test drive the vehicle until it is diagnosed and repaired. Refer to **Symptoms - Hydraulic Brakes** .
4. Select a smooth, dry, clean and level road or large lot that is as free of traffic and obstacles as possible for brake system low speed road testing.
5. With the transmission in PARK, lightly apply the brake pedal. Observe both the pedal feel and the pedal travel.
6. If the brake pedal apply felt spongy, or the pedal travel was excessive, DO NOT drive the vehicle until it is repaired.
7. If the brake pedal apply did not feel spongy and the pedal travel was not excessive, proceed to step 8.
8. Release and apply the brakes.
9. While continuing to apply the brakes, shift the transmission into DRIVE, release the brakes and allow the engine to idle the vehicle away from the stopped position. Observe for a slow release of the brake system.
10. With the aid of an assistant to observe the vehicle's performance from outside of the vehicle, drive the vehicle at a low speed and lightly apply the brakes while driving past the assistant. Have the assistant observe for brake system noise from the side of the vehicle closest to them, while you observe both the pedal effort and the pedal travel.
11. If the brake pedal apply effort was excessive, or the pedal travel was excessive, DO NOT continue to test drive the vehicle until it is repaired.
12. If the brake pedal apply effort was not excessive and the pedal travel was not excessive, proceed to step 13.
13. Drive the vehicle in the opposite direction, at the same low speed and lightly apply the brakes while driving past the assistant. Have the assistant observe for brake system noise from the side of the vehicle closest to him.
14. Drive the vehicle at a low speed and shift the transmission into NEUTRAL without applying the brakes. Observe for a rapid deceleration in vehicle speed, indicating possible brake drag.
15. Select a smooth, dry, clean and level road that is as free of heavy traffic as possible for brake system moderate speed road testing.
16. Drive the vehicle at a moderate speed. Observe for a pull and/or incorrect tracking of the vehicle without

the brakes applied.

17. While continuing to drive the vehicle at a moderate speed, perform several light applies of the brakes. Observe the pedal effort and the pedal travel, observe for brake system noise, pulsation and/or brake drag.
18. If the brake pedal apply effort was excessive, or the pedal travel was excessive, DO NOT continue to test drive the vehicle until it is repaired.
19. If the brake pedal apply effort was not excessive and the pedal travel was not excessive, proceed to step 20.
20. While continuing to drive the vehicle at a moderate speed, perform several moderate applies of the brakes. Observe the pedal effort and the pedal travel, observe for brake system pulsation and/or uneven braking action - either side to side, or front to rear.

    A small amount of vehicle front end dip is expected during a moderate apply of the brakes.

21. If the brake pedal apply effort was excessive, or the pedal travel was excessive, DO NOT continue to test drive the vehicle until it is repaired.

BRAKE PEDAL TRAVEL MEASUREMENT AND INSPECTION

Tools Required

J 28662 Brake Pedal Effort Gauge. See **Special Tools and Equipment** .

1. With the ignition OFF and the brakes cool, apply the brakes 3-5 times, or until the brake pedal effort increases significantly, in order to deplete the brake booster power reserve.
2. Install the**J 28662** to the brake pedal. See **Special Tools and Equipment** .

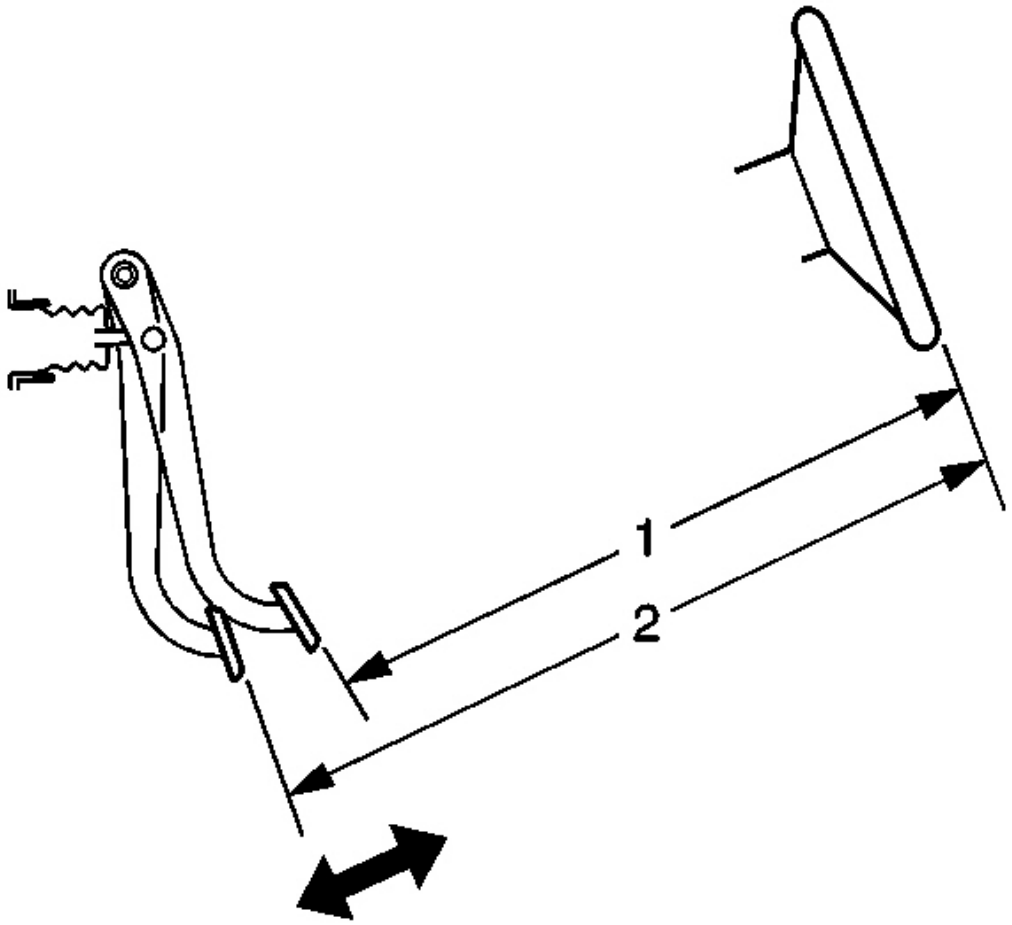

Fig. 3: Measuring Brake Pedal Travel Component View
Courtesy of GENERAL MOTORS CORP.

3. Measure and record the distance (1) from the brake pedal to the rim of the steering wheel; note the points of measurement.
4. Apply and maintain the brakes with 310 N (70 lb) of force to the brake pedal, as indicated on the **J 28662** . See **Special Tools and Equipment** .
5. While maintaining 310 N (70 lb) of force to the brake pedal, measure and record the distance (2) from the same point on the brake pedal to the same point on the rim of the steering wheel.
6. Release the brakes and repeat steps 4 and 5 to obtain a second measurement. After obtaining a second measurement, proceed to step 7.
7. Average the first and second measurements recorded during the two applies of the brakes.
8. Subtract the initial measurement, unapplied (1), from the averaged, applied measurement (2) to obtain the

brake pedal travel distance.

Specification: Maximum brake pedal travel - measured with the ignition OFF, brake booster power assist depleted, and the brakes cool: 70 mm (2.75 in).

BRAKE SYSTEM VACUUM SOURCE TEST

1. Disconnect the engine vacuum hose from the vacuum brake booster check valve.
2. Install a vacuum gage to the engine vacuum hose.
3. Start the engine and allow the engine to idle until normal operating temperatures are reached.
4. Check to see if the engine vacuum reading is within the specified normal engine vacuum range.

   Specification: 47-68 kPa (14-20 in Hg)

5. Turn the ignition OFF.
6. If the engine vacuum reading is within the specified normal range, proceed to step 10.
7. If the engine vacuum reading is NOT within the specified normal range, inspect the engine vacuum hose for the following conditions.
   - Tight connection to the engine
   - Collapse, deformation or contamination
   - Cracks, cuts, dry-rot
8. If any of these conditions were found with the engine vacuum hose, replace the hose, then repeat steps 2-4.
9. If none of these conditions were found with the engine vacuum hose, then there is an engine vacuum source problem, check the engine vacuum system.
10. Remove the vacuum brake booster check valve from the booster.
11. Install the check valve to the engine vacuum hose.
12. Install the vacuum gage to the check valve.
13. Start the engine and allow the engine to idle until normal operating temperatures are reached.
14. Turn the ignition OFF.
15. Check to see if the engine vacuum reading is maintained within the specified normal engine vacuum range.

    Specification: 47-68 kPa (14-20 in Hg)

16. If the engine vacuum reading is maintained within the specified normal range, proceed to step 18.
17. If the engine vacuum reading is NOT maintained within the specified normal range, replace the brake booster check valve, then repeat steps 11-15.
18. Inspect the brake booster check valve grommet for the following conditions:
    - Firm connection to the vacuum brake booster
    - Deformation or contamination

- Cracks, cuts, dry-rot

19. If any of these conditions were found with the check valve grommet, replace the grommet.

BRAKE SYSTEM EXTERNAL LEAK INSPECTION

CAUTION: Refer to Brake Fluid Irritant Caution in Cautions and Notices.

NOTE: Refer to Brake Fluid Effects on Paint and Electrical Components Notice in Cautions and Notices.

1. In order to inspect for external brake fluid leaks, first check the fluid level in the master cylinder.

   While a slight brake fluid level drop can be considered a normal condition due to brake lining wear, a very low level may indicate a brake fluid leak in the hydraulic system.

2. If the fluid level is abnormally low, adjust the brake fluid level. Refer to **Master Cylinder Reservoir Filling** .
3. Start the engine and allow it to idle.
4. Apply constant, moderate foot pressure to the brake pedal.

   If the brake pedal gradually falls away while under foot pressure, there may be a brake fluid leak.

5. Turn OFF the ignition.
6. Visually inspect the following brake system components for brake fluid leaks, excessive corrosion, and damage. Give particular attention to all brake pipe and flexible hose connections to ensure that there are not any slight brake fluid leaks - even though the brake pedal may feel firm and hold steady:
   - Master cylinder brake pipe fittings
   - All brake pipe connections
   - Brake pipes
   - Brake hoses and connections
   - Brake calipers and/or wheel cylinders, if equipped
7. While slight dampness around the master cylinder reservoir can be considered acceptable, brake fluid leaking from any of the brake system components requires immediate attention. If any of these components exhibit signs of brake fluid leakage, repair or replace those components. After the repair or replacement, reinspect the hydraulic brake system to assure proper function.

BRAKE SYSTEM INTERNAL LEAK TEST

CAUTION: Refer to Brake Fluid Irritant Caution in Cautions and Notices.

NOTE: **Refer to Brake Fluid Effects on Paint and Electrical Components Notice in Cautions and Notices.**

1. Start the engine and allow it to idle.
2. Apply light, steady pressure to the brake pedal. Observe both the brake pedal feel and travel.
3. Release the brakes and turn OFF the ignition.
4. If the brake pedal apply felt spongy, but the brake pedal travel was not excessive, perform the following steps:
    1. Inspect the brake system for external leaks. Refer to **Brake System External Leak Inspection** .
    2. Pressure bleed the brake system in order to purge any air that may be trapped in the system. Refer to **Hydraulic Brake System Bleeding (Manual)** or **Hydraulic Brake System Bleeding (Pressure)** .

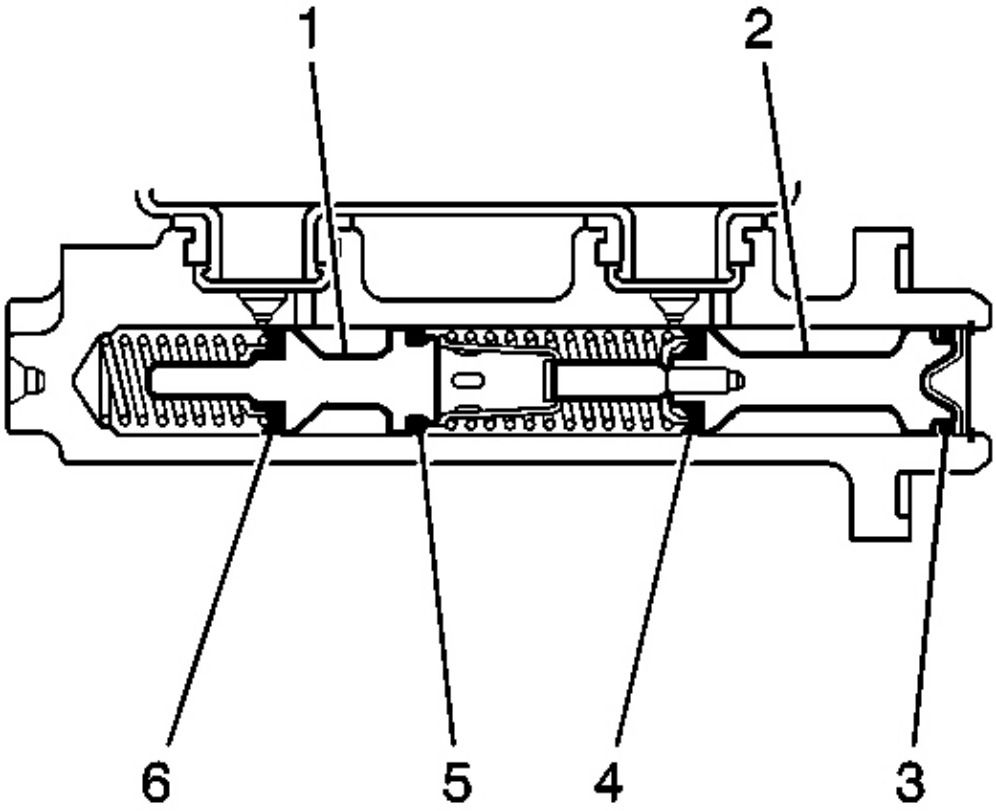

Fig. 4: Identifying Master Cylinder Components View
Courtesy of GENERAL MOTORS CORP.

5. If the brake pedal apply did not feel spongy, but the brake pedal travel was excessive, perform the following steps:
    1. Loosen the master cylinder-to-brake power booster mounting nuts.
    2. Carefully pull the master cylinder away from the brake power booster just enough to inspect the mounting surface of the master cylinder.
    3. Inspect the master cylinder mounting surface at the primary piston (2) for brake fluid leaks.
6. If the master cylinder exhibits any leakage around the primary piston (2), then the primary piston primary seal (4) and/or secondary seal (3) is leaking and the master cylinder requires overhaul or replacement.
7. If the master cylinder primary piston (2) does not exhibit any leakage, pressure bleed the brake system. Refer to **Hydraulic Brake System Bleeding (Manual)** or **Hydraulic Brake System Bleeding (Pressure)** .
8. If the brake pedal apply did not feel spongy, and the brake pedal travel was initially steady and not excessive, but then gradually fell, then the master cylinder requires overhaul or replacement due to an internal leak past the secondary piston (1) from the secondary piston primary seal (6) or secondary seal (5).
9. If the brake pedal apply did not feel spongy, and the brake pedal travel was initially steady and not excessive, then fell slightly, then became steady again, then the brake pressure modulator valve (BPMV) may be leaking internally, and may require replacement.

HYDRAULIC BRAKE COMPONENT OPERATION VISUAL INSPECTION

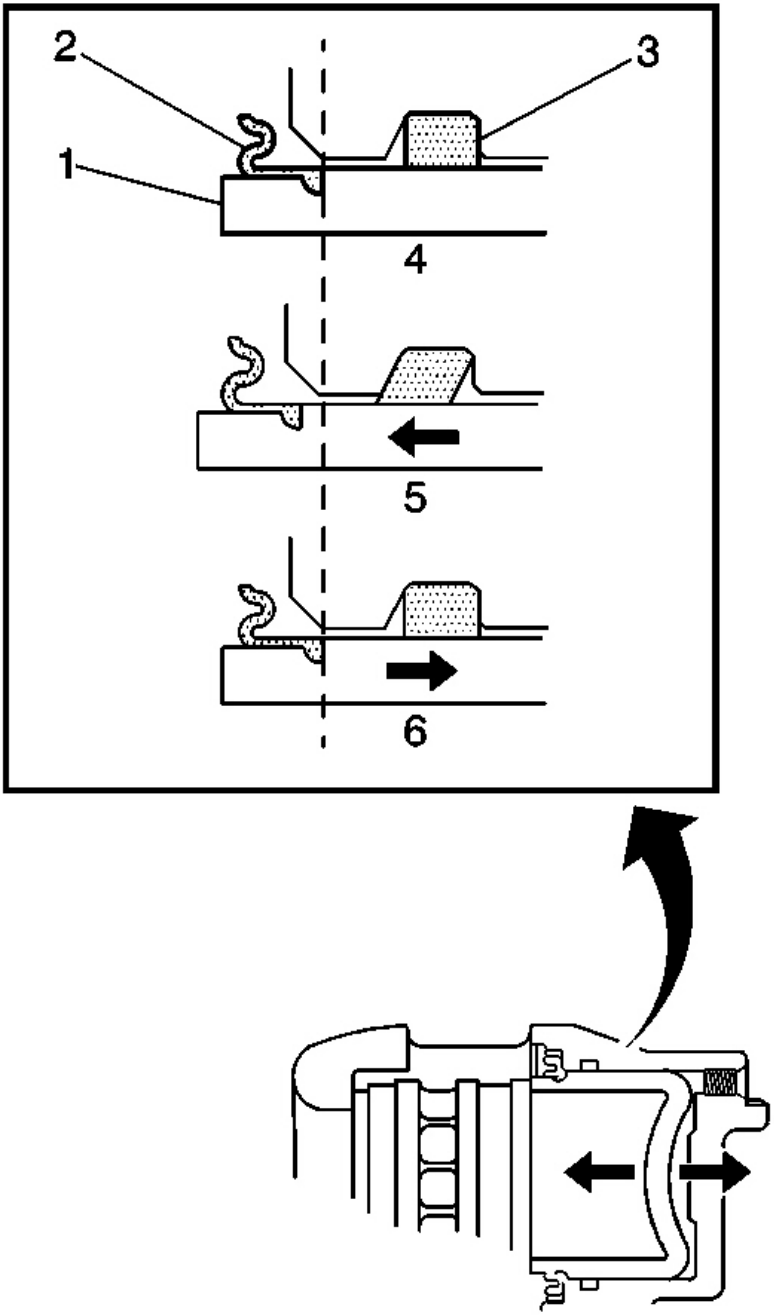

Fig. 5: Exploded View Of Caliper Piston Terminal Identification
Courtesy of GENERAL MOTORS CORP.

CAUTION: Refer to Brake Fluid Irritant Caution in Cautions and Notices.

NOTE: **Refer to Brake Fluid Effects on Paint and Electrical Components Notice in Cautions and Notices.**

1. With the tire and wheel assemblies removed and the brake rotors retained by wheel lug nuts, visually inspect the caliper piston dust boot (2) sealing area to ensure that there are no brake fluid leaks.
2. If any evidence of a brake fluid leak is present, the brake caliper requires overhaul or replacement.
3. While the brake system is at rest (4), observe the position of the caliper piston (1) in relation to the caliper housing.
4. Have an assistant apply and release the brake pedal several times while you observe the operation of the hydraulic brake caliper.
    1. Observe the caliper piston (1) for unrestricted and even movement during each apply of the brake system (5).
    2. Observe the caliper piston (1) for an unrestricted and even return motion during each release of the brake system (6).
5. If the caliper piston (1) did not exhibit unrestricted and even movement during brake system apply and/or release, the piston square seal (3) may be worn or damaged and the caliper may require overhaul or replacement.

BRAKE PIPE AND HOSE INSPECTION

CAUTION: Refer to Brake Fluid Irritant Caution in Cautions and Notices.

NOTE: **Refer to Brake Fluid Effects on Paint and Electrical Components Notice in Cautions and Notices.**

1. Visually inspect all of the brake pipes for the following conditions:
    - Kinks, improper routing, missing or damaged retainers
    - Leaking fittings, excessive corrosion
2. If any of the brake pipes exhibited any of the conditions listed, then the identified pipe, or pipes, require replacement.
3. Ensure that the vehicle axles are properly supported at ride height in order to maintain the proper relationship of the flexible brake hoses to the chassis.

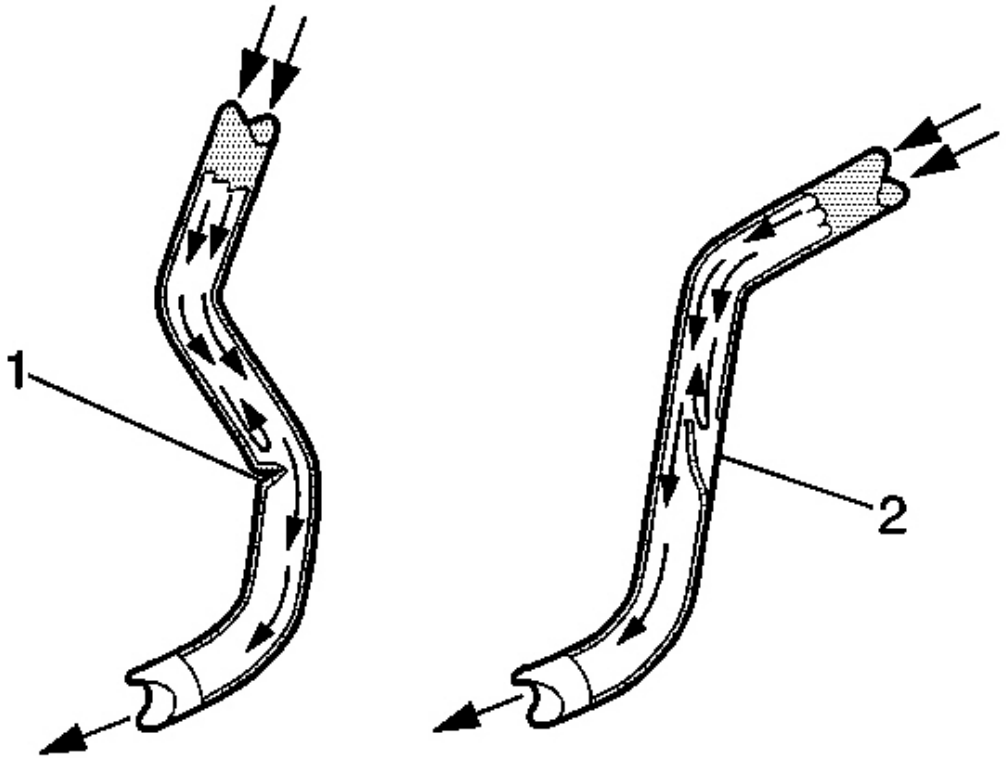

Fig. 6: Inspecting Brake Hoses Component View
Courtesy of GENERAL MOTORS CORP.

4. Visually inspect all of the flexible brake hoses for the following conditions:
   - Kinks (1), improper routing, twists, chafing, missing or damaged retainers
   - Leaking connections, cracking, dry-rot, blisters, bulges
5. If any of the flexible brake hoses exhibited any of the conditions listed, then the identified flexible brake hose, or hoses require replacement.
6. Squeeze the flexible brake hoses with firm finger pressure to check for soft spots (2), indicating an internal restriction. Check the entire length of each flexible brake hose.
7. If any of the flexible brake hoses were found to have soft spots (2), then the identified flexible brake hose, or hoses require replacement.

BRAKE PEDAL PUSHROD INSPECTION

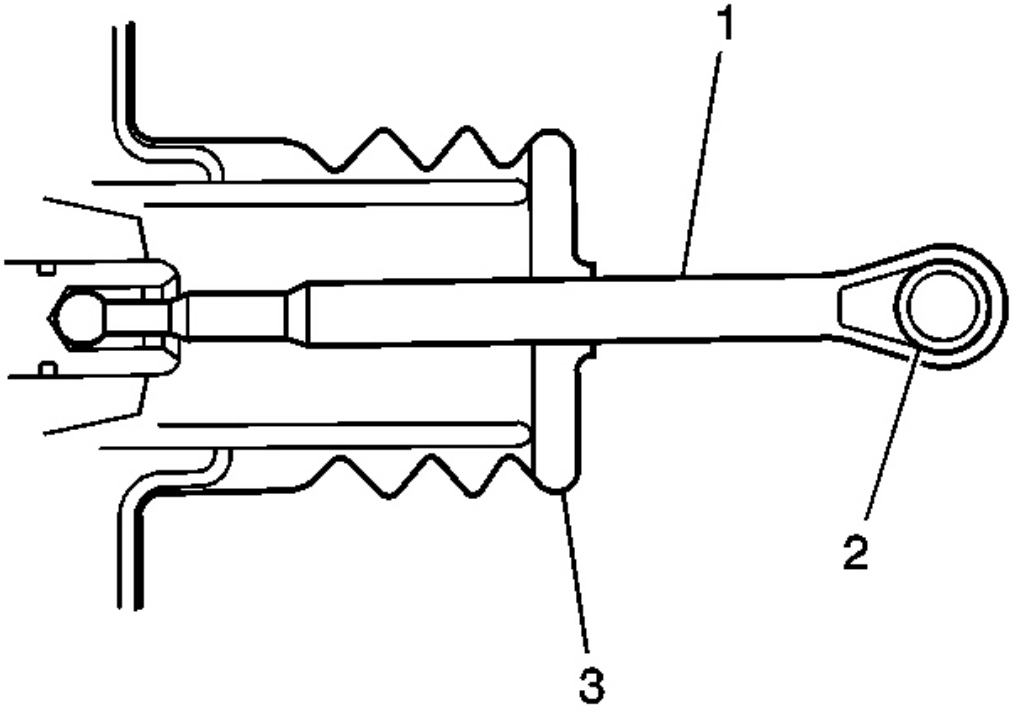

Fig. 7: Inspecting Brake Pedal Pushrod Component View
Courtesy of GENERAL MOTORS CORP.

1. Disconnect the brake pedal pushrod (1) from the brake pedal.
2. Inspect the brake pedal pushrod eyelet bushing (2), if equipped, for cracks and/or excessive wear.
3. Reposition the pedal pushrod boot (3) toward the front of the vehicle to expose as much of the pedal pushrod (1) as possible.
4. Inspect the brake pedal pushrod (1) for straightness.
5. If the brake pedal pushrod eyelet bushing (2) exhibited cracks and/or excessive wear, then the bushing requires replacement.
6. If the brake pedal pushrod (1) is not straight, then the pushrod requires replacement.
7. Return the pedal pushrod boot (3) to its original position on the pedal pushrod (1).
8. Connect the brake pedal pushrod (1) to the brake pedal.

REPAIR INSTRUCTIONS

MASTER CYLINDER RESERVOIR FILLING

CAUTION: Refer to Brake Fluid Irritant Caution in Cautions and Notices.

NOTE: When adding fluid to the brake master cylinder reservoir, use only Delco Supreme 11(R), GM P/N 12377967 (Canadian P/N 992667), or equivalent DOT-3 brake fluid from a clean, sealed brake fluid container. The use of any type of fluid other than the recommended type of brake fluid, may cause contamination which could result in damage to the internal rubber seals and/or rubber linings of hydraulic brake system components.

NOTE: Refer to Brake Fluid Effects on Paint and Electrical Components Notice in Cautions and Notices.

1. Visually inspect the brake fluid level through the brake master cylinder reservoir.
2. If the brake fluid level is at or below the half-full point during routine fluid checks, the brake system should be inspected for wear and possible brake fluid leaks.
3. If the brake fluid level is at or below the half-full point during routine fluid checks, and an inspection of the brake system did not reveal wear or brake fluid leaks, the brake fluid may be topped-off up to the maximum-fill level.
4. If brake system service was just completed, the brake fluid may be topped-off up to the maximum-fill level.
5. If the brake fluid level is above the half-full point, adding brake fluid is not recommended under normal conditions.
6. If brake fluid is to be added to the master cylinder reservoir, clean the outside of the reservoir on and around the reservoir cap prior to removing the cap and diaphragm. Use only Delco Supreme 11(R), GM P/N 12377967 (Canadian P/N 992667), or equivalent DOT-3 brake fluid from a clean, sealed brake fluid container.

MASTER CYLINDER RESERVOIR REPLACEMENT

Removal Procedure

CAUTION: Refer to Brake Fluid Irritant Caution in Cautions and Notices.

NOTE: Refer to Brake Fluid Effects on Paint and Electrical Components Notice in Cautions and Notices.

1. Remove the master cylinder from the vehicle. Refer to **Master Cylinder Replacement** .
2. Secure the master cylinder in a vise. Do not clamp the master cylinder body, secure only at the flange.

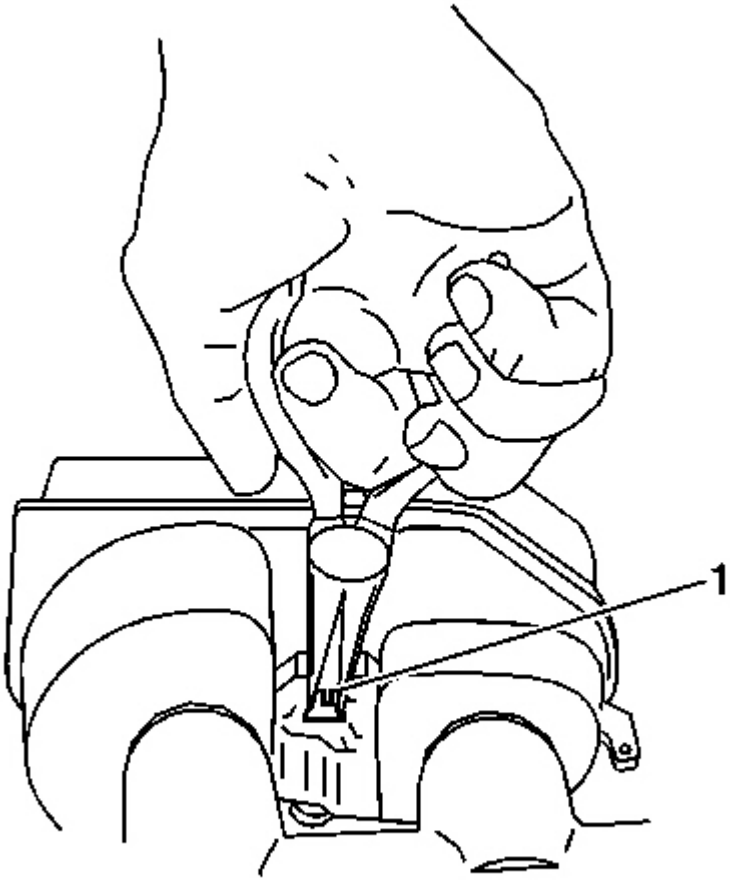

Fig. 8: Removing Brake Fluid Level Sensor Component View
Courtesy of GENERAL MOTORS CORP.

3. Remove the brake fluid level sensor. Using needle nose pliers, carefully depress the retaining tabs on the end of the brake fluid level sensor (1) and press the sensor through the reservoir to remove.

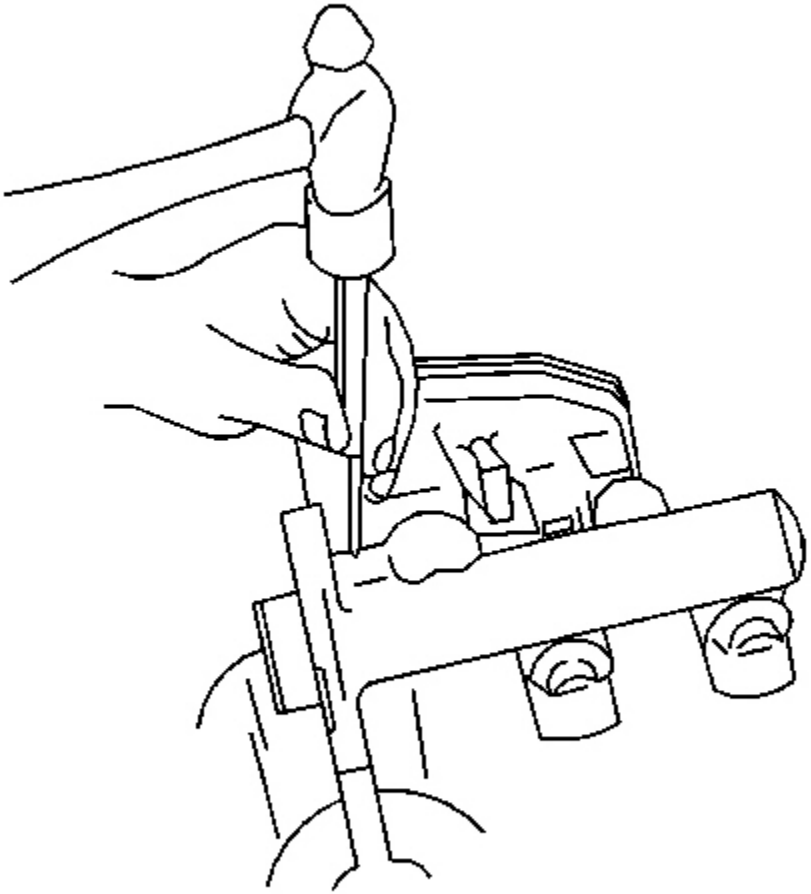

Fig. 9: Installing Reservoir Retaining Pins Component View
Courtesy of GENERAL MOTORS CORP.

4. Carefully tap out the reservoir retaining pins.
5. Remove the reservoir from the master cylinder by pulling the reservoir straight up and away from the cylinder.
6. Remove the seals from the master cylinder.

Installation Procedure

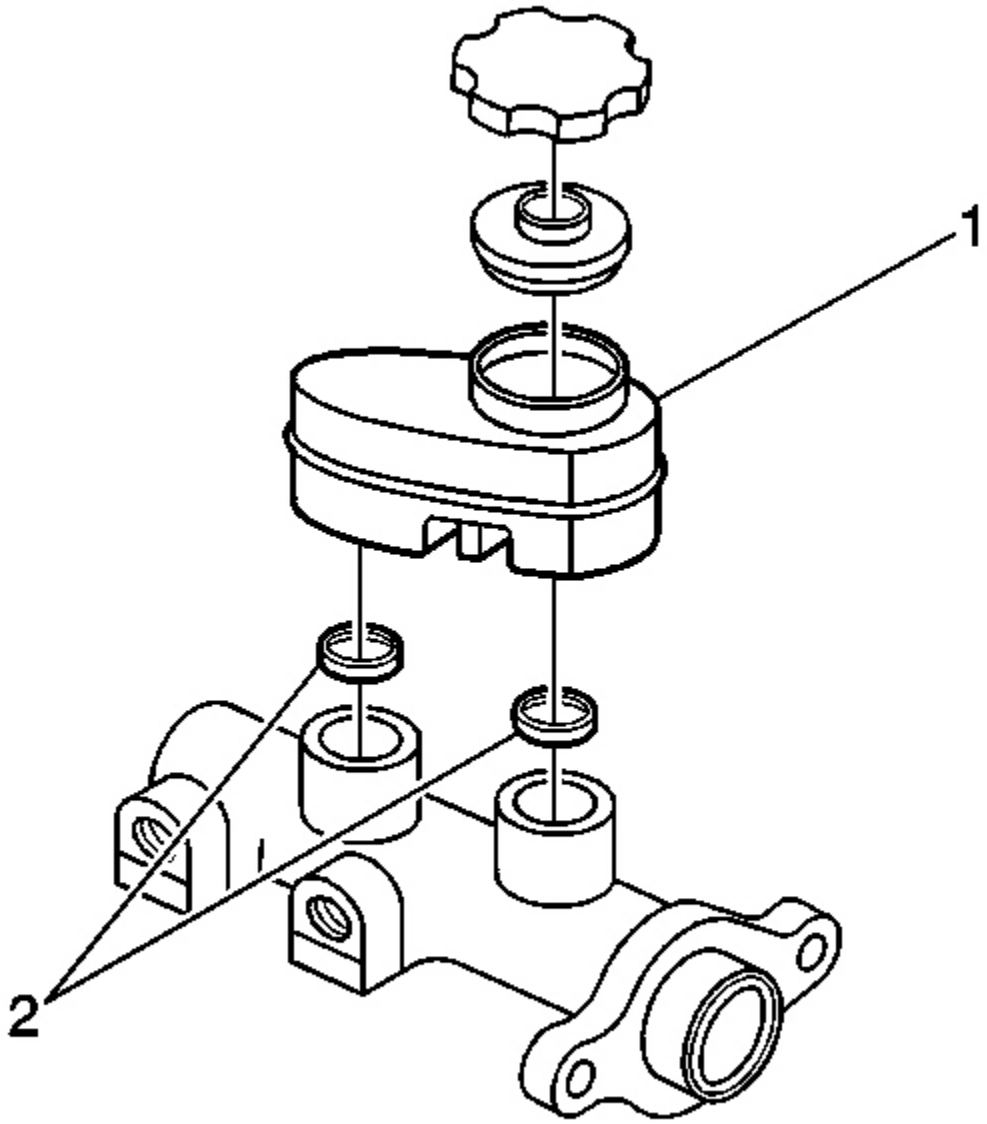

Fig. 10: Reservoir To Master Cylinder
Courtesy of GENERAL MOTORS CORP.

1. Inspect the reservoir (1) for cracks or deformation. If cracks or deformities are found, replace the reservoir.
2. Clean the reservoir with denatured alcohol, or equivalent.
3. Dry the reservoir with non-lubricated, filtered air.

4. Lubricate the new seals (2) and the outer surface area of the reservoir-to-housing barrels with Delco Supreme 11(R) GM P/N 12377967 (Canadian P/N 992667), or equivalent DOT-3 brake fluid from a clean, sealed brake fluid container.
5. Install the lubricated seals (2); make sure they are fully seated.
6. Install the reservoir (1) to the master cylinder by pressing the reservoir straight down on the master cylinder until the pin holes are aligned.

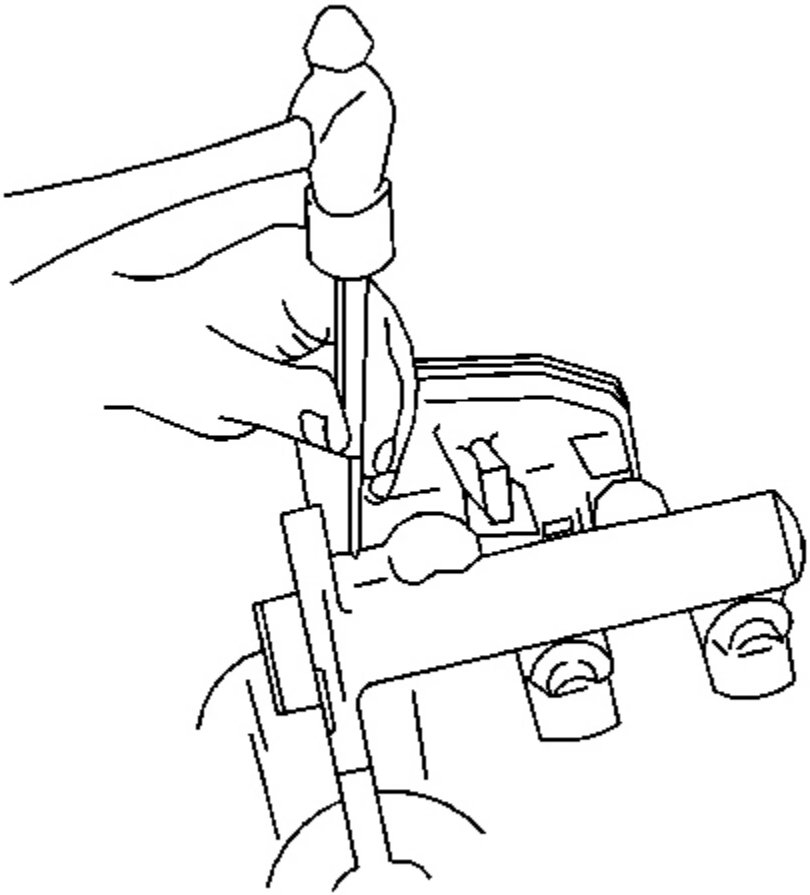

Fig. 11: Installing Reservoir Retaining Pins
Courtesy of GENERAL MOTORS CORP.

7. Carefully tap the reservoir retaining pins into place to secure the reservoir.
8. Place the brake fluid level sensor into the reservoir, press into place to secure the sensor retaining tabs.

9. Remove the master cylinder from the vise.
10. Install master cylinder to the vehicle. Refer to **Master Cylinder Replacement** .

MASTER CYLINDER REPLACEMENT

Removal Procedure

CAUTION: Refer to Brake Fluid Irritant Caution in Cautions and Notices.

NOTE: Refer to Brake Fluid Effects on Paint and Electrical Components Notice in Cautions and Notices.

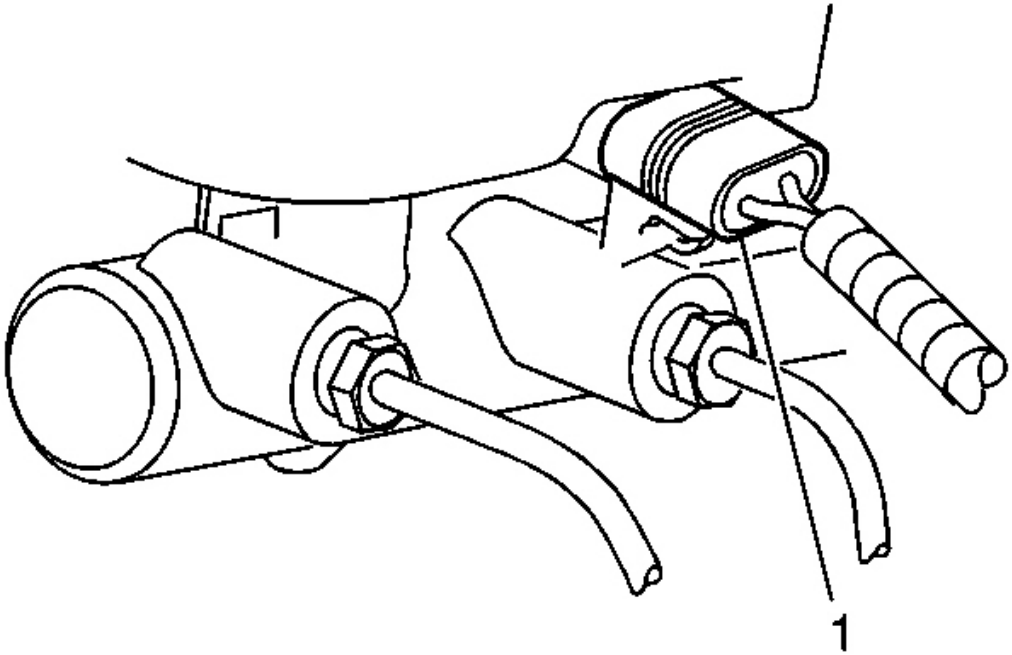

Fig. 12: View Of Master Cylinder
Courtesy of GENERAL MOTORS CORP.

1. Disconnect the electrical connector (1) from the brake fluid level sensor.

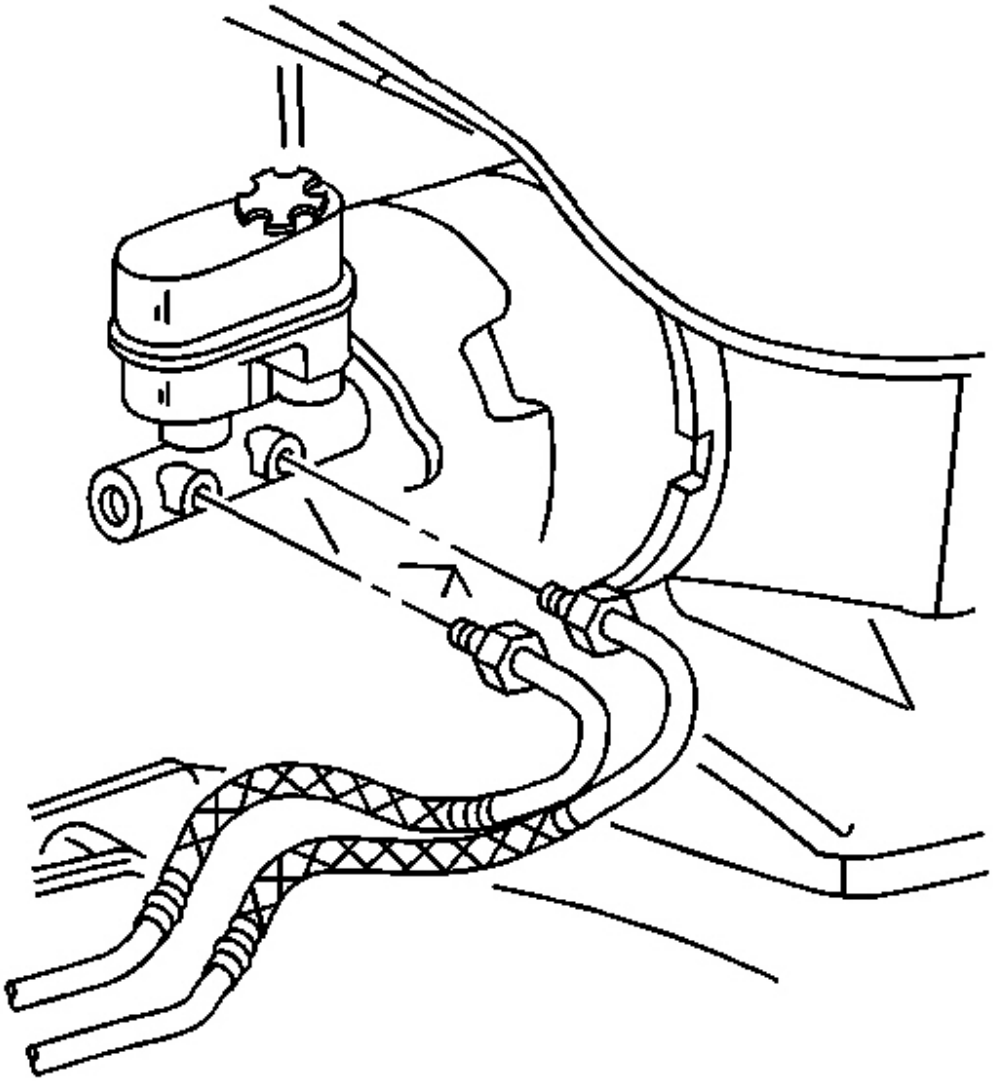

Fig. 13: Brake Pipes To Master Cylinder
Courtesy of GENERAL MOTORS CORP.

2. Disconnect the brake pipes from the master cylinder.

IMPORTANT: Install a rubber cap or plug to the exposed brake pipe fitting ends in order to prevent brake fluid loss and contamination.

3. Plug the open brake pipe ends.

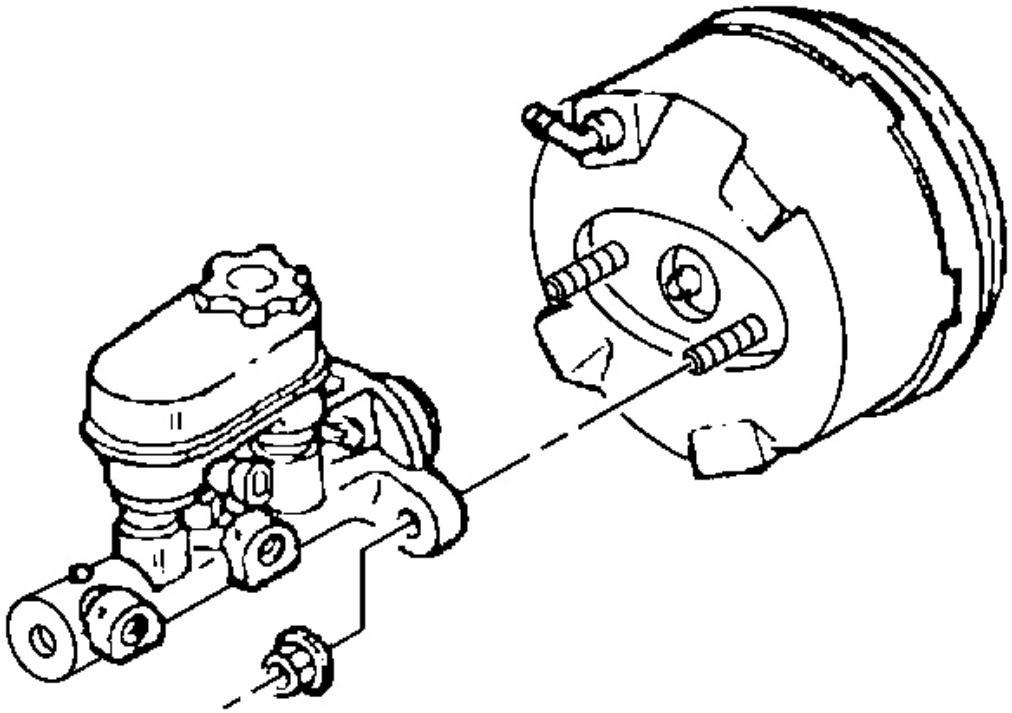

Fig. 14: Master Cylinder Reservoir At Brake Booster
Courtesy of GENERAL MOTORS CORP.

4. Remove master cylinder mounting nuts.
5. Remove the master cylinder from the vehicle.
6. Drain the master cylinder reservoir of all brake fluid.

Installation Procedure

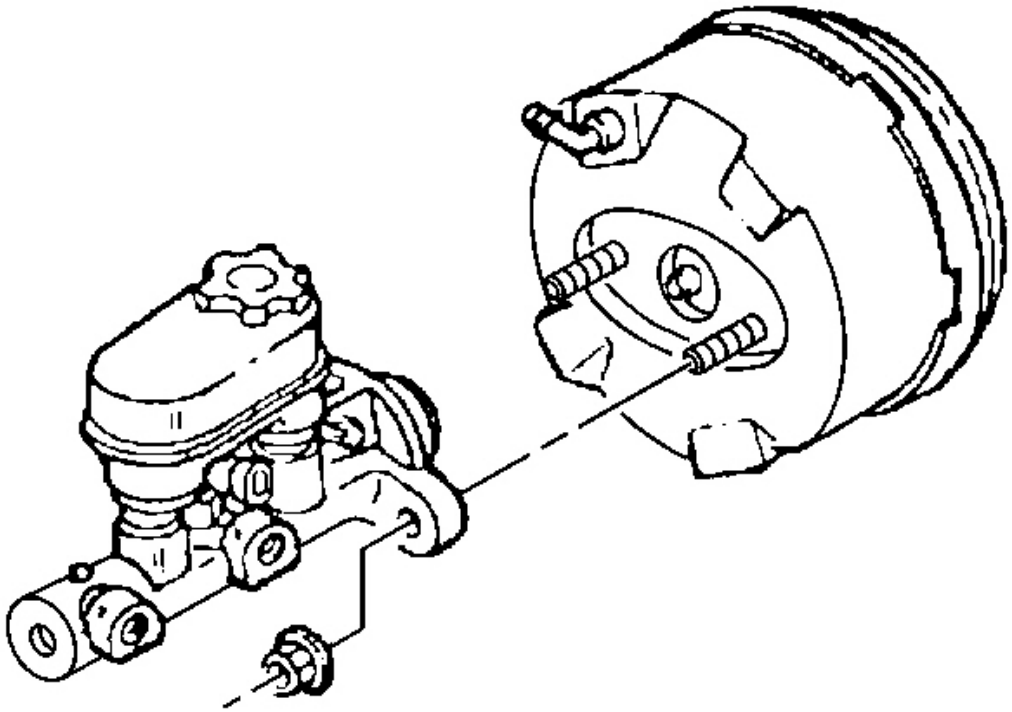

Fig. 15: Master Cylinder Reservoir At Brake Booster
Courtesy of GENERAL MOTORS CORP.

1. Bench bleed the master cylinder. Refer to **Master Cylinder Bench Bleeding** .
2. Install the master cylinder to the brake booster.

NOTE: **Refer to Fastener Notice in Cautions and Notices.**

3. Install the master cylinder mounting nuts.

   Tighten: Tighten the master cylinder mounting nuts to 29 N.m (21 lb ft).

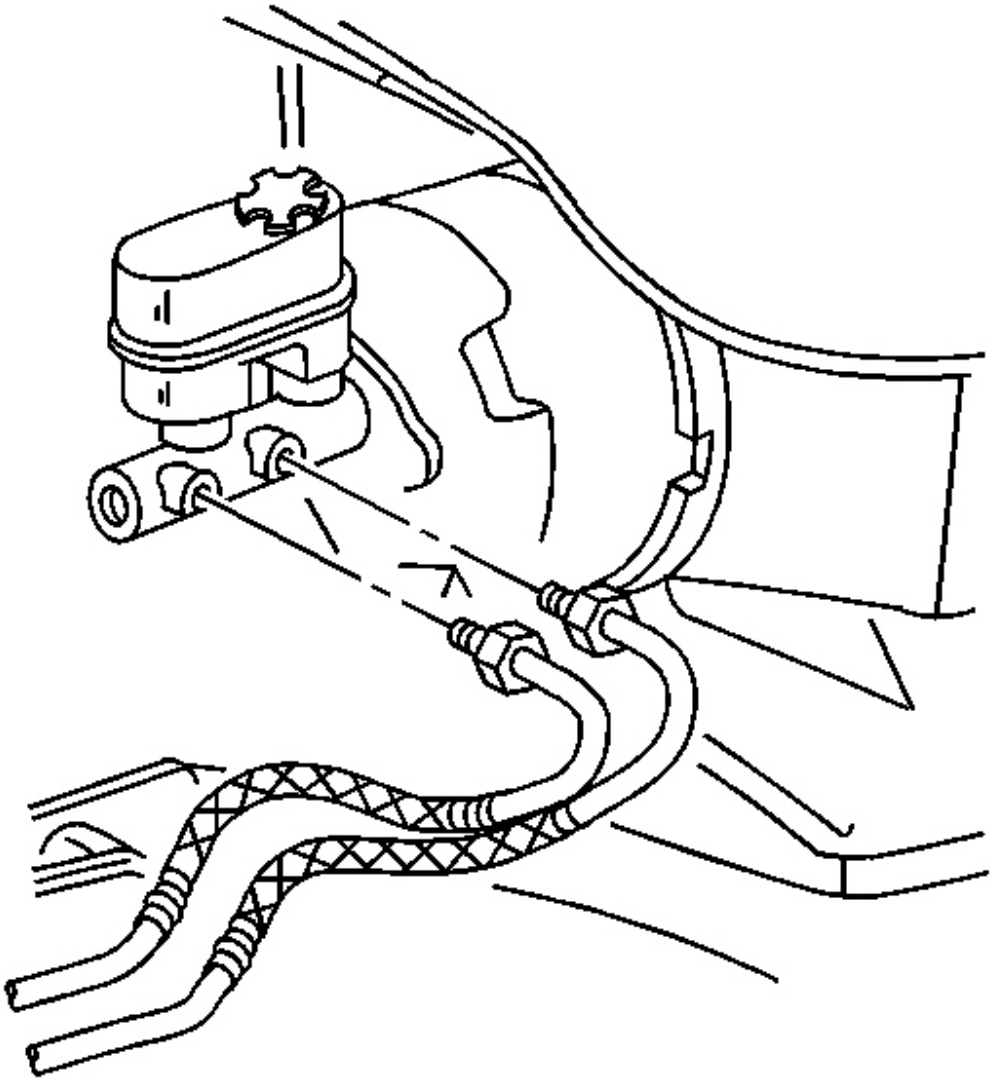

Fig. 16: Brake Pipes To Master Cylinder
Courtesy of GENERAL MOTORS CORP.

4. Remove the plugs from the brake pipes
5. Connect the brake pipes to the master cylinder.

Tighten: Tighten the brake pipe fittings at the master cylinder to 24 N.m (18 lb ft).

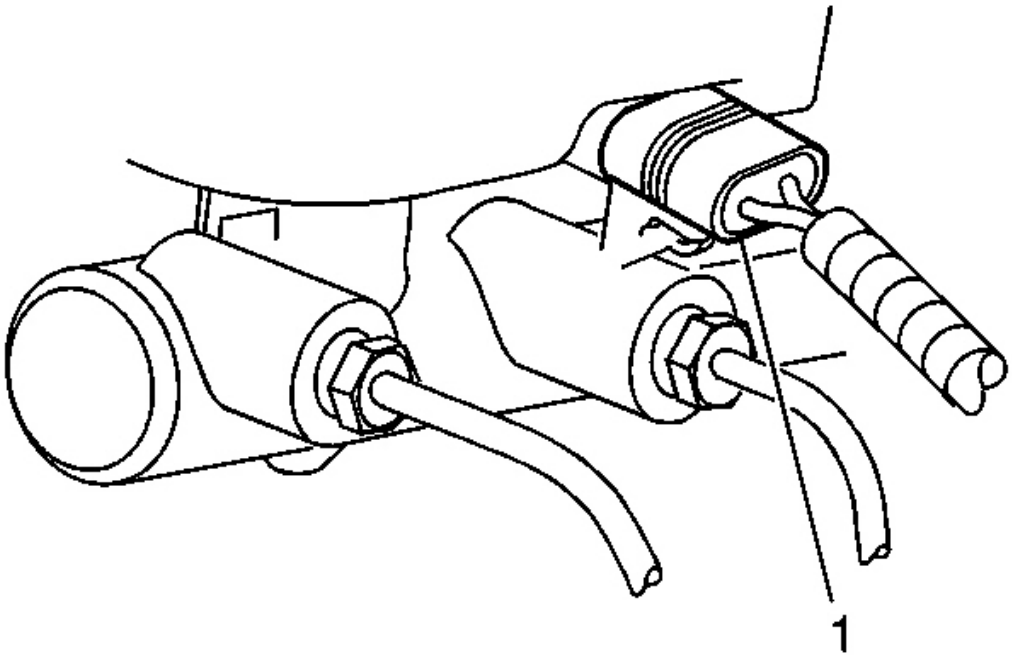

Fig. 17: View Of Master Cylinder
Courtesy of GENERAL MOTORS CORP.

6. Connect the electrical connector (1) to the brake fluid level sensor.
7. Bleed the hydraulic brake system. Refer to **Hydraulic Brake System Bleeding (Manual)** or **Hydraulic Brake System Bleeding (Pressure)** .

MASTER CYLINDER OVERHAUL

CAUTION: Refer to Brake Fluid Irritant Caution in Cautions and Notices.

NOTE: Refer to Brake Fluid Effects on Paint and Electrical Components Notice in Cautions and Notices.

Disassembly Procedure

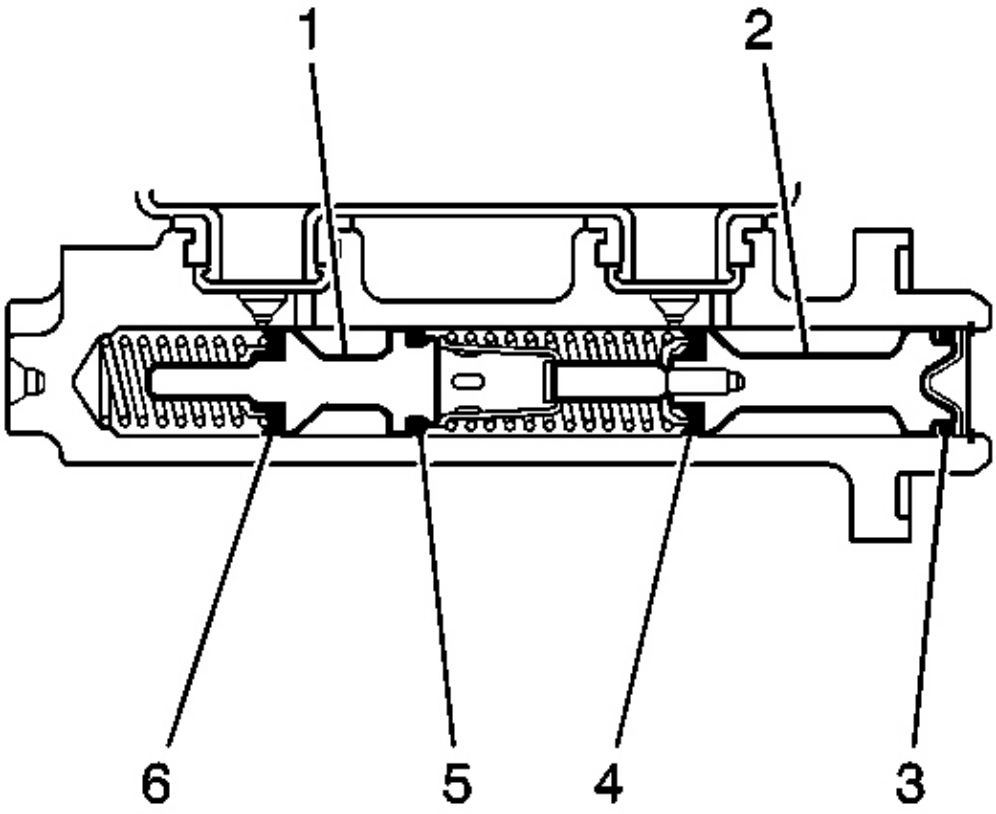

Fig. 18: Identifying Master Cylinder Components
Courtesy of GENERAL MOTORS CORP.

1. Remove the brake master cylinder from the vehicle. Refer to **Master Cylinder Replacement** .
2. Secure the mounting flange of the brake master cylinder in a bench vise so that the rear of the primary piston is accessible.
3. Clean the outside of the master cylinder reservoir on and around the reservoir cap prior to removing the cap and diaphragm.
4. Remove the reservoir cap and diaphragm from the reservoir.
5. Inspect the reservoir cap and diaphragm for the following conditions. If any of these conditions are present, replace the affected components.
   - Cuts or cracks
   - Nicks or deformation
6. Remove the master cylinder reservoir from the master cylinder. Refer to **Master Cylinder Reservoir Replacement** .

7. Using a smooth, round-ended tool, depress the primary piston (2) and remove the piston retainer.
8. Remove the primary piston assembly from the cylinder bore.
9. Plug the cylinder inlet ports and the rear outlet port. Apply low pressure, non-lubricated, filtered air into the front outlet port, in order the remove the secondary piston (1) with the primary (6) and secondary (5) seals, and the return spring.
10. Discard the primary piston assembly, the piston retainer, and the seals and seal retainer from the secondary piston.

Assembly Procedure

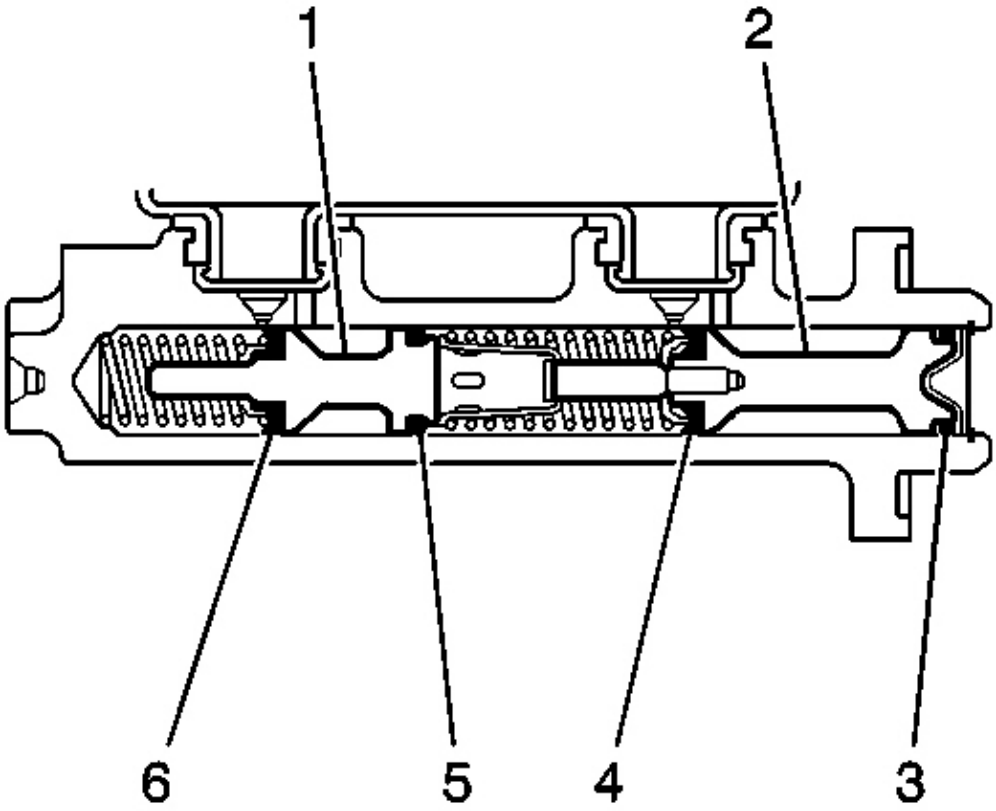

Fig. 19: Identifying Master Cylinder Components
Courtesy of GENERAL MOTORS CORP.

IMPORTANT: Do not use abrasives to clean the brake master cylinder bore.

1. Clean the interior and exterior of the master cylinder, the secondary piston (1), and the return spring in denatured alcohol, or equivalent.
2. Inspect the master cylinder bore, inlet and outlet ports, the secondary piston (1), and the return spring for cracks, scoring, pitting, and/or corrosion. Replace the master cylinder if any of these conditions exist.
3. Dry the master cylinder and the individual components with non-lubricated, filtered air.
4. Lubricate the master cylinder bore, the secondary piston (1), the return spring, and all of the individual overhaul components with Delco Supreme 11(R), GM P/N 12377967 (Canadian P/N 992667), or equivalent DOT-3 brake fluid from a clean, sealed brake fluid container.
5. Assemble the lubricated, new primary seal (6) and retainer, and new secondary seal (5) onto the secondary piston.
6. Install the lubricated return spring and secondary piston assembly (1) into the cylinder bore.
7. Install the lubricated, new primary piston assembly (2) into the cylinder bore.
8. Using a smooth, round-ended tool, depress the primary piston (2) and install the new piston retainer.
9. Install the master cylinder reservoir to the master cylinder. Refer to **Master Cylinder Reservoir Replacement** .
10. Install the reservoir cap and diaphragm to the reservoir.
11. Install the master cylinder to the vehicle. Refer to **Master Cylinder Replacement** .

MASTER CYLINDER BENCH BLEEDING

CAUTION: Refer to Brake Fluid Irritant Caution in Cautions and Notices.

NOTE: Refer to Brake Fluid Effects on Paint and Electrical Components Notice in Cautions and Notices.

NOTE: When adding fluid to the brake master cylinder reservoir, use only Delco Supreme 11(R), GM P/N 12377967 (Canadian P/N 992667), or equivalent DOT-3 brake fluid from a clean, sealed brake fluid container. The use of any type of fluid other than the recommended type of brake fluid, may cause contamination which could result in damage to the internal rubber seals and/or rubber linings of hydraulic brake system components.

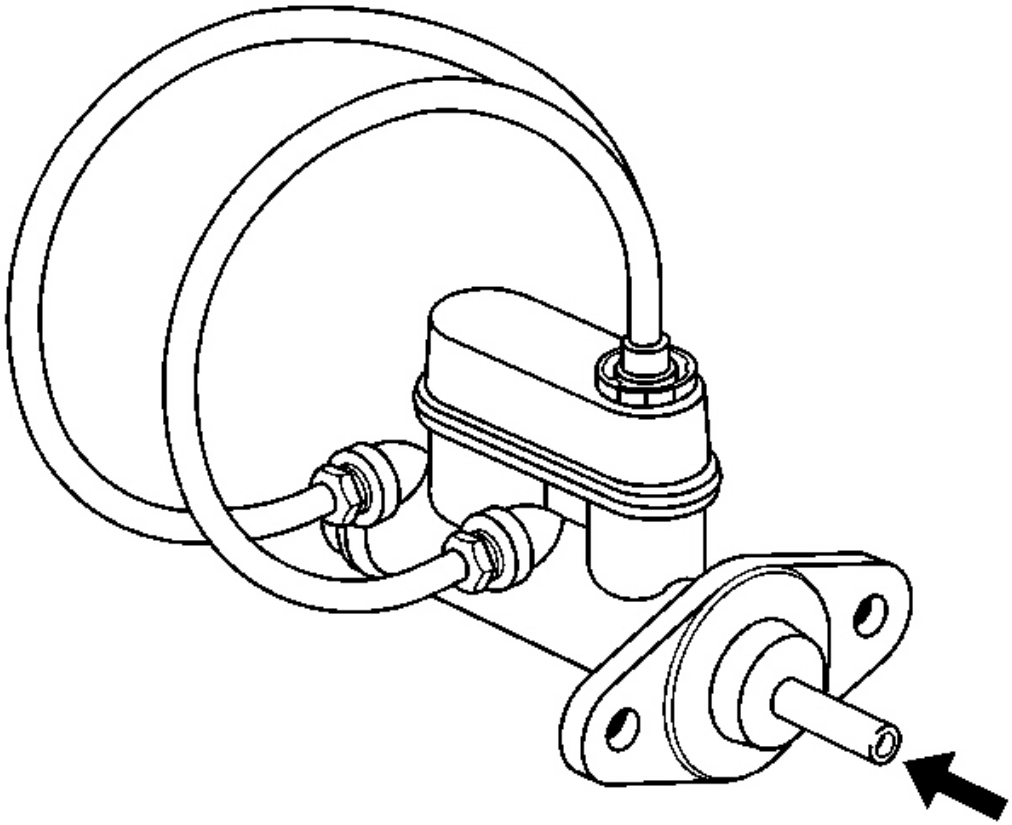

Fig. 20: Bleeding Master Cylinder
Courtesy of GENERAL MOTORS CORP.

1. Secure the mounting flange of the brake master cylinder in a bench vise so that the rear of the primary piston is accessible.
2. Remove the master cylinder reservoir cap and diaphragm.
3. Install suitable fittings to the master cylinder ports that match the type of flare seat required and also provide for hose attachment.
4. Install transparent hoses to the fittings installed to the master cylinder ports, then route the hoses into the master cylinder reservoir.
5. Fill the master cylinder reservoir to at least the half-way point with Delco Supreme 11(R), GM P/N 12377967 (Canadian P/N 992667), or equivalent DOT-3 brake fluid from a clean, sealed brake fluid container.
6. Ensure that the ends of the transparent hoses running into the master cylinder reservoir are fully submerged in the brake fluid.
7. Using a smooth, round-ended tool, depress and release the primary piston as far as it will travel, a depth

of about 25 mm (1 in), several times. Observe the flow of fluid coming from the ports.

As air is bled from the primary and secondary pistons, the effort required to depress the primary piston will increase and the amount of travel will decrease.

8. Continue to depress and release the primary piston until fluid flows freely from the ports with no evidence of air bubbles.
9. Remove the transparent hoses from the master cylinder reservoir.
10. Install the master cylinder reservoir cap and diaphragm.
11. Remove the fittings with the transparent hoses from the master cylinder ports. Wrap the master cylinder with a clean shop cloth to prevent brake fluid spills.
12. Remove the master cylinder from the vise.

MASTER CYLINDER FLUID LEVEL SENSOR REPLACEMENT

Removal Procedure

1. Disconnect the electrical connector from brake fluid level sensor.

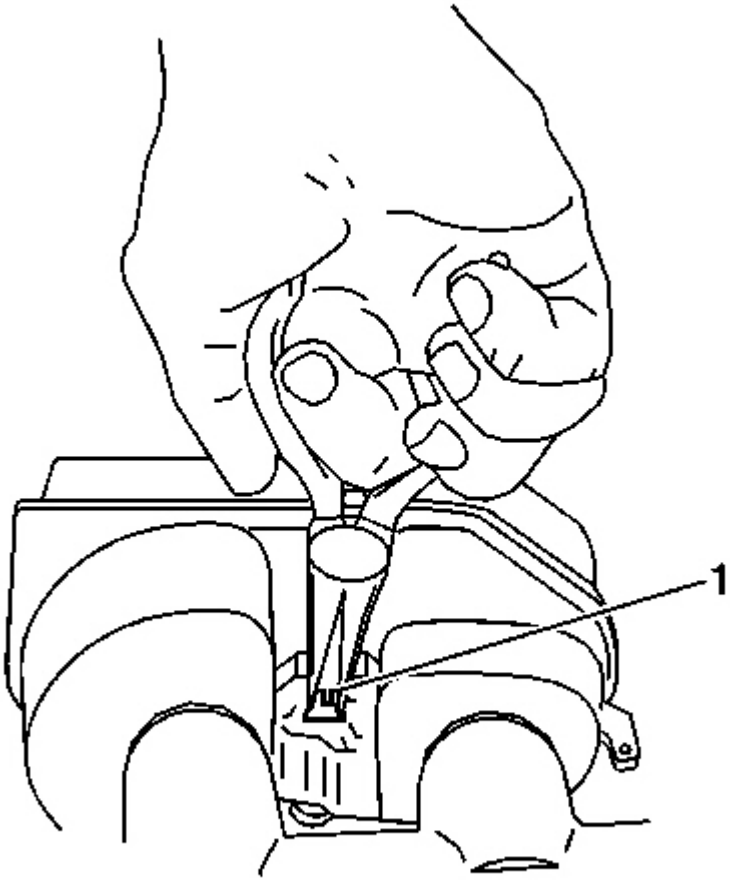

Fig. 21: Removing Brake Fluid Level Sensor
Courtesy of GENERAL MOTORS CORP.

2. Remove the brake fluid level sensor. Using needle nose pliers, carefully depress the retaining tabs on the end of the brake fluid level sensor (1) and press the sensor through the reservoir to remove.

Installation Procedure

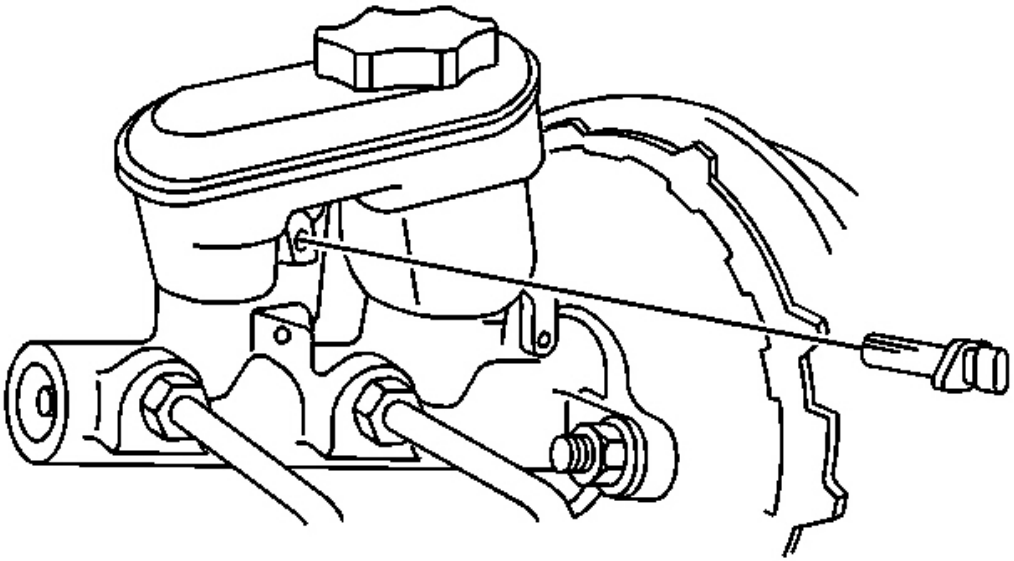

Fig. 22: Electrical Connector To Brake Fluid Level Sensor
Courtesy of GENERAL MOTORS CORP.

1. Place the brake fluid level sensor into the reservoir, press into place to secure the sensor retaining tabs.
2. Connect the electrical connector to the brake fluid level sensor.

BRAKE PEDAL ASSEMBLY REPLACEMENT

Removal Procedure

1. Remove the instrument panel knee bolster trim panel. Refer to **Trim Panel Replacement - Knee Bolster** in Instrument Panel, Gages, and Console.

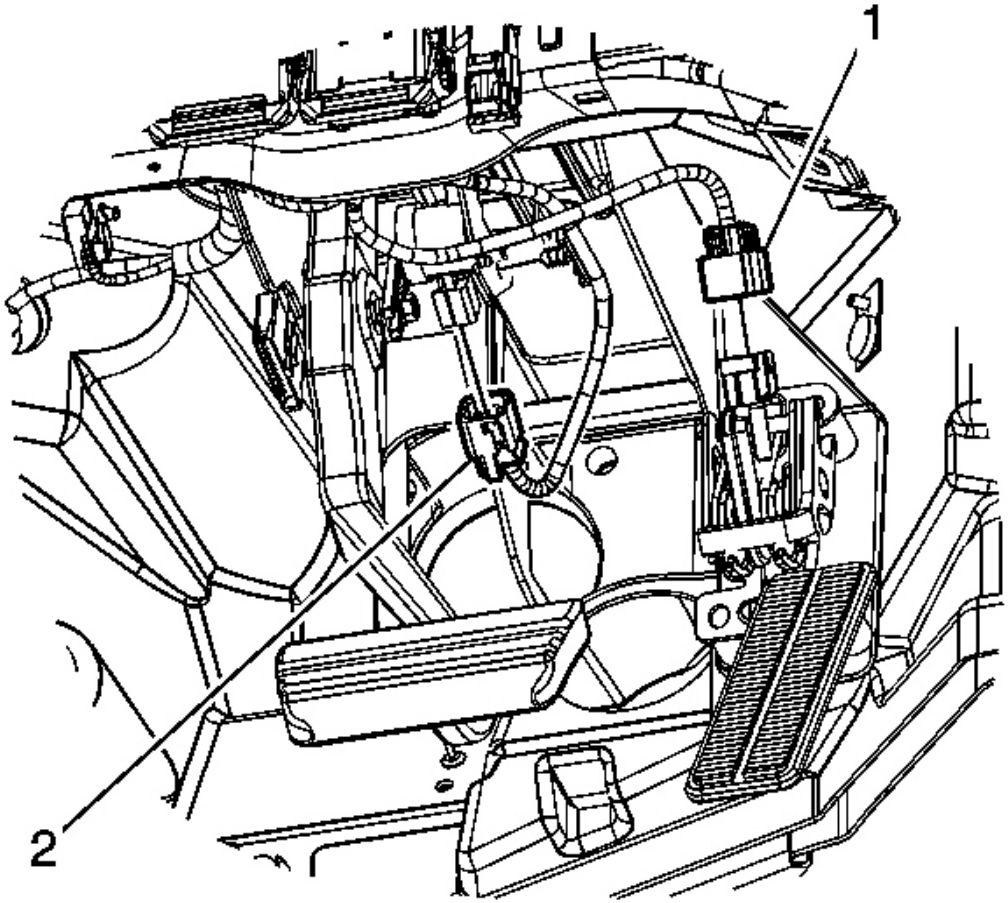

Fig. 23: Accelerator Pedal Position Sensor & Brake Apply Sensor
Courtesy of GENERAL MOTORS CORP.

2. Disconnect the accelerator pedal position sensor (1) and brake apply sensor (2).

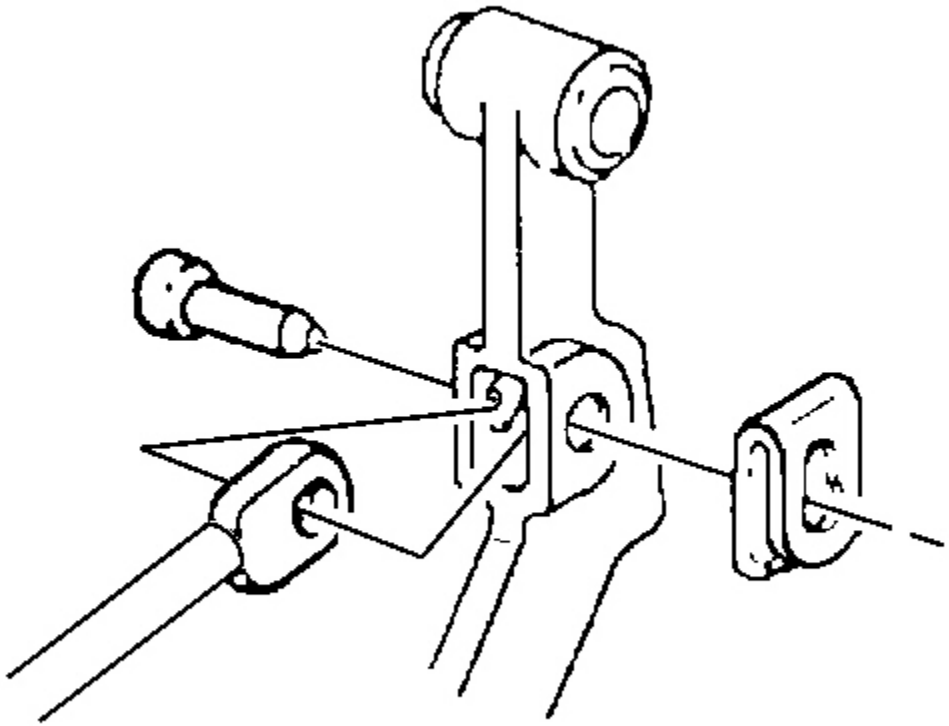

Fig. 24: Isolation Mat To Brake Pedal
Courtesy of GENERAL MOTORS CORP.

3. Remove the retainer, washer, brake booster pushrod, and brake pedal pin from the brake pedal.
4. Reposition the isolation mat by cutting a small slit in the mat.

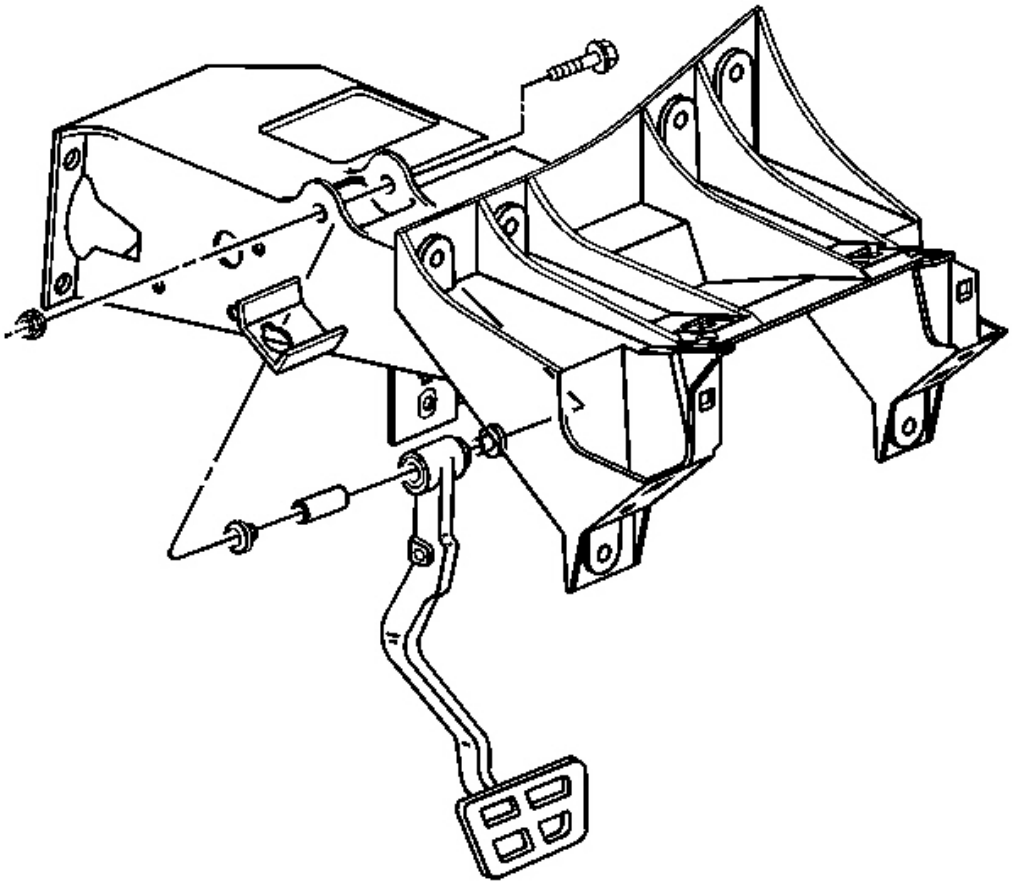

Fig. 25: Brake Pedal To Mounting Bracket
Courtesy of GENERAL MOTORS CORP.

5. Remove the brake pedal pivot bolt and nut.
6. Remove the brake pedal from the mounting bracket.

Installation Procedure

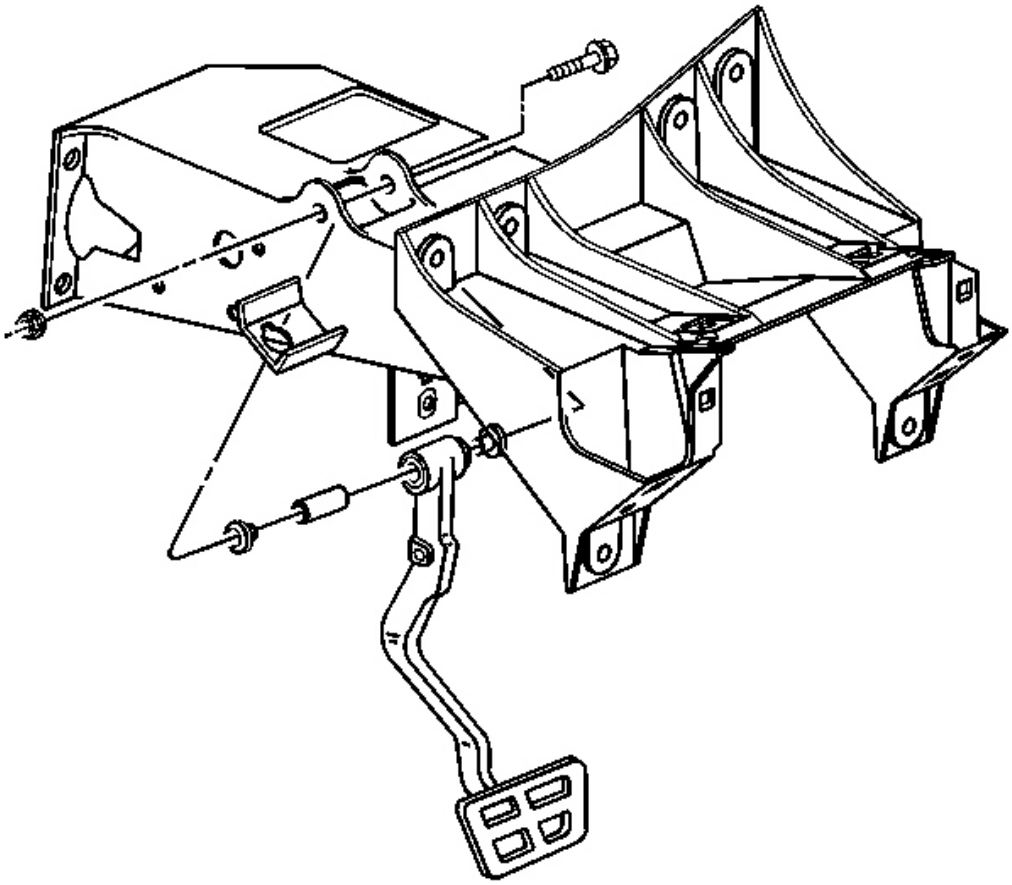

Fig. 26: Brake Pedal To Mounting Bracket
Courtesy of GENERAL MOTORS CORP.

1. Lubricate the bushings, pivot bolt, and all friction parts with high temperature silicone brake lubricant.
2. Install the brake pedal to the mounting bracket.

NOTE: **Refer to Fastener Notice in Cautions and Notices.**

3. Install the pivot bolt and nut.

   Tighten: Tighten the brake pedal pivot nut to 29 N.m (21 lb ft).

4. Reposition the dash isolation mat.

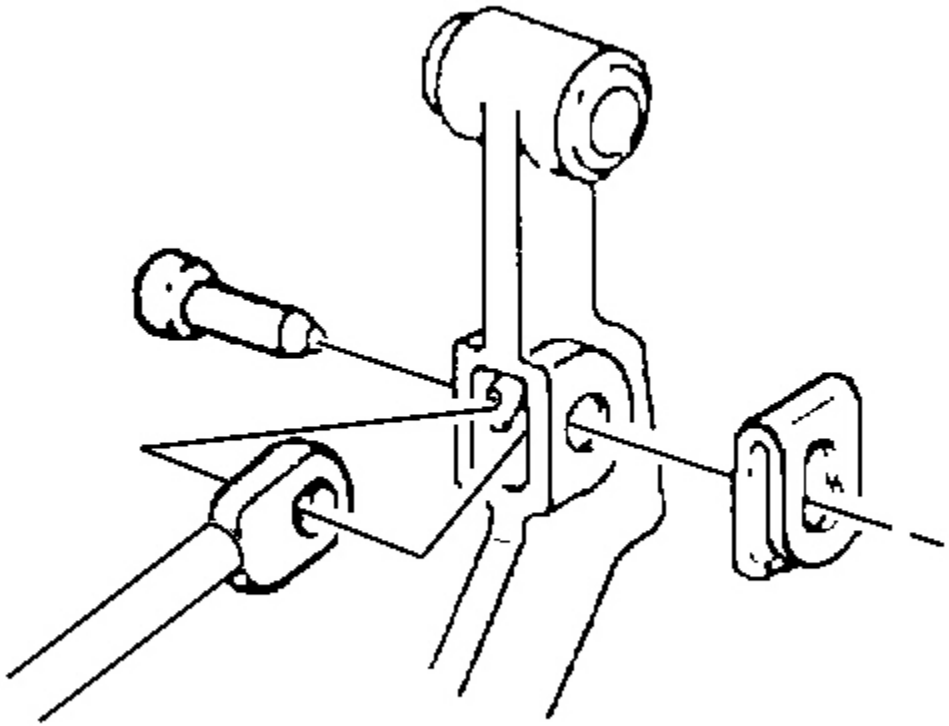

Fig. 27: Isolation Mat To Brake Pedal
Courtesy of GENERAL MOTORS CORP.

5. Install the retainer, washer, brake booster pushrod, and brake pedal pin to the brake pedal. Verify proper engagement of the retainer to the brake pedal pin by rotating the retainer.

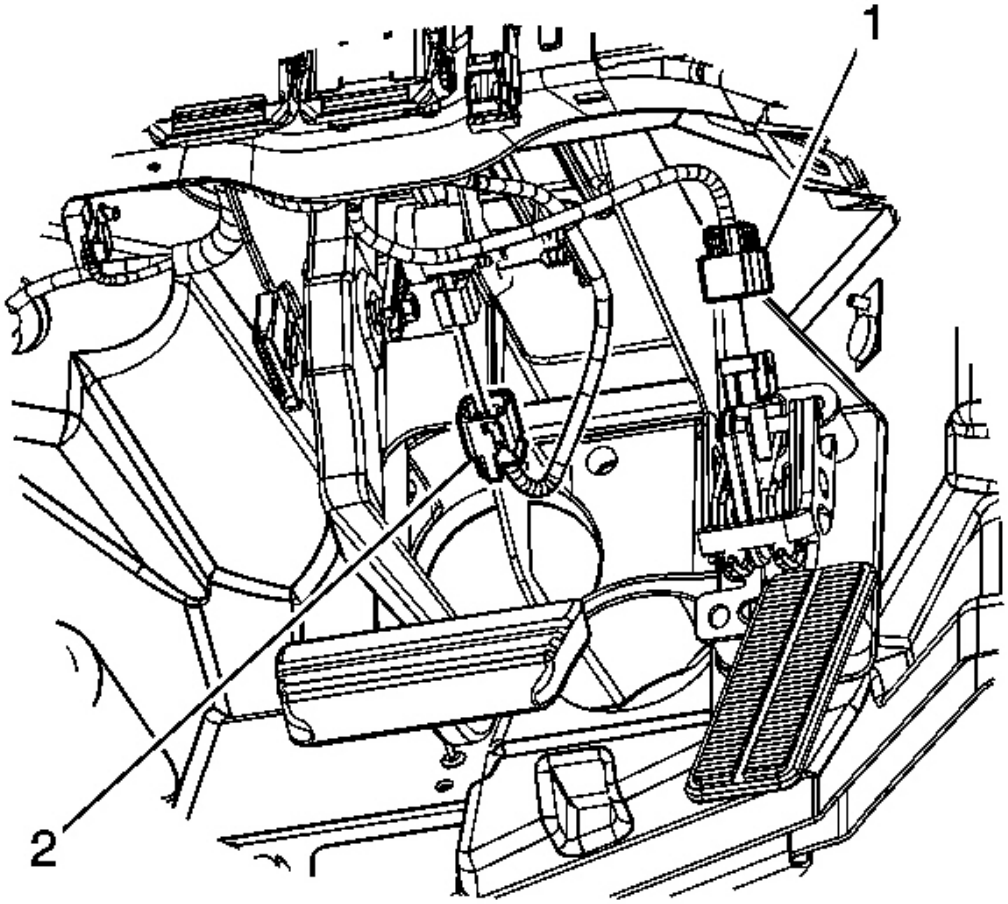

Fig. 28: Accelerator Pedal Position Sensor & Brake Apply Sensor
Courtesy of GENERAL MOTORS CORP.

6. Connect the accelerator pedal position sensor (1) and brake apply sensor (2).
7. Install the instrument panel knee bolster trim panel. Refer to **Trim Panel Replacement - Knee Bolster** in Instrument Panel, Gages, and Console.

BRAKE PIPE REPLACEMENT

Tools Required

J 45405 Pipe Flaring Tool Kit. See **Special Tools and Equipment** .

CAUTION: Refer to Brake Fluid Irritant Caution in Cautions and Notices.

CAUTION: **Always use double walled steel brake pipe when replacing brake pipes. The use of any other pipe is not recommended and may cause brake system failure. Carefully route and retain replacement brake pipes. Always use the correct fasteners and the original location for replacement brake pipes. Failure to properly route and retain brake pipes may cause damage to the brake pipes and cause brake system failure.**

NOTE: **Refer to Brake Fluid Effects on Paint and Electrical Components Notice in Cautions and Notices.**

IMPORTANT: **When servicing brake pipes, note the following:**

- **If sectioning brake pipe, use replacement pipe of the same type and outside diameter.**
- **Use fittings of the appropriate size and type.**
- **Only create flares of the same type or design as originally equipped on the vehicle.**

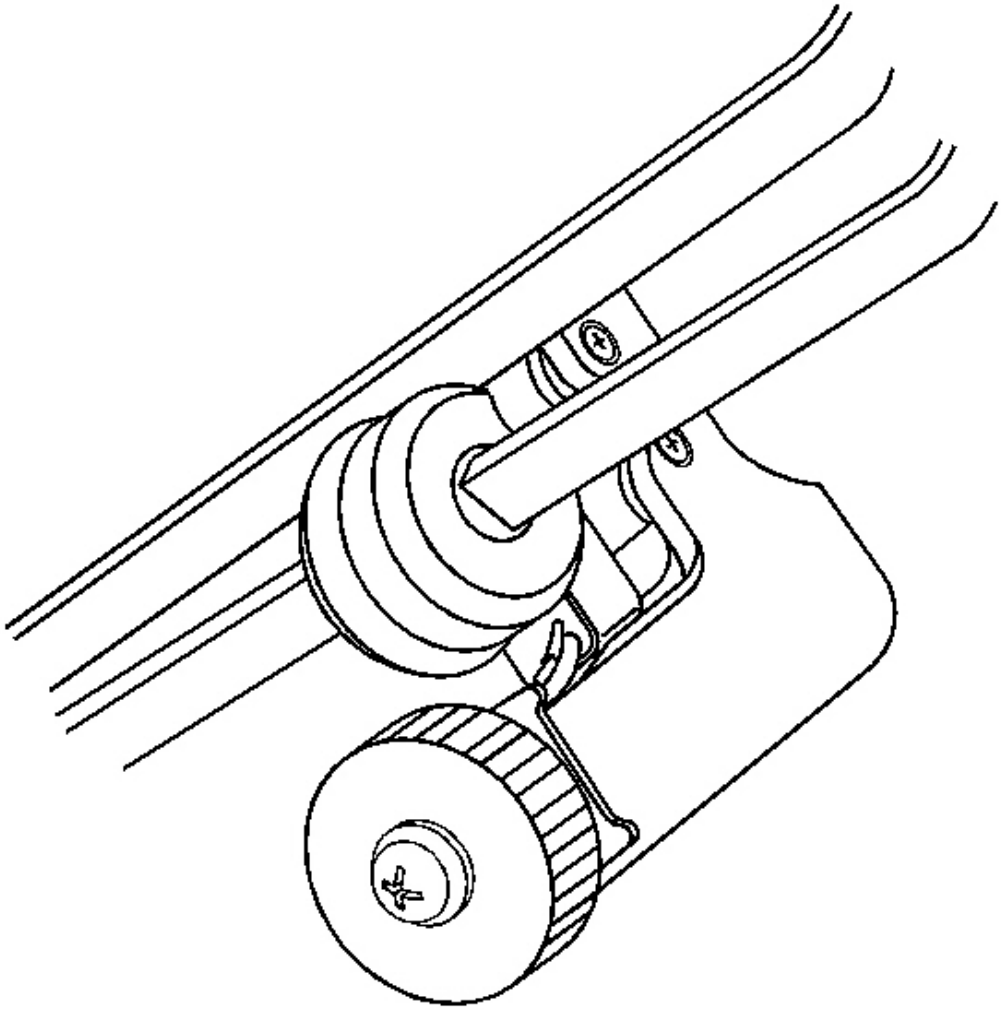

Fig. 29: Sectioning Brake Pipe Using Pipe Cutter
Courtesy of GENERAL MOTORS CORP.

1. Inspect the section of brake pipe to be replaced.
2. Release the brake pipe to be replaced from the retainers, as required.
3. Select an appropriate location to section the brake pipe, if necessary.
   - Allow adequate clearance in order to maneuver the **J 45405** . See **Special Tools and Equipment** .
   - Avoid sectioning the brake pipe at bends or mounting points.
4. Using a string or wire, measure the length of the pipe to be replaced including all pipe bends.
5. Add to the measurement taken the appropriate additional length required for each flare to be created.

Specification: 6.35 mm (0.250 in) for 4.76 mm (3/16 in) diameter pipe

IMPORTANT: Ensure that the brake pipe end to be flared is cut at a square, 90 degree angle to the pipe length.

6. Using the pipe cutter included in the **J 45405** , carefully cut the brake pipe squarely to the measured length. See **Special Tools and Equipment** .
7. Remove the sectioned brake pipe from the vehicle.
8. Select the appropriate size of brake pipe and tube nuts, as necessary. The brake pipe outside diameter determines brake pipe size.

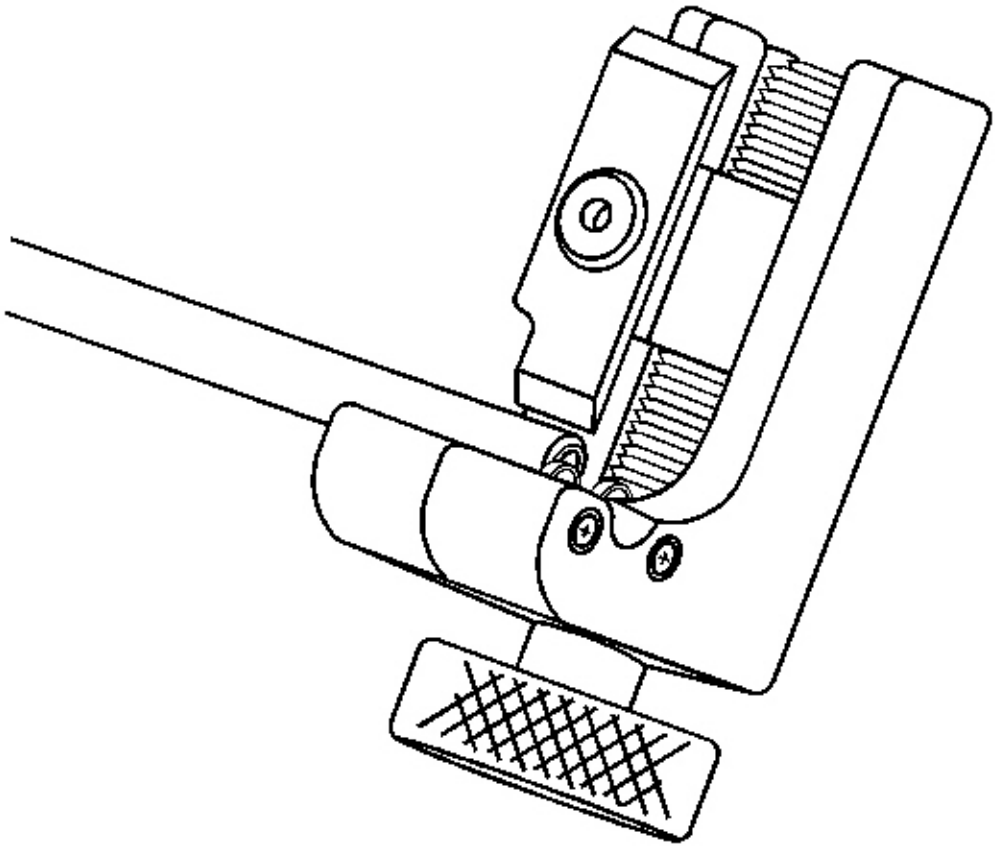

Fig. 30: Stripping Nylon Coating From Brake Pipe Ends
Courtesy of GENERAL MOTORS CORP.

9. Strip the nylon coating from the brake pipe ends to be flared, if necessary.

- Select the appropriate blade on the coating stripping tool included in the **J 45405** , by unthreading the blade block from the stripping tool and installing the block with the desired blade facing the tool rollers. See **Special Tools and Equipment** .

  Specification: 6.35 mm (0.250 in) blade for 4.76 mm (3/16 in) diameter pipe

- Insert the brake pipe end to be flared into the stripping tool to the depth of the ledge on the tool rollers.
- While holding the brake pipe firmly against the stripping tool roller ledges, rotate the thumbwheel of the tool until the blade contacts the brake pipe coated surface.

IMPORTANT: Do not gouge the metal surface of the brake pipe.

- Rotate the stripping tool in a clockwise direction, ensuring that the brake pipe end remains against the tool roller ledges.
- After each successive revolution of the stripping tool, carefully rotate the thumbwheel of the tool clockwise, in order to continue stripping the coating from the brake pipe until the metal pipe surface is exposed.
- Loosen the thumbwheel of the tool and remove the brake pipe.

IMPORTANT: Ensure that all loose remnants of the nylon coating have been removed from the brake pipe.

- Inspect the stripped end of the brake pipe to ensure that the proper amount of coating has been removed.

  Specification: 6.35 mm (0.250 in) for 4.76 mm (3/16 in) diameter pipe

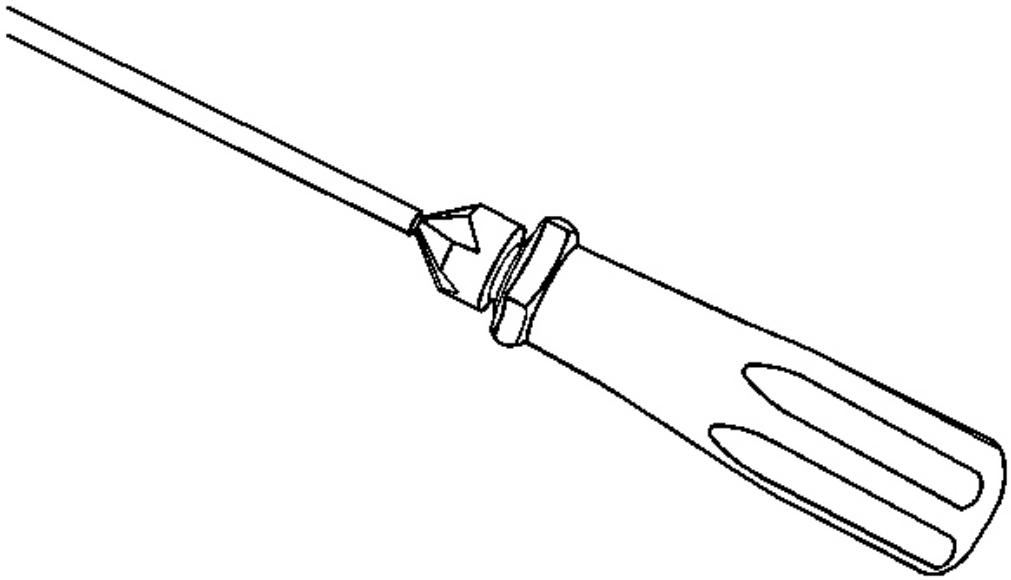

Fig. 31: Chamfering Pipe Using De-Burring Tool
Courtesy of GENERAL MOTORS CORP.

10. Chamfer the inside and outside diameter of the pipe with the de-burring tool included in the **J 45405** . See **Special Tools and Equipment** .
11. Install the tube nuts on the brake pipe, noting their orientation.
12. Clean the brake pipe and the **J 45405** of lubricant, contaminants, and debris. See **Special Tools and Equipment** .

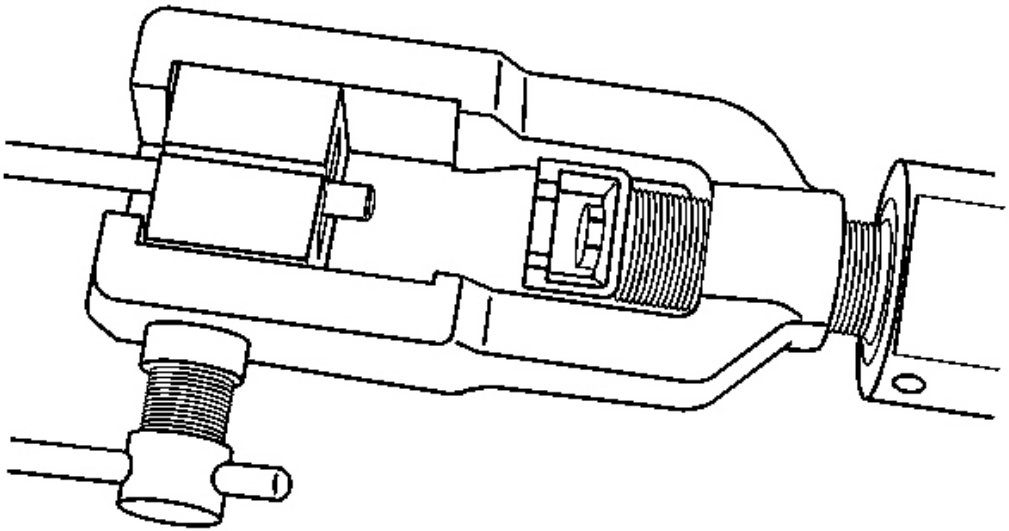

Fig. 32: View Of Pipe Flaring Tool
Courtesy of GENERAL MOTORS CORP.

13. Loosen the die clamping screw of the **J 45405** . See **Special Tools and Equipment** .
14. Select the corresponding die set and install the die halves into the die cage with the full, flat face of one die facing the clamping screw, and the counterbores of both dies facing the forming ram.

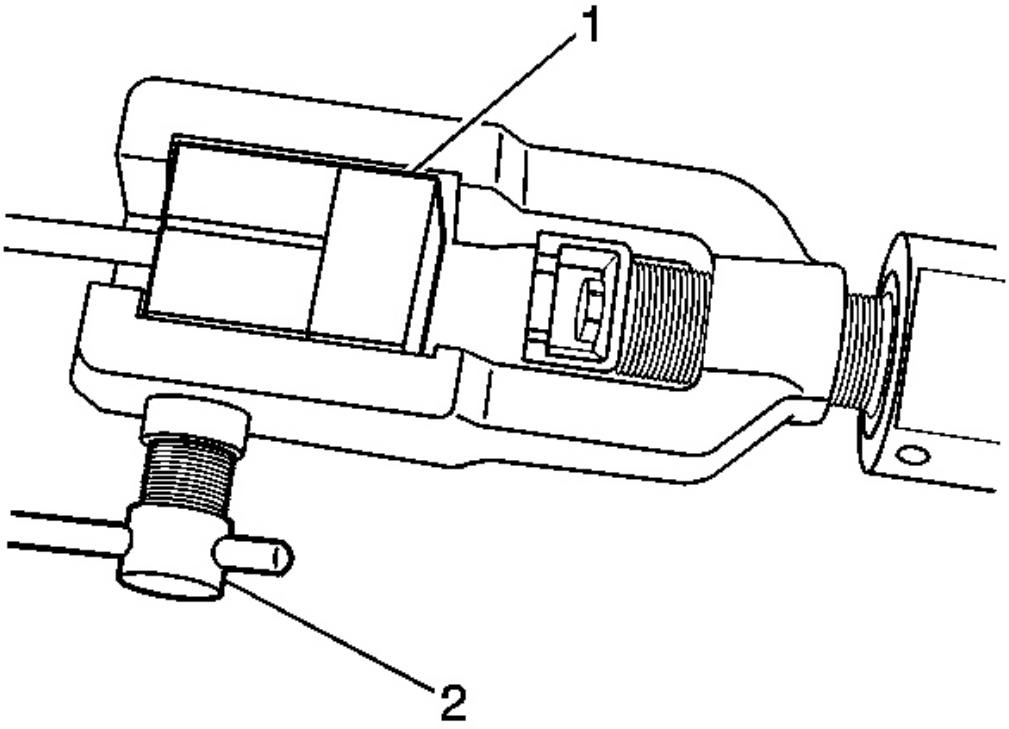

Fig. 33: View Of Pipe Flaring Tool J 45405
Courtesy of GENERAL MOTORS CORP.

15. Place the flat face of an unused die (1) against the die halves in the clamping cage and hold firmly against the counterbored face of the dies.
16. Insert the prepared end of the pipe to be flared through the back of the dies until the pipe is seated against the flat surface of the unused die (1).
17. Remove the unused die (1).
18. Ensure that the rear of both dies are seated firmly against the enclosed end of the die cage.
19. Firmly hand tighten the clamping screw (2) against the dies.

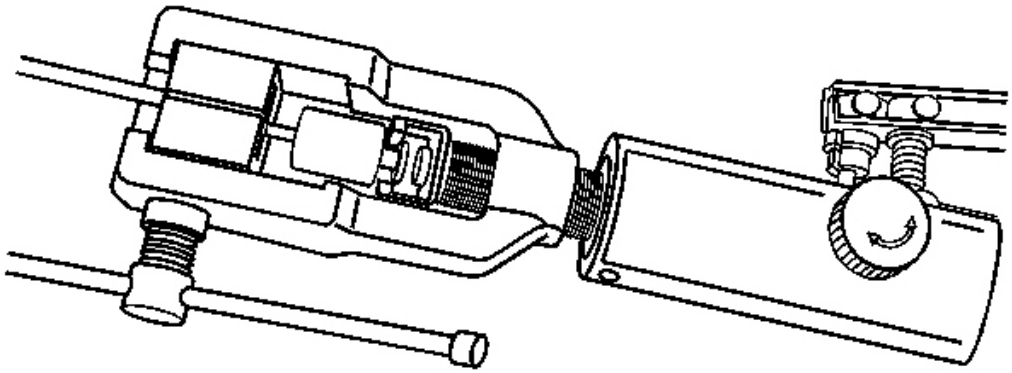

Fig. 34: Rotating J 45405 To Bottom Against Die Cage
Courtesy of GENERAL MOTORS CORP.

20. Select the appropriate forming mandrel and place into the forming ram.
21. Rotate the hydraulic fluid control valve clockwise to the closed position.
22. Rotate the body of the **J 45405** until it bottoms against the die cage. See **Special Tools and Equipment** .

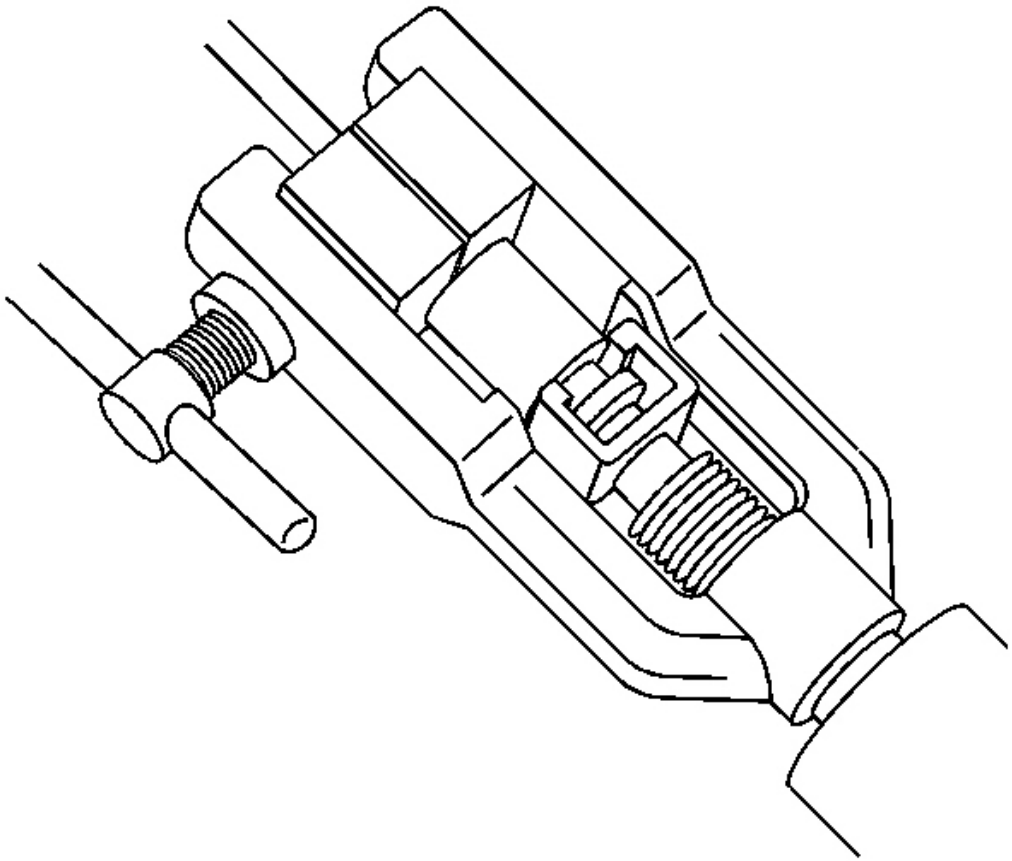

Fig. 35: View Of Pipe Flaring Tool
Courtesy of GENERAL MOTORS CORP.

23. While guiding the forming mandrel into the exposed end of pipe to be flared, operate the lever of the **J 45405** until the forming mandrel bottoms against the clamping dies. See **Special Tools and Equipment** .
24. Rotate the hydraulic fluid control valve counterclockwise to the open position to allow the hydraulic forming ram to retract.
25. Loosen the die clamping screw and remove the dies and pipe.
26. If necessary, lightly tap the dies until the die halves separate.

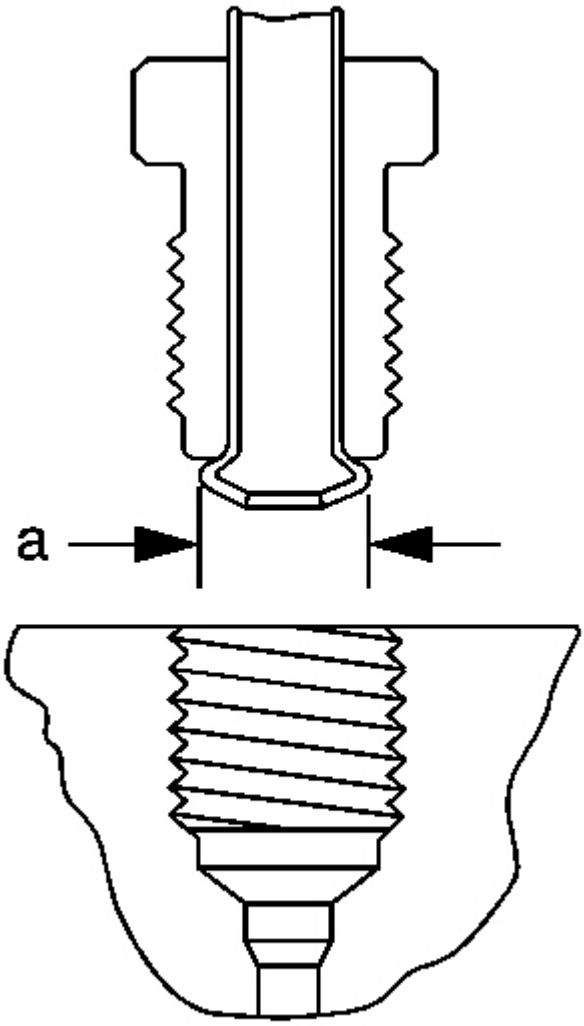

Fig. 36: Inspecting Brake Pipe Flare
Courtesy of GENERAL MOTORS CORP.

27. Inspect the brake pipe flare for correct shape and diameter (a).

    Specification: 7.10 mm (0.279 in) +/- 0.18 mm (0.007 in) flare diameter for 4.76 mm (3/16 in) diameter pipe

28. If necessary, using the removed section of pipe as a template, shape the new pipe with a suitable brake pipe bending tool.

IMPORTANT: When installing the pipe, maintain a clearance of 19 mm (3/4 in) from all moving or vibrating components.

29. Install the pipe to the vehicle with the appropriate brake pipe unions as required.
30. If previously released, secure the brake pipe to the retainers.
31. Bleed the hydraulic brake system. Refer to **Hydraulic Brake System Bleeding (Manual)** or **Hydraulic Brake System Bleeding (Pressure)** .
32. With the aid of an assistant, inspect the brake pipe flares for leaks by starting the engine and applying the brakes.

BRAKE HOSE REPLACEMENT - FRONT

Removal Procedure

CAUTION: Refer to Brake Fluid Irritant Caution in Cautions and Notices.

NOTE: Refer to Brake Fluid Effects on Paint and Electrical Components Notice in Cautions and Notices.

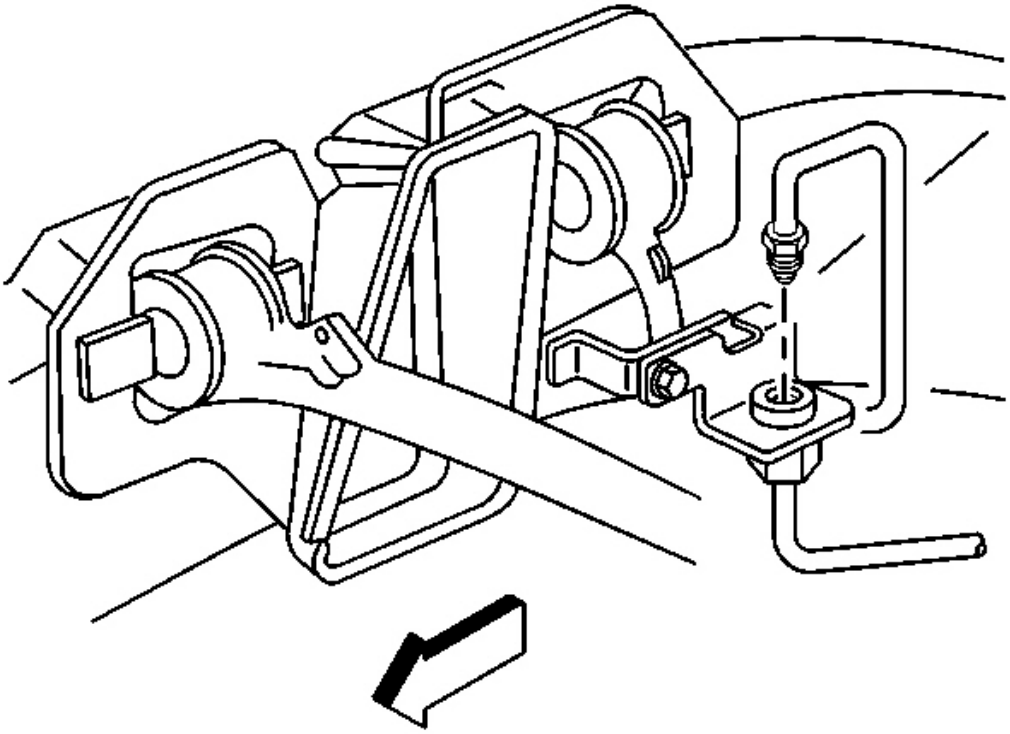

Fig. 37: Brake Pipe Fitting To Brake Hose
Courtesy of GENERAL MOTORS CORP.

1. Raise and suitably support the vehicle. Refer to **Lifting and Jacking the Vehicle** in General Information.
2. Remove the tire and wheel assembly. Refer to **Tire and Wheel Removal and Installation** in Tires and Wheels.
3. Clean all dirt and foreign material from the brake hose and brake pipe fitting.

IMPORTANT: Install a rubber cap or plug to the exposed brake pipe fitting end to prevent brake fluid loss and contamination.

4. Use a backup wrench on the hose fitting, disconnect the brake pipe fitting from the brake hose, then cap or plug the brake pipe fitting end.

   Do not bend the brake pipe or the bracket.

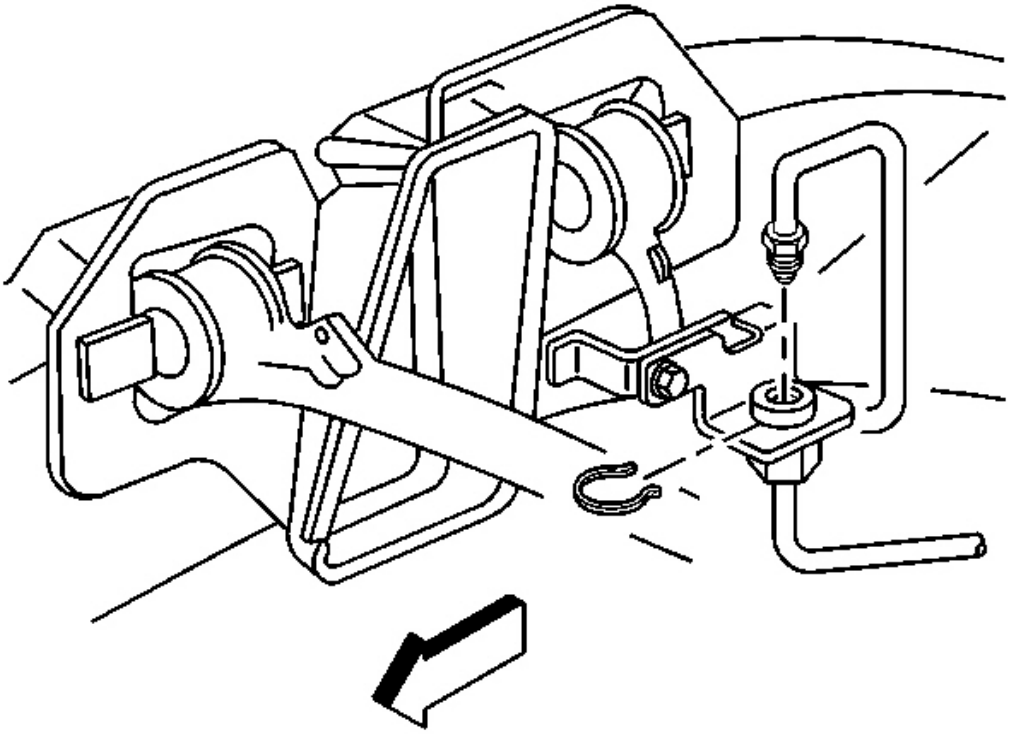

Fig. 38: Brake Hose To Hose Bracket
Courtesy of GENERAL MOTORS CORP.

5. Remove the brake hose retainer from the brake hose at the hose bracket.
6. Remove the brake hose from the hose bracket.

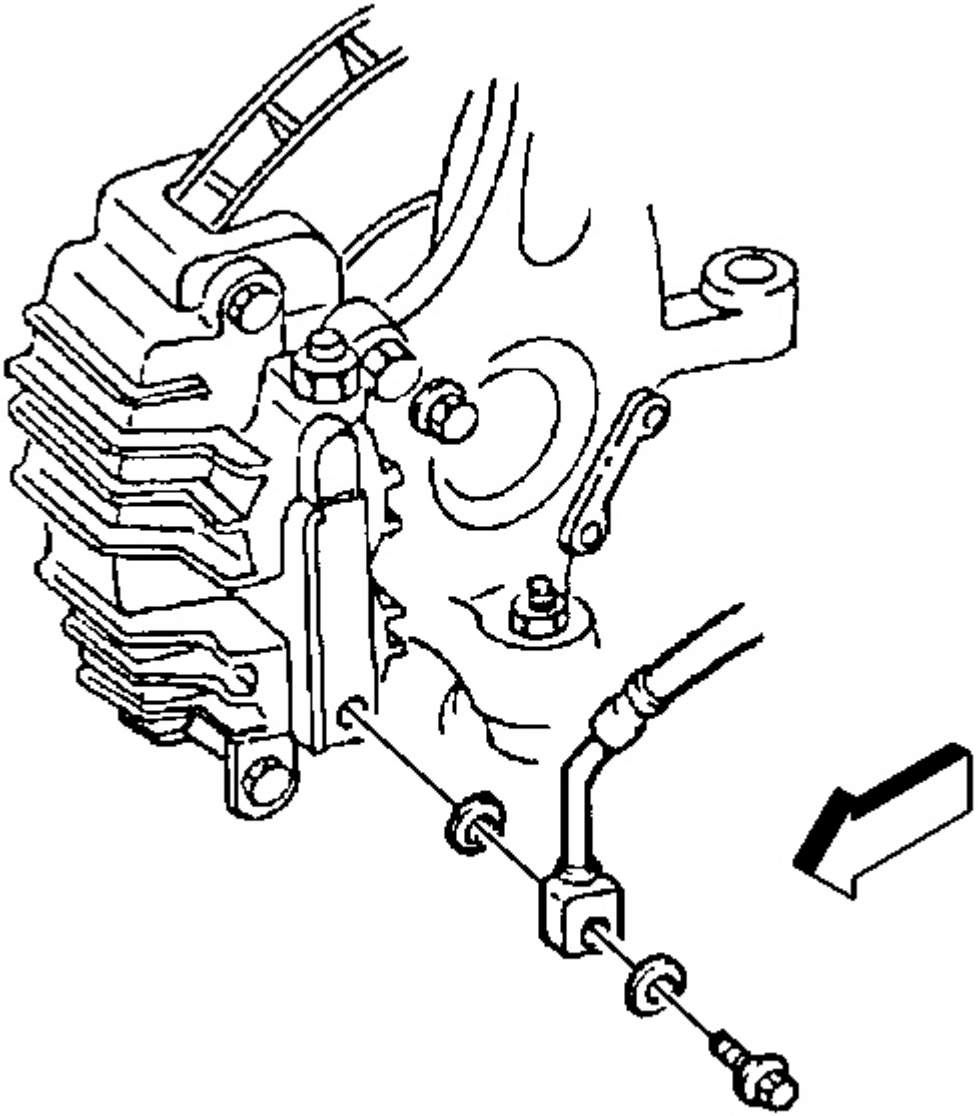

Fig. 39: Brake Hose To Brake Caliper
Courtesy of GENERAL MOTORS CORP.

7. Remove the brake caliper inlet fitting bolt from the caliper.
8. Remove the brake hose from the brake caliper.
9. Remove and discard the two copper brake hose gaskets. These gaskets may be stuck to the brake caliper and/or the brake hose end.

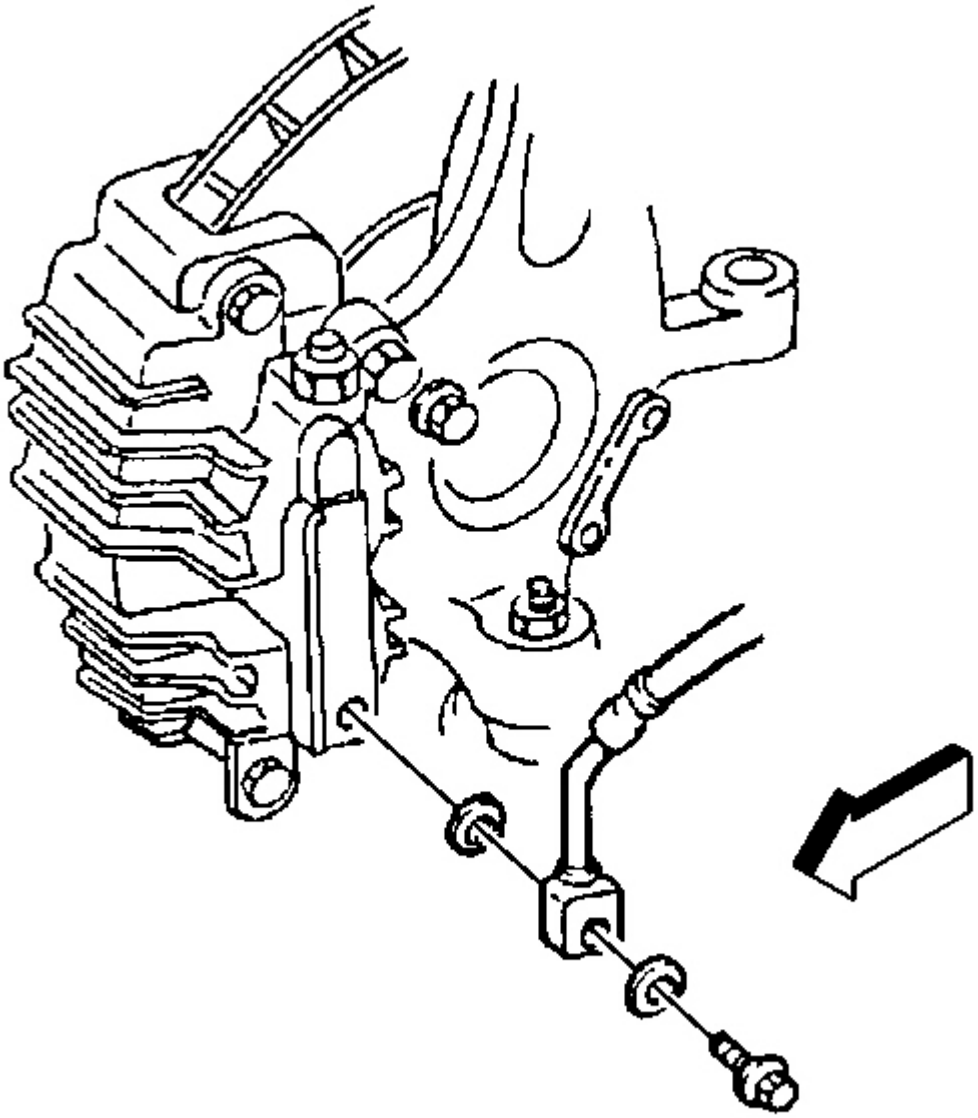

Fig. 40: Brake Hose To Brake Caliper
Courtesy of GENERAL MOTORS CORP.

IMPORTANT: Install NEW copper brake hose gaskets.

1. Assemble the NEW copper brake hose gaskets, and the brake caliper inlet fitting bolt to the brake hose.

NOTE: Refer to Fastener Notice in Cautions and Notices.

2. Install the brake hose and the brake caliper inlet fitting bolt to the brake caliper.

Tighten: Tighten the brake caliper inlet fitting bolt to 45 N.m (33 lb ft).

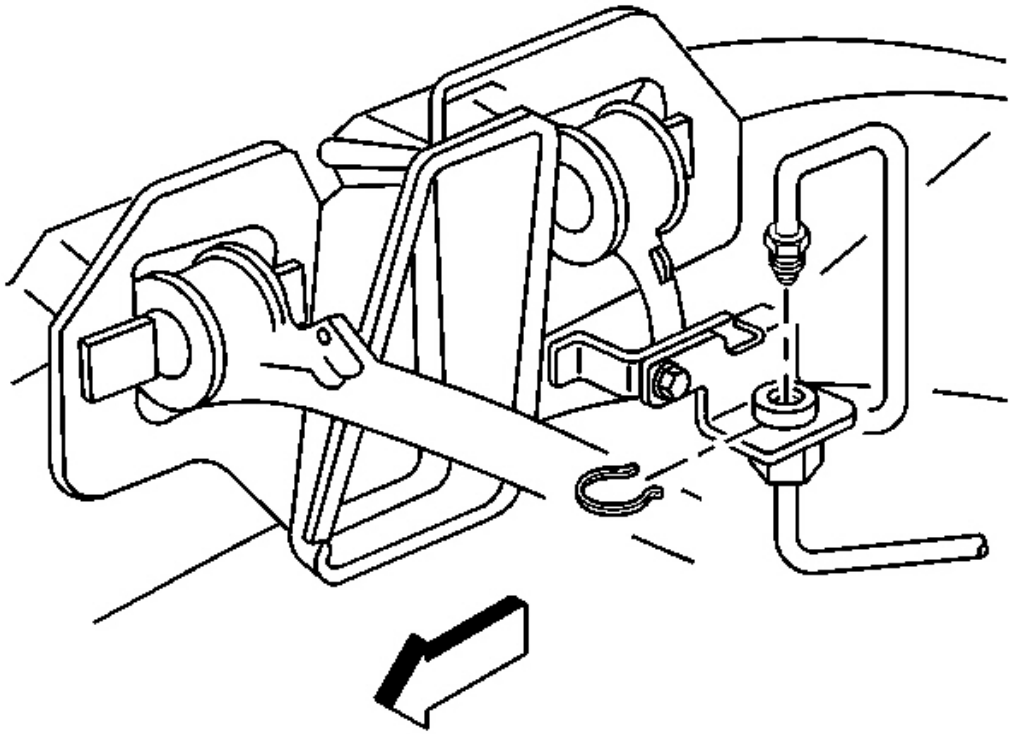

Fig. 41: Brake Hose To Hose Bracket
Courtesy of GENERAL MOTORS CORP.

3. Install the brake hose to the hose bracket. Ensure that the hose is not kinked or twisted.
4. Install the retainer onto the brake hose fitting at the bracket.

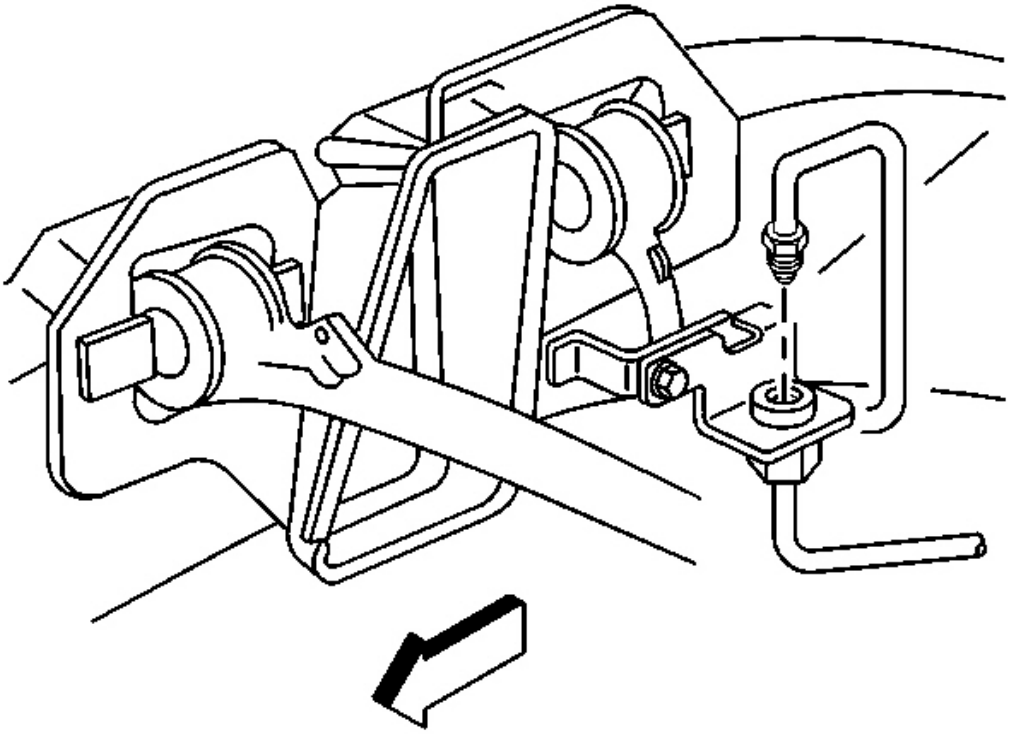

Fig. 42: Brake Pipe Fitting To Brake Hose
Courtesy of GENERAL MOTORS CORP.

5. Remove the rubber cap or plug from the exposed brake pipe fitting end.
6. Connect the brake pipe fitting to the brake hose:
   - Use a backup wrench on the hose fitting.
   - Do not bend the bracket or pipe.

   Tighten: Tighten the brake pipe fitting to 18 N.m (13 lb ft).

7. Install the tire and wheel assembly. Refer to **Tire and Wheel Removal and Installation** in Tires and Wheels.
8. Bleed the hydraulic brake system. Refer to **Hydraulic Brake System Bleeding (Manual)** or **Hydraulic Brake System Bleeding (Pressure)** .
9. Lower the vehicle.

BRAKE HOSE REPLACEMENT - REAR

Removal Procedure

CAUTION: Refer to Brake Fluid Irritant Caution in Cautions and Notices.

NOTE: Refer to Brake Fluid Effects on Paint and Electrical Components Notice in Cautions and Notices.

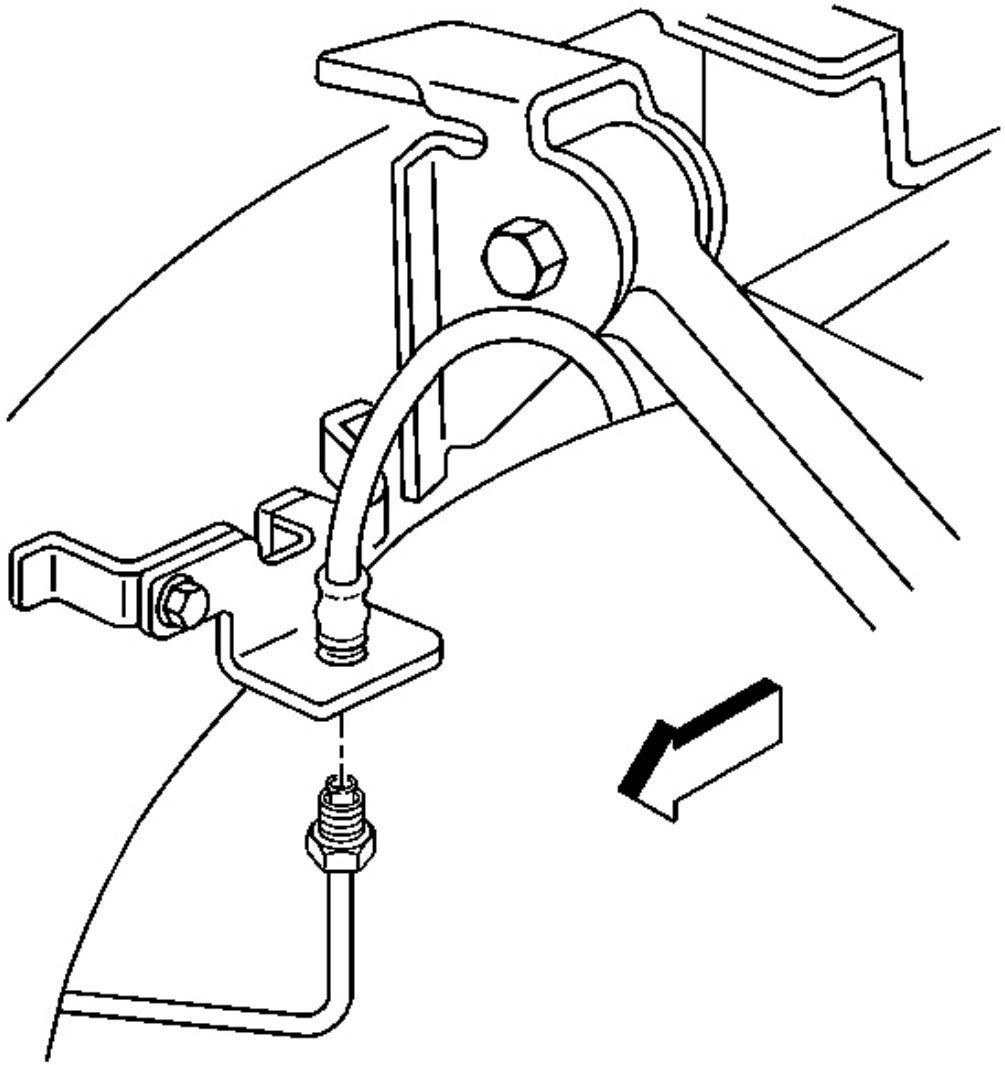

Fig. 43: Rear Tire And Wheel Assembly & Brake Pipe Fitting End

Courtesy of GENERAL MOTORS CORP.

1. Raise and suitably support the vehicle. Refer to **Lifting and Jacking the Vehicle** in General Information.
2. Remove the rear tire and wheel assembly. Refer to **Tire and Wheel Removal and Installation** in Tires and Wheels.
3. Clean all dirt and foreign material from the brake hose and brake pipe fitting.

IMPORTANT: Install a rubber cap or plug to the exposed brake pipe fitting end to prevent brake fluid loss and contamination.

4. Use a backup wrench on the hose fitting, disconnect the brake pipe fitting from the brake hose, then cap or plug the brake pipe fitting end.

   Do not bend the brake pipe or the bracket.

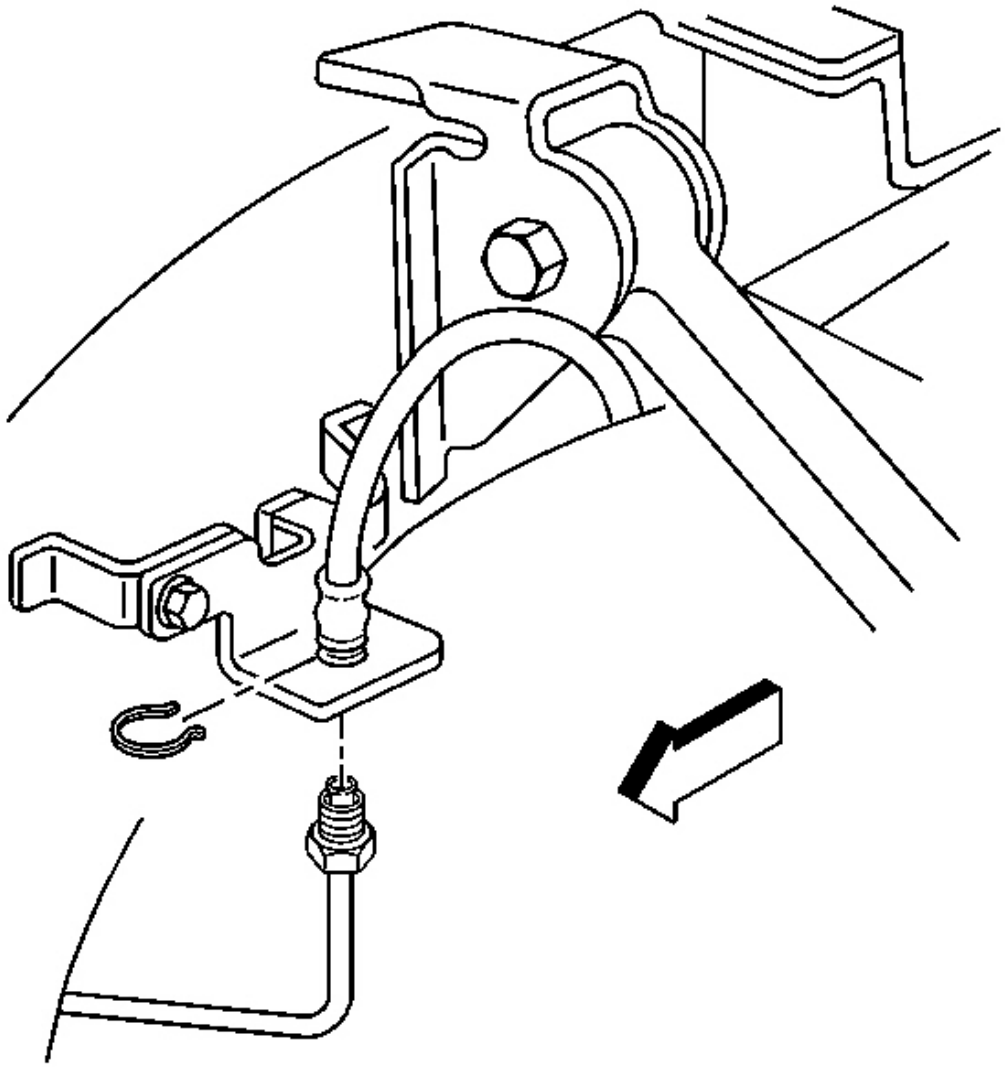

Fig. 44: Brake Hose Retainer To Brake Hose At Hose Bracket
Courtesy of GENERAL MOTORS CORP.

5. Remove the brake hose retainer from the brake hose at the hose bracket.
6. Remove the brake hose from the bracket.

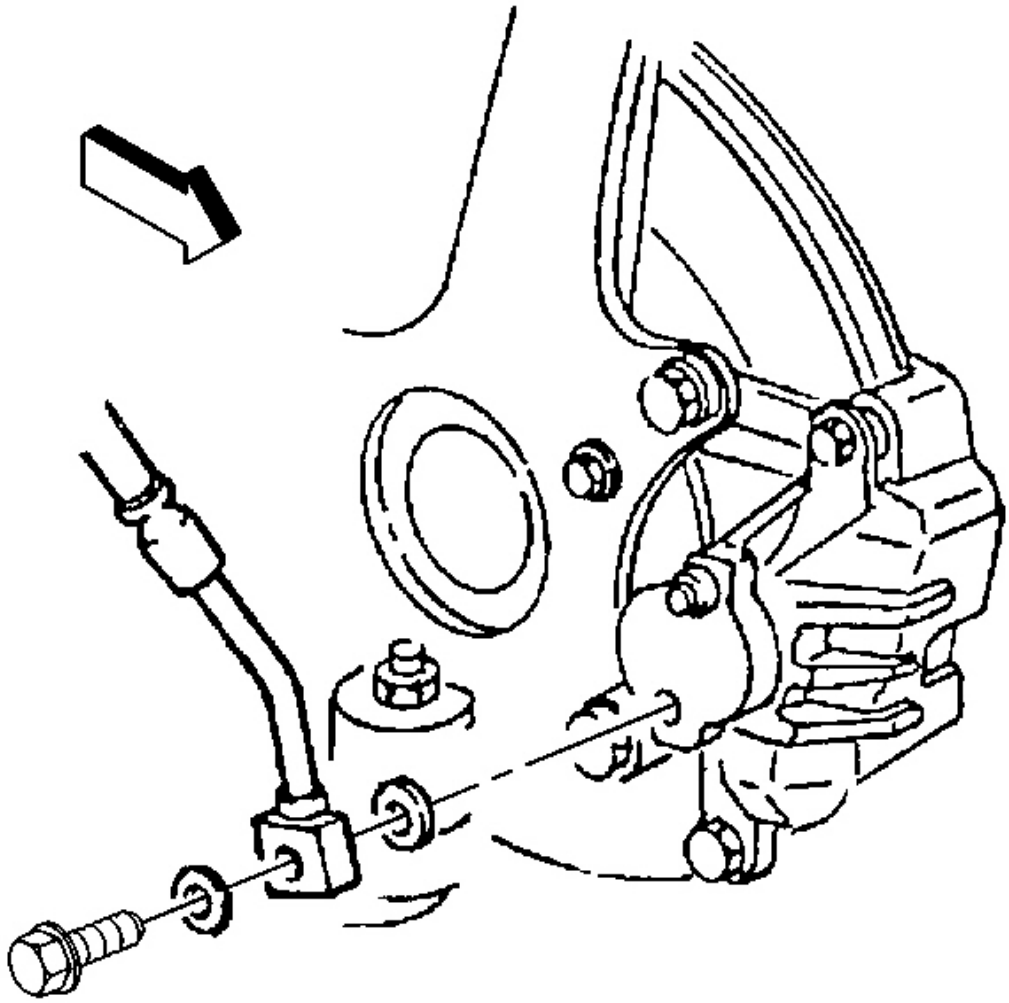

Fig. 45: Brake Caliper Inlet Fitting Bolt To Caliper
Courtesy of GENERAL MOTORS CORP.

7. Remove the brake caliper inlet fitting bolt from the caliper.
8. Remove the brake hose from the brake caliper.
9. Remove and discard the two copper brake hose gaskets. These gaskets may be stuck to the brake caliper and/or the brake hose end.

Installation Procedure

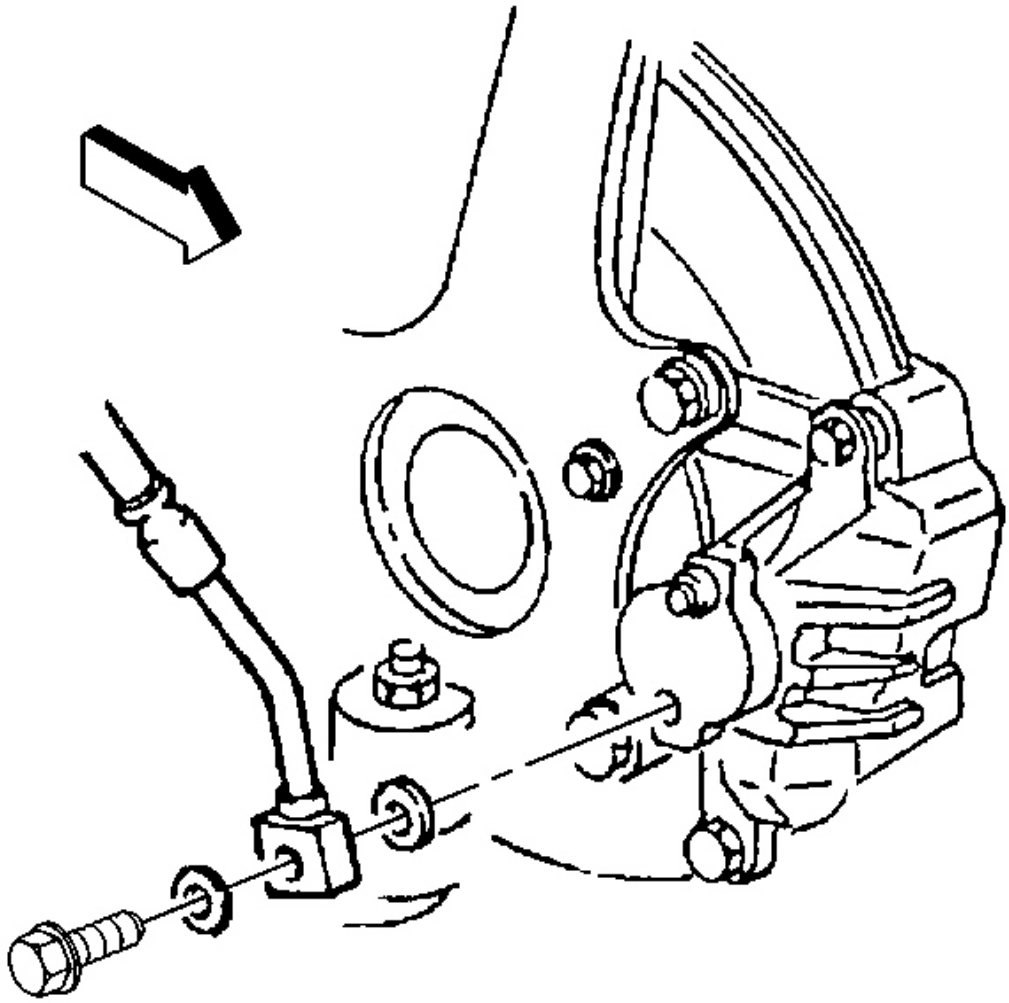

Fig. 46: Brake Caliper Inlet Fitting Bolt To Caliper
Courtesy of GENERAL MOTORS CORP.

IMPORTANT: Install NEW copper brake hose gaskets.

1. Assemble the NEW copper brake hose gaskets, and the brake caliper inlet fitting bolt to the brake hose.

   NOTE: Refer to Fastener Notice in Cautions and Notices.

2. Install the brake hose and the brake caliper inlet fitting bolt to the brake caliper.

Tighten: Tighten the brake caliper inlet fitting bolt to 45 N.m (33 lb ft).

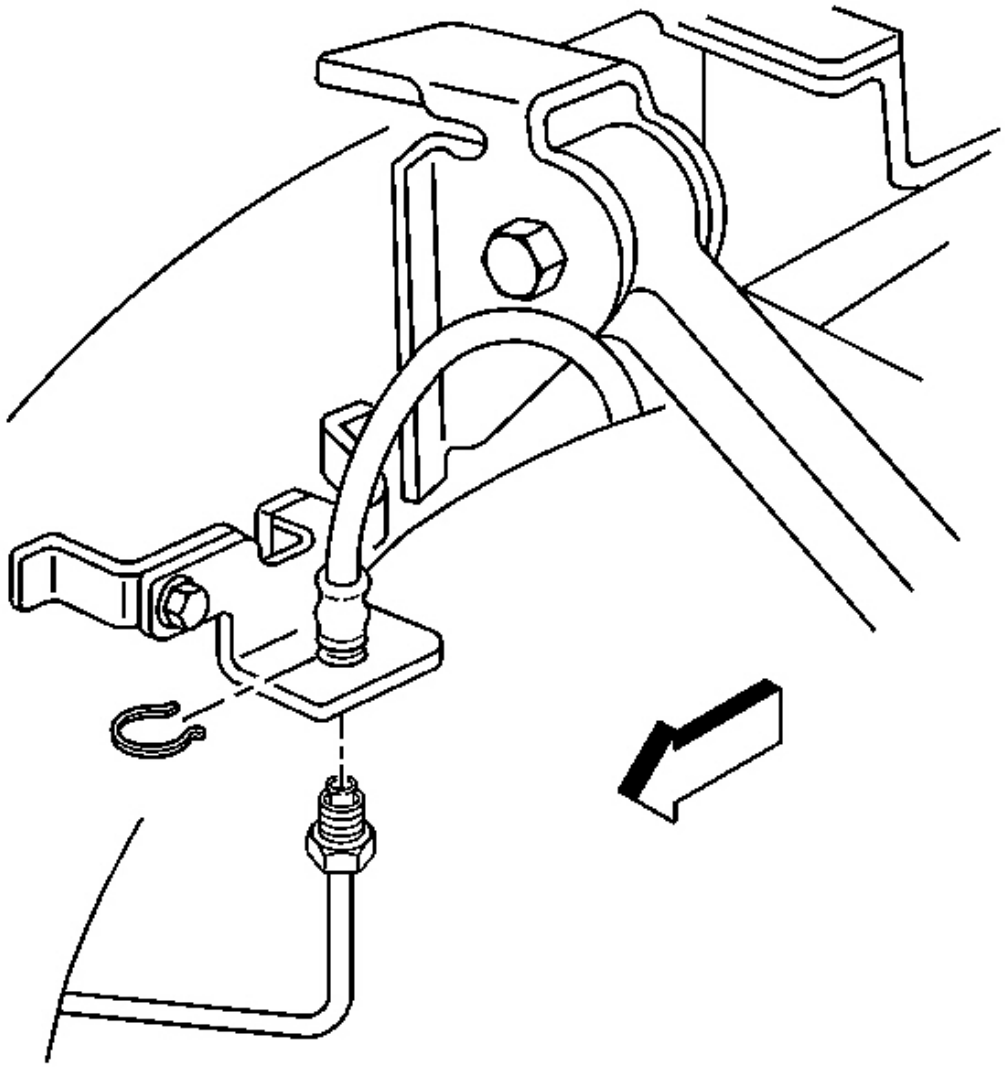

Fig. 47: Brake Hose Retainer To Brake Hose At Hose Bracket
Courtesy of GENERAL MOTORS CORP.

3. Install the brake hose to the hose bracket. Ensure that the hose is not kinked or twisted.
4. Install the retainer onto the brake hose fitting at the bracket.

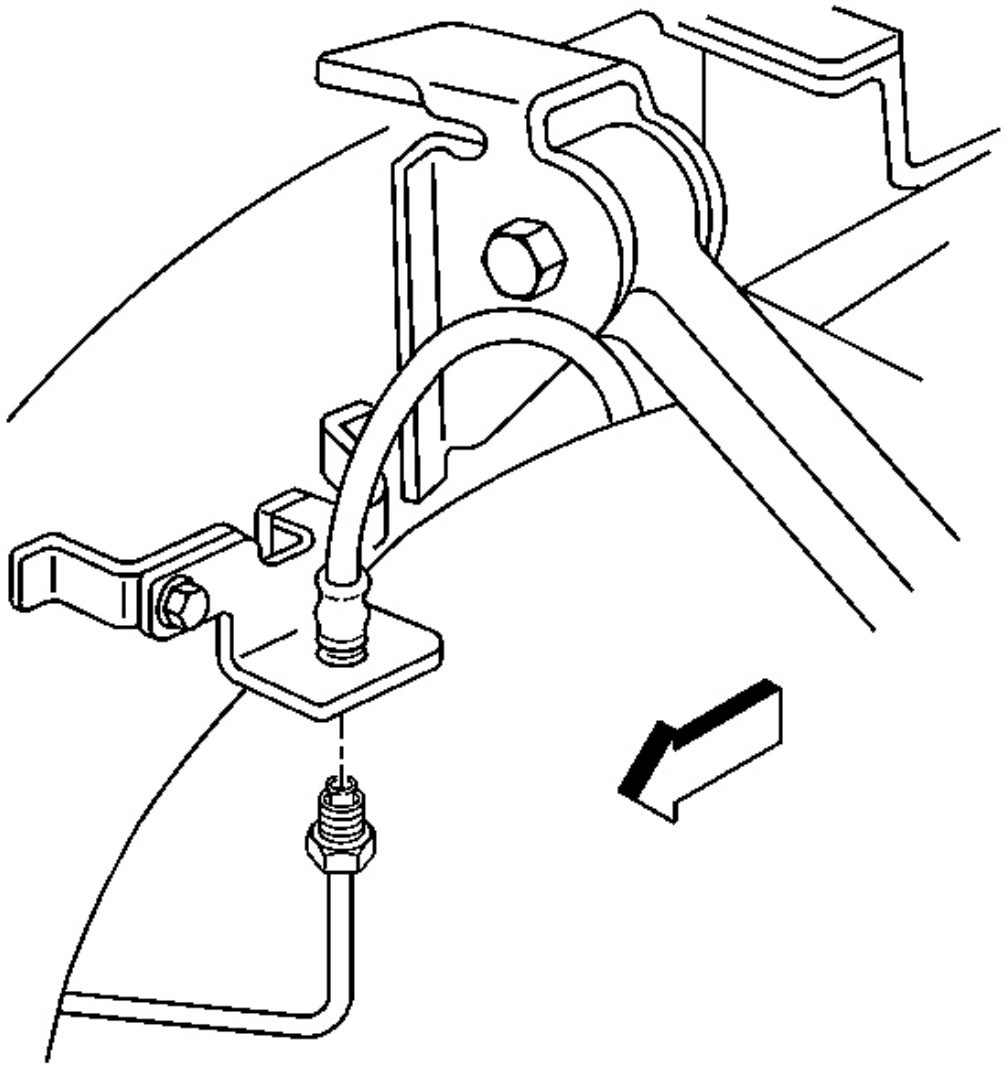

Fig. 48: Rear Tire And Wheel Assembly & Brake Pipe Fitting End
Courtesy of GENERAL MOTORS CORP.

5. Remove the rubber cap or plug from the exposed brake pipe fitting end.
6. Connect the brake pipe fitting to the brake hose:
    - Use a backup wrench on the hose fitting.
    - Do not bend the bracket or pipe.

    Tighten: Tighten the brake pipe fitting to 18 N.m (13 lb ft).

7. Install the tire and wheel assembly. Refer to **Tire and Wheel Removal and Installation** in Tires and Wheels.
8. Bleed the hydraulic brake system. Refer to **Hydraulic Brake System Bleeding (Manual)** or **Hydraulic Brake System Bleeding (Pressure)** .
9. Lower the vehicle.

HYDRAULIC BRAKE SYSTEM BLEEDING (MANUAL)

CAUTION: Refer to Brake Fluid Irritant Caution in Cautions and Notices.

NOTE: When adding fluid to the brake master cylinder reservoir, use only Delco Supreme 11(R), GM P/N 12377967 (Canadian P/N 992667), or equivalent DOT-3 brake fluid from a clean, sealed brake fluid container. The use of any type of fluid other than the recommended type of brake fluid, may cause contamination which could result in damage to the internal rubber seals and/or rubber linings of hydraulic brake system components.

NOTE: Refer to Brake Fluid Effects on Paint and Electrical Components Notice in Cautions and Notices.

1. Place a clean shop cloth beneath the brake master cylinder to prevent brake fluid spills.
2. With the ignition OFF and the brakes cool, apply the brakes 3-5 times, or until the brake pedal effort increases significantly, in order to deplete the brake booster power reserve.
3. If you have performed a brake master cylinder bench bleeding on this vehicle, or if you disconnected the brake pipes from the master cylinder, you must perform the following steps:
    1. Ensure that the brake master cylinder reservoir is full to the maximum-fill level. If necessary, add Delco Supreme 11(R), GM P/N 12377967 (Canadian P/N 992667), or equivalent DOT-3 brake fluid from a clean, sealed brake fluid container.

       If removal of the reservoir cap and diaphragm is necessary, clean the outside of the reservoir on and around the cap prior to removal.

    2. With the rear brake pipe installed securely to the master cylinder, loosen and separate the front brake pipe from the front port of the brake master cylinder.
    3. Allow a small amount of brake fluid to gravity bleed from the open port of the master cylinder.
    4. Reconnect the brake pipe to the master cylinder port and tighten securely.
    5. Have an assistant slowly depress the brake pedal fully and maintain steady pressure on the pedal.
    6. Loosen the same brake pipe to purge air from the open port of the master cylinder.
    7. Tighten the brake pipe, then have the assistant slowly release the brake pedal.
    8. Wait 15 seconds, then repeat steps 3.3-3.7 until all air is purged from the same port of the master cylinder.

9. With the front brake pipe installed securely to the master cylinder, after all air has been purged from the front port of the master cylinder, loosen and separate the rear brake pipe from the master cylinder, then repeat steps 3.3-3.8.
10. After completing the final master cylinder port bleeding procedure, ensure that both of the brake pipe-to-master cylinder fittings are properly tightened.

4. Fill the brake master cylinder reservoir with Delco Supreme 11(R), GM P/N 12377967 (Canadian P/N 992667), or equivalent DOT-3 brake fluid from a clean, sealed brake fluid container. Ensure that the brake master cylinder reservoir remains at least half-full during this bleeding procedure. Add fluid as needed to maintain the proper level.

   Clean the outside of the reservoir on and around the reservoir cap prior to removing the cap and diaphragm.

5. Install a proper box-end wrench onto the RIGHT REAR wheel hydraulic circuit bleeder valve.
6. Install a transparent hose over the end of the bleeder valve.
7. Submerge the open end of the transparent hose into a transparent container partially filled with Delco Supreme 11(R), GM P/N 12377967 (Canadian P/N 992667), or equivalent DOT-3 brake fluid from a clean, sealed brake fluid container.
8. Have an assistant slowly depress the brake pedal fully and maintain steady pressure on the pedal.
9. Loosen the bleeder valve to purge air from the wheel hydraulic circuit.
10. Tighten the bleeder valve, then have the assistant slowly release the brake pedal.
11. Wait 15 seconds, then repeat steps 8-10 until all air is purged from the same wheel hydraulic circuit.
12. With the right rear wheel hydraulic circuit bleeder valve tightened securely, after all air has been purged from the right rear hydraulic circuit, install a proper box-end wrench onto the LEFT FRONT wheel hydraulic circuit bleeder valve.
13. Install a transparent hose over the end of the bleeder valve, then repeat steps 7-11.
14. With the left front wheel hydraulic circuit bleeder valve tightened securely, after all air has been purged from the left front hydraulic circuit, install a proper box-end wrench onto the LEFT REAR wheel hydraulic circuit bleeder valve.
15. Install a transparent hose over the end of the bleeder valve, then repeat steps 7-11.
16. With the left rear wheel hydraulic circuit bleeder valve tightened securely, after all air has been purged from the left rear hydraulic circuit, install a proper box-end wrench onto the RIGHT FRONT wheel hydraulic circuit bleeder valve.
17. Install a transparent hose over the end of the bleeder valve, then repeat steps 7-11.
18. After completing the final wheel hydraulic circuit bleeding procedure, ensure that each of the 4 wheel hydraulic circuit bleeder valves are properly tightened.
19. Fill the brake master cylinder reservoir to the maximum-fill level with Delco Supreme 11(R), GM P/N 12377967 (Canadian P/N 992667), or equivalent DOT-3 brake fluid from a clean, sealed brake fluid container.
20. Slowly depress and release the brake pedal. Observe the feel of the brake pedal.

IMPORTANT: If it is determined that air was induced into the system upstream of the

ABS modulator prior to servicing, the ABS Automated Bleed Procedure must be performed.

21. If the brake pedal feels spongy, repeat the bleeding procedure again. If the brake pedal still feels spongy after repeating the bleeding procedure, perform the following steps:
    1. Inspect the brake system for external leaks. Refer to **Brake System External Leak Inspection** .
    2. Pressure bleed the hydraulic brake system in order to purge any air that may still be trapped in the system.
22. Turn the ignition key ON, with the engine OFF. Check to see if the brake system warning lamp remains illuminated.

IMPORTANT: DO NOT allow the vehicle to be driven until it is diagnosed and repaired.

23. If the brake system warning lamp remains illuminated, refer to **Symptoms - Hydraulic Brakes** .

HYDRAULIC BRAKE SYSTEM BLEEDING (PRESSURE)

Tools Required

- **J 29532** Diaphragm Type Brake Pressure Bleeder, or equivalent. See **Special Tools and Equipment** .
- **J 35589-A** Master Cylinder Bleeder Adapter. See **Special Tools and Equipment** .

CAUTION: Refer to Brake Fluid Irritant Caution in Cautions and Notices.

NOTE: When adding fluid to the brake master cylinder reservoir, use only Delco Supreme 11(R), GM P/N 12377967 (Canadian P/N 992667), or equivalent DOT-3 brake fluid from a clean, sealed brake fluid container. The use of any type of fluid other than the recommended type of brake fluid, may cause contamination which could result in damage to the internal rubber seals and/or rubber linings of hydraulic brake system components.

NOTE: Refer to Brake Fluid Effects on Paint and Electrical Components Notice in Cautions and Notices.

1. Place a clean shop cloth beneath the brake master cylinder to prevent brake fluid spills.
2. With the ignition OFF and the brakes cool, apply the brakes 3-5 times, or until the brake pedal effort increases significantly, in order to deplete the brake booster power reserve.
3. If you have performed a brake master cylinder bench bleeding on this vehicle, or if you disconnected the brake pipes from the master cylinder, you must perform the following steps:
    1. Ensure that the brake master cylinder reservoir is full to the maximum-fill level. If necessary, add Delco Supreme 11(R), GM P/N 12377967 (Canadian P/N 992667), or equivalent DOT-3 brake fluid from a clean, sealed brake fluid container.

If removal of the reservoir cap and diaphragm is necessary, clean the outside of the reservoir on and around the cap prior to removal.

2. With the rear brake pipe installed securely to the master cylinder, loosen and separate the front brake pipe from the front port of the brake master cylinder.
3. Allow a small amount of brake fluid to gravity bleed from the open port of the master cylinder.
4. Reconnect the brake pipe to the master cylinder port and tighten securely.
5. Have an assistant slowly depress the brake pedal fully and maintain steady pressure on the pedal.
6. Loosen the same brake pipe to purge air from the open port of the master cylinder.
7. Tighten the brake pipe, then have the assistant slowly release the brake pedal.
8. Wait 15 seconds, then repeat steps 3.3-3.7 until all air is purged from the same port of the master cylinder.
9. With the front brake pipe installed securely to the master cylinder, after all air has been purged from the front port of the master cylinder, loosen and separate the rear brake pipe from the master cylinder, then repeat steps 3.3-3.8.
10. After completing the final master cylinder port bleeding procedure, ensure that both of the brake pipe-to-master cylinder fittings are properly tightened.

4. Fill the brake master cylinder reservoir to the maximum-fill level with Delco Supreme 11(R), GM P/N 12377967 (Canadian P/N 992667), or equivalent DOT-3 brake fluid from a clean, sealed brake fluid container.

   Clean the outside of the reservoir on and around the reservoir cap prior to removing the cap and diaphragm.

5. Install the **J 35589-A** to the brake master cylinder reservoir. See **Special Tools and Equipment** .
6. Check the brake fluid level in the **J 29532** , or equivalent. See **Special Tools and Equipment** . Add Delco Supreme 11(R), GM P/N 12377967 (Canadian P/N 992667), or equivalent DOT-3 brake fluid from a clean, sealed brake fluid container as necessary to bring the level to approximately the half-full point.
7. Connect the **J 29532** , or equivalent, to the. See **Special Tools and Equipment** .**J 35589-A** . See **Special Tools and Equipment** .
8. Charge the **J 29532** , or equivalent, air tank to 175-205 kPa (25-30 psi). See **Special Tools and Equipment** .
9. Open the **J 29532** , or equivalent, fluid tank valve to allow pressurized brake fluid to enter the brake system. See **Special Tools and Equipment** .
10. Wait approximately 30 seconds, then inspect the entire hydraulic brake system in order to ensure that there are no existing external brake fluid leaks.

    Any brake fluid leaks identified require repair prior to completing this procedure.

11. Install a proper box-end wrench onto the RIGHT REAR wheel hydraulic circuit bleeder valve.
12. Install a transparent hose over the end of the bleeder valve.
13. Submerge the open end of the transparent hose into a transparent container partially filled with Delco Supreme 11(R), GM P/N 12377967 (Canadian P/N 992667), or equivalent DOT-3 brake fluid from a

clean, sealed brake fluid container.

14. Loosen the bleeder valve to purge air from the wheel hydraulic circuit. Allow fluid to flow until air bubbles stop flowing from the bleeder, then tighten the bleeder valve.
15. With the right rear wheel hydraulic circuit bleeder valve tightened securely, after all air has been purged from the right rear hydraulic circuit, install a proper box-end wrench onto the LEFT FRONT wheel hydraulic circuit bleeder valve.
16. Install a transparent hose over the end of the bleeder valve, then repeat steps 13-14.
17. With the left front wheel hydraulic circuit bleeder valve tightened securely, after all air has been purged from the left front hydraulic circuit, install a proper box-end wrench onto the LEFT REAR wheel hydraulic circuit bleeder valve.
18. Install a transparent hose over the end of the bleeder valve, then repeat steps 13-14.
19. With the left rear wheel hydraulic circuit bleeder valve tightened securely, after all air has been purged from the left rear hydraulic circuit, install a proper box-end wrench onto the RIGHT FRONT wheel hydraulic circuit bleeder valve
20. Install a transparent hose over the end of the bleeder valve, then repeat steps 13-14.
21. After completing the final wheel hydraulic circuit bleeding procedure, ensure that each of the 4 wheel hydraulic circuit bleeder valves are properly tightened.
22. Close the **J 29532** , or equivalent, fluid tank valve, then disconnect the. See **Special Tools and Equipment** .**J 29532** , or equivalent, from the. See **Special Tools and Equipment** .**J 35589-A** . See **Special Tools and Equipment** .
23. Remove the **J 35589-A** from the brake master cylinder reservoir. See **Special Tools and Equipment** .
24. Fill the brake master cylinder reservoir to the maximum-fill level with Delco Supreme 11(R), GM P/N 12377967 (Canadian P/N 992667), or equivalent DOT-3 brake fluid from a clean, sealed brake fluid container.
25. Slowly depress and release the brake pedal. Observe the feel of the brake pedal.

IMPORTANT: If it is determined that air was induced into the system upstream of the ABS modulator prior to servicing, the ABS Automated Bleed Procedure must be performed.

26. If the brake pedal feels spongy, perform the following steps:
    1. Inspect the brake system for external leaks. Refer to **Brake System External Leak Inspection** .
    2. Using a scan tool, perform the antilock brake system automated bleeding procedure to remove any air that may have been trapped in the BPMV. Refer to **ABS Automated Bleed Procedure** in Antilock Brake System.
27. Turn the ignition key ON, with the engine OFF. Check to see if the brake system warning lamp remains illuminated.

IMPORTANT: DO NOT allow the vehicle to be driven until it is diagnosed and repaired.

28. If the brake system warning lamp remains illuminated, refer to **Symptoms - Hydraulic Brakes** .

HYDRAULIC BRAKE SYSTEM FLUSHING

CAUTION: Refer to Brake Fluid Irritant Caution in Cautions and Notices.

NOTE: Refer to Brake Fluid Effects on Paint and Electrical Components Notice in Cautions and Notices.

NOTE: When adding fluid to the brake master cylinder reservoir, use only Delco Supreme 11(R), GM P/N 12377967 (Canadian P/N 992667), or equivalent DOT-3 brake fluid from a clean, sealed brake fluid container. The use of any type of fluid other than the recommended type of brake fluid, may cause contamination which could result in damage to the internal rubber seals and/or rubber linings of hydraulic brake system components.

1. Inspect the brake fluid for the following conditions, indicating brake fluid contamination:
   - Fluid separation, indicating two types of fluid are present; a substance other than the recommended brake fluid has been introduced into the brake hydraulic system
     - Swirled appearance - oil-based substance
     - Layered appearance - silicone-based substance
   - Fluid discoloration, indicating the presence of moisture or particles that have been introduced into the brake hydraulic system
     - Cloudy appearance - moisture
     - Dark appearance/suspended particles in fluid - dirt, rust, corrosion, brake dust
2. Inspect the master cylinder reservoir cap diaphragm and the reservoir-to-master cylinder grommets for swelling, indicating brake fluid contamination.
3. If the brake fluid WAS contaminated with an oil-based or a silicone-based substance, indicated by fluid separation and/or a swollen master cylinder reservoir cap diaphragm and/or swollen reservoir-to-master cylinder grommets, perform the following:
   1. Remove ALL of the following components listed from the vehicle. Each component contains internal rubber seals/linings which have been contaminated by the contaminated brake fluid in the brake hydraulic system.

      Refer to the procedures indicated:

      - **Master Cylinder Replacement**
      - **Brake Hose Replacement - Front**
      - **Brake Hose Replacement - Rear**
      - **Brake Caliper Replacement - Front** in Disc Brakes
      - **Brake Caliper Replacement - Rear** in Disc Brakes
      - **Brake Pressure Modulator Valve (BPMV) Replacement** in Antilock Brake System
   2. Clean out all the hydraulic brake pipes using denatured alcohol, or equivalent.

3. Dry the brake pipes using non-lubricated, filtered air.
4. Repair or replace ALL of the following components listed and install them to the vehicle. Each component contains internal rubber seals/linings which have been contaminated by the contaminated brake fluid in the brake hydraulic system.

   Refer to the procedures indicated:

   - **Master Cylinder Overhaul** or **Master Cylinder Replacement** ; also perform the following:

     Clean the brake master cylinder reservoir using denatured alcohol, or equivalent, then dry the reservoir using non-lubricated, filtered air. Inspect the reservoir for cracks and/or damage and replace if necessary. Refer to **Master Cylinder Reservoir Replacement** .

     Replace the brake master cylinder reservoir cap diaphragm.

   - **Brake Hose Replacement - Front**
   - **Brake Hose Replacement - Rear**
   - **Brake Caliper Overhaul - Front** or **Brake Caliper Replacement - Front** in Disc Brakes
   - **Brake Caliper Overhaul - Rear** or **Brake Caliper Replacement - Rear** in Disc Brakes
   - **Brake Pressure Modulator Valve (BPMV) Replacement** in Antilock Brake System

4. If the brake fluid was NOT contaminated with an oil-based or a silicone-based substance, but WAS contaminated with water or dirt, rust, corrosion, and/or brake dust, replace the brake master cylinder reservoir cap diaphragm. The diaphragm may have allowed the moisture or particles to enter the hydraulic system.
5. Fill the brake master cylinder reservoir to the maximum-fill level with Delco Supreme 11(R), GM P/N 12377967 (Canada P/N 992667) or equivalent, DOT-3 brake fluid from a clean, sealed brake fluid container.
6. Pressure bleed the hydraulic brake system. Begin the procedure with the pressure bleeder reservoir filled to the maximum-fill level with the correct brake fluid as indicated. Refer to **Hydraulic Brake System Bleeding (Manual)** or **Hydraulic Brake System Bleeding (Pressure)** .

VACUUM BRAKE BOOSTER REPLACEMENT

Removal Procedure

CAUTION: Refer to Battery Disconnect Caution in Cautions and Notices.

1. Disconnect the battery negative cable. Refer to **Battery Negative Cable Disconnect/Connect Procedure** in Engine Electrical.

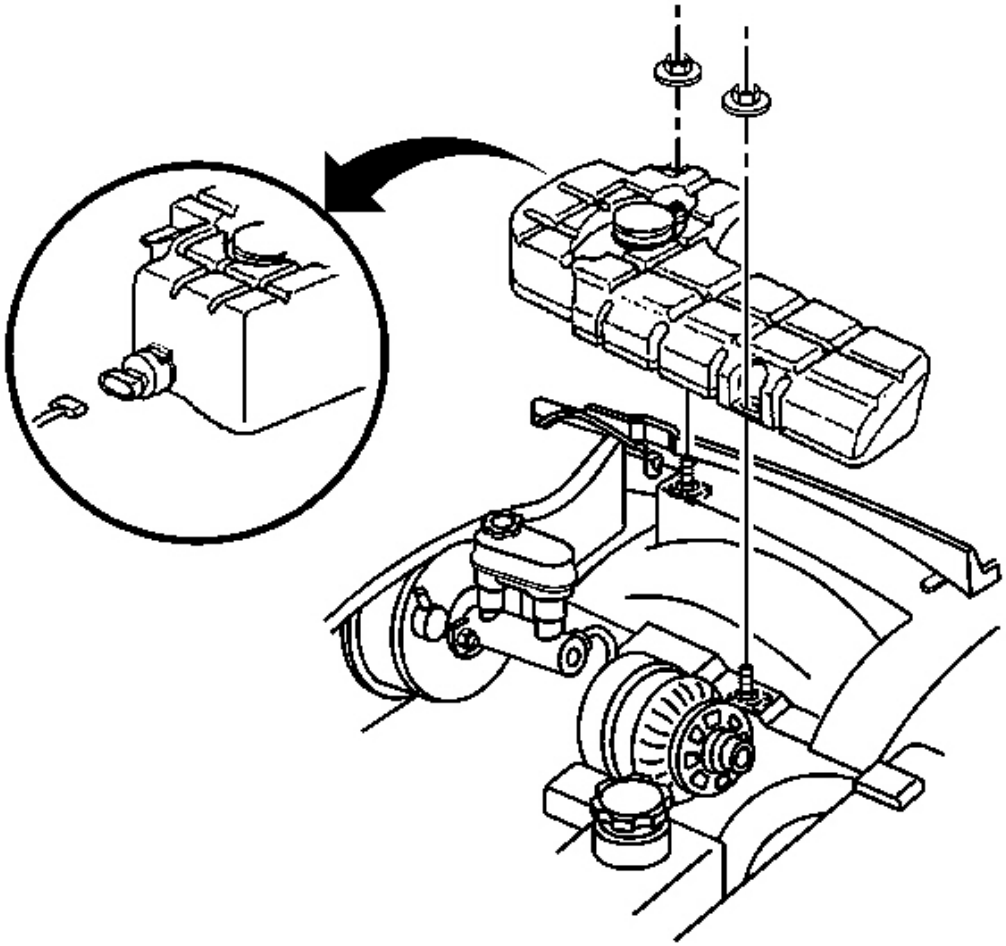

Fig. 49: Electrical Connections & Washer Hose At Container
Courtesy of GENERAL MOTORS CORP.

2. Remove the washer solvent container retaining nuts.
3. Lift the washer solvent container from the left wheelhouse.
4. Disconnect the electrical connections and the washer hose from the container.
5. Plug the washer pump outlet.

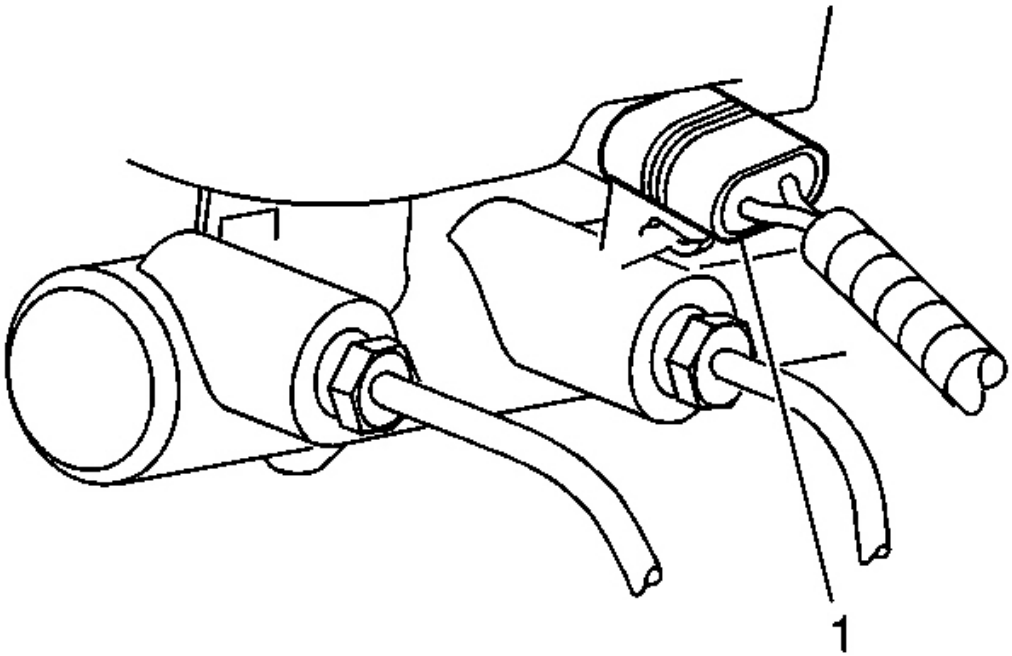

Fig. 50: View Of Master Cylinder
Courtesy of GENERAL MOTORS CORP.

6. Disconnect the electrical connector (1) from the brake fluid level sensor.

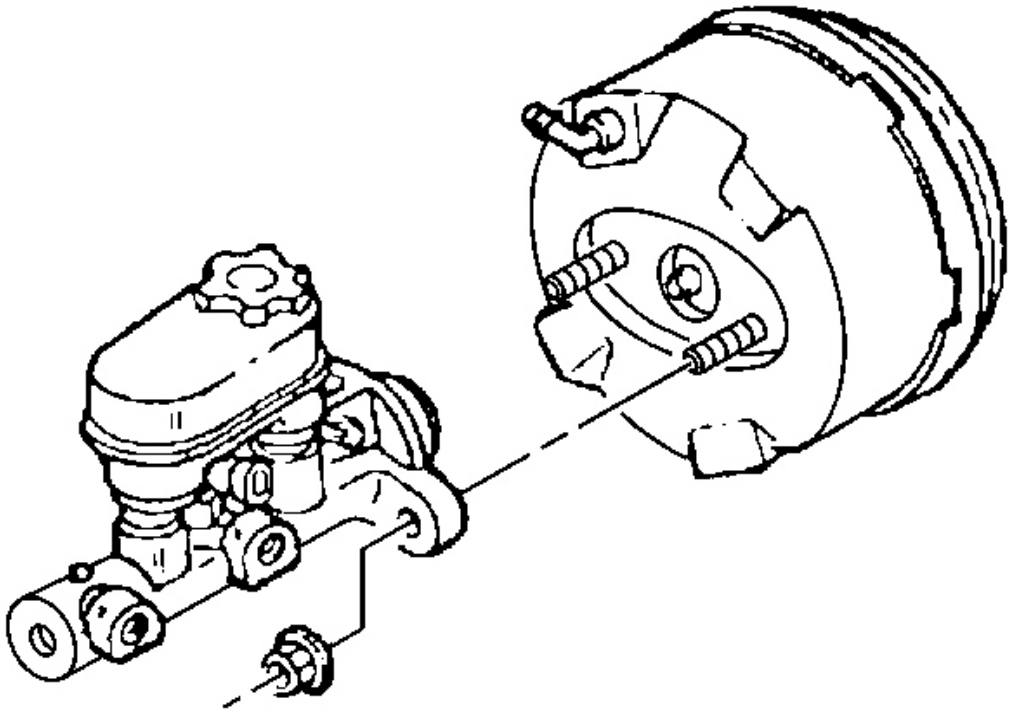

Fig. 51: Master Cylinder Reservoir At Brake Booster
Courtesy of GENERAL MOTORS CORP.

7. Remove the nuts securing the master cylinder to the brake booster.
8. Remove the master cylinder from the brake booster without disconnecting the brake pipes and position the master cylinder aside.

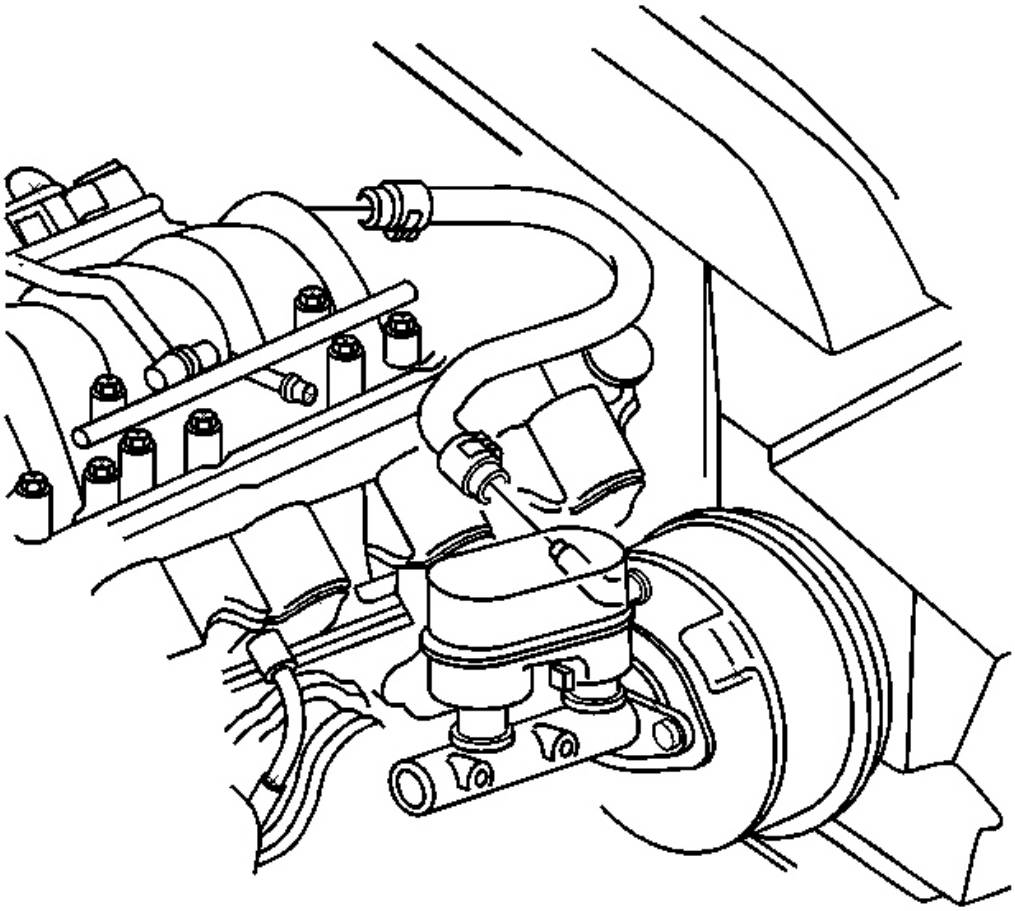

Fig. 52: Identifying Vacuum Booster Hose
Courtesy of GENERAL MOTORS CORP.

9. Disconnect the brake booster vacuum hose from the booster check valve.
10. Remove the instrument panel lower trim panel. Refer to **Trim Panel Replacement - Knee Bolster** in Instrument Panel, Gages, and Console.

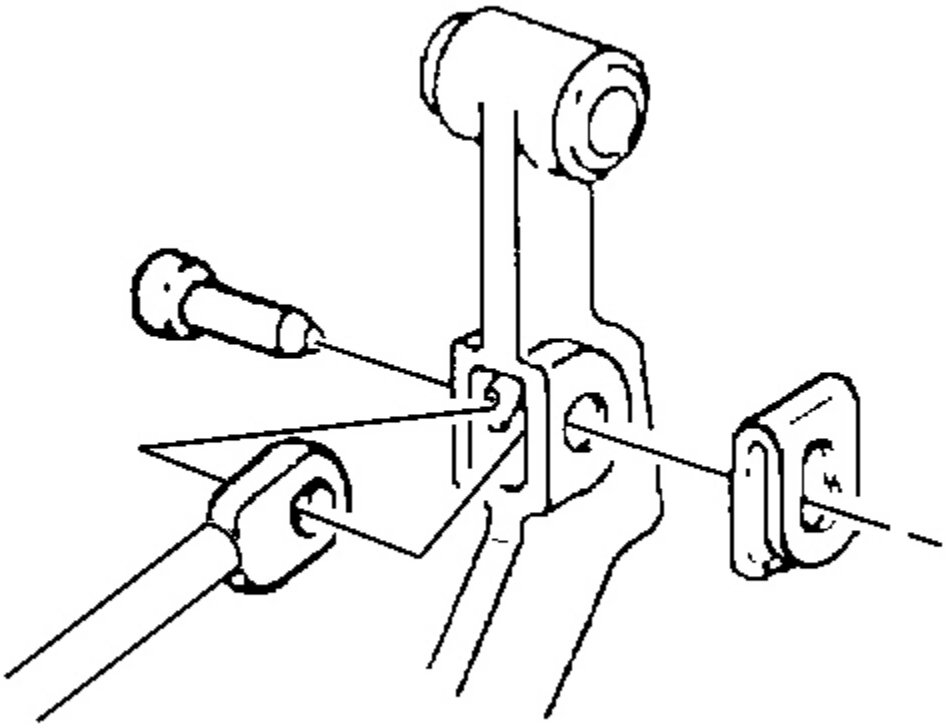

Fig. 53: Isolation Mat To Brake Pedal
Courtesy of GENERAL MOTORS CORP.

11. Remove the retainer, washer, brake pedal pin, and brake booster pushrod from the brake pedal.

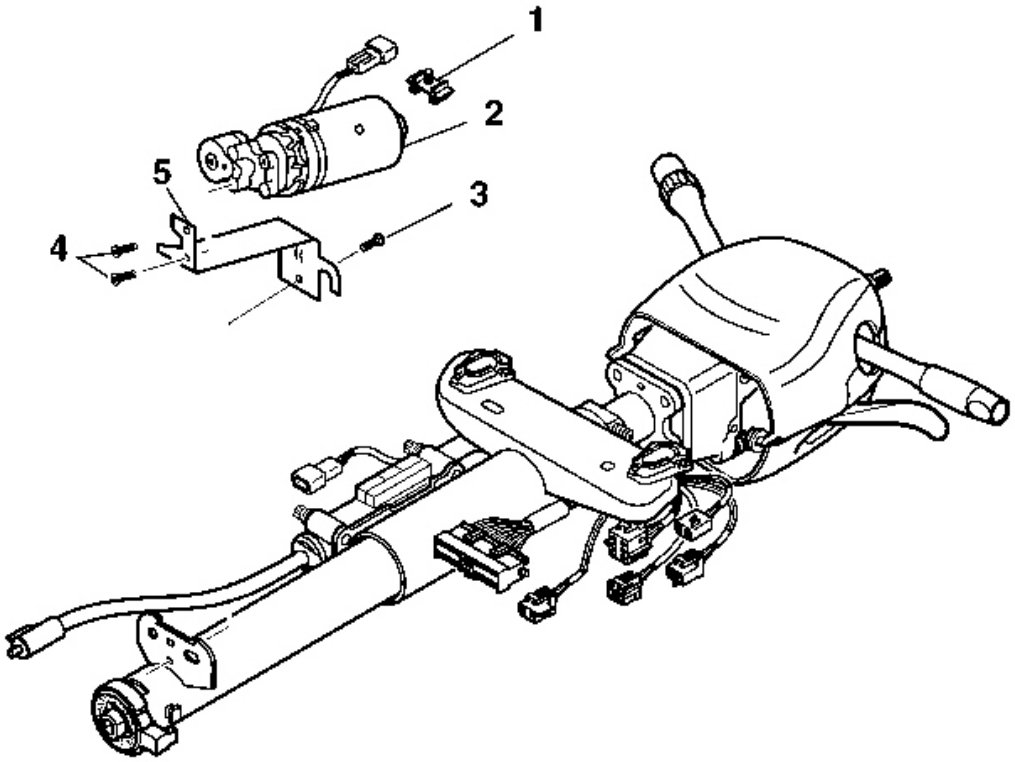

Fig. 54: Motor Assembly To Right Of Steering Column
Courtesy of GENERAL MOTORS CORP.

12. Remove the screw (3) from the telescoping column motor mounting bracket (5), if equipped.
13. Position the motor assembly to the right of the steering column.

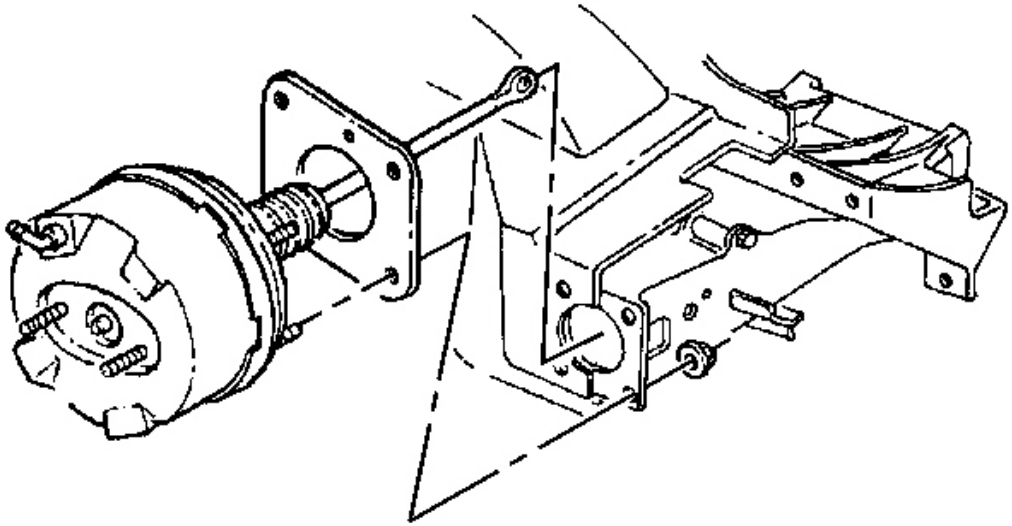

Fig. 55: Brake Booster Mounting Nuts & Washers To Booster Studs
Courtesy of GENERAL MOTORS CORP.

IMPORTANT: The brake booster is retained to the cowl with push-on nuts.

14. Remove the brake booster mounting nuts and washers from the booster studs.
15. In order to remove the booster from the cowl, perform the following steps:
    - In order to release the booster mounting studs from the push-on nuts, move booster from side to side.
    - Pull the booster straight out.
16. Remove the brake booster and seal from the cowl.
17. Inspect the booster seal and sealing surfaces for damage. Replace the seal if necessary.

Installation Procedure

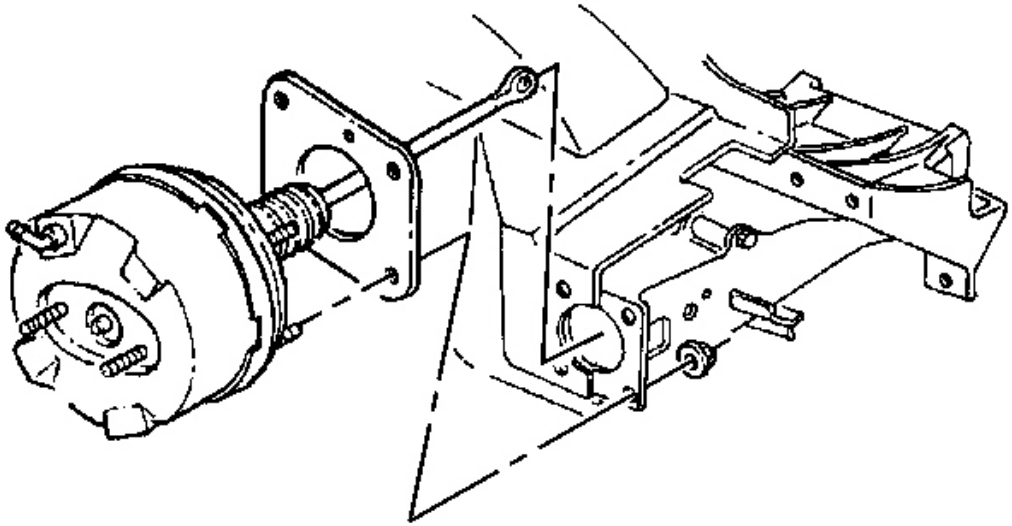

Fig. 56: Brake Booster Mounting Nuts & Washers To Booster Studs
Courtesy of GENERAL MOTORS CORP.

1. Install the seal and brake booster to the front of dash.

NOTE: **Refer to Fastener Notice in Cautions and Notices.**

2. Install brake booster mounting nuts and washers to the booster studs.

Tighten: Tighten the brake booster mounting nuts to 27 N.m (19 lb ft).

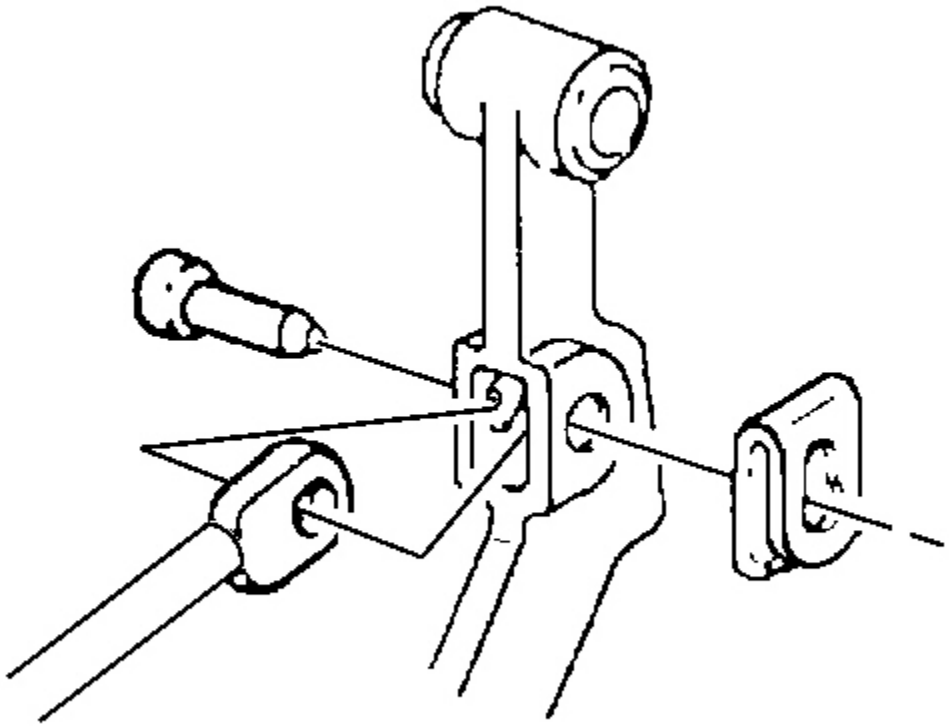

Fig. 57: Isolation Mat To Brake Pedal
Courtesy of GENERAL MOTORS CORP.

3. Install the brake booster pushrod, brake pedal pin, washer, and retainer to the brake pedal. Verify proper engagement of the retainer to the brake pedal by rotating the retainer.

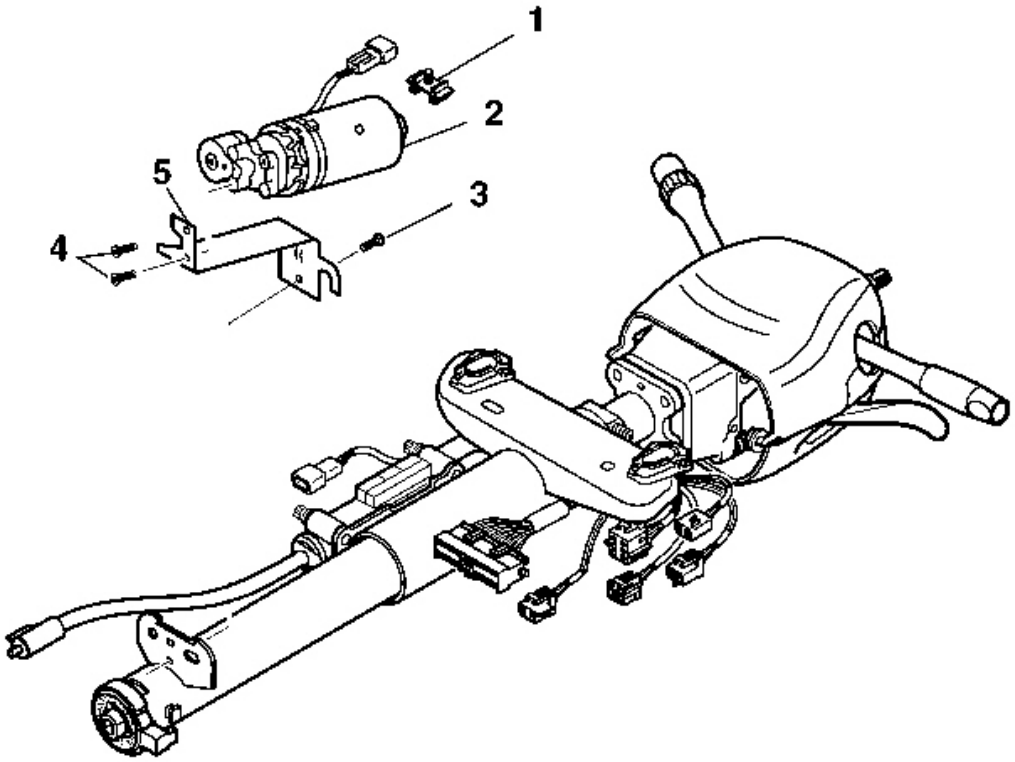

Fig. 58: Motor Assembly To Right Of Steering Column
Courtesy of GENERAL MOTORS CORP.

4. Reposition the telescoping column motor assembly to the steering column, if equipped.
5. Install the screw (3) to the motor mounting bracket (5).

   Tighten: Tighten the screw to 7 N.m (62 lb in)

6. Install the instrument panel lower trim panel. Refer to **Trim Panel Replacement - Knee Bolster** in Instrument Panel, Gages, and Console.

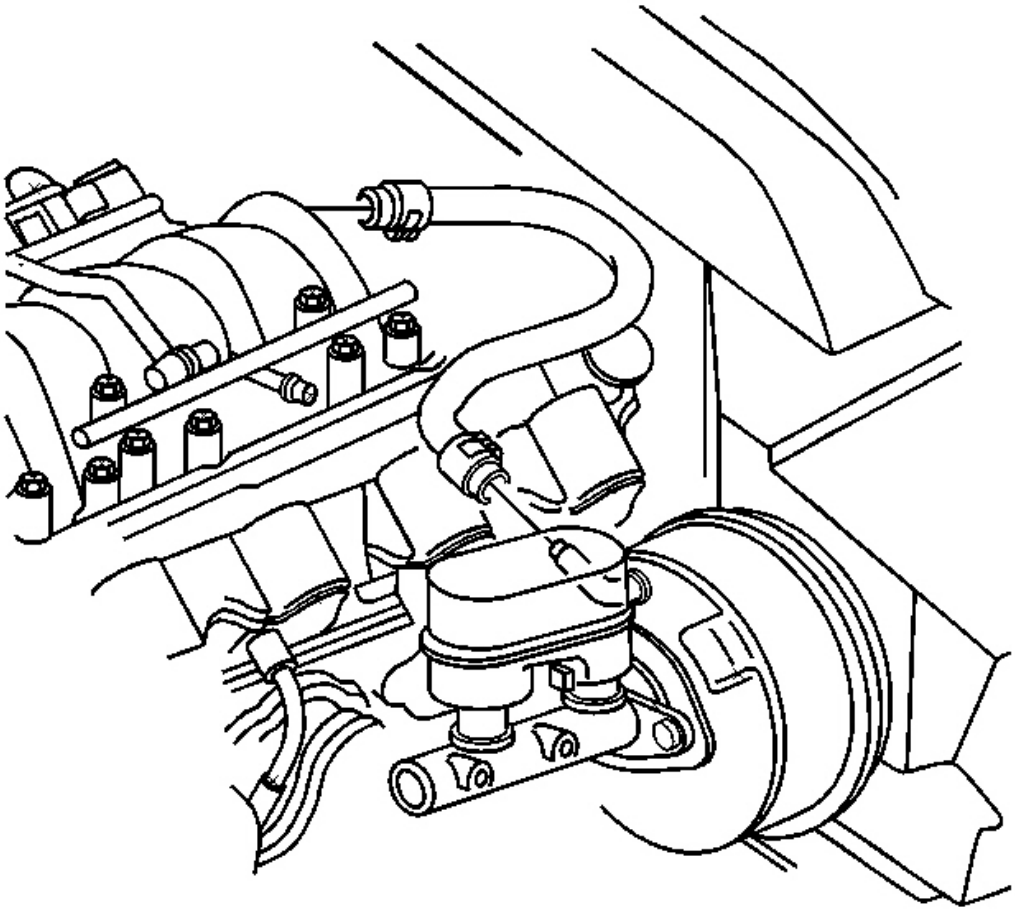

Fig. 59: Identifying Vacuum Booster Hose
Courtesy of GENERAL MOTORS CORP.

7. Connect the brake booster vacuum hose to the brake booster check valve.

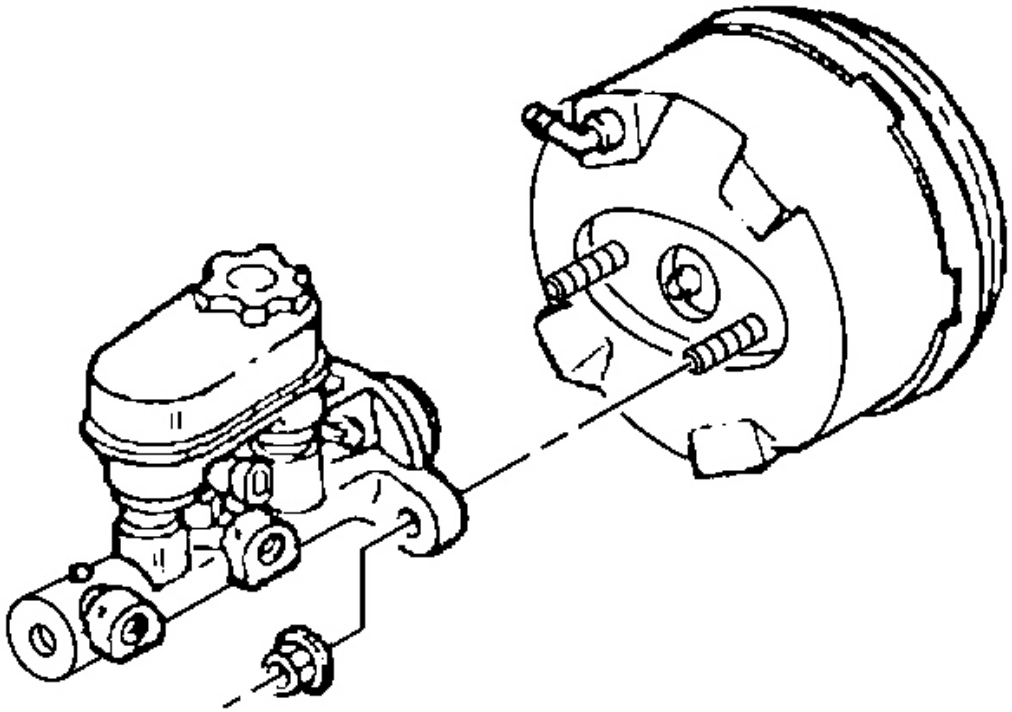

Fig. 60: Master Cylinder Reservoir At Brake Booster
Courtesy of GENERAL MOTORS CORP.

8. Install the master cylinder to the brake booster.
9. Install the master cylinder mounting nuts.

Tighten: Tighten the master cylinder mounting nuts to 29 N.m (21 lb ft).

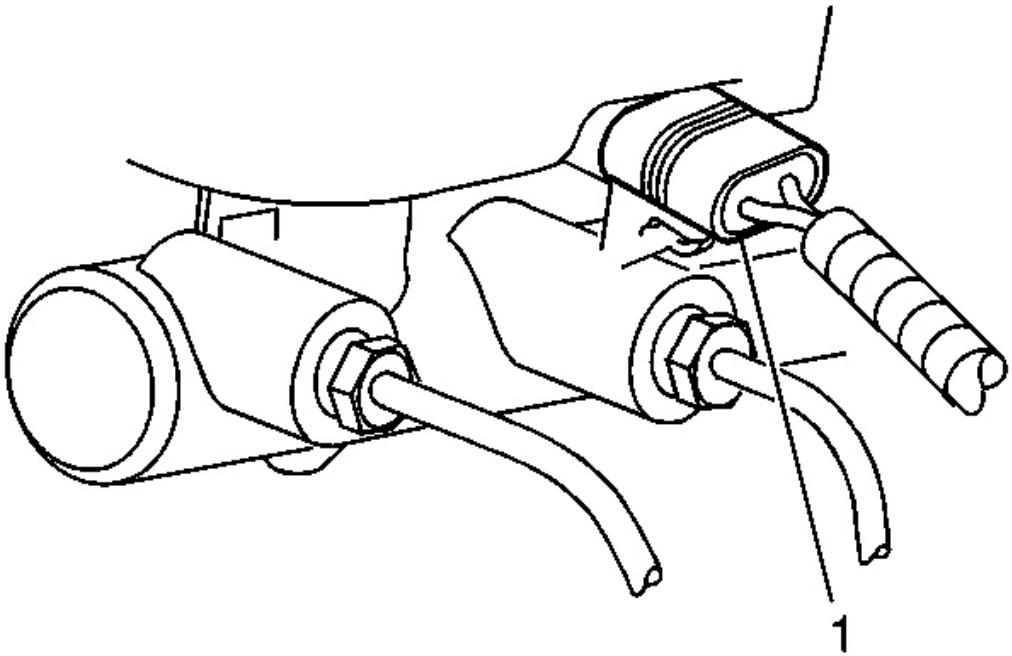

Fig. 61: View Of Master Cylinder
Courtesy of GENERAL MOTORS CORP.

10. Connect the electrical connector (1) to the brake fluid level sensor.

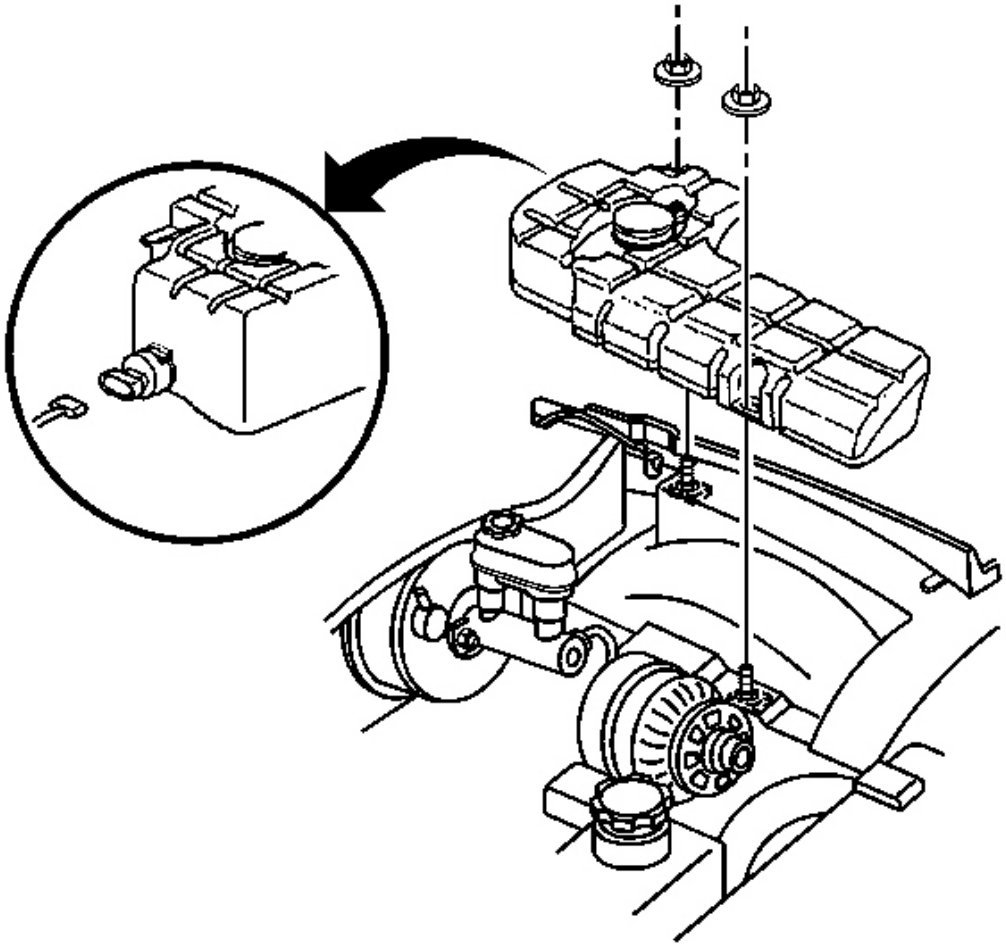

Fig. 62: Electrical Connections & Washer Hose At Container
Courtesy of GENERAL MOTORS CORP.

11. Connect the electrical connector and the washer hose to the washer solvent container.
12. Install washer solvent container to the wheelhouse.
13. Install the washer solvent container retaining nuts.

    Tighten: Tighten the washer solvent container retaining nuts to 7.5 N.m (66 lb in).

14. Connect the battery negative cable. Refer to **Battery Negative Cable Disconnect/Connect Procedure** in Engine Electrical.
15. Program the transmitters. Refer to **Transmitter Programming** in Keyless Entry.

VACUUM BRAKE BOOSTER CHECK VALVE AND/OR HOSE REPLACEMENT

Removal Procedure

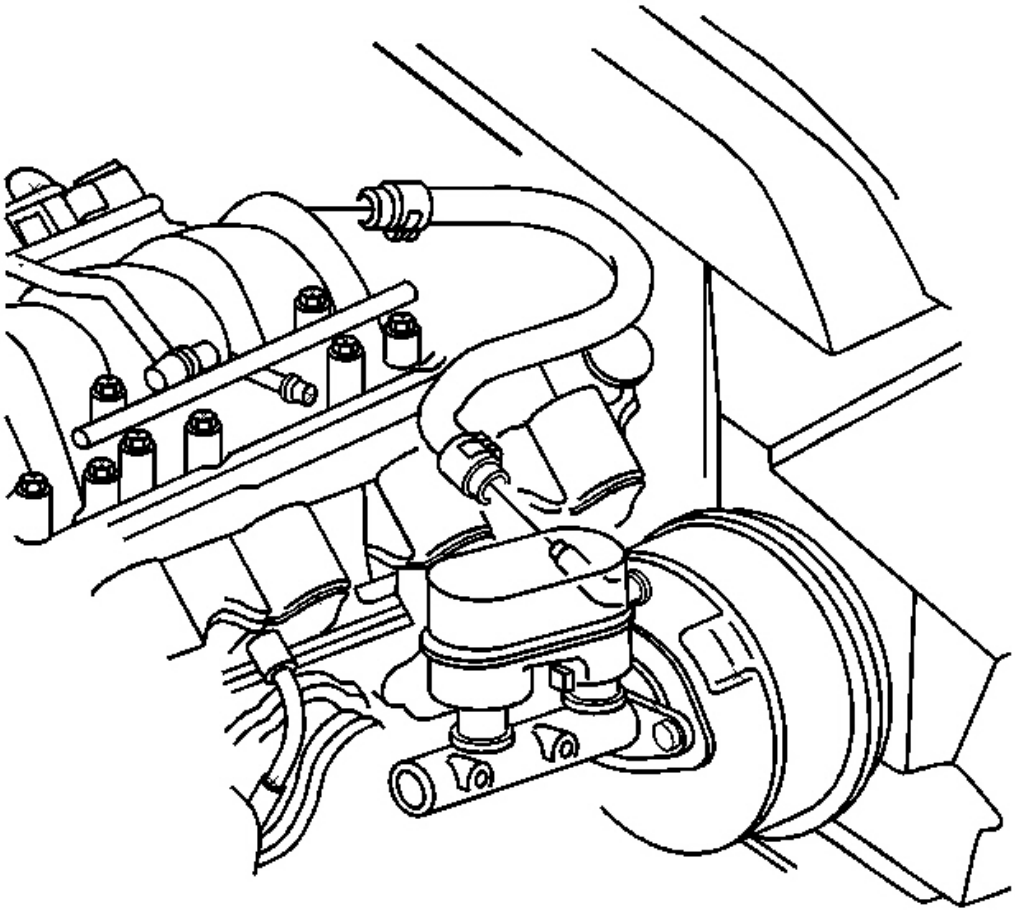

Fig. 63: Identifying Vacuum Booster Hose
Courtesy of GENERAL MOTORS CORP.

1. Disconnect the brake booster vacuum hose from the brake booster vacuum check valve.
2. Remove the vacuum check valve from the brake booster, if replacing the check valve.

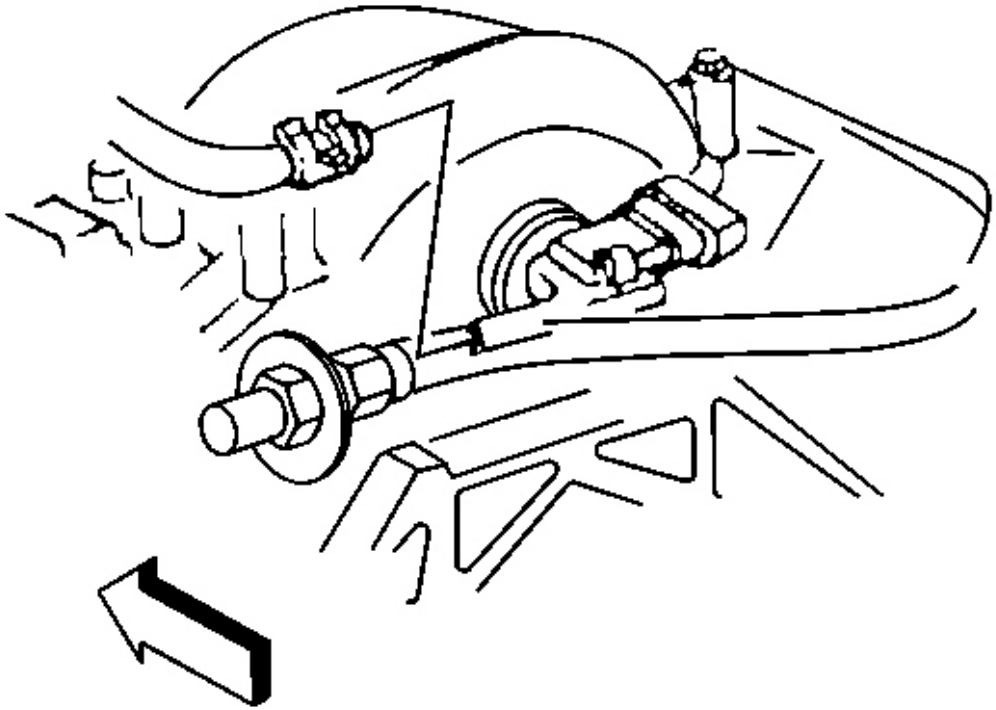

Fig. 64: Brake Booster Vacuum Hose To Intake Manifold
Courtesy of GENERAL MOTORS CORP.

3. Remove the intake manifold, if replacing the brake booster vacuum hose. Refer to **Intake Manifold Replacement** in Engine Mechanical.
4. Disconnect the brake booster vacuum hose from the intake manifold and remove the hose.

Installation Procedure

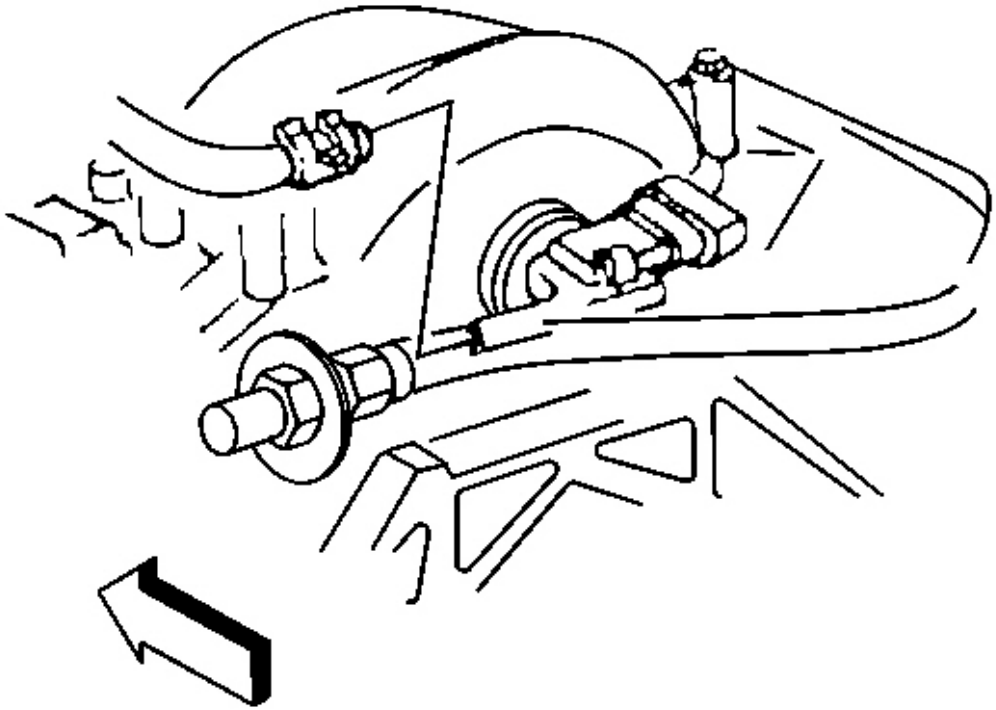

Fig. 65: Brake Booster Vacuum Hose To Intake Manifold
Courtesy of GENERAL MOTORS CORP.

1. Connect the brake booster vacuum hose to the intake manifold, if disconnected previously.
2. Install the intake manifold, if removed previously. Refer to **Intake Manifold Replacement** in Engine Mechanical.

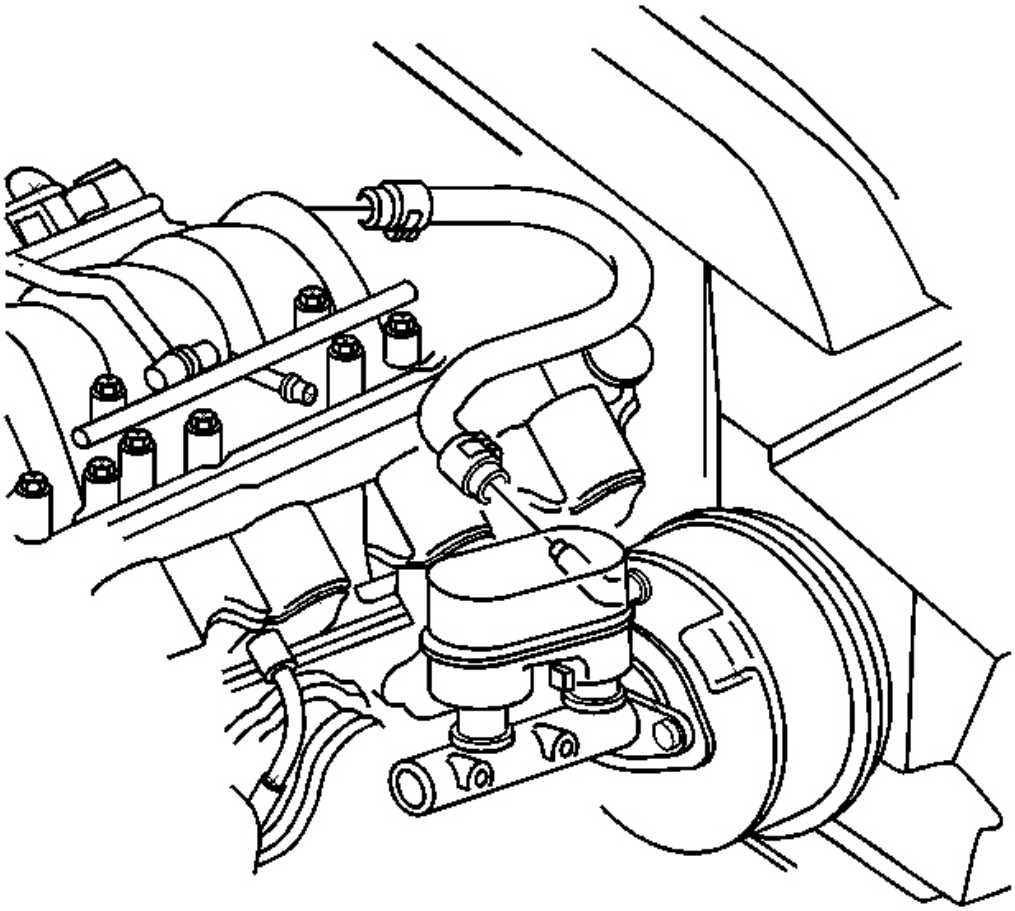

Fig. 66: Identifying Vacuum Booster Hose
Courtesy of GENERAL MOTORS CORP.

3. Install the vacuum check valve to the brake booster, if removed previously.
4. Connect the booster vacuum hose to the brake booster check valve.

DESCRIPTION AND OPERATION

BRAKE WARNING SYSTEM DESCRIPTION AND OPERATION

Brake System Indicator(s)

BRAKE

The IPC illuminates the brake indicator when the following occurs:

- The IPC detects a low brake fluid condition (signal circuit is low).
- The IPC detects the park brake is engaged (signal circuit low).
- The IPC performs the displays test at the start of each ignition cycle. The indicator illuminates for approximately 3 seconds.
- There is a Dynamic Rear Proportioning (DRP) failure.

LOW BRAKE FLUID

The IPC illuminates the LOW BRAKE FLUID indicator in the message center when the IPC receives a hardwire input from the brake fluid level sensor (signal is low).

HYDRAULIC BRAKE SYSTEM DESCRIPTION AND OPERATION

System Component Description

The hydraulic brake system consists of the following:

Hydraulic Brake Master Cylinder Fluid Reservoir

Contains supply of brake fluid for the hydraulic brake system.

Hydraulic Brake Master Cylinder

Converts mechanical input force into hydraulic output pressure. Hydraulic output pressure is distributed from the master cylinder through two hydraulic circuits, supplying diagonally-opposed wheel apply circuits.

Hydraulic Brake Pressure Balance Control System

Regulates brake fluid pressure delivered to hydraulic brake wheel circuits, in order to control the distribution of braking force. Pressure balance control is achieved through dynamic rear proportioning (DRP), which is a function of the ABS modulator. Refer to **ABS Description and Operation** in Antilock Brake System for specific information on the operation of DRP.

Hydraulic Brake Pipes and Flexible Brake Hoses

Carries brake fluid to and from hydraulic brake system components.

Hydraulic Brake Wheel Apply Components

Converts hydraulic input pressure into mechanical output force.

System Operation

Mechanical force is converted into hydraulic pressure by the master cylinder, regulated to meet braking system demands by the pressure balance control system, and delivered to the hydraulic brake wheel circuits by the pipes and flexible hoses. The wheel apply components then convert the hydraulic pressure back into mechanical force which presses linings against rotating brake system components.

BRAKE ASSIST SYSTEM DESCRIPTION AND OPERATION

System Component Description

The brake assist system consists of the following:

Brake Pedal

Receives, multiplies and transfers brake system input force from driver.

Brake Pedal Pushrod

Transfers multiplied input force received from brake pedal to brake booster.

Vacuum Brake Booster

Uses source vacuum to decrease effort required by driver when applying brake system input force. When brake system input force is applied, air at atmospheric pressure is admitted to the rear of both vacuum diaphragms, providing a decrease in brake pedal effort required. When input force is removed, vacuum replaces atmospheric pressure within the booster.

Vacuum Source

Supplies force used by vacuum brake booster to decrease brake pedal effort.

Vacuum Source Delivery System

Enables delivery and retention of source vacuum for vacuum brake booster.

System Operation

Brake system input force is multiplied by the brake pedal and transferred by the pedal pushrod to the hydraulic brake master cylinder. Effort required to apply the brake system is reduced by the vacuum brake booster.

SPECIAL TOOLS AND EQUIPMENT

SPECIAL TOOLS

Special Tools

Illustration	Tool Number/ Description

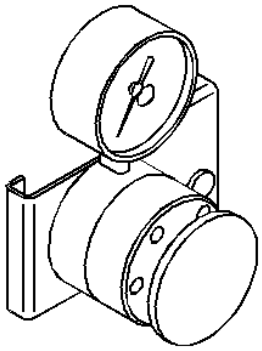	J 28662 Brake Pedal Effort Gage
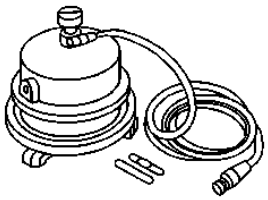	J 29532 Diaphragm Type Brake Pressure Bleeder
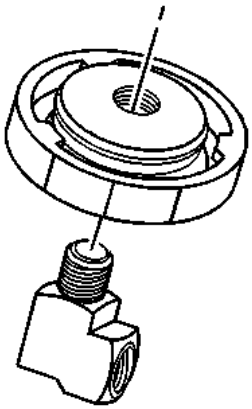	J 35589-A Brake Pressure Bleeder Adapter

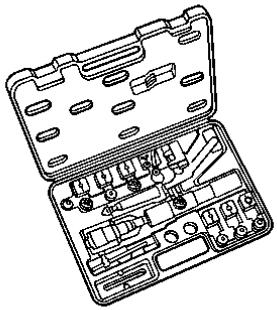	J 45405 Pipe Flaring Tool Kit