Driveshaft and Axle

GENERAL

FRONT AXLE
- FRONT HUB / KNUCKLE

DRIVESHAFT
- FRONT DRIVESHAFT ASSEMBLY
- FRONT DRIVESHAFT(PTJ-BJ TYPE)
- FRONT DRIVESHAFT (SFJ-BJ TYPE)

REAR AXLE
- REAR HUB / CARRIER

REAR DRIVESHAFT ASSEMBLY
- REAR DRIVESHAFT (DOJ-BJ TYPE)

PROPELLER SHAFT ASSEMBLY
- PROPELLER SHAFT

DIFFERENTIAL CARRIER ASSEMBLY
- DIFFERENTIAL CARRIER (4WD)

GENERAL

SPECIFICATION EDA421A7

Items			Inner side	Outer side
Front driveshaft	Diesel 2.2 M/T 2WD/4WD, Diesel 2.2 A/T 2WD/4WD, Gasoline 2.7 A/T 2WD	Joint type	PTJ	BJ
		Max. permissible angle	21°	46°
	Gasoline 2.7 A/T 4WD, Gasoline 2.7 M/T 2WD/4WD	Joint type	SFJ	BJ
		Max. permissible angle	21°	46°
Rear driveshaft		Joint type	DOJ	BJ
		Max. permissible angle	22°	46°
Differential		Oil type	Hypoid gear oil (API GL-5, SAE 75W/90)	
		Oil capacity (L)	About 0.9	
		Reduction gear type	Hypoid gear	
		Reduction gear ratio	3.818	
		Final drive gear backlash mm(in.)	0.10 ~ 0.15 (0.0039 ~ 0.0059)	
		Differential gear backlash mm(in.)	0 ~ 0.05 (0 ~ 0.0020)	

BJ : Birfield Joint
DOJ : Double Offset Joint
PTJ : Pillow journal Tri-pot Joint
SFJ : Shudderless Free-ring Joint

TIGHTENING TORQUE

Items		Nm	Kgf-m	lb-ft
Front	Wheel nut	88.3~107.9	9~11	65.1~79.6
	Driveshaft castle nut	196.1~255.0	20~26	144.7~188.1
	Strut assembly lower mounting bolt	152.0~171.6	15.5~17.5	112.1~126.6
	Inner shaft bearing bracket bolt	49.0~68.6	5~7	36.2~50.6
	Brake caliper mounting bolt	78.5~98.1	8~10	57.9~72.3
	Wheel speed sensor mounting bolt	6.9~10.8	0.7~1.1	5.1~8.0
	Brake disc mounting screw	4.9~5.9	0.5~0.6	3.6~4.3
	Hub assembly mounting bolt	78.5~98.1	8~10	57.9~72.3
	Lower arm ball joint mounting bolt	98.1~117.7	10~12	72.3~86.8
	Tie rod end ball joint mounting nut	23.5~33.3	2.4~3.4	17.4~24.6
Rear	Wheel nut	88.3~107.9	9~11	65.1~79.6
	Driveshaft castle nut	196.1~255.0	20~26	144.7~188.1
	Shock absorber upper mounting bolt	137.3~156.9	14~16	101.3~115.7
	Shock absorber lower mounting nut	98.1~117.7	10~12	72.3~86.8
	Brake caliper mounting bolt	63.7~73.5	6.5~7.5	47.0~54.2
	Wheel speed sensor mounting bolt	6.9~10.8	0.7~1.1	5.1~8.0
	Brake disc mounting screw	4.9~5.9	0.5~0.6	3.6~4.3
	Hub assembly mounting bolt	78.5~88.3	8~9	57.9~65.1
	Upper arm ball joint mounting nut	78.5~88.3	8~9	57.9~65.1
	Lower arm mounting bolt	137.3~156.9	14~16	101.3~115.7
	Assist arm ball joint mounting nut	98.1~117.7	10~12	72.3~86.8
	Trailing arm mounting bolt	137.3~156.9	14~16	101.3~115.7
Propeller shaft	Front propeller shaft mounting bolt	49.0~68.6	5~7	36.2~50.6
	Propeller shaft center bearing bracket mounting bolt	39.2~49.0	4~5	28.9~36.2
	Rear propeller shaft mounting bolt	49.0~68.6	5~7	36.2~50.6
Differential	Rear differential mounting bolt	68.6~88.3	7~9	50.6~65.1
	Differential cover mounting bolt	39.2~49.0	4~5	28.9~36.2

CAUTION

Replace self-locking nuts with new ones after removal.

LUBRICANTS E905F5BE

Items			Lubricants	Quantity
Front driveshaft	Diesel 2.2 M/T 2WD/4WD, Diesel 2.2 A/T 2WD/4WD, Gasoline 2.7 A/T 2WD	BJ	ROLLUBE BJ	155 ± 10g
		PTJ	MX13KT	220 ± 10g
	Gasoline 2.7 A/T 4WD, Gasoline 2.7 M/T 2WD/4WD	BJ	ROLLUBE BJ	155 ± 10g
		SFJ	STAMINA 0233B	220 ± 10g
Rear driveshaft		BJ	ROLLUBE BJ	110 ± 6g
		DOJ	Amblygon TA10/2A	100 ± 6g

SPECIAL TOOLS EA6CFD5D

Tool(Number and Name)	Illustration	Use
09495-33000 Puller	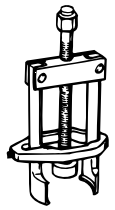 D9533000	Removal of spider assembly from a drive shaft.
09517-43101 Working base	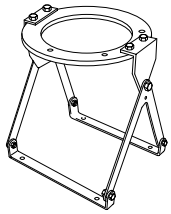 E1743101	Support for the differential carrier
09517-43500 Adapter	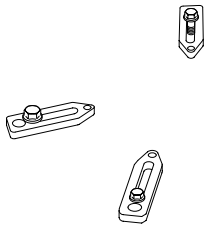 E1743500	Support for the differential carrier (Use with 09517-43101)
09495-3K000 Band installer	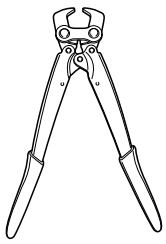 KINF500C	Installation of ear type boot band

09568-34000 Ball joint remover	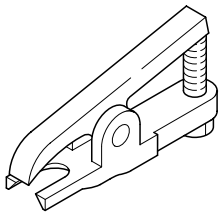 E6834000	Removal of the rear upper arm ball joint
09568-4A000 Ball joint remover	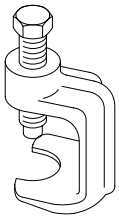 KPRE103I	Removal of the front lower arm and tie rod end ball joint

TROUBLESHOOTING E9DF00E5

Trouble Symptom	Probable cause	Remedy
Vehicle pulls to one side	Scoring of driveshaft ball joint	Replace
	Wear, rattle or scoring of wheel bearing	Replace
	Defective front suspension and steering	Adjustment or Replace
Vibartion	Wear, damage or bending of driveshaft	Replace
	Driveshaft rattle and hub serration	Replace
	Wear, rattle or scratching of wheel bearing	Replace
Shimmy	Defective wheel balance	Adjustment or Replace
	Defective front suspension and steering	Adjustment or Replace
Excessive noise	Wear, damage or bending of driveshaft	Replace
	Rattle of driveshaft and worn hub splines	Replace
	Wear, rattle or scoring of wheel bearing	Replace
	Loose hub nut	Adjustment or Replace
	Defective front suspension and steering	Adjustment or Replace

FRONT AXLE

FRONT HUB / KNUCKLE

COMPONENT LOCATION EB2E0DEC

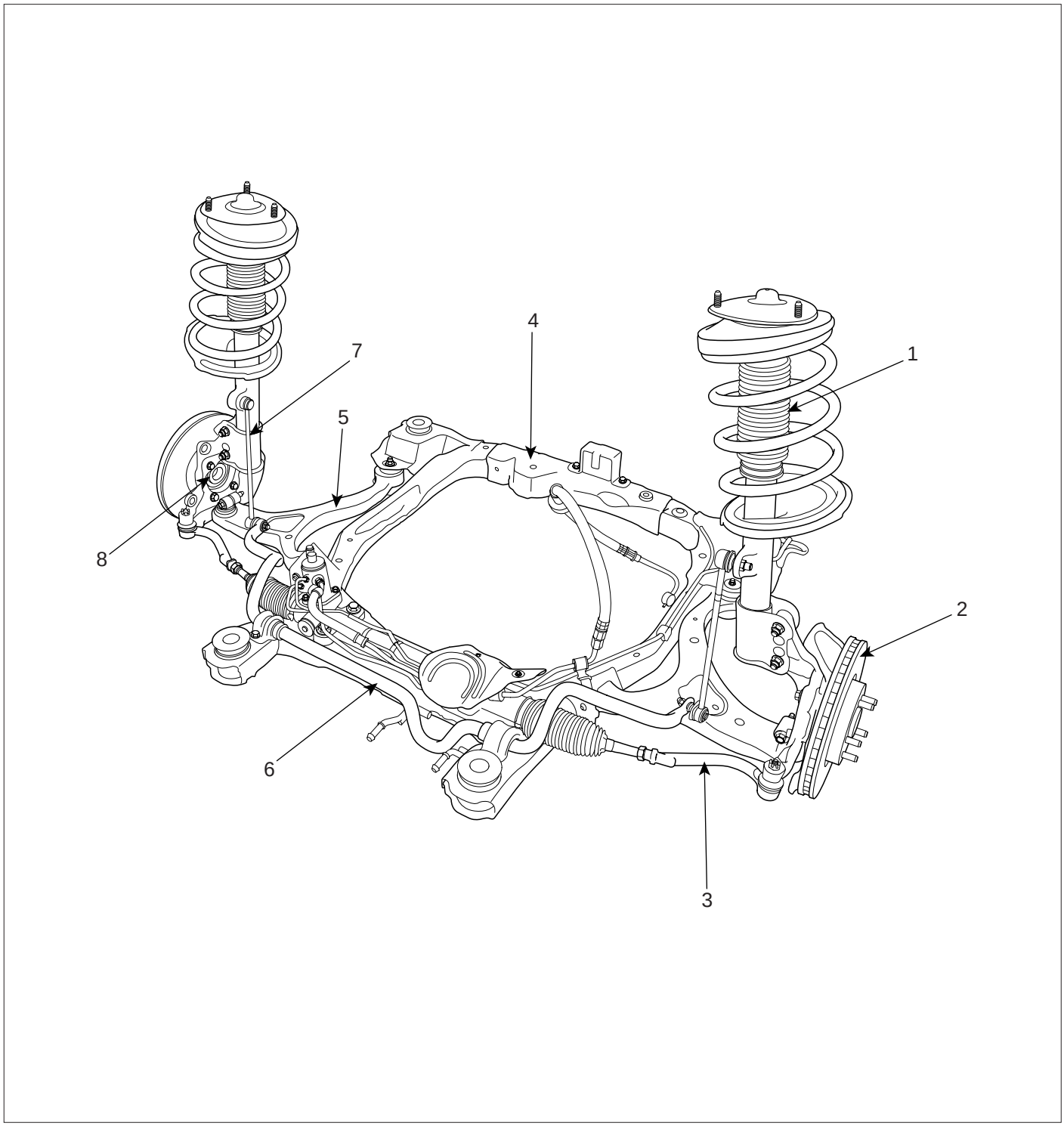

1. Front strut assembly
2. Front disc
3. Tie rod end assembly
4. Front subframe
5. Front lower arm
6. Front stabilizer bar assembly
7. Front stabilizer link assembly
8. Front knuckle assembly

SCMDS6500L

COMPONENTS E72B2FAD

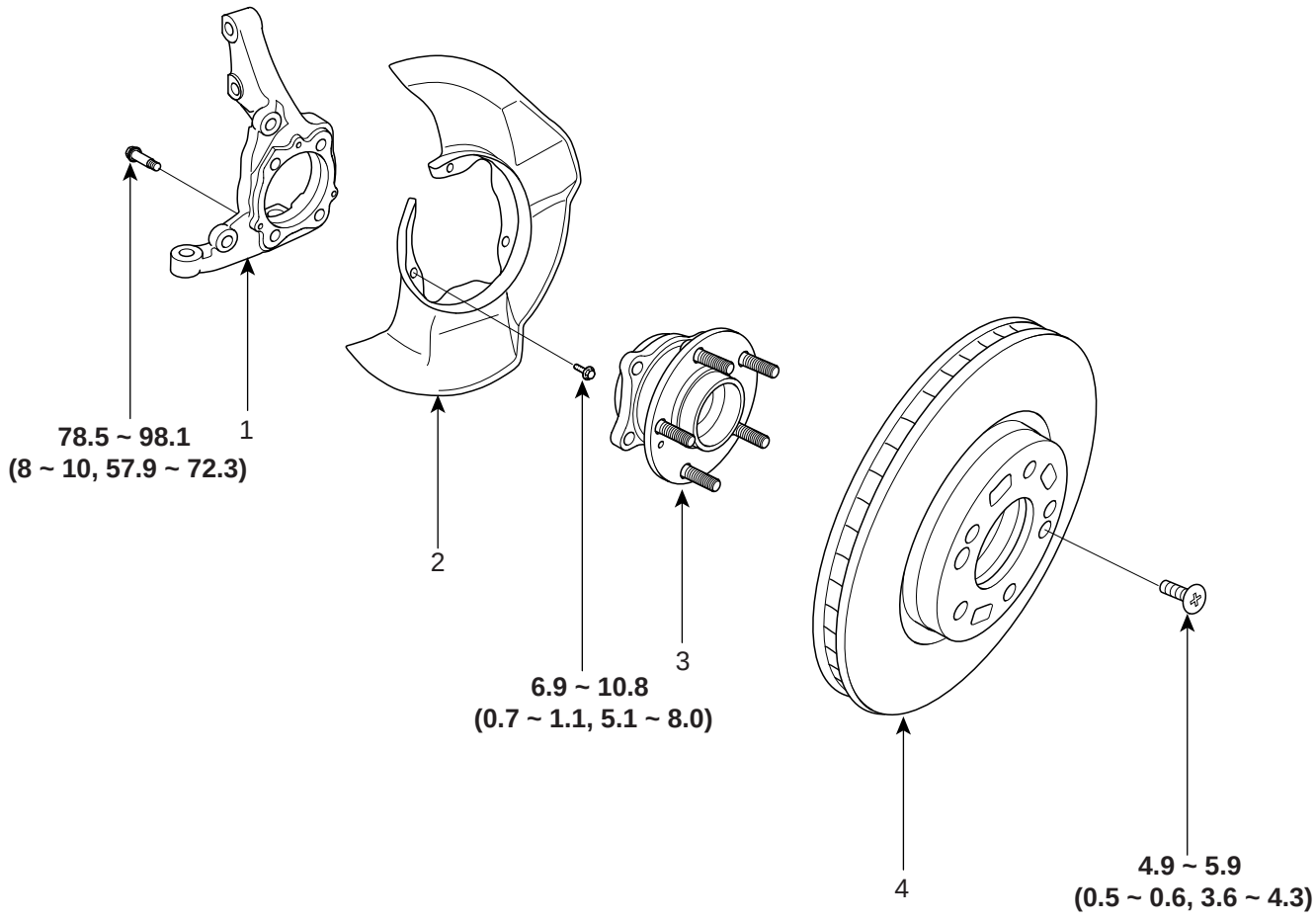

TORQUE : Nm (kgf.m, lb-ft)

1. Knuckle
2. Dust cover
3. Hub assembly
4. Brake disc

SCMDS6501L

REMOVAL E53ADA59

1. Loosen the wheel nuts slightly.
   Raise the vehicle, and make sure it is securely supported.

2. Remove the front wheel and tire (A) from the front hub (B).

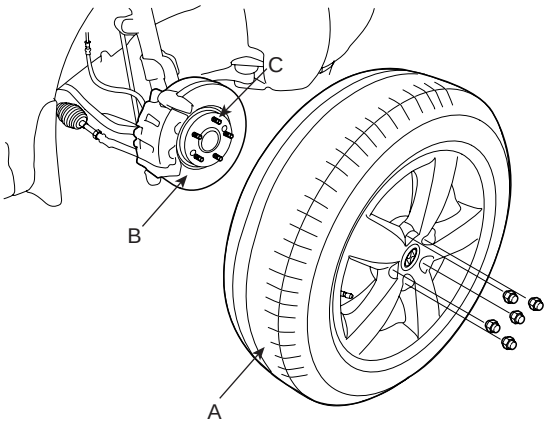

SCMDS6003D

CAUTION

Be careful not to damage to the hub bolts (C) when removing the front wheel and tire (A).

3. Remove the split pin (A), then remove castle nut (B) and washer (C) from the front hub under applying the brake.

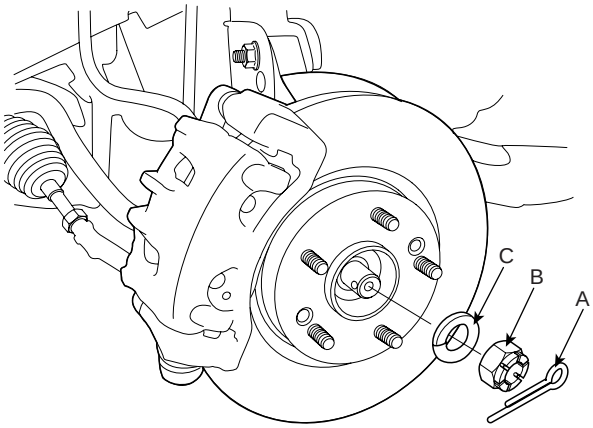

SCMDS6004D

4. Remove the brake caliper mounting bolts (A), and then place the brake caliper assembly (B) with wire.

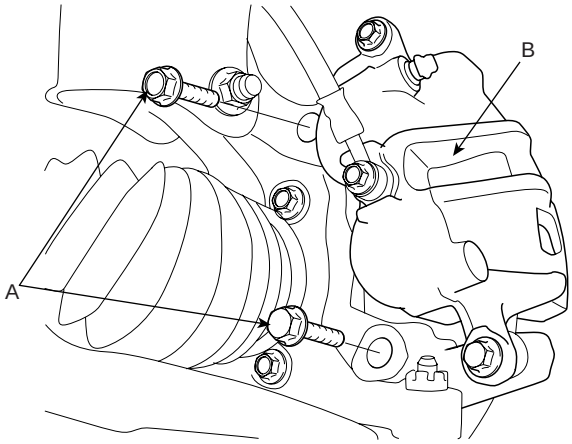

SCMDS6005D

5. Remove the tie rod end ball joint from the knuckle.
   1) Remove the split pin (A).
   2) Remove the castle nut (B).
   3) Disconnect the ball joint (C) from knuckle (D) using the special tool (09568-4A000).

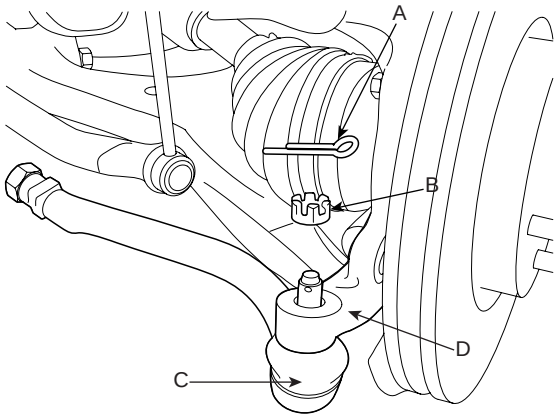

SCMDS6006D

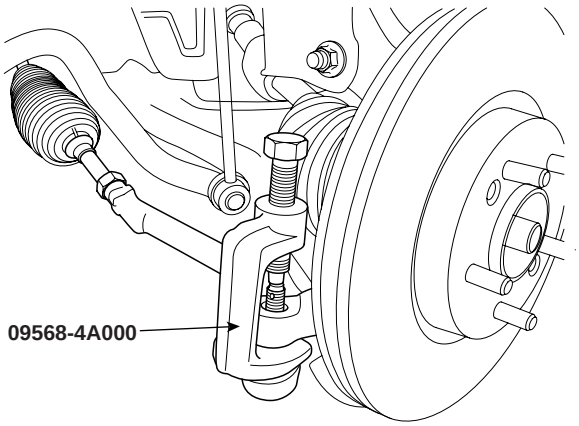

SCMDS6007D

CAUTION

Apply a few drops of oil to the special tool. (Boot contact part)

6. Remove the wheel speed sensor (B), the strut lower mounting bolt (C) and the lower arm mounting bolt (D) from the knuckle (A).

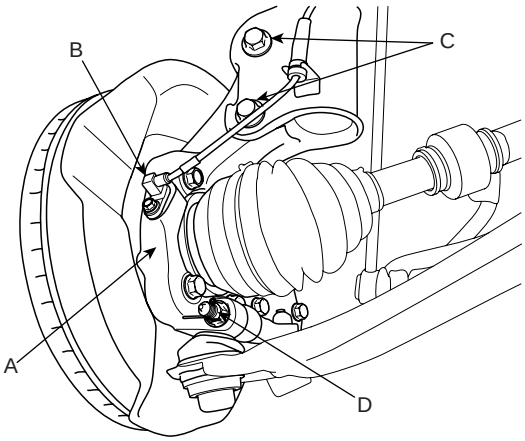

SCMDS6008D

7. Remove the hub and knuckle assembly.

CAUTION

Be careful not to damage the boot and rotor teeth.

DISASSEMBLY E57FBCCD

1. Remove the brake disc (B) from the knuckle assembly (A).

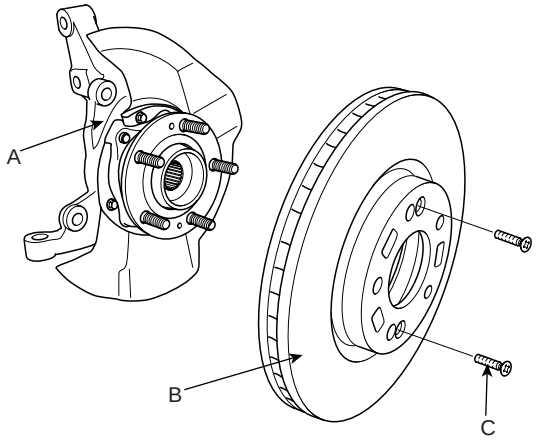

SCMDS6009D

2. Remove the hub assembly mounting bolts (B) from the knuckle (A).

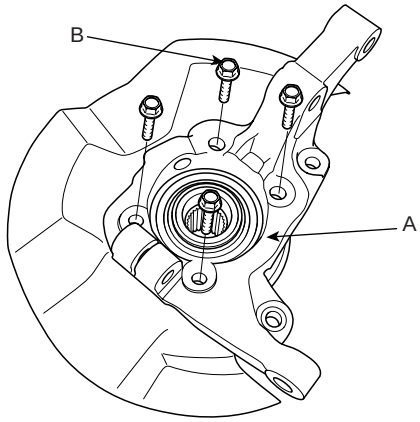

SCMDS6010D

3. Remove the hub assembly (C) and the dust cover (B) from the knuckle (A).

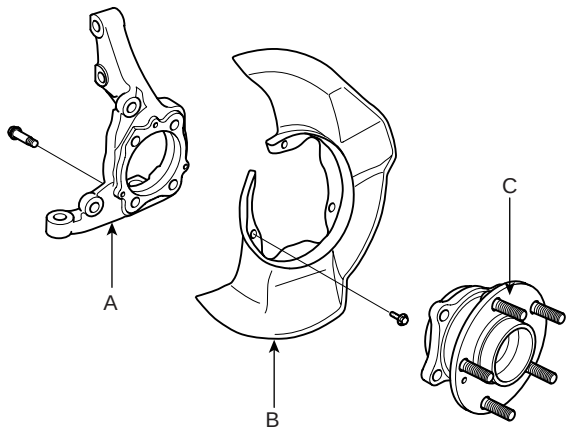

SCMDS6501D

CAUTION

Do not disassemble the hub assembly.

INSPECTION EDD59A61

1. Check the hub for cracks and the splines for wear.
2. Check the brake disc for scoring and damage.
3. Check the knuckle for cracks.
4. Check the bearing for cracks or damage.

REASSEMBLY E0EE0855

1. Install the dust cover (B) to the knuckle (A) and then tighten the mounting bolt (C).

Tightening torque Nm (kgf-m, lb-ft) :
6.9~10.8 (0.7~1.1, 5.1~8.0)

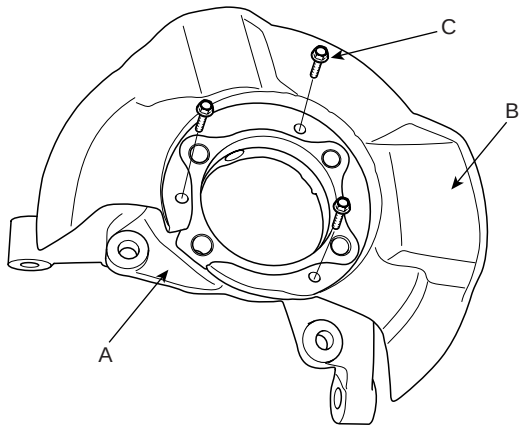

SCMDS6011D

2. Install the hub assembly to the knuckle (A) and then tighten the mounting bolt (B).

Tightening torque Nm (kgf-m, lb-ft) :
78.5~98.1 (8~10, 57.9~72.3)

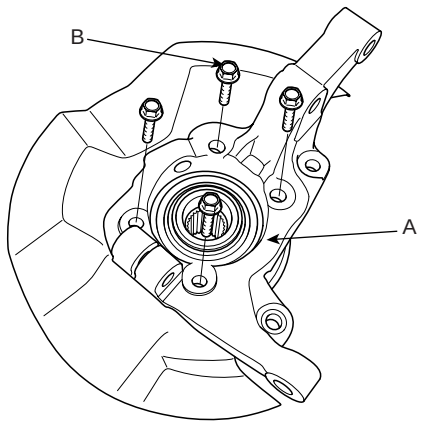

SCMDS6010D

3. Install the brake disc (B) to the knuckle assembly (A).

Tightening torque Nm (kgf-m, lb-ft) :
Screw(C): 4.9~5.9 (0.5~0.6, 3.6~4.3)

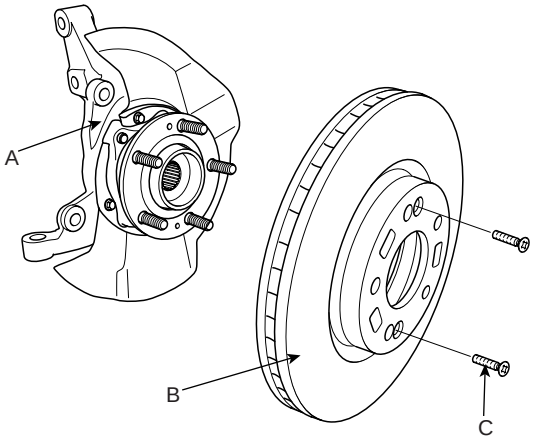

SCMDS6009D

INSTALLATION E7AFB226

1. Install the hub and knuckle assembly.

2. Install the wheel speed sensor (B), the strut lower mounting bolt (C) and the lower arm mounting bolt (D) from the knuckle (A).

Tightening torque Nm (kgf-m, lb-ft) :
Wheel speed sensor (B):
6.9~10.8 (0.7~1.1, 5.1~8.0)
Bolts (C): 152.0~171.6 (15.5~17.5, 112.1~126.6)
Bolt (D) : 98.1~117.7 (10~12, 72.3~86.8)

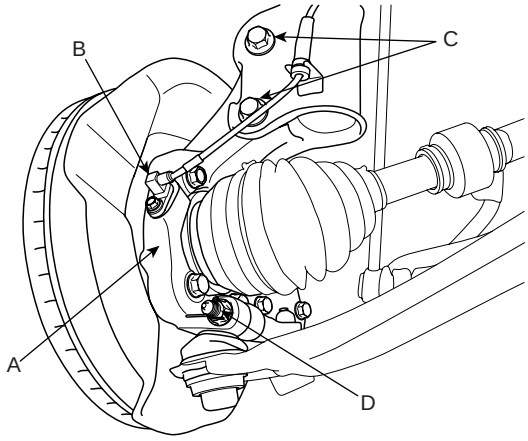

SCMDS6008D

3. Install the tie rod end ball joint (C) to the knuckle (D).

4. Install the castle nut (B) and the split pin (A).

Tightening torque Nm (kgf-m, lb-ft) :
23.5~33.3 (2.4~3.4, 17.4~24.6)

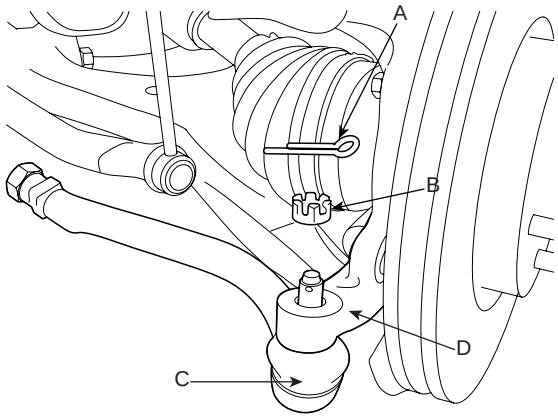

SCMDS6006D

5. Install the brake caliper (B) and then tighten the mounting bolts (A).

Tightening torque Nm (kgf-m, lb-ft) :
78.5~98.1 (8~10, 57.9~72.3)

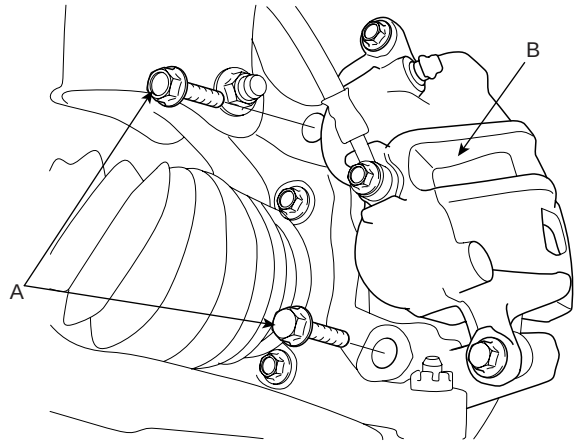

SCMDS6005D

6. Install the washer (C), castle nut (B) and split pin (A) to the front hub assembly.

Tightening torque Nm (kgf-m, lb-ft) :
196.1~255.0 (20~26, 144.7~188.1)

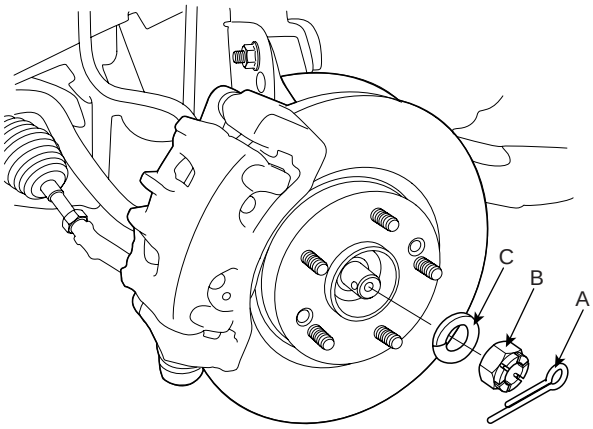

SCMDS6004D

CAUTION

The washer (B) should be assembled with convex surface outward when installing the castle nut(A) and split pin (C).

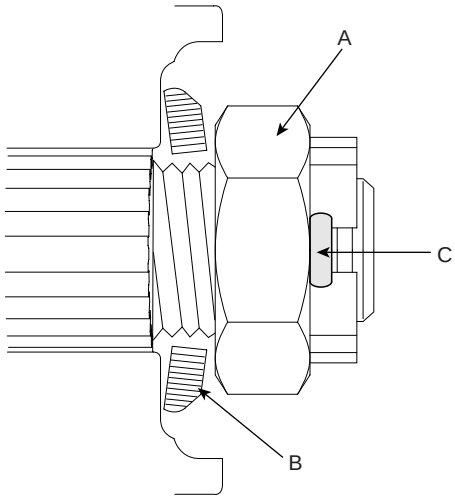

EIKD010A

7. Install the wheel and tire (A) to the front hub (B).

Tightening torque Nm (kgf-m, lb-ft) :
88.3~107.9 (9~11, 65.1~79.6)

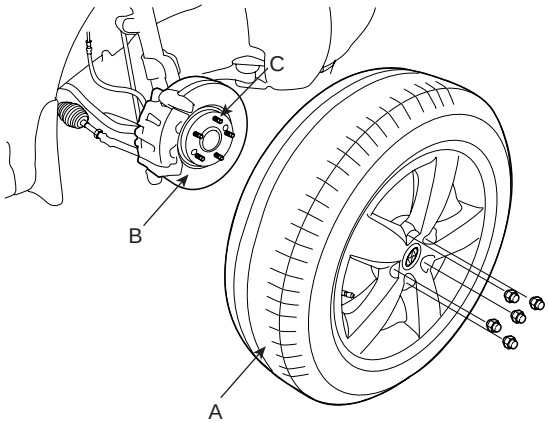

SCMDS6003D

CAUTION

Be careful not to damage the hub bolts (C) when installing the front wheel and tire (A).

DRIVESHAFT

FRONT DRIVESHAFT ASSEMBLY

COMPONENT E2AF3468

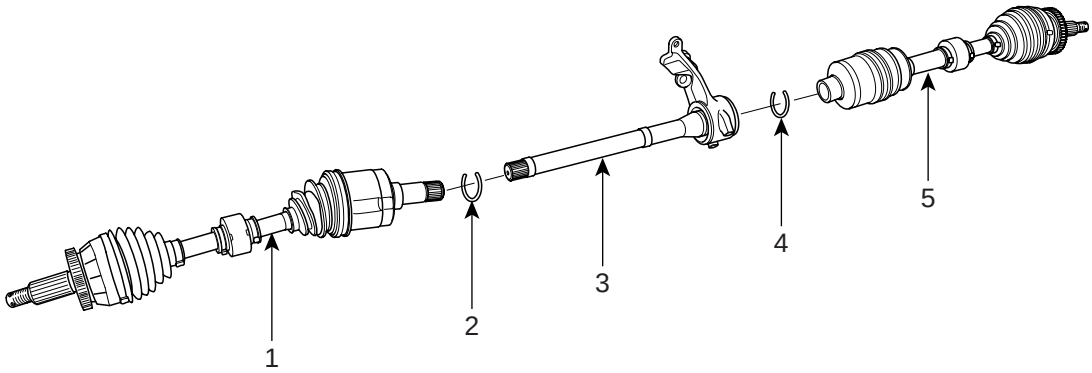

1. Driveshaft (LH)
2. Circlip
3. Inner shaft bearing bracket assembly
4. Circlip
5. Driveshaft (RH)

SCMDS6502L

REMOVAL E705BCB8

1. Loosen the wheel nuts slightly.
   Raise the vehicle, and make sure it is securely supported.

2. Remove the front wheel and tire (A) from the front hub (B).

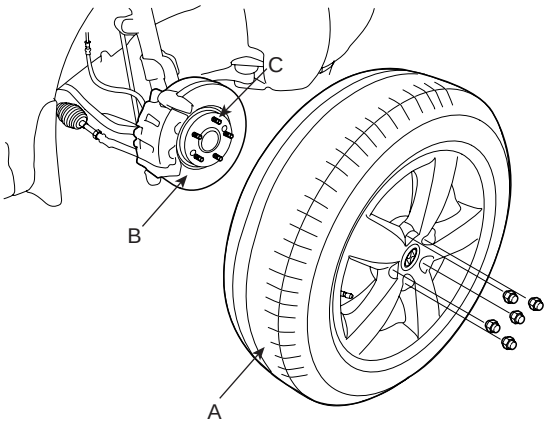

SCMDS6003D

CAUTION

Be careful not to damage to the hub bolts (C) when removing the front wheel and tire (A).

3. Remove the split pin (A), then remove castle nut (B) and washer (C) from the front hub under applying the brake.

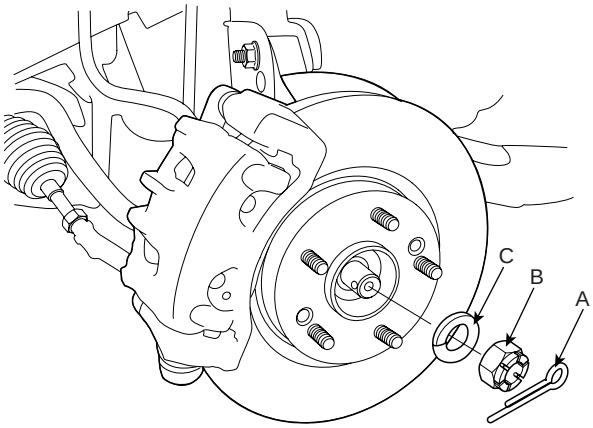

SCMDS6004D

4. Remove the brake caliper mounting bolts (A), and then place the brake caliper assembly (B) with wire.

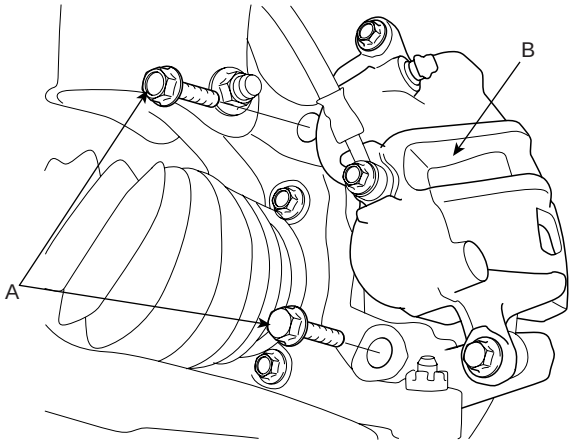

SCMDS6005D

5. Remove the tie rod end ball joint from the knuckle.
   1) Remove the split pin (A).
   2) Remove the castle nut (B).
   3) Disconnect the ball joint (C) from knuckle (D) using the special tool (09568-4A000).

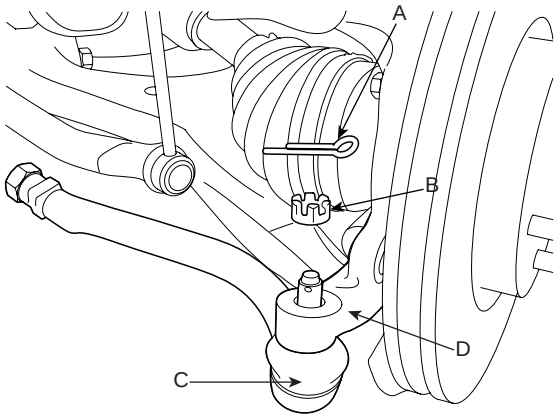

SCMDS6006D

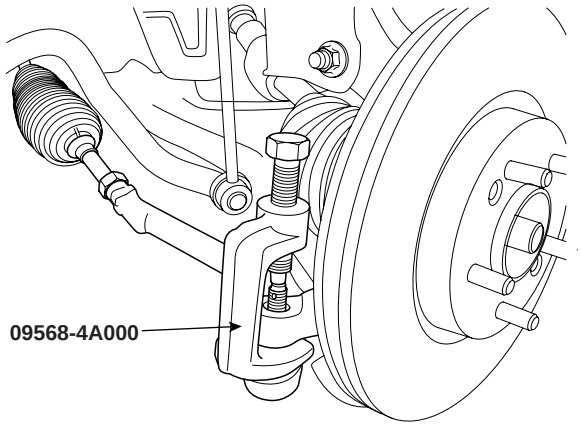

SCMDS6007D

CAUTION

Apply a few drops of oil to the special tool. (Boot contact part)

6. Remove the split pin and the lower arm mounting bolt (B) from the knuckle (A).

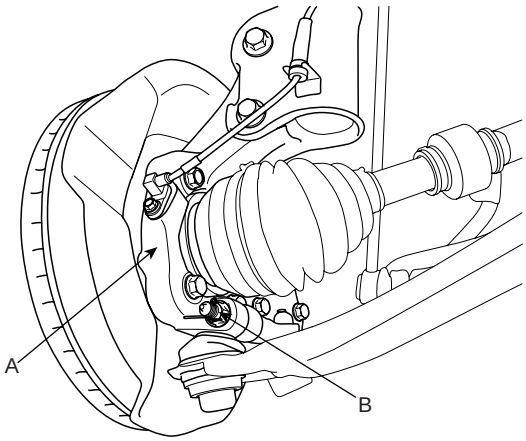

SCMDS6051D

7. Using a plastic hammer (A), disconnect driveshaft (C) from the axle hub (B).

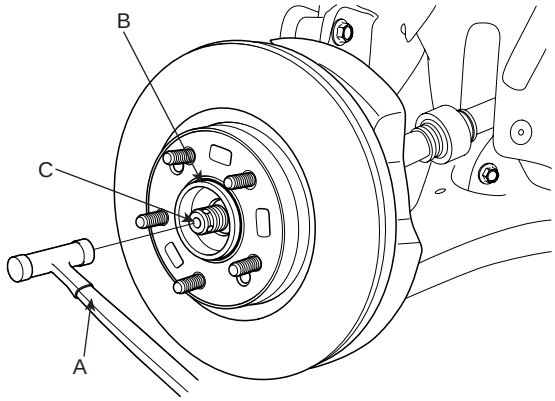

SCMDS6040D

8. Push the axle hub (A) outward and separate the drive-shaft (B) from the axle hub (A).

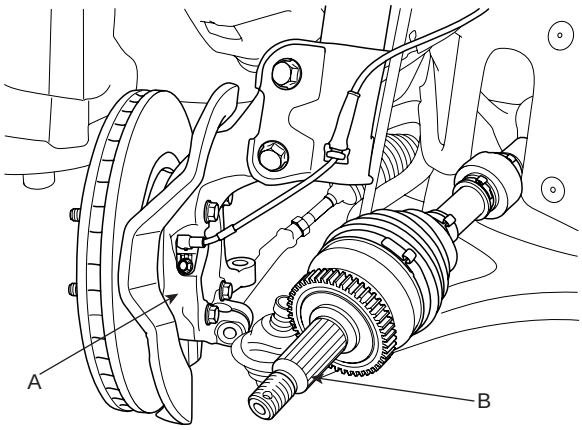

SCMDS6012D

9. Remove the dust cover (A). (RH side)

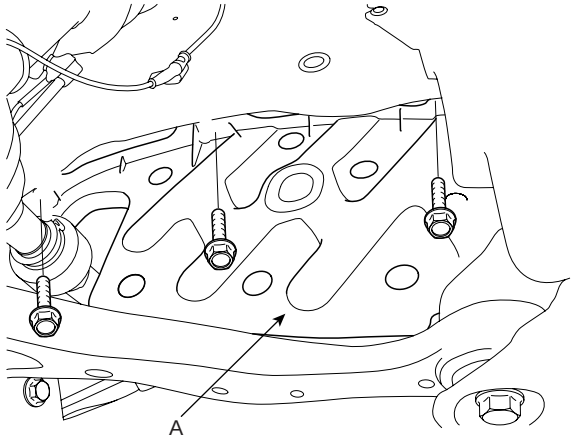

SCMDS6013D

10. Remove the mounting bolts of inner shaft bearing bracket assembly (A).

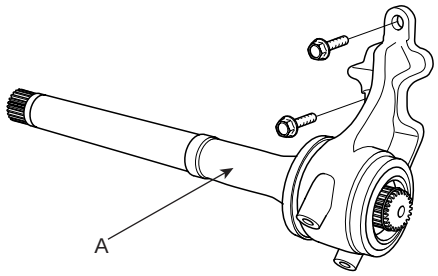

SCMDS6015D

11. Insert a pry bar (A) between the transaxle case (B) and joint case (C), and separate the driveshaft (D) from the transaxle case.

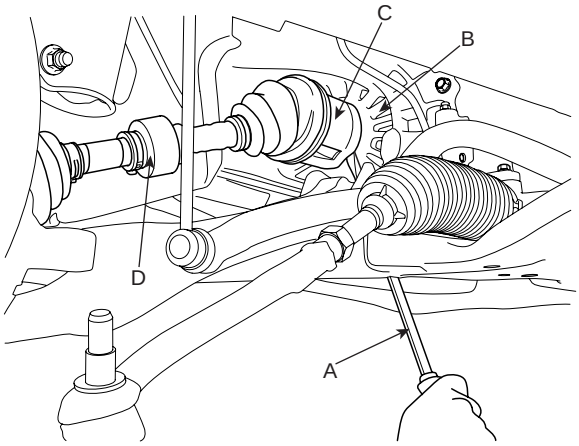

SCMDS6016D

CAUTION

- ***Use a pry bar (A) being careful not to damage the transaxle and joint.***
- ***Do not insert the pry bar (A) too deep, as this may cause damage to the oil seal.***
- ***Do not pull the driveshaft by excessive force it may cause components inside the joint kit to dislodge resulting in a torn boot or a damaged bearing.***
- ***Plug the hole of the transaxle case with the oil seal cap to prevent contamination.***
- ***Support the driveshaft properly.***
- ***Replace the retainer ring whenever the driveshaft is removed from the transaxle case.***

INSPECTION EDCDABC7

1. Check the driveshaft boots for damage and deterioration.
2. Check the ball joint for wear and damage.
3. Check the splines for wear and damage.
4. Check the dynamic damper for cracks, wear and position.

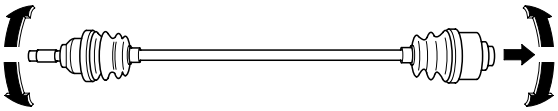

EIKD019A

5. Check the driveshaft for cracks and wears.

INSTALLATION ED821A44

1. Apply gear oil on the oil seal contacting surface (B) of transaxle case and the driveshaft splines (A).

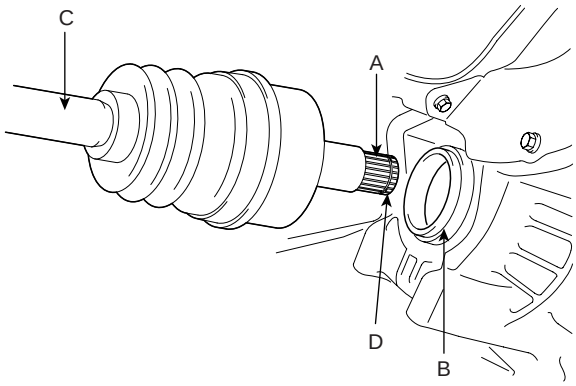

SCMDS6502D

2. Before installing the driveshaft (C), set the opening side of the circlip (D) facing downward.

3. After installation, check that the driveshaft (C) cannot be removed by hand.

4. Install the inner shaft bearing bracket assembly (A) and then tighten the mounting bolts.

Tightening torque Nm (kgf-m, lb-ft) :
49.0~68.6 (5~7, 36.2~50.6)

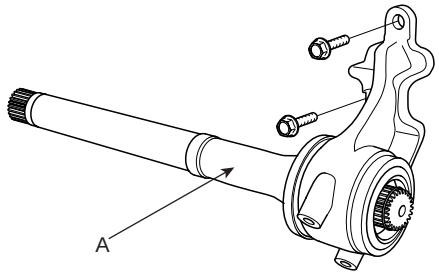

SCMDS6015D

5. Install the dust cover (A). (RH side)

Tightening torque Nm (kgf-m, lb-ft) :
7.8~11.8 (0.8~1.2, 5.8~8.7)

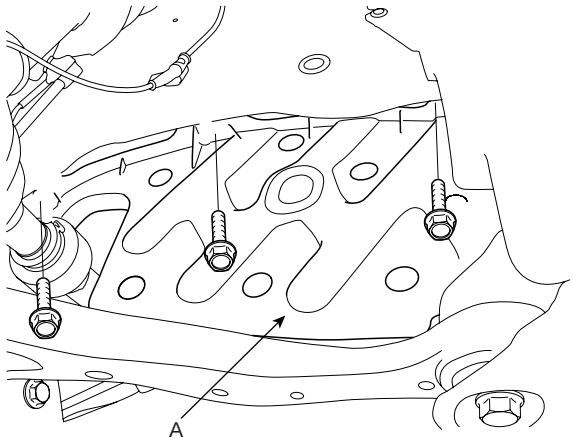

SCMDS6013D

6. Install the driveshaft to the axle hub.

7. Install the lower arm mounting bolt (B) and the split pin to the knuckle (A).

Tightening torque Nm (kgf-m, lb-ft) :
98.1~117.7 (10~12, 72.3~86.8)

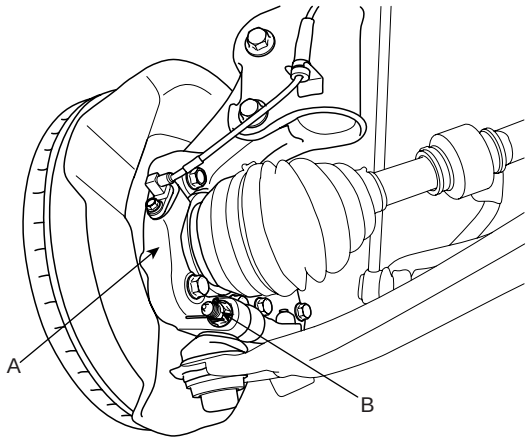

SCMDS6051D

8. Install the tie rod end ball joint (C) to the knuckle (D).

9. Install the castle nut (B) and the split pin (A).

Tightening torque Nm (kgf-m, lb-ft) :
23.5~33.3 (2.4~3.4, 17.4~24.6)

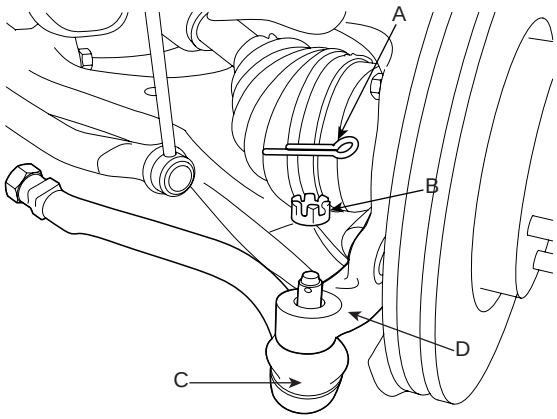

SCMDS6006D

10. Install the brake caliper (B) and then tighten the mounting bolts (A).

Tightening torque Nm (kgf-m, lb-ft) :
78.5~98.1 (8~10, 57.9~72.3)

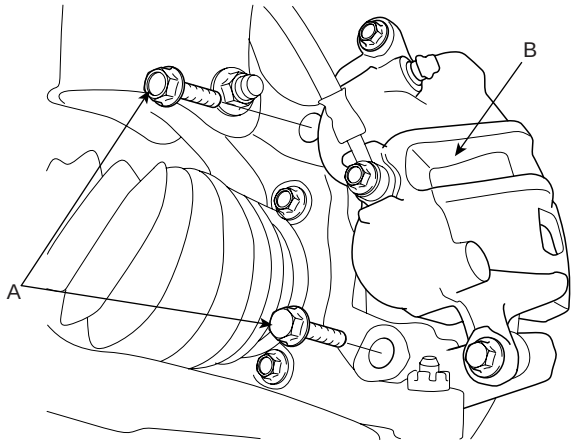

SCMDS6005D

11. Install the washer (C), castle nut (B) and split pin (A) to the front hub assembly.

Tightening torque Nm (kgf-m, lb-ft) :
196.1~255.0 (20~26, 144.7~188.1)

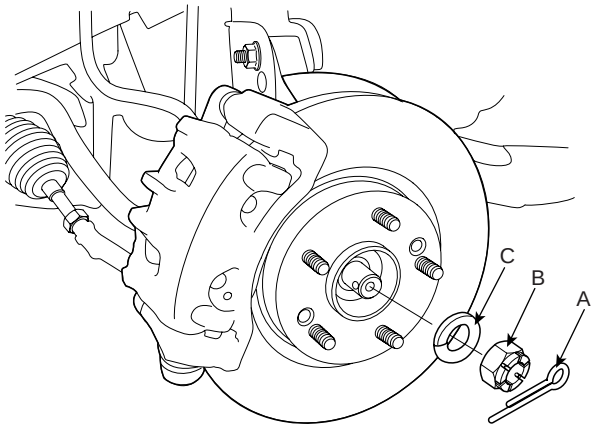

SCMDS6004D

CAUTION

The washer (B) should be assembled with convex surface outward when installing the castle nut (A) and split pin (C).

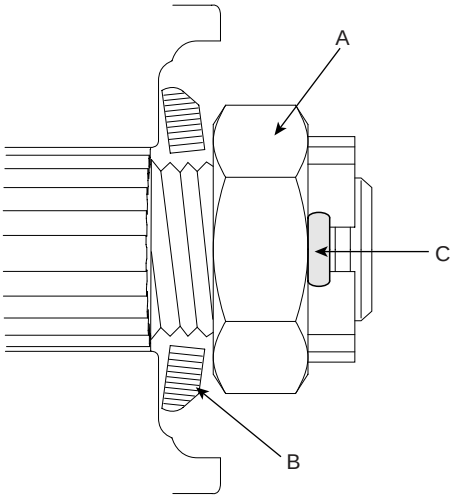

EIKD010A

12. Install the wheel and tire (A) to the front hub (B).

Tightening torque Nm (kgf-m, lb-ft) :
88.3~107.9 (9~11, 65.1~79.6)

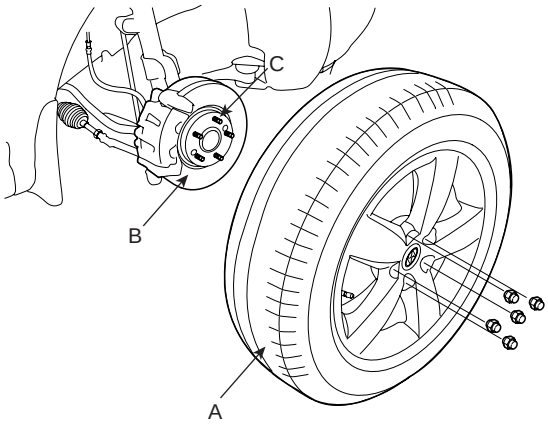

SCMDS6003D

CAUTION

Be careful not to damage the hub bolts (C) when installing the front wheel and tire (A).

FRONT DRIVESHAFT (PTJ-BJ TYPE)

COMPONENT E91015BA

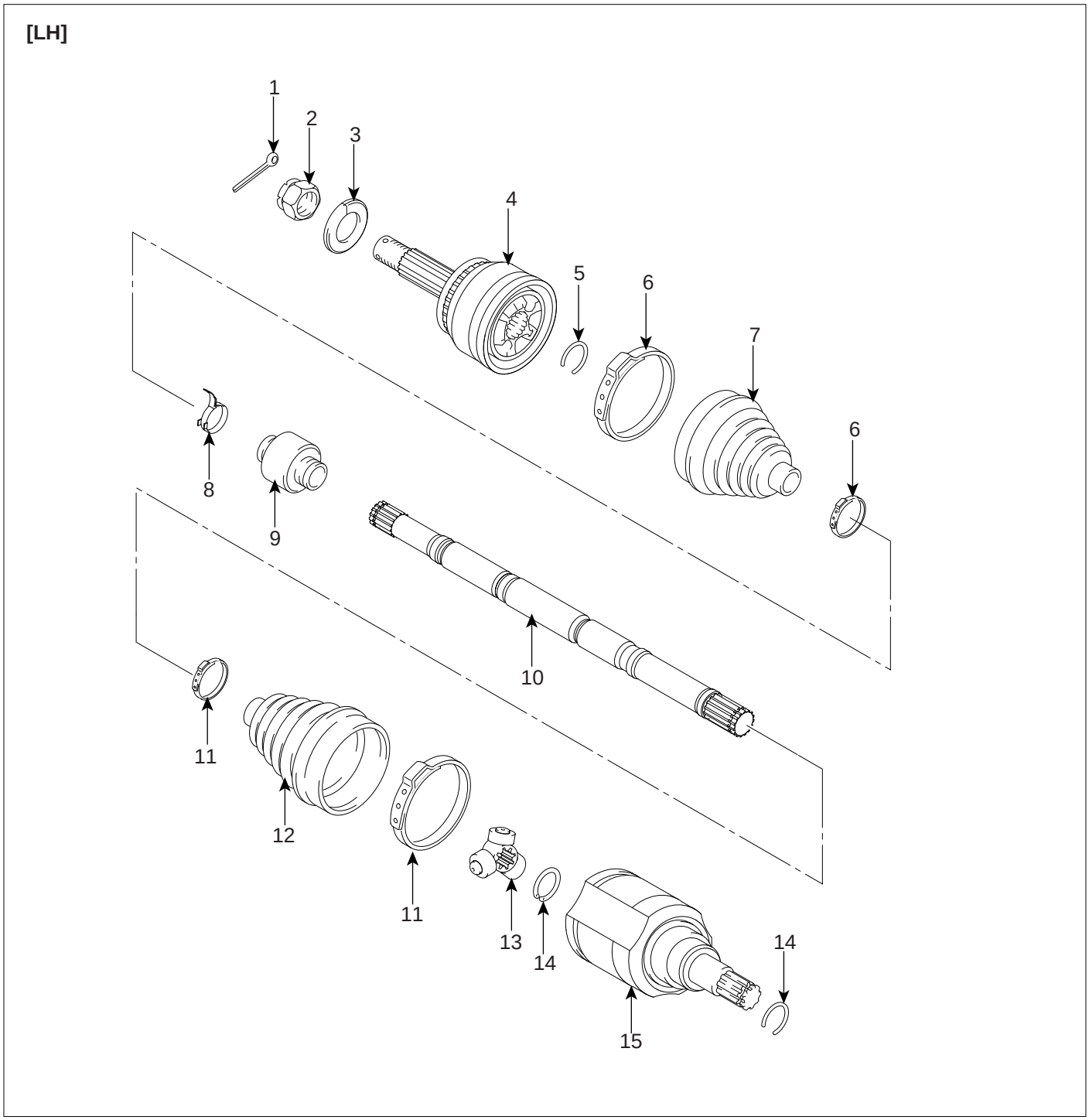

1. Split pin
2. Castle nut
3. Washer
4. BJ assembly
5. Clip A
6. BJ boot band
7. BJ boot
8. Dynamic damper band
9. Dynamic damper
10. Shaft
11. PTJ boot band
12. PTJ boot
13. Trunion assembly
14. Circlip
15. PTJ assembly

SCMDS6503L

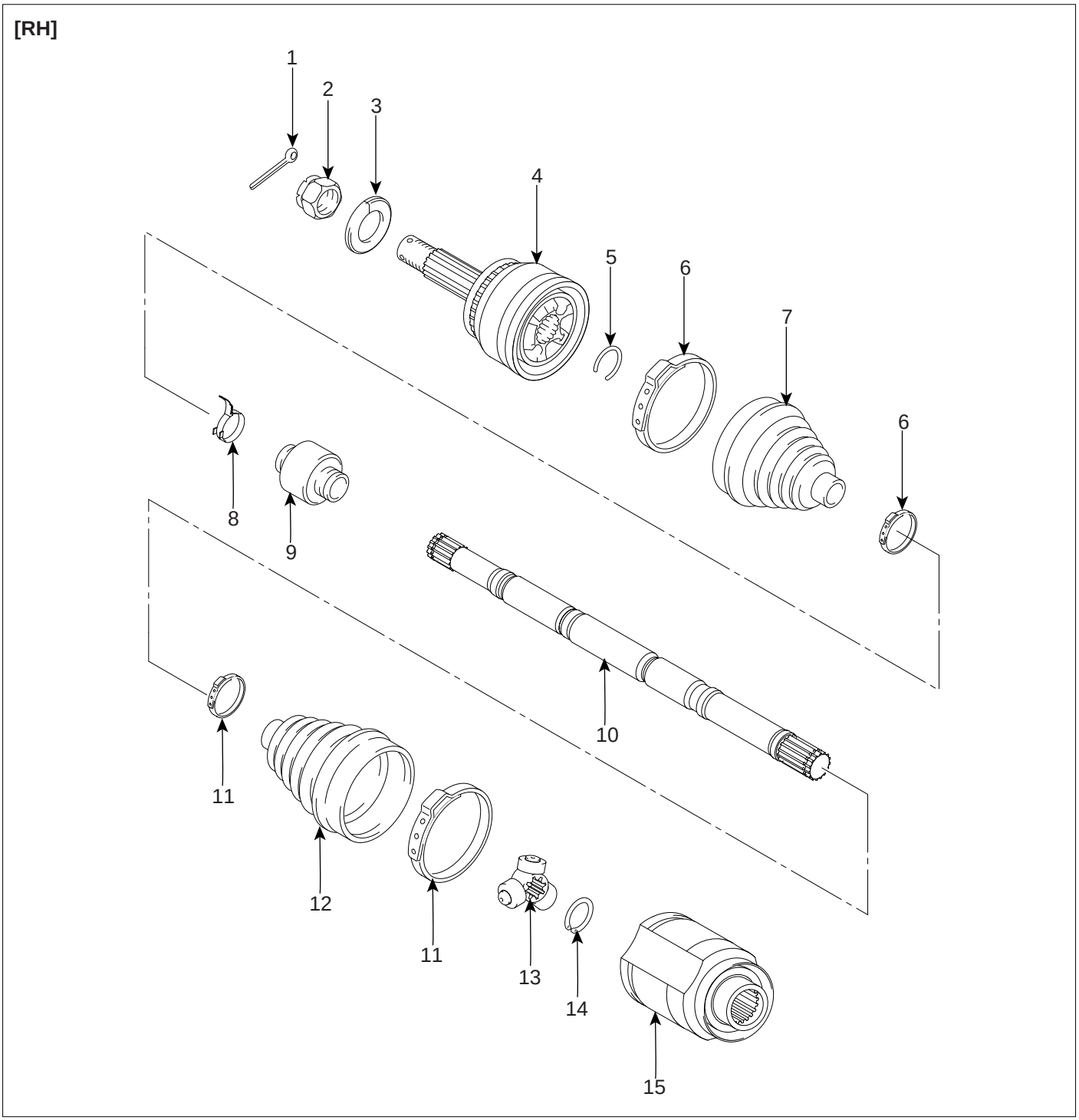

1. Split pin
2. Castle nut
3. Washer
4. BJ assembly
5. Clip A
6. BJ boot band
7. BJ boot
8. Dynamic damper band
9. Dynamic damper
10. Shaft
11. PTJ boot band
12. PTJ boot
13. Trunion assembly
14. Circlip
15. PTJ assembly

SCMDS6504L

DISASSEMBLY E7560CE9

CAUTION

- ***Do not disassemble the BJ assembly.***
- ***Special grease must be applied to the drive-shaft joint. Do not substitute with another type of grease.***
- ***The boot band should be replaced with a new one.***

1. Remove the circlip (B) from driveshaft splines (A) of the transaxle side PTJ case.

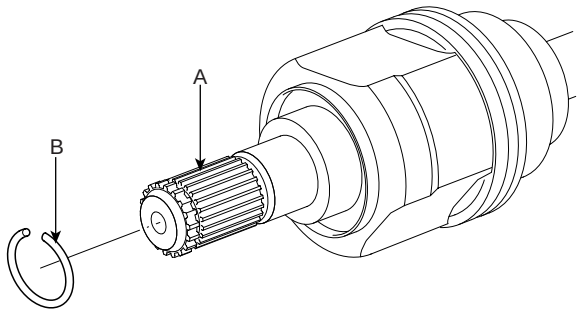

KXDDE07A

2. Remove the both boot clamps from the transaxle side PTJ case.

   1) Using a flat-tipped (-) screwdriver, remove the both clamps of the transaxle side.

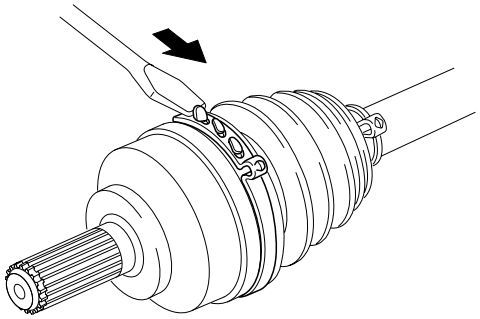

SCMDS6515D

3. Pull out the boot from the transaxle side joint(PTJ).

4. Remove the clip (C) from the PTJ case (B).

5. While dividing joint(PTJ) boot (A) of the transaxle side, wipe the grease in PTJ case (B) and collect them respectively.

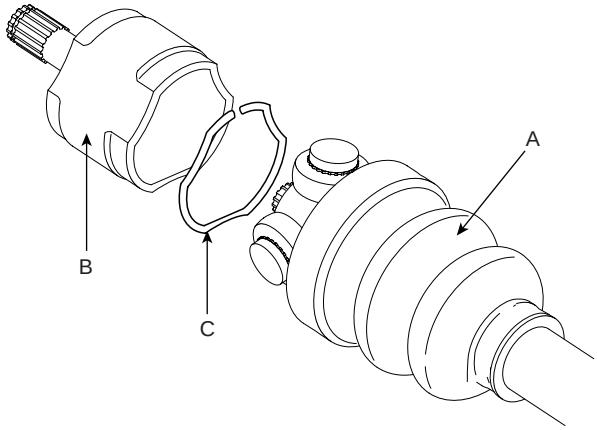

SCMDS6505D

CAUTION

- ***Be careful not to damage the boot.***
- ***According to below the illustrated, put marks (D) on roller of trunion assembly (A), PTJ case (B) and spline part (C), for providing assembly.***

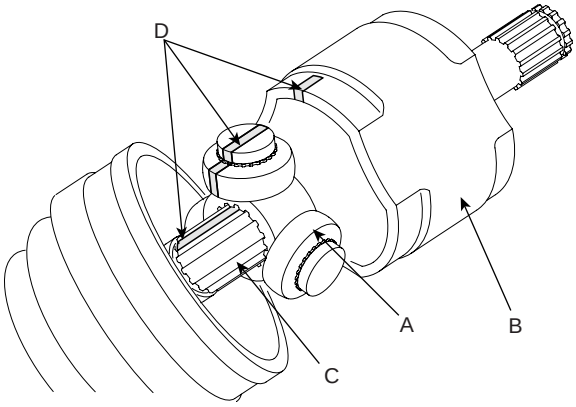

KXDDE11A

6. Using a snap ring plier or flat-tipped (-) screwdriver, remove the circlip (A).

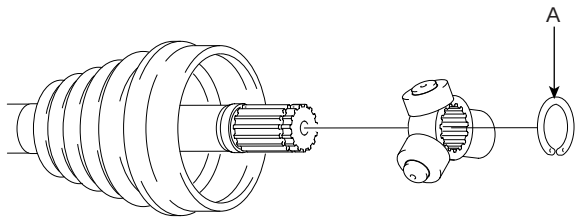

KXDDE12A

7. Remove the trunion assembly (B) from the driveshaft (A) using the special tool (09495-33000).

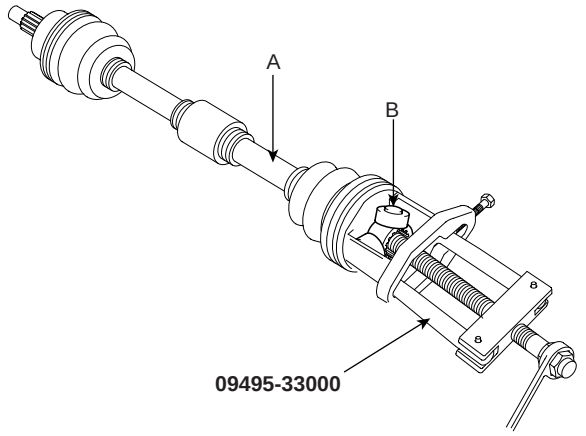

KXDDE13A

8. Clean the trunion assembly.

9. Remove the boot (A) of the transaxle side joint(PTJ).

CAUTION

For reusing the boot (A), wrap tape (B) around the driveshaft splines (C) to protect the boot (A).

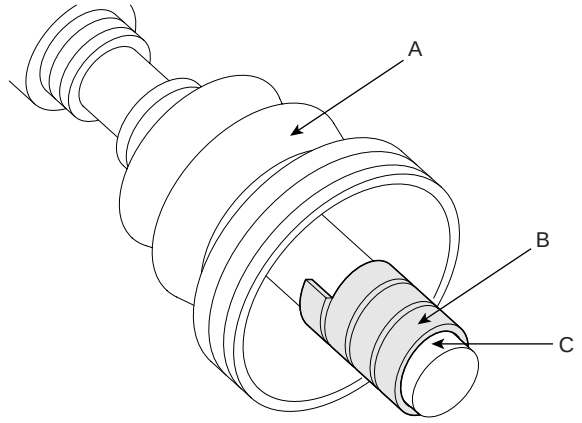

KXDDE14A

10. Using a plier or flat-tipped (-) screwdriver, remove the both side of clamp (B) of the dynamic damper (A).

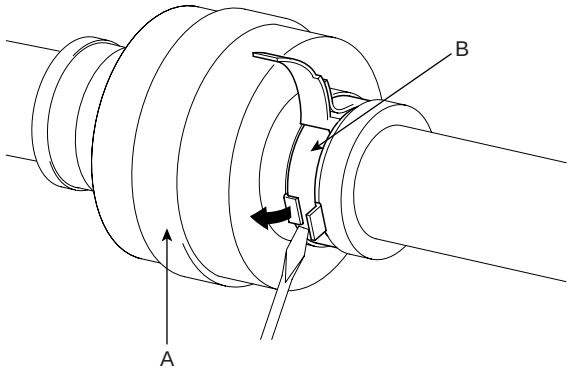

KIQE150A

11. Fix the driveshaft (A) with a vice (B) as illustrated.

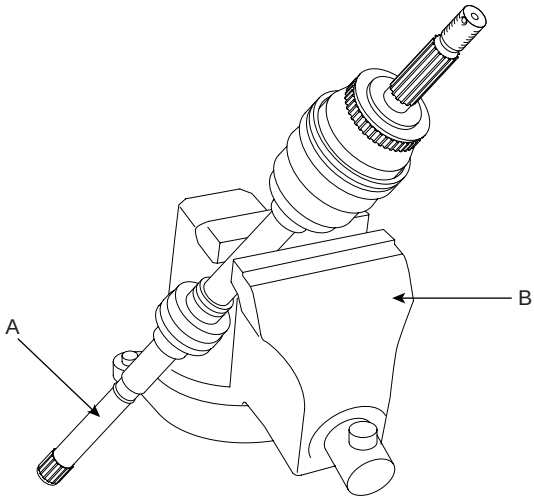

KXDDE16A

12. Apply soap powder on the shaft to prevent being damaged between the shaft spline and the dynamic damper when the dynamic damper is removed.

13. Saperate the dynamic damper (A) from the shaft (B) carefully.

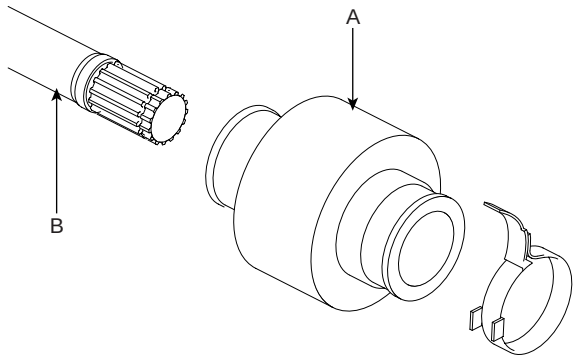

KIQE150B

14. Using a plier or flat-tipped (-) screwdriver, remove the clamp on the side of wheel.

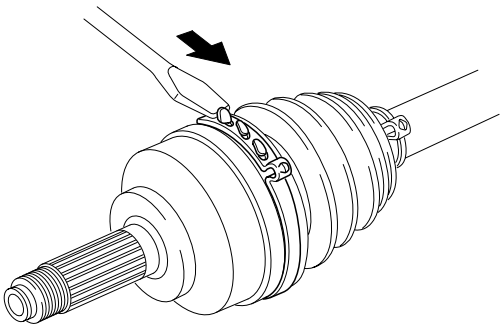

EIRF003H

15. Pull out the joint(BJ) on the side of wheel into the transaxle direction.
    Be carefull not to damage the boot.

INSPECTION EAF5A003

1. Check the driveshaft spline for wear or damage.

2. Check that there is no water or foreign material in the BJ.

3. Check the trunion assembly for roller rotation, wear or corrosion.

4. Check the groove inside the PTJ case for wear or corrosion.

5. Check the dynamic damper for damage or cracks.

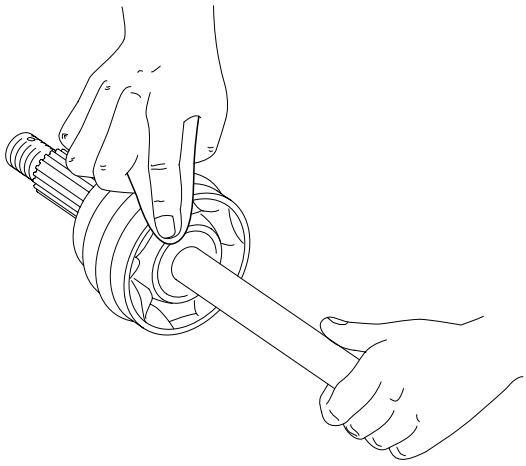

EIKD025B

REASSEMBLY E1C350AF

1. Wrap tape around the driveshaft splines (PTJ. side) to prevent damage to the boots.
2. Apply grease to the driveshaft and install the BJ boots.
3. Install the bands to both BJ boots.

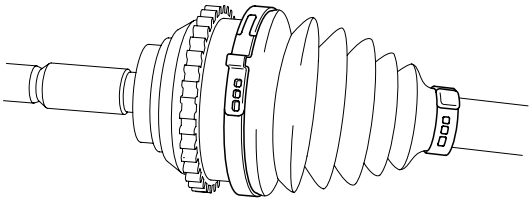

EIRF003I

4. Using the SST(09495-3K000), secure the boot bands.

Clearance (A) : 2.0 mm (0.079 in.) or less

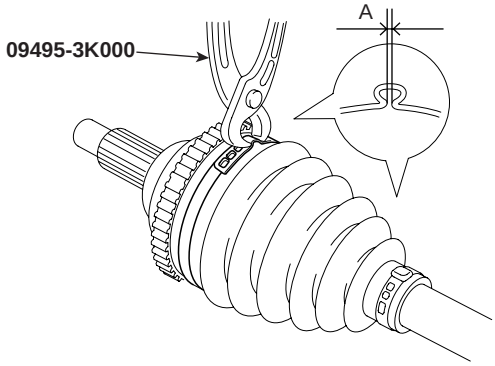

AILG500L

5. To reassemble the dynamic damper (A), keeping the shaft (B) in the straight, tighten the dynamic damper (A) with dynamic damper band (C), as the illustration.

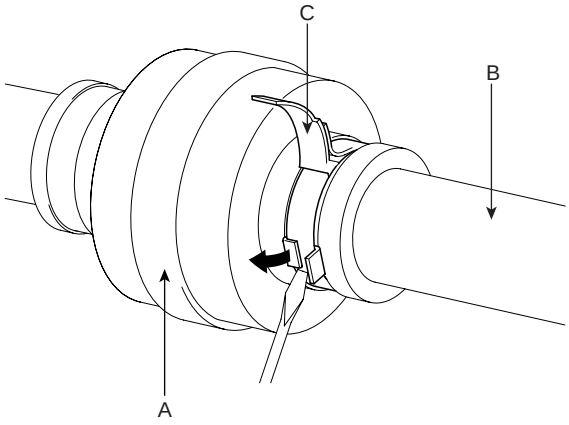

KIQE151A

6. Install the PTJ boot bands and PTJ boot.
7. Install the trunion assembly (A) and the circlip (E) to the spline (C) on the driveshaft.
   At this time align the marks (D) each other.

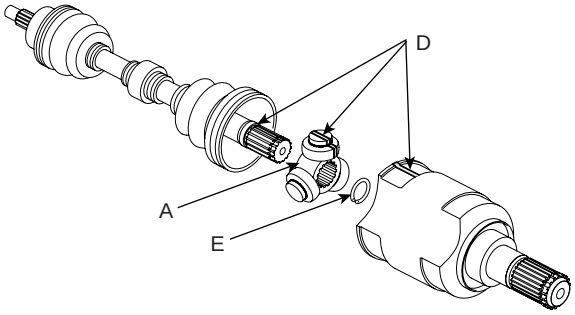

KXDDE20A

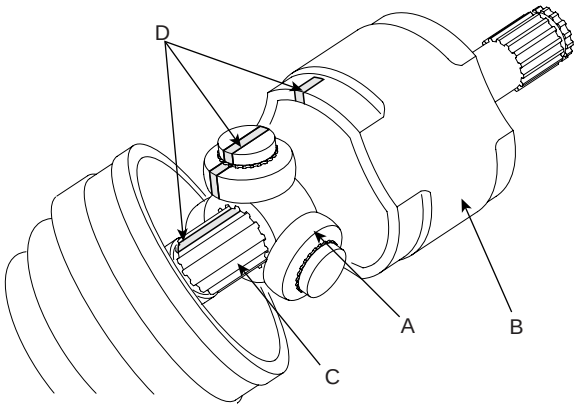

KXDDE11A

8. Install the clip to the PTJ case (B).

9. Add the specified grease to the PTJ as mush as wiped away at inspection.

10. Install the PTJ boots.

11. Install the bands to both PTJ boots.

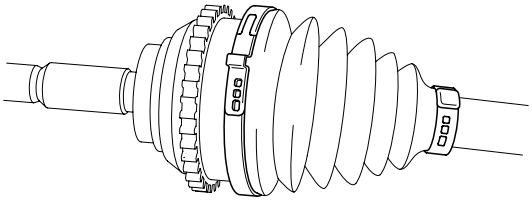

EIRF003I

12. Using the SST(09495-3K000), secure the boot bands.

Clearance (A) : 2.0 mm (0.079 in.) or less

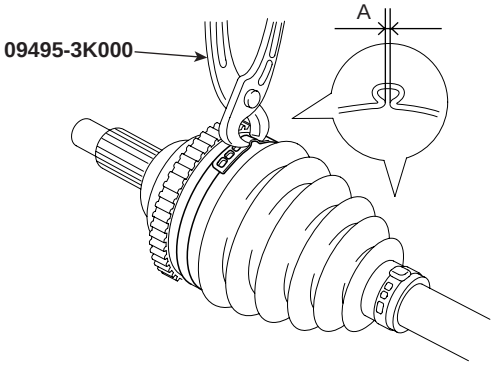

AILG500L

13. To control the air in the PTJ boot, keep the specified distance between the boot bands when they are tightened.

Distance (A)	LH side	RH side
Diesel 2.2 M/T 2WD/4WD (mm(in))	514.2 +26.8 -22.1 (20.24 +1.06 -0.87)	537.2 +26.8 -22.1 (21.15 +1.06 -0.87)
Diesel 2.2 A/T 2WD/4WD (mm(in))	524.2 +26.8 -22.1 (20.64 +1.06 -0.87)	
Gasoline 2.7 A/T 2WD (mm(in))	534.2 +26.8 -22.1 (21.03 +1.06 -0.87)	

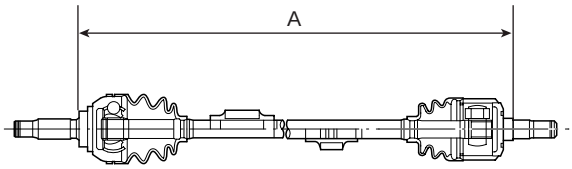

EIKD022A

FRONT DRIVESHAFT (SFJ-BJ TYPE)

COMPONENT EA567BE1

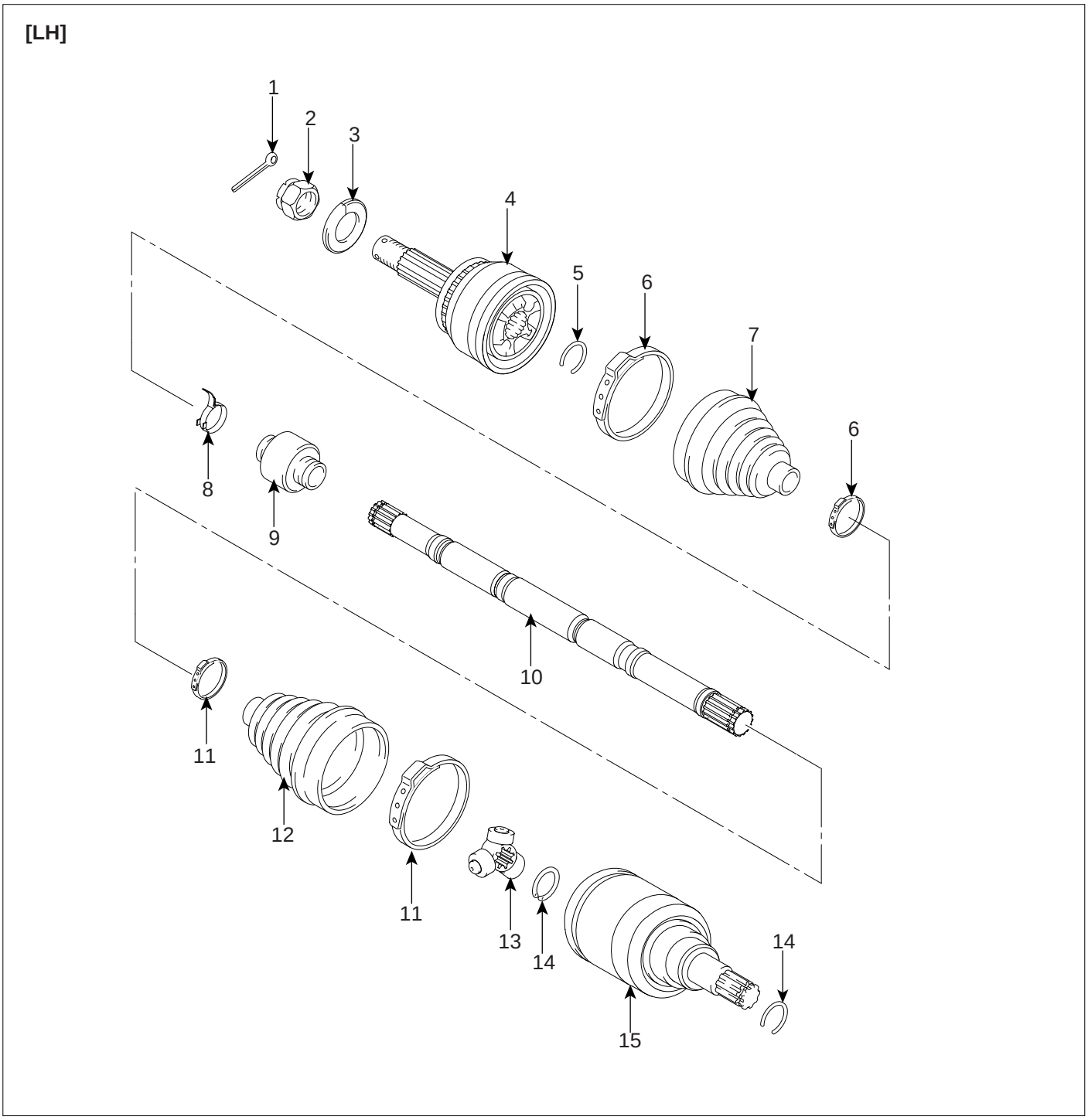

1. Split pin
2. Castle nut
3. Washer
4. BJ assembly
5. Clip A
6. BJ boot band
7. BJ boot
8. Dynamic damper band
9. Dynamic damper
10. Shaft
11. SFJ boot band
12. SFJ boot
13. Trunion assembly
14. Circlip
15. SFJ assembly

SCMDS6505L

[RH]

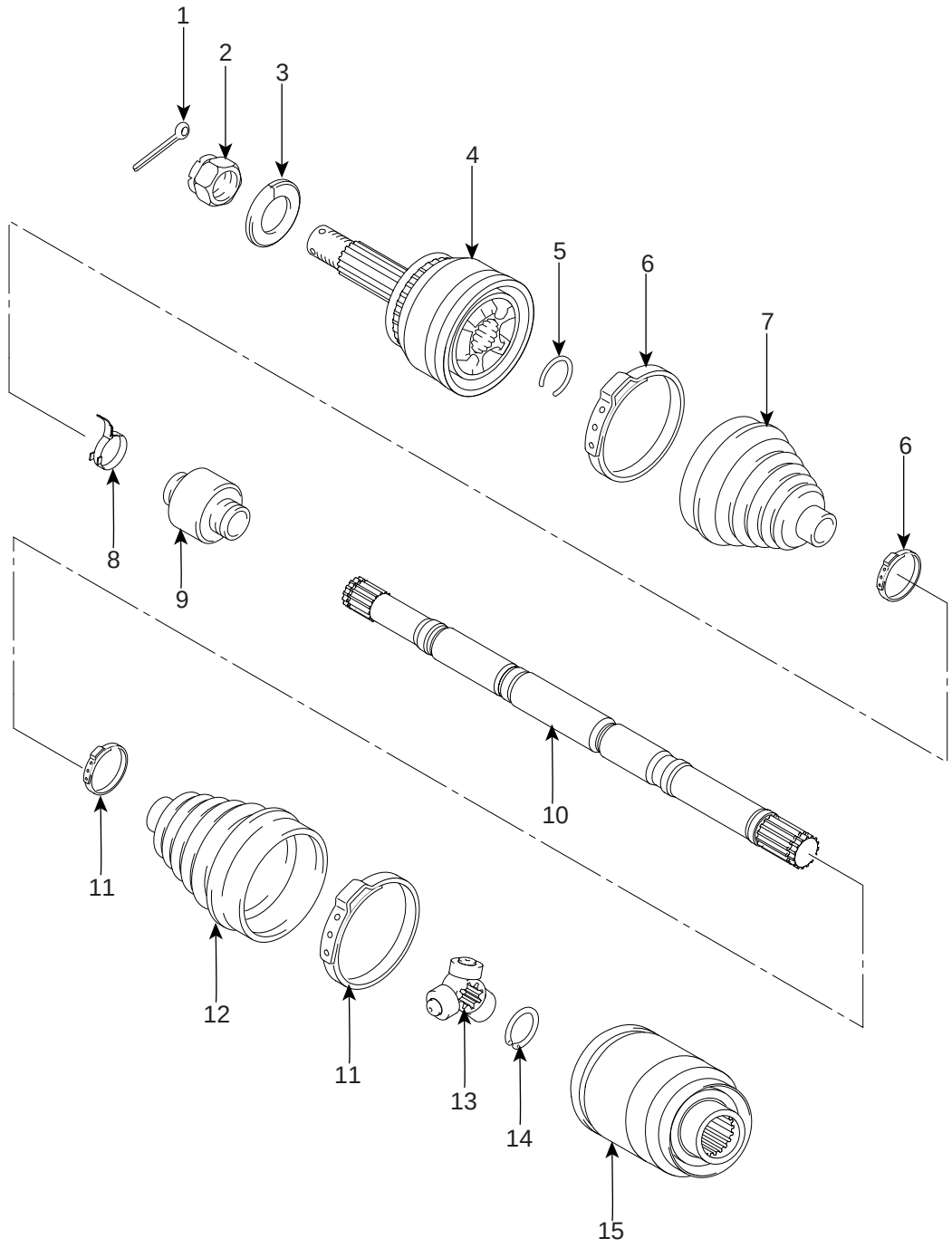

1. Split pin
2. Castle nut
3. Washer
4. BJ assembly
5. Clip A
6. BJ boot band
7. BJ boot
8. Dynamic damper band
9. Dynamic damper
10. Shaft
11. SFJ boot band
12. SFJ boot
13. Trunion assembly
14. Circlip
15. SFJ assembly

SCMDS6506L

DISASSEMBLY EEC521AB

CAUTION

- ***Do not disassemble the BJ assembly.***
- ***Special grease must be applied to the drive-shaft joint. Do not substitute with another type of grease.***
- ***The boot band should be replaced with a new one.***

1. Remove the circlip (B) from driveshaft splines (A) of the transaxle side SFJ case.

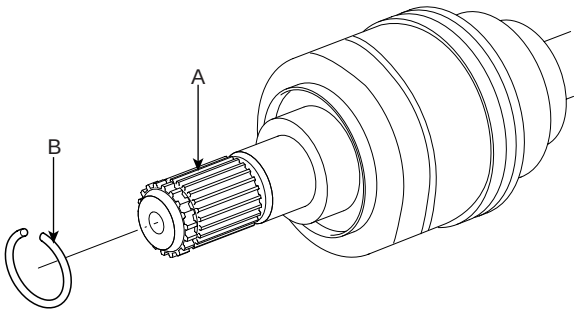

SCMDS6507L

2. Remove the both boot clamps from the transaxle side SFJ case.

   1) Using a flat-tipped (-) screwdriver, remove the both clamps of the transaxle side.

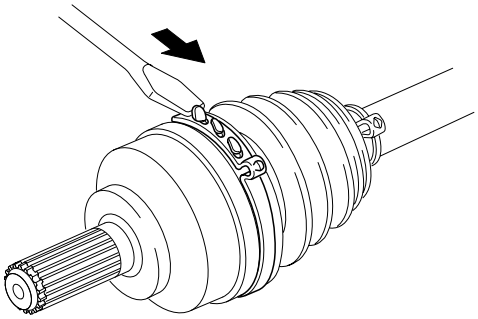

SCMDS6515D

3. Pull out the boot from the transaxle side joint(SFJ).
4. Remove the clip (C) from the SFJ case (B).
5. While dividing joint(SFJ) boot (A) of the transaxle side, wipe the grease in PTJ case (B) and collect them respectively.

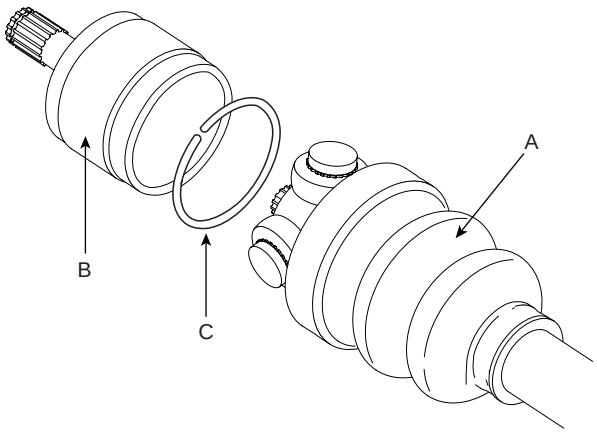

SCMDS6508L

CAUTION

- ***Be careful not to damage the boot.***
- ***According to below the illustrated, put marks (D) on roller of trunion assembly (A), SFJ case (B) and spline part (C), for providing assembly.***

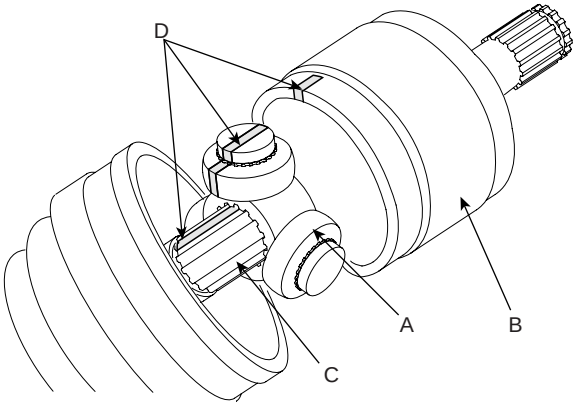

SCMDS6509L

6. Using a snap ring plier or flat-tipped (-) screwdriver, remove the circlip (A).

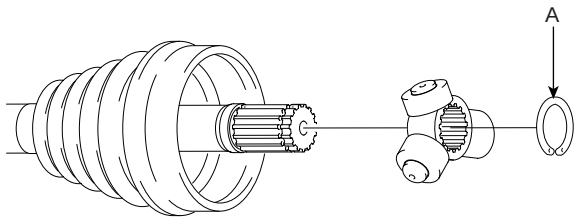

KXDDE12A

7. Remove the trunion assembly (B) from the driveshaft (A) using the special tool (09495-33000).

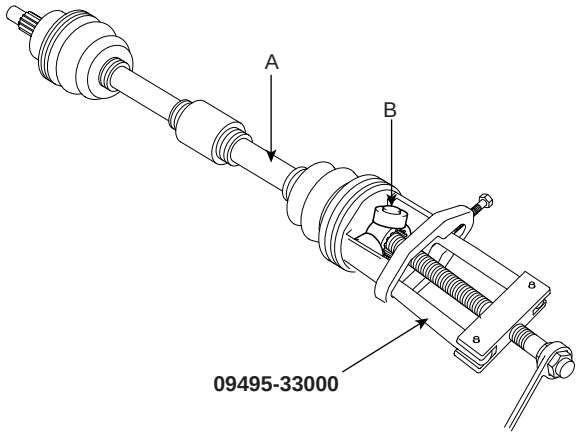

KXDDE13A

8. Clean the trunion assembly.

9. Remove the boot (A) of the transaxle side joint(SFJ).

CAUTION

For reusing the boot (A), wrap tape (B) around the driveshaft splines (C) to protect the boot(A).

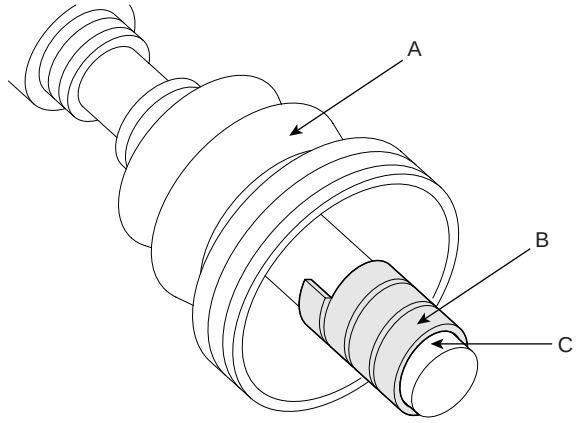

KXDDE14A

10. Using a plier or flat-tipped (-) screwdriver, remove the both side of clamp (B) of the dynamic damper (A).

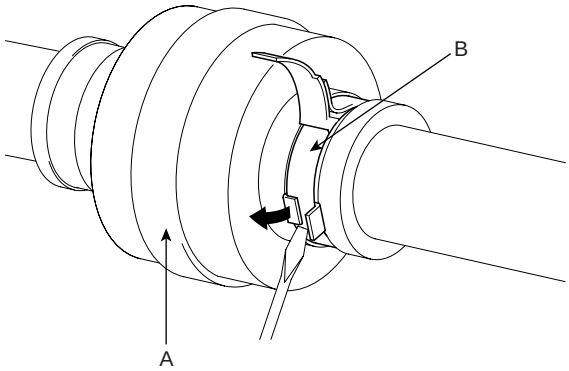

KIQE150A

11. Fix the driveshaft (A) with a vice (B) as illustrated.

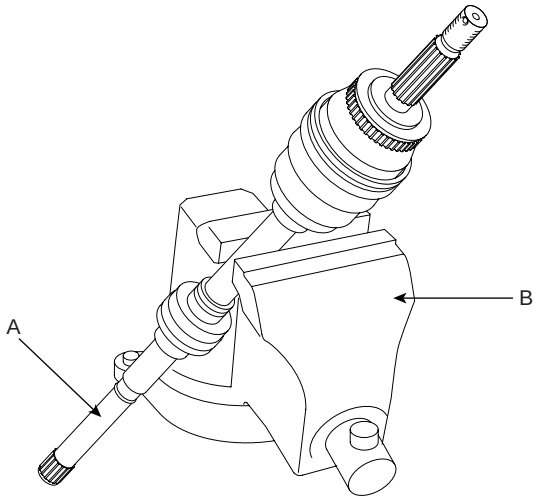

KXDDE16A

12. Apply soap powder on the shaft to prevent being damaged between the shaft spline and the dynamic damper when the dynamic damper is removed.

13. Saperate the dynamic damper (A) from the shaft (B) carefully.

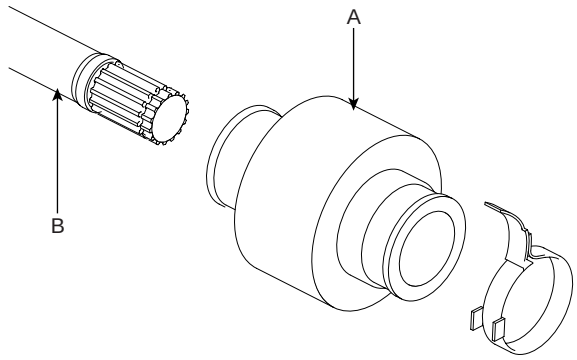

KIQE150B

14. Using a plier or flat-tipped (-) screwdriver, remove the clamp on the side of wheel.

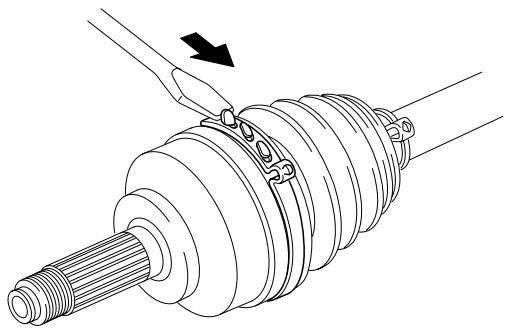

EIRF003H

15. Pull out the joint(BJ) on the side of wheel into the transaxle direction.
    Be carefull not to damage the boot.

INSPECTION E47AE75F

1. Check the driveshaft spline for wear or damage.

2. Check that there is no water or foreign material in the BJ.

3. Check the trunion assembly for roller rotation, wear or corrosion.

4. Check the groove inside the SFJ case for wear or corrosion.

5. Check the dynamic damper for damage or cracks.

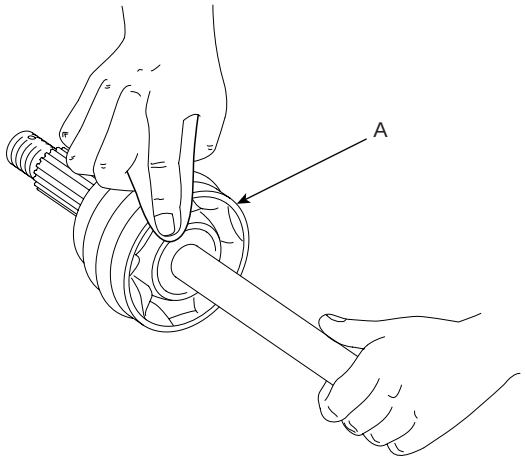

EIKD025A

REASSEMBLY E3E68C07

1. Wrap tape around the driveshaft splines (SFJ. side) to prevent damage to the boots.
2. Apply grease to the driveshaft and install the BJ boots.
3. Install the bands to both BJ boots.

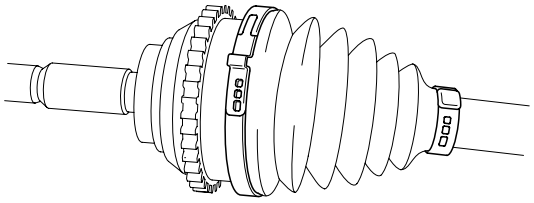

EIRF003I

4. Using the SST(09495-3K000), secure the boot bands.

Clearance (A) : 2.0 mm (0.079 in.) or less

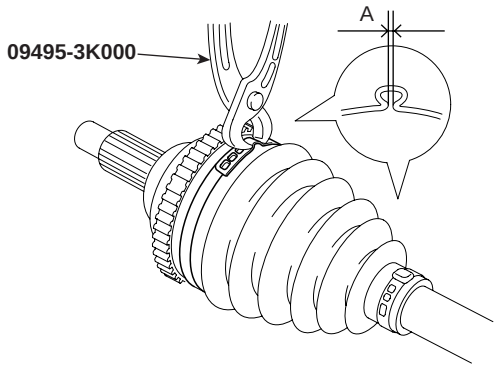

AILG500L

5. To reassemble the dynamic damper (A), keeping the shaft (B) in the straight, tighten the dynamic damper (A) with dynamic damper band (C), as the illustration.

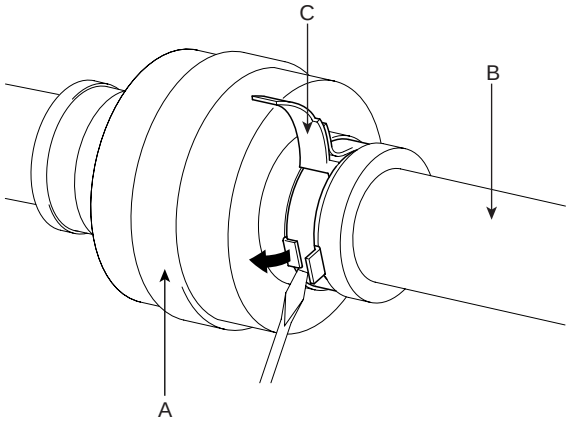

KIQE151A

6. Install the SFJ boot bands and SFJ boot.
7. Install the trunion assembly (A) and the circlip (E) to the spline (C) on the drivershaft.
   At this time align the marks (D) each other.

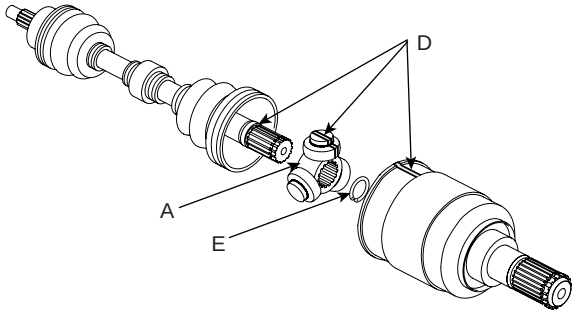

SCMDS6510L

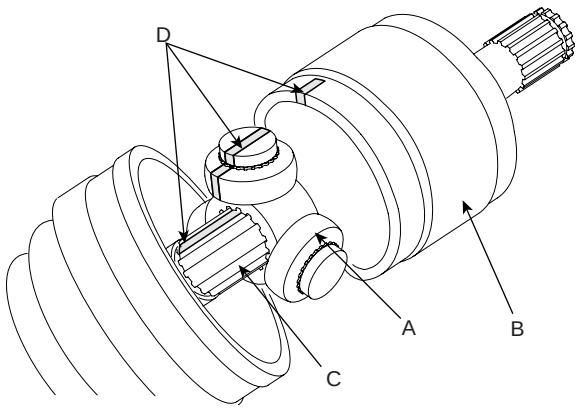

SCMDS6509L

8. Install the clip to the SFJ case (B).

9. Add the specified grease to the SFJ as mush as wiped away at inspection.

10. Install the SFJ boots.

11. Install the bands to both SFJ boots.

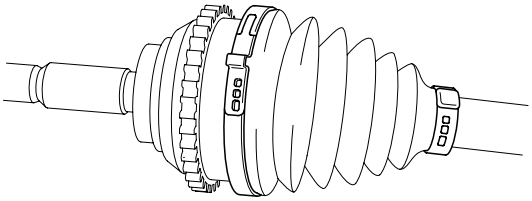

EIRF003I

12. Using the SST(09495-3K000), secure the boot bands.

Clearance (A) : 2.0 mm (0.079 in.) or less

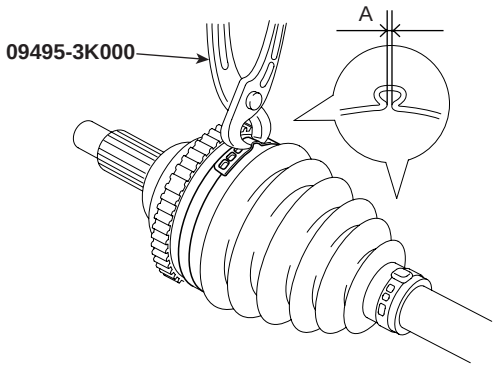

AILG500L

13. To control the air in the SFJ boot, keep the specified distance between the boot bands when they are tightened.

Distance (A)	LH side	RH side
Gasoline 2.7 M/T 2WD/4WD (mm(in))	533.2 ±23.9 (20.99 ±094)	539.0 ±23.9 (21.22 ±0.94)
Gasoline 2.7 A/T 4WD (mm(in))	533.2 ±23.9 (20.99 ±094)	

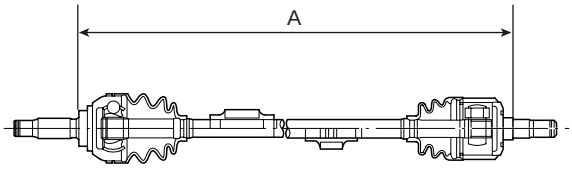

EIKD022A

REAR AXLE

REAR HUB / CARRIER

COMPONENT LOCATION E8D6A197

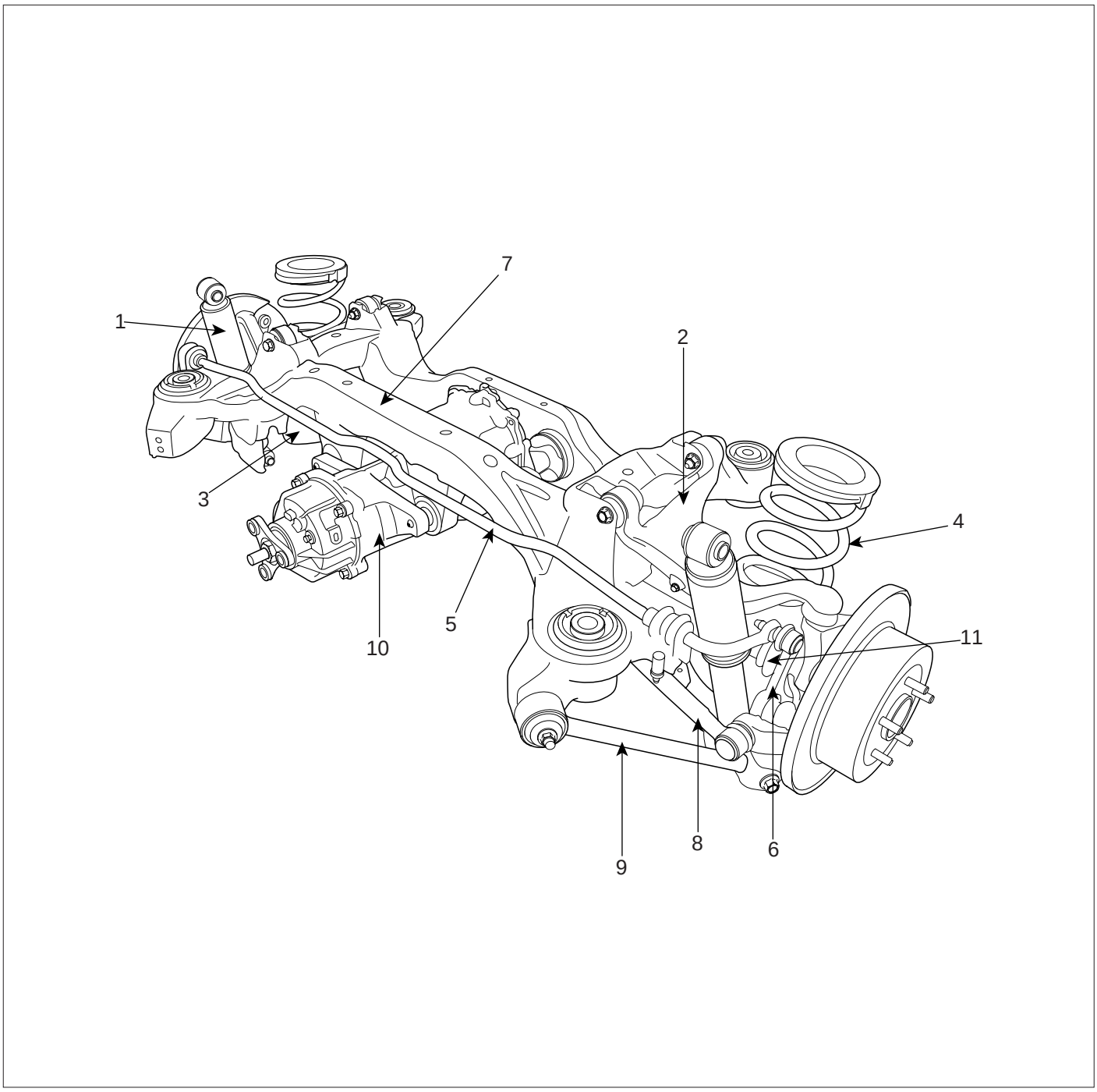

1. Rear shock absorber assembly
2. Rear upper arm
3. Rear lower arm
4. Rear coil spring
5. Rear stabilizer bar assembly
6. Rear stabilizer link assembly
7. Rear cross member
8. Rear assist arm
9. Trailing arm
10. Differential Carrier (4WD)
11. Drive shaft (4WD)

SCMDS6512L

COMPONENT E5AB35F5

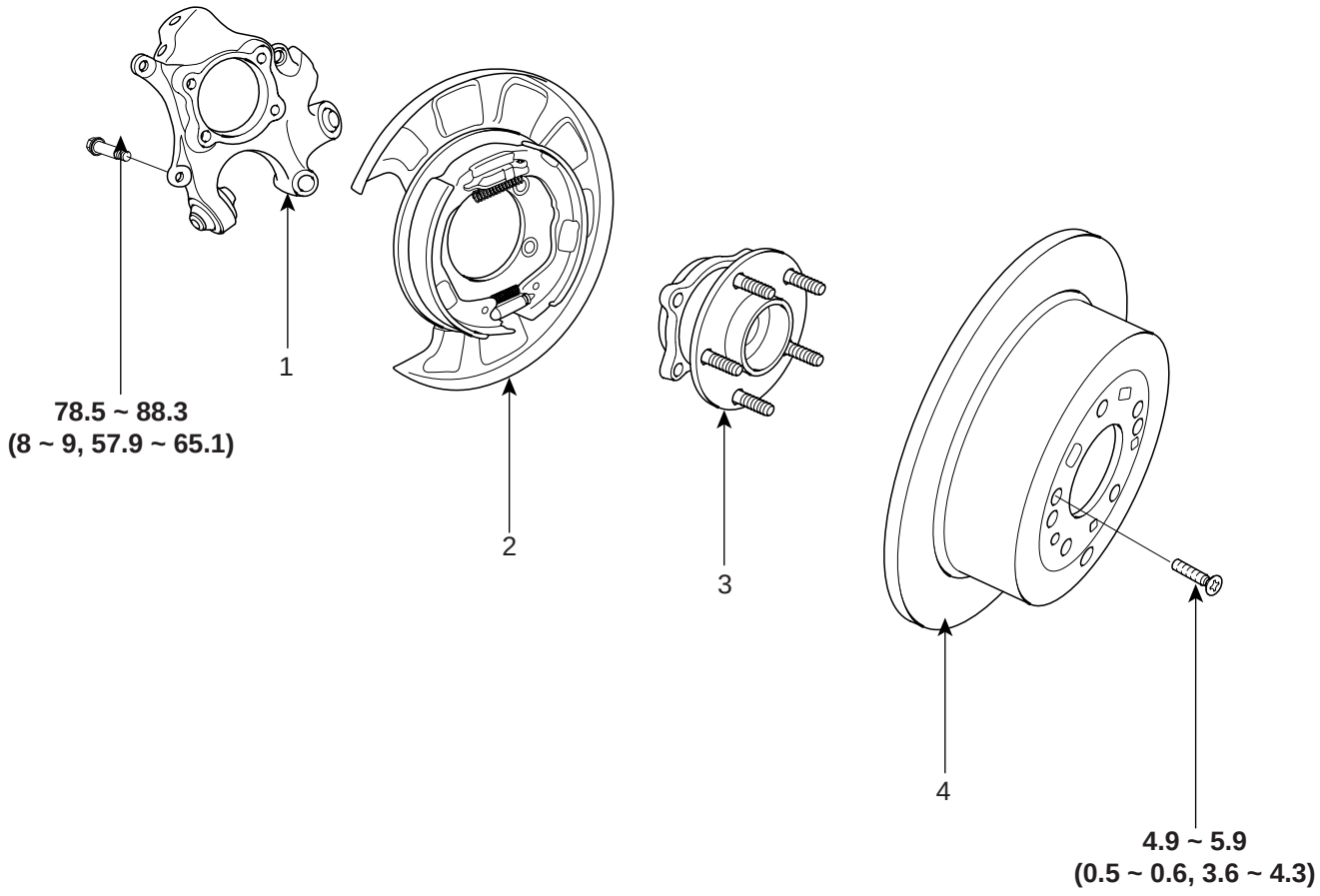

TORQUE : Nm (kgf.m, lb-ft)

1. Rear carrier assembly
2. Parking brake assembly
3. Rear hub assembly
4. Rear brake disc

SCMDS6513L

REMOVAL EB310E4E

1. Loosen the wheel nuts slightly.
   Raise the vehicle, and make sure it is securely supported.

2. Remove the rear wheel and tire (A) from the rear hub (B).

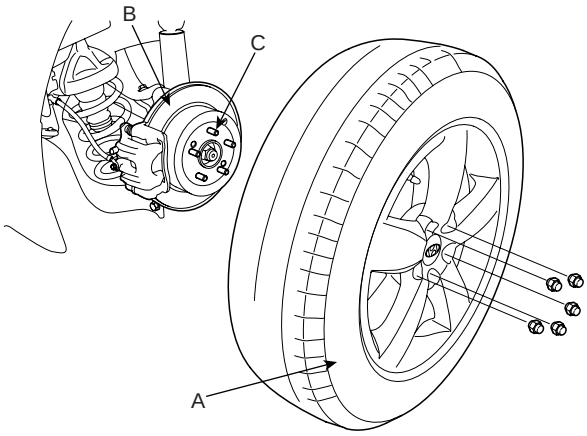

SCMDS6019D

CAUTION

Be careful not to damage to the hub bolts (C) when removing the rear wheel and tire (A).

3. Remove the split pin (A), then remove castle nut (B) and washer (C) from the front hub under applying the brake.

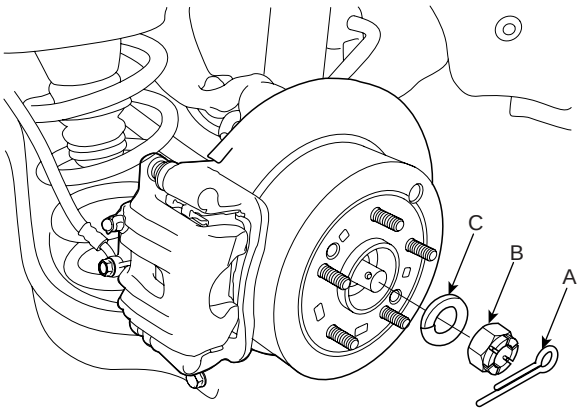

SCMDS6020D

4. Remove the mounting bolt (B) of the rear lower arm(A) and the rear carrier, while supporting the lower arm (A) with a jack as shown in the illustration. Loosen the mounting bolt (C) of the cross member and the rear lower arm.

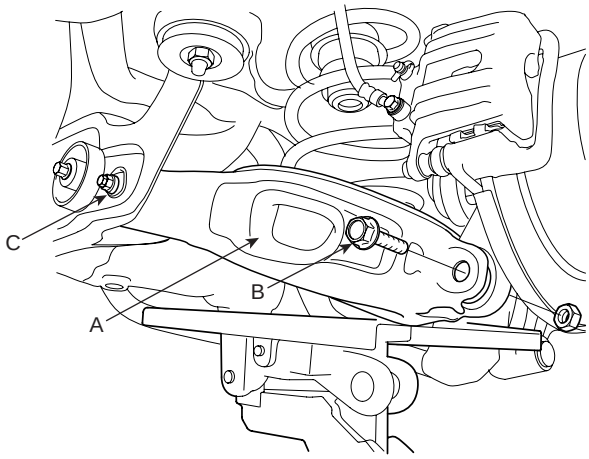

SCMDS6021D

5. Remove the spring (A), the upper pad (B) and the lower pad (C).

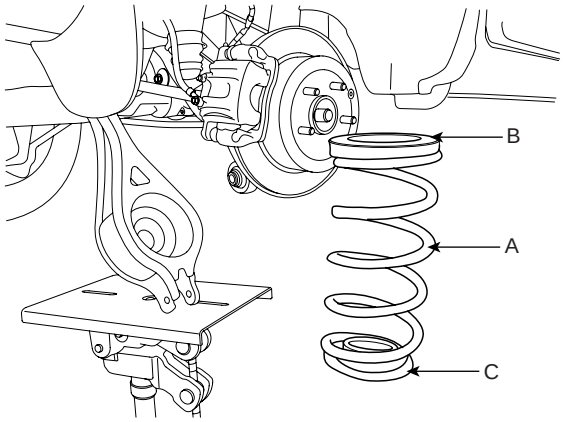

SCMDS6022D

6. Remove the rear shock absorber (A).

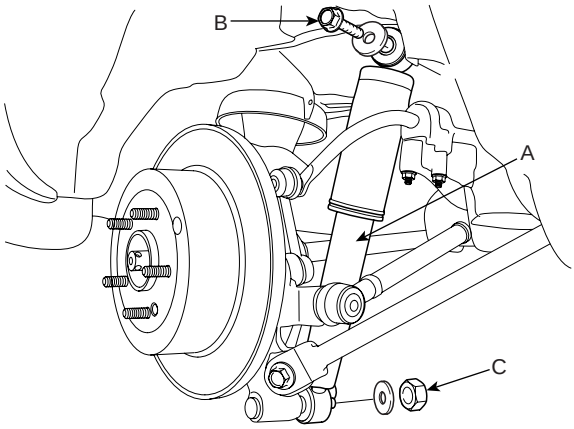

SCMDS6023D

7. Remove the assist arm (A) and the trailing arm (B) from the rear axle carrier.

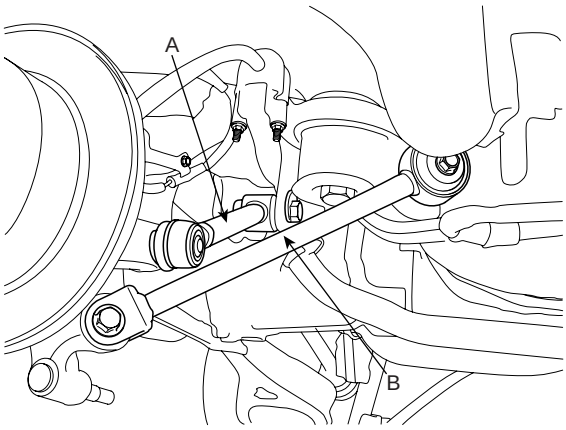

SCMDS6024D

NOTE

Remove the rear assist arm ball joint by using the special tool(09568-4A000).

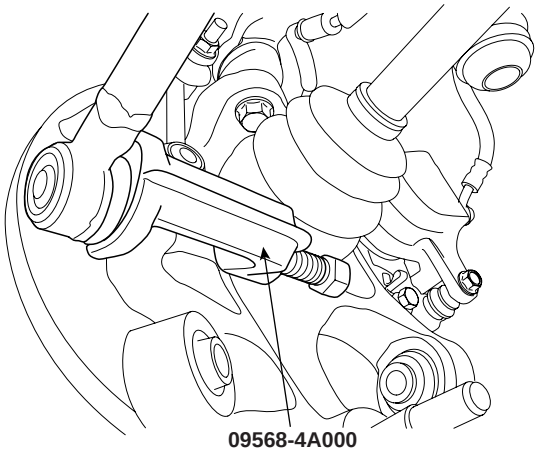

SCMDS6518L

8. Remove the rear stabilizer link (A) from the rear axle carrier.

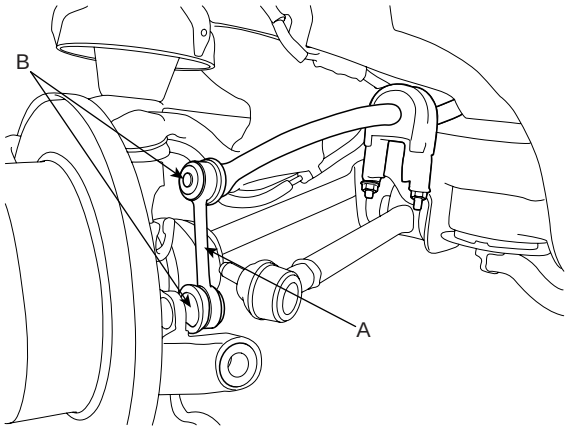

SCMDS6026D

9. Remove the brake caliper mounting bolts (A), and then place the brake caliper assembly (B) with wire as shown in the illustration.

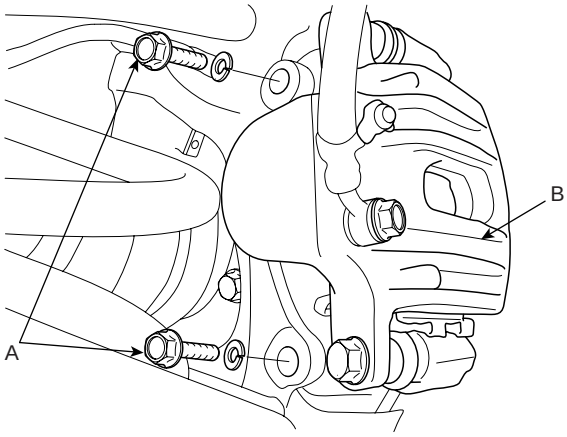

SCMDS6027D

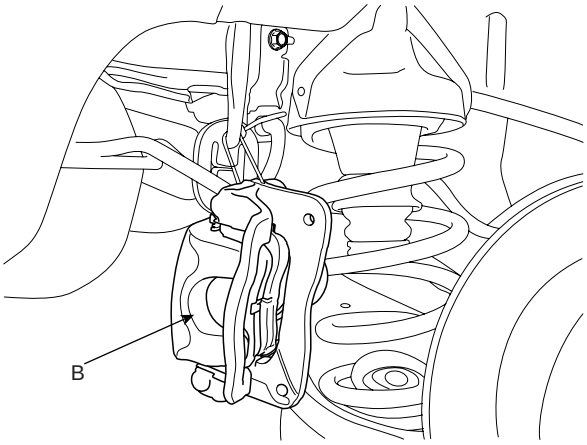

SCMDS6028D

10. Remove the wheel speed sensor (A) and the parking brake cable (B) from the rear axle carrier.

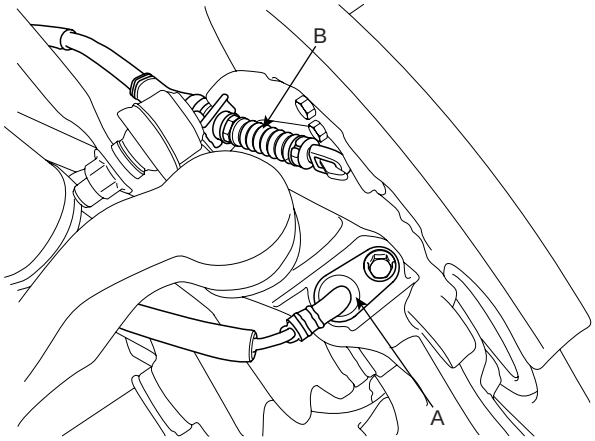

SCMDS6029D

11. Remove the split pin (A) and the castle nut (B) from the rear upper arm ball joint (C), and then remove the rear upper arm ball joint (C) by using the special tool(09568-34000).

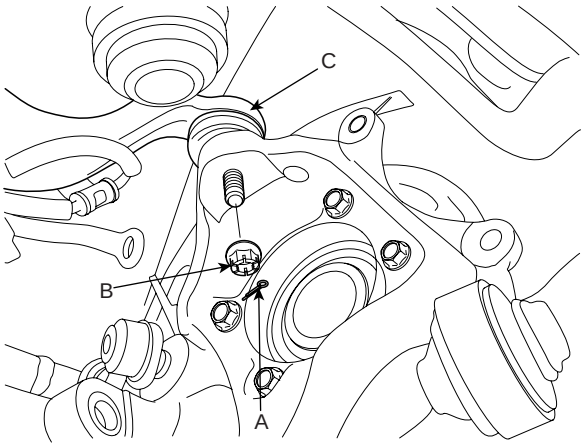

SCMDS6030D

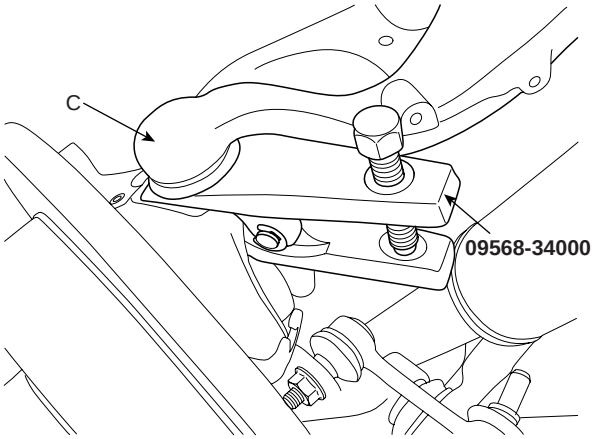

SCMDS6031D

12. Remove the rear axle carrier assembly.

DISASSEMBLY E17753C8

1. Remove the brake disc from the rear axle carrier assembly.

2. Remove the hub assembly mounting bolts (B) from the rear axle carrier (A).

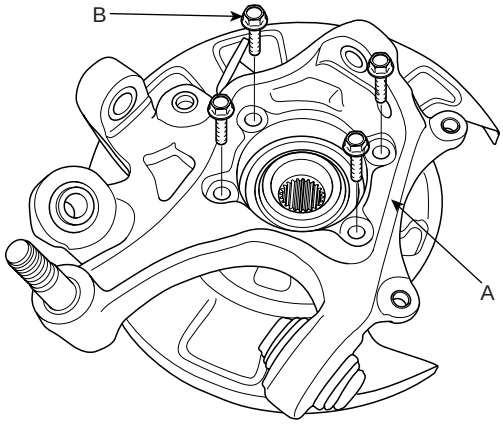

SCMDS6032D

3. Remove the hub assembly (C) and the parking brake assembly (B) from the rear axle carrier (A).

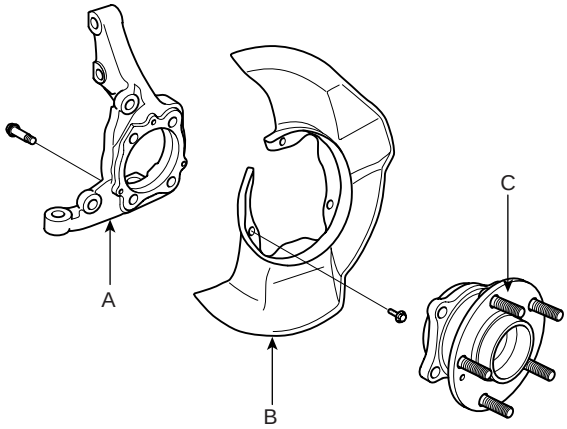

SCMDS6501D

CAUTION

Do not disassemble the hub assembly.

INSPECTION E1DDE79F

1. Check the hub for cracks and the splines for wear.

2. Check the brake disc for scoring and damage.

3. Check the rear axle carrier for cracks

4. Check the bearing for cracks or damage.

REASSEMBLY EB2FA7EF

1. Install the parking brake assembly (B) and the hub assembly (C) to the rear axle carrier (A).

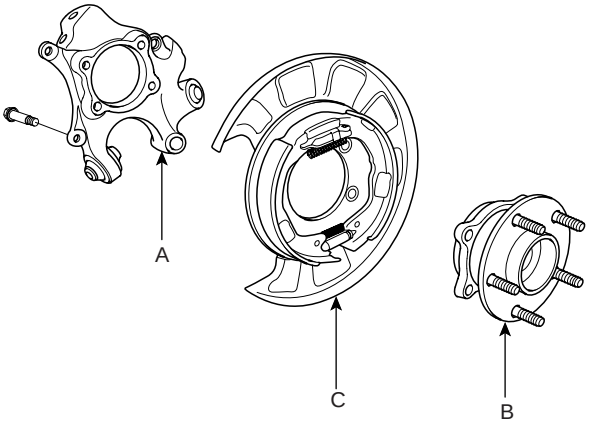

SCMDS6506D

2. Install the hub assembly to the rear axle carrier (A) and then tighten the mounting bolt (B).

Tightening torque Nm (kgf-m, lb-ft) :
78.5~88.3 (8~9, 57.9~65.1)

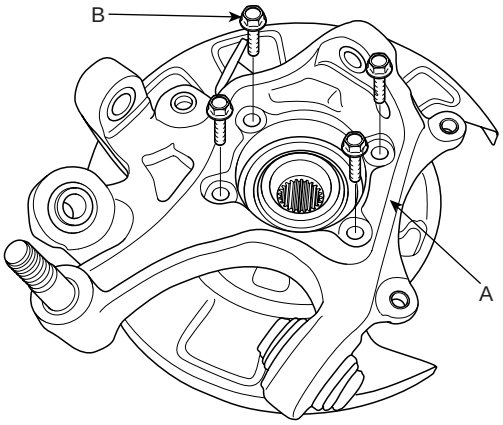

SCMDS6032D

3. Install the brake disc to the rear axle carrier assembly.

Tightening torque Nm (kgf-m, lb-ft) :
Screw: 4.9~5.9 (0.5~0.6, 3.6~4.3)

INSTALLATION E3ABD444

1. Install the rear axle carrier assembly.

2. Install the split pin (A) and the castle nut (B) to the rear upper arm ball joint (C).

Tightening torque Nm (kgf-m, lb-ft) :
78.5~88.3 (8.0~9.0, 57.9~65.1)

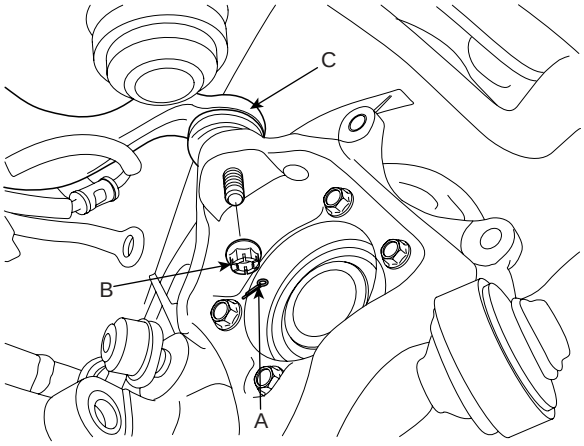

SCMDS6030D

3. Install the wheel speed sensor (A) and the parking brake cable (B) to the rear axle carrier.

Tightening torque Nm (kgf-m, lb-ft) :
Wheel speed sensor (A) :
6.9~10.8 (0.7~1.1, 5.1~8.0)

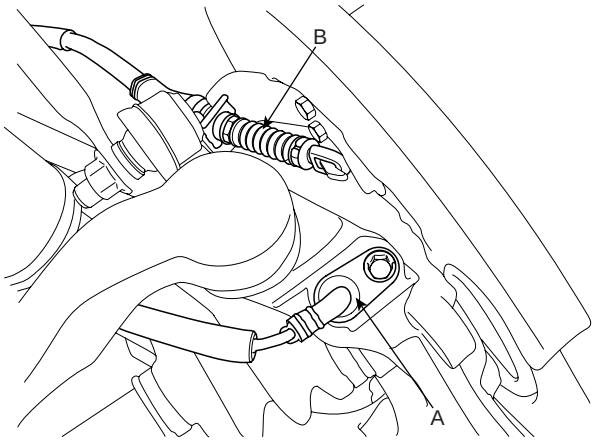

SCMDS6029D

4. Install the brake caliper (B), then tighten the brake caliper mounting bolts (A).

Tightening torque Nm (kgf-m, lb-ft) :
63.7~73.5 (6.5~7.5, 47.0~54.2)

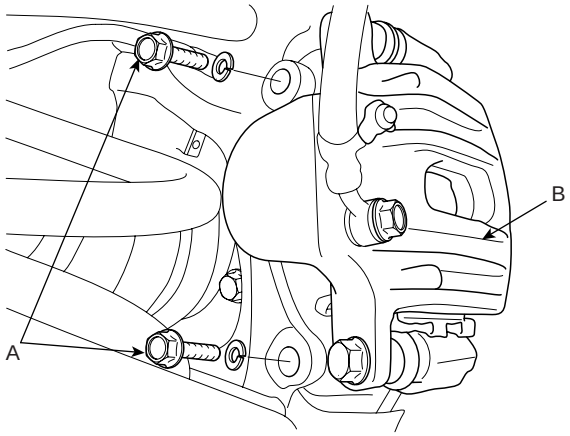

SCMDS6027D

5. Install the rear stabilizer link (A) from the rear axle carrier.

Tightening torque Nm (kgf-m, lb-ft) :
Nut(B) : 58.8~78.5 (6.0~8.0, 43.4~57.9)

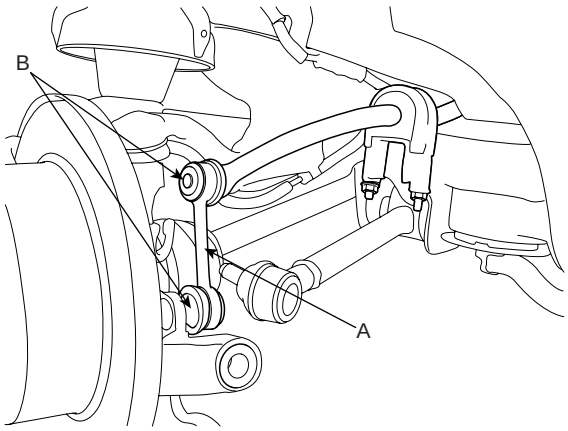

SCMDS6026D

6. Install the assist arm (A) and the trailing arm (B) to the rear axle carrier.

Tightening torque Nm (kgf-m, lb-ft) :
Bolt (C) : 137.3~156.9 (14~16, 101.3~115.7)
Nut (D) : 98.1~117.7 (10~12, 72.3~86.8)
Nut (E) : 137.3~156.9 (14~16, 101.3~115.7)
Bolt (F) : 137.3~156.9 (14~16, 101.3~115.7)

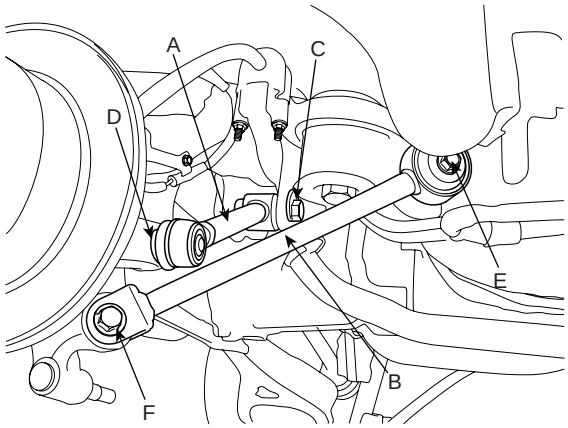

SCMDS6052D

NOTE

After checking the distance(453±10mm(17.83 ±0.39in)) between the wheel housing garnish(A) and the hub assembly(B) as shown in the illustration, tighten the mounting bolts and nuts of rear chassis part with specified torque.

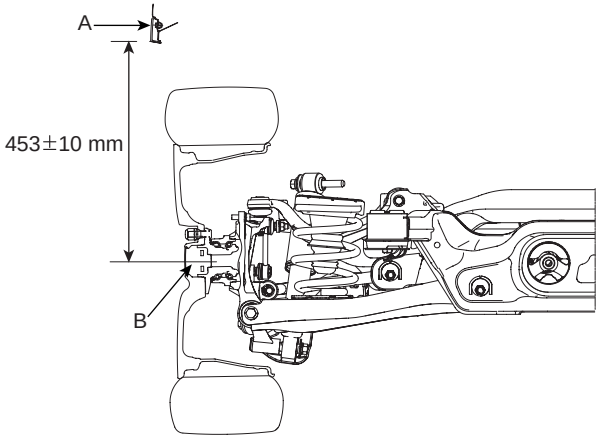

SCMDS6513D

7. Install the rear shock absorber (A).

Tightening torque Nm (kgf-m, lb-ft) :
Bolt (B) : 137.3~156.9 (14~16, 101.3~115.7)
Nut (C) : 98.1~117.7 (10.0~12.0, 72.3~86.8)

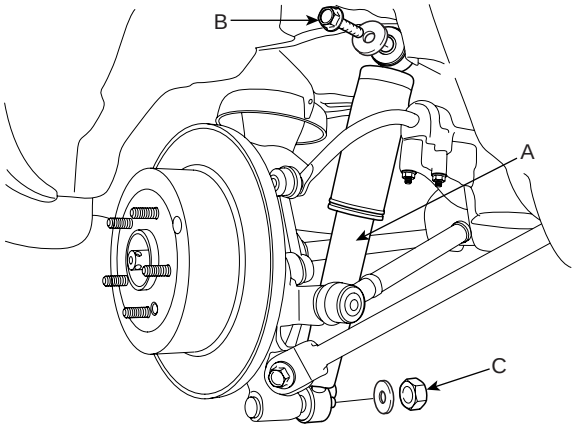

SCMDS6023D

8. Install the spring (A), the upper pad (B) and the lower pad (C).

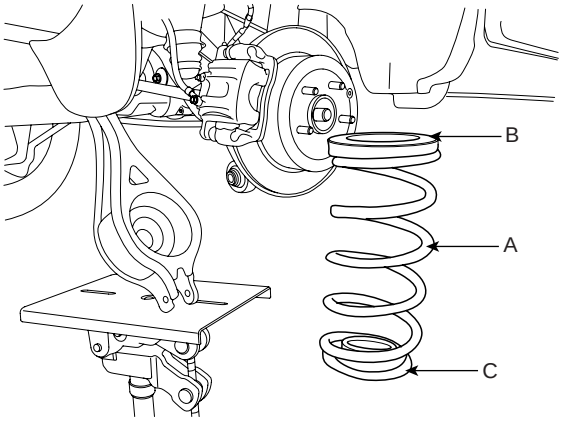

SCMDS6022D

9. Install the mounting bolt (B) of the rear lower arm(A) and the rear carrier with a specified torque, while supporting the lower arm (A) with a jack as shown in the illustration. Tighten the mounting bolt (C) of the cross member and the rear lower arm with a specified torque.

Tightening torque Nm (kgf-m, lb-ft) :
Bolt (B) : 137.3~156.9 (14~16, 101.3~115.7)
Nut (C) : 137.3~156.9 (14~16, 101.3~115.7)

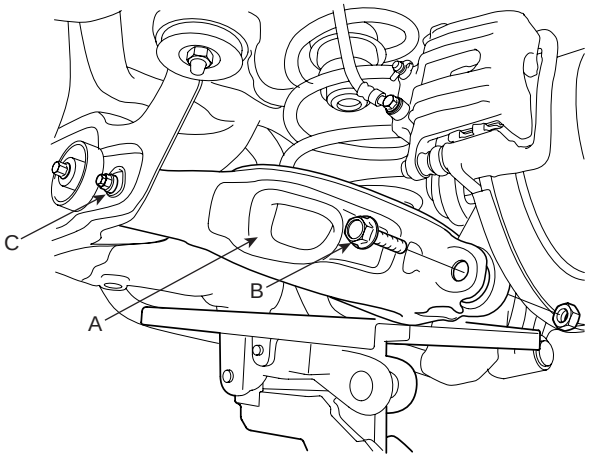

SCMDS6021D

10. Install the washer (C), castle nut (B) and split pin (A) to the rear hub assembly.

Tightening torque Nm (kgf-m, lb-ft) :
196.1~255.0 (20~26, 144.7~188.1)

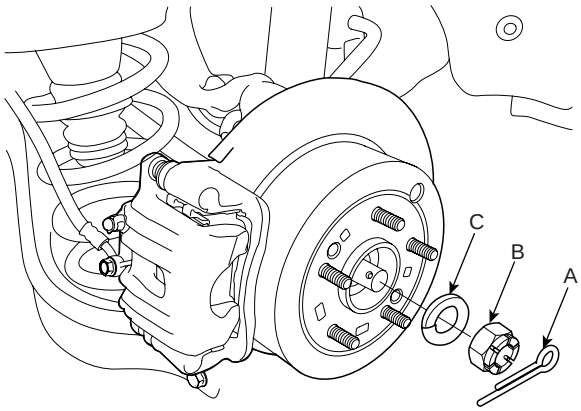

SCMDS6020D

CAUTION

The washer (B) should be assembled with convex surface outward when installing the castle nut (A) and split pin (C).

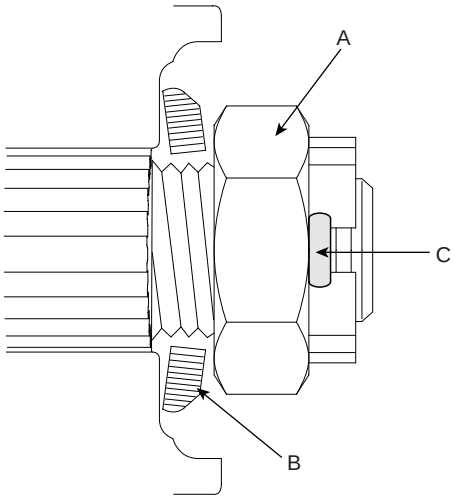

EIKD010A

11. Install the wheel and tire (A) to the rear hub (B).

Tightening torque Nm (kgf-m, lb-ft) :
88.3~107.9 (9~11, 65.1~79.6)

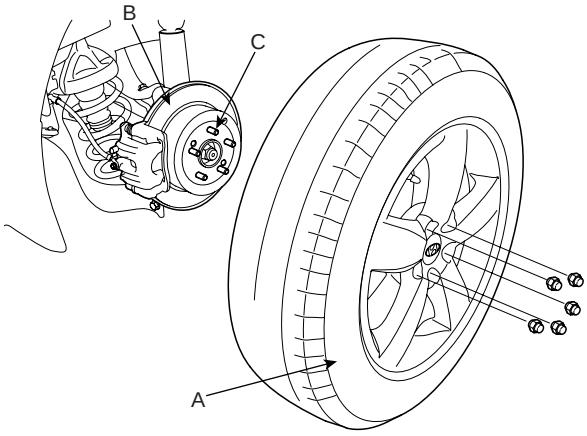

SCMDS6019D

CAUTION

Be careful not to damage the hub bolts (C) when installing the rear wheel and tire (A).

REAR DRIVESHAFT ASSEMBLY

REAR DRIVESHAFT (DOJ-BJ TYPE)

COMPONENT LOCATION EDFAFE3C

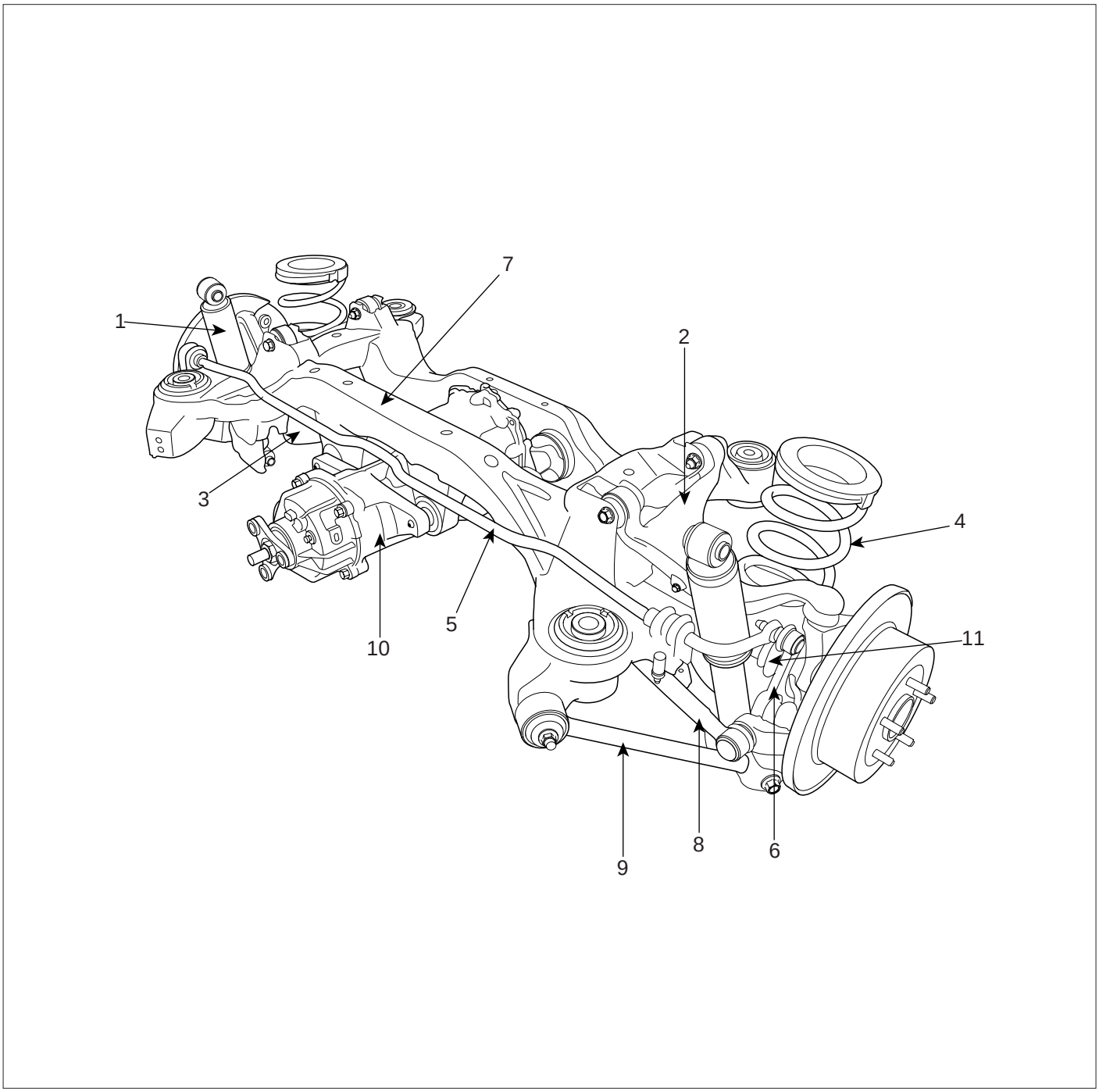

1. Rear shock absorber assembly
2. Rear upper arm
3. Rear lower arm
4. Rear coil spring
5. Rear stabilizer bar assembly
6. Rear stabilizer link assembly
7. Rear cross member
8. Rear assist arm
9. Trailing arm
10. Differential Carrier (4WD)
11. Drive shaft (4WD)

COMPONENT EABF6AAD

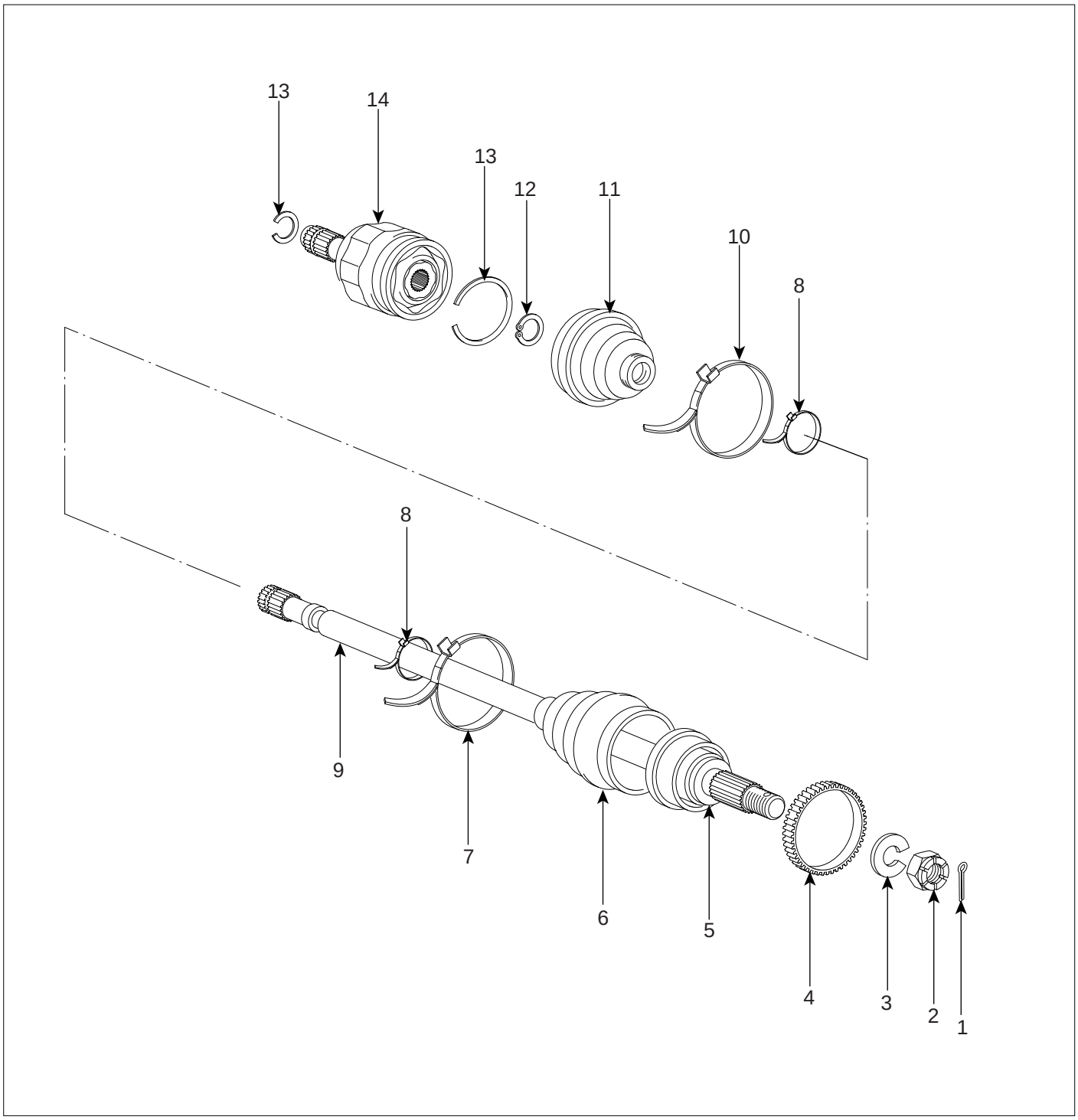

1. Split pin
2. Castle nut
3. Washer
4. Dust cover & Tone wheel
5. BJ assembly
6. BJ boot
7. BJ boot big part band
8. Boot small part band
9. Shaft
10. DOJ boot big part band
11. DOJ boot
12. Snap ling
13. Circlip
14. DOJ assembly

SCMDS6515L

REMOVAL EDC3BEEB

1. Loosen the wheel nuts slightly.
   Raise the vehicle, and make sure it is securely supported.

2. Remove the rear wheel and tire (A) from the rear hub (B).

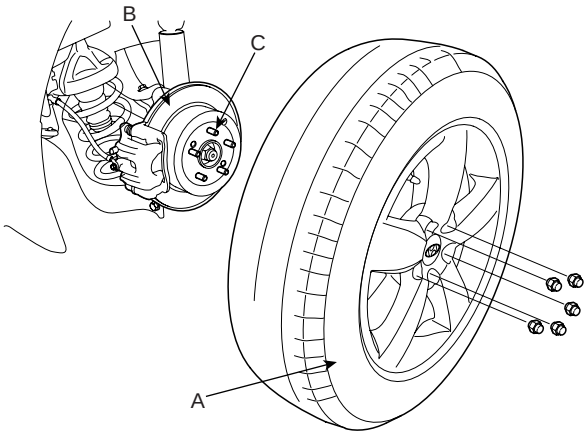

SCMDS6019D

CAUTION

Be careful not to damage to the hub bolts (C) when removing the rear wheel and tire (A).

3. Remove the split pin (A), then remove castle nut (B) and washer (C) from the front hub under applying the brake.

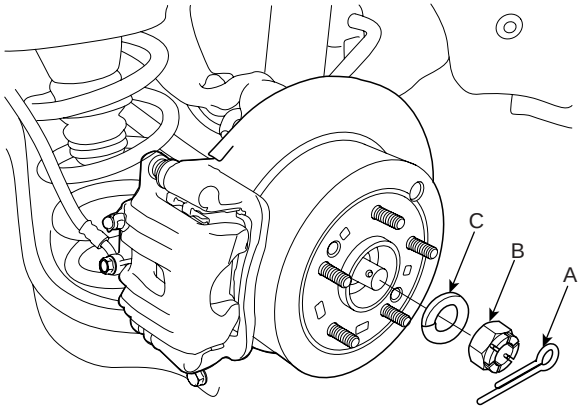

SCMDS6020D

4. Remove the mounting bolt (B) of the rear lower arm (A) and the rear carrier, while supporting the lower arm (A) with a jack as shown in the illustration. Loosen the mounting bolt (C) of the cross member and the rear lower arm.

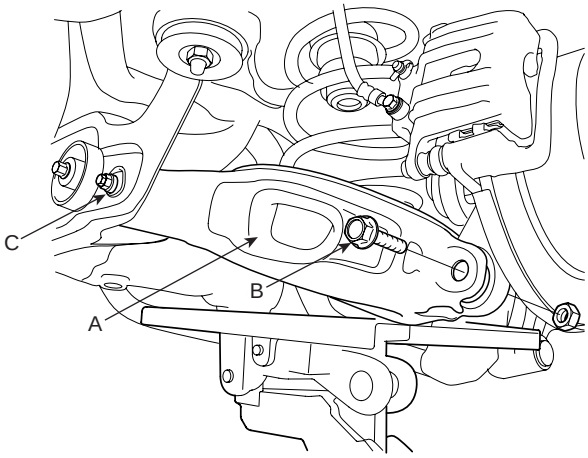

SCMDS6021D

5. Remove the spring (A), the upper pad (B) and the lower pad (C).

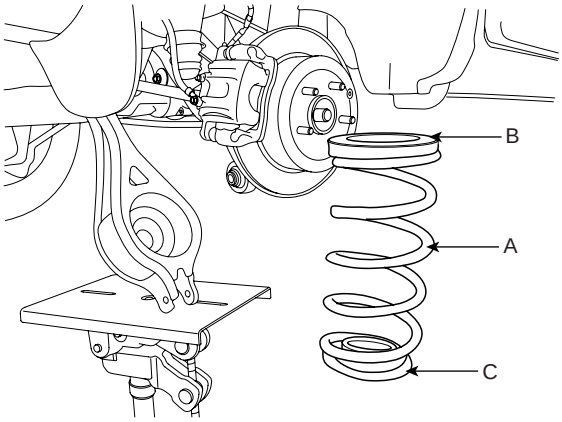

SCMDS6022D

6. Remove the rear shock absorber (A).

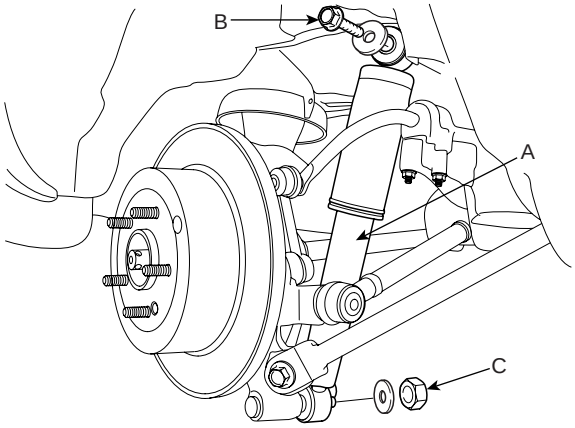

SCMDS6023D

7. Remove the assist arm (A) and the trailing arm (B) from the rear axle carrier.

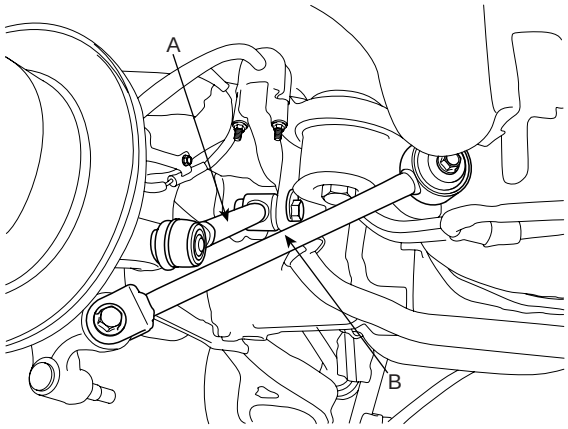

SCMDS6024D

NOTE

Remove the rear assist arm ball joint by using the special tool(09568-4A000).

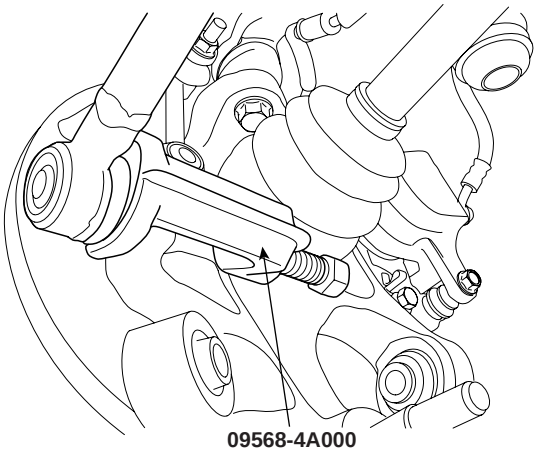

SCMDS6518L

8. Remove the rear stabilizer link (A) from the rear axle carrier.

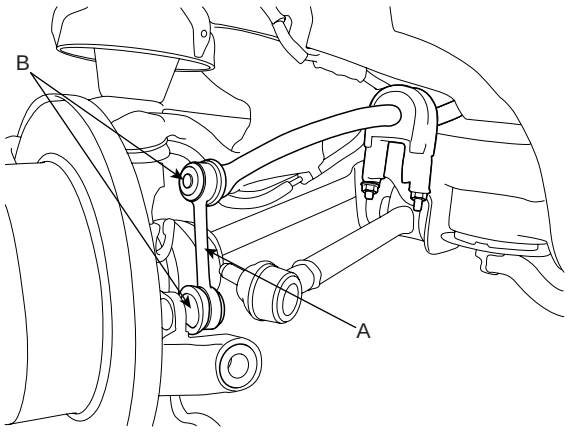

SCMDS6026D

9. Push the rear axle carrier (A) outward and separate the driveshaft (B) from the axle hub (A).

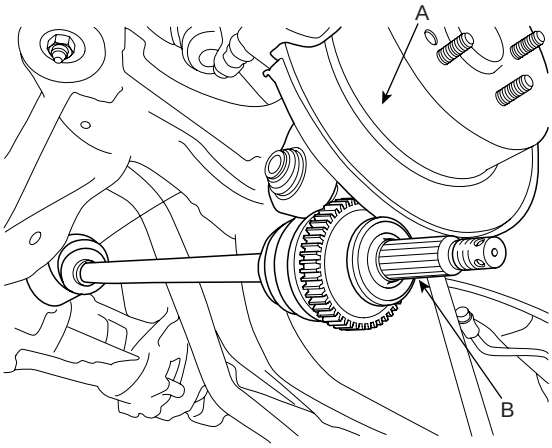

SCMDS6033D

10. Insert a pry bar (A) between the differential case (B) and joint case (C), and separate the driveshaft (D) from the differential case.

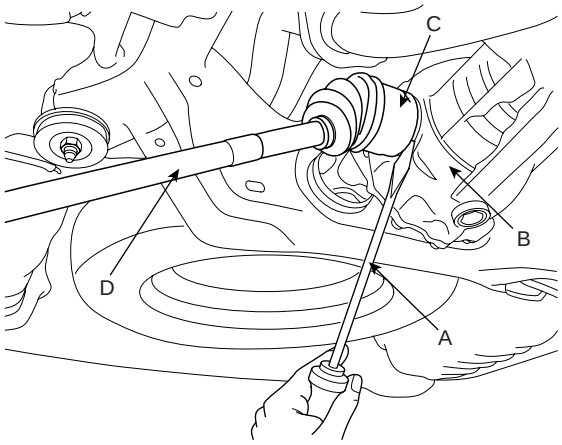

SCMDS6034D

CAUTION

- ***Use a pry bar (A) being careful not to damage the differential and joint.***
- ***Do not insert the pry bar (A) too deep, as this may cause damage to the oil seal.***
- ***Do not pull the driveshaft by excessive force it may cause components inside the joint kit to dislodge resulting in a torn boot or a damaged bearing.***
- ***Plug the hole of the differential case with the oil seal cap to prevent contamination.***
- ***Support the driveshaft properly.***
- ***Replace the retainer ring whenever the driveshaft is removed from the differential case.***

INSPECTION EDB34AB6

1. Check the driveshaft boots for damage and deterioration.
2. Check the ball joint for wear and damage.
3. Check the splines for wear and damage.
4. Check the dynamic damper for cracks, wear and position.

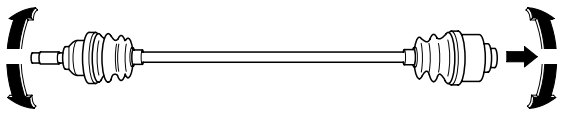

EIKD019A

5. Check the driveshaft for cracks and wears.

DISASSEMBLY E6EE31E3

CAUTION

- ***Do not disassemble the BJ assembly.***
- ***Special grease must be applied to the driveshaft joint. Do not substitute with another type of grease.***
- ***The boot band should be replaced with a new one.***

1. Remove the DOJ boot bands and pull the DOJ boot from the DOJ outer race.
   1) Using a plier or flat-tipped (-) screwdriver, remove the DOJ boot bands of differential side from the driveshaft.
   2) Remove BJ boot bands of wheel side in the same way of DOJ boot bands removal procedure.

CAUTION

Be careful not to damage the boot.

2. Remove the circlip (B) with a flat-tipped (-) screwdriver (A).

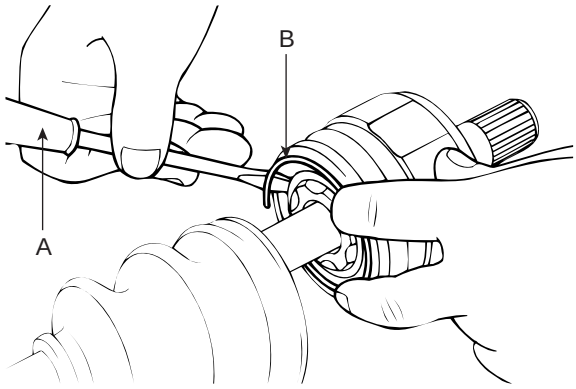

KIKD251B

3. Pull out the driveshaft from the DOJ outer race.

4. Remove the snap ring (A) and take out the inner race (B), cage (C) and balls (D) as an assembly.

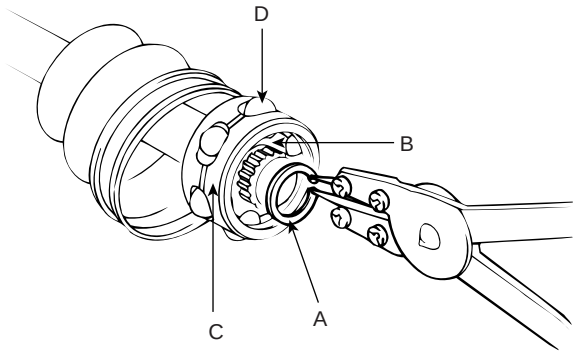

KIKD251C

5. Clean the inner race, cage and balls without disassembling.

6. Remove the BJ boot bands and pull out the DOJ boot and BJ boot.

CAUTION

If the boot (A) is to be reused, wrap tape (B) around the driveshaft splines (C) to protect the boot (A).

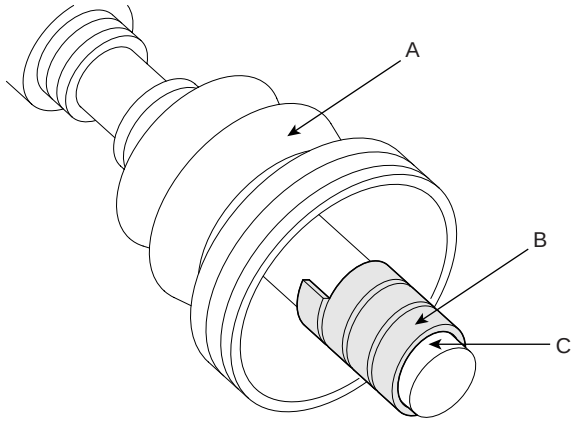

KXDDE14A

INSPECTION E9A3C35A

1. Check the DOJ outer race, inner race, cage and balls for rust or damage.

2. Check splines for wear.

3. Check for water, foreign matter, or rust in the BJ boot.

CAUTION

When the BJ assembly (A) is to be reused, do not wipe away the grease. Check that there are no foreign substances in the grease. If necessary, clean the BJ assembly (A) and replace grease.

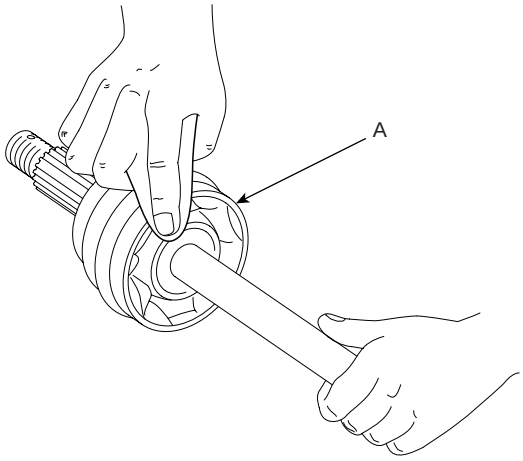

EIKD025A

REASSEMBLY E57EA4AD

1. Wrap tape around the driveshaft splines (DOJ side) to prevent damage to the boots.
2. Apply grease to the driveshaft and install the boots.
3. Apply the specified grease to the inner race (A) and cage (B). Install the cage (B) so that it is offset on the race as shown.

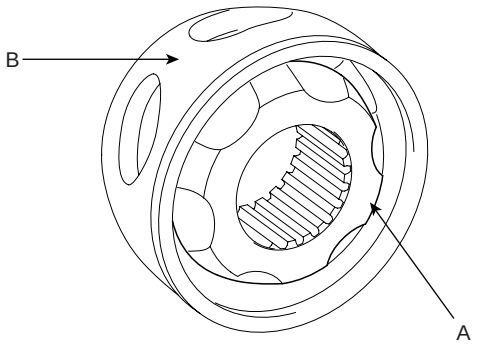

EIKD023A

4. Apply the specified grease to the cage and fit the balls into the cage.
5. Position the chamfered side (A) as shown in the illustration. Install the inner race on the driveshaft (B), and then the snap ring.

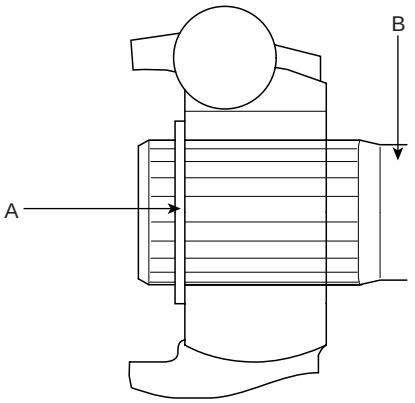

EIKD020A

6. Apply the specified grease to the outer race and install the BJ outer race onto the driveshaft.
7. Apply the specified grease into the DOJ boot and install the boot with a clip.
8. Tighten the DOJ boot bands.
9. Add the specified grease to the BJ as much as wiped away at inspection.
10. Install the boots.
11. Tighten the BJ boot bands.
12. To control the air in the DOJ boot, keep the specified distance between the boot bands when they are tightened.

Distance(A) (mm(in)): 686.8 +22.7 -14.4 (27.04 +0.89 -0.57)

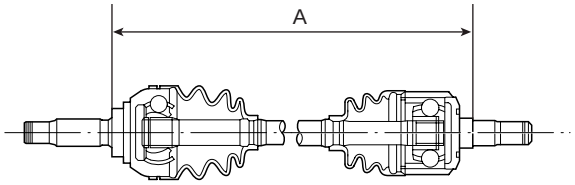

EIKD021A

INSTALLATION EDA39BCD

1. Apply gear oil on the oil seal contacting surface of differential case (B) and the driveshaft (A) splines.

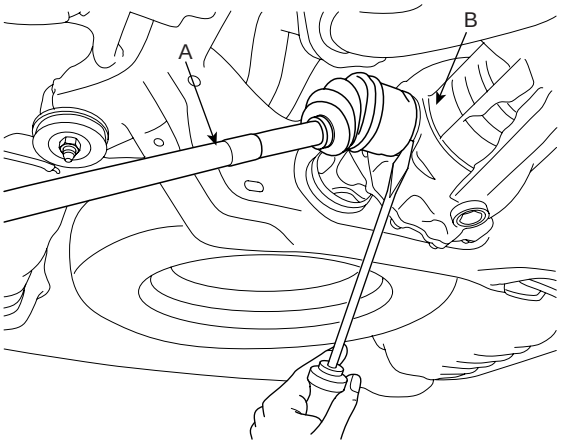

SCMDS6053D

2. Before installing the driveshaft(A), set the opening side of the circlip facing downward.

3. After installation, check that the driveshaft (A) cannot be removed by hand.

4. Install the driveshaft to the rear axle carrier assembly.

5. Install the rear stabilizer link (A) from the rear axle carrier.

Tightening torque Nm (kgf-m, lb-ft) :
Nut(B) : 58.8~78.5 (6.0~8.0, 43.4~57.9)

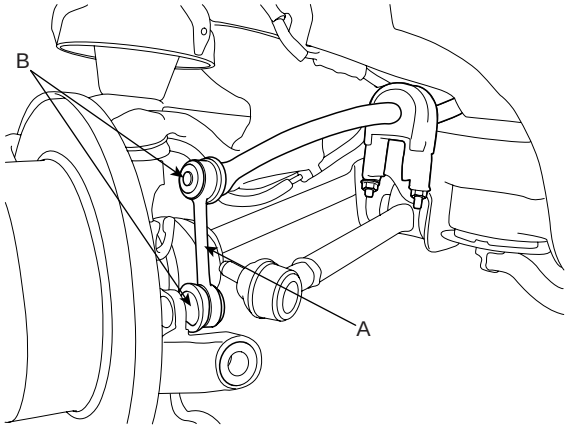

SCMDS6026D

6. Install the assist arm (A) and the trailing arm (B) to the rear axle carrier.

Tightening torque Nm (kgf-m, lb-ft) :
Bolt (C) : 137.3~156.9 (14~16, 101.3~115.7)
Nut (D) : 98.1~117.7 (10~12, 72.3~86.8)
Nut (E) : 137.3~156.9 (14~16, 101.3~115.7)
Bol t(F) : 137.3~156.9 (14~16, 101.3~115.7)

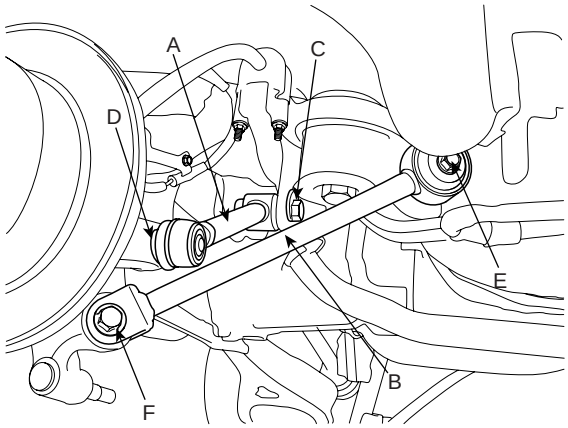

SCMDS6052D

NOTE

After checking the distance(453±10mm(17.83 ±0.39in)) between the wheel housing garnish(A) and the hub assembly(B) as shown in the illustration, tighten the mounting bolts and nuts of rear chassis part with specified torque.

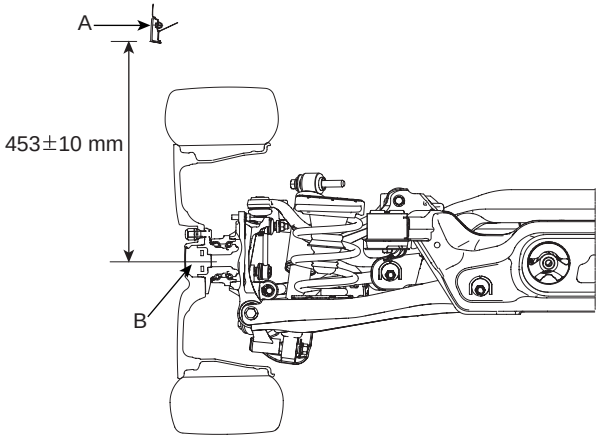

SCMDS6513D

7. Install the rear shock absorber (A).

Tightening torque Nm (kgf-m, lb-ft) :
Bolt (B) : 137.3~156.9 (14~16, 101.3~115.7)
Nut (C) : 98.1~117.7 (10.0~12.0, 72.3~86.8)

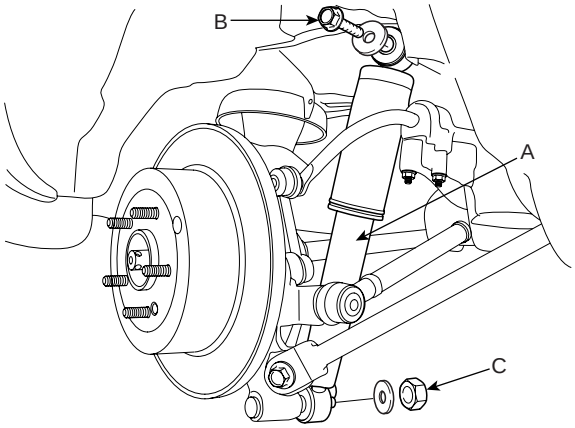

SCMDS6023D

8. Install the spring (A), the upper pad (B) and the lower pad (C).

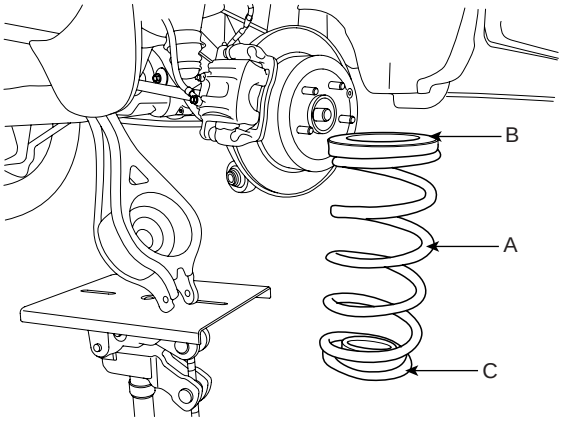

SCMDS6022D

9. Install the mounting bolt (B) of the rear lower arm (A) and the rear carrier with a specified torque, while supporting the lower arm (A) with a jack as shown in the illustration. Tighten the mounting bolt (C) of the cross member and the rear lower arm with a specified torque.

Tightening torque Nm (kgf-m, lb-ft) :
Bolt (B) : 137.3~156.9 (14~16, 101.3~115.7)
Nut (C) : 137.3~156.9 (14~16, 101.3~115.7)

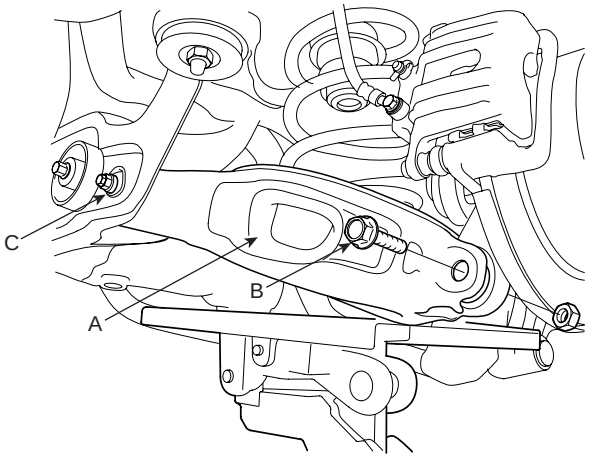

SCMDS6021D

10. Install the washer (C), castle nut (B) and split pin (A) to the rear hub assembly.

Tightening torque Nm (kgf-m, lb-ft) :
196.1~255.0 (20~26, 144.7~188.1)

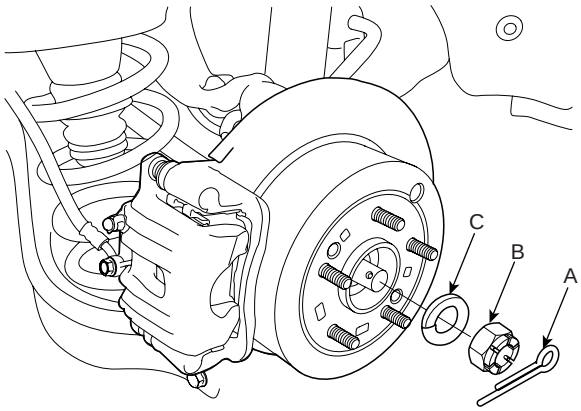

SCMDS6020D

CAUTION

The washer (B) should be assembled with convex surface outward when installing the castle nut (A) and split pin (C).

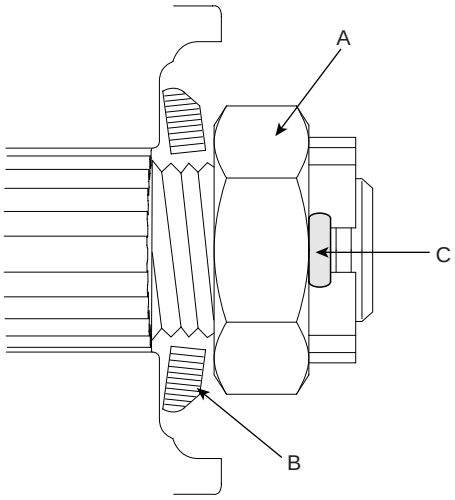

EIKD010A

11. Install the wheel and tire (A) to the rear hub (B).

Tightening torque Nm (kgf-m, lb-ft) : 88.3~107.9 (9~11, 65.1~79.6)

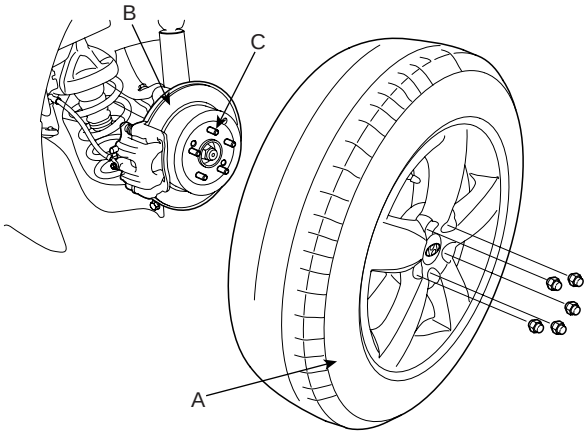

SCMDS6019D

CAUTION

Be careful not to damage the hub bolts (C) when installing the rear wheel and tire (A).

PROPELLER SHAFT ASSEMBLY

PROPELLER SHAFT

COMPONENT EAD08B0F

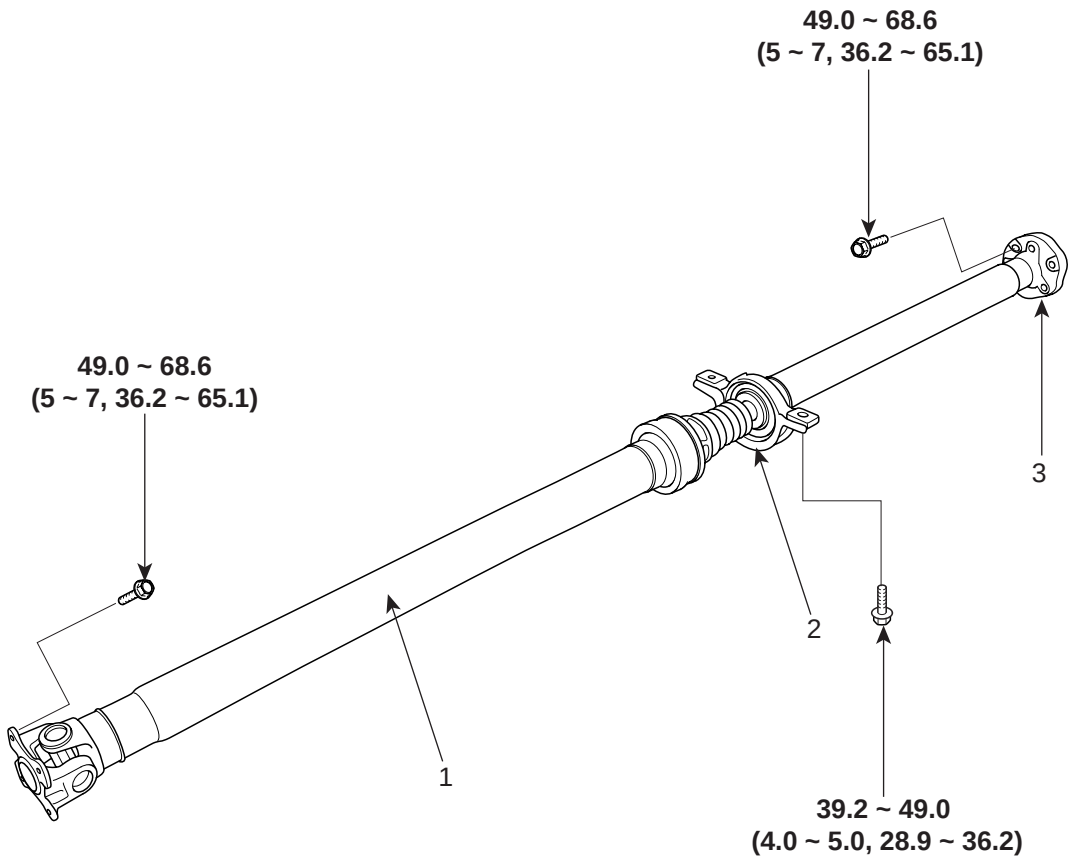

TORQUE : Nm (kgf.m, lb-ft)

1. Front propeller shaft
2. Center bearing bracket
3. Rear propeller shaft

INSPECTION EDBA5EEC

CV JOINT AND BOOTS

1. Shift the transaxle to Neutral.
2. Raise the vehicle off the ground, and support it with safety stands in the proper locations.
3. Check the center bearing (A) for excessives play or rattle and rubber for rent. If the center bearing (A) has excessive play or rattle and rubber has rent, replace the propeller shaft assembly.

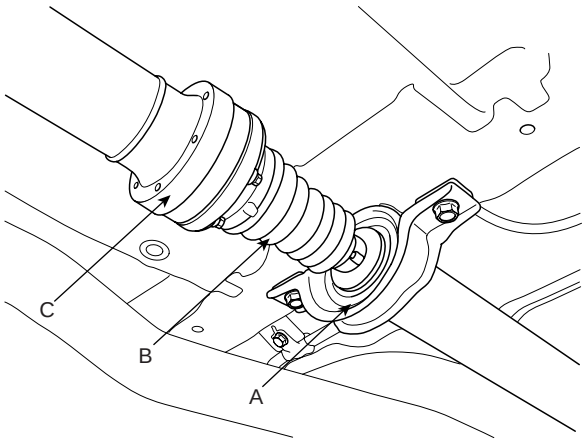

SCMDS6036D

4. Check the CV joint boot (B) for damage and deterioration. If the boot is damaged or deteriored, replace the propeller shaft assembly.
5. Check the CV joint (C) for excessive play or rattle. If the CV joint have excessive play or rattle, replace the propeller shaft assembly.

PROPELLER SHAFT RUNOUT

1. Install a dial indicator with its needle on the center of front propeller shaft or rear propeller shaft.
2. Turn the propeller shaft slowly and check the runout. Repeat this procedure for the other propeller shaft.

Front Propeller Shaft Runout : 0.3mm (0.012in.)

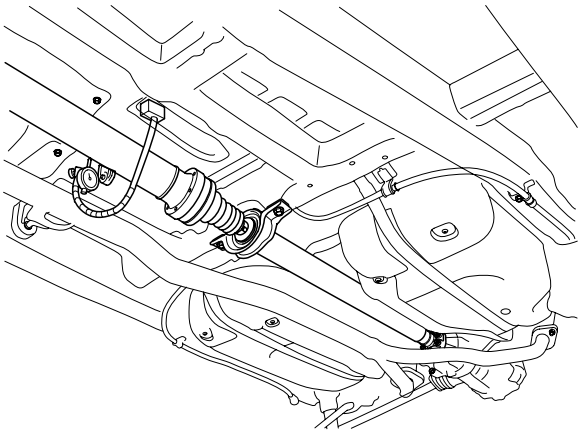

SCMDS6037D

Rear Propeller Shaft Runout : 0.3mm (0.012in.)

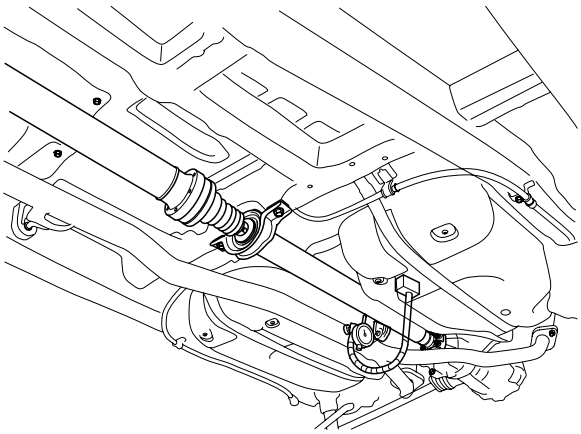

SCMDS6055D

3. If the runout on either propeller shaft exceeds the service limit, replace the propeller shaft assembly.

REMOVAL EC587D0E

1. After making a match mark (C) on the rubber coupling (A) and rear differential companion (B), remove the propeller shaft mounting bolts (D).

Tightening torque Nm (kgf-m, lb-ft) :
49.0~68.6 (5~7, 36.2~50.6)

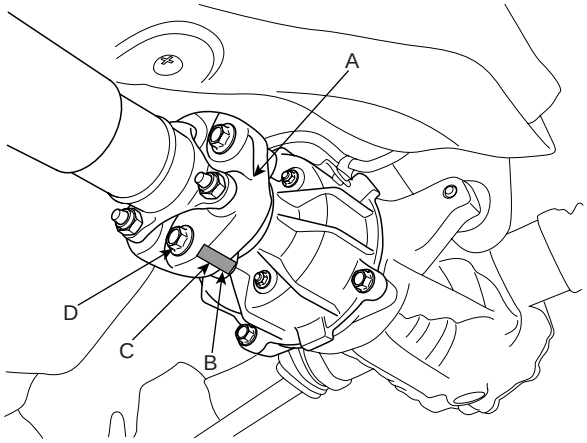

SCMDS6038D

2. Remove the center bearing bracket (A) mounting bolts (B).

Tightening torque Nm (kgf-m, lb-ft) :
39.2~49.0 (4~5, 28.9~36.2)

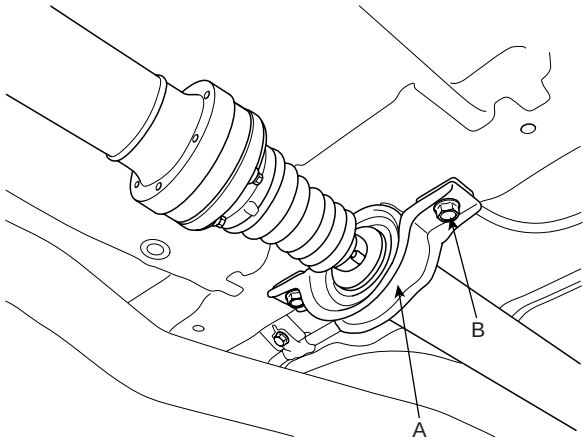

SCMDS6054D

3. After making a match mark (C) on the flange yoke (A) and transaxle companion (B), remove the propeller shaft mounting bolts (D).

Tightening torque Nm (kgf-m, lb-ft) :
49.0~68.6 (5~7, 36.2~50.6)

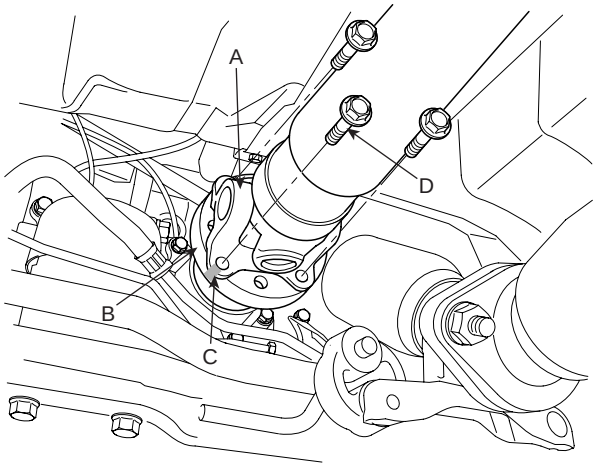

SCMDS6510D

CAUTION

Use the hexagonal wrench to prevent damage of bolt head when removing bolts (D).

4. Installation is the reverse of the removal procedures

DIFFERENTIAL CARRIER ASSEMBLY

DIFFERENTIAL CARRIER (4WD)

COMPONENT E7DDEA5A

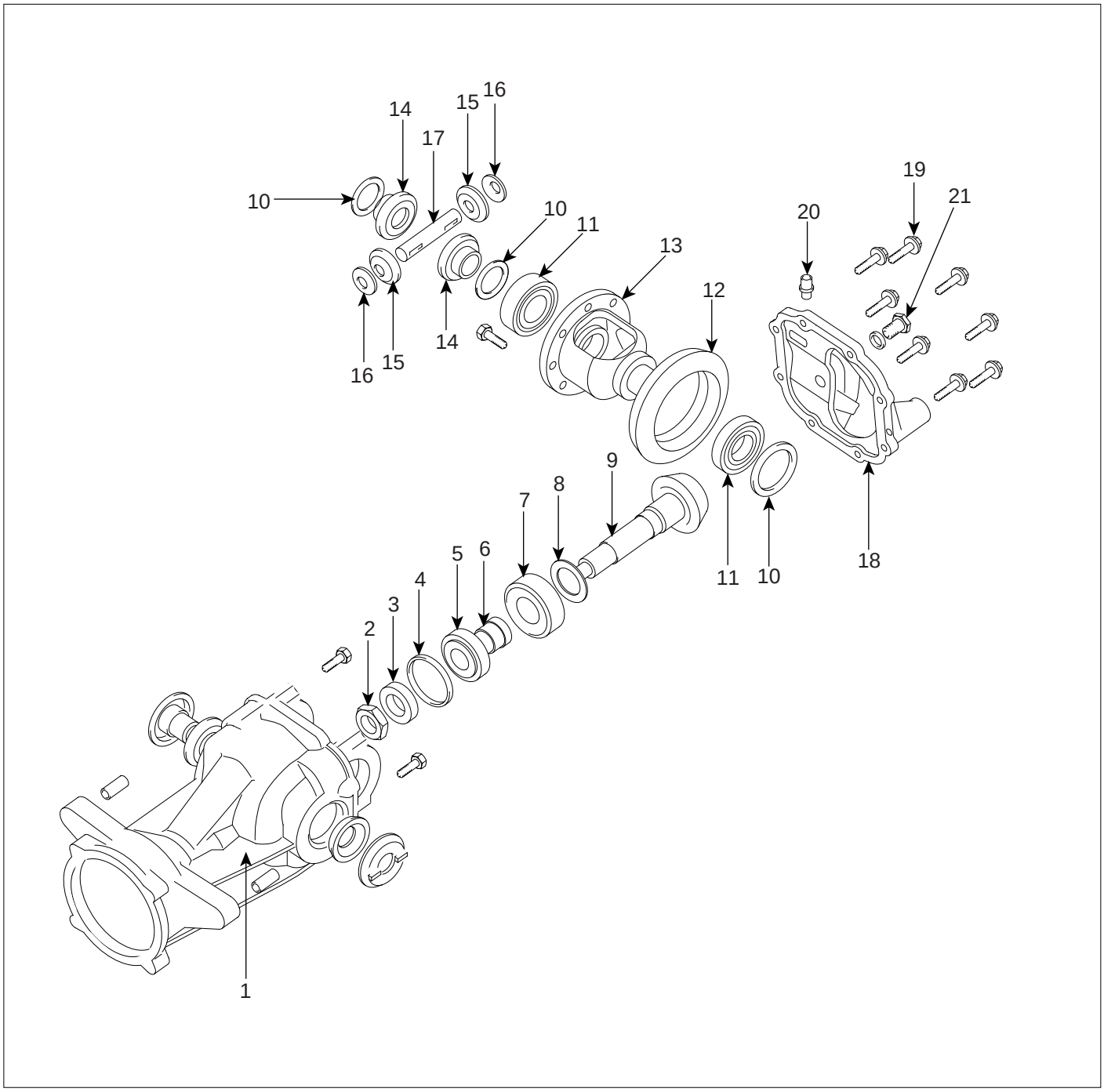

1. Differential carrier
2. Pinion locking nut
3. Oil seal guide
4. Pinion oil seal
5. Outer pinion beaing
6. Pinion bearing spacer
7. Inner pinion bearing
8. Inner bearing adjust shim
9. Drive gear
10. Oil seal
11. Differential side bearing
12. Ring gear
13. Differential
14. Cam side gear
15. Pinion gear
16. Thrust washer
17. Differential pinion shaft
18. Differential cover
19. Differential cover mounting bolts
20. Breather
21. Filler plug

SCMDS6517L

REMOVAL EE8D3F42

1. Drain the differential gear oil.
2. Remove the rear drive shaft.
3. Remove the propeller shaft.
4. Support the differential assembly (A) with the jack (B).

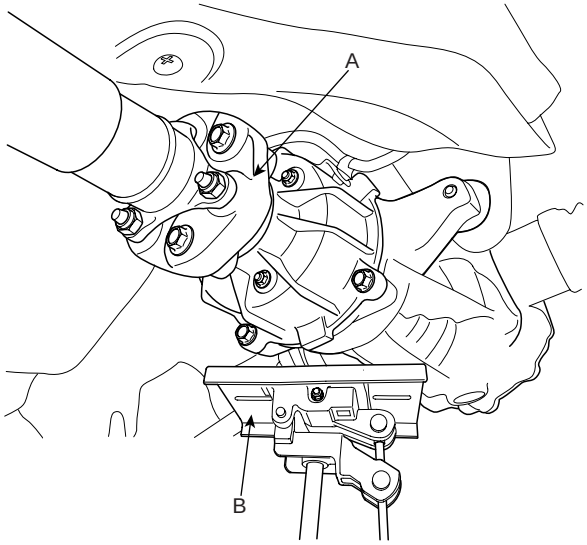

SCMDS6056D

5. Disconnect the coupling control connector (A).

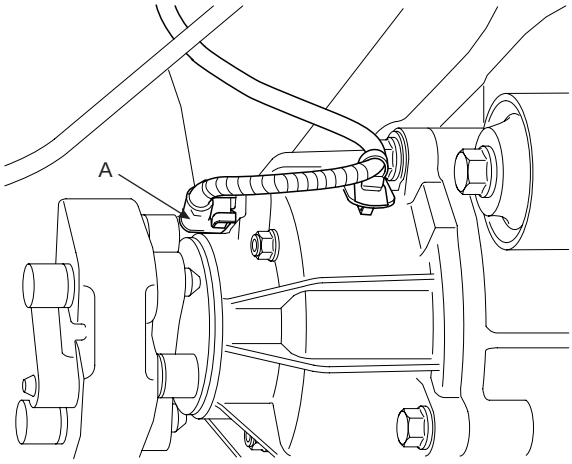

KIQE600B

6. After loosen the differential mounting bolts (A), and remove the differential (B).

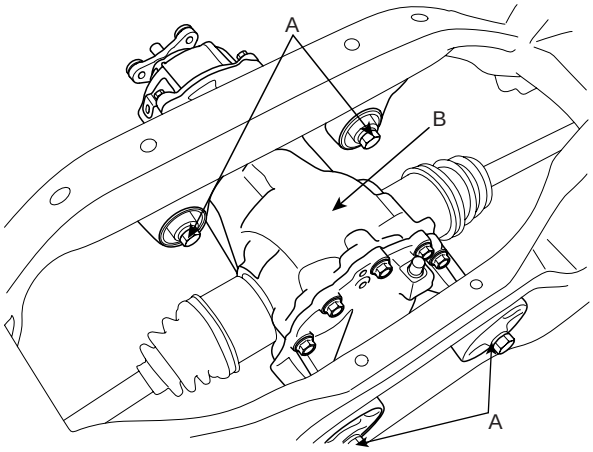

SCMDS6039D

7. After loosen the cover bolts (A), and remove the differential cover (B).

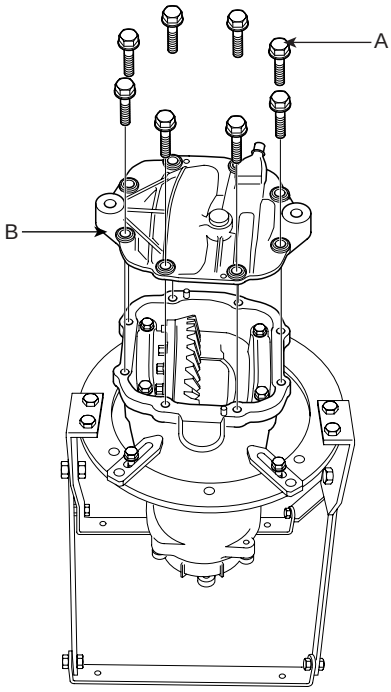

SCMDS6514D

INSPECTION E92AFA1B

Install the differential carrier assembly(A) with the special tools(09517-43101 & 09517-43500).Then carry out the following inspection.

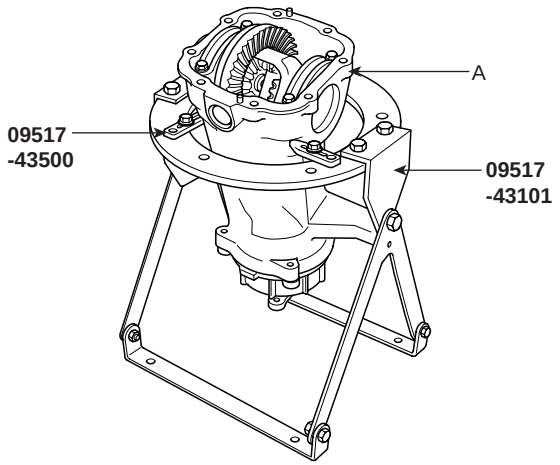

KIQE610A

1. Check the final drive gear backlash by the following procedure.

   1) Place the drive pinion and move the drive gear to check backlash is within the standard range.

   NOTE

   Measure at 4 points on the gear periphery.

Standard value : 0.10 ~ 0.15mm (0.0039 ~ 0.0059in.)

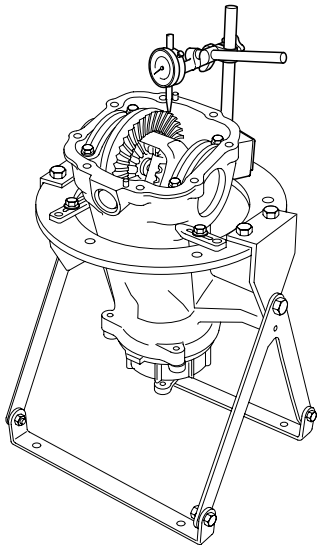

KIQE610B

2. Check the drive gear back-face lash by the following procedure.

   1) Place a dial gauge on the back-face of the drive gear and measure the runout.

Limit : 0.05 mm (0.002 in)

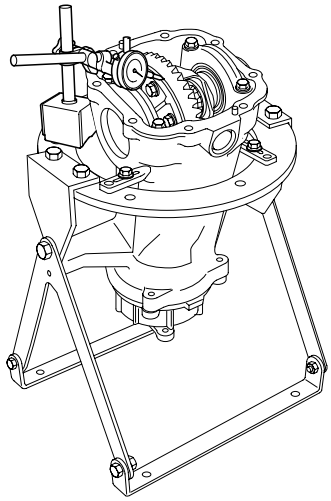

KIQE610C

   2) If the runout is beyond the limit, check that there are no foreign substances between the drive gear and differential case and, that the bolts fixing the drive gear are not loose.

3. Check the differential carrier backlash by the following procedure.

   1) Fix the side gear with a wedge so it cannot move and measure the differential gear backlash with a dial indicator on the pinion gear.

Standard value : 0 ~ 0.05 mm (0 ~ 0.002 in)

NOTE

Take the measurements at two places on the pinion gear.

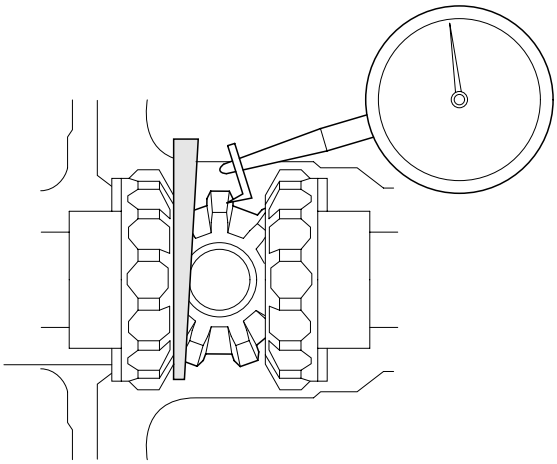

KISE610E

   2) If the backlash exceeds the limit, adjust using side bearing spacers.

NOTE

If adjustment is impossible, replace the side gear and pinion gear as a set.

4. Check the tooth contact of the final drive gear by the following procedure.

   1) Apply the same amount of machine blue slightly to both surfaces of the drive gear teeth.

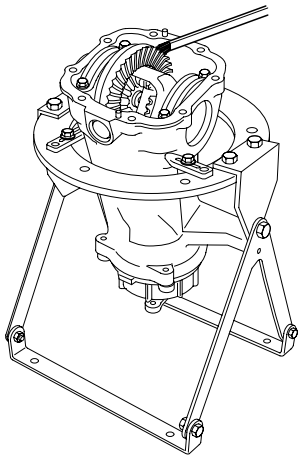

KIQE610D

   2) Insert a brass rod between the differential carrier and the differential case, and then rotate the companion flange by hand (once in the normal direction, and then once in the reverse direction) while applying a load to the drive gear so that some torque (approximately 25~30Nm) is applied to the drive pinion.

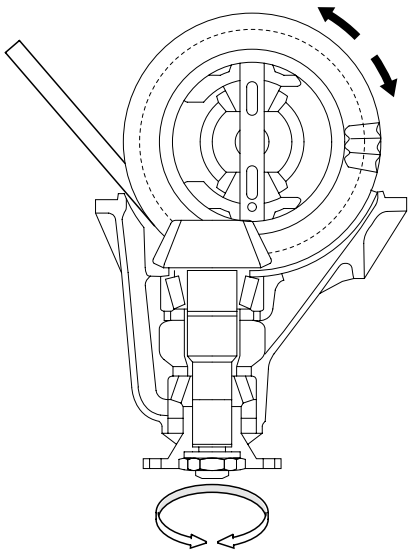

KISE610G

CAUTION

If the drive gear is rotated too much, the tooth contact pattern will become unclear and difficult to check.

3) Check the tooth contact pattern.

Tooth contact	Contact state	Solution	
Standard contact	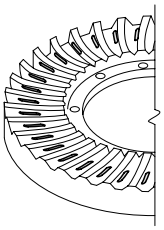 KISE610H		
1. Heal contact	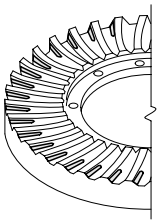 KISE650A	Increase the thickness of the pinion height adjusting shim, and position the drive pinion closer to the center of the drive gear. Also, for backlash adjustment, reposition the drive gear further from the drive pinion.	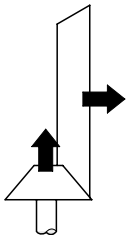 KISE630A
2. Face contact	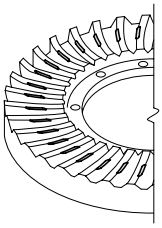 KISE650B		
3. Toe contact	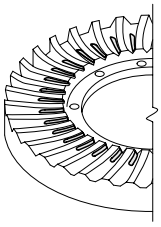 KISE650C	Decrease the thickness of the pinion height adjusting shim, and position the drive pinion further from the center of the drive gear. Also, for backlash adjustment, reposition the drive gear closer to the drive pinion.	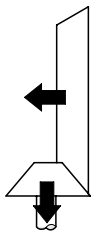 KISE630B
4. Flank contact	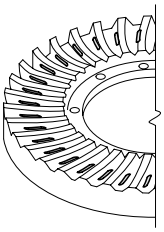 KISE650D		

NOTE

- *Tooth contact pattern is a method for judging the result of the adjustment of drive pinion height and final drive gear backlash. The adjustment of drive pinion height and final drive gear backlash should be repeated until the tooth contact patterns are similar to the standard tooth contact pattern.*
- *When you cannot obtain a correct pattern, the drive gear and drive pinion have exceeded their limits. Both gears should be replaced as a set.*

5. Check the oil leaks and the lip part for chew or wear.
6. Check the bearings for wear or discoloration.
7. Check the gear carrier for cracks.
8. Check the drive pinion and drive gear for wear or cracks.
9. Check the side gears, pinion gears and pinion shaft for wear or damage.
10. Check the side gear spline for wear or damage.

INSTALLATION E3E9CFB5

1. After apply liquid gasket, install the differential cover (B), and install the mounting bolts (A).

Tightening torque Nm (kgf-m, lb-ft) :
39.2~49.0 (4~5, 28.9~36.2)

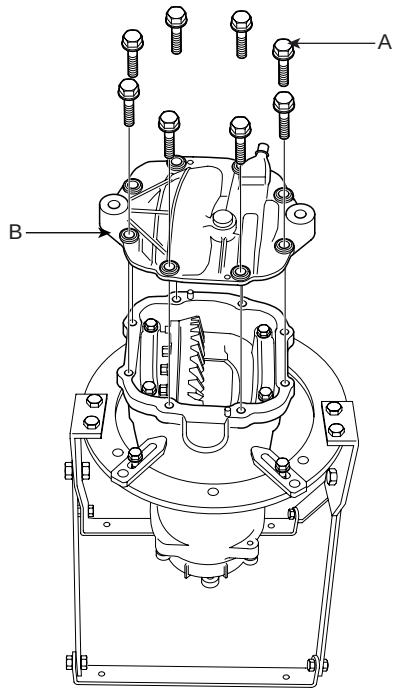

SCMDS6514D

2. After install the differential (B), and install the mounting bolts (A).

Tightening torque Nm (kgf-m, lb-ft) :
68.6~88.3 (7~9, 50.6~65.1)

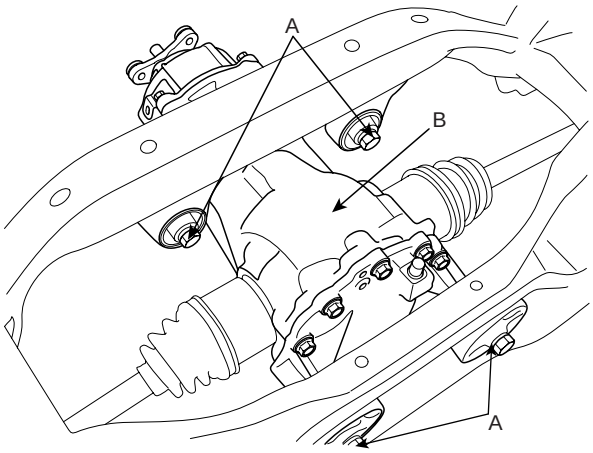

SCMDS6039D

3. Using the transaxle jack (B), install the differential assembly (A).

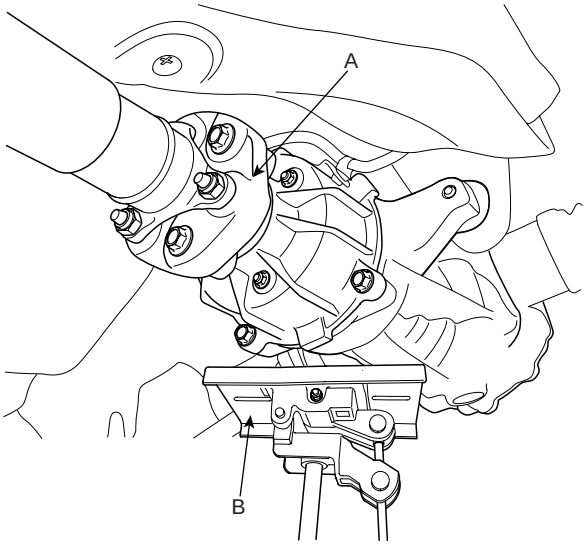

SCMDS6056D

4. Connect the coupling control connector (A).

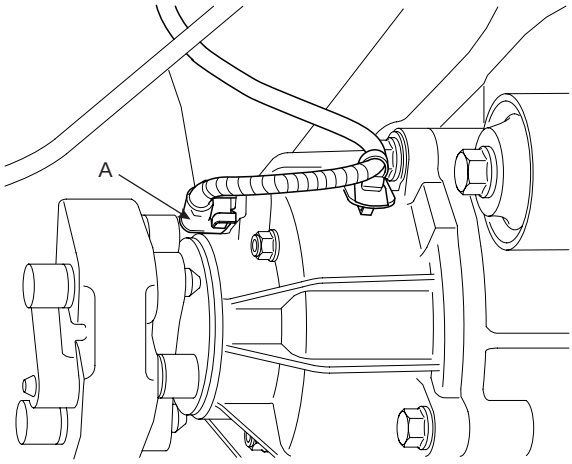

KIQE600B

5. Install the propeller shaft.

6. Install the rear drive shaft.

7. Fill the gear oil.

Specified lubricant: Hypoid gear oil (API GL-5, SAE 75W/90) Oil quantity : Fill the reservoir to the plug hold (About 0.9 L)

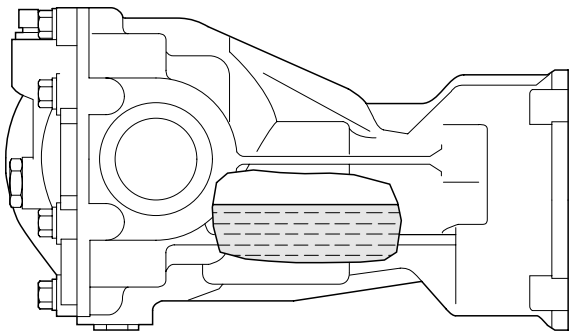

KIQE640A