2007 Chevrolet Uplander Owner Manual

Seats and Restraint Systems 7
Front Seats 9
Rear Seats 13
Safety Belts 32
Child Restraints 56
Airbag System 96
Restraint System Check 114

Features and Controls 117
Keys 119
Doors and Locks 128
Windows 143
Theft-Deterrent Systems 145
Starting and Operating Your Vehicle 150
Mirrors 165
OnStar® System 167
Universal Home Remote System 169
Storage Areas 180

Instrument Panel 189
Instrument Panel Overview 192
Climate Controls 217
Warning Lights, Gages, and Indicators 230
Driver Information Center (DIC) 249
Audio System(s) 284

Driving Your Vehicle 371
Your Driving, the Road, and Your Vehicle 372
Towing 410

Service and Appearance Care 423
Service 426
Fuel 428
Checking Things Under the Hood 436
Bulb Replacement 471
Windshield Wiper Blade Replacement 476
Tires 477
Appearance Care 517
Vehicle Identification 526
Electrical System 526
Capacities and Specifications 533

Maintenance Schedule 535
Maintenance Schedule 536

Customer Assistance Information 555
Customer Assistance and Information 556
Reporting Safety Defects 573

Index 577

GENERAL MOTORS, GM, the GM Emblem, CHEVROLET, the CHEVROLET Emblem, and the name UPLANDER are registered trademarks of General Motors Corporation.

This manual includes the latest information at the time it was printed. We reserve the right to make changes after that time without further notice. For vehicles first sold in Canada, substitute the name “General Motors of Canada Limited” for Chevrolet Motor Division whenever it appears in this manual.

This manual describes features that may be available in this model, but your vehicle may not be equipped with all of them. For example, more than one entertainment system may be offered or your vehicle may have been ordered without a front passenger or rear seats.

Keep this manual in the vehicle, so it will be there if it is ever needed when you are on the road. If the vehicle is sold, leave this manual in the vehicle.

Canadian Owners

A French language copy of this manual can be obtained from your dealer or from:

Helm, Incorporated
P.O. Box 07130
Detroit, MI 48207

Litho in U.S.A.
Part No. 15869247 A First Printing

©2006 General Motors Corporation. All Rights Reserved.

How to Use This Manual

Many people read the owner manual from beginning to end when they first receive their new vehicle. If this is done, it can help you learn about the features and controls for the vehicle. Pictures and words work together in the owner manual to explain things.

Index

A good place to quickly locate information about the vehicle is the Index in the back of the manual. It is an alphabetical list of what is in the manual and the page number where it can be found.

Safety Warnings and Symbols

There are a number of safety cautions in this book. We use a box and the word CAUTION to tell about things that could hurt you if you were to ignore the warning.

⚠ CAUTION:

These mean there is something that could hurt you or other people.

In the caution area, we tell you what the hazard is. Then we tell you what to do to help avoid or reduce the hazard. Please read these cautions. If you do not, you or others could be hurt.

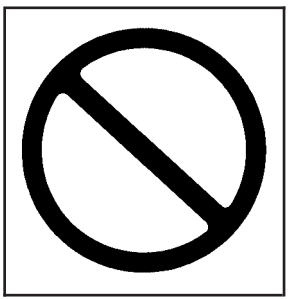

You will also find a circle with a slash through it in this book. This safety symbol means “Do Not,” “Do Not do this” or “Do Not let this happen.”

Vehicle Damage Warnings

Also, in this manual you will find these notices:

Notice: **These mean there is something that could damage your vehicle.**

A notice tells about something that can damage the vehicle. Many times, this damage would not be covered by your vehicle's warranty, and it could be costly. But the notice will tell what to do to help avoid the damage.

When you read other manuals, you might see CAUTION and NOTICE warnings in different colors or in different words.

There are also warning labels on the vehicle. They use the same words, CAUTION or NOTICE.

Vehicle Symbols

The vehicle has components and labels that use symbols instead of text. Symbols are shown along with the text describing the operation or information relating to a specific component, control, message, gage, or indicator.

If you need help figuring out a specific name of a component, gage, or indicator, reference the following topics:

- Seats and Restraint Systems in Section 1
- Features and Controls in Section 2
- Instrument Panel Overview in Section 3
- Climate Controls in Section 3
- Warning Lights, Gages, and Indicators in Section 3
- Audio System(s) in Section 3
- Engine Compartment Overview in Section 5

These are some examples of symbols that may be found on the vehicle:

CAUTION POSSIBLE INJURY	LATCH BOTH LAP AND SHOULDER BELTS TO PROTECT OCCUPANT DO NOT TWIST SAFETY BELT WHEN ATTACHING		MASTER LIGHTING SWITCH	ENGINE COOLANT TEMP	TIRE PRESSURE
PROTECT EYES BY SHIELDING	FASTEN SEAT BELTS	AIRBAG	TURN SIGNALS	BATTERY CHARGING SYSTEM	FUSE BOX ACCESS
CAUSTIC BATTERY ACID COULD CAUSE BURNS	MOVE SEAT FULLY REARWARD SECURE CHILD SEAT	DO NOT INSTALL A REAR-FACING CHILD RESTRAINT IN THIS SEATING POSITION	PARKING LAMPS	BRAKE	ENGINE COOLANT FAN
AVOID SPARKS OR FLAMES	PULL BELT OUT COMPLETELY THEN SECURE CHILD SEAT	DO NOT INSTALL A FORWARD-FACING CHILD RESTRAINT IN THIS SEATING POSITION	HAZARD WARNING FLASHER	COOLANT	FUEL
SPARK OR FLAME COULD EXPLODE BATTERY	POWER WINDOW	DOOR LOCK UNLOCK	DAYTIME RUNNING LAMPS	ENGINE OIL PRESSURE	OWNER MANUAL
			FOG LAMPS	ANTI-LOCK BRAKE SYSTEM	SERVICE MANUAL

Section 1 Seats and Restraint Systems

Front Seats 9
Manual Seats 9
Power Seats 10
Heated Seats 10
Reclining Seatbacks 11
Head Restraints 13

Rear Seats 13
Rear Seat Operation 13
Bucket Seats 13
Captain Chairs 22
Third Row Seat 27

Safety Belts 32
Safety Belts: They Are for Everyone 32
Questions and Answers About Safety Belts 36
How to Wear Safety Belts Properly 37
Driver Position 38
Shoulder Belt Height Adjustment 47
Safety Belt Use During Pregnancy 48
Right Front Passenger Position 48
Rear Seat Passengers 48
Rear Safety Belt Comfort Guides 52
Safety Belt Pretensioners 55
Safety Belt Extender 55

Child Restraints 56
Older Children 56
Infants and Young Children 59
Child Restraint Systems 63
Where to Put the Restraint 68
Lower Anchors and Tethers for Children (LATCH) 70
Securing a Child Restraint in a Rear Seat Position 77
Securing a Child Restraint in the Right Front Seat Position 80
Built-In Child Restraint 85

Airbag System 96
Where Are the Airbags? 99
When Should an Airbag Inflate? 101
What Makes an Airbag Inflate? 103
How Does an Airbag Restrain? 104

Section 1 Seats and Restraint Systems

What Will You See After an Airbag Inflates? 104
Passenger Sensing System 106
Servicing Your Airbag-Equipped Vehicle 112
Adding Equipment to Your Airbag-Equipped Vehicle 113
Restraint System Check 114
Checking the Restraint Systems 114
Replacing Restraint System Parts After a Crash 115

Front Seats

Manual Seats

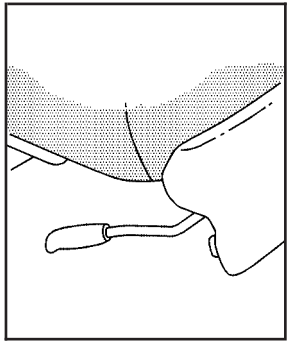

Use the lever located on the front of the seat to adjust the seat forward or rearward.
Pull up on the lever to unlock the seat.
Slide the seat to where you want it and release the lever.

⚠ CAUTION:

You can lose control of the vehicle if you try to adjust a manual driver's seat while the vehicle is moving. The sudden movement could startle and confuse you, or make you push a pedal when you do not want to. Adjust the driver's seat only when the vehicle is not moving.

To make sure the seat is locked into place, try to move the seat back and forth with your body.

Power Seats

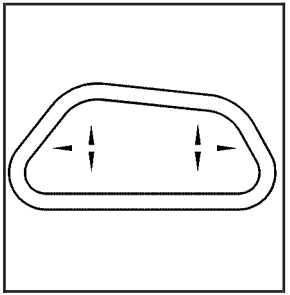

If the vehicle has power seats, the controls used to operate them are located on the outboard side of the seats.

To adjust the seat, do any of the following:

- Move the seat forward or rearward by sliding the control forward or rearward.
- Raise or lower the front part of the seat cushion by moving the front of the control up or down.
- Raise or lower the rear part of the seat cushion by moving the rear of the control up or down.

Heated Seats

Your vehicle may have this feature. If it does, the heated seat buttons are located on the climate control panel.

This feature will heat the lower cushions of the driver's and front passenger's seats.

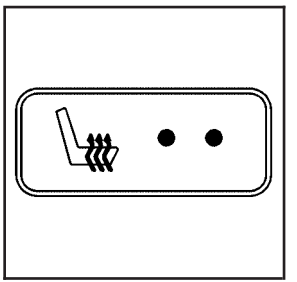

Driver's Side Button shown, Passenger's Side similar

Press this button once to turn the heated seat on to the high setting.

Both indicator lights next to the heated seat symbol will be lit to indicate that it is on the high setting. Press the button a second time to go to the low setting. One indicator will be lit. Press the button a third time to turn the heated seat off.

This feature will turn off automatically when the ignition is turned off.

Reclining Seatbacks

⚠ CAUTION:

You can lose control of the vehicle if you try to adjust a manual driver's seat while the vehicle is moving. The sudden movement could startle and confuse you, or make you push a pedal when you do not want to. Adjust the driver's seat only when the vehicle is not moving.

⚠ CAUTION:

If the seatback is not locked, it could move forward in a sudden stop or crash. That could cause injury to the person sitting there. Always push and pull on the seatback to be sure it is locked.

Your seats have manual reclining seatbacks. The lever used to operate them is located on the outboard side of the seats.

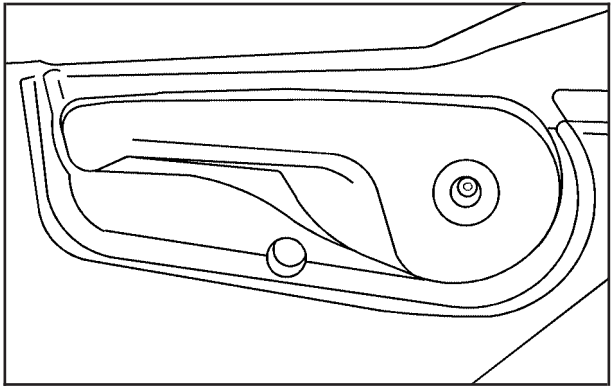

1. Lift the recline lever.
2. Move the seatback to the desired position, then release the lever to lock the seatback in place.
3. Push and pull on the seatback to make sure it is locked.

To return the seatback to an upright position, do the following:

1. Lift the lever fully without applying pressure to the seatback and the seatback will return to the upright position.
2. Push and pull on the seatback to make sure it is locked.

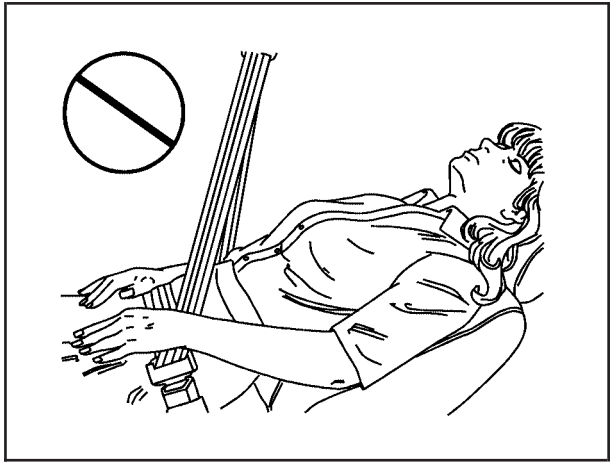

⚠ CAUTION:

Sitting in a reclined position when your vehicle is in motion can be dangerous. Even if you buckle up, your safety belts cannot do their job when you are reclined like this.

The shoulder belt cannot do its job because it will not be against your body. Instead, it will be in front of you. In a crash, you could go into it, receiving neck or other injuries.

The lap belt cannot do its job either. In a crash, the belt could go up over your abdomen. The belt forces would be there, not at your pelvic bones. This could cause serious internal injuries.

For proper protection when the vehicle is in motion, have the seatback upright. Then sit well back in the seat and wear your safety belt properly.

Do not have a seatback reclined if your vehicle is moving.

Head Restraints

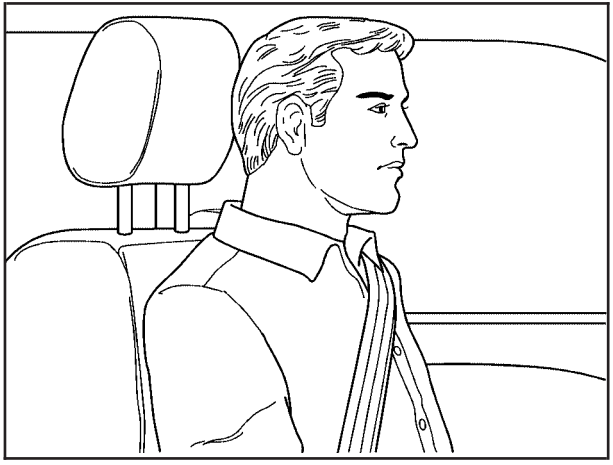

Adjust the head restraint so that the top of the restraint is at the same height as the top of the occupant's head. This position reduces the chance of a neck injury in a crash.

The height of the head restraints can be adjusted on the first and second row seats. Pull the head restraint up or push it down to adjust it.

The head restraints on the third row seat cannot be adjusted.

Rear Seats

Rear Seat Operation

The rear seats in your vehicle have levers and straps used to adjust, remove, and reinstall the seats. By using the levers and straps in the correct order, you can easily remove the seats from the vehicle. If your vehicle has second row captain chairs with airbags, the seats cannot be removed.

When reinstalling the seats, make sure the seats are in the proper positions.

If your vehicle has a second row center console, it can be removed. See *Second Row Center Console on page 183*. Do not put a seat in the center position because the safety belt cannot be worn properly in this position. See *Safety Belts: They Are for Everyone on page 32*.

Bucket Seats

Your vehicle may have bucket seats in the second row. These seats can be adjusted several different ways.

Fold and Tumble Feature

⚠ CAUTION:

Using the third row seating position while the second row is folded, or folded and tumbled, could cause injury in a sudden stop or crash. Be sure to return the seat to the passenger seating position. Push and pull on the seat to make sure it is locked into place.

The second row bucket seats can be folded and tumbled forward. Use this feature for exiting and entering third row seats, if the vehicle has them.

1. Make sure the adjustable head restraints are in the fully lowered position.

Notice: **Folding a rear seat with the safety belts still fastened may cause damage to the seat or the safety belts. Always unbuckle the safety belts and return them to their normal stowed position before folding a rear seat.**

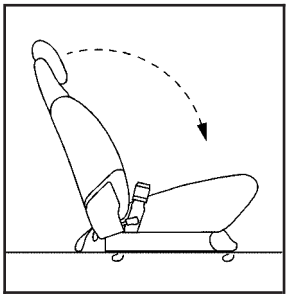

2. Fold the seatback flat on the seat.

   You can do this by either pulling on the nylon strap, located on the rear right hand side of the seat, or by lifting the recline lever, located on the front right hand side of the seatback.

3. Slide the seat all the way back in this position.

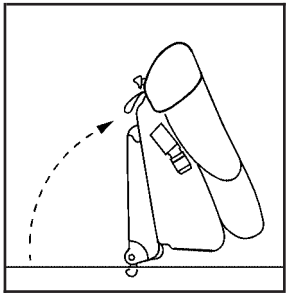

4. Release the rear set of seat hooks from the floor pins by pulling the nylon strap, located at the base of the seat. Use the strap to guide the seat forward.

To return the seat to the original position, do the following:

1. Align the seat so that the rear hooks on the seat are over the rear floor pins. Push down firmly on the rear of the seat so that the rear hooks attach to the rear floor pins.
2. Try to raise the seat to check that it is locked to the floor.
3. Pull the nylon strap, located on the rear right hand side of the seat, or lift the recline lever, located on the front right hand side of the seatback, to raise the seatback to the upright position.

⚠ CAUTION:

If the seatback is not locked, it could move forward in a sudden stop or crash. That could cause injury to the person sitting there. Always push and pull on the seatback to be sure it is locked.

4. Push and pull on the seatback to check that it is locked.

One of the bucket seats may be equipped with a built-in child restraint. See *Built-In Child Restraint on page 85*.

Adjusting the Bucket Seats Forward and Rearward

There are two adjustment levers on the second row bucket seats that enable them to move forward or rearward.

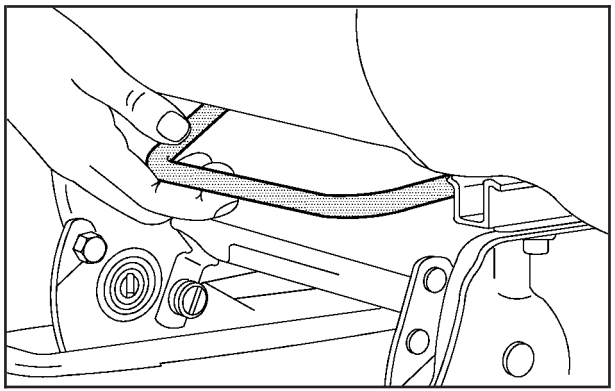

One is located below the front of the seat.

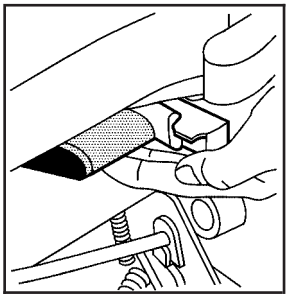

The other lever is located on the rear of the seat.

To adjust the second row bucket seats forward or rearward, do the following:

1. Lift up either lever and slide the seat forward or rearward.
2. Release the lever when the seat is in the desired position.
3. Push and pull on the seat to make sure it is locked.

Folding or Reclining the Seatbacks

The seatback on a bucket seat can either be folded forward or reclined using the nylon strap or the recline lever.

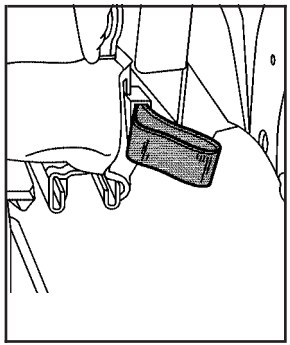

Nylon Strap

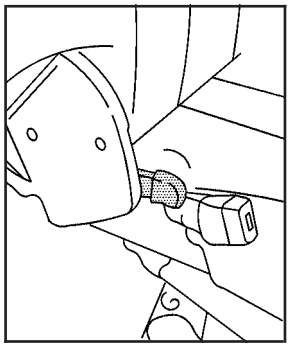

Recline Lever

To fold the seatback forward, do the following:

1. Pull the nylon strap, located on the rear right hand side of the seat, or lift the recline lever, located on the front right hand side of the seatback to release the seatback.

Notice: **Folding a rear seat with the safety belts still fastened may cause damage to the seat or the safety belts. Always unbuckle the safety belts and return them to their normal stowed position before folding a rear seat.**

2. Fold the seatback forward.

⚠ CAUTION:

If the seatback is not locked, it could move forward in a sudden stop or crash. That could cause injury to the person sitting there. Always push and pull on the seatback to be sure it is locked.

To raise the seatback to the upright position from a reclined position, do the following:

1. Pull the nylon strap or lift the recline lever while raising the seatback until it locks to the upright position.
2. Push and pull on the seatback to check that it is locked.

To recline the seatback, do the following:

1. Pull the nylon strap or lift the recline lever.
2. Press back on the seatback until it is in the desired position
3. Let go of the strap or lever.

Removing the Bucket Seats

To remove the bucket seats, do the following:

1. Make sure the head restraint is in the fully lowered position.

Notice: **Folding a rear seat with the safety belts still fastened may cause damage to the seat or the safety belts. Always unbuckle the safety belts and return them to their normal stowed position before folding a rear seat.**

2. Fold the seatback flat on the seat, by either pulling on the nylon strap, located on the rear right hand side of the seat, or by lifting the recline lever, located on the front right hand side of the seatback.
3. Lift either one of the adjuster levers and slide the seat to the most rearward position. See “Adjusting the Bucket Seats Forward and Rearward” earlier in this section.

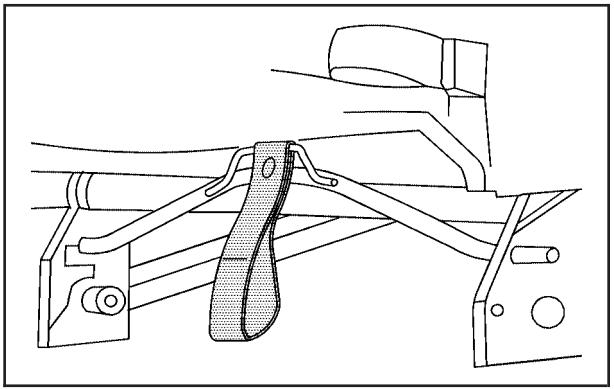

4. Release the rear set of hooks from the floor pins by pulling the nylon strap, located at the base of the seat. Use the strap to guide the seat forward.

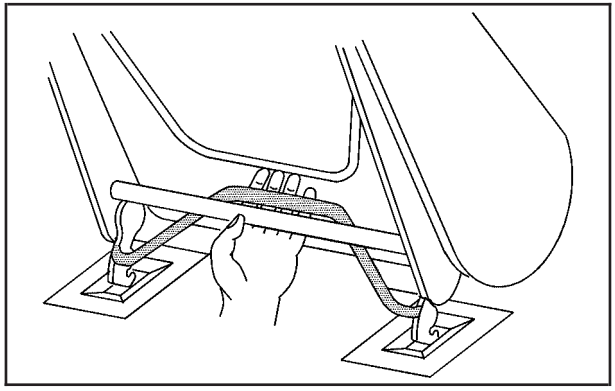

5. To release the front seat hooks from the floor pins, squeeze the angled bar, located beneath the seat toward the straight crossbar.
6. Remove the seat by rocking it slightly forward, then toward the rear of the vehicle while pulling it out. This should be done in one motion.

Reinstalling the Bucket Seats

⚠ CAUTION:

A safety belt that is improperly routed, not properly attached, or twisted will not provide the protection needed in a crash. The person wearing the belt could be seriously injured. After installing the seat, always check to be sure that the safety belts are properly routed and attached, and are not twisted.

Do not install the seat facing the rear of the vehicle, as it will not lock into place. If more storage room is needed behind the seat, slide the seat forward.

Make sure the seat is in the full rear position before beginning this procedure.

To reinstall the bucket seats, do the following:

1. With the seat folded, squeeze the angled bar beneath the seat toward the straight crossbar, while placing the front hooks of the seat into the front two floor pins.

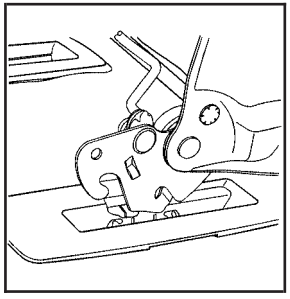

2. Make sure the seat is angled so that the front seat hooks clear the floor pins. If the front hooks are not attached correctly, the seat's rear hooks will not attach to the rear set of floor pins.

   If the front hooks are not attaching correctly, check that the seat is in the full rear position.

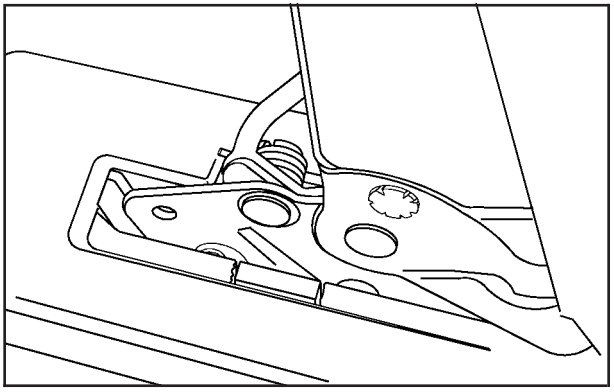

3. Firmly push the rear seat hooks into the rear floor pins by pushing down the rear of the seat.

⚠ CAUTION:

A seat that is not locked into place properly can move around in a collision or sudden stop. People in the vehicle could be injured. Be sure to lock the seat into place properly when installing it.

4. Check that the seat is locked by trying to raise the seat.
5. Pull the nylon strap, located on the rear right hand side of the seat, or lift the recline lever, located on the front right hand side of the seatback, to raise the seatback to the upright position.

⚠ CAUTION:

If the seatback is not locked, it could move forward in a sudden stop or crash. That could cause injury to the person sitting there. Always push and pull on the seatback to be sure it is locked.

6. Push and pull on the seatback to make sure that it is locked.

Captain Chairs

Your vehicle may have second row captain chairs. If so, they can be adjusted forward or rearward and the seatbacks can be adjusted.

Adjusting the Captain Chairs Forward and Rearward

There are two manual adjustment bars on each seat. One is located under the front of the seat cushion. The other one is located under the rear of the seat cushion.

Lift up either bar to slide the seat forward or rearward. Release the lever. Push and pull on the seat to make sure it is locked into place.

Folding or Reclining the Seatbacks

⚠ CAUTION:

If the seatback is not locked, it could move forward in a sudden stop or crash. That could cause injury to the person sitting there. Always push and pull on the seatback to be sure it is locked.

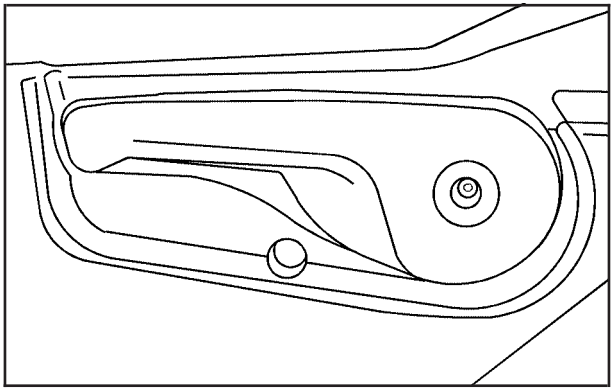

To recline the seatback, lift up on the recliner lever located on the outboard side of the seat, then move the seatback to the desired position.

To raise the seatback, lift up on the recliner lever without applying pressure to the seatback. Push and pull on the seatback to make sure it is locked in place.

Notice: **Folding a rear seat with the safety belts still fastened may cause damage to the seat or the safety belts. Always unbuckle the safety belts and return them to their normal stowed position before folding a rear seat.**

To fold the seatback forward, lift up fully on the recliner lever. Push the seatback forward until it is flat.

The armrests can be lowered or raised for easier entry or exit of the vehicle. If your vehicle has captain chairs with side impact airbags, they will have one armrest on the inboard side.

Removing a Captain Chair (without a Side Impact Airbag)

If your vehicle has captain chairs with side impact airbags, the seats cannot be removed. See *Where Are the Airbags? on page 99* for more information.

To remove a captain chair, do the following:

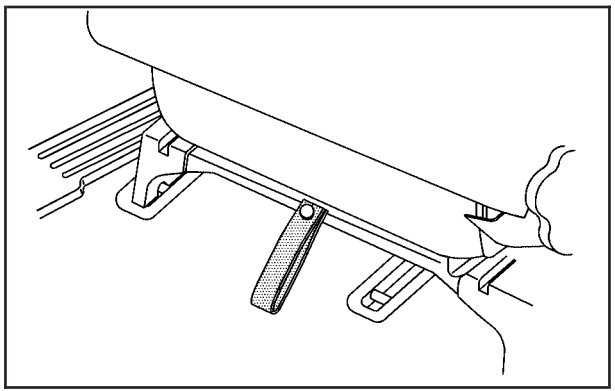

1. Pull the nylon strap behind the seat to release the rear hooks from the floor pins.

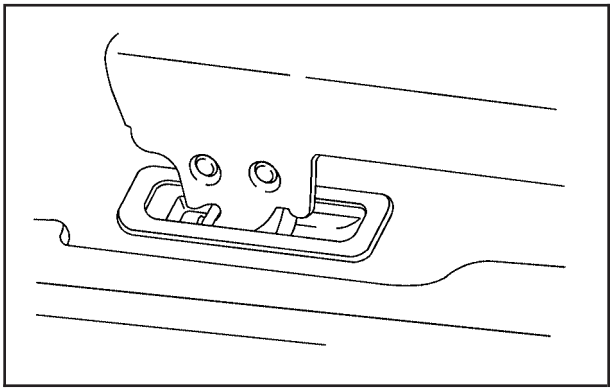

2. The seat can then be lifted off the front floor pins and removed from the vehicle.

Installing a Captain Chair (without a Side Impact Airbag)

⚠ CAUTION:

A safety belt that is improperly routed, not properly attached, or twisted will not provide the protection needed in a crash. The person wearing the belt could be seriously injured. After installing the seat, always check to be sure that the safety belts are properly routed and attached, and are not twisted.

Do not put the seats in so they face rearward because they will not latch that way. For the second row, if you want more storage room behind the seat, adjust the seat by sliding it forward.

Make sure the seatbacks are in the upright position, the seat belts are on the correct side of the seats and the seats are in the full rear position before beginning this procedure.

To install a captain chair, do the following:

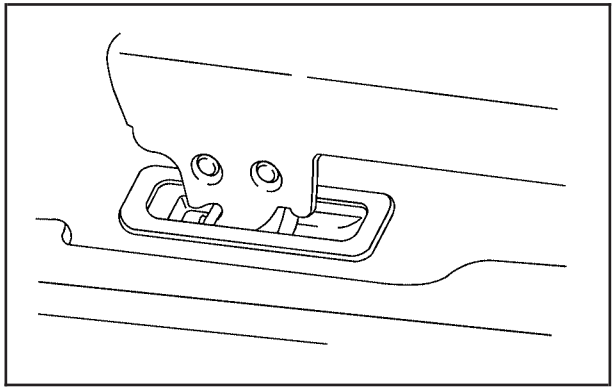

1. Hook the front latches over the front floor pins.

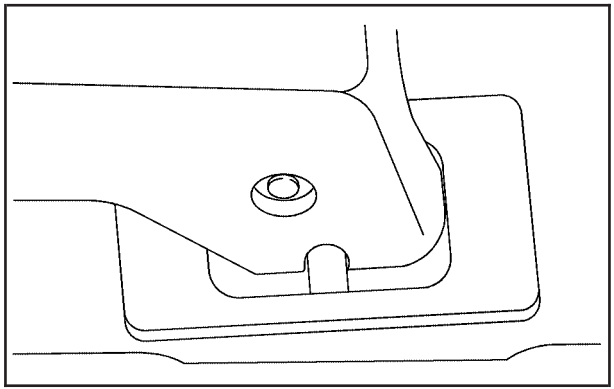

2. Push the rear of the seat down to lock the rear latches onto the rear set of floor pins.

⚠ CAUTION:

A seat that is not locked into place properly can move around in a collision or sudden stop. People in the vehicle could be injured. Be sure to lock the seat into place properly when installing it.

3. Push and pull on the seat to be sure it is properly attached.

Third Row Seat

Your vehicle may have a third row seat. It is a full bench seat and may come with the convenience center. See *Convenience Center on page 186* for more information. The third row seat can be removed and replaced, or with the seatback folded, it will lie flat with the convenience center.

Folding the Seatback(s)

Notice: **Folding a rear seat with the safety belts still fastened may cause damage to the seat or the safety belts. Always unbuckle the safety belts and return them to their normal stowed position before folding a rear seat.**

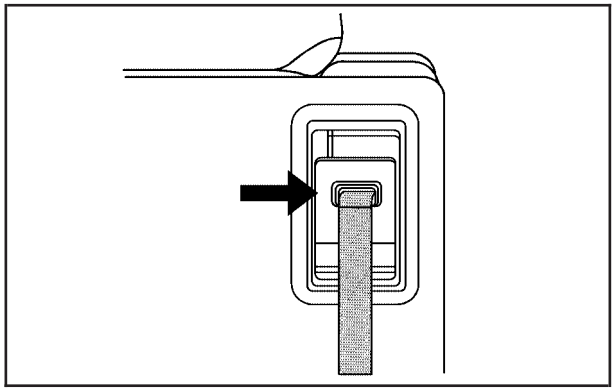

To fold down either side of the 50/50 split bench seat, lift the lever located on the back of the seat you want to fold, and push the seatback down.

Returning the Seatback to an Upright Position

⚠ CAUTION:

If the seatback is not locked, it could move forward in a sudden stop or crash. That could cause injury to the person sitting there. Always push and pull on the seatback to be sure it is locked.

To raise the seatback, do the following:

1. Move the second row seat completely forward by using the manual adjustment bar under either the front or rear of the seat cushion.
2. Open the liftgate.

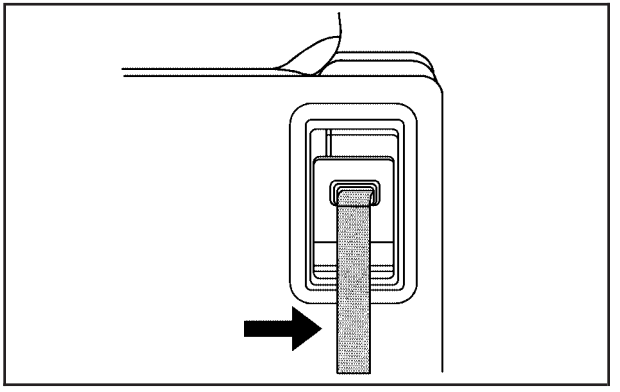

3. From the rear of the vehicle, locate the pullstrap attached to the lever on the back of the seat and pull it to raise the seat.
4. Push and pull on the seatback to make sure that it is locked into place.

Removing the Third Row Seat

1. Remove the convenience center, if equipped. See *Convenience Center on page 186* for more information.
2. Make sure all items are off the seat.

Notice: **Folding a rear seat with the safety belts still fastened may cause damage to the seat or the safety belts. Always unbuckle the safety belts and return them to their normal stowed position before folding a rear seat.**

3. Put the seatback in its folded position before removing the seat. See “Folding the Seatback(s)” earlier in this section.

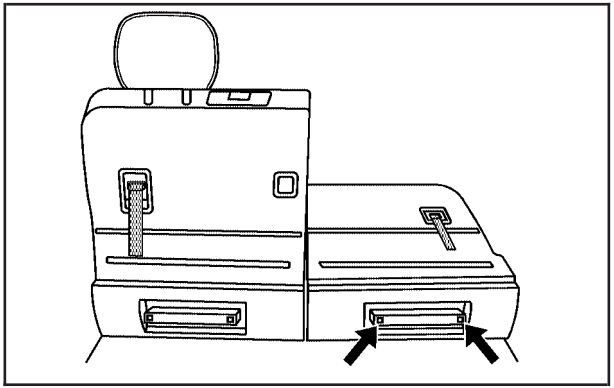

4. From behind the seat, squeeze the release handle until the pin indicators are fully out. This indicates that the rear latches are released from the floor. For ease of removing the seat, squeeze the handle with the palm of your hand up.
5. Lift the seat slightly from the floor to ensure the latches are clear of the floor pins.
6. Pull the seat rearward and out of the vehicle. The release handle can be used to carry the seat.

Installing the Third Row Seat

⚠ CAUTION:

A safety belt that is improperly routed, not properly attached, or twisted will not provide the protection needed in a crash. The person wearing the belt could be seriously injured. After installing the seat, always check to be sure that the safety belts are properly routed and attached, and are not twisted.

Do not put the third row seat in so it faces rearward because it will not latch that way. The seat needs to be installed before the convenience center. See *Convenience Center on page 186* for more information.

Notice: **Folding a rear seat with the safety belts still fastened may cause damage to the seat or the safety belts. Always unbuckle the safety belts and return them to their normal stowed position before folding a rear seat.**

For ease of installing the seat, put the seat in the folded position before beginning this procedure.

1. From the rear of the vehicle, place the front hooks of the seat onto the front floor pins in the third row. To do this, the seat will need to be angled approximately 8-10 inches (20-25 cm) from the floor so the front hooks clear the rear floor pins and rear floor cups. Use the release handle to guide the seat into place.

   If the front hooks are not attached correctly, the rear latches will not attach to the rear set of floor pins.

2. Firmly push the rear latches into the rear floor pins by pushing down on the rear of the seat.

⚠ CAUTION:

A seat that is not locked into place properly can move around in a collision or sudden stop. People in the vehicle could be injured. Be sure to lock the seat into place properly when installing it.

3. Try to raise the seat to make sure that it is locked down. The indicator pins will no longer stick out when the seat is properly latched into place.

⚠ CAUTION:

If the seatback is not locked, it could move forward in a sudden stop or crash. That could cause injury to the person sitting there. Always push and pull on the seatback to be sure it is locked.

4. Return the seatback to its upright position. See “Returning the Seatback to an Upright Position” earlier in this section.

Safety Belts

Safety Belts: They Are for Everyone

This part of the manual tells you how to use safety belts properly. It also tells you some things you should not do with safety belts.

⚠ CAUTION:

Do not let anyone ride where he or she cannot wear a safety belt properly. If you are in a crash and you are not wearing a safety belt, your injuries can be much worse. You can hit things inside the vehicle or be ejected from it. You can be seriously injured or killed. In the same crash, you might not be, if you are buckled up. Always fasten your safety belt, and check that your passengers' belts are fastened properly too.

⚠ CAUTION:

It is extremely dangerous to ride in a cargo area, inside or outside of a vehicle. In a collision, people riding in these areas are more likely to be seriously injured or killed. Do not allow people to ride in any area of your vehicle that is not equipped with seats and safety belts. Be sure everyone in your vehicle is in a seat and using a safety belt properly.

Your vehicle has indicators to remind you and your passengers to buckle your safety belts. See *Safety Belt Reminder Light on page 232* and *Passenger Safety Belt Reminder Light on page 233*.

In most states and in all Canadian provinces, the law says to wear safety belts. Here is why: *They work*.

You never know if you will be in a crash. If you do have a crash, you do not know if it will be a bad one.

A few crashes are mild, and some crashes can be so serious that even buckled up, a person would not survive. But most crashes are in between. In many of them, people who buckle up can survive and sometimes walk away. Without belts they could have been badly hurt or killed.

After more than 40 years of safety belts in vehicles, the facts are clear. In most crashes buckling up does matter... a lot!

Why Safety Belts Work

When you ride in or on anything, you go as fast as it goes.

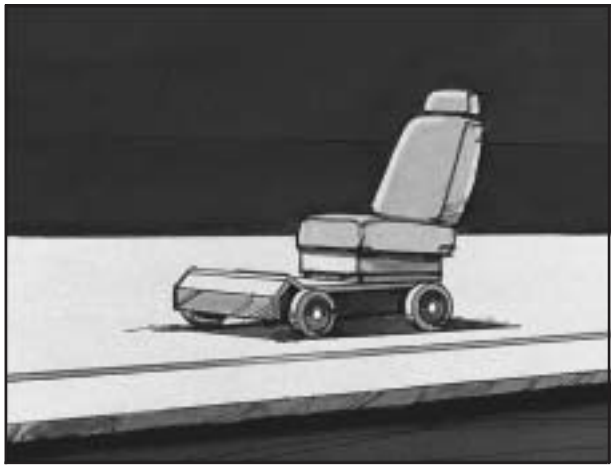

Take the simplest vehicle. Suppose it is just a seat on wheels.

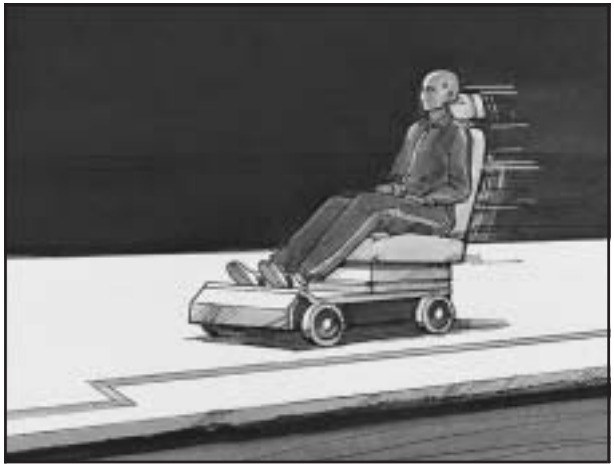

Put someone on it.

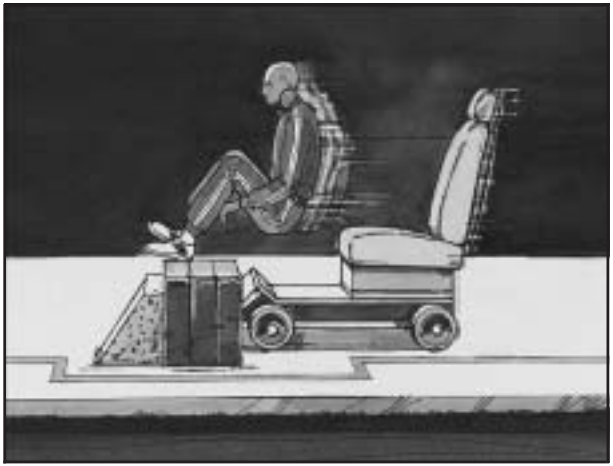

Get it up to speed. Then stop the vehicle. The rider does not stop.

The person keeps going until stopped by something. In a real vehicle, it could be the windshield...

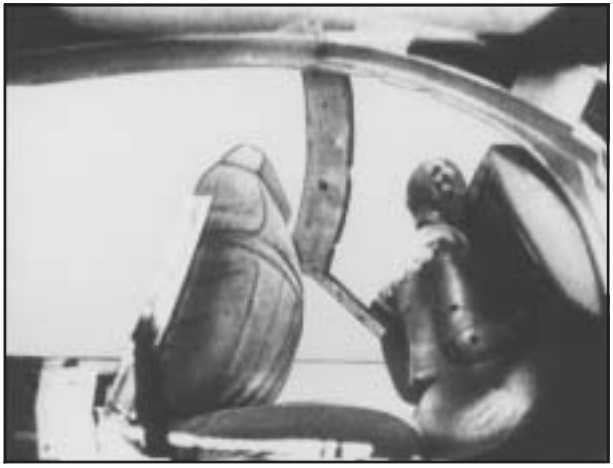

or the instrument panel...

or the safety belts!

With safety belts, you slow down as the vehicle does. You get more time to stop. You stop over more distance, and your strongest bones take the forces. That is why safety belts make such good sense.

Questions and Answers About Safety Belts

Q: Will I be trapped in the vehicle after an accident if I am wearing a safety belt?

A: You *could* be — whether you are wearing a safety belt or not. But you can unbuckle a safety belt, even if you are upside down. And your chance of being conscious during and after an accident, so you *can* unbuckle and get out, is *much* greater if you are belted.

Q: If my vehicle has airbags, why should I have to wear safety belts?

A: Airbags are in many vehicles today and will be in most of them in the future. But they are supplemental systems only; so they work *with* safety belts — not instead of them. Every airbag system ever offered for sale has required the use of safety belts. Even if you are in a vehicle that has airbags, you still have to buckle up to get the most protection. That is true not only in frontal collisions, but especially in side and other collisions.

Q: If I am a good driver, and I never drive far from home, why should I wear safety belts?

A: You may be an excellent driver, but if you are in an accident — even one that is not your fault — you and your passengers can be hurt. Being a good driver does not protect you from things beyond your control, such as bad drivers.

Most accidents occur within 25 miles (40 km) of home. And the greatest number of serious injuries and deaths occur at speeds of less than 40 mph (65 km/h).

Safety belts are for everyone.

How to Wear Safety Belts Properly

This part is only for people of adult size.

Be aware that there are special things to know about safety belts and children. And there are different rules for smaller children and babies. If a child will be riding in your vehicle, see *Older Children on page 56* or *Infants and Young Children on page 59*. Follow those rules for everyone's protection.

First, you will want to know which restraint systems your vehicle has.

We will start with the driver position.

Driver Position

Lap-Shoulder Belt

The driver has a lap-shoulder belt. Here is how to wear it properly.

1. Close and lock the door.
2. Adjust the seat so you can sit up straight. To see how, see “Seats” in the Index.

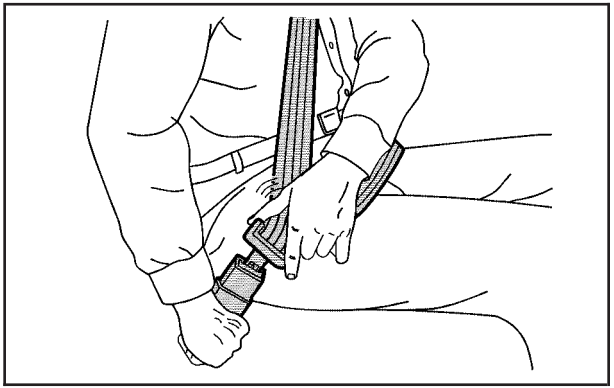

3. Pick up the latch plate and pull the belt across you. Do not let it get twisted.

   The lap-shoulder belt may lock if you pull the belt across you very quickly. If this happens, let the belt go back slightly to unlock it. Then pull the belt across you more slowly.

4. Push the latch plate into the buckle until it clicks.

   Pull up on the latch plate to make sure it is secure. If the belt is not long enough, see *Safety Belt Extender on page 55*.

   Make sure the release button on the buckle is positioned so you would be able to unbuckle the safety belt quickly if you ever had to.

5. Move the shoulder belt height adjuster to the height that is right for you. Improper shoulder belt height adjustment could reduce the effectiveness of the safety belt in a crash. See *Shoulder Belt Height Adjustment on page 47*.

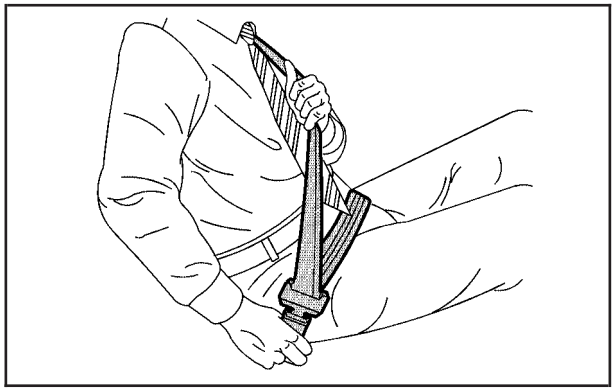

6. To make the lap part tight, pull up on the shoulder belt.

   It may be necessary to pull stitching on the safety belt through the latch plate to fully tighten the lap belt on smaller occupants.

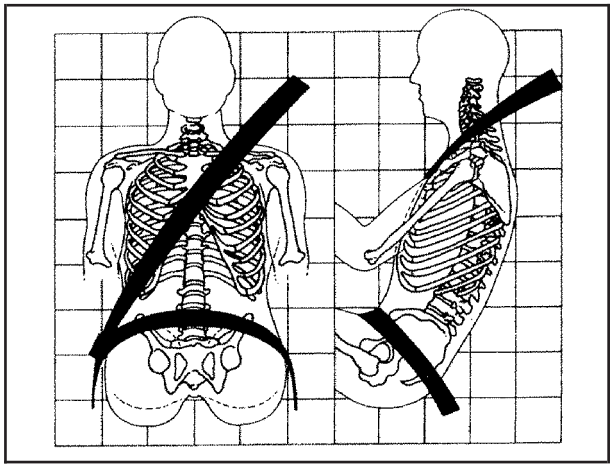

The lap part of the belt should be worn low and snug on the hips, just touching the thighs. In a crash, this applies force to the strong pelvic bones. And you would be less likely to slide under the lap belt. If you slid under it, the belt would apply force at your abdomen. This could cause serious or even fatal injuries. The shoulder belt should go over the shoulder and across the chest. These parts of the body are best able to take belt restraining forces.

The safety belt locks if there is a sudden stop or crash.

Q: What is wrong with this?

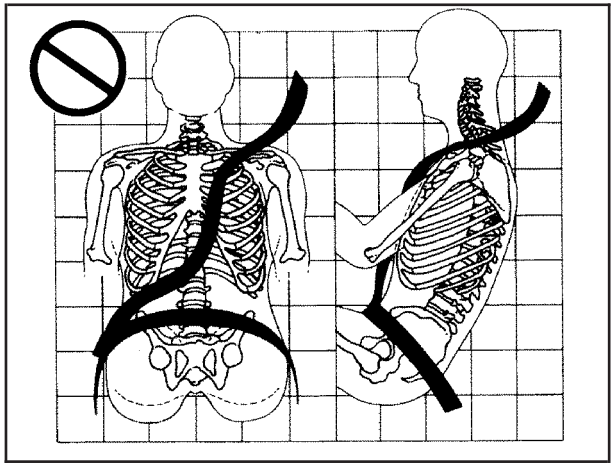

A: The shoulder belt is too loose. It will not give nearly as much protection this way.

⚠ CAUTION:

You can be seriously hurt if your shoulder belt is too loose. In a crash, you would move forward too much, which could increase injury. The shoulder belt should fit against your body.

Q: What is wrong with this?

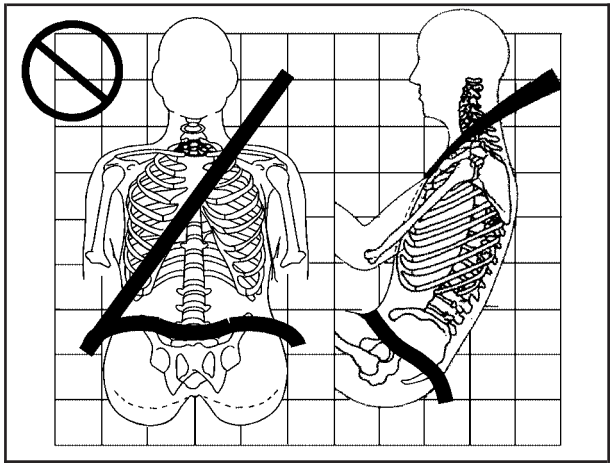

A: The lap belt is too loose. It will not give nearly as much protection this way.

⚠ CAUTION:

You can be seriously hurt if your lap belt is too loose. In a crash, you could slide under the lap belt and apply force at your abdomen. This could cause serious or even fatal injuries. The lap belt should be worn low and snug on the hips, just touching the thighs.

Q: What is wrong with this?

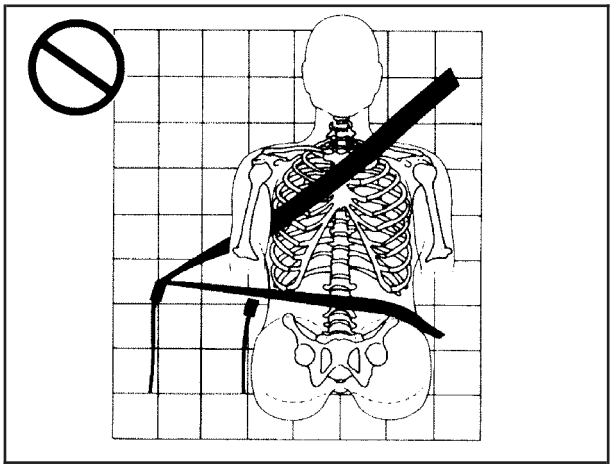

A: The belt is buckled in the wrong place.

⚠ CAUTION:

You can be seriously injured if your belt is buckled in the wrong place like this. In a crash, the belt would go up over your abdomen. The belt forces would be there, not at the pelvic bones. This could cause serious internal injuries. Always buckle your belt into the buckle nearest you.

Q: What is wrong with this?

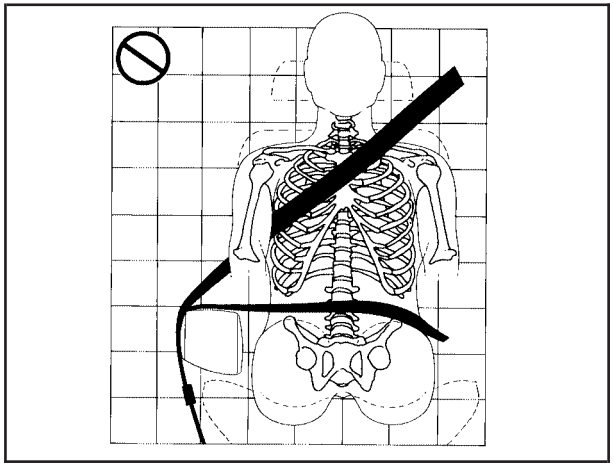

A: The belt is over an armrest.

⚠ CAUTION:

You can be seriously injured if your belt goes over an armrest like this. The belt would be much too high. In a crash, you can slide under the belt. The belt force would then be applied at the abdomen, not at the pelvic bones, and that could cause serious or fatal injuries. Be sure the belt goes under the armrests.

Q: What is wrong with this?

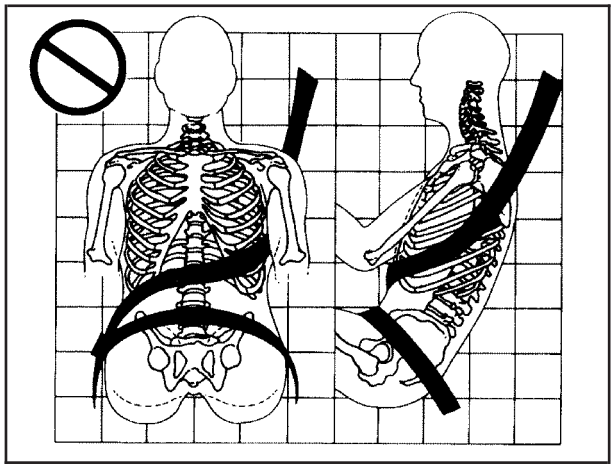

A: The shoulder belt is worn under the arm. It should be worn over the shoulder at all times.

⚠ CAUTION:

You can be seriously injured if you wear the shoulder belt under your arm. In a crash, your body would move too far forward, which would increase the chance of head and neck injury. Also, the belt would apply too much force to the ribs, which are not as strong as shoulder bones. You could also severely injure internal organs like your liver or spleen.

Q: What is wrong with this?

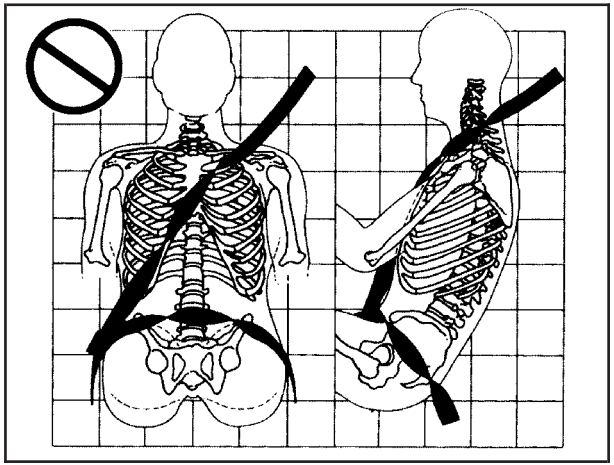

A: The belt is twisted across the body.

⚠ CAUTION:

You can be seriously injured by a twisted belt. In a crash, you would not have the full width of the belt to spread impact forces. If a belt is twisted, make it straight so it can work properly, or ask your dealer to fix it.

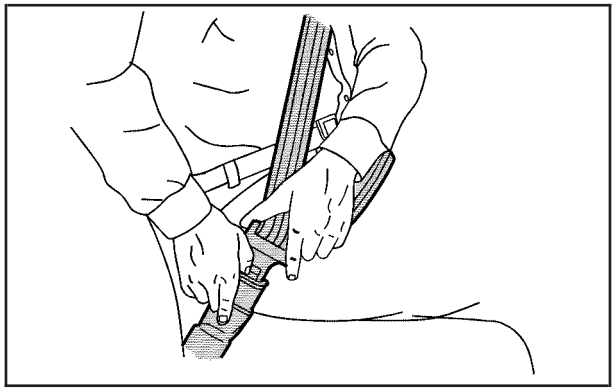

To unlatch the belt, push the button on the buckle. The belt should go back out of the way.

Before you close the door, be sure the belt is out of the way. If you slam the door on it, you can damage both the belt and your vehicle.

Shoulder Belt Height Adjustment

Before you begin to drive, move the shoulder belt height adjuster to the height that is right for you.

Adjust the height so that the shoulder portion of the belt is centered on your shoulder. The belt should be away from your face and neck, but not falling off your shoulder. Incorrect positioning of the shoulder belt can reduce the effectiveness of the safety belt.

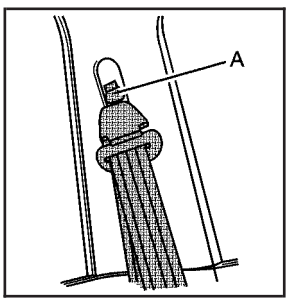

To move it down, push down on the button (A) and move the height adjuster to the desired position. You can move the height adjuster up by pushing up on the shoulder belt guide.

After you move the height adjuster to where you want it, try to move it down without pushing the button down to make sure it has locked into position.

Safety Belt Use During Pregnancy

Safety belts work for everyone, including pregnant women. Like all occupants, they are more likely to be seriously injured if they do not wear safety belts.

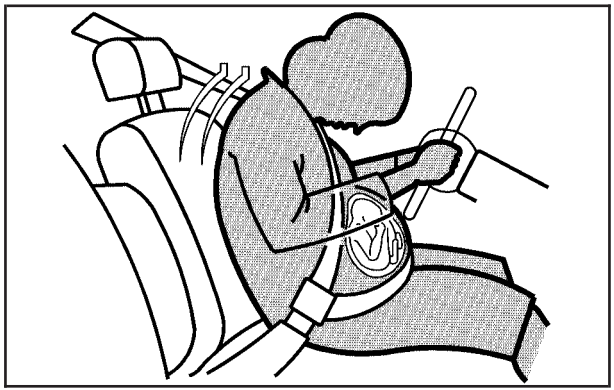

A pregnant woman should wear a lap-shoulder belt, and the lap portion should be worn as low as possible, below the rounding, throughout the pregnancy.

The best way to protect the fetus is to protect the mother. When a safety belt is worn properly, it is more likely that the fetus will not be hurt in a crash. For pregnant women, as for anyone, the key to making safety belts effective is wearing them properly.

Right Front Passenger Position

To learn how to wear the right front passenger's safety belt properly, see *Driver Position on page 38*.

The right front passenger's safety belt works the same way as the driver's safety belt — except for one thing. If you ever pull the shoulder portion of the belt out all the way, you will engage the child restraint locking feature which may turn off the passenger's frontal airbag. If this happens, just let the belt go back all the way and start again.

Rear Seat Passengers

It is very important for rear seat passengers to buckle up! Accident statistics show that unbelted people in the rear seat are hurt more often in crashes than those who are wearing safety belts.

Rear passengers who are not safety belted can be thrown out of the vehicle in a crash. And they can strike others in the vehicle who are wearing safety belts.

Lap-Shoulder Belt

All rear seat positions have lap-shoulder belts. Here is how to wear one properly.

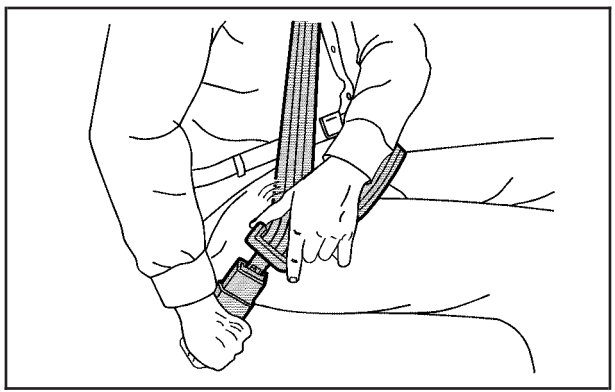

1. Pick up the latch plate and pull the belt across you. Do not let it get twisted.

   The shoulder belt may lock if you pull the belt across you very quickly. If this happens, let the belt go back slightly to unlock it. Then pull the belt across you more slowly.

2. Push the latch plate into the buckle until it clicks.

   Pull up on the latch plate to make sure it is secure.

   When the shoulder belt is pulled out all the way, it will lock. If it does, let it go back all the way and start again.

   If the belt is not long enough, see *Safety Belt Extender on page 55*.

   Make sure the release button on the buckle is positioned so you would be able to unbuckle the safety belt quickly if you ever had to.

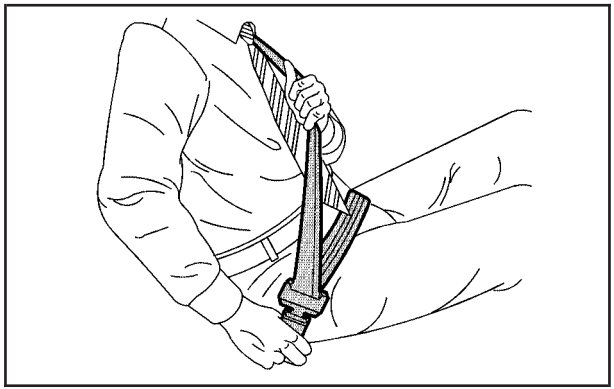

3. To make the lap part tight, pull up on the shoulder part.

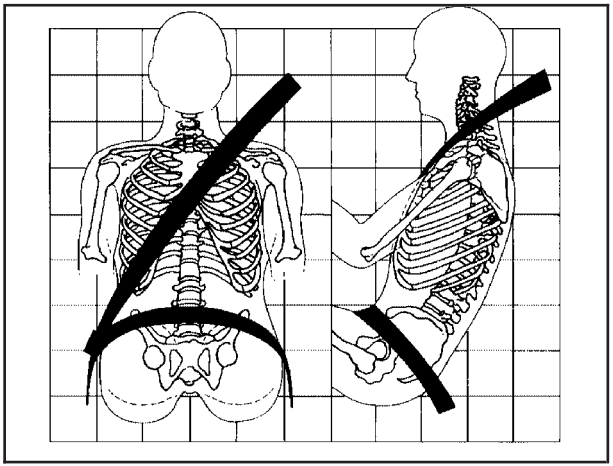

The lap part of the belt should be worn low and snug on the hips, just touching the thighs. In a crash, this applies force to the strong pelvic bones. And you would be less likely to slide under the lap belt. If you slid under it, the belt would apply force at your abdomen. This could cause serious or even fatal injuries. The shoulder belt should go over the shoulder and across the chest. These parts of the body are best able to take belt restraining forces.

The safety belt locks if there is a sudden stop or a crash, or if you pull the belt very quickly out of the retractor.

⚠ CAUTION:

You can be seriously hurt if your shoulder belt is too loose. In a crash, you would move forward too much, which could increase injury. The shoulder belt should fit against your body.

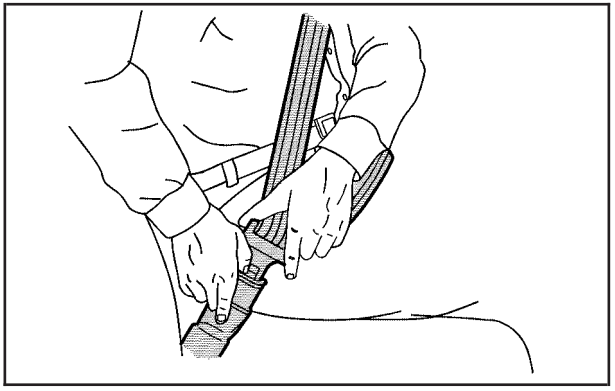

To unlatch the belt, push the button on the buckle.

Rear Safety Belt Comfort Guides

Rear shoulder belt comfort guides may provide added safety belt comfort for older children who have outgrown booster seats and for some adults. When installed on a shoulder belt, the comfort guide positions the belt away from the neck and head.

There is one guide for each second row passenger position. If your vehicle has a third row, there is one guide for each outboard position.

Here is how to install a comfort guide to the shoulder belt:

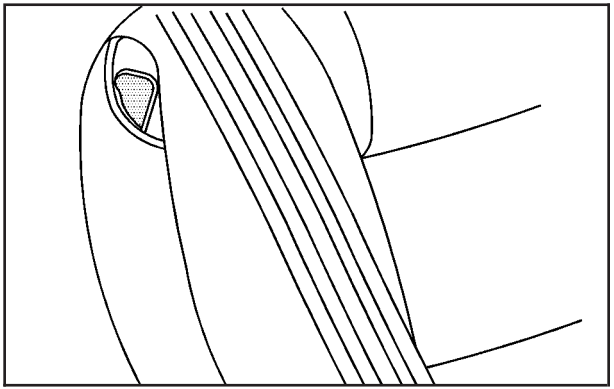

1. Remove the guide from its storage pocket on the side of the seatback.

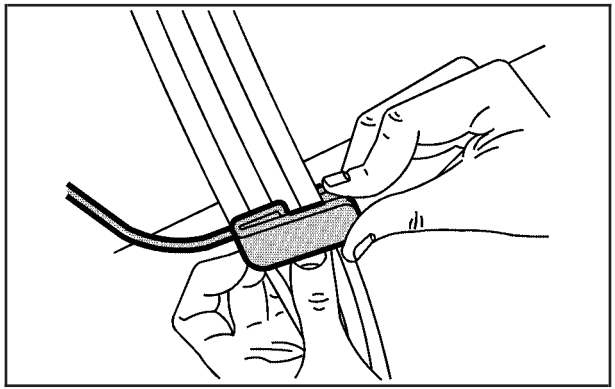

2. Place the guide over the belt and insert the two edges of the belt into the slots of the guide.

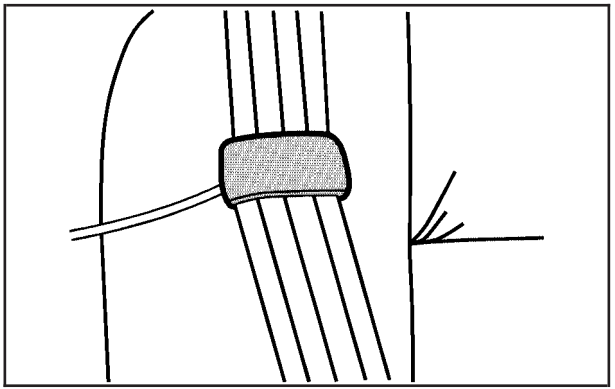

3. Be sure that the belt is not twisted and it lies flat. The elastic cord must be under the belt and the guide on top.

⚠ CAUTION:

A safety belt that is not properly worn may not provide the protection needed in a crash. The person wearing the belt could be seriously injured. The shoulder belt should go over the shoulder and across the chest. These parts of the body are best able to take belt restraining forces.

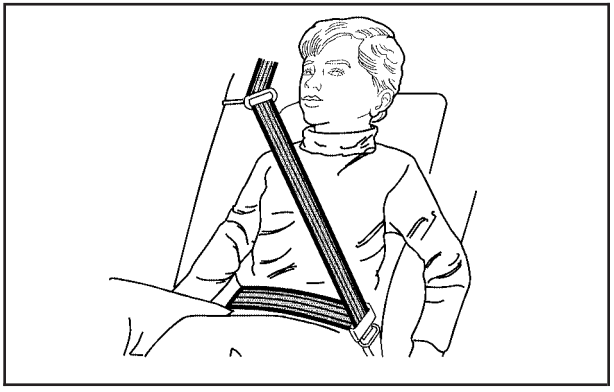

4. Buckle, position, and release the safety belt as described in *Rear Seat Passengers on page 48*. Make sure that the shoulder belt crosses the shoulder.

To remove and store the comfort guide, squeeze the belt edges together so that you can take them out of the guide. Slide the guide into the storage pocket.

Safety Belt Pretensioners

Your vehicle has safety belt pretensioners for the driver and right front passenger. Although you cannot see them, they are located on the retractor part of the safety belts. They help the safety belts reduce a person's forward movement in a moderate to severe frontal or near frontal crash.

Pretensioners work only once. If they activate in a crash, you will need to get new ones, and probably other new parts for your safety belt system. See *Replacing Restraint System Parts After a Crash on page 115*.

Safety Belt Extender

If the vehicle's safety belt will fasten around you, you should use it.

But if a safety belt is not long enough, your dealer will order you an extender. When you go in to order it, take the heaviest coat you will wear, so the extender will be long enough for you. To help avoid personal injury, do not let someone else use it, and use it only for the seat it is made to fit. The extender has been designed for adults. Never use it for securing child seats. To wear it, just attach it to the regular safety belt. For more information see the instruction sheet that comes with the extender.

Child Restraints

Older Children

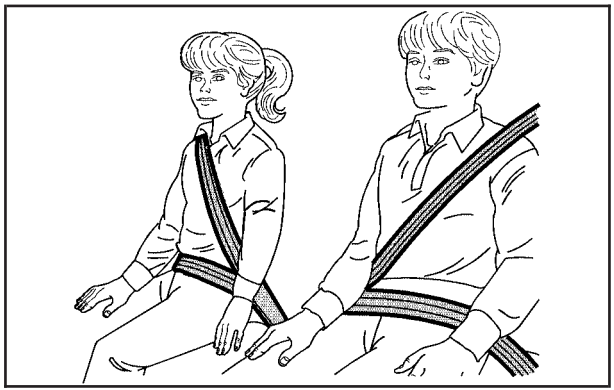

Older children who have outgrown booster seats should wear the vehicle's safety belts.

Q: What is the proper way to wear safety belts?

A: If possible, an older child should wear a lap-shoulder belt and get the additional restraint a shoulder belt can provide. The shoulder belt should not cross the face or neck. The lap belt should fit snugly below the hips, just touching the top of the thighs. It should never be worn over the abdomen, which could cause severe or even fatal internal injuries in a crash.

Accident statistics show that children are safer if they are restrained in the rear seat.

In a crash, children who are not buckled up can strike other people who are buckled up, or can be thrown out of the vehicle. Older children need to use safety belts properly.

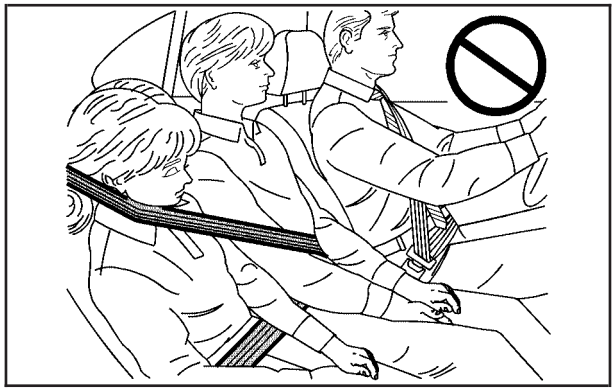

⚠ CAUTION:

Never do this.

Here two children are wearing the same belt. The belt can not properly spread the impact forces. In a crash, the two children can be crushed together and seriously injured. A belt must be used by only one person at a time.

Q: What if a child is wearing a lap-shoulder belt, but the child is so small that the shoulder belt is very close to the child's face or neck?

A: If the child is sitting in a seat next to a window, move the child toward the center of the vehicle. If the child is sitting in a center rear seat position, move the child toward the safety belt buckle. In either case, be sure that the shoulder belt still is on the child's shoulder, so that in a crash the child's upper body would have the restraint that belts provide. If the child is sitting in a rear outboard position, see *Rear Safety Belt Comfort Guides on page 52*.

⚠ CAUTION:

Never do this.

Here a child is sitting in a seat that has a lap-shoulder belt, but the shoulder part is behind the child. If the child wears the belt in this way, in a crash the child might slide under the belt. The belt's force would then be applied right on the child's abdomen. That could cause serious or fatal injuries.

Wherever the child sits, the lap portion of the belt should be worn low and snug on the hips, just touching the child's thighs. This applies belt force to the child's pelvic bones in a crash.

Infants and Young Children

Everyone in a vehicle needs protection! This includes infants and all other children. Neither the distance traveled nor the age and size of the traveler changes the need, for everyone, to use safety restraints. In fact, the law in every state in the United States and in every Canadian province says children up to some age must be restrained while in a vehicle.

⚠ CAUTION:

Children can be seriously injured or strangled if a shoulder belt is wrapped around their neck and the safety belt continues to tighten. Never leave children unattended in a vehicle and never allow children to play with the safety belts.

Every time infants and young children ride in vehicles, they should have the protection provided by appropriate restraints. Young children should not use the vehicle's adult safety belts alone, unless there is no other choice. Instead, they need to use a child restraint.

⚠ CAUTION:

People should never hold a baby in their arms while riding in a vehicle. A baby does not weigh much — until a crash. During a crash a baby will become so heavy it is not possible to hold it. For example, in a crash at only 25 mph (40 km/h), a 12 lb (5.5 kg) baby will suddenly become a 240 lb (110 kg) force on a person's arms. A baby should be secured in an appropriate restraint.

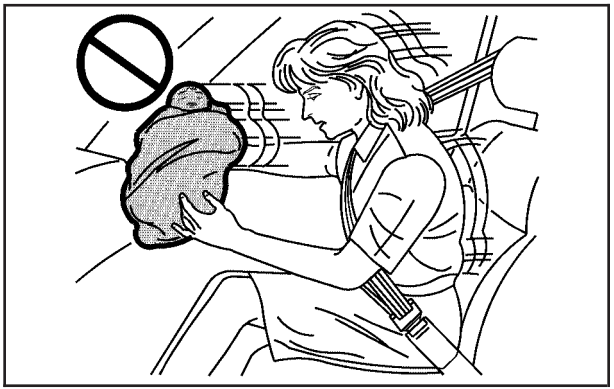

⚠ CAUTION:

Children who are up against, or very close to, any airbag when it inflates can be seriously injured or killed. Airbags plus lap-shoulder belts offer protection for adults and older children, but not for young children and infants. Neither the vehicle's safety belt system nor its airbag system is designed for them. Young children and infants need the protection that a child restraint system can provide.

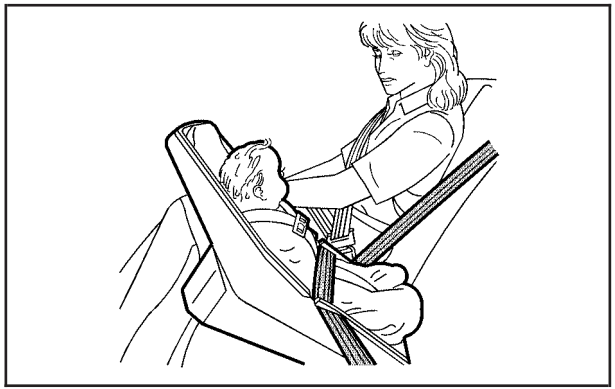

Q: What are the different types of add-on child restraints?

A: Add-on child restraints, which are purchased by the vehicle's owner, are available in four basic types. Selection of a particular restraint should take into consideration not only the child's weight, height, and age but also whether or not the restraint will be compatible with the motor vehicle in which it will be used.

For most basic types of child restraints, there are many different models available. When purchasing a child restraint, be sure it is designed to be used in a motor vehicle. If it is, the restraint will have a label saying that it meets federal motor vehicle safety standards.

The restraint manufacturer's instructions that come with the restraint state the weight and height limitations for a particular child restraint. In addition, there are many kinds of restraints available for children with special needs.

⚠ CAUTION:

Newborn infants need complete support, including support for the head and neck. This is necessary because a newborn infant's neck is weak and its head weighs so much compared with the rest of its body. In a crash, an infant in a rear-facing seat settles into the restraint, so the crash forces can be distributed across the strongest part of an infant's body, the back and shoulders. Infants always should be secured in appropriate infant restraints.

⚠ CAUTION:

The body structure of a young child is quite unlike that of an adult or older child, for whom the safety belts are designed. A young child's hip bones are still so small that the vehicle's regular safety belt may not remain low on the hip bones, as it should. Instead, it may settle up around the child's abdomen. In a crash, the belt would apply force on a body area that is unprotected by any bony structure. This alone could cause serious or fatal injuries. Young children always should be secured in appropriate child restraints.

Child Restraint Systems

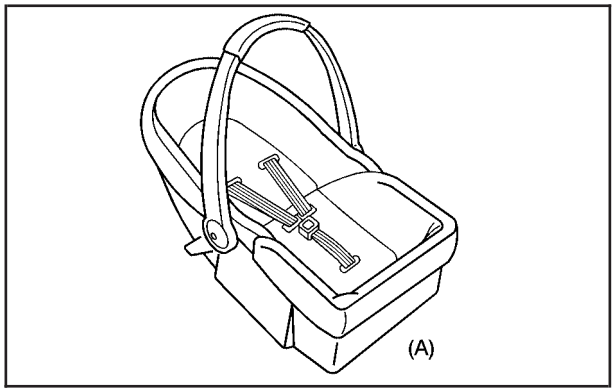

An infant car bed (A), a special bed made for use in a motor vehicle, is an infant restraint system designed to restrain or position a child on a continuous flat surface. Make sure that the infant's head rests toward the center of the vehicle.

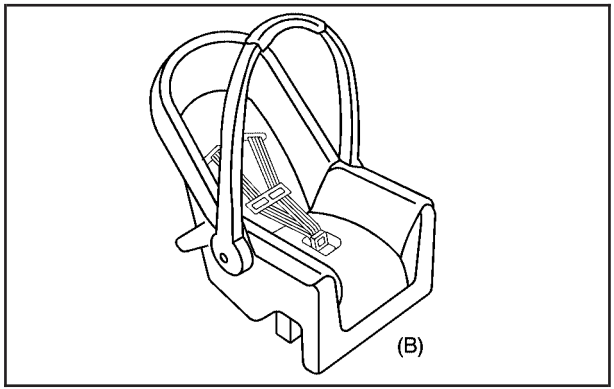

A rear-facing infant seat (B) provides restraint with the seating surface against the back of the infant. The harness system holds the infant in place and, in a crash, acts to keep the infant positioned in the restraint.

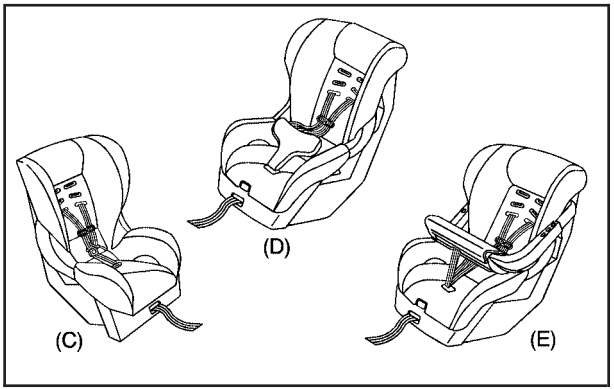

A forward-facing child seat (C-E) provides restraint for the child's body with the harness and also sometimes with surfaces such as T-shaped or shelf-like shields.

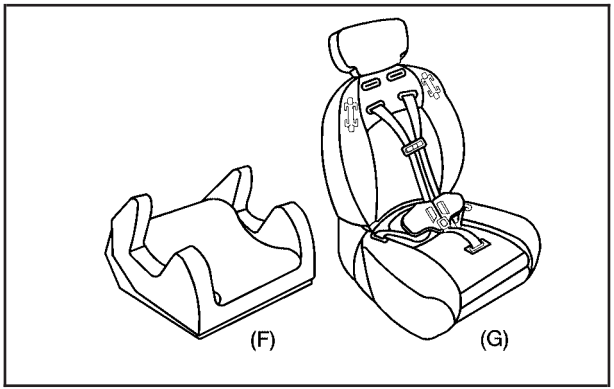

A booster seat (F-G) is a child restraint designed to improve the fit of the vehicle's safety belt system. Some booster seats have a shoulder belt positioner, and some high-back booster seats have a five-point harness. A booster seat can also help a child to see out the window.

Q: How Should I Use a Child Restraint?

A: A child restraint system is any device designed for use in a motor vehicle to restrain, seat, or position children. A built-in child restraint system is a permanent part of the motor vehicle. An add-on child restraint system is a portable one, which is purchased by the vehicle's owner. To help reduce injuries, an add-on child restraint must be secured in the vehicle. With built-in or add-on child restraints, the child has to be secured within the child restraint.

When choosing an add-on child restraint, be sure the child restraint is designed to be used in a vehicle. If it is, it will have a label saying that it meets federal motor vehicle safety standards. Then follow the instructions for the restraint. You may find these instructions on the restraint itself or in a booklet, or both.

Securing an Add-on Child Restraint in the Vehicle

⚠ CAUTION:

A child can be seriously injured or killed in a crash if the child restraint is not properly secured in the vehicle. Make sure the child restraint is properly installed in the vehicle using the vehicle's safety belt or LATCH system, following the instructions that came with that restraint, and also the instructions in this manual.

To help reduce the chance of injury, the child restraint must be secured in the vehicle. Child restraint systems must be secured in vehicle seats by lap belts or the lap belt portion of a lap-shoulder belt, or by the LATCH system. See *Lower Anchors and Tethers for Children (LATCH) on page 70* for more information. A child can be endangered in a crash if the child restraint is not properly secured in the vehicle.

When securing an add-on child restraint, refer to the instructions that come with the restraint which may be on the restraint itself or in a booklet, or both, and to this manual. The child restraint instructions are important, so if they are not available, obtain a replacement copy from the manufacturer.

Keep in mind that an unsecured child restraint can move around in a collision or sudden stop and injure people in the vehicle. Be sure to properly secure any child restraint in your vehicle — even when no child is in it.

Securing the Child Within the Child Restraint

There are several systems for securing the child within the child restraint. One system, the three-point harness, has straps that come down over each of the infant's shoulders and buckle together at the crotch. The five-point harness system has two shoulder straps, two hip straps, and a crotch strap. A shield may take the place of hip straps. A T-shaped shield has shoulder straps that are attached to a flat pad which rests low against the child's body. A shelf- or armrest-type shield has straps that are attached to a wide, shelf-like shield that swings up or to the side.

⚠ CAUTION:

A child can be seriously injured or killed in a crash if the child is not properly secured in the child restraint. Make sure the child is properly secured, following the instructions that came with that restraint.

Because there are different systems, it is important to refer to the instructions that come with the restraint. A child can be endangered in a crash if the child is not properly secured in the child restraint.

Where to Put the Restraint

Accident statistics show that children are safer if they are restrained in the rear rather than the front seat. We recommend that child restraints be secured in a rear seat, including an infant riding in a rear-facing infant seat, a child riding in a forward-facing child seat and an older child riding in a booster seat.

If your vehicle has a rear seat that will accommodate a rear-facing child restraint, a label on your sun visor says, “Never put a rear-facing child seat in the front.” This is because the risk to the rear-facing child is so great, if the airbag deploys.

⚠ CAUTION:

A child in a rear-facing child restraint can be seriously injured or killed if the right front passenger’s airbag inflates. This is because the back of the rear-facing child restraint would be very close to the inflating airbag.

CAUTION: (Continued)

CAUTION: (Continued)

Even though the passenger sensing system is designed to turn off the passenger’s frontal airbag and seat-mounted side impact airbag (if equipped) under certain conditions, no system is fail-safe, and no one can guarantee that an airbag will not deploy under some unusual circumstance, even though it is turned off. We recommend that rear-facing child restraints be secured in the rear seat, even if the airbag is off.

If you need to secure a forward-facing child restraint in the right front seat, always move the front passenger seat as far back as it will go. It is better to secure the child restraint in a rear seat.

If your vehicle does not have a rear seat that will accommodate a rear-facing child restraint, never put a child in a rear-facing child restraint in the right front passenger seat the unless passenger airbag status indicator shows off.

Never put a rear facing child restraint in the right front passenger seat unless the airbag is off. Here is why:

⚠ CAUTION:

A child in a rear-facing child restraint can be seriously injured or killed if the right front passenger's airbag inflates. This is because the back of the rear-facing child restraint would be very close to the inflating airbag. Be sure the airbag is off before using a rear-facing child restraint in the right front seat position.

Even though the passenger sensing system is designed to turn off the passenger's frontal airbag and side impact airbag (if equipped) if the system detects a rear-facing child restraint, no system is fail-safe, and no one can guarantee that an airbag will not deploy under some unusual circumstance, even though it is turned off.

CAUTION: (Continued)

CAUTION: (Continued)

We recommend that rear-facing child restraints be transported in vehicles with a rear seat that will accommodate a rear-facing child restraint, whenever possible.

If you need to secure a forward-facing child restraint in the right front seat, always move the front passenger seat as far back as it will go. It is better to secure the child restraint in a rear seat.

Wherever you install a child restraint, be sure to secure the child restraint properly.

Keep in mind that an unsecured child restraint can move around in a collision or sudden stop and injure people in the vehicle. Be sure to properly secure any child restraint in your vehicle — even when no child is in it.

Lower Anchors and Tethers for Children (LATCH)

The LATCH system holds a child restraint during driving or in a crash. This system is designed to make installation of a child restraint easier. The LATCH system uses anchors in the vehicle and attachments on the child restraint that are made for use with the LATCH system

Make sure that a LATCH-compatible child restraint is properly installed using the anchors, or use the vehicle's safety belts to secure the restraint, following the instructions that came with that restraint, and also the instructions in this manual. When installing a child restraint with a top tether, you must also use either the lower anchors or the safety belts to properly secure the child restraint. A child restraint must never be installed using only the top tether and anchor.

In order to use the LATCH system in your vehicle, you need a child restraint that has LATCH attachments. The child restraint manufacturer will provide you with instructions on how to use the child restraint and its attachments. The following explains how to attach a child restraint with these attachments in your vehicle.

Not all vehicle seating positions or child restraints have lower anchors and attachments or top tether anchors and attachments.

Lower Anchors

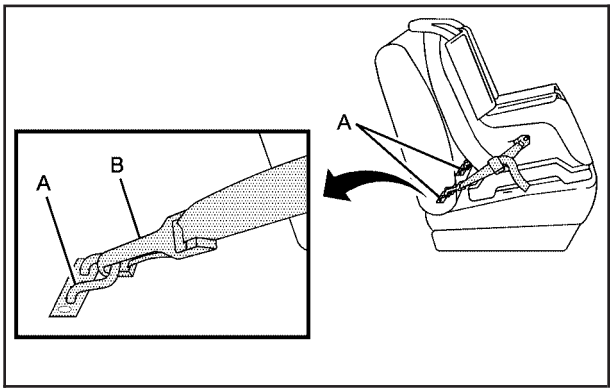

Lower anchors (A) are metal bars built into the vehicle. There are two lower anchors for each LATCH seating position that will accommodate a child restraint with lower attachments (B).

Top Tether Anchor

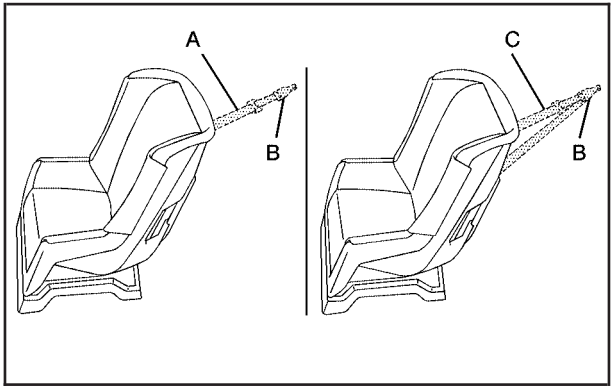

A top tether (A, C) anchors the top of the child restraint to the vehicle. A top tether anchor is built into the vehicle. The top tether attachment (B) on the child restraint connects to the top tether anchor in the vehicle in order to reduce the forward movement and rotation of the child restraint during driving or in a crash.

Your child restraint may have a single tether (A) or a dual tether (C). Either will have a single attachment (B) to secure the top tether to the anchor.

Some child restraints that have a top tether are designed for use with or without the top tether being attached. Others require the top tether always to be attached. In Canada, the law requires that forward-facing child restraints have a top tether, and that the tether be attached. In the United States, some child restraints also have a top tether. Be sure to read and follow the instructions for your child restraint.

If the child restraint does not have a top tether, one can be obtained, in kit form, for many child restraints. Ask the child restraint manufacturer whether or not a kit is available.

Lower Anchor and Top Tether Anchor Locations

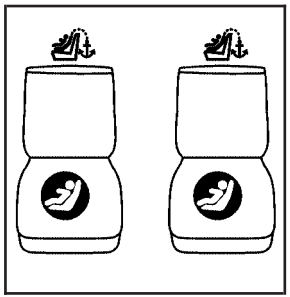

Second Row

(Top Tether Anchor): Seating positions with top tether anchors.

(Lower Anchor): Seating positions with two lower anchors.

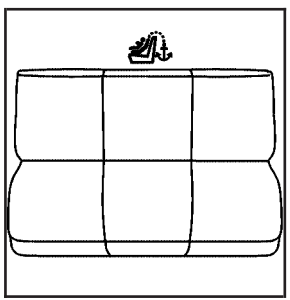

Third Row

(Top Tether Anchor): Seating positions with top tether anchors.

Each seating position with lower anchors has two labels, near the crease between the seatback and the seat cushion, showing where the anchors are located.

For the second row seating positions, the top tether anchors are located on the seatback, near the base of each seat. Be sure to use an anchor located on the same side of the vehicle as the seating position where the child restraint will be placed.

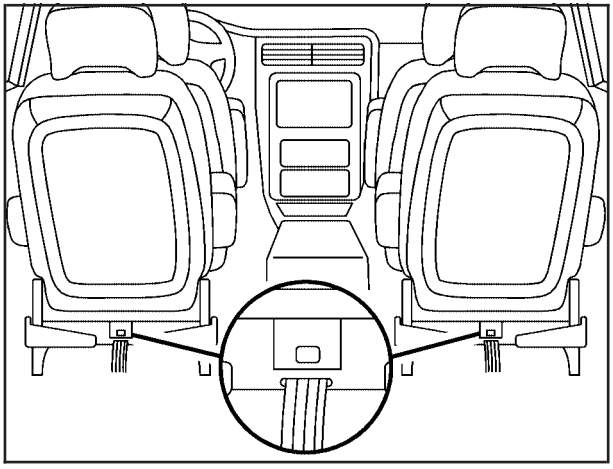

Second Row

For the center third row position, if your vehicle has one, the top tether anchor is located on the seatback, near the center of the third row seating position. This anchor can accommodate only one top tether.

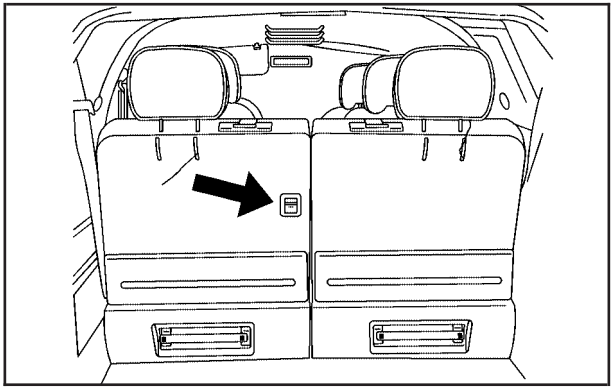

Third Row

Do not secure a child restraint in the right front passenger's position or in the third row outboard positions, if your vehicle has one, if a national or local law requires that the top tether be attached, or if the instructions that come with the child restraint say that the top tether must be attached. There is no place to attach the top tether in this position.

Accident statistics show that children are safer if they are restrained in the rear rather than the front seat. See *Where to Put the Restraint on page 68* for additional information.

Securing a Child Restraint Designed for the LATCH System

⚠ CAUTION:

If a LATCH-type child restraint is not attached to anchors, the restraint will not be able to protect the child correctly. In a crash, the child could be seriously injured or killed. Make sure that a LATCH-type child restraint is properly installed using the anchors, or use the vehicle's safety belts to secure the restraint, following the instructions that came with that restraint, and also the instructions in this manual.

⚠ CAUTION:

Each top tether anchor and lower anchor in the vehicle is designed to hold only one child restraint. Attaching more than one child restraint to a single anchor could cause the anchor or attachment to come loose or even break during a crash. A child or others could be injured if this happens. To help prevent injury to people and damage to your vehicle, attach only one child restraint per anchor.

⚠ CAUTION:

Children can be seriously injured or strangled if a shoulder belt is wrapped around their neck and the safety belt continues to tighten. Secure any unused safety belts behind the child restraint so children cannot reach them. Pull the shoulder belt all the way out of the retractor to set the lock, if your vehicle has one, after the child restraint has been installed. Be sure to follow the instructions of the child restraint manufacturer.

Notice: **Contact between the child restraint or the LATCH attachment parts and the vehicle's safety belt assembly may cause damage to these parts. Make sure when securing unused safety belts behind the child restraint that there is no contact between the child restraint or the LATCH attachment parts and the vehicle's safety belt assembly.**

Folding an empty rear seat with the safety belts secured may cause damage to the safety belt or the seat. When removing the child restraint, always remember to return the safety belts to their normal, stowed position before folding the rear seat.

1. Attach and tighten the lower attachments to the lower anchors. If the child restraint does not have lower attachments or the desired seating position does not have lower anchors, secure the child restraint with the top tether and the safety belts. Refer to your child restraint manufacturer instructions and the instructions in this manual.
   1.1. Find the lower anchors for the desired seating position.
   1.2. Put the child restraint on the seat.
   1.3. Attach and tighten the lower attachments on the child restraint to the lower anchors.

2. If the child restraint manufacturer recommends that the top tether be attached, attach and tighten the top tether to the top tether anchor, if equipped. Refer to the child restraint instructions and the following steps:
   2.1. Find the top tether anchor.
   2.2. Route, attach, and tighten the top tether according to your child restraint instructions and the following instructions:

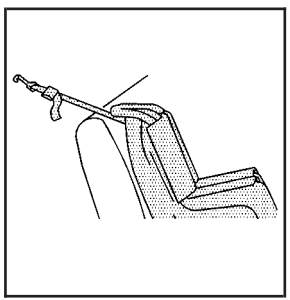

If the position you are using does not have a head restraint and you are using a single tether, route the tether over the seatback.

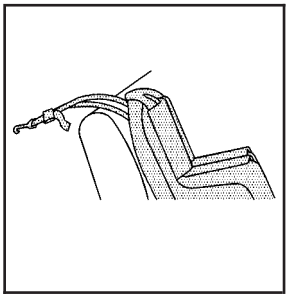

If the position you are using does not have a head restraint and you are using a dual tether, route the tether over the seatback.

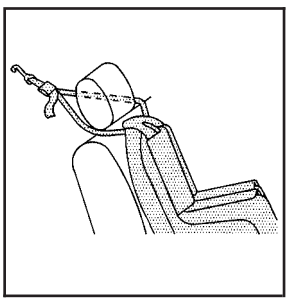

If the position you are using has an adjustable head restraint and you are using a dual tether, route the tether around the head restraint.

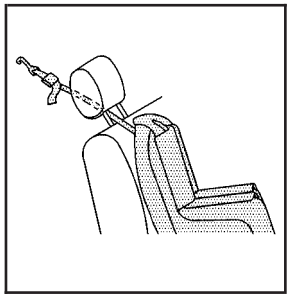

If the position you are using has an adjustable head restraint and you are using a single tether, raise the head restraint and route the tether under the head restraint and in between the head restraint posts.

3. Push and pull the child restraint in different directions to be sure it is secure.

Securing a Child Restraint in a Rear Seat Position

If your child restraint has the LATCH system, see *Lower Anchors and Tethers for Children (LATCH) on page 70*.

For vehicles with a third row, there are no top tether anchors in the outboard seating positions. Do not secure a child seat in these positions if a national or local law requires that the top tether be anchored, or if the instructions that come with the child restraint say that the top strap must be anchored.

If your child restraint does not have the LATCH system, you will be using the lap-shoulder belt to secure the child restraint. Be sure to follow the instructions that came with the child restraint. Secure the child in the child restraint when and as the instructions say.

1. Put the child restraint on the seat.
2. Pick up the latch plate, and run the lap and shoulder portions of the vehicle's safety belt through or around the restraint. The child restraint instructions will show you how.

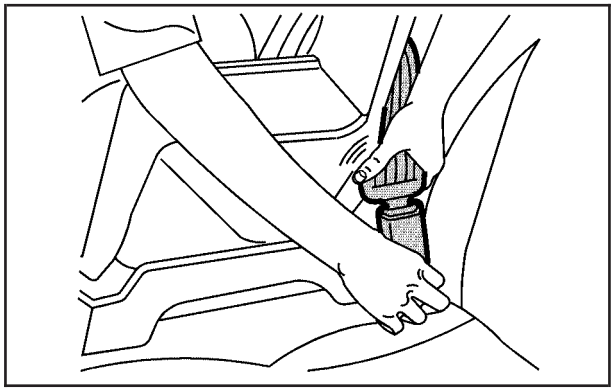

3. Buckle the belt. Make sure the release button is positioned so you would be able to unbuckle the safety belt quickly if you ever had to.

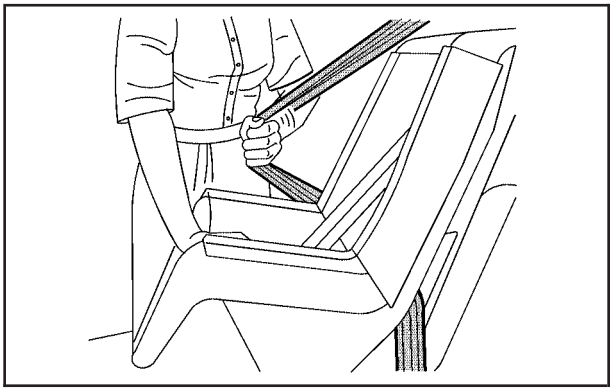

4. Pull the rest of the shoulder belt all the way out of the retractor to set the lock.

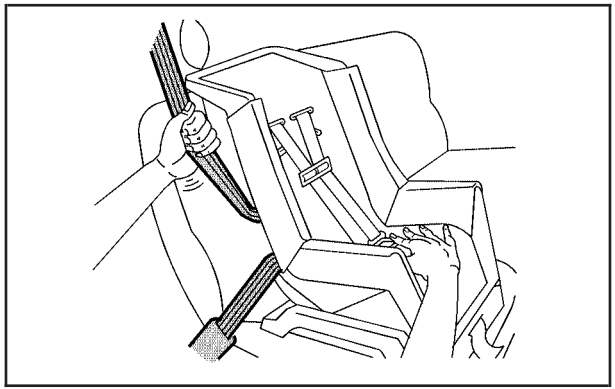

5. To tighten the belt, push down on the child restraint, pull the shoulder portion of the belt to tighten the lap portion of the belt and feed the shoulder belt back into the retractor. If you are using a forward-facing child restraint, you may find it helpful to use your knee to push down on the child restraint as you tighten the belt.
6. If your child restraint has a top tether, and the position that you are using has a top tether anchor, attach and tighten the top tether to the top tether anchor. Refer to the instructions that came with the child restraint and to *Lower Anchors and Tethers for Children (LATCH) on page 70*.
7. Push and pull the child restraint in different directions to be sure it is secure.

To remove the child restraint, if the top tether is attached to the top tether anchor, disconnect it. Unbuckle the vehicle's safety belt and let it go back all the way. The safety belt will move freely again and be ready to work for an adult or larger child passenger.

Securing a Child Restraint in the Right Front Seat Position

Your vehicle has airbags. A rear seat is a safer place to secure a forward-facing child restraint. See *Where to Put the Restraint on page 68*.

In addition, your vehicle has a passenger sensing system. The passenger sensing system is designed to turn off the right front passenger's airbag and side impact airbag (if equipped) when an infant in a rear-facing infant seat or a small child in a forward-facing child restraint or booster seat is detected. See *Passenger Sensing System on page 106* and *Passenger Airbag Status Indicator on page 235* for more information on this including important safety information.

If your vehicle has a rear seat, a label on your sun visor says, "Never put a rear-facing child seat in the front." This is because the risk to the rear-facing child is so great, if the airbag deploys.

⚠ CAUTION:

A child in a rear-facing child restraint can be seriously injured or killed if the right front passenger's airbag inflates. This is because the back of the rear-facing child restraint would be very close to the inflating airbag.

Even though the passenger sensing system is designed to turn off the passenger's frontal airbag and seat-mounted side impact airbag (if equipped) under certain conditions, no system is fail-safe, and no one can guarantee that an airbag will not deploy under some unusual circumstance, even though it is turned off. General Motors recommends that rear-facing child restraints be secured in the rear seat, even if the airbag is off.

If your vehicle does not have a rear seat that will accommodate a rear-facing child restraint, never put a child in a rear-facing child restraint in the right front passenger seat the unless passenger airbag status indicator shows off. Never put a rear facing child restraint in the right front passenger seat unless the airbag is off. Here is why:

⚠ CAUTION:

A child in a rear-facing child restraint can be seriously injured or killed if the right front passenger's airbag inflates. This is because the back of the rear facing child restraint would be very close to the inflating airbag. Be sure the airbag is off before using a rear-facing child restraint in the right front seat position.

CAUTION: (Continued)

CAUTION: (Continued)

Even though the passenger sensing system is designed to turn off the passenger's frontal airbag and side impact airbag (if equipped) if the system detects a rear-facing child restraint, no system is fail-safe, and no one can guarantee that an airbag will not deploy under some unusual circumstance, even though it is turned off. We recommend that rear-facing child restraints be transported in vehicles with a rear seat that will accommodate a rear-facing child restraint, whenever possible.

If you need to secure a forward-facing child restraint in the right front seat position, move the seat as far back as it will go before securing the forward-facing child restraint. See *Manual Seats on page 9* or *Power Seats on page 10*.

If your child restraint has the LATCH system, see *Lower Anchors and Tethers for Children (LATCH) on page 70*.

There is no top tether anchor at the right front seating position. Do not secure a child seat in this position if a national or local law requires that the top tether be anchored or if the instructions that come with the child restraint say that the top tether must be anchored. See *Lower Anchors and Tethers for Children (LATCH) on page 70* if your child restraint has a top tether.

You will be using the lap-shoulder belt to secure the child restraint in this position. Be sure to follow the instructions that came with the child restraint. Secure the child in the child restraint when and as the instructions say.

1. Your vehicle has a right front passenger's airbags. See *Passenger Sensing System on page 106*. We recommend that rear-facing child restraints be secured in a rear seat, even if the airbag or airbags are off. If your child restraint is forward-facing, move the seat as far back as it will go before securing the child restraint in this seat. See *Manual Seats on page 9* or *Power Seats on page 10*.

   When the passenger sensing system has turned off the right front passenger's airbag or airbags, the off indicator in the passenger airbag status indicator should light and stay lit when you turn the ignition to RUN or START. See *Passenger Airbag Status Indicator on page 235*.

2. Put the child restraint on the seat.

3. Pick up the latch plate, and run the lap and shoulder portions of the vehicle's safety belt through or around the restraint. The child restraint instructions will show you how.

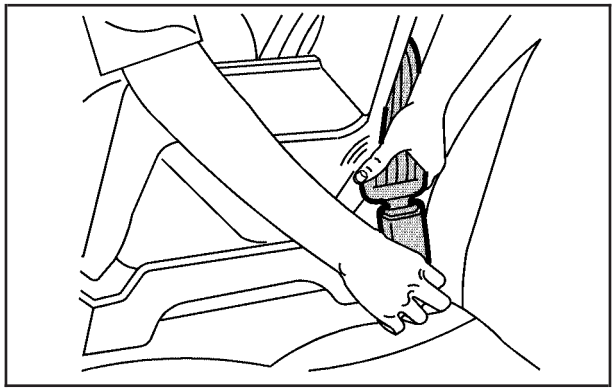

4. Buckle the belt. Make sure the release button is positioned so you would be able to unbuckle the safety belt quickly if you ever had to.

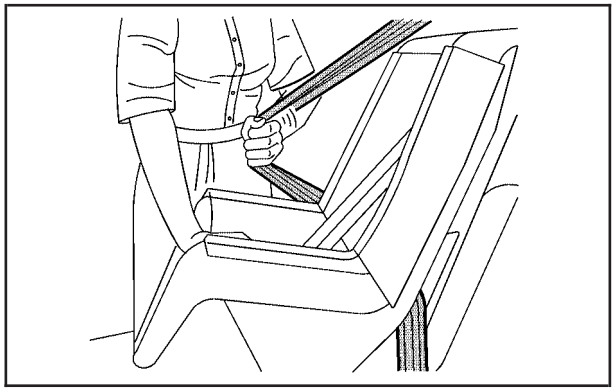

5. Pull the rest of the shoulder belt all the way out of the retractor to set the lock.

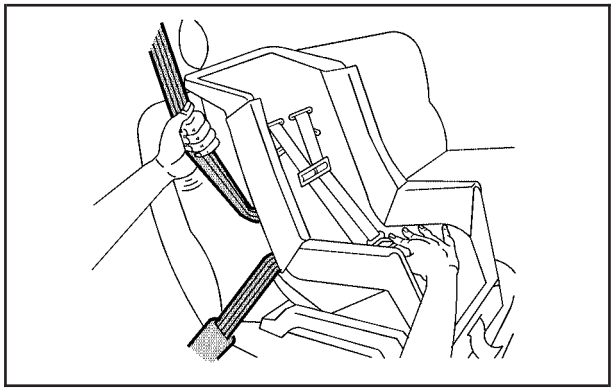

6. To tighten the belt, push down on the child restraint, pull the shoulder portion of the belt to tighten the lap portion of the belt and feed the shoulder belt back into the retractor. If you are using a forward-facing child restraint, you may find it helpful to use your knee to push down on the child restraint as you tighten the belt. You should not be able to pull more of the belt from the retractor once the lock has been set.
7. Push and pull the child restraint in different directions to be sure it is secure.
8. If the airbag or airbags are off, the off indicator on the instrument panel will be lit and stay lit when the key is turned to RUN or START.

If a child restraint has been installed and the on indicator is lit, turn the vehicle off. Remove the child restraint from the vehicle and reinstall the child restraint.

If, after reinstalling the child restraint and restarting the vehicle, the on indicator is still lit, check to make sure that the vehicle's seatback is not pressing the child restraint into the seat cushion. If this happens, slightly recline the vehicle's seatback and adjust the seat cushion if possible. Also make sure the child restraint is not trapped under the vehicle head restraint. If this happens, adjust the head restraint.

If the on indicator is still lit, secure the child in the child restraint in a rear seat position in the vehicle if one is available and check with your dealer.

To remove the child restraint, just unbuckle the vehicle's safety belt and let it go back all the way. The safety belt will move freely again and be ready to work for an adult or larger child passenger.

Built-In Child Restraint

WARNING! DEATH or SERIOUS INJURY can occur:

- Follow all instruction on the child restraint and in the vehicle's owner's manual.

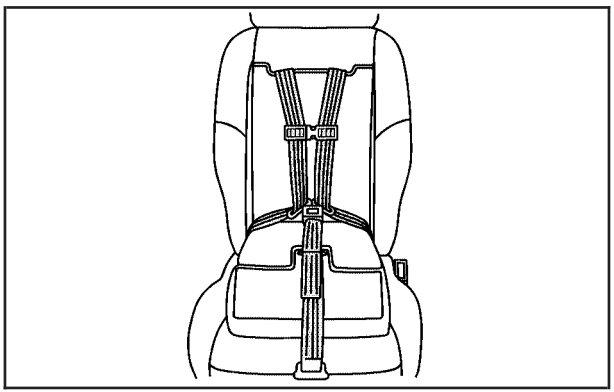

If your vehicle has this feature, the built-in child restraint is located in the passenger-side position in the second row.

This child restraint system conforms to all applicable Federal Motor Vehicle Safety Standards.

Use only with children who weigh between 22 and 40 lbs (10 and 18 kg) and whose height is between 33.5 and 40 in (850 and 1 016 mm). Use only with children whose shoulders are below the shoulder belt slots for the harness system and who are capable of sitting upright alone.

The child should also be at least one year old. It is important to use a rear-facing infant restraint until the child is at least one year old. A rear-facing restraint gives the infant's head, neck and body the support they would need in a crash. See *Older Children on page 56* or *Infants and Young Children on page 59*.

A child whose weight is over 40 lbs (18 kg), whose height is over 40 in (1 016 mm) or whose shoulders are above the shoulder belt slots for the harness system, should be restrained in an add-on booster seat appropriate for the child's size. See *Child Restraint Systems on page 63*. Once the booster seat is outgrown, the child should sit on the vehicle's regular seat and use the vehicle's safety belts.

⚠ CAUTION:

Using the vehicle's built-in child restraint as a booster seat for a larger child could cause injury to the child in a sudden stop or crash. A child whose weight is over 40 pounds, whose height is over 40 inches or whose shoulders are above the shoulder belt slots for the harness system should use a restraint system that is appropriate for their size, either an add-on booster seat or the vehicle's safety belt. See "Child Restraints" or "Older Children" in the Index.

Securing a Child in the Built-In Child Restraint

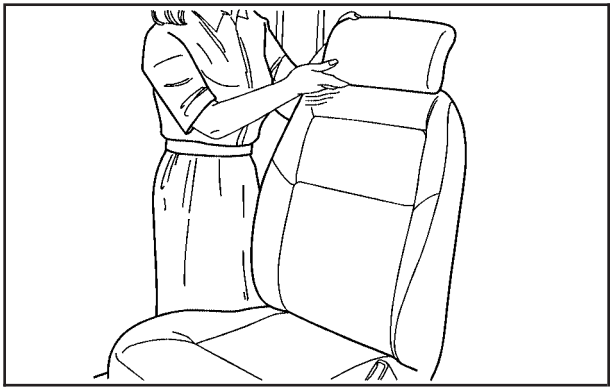

1. Raise the head restraint until the lower edge of the head restraint is even with the top of the seatback.

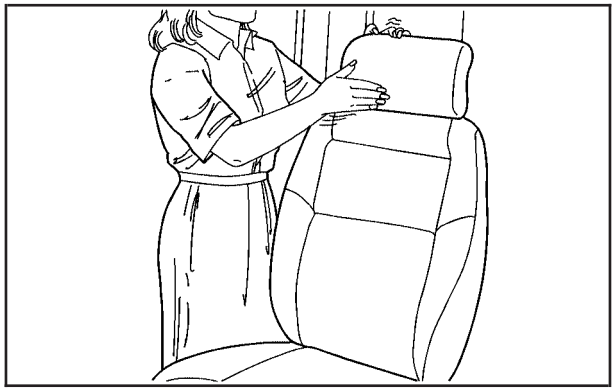

2. Rotate the head restraint rearward until it touches the top of the seatback. Make sure there is no gap between the lower edge of the head restraint and the top of the seatback.

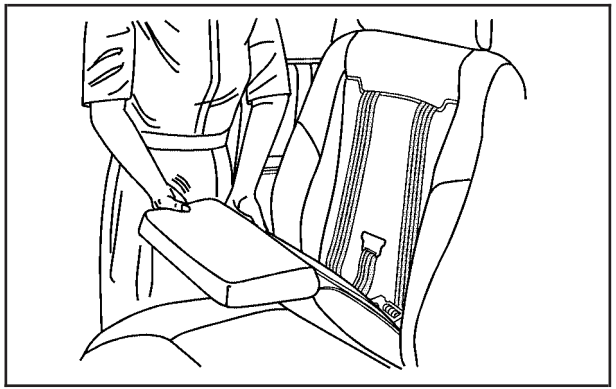

3. Lower the child restraint cushion.

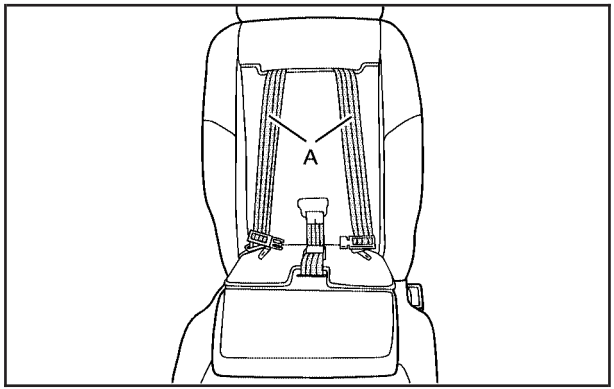

You will be using the child restraint's harness (A) to secure your child. Do not use the vehicle's safety belts.

⚠ CAUTION:

Using the vehicle's regular safety belts on a child seated on the built-in child restraint cushion can cause serious injury to the child in a sudden stop or crash. Secure the child using the built-in child restraint's harness.

WARNING: FAILURE TO FOLLOW THE MANUFACTURER'S INSTRUCTIONS ON THE USE OF THIS CHILD RESTRAINT SYSTEM CAN RESULT IN YOUR CHILD STRIKING THE VEHICLE'S INTERIOR DURING A SUDDEN STOP OR CRASH.

SNUGLY ADJUST THE BELTS PROVIDED WITH THIS CHILD RESTRAINT AROUND YOUR CHILD.

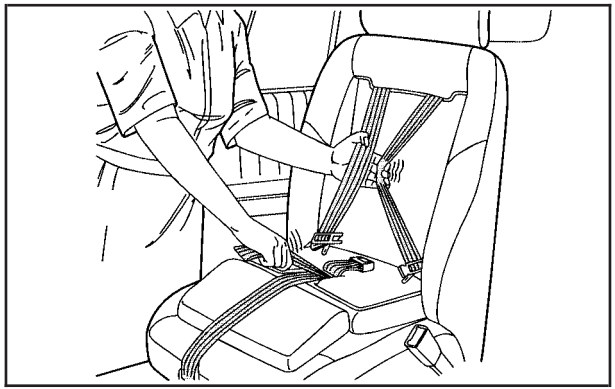

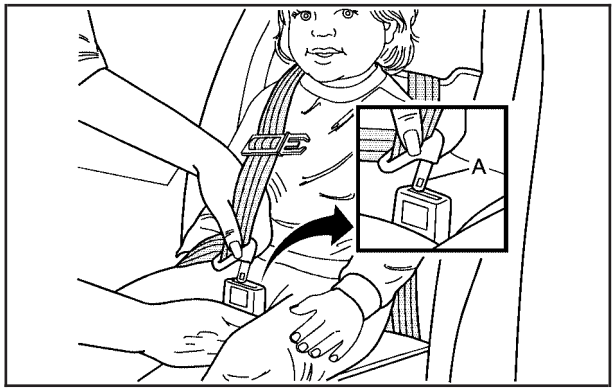

4. Before placing the child in the child restraint, add slack to the shoulder harness. Pull the black shoulder harness release strap firmly. At the same time pull both shoulder harness straps through the slots in the seatback as shown.
5. Place the child on the child restraint cushion.
6. Select only one side of the harness. Place the harness over the child's shoulder.
7. Push the latch plate (A) into the buckle until it clicks.

   Be sure the buckle is free of any foreign objects that may prevent you from securing the latch plates. If you can not secure a latch plate, see your dealer for service before using the child restraint.
8. Place the other side of the harness over the child's shoulder.

9. Push the latch plate into the buckle until it clicks.

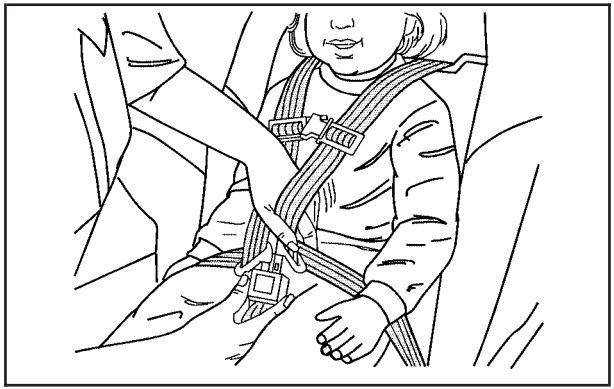

10. Pull up on the latch plates to make sure they are secure.

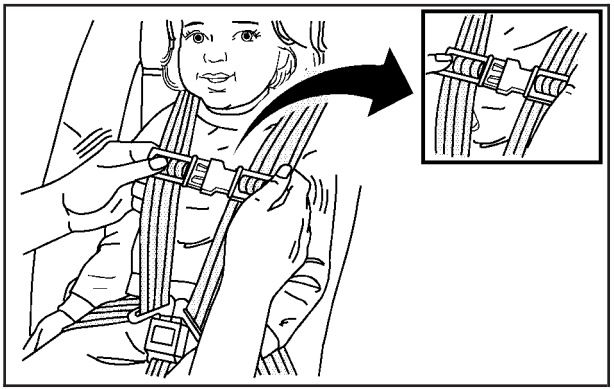

11. Now fasten the left and right halves of the shoulder harness clip together. The clip can be easily pulled apart and is designed to pull apart during a collision.

⚠ CAUTION:

A built-in child restraint harness that is not properly adjusted can cause injury to the child in a sudden stop or collision. A harness that is loose, twisted, worn improperly or improperly fastened will not be able to restrain the child's upper body. Make sure the harness is adjusted correctly. Fastening the clip is not a substitute for adjusting the harness so that it is snug.

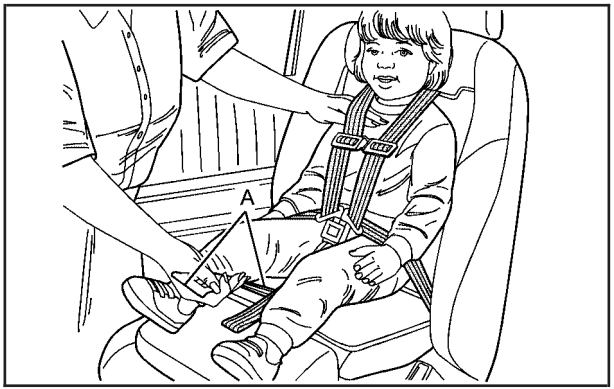

12. Pull the shoulder harness adjustment strap (A) firmly until the harness is snugly adjusted around the child. You should not be able to put more than two fingers between the harness and the child's chest. Make sure the harness and buckle strap are not twisted.

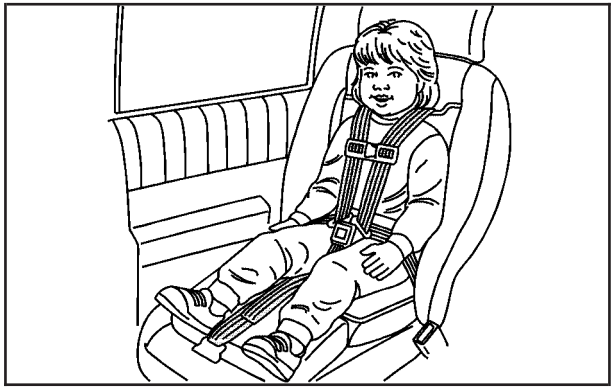

13. Adjust the position of the harness on the child's shoulder by moving the clip along the harness until it is level with the child's armpits. On each side of the harness, the shoulder part should be centered on the child's shoulder. The harness should be away from the child's face and neck, but not falling from the child's shoulders.

    If you expect that the child will sleep while riding, you can recline the seatback. See *Bucket Seats on page 13*.

Removing the Child from the Built-In Child Restraint

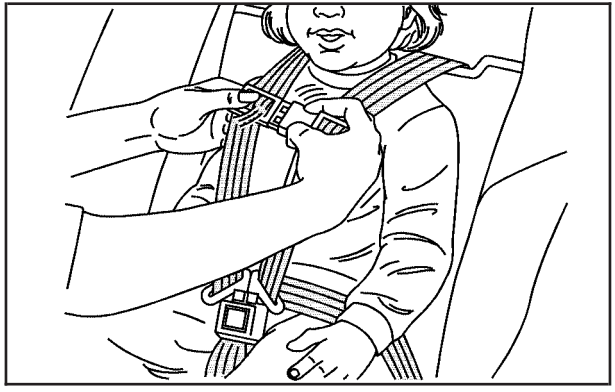

1. Unfasten the shoulder harness clip.

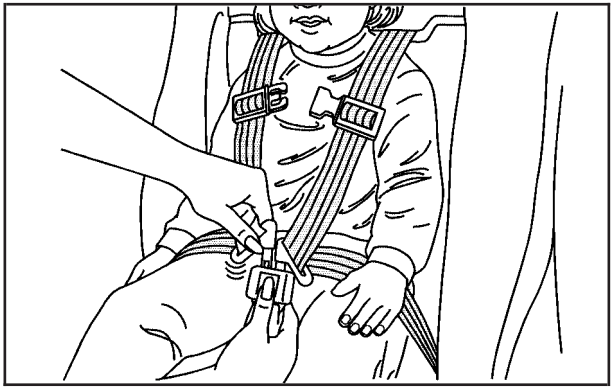

2. Unlatch the harness by pushing the button on the buckle.
3. Move one side of the harness off the child's shoulder.
4. Move the other side of the harness off the child's shoulder.
5. Remove the child from the child restraint cushion.

Storing the Built-In Child Restraint

Always properly store the built-in child restraint before using the vehicle's lap-shoulder belt.

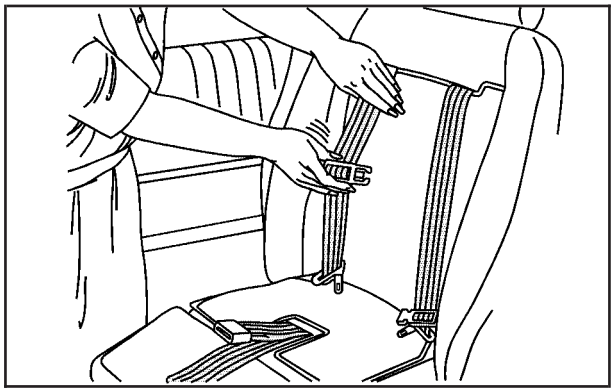

1. Move both latch plates and both sides of the shoulder harness clip to the bottom of the harness straps.

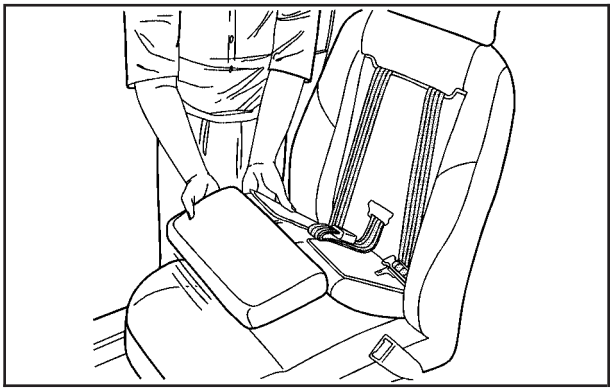

2. Fold the child restraint cushion and leg rest up into the seatback.
3. Press the child restraint cushion firmly into the seatback.

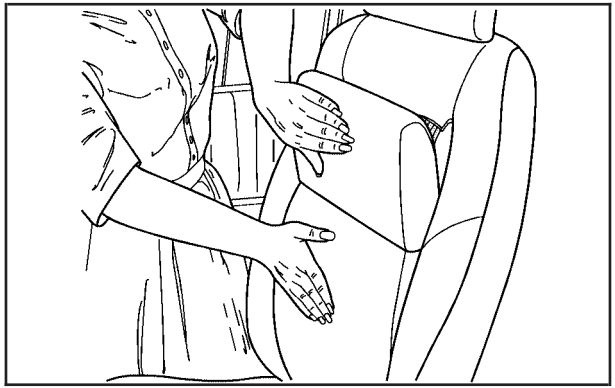

4. Then press the leg rest firmly into the seatback, and secure it by pressing the upper corners against the fastener strips on the seatback.

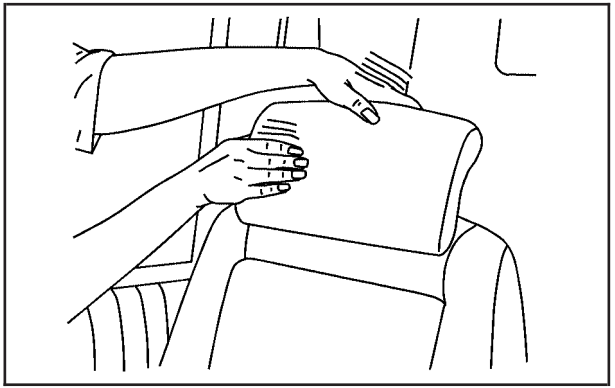

5. Rotate the head restraint forward and push it all the way down.

Just like the other restraint systems in your vehicle, your built-in child restraint needs to be periodically checked and may need to have parts replaced after a crash. See *Checking the Restraint Systems on page 114* and *Replacing Restraint System Parts After a Crash on page 115*.

Airbag System

Your vehicle has a frontal airbag for the driver and a frontal airbag for the right front passenger. Your vehicle may also have side impact airbags. Side impact airbags are available for the driver, the right front passenger and the second row captain's chairs (if equipped).

If your vehicle has a side impact airbag, the word AIRBAG will appear on the airbag covering on the side of the seatback closest to the door.

Frontal airbags are designed to help reduce the risk of injury from the force of an inflating frontal airbag. But these airbags must inflate very quickly to do their job and comply with federal regulations.

Here are the most important things to know about the airbag system:

⚠ CAUTION:

You can be severely injured or killed in a crash if you are not wearing your safety belt — even if you have airbags. Wearing your safety belt during a crash helps reduce your chance of hitting things inside the vehicle or being ejected from it. Airbags are "supplemental restraints" to the safety belts. All airbags are designed to work with safety belts but do not replace them.

CAUTION: (Continued)

CAUTION: (Continued)

Frontal airbags for the driver and right front passenger are designed to deploy in moderate to severe frontal and near frontal crashes. They are not designed to inflate in rollover, rear crashes, or in many side crashes. And, for some unrestrained occupants, frontal airbags may provide less protection in frontal crashes than more forceful airbags have provided in the past.

Side impact airbags are designed to inflate in moderate to severe crashes where something hits the side of your vehicle. They are not designed to inflate in frontal, in rollover, or in rear crashes.

Everyone in your vehicle should wear a safety belt properly — whether or not there is an airbag for that person.

⚠ CAUTION:

Both frontal and side impact airbags inflate with great force, faster than the blink of an eye. If you are too close to an inflating airbag, as you would be if you were leaning forward, it could seriously injure you. Safety belts help keep you in position for airbag inflation before and during a crash. Always wear your safety belt even with frontal airbags. The driver should sit as far back as possible while still maintaining control of the vehicle. Occupants should not lean on or sleep against the door.

⚠ CAUTION:

Anyone who is up against, or very close to, any airbag when it inflates can be seriously injured or killed. Airbags plus lap-shoulder belts offer the best protection for adults, but not for young children and infants. Neither the vehicle's safety belt system nor its airbag system is designed for them. Young children and infants need the protection that a child restraint system can provide. Always secure children properly in your vehicle. To read how, see *Older Children on page 56* or *Infants and Young Children on page 59*.

There is an airbag readiness light on the instrument panel cluster, which shows the airbag symbol.

The system checks the airbag electrical system for malfunctions. The light tells you if there is an electrical problem. See *Airbag Readiness Light on page 234* for more information.

Where Are the Airbags?

The driver's frontal airbag is in the middle of the steering wheel.

The right front passenger's frontal airbag is in the instrument panel on the passenger's side.

If your vehicle has a side impact airbag for the driver, it is in the side of the driver's seatback closest to the door.

If your vehicle has a side impact airbag for the right front passenger and/or the second row captain's chairs (if equipped), it is in the side of the seatback closest to the door.

⚠ CAUTION:

If something is between an occupant and an airbag, the airbag might not inflate properly or it might force the object into that person causing severe injury or even death. The path of an inflating airbag must be kept clear. Do not put anything between an occupant and an airbag, and do not attach or put anything on the steering wheel hub or on or near any other airbag covering. Do not let seat covers block the inflation path of a side impact airbag.

When Should an Airbag Inflate?

The driver's and right front passenger's frontal airbags are designed to inflate in moderate to severe frontal or near-frontal crashes. But they are designed to inflate only if the impact exceeds a predetermined deployment threshold. Deployment thresholds take into account a variety of desired deployment and non-deployment events and are used to predict how severe a crash is likely to be in time for the airbags to inflate and help restrain the occupants. Whether your frontal airbags will or should deploy is not based on how fast your vehicle is traveling. It depends largely on what you hit, the direction of the impact and how quickly your vehicle slows down.

In addition, your vehicle has “dual stage” frontal airbags, which adjust the restraint according to crash severity. For moderate frontal impacts, these airbags inflate at a level less than full deployment. Your vehicle has electronic frontal sensors, which help the sensing system distinguish between a moderate frontal impact and a more severe frontal impact. For more severe frontal impacts, full deployment occurs. If the front of your vehicle goes straight into a wall that does not move or deform, the threshold level for the reduced deployment is about 12 to 18 mph (19 to 29 km/h), and the threshold level for a full deployment is about 18 to 25 mph (29 to 40.2 km/h). The threshold level can vary, however, with specific vehicle design, so that it can be somewhat above or below this range.

Frontal airbags may inflate at different crash speeds. For example:

- If the vehicle hits a stationary object, the airbags could inflate at a different crash speed than if the vehicle hits a moving object.
- If the vehicle hits an object that deforms, the airbags could inflate at a different crash speed than if the vehicle hits an object that does not deform.
- If the vehicle hits a narrow object (like a pole), the airbags could inflate at a different crash speed than if the vehicle hits a wide object (like a wall).
- If the vehicle goes into an object at an angle, the airbags could inflate at a different crash speed than if the vehicle goes straight into the object.

The frontal airbags (driver and right front passenger) are not intended to inflate during vehicle rollovers, rear impacts, or in many side impacts.

Your vehicle may or may not have side impact airbags. See *Airbag System on page 96*. Side impact airbags are intended to inflate in moderate to severe side crashes. A side impact airbag will inflate if the crash severity is above the system's designed "threshold level." The threshold level can vary with specific vehicle design. Side impact airbags are not intended to inflate in frontal or near-frontal impacts, rollovers or rear impacts. A side impact airbag is intended to deploy on the side of the vehicle that is struck.

In any particular crash, no one can say whether an airbag should have inflated simply because of the damage to a vehicle or because of what the repair costs were. For frontal airbags, inflation is determined by what the vehicle hits, the angle of the impact, and how quickly the vehicle slows down. For side impact airbags, inflation is determined by the location and severity of the impact.

What Makes an Airbag Inflate?

In an impact of sufficient severity, the airbag sensing system detects that the vehicle is in a crash. The sensing system triggers a release of gas from the inflator, which inflates the airbag. The inflator, the airbag and related hardware are all part of the airbag modules. Frontal airbag modules are located inside the steering wheel and instrument panel. For seating positions with side impact airbags, there are also airbag modules in the side of the seatbacks closest to the door.

How Does an Airbag Restrain?

In moderate to severe frontal or near frontal collisions, even belted occupants can contact the steering wheel or the instrument panel. In moderate to severe side collisions, even belted occupants can contact the inside of the vehicle. Airbags supplement the protection provided by safety belts. Airbags distribute the force of the impact more evenly over the occupant's upper body, stopping the occupant more gradually. But the frontal airbags would not help you in many types of collisions, including rollovers, rear impacts, and many side impacts, primarily because an occupant's motion is not toward the airbag. Side impact airbags would not help you in many types of collisions, including many frontal or near frontal collisions, rollovers, and rear impacts.

Airbags should never be regarded as anything more than a supplement to safety belts, and then only in moderate to severe frontal or near-frontal collisions for the driver's and right front passenger's frontal airbags, and only in moderate to severe side collisions for vehicles with side impact airbags.

What Will You See After an Airbag Inflates?

After an airbag inflates, it quickly deflates, so quickly that some people may not even realize the airbag inflated. Some components of the airbag module — the steering wheel hub for the driver's frontal airbag, the instrument panel for the right front passenger's frontal airbag, and for seating positions with side impact airbags, the side of the seatback closest to the door — may be hot for a short time. The parts of the airbag that come into contact with you may be warm, but not too hot to touch. There may be some smoke and dust coming from the vents in the deflated airbags. Airbag inflation does not prevent the driver from seeing out of the windshield or being able to steer the vehicle, nor does it prevent people from leaving the vehicle.

⚠ CAUTION:

When an airbag inflates, there may be dust in the air. This dust could cause breathing problems for people with a history of asthma or other breathing trouble. To avoid this, everyone in the vehicle should get out as soon as it is safe to do so. If you have breathing problems but cannot get out of the vehicle after an airbag inflates, then get fresh air by opening a window or a door. If you experience breathing problems following an airbag deployment, you should seek medical attention.

Your vehicle has a feature that may automatically unlock the doors, turn the interior lamps on when the airbags inflate and turn on the hazard warning flashers. You can lock the doors, turn the interior lamps off, and turn the hazard warning flashers on by using the controls for those features.

In many crashes severe enough to inflate an airbag, windshields are broken by vehicle deformation. Additional windshield breakage may also occur from the right front passenger airbag.

- Airbags are designed to inflate only once. After they inflate, you will need some new parts for your airbag system. If you do not get them, the airbag system will not be there to help protect you in another crash. A new system will include airbag modules and possibly other parts. The service manual for your vehicle covers the need to replace other parts.
- Your vehicle has a crash sensing and diagnostic module which records information after a crash. See *Vehicle Data Collection and Event Data Recorders on page 567*.
- Let only qualified technicians work on your airbag system. Improper service can mean that an airbag system will not work properly. See your dealer for service.

Passenger Sensing System

Your vehicle has a passenger sensing system. The passenger airbag status indicator on the instrument panel will be visible when you turn your ignition key to RUN or START.

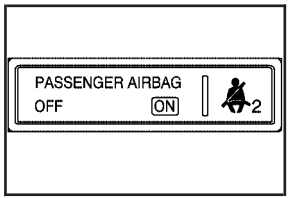

United States

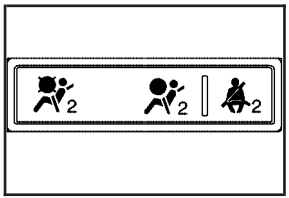

Canada

The words ON and OFF or the symbol for on and off, will be visible during the system check. When the system check is complete, either the word ON or the word OFF, or the symbol for on or the symbol for off will be visible. See *Passenger Airbag Status Indicator on page 235*.

The passenger sensing system will turn off the right front passenger's frontal airbag and side impact airbag (if equipped) under certain conditions. The driver's airbags or the second row side impact airbags (if equipped) are not part of the passenger sensing system.

The passenger sensing system works with sensors that are part of the right front passenger's seat and safety belt. The sensors are designed to detect the presence of a properly-seated occupant and determine if the passenger's airbag or airbags should be enabled (may inflate) or not.

Accident statistics show that children are safer if they are restrained in the rear rather than the front seat. We recommend that child restraints be secured in a rear seat, including an infant riding in a rear-facing infant seat, a child riding in a forward-facing child seat and an older child riding in a booster seat.

If your vehicle has a rear seat that will accommodate a rear-facing child restraint, never put a rear-facing child seat in the front. This is because the risk to the rear-facing child is so great, if the airbag deploys.

⚠ CAUTION:

A child in a rear-facing child restraint can be seriously injured or killed if the right front passenger's airbag inflates. This is because the back of the rear-facing child restraint would be very close to the inflating airbag.

Even though the passenger sensing system is designed to turn off the passenger's frontal airbag and seat-mounted side impact airbag (if equipped) under certain conditions,

CAUTION: (Continued)

CAUTION: (Continued)

no system is fail-safe, and no one can guarantee that an airbag will not deploy under some unusual circumstance, even though it is turned off. We recommend that rear-facing child restraints be secured in the rear seat, even if the airbag is off.

If you need to secure a forward-facing child restraint in the right front seat, always move the front passenger seat as far back as it will go. It is better to secure the child restraint in a rear seat.

If your vehicle does not have a rear seat that will accommodate a rear-facing child restraint, never put a child in a rear-facing child restraint in the right front passenger seat unless the passenger airbag status indicator shows off. Here is why:

⚠ CAUTION:

A child in a rear-facing child restraint can be seriously injured or killed if the right front passenger's airbag inflates. This is because the back of the rear-facing child restraint would be very close to the inflating airbag. Be sure the airbag is off before using a rear-facing child restraint in the right front seat position.

CAUTION: (Continued)

CAUTION: (Continued)

Even though the passenger sensing system is designed to turn off the passenger's frontal airbag and side impact airbag (if equipped) if the system detects a rear-facing child restraint, no system is fail-safe, and no one can guarantee that an airbag will not deploy under some unusual circumstance, even though it is turned off. We recommend that rear-facing child restraints be transported in vehicles with a rear seat that will accommodate a rear-facing child restraint, whenever possible.

If you need to secure a forward-facing child restraint in the right front seat, always move the front passenger seat as far back as it will go. It is better to secure the child restraint in a rear seat.

The passenger sensing system is designed to turn off the right front passenger's airbag and side impact airbag (if equipped) if:

- The right front passenger seat is unoccupied.
- The system determines that an infant is present in a rear-facing infant seat.
- The system determines that a small child is present in a forward-facing child restraint.
- The system determines that a small child is present in a booster seat.
- A right front passenger takes his/her weight off of the seat for a period of time.
- The right front passenger seat is occupied by a smaller person, such as a child who has outgrown child restraints.
- Or, if there is a critical problem with the airbag system or the passenger sensing system.

When the passenger sensing system has turned off the right front passenger's airbag or airbags, the off indicator will light and stay lit to remind you that the airbag or airbags are off.

If a child restraint has been installed and the on indicator is lit, turn the vehicle off. Remove the child restraint from the vehicle and reinstall the child restraint following the child restraint manufacturer's directions and refer to *Securing a Child Restraint in the Right Front Seat Position on page 80*.

If, after reinstalling the child restraint and restarting the vehicle, the on indicator is still lit, check to make sure that the vehicle's seatback is not pressing the child restraint into the seat cushion. If this happens, slightly recline the vehicle's seatback and adjust the seat cushion if possible. Also make sure the child restraint is not trapped under the vehicle head restraint. If this happens, adjust the head restraint.

If the on indicator is still lit, secure the child in the child restraint in a rear seat position in the vehicle if one is available and check with your dealer.

The passenger sensing system is designed to enable (may inflate) the right front passenger's airbag or airbags anytime the system senses that a person of adult size is sitting properly in the right front passenger's seat. When the passenger sensing system has allowed the airbag or airbags to be enabled, the on indicator will light and stay lit to remind you that the airbag or airbags are active.

For some children who have outgrown child restraints and for very small adults, the passenger sensing system may or may not turn off the right front passenger's airbag or airbags, depending upon the person's seating posture and body build. Everyone in your vehicle who has outgrown child restraints should wear a safety belt properly — whether or not there is an airbag for that person.

If a person of adult-size is sitting in the right front passenger's seat, but the off indicator is lit, it could be because that person is not sitting properly in the seat. If this happens, turn the vehicle off and ask the person to place the seatback in the fully upright position, then sit upright in the seat, centered on the seat cushion, with the person's legs comfortably extended. Restart the vehicle and have the person remain in this position for about two minutes. This will allow the system to detect that person and then enable the passenger's airbag or airbags.

⚠ CAUTION:

If the airbag readiness light in the instrument panel cluster ever comes on and stays on, it means that something may be wrong with the airbag system. If this ever happens, have the vehicle serviced promptly, because an adult-size person sitting in the right front passenger's seat may not have the protection of the frontal airbag. See *Airbag Readiness Light on page 234* for more on this, including important safety information.

Aftermarket equipment, such as seat covers, can affect how well the passenger sensing system operates. You may want to consider not using seat covers or other aftermarket equipment if your vehicle has the passenger sensing system. See *Adding Equipment to Your Airbag-Equipped Vehicle on page 113* for more information about modifications that can affect how the system operates.

⚠ CAUTION:

Stowing of articles under the passenger's seat or between the passenger's seat cushion and seatback may interfere with the proper operation of the passenger sensing system.

Servicing Your Airbag-Equipped Vehicle

Airbags affect how your vehicle should be serviced. There are parts of the airbag system in several places around your vehicle. You do not want the system to inflate while someone is working on your vehicle. Your dealer and the service manual have information about servicing your vehicle and the airbag system. To purchase a service manual, see *Service Publications Ordering Information on page 574*.

⚠ CAUTION:

For up to 10 seconds after the ignition key is turned off and the battery is disconnected, an airbag can still inflate during improper service. You can be injured if you are close to an airbag when it inflates. Avoid yellow connectors. They are probably part of the airbag system. Be sure to follow proper service procedures, and make sure the person performing work for you is qualified to do so.

The airbag system does not need regular maintenance.

Adding Equipment to Your Airbag-Equipped Vehicle

Q: Is there anything I might add to the front or sides of the vehicle that could keep the airbags from working properly?

A: Yes. If you add things that change your vehicle's frame, bumper system, height, front end or side sheet metal, they may keep the airbag system from working properly. Also, the airbag system may not work properly if you relocate any of the airbag sensors. If you have any questions about this, you should contact Customer Assistance before you modify your vehicle. The phone numbers and addresses for Customer Assistance are in Step Two of the Customer Satisfaction Procedure in this manual. See *Customer Satisfaction Procedure on page 556*.

Q: Because I have a disability, I have to get my vehicle modified. How can I find out whether this will affect my airbag system?

A: Changing or moving any parts of the front seats, safety belts, the airbag sensing and diagnostic module, steering wheel, the instrument panel, or airbag wiring can affect the operation of the airbag system. If you have questions, call Customer Assistance. The phone numbers and addresses for Customer Assistance are in Step Two of the Customer Satisfaction Procedure in this manual. See *Customer Satisfaction Procedure on page 556*.

Restraint System Check

Checking the Restraint Systems

Now and then, make sure the safety belt reminder light and all your belts, buckles, latch plates, retractors and anchorages are working properly. If your vehicle has a built-in child restraint, also periodically make sure the harness straps, latch plates, buckle, clip, child head restraint and anchorages are working properly. Look for any other loose or damaged safety belt system parts. If you see anything that might keep a safety belt system from doing its job, have it repaired. See *Care of Safety Belts and Built-in Child Restraint Harness on page 520* for more information.

Torn or frayed safety belts may not protect you in a crash. They can rip apart under impact forces. If a belt is torn or frayed, get a new one right away.

If your vehicle has the built-in child restraint, torn or frayed harness straps can rip apart under impact forces just like torn or frayed safety belts can. They may not protect a child in a crash. If a harness strap is torn or frayed, get a new harness right away.

Also look for any opened or broken airbag covers, and have them repaired or replaced. The airbag system does not need regular maintenance.

Notice: **If you damage the covering for the driver's or the right front passenger's frontal airbag, or an airbag covering (if equipped) on a seatback, the airbag may not work properly. You may have to replace the airbag module in the steering wheel, both the airbag module and the instrument panel for the right front passenger's frontal airbag, or both the airbag module and the seatback for seating positions with a side impact airbag (if equipped.) Do not open or break the airbag coverings.**

Replacing Restraint System Parts After a Crash

⚠ CAUTION:

A crash can damage the restraint systems in your vehicle. A damaged restraint system may not properly protect the person using it, resulting in serious injury or even death in a crash. To help make sure your restraint systems are working properly after a crash, have them inspected and any necessary replacements made as soon as possible.

If you have had a crash, do you need new safety belts or built-in child restraint parts or LATCH system parts?

After a very minor collision, nothing may be necessary. But if the safety belts or built-in child restraint harness straps were stretched, as they would be if worn during a more severe crash, then you need new parts.

If the LATCH system was being used during a more severe crash, then you may need new LATCH system parts.

If safety belts or built-in child restraint harness straps are cut or damaged, replace them. Collision damage also may mean you will need to have safety belt, built-in child restraint, LATCH system or seat parts repaired or replaced. New parts and repairs may be necessary even if the safety belt, built-in child restraint or LATCH system was not being used at the time of the collision.

If an airbag inflates, you will need to replace airbag system parts. See the part on the airbag system earlier in this section.

If the frontal airbags inflate, you will also need to replace the driver's and right front passenger's safety belt retractor assemblies. Be sure to do so. Then the new retractor assemblies will be there to help protect you in a collision.

After a crash you may need to replace the driver and front passenger's safety belt retractor assemblies, even if the frontal airbags have not deployed. The driver and front passenger's safety belt retractor assemblies contain the safety belt pretensioners. Have your safety belt pretensioners checked if your vehicle has been in a collision, or if your airbag readiness light stays on after you start your vehicle or while you are driving. See *Airbag Readiness Light on page 234*.

Section 2 Features and Controls

Keys 119
Remote Keyless Entry System 120
Remote Keyless Entry System Operation 121

Doors and Locks 128
Door Locks 128
Power Door Locks 129
Delayed Locking 130
Automatic Door Lock 131
Programmable Automatic Door Unlock 131
Lockout Protection 131
Dual Sliding Doors 131
Power Sliding Door (PSD) 134
Liftgate 141

Windows 143
Power Windows 144
Manual Rear Quarter Windows 144
Power Rear Quarter Windows 145
Sun Visors 145

Theft-Deterrent Systems 145
Content Theft-Deterrent 146
PASS-Key® III 148
PASS-Key® III Operation 148

Starting and Operating Your Vehicle 150
New Vehicle Break-In 150
Ignition Positions 151
Retained Accessory Power (RAP) 152
Starting the Engine 152
Engine Coolant Heater 154
Automatic Transaxle Operation 155
Parking Brake 159
Shifting Into Park (P) 160
Shifting Out of Park (P) 161
Parking Over Things That Burn 162
Engine Exhaust 163
Running the Engine While Parked 164

Mirrors 165
Manual Rearview Mirror 165
Outside Power Mirrors 165
Outside Convex Mirror 166
Outside Heated Mirrors 166
OnStar® System 167
Universal Home Remote System 169
Universal Home Remote System (With Three Round LED) 169
Universal Home Remote System (With One Triangular LED) 170
Universal Home Remote System Operation (With Three Round LED) 171
Universal Home Remote System Operation (With One Triangular LED) 176
Storage Areas 180
Glove Box 180
Cupholder(s) 180
Overhead Console (Without Rail) 181
Overhead Console (With Rail) 181
Floor Console Storage Area 183
Folding Tray 183
Second Row Center Console 183
Luggage Carrier 184
Convenience Net (With Rear Convenience Center) 185
Convenience Net (Without Rear Convenience Center) 186
Convenience Center 186

Keys

⚠ CAUTION:

Leaving children in a vehicle with the ignition key is dangerous for many reasons. They could operate the power windows or other controls or even make the vehicle move. The children or others could be badly injured or even killed. Do not leave the keys in a vehicle with children.

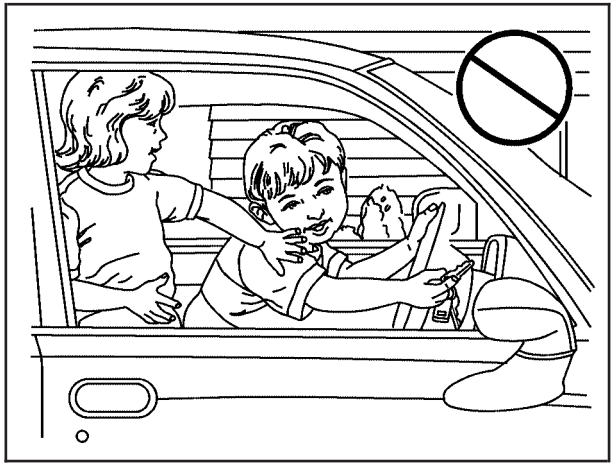

This vehicle has one key for the ignition and the driver's door lock.

Your vehicle has the PASS-Key® III vehicle theft system. The key has a transponder in the key head that matches a decoder in the vehicle's steering column. If a replacement key or any additional key is needed, you must purchase this key from your dealer. The key will have PK3 stamped on it. Keep the bar code tag that came with the original keys. Give this tag to your dealer if you need a new key made.

Any new PASS-Key® III key must be programmed before it will start your vehicle. See *PASS-Key® III on page 148* for more information on programming your new key.

Notice: **If you ever lock your keys in your vehicle, you may have to damage the vehicle to get in. Be sure you have spare keys.**

If you ever do get locked out of your vehicle, see *Roadside Assistance Program on page 562* for more information.

Remote Keyless Entry System

If the vehicle has the keyless entry system, it operates on a radio frequency subject to Federal Communications Commission (FCC) Rules and with Industry Canada.

This device complies with Part 15 of the FCC Rules. Operation is subject to the following two conditions:

1. This device may not cause interference.
2. This device must accept any interference received, including interference that may cause undesired operation of the device.

This device complies with RSS-210 of Industry Canada. Operation is subject to the following two conditions:

1. This device may not cause interference.
2. This device must accept any interference received, including interference that may cause undesired operation of the device.

Changes or modifications to this system by other than an authorized service facility could void authorization to use this equipment.

At times you may notice a decrease in range. This is normal for any remote keyless entry system. If the transmitter does not work or if you have to stand closer to your vehicle for the transmitter to work, try this:

- Check the distance. You may be too far from your vehicle. You may need to stand closer during rainy or snowy weather.
- Check the location. Other vehicles or objects may be blocking the signal. Take a few steps to the left or right, hold the transmitter higher, and try again.
- Check to determine if battery replacement is necessary. See “Battery Replacement” under *Remote Keyless Entry System Operation on page 121*.
- If you are still having trouble, see your dealer or a qualified technician for service.

Remote Keyless Entry System Operation

You can lock and unlock the vehicle’s doors and the liftgate using the remote keyless entry transmitter supplied with your vehicle.

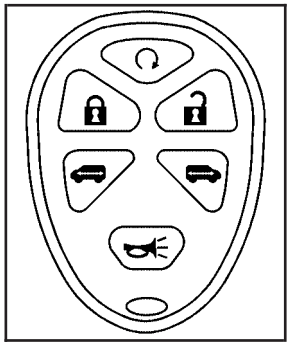

The remote keyless entry transmitter shown here is for a vehicle equipped with the remote vehicle start feature and dual power sliding doors.

The remote keyless entry transmitter supplied with your vehicle will only contain the buttons specific to your vehicle’s factory installed remote system features.

(Remote Vehicle Start): If your vehicle has this feature, you can start the engine from outside the vehicle. See “Remote Vehicle Start” at the end of this section for more detailed information.

(Lock): To lock all doors and the liftgate, press the lock button on the remote keyless entry transmitter. See *Power Door Locks on page 129* for more details on the power door lock features. If your vehicle has the content theft-deterrent system, the remote keyless entry transmitter's lock button may arm the system. See *Content Theft-Deterrent on page 146* for more details.

When you use the remote keyless entry transmitter to lock your vehicle, the turn signal lamps may flash to let you know the command has been received. If you press the lock button again, within five seconds, the horn will sound and the turn signal lamps may flash to let you know the vehicle is already locked. See "FOB LOCK FEEDBACK" under *DIC Vehicle Personalization (Uplevel Only) on page 275* for additional information.

(Unlock): When you press unlock on the remote keyless entry transmitter, only the driver's door will unlock. If you press unlock again within five seconds, all the doors and the liftgate will unlock. If you would like all the doors to unlock the first time you press unlock, see "FOB UNLOCK ON 1ST PRESS" under *DIC Vehicle Personalization (Uplevel Only) on page 275*.

If your vehicle has the content theft-deterrent system, the unlock button on the remote keyless entry transmitter will disarm the system. See *Content Theft-Deterrent on page 146* for more details.

When you use your remote keyless entry transmitter to unlock your vehicle the turn signal lamps will flash to let you know the command was received.

(Remote Alarm): When you press the horn button on the remote keyless entry transmitter, the turn signal lamps will flash and the horn will sound. This will allow you to attract attention, if needed.

Press this button again to stop the alarm from sounding.

Remote Power Sliding Door Operation

(Power Sliding Door): If your vehicle has one power sliding door, the remote keyless entry transmitter will have a button with a van symbol on it. Press and hold this button to open or close the power sliding door. See *Power Sliding Door (PSD) on page 134*.

(Dual Power Sliding Doors): If your vehicle has dual power sliding doors, your remote keyless entry transmitter will have two buttons that have a van symbol on them. The van symbol on the left is for the driver's side sliding door and the van symbol on the right is for the passenger's side sliding door. Press and hold the passenger's or driver's side button, with the van symbol on it, to open or close the selected power sliding door. See *Power Sliding Door (PSD) on page 134*.

You can operate the power sliding door(s) with the remote keyless entry transmitter even if the power sliding door override switch(es), on the overhead console, are active or inactive. See *Power Sliding Door (PSD) on page 134* for additional information.

If the sliding door is closed and the power sliding door button on the transmitter is pressed and held, the vehicle's doors will be unlocked and then the power sliding door will open. If the power sliding door has been locked using the manual door lock lever, you will need to unlock the power sliding door before it can be opened with the remote keyless entry transmitter sliding door button.

If your vehicle's fuel filler door is opened, the driver's side power sliding door will not open completely. Do not try to force the door. Once the fuel filler door is closed, the driver's side sliding door can be opened normally.

Matching Transmitter(s) to Your Vehicle

Each remote keyless entry transmitter is coded to prevent another transmitter from unlocking your vehicle. If a transmitter is lost or stolen, a replacement can be purchased through your dealer. Remember to bring any remaining transmitters with you when you go to your dealer. When the dealer matches the replacement transmitter to your vehicle, any remaining transmitters must also be matched. Once your dealer has coded the new transmitter, the lost transmitter will not unlock your vehicle. Each vehicle can have a maximum of four transmitters matched to it.

See your dealer to match transmitters to another vehicle.

Battery Replacement

Under normal use, the battery in your remote keyless entry transmitter should last about three years.

You can tell the battery is weak if the transmitter will not work at the normal range in any location. If you have to get close to your vehicle before the transmitter works, it is probably time to change the battery.

Notice: **When replacing the battery, use care not to touch any of the circuitry. Static from your body transferred to these surfaces may damage the transmitter.**

1. Insert a flat object, such as a coin, into the slot on the side of the transmitter and twist it to separate the halves.

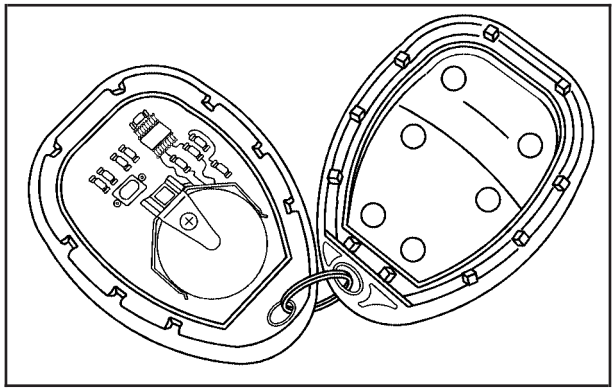

2. Gently pry the battery out of the transmitter. Do not use the metal flanges to pop out the battery.
3. Replace the battery.
4. Reassemble the transmitter. Make sure the halves are snapped together tightly so water will not get in.
5. Press and hold the lock and unlock buttons for seven seconds to synchronize the transmitter.
6. Check the transmitter operation.

Remote Vehicle Start

This feature allows you to start the engine from outside the vehicle. It may also turn the rear window defogger if the outside temperature is below 45°F (7°C).

Laws in some local communities may restrict the use of remote starters. For example, some laws may require a person using remote start to have the vehicle in view when doing so. Check local regulations for any requirements on remote starting of vehicles.

(Remote Vehicle Start): If your vehicle has the remote vehicle start feature, the remote keyless entry transmitter will have a button with this symbol on it.

An increased range of operation is provided with the remote keyless entry transmitter that has the remote vehicle start button.

If your vehicle is low on fuel, do not use the remote start feature. The vehicle may run out of fuel. The vehicle may also run out of fuel if the vehicle is running for a long period of time when parked on an incline facing downward with a low fuel condition.

To start the engine using the remote start feature, do the following:

1. Aim the remote keyless entry transmitter, equipped with the remote vehicle start button, at the vehicle.
2. Press and release the transmitter's lock button, then immediately press and hold the remote vehicle start button until the vehicle's turn signal lamps flash, or for at least two seconds, if the vehicle's lights are not visible. The vehicle's doors will be locked.
3. When the vehicle's engine starts, the parking lamps will turn on and remain on while the engine is running.

After a remote start, the engine will automatically shut off after 10 minutes unless a time extension has been done or the vehicle's key is inserted into the ignition switch and turned to RUN.

The maximum number of remote starts or remote start attempts between ignition cycles with the key is two.

If the remote start procedure is used again before the first 10 minute time frame has ended, the first 10 minutes will immediately expire and the second 10 minute time frame will start.

After two remote starts have been provided, the vehicle's ignition switch must be turned to RUN and then back to LOCK using the key before the remote start procedure can be used again.

If you enter the vehicle after a remote start, and the engine is running, insert the key into the ignition switch and turn it to the RUN position to drive the vehicle.

To manually shut off the engine after a remote start, do any of the following:

- Aim the remote keyless entry transmitter at the vehicle and press the remote start button until the parking lamps turn off.
- Turn on the hazard warning flashers.
- Insert the vehicle's key into the ignition switch and turn the switch to RUN and then back to LOCK.

The remote vehicle start feature will not operate if:

- The remote start system is disabled. See "REMOTE START" under *DIC Vehicle Personalization (Uplevel Only) on page 275*.
- The vehicle's key is in the ignition.
- The vehicle's hood, liftgate or doors are not closed.
- The hazard warning flashers are on.
- There is an emission control system malfunction.
- The engine coolant temperature is too high.
- The oil pressure is low.
- Two remote vehicle starts have already been provided. The maximum number of remote starts or remote start attempts between ignition cycles with the key is two.

Remote Start Ready

If your vehicle does not have the remote vehicle start feature, it may have the remote start ready feature. This feature allows your dealer to add the manufacturer's remote vehicle start feature.

If the keyless entry transmitter has a plus (+) symbol on the back cover, your vehicle has the remote start ready feature. You can lock or unlock your vehicle from approximately 197 feet (60 m) away.

See your dealer if you would like to add the manufacturer's remote vehicle start feature to your vehicle.

Doors and Locks

Door Locks

⚠ CAUTION:

Unlocked doors can be dangerous.

- **Passengers, especially children, can easily open the doors and fall out of a moving vehicle. When a door is locked, the handle will not open it. You increase the chance of being thrown out of the vehicle in a crash if the doors are not locked. So, wear safety belts properly and lock the doors whenever you drive.**

CAUTION: (Continued)

CAUTION: (Continued)

- **Young children who get into unlocked vehicles may be unable to get out. A child can be overcome by extreme heat and can suffer permanent injuries or even death from heat stroke. Always lock your vehicle whenever you leave it.**
- **Outsiders can easily enter through an unlocked door when you slow down or stop your vehicle. Locking your doors can help prevent this from happening.**

There are several ways to lock and unlock your vehicle.

From the outside, use your key or the remote keyless entry transmitter.

To unlock the driver's door from the outside with the key, insert the key and turn it toward the front of the vehicle. To lock the driver's door from the outside with your key, insert the key and turn it toward the rear of the vehicle.

If your vehicle has power door locks, you may be able to unlock all of the doors and the liftgate when you insert the key, turn it toward the front of the vehicle, and hold it there for one second. You may be able to lock all of the doors when you insert the key and turn it toward the rear of the vehicle.

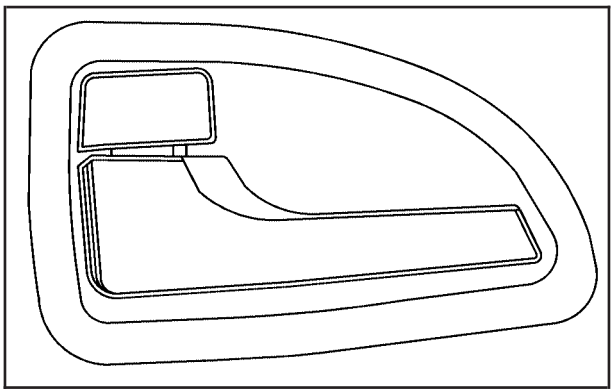

From the inside, use the manual or power door locks.

To unlock either front door from the inside, pull back on the manual lever. To lock either front door from the inside, push the manual lever forward.

Power Door Locks

Your vehicle has power door locks.

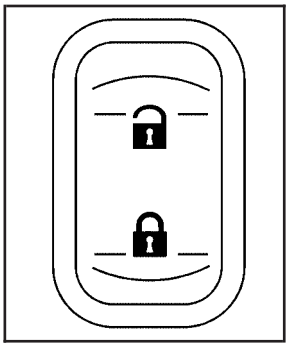

The switches are located on the driver's and front passenger's door. Press the top of the switch to unlock the doors and liftgate.

With the content theft-deterrent system, the power door lock switch will not unlock the doors until the system is disarmed. See *Content Theft-Deterrent on page 146* for more details.

Press the bottom of the switch to lock the doors and liftgate. With the content theft-deterrent system, the power door lock switch may cause the system to arm. See *Content Theft-Deterrent on page 146* for more details.

Delayed Locking

This feature allows the locking of the vehicle to be delayed until all doors have been closed for approximately five seconds.

To activate the delayed locking feature, do one of the following:

- Press the driver's door power lock switch one time while the driver's door is open.
- Press the passenger's door power lock switch one time while the passenger's door is open.
- Press the lock button on the remote keyless entry transmitter one time while any door is open.

Two chimes will sound to signal that delayed locking is active.

The doors may be locked immediately by repeating any of the above actions more than one time.

If a door remains open, without any other door being opened or closed, the vehicle will lock after approximately 45 seconds.

If the key is in the ignition, this feature will not lock the doors.

To turn the delayed locking feature off or on, see *DIC Vehicle Personalization (Uplevel Only) on page 275*.

Sliding Door Delayed Locking

If either sliding door is open when you use the power door locks to lock the vehicle, the sliding door that is open will not lock. Normally the delayed locking feature will be used to lock the sliding door after it has been closed.

The sliding door delayed locking feature will lock your sliding door(s) in situations where the delayed locking feature does not apply or was overridden or programmed to be off. See "Delayed Locking" earlier in this section. Shortly after the last sliding door is closed, all the doors will lock.

Automatic Door Lock

All of the doors will lock automatically when you move the shift lever out of PARK (P). This feature cannot be disabled.

If someone needs to get out of the vehicle while it is not in PARK (P), shift into PARK (P), or, have that person use the manual lever or the power door lock switch. When the door is closed again, it will lock when the vehicle exceeds 5 mph (8 km/h).

With automatic door locks, you can lock or unlock the doors at any time, either manually or by using the power door lock switches.

Programmable Automatic Door Unlock

Your vehicle was programmed so that all doors will unlock automatically when the shift lever is moved into PARK (P).

To change the way the automatic door unlocking operates, see *DIC Vehicle Personalization (Uplevel Only) on page 275*.

Lockout Protection

The lockout protection feature makes it more difficult to lock the key in the vehicle. If the driver's door is open while the key is in the ignition, the door cannot be locked with the power door lock switch.

This feature cannot guarantee that you will never be locked out of the vehicle. If the key is not left in the ignition, or, if the manual door lock is used, the key could still be locked inside the vehicle. Always remember to take the key with you.

Dual Sliding Doors

To open either sliding door from outside the vehicle, pull the handle out and then pull the door toward the rear. If you slide the door all the way back, the door will rest in a detent position.

To move the door forward, you must first pull the door past the open detent position.

The driver's side sliding door is designed to open only a little if the fuel door is open. If this ever happens, do not try to force the sliding door. Just close the driver's side sliding door. Then when the fuel filler door is closed, the driver's side sliding door can be opened normally.

Sliding Door Lock

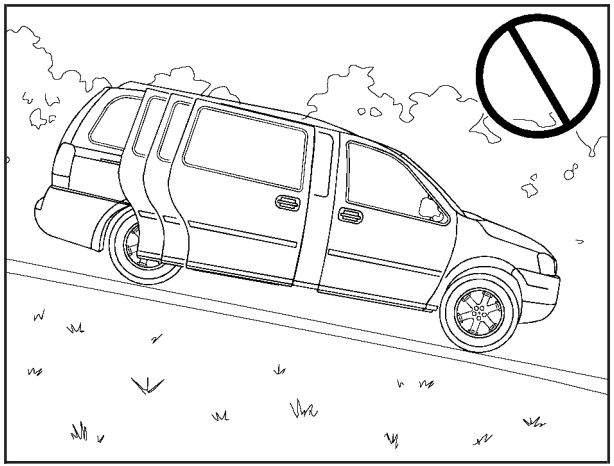

⚠ CAUTION:

If your vehicle is facing downward on a steep grade (15 percent or more), the door may not stay open and could slam shut, possibly injuring someone. To make sure the door does not slam shut be sure to hold it open until everyone is clear of the door, and only then allow it to slowly close.

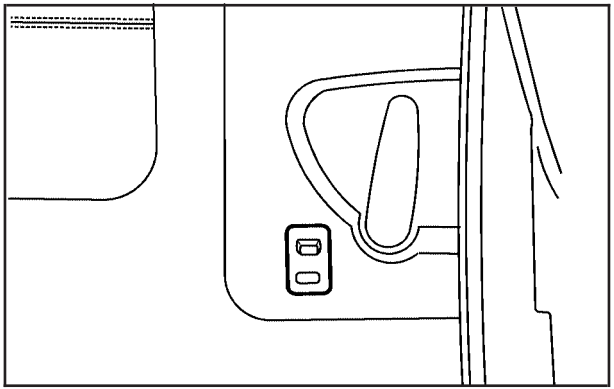

Lock either sliding door from inside the vehicle by moving the manual lever down. Unlock it by moving the lever up.

With the power door locks, the sliding door lock has a delay feature. See *Delayed Locking on page 130* and *DIC Vehicle Personalization (Uplevel Only) on page 275*.

Sliding Door Security Lock

Your vehicle is equipped with sliding door security locks that helps prevent young children or other passengers from opening the sliding door(s) using the inside door handle. To use one of these locks, do the following:

1. Open the sliding door.

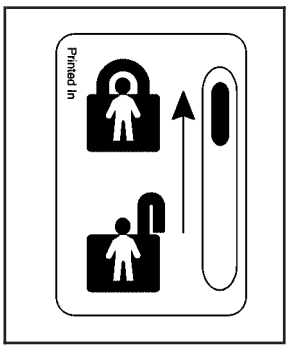

2. On the inside of the sliding door(s), on the front edge of the door will be a lock. Push the lever up to engage the lock.
3. Close the door.
4. Repeat Steps 1 through 3 for the other door.

If your vehicle has power sliding door(s), you can prevent power opening of the sliding door from the passenger power sliding door (psd) activation switch by pressing the psd second row passenger override (deactivation) switch located on the overhead console. See *Power Sliding Door (PSD) on page 134*.

If you want to open the sliding door while the security lock is on, unlock and open the door from the outside.

You should let adults and older children know how the security lock works, and how to cancel the lock. If you do not, adults or older children who ride in the rear will not be able to open the sliding door from the inside while the security lock feature is in use.

Canceling the Sliding Door Security Lock

1. Unlock the sliding door and open the door from the outside.
2. Push the security lock lever all the way down.
3. Close the door.
4. Repeat Steps 1 through 3 for the other door.

The sliding door lock will now work normally.

Power Sliding Door (PSD)

If your vehicle has this feature, you can open and close the power sliding door(s) using the switches inside your vehicle. You can also operate the sliding door(s) with your remote keyless entry transmitter. See *Remote Keyless Entry System on page 120*.

⚠ CAUTION:

Leaving your children or pets unattended in your vehicle can be dangerous. They could operate the power sliding door. A child or others could be injured. Do not leave children or pets unattended in your vehicle.

Power Sliding Door (PSD) Switches

Your vehicle will have one of the following switch(es) located on the overhead console switchbank.

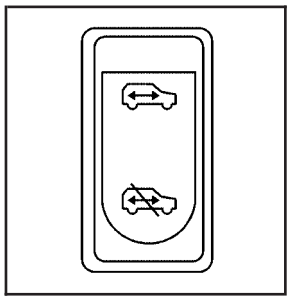

PSD Activation/Override (Deactivation) Switch

If your vehicle has a single power sliding door (PSD), you have this switch.

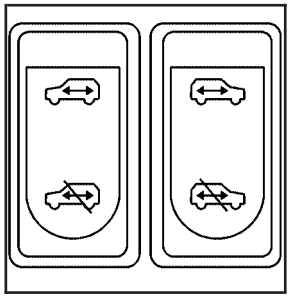

Driver's Side and Passenger's Side PSD Activation/Override (Deactivation) Switches

If your vehicle has dual power sliding doors, you have these switches.

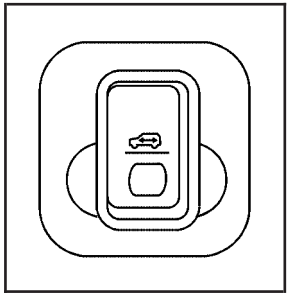

Passenger PSD Activation Switch

Your vehicle also has passenger power sliding door activation switch(es).

If you have a single PSD, this switch is located in front of the passenger side sliding door. If your vehicle has dual PSDs, the switches are located in front of both sliding doors.

Power Sliding Door Operation

The power sliding door(s) will only open if the transaxle is in PARK (P). The transaxle does not have to be in PARK (P) to close the door(s).

There are several ways to open and close the power sliding door(s).

- If your vehicle has a single power sliding door, press the top of the overhead console PSD activation/override (deactivation) switch.
- If your vehicle has dual power sliding doors, press the top of the driver's side and/or passenger's side overhead console PSD activation/override (deactivation) switch.
- Press the passenger PSD activation switch. This switch will also stop a moving door immediately.

- Press the power sliding door button on the remote keyless entry transmitter.
- To manually open the power sliding door(s) while the switch(es) are in the activation position, pull and release the inside or outside door handle to release the door latch. The door will fully open.
- To manually close the power sliding door(s) while the switches are in the activation position, pull the inside or outside door handle or the edge of the door. Move the door about 4 inches (10 cm) toward the closed position and release it. The door will close completely and latch.

If a power sliding door is locked, it cannot be unlocked and opened using the overhead console PSD switch(es) or the passenger PSD activation switch(es). The power sliding door must either be manually unlocked or unlocked using the power door unlock switch located on the driver's or front passenger's armrest, and then opened using the overhead or passenger PSD activation switch(es).

The remote keyless entry transmitter can also be used to open the power sliding door(s). If the vehicle is locked, press the power sliding door button(s) and all doors will unlock and the sliding door(s) will open. See *Remote Keyless Entry System Operation on page 121*.

If the power sliding door has been manually locked, you must unlock the PSD before it can be opened.

Notice: **If you leave the power sliding door on when you go through an automatic car wash, the door may accidentally open. Be sure the power sliding door is turned off when going through a car wash.**

If the power sliding door(s) is open or in the process of closing when you shift out of PARK (P), a chime will sound. This is a warning that the sliding door(s) is not completely closed. Also, the Driver Information Center (DIC) will indicate if the door is open. See *DIC Warnings and Messages on page 256*. Stop the vehicle and close the door.

⚠ CAUTION:

If you shift the transaxle out of PARK (P) and accelerate before the power sliding door latches closed, the door may reverse to the open position. A child or others could fall out of the vehicle and be injured. Always make sure the power sliding door is closed and latched before you drive away.

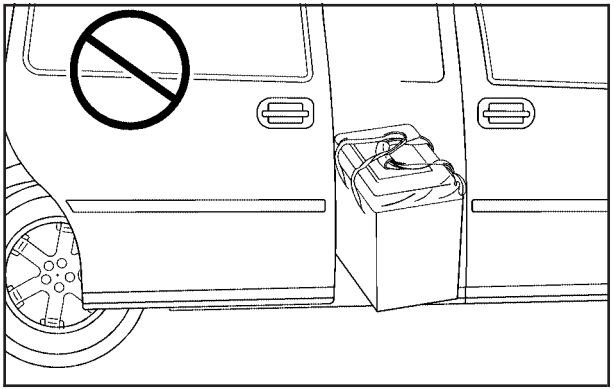

If an object obstructs the power sliding door(s) while it is closing, the door will automatically reverse to the open position, provided it meets sufficient resistance. Resistance must be as strong as the force of the closing door, or stronger. The force of the closing door increases significantly as the door approaches the latched position.

The driver's side sliding door is designed to open only a little if the fuel door is open. If this ever happens, do not try to force the sliding door. When the fuel filler door is closed, the driver's side sliding door can be opened normally.

⚠ CAUTION:

You or others could be injured if caught in the path of the sliding door. Make sure the door path is clear before closing the door.

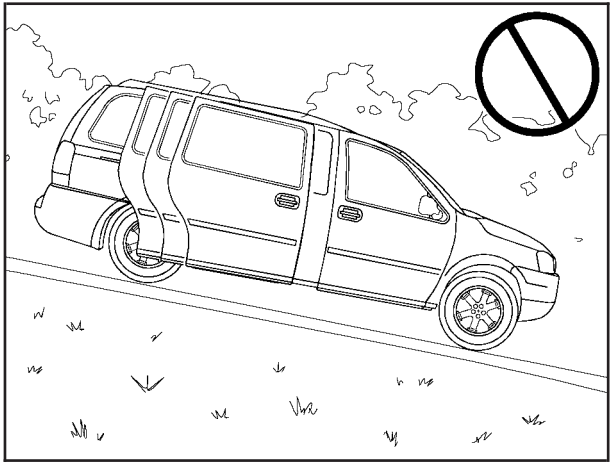

⚠ CAUTION:

If your vehicle is facing downward on a steep grade (15 percent or more), the door may not stay open and could slam shut, possibly injuring someone. To make sure the door does not slam shut, turn on the power sliding door feature. Then if the door closes, it will close under the control of the power door system.

Power Sliding Door Second Row Passenger Override (Deactivation)

To help avoid accidental operation of the sliding door(s) by using the passenger PSD activation switch, press the override (deactivation) part of the overhead console switch. The door can still be manually opened from the inside or outside with the override (deactivation) on.

To open a power sliding door(s) manually when the overhead console switch is in override (deactivation) position, pull the inside or outside door handle and slide the door all the way back.

To close the door(s) manually when the override switch(es) is in the override (deactivation) position, pull the inside or outside door handle and slide the door all the way forward to the latched position.

To stop the door(s) immediately while the door(s) is opening or closing, press the PSD override (deactivation) part of the switch.

Pressing the PSD button(s) on the remote keyless entry will open and close the door unless the door has been manually locked using the mechanical slider.

Resetting the Power Sliding Door

The power sliding door may operate incorrectly or not at all because of the following conditions:

- A low voltage or dead battery
- A disconnected battery
- If the instrument panel PSD/fuse 21, LHPSD/fuse 24 or RHPSD/fuse 25 are removed or blown.

See *Fuses and Circuit Breakers on page 527* for more information.

If any of these conditions occur, the power sliding door may need to be reset. If your vehicle has the dual power sliding doors, both doors will have to be reset. To reset a door, do the following:

1. Check to be sure the power sliding door is unlocked and securely closed.
2. Turn the ignition to LOCK.

3. If the power sliding door overhead console switch is in the override (deactivation) position, return to the activation position.
4. Open the sliding door using the remote keyless entry transmitter, overhead console switch, or passenger switch. Allow the door to travel fully open.

If the door does not travel to the fully open position, press the overhead console switch to the override (deactivation) position and slide the door fully open and closed. Check for foreign objects in the tracks. Repeat the procedure starting with Step 1. If the door resists travel to the fully open position, see your dealer for service.

Liftgate

To unlock or lock the liftgate from the outside, use the remote keyless entry transmitter. For more information, see *Remote Keyless Entry System Operation on page 121*.

You can also use the power door lock switch to lock and unlock the liftgate.

Open the liftgate using the handle located above the license plate. Once slightly opened, the liftgate will rise by itself. Lamps in the rear of the vehicle will come on, illuminating the rear cargo area.

Notice: **If you open the liftgate without checking for overhead obstructions such as a garage door, you could break the liftgate glass. Always check to make sure the area above the liftgate is clear before opening it.**

⚠ CAUTION:

It can be dangerous to drive with the liftgate open because carbon monoxide (CO) gas can come into your vehicle. You cannot see or smell CO. It can cause unconsciousness and even death. If you must drive with the liftgate open or if electrical wiring or other cable connections must pass through the seal between the body and the liftgate:

- **Make sure all other windows are shut.**
- **Turn the fan on your heating or cooling system to its highest speed and select the control setting that will force outside air into your vehicle. See *Climate Control System on page 217* or *Dual Climate Control System on page 220*.**
- **If you have air outlets on or under the instrument panel, open them all the way. See *Engine Exhaust on page 163*.**

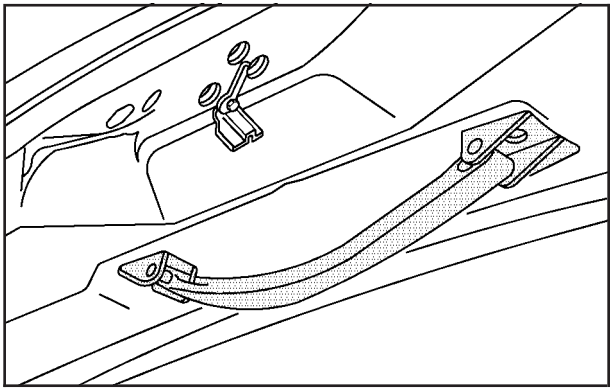

To close the liftgate, pull down on the handle, then firmly shut the liftgate. Do not drive with the liftgate open, even slightly.

Windows

⚠ CAUTION:

Leaving children, helpless adults, or pets in a vehicle with the windows closed is dangerous. They can be overcome by the extreme heat and suffer permanent injuries or even death from heat stroke. Never leave a child, a helpless adult, or a pet alone in a vehicle, especially with the windows closed in warm or hot weather.

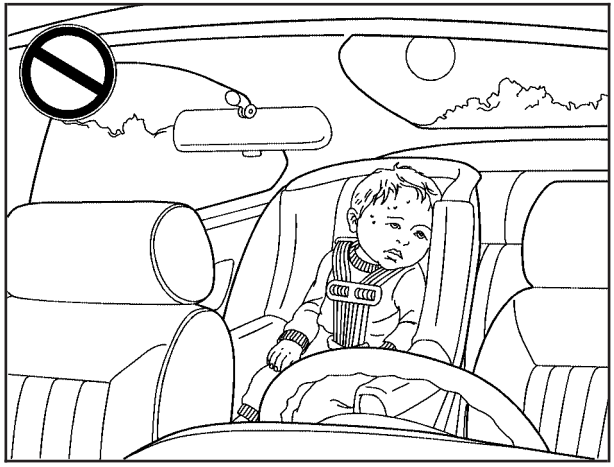

Power Windows

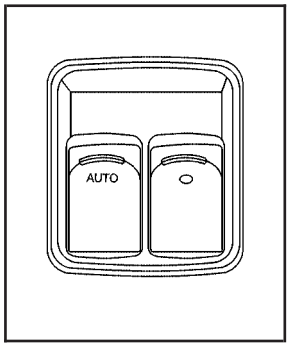

The switches on the driver's door armrest control the front windows when the ignition is in RUN, ACCESSORY or when Retained Accessory Power (RAP) is active. See *Retained Accessory Power (RAP) on page 152*.

The driver's power window switch has two down positions. The first position lowers the window normally.

To raise the window, pull up the front of the switch.

Express-Down Window

To activate the express-down feature, push the AUTO switch all the way down to the second position, then release it. The window will lower completely. To stop the window from lowering all the way, pull up on the front of the switch.

Manual Rear Quarter Windows

Your vehicle may have manual rear quarter windows.

To open, pull the latch forward to release it, then swing the window outward. Press the center of the latch to secure the window in the open position.

To close, pull the center of the latch forward and then close the latch. Press the center of the latch to secure the window in the closed position.

Power Rear Quarter Windows

Your vehicle may have power rear quarter windows.

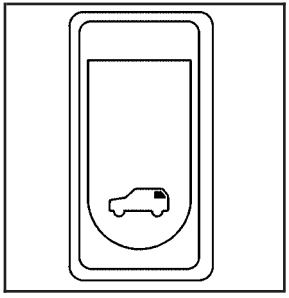

This switch, located in the overhead console switchbank, is used for opening and closing the power rear quarter windows.

Press the top of the switch to open the windows; both windows will open. The windows will continue to open as long as the switch is pressed, until they are fully opened.

Press the bottom of the switch to close both windows. The windows can be closed fully or partially, depending on how long the switch is pressed.

The ignition must be in RUN, ACCESSORY, or Retained Accessory Power (RAP) must be active, to use the power rear quarter windows. See *Retained Accessory Power (RAP) on page 152*.

Sun Visors

To block out glare, swing down the sun visors. You can also remove them from the center mount and swing them to the side. The sun visors can also slide along the rod to cover different areas of the front window.

Visor Vanity Mirror

Your vehicle may have a visor vanity mirror. Pull down the sun visor to access the vanity mirror.

Lighted Vanity Mirror

Your vehicle may have a lighted vanity mirror. Pull down the sun visor and flip up the cover to expose the vanity mirror. The lamps will come on when you flip up the cover.

Theft-Deterrent Systems

Vehicle theft is big business, especially in some cities. Although your vehicle has a number of theft-deterrent features, we know that nothing we put on it can make it impossible to steal.

Content Theft-Deterrent

Your vehicle may have a theft-deterrent alarm system.

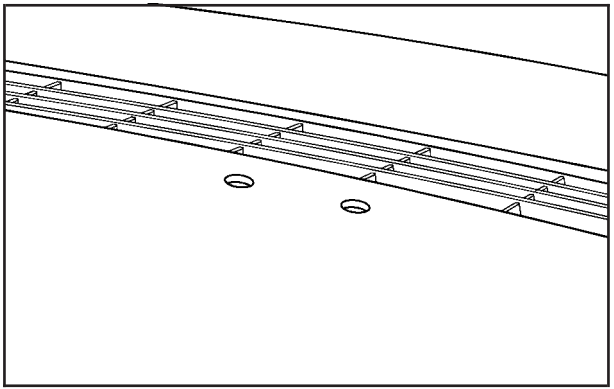

A light located on top of your instrument panel, near the center of the vehicle next to the windshield, will flash slowly to let you know that the system has been armed.

While armed, the doors will not unlock with the power door lock switch.

Once armed, the alarm will go off if someone tries to enter the vehicle without using the remote keyless entry transmitter or a key, or turns the ignition to RUN. The horn will sound and the turn signal lamps will flash for up to two minutes.

Arming with the Power Lock Switch

Your alarm system will arm when the key is removed from the ignition and you use the driver's power door lock switch, with the driver's door open or the passenger's door power door lock switch with the passenger's door open to lock the vehicle. If you would like to turn on power door lock switch arming, see *DIC Vehicle Personalization (Uplevel Only) on page 275*.

When the security light flashes quickly the system is arming. After all doors and the liftgate are closed and locked, the security light will begin flashing at a very slow rate to let you know the system is armed.

Arming with the Remote Keyless Entry Transmitter

Your alarm system will arm if the key is not in the ignition and you use your remote keyless entry transmitter to lock the doors. The security light will flash to let you know the system is arming. If you press the transmitter's lock button twice within five seconds, the horn will sound. After all doors and the liftgate are closed and locked, the security light will begin flashing at a very slow rate to let you know the system is armed.

Arming with Your Key

Your alarm system will arm when you use your key to lock the driver's door. The security light will flash to let you know the system is arming. After all doors and the liftgate are closed and locked, the security light will begin flashing at a very slow rate to let you know the system is armed. If you would like your key not to arm the system, see *DIC Vehicle Personalization (Uplevel Only) on page 275*.

Arming Confirmation

If remote unlock confirmation is on, the turn signal lamps will flash briefly to let you know when your alarm system has disarmed. If you would not like the turn signal lamps to flash, see *DIC Vehicle Personalization (Uplevel Only) on page 275*.

Disarming with the Remote Keyless Entry Transmitter

Your alarm system will disarm when you use your remote keyless entry transmitter to unlock the doors. The security light will stop flashing to let you know the system is no longer armed.

Disarming with Your Key

Your alarm system will disarm when you use your key to unlock the driver's door. The security light will stop flashing to let you know the system is no longer armed. If you would like your key not to disarm the alarm system, see *DIC Vehicle Personalization (Uplevel Only) on page 275*.

PASS-Key® III

Your PASS-Key® III system operates on a radio frequency subject to Federal Communications Commission (FCC) Rules and with Industry Canada.

This device complies with Part 15 of the FCC Rules. Operation is subject to the following two conditions:

1. This device may not cause harmful interference.
2. This device must accept any interference received, including interference that may cause undesired operation.

This device complies with RSS-210 of Industry Canada. Operation is subject to the following two conditions:

1. This device may not cause interference.
2. This device must accept any interference received, including interference that may cause undesired operation of the device.

Changes or modifications to this system by other than an authorized service facility could void authorization to use this equipment.

PASS-Key® III uses a radio frequency transponder in the key that matches a decoder in your vehicle.

PASS-Key® III Operation

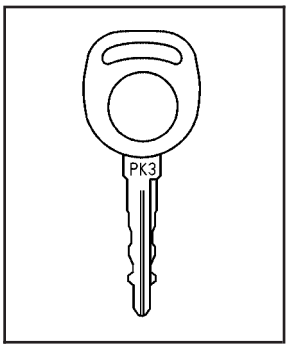

Your vehicle is equipped with the PASS-Key® III (Personalized Automotive Security System) theft-deterrent system. PASS-Key® III is a passive theft deterrent system.

This means you do not have to do anything different to arm or disarm the system. It works when you insert or remove the key from the ignition.

When the PASS-Key® III system senses that someone is using the wrong key, it shuts down the vehicle's starter and fuel systems. The starter will not work and fuel will stop being delivered to the engine. Anyone using a trial-and-error method to start the vehicle will be discouraged because of the high number of electrical key codes.

If the engine does not start and the security message comes on, the key may have a damaged transponder. Turn the ignition off and try again.

If the engine still does not start, and the key appears to be undamaged, try another ignition key. At this time, you may also want to check the instrument panel PASS KEY fuse. If the engine still does not start with the other key, your vehicle needs service. If your vehicle does start, the first key may be faulty. See your dealer or a locksmith who can service the PASS-Key® III to have a new key made. See *Fuses and Circuit Breakers on page 527*.

It is possible for the PASS-Key® III decoder to learn the transponder value of a new or replacement key. Up to 10 keys may be programmed for the vehicle. This procedure is for learning additional keys only. If all the currently programmed keys are lost or do not operate, you must see your dealer or a locksmith who can service PASS-Key® III to have keys made and programmed to the system.

See your dealer or a locksmith who can service PASS-Key® III to get a new key blank that is cut exactly as the ignition key that operates the system.

To program the new key, do the following:

1. Verify the new key has PK3 stamped on it.
2. Insert the original, already programmed key into the ignition lock cylinder and start the engine. If the engine will not start, see your dealer for service.
3. After the engine has started, turn the key to LOCK and remove the key.
4. Insert the key to be programmed and turn it to RUN within 10 seconds of removing the previous key.
5. The security message will turn off once the key has been programmed. It may not be apparent that the security message went on due to how quickly the key is programmed.
6. Repeat Steps 1 through 4 if additional keys are to be programmed.

If you are ever driving and the security message comes on and stays on, you will be able to restart your engine if you turn it off. Your PASS-Key® III system, however, is not working properly and must be serviced by your dealer. Your vehicle is not protected by the PASS-Key® III system at this time.

If you lose or damage a PASS-Key® III key, see your dealer or a locksmith who can service PASS-Key® III to have a new key made.

Starting and Operating Your Vehicle

New Vehicle Break-In

Notice: **Your vehicle does not need an elaborate break-in. But it will perform better in the long run if you follow these guidelines:**

- **Do not drive at any one constant speed, fast or slow, for the first 500 miles (805 km). Do not make full-throttle starts. Avoid downshifting to brake, or slow, the vehicle.**
- **Avoid making hard stops for the first 200 miles (322 km) or so. During this time your new brake linings are not yet broken in. Hard stops with new linings can mean premature wear and earlier replacement. Follow this breaking-in guideline every time you get new brake linings.**
- **Do not tow a trailer during break-in. See *Towing a Trailer on page 412* for the trailer towing capabilities of your vehicle and more information.**

Following break-in, engine speed and load can be gradually increased.

Ignition Positions

The key can be turned to one of four positions while in the ignition switch.

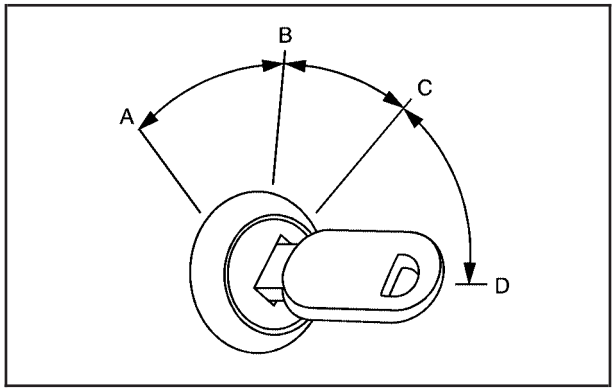

A (LOCK): This is the only position from which you can remove the key. This position locks your ignition and transaxle.

Notice: **Using a tool to force the key from the ignition switch could cause damage or break the key. Use the correct key and turn the key only with your hand. Make sure the key is all the way in. If none of this works, then your vehicle needs service.**

B (ACCESSORY): This is the position in which you can operate the electrical accessories, such as the radio.

C (RUN): This is the position to which the switch returns after the engine is started and the ignition key is released. This is the position for driving. Even while the engine is not running, RUN can be used to operate your electrical accessories and to display some instrument panel warning lights.

The battery could be drained if you leave the key in the ACCESSORY or RUN position with the engine off. You may not be able to start your vehicle if the battery is allowed to drain for an extended period of time.

D (START): This position starts the engine. When the engine starts, release the ignition key. The switch will return to RUN for driving.

Key In the Ignition

Never leave your vehicle with the keys inside, as it is an easy target for joy riders or thieves. If you leave the key in the ignition and park your vehicle,a chime will sound, when you open the driver's door. Always remember to remove your key from the ignition and take it with you. This will lock your ignition and transaxle. Also, always remember to lock the doors.

The battery could be drained if you leave the key in the ignition while your vehicle is parked. You may not be able to start your vehicle after it has been parked for an extended period of time.

Retained Accessory Power (RAP)

With RAP, your power windows and the audio system will continue to work for up to 10 minutes after the engine is turned off or until either door is opened. If a door is opened, the power windows and audio system will shut off.

Starting the Engine

Move your shift lever to PARK (P) or NEUTRAL (N). Your engine will not start in any other position — that is a safety feature. To restart when you are already moving, use NEUTRAL (N) only.

Notice: **Shifting into PARK (P) with the vehicle moving could damage the transaxle. Shift into PARK (P) only when your vehicle is stopped.**

1. With your foot off the accelerator pedal, turn your ignition key to START. When the engine starts, let go of the key. The idle speed will go down as your engine warms up. Do not race the engine immediately after starting it. Operate the engine and transaxle gently until the oil warms up and lubricates all moving parts.

Your vehicle has a Computer-Controlled Cranking System. This feature assists in starting the engine and protects the electrical system. If the ignition key is turned to the START position, and then released when the engine begins cranking, the engine will continue cranking until the vehicle starts or until it exceeds the maximum cranking time allowed, approximately 15 seconds to prevent cranking motor damage. To prevent starter-motor gear damage, this system also prevents cranking if the engine is already running. The engine cranking can be stopped by turning the ignition switch to the ACCESSORY or LOCK position.

Notice: **Holding your key in START for longer than 15 seconds at a time will cause your battery to be drained much sooner. And the excessive heat can damage your starter motor. Wait about 15 seconds between each try to help avoid draining your battery or damaging your starter.**

2. If the engine does not start in 10 seconds, push the accelerator pedal about one-quarter of the way down while you turn the key to START. Do this until the engine starts. As soon as it does, let go of the key.
3. If your engine still will not start, or starts but then stops, it could be flooded with too much gasoline. Try pushing your accelerator pedal all the way to the floor and holding it there as you hold the key in START for a maximum of 15 seconds. This clears the extra gasoline from the engine. If the engine still will not start, or starts briefly but then stops again, repeat Step 1 or 2, depending on the temperature. When the engine starts, release the key and the accelerator pedal.

Notice: **Your engine is designed to work with the electronics in your vehicle. If you add electrical parts or accessories, you could change the way the engine operates. Before adding electrical equipment, check with your dealer. If you do not, your engine might not perform properly. Any resulting damage would not be covered by your vehicle's warranty.**

Engine Coolant Heater

Your vehicle may have an engine coolant heater. In very cold weather, 0°F (–18°C) or colder, the engine coolant heater can help. You will get easier starting and better fuel economy during engine warm-up. Usually, the coolant heater should be plugged in a minimum of four hours prior to starting your vehicle. At temperatures above 32°F (0°C), use of the coolant heater is not required. Your vehicle may also have an internal thermostat in the plug end of the cord. This will prevent operation of the engine coolant heater when the temperature is at or above 0°F (–18°C) as noted on the cord.

To Use the Engine Coolant Heater

1. Turn off the engine.
2. Open the hood and unwrap the electrical cord. The electrical cord is located on the driver's side of the engine compartment.
3. Plug it into a normal, grounded 110-volt AC outlet.

⚠ CAUTION:

Plugging the cord into an ungrounded outlet could cause an electrical shock. Also, the wrong kind of extension cord could overheat and cause a fire. You could be seriously injured. Plug the cord into a properly grounded three-prong 110-volt AC outlet. If the cord will not reach, use a heavy-duty three-prong extension cord rated for at least 15 amps.

4. Before starting the engine, be sure to unplug and store the cord as it was before to keep it away from moving engine parts. If you do not, it could be damaged.

How long should you keep the coolant heater plugged in? The answer depends on the outside temperature, the kind of oil you have, and some other things. Instead of trying to list everything here, we ask that you contact your dealer in the area where you will be parking your vehicle. The dealer can give you the best advice for that particular area.

Automatic Transaxle Operation

P R N D 3 2 1

Maximum engine speed is limited when you are in PARK (P) or NEUTRAL (N), to protect driveline components from improper operation.

There are several different positions for your shift lever.

PARK (P): This gear position locks your front wheels. It is the best position to use when you start your engine because your vehicle cannot move easily.

Make sure the shift lever is fully in PARK (P) before starting the engine. Your vehicle has an automatic transaxle shift lock control system. You must fully apply your regular brakes first and then press the shift lever button before you can shift from PARK (P) when the ignition key is in RUN. If you cannot shift out of PARK (P), ease pressure on the shift lever and psh the shift lever all the way info PARK (P) as you maintain brake application. Then press the shift lever button and move the shift lever into another gear. See *Shifting Out of Park (P) on page 161*.

⚠ CAUTION:

It is dangerous to get out of your vehicle if the shift lever is not fully in PARK (P) with the parking brake firmly set. Your vehicle can roll.

Do not leave your vehicle when the engine is running unless you have to. If you have left the engine running, the vehicle can move suddenly. You or others could be injured. To be sure your vehicle will not move, even when you are on fairly level ground, always set your parking brake and move the shift lever to PARK (P). See *Shifting Into Park (P) on page 160*. If you are pulling a trailer, see *Towing a Trailer on page 412*.

REVERSE (R): Use this gear to back up.

Notice: **Shifting to REVERSE (R) while your vehicle is moving forward could damage the transaxle. The repairs would not be covered by your warranty. Shift to REVERSE (R) only after your vehicle is stopped.**

To rock your vehicle back and forth to get out of snow, ice or sand without damaging your transaxle, see *If Your Vehicle is Stuck in Sand, Mud, Ice, or Snow on page 403*.

NEUTRAL (N): In this position, your engine does not connect with the wheels. To restart when you are already moving, use NEUTRAL (N) only. Also, use NEUTRAL (N) when your vehicle is being towed.

⚠ CAUTION:

Shifting into a drive gear while your engine is running at high speed is dangerous. Unless your foot is firmly on the brake pedal, your vehicle could move very rapidly. You could lose control and hit people or objects. Do not shift into a drive gear while your engine is running at high speed.

Notice: **Shifting out of PARK (P) or NEUTRAL (N) while the engine is running at high speed may damage the transaxle. The repairs would not be covered by your warranty. Be sure the engine is not running at high speeds when shifting your vehicle.**

DRIVE (D): This position is for normal driving. It provides the best fuel economy for your vehicle. If you need more power for passing, and you are:

- Going less than 35 mph (55 km/h), push your accelerator pedal about halfway down.
- Going about 35 mph (55 km/h) or more, push the accelerator all the way down.

  The vehicle will shift down to the next gear and have more power.

Downshifting the transaxle in slippery road conditions could result in skidding, see Skidding under *Loss of Control on page 387*

Notice: **If your vehicle seems to start up rather slowly or not shift gears when you go faster, and you continue to drive your vehicle that way, you could damage the transaxle. Have your vehicle serviced right away. You can drive in SECOND (2) when you are driving less than 35 mph (55 km/h) and DRIVE (D) for higher speeds until then.**

Warm-Up Shift

Your vehicle has a computer controlled transaxle designed to warm up the engine faster when the outside temperature is 35°F (2°C) or colder. You may notice that the transaxle will shift at a higher vehicle speed until the engine is warmed up. This is a normal condition designed to provide heat to the passenger compartment and defrost the windows more quickly. See *Climate Control System on page 217* and *Dual Climate Control System on page 220* for more information.

THIRD (3): This position is also used for normal driving. It reduces vehicle speed more than DRIVE (D) without using your brakes. You might choose THIRD (3) instead of DRIVE (D) when driving on hilly, winding roads, when towing a trailer, so there is less shifting between gears and when going down a steep hill.

SECOND (2): This position reduces vehicle speed more than DRIVE (D) without using your brakes. You can use SECOND (2) on hills. It can help control your speed as you go down steep mountain roads, but then you would also want to use your brakes off and on.

Notice: **Driving in SECOND (2) for more than 25 miles (40 km) or at speeds over 55 mph (90 km/h) may damage the transaxle. Also, shifting into SECOND (2) at speeds above 65 mph (105 km/h) can cause damage. Drive in THIRD (3) or DRIVE (D) instead of SECOND (2).**

Notice: **If your vehicle seems to start up rather slowly, or if it seems not to shift gears as you go faster, something may be wrong with a transaxle system sensor. If you drive very far that way, your vehicle can be damaged. So, if this happens, have your vehicle serviced right away. Until then, you can use SECOND (2) when you are driving less than 35 mph (55 km/h) and THIRD (3) for higher speeds.**

FIRST (1): This position reduces vehicle speed even more than SECOND (2) without using your brakes. You can use it on very steep hills, or in deep snow or mud. If the shift lever is put in FIRST (1) while the vehicle is moving forward, the transaxle will not shift into first gear until the vehicle is going slowly enough.

Notice: **Spinning the tires or holding the vehicle in one place on a hill using only the accelerator pedal may damage the transaxle. If you are stuck, do not spin the tires. When stopping on a hill, use the brakes, or parking brake to hold the vehicle in place.**

Parking Brake

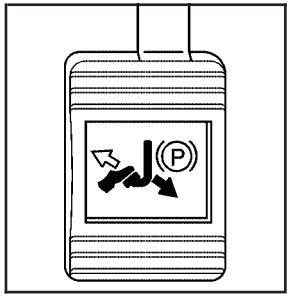

The parking brake is located under the instrument panel on the driver's side of the vehicle.

To set the parking brake, hold the regular brake pedal down with your right foot and push down on the parking brake pedal with your left foot.

If the ignition is on, the brake system warning light will come on. See *Brake System Warning Light on page 238*.

To release the parking brake, hold the regular brake pedal down with your right foot while you push down on the parking brake pedal with your left foot. When you lift your left foot from the parking brake pedal, it will pop up to the released position.

Notice: **Driving with the parking brake on can overheat the brake system and cause premature wear or damage to brake system parts. Verify that the parking brake is fully released and the brake warning light is off before driving.**

If you are towing a trailer and are parking on any hill, see *Towing a Trailer on page 412*.

Shifting Into Park (P)

⚠ CAUTION:

It can be dangerous to get out of your vehicle if the shift lever is not fully in PARK (P) with the parking brake firmly set. Your vehicle can roll. If you have left the engine running, the vehicle can move suddenly. You or others could be injured. To be sure your vehicle will not move, even when you are on fairly level ground, use the steps that follow. If you are pulling a trailer, see *Towing a Trailer on page 412*.

1. Hold the brake pedal down with your right foot and set the parking brake with your left foot.
2. Move the shift lever into PARK (P) by pulling the shift lever toward you and moving it up as far as it will go.
3. Turn the ignition key to LOCK.
4. Remove the key and take it with you. If you can leave your vehicle with the ignition key in your hand, your vehicle is in PARK (P).

Leaving Your Vehicle With the Engine Running

⚠ CAUTION:

It can be dangerous to leave your vehicle with the engine running. Your vehicle could move suddenly if the shift lever is not fully in PARK (P) with the parking brake firmly set. And, if you leave the vehicle with the engine running, it could overheat and even catch fire. You or others could be injured. Do not leave your vehicle with the engine running.

If you have to leave your vehicle with the engine running, be sure your vehicle is in PARK (P) and the parking brake is firmly set before you leave it. After you move the shift lever into PARK (P), hold the regular brake pedal down. Then, see if you can move the shift lever away from PARK (P) without first pulling it toward you. If you can, it means that the shift lever was not fully locked into PARK (P).

Torque Lock

If you are parking on a hill and you do not shift your vehicle into PARK (P) properly, the weight of the vehicle may put too much force on the parking pawl in the transaxle. You may find it difficult to pull the shift lever out of PARK (P). This is called torque lock. To prevent torque lock, set the parking brake and then shift into PARK (P) properly before you leave the driver's seat. To find out how, see *Shifting Into Park (P) on page 160*.

When you are ready to drive, move the shift lever out of PARK (P) before you release the parking brake.

If torque lock does occur, you may need to have another vehicle push yours a little uphill to take some of the pressure from the parking pawl in the transaxle, so you can pull the shift lever out of PARK (P).

Shifting Out of Park (P)

Your vehicle has an automatic transaxle shift lock control system which locks the shift lever in PARK (P) when the ignition is in the LOCK position. In addition, you must fully apply your regular brakes before you can shift from PARK (P) when the ignition is in RUN. See *Automatic Transaxle Operation on page 155*.

Parking Over Things That Burn

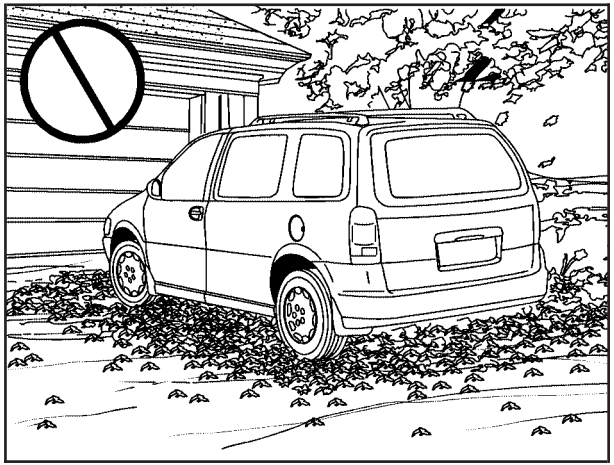

⚠ CAUTION:

Things that can burn could touch hot exhaust parts under your vehicle and ignite. Do not park over papers, leaves, dry grass, or other things that can burn.

Engine Exhaust

⚠ CAUTION:

Engine exhaust can kill. It contains the gas carbon monoxide (CO), which you cannot see or smell. It can cause unconsciousness and death.

You might have exhaust coming in if:

- **Your exhaust system sounds strange or different.**
- **Your vehicle gets rusty underneath.**
- **Your vehicle was damaged in a collision.**

CAUTION: (Continued)

CAUTION: (Continued)

- **Your vehicle was damaged when driving over high points on the road or over road debris.**
- **Repairs were not done correctly.**
- **Your vehicle or exhaust system has been modified improperly.**

If you ever suspect exhaust is coming into your vehicle:

- **Drive it only with all the windows down to blow out any CO; and**
- **Have your vehicle fixed immediately.**

Running the Engine While Parked

It is better not to park with the engine running. But if you ever have to, here are some things to know.

⚠ CAUTION:

Idling the engine with the climate control system off could allow dangerous exhaust into your vehicle. See the earlier caution under *Engine Exhaust on page 163*.

Also, idling in a closed-in place can let deadly carbon monoxide (CO) into your vehicle even if the climate control fan is at the highest setting. One place this can happen is a garage. Exhaust — with CO — can come in easily. NEVER park in a garage with the engine running.

Another closed-in place can be a blizzard. See *Winter Driving on page 399*.

⚠ CAUTION:

It can be dangerous to get out of your vehicle if the shift lever is not fully in PARK (P) with the parking brake firmly set. Your vehicle can roll. Do not leave your vehicle when the engine is running unless you have to. If you have left the engine running, the vehicle can move suddenly. You or others could be injured. To be sure your vehicle will not move, even when you are on fairly level ground, always set your parking brake and move the shift lever to PARK (P).

Follow the proper steps to be sure your vehicle will not move. See *Shifting Into Park (P) on page 160*.

If you are pulling a trailer, see *Towing a Trailer on page 412*.

Mirrors

Manual Rearview Mirror

While sitting in a comfortable driving position, adjust the mirror so you can see clearly behind your vehicle. Grip the mirror in the center to move it up or down and side to side. The day/night adjustment can lessen glare from the headlamps behind your vehicle. Pull the tab forward for daytime use; push it back for night use.

Outside Power Mirrors

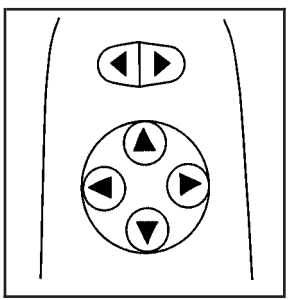

The controls, located on the driver's door, operate both outside rearview mirrors.

Push the top control to the left or right to choose either the driver's or passenger's outside rearview mirror. Leave the control in the center position to prevent moving the mirrors once they are adjusted.

Use the arrows on the bottom control to adjust the position of each mirror. Adjust each mirror so that you can see the side of your vehicle and the area behind it, while sitting in a comfortable driving position.

Both outside mirrors can be folded forward or rearward to prevent damage when going through car washes or confined spaces.

Outside Convex Mirror

⚠ CAUTION:

A convex mirror can make things (like other vehicles) look farther away than they really are. If you cut too sharply into the right lane, you could hit a vehicle on your right. Check your inside mirror or glance over your shoulder before changing lanes.

The passenger's side mirror is convex. A convex mirror's surface is curved so more can be seen from the driver's seat. It also makes things appear farther away than they really are.

Outside Heated Mirrors

If the vehicle has outside heated rearview mirrors, they are activated when the rear window defogger is turned on. See "Rear Window Defogger" in *Climate Control System on page 217* or *Dual Climate Control System on page 220*.

OnStar® System

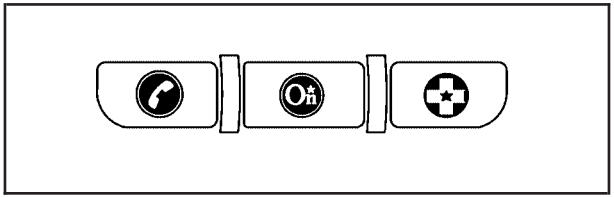

OnStar® uses several innovative technologies and live advisors to provide you with a wide range of safety, security, information, and convenience services. If your airbags deploy, the system is designed to make an automatic call to OnStar® Emergency where we can request emergency services be sent to your location. If you lock your keys in the vehicle, call OnStar® at 1-888-4-ONSTAR and they can send a signal to unlock your doors. If you need roadside assistance, press the OnStar® button and they can contact Roadside Service for you.

A complete OnStar® Owner's Guide and the Terms and Conditions of the OnStar® Subscription Service Agreement are included in the vehicle's OnStar® Subscriber Information packet located in your vehicle. For more information, visit www.onstar.com or www.onstar.ca, contact OnStar® at 1-888-4-ONSTAR (1-888-466-7827), or press the OnStar® button to speak with an OnStar® advisor 24 hours a day, 7 days a week.

OnStar® Services

For new vehicles equipped with OnStar®, the Safe & Sound Plan is included for one year from the date of purchase. You can extend this plan beyond the first year, or upgrade to the Directions & Connections® Plan to meet your needs. For more information, press the OnStar® button to speak with an advisor.

Safe & Sound Plan

- Automatic Notification of Airbag Deployment
- Emergency Services
- Roadside Assistance
- Stolen Vehicle Location Assistance
- AccidentAssist
- Remote Door Unlock/Vehicle Alert
- OnStar® Vehicle Diagnostics
- OnStar® Hands-Free Calling
- OnStar® Virtual Advisor

Directions & Connections® Plan

- All Safe & Sound Plan Services
- Driving Directions
- RideAssist
- Information and Convenience Services

OnStar® Hands-Free Calling

OnStar® Hands-Free Calling allows OnStar® subscribers to make and receive calls using voice commands at the touch of a button. Hands-Free Calling is fully integrated into the vehicle, and may be used with Pre-Paid Minute Packages or linked to a cell phone through OnStar® Shared Minutes Plan. To find out more, refer to the OnStar® Owner's Guide in the vehicle's glove box, visit www.onstar.com or www.onstar.ca, or speak with an OnStar® advisor by pressing the OnStar® button or calling 1-888-4-ONSTAR (1-888-466-7827).

OnStar® Virtual Advisor

Your vehicle may have Virtual Advisor. It is a feature of OnStar® Hands-Free Calling that uses your minutes to access weather, local traffic reports, and stock quotes. By pressing the phone button and giving a few simple voice commands, you can browse through the various topics. Customize your information profile at www.myonstar.com. See the OnStar® Owner's Guide for more information.

OnStar® Steering Wheel Controls

: Your vehicle may be equipped with a Talk/Mute button that can be used to interact with OnStar®.

See *Audio Steering Wheel Controls on page 367* for more information.

When calling into voice mail systems or to dial directory numbers, press this button once, wait for the response, say the number(s) to be dialed, wait for the number(s) to be repeated and then say “dial.” See the OnStar® Owner’s Guide for more information.

Universal Home Remote System

Universal Home Remote System (With Three Round LED)

The Universal Home Remote System provides a way to replace up to three hand-held Radio-Frequency (RF) transmitters used to activate devices such as garage door openers, security systems, and home lighting.

This device complies with Part 15 of the FCC Rules. Operation is subject to the following two conditions:

1. This device may not cause harmful interference.
2. This device must accept any interference received, including interference that may cause undesired operation.

The FCC Grant of Equipment Authorization Certificate number is KOBGTE05A.

This device complies with RSS-210 of Industry Canada. Operation is subject to the following two conditions:

1. This device may not cause interference.
2. This device must accept any interference received, including interference that may cause undesired operation of the device.

The Canadian Registration ID number is 3521A-GTE05A.

Changes or modifications to this system by other than an authorized service facility could void authorization to use this equipment.

Universal Home Remote System (With One Triangular LED)

The Universal Home Remote System provides a way to replace up to three hand-held radio-frequency (RF) transmitters used to activate devices such as garage door openers, security systems, and home lighting.

This device complies with Part 15 of the FCC Rules. Operation is subject to the following two conditions:

1. This device may not cause harmful interference.
2. This device must accept any interference received, including interference that may cause undesired operation.

The FCC Grant of Equipment Authorization Certificate number is CB2SAHL3.

This device complies with RSS-210 of Industry Canada. Operation is subject to the following two conditions:

1. This device may not cause interference.
2. This device must accept any interference received, including interference that may cause undesired operation of the device.

The Canadian Registration ID number is 2791021849A.

Changes or modifications to this system by other than an authorized service facility could void authorization to use this equipment.

Universal Home Remote System Operation (With Three Round LED)

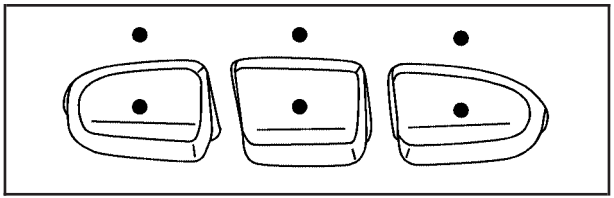

Your vehicle may have the Universal Home Remote System. If there are three round Light Emitting Diode (LED) above the Universal Home Remote System buttons, follow the instructions below. If there is one triangular LED above the Universal Home Remote System buttons, follow the instructions under Universal Home Remote System Operation (with one triangular LED).

This system provides a way to replace up to three remote control transmitters used to activate devices such as garage door openers, security systems, and home lighting.

Do not use the this system with any garage door opener that does not have the stop and reverse feature. This includes any garage door opener model manufactured before April 1, 1982.

Read the instructions completely before attempting to program the transmitter. Because of the steps involved, it may be helpful to have another person available to assist you in programming the transmitter.

Be sure to keep the original remote control transmitter for use in other vehicles, as well as, for future programming. You only need the original remote control transmitter for fixed code programming. It is also recommended that upon the sale or lease termination of the vehicle, the programmed buttons should be erased for security purposes. See “Erasing your Universal Home Remote Buttons” later in this section.

Be sure that people and objects are clear of the garage door or security device you are programming. When programming a garage door, it is advised to park outside of the garage.

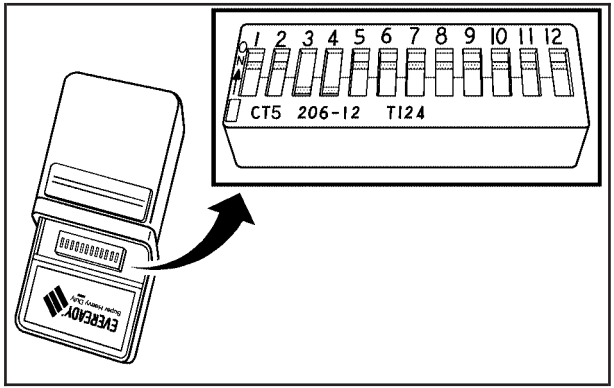

If you do not know if your garage door opener is a fixed code or rolling code device, open your garage door opener's remote control battery cover. Your garage door opener is a fixed code device if there is a panel of switches. If not, your garage door opener is a rolling code device.

Programming Universal Home Remote — Fixed Code

Fixed Code garage door openers are used for garage doors produced prior to 1996. Fixed code uses the same coded signal every time, which is manually programmed by setting DIP switches for a unique personal code.

Follow these steps to program up to three channels:

1. Remove the battery cover of the hand-held transmitter.

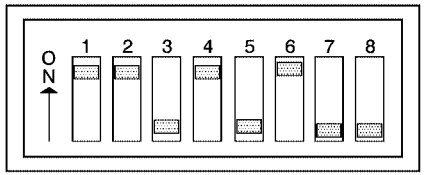

Switch Number	1	2	3	4	5	6	7	8
Switch Position	On	On	Off	On	Off	On	Off	Off

Example of Switch Settings

2. Write down the eight to 12 coding switch settings from left to right. When the switch is in the up position, write “on,” and when a switch is in the down position, write “off”. If a switch is set between the up and down position, write “middle”.
3. Enter these positions into the Universal Home Remote System as follows.

   Press and release all three buttons at the same time to put the device into programming mode.

Switch Number	1	2	3	4	5	6	7	8
Switch Position	On	On	Off	On	Off	On	Off	Off
Your UHR Button	Left	Left	Right	Left	Right	Left	Right	Right

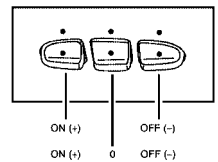

Example

4. The indicator light will blink slowly. In order from left to right, and within two and one-half minutes, enter each switch setting into the Universal Home Remote System. Push one button for each switch as follows:
   - Left button = “on” switch position.
   - Right button = “off” switch position.
   - Middle button = “middle” switch position.
5. After entering the switch settings, press and release all three buttons at the same time. The indicator lights will turn on.

6. Press and hold the button you would like to use to control the garage door until the garage door moves. The indicator light above the selected button should slowly blink. You may need to hold the button from five to 55 seconds.
7. Immediately release the button when the garage door moves. The indicator light will blink rapidly until programming is complete.
8. Press and release the button again. The garage door should move, confirming that programming is successful and complete.

To program another device such as an additional garage door opener, a security device, or home lighting, repeat Steps 1 through 8, choosing a different function button in Step 7 than what you used for the garage door opener.

Programming Universal Home Remote — Rolling Code

Rolling code garage door openers are used for garage doors produced after 1996 and are code protected. Rolling code means the coded signal is changed every time your remote control garage door opener is used.

Programming a rolling code garage door opener involves time-sensitive actions, so read the entire procedure before you begin. If you do not follow these actions, the device will time out and you will have to repeat the procedure.

Follow these steps to program up to three channels:

1. Press the two outside buttons at the same time for one to two seconds, and immediately release them.

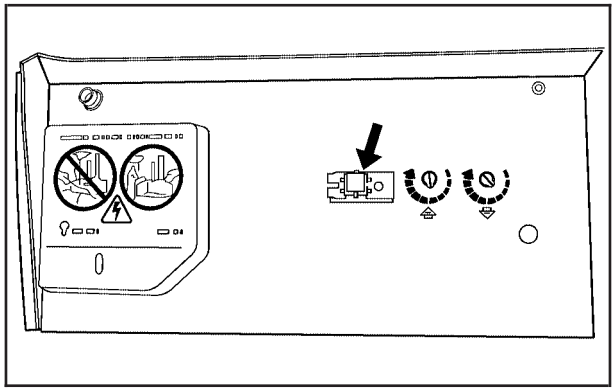

2. Go to the garage. Locate the garage door motor head and press and release the “learn” button.

   After pressing the “learn” button, you have 10 to 30 seconds to complete Step 4 depending on your garage control unit. If you cannot locate the “learn” button, refer to the owners guide for your garage door opener.

3. Press and hold the button you would like to use to control the garage door until the garage door moves. The indicator light, above the selected button, should slowly blink. You may need to hold the button from five to 20 seconds.
4. Immediately release the button when the garage door moves. The indicator light will blink rapidly until programming is complete.
5. Press and release the button again. The garage door should move, confirming that programming is successful and complete.

To program another device such as an additional garage door opener, a security device, or home lighting, repeat Steps 1 through 6, choosing a different function button in Step 4 than what you used for the garage door opener.

Using Universal Home Remote

Press and hold the appropriate button for at least half of a second. The indicator light will come on while the signal is being transmitted.

Reprogramming Universal Home Remote Buttons

You can reprogram any of the three buttons by repeating the instructions.

Erasing Universal Home Remote Buttons

You should erase the programmed buttons when you sell the vehicle or terminate your lease.

To erase either rolling code or fixed code on the Universal Home Remote device, do the following:

1. Press and hold the two outside buttons at the same time for approximately 20 seconds, until the indicator lights, located directly above the buttons, begin to blink rapidly.
2. Once the indicator lights begin to blink, release both buttons. The codes from all button will be erased.

For additional information on Universal Home Remote, see *Customer Assistance Offices on page 560*.

Universal Home Remote System Operation (With One Triangular LED)

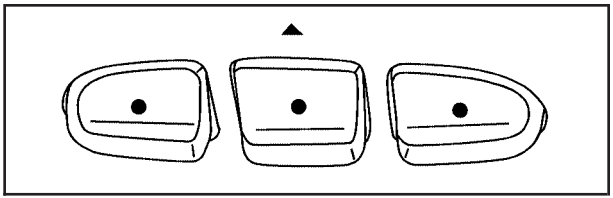

Your vehicle may have the Universal Home Remote System. If there is one triangular Light Emitting Diode (LED) above the Universal Home Remote buttons, follow the instructions below. If your vehicle has three round LED above the Universal Home Remote buttons, follow the instructions under Universal Home Remote System Operation (with three round LED).

Do not use the Universal Home Remote with any garage door opener that does not have the stop and reverse feature. This includes any garage door opener model manufactured before April 1, 1982. If you have a newer garage door opener with rolling codes, please be sure to follow Steps 6 through 8 to complete the programming of your Universal Home Remote Transmitter.

Read the instructions completely before attempting to program the Universal Home Remote. Because of the steps involved, it may be helpful to have another person available to assist you in the programming steps.

Keep the original hand-held transmitter for use in other vehicles as well as for future Universal Home Remote programming. It is also recommended that upon the sale of the vehicle, the programmed Universal Home Remote buttons should be erased for security purposes. See "Erasing Universal Home Remote Buttons" later in this section or, for assistance, see *Customer Assistance Offices on page 560*.

Be sure that people and objects are clear of the garage door or gate operator you are programming. When programming a garage door, it is advised to park outside of the garage.

It is recommended that a new battery be installed in your hand-held transmitter for quicker and more accurate transmission of the radio-frequency signal.

Programming Universal Home Remote

Follow these steps to program up to three channels:

1. Press and hold down the two outside Universal Home Remote buttons, releasing only when the Universal Home Remote indicator light begins to flash, after 20 seconds. Do not hold down the buttons for longer than 30 seconds and do not repeat this step to program a second and/or third hand-held transmitter to the remaining two Universal Home Remote buttons.
2. Position the end of your hand-held transmitter about 1 to 3 inches (3 to 8 cm) away from the Universal Home Remote buttons while keeping the indicator light in view.
3. Simultaneously press and hold both the desired Universal Home Remote button and the hand-held transmitter button. Do not release the buttons until Step 4 has been completed.

   Some entry gates and garage door openers may require you to substitute Step 3 with the procedure noted in "Gate Operator and Canadian Programming" later in this section.

4. The indicator light will flash slowly at first and then rapidly after Universal Home Remote successfully receives the frequency signal from the hand-held transmitter. Release both buttons.
5. Press and hold the newly-trained Universal Home Remote button and observe the indicator light.

   If the indicator light stays on continuously, programming is complete and your device should activate when the Universal Home Remote button is pressed and released.

   To program the remaining two Universal Home Remote buttons, begin with Step 2 under “Programming Universal Home Remote.” Do not repeat Step 1 as this will erase all of the programmed channels.

   If the indicator light blinks rapidly for two seconds and then turns to a constant light, continue with Steps 6 through 8 following to complete the programming of a rolling-code device, most commonly, a garage door opener.
6. Locate in the garage, the garage door opener receiver (motor-head unit). Locate the “Learn” or “Smart” button. This can usually be found where the hanging antenna wire is attached to the motor-head unit.
7. Firmly press and release the “Learn” or “Smart” button. The name and color of the button may vary by manufacturer.

   You will have 30 seconds to start Step 8.
8. Return to the vehicle. Firmly press and hold the programmed Universal Home Remote button for two seconds, then release. Repeat the press/hold/release sequence a second time, and depending on the brand of the garage door opener or other rolling code device, repeat this sequence a third time to complete the programming.

   The Universal Home Remote should now activate the rolling-code device.

To program the remaining two Universal Home Remote buttons, begin with Step 2 of “Programming Universal Home Remote.” Do not repeat Step 1, as this will erase all previous programming from the Universal Home Remote buttons.

Gate Operator and Canadian Programming

Canadian radio-frequency laws require transmitter signals to time out or quit after several seconds of transmission. This may not be long enough for Universal Home Remote to pick up the signal during programming. Similarly, some U.S. gate operators are manufactured to time out in the same manner.

If you live in Canada, or you are having difficulty programming a gate operator or garage door opener by using the “Programming Universal Home Remote” procedures, regardless of where you live, replace Step 3 under “Programming Universal Home Remote” with the following:

Continue to press and hold the Universal Home Remote button while you press and release every two seconds (cycle) the hand-held transmitter button until the frequency signal has been successfully accepted by the Universal Home Remote. The Universal Home Remote indicator light will flash slowly at first and then rapidly. Proceed with Step 4 under “Programming Universal Home Remote” to complete.

Using Universal Home Remote

Press and hold the appropriate Universal Home Remote button for at least half of a second. The indicator light will come on while the signal is being transmitted.

Erasing Universal Home Remote Buttons

To erase programming from the three Universal Home Remote buttons do the following:

1. Press and hold down the two outside buttons until the indicator light begins to flash, after 20 seconds. Do not hold the two outside buttons for longer than 30 seconds.
2. Release both buttons.

The Universal Home Remote is now in the training (learning) mode and can be programmed at any time beginning with Step 2 under “Programming Universal Home Remote” shown earlier in this section.

Individual buttons cannot be erased, but they can be reprogrammed. See “Reprogramming a Single Universal Home Remote Button” following this section.

Reprogramming a Single Universal Home Remote Button

To program a device to Universal Home Remote using a Universal Home Remote button previously trained, follow these steps:

1. Press and hold the desired Universal Home Remote button. Do not release the button.
2. The indicator light will begin to flash after 20 seconds. While still holding the Universal Home Remote button, proceed with Step 2 under “Programming Universal Home Remote” shown earlier in this section.

For additional information on Universal Home Remote, see *Customer Assistance Offices on page 560*.

Storage Areas

Your vehicle’s large carrying capacity can store many items. If the vehicle has an extended wheelbase, it can carry even larger items. The floor pins that are used to attach the seats, can be used to secure larger loads.

Glove Box

If the glove box has a lock, put your key into the lock and turn the key counterclockwise. To open the glove box, pull the latch release.

The glove box door has a detent to prevent the door from lowering too far. Open the glove box until the door is partway open, then pull the door down if you need it fully opened.

To close the glove box, the door must be pushed up past the detent. To lock the glove box, put your key into the lock and turn the key clockwise.

Cupholder(s)

There are cupholders located below the center instrument panel switchbank. The cupholders have a rubber liner that can be removed, so that larger cups can fit into the cupholders. You can also remove the liner to clean it.

To use the cupholders, pull the tray out. Push the tray back when not in use.

Your vehicle may be equipped with cupholders in the second row.

Overhead Console (Without Rail)

If your vehicle has an overhead console without the rail system, it has two reading lights, a courtesy light, and a switchbank. See *Overhead Console Switchbank on page 211* for more information.

Overhead Console (With Rail)

If your vehicle is equipped with an overhead console, it may contain the following:

- Reading lamps. See *Front Reading Lamps on page 209* or *Rear Reading Lamps on page 209*.
- Switchbank. See *Overhead Console Switchbank on page 211*.
- OnStar® System buttons. See *OnStar® System on page 167*.
- Universal Home Remote buttons. See *Universal Home Remote System (With Three Round LED) on page 169* or *Universal Home Remote System (With One Triangular LED) on page 170*.

See your dealer to purchase additional items for the rail system.

Storage Bin

Your vehicle may have a storage bin located on the overhead rail that you can use for storage.

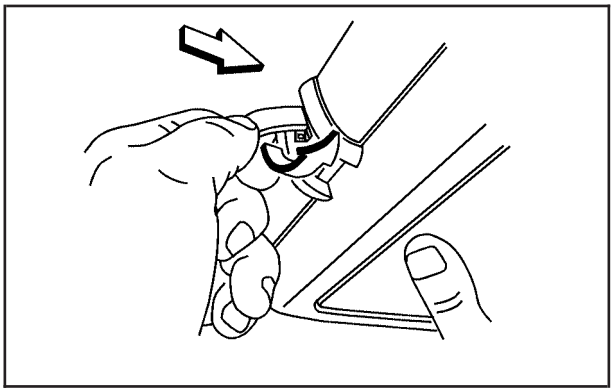

If your bin is equipped with the finger size latches do the following:

1. Place the storage bin on to the rails in the desired location.
2. Push firmly upward on the bin while supporting it with one hand.
3. Push in on the latch and then rotate it 90 degrees.

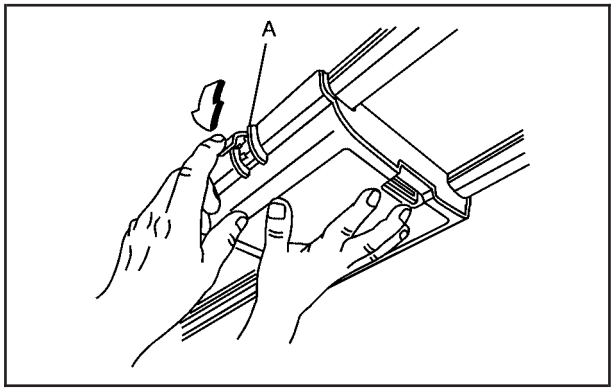

4. Firmly press down making sure the latch is flat with the ribs (A) on the storage bin.
5. Switch hands and repeat Steps 2 through 4 for the latch on the opposite side of the storage bin.
6. Reverse these steps in order to remove the storage bin.

If your bin is equipped with the hand size latches do the following:

1. Place the storage bin on to the rails in the desired location.
2. Push firmly upward on the bin while supporting it with one hand.
3. The bin will snap into place.

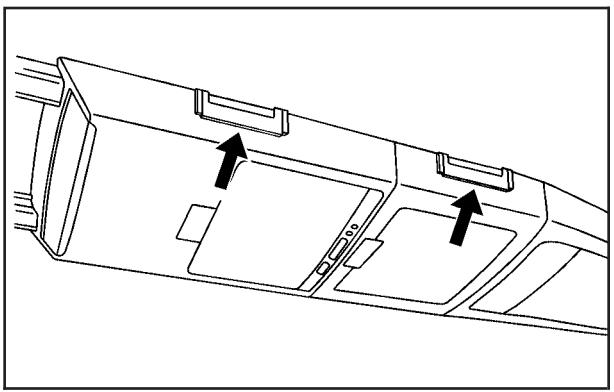

4. To remove the bin, support the bin with one hand while pulling each latch up and away from the bin.

The contents of the bin should never weigh more than 1.5 lbs (0.7 kg).

Always make sure to close and latch the bin before driving.

Floor Console Storage Area

If your vehicle has a storage compartment located on the front console below the front cupholders. Pull up and then forward on the handle to open the storage compartment.

Folding Tray

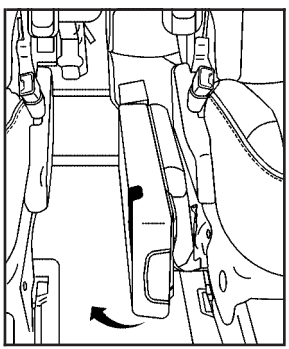

Your vehicle may be equipped with folding convenience trays located between seats. To use each tray lift up on the handle located on its front end, while pulling up on the tray to lock it into place. There are four cupholders on each tray.

Second Row Center Console

If your vehicle has the second row center console, use the following procedure to remove or install the console.

Removing the Center Console

1. Locate the attachment lever in an opening on the rear of the console
2. Pull the attachment lever upward to release the attachment hook.
3. Lift the console up to remove it from the vehicle.

Replacing the Center Console

⚠ CAUTION:

A second row center console that is not locked into place properly can move around in a crash or sudden stop. People in the vehicle could be injured. Be sure to lock the console into place properly when installing it.

1. Position the second row center console above the forward floor attachments between the second row bucket seats.

   For information on installing the seats, see *Rear Seat Operation on page 13*.
2. Place the console's front hooks onto the forward floor attachments.
3. Locate the attachment lever at the rear of the console and pull up.
4. Rock the rear attachment bracket onto the floor attachment and release the lever.
5. Pull up on the console to ensure the rear attachment hook is latched.

Luggage Carrier

⚠ CAUTION:

If you try to carry something on top of your vehicle that is longer or wider than the luggage carrier — like paneling, plywood, a mattress and so forth — the wind can catch it as you drive along. This can cause you to lose control. What you are carrying could be violently torn off, and this could cause you or other drivers to have a collision, and of course damage your vehicle. You may be able to carry something like this inside. But, never carry something longer or wider than the luggage carrier on top of your vehicle.

If you have the luggage carrier, you can load things on top of your vehicle. Crossrails are not standard on this vehicle and must be purchased at your dealer.

Notice: **Loading cargo on the luggage carrier that weighs more than 150 lbs (68 kg) or hangs over the rear or sides of the vehicle may damage your vehicle. Load cargo so that it rests on the slats as far forward as possible and against the side rails, making sure to fasten it securely.**

Do not exceed the maximum vehicle capacity when loading your vehicle. For more information on vehicle capacity and loading, see *Loading Your Vehicle on page 404*.

To prevent damage or loss of cargo as you are driving, check now and then to make sure the cargo is still securely fastened.

Convenience Net (With Rear Convenience Center)

Your vehicle may have a convenience net. The convenience net is designed to help keep small loads, from falling out of the vehicle when the liftgate is opened. Install the convenience net at the rear of your vehicle, inside the liftgate.

To use the convenience net, do the following:

1. Attach the upper loops to the posts on both sides of the liftgate opening. The label on the net should be in the upper left corner.
2. Attach the lower loops to the tabs at the rear edge of the rear convenience center.

When not in use, it is recommended that you take down the convenience net to extend the life of the net and to help retain its elasticity, and to keep the rear exit clear.

Convenience Net (Without Rear Convenience Center)

Your vehicle may have a convenience net. The convenience net is designed to help keep small loads, like grocery bags, from falling over. Install the convenience net at the rear of your vehicle, inside the liftgate.

To use the convenience net, do the following:

1. Attach the upper loops to the posts on both sides of the liftgate opening. The label on the net should be in the upper left corner.
2. Attach the lower hooks to the metal rings on the floor.
3. Once you have loaded items into the net, stretch the higher side of the net up and over the top of the load to hold it firmly in place.

The convenience net has a maximum capacity of 100 lbs (45 kg). It is not designed to hold larger, heavier loads. Store such loads on the floor of your vehicle, as far forward as you can.

When not in use, it is recommended that you take down the convenience net to extend the life of the net and to help retain its elasticity, and to keep the rear exit clear.

Convenience Center

⚠ CAUTION:

If any removable convenience item is not secured properly, it can move around in a collision or sudden stop. People in the vehicle could be injured. Be sure to secure any such item properly.

Your vehicle may have a convenience center. It provides extra storage space for the rear of the vehicle.

To open the convenience center, pull up on the door latch located on the front of the cover. The convenience center cover has two automatic prop rods to hold it up and in place.

To close the convenience center cover, you must pull one of the prop rod linkages toward you while holding onto the door latch and lower the convenience center cover to close it.

Removing the Convenience Center

1. Make sure that all items are off the convenience center and that it is empty.
2. Turn the hand knob, located at the rear of the convenience center, counterclockwise until the knob is loose.
3. Lift up on the hand knob, then grip and pull up on the convenience center to remove it from the vehicle.

Replacing the Convenience Center

1. Make sure the third row seat is properly installed in the vehicle. See *Third Row Seat on page 27* for more information. If the third row seat is not in the vehicle with the convenience center, the convenience center will not be locked into the correct position in the vehicle.
2. Make sure that the convenience center is empty and closed.
3. Lift the convenience center up and into the rear of the vehicle.
4. Slide the convenience center in and align it to the rear seat.
5. Press down on the front of the convenience center so the center is aligned on the sill mounting bracket.
6. Turn the hand knob clockwise until it is tight.
7. Pull up on the convenience center to make sure it is locked into place.

The cover of the convenience center can be left in its upright position while the vehicle is moving.

The convenience center and the third row seat both have a maximum weight capacity of 400 lbs (181.6 kg).

Notice: **Overloading your vehicle may cause damage. Repairs would not be covered by your warranty. Do not overload your vehicle.**

NOTES

Section 3 Instrument Panel

Instrument Panel Overview 192
Hazard Warning Flashers 194
Other Warning Devices 194
Horn 194
Tilt Wheel 195
Turn Signal/Multifunction Lever 195
Turn and Lane-Change Signals 196
Headlamp High/Low-Beam Changer 197
Flash-to-Pass 197
Windshield Wipers 197
Windshield Washer 198
Rear Window Wiper/Washer 199
Cruise Control 200
Exterior Lamps 204
Wiper Activated Headlamps 205
Headlamps on Reminder 205
Daytime Running Lamps (DRL)/Automatic Headlamp System 205
Instrument Panel Brightness 206
Interior Lamps Control 207
Dome Lamp 207
Entry Lighting 208
Delayed Lighting 208
Exit Lighting 209
Front Reading Lamps 209
Rear Reading Lamps 209
Cargo Lamp 210
Electric Power Management 210
Battery Run-Down Protection 211
Overhead Console Switchbank 211
Ultrasonic Rear Parking Assist (URPA) 212
Accessory Power Outlet(s) 214
Power Outlet 115 Volt Alternating Current 215
Cigarette Lighter 216

Climate Controls 217
Climate Control System 217
Dual Climate Control System 220
Outlet Adjustment 223
Rear Climate Control System (Option A, Uplevel) 224
Rear Climate Control System (Option B, Uplevel) 226
Passenger Compartment Air Filter 228

Warning Lights, Gages, and Indicators 230
Instrument Panel Cluster 231
Speedometer and Odometer 232
Trip Odometer 232
Tachometer 232

Safety Belt Reminder Light 232
Passenger Safety Belt Reminder Light 233
Airbag Readiness Light 234
Passenger Airbag Status Indicator 235
Charging System Light 237
Brake System Warning Light 238
Anti-Lock Brake System Warning Light 239
Traction Control System (TCS) Warning Light 240
Engine Coolant Temperature Gage 241
Malfunction Indicator Lamp 242
Oil Pressure Light 246
Security Light 247
Cruise Control Light 247
Highbeam On Light 247
Fuel Gage 248
Low Fuel Warning Light 248

Driver Information Center (DIC) 249
DIC Operation and Displays 249
DIC Compass (Uplevel Only) 254
DIC Warnings and Messages 256
DIC Vehicle Personalization (Uplevel Only) 275

Audio System(s) 284
Setting the Time 285
Radio with CD 286
Using an MP3 301
XM Radio Messages 307
Navigation/Radio System 309
Rear Seat Entertainment System (Option A, Uplevel) 309
Rear Seat Entertainment System (Option B, Uplevel) 324
Rear Seat Audio (RSA) (Option A, Uplevel) 340
Rear Seat Audio (RSA) (Option B, Uplevel) 343
Mobile Digital Media System 345
Theft-Deterrent Feature 367
Audio Steering Wheel Controls 367
Radio Reception 368
Care of Your CDs and DVDs 369
Care of the CD and DVD Player 369
Fixed Mast Antenna 370
XM™ Satellite Radio Antenna System 370
Chime Level Adjustment 370

NOTES

Instrument Panel Overview

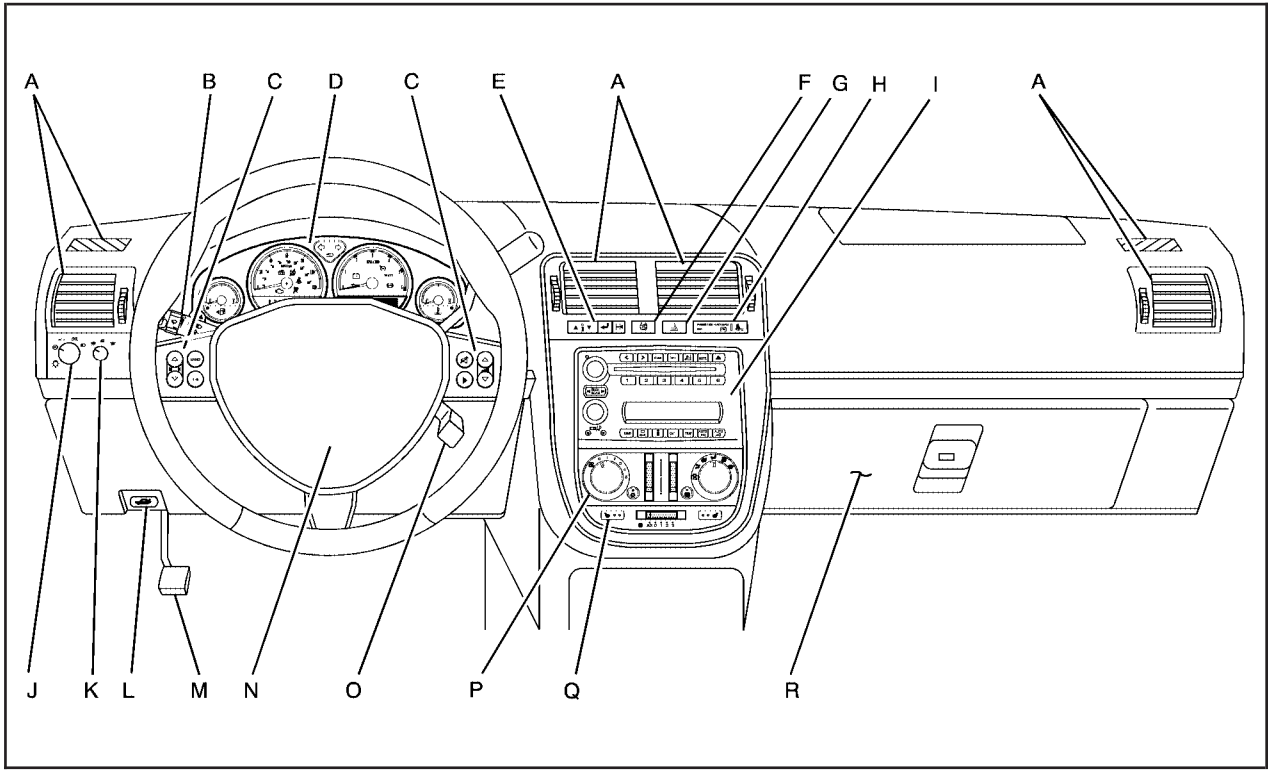

The main components of the instrument panel are the following:

A. Air Outlets. See *Outlet Adjustment on page 223*.

B. Turn Signal/Multifunction Lever. See *Turn Signal/Multifunction Lever on page 195*.

C. Audio Steering Wheel Controls (If Equipped). See *Audio Steering Wheel Controls on page 367*.

D. Instrument Panel Cluster. See *Instrument Panel Cluster on page 231*.

E. Driver Information Center (DIC) Controls (If Equipped). See *Driver Information Center (DIC) on page 249*.

F. Traction Control System Button (If Equipped). See *Traction Control System (TCS) on page 379*.

G. Hazard Warning Flasher Switch. See *Hazard Warning Flashers on page 194*.

H. Passenger Airbag Status And Passenger Seatbelt Reminder Indicator. See *Passenger Airbag Status Indicator on page 235* and *Passenger Safety Belt Reminder Light on page 233*.

I. Audio System. See *Audio System(s) on page 284*.

J. Exterior Lamps Control. See *Exterior Lamps on page 204*.

K. Interior Lamps Control. See *Interior Lamps Control on page 207*. Instrument Panel Brightness Control. See *Instrument Panel Brightness on page 206*.

L. Hood Release. See *Hood Release on page 437*.

M. Parking Brake. See *Parking Brake on page 159*.

N. Horn. See *Horn on page 194*.

O. Cruise Controls (If Equipped). See *Cruise Control on page 200*.

P. Climate Controls. See *Climate Control System on page 217*. Dual Climate Controls. See *Dual Climate Control System on page 220*.

Q. Heated Seat Controls (If Equipped). See *Heated Seats on page 10*.

R. Glove Box. See *Glove Box on page 180*.

Hazard Warning Flashers

Your hazard warning flashers let you warn others. They also let police know you have a problem. Your front and rear turn signal lamps will flash on and off.

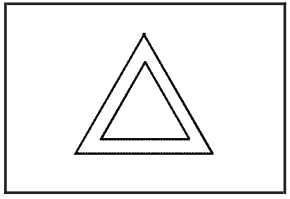

The hazard warning flasher button is located in the center of the instrument panel.

Your hazard warning flashers work no matter what position your key is in, and even if the key is not in the ignition switch.

Press the button to make the front and rear turn signal lamps flash on and off. Press the button again to turn the flashers off.

When the hazard warning flashers are on, your turn signals will not work.

Other Warning Devices

If you carry reflective triangles, you can set them up at the side of the road about 300 feet (100 m) behind your vehicle.

Horn

Press near or on the horn symbols on your steering wheel pad to sound the horn.

Tilt Wheel

A tilt wheel allows you to adjust the steering wheel before you drive. You can raise the steering wheel to the highest level to give your legs more room when you enter and exit the vehicle.

The lever that allows you to tilt the steering wheel is located on the left side of the steering column.

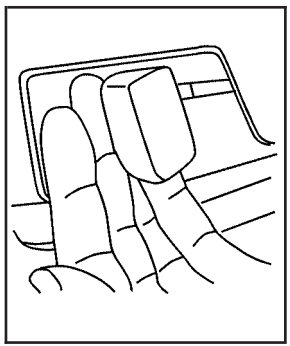

To tilt the wheel, hold the wheel and pull the lever. Then move the wheel to a comfortable position and release the lever to lock the wheel in place.

Turn Signal/Multifunction Lever

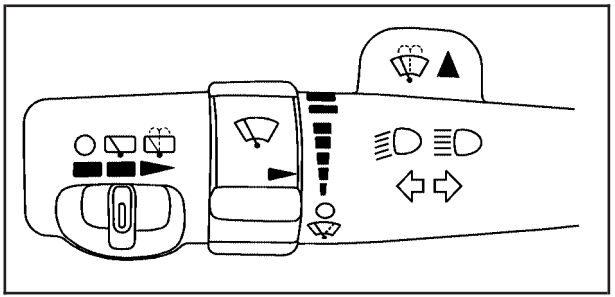

The lever on the left side of the steering column includes the following:

- Turn and Lane Change Signals. See *Turn and Lane-Change Signals on page 196*.
- Headlamp High/Low-Beam Changer. See *Headlamp High/Low-Beam Changer on page 197*.
- Flash-to-Pass. See *Flash-to-Pass on page 197*.
- Windshield Wipers. See *Windshield Wipers on page 197*.

- Windshield Washer. See *Windshield Washer on page 198*.
- Rear Window Wiper. See *Windshield Washer on page 198*.
- Rear Window Washer. See *Windshield Washer on page 198*.

For information on the headlamps, see *Exterior Lamps on page 204*.

Turn and Lane-Change Signals

The turn signal has two upward (for right) and two downward (for left) positions. These positions allow you to signal a turn or a lane change.

To signal a turn, move the lever all the way up or down. When the turn is finished, the lever will return automatically.

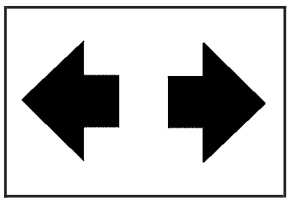

An arrow on the instrument panel cluster will flash in the direction of the turn or lane change.

To signal a lane change, just raise or lower the lever until the arrow starts to flash. Hold it there until you complete your lane change. The lever will return by itself when you release it.

As you signal a turn or a lane change, if the arrow flashes faster than normal, a signal bulb may be burned out and other drivers will not see your turn signal.

If a bulb is burned out, replace it to help avoid an accident. If the arrows do not go on at all when you signal a turn, check for burned-out bulbs and check the fuse. See *Bulb Replacement on page 471* and *Fuses and Circuit Breakers on page 527*.

If you have a trailer towing option with added wiring for the trailer lamps, the signal indicator will flash at a normal rate even if a turn signal bulb is burned out. Check the front and rear turn signal lamps regularly to make sure they are working.

Turn Signal On Chime

If either turn signal is left on for more than 3/4 mile (1.2 km), a chime will sound to let the driver know to turn it off. If you need to leave the signal on for more than 3/4 mile (1.2 km), turn off the signal and then turn it back on.

Headlamp High/Low-Beam Changer

To change the headlamps from low beam to high beam, push the turn signal/multifunction lever away from you.

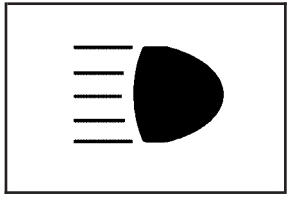

When the high beams are on, this light will appear on the instrument panel cluster.

To change the headlamps from high beam to low beam, pull the turn signal/multifunction lever toward you.

Flash-to-Pass

When the headlamps are off, pull the lever toward you to momentarily turn on the high beams. This will signal that you are going to pass. When you release the lever, they will turn off.

Windshield Wipers

You control the windshield wipers by turning the band with the wiper symbol on it.

(Mist): For a single wiping cycle, turn the band to mist. Hold it there until the wipers start. Then let go. The wipers will stop after one wipe. If you want more wipes, hold the band on mist longer.

(Off): To stop the wipers, move the band to off.

(Delay): You can set the wiper speed for a long or short delay between wipes. This can be very useful in light rain or snow. Turn the band to choose the delay time. The closer to the top of the lever, the shorter the delay.

(Low Speed): For steady wiping at low speed, turn the band away from you to the first solid band past the delay settings. For high-speed wiping, turn the band further, to the second solid band past the delay settings. To stop the wipers, move the band to off.

(High Speed): For high-speed wiping, turn the band further, to the second solid band past the delay settings.

Be sure to clear ice and snow from the wiper blades before using them. If they are frozen to the windshield, carefully loosen or thaw them. If your blades do become worn or damaged, get new blades or blade inserts.

Windshield Washer

(Windshield Washer): Press and hold the windshield washer paddle with this symbol on it to wash your windshield. The washers and wipers will operate.

When you release the paddle, the washers will stop, and the wipers will continue to operate for two cycles, unless your wipers had already been on. In that case, the wipers will resume the wiper speed you had selected earlier.

⚠ CAUTION:

In freezing weather, do not use your washer until the windshield is warmed. Otherwise the washer fluid can form ice on the windshield, blocking your vision.

Rear Window Wiper/Washer

⚠ CAUTION:

In freezing weather, do not use your washer until the windshield is warmed. Otherwise the washer fluid can form ice on the windshield, blocking your vision.

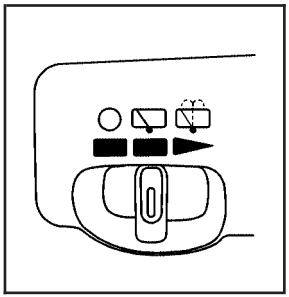

If your vehicle has the rear window washer/wiper, the controls are located on the end of the turn signal/multifunction lever.

○ **(Off):** Move the lever to this position to turn the rear washers/wipers off.

(Rear Wiper): Move the lever to this position to turn the rear wipers on.

(Rear Washer/Wiper): Move the lever to this position to wash and wipe the rear window.

The rear window washer uses the same fluid bottle as the windshield washer. However, the rear window washer will run out of fluid before the windshield washer. If you can wash your windshield but not your rear window, check the fluid level.

Cruise Control

⚠ CAUTION:

Cruise control can be dangerous where you cannot drive safely at a steady speed. So, do not use your cruise control on winding roads or in heavy traffic.

Cruise control can be dangerous on slippery roads. On such roads, fast changes in tire traction can cause excessive wheel slip, and you could lose control. Do not use cruise control on slippery roads.

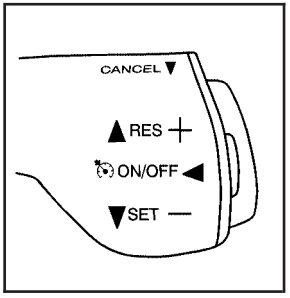

If your vehicle has cruise control, the lever is located below the windshield wiper control on the right side of the steering wheel.

▲ **RES + (Resume/Accelerate):** Push the lever up to resume the cruise control speed, or to accelerate when passing another vehicle.

(CRUISE CONTROL) ON/OFF ◀: Press the button on the end of the lever to turn the cruise control on. Press it again to turn cruise control off.

▼ **SET — (Set/Coast/Decelerate):** Push the lever down to set the cruise speed. If the cruise speed is already set this position can be used to coast or decelerate from a higher speed.

CANCEL ▼: Pull the lever to cancel the cruise control speed.

Cruise control allows a speed of approximately 25 mph (40 km/h) or more to be maintained without keeping your foot on the accelerator. This is helpful on long trips. Cruise control does not work at speeds below about 25 mph (40 km/h).

When the brakes are applied, the cruise control shuts off.

If the vehicle is in cruise control and the Traction Control System (TCS) begins to limit wheel spin, the cruise control will automatically disengage. See *Traction Control System (TCS) on page 379*. When road conditions allow, the cruise control can be used again.

Setting Cruise Control

⚠ CAUTION:

If you leave your cruise control on when you are not using cruise, you might hit a button and go into cruise when you do not want to. You could be startled and even lose control. Keep the cruise control switch off until you want to use cruise control.

1. Push the button at the end of the cruise control lever to turn the cruise control on.
2. Accelerate to the desired speed.
3. Push down on the cruise control lever and release it. This will set the speed in cruise control.
4. Remove your foot from the accelerator pedal.

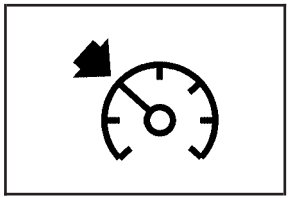

This symbol will appear on the instrument panel cluster when the cruise control is set.

This symbol will disappear when the brakes are applied or the cruise control is cancelled. It will reappear when the set cruise speed is resumed.

Resuming a Set Speed

If the cruise control is set at a desired speed and then the brakes are applied, the cruise control shuts off. But the cruise control does not need to be reset.

Once the vehicle is traveling approximately 25 mph (40 km/h) or more, the cruise control lever can be pushed upward toward the plus (resume/accelerate) position to return to the preset cruise speed.

The vehicle will return to and stay at the preset cruise speed. If the cruise control lever is pushed up and held toward the plus (resume/accelerate) position, the vehicle speed will increase until the lever is released or the brakes are applied. Do not continue to hold the lever in the plus (resume/accelerate) position, unless a faster speed is desired.

Increasing Speed While Using Cruise Control

There are two ways to go to a higher speed:

- Use the accelerator pedal to get to the higher speed. Push up on the cruise control lever toward the plus (resume/accelerate) position, then release the lever and take your foot off the accelerator pedal. The vehicle will now cruise at the higher speed.
- Push up and hold the cruise control lever toward the plus (resume/accelerate) position until the vehicle reaches the desired speed. Then release the cruise control lever. To increase the vehicle's speed in very small amounts, push up briefly on the cruise control lever and release it. Each time this is done, the vehicle will speed up approximately one mph (1.6 km/h).

The acceleration feature will only work after the cruise control speed has been set by pushing the cruise control lever down to the set position.

Reducing Speed While Using Cruise Control

There are two ways to reduce the vehicle's speed while using cruise control:

- Push the cruise control lever downward toward the minus (set/coast/decelerate) position until a lower speed is reached, then release it.
- To slow down in very small amounts, push the cruise control lever downward toward the minus (set/coast/decelerate) position briefly. Each time this is done, the vehicle will slow down approximately one mph (1.6 km/h).

Passing Another Vehicle While Using Cruise Control

Use the accelerator pedal to increase the vehicle's speed. When you take your foot off the pedal, the vehicle will slow down to the cruise control speed set earlier.

Using Cruise Control on Hills

How well the cruise control will work on hills depends upon the vehicle's speed, its load, and the steepness of the hills. When going up steep hills, the accelerator pedal might have to be used in order to maintain the vehicle's speed. When going downhill, the brakes might have to be applied, or the transaxle might have to be shifted to a lower gear to keep the vehicle's speed down. Doing either of these things will take the vehicle out of cruise. It may be better not to use the cruise control if the brakes constantly have to be applied, or the vehicle continuously needs to be shifted to a lower gear.

Cancelling Cruise Control

To cancel a cruise control session, pull the cruise control lever forward, or step lightly on the brake pedal.

Doing either of these things will only end the current cruise control session, but the set speed will be retained in memory.

Push the button at the end of the cruise control lever to turn the system off.

Erasing Speed Memory

When the cruise control or the ignition is turned off, the cruise control set speed memory is erased.

Exterior Lamps

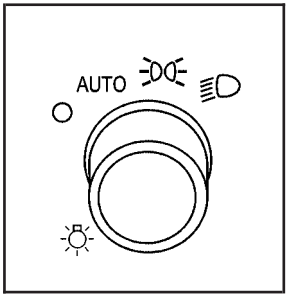

The control to the left of the steering column operates the exterior lamps.

(Off): Turn the control to this position to toggle off all lamps. This is a momentary control that will spring back to AUTO when released.

This momentary control will turn the automatic headlamps and/or the Daytime Running Lamps on and off for U.S. vehicles. For vehicles first sold in Canada, this is only true when the transaxle is in PARK (P).

AUTO (Automatic): Turn the control to this position to set your headlamps in automatic mode. AUTO mode, if enabled, will turn the exterior lamps on and off automatically depending on how much light is available outside the vehicle.

Due to the momentary switch design, your automatic lights may be disabled even if the control is in the AUTO position.

(Parking Lamps): Turn the control to this position to turn on the parking lamps together with the following:

- Taillamps
- Instrument Panel Lights

(Headlamps): Turn the control to this position to turn on the headlamps, together with the previously listed lamps and lights.

Wiper Activated Headlamps

This feature, if equipped, will automatically activate the headlamps and parking lamps after the windshield wipers have been in use for about 30 seconds and when all of the following conditions are met.

- The exterior lamp control is in AUTO.
- The headlamps have not already been activated by automatic lighting.
- The automatic lighting feature has not been disabled using the exterior lamp control.

See *Exterior Lamps on page 204* for additional information.

If the wipers are activated for over 30 seconds and the exterior lamp control is in the parking lamps position, or the automatic lighting feature has been disabled using the exterior lamp control, a HEADLAMPS SUGGESTED message will appear on the Driver Information Center, if equipped.

Headlamps on Reminder

If you turn the ignition to LOCK while leaving the lamps on, you will hear a warning chime once the driver's door is opened.

Daytime Running Lamps (DRL)/Automatic Headlamp System

Daytime Running Lamps (DRL) can make it easier for others to see the front of your vehicle during the day. DRL can be helpful in many different driving conditions, but they can be especially helpful in the short periods after dawn and before sunset. Fully functional Daytime Running Lamps are required on all vehicles first sold in Canada.

A light sensor on top of the instrument panel makes the DRL work, so be sure it is not covered. The DRL system will make front parking and turn signal lamps come on in daylight when the following conditions are met:

- The ignition is on.
- The exterior lamps control is off.

When the DRL are on, only your front turn signal lamps will be on. Your instrument panel will not be lit up.

When it is dark enough outside, the exterior lamps will come on automatically. When it is bright enough outside, the exterior lamps will turn off and the DRL will turn on. Of course, you may still turn on the headlamps any time you need to.

If you start your vehicle in a dark garage, the automatic headlamp system will come on immediately. Once you leave the garage, it will take approximately 30 seconds for the automatic headlamp system to change to DRL if it is light outside. During that delay, your instrument panel cluster may not be as bright as usual. Make sure your instrument panel brightness control is in the full bright position. See *Instrument Panel Brightness on page 206*.

To idle your vehicle with the DRL and automatic headlamps off, toggle the exterior lamp control to off after starting the vehicle.

As with any vehicle, you should turn on the regular headlamp system when you need it.

Instrument Panel Brightness

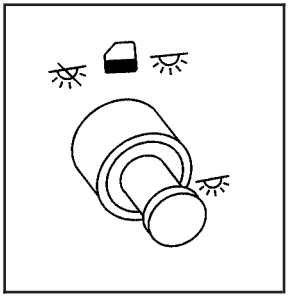

The knob to adjust the instrument panel brightness is located in the center of the interior lamp controls.

Turn the knob clockwise to brighten the lights and counterclockwise to dim them.

Interior Lamps Control

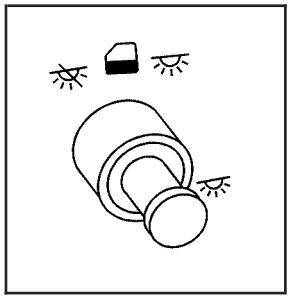

The interior lamp control is located to the right of the exterior lamp controls on the instrument panel to the left of the steering column.

(Interior Lamp Override): Turn the outer knob to this position to have your interior lamps remain off while any door is open.

(Door): Turn the outer knob to this position to turn the interior lamps on while any door is open and when the ignition key is removed from the ignition.

(Interior Lamps): Turn the outer knob to this position to turn the interior lamps on.

Turn the inner knob to adjust the instrument panel brightness, described earlier in this section.

Dome Lamp

The dome lamp is located in the headliner and has two buttons to manually turn it on or off. The dome lamp will come on each time you open a door, unless you turn on the interior lamps override feature. See *Interior Lamps Control on page 207*.

Entry Lighting

With entry lighting, the interior of your vehicle is illuminated so that you can see inside before you enter your vehicle. The lamps will come on for 20 seconds if you unlock your door using your key or the remote keyless entry transmitter and the ignition is in LOCK. After 20 seconds have passed, the interior lamps will slowly fade out. The lamps will turn off before the 20 seconds if you do one of the following:

- Lock all the doors using the key.
- Press lock on the power door lock switch.
- Press lock on the remote keyless entry transmitter.

When any door is opened, entry lighting is cancelled. The interior lamps will stay on while any door or the liftgate is open, and slowly fade out when all doors and the liftgate are closed.

The interior lamps may stay on for up to 25 seconds after all doors have been closed if they have not been locked. See *Delayed Lighting on page 208*.

To turn the entry lighting feature off or on, see *DIC Vehicle Personalization (Uplevel Only) on page 275*.

Delayed Lighting

The delayed lighting feature will continue to illuminate the interior for 20 seconds after all doors have been closed, so that you can find your ignition and buckle your safety belt at night. Delayed lighting will not occur while the ignition is in RUN or ACCESSORY. After 20 seconds have passed, the interior lamps will slowly fade out. The lamps will fade out before the 20 seconds have passed if you do one of the following:

- Turn the ignition to RUN or ACCESSORY.
- Lock all doors using the remote keyless entry transmitter.
- Lock all doors using the power door lock switch or the key.

To turn the delayed lighting feature off or on, see *DIC Vehicle Personalization (Uplevel Only) on page 275*.

Exit Lighting

With exit lighting, the interior lamps will come on for about 25 seconds whenever you remove the key from the ignition. If you turn the ignition key to RUN or ACCESSORY, the lamps will fade out. The lamps will also fade out if you lock the doors with the power door lock switch or the remote keyless entry transmitter.

When any door is opened, exit lighting is cancelled. The interior lamps will stay on while any door or the liftgate is open, and slowly fade out when all doors and the liftgate are closed.

The interior lamps may stay on for up to 20 seconds after all doors have been closed if they have not been locked. See *Delayed Lighting on page 208*.

To turn the exit lighting feature off or on, see *DIC Vehicle Personalization (Uplevel Only) on page 275*.

Front Reading Lamps

There are two reading lamps and one courtesy lamp in the overhead console. To turn either reading lamp on or off, press the lens of the lamp. The courtesy lamp will come on each time you open a door, unless you turn on the interior lamps override feature. See *Interior Lamps Control on page 207*.

Rear Reading Lamps

There are two reading lamps in the third row headliner. To turn either reading lamp on or off, press the lens of the lamp.

There may also be a reading lamp in the second row, integrated with the dome lamp. To turn the second row reading lamp on or off, press the button next to the lamp lens.

Cargo Lamp

The cargo lamp is located in the rear of your vehicle, above the liftgate opening, and does not have a switch. The cargo lamp will come on each time you open a door, unless you turn on the interior lamps override. See *Interior Lamps Control on page 207*.

Electric Power Management

This vehicle has Electric Power Management (EPM), an advanced control system. It estimates the battery's temperature and state of charge and then adjusts the voltage for best performance and extended life of the battery.

When the battery's state of charge is low, the voltage is raised slightly to quickly put the charge back in. When the state of charge is high, the voltage is lowered slightly to prevent overcharging. If the vehicle has a voltmeter gage, you may see the voltage move up or down. This is normal. If there is a problem, an alert will be displayed.

The battery can be discharged at idle if the electrical loads are very high. This is true for all vehicles. This is because the generator (alternator) may not be spinning fast enough at idle to produce all the power that is needed for very high electrical loads.

A high electrical load occurs when several of the following loads are on: headlamps, high beams, fog lamps, rear window defogger, climate control fan at high speed, heated seats, engine cooling fans, trailer loads, and loads plugged into accessory power outlets.

EPM works to prevent excessive discharge of the battery. It does this by balancing the generator's output and the vehicle's electrical needs. It can increase engine idle speed to generate more power, whenever needed. It can temporarily reduce the power demands of some accessories.

Normally, these actions occur in steps or levels, without being noticeable. In rare cases at the highest levels of corrective action, this action may be noticeable to the driver. If so, a Driver Information Center (DIC) message might be displayed, such as Battery Saver Active or Battery Voltage Low. If this message is displayed, it is recommended that the driver reduce the electrical loads as much as possible.

Battery Run-Down Protection

Your vehicle has a feature to help prevent you from draining the battery, in case you accidentally leave the interior lamps on. If you leave any interior lamps on while the ignition is in lock or off, they will automatically turn off after 10 minutes. The lamps will not come back on again until you do one of the following:

- Turn the ignition to RUN or ACCESSORY
- Open a closed door, or close and reopen a door.
- Turn the interior lamps on if they are in the door or override position.
- Turn the interior lamps to the door or override position and then to on again if the interior lamp control is in the on position.

If your vehicle has less than 15 miles (25 km) on the odometer, the battery saver will turn off the lamps after only three minutes.

Overhead Console Switchbank

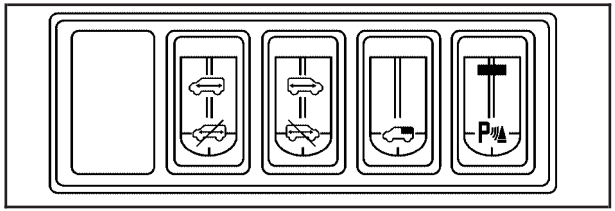

The overhead console switchbank is located in the overhead console. This switchbank may include the following:

- Power Sliding Door(s)/Override Switch(es). See *Power Sliding Door (PSD) on page 134*.
- Power Rear Quarter Windows. See *Power Rear Quarter Windows on page 145*.
- Ultrasonic Rear Parking Assist (URPA) Disable Switch. See *Ultrasonic Rear Parking Assist (URPA) on page 212*.

If your vehicle does not have some of these options, there will be a blank.

Ultrasonic Rear Parking Assist (URPA)

If your vehicle is equipped with the Ultrasonic Rear Parking Assist (URPA) system, it is designed to help you park, while the vehicle is in REVERSE (R). It operates only at very low speeds, less than 3 mph (5 km/h). URPA can help make parking easier and to help you avoid colliding with objects such as parked vehicles. The URPA system can detect objects up to 5 feet (1.5 m) behind the vehicle, and tell you how close these objects are from your rear bumper.

Your vehicle's URPA operates when the shift lever is moved into REVERSE (R) and the vehicle speed is less than 3 mph (5 km/h). Four ultrasonic sensors located at the rear bumper are used to detect the distance to the object. The URPA display is located inside the vehicle, near the rear window. It has three color-coded lights used to provide distance and system information to the driver.

⚠ CAUTION:

The Ultrasonic Rear Park Assist (URPA) system does not replace driver vision. URPA does not:

- **Operate above speeds of 3 mph (5 km/h).**
- **Detect objects more than 5 feet (1.5 meters) behind the vehicle. This distance may be less during warmer or humid weather.**
- **Detect objects that are below the bumper, underneath the vehicle, or that are very close to the vehicle.**
- **Detect children, pedestrians, bicyclists, or pets.**

So if you do not use proper care before backing up, you could hit a vehicle, child, pedestrian, bicyclist, or pet, resulting in vehicle damage, injury, or death. Even though the vehicle has the URPA system, always check carefully before backing up by checking behind your vehicle.

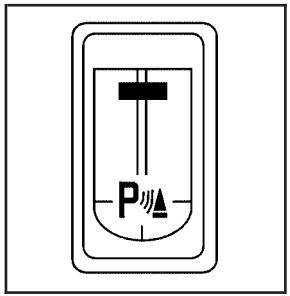

URPA can be turned off by pressing the rear park aid disable switch located in the overhead console switchbank.

While the system is disabled, an indicator light will be lit on the switch. You will not see any lights on the rear display if the switch is in the off position.

How the System Works

Unless disabled, the URPA will turn on automatically when the shift lever is moved into REVERSE (R). When the system turns on, the three lights on the display will illuminate for one and a half seconds to let you know that the system is working. If your vehicle is moving in REVERSE (R) at a speed greater than 3 mph (5 km/h), the red light will flash to remind you that the system does not work at speed greater than 3 mph (5 km/h).

If an object is detected at a REVERSE (R) speed of less than 3 mph (5 km/h), one of the following will occur:

Description	English	Metric
amber light	5 ft	1.5 m
amber/amber lights	40 in	1.0 m
amber/amber/red lights & continuous chime	20 in	0.5 m
amber/amber/red lights flashing & continuous chime	1 ft	0.3 m

A chime will sound the first time an object is detected between 20 inches (0.5 m) and 5 feet (1.5 m) away.

URPA cannot detect objects that are above liftgate level. In order for the rear sensors to recognize an object, it must be within detection range behind the vehicle.

When the System Does Not Seem to Work Properly

The light may flash red when the vehicle is in REVERSE (R) if the ultrasonic sensors are not kept clean. So be sure to keep your rear bumper free of mud, dirt, snow, ice and slush. Other conditions that may affect system performance include things like the vibrations from a jackhammer or the compression of air brakes on a very large truck. If after cleaning the rear bumper and then driving forward at least 15 mph (25 km/h), the display continues to flash red, see your dealer.

If a trailer was attached to your vehicle, or a bicycle or an object was on the back of, or hanging out of your liftgate during your last drive cycle, the light may also flash red. The light will continue to flash whenever in REVERSE (R) until your vehicle is driven forward at least 15 mph (25 km/h) without any obstructions behind the vehicle.

Accessory Power Outlet(s)

Your vehicle may be equipped with a front accessory power outlet located below the climate controls on the instrument panel. It can be used to plug in electrical equipment such as a cellular telephone or CB radio.

Pull the cover down to use the accessory power outlet. When not in use, keep the cover on.

The rear accessory power outlet is located on the rear compartment on the driver's side.

To remove the cover, pull the tab on the cover and pull it off. To put the cover back on, line up the tabs at the back of the cover and put the cover in place. Push down the tab to secure the cover. When not in use, always cover the rear accessory power outlet with the protective cap.

Notice: **Leaving electrical equipment on for extended periods will drain the battery. Always turn off electrical equipment when not in use and do not plug in equipment that exceeds the maximum amperage rating of 20 amperes.**

Certain electrical accessories may not be compatible with the accessory power outlet and could result in blown vehicle or adapter fuses. If you experience a problem see your dealer for additional information on accessory power outlets.

Notice: **Adding any electrical equipment to your vehicle may damage it or keep other components from working as they should. The repairs would not be covered by your warranty. Do not use equipment exceeding maximum amperage rating of 20 amperes. Check with your dealer before adding electrical equipment.**

When adding electrical equipment, be sure to follow the proper installation instructions included with the equipment.

Notice: **Improper use of the power outlet can cause damage not covered by your warranty. Do not hang any type of accessory or accessory bracket from the plug because the power outlets are designed for accessory power plugs only.**

Power Outlet 115 Volt Alternating Current

Your vehicle may have a power outlet that can be used to plug in auxiliary electrical equipment with a maximum limit of 150 watts. If you try to use equipment that requires more than the limit, a protection circuit will cut the power supply. To reset the outlet, unplug the item and plug it back in or turn the ignition to LOCK or ACCESSORY and then back on. The power will automatically restart when equipment that operates within the limit is plugged in.

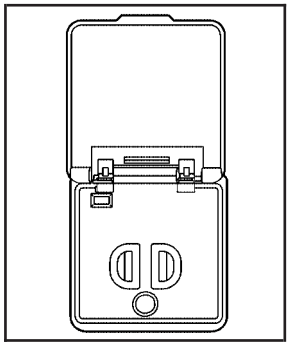

The power outlet is located behind the third row seats on the passenger's side rear quarter trim panel.

The power outlet is not designed for the following electrical equipment and may not work properly if these items are plugged into the power outlet:

- Equipment with high initial peak wattage such as: compressor-driven refrigerators and electric power tools.
- Other equipment requiring an extremely stable power supply such as: microcomputer-controlled electric blankets, touch sensor lamps, etc.

Cigarette Lighter

Your vehicle may have a cigarette lighter. To use the lighter, located on the instrument panel below the climate controls, push it in all the way and let go. When it is ready, it will pop back out by itself.

Notice: **Holding a cigarette lighter in while it is heating will not allow the lighter to back away from the heating element when it is hot. Damage from overheating may occur to the lighter or heating element, or a fuse could be blown. Do not hold a cigarette lighter in while it is heating.**

Notice: **If you put papers, pins, or other flammable items in the ashtray, hot cigarettes or other smoking materials could ignite them and possibly damage your vehicle. Never put flammable items in the ashtray.**

Climate Controls

Climate Control System

With this system you can control the heating, cooling and ventilation for your vehicle.

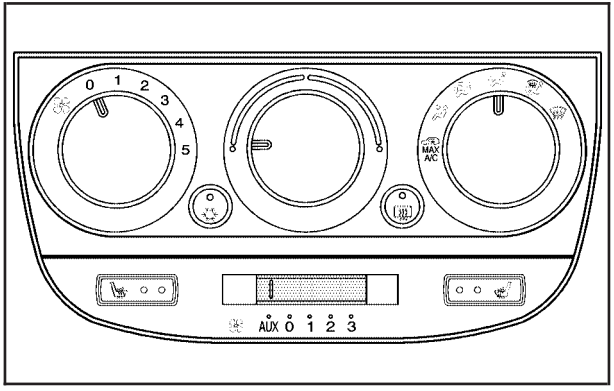

Operation

Turn the right knob clockwise or counterclockwise to direct the airflow inside of your vehicle.

To change the current mode, select one of the following:

(Vent): This mode directs air to the instrument panel outlets.

(Bi-Level): This mode directs half of the air to the instrument panel outlets, then directs the remaining air to the floor outlets. Cooler air is directed to the upper outlets and warmer air to the floor outlets.

(Floor): This mode directs most of the air to the floor outlets. Use this mode to send air to the rear of the vehicle. Keep the area under the front seats free of objects that could obstruct airflow to the rear of the vehicle.

The right knob can also be used to select defog or defrost mode. For more information, see “Defogging and Defrosting” later in this section.

Outside Air: This mode will be automatically selected when your vehicle is in any mode except maximum air conditioning.

(Fan): Turn the left knob clockwise or counterclockwise to increase or decrease the fan speed. Turn the knob to 0 to turn off the fan. The fan must be turned on for the air conditioning compressor to operate.

Temperature Control: Turn the center knob clockwise or counterclockwise to increase or decrease the air temperature inside your vehicle.

(Air Conditioning): Press this button to turn the air-conditioning system on or off. When it is pressed, an indicator light in the button will come on to let you know that air conditioning is activated.

You may notice a slight change in engine performance when the air conditioning compressor shuts off and turns on again. This is normal. The system is designed to make adjustments to help with fuel economy while still maintaining the selected temperature.

On hot days, open the windows to let hot inside air escape; then close them. This helps to reduce the time it takes for your vehicle to cool down. It also helps the system to operate more efficiently.

The air conditioning system removes moisture from the air, so you may sometimes notice a small amount of water dripping underneath your vehicle while idling or after turning off the engine. This is normal.

MAX A/C (Maximum Air Conditioning): Turn the right knob to this position for maximum air conditioning. This will select air conditioning and recirculation for maximum cooling of your vehicle. This mode directs air to the instrument panel outlets.

Recirculation: This mode keeps outside air from coming in the vehicle. It can be used to prevent outside air and odors from entering your vehicle or help heat or cool the air inside your vehicle more quickly. This mode will automatically be selected when you select maximum air conditioning.

(Heated Seats): Press this button to turn on the heated seats. The button on the left controls the driver's seat and the button on the right controls the passenger's seat. See *Heated Seats on page 10* for additional information.

Defogging and Defrosting

Fog on the inside of windows is a result of high humidity, or moisture, condensing on the cool window glass. This can be minimized if the climate control system is used properly. There are two modes to clear fog or frost from your windshield. Use the defog mode to clear the windows of fog or moisture and warm the passengers. Use the defrost mode to remove fog or frost from the windshield more quickly.

Turn the right knob to select the defog or defrost mode.

(Defog): This mode directs air to the windshield and the floor outlets. When you select this mode, the system runs the air-conditioning compressor unless the outside temperature is at or below freezing. The recirculation mode cannot be selected while in the defog mode.

(Defrost): This mode directs most of the air to the windshield and the side window outlets, with some air directed to the floor outlets. In this mode, the system will automatically run the air-conditioning compressor, unless the outside temperature is at or below freezing. Recirculation cannot be selected while in the defrost mode.

Do not drive the vehicle until all the windows are clear.

Rear Window Defogger

If your vehicle has a rear window defogger a warming grid is used to remove fog from the rear window.

REAR: Press this button to turn the rear window defogger on or off. An indicator light in the button will come on to let you know that the rear window defogger is activated.

The rear window defogger will turn off about 10 minutes after the button is pressed. If turned on again, the defogger will only run for about five minutes before turning off. The defogger can also be turned off by pressing the button again or by turning off the engine.

Notice: **Do not use anything sharp on the inside of the rear window. If you do, you could cut or damage the warming grid, and the repairs would not be covered by your warranty. Do not attach a temporary vehicle license, tape, a decal or anything similar to the defogger grid.**

Dual Climate Control System

Your vehicle may have a dual climate control system. With this system you can control the heating, cooling, and ventilation for your vehicle.

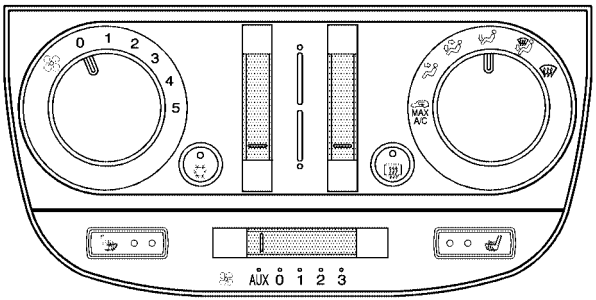

Operation

(Fan): Turn the left knob clockwise or counterclockwise to increase or decrease the fan speed. Turn the knob to 0 to turn off the fan. The fan must be turned on for the air conditioning compressor to operate.

Temperature Control: Use the driver's and passenger's levers to increase or decrease the air temperature inside your vehicle.

Turn the right knob clockwise or counterclockwise to direct the airflow inside of your vehicle.

To change the current mode, select one of the following:

MAX A/C (Maximum Air Conditioning): Turn the right knob to this position for maximum air conditioning. This will select air conditioning and recirculation for maximum cooling of your vehicle.

Recirculation: This mode keeps outside air from coming in the vehicle. It can be used to prevent outside air and odors from entering your vehicle or help heat or cool the air inside your vehicle more quickly. This mode will automatically be selected when maximum air conditioning is selected.

(Vent): This mode directs air to the instrument panel outlets.

(Bi-Level): This mode directs half of the air to the instrument panel outlets, then directs the remaining air to the floor outlets. Cooler air is directed to the upper outlets and warmer air to the floor outlets.

(Floor): This mode directs most of the air to the floor outlets. Use this mode to send air to the rear of the vehicle. Keep the area under the front seats free of objects that could obstruct airflow to the rear of the vehicle.

Outside Air: This mode is automatically selected when your vehicle is in any mode except maximum air conditioning.

The right knob can also be used to select defog or defrost mode. For more information, see "Defogging and Defrosting" later in this section.

(Air Conditioning): Press this button to turn the air conditioning system on or off. When it is pressed, an indicator light in the button will come on to let you know that air conditioning is activated.

You may notice a slight change in engine performance when the air conditioning compressor shuts off and turns on again. This is normal. The system is designed to make adjustments to help with fuel economy while still maintaining the selected temperature.

On hot days, open the windows to let hot inside air escape; then close them and switch to maximum air conditioning mode. This helps to reduce the time it takes for your vehicle to cool down. It also helps the system to operate more efficiently.

The air conditioning system removes moisture from the air, so you may sometimes notice a small amount of water dripping underneath your vehicle while idling or after turning off the engine. This is normal.

(Heated Seats): Press this button to turn on the heated seats. The button on the left controls the driver's seat and the button on the right controls the passenger's seat. See *Heated Seats on page 10* for additional information.

Defogging and Defrosting

Fog on the inside of windows is a result of high humidity, or moisture, condensing on the cool window glass. This can be minimized if the climate control system is used properly. There are two modes to clear fog or frost from your windshield. Use the defog mode to clear the windows of fog or moisture and warm the passengers. Use the defrost mode to remove fog or frost from the windshield more quickly.

Turn the right knob to select the defog or defrost mode.

(Defog): This mode directs air to the windshield and the floor outlets. When this mode is selected, the system runs the air conditioning compressor unless the outside temperature is at or below freezing.

The recirculation mode cannot be selected while in the defog mode.

(Defrost): This mode directs most of the air to the windshield and the side window outlets, with some air directed to the floor outlets. In this mode, the system will automatically run the air conditioning compressor, unless the outside temperature is at or below freezing.

Recirculation cannot be selected while in the defrost mode.

Do not drive the vehicle until all the windows are clear.

Rear Window Defogger

The rear window defogger uses a warming grid to remove fog from the rear window.

(Rear Window Defogger): Press this button to turn the rear window defogger on or off. An indicator light in the button will come on to let you know that the rear window defogger is activated.

The rear window defogger will turn off about 10 minutes after the button is pressed. If turned on again, the defogger will only run for about five minutes before turning off. The defogger can also be turned off by pressing the button again or by turning off the engine.

Notice: **Do not use anything sharp on the inside of the rear window. If you do, you could cut or damage the warming grid, and the repairs would not be covered by your warranty. Do not attach a temporary vehicle license, tape, a decal or anything similar to the defogger grid.**

Outlet Adjustment

(Open): Turn the thumbwheel to this position to open the air outlets.

(Closed): Turn the thumbwheel to this position to close the air outlets.

Use the louvers located on the air outlets to change the direction of the airflow.

Operation Tips

- Clear away any ice, snow, or leaves from the air inlets at the base of the vehicle that may block the flow of air into your vehicle.
- Use of non-GM approved hood deflectors may adversely affect the performance of the system.
- Keep the path under the front seats clear of objects to help circulate the air inside of your vehicle more effectively.

Rear Climate Control System (Option A, Uplevel)

Your vehicle may have a rear climate control system that allows the driver to adjust the fan speed for the rear seating area. This system works with the main climate control system in your vehicle.

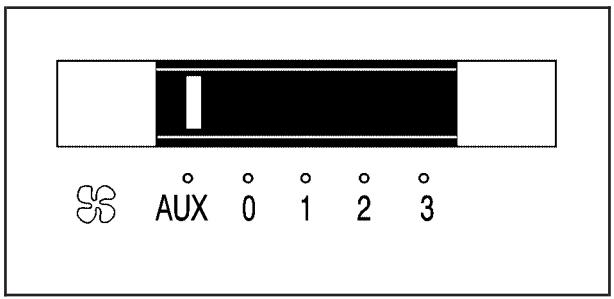

This lever is located below the main climate control system on the instrument panel. Use this lever to adjust the fan speed for the rear seat passengers.

(Fan): Slide the lever to 1, 2, or 3 to increase or decrease airflow to the rear seating area. Slide the fan knob to 0 to turn the fan off.

AUX: Slide the lever to AUX to allow the rear passengers to adjust the temperature and airflow to the rear seating area.

Your vehicle may also have a rear climate control system that allows the rear passengers to adjust the temperature and fan speed for the rear seating area.

When the front climate control is in AUX and the rear climate control fan or temperature button is pressed, the display will show the same airflow modes as the front climate control system. See *Dual Climate Control System on page 220*.

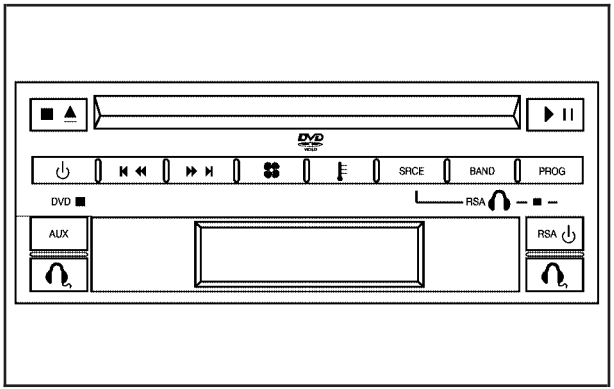

The front control must be in AUX position to enable adjustment of the temperature and fan speed on the rear control system. If it is not in AUX, pressing the fan or temperature button on the rear climate control will show a DISABLED message on the rear seat entertainment system display.

(Decrease Setting): Press this button to decrease the fan or temperature setting when arrows are active in the display.

(Increase Setting): Press this button to increase the fan or temperature setting when arrows are active in display.

(Fan): Press this button to increase or decrease fan speed. After pressing this button, arrows and a fan will appear in the display. The arrows indicate that to increase or decrease fan speed, you need to press either the left or right arrow button. The displayed arrows and fan will disappear after a few seconds.

(Temperature): Press this button to increase or decrease temperature. After pressing this button, arrows and a temperature scale will appear in the display. The arrows indicate that to increase or decrease temperature, you need to press either the left or right arrow button. The displayed arrows and temperature scale will disappear after a few seconds.

Rear Air Outlets

The outlet behind the left rear seat is the cold air return outlet. Be sure to keep it free from obstructions. Also, keep the area around the base of the center instrument panel console, between and under the front seats, free of objects that could also obstruct airflow to the rear seating area.

For more information on how to use the main climate control system, see *Dual Climate Control System on page 220*. For information on ventilation, see *Outlet Adjustment on page 223*.

Rear Climate Control System (Option B, Uplevel)

Your vehicle may have a rear climate control system that allows the driver to adjust the fan speed for the rear seating area. This system works with the main climate control system in your vehicle.

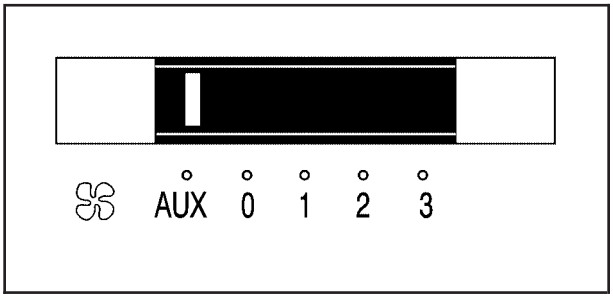

This lever is located below the main climate control system on the instrument panel. Use this lever to adjust the fan speed for the rear seat passengers.

(Fan): Slide the lever to 1, 2, or 3 to increase or decrease airflow to the rear seating area. Slide the fan knob to 0 to turn the fan off.

AUX: Slide the lever to AUX to allow the rear passengers to adjust the temperature and airflow to the rear seating area.

Your vehicle may also have a rear climate control system that allows the rear passengers to adjust the temperature and fan speed for the rear seating area.

When the front climate control is in AUX and the rear climate control fan or temperature button is pressed, the display will show the same airflow modes as the front climate control system. See *Dual Climate Control System on page 220*.

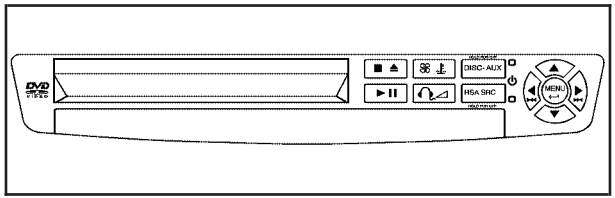

The front control must be in AUX position to enable adjustment of the temperature and fan speed on the rear control system. If it is not in AUX, pressing the fan or temperature button on the rear climate control will show a DISABLED message on the rear seat entertainment system display.

◀ ⏮ **(Decrease Setting):** Press this button to decrease the fan or temperature setting when arrows are active in the display.

▶ ⏭ **(Increase Setting):** Press this button to increase the fan or temperature setting when arrows are active in the display.

(Fan)/ (Temperature): Press this button once to enable adjustment of the fan speed. After pressing this button, the current fan speed setting will be highlighted and appear in the on screen display. The arrows indicate that to increase or decrease fan speed, you need to press either the left or right arrow button. The on screen display will disappear after a few seconds.

Press this button twice to enable temperature adjustment. After pressing this button, the current temperature settings will be highlighted and appear in the on screen display. The arrows indicate that to increase or decrease temperature, you need to press either the left or right arrow button. The on screen display will disappear after a few seconds.

Pressing this button a third time will turn off the on screen display.

▲▼**:** Press the up and down arrows to toggle between the fan and temperature settings.

Rear Air Outlets

The outlet behind the left rear seat is the cold air return outlet. Be sure to keep it free from obstructions. Also, keep the area around the base of the center instrument panel console, between and under the front seats, free of objects that could also obstruct airflow to the rear seating area.

For more information on how to use the main climate control system, see *Dual Climate Control System on page 220*. For information on ventilation, see *Outlet Adjustment on page 223*.

Passenger Compartment Air Filter

Passenger compartment air, both outside and recirculated air, is routed through a passenger compartment filter. The filter removes most particles from the air, including dust particles. Reductions in airflow, which may occur more quickly in dusty areas, indicate that the filter needs to be replaced early. For how often to change the air filter, see *Scheduled Maintenance on page 539*.

The access panel for the passenger compartment air filter is located in the back of the glove box. To replace the filter, do the following:

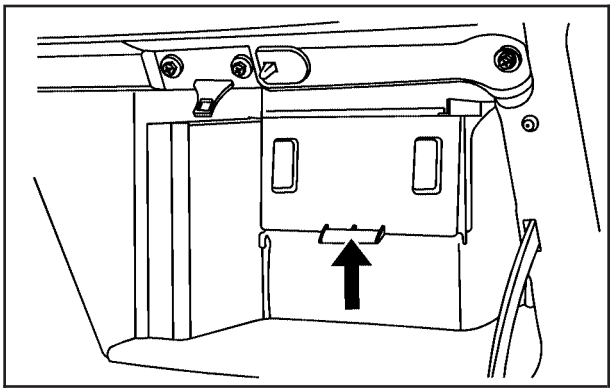

1. Pull the tab located on the outer access panel up and out.

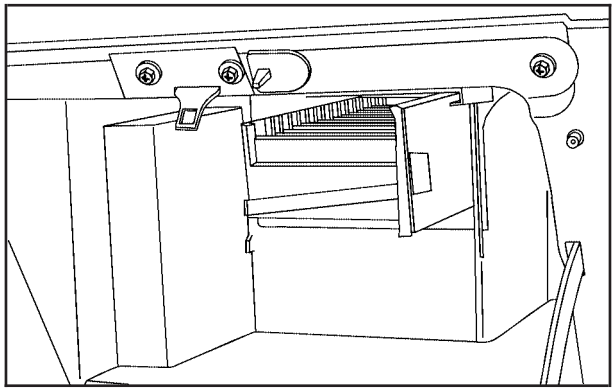

2. Then push the tab, located on the left of the inner access panel, to the right.
3. The first air filter will pull straight out. To remove the second, reach in and slide it toward the opening. Pull the second filter out.
4. Replace the filters by reversing Step 3. Make sure the filters are inserted so that the sealing foam is angled in the same direction on both filters. For the type of filter to use, see *Normal Maintenance Replacement Parts on page 550*.
5. Close the inner access door, while squeezing the tab. Be sure it is tightly closed.
6. Snap the outer access panel into the back of the glove box.

Warning Lights, Gages, and Indicators

This part describes the warning lights and gages that may be on your vehicle. The pictures will help you locate them.

Warning lights and gages can signal that something is wrong before it becomes serious enough to cause an expensive repair or replacement. Paying attention to your warning lights and gages could also save you or others from injury.

Warning lights come on when there may be or is a problem with one of your vehicle's functions. As you will see in the details on the next few pages, some warning lights come on briefly when you start the engine just to let you know they're working. If you are familiar with this section, you should not be alarmed when this happens.

Gages can indicate when there may be or is a problem with one of your vehicle's functions. Often gages and warning lights work together to let you know when there's a problem with your vehicle.

When one of the warning lights comes on and stays on when you are driving, or when one of the gages shows there may be a problem, check the section that tells you what to do about it. Please follow this manual's advice. Waiting to do repairs can be costly — and even dangerous. So please get to know your warning lights and gages. They're a big help.

Instrument Panel Cluster

Your instrument panel cluster is designed to let you know at a glance how your vehicle is running. You'll know how fast you're going, how much fuel you're using, and many other things you'll need to drive safely and economically. The indicator warning lights and gages are explained on the following pages.

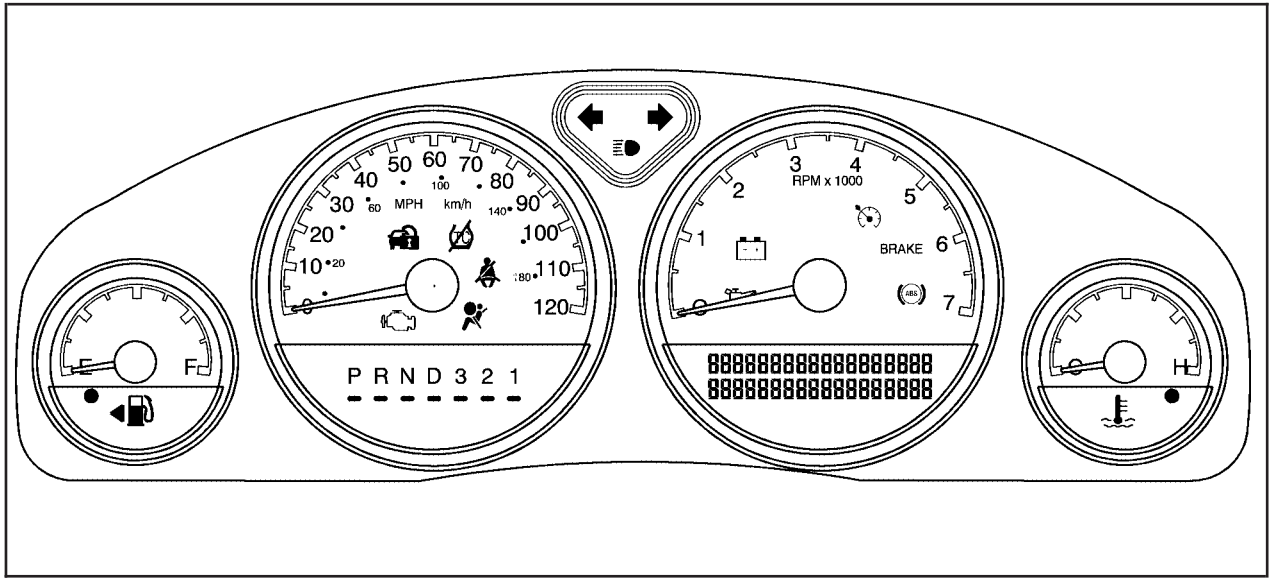

United States version shown, Canada similar

Speedometer and Odometer

Your speedometer lets you see your speed in both miles per hour (mph) and kilometers per hour (km/h). Your odometer shows how far your vehicle has been driven, in either miles (used in the United States) or kilometers (used in Canada).

Your vehicle has a tamper-resistant odometer.

You may wonder what happens if your vehicle needs a new odometer installed. The new one can be set to the mileage total of the old odometer.

Trip Odometer

The trip odometer can display how far you have driven since you last reset it.

For more information see *DIC Operation and Displays on page 249*.

Tachometer

The tachometer displays the engine speed in revolutions per minute (rpm).

Safety Belt Reminder Light

When the key is turned to RUN or START, a chime will come on for several seconds to remind people to fasten their safety belts.

The safety belt light will also come on and stay on for several seconds, then it will flash for several more.

If the driver remains unbuckled when the ignition is on and the vehicle is in motion, the chime and safety belt light will be repeated. You should buckle your seat belt. If the driver's belt is already buckled, neither the chime nor the light will come on.

Passenger Safety Belt Reminder Light

Several seconds after the key is turned to RUN or START, a chime will come on for several seconds to remind the front passenger to buckle their safety belt. This would only occur if a passenger is detected by the passenger sensing system. See *Passenger Sensing System on page 106* for more information. The passenger safety belt light will also come on and stay on for several seconds, then it will flash for several more.

You should have the passenger buckle their safety belt.

This light and chime reminder will be repeated if the ignition is on, the vehicle is in motion, the passenger is still unbuckled and the passenger airbag is enabled.

If the passenger's safety belt is buckled, neither the chime nor the light will come on.

Airbag Readiness Light

There is an airbag readiness light on the instrument panel, which shows the airbag symbol. The system checks the airbag's electrical system for malfunctions. The light comes on if there is an electrical problem. The system check includes the airbag sensor, the airbag modules, the wiring and the diagnostic module. For more information on the airbag system, see *Airbag System on page 96*.

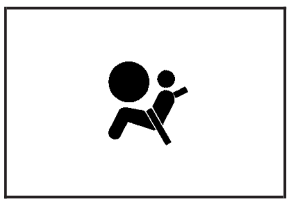

This light will come on when you start your vehicle, and it will flash for a few seconds. Then the light should go out. This means the system is ready.

If the airbag readiness light stays on after you start the vehicle or comes on when you are driving, your airbag system may not work properly. Have your vehicle serviced right away.

⚠ CAUTION:

If the airbag readiness light stays on after you start your vehicle, it means the airbag system may not be working properly. The airbags in your vehicle may not inflate in a crash, or they could even inflate without a crash. To help avoid injury to yourself or others, have your vehicle serviced right away if the airbag readiness light stays on after you start your vehicle.

The airbag readiness light should flash for a few seconds when you turn the ignition key to RUN. If the light doesn't come on then, have it fixed so it will be ready to warn you if there is a problem.

Passenger Airbag Status Indicator

Your vehicle has the passenger sensing system. Your instrument panel has a passenger airbag status indicator.

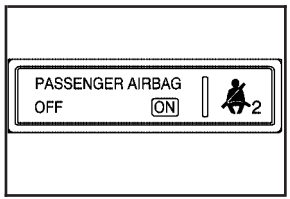

United States

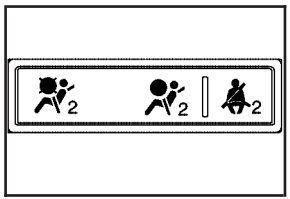

Canada

When the ignition key is turned to RUN or START, the passenger airbag status indicator will light ON and OFF, or the symbol for on and off, for several seconds as a system check. Then, after several more seconds, the status indicator will light either ON or OFF, or either the on or off symbol to let you know the status of the right front passenger's frontal airbag and side impact airbag (if equipped).

If the word ON or the on symbol is lit on the passenger airbag status indicator, it means that the right front passenger's airbag or airbags are enabled (may inflate).

⚠ CAUTION:

If the on indicator comes on when you have a rear-facing child restraint installed in the right front passenger's seat, it means that the passenger sensing system has not turned off the passenger's frontal airbag and seat-mounted side impact airbag (if equipped). A child in a rear-facing child restraint can be seriously injured or killed if the right front passenger's airbag inflates. This is because the back of the rear-facing child restraint would be very close to the inflating airbag. Do not use a rear-facing child restraint in the right front passenger's seat if the airbag is turned on.

If your vehicle has a rear seat that will accommodate a rear-facing child restraint, never put a rear-facing child seat in the front. This is because the risk to the rear-facing child is so great if the airbag deploys.

⚠ CAUTION:

Even though the passenger sensing system is designed to turn off the passenger's frontal airbag and side impact airbag (if equipped) if the system detects a rear-facing child restraint, no system is fail-safe, and no one can guarantee that an airbag will not deploy under some unusual circumstance, even though it is turned off. We recommend that rear-facing child restraints be secured in the rear seat, even if the airbag is off.

If your vehicle does not have a rear seat that will accommodate a rear-facing child restraint, never put a child in a rear-facing child restraint in the right front passenger seat the unless passenger airbag status indicator shows off. Here is why:

⚠ CAUTION:

Even though the passenger sensing system is designed to turn off the passenger's frontal airbag and side impact airbag (if equipped) if the system detects a rear-facing child restraint, no system is fail-safe, and no one can guarantee that an airbag will not deploy under some unusual circumstance, even though it is turned off. We recommend that rear-facing child restraints be transported in vehicles with a rear seat that will accommodate a rear-facing child restraint, whenever possible.

If the word OFF or the off symbol is lit on the airbag status indicator, it means that the passenger sensing system has turned off the right front passenger's airbag or airbags. See *Passenger Sensing System on page 106* for more on this, including important safety information.

If, after several seconds, all status indicator lights remain on, or if there are no lights at all, there may be a problem with the lights or the passenger sensing system. See your dealer for service.

⚠ CAUTION:

If the off indicator and the airbag readiness light ever come on together, it means that something may be wrong with the airbag system. If this ever happens, have the vehicle serviced promptly, because an adult-size person sitting in the right front passenger seat may not have the protection of an airbag. See *Airbag Readiness Light on page 234*.

Charging System Light

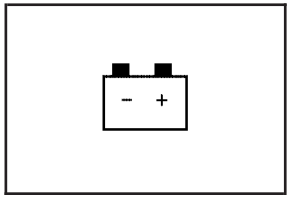

The charging system light will come on briefly when you turn on the ignition, but the engine is not running, as a check to show you it is working.

It should go out once the engine is running. If it stays on, or comes on while you are driving, you may have a problem with the charging system. It could indicate that you have problems with a generator drive belt, or another electrical problem. Have it checked right away. Driving while this light is on could drain your battery.

If you must drive a short distance with the light on, be certain to turn off all your accessories, such as the radio and air conditioner.

Brake System Warning Light

When the ignition is on, the brake system warning light will come on when you set your parking brake. The light will stay on if your parking brake doesn't release fully. If it stays on after your parking brake is fully released, it means you have a brake problem.

Your vehicle's hydraulic brake system is divided into two parts. If one part isn't working, the other part can still work and stop you. For good braking, though, you need both parts working well.

If the warning light comes on, there could be a brake problem. Have your brake system inspected right away.

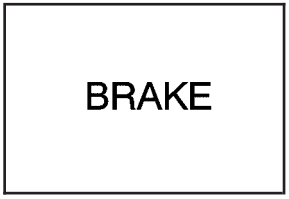

United States

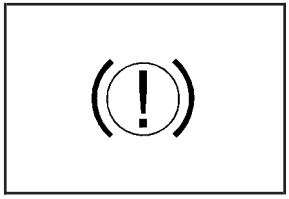

Canada

This light should come on briefly when you turn the ignition key to RUN. If it doesn't come on then, have it fixed so it will be ready to warn you if there's a problem.

If the light comes on while you are driving, pull off the road and stop carefully. You may notice that the pedal is harder to push. Or, the pedal may go closer to the floor. It may take longer to stop. If the light is still on, have the vehicle towed for service. See *Anti-Lock Brake System Warning Light on page 239* and *Towing Your Vehicle on page 410*.

⚠ CAUTION:

Your brake system may not be working properly if the brake system warning light is on. Driving with the brake system warning light on can lead to an accident. If the light is still on after you have pulled off the road and stopped carefully, have the vehicle towed for service.

Anti-Lock Brake System Warning Light

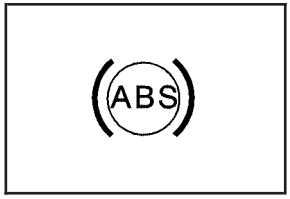

Your vehicle has an Anti-lock Brake System (ABS) warning light.

This light should come on for a few seconds when you turn the ignition key to RUN. If the light does not come on then, have it fixed so it will be ready to warn you if there is a problem.

If this light stays on longer than normal after you have started your engine, turn the ignition off. If the light comes on and stays on when you are driving, stop as soon as possible and turn the ignition off. Then start the engine again to reset the system. If the light still stays on, or comes on again while you are driving, the ABS needs service and you do not have anti-lock brakes.

Traction Control System (TCS) Warning Light

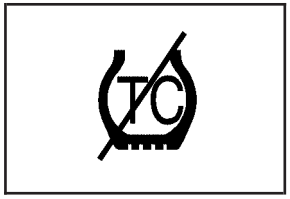

Your vehicle is equipped with a traction control system warning light.

The traction control system warning light may come on for the following reasons:

- If you turn the system off by pressing the traction control button. To turn the system back on, press the button again. The warning light should go off. See *Traction Control System (TCS) on page 379* for more information.
- If there's a brake system problem that is specifically related to traction control, the traction control system will turn off and the warning light will come on. If your brakes begin to overheat, the traction control system will turn off and the warning light will come on until your brakes cool down.
- If the traction control system is affected by an engine-related problem, the system will turn off and the warning light will come on.

If the traction control system warning light comes on and stays on for an extended period of time when the system is turned on, your vehicle needs service.

Engine Coolant Temperature Gage

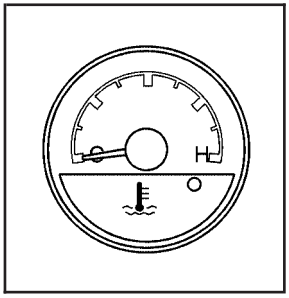

United States

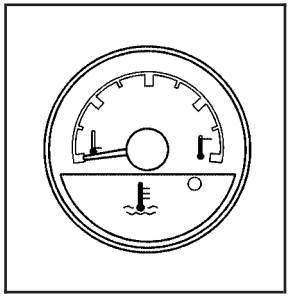

Canada

This gage shows the engine coolant temperature. If the red gage lamp turns on, your engine is too hot!

It means that your engine coolant has overheated. If you have been operating your vehicle under normal driving conditions, you should pull off the road, stop your vehicle and turn off the engine as soon as possible.

See *Engine Overheating on page 451*.

Malfunction Indicator Lamp

Check Engine Light

Your vehicle has a computer which monitors operation of the fuel, ignition, and emission control systems.

This system is called OBD II (On-Board Diagnostics-Second Generation) and is intended to assure that emissions are at acceptable levels for the life of the vehicle, helping to produce a cleaner environment. The check engine light comes on to indicate that there is a problem and service is required. Malfunctions often will be indicated by the system before any problem is apparent. This may prevent more serious damage to your vehicle. This system is also designed to assist your service technician in correctly diagnosing any malfunction.

Notice: **If you keep driving your vehicle with this light on, after awhile, your emission controls may not work as well, your fuel economy may not be as good, and your engine may not run as smoothly. This could lead to costly repairs that may not be covered by your warranty.**

Notice: **Modifications made to the engine, transaxle, exhaust, intake, or fuel system of your vehicle or the replacement of the original tires with other than those of the same Tire Performance Criteria (TPC) can affect your vehicle's emission controls and may cause this light to come on. Modifications to these systems could lead to costly repairs not covered by your warranty. This may also result in a failure to pass a required Emission Inspection/Maintenance test. See *Accessories and Modifications on page 426*.**

This light should come on, as a check to show you it is working, when the ignition is on and the engine is not running. If the light does not come on, have it repaired. This light will also come on during a malfunction in one of two ways:

- **Light Flashing** — A misfire condition has been detected. A misfire increases vehicle emissions and may damage the emission control system on your vehicle. Diagnosis and service may be required.
- **Light On Steady** — An emission control system malfunction has been detected on your vehicle. Diagnosis and service may be required.

If the Light is Flashing

The following may prevent more serious damage to your vehicle:

- Reducing vehicle speed
- Avoiding hard accelerations
- Avoiding steep uphill grades
- If you are towing a trailer, reduce the amount of cargo being hauled as soon as it is possible

If the light stops flashing and remains on steady, see “If the Light Is On Steady” following.

If the light continues to flash, when it is safe to do so, stop the vehicle. Find a safe place to park your vehicle. Turn the key off, wait at least 10 seconds and restart the engine. If the light remains on steady, see “If the Light Is On Steady” following. If the light is still flashing, follow the previous steps, and see your dealer for service as soon as possible.

If the Light Is On Steady

You may be able to correct the emission system malfunction by considering the following:

Did you recently put fuel into your vehicle?

If so, reinstall the fuel cap, making sure to fully install the cap. See *Filling the Tank on page 433*. The diagnostic system can determine if the fuel cap has been left off or improperly installed. A loose or missing fuel cap will allow fuel to evaporate into the atmosphere. A few driving trips with the cap properly installed should turn the light off.

Did you just drive through a deep puddle of water?

If so, your electrical system may be wet. The condition will usually be corrected when the electrical system dries out. A few driving trips should turn the light off.

Have you recently changed brands of fuel?

If so, be sure to fuel your vehicle with quality fuel. See *Gasoline Octane on page 429*. Poor fuel quality will cause your engine not to run as efficiently as designed. You may notice this as stalling after start-up, stalling when you put the vehicle into gear, misfiring, hesitation on acceleration, or stumbling on acceleration. (These conditions may go away once the engine is warmed up.) This will be detected by the system and cause the light to turn on.

If you experience one or more of these conditions, change the fuel brand you use. It will require at least one full tank of the proper fuel to turn the light off.

If none of the above steps have made the light turn off, your dealer can check the vehicle. Your dealer has the proper test equipment and diagnostic tools to fix any mechanical or electrical problems that may have developed.

Emissions Inspection and Maintenance Programs

Some state/provincial and local governments have or may begin programs to inspect the emission control equipment on your vehicle. Failure to pass this inspection could prevent you from getting a vehicle registration.

Here are some things you need to know to help your vehicle pass an inspection:

Your vehicle will not pass this inspection if the check engine light is on or not working properly.

Your vehicle will not pass this inspection if the OBD (on-board diagnostic) system determines that critical emission control systems have not been completely diagnosed by the system. The vehicle would be considered not ready for inspection. This can happen if you have recently replaced your battery or if your battery has run down. The diagnostic system is designed to evaluate critical emission control systems during normal driving. This may take several days of routine driving.
If you have done this and your vehicle still does not pass the inspection for lack of OBD system readiness, your GM dealer can prepare the vehicle for inspection.

Oil Pressure Light

If your vehicle has low engine oil pressure, this light will stay on after you start your engine, or come on when you are driving.

This indicates that your engine is not receiving enough oil. The engine could be low on oil, or could have some other oil problem. Have it fixed immediately by your dealer.

The oil light could also come on in three other situations:

- When the ignition is on but the engine is not running, the light will come on as a test to show you it is working. The light will go out when you turn the ignition on. If it does not come on with the ignition on, you may have a problem with the fuse or bulb. Have it fixed right away.
- If you are idling at a stop sign, the light may blink on and then off.
- If you make a hard stop, the light may come on for a moment. This is normal.

⚠ CAUTION:

Do not keep driving if the oil pressure is low. If you do, your engine can become so hot that it catches fire. You or others could be burned. Check your oil as soon as possible and have your vehicle serviced.

Notice: **Lack of proper engine oil maintenance may damage the engine. The repairs would not be covered by your warranty. Always follow the maintenance schedule in this manual for changing engine oil.**

Security Light

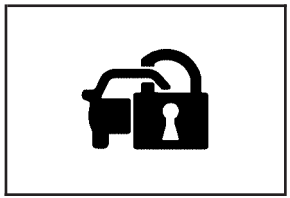

For information regarding this light, see *Theft-Deterrent Systems on page 145*.

Cruise Control Light

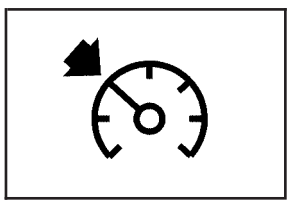

This light comes on whenever you set your cruise control.

The light will go out when the cruise control is turned off. See *Cruise Control on page 200* for more information.

Highbeam On Light

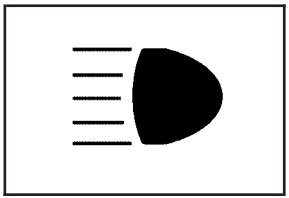

This light will come on when the high-beam headlamps or the Flash-to-Pass feature is in use.

See *Headlamp High/Low-Beam Changer on page 197*.

Fuel Gage

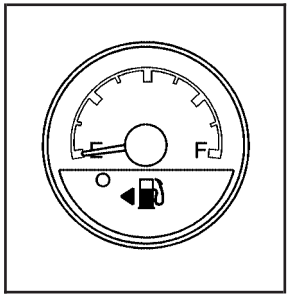

United States

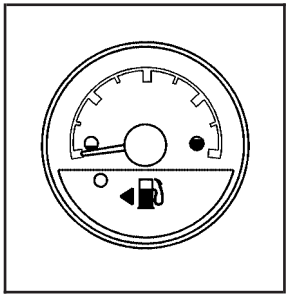

Canada

When the indicator nears empty, you still have a little fuel left, but you should get more soon.

Your fuel gage tells you about how much fuel you have left when the ignition is on.

Here are four things some owners ask about. All these things are normal and do not indicate that anything is wrong with the fuel gage.

- At the gas station, the gas pump shuts off before the gage reads full.
- It takes a little more (or less) fuel to fill up than the gage reads. For example, the gage read half full, but it took more (or less) than half of the tank's capacity to fill it.
- The gage pointer may move while cornering, braking or speeding up.
- The gage may not indicate empty when the ignition is turned off.

Low Fuel Warning Light

The light next to the fuel gage will come on briefly when you are starting the engine.

This light comes on when the fuel tank is low on fuel. To turn it off, add fuel to the fuel tank.

Driver Information Center (DIC)

Your vehicle has a Driver Information Center (DIC).

All messages will appear in the DIC display located in the instrument panel cluster, below the tachometer. The DIC buttons are located on the center of the instrument panel, below the center outlets.

The DIC comes on when the ignition is on. After a short delay, the DIC will display WELCOME DRIVER (1 or 2) if a personalized key 1 or 2 is used, and then the information that was last displayed before the engine was turned off. The driver number also corresponds to the numbers, 1 or 2, on the back of the remote keyless entry transmitters.

The DIC displays the odometer, trip odometers, fuel economy, trip computer, vehicle system information, and compass display, if equipped. It also displays warning messages if a system problem is detected. In addition, the DIC displays phone numbers that are called using the OnStar® system, if equipped. See *OnStar® System on page 167*.

If equipped, the outside air temperature automatically appears in the bottom right corner of the DIC display when viewing all of the information screens, except for the oil life screens. If the outside air temperature is at or below 37°F (3°C), the temperature reading will toggle between displaying the outside temperature and the word ICE for two minutes. If there is a problem with the system that controls the temperature display, the letters OC (open circuit) or SC (short circuit) will appear on the display. If this occurs, have the vehicle serviced by your dealer.

The DIC also allows some features to be customized or personalized, if equipped. See *DIC Vehicle Personalization (Uplevel Only) on page 275* for more information.

DIC Operation and Displays

The DIC has different modes which can be accessed by pressing the DIC buttons located on the center of the instrument panel. The buttons are the information, set/reset, and menu buttons.

The button functions are detailed in the following pages.

DIC Buttons

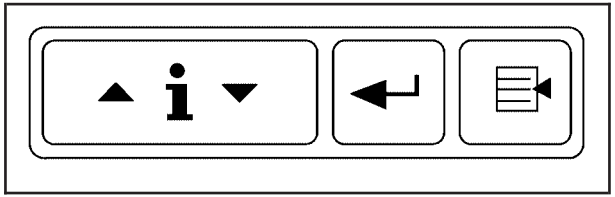

▲i▼ **(Information):** Press this button to display the odometer, trip distance, time elapsed, average speed, fuel economy, battery voltage, oil life, and to turn off the DIC.

◄┘ **(Set/Reset):** Press this button to set or reset certain functions and to turn off or acknowledge messages on the DIC.

(Menu): Press this button to display the units, language, personalization, if equipped, compass zone and compass calibration, if equipped. See *DIC Vehicle Personalization (Uplevel Only) on page 275* and *DIC Compass (Uplevel Only) on page 254* for more information.

Information Button Items

▲i▼ **(Information):** Press this button to scroll through the following items:

Odometer

Press the information button until the odometer displays. This mode shows the distance the vehicle has been driven in either miles or kilometers.

Trip A and Trip B

Press the information button until A or B displays. This mode shows the current distance traveled in either miles or kilometers since the last reset for each trip odometer. Both trip odometers can be used at the same time.

The display will show the odometer on the top line and the trip odometer information, either A or B, on the bottom line.

Each trip odometer can be reset to zero separately by pressing the set/reset button while the desired trip odometer is displayed.

There is also a retroactive trip odometer function that performs the following for each trip odometer:

- If the vehicle's speed has exceeded 3 mph (5 km/h) during the current ignition cycle, this function will set the trip odometer to the distance driven during the current ignition cycle.
- If the vehicle's speed has not exceeded 3 mph (5 km/h), this function will set the trip odometer to the distance driven during the previous ignition cycle plus the distance driven during the current ignition cycle.

Press and hold the set/reset button for three seconds, then release the button. The retroactive trip odometer value will be set into the currently displayed trip odometer.

Time Elapsed

Press the information button until TIME ELAPSED :00 displays. This mode is like a stopwatch, in that you can clock the time it takes to get from one point to another. Each of the fields for the hours, minutes, and seconds are two numeric digits.

Once TIME ELAPSED :00 is displayed, press the set/reset button to start the timing feature. Press the set/reset button again to stop it. If you will be starting and stopping your vehicle, during a trip for instance, the TIME ELAPSED feature will automatically start timing where it left off when you last stopped. To reset it, press and hold the set/reset button for approximately 1.5 seconds. The display will return to zero.

Average Speed

Press the information button until AVERAGE SPEED displays. This mode shows the average speed of the vehicle in miles per hour (mph) or kilometers per hour (km/h). This average is calculated based on the various vehicle speed recorded since the last reset of this value. To reset the value, press the information button to display AVERAGE SPEED, then press and hold the set/reset button. The display will return to zero.

Fuel Range

Press the information button until FUEL RANGE displays. This mode shows the approximate number of remaining miles or kilometers the vehicle can be driven without refueling.

Fuel range is based on several factors, including distance travelled, fuel used, fuel capacity, etc. This estimate will change if driving conditions change. For example, if driving in traffic and making frequent stops, this mode may read one number, but if the vehicle is driven on a freeway, the number may change even though the same amount of fuel is in the fuel tank. This is because different driving conditions produce different fuel economies. Generally, freeway driving produces better fuel economy than city driving. Fuel range cannot be reset.

If your vehicle is low on fuel, FUEL RANGE LOW will display followed by the LOW FUEL message. See “LOW FUEL” under *DIC Warnings and Messages on page 256* for more information.

Average Fuel Economy

Press the information button until AVG ECONOMY displays. This mode shows the approximate average miles per gallon (mpg) or liters per 100 kilometers (L/100 km). This number is calculated based on the number of mpg (L/100 km) recorded since the last time this menu item was reset. To reset AVG ECONOMY, press and hold the set/reset button. The display will return to zero.

Battery

Press the information button until BATTERY displays. This mode shows the current battery voltage.

Your vehicle’s charging system regulates voltage based on the state of the battery. The battery voltage may fluctuate when viewing this information on the DIC. This is normal.

If there is a problem with the battery charging system, a DIC message will display. See *DIC Warnings and Messages on page 256* for more information.

Oil Life

Press the information button until OIL LIFE displays. This mode shows an estimate of the oil's remaining useful life. If you see OIL LIFE 99% on the display, that means 99% of the current oil life remains. The engine oil life system will alert you to change your oil on a schedule consistent with your driving conditions.

When the remaining oil life is low, the CHANGE OIL SOON message will appear on the display. You should change your oil as soon as possible. See *Engine Oil on page 439*. In addition to the engine oil life system monitoring the oil life, additional maintenance is recommended in the Maintenance Schedule in this manual. See *Scheduled Maintenance on page 539* for more information.

Remember, you must reset the OIL LIFE yourself after each oil change. It will not reset itself. Also, be careful not to reset the OIL LIFE accidentally at any time other than when the oil has just been changed. It cannot be reset accurately until the next oil change. To reset the engine oil life system, see *Engine Oil Life System on page 442*. The display will show 100% when the system is reset.

Menu Button Items

(Menu): Press this button to scroll through the following items:

Units

Press the menu button until UNITS displays. This mode allows you to select between English or Metric units of measurement. Once in this mode, press the set/reset button to select between ENGLISH or METRIC.

Language

Press the menu button until the language screen displays. This mode allows you to select the language in which the DIC messages will appear. Once in this mode, press the set/reset button to select among the following choices:

- English
- Francais (French)
- Espanol (Spanish)

Personalization (Uplevel Only)

Press the menu button until PERSONAL PROGRAM displays. Your vehicle may have personalization capabilities that allow you to program certain features to a preferred setting for up to two drivers.

Your vehicle may also have customization capabilities that allow you to program certain features to one preferred setting. Customization features can only be programmed to one setting on the vehicle and cannot be programmed to a preferred setting for up to two drivers. See *DIC Vehicle Personalization (Uplevel Only) on page 275* for additional information on personal programming.

Compass Zone (Uplevel Only)

Under certain circumstances, such as during a long distance cross-country trip, it will be necessary to compensate for compass variance and reset the zone. To change the compass zone through the DIC, see *DIC Compass (Uplevel Only) on page 254*.

Compass Calibration (Uplevel Only)

The compass can be manually calibrated. To calibrate the compass through the DIC, see *DIC Compass (Uplevel Only) on page 254*.

DIC Compass (Uplevel Only)

Your vehicle may have a compass in the Driver Information Center (DIC).

Compass Zone

Press the menu button until COMPASS ZONE displays. Press the set/reset button to change the compass zone. Zones 1 through 15 are available. The direction the vehicle is moving will be displayed in the top right corner of the DIC display.

Compass Calibration

Under certain circumstances, such as during a long distance cross-country trip, it will be necessary to compensate for compass variance and reset the zone through the DIC.

Compass variance is the difference between the earth's magnetic north and true geographic north. If not adjusted to account for compass variance, the compass in the vehicle could give false readings.

In order to do this, the compass must be set or calibrated to the variance zone in which the vehicle is traveling.

To adjust for compass variance, use the following procedure:

1. Press the menu button until COMPASS ZONE displays.

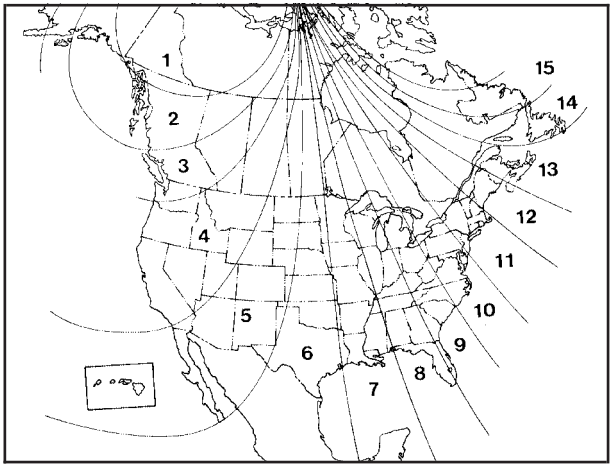

2. Find the vehicle's current location and variance zone number on the map.
3. Press the set/reset button to scroll through and select the appropriate variance zone.
4. Press the menu button to advance to the COMPASS CALIBRATION screen.

5. To start the compass calibration, press and hold the set/reset button until CALIBRATION BEGUN DRIVE UNTIL DONE appears in the DIC display.
6. Drive the vehicle slowly in a circle two times to activate the compass.

   When the calibration is complete, the DIC will display CALIBRATION FINISHED.
7. If the message CAL appears in the DIC, you must manually put the compass into the calibration mode again. Repeat Steps 1 through 6.

DIC Warnings and Messages

Messages are displayed on the DIC to notify the driver that the status of the vehicle has changed and that some action may be needed by the driver to correct the condition. Multiple messages may appear one after another.

Some messages may not require immediate action, but you can press any of the DIC buttons to acknowledge that you received the message and clear it from the DIC display.

Some messages cannot be cleared from the DIC display because they are more urgent. These messages require action before they can be cleared.

If there are any active warning messages when the vehicle is turned off, two chimes sound and the DIC goes into a reminder mode. The reminder mode displays any active message. If there are multiple messages, the DIC displays each message for five seconds. After each active message is displayed once, the reminder mode turns off.

You should take any messages that appear on the display seriously and remember that clearing the messages will only make the messages disappear, not correct the problem.

The following are the possible messages that can be displayed and some information about them.

A/C OFF FOR ENGINE PROTECTION

This message displays when the engine coolant becomes hotter than the normal operating temperature. See *Engine Coolant Temperature Gage on page 241*. To avoid added strain on a hot engine, the air conditioning compressor is automatically turned off. When the coolant temperature returns to normal, the air conditioning compressor turns back on. You can continue to drive your vehicle.

This message comes on while the ignition is in RUN. Press any of the DIC buttons to acknowledge this warning message and to clear it from the screen.

This message continues to display for two seconds if it has not been acknowledged when the engine is turned off. It also re-displays for two seconds if the message has been acknowledged, but the condition still exists when the engine is turned off.

If the condition still exists, the message re-appears when the engine is turned on. If this message continues to appear, have the system repaired by your dealer as soon as possible to avoid damage to the engine.

BATTERY SAVER ACTIVE

This message displays when the system detects that the battery voltage is dropping beyond a reasonable level. The battery saver system starts reducing certain features of the vehicle that you may be able to notice. At the point that the features are disabled, this message is displayed. It means that the vehicle is trying to save the charge in the battery.

Turn off all unnecessary accessories to allow the battery to recharge.

The normal battery voltage range is 11.5 to 15.5 volts. You can monitor the battery voltage by pressing the information button until BATTERY displays.

CHANGE OIL SOON

This message displays when service is required for the vehicle. See your dealer. See *Engine Oil on page 439* and *Scheduled Maintenance on page 539* for more information.

The CHANGE OIL SOON message is reset by acknowledging the message. The OIL LIFE screen under the gages menu on the DIC must also be reset. See “Oil Life” under *DIC Operation and Displays on page 249* and *Engine Oil Life System on page 442*.

This message displays while the ignition is in RUN. Press any of the DIC buttons to acknowledge this message and to clear it from the screen.

This message continues to display for two seconds if it has not been acknowledged when the engine is turned off. It also re-displays for two seconds if the message has been acknowledged, but the condition still exists when the engine is turned off.

If the condition still exists, the message re-appears when the engine is turned on.

CHARGING SYSTEM FAILURE

This message displays when there is a problem with the generator and battery charging systems. Driving with this problem could drain the battery. Turn off all unnecessary accessories. Stop and turn off the vehicle as soon as it is safe to do so. Have the electrical system checked by your dealer immediately.

This message displays and a chime sounds while the ignition is in RUN. Press any of the DIC buttons to acknowledge this message and to clear it from the screen.

This message continues to display for two seconds if it has not been acknowledged when the engine is turned off. It also re-displays for two seconds if the message has been acknowledged, but the condition still exists when the engine is turned off.

If the condition still exists, the message re-appears when the engine is turned on.

CHECK GAS CAP

This message displays if the fuel cap is not on, or is not fully tightened. Check the fuel cap to ensure that it is on properly. See *Filling the Tank on page 433* for more information.

This message displays and a chime sounds while the ignition is in RUN. Press any of the DIC buttons to acknowledge this message and to clear it from the screen.

This message continues to display for two seconds if it has not been acknowledged when the engine is turned off. It also re-displays for two seconds if the message has been acknowledged, but the condition still exists when the engine is turned off.

If the condition still exists, the message re-appears when the engine is turned on.

DELAYED LOCKING

This message displays to inform the driver that even though a door lock switch or the lock button on the Remote Keyless Entry (RKE) transmitter has been pressed, that actual locking of the doors is being delayed because the delayed locking feature has been activated in the DIC.

See “DELAYED LOCKING” under *DIC Vehicle Personalization (Uplevel Only) on page 275* for more information.

This message appears and a chime sounds when the ignition is off.

This message cannot be acknowledged.

DRIVER’S DOOR AJAR

This message displays when the driver’s door is not closed properly. When this message appears, make sure that the driver’s door is closed completely.

This message displays while the ignition is in RUN. A chime sounds when the ignition is shifted out of PARK (P). Press any of the DIC buttons to acknowledge this message and to clear it from the screen.

This message continues to display for two seconds if it has not been acknowledged when the engine is turned off. It also re-displays for two seconds if the message has been acknowledged, but the condition still exists when the engine is turned off.

If the condition still exists, the message re-appears when the engine is turned on.

DRIVER'S REAR DOOR AJAR

This message displays when the driver's side rear door is not closed properly. When this message appears, make sure that the driver's side rear door is closed completely.

This message displays while the ignition is in RUN. A chime sounds when the ignition is shifted out of PARK (P). Press any of the DIC buttons to acknowledge this message and to clear it from the screen.

This message continues to display for two seconds if it has not been acknowledged when the engine is turned off. It also re-displays for two seconds if the message has been acknowledged, but the condition still exists when the engine is turned off.

If the condition still exists, the message re-appears when the engine is turned on.

ENGINE COOLANT HOT

Notice: **If you drive your vehicle while the engine is overheating, severe engine damage may occur. If an overheat warning appears on the instrument panel cluster and/or DIC, stop the vehicle as soon as possible. Do not increase the engine speed above normal idling speed. See *Engine Overheating on page 451* for more information.**

This message displays when the engine coolant temperature is too hot. The engine coolant temperature warning light also appears on the instrument panel cluster. See *Engine Coolant Temperature Gage on page 241* for more information.

To avoid added strain on the engine, turn off the air conditioner if it is on. When the coolant temperature returns to normal, the air conditioner can be turned back on.

This message displays only when the ignition is in RUN. A chime sounds continuously when this message is displayed. Press any of the DIC buttons to acknowledge this message and to clear it from the screen.

This message continues to display for two seconds if it has not been acknowledged when the engine is turned off. It also re-displays for two seconds if the message has been acknowledged, but the condition still exists when the engine is turned off.

If the condition still exists, the message re-appears when the engine is turned on.

HEADLAMPS SUGGESTED

This message displays when the amount of available light outside of the vehicle is low, or the windshield wipers have been on for approximately 30 seconds, and the exterior lamps control is off or in the park lamps position. This message informs the driver that turning on the exterior lamps is recommended. See *Exterior Lamps on page 204* for more information.

This message displays while the ignition is in RUN. Press any of the DIC buttons to acknowledge this message and to clear it from the screen.

This message continues to display for two seconds if it has not been acknowledged when the engine is turned off. It also re-displays for two seconds if the message has been acknowledged, but the condition still exists when the engine is turned off.

If the condition still exists, the message re-appears when the engine is turned on.

HOOD AJAR

If your vehicle has the remote start feature, this message displays when the hood is not closed properly. When this message appears, make sure that the hood is closed completely. See *Hood Release on page 437*.

This message displays while the ignition is in RUN. Press any of the DIC buttons to acknowledge this message and to clear it from the screen.

This message continues to display for two seconds if it has not been acknowledged when the engine is turned off. It also re-displays for two seconds if the message has been acknowledged, but the condition still exists when the engine is turned off.

If the condition still exists, the message re-appears when the engine is turned on.

KEY FOB BATTERY LOW

This message displays when the battery in the Remote Keyless Entry (RKE) transmitter needs to be replaced. To replace the battery, see “Battery Replacement” under *Remote Keyless Entry System Operation on page 121*.

This message displays while the ignition is in RUN. Press any of the DIC buttons to acknowledge this message and to clear it from the screen.

This message continues to display for two seconds if it has not been acknowledged when the engine is turned off. It also re-displays for two seconds if the message has been acknowledged, but the condition still exists when the engine is turned off.

If the condition still exists, the message re-appears when the engine is turned on.

KEY IN IGNITION

This message displays and a chime sounds continuously when the driver’s door is open and the key is in ACCESSORY or LOCK.

This message cannot be acknowledged.

This message disappears and the chiming stops when the key is removed from the ignition.

LEFT FRONT TURN LAMP OUT

This message displays when the left front turn signal bulb needs to be replaced. See *Headlamps and Sidemarker Lamps on page 471*.

This message displays while the ignition is in RUN. Press any of the DIC buttons to acknowledge this message and to clear it from the screen.

This message continues to display for two seconds if it has not been acknowledged when the engine is turned off. It also re-displays for two seconds if the message has been acknowledged, but the condition still exists when the engine is turned off.

If the condition still exists, the message re-appears when the engine is turned on.

LEFT REAR TURN LAMP OUT

This message displays when the left rear turn signal bulb needs to be replaced. See *Taillamps, Turn Signal, Stoplamps and Back-up Lamps on page 473*.

This message displays while the ignition is in RUN. Press any of the DIC buttons to acknowledge this message and to clear it from the screen.

This message continues to display for two seconds if it has not been acknowledged when the engine is turned off. It also re-displays for two seconds if the message has been acknowledged, but the condition still exists when the engine is turned off.

If the condition still exists, the message re-appears when the engine is turned on.

LIFT GATE AJAR

This message displays when the liftgate is not closed completely. Make sure that the liftgate is closed completely. See *Liftgate on page 141*.

This message displays while the ignition is in RUN. A chime sounds when the ignition is shifted out of PARK (P). Press any of the DIC buttons to acknowledge this message and to clear it from the screen.

This message continues to display for two seconds if it has not been acknowledged when the engine is turned off. It also re-displays for two seconds if the message has been acknowledged, but the condition still exists when the engine is turned off.

If the condition still exists, the message re-appears when the engine is turned on.

LOW BRAKE FLUID

This message displays when the brake fluid level is low. Have the brake system serviced by your dealer as soon as possible. See *Brakes on page 462* for proper fluid level.

The brake system warning light also appears on the instrument panel cluster when this message appears on the DIC. See *Brake System Warning Light on page 238*.

This message displays and a chime sounds only while the ignition is in RUN. Press any of the DIC buttons to acknowledge this message and to clear it from the screen.

This message continues to display for two seconds if it has not been acknowledged when the engine is turned off. It also re-displays for two seconds if the message has been acknowledged, but the condition still exists when the engine is turned off.

If the condition still exists, the message re-appears when the engine is turned on.

LOW FUEL

This message displays when your vehicle is low on fuel. Refill the fuel tank as soon as possible. See *Fuel Gage on page 248* and *Filling the Tank on page 433* for more information.

The message displays and a chime sounds while the ignition is in RUN. Press any of the DIC buttons to acknowledge this message and to clear it from the screen.

If the condition still exists, the message re-appears when the engine is turned on.

LOW OIL PRESSURE

Notice: **If the LOW OIL PRESSURE warning message appears on the DIC display, stop the vehicle immediately. Do not drive the vehicle until the cause of the low oil pressure is corrected. Severe engine damage can result from driving a vehicle with low oil pressure. See *Engine Oil on page 439* for more information.**

This message displays when the vehicle's engine oil pressure is low. The oil pressure light also appears on the instrument panel cluster. See *Oil Pressure Light on page 246*.

Stop the vehicle immediately, as engine damage can result from driving a vehicle with low oil pressure. Have the vehicle serviced by your dealer as soon as possible when this message is displayed.

This message displays only when the ignition is in RUN. A chime sounds continuously when this message is displayed.

This message cannot be acknowledged and cleared from the screen. This message re-displays for a few seconds if the condition still exists when the engine is turned off.

If the condition still exists, the message re-appears when the engine is turned on.

PARKING BRAKE ON

This message displays to alert the driver when the vehicle's parking brake is on, the ignition is in RUN, and the vehicle speed is greater than 5 mph (8 km/h). Release the parking brake before driving. See *Parking Brake on page 159* for more information.

The brake system warning light also appears on the instrument panel cluster when this message appears on the DIC. See *Brake System Warning Light on page 238*.

A chime sounds continuously while this message is displayed if driving above 5 mph (8 km/h). Press any of the DIC buttons to acknowledge this message and to clear it from the screen.

This message continues to display for two seconds if it has not been acknowledged when the engine is turned off. It also re-displays for two seconds if the message has been acknowledged, but the condition still exists when the engine is turned off.

If the condition still exists, the message re-appears when the engine is turned on.

PARK LAMPS ON

This message displays to alert the driver when the headlamps or parking lamps are on while the ignition is off and the driver's door is opened. See *Exterior Lamps on page 204* for more information. A chime sounds continuously while this message is displayed.

This message cannot be acknowledged.

PASSENGER'S DOOR AJAR

This message displays when the front passenger's door is not closed properly. When this message appears, make sure that the front passenger's door is closed completely.

This message displays while the ignition is in RUN. A chime sounds when the ignition is shifted out of PARK (P). Press any of the DIC buttons to acknowledge this message and to clear it from the screen.

This message continues to display for two seconds if it has not been acknowledged when the engine is turned off. It also re-displays for two seconds if the message has been acknowledged, but the condition still exists when the engine is turned off.

If the condition still exists, the message re-appears when the engine is turned on.

PASSENGER'S REAR DOOR AJAR

This message displays when the passenger's side rear door is not closed properly. When this message appears, make sure that the passenger's side rear door is closed completely.

This message displays while the ignition is in RUN. A chime sounds when the ignition is shifted out of PARK (P). Press any of the DIC buttons to acknowledge this message and to clear it from the screen.

This message continues to display for two seconds if it has not been acknowledged when the engine is turned off. It also re-displays for two seconds if the message has been acknowledged, but the condition still exists when the engine is turned off.

If the condition still exists, the message re-appears when the engine is turned on.

PASSENGER SEATBELT IS NOT FASTENED

This message reminds you to buckle the passenger's safety belt.

This message displays and a chime sounds when the ignition is on, the driver's safety belt is buckled, the passenger's safety belt is unbuckled with the passenger airbag enabled, and the vehicle is in motion. You should have the passenger buckle their safety belt.

The reminder will be repeated if the ignition is on, the vehicle is in motion, the driver is unbuckled and the passenger is still unbuckled and the passenger airbag is enabled. If the passenger's safety belt is already buckled, this message and chime will not come on.

REDUCED ENGINE POWER

This message displays when the vehicle's engine power is reduced. This happens when driving conditions, such as climbing a steep hill, make the transaxle overwork in a gear that may cause damage to the vehicle's engine or transaxle. Reduced engine power can affect the vehicle's ability to accelerate.

This message displays and a chime sounds only when the ignition is in RUN. Press any of the DIC buttons to acknowledge this message and to clear it from the screen.

This message continues to display for two seconds if it has not been acknowledged when the engine is turned off. It also re-displays for two seconds if the message has been acknowledged, but the condition still exists when the engine is turned off.

If the condition still exists, the message re-appears when the engine is turned on.

REDUCED POWER STOP WHEN SAFE

This message displays when your vehicle is in an overheated engine operating mode. This operating mode allows your vehicle to be driven to a safe place in an emergency. In this mode, you will notice a significant loss in power and engine performance. See *Overheated Engine Protection Operating Mode on page 453* for more information. Anytime this message is on, the vehicle should be taken to your dealer for service as soon as possible.

This message displays and a chime sounds only when the ignition is in RUN. Press any of the DIC buttons to acknowledge this message and to clear it from the screen.

This message continues to display for two seconds if it has not been acknowledged when the engine is turned off. It also re-displays for two seconds if the message has been acknowledged, but the condition still exists when the engine is turned off.

If the condition still exists, the message re-appears when the engine is turned on.

REMOTE START DISABLED

If your vehicle has the remote start feature, this message displays if a remote start attempt is unsuccessful. This may be caused if any of the following conditions are true when a remote start attempt is made:

- The remote start system is disabled through the DIC.
- The key is in the ignition.
- The hood or the doors are not closed.
- There is an emission control system malfunction.
- The engine coolant temperature is too high.
- The oil pressure is low.
- The hazard warning flashers are turned on.
- The maximum number of remote starts or remote start attempts between ignition cycles has been reached.
- The content theft-deterrent alarm is on while attempting to remote start the vehicle.

See “REMOTE START” under *DIC Vehicle Personalization (Uplevel Only) on page 275* and “Remote Vehicle Start” under *Remote Keyless Entry System Operation on page 121* for more information.

REMOTE START ON

If your vehicle has the remote start feature, this message displays when a remote start is initiated. See “Remote Vehicle Start” under *Remote Keyless Entry System Operation on page 121* for more information.

RIGHT FRONT TURN LAMP OUT

This message displays when the right front turn signal bulb needs to be replaced. See *Headlamps and Sidemarker Lamps on page 471*.

This message displays while the ignition is in RUN. Press any of the DIC buttons to acknowledge this message and to clear it from the screen.

This message continues to display for two seconds if it has not been acknowledged when the engine is turned off. It also re-displays for two seconds if the message has been acknowledged, but the condition still exists when the engine is turned off.

If the condition still exists, the message re-appears when the engine is turned on.

RIGHT REAR TURN LAMP OUT

This message displays when the right rear turn signal bulb needs to be replaced. See *Taillamps, Turn Signal, Stoplamps and Back-up Lamps on page 473*.

This message displays while the ignition is in RUN. Press any of the DIC buttons to acknowledge this message and to clear it from the screen.

This message continues to display for two seconds if it has not been acknowledged when the engine is turned off. It also re-displays for two seconds if the message has been acknowledged, but the condition still exists when the engine is turned off.

If the condition still exists, the message re-appears when the engine is turned on.

SERVICE ABS SYSTEM

This message displays when the vehicle's Anti-lock Brake System (ABS) is not functioning properly. Have the ABS serviced by your dealer as soon as possible.

The ABS warning light also appears on the instrument panel cluster when this message appears on the DIC. See *Anti-Lock Brake System Warning Light on page 239*.

This message only displays while the ignition is in RUN. Press any of the DIC buttons to acknowledge this message and to clear it from the screen.

This message continues to display for two seconds if it has not been acknowledged when the engine is turned off. It also re-displays for two seconds if the message has been acknowledged, but the condition still exists when the engine is turned off.

If the condition still exists, the message re-appears when the engine is turned on.

SERVICE AIR BAG

This message displays along with the airbag readiness light if there is a problem with the airbag system. Have your dealer inspect the system for problems. See *Airbag Readiness Light on page 234* and *Airbag System on page 96* for more information.

This message only displays while the ignition is in RUN. Press any of the DIC buttons to acknowledge this message and to clear it from the screen.

This message continues to display for two seconds if it has not been acknowledged when the engine is turned off. It also re-displays for two seconds if the message has been acknowledged, but the condition still exists when the engine is turned off.

If the condition still exists, the message re-appears when the engine is turned on.

SERVICE BRAKE SYSTEM

This message displays when a problem with the brake system has been detected. Have your vehicle serviced by your dealer as soon as possible.

The brake system warning light also appears on the instrument panel cluster when this message appears on the DIC. See *Brake System Warning Light on page 238*.

This message only displays while the ignition is in RUN. Press any of the DIC buttons to acknowledge this message and to clear it from the screen.

This message continues to display for two seconds if it has not been acknowledged when the engine is turned off. It also re-displays for two seconds if the message has been acknowledged, but the condition still exists when the engine is turned off.

If the condition still exists, the message re-appears when the engine is turned on.

SERVICE PARK LAMPS

This message displays when there is a problem with the park lamps. Check to see if the park lamp fuse is blown and replace the fuse if necessary. See *Fuses and Circuit Breakers on page 527* and *Instrument Panel Fuse Block on page 528* for more information. If changing the fuse does not correct the problem, see your dealer.

This message only displays while the ignition is in RUN. Press any of the DIC buttons to acknowledge this message and to clear it from the screen.

This message continues to display for two seconds if it has not been acknowledged when the engine is turned off. It also re-displays for two seconds if the message has been acknowledged, but the condition still exists when the engine is turned off.

If the condition still exists, the message re-appears when the engine is turned on.

SERVICE STABILITY SYSTEM

If your vehicle has StabiliTrak®, this message displays if there has been a problem detected with StabiliTrak®. See *StabiliTrak® System on page 381*.

If this message turns on while you are driving, pull off the road as soon as possible and stop carefully. Try resetting the system by turning the ignition off and then back on. If this message still stays on or turns back on again while you are driving, your vehicle needs service. Have the StabiliTrak® System inspected by your dealer as soon as possible.

This message displays only while the ignition is in RUN. Press any of the DIC buttons to acknowledge this message and to clear it from the screen.

This message continues to display for two seconds if it has not been acknowledged when the engine is turned off. It also re-displays for two seconds if the message has been acknowledged, but the condition still exists when the engine is turned off.

If the condition still exists, the message re-appears when the engine is turned on.

SERVICE TRACTION SYSTEM

If your vehicle has the Traction Control System (TCS), this message displays when the system is not functioning properly. A warning light also appears on the instrument panel cluster. See *Traction Control System (TCS) Warning Light on page 240*. See *Traction Control System (TCS) on page 379* for more information. Have the TCS serviced by your dealer as soon as possible.

This message displays only while the ignition is in RUN. Press any of the DIC buttons to acknowledge this message and to clear it from the screen.

This message continues to display for two seconds if it has not been acknowledged when the engine is turned off. It also re-displays for two seconds if the message has been acknowledged, but the condition still exists when the engine is turned off.

If the condition still exists, the message re-appears when the engine is turned on.

SERVICE VEHICLE SOON

This message displays when a non-emissions related malfunction occurs. Have the vehicle serviced by your dealer as soon as possible.

This message displays only while the ignition is in RUN. Press any of the DIC buttons to acknowledge this message and to clear it from the screen.

This message continues to display for two seconds if it has not been acknowledged when the engine is turned off. It also re-displays for two seconds if the message has been acknowledged, but the condition still exists when the engine is turned off.

If the condition still exists, the message re-appears when the engine is turned on.

STABILITY CONTROL ACTIVE

If your vehicle has StabiliTrak®, this message displays when StabiliTrak® is actively assisting you with directional control of the vehicle. Slippery road conditions may exist when this message is displayed, so adjust your driving accordingly. See *StabiliTrak® System on page 381*.

This message displays only while the ignition is in RUN. This message stays on until road conditions change and StabiliTrak® is not active.

This message cannot be acknowledged and cleared from the screen.

STABILITY CONTROL OFF

If your vehicle has StabiliTrak®, this message displays any time the system turns off. When this message has been displayed, StabiliTrak® is no longer available to assist you with directional control of the vehicle. Adjust your driving accordingly. See *StabiliTrak® System on page 381*.

This message displays only while the ignition is in RUN.

Any of the following conditions may cause the StabiliTrak® system to turn off:

- The battery is low.
- There is a StabiliTrak® system failure. See your dealer for service.

STARTING DISABLED

This message displays if the starting of the engine is disabled due to the electronic throttle control system or vehicle theft-deterrent system. Have your vehicle serviced by your dealer immediately.

This message only appears while the ignition is in RUN and will not disappear until the problem is resolved.

This message cannot be acknowledged.

TRACTION CONTROL ACTIVE

If your vehicle has the Traction Control System (TCS), this message displays when the system is on. Slippery road conditions may exist if this message is displayed, so adjust your driving accordingly. See *Traction Control System (TCS) on page 379* for more information.

This message only displays while the ignition is in RUN and will not disappear until driving conditions change and the TCS is no longer active.

This message cannot be acknowledged or cleared from the screen.

TRACTION CONTROL OFF

If your vehicle has the Traction Control System (TCS), this message displays when the TCS turns off. See *Traction Control System (TCS) on page 379* for more information.

This message only displays while the ignition is in RUN and disappears after two seconds.

Any of the following conditions may cause the TCS to turn off:

- The TCS is turned off by pressing the traction control button located on the center of the instrument panel. See *Traction Control System (TCS) on page 379*.
- The battery is low.
- There is a TCS failure. See your dealer for service.

TRANSMISSION FLUID HOT

This message displays when the transaxle fluid in your vehicle is too hot. Stop the vehicle and allow it to idle until it cools down. If the warning message continues to display, have the vehicle serviced by your dealer as soon as possible.

This message displays and a chime sounds only while the ignition is in RUN. Press any of the DIC buttons to acknowledge this message and to clear it from the screen.

This message continues to display for two seconds if it has not been acknowledged when the engine is turned off. It also re-displays for two seconds if the message has been acknowledged, but the condition still exists when the engine is turned off.

If the condition still exists, the message re-appears when the engine is turned on.

TURN SIGNAL ON

This message displays as a reminder to turn off the turn signal if you drive your vehicle for more than about 0.75 mile (1.2 km) with a turn signal on. See *Turn Signal/Multifunction Lever on page 195*.

This message displays and a chime sounds only when the ignition is in RUN. This message clears from the DIC if the turn signal is manually turned off, a turn is completed, or the message is acknowledged.

DIC Vehicle Personalization (Uplevel Only)

Your vehicle may have customization capabilities that allow you to program certain features to one preferred setting. Customization features can only be programmed to one setting on the vehicle and cannot be programmed to a preferred setting for two different drivers. The customization features include the following:

- Exterior lighting delay
- Interior lighting delay
- Delayed locking
- Content theft
- Remote keyless entry feedback
- Remote start
- Rear park chime

Your vehicle may also have personalization capabilities that allow you to program certain features to a preferred setting for up to two drivers. The first personalized key corresponds to driver 1 and the second personalized key corresponds to driver 2. The driver number also corresponds to the numbers, 1 or 2, on the back of the remote keyless entry transmitters.

The personalization features include the following:

- Radio station presets
- Auto door unlock preferences
- Remote keyless entry unlock preferences

All of the customization and personalization options may not be available on your vehicle. Only the options available will be displayed on your DIC.

The default settings for the customization and personalization features were set when your vehicle left the factory, but may have been changed from their default setting since then.

The customization preferences are automatically recalled.

The driver's personalization preferences are recalled by using the key programmed for driver 1 or 2. The driver number also corresponds to the numbers, 1 or 2, on the back of the remote keyless entry transmitters.

To change customization and personalization preferences, use the following procedure.

Entering the Personal Program Menu

1. Turn the ignition on and place the vehicle in PARK (P).

   To avoid excessive drain on the battery, it is recommended that the headlamps are turned off.

2. Press the menu button until PERSONAL PROGRAM displays.

   If the vehicle is not in PARK (P), PERSONAL PROGRAM ONLY IN PARK will display.

   If the vehicle is not able to enter the personal program menu, PERSONAL PROGRAM NOT AVAILABLE will display.

3. Press the set/reset button to begin.
4. The DIC will then display an instruction screen.

   Press the menu button to display the modes that are available to program.

   Press the set/reset button to change the setting of each mode.

Customization Menu Items

The following are customization features that allow you to program settings to the vehicle:

FACTORY DEFAULTS

This feature allows you to set all of the customization and personalization features back to their factory default settings.

Press the menu button until FACTORY DEFAULTS appears on the DIC display. Press the set/reset button to scroll through the following choices:

NO (default): The customization and personalization features will not be set to their factory default settings.

YES: The customization and personalization features will be set to their factory default settings.

If YES is selected, the keys will need to be personalized again to be recognized as key 1 or 2. See “PERSONALIZE KEY” later in this section for more information.

Choose one of the available settings and press the menu button while it is displayed on the DIC to select it and move on to the next feature.

ALL KEYS RESET

This screen will only display if YES was selected on the FACTORY DEFAULTS screen.

Press the set/reset button to scroll through the following choices:

CANCEL (default): The features will not be set to their factory default settings and the DIC will return to the FACTORY DEFAULTS screen.

OK: The features will be set to their factory default settings, the DIC will exit the personal program menu, and PERSONAL OPTIONS SAVED will display.

EXT (Exterior) LIGHT DELAY

This feature allows you to set the amount of time the exterior lamps remain on after the key is removed from the ignition or the vehicle is unlocked using the remote keyless entry transmitter.

Press the menu button until EXT LIGHT DELAY appears on the DIC display. Press the set/reset button to scroll through the following choices:

OFF: The exterior lamps will not turn on.

15 seconds: The exterior lamps will stay on for 15 seconds.

30 seconds (default): The exterior lamps will stay on for 30 seconds.

60 seconds: The exterior lamps will stay on for 60 seconds.

90 seconds: The exterior lamps will stay on for 90 seconds.

Choose one of the available settings and press the menu button while it is displayed on the DIC to select it and move on to the next feature.

INT (Interior) LIGHTS KEYS REMOVED

This feature enables the interior lamps in the vehicle to turn on for about 25 seconds after the key is removed from the ignition.

Press the menu button until INT LIGHTS KEYS REMOVED appears on the DIC display. Press the set/reset button to scroll through the following choices:

OFF: Removing the key from the ignition will not cause the interior lamps to turn on.

ON (default): Removing the key from the ignition will cause the interior lamps to be turned on for about 25 seconds.

Choose one of the available settings and press the menu button while it is displayed on the DIC to select it and move on to the next feature.

DELAYED LOCKING

This feature allows the locking of the vehicle to be delayed until all of the doors have been closed for approximately five seconds.

When the delayed locking feature is enabled, it may be activated when the key is out of the ignition by doing one of the following:

- Pressing the driver's door power lock switch one time while the driver's door is open.
- Pressing the passenger's door power lock switch one time while the passenger's door is open.
- Pressing the lock button on the remote keyless entry transmitter one time while any door is open.

Two chimes will sound to signal that delayed locking is active.

The doors may be locked immediately by repeating one of the above actions more than one time.

If a door remains open, without any other door being opened or closed, the vehicle will lock after approximately 45 seconds.

If a key is in the ignition, this feature will not lock the doors. See *Delayed Locking on page 130* for more information.

Press the menu button until DELAYED LOCKING appears on the DIC display. Press the set/reset button to scroll through the following choices:

OFF: There will be no delayed locking of the vehicle's doors.

ON (default): The locking of the vehicle's doors will be delayed by five seconds while a door is open after a power door lock switch is pressed, or the lock button on the remote keyless entry transmitter is pressed while a door is open.

Choose one of the available settings and press the menu button while it is displayed on the DIC to select it and move on to the next feature.

CONTENT THEFT

If your vehicle has the content theft-deterrent system, once this feature is turned on, the system will activate if someone tries to enter the vehicle without using the remote keyless entry transmitter or the correct key. It will also activate when an incorrect key is used in the ignition.

Press the menu button until CONTENT THEFT appears on the DIC display. Press the set/reset button to scroll through the following choices:

OFF: The content theft-deterrent system will be turned off.

ON (default): The content theft-deterrent system will be turned on.

When ON is selected, the content theft-deterrent system will be armed when the vehicle is locked by pressing the lock button on the remote keyless entry transmitter or by pressing the power door lock switch. See *Content Theft-Deterrent on page 146* and *Power Door Locks on page 129* for more information.

Choose one of the available settings and press the menu button while it is displayed on the DIC to select it and move on to the next feature.

FOB LOCK FEEDBACK

This feature allows you to select the type of feedback you will receive when locking the vehicle with the remote keyless entry transmitter.

Press the menu button until FOB LOCK FEEDBACK appears on the DIC display. Press the set/reset button to scroll through the following choices:

OFF: There will be no feedback when locking the vehicle.

LIGHTS: The exterior lamps will flash when you press the lock button on the remote keyless entry transmitter.

LIGHTS and HORN (default): The exterior lamps will flash when you press the lock button on the remote keyless entry transmitter, and the horn will sound when the lock button is pressed again within five seconds of the previous command.

Choose one of the available settings and press the menu button while it is displayed on the DIC to select it and move on to the next feature.

REMOTE START

If your vehicle has remote start, this feature allows the remote start to be turned OFF or ON. The remote start feature allows you to start the engine from outside of the vehicle using the remote keyless entry transmitter. See “Remote Vehicle Start” under *Remote Keyless Entry System Operation on page 121* for more information.

Press the menu button until REMOTE START appears on the DIC display. Press the set/reset button to scroll through the following choices:

OFF: The remote start feature will be disabled.

ON (default): The remote start feature will be enabled.

Choose one of the available settings and press the menu button while it is displayed on the DIC to select it and move on to the next feature.

REAR PARK CHIME

If your vehicle has the Ultrasonic Rear Parking Assist (URPA) system, this feature allows the URPA system’s chime to be turned OFF or ON. See *Ultrasonic Rear Parking Assist (URPA) on page 212* for more information.

Press the option button until REAR PARK CHIME appears on the DIC display. Press the set/reset button to scroll through the following choices:

OFF: The URPA system's chime will be disabled.

ON (default): The URPA system's chime will be enabled.

Choose one of the available settings and press the menu button while it is displayed on the DIC to select it and move on to the next feature.

Personalization Menu Items

The following are personalization features that allow you to program setting for up to two drivers:

PERSONALIZE KEY

If you are using a key that has already been personalized to be recognized as key 1 or 2, this screen will not display. This feature allows you to personalize a key to be recognized as key 1 or 2. A personalized key allows you to program personalization features to a preferred setting to correspond to key 1 or 2.

Press the menu button until PERSONALIZE KEY appears on the DIC display. Press the set/reset button to scroll through the following choices:

NO (default): The key will not be personalized.

YES: The key will be personalized.

Choose one of the available settings and press the menu button while it is displayed on the DIC to select it and move on to the next feature.

REPLACE KEY

This screen displays only if YES was selected for the PERSONALIZE KEY feature, keys 1 and 2 have already been personalized, and the current key being used is not key 1 or 2. This feature allows you to program a key to be recognized as key 1 or 2 in the event that the previously programmed key needs to be replaced.

1: The key will be programmed to be recognized as key 1.

2: The key will be programmed to be recognized as key 2.

CANCEL (default): The key will not be programmed.

RADIO STATIONS PERSONALIZED

This screen displays only if YES was selected for the PERSONALIZE KEY feature. This feature allows you to set the radio station presets to be recognized for the key, 1 or 2, that is being used. Once this message displays, set the radio station presets. If the presets are not set at this time, the presets will not be recognized for key 1 or 2, however, the vehicle radio station presets will be maintained.

AUTO DOOR UNLOCK

This feature allows automatic door unlocking to be turned off, used for the driver's door only, or for all of the doors.

Press the menu button until AUTO DOOR UNLOCK appears on the DIC display. Press the set/reset button to scroll through the following choices:

OFF: None of the doors will unlock when the vehicle is shifted into PARK (P) or the key is taken out of the ignition.

DRIVER: Only the driver's door will unlock when the vehicle is shifted into PARK (P) or the key is taken out of the ignition.

ALL (default): All of the doors will unlock when the vehicle is shifted into PARK (P) or the key is taken out of the ignition.

Choose one of the available settings and press the menu button while it is displayed on the DIC to select it and move on to the next feature.

AUTO UNLOCK ON

This feature displays only if DRIVER or ALL was selected for the AUTO DOOR UNLOCK feature. This feature allows the selection of when the vehicle's doors will unlock.

Press the menu button until AUTO UNLOCK ON appears on the DIC display. Press the set/reset button to scroll through the following choices:

KEY-OUT: The door(s) will unlock when the key is taken out of the ignition.

PARK (default): The door(s) will unlock when the vehicle is shifted into PARK (P).

Choose one of the available settings and press the menu button while it is displayed on the DIC to select it and move on to the next feature.

FOB UNLOCK ON 1ST PRESS

This feature allows the selection of which doors will unlock on the first press of the unlock button on the remote keyless entry transmitter. See *Remote Keyless Entry System Operation on page 121* for more information.

Press the menu button until FOB UNLOCK ON 1ST PRESS appears on the DIC display. Press the set/reset button to scroll through the following choices:

DRIVER (default): The driver's door will unlock on the first press of the unlock button on the remote keyless entry transmitter.

ALL: All of the doors will unlock on the first press of the unlock button on the remote keyless entry transmitter.

Choose one of the available settings and press the menu button while it is displayed on the DIC to select it. The DIC will then display PRESS UNLOCK SWITCH ON KEY FOB. Press the unlock button on the remote keyless entry transmitter and your setting will be saved for that remote keyless entry transmitter.

After programming the last option, the message KEY FOB NOW PERSONALIZED will appear on the DIC display for a few seconds if you personalized the key. Next, the message PERSONAL OPTIONS SAVED will appear briefly on the DIC display, then the display will return to the PERSONAL PROGRAM main screen.

Exiting the Personal Program Menu

The personal program menu will be exited when any of the following occurs:

- The vehicle is shifted out of PARK (P).
- The vehicle is no longer in RUN.
- The end of the personal program menu is reached.

Audio System(s)

Determine which radio your vehicle has and then read the pages following to familiarize yourself with its features.

Driving without distraction is a necessity for a safer driving experience. See *Defensive Driving on page 372*. By taking a few moments to read this manual and get familiar with your vehicle's audio system, you can use it with less effort, as well as take advantage of its features. While your vehicle is parked, set up your audio system by presetting your favorite radio stations, setting the tone, and adjusting the speakers. Then, when driving conditions permit, you can tune to your favorite stations using the presets and steering wheel controls if the vehicle has them.

⚠ CAUTION:

This system provides you with a far greater access to audio stations and song listings. Giving extended attention to entertainment tasks while driving can cause a crash and you or others can be injured or killed. Always keep your eyes on the road and your mind on the drive — avoid engaging in extended searching while driving.

Keeping your mind on the drive is important for safe driving. Here are some ways in which you can help avoid distraction while driving.

While your vehicle is parked:

- Familiarize yourself with all of its controls.
- Familiarize yourself with its operation.
- Set up your audio system by presetting your favorite radio stations, setting the tone, and adjusting the speakers. Then, when driving conditions permit, you can tune to your favorite radio stations using the presets and steering wheel controls if the vehicle has them.

Notice: **Before adding any sound equipment to your vehicle, such as an audio system, CD player, CB radio, mobile telephone, or two-way radio, make sure that it can be added by checking with your dealer. Also, check federal rules covering mobile radio and telephone units. If sound equipment can be added, it is very important to do it properly. Added sound equipment may interfere with the operation of your vehicle's engine, radio, or other systems, and even damage them. Your vehicle's systems may interfere with the operation of sound equipment that has been added.**

Notice: **The chime signals related to safety belts, parking brake, and other functions of your vehicle operate through the radio/entertainment system. If that equipment is replaced or additional equipment is added to your vehicle, the chimes may not work. Make sure that replacement or additional equipment is compatible with your vehicle before installing it. See *Accessories and Modifications on page 426*.**

Your vehicle has a feature called Retained Accessory Power (RAP). With RAP, the audio system can be played even after the ignition is turned off. See *Retained Accessory Power (RAP) on page 152* for more information.

Setting the Time

Press the H or the M button to enter clock mode. Press and hold H until the correct hour appears on the display. Press and hold M until the correct minute appears on the display.

To change the time default setting from 12 hour to 24 hour, press either the H or the M button to enter the clock mode, then press the tune knob to select between the 12 or 24 hour display format. The clock mode will automatically time out with the changed display format set as the current default setting.

Radio with CD

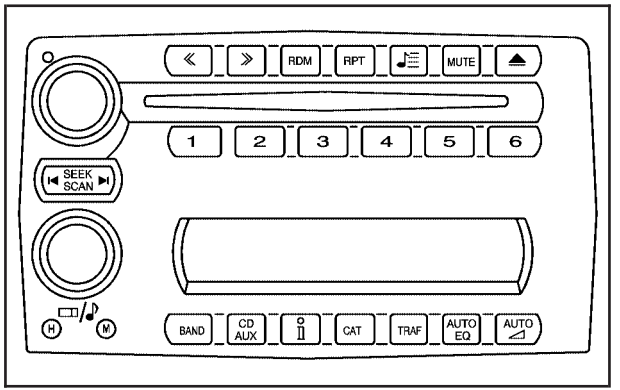

Radio with CD shown, Radio with Six-Disc CD similar

Radio Data System (RDS)

The audio system has a Radio Data System (RDS). RDS features are available for use only on FM stations that broadcast RDS information.

With RDS, the radio can do the following:

- Seek to stations broadcasting the selected type of programming
- Receive announcements concerning local and national emergencies
- Display messages from radio stations
- Seek to stations with traffic announcements

This system relies upon receiving specific information from these stations and only works when the information is available. In rare cases, a radio station may broadcast incorrect information that causes the radio features to work improperly. If this happens, contact the radio station.

While the radio is tuned to an RDS station, the station name or call letters appear on the display. RDS stations may also provide the time of day, a program type (PTY) for current programming, and the name of the program being broadcast.

XM™ Satellite Radio Service

XM™ is a satellite radio service that is based in the 48 contiguous United States and Canada. XM™ offers a large variety of coast-to-coast channels including music, news, sports, talk, traffic/weather (U.S. subscribers), and children's programming. XM™ provides digital quality audio and text information that includes song title and artist name. A service fee is required in order to receive the XM™ service. For more information, contact XM™; In the U.S. at www.xmradio.com or call 1-800-852-XMXM (9696) or in Canada at www.xmradio.ca or call 1-877-GET-XMSR (438-9677).

Playing the Radio

Top Knob (Power/Volume): Press this knob to turn the system on and off. Turn this knob clockwise or counterclockwise to increase or to decrease the volume.

i (Information): For RDS, press this button to change what appears on the display while using RDS. The display options are station name, RDS station frequency, PTY (program type), and the name of the program (if available).

For XM™ (if equipped), press the information button while in XM™ mode to retrieve four different categories of information related to the current song or channel: Artist, Song Title, Category or PTY, Channel Number/Channel Name.

To change the default on the display, press the information button until you see the desired display, then hold the button for two seconds. The radio produces one beep and the selected display becomes the default.

AUTO ◿ (Automatic Volume): With automatic volume, the audio system adjusts automatically to make up for road and wind noise as you drive, by increasing the volume as the vehicle speed increases.

Set the volume at the desired level. Press this button to select AUTO VOLUME MIN (minimum), AUTO VOLUME MED (medium), or AUTO VOLUME MAX (maximum). Each higher setting provides more volume compensation at faster vehicle speeds. To turn automatic volume off, press this button until AUTO VOLUME OFF appears on the display.

MUTE: Press this button to silence the system. Press this button again to turn the sound on.

This button is not available on the Radio with Six-Disc CD.

Finding a Station

BAND: Press this button to switch between FM1, FM2, AM, or XM1 or XM2 (if equipped). The display shows the selection.

▭ / ♪ (Tune): Turn this knob to select radio stations.

|◀ SEEK ▶| : Press the right or the left arrow to go to the next or to the previous station and stay there.

The radio only seeks stations with a strong signal that are in the selected band.

|◀ SCAN ▶| : Press and hold either arrow for two seconds until FREQUENCY SCAN appears on the display. The radio goes to a station, plays for a few seconds, then goes to the next station. Press either arrow again to stop scanning.

To scan preset stations, press and hold either arrow for four seconds until PRESET SCAN appears on the display. The radio goes to the next preset station, plays for a few seconds, then goes to the next preset station. Press either scan arrow again or one of the pushbuttons to stop scanning presets.

The radio only scans stations with a strong signal that are in the selected band.

Setting Preset Stations

Up to 30 stations (six FM1, six FM2, and six AM, six XM1 and six XM2 (if equipped)), can be programmed on the six numbered pushbuttons, by performing the following steps:

1. Turn the radio on.
2. Press BAND to select FM1, FM2, AM, or XM1 or XM2.
3. Tune in the desired station.
4. Press AUTO EQ to select the equalization.
5. Press and hold one of the six numbered pushbuttons until you hear a beep. Whenever that numbered pushbutton is pressed, the station that was set returns and the equalization that was selected is stored for that pushbutton.
6. Repeat the steps for each pushbutton.

Setting the Tone (Bass/Treble)

♪ **(Bass/Treble/Midrange):** Press this knob to select BASS, MIDRANGE, or TREBLE. Turn the knob to increase or to decrease. If a station is weak or has static, decrease the treble.

To adjust the bass, midrange, and treble to the middle position, press and hold this knob when the tone control is on the display. The level changes to the middle position.

To adjust all tone and speaker controls to the middle position, press and hold this knob when no tone or speaker control is displayed. AUDIO SETTINGS CENTERED appears on the display.

AUTO EQ (Automatic Equalization): Press this button to select customized equalization settings designed for country/western, jazz, talk, pop, rock, and classical. Selecting CUSTOM or changing bass or treble, returns the EQ to the manual bass and treble settings.

The radio saves separate AUTO EQ settings for each preset and source.

Adjusting the Speakers (Balance/Fade)

♪ **(Balance/Fade):** To adjust the balance between the right and the left speakers, press this knob until BALANCE appears on the display. Turn the knob to move the sound toward the right or the left speakers.

To adjust the fade between the front and the rear speakers, press this knob until FADE appears on the display. Turn the knob to move the sound toward the front or the rear speakers.

To adjust the balance and fade to the middle position, press and hold this knob when the speaker control is on the display. The level changes to the middle position.

To adjust all tone and speaker controls to the middle position, press and hold this knob when no tone or speaker control is displayed. AUDIO SETTINGS CENTERED appears on the display.

Finding a Category Station (RDS and XM™)

To select and find a desired category perform the following:

1. Press the CAT (category) button. The last selected category appears on the display.
2. Turn the tune knob to select the category.
3. Once the desired category is displayed, press either SEEK arrow to take you to a category's station. SEEKING CATEGORY appears on the display.
4. To go to another station within that category, press the CAT button to display the category, then press either SEEK arrow to go to another station.

If both category and traffic are on, the radio searches for stations with the selected category and traffic announcements. This function does not work with XM™.

If the radio cannot find the desired category, NONE appears on the display and the radio returns to the last station you were listening to. This function does not work with XM™.

SCAN: Scan the stations within a category by performing the following:

1. Press the CAT button. The last selected category appears on the display.
2. Turn the tune knob to select the category.
3. Once the desired category is displayed, press and hold either SCAN arrow until you hear a beep and SCAN CATEGORY appears on the display. The radio begins scanning the stations in the category.
4. Press either SCAN arrow to stop scanning.

If both category and TRAF (traffic) are on, the radio scans for stations with the selected category and traffic announcements.

BAND (AF – Alternate Frequency): Alternate frequency allows the radio to switch to a stronger station with the same category. To turn alternate frequency on, press and hold BAND for four seconds. AF ON appears on the display. The radio may switch to stations with a stronger frequency.

To turn alternate frequency off, press and hold BAND again for four seconds. AF OFF appears on the display. The radio does not switch to other stations.

This function does not apply for XM™ Satellite Radio Service.

RDS Messages

ALERT!: Alert warns of local or national emergencies. When an alert announcement comes on the current radio station, ALERT! appears on the display. You will hear the announcement, even if the volume is low or a CD is playing. If a CD is playing, play stops during the announcement. Alert announcements cannot be turned off.

ALERT! is not affected by tests of the emergency broadcast system. This feature is not supported by all RDS stations.

i (INFO – Information): If the current station has a message, INFO appears on the display. Press this button to see the message. The message may display the artist, song title, call in phone numbers, etc.

If the entire message is not displayed, parts of the message appears every three seconds. To scroll through the message, press and release this button. A new group of words appears on the display after every press of the button. Once the complete message has displayed, INFO disappears from the display until another new message is received. The last message can be displayed by pressing this button. You can view the last message until a new message is received or a different station is tuned to.

When a message is not available from a station, NO INFO appears on the display.

TRAF (TA – Traffic): If TA appears on the display, the tuned station broadcasts traffic announcements and when a traffic announcement comes on the tuned radio station you will hear it.

If the station does not broadcast traffic announcements, press the TRAF button and the radio seeks to a station that does. When a station that broadcasts traffic announcements is found, the radio stops seeking and TA appears on the display. If no station is found that broadcasts traffic announcements, NO TRAFFIC appears on the display.

If TA is on the display, press the TRAF button to turn off the traffic announcements.

The radio plays the traffic announcement even if the volume is low. The radio interrupts the play of a CD if the last tuned station broadcasts traffic announcements.

This function does not apply to XM™ Satellite Radio Service.

Radio Messages

CAL ERR (Calibration Error): The audio system has been calibrated for your vehicle from the factory. If CAL ERR appears on the display, it means that the radio has not been configured properly for your vehicle and must be returned to your dealer for service.

LOCKED: This message is displayed when the THEFTLOCK® system has locked up. Take the vehicle to your dealer for service.

If any error occurs repeatedly or if an error cannot be corrected, contact your dealer. If the radio displays an error message, write it down and provide it to your dealer when reporting the problem.

Radio Messages for XM™ Only

See *XM Radio Messages on page 307* later in this section for further detail.

Playing a CD (Single CD Player)

Insert a CD partway into the slot, label side up. The player pulls it in and the CD should begin playing.

If the ignition or radio is turned off with a CD in the player, it stays in the player. When the ignition or radio is turned on, the CD starts playing where it stopped, if it was the last selected audio source.

When a CD is inserted, CD and the CD symbol appears on the display. As each new track starts to play the track number appears on the display.

The CD player can play the smaller 3 inch (8 cm) single CDs with an adapter ring. Full-size CDs and the smaller CDs are loaded in the same manner.

If playing a CD-R, the sound quality (and playback performance) may be reduced due to the CD-R quality, method of recording, the quality of the music that has been recorded, and the way the CD-R has been handled. For better playback performance when home burning audio discs, use brand named CD media showing the Compact Disc™, and a burn rate no faster than 12X.

There may be an increase in skipping, difficulty in finding tracks, and/or difficulty in loading and ejecting. If these problems occur, check the bottom surface of the CD. If the surface of the CD is damaged, such as cracked, broken, or scratched, the CD will not play properly. If the surface of the CD is soiled, see *Care of Your CDs and DVDs on page 369* for more information.

If there is no apparent damage, try a known good CD.

Do not add any label to a CD, it could get caught in the CD player. If a CD is recorded on a personal computer and a description label is needed, try labeling the top of the recorded CD with a marking pen.

Notice: **If you add any label to a CD, insert more than one CD into the slot at a time, or attempt to play scratched or damaged CDs, you could damage the CD player. When using the CD player, use only CDs in good condition without any label, load one CD at a time, and keep the CD player and the loading slot free of foreign materials, liquids, and debris.**

If an error appears on the display, see “CD Messages” later in this section.

/ ♪ (Tune): Turn this knob to go to the next or previous track.

≪ (Reverse): Press and hold this button to reverse the current track.

≫ (Fast Forward): Press and hold this button to fast forward through the current track.

RDM (Random): Press this button to hear the tracks in random, rather than sequential, order. RANDOM DISC appears on the display. Press this button again to turn off random play.

RPT (Repeat): Press this button to hear a track over again. REPEAT appears on the display. Press this button again to turn off repeat play.

MUTE: Press this button to silence the system. Press this button again to turn the sound on.

|◀ SEEK ▶| : Press the left arrow to go to the start of the current track if more than eight seconds have played. Press the right arrow to go to the start of the next track. If either arrow is held or pressed more than once, the player continues moving backward or forward through the CD.

BAND: Press this button to listen to the radio when a CD is playing. The inactive CD remains safely inside the radio for future listening.

CD AUX (Auxiliary): Press this button to play a CD when listening to the radio. CD appears on the display when a CD is in the player. If the system has a remote playback device, pressing this button a second time allows the remote device to play.

AUTO EQ (Automatic Equalization): Press AUTO EQ to select the equalization setting while playing a CD. The equalization is stored whenever a CD is played. For more information on AUTO EQ, see “AUTO EQ” listed previously in this section.

⏏ (Eject): Press this button to eject the CD. EJECT may be activated with either the ignition or radio off.

Playing a CD(s) (Six-Disc CD Player)

If the ignition or radio is turned off, with a CD in the player, it stays in the player. When the ignition or radio is turned on, the CD starts playing where it stopped, if it was the last selected audio source.

When a CD is inserted, the CD symbol appears on the CD. As each new track starts to play, the track number appears on the display.

The CD player can play the smaller 3 inch (8 cm) single CDs with an adapter ring. Full-size CDs and the smaller CDs are loaded in the same manner.

If playing a CD-R, the sound quality (and playback performance) may be reduced due to the CD-R quality, method of recording, the quality of the music that has been recorded, and the way the CD-R has been handled. For better playback performance when home burning audio discs, use brand named CD media showing the Compact Disc™, and a burn rate no faster than 12X.

There may be an increase in skipping, difficulty in finding tracks, and/or difficulty in loading and ejecting. If these problems occur, check the bottom surface of the CD. If the surface of the CD is damaged, such as cracked, broken, or scratched, the CD will not play properly. If the surface of the CD is soiled, see *Care of Your CDs and DVDs on page 369* for more information.

If there is no apparent damage, try a known good CD.

Do not add any label to a CD, it could get caught in the CD player. If a CD is recorded on a personal computer and a description label is needed, try labeling the top of the recorded CD with a marking pen.

Notice: **If you add any label to a CD, insert more than one CD into the slot at a time, or attempt to play scratched or damaged CDs, you could damage the CD player. When using the CD player, use only CDs in good condition without any label, load one CD at a time, and keep the CD player and the loading slot free of foreign materials, liquids, and debris.**

If an error appears on the display, see “CD Messages” later in this section.

(Load): Press this button to load CDs into the CD player. This CD player holds up to six CDs.

To insert one CD, do the following:

1. Turn the ignition on.
2. Press and release the load button.
3. When INSET CD # appears on the display, load a CD. Insert the CD partway into the slot, label side up. The player pulls the CD in.

To insert multiple CDs, do the following:

1. Turn the ignition on.
2. Press and hold the load button for two seconds.

   A beep will sound and LOAD ALL DISC appears on the display.
3. When INSERT CD # appears on the display, load a CD. Insert the CD partway into the slot, label side up. The player pulls the CD in.

   Once the CD is loaded, wait for INSERT CD # to appear on the display, then load the next CD. The CD player takes up to six CDs. Do not try to load more than six.

To load more than one CD but less than six, complete Steps 1 through 3. When finished loading CDs, press the load button to cancel the loading function. The radio begins to play the last CD loaded.

If more than one CD has been loaded, a number for each CD appears on the display.

Playing a Specific Loaded CD

For every CD loaded, a number appears on the display. To play a specific CD press the numbered pushbutton that corresponds to the CD.

If an error appears on the display, see “CD Messages” later in this section.

⏏ **(Eject):** Press this button to eject CD(s).

To eject the CD that is currently playing, press and release this button.

To eject multiple CDs, do the following:

1. Press and hold the eject button for two seconds.

   A beep will sound and EJECT ALL DISCS appears on the display.

2. When REMOVE DISC appears on the display, the CD ejects and can be removed.

   To stop ejecting the CDs, press the load or the eject button.

If the CD is not removed, after 25 seconds, the CD automatically pulls back into the player. If CD is pushed back into the player, before the 25 second time period is complete, the player senses an error and tries to eject the CD several times before stopping.

Do not repeatedly press the eject button to eject a CD after you have tried to push it in manually. The player’s 25-second eject timer resets at each press of eject, causing the player to not eject the CD until the 25-second time period has elapsed.

▭ / ♪ **(Tune):** Turn this knob to go to the next or previous track.

≪ **(Reverse):** Press and hold this button to reverse within the current track.

≫ **(Fast Forward):** Press and hold this button to fast forward through the current track.

RDM (Random): Press this button to hear the tracks in random, rather than sequential order, on one CD or all of the loaded CDs.

To use random, do one of the following:

- To play the tracks on the CD you are listening to in random order, press and release this button until RANDOM DISC PLAY appears on the display.
- To play the tracks on all of the CDs that are loaded in random order, press and release this button until RANDOM ALL DISCS appears on the display.

To turn off random play, press and release the RDM button until RANDOM OFF appears on the display.

RPT (Repeat): Press this button to hear a track or an entire CD over again.

To use repeat, do one of the following:

- To repeat a track, press and release this button until REPEAT appears on the display.
- To repeat an entire CD, press and release this button until REPEAT ONE DISC appears on the display.

To turn off repeated play, press and release the RPT button until REPEAT OFF appears on the display.

|◀ SEEK ▶| : Press the left arrow to go to the start of the current track, if more than ten seconds have played. Press the right arrow to go to the next track. If either arrow is held or pressed more than once, the player continues moving backward or forward through the CD.

|◀ SCAN ▶| : To scan one CD, press and hold either SCAN arrow for more than two seconds until SCAN appears on the display and you hear a beep. The radio goes to the next track, plays for 10 seconds, then goes to the next track. Press either SCAN arrow again, to stop scanning.

To scan all loaded CDs, press and hold either SCAN arrow for more than four seconds until CD SCAN appears on the display and you hear a beep. Use this feature to listen to 10 seconds of the first track of each loaded CD. Press either SCAN arrow again, to stop scanning.

BAND: Press this button to listen to the radio when a CD is playing. The inactive CD(s) will remain safely inside the radio for future listening.

CD AUX (Auxiliary): Press this button to play a CD when listening to the radio. CD appears on the display when a CD is in the player. If your system has a remote playback device, pressing this button a second time allows the remote device to play.

AUTO EQ (Automatic Equalization): Press AUTO EQ to select the equalization setting while playing a CD. The equalization is stored whenever a CD is played. For more information on AUTO EQ, see “AUTO EQ” listed previously in this section.

Playing an MP3 CD-R Disc

Your vehicle’s radio system may have the MP3 feature. If it has this feature, it is capable of playing an MP3 CD-R disc. For more information on how to play an MP3 CD-R disc, see *Using an MP3 on page 301* later in this section.

Using ♩☰ (Song List) Mode (Single CD, MP3, and Six-Disc CD)

This feature is capable of saving 20 track selections. To save tracks into the song list feature, perform the following steps:

1. Turn the CD player on and load it with at least one CD.
2. Check to see that the CD player is not in song list mode. S-LIST (sound list) should not appear on the display. If S-LIST is present, press the song list button to turn it off.
3. Select the desired CD by pressing the numbered pushbutton and then use the SEEK right arrow or turn the tune knob to locate the track to be saved. The track begins to play.
4. Press and hold the song list button to save the track into memory. When song list is pressed, one beep will sound. ADDED SONG will appear on the display.
5. Repeat Steps 3 and 4 for saving other selections.

SONGLIST FULL appears on the display if you try to save more than 20 selections.

To play the song list, press the song list button. The recorded tracks begins to play in the order they were saved.

Seek through the song list by using the SEEK arrows. Seeking past the last saved track returns to the first saved track.

To delete tracks from the song list, perform the following steps:

1. Turn the CD player on.
2. Press the song list button to turn song list on. S-LIST appears on the display.
3. Press either SEEK arrow or turn the tune knob to select the desired track to be deleted.
4. Press and hold the song list button for two seconds. Release the button when SONG REMOVED appears on the display.

After a track has been deleted, the remaining tracks are moved up the list. When another track is added to the song list, the track is added to the end of the list.

To delete the entire song list, perform the following steps:

1. Turn the CD player on.
2. Press the song list button to turn song list on. S-LIST appears on the display.
3. Press and hold the song list button for more than four seconds. One beep will sound. SONGLIST EMPTY appears on the display indicating the song list has been deleted.

If a CD is ejected, and the song list contains saved tracks from that CD, those tracks are automatically deleted from the song list. Any tracks saved to the song list again are added to the bottom of the list.

To end song list mode, press the song list button. One beep will sound and S-LIST will be removed from the display.

CD Messages

CHECK CD: If this message appears on the display and/or the CD comes out, it could be for one of the following reasons:

- It is very hot. When the temperature returns to normal, the CD should play.
- You are driving on a very rough road. When the road becomes smoother, the CD should play.
- The CD is dirty, scratched, wet, or upside down.
- The air is very humid. If so, wait about an hour and try again.
- There may have been a problem while burning the CD.
- The label may be caught in the CD player.

If the CD is not playing correctly, for any other reason, try a known good CD.

If any error occurs repeatedly or if an error cannot be corrected, contact your dealer. If the radio displays an error message, write it down and provide it to your dealer when reporting the problem.

Using an MP3

MP3 CD-R Disc

MP3 Format

If you burn your own MP3 disc on a personal computer:

- Make sure the MP3 files are recorded on a CD-R disc.
- Do not mix standard audio and MP3 files on one disc.
- Make sure playlists have a .m3u or .wpl extension, other file extensions may not work.
- Files can be recorded with a variety of fixed or variable bit rates. Song title, artist name, and album will be available for display by the radio when recorded using ID3 tags version 1 and 2.
- Create a folder structure that makes it easy to find songs while driving. Organize songs by albums using one folder for each album. Each folder or album should contain 18 songs or less.

- Make sure to finalize the disc when burning an MP3 disc, using multiple sessions. It is usually better to burn the disc all at once.
- Do not use CD-RW discs.
- Do not use colored discs.

The player will be able to read and play a maximum of 50 folders, 50 playlists, 10 sessions, and 255 files. Long file names, folder names, or playlist names may use more disc memory space than necessary. To conserve space on the disc, minimize the length of the file, folder, or playlist names. You can also play an MP3 CD that was recorded using no file folders. The system can support up to 11 folders in depth, though, keep the depth of the folders to a minimum in order to keep down the complexity and confusion in trying to locate a particular folder during playback. If a CD contains more than the maximum of 50 folders, 50 playlists, 10 sessions, and 255 files the player lets you access and navigate up to the maximum, but all items over the maximum cannot be accessed.

Root Directory

The root directory will be treated as a folder. If the root directory has compressed audio files, the directory is displayed as F1 ROOT. All files contained directly under the root directory are accessed prior to any root directory folders. However, playlists (Px) are always accessed before root folders or files.

Empty Directory or Folder

If a root directory or a folder exists somewhere in the file structure that contains only folders/subfolders and no compressed files directly beneath them, the player advances to the next folder in the file structure that contains compressed audio files. The empty folder will not display.

No Folder

When the CD contains only compressed files, the files will be located under the root folder. The next and previous folder functions will not function on a CD that was recorded without folders or playlists. When displaying the name of the folder the radio displays ROOT.

When the CD contains only playlists and compressed audio files, but no folders, all files are located under the root folder. The folder down and the folder up buttons search playlists (Px) first and then go to the root folder. When the radio displays the name of the folder the radio displays ROOT.

Order of Play

Tracks are played in the following order:

- Play begins from the first track in the first playlist and continues sequentially through all tracks in each playlist. When the last track of the last playlist has played, play continues from the first track of the first playlist.
- If the CD does not contain any playlists, then play begins from the first track under the root directory. When all tracks from the root directory have played, play continues from files according to their numerical listing. After playing the last track from the last folder, play begins again at the first track of the first folder or root directory.

When play enters a new folder, the display does not automatically show the new folder name unless you have chosen the folder mode as the default display. See the information button later in this section for more information. The new track name appears on the display.

File System and Naming

The song name that displays is the song name that is contained in the ID3 tag. If the song name is not present in the ID3 tag, then the radio displays the file name without the extension (such as .mp3) as the track name.

Track names longer than 32 characters or four pages are shortened. Parts of words on the last page of text and the extension of the filename will not display.

Preprogrammed Playlists

Preprogrammed playlists that were created using WinAmp™, MusicMatch™, or Real Jukebox™ software can be accessed, however, they cannot be edited using the radio. These playlists are treated as special folders containing compressed audio song files.

Playing an MP3

Insert a CD partway into the slot, label side up. The player pulls it in, and READING appears on the display. The CD should begin playing and the CD symbol appears on the display.

If the ignition or radio is turned off with a CD in the player it stays in the player. When the ignition or radio is turned on, the CD starts to play where it stopped, if it was the last selected audio source.

As each new track starts to play, the track number appears on the display.

The CD player can play the smaller 3 inch (8 cm) single CDs with an adapter ring. Full-size CDs and the smaller CDs are loaded in the same manner.

If playing a CD-R, the sound quality (and playback performance) may be reduced due to the CD-R quality, method of recording, the quality of the music that has been recorded, and the way the CD-R has been handled. For better playback performance when home burning audio discs, use brand named CD media showing the Compact Disc™, and a burn rate no faster than 12X.

There may be an increase in skipping, difficulty in finding tracks, and/or difficulty in loading and ejecting. If these problems occur, check the bottom surface of the CD. If the surface of the CD is damaged, such as cracked, broken, or scratched, the CD will not play properly. If the surface of the CD is soiled, see *Care of Your CDs and DVDs on page 369* for more information.

If there is no apparent damage, try a known good CD.

Do not add any label to a CD, it could get caught in the CD player. If a CD is recorded on a personal computer and a description label is needed, try labeling the top of the recorded CD with a marking pen.

Notice: **If you add any label to a CD, insert more than one CD into the slot at a time, or attempt to play scratched or damaged CDs, you could damage the CD player. When using the CD player, use only CDs in good condition without any label, load one CD at a time, and keep the CD player and the loading slot free of foreign materials, liquids, and debris.**

If an error appears on the display, see “CD Messages” later in this section.

/ ♪ (Tune): Turn this knob to go to the next or previous track.

≪ (Previous Folder): Press this button to go to the first track in the previous folder. Press and hold this button to reverse through the current track.

≫ (Next Folder): Press this pushbutton to go to the first track in the next folder. Press and hold this button to fast forward the current track.

RDM (Random): Press this button to hear the tracks in random, rather than sequential order, on one CD, one folder, or all of the loaded CDs.

To use random, do one of the following:

- To play the tracks on the CD you are listening to in random order, press and release this button until RANDOM DISC appears on the display.
- To play the tracks in the folder you are listening to in random order, press and release this button until RANDOM FOLDER appears on the display.
- To play the tracks on all of the CDs that are loaded in random order, press and release this button until RANDOM ALL appears on the display.

To turn off random play, press and release the RDM button until RANDOM OFF appears on the display.

RPT (Repeat): Press this button to hear a track, CD, or a folder over again.

To use repeat, do one of the following:

- To repeat a track, press and release this button until REPEAT TRACK appears on the display.
- To repeat a CD, press and release this button until REPEAT DISC appears on the display.
- To repeat a folder, press and release this button until REPEAT FOLDER appears on the display.

To turn off repeated play, press and release the RPT button until REPEAT OFF appears on the display

MUTE: Press this button to silence the system. Press this button again to turn the sound on.

This button is not available on the Radio with Six-Disc CD.

|◀ SEEK ▶|: Press the left arrow to go to the start of the current track, if more than 10 seconds have played. Press the right arrow to go to the next track. If either arrow is held or pressed more than once, the player continues moving backward or forward through the CD.

i (Information): Press this button to display the artist name and album contained in the ID3 tag.

BAND: Press this button to listen to the radio when a CD is playing. The inactive CD remains safely inside the radio for future listening.

CD AUX (Auxiliary): Press this button to play a CD when listening to the radio. The CD symbol appears on the display when a CD is loaded.

⏏ (Eject): Press this button to eject a CD. Eject may be activated with either the ignition or radio off.

XM Radio Messages

Radio Display Message	Condition	Action Required
XL (Explicit Language Channels)	XL on the radio display, after the channel name, indicates content with explicit language.	These channels, or any others, can be blocked at a customer's request, by calling 1-800-852-XMXM (9696).
Updating	Updating encryption code	The encryption code in the receiver is being updated, and no action is required. This process should take no longer than 30 seconds.
No Signal	Loss of signal	The system is functioning correctly, but the vehicle is in a location that is blocking the XM™ signal. When you move into an open area, the signal should return.
Loading XM	Acquiring channel audio (after 4 second delay)	The audio system is acquiring and processing audio and text data. No action is needed. This message should disappear shortly.
CH Off Air	Channel not in service	This channel is not currently in service. Tune to another channel.
CH Unavail	Channel no longer available	This previously assigned channel is no longer assigned. Tune to another station. If this station was one of the presets, choose another station for that preset button.
No Info	Artist Name/Feature not available	No artist information is available at this time on this channel. The system is working properly.
No Info	Song/Program Title not available	No song title information is available at this time on this channel. The system is working properly.

Radio Display Message	Condition	Action Required
No Info	Category Name not available	No category information is available at this time on this channel. The system is working properly.
No Info	No Text/Informational message available	No text or informational messages are available at this time on this channel. The system is working properly.
Not Found	No channel available for the chosen category	There are no channels available for the selected category. The system is working properly.
XM Locked	Theft lock active	The XM™ receiver in the vehicle may have previously been in another vehicle. For security purposes, XM™ receivers cannot be swapped between vehicles. If this message is received after having your vehicle serviced, check with your GM dealer.
Radio ID	Radio ID label (channel 0)	If tuned to channel 0, this message will alternate with the XM™ Radio eight digit radio ID label. This label is needed to activate the service.
Unknown	Radio ID not known (should only be if hardware failure)	If this message is received when tuned to channel 0, there may be a receiver fault. Consult with your GM dealer.
Chk XMRcvr	Hardware failure	If this message does not clear within a short period of time, your receiver may have a fault. Consult with your GM dealer.

Navigation/Radio System

Your vehicle may have a navigation radio system.

The navigation system has built-in features intended to minimize driver distraction. Technology alone, no matter how advanced, can never replace your own judgment. See the Navigation System manual for some tips to help you reduce distractions while driving.

Rear Seat Entertainment System (Option A, Uplevel)

Your vehicle may have this type of DVD Rear Seat Entertainment (RSE) system. If it has this feature, it will include a DVD player, a video display screen, auxiliary inputs, two sets of wireless headphones (if included), and a remote control.

Parental Control

▶❚❚ (Parental Control): This button is located behind the video screen, below the auxiliary jacks. Press this button while using RSA, or when a DVD or CD is playing to blank the video screen and to mute the audio. The power indicator lights on the DVD player will flash. Turning on the parental control will also disable all other button operations from the remote control and the DVD player, except for the eject button. Press this button again to restore operation of the RSA, DVD player, and remote control.

This button may also be used to turn the DVD player power on and automatically resume play if the vehicle is on and a disc is in the player. If no disc is in the player, the system will power up in auxiliary mode.

Before You Drive

The RSE is designed for rear seat passengers only. The driver cannot safely view the video screen while driving and should not try to do so. The RSE system will play DVD, CD, and MP3 discs. You can also connect an auxiliary device to the RSE system to play games, watch videos, look at pictures, etc.

Normal operation may be limited under extremely low or high temperatures, in order to protect the system from damage. Operate the RSE system under normal or comfortable cabin temperature ranges.

Headphones

Wireless Headphones

The RSE system may include two sets of wireless headphones (batteries are included).

The wireless headphones have an ON/OFF switch, a channel select switch, and a volume control. To use the headphones, turn the switch to ON. An indicator light on the headphones will illuminate. If the light does not illuminate, the batteries may need to be replaced. See “Battery Replacement” later in this section for more information. Switch the headphones to OFF when not in use.

The headphones will shut off automatically to save the battery power if the RSE system is shut off or if the headphones are out of range of the transmitters for more than three minutes. The transmitters are located next to the DVD faceplate. If you move too far forward or step out of the vehicle, the headphones will lose the audio signal.

DVD and auxiliary audio will always be found on channel (CHA or CH1) of the wireless headphones. RSA audio is dedicated to CHB or CH2 of the wireless headphones.

To adjust the volume on the wireless headphones, use the volume control.

Notice: **Do not store the headphones in heat or direct sunlight. This could damage the headphones and repairs will not be covered by your warranty. Keep the headphones stored in a cool, dry place.**

If there is a decreased audio signal during CD, MP3, or DVD play, there may be a low hissing noise through the speakers and/or headphones. If the hissing sound in the wireless headphones seems excessive, make sure that the headphone batteries are fully charged. Some amount of hissing is normal.

Both sets of rear seat headphones may include foam ear pads that can be replaced.

Foam ear pads on these headphones may become worn or damaged. The headphone foam ear pads can become damaged if they are not handled or stored properly. If the foam ear pads do become damaged or worn out, the pads can be replaced separately from the headphone set. It is not necessary to replace the complete headphone set.

The headphone replacement foam ear pads can be ordered in pairs. See your dealer for more information.

Battery Replacement

To change the batteries, do the following:

1. Loosen the screw on the battery compartment door located on the left side of the headphone earpiece.
2. Replace the two AAA batteries in the compartment. Make sure that they are installed correctly using the diagram on the inside of the battery compartment.
3. Tighten the screw on the battery compartment door.

If the headphones are to be stored for a long period of time, remove the batteries, and keep them in a cool, dry place.

Wired Headphones

There is a right and left wired headphone jack. To adjust the volume, do the following:

1. Plug the headphone into the corresponding jack, located behind the video screen, next to the auxiliary jacks.
2. Press the corresponding headphone button on the DVD faceplate.
3. Press the right and left arrow buttons, on the DVD faceplate, to increase or to decrease the volume.

The wired headphones work as follows:

- DVD on / RSA off: The wired headphones will play RSE audio.
- DVD off / RSA on: The wired headphones will play RSA audio.
- DVD on / RSA on: The wired headphones will play RSA audio.

Stereo RCA Jacks

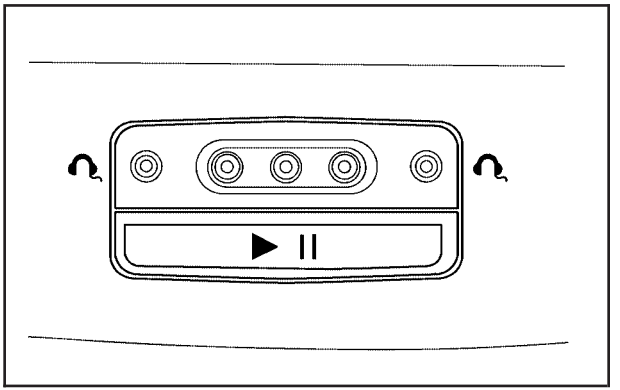

The RCA jacks are located behind the video screen on the DVD console. The RCA jacks allow audio and video signals to be connected from an auxiliary device such as a camcorder or a video game unit to the RSE. The yellow RCA jack is used for video inputs, the red RCA jack for right audio inputs, and the white RCA jack for left audio inputs. The system requires standard RCA cables, not included, to connect the auxiliary device to the RCA jacks. Refer to the manufacturer's instructions for proper usage.

To use the auxiliary audio and video inputs, connect an external auxiliary device such as a camcorder to the RCA jacks and turn on both the auxiliary device power and the power on the front of the RSE player.

If a disc is present when the RSE power is turned on, the player will automatically begin playing the disc and the user will need to press the AUX button on the remote control or on the DVD player faceplate to switch the system between the DVD player and the auxiliary device. See “DVD Player” and “Remote Control” later in this section for more information.

Audio Output

Audio from the DVD player or auxiliary devices can be heard through the following possible sources:

- Vehicle Speakers
- Wireless Headphones
- Wired Headphones (not included)

Vehicle Speakers

Only one audio source can be heard through the vehicle’s speakers at a time.

The RSE system or an auxiliary device can be heard through all of the vehicle’s speakers when the following occurs:

- A DVD or auxiliary device is playing
- The front audio system is on and the CD AUX button is pressed to enable the RSE system

DVD will appear on the radio display when the RSE system is on.

To turn the vehicles speakers on and off, press the CD AUX button on the radio. The audio from the RSE system can be heard through the wireless headphones and the vehicles speakers at the same time. The volume on the radio may vary when switching between the radio, CD, DVD, MP3, or an auxiliary device.

Video Screen

The video screen is located in the overhead console.

To use the video screen, do the following:

1. Push forward on the release button and the screen will fold down.
2. Adjust its position as desired.

When the video screen is not in use, push it up into its stowed and latched position.

Notice: **Avoid directly touching the video screen, as damage may occur. See "Cleaning the Video Screen" later in this section for more information.**

DVD Player

The DVD player is located in the overhead console.

The DVD player can be controlled by the buttons on the DVD player and/or by the buttons on the remote control. See "Remote Control" later in this section for more information.

The RSE system DVD player is only compatible with DVDs of the appropriate region code for the country that the vehicle was sold. The DVD region code is printed on the jacket of most DVDs.

Standard audio CDs, CD-R, CD-RW, enhanced CDs, video CDs, and CD-ROM with MP3 media are supported by this DVD player. DVD+R, DVD+RW, and copy protected CDs may or may not be supported by the DVD player. The DVD player does not support DVD-RAM, DVD-ROM, DVD-R, DVD-R/W, and DVD audio media. An error message will appear on the display if this type of media is inserted into the DVD player.

If an error message appears on the video screen, see "DVD Messages" later in this section.

DVD Player Buttons

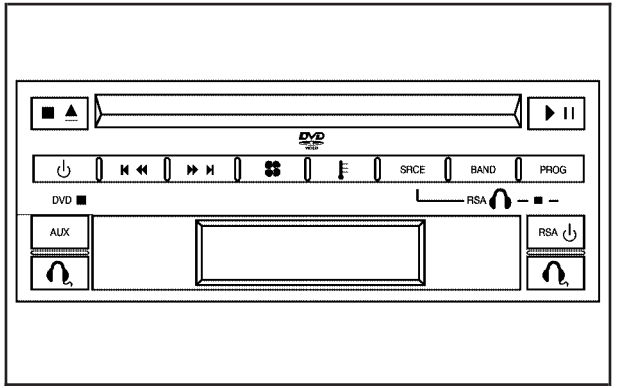

(Stop/Eject): Press and release this button to stop playing, rewinding, or fast forwarding.

Press this button twice to eject a disc. If the player is already stopped, then only press this button once.

(Power): Press this button to turn the DVD player on and off.

AUX (Auxiliary): Press this button to switch the system between the DVD player and an auxiliary device.

(Play/Pause): Press this button to start play of a disc. Press this button while a disc is playing to pause it. Press it again to continue play of a disc.

/ (Previous and Fast Reverse/Next and Fast Forward): These controls can be used to move forward or backward through a disc.

These buttons can also be used to modify RSA, rear temperature, rear fan speed, and wired headphone volume adjustment. See “Headphones” earlier in this section, *Rear Seat Audio (RSA) (Option A, Uplevel) on page 340* or *Rear Seat Audio (RSA) (Option B, Uplevel) on page 343*, and *Rear Climate Control System (Option A, Uplevel) on page 224* or *Rear Climate Control System (Option B, Uplevel) on page 226* for more information.

When a DVD is playing in the DVD player and the RSA system is on, the stop/eject and play/pause buttons are the only buttons that will work.

Playing a Disc

To play a disc, gently insert the disc, with the label side up, into the loading slot. The DVD player will continue loading the disc and the player will automatically start if the vehicle is in ACCESSORY, RUN, or RAP.

If a disc is already in the player, make sure that the DVD player is on, then press the play/pause button on the player faceplate or on the remote control. You can also, press the CD AUX button on the radio faceplate, until RSE appears on the display, to start playing a disc.

Some DVDs will not allow fast forwarding or skipping of the copyright information or previews. Some DVDs will begin playing after the previews have finished. If the DVD does not begin playing at the main title, refer to the on-screen instructions.

Stopping and Resuming Playback

To stop playing a disc, press and release the stop button on the DVD player faceplate or the remote control.

To resume playback, press the play/pause button on the DVD player faceplate or the remote control. The movie should resume play from where it was last stopped if the disc has not been ejected.

If the disc has been ejected, the disc will resume play at the beginning of the disc.

Ejecting a Disc

Press the eject button on the DVD player faceplate, when the disc is stopped, to eject the disc. There is not an eject button on the remote control.

If a disc is ejected from the player, but not removed, the DVD player will reload the disc after a short period of time.

Remote Control

The RSE system will include a remote control (batteries are included). To use the remote control, aim it at the transmitter window next to the RSE faceplate and press the desired button. Direct sunlight or very bright light may affect the ability of the transmitter to receive signals from the remote control. If the remote control does not seem to be working, the batteries may need to be replaced. See “Battery Replacement” later in this section. Objects blocking the line of sight will affect the function of the remote control.

Notice: **Storing the remote control in a hot area or in direct sunlight may damage it, and the repairs will not be covered by your warranty. Keep the remote control stored in a cool, dry place.**

Remote Control Buttons

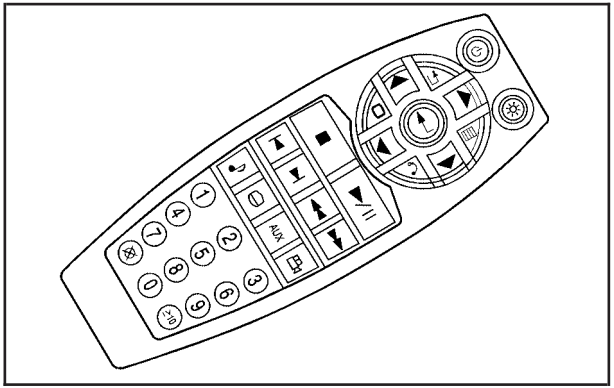

⏻ **(Power):** Press this button to turn the DVD player on and off.

☼ **(Backlight):** Press this button to turn the remote control backlighting on. The backlight will automatically turn off after eight seconds.

(Title): Press this button to display the current title number. Each press of this button will move the disc to the next available title.

▲, ▼, ◀, ▶ **(Directional Arrows):** Press these buttons to move through DVD menus.

The up and down arrows will move through MP3 folders.

◀↵ **(Enter):** Press this button to select the choice that is highlighted in any menu.

▢ **(Display Control Button):** Press this button to open the RSE On-Screen Display (OSD) menus to adjust the color, tint, brightness, contrast, and display modes.

▤ **(Main Menu):** Press this button to view the main DVD menu. The menu is different on every disc. Use the up, down, right, and left arrow buttons to move the cursor around the menu. After making a selection, press the enter button.

↶ **(Return):** Press this button to go back one step in the RSE OSD menu and some DVD menus. Press this button to exit the current menu and to move to the previous menu.

■ **(Stop):** Press this button to stop playing, rewinding, or fast forwarding a disc.

▶‖ **(Play/Pause):** Press this button to start play of a disc. Press this button while a disc is playing to pause it. Press it again to continue playing the disc.

|◀ **(Prior Chapter/Track):** Press this button to go to the beginning of the current chapter or track. Press this button again to return to the previous chapter or track. This button may not work when the DVD is playing the copyright information or previews.

▶| **(Next Chapter/Track):** Press this button to go to the beginning of the next chapter or track. This button may not work when the DVD is playing the copyright information or the previews.

◀◀ **(Fast Reverse):** Press this button to fast reverse the DVD and CD. To stop reversing, press the play or stop button. This button may not work when the DVD is playing the copyright information or the previews.

▶▶ **(Fast Forward):** Press this button to fast forward the DVD and CD. To stop fast forwarding, press the play or stop button. This button may not work when the DVD is playing the copyright information or the previews.

♪ **(Sound):** Press this button to display the current audio track. Each press will move the DVD to the next language or commentary. The format and content of this function will vary for each disc.

(Subtitles): Press this button to display the current subtitles. Each press of this button will move the DVD to the next available subtitle option (English, Spanish, French, etc., if available). The format and content of this function will vary for each disc.

AUX (Auxiliary): Press this button to switch the system between the DVD player and an auxiliary source.

(Camera): Press this button to display the current camera angle on DVDs that have this feature. Each press will move the DVD to the next available camera angle. The format and content of this function will vary for each disc.

0 through 9 (Numeric Keypad): The numeric keypad provides the capability of direct chapter or track number selection.

⊗ **(Clear):** Press this button within two seconds after inputting a numeric selection, to clear all numeric inputs.

≧ **10 (Multiple Digit Entries):** Press this button to select chapter or track numbers greater than 9. Press this button before inputting the number.

RSE On-Screen Display (OSD) Menu

To use the RSE OSD menu when using a DVD or an auxiliary device, do the following:

To access this menu, press the display button on the remote control. Once the menu is on the screen, use the directional arrows and the enter button to navigate the screen. This menu will let you select default preferences for video format, language preference, brightness, color, contrast, and tint. Not all DVDs support all the feature defaults in the setup menus. If a feature is not supported, the defaults will be provided by the DVD media. To exit this menu, press the display or the return button on the remote control or wait for the menu to time out.

The default language selection will apply to all future DVDs.

To use the RSE OSD menu when using a CD or an MP3, do the following:

Make sure that a CD or an MP3 is loaded in the RSE system and that the system is not in auxiliary, then press the display button on the remote control. Once the menu is on the screen, use the directional arrows and the enter button to navigate the screen. This menu will let you select default preferences for language and playback settings. To exit this menu, press the display or the return button on the remote control or wait for the menu to time out.

Battery Replacement

To change the remote control batteries, do the following:

1. Slide the battery door, located on the back of the remote control, down.
2. Replace the two AA batteries in the compartment. Make sure that they are installed correctly, using the diagram on the inside of the battery compartment.
3. Close the battery door.

If the remote control is to be stored for a long period of time, remove the batteries and keep them in a cool, dry place.

Tips and Troubleshooting Chart

Problem	Recommended Action
No power.	The ignition may not be in ACCESSORY, RUN, or RAP.
Disc will not play.	The system might be off. The parental control button might have been pressed. The power indicator lights will flash. The system might be in auxiliary source mode. Press the AUX button to switch between the DVD player and the auxiliary source. The disc is upside down or is not compatible.
No sound — Wireless Headphones	Turn the headphones on. Make sure the correct channel is selected on the wireless headphones. Check the batteries. The volume on the headphones could be too low, adjust the volume.
No sound — Wired Headphones	Make sure the wired headphones are plugged in. Adjust the volume. If RSA is on, DVD audio will not be heard.

Problem	Recommended Action
No sound — Vehicle Speakers	If the DVD system is being heard through the vehicle speakers, adjust the volume on the radio. Press the CD AUX button on the radio to make sure that RSE is enabled. The rear speakers will mute when RSA is on.
The picture is distorted during fast forward or reverse.	This is normal for this operation.
The picture does not fill the screen. There are black borders on the top and bottom or on both sides or it looks stretched out.	Video mode may not be correctly set. See “RSE OSD” earlier in this section.
I ejected the disc and tried to take it out, but it was pulled back into the slot.	Press the eject button once.

Problem	Recommended Action
The language in the audio or on the screen is wrong.	Press the main menu button on the remote control and change the audio or language selection on the DVD menu. To change the language preference, press the display button to access the RSE OSD menu. See “RSE OSD” earlier in this section.
The remote control does not work.	Point the remote control directly at the face of the DVD unit. The batteries could be weak or put in wrong. The parental control button might have been pressed, the power indicator lights will flash.
How do I get subtitles on or off?	Press the subtitle button on the remote control to select subtitle option or go to the DVDs main menu and follow the screen prompts.

Problem	Recommended Action
The auxiliary source is running but there is no picture or sound.	Press and release the AUX button on the remote control or the DVD player to get to auxiliary input. Check to make sure that the auxiliary source is connected to the inputs properly.
The audio or video skips or jumps.	The DVD could be dirty or scratched. Try cleaning the disc.
The fast forward, fast reverse, previous, and next functions do not work.	Some commands that do one thing for DVDs will not always work or perform the same function for audio, audio discs, or games. These functions may also be disabled when the DVD is playing the copyright information or the previews. When RSA is on, these buttons control RSA functions.

Problem	Recommended Action
My disc is stuck in the player. The eject button does not work.	Press the eject button on the DVD player. Turn the ignition off, then on again, then press the eject button on the DVD player. Do not attempt to force or remove the disc from the player. If the problem persists, return to your GM dealer for further assistance.
I lost the remote control and/or the headphones.	Contact your GM dealer for assistance.
Sometimes the wireless headphone audio cuts out or buzzes for a moment, then it comes back.	This could be caused by interference from cell towers or by using the cellular telephone or other radio transmitter devices in the vehicle.

Problem	Recommended Action
DVD System inoperable.	In severe or extreme temperatures the DVD system might not be operable. Temperatures below –4°F (–20°C) or above 140°F (60°C) could damage the DVD system. Operate the DVD system under normal or comfortable cabin temperature ranges. See your GM dealer if the problem persists.
The wireless headphones have audio distortion.	Verify that the headphones are facing to the front of the vehicle, left and right sides are indicated on the headphones to ensure that the signal is received properly. Verify that there is no obstruction between the headphone(s) and the transmitter. Verify that the batteries have a full charge.
In auxiliary mode, the picture moves or scrolls.	Check the signal coming from the auxiliary device and make sure that the connection and the signal is good.

DVD Messages

The following errors may be displayed on the video screen.

Disc Format Error: This message will be displayed if a disc is inserted upside down, if the disc is not readable, or if the disc format is not compatible.

Disc Play Error: This message will be displayed if the mechanism cannot play the disc. Scratched or damaged discs will cause this error.

Region Code Error: This message will be displayed if the region code of the DVD is not compatible with the region code of the DVD player.

Load/Eject Error: This message will be displayed if the disc is not properly loaded or ejected.

No Disc: This message will be displayed when you try to play or eject a disc that is not in the player.

X: A white X will be displayed, in the upper left corner of the video screen, if the operation that has been selected is not currently available.

DVD Distortion

There may be an experience with video distortion when operating cellular phones, scanners, CB radios, Global Position Systems (GPS)*, two-way radios, mobile fax, or walkie talkies.

It may be necessary to turn off the DVD player when operating one of these devices in or near the vehicle.

*Excludes the OnStar® System.

Cleaning the DVD Player

When cleaning the outside DVD faceplate and buttons, use only a clean cloth dampened with clean water.

Cleaning the Video Screen

When cleaning the video screen, use only a clean cloth dampened with clean water. Use care when directly touching or cleaning the screen, as damage may result.

Rear Seat Entertainment System (Option B, Uplevel)

Your vehicle may have this type of DVD Rear Seat Entertainment (RSE) system. If it has this feature, it will include a DVD player, a video display screen, auxiliary inputs, two sets of wireless headphones, and a remote control.

Parental Control

▶❚❚ (Parental Control): This button is located behind the video screen, next to the auxiliary jacks. Press this button while using rear seat audio (RSA), or when a DVD or CD is playing to make the video screen go blank and to mute the audio. The power indicator lights on the DVD player will flash. Turning on the parental control will also disable all other button operations from the remote control and the DVD player, except for the eject button. Press this button again to restore operation of the RSA, DVD player, and remote control.

This button may also be used to turn the DVD player power on and to automatically resume play of a disc that is in the player while the vehicle is on. If no disc is in the player, the system will power up and display no display on the LCD screen.

Before You Drive

The RSE is designed for rear seat passengers only. The driver cannot safely view the video screen while driving and should not try to do so. The RSE system can play DVD, CD, and MP3 discs. You can also connect an auxiliary device to the RSE system to play games, watch videos, look at pictures, etc.

Normal operation may be limited under extremely low or high temperatures, in order to protect the system from damage. Operate the RSE system under normal or comfortable cabin temperature ranges.

Headphones

Notice: **Do not store the headphones in heat or direct sunlight. This could damage the headphones and repairs will not be covered by your warranty. Keep the headphones stored in a cool, dry place.**

Wireless Headphones

The RSE system may include two sets of wireless headphones (batteries may be included with the headphone sets).

The wireless headphones have an ON/OFF switch, a channel select switch, and a volume control. To use the headphones, turn the ON/OFF switch to ON. An indicator light on the headphones will come on. If the light does not come on, the batteries may need to be replaced. See “Battery Replacement” later in this section for more information. Switch the headphones to OFF when not in use.

The headphones will shut off automatically to save the battery power if the RSE system is off or if the headphones are out of range of the transmitters for more than three minutes. The transmitters are located next to the DVD faceplate. If you move too far forward or step out of the vehicle, the headphones will lose the audio signal.

DVD and auxiliary audio will always be found on channel (CHA or CH1) of the wireless headphones. RSA audio is dedicated to CHB or CH2 of the wireless headphones.

To adjust the volume on the wireless headphones, use the volume control located on the headphones.

If there is a decreased audio signal during CD, MP3, or DVD play, there may be a low hissing noise through the speakers and/or headphones. If the hissing sound in the wireless headphones seems excessive, make sure that the headphone batteries are fully charged. Some amount of hissing is normal.

Both sets of rear seat headphones may include foam ear pads that can be replaced.

Foam ear pads on these headphones may become worn or damaged. The headphone foam ear pads can become damaged if they are not handled or stored properly. If the foam ear pads do become damaged or worn out, the pads can be replaced separately from the headphone set. It is not necessary to replace the complete headphone set.

The headphone replacement foam ear pads can be ordered in pairs. See your dealer for more information.

Battery Replacement

To change the batteries, do the following:

1. Loosen the screw on the battery compartment door located on the left side of the headphone earpiece.
2. Replace the two batteries in the compartment. Make sure that they are installed correctly using the diagram on the inside of the battery compartment.
3. Tighten the screw on the battery compartment door.

If the headphones are to be stored for a long period of time, remove the batteries, and keep them in a cool, dry place.

Wired Headphones

There is a right and left wired headphone jack. To adjust the volume, do the following:

1. Plug the headphone into the corresponding jack, located behind the video screen, next to the auxiliary jacks.

2. Press the headphone volume control button until the Wired Headset Volume is displayed and the Left wired headphone is highlighted for selection. Press the volume control button again to select the Right volume control.

   Another way to select either the Left or Right Wired Headset Volume is to press the up or down arrows on the DVD faceplate.

3. Press the right and left arrow buttons on the DVD faceplate to increase or to decrease the volume. Press the headphone volume control button again or wait for a few seconds until the screen disappears.

The wired headphones work as follows:

- DVD on / RSA off: The wired headphones will play RSE audio.
- DVD off / RSA on: The wired headphones will play RSA audio.
- DVD on / RSA on: The wired headphones will play RSA audio.

Stereo RCA Jacks

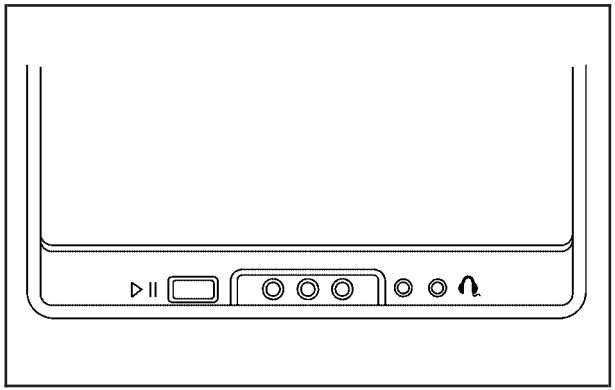

The RCA jacks are located behind the video screen on the DVD console. The RCA jacks allow audio and video signals to be connected from an auxiliary device such as a camcorder or a video game unit to the RSE. The yellow RCA jack is used for video input, the red RCA jack for right audio inputs, and the white RCA jack for left audio inputs. The system requires standard RCA cables, not included, to connect the auxiliary device to the RCA jacks. Refer to the manufacturer's instructions for proper usage.

To use the auxiliary audio and video inputs, connect an external auxiliary device such as a camcorder to the RCA jacks and turn on both the auxiliary device power and the power on the front of the RSE player.

If a disc is present when the RSE power is turned on, the player may automatically begin playing the disc. Press the AUX button on the remote control or the DVD AUX button on the DVD player faceplate to switch the system between the DVD player and the auxiliary device. See “DVD Player” and “Remote Control” later in this section for more information.

Audio Output

Audio from the DVD player or auxiliary devices can be heard through the following sources:

- Vehicle Speakers
- Wireless Headphones
- Wired Headphones (not included)

Vehicle Speakers

Only one audio source can be heard through the vehicle’s speakers at a time.

The RSE system or an auxiliary device can be heard through all of the vehicle’s speakers when the following occurs:

- A DVD or auxiliary device is playing
- The front audio system is on and the CD AUX button is pressed to enable the RSE system

DVD appears on the radio display when the RSE system is on.

To turn the vehicles speakers on and off, press the CD AUX button on the radio. The audio from the RSE system can be heard through the wireless headphones and the vehicles speakers at the same time. The volume on the radio may vary when switching between the radio, CD, DVD, MP3, or an auxiliary device.

Video Screen

The video screen is located in the overhead console.

To use the video screen, do the following:

1. Push the release button and the screen will fold down.
2. Adjust its position as desired.

When the video screen is not in use, push it up into its stowed and latched position.

Notice: **Avoid directly touching the video screen, as damage may occur. See "Cleaning the Video Screen" later in this section for more information.**

DVD Player

The DVD player is located in the overhead console.

The DVD player can be controlled by the buttons on the DVD player and/or by the buttons on the remote control. See "Remote Control" later in this section for more information.

The RSE system DVD player is only compatible with DVDs of the appropriate region code for the country that the vehicle was sold. The DVD region code is printed on the jacket of most DVDs.

The player is capable of playing the following media formats: DVD (single and dual player), DVD+R/RW, DVD-R/RW, DVD-ROM with MP3, DVD-ROM with WMA, CD-DA, CD-R/RW, CD-ROM with MP3, CD-ROM with WMA, Enhanced CD, SACD (CD player only). An error message may appear on the display if any other type of media is inserted into the DVD player.

If an error message appears on the video screen, see "DVD Messages" later in this section.

DVD Player Buttons

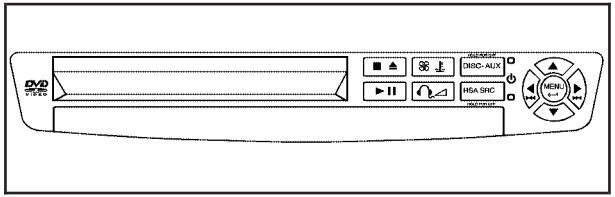

RSE Faceplate with Rear Seat Climate Controls shown, RSE Faceplate without Rear Seat Climate Controls similar

■ ⏏ (Stop/Eject): Press and release this button to stop playing, rewinding, or fast forwarding.

Press this button twice to eject a disc. If the player is already stopped, then only press this button once.

DVD AUX (Disc Auxiliary): Press this button to switch the system between the DVD player and an auxiliary device.

►❚❚ (Play/Pause): Press the play button to start play of a disc. Press the pause button while a disc is playing to pause it. Press it again to continue play of a disc.

(Wired Headphone Volume): Press this button to select the correct headphone. Then press the left or right arrow buttons to increase or decrease the headphone volume.

When a DVD is playing in the DVD player and the RSA system is on, the stop/eject and play/pause buttons are the only buttons that will work.

RSA SRC (Rear Seat Audio Source): Press this button to switch between playing the AM, FM1, FM2, XM1™ or XM2™ Satellite Radio Service (if equipped), or the front CD player. If one of the sources are not loaded, the system will skip over the source when this button is pressed.

◄, ▲, ►, ▼ (Directional Arrows): Press these buttons to move through DVD menus.

The up and down arrows will move through MP3 folders.

⏮ (Fast Reverse): Press this button to fast reverse the DVD and CD. To stop reversing, press the play or stop button. This button may not work when the DVD is playing the copyright information or the previews.

⏭ **(Fast Forward):** Press this button to fast forward the DVD and CD. To stop forwarding, press the play or stop button. This button may not work when the DVD is playing the copyright information or the previews.

MENU (Disc): Press this button to view the main DVD menu. The menu is different on every disc. Use the up, down, right, and left arrow buttons to move the cursor around the menu. After making a selection, press the enter button.

◀┘ **(Enter/Select):** Press this button to select the choice that is highlighted in any menu.

▢ **(Display Control Button):** For vehicles without rear seat climate control, this button will take the place of the fan/temp button. For vehicles with rear seat climate control, this button is also found on the remote control. Press this button to open the RSE On-Screen Display (OSD) menus to adjust the color, tint, brightness, contrast, and display modes.

Playing a Disc

To play a disc, gently insert the disc, with the label side up, into the loading slot. The DVD player will continue loading the disc and the player will automatically start if the vehicle is in ACCESSORY, RUN, or RAP.

If a disc is already in the player, make sure that the DVD player is on, then press the play/pause button on the player faceplate or on the remote control. You can also press the DVD AUX button on the player faceplate, or the CD AUX button on the radio faceplate until RSE appears on the display, to start playing a disc.

Some DVDs will not allow fast forwarding or skipping of the copyright information or previews. Some DVDs will begin playing after the previews have finished. If the DVD does not begin playing at the main title, refer to the on-screen instructions.

Stopping and Resuming Playback

To stop playing a disc, press and release the stop button on the DVD player faceplate or the remote control.

To resume playback, press the play/pause button on the DVD player faceplate or the remote control. The movie should resume play from where it was last stopped if the disc has not been ejected.

If the disc has been ejected, the disc will resume play at the beginning of the disc.

Ejecting a Disc

Press the eject button on the DVD player faceplate, when the disc is stopped, to eject the disc. There is no eject button on the remote control.

If a disc is ejected from the player, but not removed, the DVD player will reload the disc after a short period of time.

Remote Control

The RSE system includes a remote control (batteries may be included with the remote control). To use the remote control, aim it at the transmitter window next to the RSE faceplate and press the desired button. Direct sunlight or very bright light may affect the ability of the transmitter to receive signals from the remote control. If the remote control does not seem to be working, the batteries may need to be replaced. See “Battery Replacement” later in this section. Objects blocking the line of sight will affect the function of the remote control.

Notice: **Storing the remote control in a hot area or in direct sunlight may damage it, and the repairs will not be covered by your warranty. Keep the remote control stored in a cool, dry place.**

Remote Control Buttons

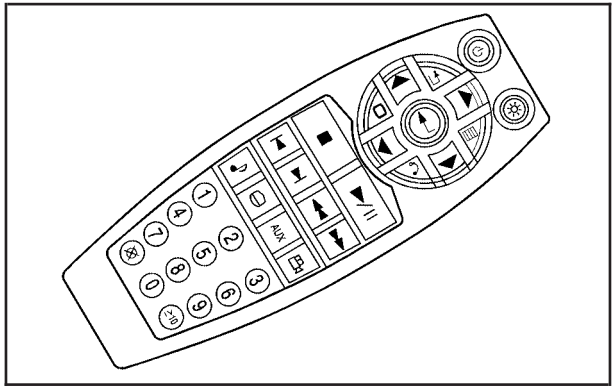

⏻ **(Power):** Press this button to turn the DVD player on and off.

☼ **(Backlight):** Press this button to turn the remote control backlighting on. The backlight will automatically turn off after eight seconds.

(Title): Press this button to display the current title number. Each press of this button will move the disc to the next available title.

◀, ▲, ▶, ▼ **(Directional Arrows):** Press these buttons to move through DVD menus.

The up and down arrows will move through MP3 folders.

(Enter): Press this button to select the choice that is highlighted in any menu.

(Display Control Button): Press this button to open the RSE On-Screen Display (OSD) menus to adjust the color, tint, brightness, contrast, and display modes.

(Main Menu): Press this button to view the main DVD menu. The menu is different on every disc. Use the up, down, right, and left arrow buttons to move the cursor around the menu. After making a selection, press the enter button.

(Return): Press this button to go back one step in the RSE OSD menu and some DVD menus. Press this button to exit the current menu and to move to the previous menu.

■ **(Stop):** Press this button to stop playing, rewinding, or fast forwarding a disc.

►‖ **(Play/Pause):** Press this button to start play of a disc. Press this button while a disc is playing to pause it. Press it again to continue playing the disc.

|◄ **(Prior Chapter/Track):** Press this button to go to the beginning of the current chapter or track. Press this button again to return to the previous chapter or track. This button may not work when the DVD is playing the copyright information or previews.

►| **(Next Chapter/Track):** Press this button to go to the beginning of the next chapter or track. This button may not work when the DVD is playing the copyright information or the previews.

◄◄ **(Fast Reverse):** Press this button to fast reverse the DVD and CD. To stop reversing, press the play or stop button. This button may not work when the DVD is playing the copyright information or the previews.

►► **(Fast Forward):** Press this button to fast forward the DVD and CD. To stop fast forwarding, press the play or stop button. This button may not work when the DVD is playing the copyright information or the previews.

♪ **(Sound):** Press this button to display the current audio track. Each press will move the DVD to the next language or commentary. The format and content of this function will vary for each disc.

▭ **(Subtitles):** Press this button to display the current subtitles. Each press of this button will move the DVD to the next available subtitle option (English, Spanish, French, etc., if available). The format and content of this function will vary for each disc.

AUX (Auxiliary): Press this button to switch the system between the DVD player and an auxiliary source.

(Camera): Press this button to display the current camera angle on DVDs that have this feature. Each press will move the DVD to the next available camera angle. The format and content of this function will vary for each disc.

0 through 9 (Numeric Keypad): The numeric keypad provides the capability of direct chapter or track number selection.

⊗ **(Clear):** Press this button within two seconds after entering a numeric selection, to clear all numeric inputs.

≧ **10 (Multiple Digit Entries):** Press this button to select chapter or track numbers greater than 9. Press this button before entering the number.

RSE On-Screen Display (OSD) Menu

To use the RSE OSD menu when using a DVD or an auxiliary device, do the following:

To access this menu, press the display button on the remote control or on the DVD faceplate, if you do not have rear seat climate control. Once the menu is on the screen, use the directional arrows and the enter button to navigate the screen. This menu will let you select default preferences for video format, language preference, brightness, color, contrast, and tint. Not all DVDs support all the feature defaults in the setup menus. If a feature is not supported, the defaults will be provided by the DVD media. To exit this menu, press the display button, or the return button on the remote control, or faceplate if there is no rear seat climate control, or wait for the menu to time out.

The default language selection will apply to all future DVDs.

To use the RSE OSD menu when using a CD or an MP3, do the following:

Make sure that a CD or an MP3 is loaded in the RSE system and that the system is not in auxiliary, then press the display button on the remote control, or faceplate if there is no rear seat climate control. Once the menu is on the screen, use the directional arrows and the enter button to navigate the screen. This menu lets you select default preferences for language and playback settings. To exit this menu, press the display button, or the return button on the remote control, or faceplate if there is no rear seat climate control, or wait for the menu to time out.

Battery Replacement

To change the remote control batteries, do the following:

1. Slide the battery door, located on the back of the remote control, down.
2. Replace the two batteries in the compartment. Make sure that they are installed correctly, using the diagram on the inside of the battery compartment.
3. Close the battery door.

If the remote control is to be stored for a long period of time, remove the batteries and keep them in a cool, dry place.

Tips and Troubleshooting Chart

Problem	Recommended Action
No power.	The ignition may not be in ACCESSORY, RUN, or RAP.
Disc will not play.	The system might be off. The parental control button might have been pressed. The power indicator lights will flash. The system might be in auxiliary source mode. Press the DVD AUX button on the player faceplate or the AUX button on the remote to switch between the DVD player and the auxiliary sources. The disc is upside down or is not compatible.
No sound — Wireless Headphones	Turn the headphones on. Make sure the correct channel is selected on the wireless headphones. Check the batteries. The volume on the headphones could be too low, adjust the volume.

Problem	Recommended Action
No sound — Wired Headphones	Make sure the wired headphones are plugged in. Adjust the volume. If RSA is on, DVD audio will not be heard.
No sound — Vehicle Speakers	If the DVD system is being heard through the vehicle speakers, adjust the volume on the radio. Press the CD AUX button on the radio to make sure that RSE is enabled. The rear speakers will mute when RSA is on.
The picture is distorted during fast forward or reverse.	This is normal for this operation.
The picture does not fill the screen. There are black borders on the top and bottom or on both sides or it looks stretched out.	Video mode may not be correctly set. See “RSE OSD” earlier in this section.
I ejected the disc and tried to take it out, but it was pulled back into the slot.	Press the eject button once.

Problem	Recommended Action
The language in the audio or on the screen is wrong.	Press the main menu button on the remote control and change the audio or language selection on the DVD menu. To change the language preference, press the display button to access the RSE OSD menu. See “RSE OSD” earlier in this section.
The remote control does not work.	Point the remote control directly at the face of the DVD unit. The batteries could be weak or put in wrong. The parental control button might have been pressed, the power indicator lights will flash.
How do I get subtitles on or off?	Press the subtitle button on the remote control to select subtitle option or go to the DVDs main menu and follow the screen prompts.

Problem	Recommended Action
The auxiliary source is running but there is no picture or sound.	Press and release the AUX button on the remote control or the DVD AUX button on the player faceplate to get to auxiliary input. Check to make sure that the auxiliary source is connected to the inputs properly.
The audio or video skips or jumps.	The DVD could be dirty or scratched. Try cleaning the disc.
The fast forward, fast reverse, previous, and next functions do not work.	Some commands that do one thing for DVDs will not always work or perform the same function for audio, audio discs, or games. These functions may also be disabled when the DVD is playing the copyright information or the previews. When RSA is on, these buttons may control RSA functions.

Problem	Recommended Action
My disc is stuck in the player. The eject button does not work.	Press the eject button on the DVD player. Turn the ignition off, then on again, then press the eject button on the DVD player. Do not attempt to force or remove the disc from the player. If the problem persists, return to your dealer for further assistance.
I lost the remote control and/or the headphones.	Contact your dealer for assistance.
Sometimes the wireless headphone audio cuts out or buzzes for a moment, then it comes back.	This could be caused by interference from cell towers or by using the cellular telephone or other radio transmitter devices in the vehicle.

Problem	Recommended Action
DVD System inoperable.	In severe or extreme temperatures the DVD system might not be operable. Temperatures below –4°F (–20°C) or above 140°F (60°C) could damage the DVD system. Operate the DVD system under normal or comfortable cabin temperature ranges. See your dealer if the problem persists.
The wireless headphones have audio distortion.	Verify that the headphones are facing to the front of the vehicle, left and right sides are indicated on the headphones to ensure that the signal is received properly. Verify that there is no obstruction between the headphone(s) and the transmitter. Verify that the batteries have a full charge.
In auxiliary mode, the picture moves or scrolls.	Check the signal coming from the auxiliary device and make sure that the connection and the signal is good.

DVD Messages

The following errors may be displayed on the video screen.

Disc Format Error: This message is displayed if a disc is inserted upside down, if the disc is not readable, or if the disc format is not compatible.

Disc Play Error: This message is displayed if the mechanism cannot play the disc. Scratched or damaged discs will cause this error.

Region Code Error: This message is displayed if the region code of the DVD is not compatible with the region code of the DVD player.

Load/Eject Error: This message is displayed if the disc is not properly loaded or ejected.

No Disc: This message is displayed when you try to play or eject a disc that is not in the player.

X: A white X is displayed, in the upper left corner of the video screen, if the operation that has been selected is not currently available.

DVD Distortion

There may be an experience with video distortion when operating cellular phones, scanners, CB radios, Global Position Systems (GPS)*, two-way radios, mobile fax, or walkie talkies.

It may be necessary to turn off the DVD player when operating one of these devices in or near the vehicle.

*Excludes the OnStar® System.

Cleaning the DVD Player

When cleaning the outside DVD faceplate and buttons, use only a clean cloth dampened with clean water.

Cleaning the Video Screen

When cleaning the video screen, use only a clean cloth dampened with clean water. Use care when directly touching or cleaning the screen, as damage may result.

Rear Seat Audio (RSA) (Option A, Uplevel)

Your vehicle may have this type of rear seat audio (RSA) system, if it has this feature, it will allow rear seat passengers to listen to and control any of the following audio sources: AM/FM tuner, front CD player, and XM™ Satellite Radio Service (if equipped). However, the rear seat passengers can only control the sources that the front seat passengers are not listening to. For example, rear seat passengers may listen to a CD in the front radio and control it while the driver listens to the radio through the front speakers. The rear seat passengers have control of the volume for each set of headphones.

The front seat audio controls always have priority over the RSA controls. If the front seat passengers switch the source for the main radio to a remote source, the RSA will not be able to control the remote source. You can operate the RSA when the main radio is off.

The DVD or auxiliary device will always be available on channel (CHA or CH1) of the wireless headphones. All other RSA sources are available on CHB or CH2 of the wireless headphones, as well as the wired headphones. If the RSA is off, the wired headphones will provide DVD or auxiliary device audio. The rear seat passengers will not be able to listen to XM, on CHB or CH2, if the front passenger is listening to a DVD or auxiliary device.

The remote control will not operate any of the RSA features.

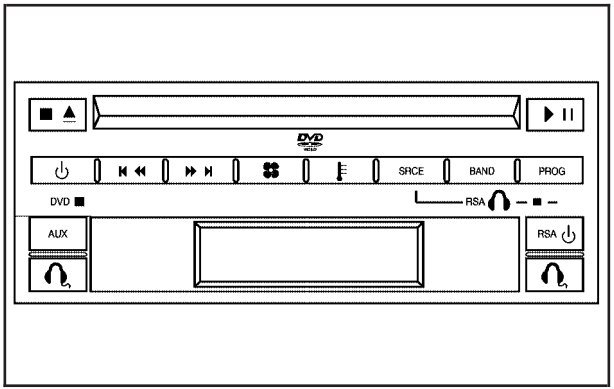

RSA ⏻ (Power): Press this button to turn the RSA system on or off. RSA CHB or RSA CH2 will appear on the display when the system is on to indicate the channel to receive audio for the wireless headphones. Pressing this button will also silence the rear speakers.

BAND: Press this button to switch between FM1, FM2, AM, or XM1 or XM2 (if equipped). The selected radio station will appear on the display. If the front passengers are listening to the radio, the RSA will not switch between the bands and cannot change the station.

|◀ ◀◀ / ▶▶ ▶| (Tune): When listening to the radio, press the right or the left arrow to go to the next or the previous station and stay there. This function is inactive if the front seat passengers are listening to the radio.

When a CD is playing, press the left arrow to go to the start of the current track or to the previous track. Press the right arrow to go to the next track on the CD. This function is inactive if the front seat passengers are listening to a CD.

PROG (Program): Press this button to select the next preset station stored on the radio. Each press of this button will take you to the next preset station. This function is inactive if the front seat passengers are listening to the radio.

When a CD is playing in the single CD player, press this button to select the next track. This function is inactive if the front seat passengers are listening to a CD.

When a CD is playing in the six-disc CD changer, press this button to select the next CD, if multiple CDs are loaded. This function is inactive if the front seat passengers are listening to a CD.

SRCE (Source): Press this button to switch between playing the AM/FM tuner, front CD player, and XM™ Satellite Radio Service (if equipped). If one of the sources are not loaded, the system will skip over the source when this button is pressed.

🎧 (Headphone): Press the right or the left headphone button to enable volume control of the wired headphone connected to the corresponding jack. Press the right and left arrow buttons to change the volume.

▶❚❚ (Parental Control): This button is located behind the video screen, below the auxiliary jacks. Press this button while using RSA, or when a DVD or CD is playing to blank the video screen and to mute the audio. The power indicator lights on the DVD player will flash. Turning on the parental control will also disable all other button operations from the remote control and the DVD player, except for the eject button. Press this button again to restore operation of the RSA, DVD player, and remote control.

This button may also be used to turn the DVD player power on and automatically resume play if the vehicle is on and a disc is in the player. If no disc is in the player then the system will power up in auxiliary mode.

Rear Seat Audio (RSA) (Option B, Uplevel)

Your vehicle may have this type of rear seat audio (RSA) system, if it has this feature, it will allow rear seat passengers to listen to and control any of the following audio sources: AM/FM tuner, front CD player, and XM™ Satellite Radio Service (if equipped). However, the rear seat passengers can only control the sources that the front seat passengers are not listening to. For example, rear seat passengers may listen to a CD in the front radio and control it while the driver listens to the radio through the front speakers. The rear seat passengers have control of the volume for each set of headphones.

The front seat audio controls always have priority over the RSA controls. If the front seat passengers switch the source for the main radio to a remote source, the RSA will not be able to control the remote source. You can operate the RSA when the main radio is off.

The DVD or auxiliary device will always be available on channel (CHA or CH1) of the wireless headphones. All other RSA sources are available on channel (CHB or CH2) of the wireless headphones, as well as the wired headphones. If the RSA is off, the wired headphones will provide DVD or auxiliary device audio. The rear seat passengers will not be able to listen to XM, on channel (CHB or CH2), if the front passenger is listening to a DVD or auxiliary device.

The remote control will not operate any of the RSA features.

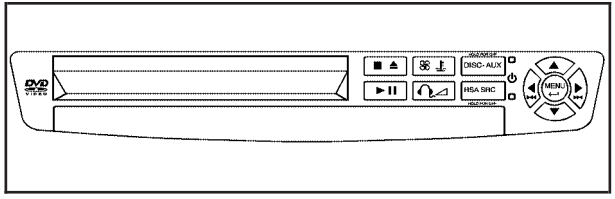

RSA SRC (Rear Seat Audio Source): Press this button to turn on the RSA system. Press this button to switch between playing the AM, FM1, FM2, XM1™ or XM2™ Satellite Radio Service (if equipped), or the front CD player. If one of the sources is not loaded, the system will skip over the source when this button is pressed. Hold this button down to turn off RSA.

▲, ▼, ◀, ▶, (Directional Arrows):
Up Arrow – Press this button while in AM/FM tuner, or XM™ Satellite Radio Service to switch between the station presets. Press this button while sourcing the single CD player to go to the next track. Press this button while sourcing the six-disc CD player to go to the next disc.

Down Arrow – Press this button while in AM/FM tuner to change the BAND from AM/FM tuner to the front CD player or to the XM™ Satellite Radio Service.

Left Arrow – Press this button while in AM/FM tuner, or XM™ Satellite Radio Service to seek down. Press this button while sourcing the single CD player, or the six-disc CD player to go to the previous track.

Right Arrow – Press this button while in AM/FM tuner, or XM™ Satellite Radio Service to seek up. Press this button while sourcing the single CD player, or the six-disc CD player to go to the next track.

(Wired Headphone Volume): Press this button to select the correct headphone. Then press the left or right arrow buttons to increase or decrease the headphone volume.

▶❚❚ (Parental Control): This button is located behind the video screen next to the auxiliary and headphone jacks. Press this button while using RSA, or when a DVD or CD is playing to blank the video screen and to mute the audio. The power indicator lights on the DVD player will flash. Turning on the parental control will also disable all other button operations from the remote control and the DVD player, except for the eject button. Press this button again to restore operation of the RSA, DVD player, and remote control.

This button may also be used to turn the DVD player power on and automatically resume play if the vehicle is on and a disc is in the player. If no disc is in the player then the system will power up in auxiliary mode.

Mobile Digital Media System

Your vehicle may have the GM Mobile Digital Media system which is made up of a digital media player, a wireless game controller, the digital media storage (DMS) cartridge, the USB 2.0 cradle (docking station), and the PhatNoise™ Media Manager software.

See the following information to learn more about the components that make up the complete Digital Media system.

Digital Media Player

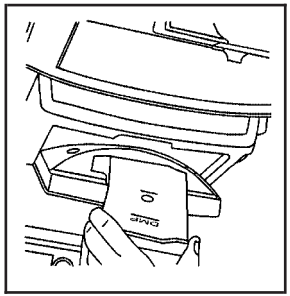

The digital media player is contained in an overhead console. It is attached to the vehicle's overhead rail system, located behind the second row domelamp.

The overhead console has an opening that opens downward and is used to insert or remove the DMS cartridge. Pull the panel down to insert the removable cartridge. Close this panel to completely hide the cartridge inside the console.

With the DMS cartridge inserted, the digital media player is capable of playing back all of the content that has been stored on the cartridge. Audio content is accessible through the radio and steering wheel controls. Audio, videos, and games are accessible through the rear seat video screen.

Wireless Game Controller

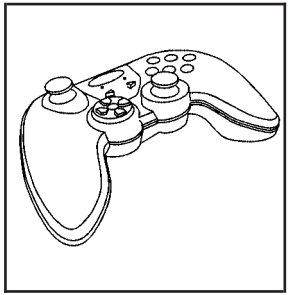

Most of the functions on the game controller will vary, depending on the game being played.

The wireless game controller will allow the rear seat passengers to interact with the video games being played. While playing a game, press the buttons on the controller to send commands to the game being played.

DMS (Digital Media Storage) Cartridge

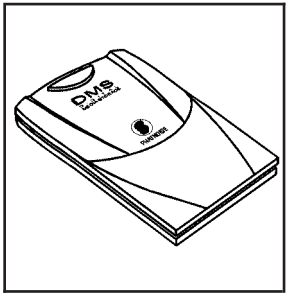

The DMS cartridge is a palm-sized 40GB portable hard drive.

This type of cartridge should allow for storage of up to 5,000 songs in MP3 format, or up to 15 typical movies in MPEG format, and hours of game collections, or any combination of the three.

USB 2.0 Cradle

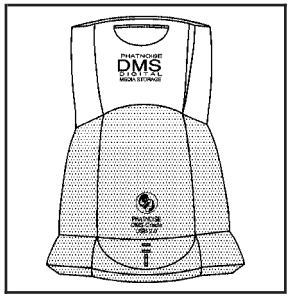

This type of cradle is the docking station for the DMS cartridge.

The USB 2.0 cradle is the docking station that connects the DMS cartridge to the home computer allowing new content to be added to the DMS cartridge. When the cradle is connected to the home computer, you can read from and write to the DMS cartridge. The system is compatible with home computers that support USB communication (Microsoft® Windows 98 SR2 and higher).

The USB 2.0 cradle is also backward compatible for computers equipped with USB 1.1.

PhatNoise™ Media Manager

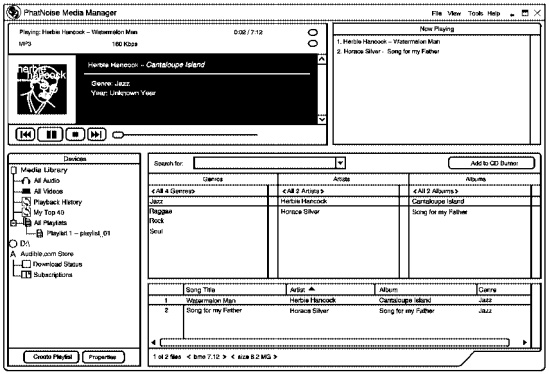

The PhatNoise™ Media Manager (PMM) supports the in-vehicle GM Mobile Digital Media system. The PMM can be used to save audio CDs to the DMS cartridge as well as organize and transfer existing tracks on your PC, load video files onto your DMS cartridge, purchase the preloaded videos and games, and much more.

Selecting Your Mobile Digital Media as the Active Source

Your radio and rear seat entertainment system communicate with the GM Mobile Digital Media system, as one compact unit that can be accessed by everyone seated inside the vehicle. The GM Mobile Digital Media system can hold thousands of songs, hours of videos, and hundreds of games.

To help use this system, see the following “Quick Start” information:

- Front seat driver and passenger, use the radio and steering wheel controls to access the music collection with PhatNoise Voice Index™ technology. The preset buttons can be used to select the browsing category. The Next, Previous, and Seek buttons can be used to browse within a browsing category. Browse the music collection by artist, album, genre, or custom playlist as the system uses the voice mode to announce these selections. See “Using the GM Mobile Digital Media System for Front Seat Audio Entertainment” later in this manual.
- Rear seat passengers, use the wireless DVD remote control to navigate the menu displayed on the overhead DVD video screen, then select to play music, videos, or games. A dedicated game controller is included with the Mobile Digital Media package. See “Using the GM Mobile Digital Media System for Rear Seat Entertainment” later in this manual.

Your vehicle may have audio steering wheel controls. Some audio controls can be adjusted at the steering wheel. See *Audio Steering Wheel Controls on page 367* in your owner manual.

If your vehicle has the OnStar®/Mute audio steering wheel control, read the following instructions.

For vehicles with OnStar®:

- Press and hold the mute button to activate OnStar®.
- Press and release this button once again to deactivate OnStar® mode and go to mute mode.
- Press this button twice to return to sound from the GM Mobile Digital Media system.

For vehicles without OnStar®:

- Press the mute button to silence the system, press and release this button once again to turn the sound back on.

Using GM Mobile Digital Media System for Front Seat Audio Entertainment

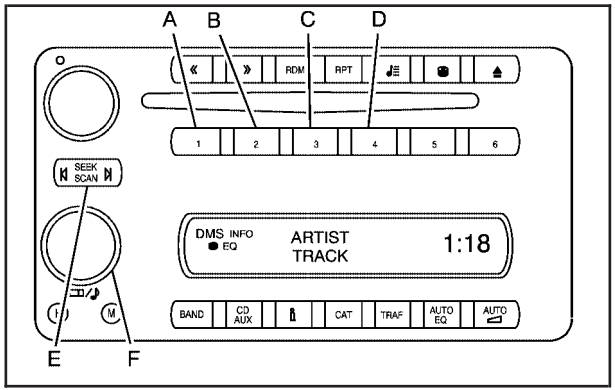

A. Album
B. Artist
C. Genre
D. Playlist
E. Mode Items
F. Tracks

The GM Mobile Digital Media is controlled through the radio and steering wheel controls on your vehicle's audio system. This system functions differently than a typical CD changer. The Digital Media system allows you to switch between different playback modes. These modes determine the next song that will play. Using modes, you can browse through playlists, artists, albums, and genres while the system reads Voice Index™ names to you while you drive. By selecting Playlist Mode, you can access the music collection in the order placed onto the DMS cartridge, or you can have the system sort the music by Album, Artist, or Genre by selecting the corresponding Modes.

Starting the System for Front Seat Entertainment

The GM Mobile Digital Media system is available through the DMS mode of your radio. This system will power on and off automatically and resume where the system last stopped.

To begin playback, follow the instructions listed below:

1. Insert the DMS cartridge into the GM Mobile Digital Media player.
2. Turn on your radio and switch to the DMS mode by pressing the CD/AUX button on your radio.
3. Press any of the first four pushbuttons (A-D) to select different browse modes.
4. Press the left or right SEEK/SCAN arrow (E) to navigate through the mode items.
5. Turn the tune knob (F) to navigate through songs in a song list.

Modes Overview

The numbered preset buttons one through four are used to change the order tracks are grouped and played. For example, in artist mode, all tracks are grouped by artist names. Artist names are listed alphabetically.

The SEEK/SCAN arrows are used to change the mode item. For example, in Album Mode this will change to the next or previous album. The mode list name will display for five seconds, time-out, then update to show which list the GM Mobile Digital Media system is currently playing.

The tune knob is used to change the song within the current category. For example, while in a playlist (Playlist Mode) turning the tune knob to the right will change from track 1 to track 2.

|◀ SEEK/SCAN ▶| : Once a mode has been set, navigate through the categories within that mode by pressing the right or left SEEK/SCAN arrow. The category items will display for five seconds, time-out, then update to show which category the Digital Media system is currently playing.

To change the song that is currently playing, press the right or left SEEK/SCAN arrow to navigate through the songs.

Setting the Browse Mode Using Voice Index™

The system automatically organizes all of the songs on the DMS (digital media storage) cartridge for you. With Voice Index™ browsing, the six numbered pushbuttons are used as mode buttons to browse as the system reads album, artist, genre and playlist names to you while you drive.

1-6 (Pushbuttons): The GM Digital Media system uses the numbered station preset buttons to switch through the browse modes. Press one of the pushbuttons to set the browse mode. The selected browse mode will be announced and the browse mode name will appear on the display.

The preset pushbuttons and the modes associated with those numbers are:

- (1) Album
- (2) Artist
- (3) Genre
- (4) Playlist
- (5) Not Used
- (6) Not Used

Changing Song Lists Within a Browse Mode

Each browse mode contains lists of songs. For example, Genre mode might contain a list of Classical songs, a list of Rock songs, and a list of Country songs.

Once the audio system is set to one of the four modes, press the SEEK/SCAN button to navigate through the song lists. For example, press the right arrow while in Album mode to change to the next album. Press the left arrow to go back to the previous Album item.

|◀ SEEK/SCAN ▶| : Press the SEEK/SCAN button once to change to the next song list.

Mode 1 (Album Mode): Press the (1) pushbutton to put the system into Album mode. Press the right or left SEEK/SCAN arrow once to change to the next or previous Album. Albums are listed alphabetically in groups of Artists.

Mode 2 (Artist Mode): Press the (2) pushbutton to put the system into Artist mode. Press the right or left SEEK/SCAN arrow once to change to the next or previous Artist. Artists are listed in alphabetical order.

Mode 3 (Genre Mode): Press the (3) pushbutton to put the system into Genre mode. Press the right or left SEEK/SCAN arrow once to change to the next or previous Genre in alphabetical order.

Mode 4 (Playlist Mode): Press the (4) pushbutton to put the system into Playlist mode. Press the right or left SEEK/SCAN arrow once to change to the next or previous Playlist in the order the playlists were saved to the DMS cartridge.

The Album, Artist, and Genre lists are generated and organized automatically using the Phatnoise™ Media Manager.

Seeking Through Song List Titles

|◀ SEEK/SCAN ▶| : Press and hold the SEEK/SCAN button for more than 2 seconds to start seeking through song list titles. Press this button again to stop on a song list title.

The Digital Media system will announce the following in each mode:

Mode 1 (Album Mode): Album names are announced.

Mode 2 (Artist Mode): Artist names are announced. Press and hold the SEEK/SCAN button until the system announces the first letter of each artist name.

Mode 3 (Genre Mode): The first letter of Artist names are announced in alphabetical order. Press and hold the SEEK/SEEK button until the system announces the first letter of each artist name.

Mode 4 (Playlist Mode): Seeking through songs is not available in Playlist Mode.

Finding Songs in a Song List

After finding a playlist, artist, album, or genre, navigate through the songs by turning the tune knob.

Using the Fast Forward and Fast Reverse Buttons

≪ ≫ **(Fast Forward/Fast Reverse):** Press and hold the fast forward or fast reverse arrow to fast forward or reverse within the current track.

Using the GM Mobile Digital Media System for Rear Seat Entertainment

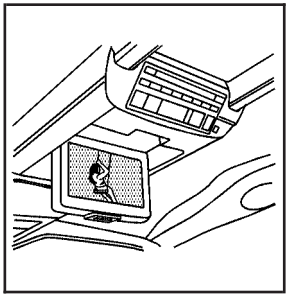

Overhead Video Screen

Rear seat passengers can enjoy audio, video and games over the wireless headphones.

Access to the Audio, Video, and Games on the menu system is displayed on the video screen. The DVD remote control and the controls on the DVD player itself can be used to make the selections.

Starting the System for Rear Seat Entertainment

The GM Mobile Digital Media system is available through the auxiliary mode of the DVD player.

To begin using the system, follow the instruction list below:

1. Insert the DMS cartridge into the GM Mobile Digital Media player.
2. Turn on your video screen by pressing the power button.
3. Switch to the DMS mode by pressing the AUX button.

Navigating the On-Screen Menus Using the DVD Remote Control

The on-screen menus provide access to the Audio, Video, and Game content on your digital media storage (DMS) cartridge. Use the DVD remote control to navigate the on-screen menus.

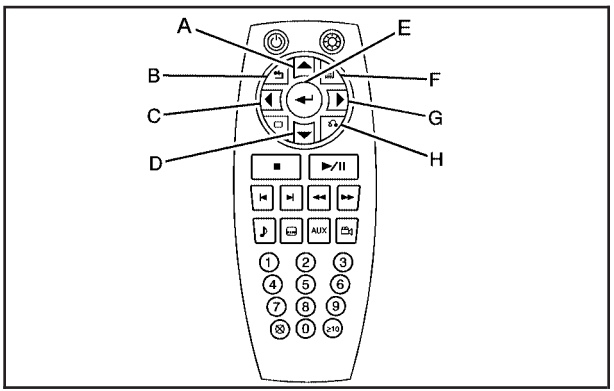

A. Up List
B. Top Menu
C. Left
D. Down List
E. Select
F. Options
G. Right
H. Return to Current Selection

▲, ▼, ◀, ▶ (Up List, Down List, Right, and Left Directional Arrows): For the GM Mobile Digital Media system, press the up list or down list directional arrows (A, D) to move the highlight area up or down the list of items.

Press the right directional arrow (G) to go further into the selected item, or press the left directional arrow (C) to go back one menu level.

(Enter/Select): For the GM Mobile Digital Media system, press the enter/select button (E) to go into any selected menu item.

(Title/Top Menu): For the GM Mobile Digital Media system, press the title/top menu button (B) to jump to the start screen.

(Return/Current Selection): For the GM Mobile Digital Media system, if audio is playing or in the pause mode, press the return/current selection button (H) to go back to the current selection.

(Menu/Options): For the GM Mobile Digital Media system, press the menu/options button (F) to display the options list.

■ (Stop): For the GM Mobile Digital Media system, press this button to stop playback of the selected option.

▶ / ❚❚ (Play/Pause): For the GM Mobile Digital Media system, press this button to start playback of a selected option. Press this button while an option is in the play mode to pause it. Press it again to continue playback of the current option.

DVD Remote Control Batteries

If the remote control does not seem to be working, the batteries may need to be replaced. See Remote Control, “Battery Replacement” in your vehicle’s owner manual.

Browsing Audio

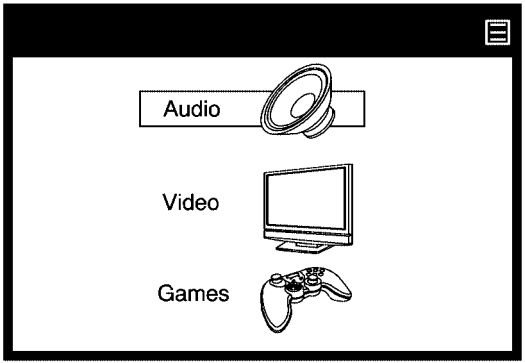

1. Select the Audio option through the menu system displayed on the video screen.

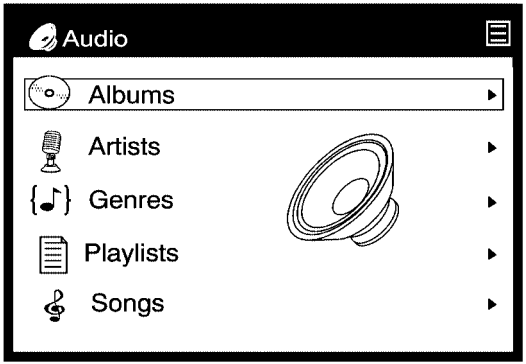

2. Press the up list or down list directional arrows (A, D) on the remote control to navigate through the menu options such as album, artist, playlist or genre. See “Navigating the On-Screen Menus Using the DVD Remote Control” earlier in this section for more information.

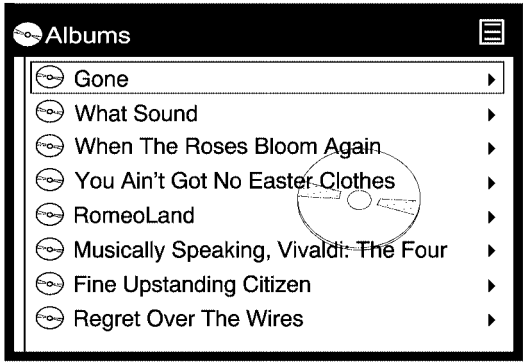

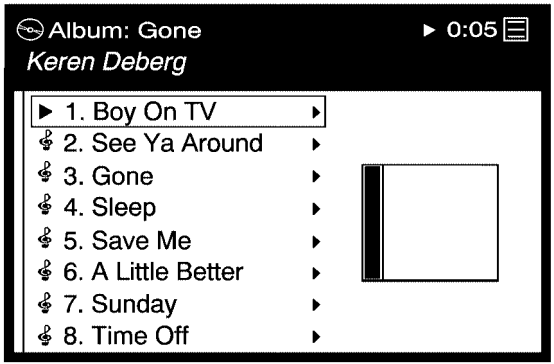

3. Press the select button (E) on the remote control to begin playing an album, artist, genre, playlist, or song. See “Navigating the On-Screen Menus Using the DVD Remote Control” earlier in this section for more information.

4. If you want to find a particular song, press the right directional arrow (G) on the remote control to go further into the selected item. See “Navigating the On-Screen Menus Using the DVD Remote Control” earlier in this section for more information.

Video Browsing

Browse digital videos stored on the system through the menu display. MPEG format is supported, so you can play back recorded shows and movies from television, home movies, downloaded videos and pre-packaged feature films and shows. See the following instructions for further screen display information:

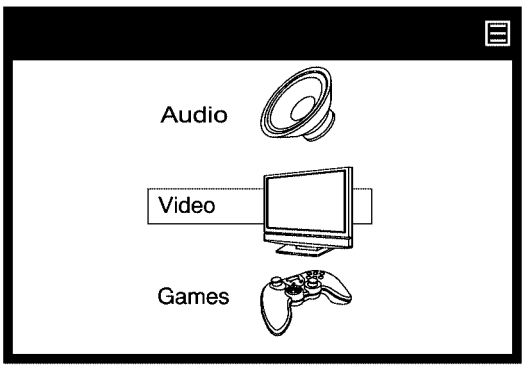

1. Select the Video option through the menu system displayed on the video screen.

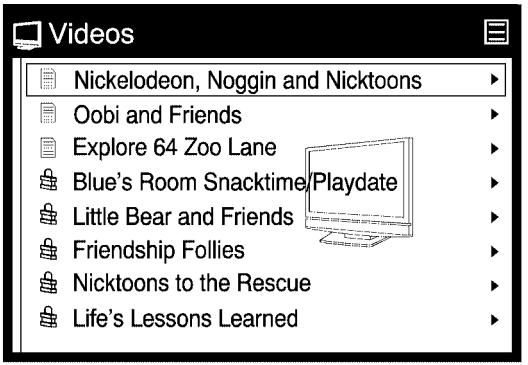

2. Press the up list or down list directional arrows (A, D) on the remote control to navigate through preloaded videos and unlocked video playlists. See “Navigating the On-Screen Menus Using the DVD Remote Control” earlier in this section for more information.

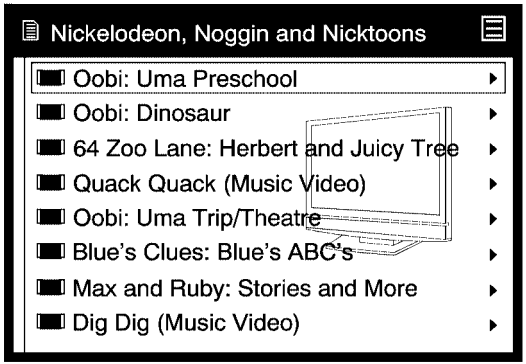

3. If you want to find a particular video, press the right directional arrow (G) on the remote control to go further into the selected item. See “Navigating the On-Screen Menus Using the DVD Remote Control” earlier in this section for more information.

Games Browsing

Browse games that are stored on the system through the menu display. Video games are preloaded on the DMS cartridge and played with rich screen graphics and the included wireless game controller.

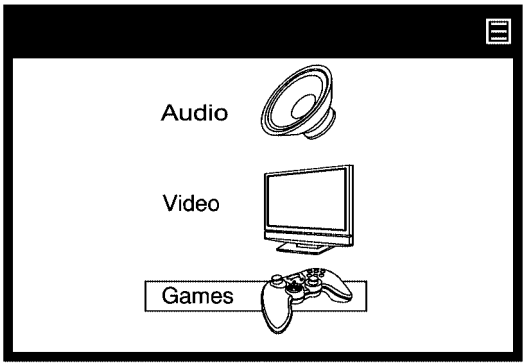

1. Select the Games option through the menu system displayed on the video screen.

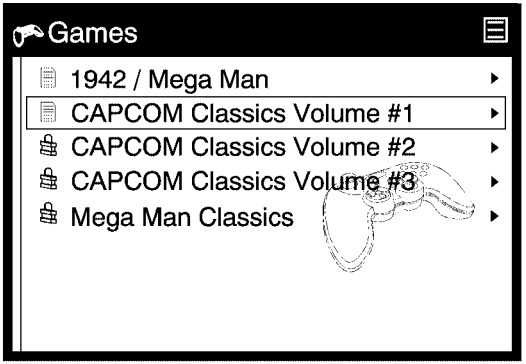

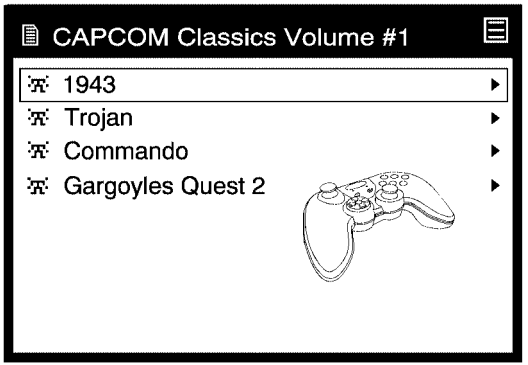

2. Press the up list or down list directional arrows (A, D) on the remote control to navigate through the preloaded game packages. Game packages can be purchased and unlocked from your desktop computer. See the PhatNoise™ Media Manager Owner's Manual for more information on how to unlock games.

Wireless Game Controller

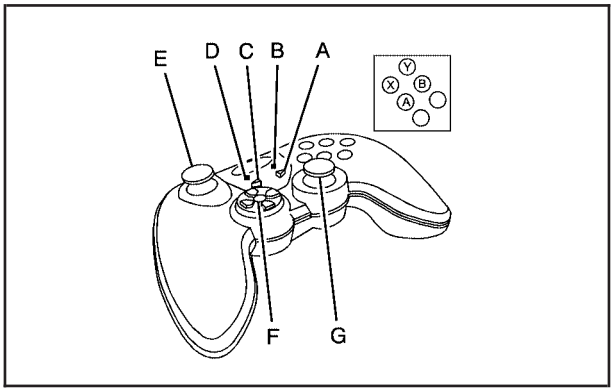

A. Start Button
B. Start Light
C. Select Button
D. Select Light
E. Left Thumbstick
F. Left Rockerpad
G. Right Thumbstick

The wireless game controller transmits radio frequency signals to the overhead monitor. Wireless means, there are no cords to hinder your movement while playing games.

The key pad as shown above has six buttons located on the upper right side of the game controller.

Wireless Game Controller Synchronization

In the event that your GM Mobile Digital Media game controller needs to be re-synchronized with your vehicle, open the battery compartment and remove a battery. As soon as the battery is replaced, the game controller will synchronize with the vehicle during the next ignition cycle.

Wireless Game Controller Play Mode

The functionality of your GM Mobile Digital Media Game Controller is dependant upon the game being played. In cases where there are two player options for a game, you may desire to have a second controller in your vehicle which may be purchased through your dealer.

Wireless Game Controller Power Saving Mode

Your GM Mobile Digital Media Game Controller has a built-in power saving mode to conserve battery life. When not in use, the game controller will automatically go into “Sleep” mode. The game controller can be awakened at any time by pressing the “Start” button.

Important Safety and Handling Instructions

This equipment has been tested and found to comply with the limits for a Class B digital device, pursuant to Part 15 of the FCC Rules. These limits are designed to provide reasonable protection against harmful interference in a residential installation. This equipment may cause harmful interference to radio communications, if it is not installed and used in accordance with the instructions provided. However, there is no guarantee that interference will not occur in a particular installation. If this equipment does cause harmful interference to radio or television reception, which can be determined by turning the equipment off and on, consult the dealer for help.

This device also complies with RSS-210 of Industry Canada. Operation is subject to the following two conditions:

1. This device may not cause interference.
2. This device must accept any interference received, including interference that may cause undesired operation of the device.

Changes and modifications to this system by other than an authorized service facility could void authorization to use this equipment.

Read the following for instructions on handling and taking care of your Mobile Digital Media system and its components.

Digital Media Storage (DMS) Cartridge Care

- Do not leave the DMS cartridge in locations with extremely high temperatures such as on a car dashboard or in the rear window where it will be subject to direct sunlight.
- Do not drop the DMS cartridge or subject it to a violent shock.
- Do not spill liquid on the DMS cartridge or submerge the DMS cartridge in liquid. The only effective protection for data and other material stored on the DMS cartridge is the regular backing up of that data by you.

Mobile Digital Media Player Care

- Never spray any type of liquid such as a cleaning agent inside of an open cartridge panel on the Digital Media player. Doing this may damage the parts or inside mechanism needed to help operate the unit.
- Do not use any object to probe the opening of the Mobile Digital Media player and do not put any body parts or other foreign objects in the opening of the product.

Tips and Troubleshooting Chart

Problem	Cause and Solution
The Digital Media system and RSE system will not come on at all.	• A fuse in the car has blown. After checking for short circuits in the wires, replace the fuse with one of the same rating.
The RSE screen displays DMS MEDIA NOT INSERTED.	• The DMS cartridge is not fully inserted. Fully insert the DMS cartridge.
The RSE screen displays DMS MEDIA LOADING.	• The system is still booting. Please wait up to 15 seconds for the system to boot and then switch back to digital media mode.
The RSE screen displays DMS MEDIA ERROR.	• The DMS cartridge is not operating properly or is damaged. See your dealer if the problem persists.
The RSE screen displays DMS MEDIA FILE ERROR.	• A file on your DMS cartridge is corrupted and will not play properly. Run the PhatNoise DMS Doctor on your computer and follow the recommendations.
The green light blinks at a steady rate for longer than 20 seconds.	• You have updated the firmware on the DMS cartridge and the Mobile Digital Media system is reprogramming itself. DO NOT REMOVE THE DMS CARTRIDGE. Allow the Digital Media system to reprogram itself for up to 10 minutes. When reprogramming is complete, the lights will turn off and stay off. The system will be ready to use.

Tips and Troubleshooting Chart (cont'd)

Problem	Cause and Solution
No Sound.	• Adjust the volume of the head unit. • Make sure the head unit has the Digital Media player as the active source.
No Sound. The head unit cannot access the Digital Media system.	• File(s) on your cartridge may be corrupt. Run the PhatNoise DMS Doctor on your computer and follow the recommendations. • If you have just downloaded new firmware, this is normal. Wait about seven minutes until the green light stops blinking, then both lights should go off.
Audio skipping occurs during playback.	Many things can cause a "skip", or any break during playback. If you are hearing breaks in playback, here are some things to check: • When you hear a skip, restart the track, or seek backwards a bit, to hear if the skip is actually in the music file. • Check to see if you are using the latest firmware and desktop software. This is very important, as software is updated frequently. See PhatNoise Music Manager manual. • Sometimes a heavily fragmented cartridge can skip due to increased seek times. Defragment the cartridge for best performance. See PhatNoise Media Manager™ software instructions for defragmenting a cartridge.

Tips and Troubleshooting Chart (cont'd)

Problem	Cause and Solution
WMA files are not playing in the Mobile Digital Media system.	Some software such as Windows Media Player features copy protection in their WMA encoding tools. This prevents the tracks from playing on any device other than your computer. Disable any "Copy Protect Music" check box when encoding music. Consult your software's manual for more information.
Voice prompts are missing in the vehicle.	Check your voice prompt settings on your desktop computer: • Insert the DMS. • Open the Device view and select the DMS. • Press the Hardware Options button. • Open the DMS Database/Voice Prompts tab and click Fix Voice Prompts.

Customer Assistance Center

For customer assistance in the United States, call 1-877-GM-PHATN (877-467-4286) or contact the Customer Assistance Center through the internet at gmmobilemediasupportgedas.com

For customer assistance in Canada, see the Customer Assistance Offices in the index of your vehicle's owner manual.

Theft-Deterrent Feature

THEFTLOCK® is designed to discourage theft of your vehicle's radio. The feature works automatically by learning a portion of the Vehicle Identification Number (VIN). If the radio is moved to a different vehicle, it will not operate and LOCKED will appear on the display.

With THEFTLOCK® activated, the radio will not operate if stolen.

Audio Steering Wheel Controls

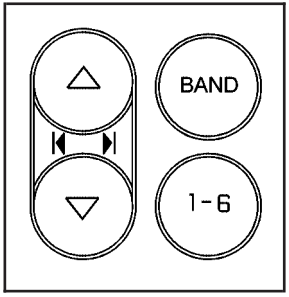

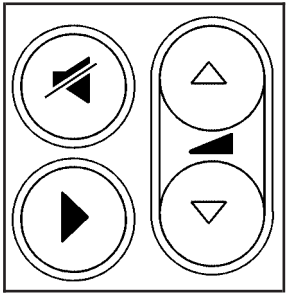

If your vehicle has this feature, some audio controls can be adjusted at the steering wheel. They include the following:

△|◀ ▶| ▽ **(Seek):** Press the up or the down arrow to go to the next or previous station and stay there.

To scan stations, press and hold either arrow for two seconds until FREQUENCY SCAN appears on the display. The radio will go to a station, play for a few seconds, then go to the next station. Press either arrow again to stop scanning.

The sound will mute while seeking or scanning.

The radio will only seek or scan stations with a strong signal that are in the selected band.

When a CD is playing, press either arrow to go to the previous or next track, if more than eight seconds have played. If either arrow is held or pressed more than once, the player will continue moving backward or forward through the CD.

BAND: Press this button to switch between FM1, FM2, AM, or XM1 or XM2 (if equipped).

1 - 6: Press this button to scan the stations that are programmed on the radio preset pushbuttons. The radio will go to the next preset station stored on the pushbuttons, play for a few seconds, then go on to the next preset station. Press this button again to stop scanning. The radio will only scan preset stations with a strong signal that are in the selected band.

(Mute): Press this button to silence the system. Press this button again, to turn the sound on.

(Play): When listening to the radio, press this button to play a CD.

(Volume): Press the up or down arrow to increase or decrease the volume.

Radio Reception

You may experience frequency interference and static during normal radio reception if items such as cellphone chargers, vehicle convenience accessories, and external electronic devices are plugged into the accessory power outlet. If there is interference or static, unplug the item from the accessory power outlet.

AM

The range for most AM stations is greater than for FM, especially at night. The longer range can cause station frequencies to interfere with each other. For better radio reception, most AM radio stations will boost the power levels during the day, and then reduce these levels during the night. Static can also occur when things like storms and power lines interfere with radio reception. When this happens, try reducing the treble on your radio.

FM Stereo

FM stereo will give the best sound, but FM signals will reach only about 10 to 40 miles (16 to 65 km). Tall buildings or hills can interfere with FM signals, causing the sound to fade in and out.

XM™ Satellite Radio Service

XM™ Satellite Radio Service gives digital radio reception from coast-to-coast in the 48 contiguous United States, and in Canada. Just as with FM, tall buildings or hills can interfere with satellite radio signals, causing the sound to fade in and out. In addition, traveling or standing under heavy foliage, bridges, garages, or tunnels may cause loss of the XM™ signal for a period of time. The radio may display NO SIGNAL to indicate interference.

Care of Your CDs and DVDs

Handle CDs carefully. Store them in their original cases or other protective cases and away from direct sunlight and dust. The CD player scans the bottom surface of the disc. If the surface of a CD is damaged, such as cracked, broken, or scratched, the CD will not play properly or not at all. If the surface of a CD is soiled, take a soft, lint free cloth or dampen a clean, soft cloth in a mild, neutral detergent solution mixed with water, and clean it. Make sure the wiping process starts from the center to the edge.

Do not touch the bottom side of a CD while handling it; this could damage the surface. Pick up CDs by grasping the outer edges or the edge of the hole and the outer edge.

Care of the CD and DVD Player

The use of CD lens cleaners for CDs is not advised, due to the risk of contaminating the lens of the CD optics with lubricants internal to the CD mechanism.

Fixed Mast Antenna

The fixed mast antenna can withstand most car washes without being damaged. If the mast should ever become slightly bent, straighten it out by hand. If the mast is badly bent, replace it.

Check occasionally to make sure the mast is still tightened to the antenna base located on the hood of the vehicle. If tightening is required, tighten by hand.

XM™ Satellite Radio Antenna System

The XM™ Satellite Radio antenna is located on the roof of your vehicle. Keep this antenna clear of snow and ice build up for clear radio reception.

Loading items onto the roof of your vehicle can interfere with the performance of the XM™ system. Make sure that the XM™ satellite antenna is not obstructed.

Chime Level Adjustment

The radio is used to adjust the vehicle's chime level. To change the volume level of the chime, press and hold pushbutton 6 with the ignition on and the radio power off. The volume level will change from the normal level to loud, and LOUD will appear on the radio display. To change back to the default or normal setting, press and hold pushbutton 6 again. The volume level will change from the loud level to normal, and NORMAL will appear on the radio display. Removing the radio and not replacing it with a factory radio or chime module will disable vehicle chimes.

Section 4 Driving Your Vehicle

Your Driving, the Road, and Your Vehicle 372
Defensive Driving 372
Drunken Driving 373
Control of a Vehicle 376
Braking 376
Anti-Lock Brake System (ABS) 377
Braking in Emergencies 379
Traction Control System (TCS) 379
StabiliTrak® System 381
Steering 383
Off-Road Recovery 385
Passing 385
Loss of Control 387
Driving at Night 388
Driving in Rain and on Wet Roads 390
City Driving 393
Freeway Driving 394
Before Leaving on a Long Trip 395
Highway Hypnosis 396
Hill and Mountain Roads 397
Winter Driving 399
If Your Vehicle is Stuck in Sand, Mud, Ice, or Snow 403
Rocking Your Vehicle to Get It Out 404
Loading Your Vehicle 404
Towing 410
Towing Your Vehicle 410
Recreational Vehicle Towing 410
Level Control 411
Towing a Trailer 412

Your Driving, the Road, and Your Vehicle

Defensive Driving

The best advice anyone can give about driving is: Drive defensively.

Please start with a very important safety device in your vehicle: Buckle up. See *Safety Belts: They Are for Everyone on page 32*.

⚠ CAUTION:

Defensive driving really means "Be ready for anything." On city streets, rural roads, or expressways, it means "Always expect the unexpected." Assume that pedestrians or other drivers are going to be careless and make mistakes. Anticipate what they might do and be ready. Rear-end collisions are about the most preventable of accidents. Yet they are common. Allow enough following distance. Defensive driving requires that a driver concentrate on the driving task. Anything that distracts from the driving task makes proper defensive driving more difficult and can even cause a collision, with resulting injury. Ask a passenger to help do these things, or pull off the road in a safe place to do them. These simple defensive driving techniques could save your life.

Drunken Driving

Death and injury associated with drinking and driving is a national tragedy. It is the number one contributor to the highway death toll, claiming thousands of victims every year.

Alcohol affects four things that anyone needs to drive a vehicle:

- Judgment
- Muscular Coordination
- Vision
- Attentiveness

Police records show that almost half of all motor vehicle-related deaths involve alcohol. In most cases, these deaths are the result of someone who was drinking and driving. In recent years, more than 16,000 annual motor vehicle-related deaths have been associated with the use of alcohol, with more than 300,000 people injured.

Many adults — by some estimates, nearly half the adult population — choose never to drink alcohol, so they never drive after drinking. For persons under 21, it is against the law in every U.S. state to drink alcohol. There are good medical, psychological, and developmental reasons for these laws.

The obvious way to eliminate the leading highway safety problem is for people never to drink alcohol and then drive. But what if people do? How much is “too much” if someone plans to drive? It is a lot less than many might think. Although it depends on each person and situation, here is some general information on the problem.

The Blood Alcohol Concentration (BAC) of someone who is drinking depends upon four things:

- The amount of alcohol consumed
- The drinker’s body weight
- The amount of food that is consumed before and during drinking
- The length of time it has taken the drinker to consume the alcohol

According to the American Medical Association, a 180 lb (82 kg) person who drinks three 12 ounce (355 ml) bottles of beer in an hour will end up with a BAC of about 0.06 percent. The person would reach the same BAC by drinking three 4 ounce (120 ml) glasses of wine or three mixed drinks if each had 1-1/2 ounces (45 ml) of liquors like whiskey, gin, or vodka.

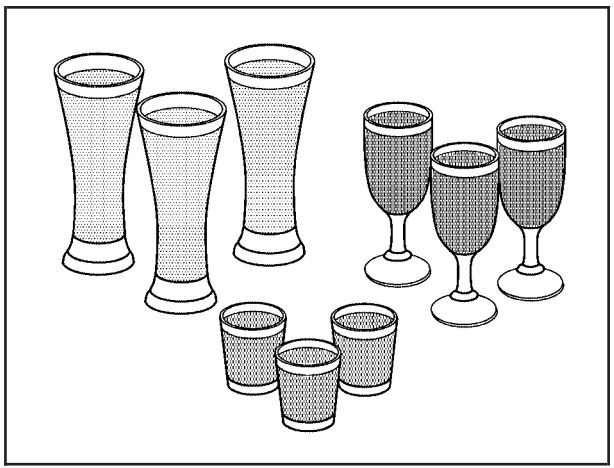

It is the amount of alcohol that counts. For example, if the same person drank three double martinis (3 ounces or 90 ml of liquor each) within an hour, the person's BAC would be close to 0.12 percent. A person who consumes food just before or during drinking will have a somewhat lower BAC level.

There is a gender difference, too. Women generally have a lower relative percentage of body water than men. Since alcohol is carried in body water, this means that a woman generally will reach a higher BAC level than a man of her same body weight will when each has the same number of drinks.

The law in most U.S. states, and throughout Canada, sets the legal limit at 0.08 percent. In some other countries, the limit is even lower. For example, it is 0.05 percent in both France and Germany. The BAC limit for all commercial drivers in the United States is 0.04 percent.

The BAC will be over 0.10 percent after three to six drinks (in one hour). Of course, as we have seen, it depends on how much alcohol is in the drinks, and how quickly the person drinks them.

But the ability to drive is affected well below a BAC of 0.10 percent. Research shows that the driving skills of many people are impaired at a BAC approaching 0.05 percent, and that the effects are worse at night. All drivers are impaired at BAC levels above 0.05 percent. Statistics show that the chance of being in a collision increases sharply for drivers who have a BAC of 0.05 percent or above. A driver with a BAC level of 0.06 percent has doubled his or her chance of having a collision. At a BAC level of 0.10 percent, the chance of this driver having a collision is 12 times greater; at a level of 0.15 percent, the chance is 25 times greater!

The body takes about an hour to rid itself of the alcohol in one drink. No amount of coffee or number of cold showers will speed that up. “I will be careful” is not the right answer. What if there is an emergency, a need to take sudden action, as when a child darts into the street? A person with even a moderate BAC might not be able to react quickly enough to avoid the collision.

There is something else about drinking and driving that many people do not know. Medical research shows that alcohol in a person’s system can make crash injuries worse, especially injuries to the brain, spinal cord, or heart. This means that when anyone who has been drinking — driver or passenger — is in a crash, that person’s chance of being killed or permanently disabled is higher than if the person had not been drinking.

⚠ CAUTION:

Drinking and then driving is very dangerous. Your reflexes, perceptions, attentiveness, and judgment can be affected by even a small amount of alcohol. You can have a serious — or even fatal — collision if you drive after drinking. Please do not drink and drive or ride with a driver who has been drinking. Ride home in a cab; or if you are with a group, designate a driver who will not drink.

Control of a Vehicle

You have three systems that make your vehicle go where you want it to go. They are the brakes, the steering, and the accelerator. All three systems have to do their work at the places where the tires meet the road.

Sometimes, as when you are driving on snow or ice, it is easy to ask more of those control systems than the tires and road can provide. That means you can lose control of your vehicle. See *Traction Control System (TCS) on page 379* and *StabiliTrak® System on page 381*.

Adding non-GM accessories can affect your vehicle's performance. See *Accessories and Modifications on page 426*.

Braking

See *Brake System Warning Light on page 238*.

Braking action involves perception time and reaction time.

First, you have to decide to push on the brake pedal. That is perception time. Then you have to bring up your foot and do it. That is reaction time.

Average reaction time is about three-fourths of a second. But that is only an average. It might be less with one driver and as long as two or three seconds or more with another. Age, physical condition, alertness, coordination, and eyesight all play a part. So do alcohol, drugs, and frustration. But even in three-fourths of a second, a vehicle moving at 60 mph (100 km/h) travels 66 feet (20 m). That could be a lot of distance in an emergency, so keeping enough space between your vehicle and others is important.

And, of course, actual stopping distances vary greatly with the surface of the road, whether it is pavement or gravel; the condition of the road, whether it is wet, dry, or icy; tire tread; the condition of the brakes; the weight of the vehicle; and the amount of brake force applied.

Avoid needless heavy braking. Some people drive in spurts — heavy acceleration followed by heavy braking — rather than keeping pace with traffic. This is a mistake. The brakes may not have time to cool between hard stops. The brakes will wear out much faster if you do a lot of heavy braking. If you keep pace with the traffic and allow realistic following distances, you will eliminate a lot of unnecessary braking. That means better braking and longer brake life.

If your vehicle's engine ever stops while you are driving, brake normally but do not pump the brakes. If you do, the pedal may get harder to push down. If the engine stops, you will still have some power brake assist. But you will use it when you brake. Once the power assist is used up, it may take longer to stop and the brake pedal will be harder to push.

Adding non-GM accessories can affect your vehicle's performance. See *Accessories and Modifications on page 426*.

Anti-Lock Brake System (ABS)

Your vehicle has the Anti-Lock Brake System (ABS), an advanced electronic braking system that will help prevent a braking skid.

When you start your engine and begin to drive away, ABS will check itself. You may hear a momentary motor or clicking noise while this test is going on, and you may even notice that your brake pedal moves or pulses a little. This is normal.

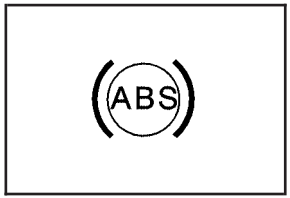

If there is a problem with ABS, this warning light will stay on. See *Anti-Lock Brake System Warning Light on page 239*.

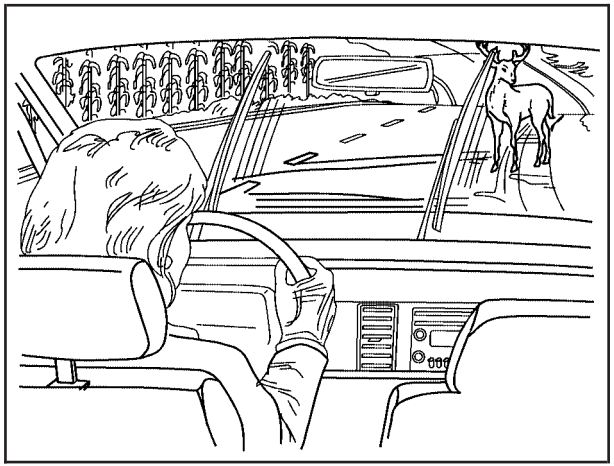

Let us say the road is wet and you are driving safely. Suddenly, an animal jumps out in front of you. You slam on the brakes and continue braking. Here is what happens with ABS:

A computer senses that wheels are slowing down. If one of the wheels is about to stop rolling, the computer will separately work the brakes at each wheel.

ABS can change the brake pressure faster than any driver could. The computer is programmed to make the most of available tire and road conditions. This can help you steer around the obstacle while braking hard.

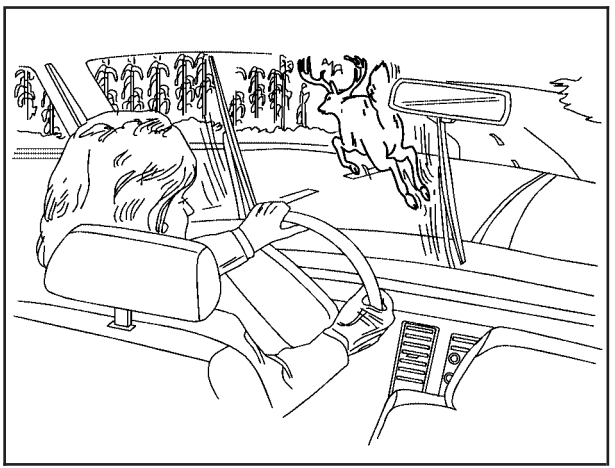

As you brake, your computer keeps receiving updates on wheel speed and controls braking pressure accordingly.

Remember: ABS does not change the time you need to get your foot up to the brake pedal or always decrease stopping distance. If you get too close to the vehicle in front of you, you will not have time to apply your brakes if that vehicle suddenly slows or stops. Always leave enough room up ahead to stop, even though you have ABS.

Using ABS

Do not pump the brakes. Just hold the brake pedal down firmly and let anti-lock work for you. You may feel a slight brake pedal pulsation or notice some noise, but this is normal.

Braking in Emergencies

With ABS, you can steer and brake at the same time. In many emergencies, steering can help you more than even the very best braking.

Traction Control System (TCS)

Your vehicle may have a traction control system that limits wheel spin. This is especially useful in slippery road conditions. The system operates if it senses that one or both of the front wheels are spinning or beginning to lose traction. When this happens, the system brakes the spinning wheel(s) and/or reduces engine power to limit wheel spin.

The TRACTION CONTROL ACTIVE message will come on in the Driver Information Center (DIC) when the traction control system is limiting wheel spin. You may feel or hear the system working, but this is normal.

If your vehicle is in cruise control when the traction control system begins to limit wheel spin, the cruise control will automatically disengage. When road conditions allow you to safely use it again, you may re-engage the cruise control.

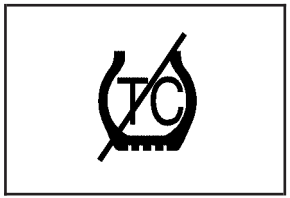

This warning light will come on to let you know if there is a problem with your traction control system.

When this warning light is on, the system will not limit wheel spin. Adjust your driving accordingly.

If the SERVICE TRACTION SYSTEM message in the DIC comes on and stays on or comes on while you are driving, there's a problem with your traction control system. Have the traction control system serviced by your GM dealer as soon as possible.

When this warning message is on, the TRACTION CONTROL OFF message in the DIC will come on to remind you that the system will not limit wheel spin. Adjust your driving accordingly.

The traction control system automatically comes on whenever you start your vehicle. To limit wheel spin, especially in slippery road conditions, you should always leave the system on. But you can turn the traction control system off if you ever need to. You should turn the system off if your vehicle ever gets stuck in sand, mud or snow and rocking the vehicle is required. See *Rocking Your Vehicle to Get It Out on page 404* and *If Your Vehicle is Stuck in Sand, Mud, Ice, or Snow on page 403*.

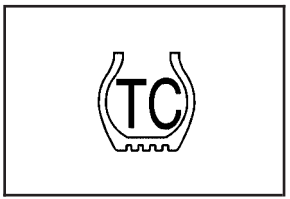

To turn the system off, press the traction control button located on the center of the instrument panel.

If the system is limiting wheel spin when you press the button, the TRACTION CONTROL ACTIVE message will go off, but the system will not turn off until there is no longer a current need to limit wheel spin. The TRACTION CONTROL OFF message will come on to remind you the system is off. You can turn the system back on at any time by pressing the button again. The traction control system warning message should go off.

Adding non-GM accessories can affect your vehicle's performance. See *Accessories and Modifications on page 426* for more information.

StabiliTrak® System

Your vehicle may be equipped with StabiliTrak® which combines anti-lock brake, traction and stability control systems and helps the driver maintain directional control of the vehicle in most driving conditions.

When you first start your vehicle and begin to drive away, the system performs several diagnostic checks to insure there are no problems. You may hear or feel the system working. This is normal and does not mean there is a problem with your vehicle.

If the system fails to turn on or activate, the SERVICE STABILITY SYSTEM message will be displayed on the Driver Information Center (DIC). If the vehicle has gone through heavy acceleration or braking or multiple turns during the first two miles of driving after starting your vehicle, the STABILITY CONTROL OFF message may appear on the DIC. If this is the case, your vehicle does not need servicing. You will need to turn the vehicle off and then restart it to initialize StabiliTrak®. If either message appears on the DIC, and your vehicle has not gone through hard acceleration, braking or multiple turns in the first two miles of driving, your vehicle should be taken in for service.

The STABILITY CONTROL ACTIVE message will appear on the DIC only when the system is both on and activated. It means that an advanced computer-controlled system has come on to help your vehicle continue to go in the direction in which you are steering. StabiliTrak® activates when the computer senses that your vehicle is just starting to spin, as it might if you hit a patch of ice or other slippery spot on the road. When the system activates, you may hear a noise or feel a vibration in the brake pedal. This is normal. When the STABILITY CONTROL ACTIVE message is on, you should continue to steer in the direction you want to go. The system is designed to help you in bad weather or other difficult driving situations by making the most of whatever road conditions will permit. For more information on the stability messages, see *Driver Information Center (DIC) on page 249*.

If the StabiliTrak® system turns off, the traction control system warning light will illuminate, and the STABILITY CONTROL OFF message will appear on the DIC to warn the driver that StabiliTrak® is no longer available to assist you with directional control of the vehicle. Adjust your driving accordingly.

To realize the full benefits of the stability enhancement system, you should normally leave StabiliTrak® on, but it may be necessary to turn the system off if your vehicle is stuck in sand, mud, ice or snow, and you want to “rock” your vehicle to attempt to free it. See *Rocking Your Vehicle to Get It Out on page 404* and *If Your Vehicle is Stuck in Sand, Mud, Ice, or Snow on page 403*.

Traction Control Operation

The traction control system is part of the StabiliTrak® system. Traction control limits wheel spin by reducing engine power to the wheels (engine speed management) and by applying brakes.

The traction control system is enabled automatically when you start your vehicle. It will activate and display the TRACTION CONTROL ACTIVE message in the DIC if it senses that one or both of the front wheels are spinning or beginning to lose traction while driving.

If the brake traction-control system activates constantly or if the brakes have heated up due to high-speed braking, brake traction-control will be disabled and the TRACTION CONTROL ACTIVE message will be displayed. In the limited mode, the traction control system will only use engine traction-control and is limited in its ability to provide optimal performance since the system will not utilize brake traction-control to control slip on the drive wheels. The system will return to normal operation after the brakes have cooled. This can take up to two minutes or longer depending on brake usage.

The traction control system may activate on dry or rough roads or under conditions such as heavy acceleration while turning or abrupt upshifts/downshifts of the transaxle. When this happens you may notice a reduction in acceleration, or may hear a noise or vibration. This is normal.

If your vehicle is in cruise control when the system activates, the STABILITY CONTROL ACTIVE message will appear on the DIC and the cruise control will automatically disengage. When road conditions allow you to use cruise again, you may re-engage the cruise control. See *Cruise Control on page 200*.

StabiliTrak® may also turn off automatically if it determines that a problem exists with the system. If the problem does not clear itself after restarting the vehicle, you should see your dealer for service.

Steering

Power Steering

If you lose power steering assist because the engine stops or the system is not functioning, you can steer but it will take much more effort.

Steering Tips

It is important to take curves at a reasonable speed.

A lot of the “driver lost control” accidents mentioned on the news happen on curves. Here is why:

Experienced driver or beginner, each of us is subject to the same laws of physics when driving on curves. The traction of the tires against the road surface makes it possible for the vehicle to change its path when you turn the front wheels. If there is no traction, inertia will keep the vehicle going in the same direction. If you have ever tried to steer a vehicle on wet ice, you will understand this.

The traction you can get in a curve depends on the condition of your tires and the road surface, the angle at which the curve is banked, and your speed. While you are in a curve, speed is the one factor you can control.

Suppose you are steering through a sharp curve. Then you suddenly apply the brakes. Both control systems — steering and braking — have to do their work where the tires meet the road. Unless you have four-wheel anti-lock brakes, adding the hard braking can demand too much of those places. You can lose control.

The same thing can happen if you are steering through a sharp curve and you suddenly accelerate. Those two control systems — steering and acceleration — can overwhelm those places where the tires meet the road and make you lose control. See *Traction Control System (TCS) on page 379* and *StabiliTrak® System on page 381*.

What should you do if this ever happens? Ease up on the brake or accelerator pedal, steer the vehicle the way you want it to go, and slow down.

Speed limit signs near curves warn that you should adjust your speed. Of course, the posted speeds are based on good weather and road conditions. Under less favorable conditions you will want to go slower.

If you need to reduce your speed as you approach a curve, do it before you enter the curve, while your front wheels are straight ahead.

Try to adjust your speed so you can “drive” through the curve. Maintain a reasonable, steady speed. Wait to accelerate until you are out of the curve, and then accelerate gently into the straightaway.

Adding non-GM accessories can affect your vehicle’s performance. See *Accessories and Modifications on page 426*.

Steering in Emergencies

There are times when steering can be more effective than braking. For example, you come over a hill and find a truck stopped in your lane, or a car suddenly pulls out from nowhere, or a child darts out from between parked cars and stops right in front of you. You can avoid these problems by braking — if you can stop in time. But sometimes you cannot; there is not room. That is the time for evasive action — steering around the problem.

Your vehicle can perform very well in emergencies like these. First apply your brakes.

See *Braking on page 376*. It is better to remove as much speed as you can from a possible collision. Then steer around the problem, to the left or right depending on the space available.

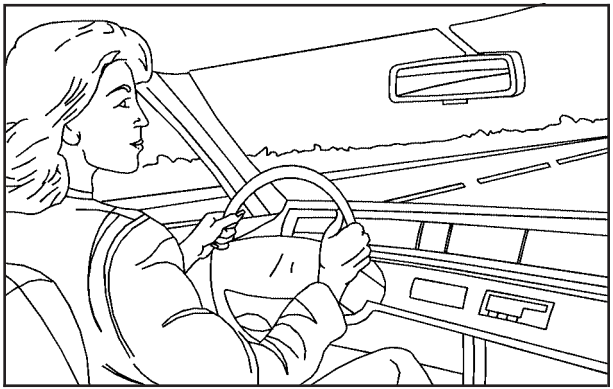

An emergency like this requires close attention and a quick decision. If you are holding the steering wheel at the recommended 9 and 3 o’clock positions, you can turn it a full 180 degrees very quickly without removing either hand. But you have to act fast, steer quickly, and just as quickly straighten the wheel once you have avoided the object.

The fact that such emergency situations are always possible is a good reason to practice defensive driving at all times and wear safety belts properly.

Off-Road Recovery

You may find that your right wheels have dropped off the edge of a road onto the shoulder while you are driving.

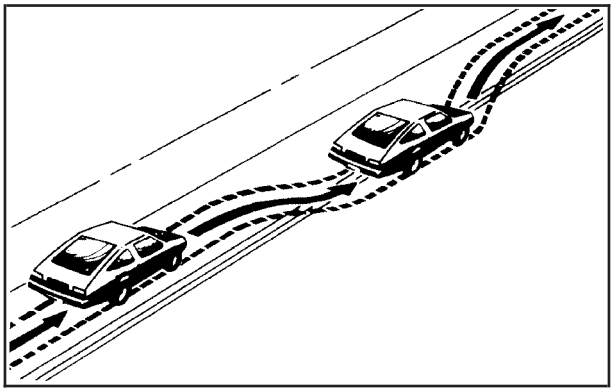

If the level of the shoulder is only slightly below the pavement, recovery should be fairly easy.

Ease off the accelerator and then, if there is nothing in the way, steer so that your vehicle straddles the edge of the pavement. You can turn the steering wheel up to one-quarter turn until the right front tire contacts the pavement edge. Then turn your steering wheel to go straight down the roadway.

Passing

The driver of a vehicle about to pass another on a two-lane highway waits for just the right moment, accelerates, moves around the vehicle ahead, then goes back into the right lane again. A simple maneuver?

Not necessarily! Passing another vehicle on a two-lane highway is a potentially dangerous move, since the passing vehicle occupies the same lane as oncoming traffic for several seconds. A miscalculation, an error in judgment, or a brief surrender to frustration or anger can suddenly put the passing driver face to face with the worst of all traffic accidents — the head-on collision.

So here are some tips for passing:

- Drive ahead. Look down the road, to the sides, and to crossroads for situations that might affect your passing patterns. If you have any doubt whatsoever about making a successful pass, wait for a better time.
- Watch for traffic signs, pavement markings, and lines. If you can see a sign up ahead that might indicate a turn or an intersection, delay your pass. A broken center line usually indicates it is all right to pass, providing the road ahead is clear. Never cross a solid line on your side of the lane or a double solid line, even if the road seems empty of approaching traffic.
- Do not get too close to the vehicle you want to pass while you are awaiting an opportunity. For one thing, following too closely reduces your area of vision, especially if you are following a larger vehicle. Also, you will not have adequate space if the vehicle ahead suddenly slows or stops. Keep back a reasonable distance.
- When it looks like a chance to pass is coming up, start to accelerate but stay in the right lane and do not get too close. Time your move so you will be increasing speed as the time comes to move into the other lane. If the way is clear to pass, you will have a running start that more than makes up for the distance you would lose by dropping back. And if something happens to cause you to cancel your pass, you need only slow down and drop back again and wait for another opportunity.
- If other vehicles are lined up to pass a slow vehicle, wait your turn. But take care that someone is not trying to pass you as you pull out to pass the slow vehicle. Remember to glance over your shoulder and check the blind spot.
- Check your vehicle's mirrors, glance over your shoulder, and start your left lane change signal before moving out of the right lane to pass. When you are far enough ahead of the passed vehicle to see its front in your vehicle's inside mirror, activate the right lane change signal and move back into the right lane. Remember that your vehicle's passenger side outside mirror is convex. The vehicle you just passed may seem to be farther away from you than it really is.

- Try not to pass more than one vehicle at a time on two-lane roads. Reconsider before passing the next vehicle.
- Do not overtake a slowly moving vehicle too rapidly. Even though the brake lamps are not flashing, it may be slowing down or starting to turn.
- If you are being passed, make it easy for the following driver to get ahead of you. Perhaps you can ease a little to the right.

Loss of Control

Let us review what driving experts say about what happens when the three control systems — brakes, steering, and acceleration — do not have enough friction where the tires meet the road to do what the driver has asked.

In any emergency, do not give up. Keep trying to steer and constantly seek an escape route or area of less danger.

Skidding

In a skid, a driver can lose control of the vehicle. Defensive drivers avoid most skids by taking reasonable care suited to existing conditions, and by not overdriving those conditions. But skids are always possible.

The three types of skids correspond to your vehicle's three control systems. In the braking skid, your wheels are not rolling. In the steering or cornering skid, too much speed or steering in a curve causes tires to slip and lose cornering force. And in the acceleration skid, too much throttle causes the driving wheels to spin.

A cornering skid is best handled by easing your foot off the accelerator pedal.

Remember: Any traction control system helps avoid only the acceleration skid. If your traction control system is off, then an acceleration skid is also best handled by easing your foot off the accelerator pedal.

If your vehicle starts to slide, ease your foot off the accelerator pedal and quickly steer the way you want the vehicle to go. If you start steering quickly enough, your vehicle may straighten out. Always be ready for a second skid if it occurs.

Of course, traction is reduced when water, snow, ice, gravel, or other material is on the road. For safety, you will want to slow down and adjust your driving to these conditions. It is important to slow down on slippery surfaces because stopping distance will be longer and vehicle control more limited.

While driving on a surface with reduced traction, try your best to avoid sudden steering, acceleration, or braking, including reducing vehicle speed by shifting to a lower gear. Any sudden changes could cause the tires to slide. You may not realize the surface is slippery until your vehicle is skidding. Learn to recognize warning clues — such as enough water, ice, or packed snow on the road to make a mirrored surface — and slow down when you have any doubt.

Remember: Any Anti-Lock Brake System (ABS) helps avoid only the braking skid.

Driving at Night

Night driving is more dangerous than day driving. One reason is that some drivers are likely to be impaired — by alcohol or drugs, with night vision problems, or by fatigue.

Here are some tips on night driving.

- Drive defensively.
- Do not drink and drive.
- Adjust the inside rearview mirror to reduce the glare from headlamps behind you.
- Since you cannot see as well, you may need to slow down and keep more space between you and other vehicles.
- Slow down, especially on higher speed roads. Your vehicle's headlamps can light up only so much road ahead.
- In remote areas, watch for animals.
- If you are tired, pull off the road in a safe place and rest.

No one can see as well at night as in the daytime. But as we get older these differences increase. A 50-year-old driver may require at least twice as much light to see the same thing at night as a 20-year-old.

What you do in the daytime can also affect your night vision. For example, if you spend the day in bright sunshine you are wise to wear sunglasses. Your eyes will have less trouble adjusting to night. But if you are driving, do not wear sunglasses at night. They may cut down on glare from headlamps, but they also make a lot of things invisible.

You can be temporarily blinded by approaching headlamps. It can take a second or two, or even several seconds, for your eyes to re-adjust to the dark. When you are faced with severe glare, as from a driver who does not lower the high beams, or a vehicle with misaimed headlamps, slow down a little. Avoid staring directly into the approaching headlamps.

Keep the windshield and all the glass on your vehicle clean — inside and out. Glare at night is made much worse by dirt on the glass. Even the inside of the glass can build up a film caused by dust. Dirty glass makes lights dazzle and flash more than clean glass would, making the pupils of your eyes contract repeatedly.

Remember that the headlamps light up far less of a roadway when you are in a turn or curve. Keep your eyes moving; that way, it is easier to pick out dimly lighted objects. Just as the headlamps should be checked regularly for proper aim, so should your eyes be examined regularly. Some drivers suffer from night blindness — the inability to see in dim light — and are not even aware of it.

Driving in Rain and on Wet Roads

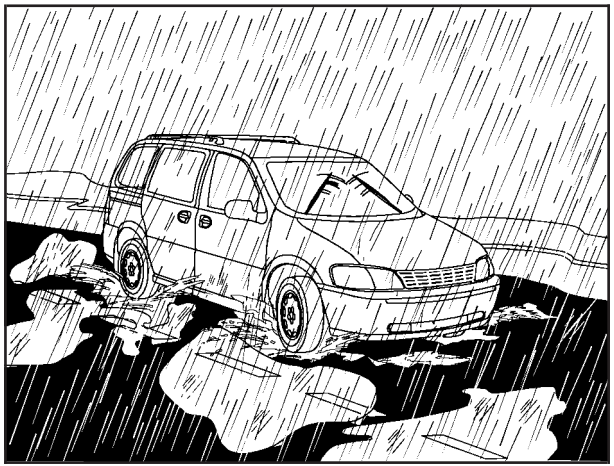

Rain and wet roads can mean driving trouble. On a wet road, you cannot stop, accelerate, or turn as well because your tire-to-road traction is not as good as on dry roads. And, if your tires do not have much tread left, you will get even less traction. It is always wise to go slower and be cautious if rain starts to fall while you are driving. The surface may get wet suddenly when your reflexes are tuned for driving on dry pavement.

The heavier the rain, the harder it is to see. Even if your windshield wiper blades are in good shape, a heavy rain can make it harder to see road signs and traffic signals, pavement markings, the edge of the road, and even people walking.

It is wise to keep your windshield wiper and washer system in good shape and keep your windshield washer fluid reservoir filled with washer fluid. Replace your windshield wiper inserts when they show signs of streaking or missing areas on the windshield, or when strips of rubber start to separate from the inserts.

⚠ CAUTION:

Wet brakes can cause accidents. They may not work as well in a quick stop and may cause pulling to one side. You could lose control of the vehicle.

After driving through a large puddle of water or a car wash, apply your brake pedal lightly until your brakes work normally.

Driving too fast through large water puddles or even going through some car washes can cause problems, too. The water may affect your brakes. Try to avoid puddles. But if you cannot, try to slow down before you hit them.

Hydroplaning

Hydroplaning is dangerous. So much water can build up under your tires that they can actually ride on the water. This can happen if the road is wet enough and you are going fast enough. When your vehicle is hydroplaning, it has little or no contact with the road.

Hydroplaning does not happen often. But it can if your tires do not have much tread or if the pressure in one or more is low. It can happen if a lot of water is standing on the road. If you can see reflections from trees, telephone poles, or other vehicles, and raindrops dimple the water's surface, there could be hydroplaning.

Hydroplaning usually happens at higher speeds. There just is not a hard and fast rule about hydroplaning. The best advice is to slow down when it is raining.

Driving Through Deep Standing Water

Notice: **If you drive too quickly through deep puddles or standing water, water can come in through your engine's air intake and badly damage your engine. Never drive through water that is slightly lower than the underbody of your vehicle. If you cannot avoid deep puddles or standing water, drive through them very slowly.**

Driving Through Flowing Water

⚠ CAUTION:

Flowing or rushing water creates strong forces. If you try to drive through flowing water, as you might at a low water crossing, your vehicle can be carried away. As little as six inches of flowing water can carry away a smaller vehicle. If this happens, you and other vehicle occupants could drown. Do not ignore police warning signs, and otherwise be very cautious about trying to drive through flowing water.

Some Other Rainy Weather Tips

- Turn on your low-beam headlamps — not just your parking lamps — to help make you more visible to others.
- Besides slowing down, allow some extra following distance. And be especially careful when you pass another vehicle. Allow yourself more clear room ahead, and be prepared to have your view restricted by road spray.
- Have good tires with proper tread depth. See *Tires on page 477*.

City Driving

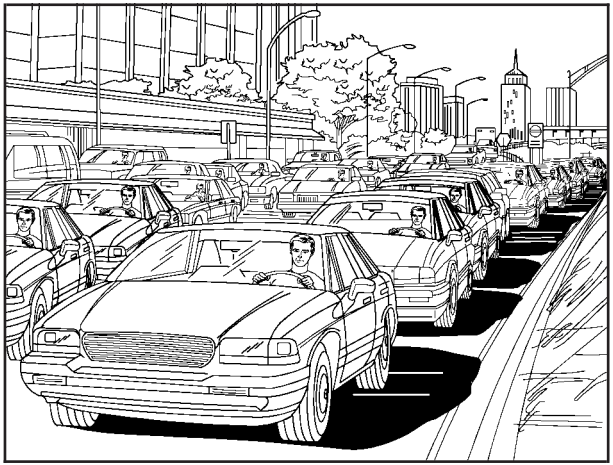

One of the biggest problems with city streets is the amount of traffic on them. You will want to watch out for what the other drivers are doing and pay attention to traffic signals.

Here are ways to increase your safety in city driving:

- Know the best way to get to where you are going. Get a city map and plan your trip into an unknown part of the city just as you would for a cross-country trip.
- Try to use the freeways that rim and crisscross most large cities. You will save time and energy. See *Freeway Driving on page 394*.
- Treat a green light as a warning signal. A traffic light is there because the corner is busy enough to need it. When a light turns green, and just before you start to move, check both ways for vehicles that have not cleared the intersection or may be running the red light.

Freeway Driving

Mile for mile, freeways — also called thruways, parkways, expressways, turnpikes, or superhighways — are the safest of all roads. But they have their own special rules.

The most important advice on freeway driving is: Keep up with traffic and keep to the right. Drive at the same speed most of the other drivers are driving. Too-fast or too-slow driving breaks a smooth traffic flow. Treat the left lane on a freeway as a passing lane.

At the entrance, there is usually a ramp that leads to the freeway. If you have a clear view of the freeway as you drive along the entrance ramp, you should begin to check traffic. Try to determine where you expect to blend with the flow. Try to merge into the gap at close to the prevailing speed. Switch on your turn signal, check your mirrors, and glance over your shoulder as often as necessary. Try to blend smoothly with the traffic flow.

Once you are on the freeway, adjust your speed to the posted limit or to the prevailing rate if it is slower. Stay in the right lane unless you want to pass.

Before changing lanes, check your mirrors. Then use your turn signal.

Just before you leave the lane, glance quickly over your shoulder to make sure there is not another vehicle in your blind spot.

Once you are moving on the freeway, make certain you allow a reasonable following distance. Expect to move slightly slower at night.

When you want to leave the freeway, move to the proper lane well in advance. If you miss your exit, do not, under any circumstances, stop and back up. Drive on to the next exit.

The exit ramp can be curved, sometimes quite sharply. The exit speed is usually posted.

Reduce your speed according to your speedometer, not to your sense of motion. After driving for any distance at higher speeds, you may tend to think you are going slower than you actually are.

Before Leaving on a Long Trip

Make sure you are ready. Try to be well rested. If you must start when you are not fresh — such as after a day's work — do not plan to make too many miles that first part of the journey. Wear comfortable clothing and shoes you can easily drive in.

Is your vehicle ready for a long trip? If you keep it serviced and maintained, it is ready to go. If it needs service, have it done before starting out. Of course, you will find experienced and able service experts in GM dealerships all across North America. They will be ready and willing to help if you need it.

Here are some things you can check before a trip:

- *Windshield Washer Fluid:* Is the reservoir full? Are all windows clean inside and outside?
- *Wiper Blades:* Are they in good shape?
- *Fuel, Engine Oil, Other Fluids:* Have you checked all levels?
- *Lamps:* Are they all working? Are the lenses clean?
- *Tires:* They are vitally important to a safe, trouble-free trip. Is the tread good enough for long-distance driving? Are the tires all inflated to the recommended pressure?
- *Weather Forecasts:* What is the weather outlook along your route? Should you delay your trip a short time to avoid a major storm system?
- *Maps:* Do you have up-to-date maps?

Highway Hypnosis

Is there actually such a condition as highway hypnosis? Or is it just plain falling asleep at the wheel? Call it highway hypnosis, lack of awareness, or whatever.

There is something about an easy stretch of road with the same scenery, along with the hum of the tires on the road, the drone of the engine, and the rush of the wind against the vehicle that can make you sleepy. Do not let it happen to you! If it does, your vehicle can leave the road in less than a second, and you could crash and be injured.

What can you do about highway hypnosis? First, be aware that it can happen.

Then here are some tips:

- Make sure your vehicle is well ventilated, with a comfortably cool interior.
- Keep your eyes moving. Scan the road ahead and to the sides. Check your mirrors and your instruments frequently.
- If you get sleepy, pull off the road into a rest, service, or parking area and take a nap, get some exercise, or both. For safety, treat drowsiness on the highway as an emergency.

Hill and Mountain Roads

Driving on steep hills or mountains is different from driving in flat or rolling terrain.

If you drive regularly in steep country, or if you are planning to visit there, here are some tips that can make your trips safer and more enjoyable.

- Keep your vehicle in good shape. Check all fluid levels and also the brakes, tires, cooling system, and transaxle. These parts can work hard on mountain roads.

⚠ CAUTION:

If you do not shift down, your brakes could get so hot that they would not work well. You would then have poor braking or even none going down a hill. You could crash. Shift down to let your engine assist your brakes on a steep downhill slope.

⚠ CAUTION:

Coasting downhill in NEUTRAL (N) or with the ignition off is dangerous. Your brakes will have to do all the work of slowing down. They could get so hot that they would not work well. You would then have poor braking or even none going down a hill. You could crash. Always have your engine running and your vehicle in gear when you go downhill.

- Know how to go down hills. The most important thing to know is this: let your engine do some of the slowing down. Shift to a lower gear when you go down a steep or long hill.
- Know how to go uphill. You may want to shift down to a lower gear. The lower gears help cool your engine and transaxle, and you can climb the hill better.
- Stay in your own lane when driving on two-lane roads in hills or mountains. Do not swing wide or cut across the center of the road. Drive at speeds that let you stay in your own lane.
- As you go over the top of a hill, be alert. There could be something in your lane, like a stalled car or an accident.
- You may see highway signs on mountains that warn of special problems. Examples are long grades, passing or no-passing zones, a falling rocks area, or winding roads. Be alert to these and take appropriate action.

Winter Driving

Here are some tips for winter driving:

- Have your vehicle in good shape for winter.
- You may want to put winter emergency supplies in your vehicle.

Also see *Tires on page 477*.

Include an ice scraper, a small brush or broom, a supply of windshield washer fluid, a rag, some winter outer clothing, a small shovel, a flashlight, a red cloth, and a couple of reflective warning triangles. And, if you will be driving under severe conditions, include a small bag of sand, a piece of old carpet, or a couple of burlap bags to help provide traction. Be sure you properly secure these items in your vehicle.

Driving on Snow or Ice

Most of the time, those places where the tires meet the road probably have good traction.

However, if there is snow or ice between the tires and the road, you can have a very slippery situation. You will have a lot less traction, or grip, and will need to be very careful.

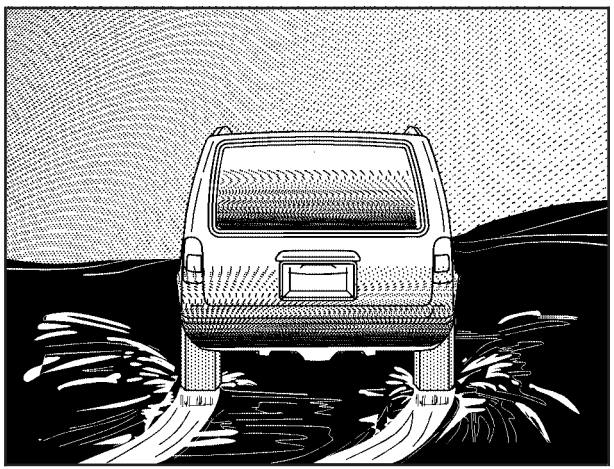

What is the worst time for this? Wet ice. Very cold snow or ice can be slick and hard to drive on. But wet ice can be even more trouble because it may offer the least traction of all. You can get wet ice when it is about freezing, 32°F (0°C), and freezing rain begins to fall. Try to avoid driving on wet ice until salt and sand crews can get there.

Whatever the condition — smooth ice, packed, blowing, or loose snow — drive with caution.

If you have a traction system, it will improve your ability to accelerate when driving on a slippery road. But you can turn the traction system off if you ever need to. You should turn the traction system off if your vehicle ever gets stuck in sand, mud, ice, or snow. See *If Your Vehicle is Stuck in Sand, Mud, Ice, or Snow on page 403*. Even if your vehicle has a traction system, you will want to slow down and adjust your driving to the road conditions. Under certain conditions, you may want to turn the traction system off, such as when driving through deep snow and loose gravel, to help maintain vehicle motion at lower speeds. See *Traction Control System (TCS) on page 379* and *StabiliTrak® System on page 381*.

If you do not have a traction system, accelerate gently. Try not to break the fragile traction. If you accelerate too fast, the drive wheels will spin and polish the surface under the tires even more.

The Anti-Lock Brake System (ABS) improves your vehicle's stability when you make a hard stop on a slippery road. Even though you have ABS, you will want to begin stopping sooner than you would on dry pavement. See *Anti-Lock Brake System (ABS) on page 377*.

- Allow greater following distance on any slippery road.
- Watch for slippery spots. The road might be fine until you hit a spot that is covered with ice. On an otherwise clear road, ice patches may appear in shaded areas where the sun cannot reach, such as around clumps of trees, behind buildings, or under bridges. Sometimes the surface of a curve or an overpass may remain icy when the surrounding roads are clear. If you see a patch of ice ahead of you, brake before you are on it. Try not to brake while you are actually on the ice, and avoid sudden steering maneuvers.

If You Are Caught in a Blizzard

If you are stopped by heavy snow, you could be in a serious situation. You should probably stay with your vehicle unless you know for sure that you are near help and you can hike through the snow. Here are some things to do to summon help and keep yourself and your passengers safe:

- Turn on your hazard flashers.
- Tie a red cloth to your vehicle to alert police that you have been stopped by the snow.
- Put on extra clothing or wrap a blanket around you. If you do not have blankets or extra clothing, make body insulators from newspapers, burlap bags, rags, floor mats — anything you can wrap around yourself or tuck under your clothing to keep warm.

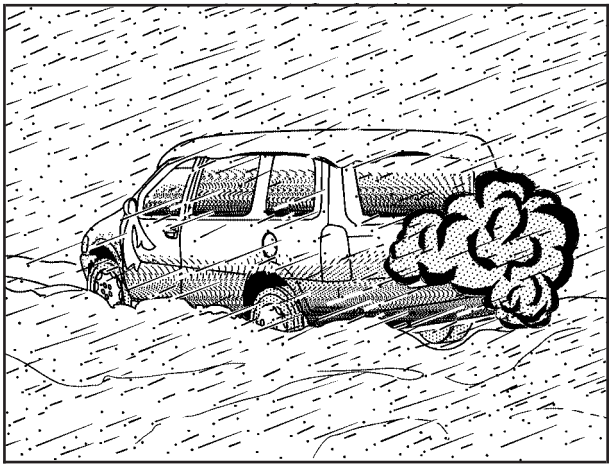

You can run the engine to keep warm, but be careful.

⚠ CAUTION:

Snow can trap exhaust gases under your vehicle. This can cause deadly CO (carbon monoxide) gas to get inside. CO could overcome you and kill you. You cannot see it or smell it, so you might not know it is in your vehicle. Clear away snow from around the base of your vehicle, especially any that is blocking your exhaust pipe. And check around again from time to time to be sure snow does not collect there.

Open a window just a little on the side of the vehicle that is away from the wind. This will help keep CO out.

Run your engine only as long as you must. This saves fuel. When you run the engine, make it go a little faster than just idle. That is, push the accelerator slightly. This uses less fuel for the heat that you get and it keeps the battery charged.

You will need a well-charged battery to restart the vehicle, and possibly for signaling later on with your headlamps. Let the heater run for a while.

Then, shut the engine off and close the window almost all the way to preserve the heat. Start the engine again and repeat this only when you feel really uncomfortable from the cold. But do it as little as possible. Preserve the fuel as long as you can. To help keep warm, you can get out of the vehicle and do some fairly vigorous exercises every half hour or so until help comes.

If Your Vehicle is Stuck in Sand, Mud, Ice, or Snow

In order to free your vehicle when it is stuck, you will need to spin the wheels, but you do not want to spin your wheels too fast. The method known as rocking can help you get out when you are stuck, but you must use caution.

⚠ CAUTION:

If you let your vehicle's tires spin at high speed, they can explode, and you or others could be injured. And, the transaxle or other parts of the vehicle can overheat. That could cause an engine compartment fire or other damage. When you are stuck, spin the wheels as little as possible. Do not spin the wheels above 35 mph (55 km/h) as shown on the speedometer.

Notice: **Spinning the wheels can destroy parts of your vehicle as well as the tires. If you spin the wheels too fast while shifting the transaxle back and forth, you can destroy the transaxle. See *Rocking Your Vehicle to Get It Out on page 404*.**

For information about using tire chains on your vehicle, see *Tire Chains on page 496*.

Rocking Your Vehicle to Get It Out

First, turn the steering wheel left and right. That will clear the area around the front wheels. If your vehicle has traction control, you should turn the traction control system off. See *Traction Control System (TCS) on page 379* and *StabiliTrak® System on page 381*. Then shift back and forth between REVERSE (R) and a forward gear, spinning the wheels as little as possible. Release the accelerator pedal while you shift, and press lightly on the accelerator pedal when the transaxle is in gear. By slowly spinning the wheels in the forward and reverse directions, you will cause a rocking motion that may free your vehicle. If that does not get your vehicle out after a few tries, it may need to be towed out. If your vehicle does need to be towed out, see *Towing Your Vehicle on page 410*.

Loading Your Vehicle

It is very important to know how much weight your vehicle can carry. This weight is called the vehicle capacity weight and includes the weight of all occupants, cargo, and all nonfactory-installed options. Two labels on your vehicle show how much weight it may properly carry, the Tire and Loading Information label and the Certification/Tire label.

⚠ CAUTION:

Do not load your vehicle any heavier than the Gross Vehicle Weight Rating (GVWR), or either the maximum front or rear Gross Axle Weight Rating (GAWR). If you do, parts on your vehicle can break, and it can change the way your vehicle handles. These could cause you to lose control and crash. Also, overloading can shorten the life of your vehicle.

Tire and Loading Information Label

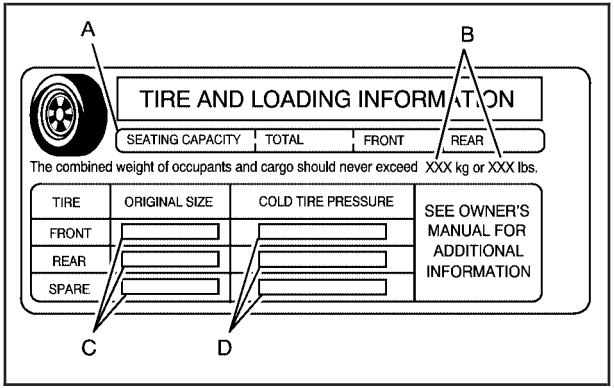

Example Label

A vehicle specific Tire and Loading Information label is attached to the center pillar (B-pillar) of your vehicle. With the driver's door open, you will find the label attached below the door lock post (striker). The tire and loading information label shows the number of occupant seating positions (A), and the maximum vehicle capacity weight (B) in kilograms and pounds.

The Tire and Loading Information label also shows the size of the original equipment tires (C) and the recommended cold tire inflation pressures (D). For more information on tires and inflation see *Tires on page 477* and *Inflation - Tire Pressure on page 485*.

There is also important loading information on the vehicle Certification/Tire label. It tells you the Gross Vehicle Weight Rating (GVWR) and the Gross Axle Weight Rating (GAWR) for the front and rear axle. See "Certification/Tire Label" later in this section.

Steps for Determining Correct Load Limit

1. Locate the statement "The combined weight of occupants and cargo should never exceed XXX kg or XXX lbs" on your vehicle's placard.
2. Determine the combined weight of the driver and passengers that will be riding in your vehicle.
3. Subtract the combined weight of the driver and passengers from XXX kg or XXX lbs.

4. The resulting figure equals the available amount of cargo and luggage load capacity. For example, if the “XXX” amount equals 1400 lbs and there will be five 150 lb passengers in your vehicle, the amount of available cargo and luggage load capacity is 650 lbs (1400 – 750 (5 x 150) = 650 lbs).
5. Determine the combined weight of luggage and cargo being loaded on the vehicle. That weight may not safely exceed the available cargo and luggage load capacity calculated in Step 4.
6. If your vehicle will be towing a trailer, the load from your trailer will be transferred to your vehicle. Consult this manual to determine how this reduces the available cargo and luggage load capacity for your vehicle.

See *Towing a Trailer on page 412* for important information on towing a trailer, towing safety rules, and trailering tips.

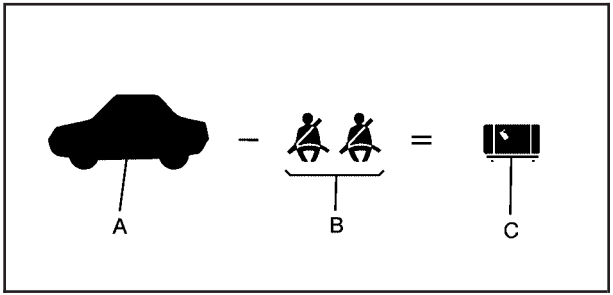

Example 1

Item	Description	Total
A	Vehicle Capacity Weight for Example 1 =	1,000 lbs (453 kg)
B	Subtract Occupant Weight 150 lbs (68 kg) × 2 =	300 lbs (136 kg)
C	Available Occupant and Cargo Weight =	700 lbs (317 kg)

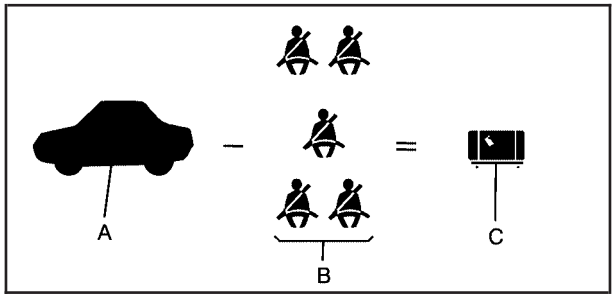

Example 2

Item	Description	Total
A	Vehicle Capacity Weight for Example 2 =	1,000 lbs (453 kg)
B	Subtract Occupant Weight 150 lbs (68 kg) × 5 =	750 lbs (340 kg)
C	Available Cargo Weight =	250 lbs (113 kg)

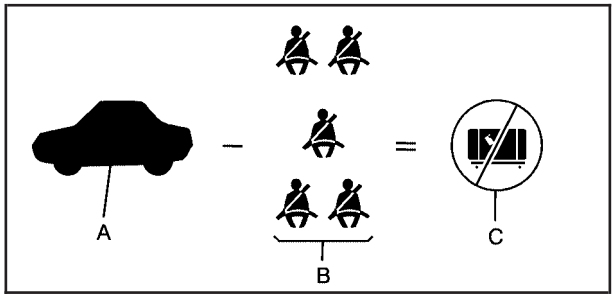

Example 3

Item	Description	Total
A	Vehicle Capacity Weight for Example 3 =	1,000 lbs (453 kg)
B	Subtract Occupant Weight 200 lbs (91 kg) × 5 =	1,000 lbs (453 kg)
C	Available Cargo Weight =	0 lbs (0 kg)

Refer to your vehicle's tire and loading information label for specific information about your vehicle's capacity weight and seating positions. The combined weight of the driver, passengers, and cargo should never exceed your vehicle's capacity weight.

Certification/Tire Label

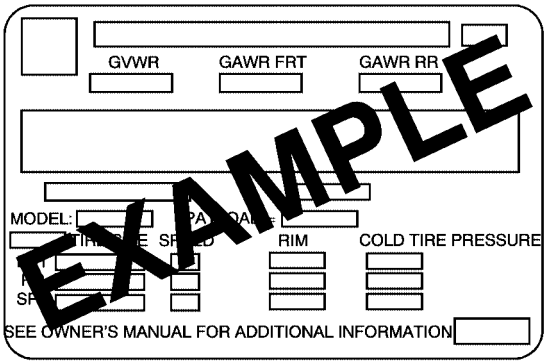

A vehicle specific Certification/Tire label is attached to the rear edge of the driver's door.

The label shows the gross weight capacity of your vehicle. This is called the Gross Vehicle Weight Rating (GVWR). The GVWR includes the weight of the vehicle, all occupants, fuel, and cargo.

The Certification/Tire label also tells you the maximum weights for the front and rear axles, called the Gross Axle Weight Rating (GAWR). To find out the actual loads on your front and rear axles, you need to go to a weigh station and weigh your vehicle. Your dealer can help you with this. Be sure to spread out your load equally on both sides of the centerline.

Never exceed the GVWR for your vehicle or the GAWR for either the front or rear axle.

⚠ CAUTION:

Do not load your vehicle any heavier than the Gross Vehicle Weight Rating (GVWR), or either the maximum front or rear Gross Axle Weight Rating (GAWR). If you do, parts on your vehicle can break, and it can change the way your vehicle handles. These could cause you to lose control and crash. Also, overloading can shorten the life of your vehicle.

Notice: **Overloading your vehicle may cause damage. Repairs would not be covered by your warranty. Do not overload your vehicle.**

If you put things inside your vehicle — like suitcases, tools, packages, or anything else, they will go as fast as the vehicle goes. If you have to stop or turn quickly, or if there is a crash, they will keep going.

⚠ CAUTION:

Things you put inside your vehicle can strike and injure people in a sudden stop or turn, or in a crash.

- **Put things in the cargo area of your vehicle. Try to spread the weight evenly.**
- **Never stack heavier things, like suitcases, inside the vehicle so that some of them are above the tops of the seats.**
- **Do not leave an unsecured child restraint in your vehicle.**
- **When you carry something inside the vehicle, secure it whenever you can.**
- **Do not leave a seat folded down unless you need to.**

Towing

Towing Your Vehicle

Consult your dealer or a professional towing service if you need to have your disabled vehicle towed. See *Roadside Assistance Program on page 562*.

If you want to tow your vehicle behind another vehicle for recreational purposes (such as behind a motorhome), see “Recreational Vehicle Towing” following.

Recreational Vehicle Towing

Recreational vehicle towing means towing your vehicle behind another vehicle – such as behind a motorhome. The two most common types of recreational vehicle towing are known as “dinghy towing” (towing your vehicle with all four wheels on the ground) and “dolly towing” (towing your vehicle with two wheels on the ground and two wheels up on a device know as a “dolly”).

With the proper preparation and equipment, many vehicles can be towed in these ways. See “Dinghy Towing” and “Dolly Towing,” following.

Here are some important things to consider before you do recreational vehicle towing:

- What’s the towing capacity of the towing vehicle? Be sure you read the tow vehicle manufacturer’s recommendations.
- How far will you tow? Some vehicles have restrictions on how far and how long they can tow.
- Do you have the proper towing equipment? See your dealer or trailering professional for additional advice and equipment recommendations.
- Is your vehicle ready to be towed? Just as you would prepare your vehicle for a long trip, you’ll want to make sure your vehicle is prepared to be towed. See *Before Leaving on a Long Trip on page 395*.

Dinghy Towing

Your vehicle was not designed to be towed with all of its wheels on the ground.It can be towed with the two rear wheels on the ground. See “Dolly Towing” following for more information.

Dolly Towing

To dolly tow your vehicle, do the following:

1. Put the front wheels on a dolly.
2. Put the vehicle in PARK (P).
3. Set the parking brake and then remove the key.
4. Clamp the steering wheel in a straight-ahead position with a clamping device designed for towing.
5. Release the parking brake.

Level Control

On vehicles equipped with automatic level control, the rear of the vehicle is automatically kept level as you load or unload your vehicle. However, you should still not exceed the GVWR or the GAWR. See *Loading Your Vehicle on page 404*.

You may hear the compressor operating when you load or unload your vehicle, and periodically as the system self-adjusts. This is normal. The compressor should operate for brief periods of time. If the sound continues for an extended period of time, your vehicle needs service.

Using heavier suspension components to get added durability might not change your weight ratings. Ask your dealer to help you load your vehicle the right way.

Towing a Trailer

⚠ CAUTION:

If you do not use the correct equipment and drive properly, you can lose control when you pull a trailer. For example, if the trailer is too heavy, the brakes may not work well — or even at all. You and your passengers could be seriously injured. Pull a trailer only if you have followed all the steps in this section. Ask your dealer for advice and information about towing a trailer with your vehicle.

Notice: **Pulling a trailer improperly can damage your vehicle and result in costly repairs that would not be covered by your warranty. Always follow the instructions in this section and check with your dealer for more information about towing a trailer with your vehicle.**

Your vehicle can tow a trailer. To identify the trailering capacity of vehicle, you should read the information in “Weight of the Trailer” that appears later in this section. Trailering is different than just driving your vehicle by itself. Trailering means changes in handling, acceleration, braking, durability, and fuel economy. Successful, safe trailering takes correct equipment, and it has to be used properly.

That is the reason for this section. In it are many time-tested, important trailering tips and safety rules. Many of these are important for your safety and that of your passengers. So please read this section carefully before you pull a trailer.

Load-pulling components such as the engine, transaxle, wheel assemblies, and tires are forced to work harder against the drag of the added weight. The engine is required to operate at relatively higher speeds and under greater loads, generating extra heat. The trailer also adds considerably to wind resistance, increasing the pulling requirements.

If You Do Decide To Pull A Trailer

If you do, here are some important points:

- There are many different laws, including speed limit restrictions, having to do with trailering. Make sure your rig will be legal, not only where you live but also where you'll be driving. A good source for this information can be state or provincial police.
- Consider using a sway control. See "Hitches" later in this section.
- Do not tow a trailer at all during the first 500 miles (800 km) your new vehicle is driven. Your engine, axle, or other parts could be damaged.
- During the first 500 miles (800 km) that you tow a trailer, do not drive over 50 mph (80 km/h) and do not make starts at full throttle. This helps your engine and other parts of your vehicle wear in at the heavier loads.
- You can use THIRD (3) or, as you need to, a lower gear when towing a trailer. Operating your vehicle in THIRD (3) when towing a trailer will minimize heat buildup and extend the life of your transaxle.

Three important considerations have to do with weight:

- Weight of the trailer
- Weight of the trailer tongue
- Weight on your vehicle's tires

Weight of the Trailer

How heavy can a trailer safely be?

It depends on how you plan to use your rig. For example, speed, altitude, road grades, outside temperature, and how much your vehicle is used to pull a trailer are all important. It can also depend on any special equipment that you have on your vehicle, and the amount of tongue weight the vehicle can carry. See “Weight of the Trailer Tongue” later in this section for more information.

Maximum trailer weight is calculated assuming only the driver is in the tow vehicle and it has all the required trailering equipment. The weight of additional optional equipment, passengers and cargo in the tow vehicle must be subtracted from the maximum trailer weight.

Look in the following chart to find the maximum trailer weight for your vehicle.

Vehicle	Axle Ratio	Maximum Trailer Weight	*GCWR
Two-Wheel-Drive	3.29	3,500 lbs (1 588 kg)	8,500 lbs (3 856 kg)
Any vehicle without the V92 trailering package or heavy-duty cooling package is limited to a 2,000 lb (907 kg) trailer rating and a 7,000 lb (3 175 kg) GCWR. *The Gross Combination Weight Rating (GCWR) is the total allowable weight of the completely loaded vehicle and trailer including any passengers, cargo, equipment and conversion. The GCWR for your vehicle should not be exceeded.			

You can ask your dealer for our trailering information or advice, or you can write us at the address listed in your Warranty and Owner Assistance Information Booklet.

In Canada, write to:

General Motors of Canada Limited
Customer Communication Center, 163-005
1908 Colonel Sam Drive
Oshawa, Ontario L1H 8P7

Weight of the Trailer Tongue

The tongue load (A) of any trailer is an important weight to measure because it affects the total or gross weight of your vehicle. The Gross Vehicle Weight (GVW) includes the curb weight of the vehicle, any cargo you may carry in it, and the people who will be riding in the vehicle. If you have a lot of options, equipment, passengers, or cargo in your vehicle, it will reduce the tongue weight your vehicle can carry, which will also reduce the trailer weight your vehicle can tow. And if you will tow a trailer, you must add the tongue load to the GVW because your vehicle will be carrying that weight, too. See *Loading Your Vehicle on page 404* for more information about your vehicle's maximum load capacity.

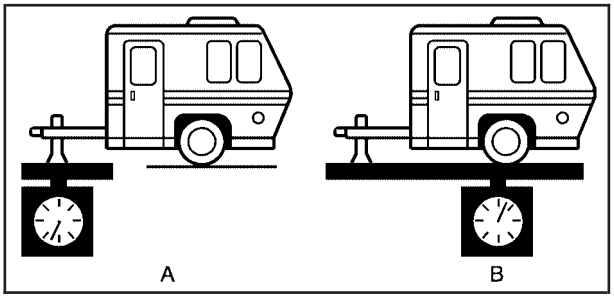

If you are using a weight-carrying or a weight-distributing hitch, the trailer tongue weight (A) should be 10 percent to 15 percent of the total loaded trailer weight (B). Do not exceed the maximum allowable tongue weight of 350 lbs (159 kg) for your vehicle.

After you have loaded your trailer, weigh the trailer and then the tongue, separately, to see if the weights are proper. If they are not, you may be able to get them right simply by moving some items around in the trailer.

Trailering may be limited by the vehicle's ability to carry tongue weight. Tongue weight cannot cause the vehicle to exceed the GVWR (Gross Vehicle Weight Rating) or the RGAWR (Rear Gross Axle Weight Rating). The effect of additional weight may reduce your trailering capacity more than the total of the additional weight.

Consider the following example:

A vehicle model base weight is 5,500 lbs (2 495 kg); 2,800 lbs (1 270 kg) at the front axle and 2,700 lbs (1 225 kg) at the rear axle. It has a GVWR of 7,200 lbs (3 266 kg), a RGAWR of 4,000 lbs (1 814 kg) and a GCWR (Gross Combination Weight Rating) of 14,000 lbs (6 350 kg).

The trailer rating should be:

14,000 lbs (6350 kg)	GCWR
–5,500 lbs (2495 kg)	Vehicle Weight
8,500 lbs (3855 kg)	Trailer Rating

You can expect tongue weight to be at least 10 percent of trailer weight (850 lbs (386 kg)) and because the weight is applied well behind the rear axle, the effect on the rear axle will be greater than just the weight itself, as much as 1.5 times as much. The weight at the rear axle could be 850 lbs (386 kg) X 1.5 = 1,275 lbs (578 kg). Since the rear axle already weighs 2,700 lbs (1 225 kg), adding 1,275 lbs (578 kg) brings the total to 3,975 lbs (1 803 kg). This is very close to, but within the limit for RGAWR as well. The vehicle is set to trailer up to 8,500 lbs (3 856 kg).

But let's say your specific vehicle is equipped with some of the latest options and you have a front seat passenger and two rear seat passengers with some luggage and gear in the vehicle as well.

You may add 300 lbs (136 kg) to the front axle weight and 400 lbs (181 kg) to the rear axle weight. Your vehicle now weighs:

2,800 lbs	(1270 kg)	+	300 lbs (136 kg)	Front
2,700 lbs	(1225 kg)	+	400 lbs (181 kg)	Rear
	6,200 lbs (2812 kg)			Total

Weight is still below 7,200 lbs (3 266 kg) and you may think that you should subtract 700 additional pounds (318 kg) from your trailering capacity to stay within GCWR limits. Your maximum trailer would only be 7,800 lbs (3 538 kg). You may go further and think you must limit tongue weight to less than 1,000 lbs (454 kg) to avoid exceeding GVWR. But, you must still consider the effect on the rear axle. Because your rear axle now weighs 3,100 lbs (1 406 kg), you can only put 900 lbs (408 kg) on the rear axle without exceeding RGAWR. The effect of tongue weight is about 1.5 times the actual weight. Dividing the 900 lbs (408 kg) by 1.5 leaves you with being able to handle only 600 lbs (272 kg) of tongue weight.

Since tongue weight is usually at least 10 percent of total loaded trailer weight, you can expect that the largest trailer your vehicle can properly handle is 6,000 lbs (2 721 kg).

It is important that you make sure your vehicle does not exceed any of its ratings — GCWR, GVWR, RGAWR, Maximum Trailer Rating or Tongue Weight. The only way to be sure you are not exceeding any of these ratings is to weigh your vehicle and trailer.

Total Weight on Your Vehicle's Tires

Be sure your vehicle's tires are inflated to the upper limit for cold tires. You will find these numbers on the Certification/Tire label at the rear edge of the driver's door or see *Loading Your Vehicle on page 404*. Then be sure you do not go over the GVW limit for your vehicle, including the weight of the trailer tongue.

Hitches

It is important to have the correct hitch equipment. Crosswinds, large trucks going by, and rough roads are a few reasons why you will need the right hitch. Here are some rules to follow:

- The bumpers on your vehicle are not intended for hitches. Do not attach rental hitches or other bumper-type hitches to them. Use only a frame-mounted hitch that does not attach to the bumper.
- Will you have to make any holes in the body of your vehicle when you install a trailer hitch?

  If you do, remember to seal the holes later when you remove the hitch. If you do not seal them, deadly carbon monoxide (CO) from your exhaust can get into your vehicle. See *Engine Exhaust on page 163*. Dirt and water can, too.

Safety Chains

You should always attach chains between your vehicle and your trailer. Cross the safety chains under the tongue of the trailer to help prevent the tongue from contacting the road if it becomes separated from the hitch. Instructions about safety chains may be provided by the hitch manufacturer or by the trailer manufacturer. Follow the manufacturer's recommendation for attaching safety chains and do not attach them to the bumper. Always leave just enough slack so you can turn with your rig. Never allow safety chains to drag on the ground.

Trailer Brakes

If your trailer weighs more than 1,000 lbs (450 kg) loaded, then it needs its own brakes – and they must be adequate. Be sure to read and follow the instructions for the trailer brakes so you will be able to install, adjust, and maintain them properly.

Because your vehicle may have anti-lock brakes, do not try to tap into your vehicle's brake system. If you do, both brake systems will not work well, or at all.

⚠ CAUTION:

If you have a rear-most window open and you pull a trailer with your vehicle, carbon monoxide (CO) could come into your vehicle. You cannot see or smell CO. It can cause unconsciousness or death. See *Engine Exhaust on page 163*. To maximize your safety when towing a trailer:

- **Have your exhaust system inspected for leaks, and make necessary repairs before starting on your trip.**
- **Keep the rear-most windows closed.**

CAUTION: (Continued)

CAUTION: (Continued)

- **If exhaust does come into your vehicle through a window in the rear or another opening, drive with your front, main heating or cooling system on and with the fan on any speed. This will bring fresh, outside air into your vehicle. Do not use the climate control setting for maximum air because it only recirculates the air inside your vehicle. See *Climate Control System on page 217* or *Dual Climate Control System on page 220*.**

Towing a trailer requires a certain amount of experience. Before setting out for the open road, you will want to get to know your rig. Acquaint yourself with the feel of handling and braking with the added weight of the trailer. And always keep in mind that the vehicle you are driving is now a good deal longer and not nearly as responsive as your vehicle is by itself.

Before you start, check all trailer hitch parts and attachments, safety chains, electrical connector, lamps, tires, and mirror adjustment. If the trailer has electric brakes, start your vehicle and trailer moving and then apply the trailer brake controller by hand to be sure the brakes are working. This lets you check your electrical connection at the same time.

During your trip, check occasionally to be sure that the load is secure, and that the lamps and any trailer brakes are still working.

Following Distance

Stay at least twice as far behind the vehicle ahead as you would when driving your vehicle without a trailer. This can help you avoid situations that require heavy braking and sudden turns.

Passing

You will need more passing distance up ahead when you are towing a trailer. And, because you are a good deal longer, you will need to go much farther beyond the passed vehicle before you can return to your lane.

Backing Up

Hold the bottom of the steering wheel with one hand. Then, to move the trailer to the left, just move that hand to the left. To move the trailer to the right, move your hand to the right. Always back up slowly and, if possible, have someone guide you.

Making Turns

Notice: **Making very sharp turns while trailering could cause the trailer to come in contact with the vehicle. Your vehicle could be damaged. Avoid making very sharp turns while trailering.**

When you are turning with a trailer, make wider turns than normal. Do this so your trailer will not strike soft shoulders, curbs, road signs, trees, or other objects. Avoid jerky or sudden maneuvers. Signal well in advance.

Turn Signals When Towing a Trailer

When you tow a trailer, your vehicle has to have extra wiring.

The arrows on your instrument panel will flash whenever you signal a turn or lane change. Properly hooked up, the trailer lamps will also flash, telling other drivers you are about to turn, change lanes, or stop.

When towing a trailer, the arrows on your instrument panel will flash for turns even if the bulbs on the trailer are burned out. Thus, you may think drivers behind you are seeing your signal when they are not. It is important to check occasionally to be sure the trailer bulbs are still working.

Driving on Grades

Reduce speed and shift to a lower gear before you start down a long or steep downgrade. If you do not shift down, you might have to use your brakes so much that they would get hot and no longer work well.

If you are towing a trailer that weighs more than 1,000 lbs (450 kg), you may prefer to drive in THIRD (3) instead of DRIVE (D) or, as you need to, a lower gear. This will minimize heat build-up and extend the life of your transaxle.

Parking on Hills

⚠ CAUTION:

You really should not park your vehicle, with a trailer attached, on a hill. If something goes wrong, your rig could start to move. People can be injured, and both your vehicle and the trailer can be damaged.

But if you ever have to park your rig on a hill, do the following:

1. Apply your regular brakes, but do not shift into PARK (P).
2. Have someone place chocks under the trailer wheels.
3. When the wheel chocks are in place, release the regular brakes until the chocks absorb the load.
4. Reapply the regular brakes. Then apply your parking brake, and shift into PARK (P).
5. Release the regular brakes.

When You Are Ready to Leave After Parking on a Hill

1. Apply your regular brakes and hold the pedal down while you do the following:
   - Start your engine.
   - Shift into a gear.
   - Release the parking brake.
2. Let up on the brake pedal.
3. Drive slowly until the trailer is clear of the chocks.
4. Stop and have someone pick up and store the chocks.

Maintenance When Trailer Towing

Your vehicle will need service more often when you are pulling a trailer. See the Maintenance Schedule for more on this. Things that are especially important in trailer operation are automatic transaxle fluid, engine oil, belts, cooling system, and brake system. Each of these is covered in this manual, and the Index will help you find them quickly. If you are trailering, it is a good idea to review these sections before you start your trip.

Check periodically to see that all hitch nuts and bolts are tight.

Trailer Wiring Harness

Your vehicle may have a trailer wiring harness package located in the glove box. It can be connected from the rear of your vehicle to your trailer. Contact your dealer for more information.

Section 5 Service and Appearance Care

Service 426
Accessories and Modifications 426
California Proposition 65 Warning 427
Doing Your Own Service Work 427
Adding Equipment to the Outside of Your Vehicle 428

Fuel 428
Gasoline Octane 429
Gasoline Specifications 429
California Fuel 429
Additives 430
Fuel E85 (85% Ethanol) 431
Fuels in Foreign Countries 432
Filling the Tank 433
Filling a Portable Fuel Container 435

Checking Things Under the Hood 436
Hood Release 437
Engine Compartment Overview 438
Engine Oil 439
Engine Oil Life System 442
Engine Air Cleaner/Filter 444
Automatic Transaxle Fluid 445
Engine Coolant 448
Radiator Pressure Cap 451
Engine Overheating 451
Overheated Engine Protection Operating Mode 453
Cooling System 454
Power Steering Fluid 459
Windshield Washer Fluid 460
Brakes 462
Battery 465
Jump Starting 466

Bulb Replacement 471
Halogen Bulbs 471
Headlamps and Sidemarker Lamps 471
Front Turn Signal, Parking and Daytime Running Lamps (DRL) 473
Taillamps, Turn Signal, Stoplamps and Back-up Lamps 473
License Plate Lamp 475
Replacement Bulbs 475

Section 5 Service and Appearance Care

Windshield Wiper Blade Replacement 476
Tires 477
Tire Sidewall Labeling 478
Tire Terminology and Definitions 482
Inflation - Tire Pressure 485
High-Speed Operation 486
Tire Inspection and Rotation 487
When It Is Time for New Tires 489
Buying New Tires 490
Different Size Tires and Wheels 492
Uniform Tire Quality Grading 493
Wheel Alignment and Tire Balance 494
Wheel Replacement 494
Tire Chains 496
Accessory Inflator 496
If a Tire Goes Flat 499
Changing a Flat Tire 500
Removing the Spare Tire and Tools 501
Removing the Flat Tire and Installing the Spare Tire 504
Secondary Latch System 511
Storing a Flat or Spare Tire and Tools 513
Compact Spare Tire 516
Appearance Care 517
Cleaning the Inside of Your Vehicle 517
Fabric/Carpet 518
Leather 519
Instrument Panel, Vinyl, and Other Plastic Surfaces 520
Child Restraint Pad 520
Care of Safety Belts and Built-in Child Restraint Harness 520
Weatherstrips 521
Washing Your Vehicle 521
Cleaning Exterior Lamps/Lenses 521
Finish Care 522
Windshield, Backglass, and Wiper Blades 522
Aluminum Wheels 523
Tires 523
Sheet Metal Damage 524
Finish Damage 524
Underbody Maintenance 524
Chemical Paint Spotting 524
Vehicle Care/Appearance Materials 525

Section 5 Service and Appearance Care

Vehicle Identification 526
Vehicle Identification Number (VIN) 526
Service Parts Identification Label 526
Electrical System 526
Add-On Electrical Equipment 526
Headlamp Wiring 527
Windshield Wiper Fuses 527
Power Windows and Other Power Options 527
Fuses and Circuit Breakers 527
Instrument Panel Fuse Block 528
Underhood Fuse Block 530
Capacities and Specifications 533

Service

Your dealer knows your vehicle best and wants you to be happy with it. We hope you will go to your dealer for all your service needs. You will get genuine GM parts and GM-trained and supported service people.

We hope you will want to keep your GM vehicle all GM. Genuine GM parts have one of these marks:

ACDelco®

GM Parts

GM Goodwrench

GM Accessories

Accessories and Modifications

When you add non-GM accessories to your vehicle they can affect your vehicle's performance and safety, including such things as, airbags, braking, stability, ride and handling, emissions systems, aerodynamics, durability, and electronic systems like anti-lock brakes, traction control and stability control. Some of these accessories may even cause malfunction or damage not covered by warranty.

GM Accessories are designed to complement and function with other systems on your vehicle. Your GM dealer can accessorize your vehicle using genuine GM Accessories. When you go to your GM dealer and ask for GM Accessories, you will know that GM-trained and supported service technicians will perform the work using genuine GM Accessories.

California Proposition 65 Warning

Most motor vehicles, including this one, contain and/or emit chemicals known to the State of California to cause cancer and birth defects or other reproductive harm. Engine exhaust, many parts and systems (including some inside the vehicle), many fluids, and some component wear by-products contain and/or emit these chemicals.

Doing Your Own Service Work

⚠ CAUTION:

You can be injured and your vehicle could be damaged if you try to do service work on a vehicle without knowing enough about it.

- **Be sure you have sufficient knowledge, experience, the proper replacement parts, and tools before you attempt any vehicle maintenance task.**
- **Be sure to use the proper nuts, bolts, and other fasteners. English and metric fasteners can be easily confused. If you use the wrong fasteners, parts can later break or fall off. You could be hurt.**

If you want to do some of your own service work, you will want to use the proper service manual. It tells you much more about how to service your vehicle than this manual can. To order the proper service manual, see *Service Publications Ordering Information on page 574*.

Your vehicle has an airbag system. Before attempting to do your own service work, see *Servicing Your Airbag-Equipped Vehicle on page 112*.

You should keep a record with all parts receipts and list the mileage and the date of any service work you perform. See *Maintenance Record on page 552*.

Adding Equipment to the Outside of Your Vehicle

Things you might add to the outside of your vehicle can affect the airflow around it. This may cause wind noise and affect windshield washer performance. Check with your dealer before adding equipment to the outside of your vehicle.

Fuel

Use of the recommended fuel is an important part of the proper maintenance of your vehicle. To help keep your engine clean and maintain optimum vehicle performance, GM recommends the use of gasoline advertised as TOP TIER Detergent Gasoline.

The 8th digit of your Vehicle Identification Number (VIN) shows the code letter or number that identifies your engine. You will find the VIN at the top left of the instrument panel. See *Vehicle Identification Number (VIN) on page 526*.

If your vehicle has the 3.9L V6 engine (VIN Code W only), you may use either regular unleaded gasoline or ethanol fuel containing up to 85% ethanol (E85); also see *Fuel E85 (85% Ethanol) on page 431*. If your vehicle has the 3.9L V6 engine (VIN Code 1), use only regular unleaded gasoline.

Gasoline Octane

Use regular unleaded gasoline with a posted octane rating of 87 or higher. If the octane rating is less than 87, you may notice an audible knocking noise when you drive, commonly referred to as spark knock. If this occurs, use a gasoline rated at 87 octane or higher as soon as possible. If you are using gasoline rated at 87 octane or higher and you hear heavy knocking, your engine needs service.

Gasoline Specifications

At a minimum, gasoline should meet ASTM specification D 4814 in the United States or CAN/CGSB-3.5 in Canada. Some gasolines may contain an octane-enhancing additive called methylcyclopentadienyl manganese tricarbonyl (MMT). General Motors recommends against the use of gasolines containing MMT. See *Additives on page 430* for additional information.

California Fuel

If your vehicle is certified to meet California Emissions Standards, it is designed to operate on fuels that meet California specifications. See the underhood emission control label. If this fuel is not available in states adopting California emissions standards, your vehicle will operate satisfactorily on fuels meeting federal specifications, but emission control system performance may be affected. The malfunction indicator lamp may turn on and your vehicle may fail a smog-check test. See *Malfunction Indicator Lamp on page 242*. If this occurs, return to your authorized GM dealer for diagnosis. If it is determined that the condition is caused by the type of fuel used, repairs may not be covered by your warranty.

Additives

To provide cleaner air, all gasolines in the United States are now required to contain additives that will help prevent engine and fuel system deposits from forming, allowing your emission control system to work properly. In most cases, you should not have to add anything to your fuel. However, some gasolines contain only the minimum amount of additive required to meet U.S. Environmental Protection Agency regulations. To help keep fuel injectors and intake valves clean, or if your vehicle experiences problems due to dirty injectors or valves, look for gasoline that is advertised as TOP TIER Detergent Gasoline. Also, your GM dealer has additives that will help correct and prevent most deposit-related problems.

Gasolines containing oxygenates, such as ethers and ethanol, and reformulated gasolines may be available in your area. General Motors recommends that you use these gasolines if they comply with the specifications described earlier. However, E85 (85% ethanol) and other fuels containing more than 10% ethanol must not be used in vehicles that were not designed for those fuels.

Notice: **Your vehicle was not designed for fuel that contains methanol. Do not use fuel containing methanol. It can corrode metal parts in your fuel system and also damage the plastic and rubber parts. That damage would not be covered under your warranty.**

Some gasolines that are not reformulated for low emissions may contain an octane-enhancing additive called methylcyclopentadienyl manganese tricarbonyl (MMT); ask the attendant where you buy gasoline whether the fuel contains MMT. General Motors recommends against the use of such gasolines. Fuels containing MMT can reduce the life of spark plugs and the performance of the emission control system may be affected. The malfunction indicator lamp may turn on. If this occurs, return to your authorized GM dealer for service.

Fuel E85 (85% Ethanol)

The 8th digit of your Vehicle Identification Number (VIN) shows the code letter or number that identifies your engine. You will find the VIN at the top left of the instrument panel. See *Vehicle Identification Number (VIN) on page 526*.

If your vehicle has the 3.9L V6 engine (VIN Code W only), you may use either regular unleaded gasoline or ethanol fuel containing up to 85% ethanol (E85); also see *Fuel on page 428*. If your vehicle has the 3.9L V6 engine (VIN Code 1), use only regular unleaded gasoline.

Only vehicles that have the 3.9L V6 engine (VIN Code W) may use 85% ethanol fuel (E85). General Motors encourages the use of E85 in vehicles that are designed to use it. The ethanol in E85 is a “renewable” fuel, meaning it is made from renewable sources such as corn and other crops.

Many service stations will not have an 85% ethanol fuel (E85) pump available. The U. S. Department of Energy has an alternative fuels website (www.eere.energy.gov/afdc/infrastructure/locator.html) that can help you find E85 fuel. Those stations that do have E85 should have a label indicating ethanol content. Do not use the fuel if the ethanol content is greater than 85%.

At a minimum, E85 should meet ASTM Specification D 5798.

To ensure quick starts in the wintertime, the E85 fuel must be formulated properly for your climate according to ASTM specification D 5798. If you have trouble starting on E85, it may be because your E85 fuel is not properly formulated for your climate. If this happens, switching to gasoline or adding gasoline to your fuel tank may improve starting. For good starting and heater efficiency below 32°F (0°C), the fuel mix in the fuel tank should contain no more than 70% ethanol. It is best not to alternate repeatedly between gasoline and E85. If you do switch fuels, it is recommended that you add as much fuel as possible — do not add less than five gallons (18.9 L) when refueling. You should drive the vehicle immediately after refueling for at least seven miles (11 km) to allow the vehicle to adapt to the change in ethanol concentration.

E85 has less energy per gallon than gasoline, so you will need to refill your fuel tank more often when using E85 than when you are using gasoline. See *Filling the Tank on page 433*.

Notice: **Some additives are not compatible with E85 fuel and may harm your fuel system. Damage caused by additives would not be covered by your new vehicle warranty. Do not use additives with E85 fuel.**

Notice: **Your vehicle was not designed for fuel that contains methanol. Do not use fuel containing methanol. It can corrode metal parts in your fuel system and also damage the plastic and rubber parts. That damage would not be covered under your warranty.**

Fuels in Foreign Countries

If you plan on driving in another country outside the United States or Canada, the proper fuel may be hard to find. Never use leaded gasoline or any other fuel not recommended in the previous text on fuel. Costly repairs caused by use of improper fuel would not be covered by your warranty.

To check the fuel availability, ask an auto club, or contact a major oil company that does business in the country where you will be driving.

Filling the Tank

⚠ CAUTION:

Fuel vapor burns violently and a fuel fire can cause bad injuries. To help avoid injuries to you and others, read and follow all the instructions on the pump island. Turn off your engine when you are refueling. Do not smoke if you are near fuel or refueling your vehicle. Keep sparks, flames, and smoking materials away from fuel. Do not leave the fuel pump unattended when refueling your vehicle. This is against the law in some places. Keep children away from the fuel pump; never let children pump fuel.

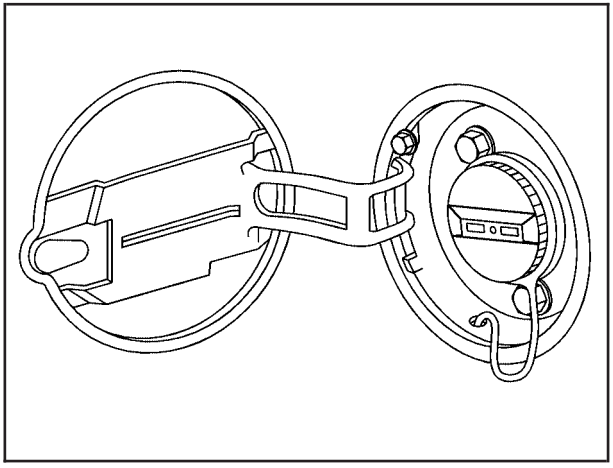

The tethered fuel cap is located behind a hinged fuel door on the driver's side of the vehicle. If the vehicle has E85 fuel capability, a yellow cap with the words "E85 or gasoline" can be seen.

When the fuel door is opened on a vehicle with dual sliding doors, the driver's side sliding door will only open partway.

While refueling, let the fuel cap hang by the tether.

⚠ CAUTION:

If you spill fuel and then something ignites it, you could be badly burned. Fuel can spray out on you if you open the fuel cap too quickly. This spray can happen if your tank is nearly full, and is more likely in hot weather. Open the fuel cap slowly and wait for any hiss noise to stop. Then unscrew the cap all the way.

Be careful not to spill fuel. Do not top off or overfill the tank and wait a few seconds after you have finished pumping before removing the nozzle. Clean fuel from painted surfaces as soon as possible. See *Washing Your Vehicle on page 521*.

When replacing the fuel cap, turn it clockwise until it clicks. Make sure the cap is fully installed. The diagnostic system can determine if the fuel cap has been left off or improperly installed. This would allow fuel to evaporate into the atmosphere. See *Malfunction Indicator Lamp on page 242*.

The CHECK GAS CAP message will be displayed in the Driver Information Center (DIC) if the fuel cap is not properly installed. See *DIC Warnings and Messages on page 256* for more information.

⚠ CAUTION:

If a fire starts while you are refueling, do not remove the nozzle. Shut off the flow of fuel by shutting off the pump or by notifying the station attendant. Leave the area immediately.

Notice: **If you need a new fuel cap, be sure to get the right type. Your dealer can get one for you. If you get the wrong type, it may not fit properly. This may cause your malfunction indicator lamp to light and may damage your fuel tank and emissions system. See *Malfunction Indicator Lamp on page 242*.**

Filling a Portable Fuel Container

⚠ CAUTION:

Never fill a portable fuel container while it is in your vehicle. Static electricity discharge from the container can ignite the gasoline vapor. You can be badly burned and your vehicle damaged if this occurs.
To help avoid injury to you and others:

- **Dispense gasoline only into approved containers.**
- **Do not fill a container while it is inside a vehicle, in a vehicle's trunk, pickup bed, or on any surface other than the ground.**

CAUTION: (Continued)

CAUTION: (Continued)

- **Bring the fill nozzle in contact with the inside of the fill opening before operating the nozzle. Contact should be maintained until the filling is complete.**
- **Do not smoke while pumping gasoline.**

Checking Things Under the Hood

⚠ CAUTION:

An electric fan under the hood can start up and injure you even when the engine is not running. Keep hands, clothing, and tools away from any underhood electric fan.

⚠ CAUTION:

Things that burn can get on hot engine parts and start a fire. These include liquids like fuel, oil, coolant, brake fluid, windshield washer and other fluids, and plastic or rubber. You or others could be burned. Be careful not to drop or spill things that will burn onto a hot engine.

Hood Release

To open the hood, do the following:

1. Pull the hood release handle with this symbol on it. It is located under the instrument panel on the driver's side.
2. Go to the front of the vehicle and push the underhood release to the right. It is located near the center of the hood, above the grille.
3. Lift the hood.
4. Pull up on the hood prop to release it from its storage clip.

   The hood prop may be hot due to increased engine temperatures under the hood, so be careful when handling it. Use your hood prop sleeve when handling the hood prop.
5. Put the end of the hood prop into the slot in the underside of the hood, on the driver's side of the vehicle. It is marked by an arrow.

Before closing the hood, be sure all the filler caps are on properly. Lift the hood to relieve pressure on the hood prop. Remove the hood prop from the slot in the hood and return the prop to its retainer. Then let the hood down and close it firmly.

Engine Compartment Overview

When you open the hood on the 3.9L V6 engine, here is what you will see:

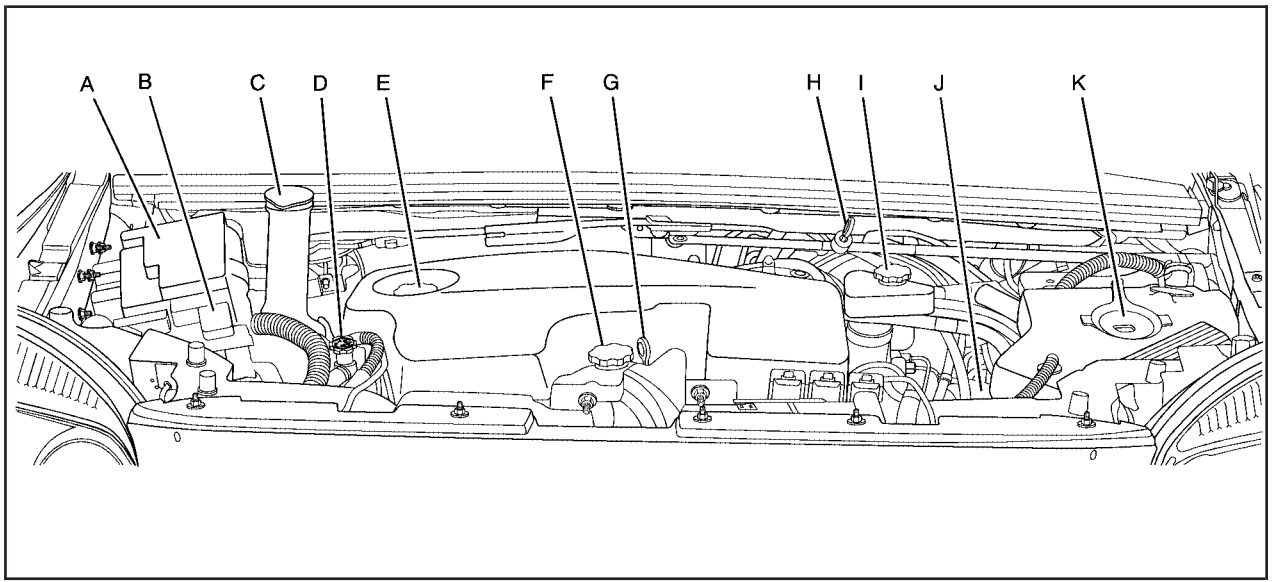

A. Underhood Fuse Block. See *Underhood Fuse Block on page 530*.

B. Remote Positive (+) Terminal. See *Jump Starting on page 466*.

C. Windshield Washer Fluid Reservoir. See “Adding Washer Fluid” under *Windshield Washer Fluid on page 460*.

D. Radiator Pressure Cap. See *Radiator Pressure Cap on page 451*.

E. Power Steering Fluid Reservoir. See *Power Steering Fluid on page 459*.

F. Engine Oil Fill Cap. See “When to Add Engine Oil” under *Engine Oil on page 439*.

G. Engine Oil Dipstick. See “Checking Engine Oil” under *Engine Oil on page 439*.

H. Automatic Transaxle Fluid Dipstick. See “Checking the Fluid Level” under *Automatic Transaxle Fluid on page 445*.

I. Brake Master Cylinder Reservoir. See “Brake Fluid” under *Brakes on page 462*.

J. Engine Air Cleaner/Filter. See *Engine Air Cleaner/Filter on page 444*.

K. Engine Coolant Recovery Tank. See *Cooling System on page 454*.

Engine Oil

Checking Engine Oil

It is a good idea to check the engine oil every time you get fuel. In order to get an accurate reading, the oil must be warm and the vehicle must be on level ground.

The engine oil dipstick handle is a yellow loop. See *Engine Compartment Overview on page 438* for the location of the engine oil dipstick.

1. Turn off the engine and give the oil several minutes to drain back into the oil pan. If you do not do this, the oil dipstick might not show the actual level.
2. Pull out the dipstick and clean it with a paper towel or cloth, then push it back in all the way. Remove it again, keeping the tip down, and check the level.

When to Add Engine Oil

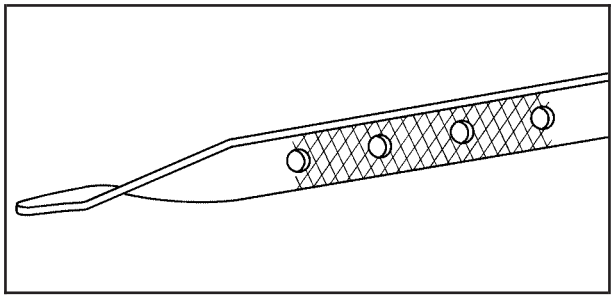

If the oil is below the cross-hatched area at the tip of the dipstick, you will need to add at least one quart/liter of oil. But you must use the right kind. This section explains what kind of oil to use. For engine oil crankcase capacity, see *Capacities and Specifications on page 533*.

Notice: **Do not add too much oil. If the engine has so much oil that the oil level gets above the cross-hatched area that shows the proper operating range, the engine could be damaged.**

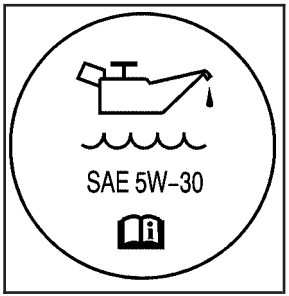

See *Engine Compartment Overview on page 438* for the location of the engine oil fill cap.

Be sure to add enough oil to put the level somewhere in the proper operating range in the cross-hatched area. Push the dipstick all the way back in when you are through.

What Kind of Engine Oil to Use

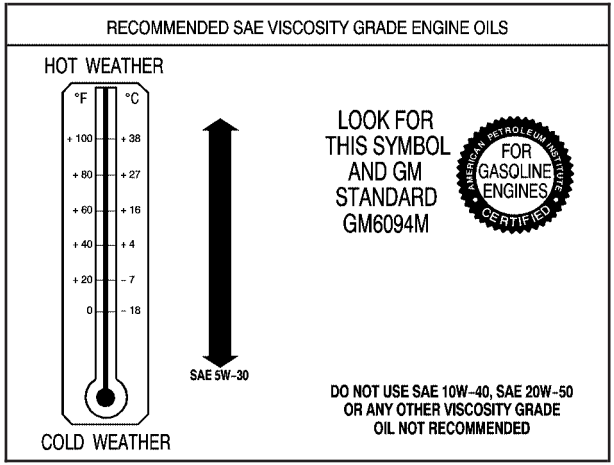

Look for two things:

- GM6094M

  Your vehicle's engine requires oil meeting GM Standard GM6094M. You should look for and use only an oil that meets GM Standard GM6094M.
- SAE 5W-30

  As shown in the viscosity chart, SAE 5W-30 is best for your vehicle.

  These numbers on an oil container show its viscosity, or thickness. Do not use other viscosity oils such as SAE 20W-50.

Oils meeting these requirements should also have the starburst symbol on the container. This symbol indicates that the oil has been certified by the American Petroleum Institute (API).

You should look for this information on the oil container, and use only those oils that are identified as meeting GM Standard GM6094M and have the starburst symbol on the front of the oil container.

Notice: **Use only engine oil identified as meeting GM Standard GM6094M and showing the American Petroleum Institute Certified For Gasoline Engines starburst symbol. Failure to use the recommended oil can result in engine damage not covered by your warranty.**

GM Goodwrench® oil meets all the requirements for your vehicle.

If you are in an area of extreme cold, where the temperature falls below –20°F (–29°C), it is recommended that you use either an SAE 5W-30 synthetic oil or an SAE 0W-30 oil. Both will provide easier cold starting and better protection for the engine at extremely low temperatures.

Engine Oil Additives

Do not add anything to the oil. The recommended oils with the starburst symbol meet GM Standard GM6094M are all you will need for good performance and engine protection.

Engine Oil Life System

When to Change Engine Oil

Your vehicle has a computer system that lets you know when to change the engine oil and filter. This is based on engine revolutions and engine temperature, and not on mileage. Based on driving conditions, the mileage at which an oil change will be indicated can vary considerably. For the oil life system to work properly, you must reset the system every time the oil is changed.

When the system has calculated that oil life has been diminished, it will indicate that an oil change is necessary. A CHANGE OIL SOON message will come on. See *DIC Warnings and Messages on page 256*. Change your oil as soon as possible within the next 600 miles (1 000 km). It is possible that, if you are driving under the best conditions, the oil life system may not indicate that an oil change is necessary for over a year. However, your engine oil and filter must be changed at least once a year and at this time the system must be reset. Your dealer has GM-trained people who will perform this work using genuine GM parts and reset the system. It is also important to check your oil regularly and keep it at the proper level.

If the system is ever reset accidentally, you must change your oil at 3,000 miles (5 000 km) since your last oil change. Remember to reset the oil life system whenever the oil is changed.

How to Reset the Engine Oil Life System

The Engine Oil Life System calculates when to change your engine oil and filter based on vehicle use. Anytime your oil is changed, reset the system so it can calculate when the next oil change is required. If a situation occurs where you change your oil prior to a CHANGE OIL SOON message being turned on, reset the system.

1. With the ignition key in RUN but the engine off, repeatedly push the set/reset button until OIL is displayed on the Driver Information Center (DIC).
2. Once OIL is displayed, push and hold the set/reset button for five seconds. The number will disappear and be replaced by 100 (indicating 100% oil life remaining).
3. Turn the key to LOCK.

If the CHANGE OIL SOON message comes back on when you start your vehicle, the engine oil life system has not reset. Repeat the procedure.

What to Do with Used Oil

Used engine oil contains certain elements that may be unhealthy for your skin and could even cause cancer. Do not let used oil stay on your skin for very long. Clean your skin and nails with soap and water, or a good hand cleaner. Wash or properly dispose of clothing or rags containing used engine oil. See the manufacturer's warnings about the use and disposal of oil products.

Used oil can be a threat to the environment. If you change your own oil, be sure to drain all the oil from the filter before disposal. Never dispose of oil by putting it in the trash, pouring it on the ground, into sewers, or into streams or bodies of water. Instead, recycle it by taking it to a place that collects used oil. If you have a problem properly disposing of your used oil, ask your dealer, a service station, or a local recycling center for help.

Engine Air Cleaner/Filter

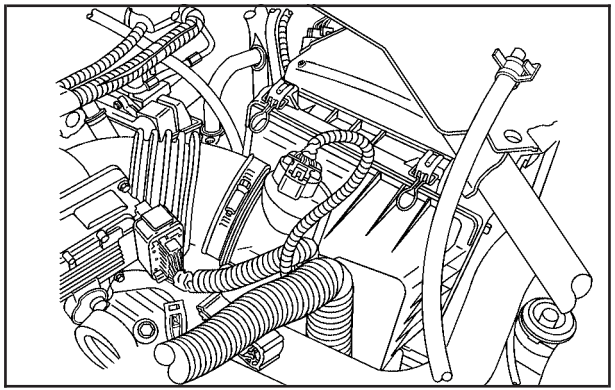

See *Engine Compartment Overview on page 438* for the location of the engine air cleaner/filter.

When to Inspect the Engine Air Cleaner/Filter

Inspect the air cleaner/filter at the Maintenance II intervals and replace it at the first oil change after each 50,000 mile (85 000 km) interval. See *Scheduled Maintenance on page 539* for more information. If you are driving in dusty/dirty conditions, inspect the filter at each engine oil change.

How to Inspect the Engine Air Cleaner/Filter

To inspect the air cleaner/filter, remove the filter from the vehicle and lightly shake the filter to release loose dust and dirt. If the filter remains caked with dirt, a new filter is required. Do not use compressed air to clean the filter.

To inspect or replace the air cleaner/filter, do the following:

1. Remove the two clamps on the duct.
2. Remove the duct.
3. Unlatch the two hooks on top of the engine air cleaner/filter housing.
4. Inspect or replace the engine air cleaner/filter.

5. Align the tabs located on the bottom of the panel with the slots at the bottom of the housing.
6. Latch the hooks to secure the panel in place. If the panel moves easily, check that the tabs are seated correctly in the slots.
7. Put the duct back on and reinstall the clamps.

⚠ CAUTION:

Operating the engine with the air cleaner/filter off can cause you or others to be burned. The air cleaner not only cleans the air; it helps to stop flames if the engine backfires. If it is not there and the engine backfires, you could be burned. Do not drive with it off, and be careful working on the engine with the air cleaner/filter off.

Notice: **If the air cleaner/filter is off, a backfire can cause a damaging engine fire. And, dirt can easily get into your engine, which will damage it. Always have the air cleaner/filter in place when you are driving.**

Automatic Transaxle Fluid

When to Check and Change Automatic Transaxle Fluid

A good time to check your automatic transaxle fluid level is when the engine oil is changed.

Change the fluid and filter at the intervals listed in *Additional Required Services on page 542*, and be sure to use the transaxle fluid listed in *Recommended Fluids and Lubricants on page 548*.

How to Check Automatic Transaxle Fluid

Because this operation can be a little difficult, you may choose to have this done at the dealership service department.

If you do it yourself, be sure to follow all the instructions here, or you could get a false reading on the dipstick.

Notice: **Too much or too little fluid can damage the transaxle. Too much can mean that some of the fluid could come out and fall on hot engine or exhaust system parts, starting a fire. Too little fluid could cause the transaxle to overheat. Be sure to get an accurate reading if you check the transaxle fluid.**

Wait at least 30 minutes before checking the transaxle fluid level if you have been driving:

- When outside temperatures are above 90°F (32°C).
- At high speed for quite a while.
- In heavy traffic — especially in hot weather.
- While pulling a trailer.

To get the right reading, the fluid should be at normal operating temperature, which is 180°F to 200°F (82°C to 93°C).

Get the vehicle warmed up by driving about 15 miles (24 km) when outside temperatures are above 50°F (10°C). If it is colder than 50°F (10°C), you may have to drive longer.

Checking the Fluid Level

Prepare your vehicle as follows:

1. Park your vehicle on a level place. Keep the engine running.
2. With the parking brake applied, place the shift lever in PARK (P).
3. With your foot on the brake pedal, move the shift lever through each gear range, pausing for about three seconds in each range. Then, position the shift lever in PARK (P).
4. Let the engine run at idle for three to five minutes.

Then, without shutting off the engine, follow these steps:

1. Pull out the dipstick and wipe it with a clean rag or paper towel.

   The automatic transaxle dipstick is located toward the back of the engine compartment, near the brake master cylinder reservoir. The dipstick handle is a red loop. See *Engine Compartment Overview on page 438* for more information on location.

2. Push it back in all the way, wait three seconds, and then pull it back out again.
3. Check both sides of the dipstick, and read the lower level. The fluid level must be in the cross-hatched area.
4. If the fluid level is in the acceptable range, push the dipstick back in all the way.

How to Add Automatic Transaxle Fluid

Refer to the Maintenance Schedule to determine what kind of transaxle fluid to use. See *Recommended Fluids and Lubricants on page 548*.

If the fluid level is low, add only enough of the proper fluid to bring the level into the cross-hatched area on the dipstick.

1. Pull out the dipstick.
2. Using a long-neck funnel, add enough fluid at the dipstick hole to bring it to the proper level.

   It does not take much fluid, generally less than one pint (0.5 L). Do not overfill.

Notice: **Use of the incorrect automatic transaxle fluid may damage your vehicle, and the damages may not be covered by your warranty. Always use the automatic transaxle fluid listed in *Recommended Fluids and Lubricants on page 548*.**

3. After adding fluid, recheck the fluid level as described under “How to Check Automatic Transaxle Fluid,” earlier in this section.
4. When the correct fluid level is obtained, push the dipstick back in all the way.

Engine Coolant

The cooling system in your vehicle is filled with DEX-COOL® engine coolant. This coolant is designed to remain in your vehicle for five years or 150,000 miles (240 000 km), whichever occurs first, if you add only DEX-COOL® extended life coolant.

The following explains your cooling system and how to add coolant when it is low. If you have a problem with engine overheating, see *Engine Overheating on page 451*.

A 50/50 mixture of clean, drinkable water and DEX-COOL® coolant will:

- Give freezing protection down to –34°F (–37°C).
- Give boiling protection up to 265°F (129°C).
- Protect against rust and corrosion.
- Help keep the proper engine temperature.
- Let the warning messages and gages work as they should.

Notice: **Using coolant other than DEX-COOL® may cause premature engine, heater core, or radiator corrosion. In addition, the engine coolant may require changing sooner, at the first maintenance service after each 30,000 miles (50 000 km) or 24 months, whichever occurs first. Any repairs would not be covered by your warranty. Always use DEX-COOL® (silicate-free) coolant in your vehicle.**

What Engine Coolant to Use

Use a mixture of one-half clean, drinkable water and one-half DEX-COOL® coolant which will not damage aluminum parts. If you use this coolant mixture, you do not need to add anything else.

⚠ CAUTION:

Adding only plain water to your cooling system can be dangerous. Plain water, or some other liquid such as alcohol, can boil before the proper coolant mixture will. Your vehicle's coolant warning system is set for the proper coolant mixture. With plain water or the wrong mixture, your engine could get too hot but you would not get the overheat warning. Your engine could catch fire and you or others could be burned. Use a 50/50 mixture of clean, drinkable water and DEX-COOL® coolant.

Notice: **If you use an improper coolant mixture, your engine could overheat and be badly damaged. The repair cost would not be covered by your warranty. Too much water in the mixture can freeze and crack the engine, radiator, heater core, and other parts.**

If you have to add coolant more than four times a year, have your dealer check your cooling system.

Notice: **If you use extra inhibitors and/or additives in your vehicle's cooling system, you could damage your vehicle. Use only the proper mixture of the engine coolant listed in this manual for the cooling system. See *Recommended Fluids and Lubricants on page 548* for more information.**

Checking Coolant

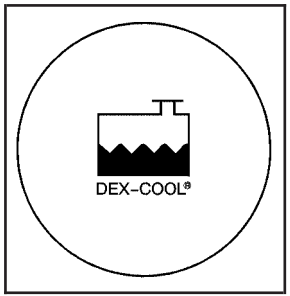

The coolant recovery tank is located on the driver's side of the vehicle, above the engine air cleaner/filter. See *Engine Compartment Overview on page 438* for more information on location.

The vehicle must be on a level surface. When your engine is cold, the coolant level should be at the full cold mark, or a little higher. When your engine is warm, the level should be above the full cold mark or a little higher. The full cold mark is a line with an arrow pointing down at it, located on the front of the coolant recovery tank.

Adding Coolant

If you need more coolant, add the proper DEX-COOL® coolant mixture at the coolant recovery tank, but be careful not to spill it.

⚠ CAUTION:

Turning the radiator pressure cap when the engine and radiator are hot can allow steam and scalding liquids to blow out and burn you badly. With the coolant recovery tank, you will almost never have to add coolant at the radiator. Never turn the radiator pressure cap — even a little — when the engine and radiator are hot.

⚠ CAUTION:

You can be burned if you spill coolant on hot engine parts. Coolant contains ethylene glycol, and it will burn if the engine parts are hot enough. Do not spill coolant on a hot engine.

Occasionally check the coolant level in the radiator. For information on how to add coolant to the radiator, see *Cooling System on page 454*.

Radiator Pressure Cap

Notice: **The radiator cap on your vehicle is a pressure-type cap and must be tightly installed to prevent coolant loss and possible engine damage from overheating. Be sure the cap is properly closed.**

See *Engine Compartment Overview on page 438* for more information on location.

Engine Overheating

You will find an engine coolant temperature gage on your vehicle's instrument panel. See *Engine Coolant Temperature Gage on page 241*.

Your vehicle may also have an ENGINE COOLANT HOT message displayed in the Driver Information Center (DIC). See *DIC Warnings and Messages on page 256*.

If Steam Is Coming From Your Engine

⚠ CAUTION:

Steam from an overheated engine can burn you badly, even if you just open the hood. Stay away from the engine if you see or hear steam coming from it. Turn it off and get everyone away from the vehicle until it cools down. Wait until there is no sign of steam or coolant before you open the hood.

If you keep driving when the vehicles engine is overheated, the liquids in it can catch fire. You or others could be badly burned. Stop your engine if it overheats, and get out of the vehicle until the engine is cool.

See *Overheated Engine Protection Operating Mode on page 453* for information on driving to a safe place in an emergency.

Notice: **If your engine catches fire because you keep driving with no coolant, your vehicle can be badly damaged. The costly repairs would not be covered by your warranty. See *Overheated Engine Protection Operating Mode on page 453* for information on driving to a safe place in an emergency.**

If No Steam Is Coming From Your Engine

If you get an engine overheat warning but see or hear no steam, the problem may not be too serious. Sometimes the engine can get a little too hot when you:

- Climb a long hill on a hot day.
- Stop after high-speed driving.
- Idle for long periods in traffic.
- Tow a trailer.

If you get the overheat warning with no sign of steam, try this for a minute or so:

1. If your air conditioner is on, turn it off.
2. Turn on your heater to full hot at the highest fan speed and open the windows as necessary.
3. If you are in a traffic jam, shift to NEUTRAL (N); otherwise, shift to the highest gear while driving — DRIVE (D) or THIRD (3).

If you no longer have the overheat warning, you can drive. Just to be safe, drive slower for about 10 minutes. If the warning does not come back on, you can drive normally.

If the warning continues, pull over, stop, and park your vehicle right away.

If there is still no sign of steam, idle the engine for three minutes while you are parked. If you still have the warning, turn off the engine and get everyone out of the vehicle until it cools down. Also, see “Overheated Engine Protection Operating Mode” later in this section.

You may decide not to lift the hood but to get service help right away.

Overheated Engine Protection Operating Mode

This emergency operating mode allows your vehicle to be driven to a safe place in an emergency situation. If an overheated engine condition exists, an overheat protection mode which alternates firing groups of cylinders helps prevent engine damage. In this mode, you will notice a significant loss in power and engine performance. The temperature gage will indicate an overheat condition exists. Driving extended miles (km) and/or towing a trailer in the overheat protection mode should be avoided.

Notice: **After driving in the overheated engine protection operating mode, to avoid engine damage, allow the engine to cool before attempting any repair. The engine oil will be severely degraded. Repair the cause of coolant loss, change the oil and reset the oil life system. See *Engine Oil on page 439*.**

Cooling System

When you decide it is safe to lift the hood, here is what you will see:

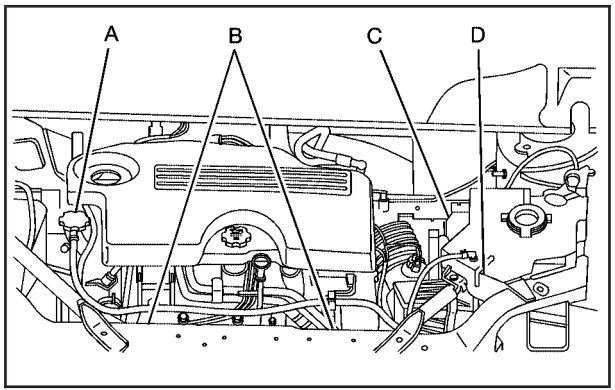

A. Radiator Pressure Cap
B. Electric Engine Cooling Fans
C. Engine Coolant Recovery Tank
D. Recovery tank FULL COLD mark

⚠ CAUTION:

An electric engine cooling fan under the hood can start up even when the engine is not running and can injure you. Keep hands, clothing and tools away from any underhood electric fan.

If the coolant inside the coolant recovery tank is boiling, do not do anything else until it cools down. The vehicle should be parked on a level surface.

The coolant level should be at or above the full cold mark. If it is not, you may have a leak at the pressure cap or in the radiator hoses, heater hoses, radiator, water pump, or somewhere else in the cooling system.

⚠ CAUTION:

Heater and radiator hoses, and other engine parts, can be very hot. Do not touch them. If you do, you can be burned.

Do not run the engine if there is a leak. If you run the engine, it could lose all coolant. That could cause an engine fire, and you could be burned. Get any leak fixed before you drive the vehicle.

If there seems to be no leak, with the engine on, check to see if the electric engine cooling fans are running. If the engine is overheating, both fans should be running. If they are not, your vehicle needs service.

Notice: **Engine damage from running your engine without coolant is not covered by your warranty. See *Overheated Engine Protection Operating Mode on page 453* for information on driving to a safe place in an emergency.**

Notice: **Using coolant other than DEX-COOL® may cause premature engine, heater core or radiator corrosion. In addition, the engine coolant may require changing sooner, at 30,000 miles (50 000 km) or 24 months, whichever occurs first. Any repairs would not be covered by your warranty. Always use DEX-COOL® (silicate-free) coolant in your vehicle.**

How to Add Coolant to the Coolant Recovery Tank

If you have not found a problem yet, but the coolant level is not at or above the full cold mark, add a 50/50 mixture of clean, drinkable water and DEX-COOL® engine coolant at the coolant recovery tank. See *Engine Coolant on page 448* for more information.

⚠ CAUTION:

Adding only plain water to your cooling system can be dangerous. Plain water, or some other liquid such as alcohol, can boil before the proper coolant mixture will. Your vehicle's coolant warning system is set for the proper coolant mixture. With plain water or the wrong mixture, your engine could get too hot but you would not get the overheat warning. Your engine could catch fire and you or others could be burned. Use a 50/50 mixture of clean, drinkable water and DEX-COOL® coolant.

Notice: **In cold weather, water can freeze and crack the engine, radiator, heater core and other parts. Use the recommended coolant and the proper coolant mixture.**

⚠ CAUTION:

You can be burned if you spill coolant on hot engine parts. Coolant contains ethylene glycol and it will burn if the engine parts are hot enough. Do not spill coolant on a hot engine.

When the coolant in the coolant recovery tank is at or above the full cold mark, start your vehicle.

If the overheat warning continues, there is one more thing you can try. You can add the proper coolant mixture directly to the radiator, but be sure the cooling system is cool before you do it.

⚠ CAUTION:

Steam and scalding liquids from a hot cooling system can blow out and burn you badly. They are under pressure, and if you turn the radiator pressure cap — even a little — they can come out at high speed. Never turn the cap when the cooling system, including the radiator pressure cap, is hot. Wait for the cooling system and radiator pressure cap to cool if you ever have to turn the pressure cap.

How to Add Coolant to the Radiator

Notice: **Your engine has a specific radiator fill procedure. Failure to follow this procedure could cause your engine to overheat and be severely damaged.**

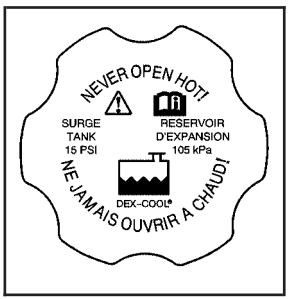

1. You can remove the radiator pressure cap when the cooling system, including the radiator pressure cap and upper radiator hose, is no longer hot.

   Turn the pressure cap slowly counterclockwise. If you hear a hiss, wait for that to stop. A hiss means there is still some pressure left, close the cap and wait for the system to cool down.

2. Keep turning the pressure cap. Remove the pressure cap.

⚠ CAUTION:

You can be burned if you spill coolant on hot engine parts. Coolant contains ethylene glycol and it will burn if the engine parts are hot enough. Do not spill coolant on a hot engine.

3. Fill the radiator with the proper DEX-COOL® coolant mixture, up to the base of the filler neck. See *Engine Coolant on page 448* for more information about the proper coolant mixture.
4. Rinse or wipe any spilled coolant from the engine and the compartment.
5. Start the engine and let it run until you can feel the upper radiator hose getting hot. Watch out for the engine cooling fans.
6. By this time, the coolant level inside the radiator filler neck may be lower. If the level is lower, add more of the proper DEX-COOL® coolant mixture through the filler neck until the level reaches the base of the filler neck.
7. Then replace the pressure cap. At any time during this procedure if coolant begins to flow out of the filler neck, reinstall the pressure cap. Be sure the pressure cap is closed properly.

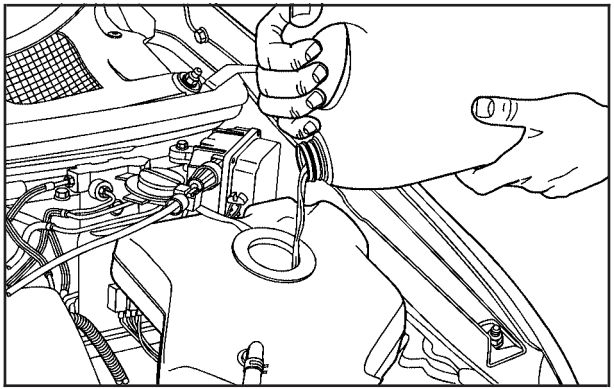

Filling the Coolant Recovery Tank

8. Then fill the coolant recovery tank to the full cold mark.
9. Put the cap back on the coolant recovery tank.

Power Steering Fluid

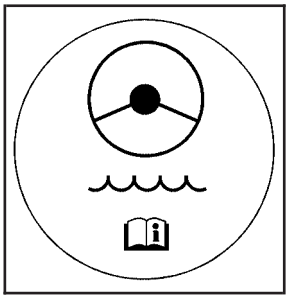

The power steering fluid reservoir is located toward the rear of the engine compartment on the passenger's side of the vehicle. See *Engine Compartment Overview on page 438* for reservoir location.

When to Check Power Steering Fluid

It is not necessary to regularly check power steering fluid unless you suspect there is a leak in the system or you hear an unusual noise. A fluid loss in this system could indicate a problem. Have the system inspected and repaired.

How to Check Power Steering Fluid

To check the power steering fluid, do the following:

1. Turn the key off and let the engine compartment cool down.
2. Wipe the cap and the top of the reservoir clean.
3. Unscrew the cap and wipe the dipstick with a clean rag.
4. Replace the cap and completely tighten it.
5. Remove the cap again and look at the fluid level on the dipstick.

The fluid level should be somewhere within the cross-hatched area on the dipstick. If the fluid is at the ADD mark, you should add fluid.

What to Use

To determine what kind of fluid to use, see *Recommended Fluids and Lubricants on page 548*. Always use the proper fluid. Failure to use the proper fluid can cause leaks and damage hoses and seals.

Windshield Washer Fluid

What Washer Fluid to Use

When you need windshield washer fluid, be sure to read the manufacturer's instructions before use. If you will be operating your vehicle in an area where the temperature may fall below freezing, use a fluid that has sufficient protection against freezing.

Adding Washer Fluid

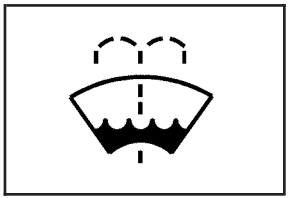

Open the cap with the washer symbol on it. Add washer fluid until the tank is full. See *Engine Compartment Overview on page 438* for reservoir location.

Notice:

- **When using concentrated washer fluid, follow the manufacturer's instructions for adding water.**
- **Do not mix water with ready-to-use washer fluid. Water can cause the solution to freeze and damage your washer fluid tank and other parts of the washer system. Also, water does not clean as well as washer fluid.**
- **Fill your washer fluid tank only three-quarters full when it is very cold. This allows for expansion if freezing occurs, which could damage the tank if it is completely full.**
- **Do not use engine coolant (antifreeze) in your windshield washer. It can damage your washer system and paint.**

Brakes

Brake Fluid

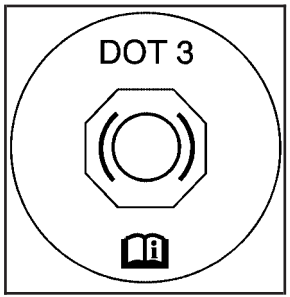

Your brake master cylinder reservoir is filled with DOT-3 brake fluid. See *Engine Compartment Overview on page 438* for the location of the reservoir.

There are only two reasons why the brake fluid level in the reservoir might go down. The first is that the brake fluid goes down to an acceptable level during normal brake lining wear. When new linings are put in, the fluid level goes back up. The other reason is that fluid is leaking out of the brake system. If it is, you should have your brake system fixed, since a leak means that sooner or later your brakes will not work well, or will not work at all.

So, it is not a good idea to top off your brake fluid. Adding brake fluid will not correct a leak. If you add fluid when your linings are worn, then you will have too much fluid when you get new brake linings. You should add or remove brake fluid, as necessary, only when work is done on the brake hydraulic system.

⚠ CAUTION:

If you have too much brake fluid, it can spill on the engine. The fluid will burn if the engine is hot enough. You or others could be burned, and your vehicle could be damaged. Add brake fluid only when work is done on the brake hydraulic system.

When your brake fluid falls to a low level, your brake warning light will come on. See *Brake System Warning Light on page 238*.

What to Add

When you do need brake fluid, use only DOT-3 brake fluid. Use new brake fluid from a sealed container only. See *Recommended Fluids and Lubricants on page 548*.

Always clean the brake fluid reservoir cap and the area around the cap before removing it. This will help keep dirt from entering the reservoir.

⚠ CAUTION:

With the wrong kind of fluid in your brake system, your brakes may not work well, or they may not even work at all. This could cause a crash. Always use the proper brake fluid.

Notice:

- **Using the wrong fluid can badly damage brake system parts. For example, just a few drops of mineral-based oil, such as engine oil, in your brake system can damage brake system parts so badly that they will have to be replaced. Do not let someone put in the wrong kind of fluid.**
- **If you spill brake fluid on your vehicle's painted surfaces, the paint finish can be damaged. Be careful not to spill brake fluid on your vehicle. If you do, wash it off immediately. See *Washing Your Vehicle on page 521*.**

Brake Wear

Your vehicle has four-wheel disc brakes.

Disc brake pads have built-in wear indicators that make a high-pitched warning sound when the brake pads are worn and new pads are needed. The sound may come and go or be heard all the time your vehicle is moving, except when you are pushing on the brake pedal firmly.

⚠ CAUTION:

The brake wear warning sound means that soon your brakes will not work well. That could lead to an accident. When you hear the brake wear warning sound, have your vehicle serviced.

Notice: **Continuing to drive with worn-out brake pads could result in costly brake repair.**

Some driving conditions or climates may cause a brake squeal when the brakes are first applied or lightly applied. This does not mean something is wrong with your brakes.

Properly torqued wheel nuts are necessary to help prevent brake pulsation. When tires are rotated, inspect brake pads for wear and evenly tighten wheel nuts in the proper sequence to GM torque specifications.

Brake linings should always be replaced as complete axle sets.

Brake Pedal Travel

See your dealer if the brake pedal does not return to normal height, or if there is a rapid increase in pedal travel. This could be a sign of brake trouble.

Brake Adjustment

Every time you apply the brakes, with or without the vehicle moving, your brakes adjust for wear.

Replacing Brake System Parts

The braking system on a vehicle is complex. Its many parts have to be of top quality and work well together if the vehicle is to have really good braking. Your vehicle was designed and tested with top-quality GM brake parts. When you replace parts of your braking system — for example, when your brake linings wear down and you need new ones put in — be sure you get new approved GM replacement parts. If you do not, your brakes may no longer work properly. For example, if someone puts in brake linings that are wrong for your vehicle, the balance between your front and rear brakes can change — for the worse. The braking performance you have come to expect can change in many other ways if someone puts in the wrong replacement brake parts.

Battery

Your vehicle has a maintenance free battery. When it is time for a new battery, get one that has the replacement number shown on the original battery's label. We recommend an ACDelco® replacement battery.

Warning: Battery posts, terminals, and related accessories contain lead and lead compounds, chemicals known to the State of California to cause cancer and reproductive harm. Wash hands after handling.

Vehicle Storage

If you are not going to drive your vehicle for 25 days or more, remove the black, negative (–) cable from the battery. This will help keep your battery from running down.

⚠ CAUTION:

Batteries have acid that can burn you and gas that can explode. You can be badly hurt if you are not careful. See *Jump Starting on page 466* for tips on working around a battery without getting hurt.

Jump Starting

If your vehicle's battery has run down, you may want to use another vehicle and some jumper cables to start your vehicle. Be sure to use the following steps to do it safely.

On vehicles equipped with the optional power sliding door, a low-voltage battery or replacing a battery may cause the system to become inoperative. See *Power Sliding Door (PSD) on page 134* for more information.

⚠ CAUTION:

Batteries can hurt you. They can be dangerous because:

- **They contain acid that can burn you.**
- **They contain gas that can explode or ignite.**
- **They contain enough electricity to burn you.**

If you do not follow these steps exactly, some or all of these things can hurt you.

Notice: **Ignoring these steps could result in costly damage to your vehicle that would not be covered by your warranty.**

Trying to start your vehicle by pushing or pulling it will not work, and it could damage your vehicle.

1. Check the other vehicle. It must have a 12-volt battery with a negative ground system.

Notice: **If the other vehicle's system is not a 12-volt system with a negative ground, both vehicles can be damaged. Only use vehicles with 12-volt systems with negative grounds to jump start your vehicle.**

2. Get the vehicles close enough so the jumper cables can reach, but be sure the vehicles are not touching each other. If they are, it could cause a ground connection you do not want. You would not be able to start your vehicle, and the bad grounding could damage the electrical systems.

To avoid the possibility of the vehicles rolling, set the parking brake firmly on both vehicles involved in the jump start procedure. Put an automatic transaxle in PARK (P) or a manual transaxle in NEUTRAL before setting the parking brake.

Notice: **If you leave your radio or other accessories on during the jump starting procedure, they could be damaged. The repairs would not be covered by your warranty. Always turn off your radio and other accessories when jump starting your vehicle.**

3. Turn off the ignition on both vehicles. Unplug unnecessary accessories plugged into the cigarette lighter or the accessory power outlet. Turn off the radio and all lamps that are not needed. This will avoid sparks and help save both batteries. And it could save the radio!
4. Open the hoods and locate the batteries. Find the positive (+) and negative (–) terminal locations on each vehicle.

   You will not need to access your battery for jump starting. Your vehicle has a remote positive (+) jump starting terminal for that purpose.

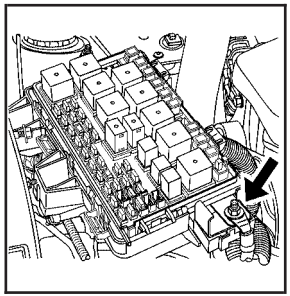

The terminal is located under the fuse block cover. Remove the cover to access the remote positive (+) terminal.

See *Engine Compartment Overview on page 438* for more information on the location of the remote positive (+) terminal. You should always use the remote positive (+) terminal instead of the positive (+) terminal on your battery.

⚠ CAUTION:

An electric fan can start up even when the engine is not running and can injure you. Keep hands, clothing and tools away from any underhood electric fan.

⚠ CAUTION:

Using a match near a battery can cause battery gas to explode. People have been hurt doing this, and some have been blinded. Use a flashlight if you need more light.

Be sure the battery has enough water. You do not need to add water to the battery installed in your new vehicle. But if a battery has filler caps, be sure the right amount of fluid is there. If it is low, add water to take care of that first. If you do not, explosive gas could be present.

Battery fluid contains acid that can burn you. Do not get it on you. If you accidentally get it in your eyes or on your skin, flush the place with water and get medical help immediately.

⚠ CAUTION:

Fans or other moving engine parts can injure you badly. Keep your hands away from moving parts once the engine is running.

5. Check that the jumper cables do not have loose or missing insulation. If they do, you could get a shock. The vehicles could be damaged too.

   Before you connect the cables, here are some basic things you should know. Positive (+) will go to positive (+) or to a remote positive (+) terminal if the vehicle has one. Negative (–) will go to a heavy, unpainted metal engine part or to a remote negative (–) terminal if the vehicle has one. Do not connect positive (+) to negative (–) or you will get a short that would damage the battery and maybe other parts too. Do not connect the negative (–) cable to the negative (–) terminal on the dead battery because this can cause sparks.

6. Connect the red positive (+) cable to the positive (+) terminal of the dead battery. Use a remote positive (+) terminal if the vehicle has one.
7. Do not let the other end touch metal. Connect it to the positive (+) terminal of the good battery. Use a remote positive (+) terminal if the vehicle has one.
8. Now connect the black negative (–) cable to the negative (–) terminal of the good battery. Use a remote negative (–) terminal if the vehicle has one.

   Do not let the other end touch anything until the next step. The other end of the negative (–) cable does not go to the dead battery. It goes to a heavy, unpainted metal engine part, or to a remote negative (–) terminal on the vehicle with the dead battery.
9. Connect the other end of the negative (–) cable at least 18 inches (45 cm) away from the dead battery, but not near engine parts that move. The electrical connection is just as good there, and the chance of sparks getting back to the battery is much less.
10. Now start the vehicle with the good battery and run the engine for a while.
11. Try to start the vehicle that had the dead battery. If it will not start after a few tries, it probably needs service.

Notice: **If the jumper cables are connected or removed in the wrong order, electrical shorting may occur and damage the vehicle. The repairs would not be covered by your warranty. Always connect and remove the jumper cables in the correct order, making sure that the cables do not touch each other or other metal.**

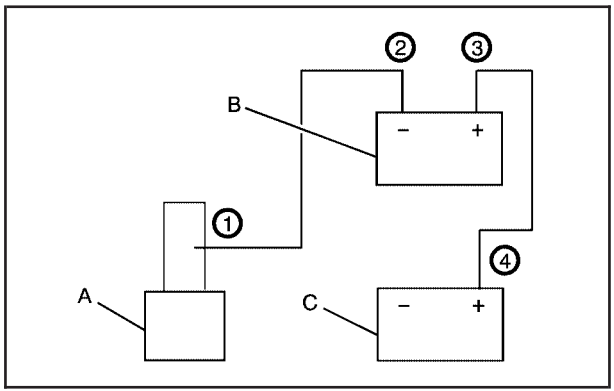

Jumper Cable Removal

A. Heavy, Unpainted Metal Engine Part or Remote Negative (–) Terminal
B. Good Battery or Remote Positive (+) Terminal and Remote Negative (–) Terminals
C. Dead Battery or Remote Positive (+) Terminal

To disconnect the jumper cables from both vehicles, do the following:

1. Disconnect the black negative (–) cable from the vehicle that had the dead battery.
2. Disconnect the black negative (–) cable from the vehicle with the good battery.
3. Disconnect the red positive (+) cable from the vehicle with the good battery.
4. Disconnect the red positive (+) cable from the other vehicle.
5. Return the remote positive (+) terminal cover or underhood fuse block cover to its original position.

Bulb Replacement

For the proper type of replacement bulbs, see *Replacement Bulbs on page 475*.

For any bulb changing procedure not listed in this section, contact your dealer.

Halogen Bulbs

⚠ CAUTION:

Halogen bulbs have pressurized gas inside and can burst if you drop or scratch the bulb. You or others could be injured. Be sure to read and follow the instructions on the bulb package.

Headlamps and Sidemarker Lamps

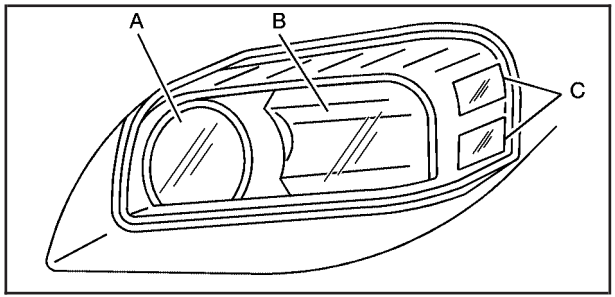

A. High-beam Headlamp
B. Low-beam Headlamp
C. Sidemarker Lamp

To replace one of these bulbs, do the following:

1. Open the hood. See *Hood Release on page 437* for more information.

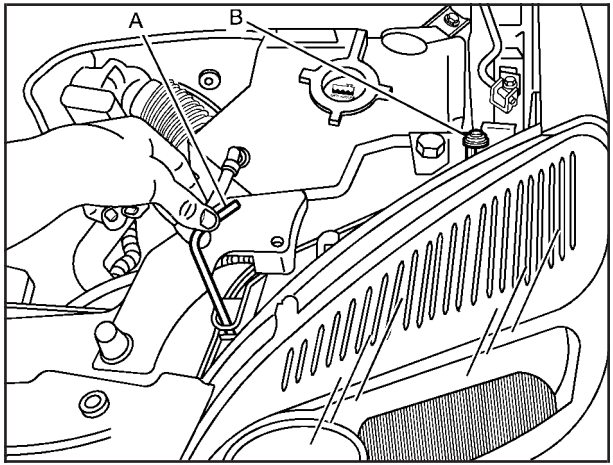

2. Remove the headlamp retainer pin (A) by turning it towards the headlamp assembly and pulling it straight out.
3. Remove the screw (B) from the top of the headlamp assembly.
4. Pull the assembly away from the vehicle.
5. Disconnect the socket wiring harness connector from the headlamp assembly.
6. Turn the bulb socket counterclockwise to remove from the assembly.
7. To replace a headlamp bulb, disconnect the bulb socket wiring harness and connect to the new bulb socket.

   To replace a sidemarker bulb, pull the old bulb out and push a new bulb in.
8. Reinstall the bulb socket by inserting into the bulb assembly and turning it clockwise to secure.
9. Reverse the steps to reinstall the headlamp assembly.

Front Turn Signal, Parking and Daytime Running Lamps (DRL)

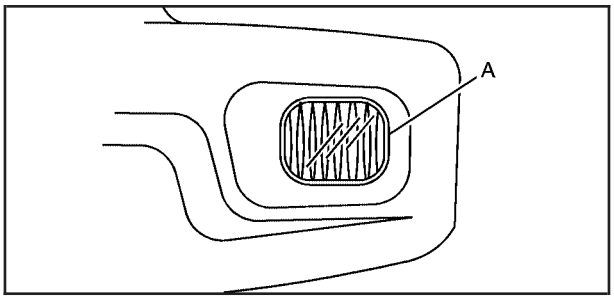

To replace one of these bulbs (A), do the following:

1. Follow the Steps 1 through 4 to remove the headlamp assembly. See *Headlamps and Sidemarker Lamps on page 471* for more information.
2. Turn the bulb socket counterclockwise to remove from the assembly.
3. Pull the old bulb out from the bulb socket.
4. Replace with a new bulb.
5. Reinstall the bulb socket by inserting into the bulb assembly and turning it clockwise to secure.
6. Reverse the steps to reinstall the headlamp assembly.

Taillamps, Turn Signal, Stoplamps and Back-up Lamps

To change a stoplamp/taillamp, turn signal or back-up lamp bulb, do the following:

1. Open the liftgate. See *Liftgate on page 141* for more information.

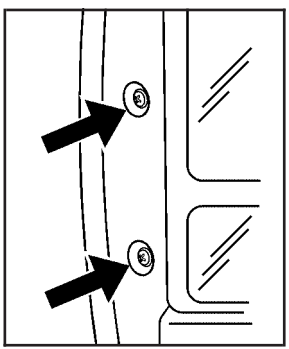

2. Remove the two screws from the taillamp housing on the inboard side.

3. Pull out the taillamp housing.
4. Disconnect the wiring harness connector from the taillamp assembly.

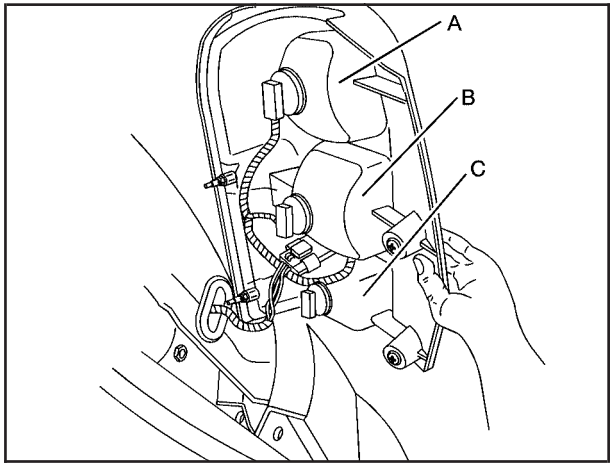

A. Stoplamp/Taillamp
B. Turn Signal Lamp
C. Back-up Lamp Bulb

5. Turn the bulb socket counterclockwise to remove.
6. Replace the bulb by pulling the old bulb out of the socket and gently pushing in a new bulb.
7. Replace the bulb socket by inserting and turning clockwise to secure.
8. Reinstall the taillamp assembly by inserting the outboard locating/retaining pins until the lamp is seated.
9. Secure with the inboard screws.

License Plate Lamp

To replace one of these bulbs, do the following:

1. Remove the two screws holding each of the license plate lamps to the fascia.

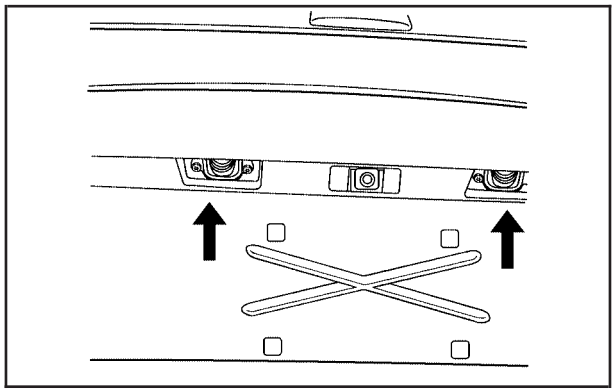

2. Turn and pull the license plate lamp forward through the fascia opening.
3. Turn the bulb socket counterclockwise and pull the bulb straight out of the socket.
4. Install the new bulb.
5. Reverse Steps 1 through 3 to reinstall the license plate lamp.

Replacement Bulbs

Exterior Lamp	Bulb Number
Back-up	3057KX
Front Turn Signal, DRL and Parking	3157NAK
High-Beam and Low-Beam Headlamps	H11
License Plate Lamp	168
Sidemarker	194
Stoplamp, Taillamp and Turn Signal	3057KX

For replacement bulbs not listed here, contact your dealer.

Windshield Wiper Blade Replacement

Windshield wiper blades should be inspected for wear and cracking. See *Scheduled Maintenance on page 539* for more information.

Replacement blades come in different types and are removed in different ways. For proper type and length, see *Normal Maintenance Replacement Parts on page 550*.

To replace the windshield wiper blade assembly do the following:

1. Lift the wiper arm and turn the blade until it is facing away from the windshield.

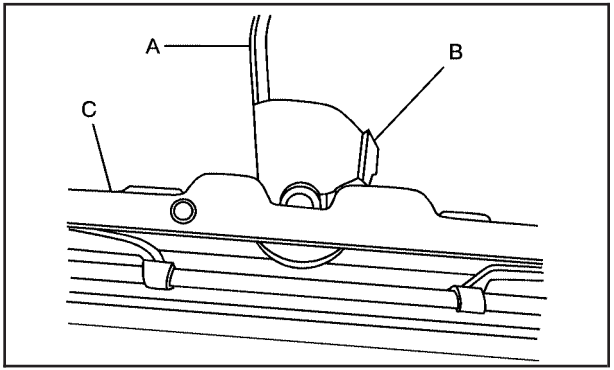

2. Squeeze the tabs (B) on each side of the wiper blade assembly to remove the wiper arm (A) from the blade (C).

   Allowing the wiper blade arm to touch the windshield when no wiper blade is installed could damage the windshield. Any damage that occurs would not be covered by your warranty. Do not allow the wiper blade arm to touch the windshield.

3. Push the new wiper blade securely on the wiper arm until you hear the tabs on each side of the wiper blade assembly click into place.

To replace the rear wiper blade, follow the steps listed above.

Tires

Your new vehicle comes with high-quality tires made by a leading tire manufacturer. If you ever have questions about your tire warranty and where to obtain service, see your GM Warranty booklet for details. For additional information refer to the tire manufacturer's booklet included with your vehicle.

⚠ CAUTION:

Poorly maintained and improperly used tires are dangerous.

- **Overloading your vehicle's tires can cause overheating as a result of too much friction. You could have an air-out and a serious accident. See *Loading Your Vehicle on page 404*.**

CAUTION: (Continued)

CAUTION: (Continued)

- **Underinflated tires pose the same danger as overloaded tires. The resulting accident could cause serious injury. Check all tires frequently to maintain the recommended pressure. Tire pressure should be checked when your vehicle's tires are cold. See *Inflation - Tire Pressure on page 485*.**
- **Overinflated tires are more likely to be cut, punctured, or broken by a sudden impact — such as when you hit a pothole. Keep tires at the recommended pressure.**
- **Worn, old tires can cause accidents. If the tire's tread is badly worn, or if your vehicle's tires have been damaged, replace them.**

Tire Sidewall Labeling

Useful information about a tire is molded into its sidewall. The examples below show a typical passenger vehicle tire and a compact spare tire sidewall.

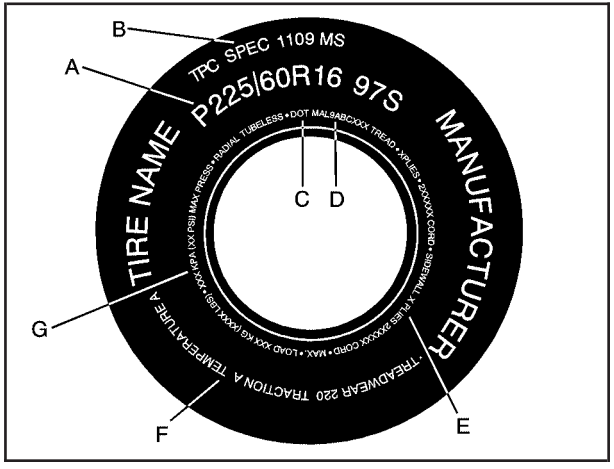

Passenger (P-Metric) Tire Example

(A) Tire Size: The tire size is a combination of letters and numbers used to define a particular tire's width, height, aspect ratio, construction type, and service description. See the "Tire Size" illustration later in this section for more detail.

(B) TPC Spec (Tire Performance Criteria Specification): Original equipment tires designed to GM's specific tire performance criteria have a TPC specification code molded onto the sidewall. GM's TPC specifications meet or exceed all federal safety guidelines.

(C) DOT (Department of Transportation): The Department of Transportation (DOT) code indicates that the tire is in compliance with the U.S. Department of Transportation Motor Vehicle Safety Standards.

(D) Tire Identification Number (TIN): The letters and numbers following DOT (Department of Transportation) code is the Tire Identification Number (TIN). The TIN shows the manufacturer and plant code, tire size, and date the tire was manufactured. The TIN is molded onto both sides of the tire, although only one side may have the date of manufacture.

(E) Tire Ply Material: The type of cord and number of plies in the sidewall and under the tread.

(F) Uniform Tire Quality Grading (UTQG): Tire manufacturers are required to grade tires based on three performance factors: treadwear, traction, and temperature resistance. For more information see *Uniform Tire Quality Grading on page 493*.

(G) Maximum Cold Inflation Load Limit: Maximum load that can be carried and the maximum pressure needed to support that load.

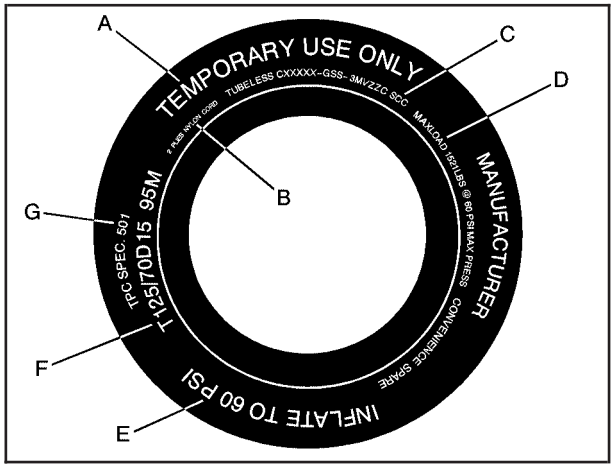

Compact Spare Tire Example

(A) Temporary Use Only: The compact spare tire or temporary use tire has a tread life of approximately 3,000 miles (5 000 km) and should not be driven at speeds over 65 mph (105 km/h). The compact spare tire is for emergency use when a regular road tire has lost air and gone flat. If your vehicle has a compact spare tire, see *Compact Spare Tire on page 516* and *If a Tire Goes Flat on page 499*.

(B) Tire Ply Material: The type of cord and number of plies in the sidewall and under the tread.

(C) Tire Identification Number (TIN): The letters and numbers following the DOT (Department of Transportation) code is the Tire Identification Number (TIN). The TIN shows the manufacturer and plant code, tire size, and date the tire was manufactured. The TIN is molded onto both sides of the tire, although only one side may have the date of manufacture.

(D) Maximum Cold Inflation Load Limit: Maximum load that can be carried and the maximum pressure needed to support that load.

(E) Tire Inflation: The temporary use tire or compact spare tire should be inflated to 60 psi (420 kPa). For more information on tire pressure and inflation see *Inflation - Tire Pressure on page 485*.

(F) Tire Size: A combination of letters and numbers define a tire's width, height, aspect ratio, construction type, and service description. The letter T as the first character in the tire size means the tire is for temporary use only.

(G) TPC Spec (Tire Performance Criteria Specification): Original equipment tires designed to GM's specific tire performance criteria have a TPC specification code molded onto the sidewall. GM's TPC specifications meet or exceed all federal safety guidelines.

Tire Size

The following illustration shows an example of a typical passenger vehicle tire size.

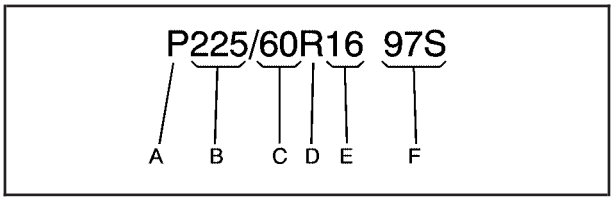

(A) Passenger (P-Metric) Tire: The United States version of a metric tire sizing system. The letter P as the first character in the tire size means a passenger vehicle tire engineered to standards set by the U.S. Tire and Rim Association.

(B) Tire Width: The three-digit number indicates the tire section width in millimeters from sidewall to sidewall.

(C) Aspect Ratio: A two-digit number that indicates the tire height-to-width measurements. For example, if the tire size aspect ratio is 60, as shown in item C of the illustration, it would mean that the tire's sidewall is 60 percent as high as it is wide.

(D) Construction Code: A letter code is used to indicate the type of ply construction in the tire. The letter R means radial ply construction; the letter D means diagonal or bias ply construction; and the letter B means belted-bias ply construction.

(E) Rim Diameter: Diameter of the wheel in inches.

(F) Service Description: These characters represent the load range and speed rating of the tire. The load index represents the load carry capacity a tire is certified to carry. The load index can range from 1 to 279. The speed rating is the maximum speed a tire is certified to carry a load. Speed ratings range from A to Z.

Tire Terminology and Definitions

Air Pressure: The amount of air inside the tire pressing outward on each square inch of the tire. Air pressure is expressed in pounds per square inch (psi) or kilopascal (kPa).

Accessory Weight: This means the combined weight of optional accessories. Some examples of optional accessories are, automatic transmission/transaxle, power steering, power brakes, power windows, power seats, and air conditioning.

Aspect Ratio: The relationship of a tire's height to its width.

Belt: A rubber coated layer of cords that is located between the plies and the tread. Cords may be made from steel or other reinforcing materials.

Bead: The tire bead contains steel wires wrapped by steel cords that hold the tire onto the rim.

Bias Ply Tire: A pneumatic tire in which the plies are laid at alternate angles less than 90 degrees to the centerline of the tread.

Cold Tire Pressure: The amount of air pressure in a tire, measured in pounds per square inch (psi) or kilopascals (kPa) before a tire has built up heat from driving. See *Inflation - Tire Pressure on page 485*.

Curb Weight: This means the weight of a motor vehicle with standard and optional equipment including the maximum capacity of fuel, oil, and coolant, but without passengers and cargo.

DOT Markings: A code molded into the sidewall of a tire signifying that the tire is in compliance with the U.S. Department of Transportation (DOT) motor vehicle safety standards. The DOT code includes the Tire Identification Number (TIN), an alphanumeric designator which can also identify the tire manufacturer, production plant, brand, and date of production.

GVWR: Gross Vehicle Weight Rating. See *Loading Your Vehicle on page 404*.

GAWR FRT: Gross Axle Weight Rating for the front axle. See *Loading Your Vehicle on page 404*.

GAWR RR: Gross Axle Weight Rating for the rear axle. See *Loading Your Vehicle on page 404*.

Intended Outboard Sidewall: The side of an asymmetrical tire, that must always face outward when mounted on a vehicle.

Kilopascal (kPa): The metric unit for air pressure.

Light Truck (LT-Metric) Tire: A tire used on light duty trucks and some multipurpose passenger vehicles.

Load Index: An assigned number ranging from 1 to 279 that corresponds to the load carrying capacity of a tire.

Maximum Inflation Pressure: The maximum air pressure to which a cold tire may be inflated. The maximum air pressure is molded onto the sidewall.

Maximum Load Rating: The load rating for a tire at the maximum permissible inflation pressure for that tire.

Maximum Loaded Vehicle Weight: The sum of curb weight, accessory weight, vehicle capacity weight, and production options weight.

Normal Occupant Weight: The number of occupants a vehicle is designed to seat multiplied by 150 lbs (68 kg). See *Loading Your Vehicle on page 404*.

Occupant Distribution: Designated seating positions.

Outward Facing Sidewall: The side of an asymmetrical tire that has a particular side that faces outward when mounted on a vehicle. The side of the tire that contains a whitewall, bears white lettering, or bears manufacturer, brand, and/or model name molding that is higher or deeper than the same moldings on the other sidewall of the tire.

Passenger (P-Metric) Tire: A tire used on passenger cars and some light duty trucks and multipurpose vehicles.

Recommended Inflation Pressure: Vehicle manufacturer's recommended tire inflation pressure as shown on the tire placard. See *Inflation - Tire Pressure on page 485* and *Loading Your Vehicle on page 404*.

Radial Ply Tire: A pneumatic tire in which the ply cords that extend to the beads are laid at 90 degrees to the centerline of the tread.

Rim: A metal support for a tire and upon which the tire beads are seated.

Sidewall: The portion of a tire between the tread and the bead.

Speed Rating: An alphanumeric code assigned to a tire indicating the maximum speed at which a tire can operate.

Traction: The friction between the tire and the road surface. The amount of grip provided.

Tread: The portion of a tire that comes into contact with the road.

Treadwear Indicators: Narrow bands, sometimes called wear bars, that show across the tread of a tire when only 1/16 inch (1.6 mm) of tread remains. See *When It Is Time for New Tires on page 489*.

UTQGS (Uniform Tire Quality Grading Standards): A tire information system that provides consumers with ratings for a tire's traction, temperature, and treadwear. Ratings are determined by tire manufacturers using government testing procedures. The ratings are molded into the sidewall of the tire. See *Uniform Tire Quality Grading on page 493*.

Vehicle Capacity Weight: The number of designated seating positions multiplied by 150 lbs (68 kg) plus the rated cargo load. See *Loading Your Vehicle on page 404*.

Vehicle Maximum Load on the Tire: Load on an individual tire due to curb weight, accessory weight, occupant weight, and cargo weight.

Vehicle Placard: A label permanently attached to a vehicle showing the vehicle's capacity weight and the original equipment tire size and recommended inflation pressure. See "Tire and Loading Information Label" under *Loading Your Vehicle on page 404*.

Inflation - Tire Pressure

Tires need the correct amount of air pressure to operate effectively.

Notice: **Do not let anyone tell you that under-inflation or over-inflation is all right. It is not. If your tires do not have enough air (under-inflation), you can get the following:**

- **Too much flexing**
- **Too much heat**
- **Tire overloading**
- **Premature or irregular wear**
- **Poor handling**
- **Reduced fuel economy**

If your tires have too much air (over-inflation), you can get the following:

- **Unusual wear**
- **Poor handling**
- **Rough ride**
- **Needless damage from road hazards**

A Tire and Loading Information label is attached to the vehicle's center pillar (B-pillar), below the driver's door latch. This label shows your vehicle's original equipment tires and the correct inflation pressures for your tires when they are cold. The recommended cold tire inflation pressure, shown on the label, is the minimum amount of air pressure needed to support your vehicle's maximum load carrying capacity.

For additional information regarding how much weight your vehicle can carry, and an example of the tire and loading information label, see *Loading Your Vehicle on page 404*. How you load your vehicle affects vehicle handling and ride comfort, never load your vehicle with more weight than it was designed to carry.

When to Check

Check your tires once a month or more. Do not forget to check the compact spare tire, it should be at 60 psi (420 kPa). For additional information regarding the compact spare tire, see *Compact Spare Tire on page 516*.

How to Check

Use a good quality pocket-type gage to check tire pressure. You cannot tell if your tires are properly inflated simply by looking at them. Radial tires may look properly inflated even when they are under-inflated. Check the tire's inflation pressure when the tires are cold. Cold means your vehicle has been sitting for at least three hours or driven no more than 1 mile (1.6 km).

Remove the valve cap from the tire valve stem. Press the tire gage firmly onto the valve to get a pressure measurement. If the cold tire inflation pressure matches the recommended pressure on the Tire and Loading Information label, no further adjustment is necessary. If the inflation pressure is low, add air until you reach the recommended amount.

If you overfill the tire, release air by pushing on the metal stem in the center of the tire valve. Re-check the tire pressure with the tire gage.

Be sure to put the valve caps back on the valve stems. They help prevent leaks by keeping out dirt and moisture.

High-Speed Operation

⚠ CAUTION:

Driving at high speeds, 100 mph (160 km/h) or higher, puts an additional strain on tires. Sustained high-speed driving causes excessive heat build up and can cause sudden tire failure. You could have a crash and you or others could be killed. Some high-speed rated tires require inflation pressure adjustment for high speed operation. When speed limits and road conditions are such that a vehicle can be driven at high speeds, make sure the tires are rated for high speed operation, in excellent condition, and set to the correct cold tire inflation pressure for the vehicle load.

If your vehicle has P225/60R17 size tires, they will require inflation pressure adjustment when driving your vehicle at speeds of 100 mph (160 km/h) or higher. Set the cold inflation pressure to the maximum inflation pressure shown on the tire sidewall, or 38 psi (262 kPa), whichever is lower. See the example following. When you end this high-speed driving, return the tires to the cold tire inflation pressure shown on the Tire and Loading Information label. See *Loading Your Vehicle on page 404* and *Inflation - Tire Pressure on page 485*.

Example:

You will find the maximum load and inflation pressure molded on the tire's sidewall, in small letters, near the rim flange. It will read something like this: Maximum load 690 kg (1521 lbs) 300 kPa (44 psi) Max. Press.

For this example, you would set the inflation pressure for high-speed driving at 38 psi (262 kPa).

Tire Inspection and Rotation

Tires should be rotated every 5,000 to 8,000 miles (8 000 to 13 000 km).

Any time you notice unusual wear, rotate your tires as soon as possible and check wheel alignment. Also check for damaged tires or wheels. See *When It Is Time for New Tires on page 489* and *Wheel Replacement on page 494* for more information.

The purpose of regular rotation is to achieve more uniform wear for all tires on the vehicle. The first rotation is the most important. See *Scheduled Maintenance on page 539*.

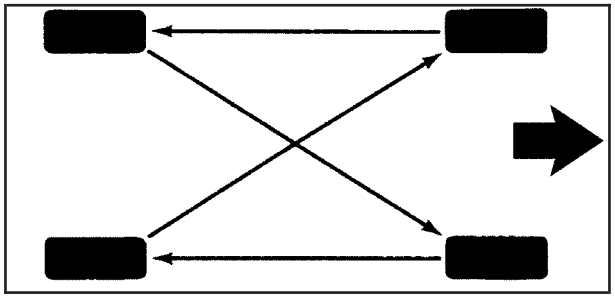

When rotating your tires, always use the correct rotation pattern shown here.

Do not include the compact spare tire in your tire rotation.

After the tires have been rotated, adjust the front and rear inflation pressures as shown on the Tire and Loading Information label.

Make certain that all wheel nuts are properly tightened. See “Wheel Nut Torque” under *Capacities and Specifications on page 533*.

⚠ CAUTION:

Rust or dirt on a wheel, or on the parts to which it is fastened, can make wheel nuts become loose after a time. The wheel could come off and cause an accident. When you change a wheel, remove any rust or dirt from places where the wheel attaches to the vehicle. In an emergency, you can use a cloth or a paper towel to do this; but be sure to use a scraper or wire brush later, if needed, to get all the rust or dirt off. See *Changing a Flat Tire on page 500*.

When It Is Time for New Tires

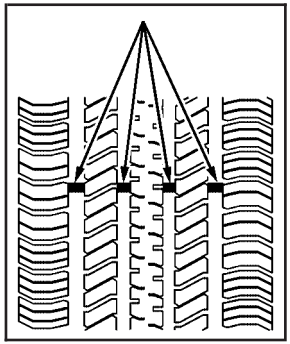

One way to tell when it is time for new tires is to check the treadwear indicators, which will appear when your tires have only 1/16 inch (1.6 mm) or less of tread remaining.

You need a new tire if any of the following statements are true:

- You can see the indicators at three or more places around the tire.
- You can see cord or fabric showing through the tire's rubber.
- The tread or sidewall is cracked, cut, or snagged deep enough to show cord or fabric.
- The tire has a bump, bulge, or split.
- The tire has a puncture, cut, or other damage that cannot be repaired well because of the size or location of the damage.

Buying New Tires

GM has developed and matched specific tires for your vehicle. The original equipment tires installed on your vehicle, when it was new, were designed to meet General Motors Tire Performance Criteria Specification (TPC spec) system rating. If you need replacement tires, GM strongly recommends that you get tires with the same TPC Spec rating. This way, your vehicle will continue to have tires that are designed to give the same performance and vehicle safety, during normal use, as the original tires.

GM's exclusive TPC Spec system considers over a dozen critical specifications that impact the overall performance of your vehicle, including brake system performance, ride and handling, traction control, and tire pressure monitoring performance. GM's TPC Spec number is molded onto the tire's sidewall by the tire manufacturer. If the tires have an all-season tread design, the TPC spec number will be followed by an MS for mud and snow. See *Tire Sidewall Labeling on page 478* for additional information.

⚠ CAUTION:

Mixing tires could cause you to lose control while driving. If you mix tires of different sizes, brands, or types (radial and bias-belted tires), the vehicle may not handle properly, and you could have a crash. Using tires of different sizes, brands, or types may also cause damage to your vehicle. Be sure to use the correct size, brand, and type of tires on all wheels. It is all right to drive with your compact spare temporarily, as it was developed for use on your vehicle. See *Compact Spare Tire on page 516*.

⚠ CAUTION:

If you use bias-ply tires on your vehicle, the wheel rim flanges could develop cracks after many miles of driving. A tire and/or wheel could fail suddenly, causing a crash. Use only radial-ply tires with the wheels on your vehicle.

If you must replace your vehicle's tires with those that do not have a TPC Spec number, make sure they are the same size, load range, speed rating, and construction type (radial and bias-belted tires) as your vehicle's original tires.

Your vehicle's original equipment tires are listed on the Tire and Loading Information Label. This label is attached to the vehicle's center pillar (B-pillar). See *Loading Your Vehicle on page 404*, for more information about the Tire and Loading Information Label and its location on your vehicle.

Different Size Tires and Wheels

If you add wheels or tires that are a different size than your original equipment wheels and tires, this may affect the way your vehicle performs, including its braking, ride and handling characteristics, stability, and resistance to rollover. Additionally, if your vehicle has electronic systems such as, anti-lock brakes, traction control, and electronic stability control, the performance of these systems can be affected.

⚠ CAUTION:

If you add different sized wheels, your vehicle may not provide an acceptable level of performance and safety if tires not recommended for those wheels are selected. You may increase the chance that you will crash and suffer serious injury. Only use GM specific wheel and tire systems developed for your vehicle, and have them properly installed by a GM certified technician.

See *Buying New Tires on page 490* and *Accessories and Modifications on page 426* for additional information.

Uniform Tire Quality Grading

Quality grades can be found where applicable on the tire sidewall between tread shoulder and maximum section width. For example:

Treadwear 200 Traction AA Temperature A

The following information relates to the system developed by the United States National Highway Traffic Safety Administration (NHTSA), which grades tires by treadwear, traction, and temperature performance. This applies only to vehicles sold in the United States. The grades are molded on the sidewalls of most passenger car tires. The Uniform Tire Quality Grading (UTQG) system does not apply to deep tread, winter-type snow tires, space-saver, or temporary use spare tires, tires with nominal rim diameters of 10 to 12 inches (25 to 30 cm), or to some limited-production tires.

While the tires available on General Motors passenger cars and light trucks may vary with respect to these grades, they must also conform to federal safety requirements and additional General Motors Tire Performance Criteria (TPC) standards.

Treadwear

The treadwear grade is a comparative rating based on the wear rate of the tire when tested under controlled conditions on a specified government test course. For example, a tire graded 150 would wear one and a half (1.5) times as well on the government course as a tire graded 100. The relative performance of tires depends upon the actual conditions of their use, however, and may depart significantly from the norm due to variations in driving habits, service practices, and differences in road characteristics and climate.

Traction – AA, A, B, C

The traction grades, from highest to lowest, are AA, A, B, and C. Those grades represent the tire's ability to stop on wet pavement as measured under controlled conditions on specified government test surfaces of asphalt and concrete. A tire marked C may have poor traction performance.

Warning: The traction grade assigned to this tire is based on straight-ahead braking traction tests, and does not include acceleration, cornering, hydroplaning, or peak traction characteristics.

Temperature – A, B, C

The temperature grades are A (the highest), B, and C, representing the tire's resistance to the generation of heat and its ability to dissipate heat when tested under controlled conditions on a specified indoor laboratory test wheel. Sustained high temperature can cause the material of the tire to degenerate and reduce tire life, and excessive temperature can lead to sudden tire failure. The grade C corresponds to a level of performance which all passenger car tires must meet under the Federal Motor Vehicle Safety Standard No. 109. Grades B and A represent higher levels of performance on the laboratory test wheel than the minimum required by law.

Warning: The temperature grade for this tire is established for a tire that is properly inflated and not overloaded. Excessive speed, underinflation, or excessive loading, either separately or in combination, can cause heat buildup and possible tire failure.

Wheel Alignment and Tire Balance

The tires and wheels on your vehicle were aligned and balanced carefully at the factory to give you the longest tire life and best overall performance. Adjustments to wheel alignment and tire balancing will not be necessary on a regular basis. However, if you notice unusual tire wear or your vehicle pulling to one side or the other, the alignment may need to be checked. If you notice your vehicle vibrating when driving on a smooth road, your tires and wheels may need to be rebalanced. See your dealer for proper diagnosis.

Wheel Replacement

Replace any wheel that is bent, cracked, or badly rusted or corroded. If wheel nuts keep coming loose, the wheel, wheel bolts, and wheel nuts should be replaced. If the wheel leaks air, replace it (except some aluminum wheels, which can sometimes be repaired). See your dealer if any of these conditions exist.

Your dealer will know the kind of wheel you need.

Each new wheel should have the same load-carrying capacity, diameter, width, offset and be mounted the same way as the one it replaces.

If you need to replace any of your wheels, wheel bolts, or wheel nuts, replace them only with new GM original equipment parts. This way, you will be sure to have the right wheel, wheel bolts, and wheel nuts for your vehicle.

⚠ CAUTION:

Using the wrong replacement wheels, wheel bolts, or wheel nuts on your vehicle can be dangerous. It could affect the braking and handling of your vehicle, make your tires lose air and make you lose control. You could have a collision in which you or others could be injured. Always use the correct wheel, wheel bolts, and wheel nuts for replacement.

Notice: **The wrong wheel can also cause problems with bearing life, brake cooling, speedometer or odometer calibration, headlamp aim, bumper height, vehicle ground clearance, and tire or tire chain clearance to the body and chassis.**

See *Changing a Flat Tire on page 500* for more information.

Used Replacement Wheels

⚠ CAUTION:

Putting a used wheel on your vehicle is dangerous. You cannot know how it has been used or how far it has been driven. It could fail suddenly and cause a crash. If you have to replace a wheel, use a new GM original equipment wheel.

Tire Chains

⚠ CAUTION:

Do not use tire chains. There is not enough clearance. Tire chains used on a vehicle without the proper amount of clearance can cause damage to the brakes, suspension or other vehicle parts. The area damaged by the tire chains could cause you to lose control of your vehicle and you or others may be injured in a crash.

Use another type of traction device only if its manufacturer recommends it for use on your vehicle and tire size combination and road conditions. Follow that manufacturer's instructions. To help avoid damage to your vehicle, drive slowly,

CAUTION: (Continued)

CAUTION: (Continued)

readjust or remove the device if it is contacting your vehicle, and do not spin your vehicle's wheels. If you do find traction devices that will fit, install them on the front tires.

Accessory Inflator

Your vehicle may have an accessory inflator. With it, you can inflate things like air mattresses and basketballs, and you can also use it to bring your tires up to the proper pressure.

The accessory inflator is located in the rear compartment on the driver's side. To access the accessory inflator, do the following:

1. Open the liftgate. See *Liftgate on page 141* for more information.
2. Lift the lever to move the third row rear seatback forward. See *Third Row Seat on page 27* for more information.
3. Remove the cover by pulling the lever up.

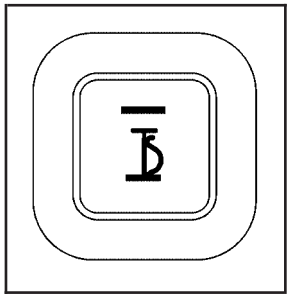

This symbol is on the accessory inflator switch.

There may be an accessory inflator kit stored in the rear compartment on the passenger's side. It includes a 20-foot (6 m) hose with an air pressure gage and nozzle adapters.

⚠ CAUTION:

Inflating something too much can make it explode, and you or others could be injured. Be sure to read the inflator instructions, and inflate any object only to its recommended pressure.

To use your accessory inflator system, do the following:

1. Turn the ignition to ACCESSORY or RUN.
2. Attach the appropriate nozzle adapter, if required, to the end of the hose that has the pressure gage.
3. Attach that end of the hose to the object you wish to inflate.

4. Remove the protective cap covering the outlet.
5. Attach the other end of the hose to the outlet.
6. Press the accessory inflator switch. The light in the switch will come on to show the system is working.

If the accessory inflator system does not turn on or the light does not come on, the fuse may be blown or installed incorrectly. See *Fuses and Circuit Breakers on page 527* or see your retailer for service.

Your accessory inflator will automatically shut off after about 10 minutes. The light in the switch will blink. After about one minute you can use the system again. Press the switch and the indicator light will come on.

Notice: **If you run the accessory inflator longer than 30 minutes at a time, you could damage the inflator. The repairs would not be covered by your warranty. Run the inflator for short periods of time only.**

After running the accessory inflator for 30 minutes, wait at least 10 minutes before restarting the accessory inflator.

To turn off the inflator, do the following:

1. Press the switch and detach the hose, first from the inflated object, then from the outlet.
2. Put the protective cap back on.
3. Place the inflator kit tools in the pouch, and store in the rear compartment on the passenger's side.

To put the cover back on, line up the tabs at the bottom of the cover and put it in place. Push down the tab to secure the cover.

If a Tire Goes Flat

It is unusual for a tire to blowout while you are driving, especially if you maintain your vehicle's tires properly. If air goes out of a tire, it is much more likely to leak out slowly. But if you should ever have a blowout, here are a few tips about what to expect and what to do:

If a front tire fails, the flat tire will create a drag that pulls the vehicle toward that side. Take your foot off the accelerator pedal and grip the steering wheel firmly. Steer to maintain lane position, and then gently brake to a stop well out of the traffic lane.

A rear blowout, particularly on a curve, acts much like a skid and may require the same correction you would use in a skid. In any rear blowout remove your foot from the accelerator pedal. Get the vehicle under control by steering the way you want the vehicle to go. It may be very bumpy and noisy, but you can still steer. Gently brake to a stop, well off the road if possible.

⚠ CAUTION:

Lifting a vehicle and getting under it to do maintenance or repairs is dangerous without the appropriate safety equipment and training. The jack provided with your vehicle is designed only for changing a flat tire. If it is used for anything else, you or others could be badly injured or killed if the vehicle slips off the jack. Use the jack provided with your vehicle only for changing a flat tire.

If a tire goes flat, the next part shows how to use the jacking equipment to change a flat tire safely.

Changing a Flat Tire

If a tire goes flat, avoid further tire and wheel damage by driving slowly to a level place. Turn on your vehicle's hazard warning flashers. See *Hazard Warning Flashers on page 194* for more information.

⚠ CAUTION:

Changing a tire can be dangerous. The vehicle can slip off the jack and roll over or fall on you or other people. You and they could be badly injured or even killed. Find a level place to change your tire. To help prevent the vehicle from moving:

1. **Set the parking brake firmly.**
2. **Put the shift lever in PARK (P).**

CAUTION: (Continued)

CAUTION: (Continued)

3. **Turn off the engine and do not restart while the vehicle is raised.**
4. **Do not allow passengers to remain in the vehicle.**

To be even more certain the vehicle will not move, you should put blocks at the front and rear of the tire farthest away from the one being changed. That would be the tire, on the other side, at the opposite end of the vehicle.

When your vehicle has a flat tire, use the following example as a guide to assist you in the placement of wheel blocks.

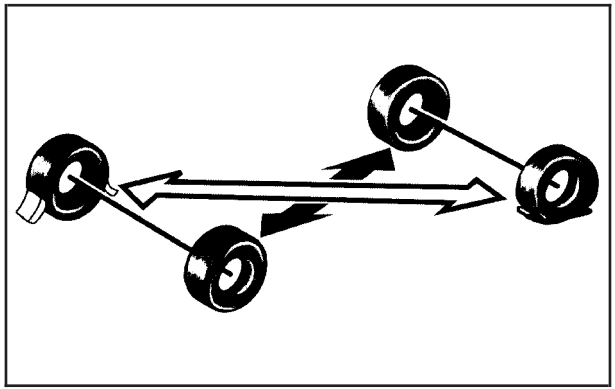

The following information will tell you next how to use the jack and change a tire.

Removing the Spare Tire and Tools

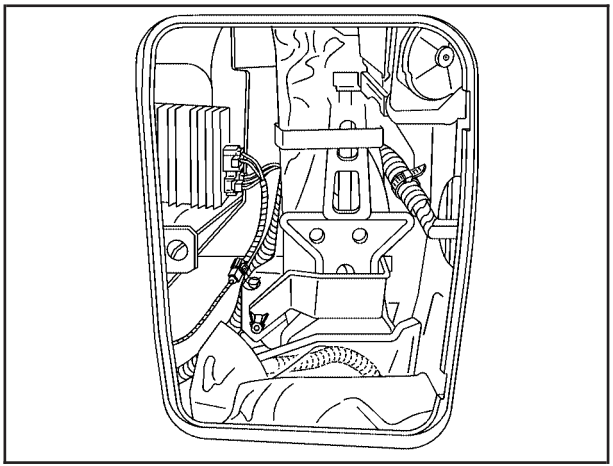

The tools needed to remove the spare tire are located in the storage compartment at the rear of the vehicle, on the passenger's side.

To remove the tools, do the following:

1. Open the liftgate. See *Liftgate on page 141* for more information.
2. Remove the convenience net, if the vehicle has one.

3. Open the jack storage compartment by lifting the tab and pulling the cover off.

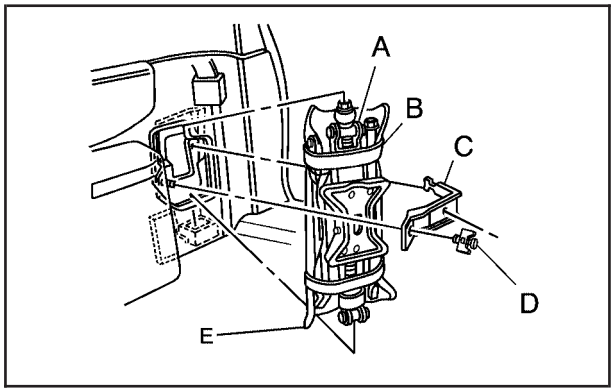

A. Jack
B. Strap
C. Bracket
D. Wing Nut
E. Bag and Tools

4. Remove the jack (A) and jacking tools (E) by loosening and then removing the wing nut (D) and bracket (C).
5. Separate the plastic pouch from the jack and remove the jacking tools, including the folding wrench and extension, from the pouch.

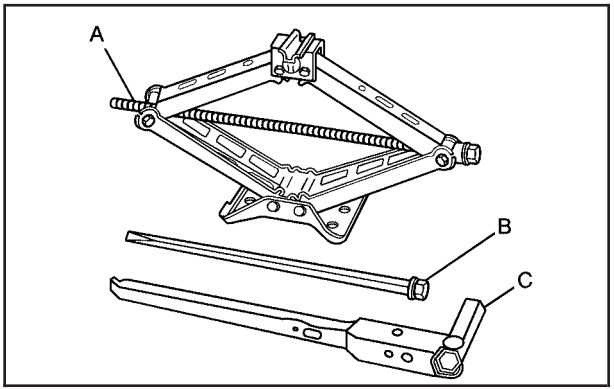

The tools you will be using include the jack (A), extension (B), and folding wrench (C).

The compact spare tire is located under the rear of the vehicle. See *Compact Spare Tire on page 516* for more information about the compact spare.

To remove the compact spare tire, do the following:

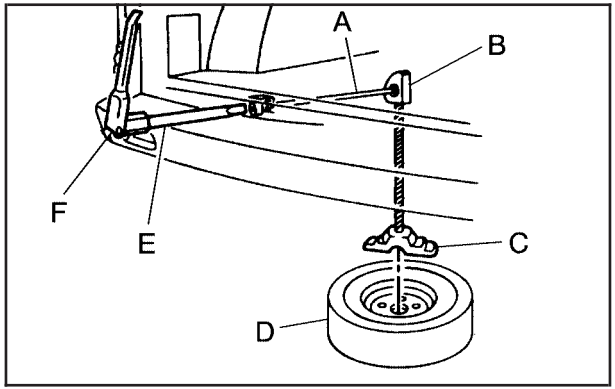

A. Hoist Shaft
B. Hoist Assembly
C. Retainer
D. Compact Spare Tire
E. Extension (Chisel End)
F. Folding Wrench

1. Attach the folding wrench (F) to the extension (E) and insert the chisel end on an angle through the hole in the rear bumper and into the hoist shaft (A).
2. Turn the folding wrench counterclockwise to lower the compact spare tire (D) to the ground. Continue to turn the wrench so the compact spare tire can be pulled out from under the vehicle.

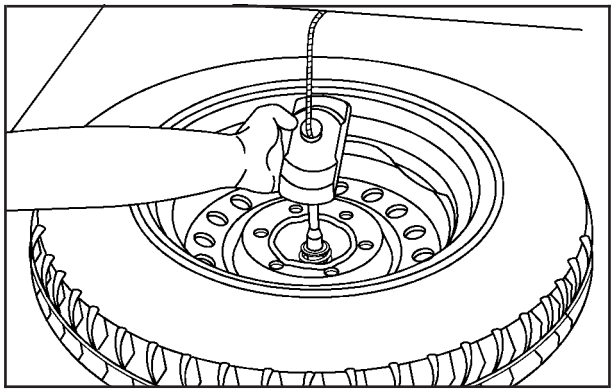

3. Tilt the retainer at the end of the cable to remove the compact spare tire, so it can be pulled up through the wheel opening.

   The hoist is used to store a full-size or a flat road tire under the vehicle. See *Storing a Flat or Spare Tire and Tools on page 513* for more information.

4. Remove the compact spare tire from the cable.

If the compact spare tire will not lower, check under the vehicle to see if the tire is hanging loose and the cable end and spring under the wheel plate are missing. If so, the secondary latch system is engaged. See *Secondary Latch System on page 511*.

To continue changing the flat tire, see *Removing the Flat Tire and Installing the Spare Tire on page 504*.

Removing the Flat Tire and Installing the Spare Tire

Your vehicle may have aluminum wheels. If so, you will see exposed stainless steel wheel nuts. Use the wheel wrench to loosen all of the wheel nuts. Do not remove them yet. Or, your vehicle may have steel wheel covers. To remove the wheel covers and wheel nut caps, loosen the plastic nut caps with the wheel wrench in a counterclockwise direction. If needed, you can finish loosening with your fingers.

The plastic nut caps will not come off. Use the flat end of the wheel wrench and pry along the edge of the cover until it comes off. The edge of the wheel cover could be sharp, so do not try to remove it with your bare hands. Do not drop the cover or lay it face down, as it could become scratched or damaged. Once you have removed the wheel cover, use the following procedure to remove the flat tire and install the spare tire.

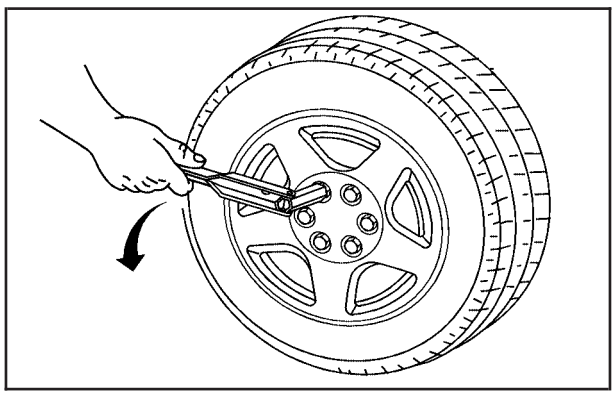

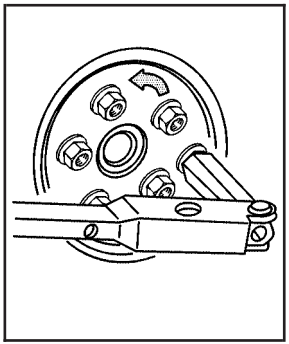

1. Loosen the wheel nuts using the folding wrench, but do not remove them.

   Turn the handle counterclockwise about 180 degrees, then flip the handle back to the starting position. This avoids taking the wrench off the lug nut for each turn.

Notice: **If your vehicle has wheel locks and you use an impact wrench to remove the wheel nuts, you could damage the lock nut or wheel lock key. Do not use an impact wrench to remove the wheel nuts if your vehicle has wheel locks.**

Notice: **If you use a jack to raise the vehicle without positioning it correctly, you could damage your vehicle. When raising your vehicle on a jack, avoid contact with the rear axle control arms.**

Notice: **If you position the jack under the rocker molding and attempt to raise the vehicle, you could break the molding and/or cause other damage to your vehicle. Always position the jack so that when the jack head is raised, it will fit firmly in the notch located inboard from the rocker molding.**

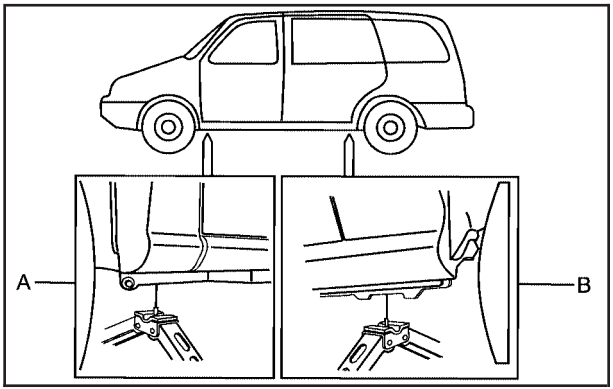

A. Front Location
B. Rear Location

2. Near each wheel, there is a notch (A and B) in the vehicle's frame, inboard of the rocker molding. Position the jack and raise the jack head until it fits firmly into the notch in the vehicle's frame nearest the flat tire.

   Do not raise the vehicle yet.

3. Put the compact spare tire near you.

⚠ CAUTION:

Getting under a vehicle when it is jacked up is dangerous. If the vehicle slips off the jack you could be badly injured or killed. Never get under a vehicle when it is supported only by a jack.

⚠ CAUTION:

Raising your vehicle with the jack improperly positioned can damage the vehicle and even make the vehicle fall. To help avoid personal injury and vehicle damage, be sure to fit the jack lift head into the proper location before raising the vehicle.

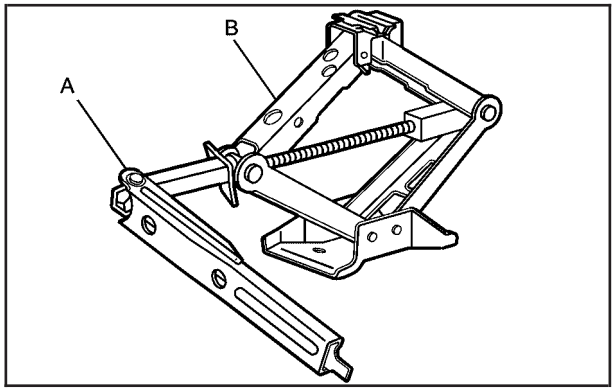

4. Attach the folding wrench (A) to the jack (B), and turn the wrench clockwise to raise the jack head approximately 3 inches (7.6 cm).

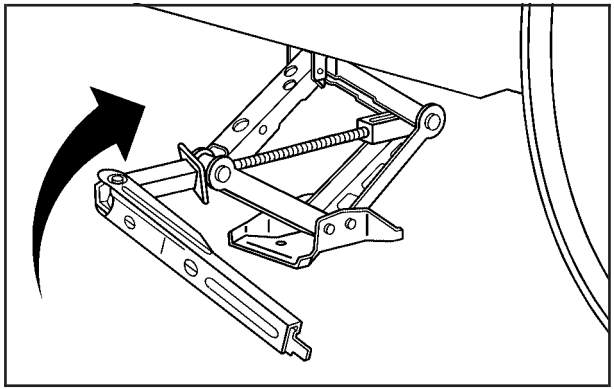

5. Raise the vehicle by turning the folding wrench clockwise in the jack. Raise the vehicle far enough off the ground so there is enough room for the compact spare tire to fit under the wheel well.
6. Remove all the wheel nuts and take off the flat tire.

⚠ CAUTION:

Rust or dirt on the wheel, or on the parts to which it is fastened, can make the wheel nuts become loose after a time. The wheel could come off and cause an accident. When you change a wheel, remove any rust or dirt from the places where the wheel attaches to the vehicle. In an emergency, you can use a cloth or a paper towel to do this; but be sure to use a scraper or wire brush later, if needed, to get all the rust or dirt off.

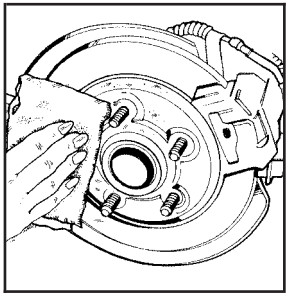

7. Remove any rust or dirt from the wheel bolts, mounting surfaces and spare wheel.

⚠ CAUTION:

Never use oil or grease on studs or nuts. If you do, the nuts might come loose. Your wheel could fall off, causing a serious accident.

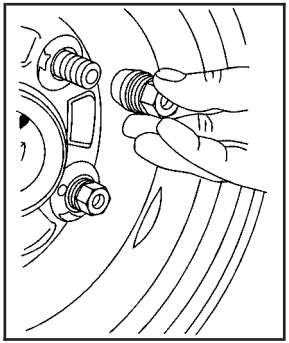

8. Install the compact spare tire and put the wheel nuts back on with the rounded end of the nuts toward the wheel.

Tighten each nut by hand until the wheel is held against the hub.

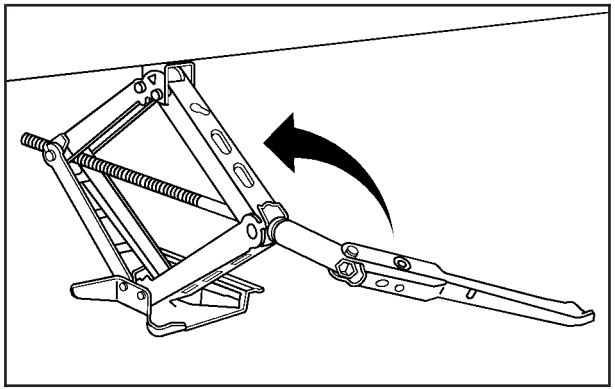

9. Lower the vehicle by attaching the folding wheel wrench to the jack and turning the wrench counterclockwise. Lower the jack completely.

⚠ CAUTION:

Incorrect wheel nuts or improperly tightened wheel nuts can cause the wheel to come loose and even come off. This could lead to an accident. Be sure to use the correct wheel nuts. If you have to replace them, be sure to get new GM original equipment wheel nuts. Stop somewhere as soon as you can and have the nuts tightened with a torque wrench to the proper torque specification. See *Capacities and Specifications on page 533* for wheel nut torque specification.

Notice: **Improperly tightened wheel nuts can lead to brake pulsation and rotor damage. To avoid expensive brake repairs, evenly tighten the wheel nuts in the proper sequence and to the proper torque specification. See *Capacities and Specifications on page 533* for the wheel nut torque specification.**

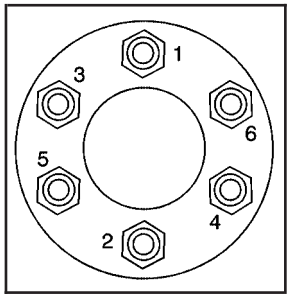

10. Tighten the wheel nuts firmly in a crisscross sequence, as shown.

Notice: **Wheel covers will not fit on your compact spare. If you try to put a wheel cover on the compact spare, you could damage the cover or the spare.**

11. Do not try to put a wheel cover on the compact spare tire. It will not fit. Store the wheel cover securely in the rear of the vehicle until you have the flat tire repaired or replaced.

Secondary Latch System

Your vehicle may have an underbody-mounted tire hoist assembly equipped with a secondary latch system. It is designed to stop a tire from suddenly falling off your vehicle if the cable holding the spare tire is damaged. For the secondary latch to work, the tire must be stowed with the valve stem pointing down.

Your vehicle uses the underbody tire hoist assembly to store either the compact spare or a flat road tire. See *Storing a Flat or Spare Tire and Tools on page 513* for instructions on storing the spare or flat tire correctly.

⚠ CAUTION:

Before beginning this procedure read all the instructions. Failure to read and follow the instructions could damage the hoist assembly and you and others could get hurt. Read and follow the instructions listed next.

⚠ CAUTION:

Someone standing too close during the procedure could be injured by the jack. If the spare tire does not slide off the jack completely, make sure no one is behind you or on either side of you as you pull the jack out from the spare.

To release the spare tire from the secondary latch, do the following:

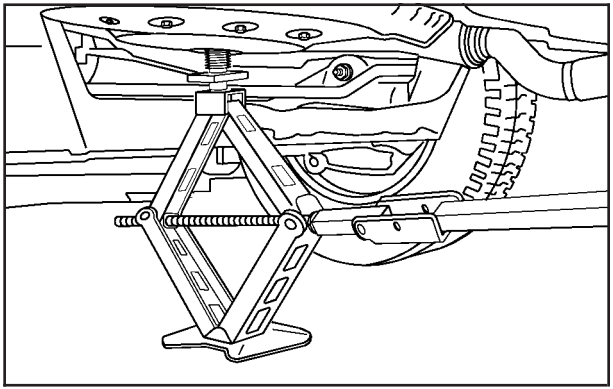

1. Place the jack under the vehicle, ahead of the rear bumper. Position the center lift point of the jack under the center of the compact spare tire.
2. Turn the folding wrench clockwise to raise the jack until it lifts the secondary latch device under the wheel plate.
3. Keep raising the jack until the compact spare tire stops moving upward and is held firmly in place. This lets you know that the secondary latch has released.

4. Lower the jack by turning the folding wrench counterclockwise. Keep lowering the jack until the compact spare tire is resting on the folding wrench.

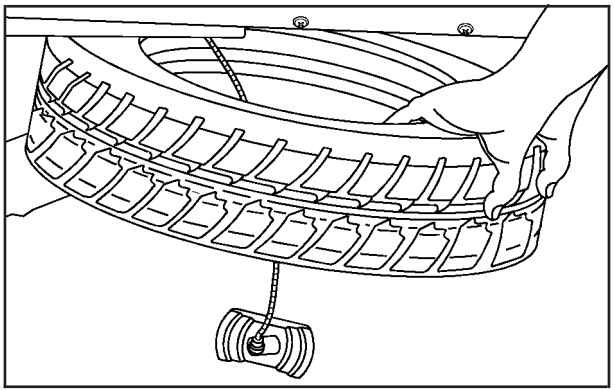

5. Grasp the compact spare tire with both hands and pull it out from under the vehicle.
6. Reach under the vehicle and remove the folding wrench and jack.

Have the hoist assembly inspected as soon as you can. You will not be able to store a spare or flat tire using the hoist assembly until it has been repaired or replaced.

Storing a Flat or Spare Tire and Tools

⚠ CAUTION:

Storing a jack, a tire, or other equipment in the passenger compartment of the vehicle could cause injury. In a sudden stop or collision, loose equipment could strike someone. Store all these in the proper place.

Storing the Flat or Spare Tire

⚠ CAUTION:

The underbody-mounted spare tire needs to be stored with the valve stem pointing down. If the spare tire is stored with the valve stem pointing upwards, its secondary latch will not work properly and the spare tire could loosen and suddenly fall from your vehicle. If this happened when your vehicle was being driven, the tire might contact a person or another vehicle, causing injury and, of course, damage to itself as well. Be sure the underbody-mounted spare tire is stored with its valve stem pointing down.

To store the spare tire, do the following:

1. Lay the tire near the rear of the vehicle with the valve stem down.
2. Remove the small center cap by tapping the back of the cap with the extension of the shaft, if the vehicle has aluminum wheels.
3. Slide the cable retainer through the center of the wheel and start to raise the tire.

   Make sure the retainer is fully seated across the underside of the wheel.
4. When the tire is almost in the stored position, turn the tire so the valve is towards the rear of the vehicle.

   This will help when you check and maintain tire pressure in the spare.
5. Raise the tire fully against the underside of the vehicle. Continue turning the folding wrench until you feel more than two clicks. This indicates that the compact spare tire is secure and the cable is tight. The spare tire hoist cannot be overtightened.

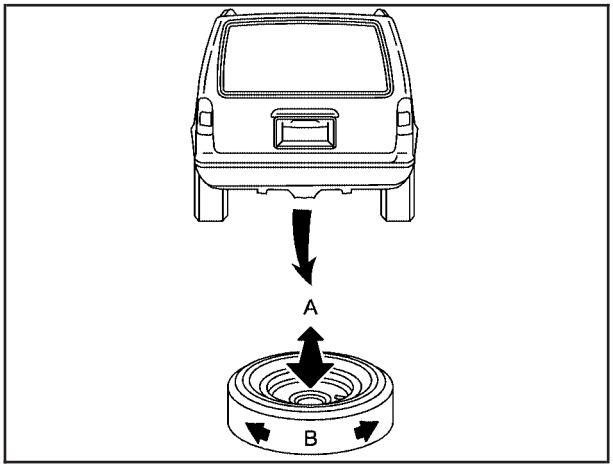

6. Make sure the tire is stored securely. Push, pull (A), and then try to turn (B) the tire. If the tire moves, use the folding wrench to tighten the cable.

Storing the Tools

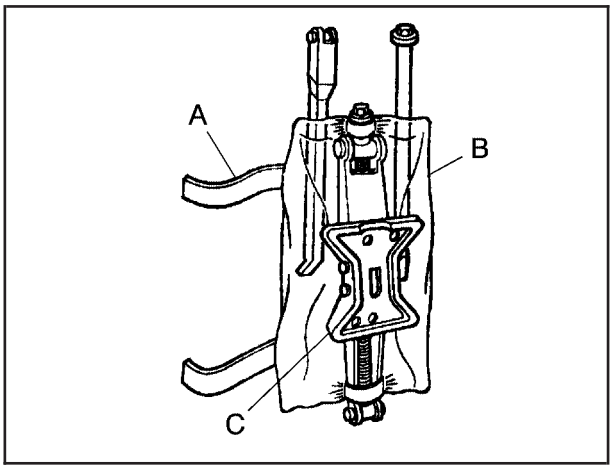

A. Strap

B. Bag and Tools

C. Jack

Put back all tools as they were stored in the jack storage compartment and put the compartment cover back on.

To replace the cover, line up the tabs on the right of the cover with the slots in the cover opening. Push the cover in place and push down the tab so that it rests in the groove. This secures the cover in place.

Store the center cap or the plastic bolt-on wheel covers until a full size tire is put back on the vehicle. When you replace the compact spare with a full-size tire, reinstall the bolt-on wheel covers or the center cap. Hand-tighten them over the wheel nuts, using the folding wrench.

Compact Spare Tire

Although the compact spare tire was fully inflated when the vehicle was new, it can lose air after a time. Check the inflation pressure regularly. It should be 60 psi (420 kPa).

After installing the compact spare on the vehicle, stop as soon as possible and make sure the spare tire is correctly inflated. The compact spare is made to perform well at speeds up to 65 mph (105 km/h) for distances up to 3,000 miles (5 000 km), so you can finish your trip and have the full-size tire repaired or replaced at your convenience. Of course, it is best to replace the spare with a full-size tire as soon as possible. The spare tire will last longer and be in good shape in case it is needed again.

Notice: **When the compact spare is installed, do not take your vehicle through an automatic car wash with guide rails. The compact spare can get caught on the rails. That can damage the tire and wheel, and maybe other parts of your vehicle.**

Do not use the compact spare on other vehicles.

And do not mix the compact spare tire or wheel with other wheels or tires. They will not fit. Keep the spare tire and its wheel together.

Notice: **Tire chains will not fit your compact spare. Using them can damage your vehicle and can damage the chains too. Do not use tire chains on your compact spare.**

Appearance Care

Cleaning the Inside of Your Vehicle

Your vehicle's interior will continue to look its best if it is cleaned often. Although not always visible, dust and dirt can accumulate on your upholstery. Dirt can damage carpet, fabric, leather, and plastic surfaces. Regular vacuuming is recommended to remove particles from your upholstery. It is important to keep your upholstery from becoming and remaining heavily soiled. Soils should be removed as quickly as possible. Your vehicle's interior may experience extremes of heat that could cause stains to set rapidly.

Lighter colored interiors may require more frequent cleaning. Use care because newspapers and garments that transfer color to your home furnishings may also transfer color to your vehicle's interior.

When cleaning your vehicle's interior, only use cleaners specifically designed for the surfaces being cleaned. Permanent damage may result from using cleaners on surfaces for which they were not intended. Use glass cleaner only on glass. Remove any accidental over-spray from other surfaces immediately. To prevent over-spray, apply cleaner directly to the cleaning cloth.

Notice: **If you use abrasive cleaners when cleaning glass surfaces on your vehicle, you could scratch the glass and/or cause damage to the rear window defogger. When cleaning the glass on your vehicle, use only a soft cloth and glass cleaner.**

Many cleaners contain solvents that may become concentrated in your vehicle's breathing space. Before using cleaners, read and adhere to all safety instructions on the label. While cleaning your vehicle's interior, maintain adequate ventilation by opening your vehicle's doors and windows.

Dust may be removed from small buttons and knobs using a small brush with soft bristles.

Your GM dealer has a product for cleaning your vehicle's glass. Should it become necessary, you can also obtain a product from your GM dealer to remove odors from your vehicle's upholstery.

Do not clean your vehicle using the following cleaners or techniques:

- Never use a knife or any other sharp object to remove a soil from any interior surface.
- Never use a stiff brush. It can cause damage to your vehicle's interior surfaces.
- Never apply heavy pressure or rub aggressively with a cleaning cloth. Use of heavy pressure can damage your interior and does not improve the effectiveness of soil removal.
- Use only mild, neutral-pH soaps. Avoid laundry detergents or dishwashing soaps with degreasers. Using too much soap will leave a residue that leaves streaks and attracts dirt. For liquid cleaners, about 20 drops per gallon (3.78 L) of water is a good guide.
- Do not heavily saturate your upholstery while cleaning.
- Damage to your vehicle's interior may result from the use of many organic solvents such as naptha, alcohol, etc.

Fabric/Carpet

Use a vacuum cleaner with a soft brush attachment frequently to remove dust and loose dirt. A canister vacuum with a beater bar in the nozzle may only be used on floor carpet and carpeted floor mats. For soils, always try to remove them first with plain water or club soda. Before cleaning, gently remove as much of the soil as possible using one of the following techniques:

- For liquids: gently blot the remaining soil with a paper towel. Allow the soil to absorb into the paper towel until no more can be removed.
- For solid dry soils: remove as much as possible and then vacuum.

To clean, use the following instructions:

1. Saturate a lint-free, clean white cloth with water or club soda.
2. Wring the cloth to remove excess moisture.
3. Start on the outside edge of the soil and gently rub toward the center. Continue cleaning, using a clean area of the cloth each time it becomes soiled.
4. Continue to gently rub the soiled area until the cleaning cloth remains clean.
5. If the soil is not completely removed, use a mild soap solution and repeat the cleaning process that was used with plain water.

If any of the soil remains, a commercial fabric cleaner or spot lifter may be necessary. When a commercial upholstery cleaner or spot lifter is to be used, test a small hidden area for colorfastness first. If the locally cleaned area gives any impression that a ring formation may result, clean the entire surface.

After the cleaning process has been completed, a paper towel can be used to blot excess moisture from the fabric or carpet.

Leather

A soft cloth dampened with water may be used to remove dust. If a more thorough cleaning is necessary, a soft cloth dampened with a mild soap solution can be used. Allow the leather to dry naturally. Do not use heat to dry. Never use steam to clean leather. Never use spot lifters or spot removers on leather. Many commercial leather cleaners and coatings that are sold to preserve and protect leather may permanently change the appearance and feel of your leather and are not recommended. Do not use silicone or wax-based products, or those containing organic solvents to clean your vehicle's interior because they can alter the appearance by increasing the gloss in a non-uniform manner. Never use shoe polish on your leather.

Instrument Panel, Vinyl, and Other Plastic Surfaces

A soft cloth dampened with water may be used to remove dust. If a more thorough cleaning is necessary, a clean soft cloth dampened with a mild soap solution can be used to gently remove dust and dirt. Never use spot lifters or removers on plastic surfaces. Many commercial cleaners and coatings that are sold to preserve and protect soft plastic surfaces may permanently change the appearance and feel of your interior and are not recommended. Do not use silicone or wax-based products, or those containing organic solvents to clean your vehicle's interior because they can alter the appearance by increasing the gloss in a non-uniform manner.

Some commercial products may increase gloss on your instrument panel. The increase in gloss may cause annoying reflections in the windshield and even make it difficult to see through the windshield under certain conditions.

Child Restraint Pad

The built-in child restraint pad is attached to the seat frame with fastener strips. You can remove the pad and hand wash it with mild soap and water.

Care of Safety Belts and Built-in Child Restraint Harness

Keep the safety belts and the built-in child restraint harness clean and dry.

⚠ CAUTION:

Do not bleach or dye safety belts or the built-in child restraint harness. If you do, they may be severely weakened. In a crash, they might not be able to provide adequate protection. Clean the safety belts and the child restraint harness only with mild soap and lukewarm water.

Weatherstrips

Silicone grease on weatherstrips will make them last longer, seal better, and not stick or squeak. Apply silicone grease with a clean cloth. During very cold, damp weather frequent application may be required. See *Recommended Fluids and Lubricants on page 548*.

Washing Your Vehicle

The paint finish on the vehicle provides beauty, depth of color, gloss retention, and durability.

The best way to preserve the vehicle's finish is to keep it clean by washing it often with lukewarm or cold water.

Do not wash the vehicle in the direct rays of the sun. Use a car washing soap. Do not use strong soaps or chemical detergents. Be sure to rinse the vehicle well, removing all soap residue completely. GM-approved cleaning products can be obtained from your dealer. See *Vehicle Care/Appearance Materials on page 525*. Do not use cleaning agents that are petroleum based, or that contain acid or abrasives. All cleaning agents should be flushed promptly and not allowed to dry on the surface, or they could stain. Dry the finish with a soft, clean chamois or an all-cotton towel to avoid surface scratches and water spotting.

High pressure car washes may cause water to enter the vehicle.

Cleaning Exterior Lamps/Lenses

Use only lukewarm or cold water, a soft cloth and a car washing soap to clean exterior lamps and lenses. Follow instructions under *Washing Your Vehicle on page 521*.

Finish Care

Occasional waxing or mild polishing of the vehicle by hand may be necessary to remove residue from the paint finish. GM-approved cleaning products can be obtained from your dealer. See *Vehicle Care/Appearance Materials on page 525*.

Notice: **Machine compounding or aggressive polishing on a basecoat/clearcoat paint finish may damage it. Use only non-abrasive waxes and polishes that are made for a basecoat/clearcoat paint finish on your vehicle.**

The vehicle has a basecoat/clearcoat paint finish. The clearcoat gives more depth and gloss to the colored basecoat. Always use waxes and polishes that are non-abrasive and made for a basecoat/clearcoat paint finish.

Foreign materials such as calcium chloride and other salts, ice melting agents, road oil and tar, tree sap, bird droppings, chemicals from industrial chimneys, etc., can damage the vehicle's finish if they remain on painted surfaces. Wash the vehicle as soon as possible. If necessary, use non-abrasive cleaners that are marked safe for painted surfaces to remove foreign matter.

Exterior painted surfaces are subject to aging, weather, and chemical fallout that can take their toll over a period of years. To help keep the paint finish looking new, keep the vehicle in a garage or covered whenever possible.

Windshield, Backglass, and Wiper Blades

If the windshield is not clear after using the windshield washer, or if the wiper blade chatters when running, wax, sap or other material may be on the blade or windshield.

Clean the outside of the windshield with a full-strength glass cleaning liquid. The windshield is clean if beads do not form when you rinse it with water.

Grime from the windshield will stick to the wiper blades and affect their performance. Clean the blade by wiping vigorously with a cloth soaked in full-strength windshield washer solvent. Then rinse the blade with water.

Check the wiper blades and clean them as necessary; replace blades that look worn.

Aluminum Wheels

Notice: **If you use strong soaps, chemicals, abrasive polishes, cleaners, brushes, or cleaners that contain acid on aluminum or chrome-plated wheels, you could damage the surface of the wheel(s). The repairs would not be covered by your warranty. Use only GM-approved cleaners on aluminum or chrome-plated wheels.**

Keep the wheels clean using a soft clean cloth with mild soap and water. Rinse with clean water. After rinsing thoroughly, dry with a soft clean towel. A wax may then be applied.

Notice: **Using chrome polish on aluminum wheels could damage the wheels. The repairs would not be covered by your warranty. Use chrome polish on chrome wheels only.**

The surface of these wheels is similar to the painted surface of the vehicle. Do not use strong soaps, chemicals, abrasive polishes, abrasive cleaners, cleaners with acid, or abrasive cleaning brushes on them because the surface could be damaged. Do not use chrome polish on aluminum wheels.

Notice: **If you drive your vehicle through an automatic car wash that has silicone carbide tire cleaning brushes, you could damage the aluminum or chrome-plated wheels. The repairs would not be covered by your warranty. Never drive a vehicle equipped with aluminum or chrome-plated wheels through an automatic car wash that uses silicone carbide tire cleaning brushes.**

Do not take the vehicle through an automatic car wash that has silicone carbide tire cleaning brushes. These brushes can also damage the surface of these wheels.

Tires

To clean the tires, use a stiff brush with tire cleaner.

Notice: **Using petroleum-based tire dressing products on your vehicle may damage the paint finish and/or tires. When applying a tire dressing, always wipe off any overspray from all painted surfaces on your vehicle.**

Sheet Metal Damage

If the vehicle is damaged and requires sheet metal repair or replacement, make sure the body repair shop applies anti-corrosion material to parts repaired or replaced to restore corrosion protection.

Original manufacturer replacement parts will provide the corrosion protection while maintaining the warranty.

Finish Damage

Any stone chips, fractures or deep scratches in the finish should be repaired right away. Bare metal will corrode quickly and may develop into major repair expense.

Minor chips and scratches can be repaired with touch-up materials available from your GM dealer. Larger areas of finish damage can be corrected in your GM dealer's body and paint shop.

Underbody Maintenance

Chemicals used for ice and snow removal and dust control can collect on the underbody. If these are not removed, corrosion and rust can develop on the underbody parts such as fuel lines, frame, floor pan, and exhaust system even though they have corrosion protection.

At least every spring, flush these materials from the underbody with plain water. Clean any areas where mud and debris can collect. Dirt packed in close areas of the frame should be loosened before being flushed. Your dealer or an underbody car washing system can do this for you.

Chemical Paint Spotting

Some weather and atmospheric conditions can create a chemical fallout. Airborne pollutants can fall upon and attack painted surfaces on the vehicle. This damage can take two forms: blotchy, ring-shaped discolorations, and small, irregular dark spots etched into the paint surface.

Although no defect in the paint job causes this, GM will repair, at no charge to the owner, the surfaces of new vehicles damaged by this fallout condition within 12 months or 12,000 miles (20 000 km) of purchase, whichever occurs first.

Vehicle Care/Appearance Materials

Description	Usage
Polishing Cloth Wax-Treated	Interior and exterior polishing cloth.
Tar and Road Oil Remover	Removes tar, road oil, and asphalt.
Chrome Cleaner and Polish	Use on chrome or stainless steel.
White Sidewall Tire Cleaner	Removes soil and black marks from whitewalls.
Vinyl Cleaner	Cleans vinyl.
Glass Cleaner	Removes dirt, grime, smoke and fingerprints.
Chrome and Wire Wheel Cleaner	Removes dirt and grime from chrome wheels and wire wheel covers.
Finish Enhancer	Removes dust, fingerprints, and surface contaminants. Spray on and wipe off.
Swirl Remover Polish	Removes swirl marks, fine scratches, and other light surface contamination.
Cleaner Wax	Removes light scratches and protects finish.
Foaming Tire Shine Low Gloss	Cleans, shines, and protects in one step. No wiping necessary.
Wash Wax Concentrate	Medium foaming shampoo. Cleans and lightly waxes. Biodegradable and phosphate free.
Spot Lifter	Quickly removes spots and stains from carpets, vinyl, and cloth upholstery.
Odor Eliminator	Odorless spray odor eliminator used on fabrics, vinyl, leather and carpet.

Vehicle Identification

Vehicle Identification Number (VIN)

This is the legal identifier for your vehicle. It appears on a plate in the front corner of the instrument panel, on the driver's side. You can see it if you look through the windshield from outside your vehicle. The VIN also appears on the Certification/Tire and Service Parts labels and the certificates of title and registration.

Engine Identification

The eighth character in the VIN is the engine code. This code will help you identify your vehicle's engine, specifications, and replacement parts.

Service Parts Identification Label

You will find this label on the inside of the glove box. It is very helpful if you ever need to order parts. On this label, you will find the following:

- VIN
- Model designation
- Paint information
- Production options and special equipment

Do not remove this label from the vehicle.

Electrical System

Add-On Electrical Equipment

Notice: **Do not add anything electrical to your vehicle unless you check with your dealer first. Some electrical equipment can damage your vehicle and the damage would not be covered by your warranty. Some add-on electrical equipment can keep other components from working as they should.**

Add-on equipment can drain your vehicle's battery, even if your vehicle is not operating.

Your vehicle has an airbag system. Before attempting to add anything electrical to your vehicle, see *Servicing Your Airbag-Equipped Vehicle on page 112*.

Headlamp Wiring

The headlamp wiring is protected by four internal fuses in the underhood fuse block. An electrical overload will cause the lamps to go on and off, or in some cases to remain off. If this happens, have your headlamp wiring checked right away.

Windshield Wiper Fuses

The windshield wiper motor is protected by an internal fuse in the underhood fuse block. If the motor overheats due to heavy snow, etc., the wiper will stop until the motor cools. If the overload is caused by some electrical problem, be sure to get it fixed.

The rear washer pump is controlled by a relay located in the engine compartment, behind the windshield washer fluid reservoir. The rear wiper motor is protected by a fuse located in the instrument panel fuse block.

Power Windows and Other Power Options

Circuit breakers in the instrument panel fuse panel protect the power windows and other power accessories. When the current load is too heavy, the circuit breaker opens and closes, protecting the circuit until the problem is fixed.

Fuses and Circuit Breakers

The wiring circuits in your vehicle are protected from short circuits by a combination of fuses, circuit breakers, and fusible thermal links.

Look at the silver-colored band inside the fuse. If the band is broken or melted, replace the fuse. Be sure you replace a bad fuse with a new one of the identical size and rating.

If you ever have a problem on the road and do not have a spare fuse, you can borrow one that has the same amperage or use one of the spare fuses in the underhood fuse block. Just pick some feature of your vehicle that you can get along without, like the radio or cigarette lighter, and use its fuse if it is the right amperage. Replace it as soon as you can.

There are two fuse blocks in your vehicle, the instrument panel fuse block and the underhood fuse block.

Instrument Panel Fuse Block

The instrument panel fuse block is located at the right end of the instrument panel, on the passenger's side of the vehicle. Open the front passegner's door, and remove the cover, to access the fuse block.

Your vehicle may not have all of the fuses listed.

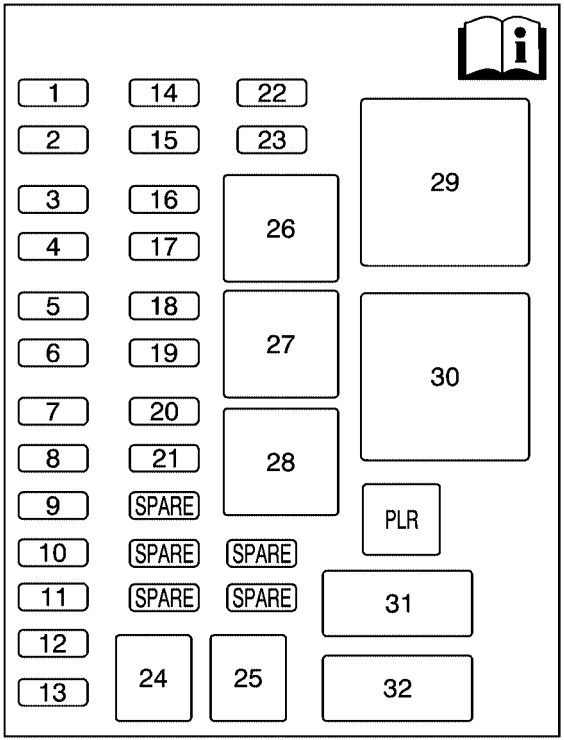

Fuses	Usage
1	Trunk, Door Locks
2	Electronic Level Control
3	Rear Wiper
4	Radio, DVD Player
5	Interior Lamps
6	OnStar®
7	Keyless Entry Module
8	Cluster, Heating, Ventilation, Air Conditioning
9	Cruise Switch
10	Steering Wheel Illumination
11	Power Mirror
12	Stoplamp, Turn Lamps
13	Heated Seats
14	Blank
15	Electronic Level Control
16	Heated Mirror
17	Center High-Mounted Stoplamp, Back-up Lamps
18	Blank

Fuses	Usage
19	Canister Vent Solenoid
20	Park Lamps
21	Power Sliding Door
22	Blank
23	Blank
24	Left Power Sliding Door
25	Right Power Sliding Door

Relays	Usage
26	Blank
27	Blank
28	Park Lamps, Taillamps
29	Retained Accessory Power
30	Rear Defog
PLR	Fuse Puller

Circuit Breakers	Usage
31	Power Seats
32	Power Window

Underhood Fuse Block

The underhood fuse block is located in the engine compartment. For more information on location see *Engine Compartment Overview on page 438*.

Your vehicle may not have all the fuses listed.

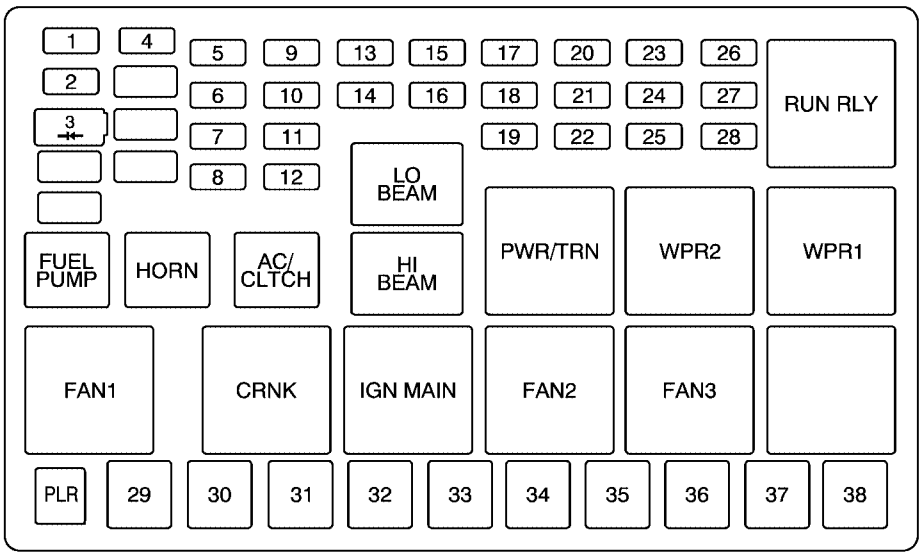

Fuses	Usage
1	Right High-Beam
2	Fuel Pump
3	Diode
BLANK	Not Used
BLANK	Not Used
4	Left High-Beam
BLANK	Not Used
BLANK	Not Used
BLANK	Not Used
5	Not Used
6	Air Conditioning Clutch
7	Horn
8	Left Low-Beam
9	Powertrain Control Module, Electronic Throttle Control
10	Not Used
11	Transmission Solenoid
12	Right Low-Beam

Fuses	Usage
13	Anti-lock Brake System
14	Powertrain Control Module Ignition
15	Electronic Ignition
16	Fuel Injector
17	Climate Control, RPA, Cruise Control
18	Electronic Throttle Control
19	Engine Sensor, Evaporator
20	Airbag
21	Not Used
22	Not Used
23	Auxiliary Power
24	Front Windshield Washer
25	AC/DC Inverter
26	Rear Blower
27	Front Blower
28	Front Windshield Wiper

J-Case Fuses	Usage
PLR	Fuse Puller
29	Fan 1
30	Starter Solenoid
31	Anti-lock Brake System Motor
32	Blank
33	Fan 2
34	Front Blower High
35	Battery Main 3
36	Rear Defogger
37	Battery Main 2
38	Spare

Relays	Usage
RUN RLY	Starter
LO BEAM	Low-Beam
FUEL PUMP	Fuel Pump

Relays	Usage
HORN	Horn
AC/CLTCH	Air Conditioning Clutch
HI BEAM	High-Beam
PWR/TRN	Powertrain
WPR2	Wiper 2
WPR1	Wiper 1
FAN 1	Fan 1
CRNK	Crank
IGN MAIN	Ignition Main
FAN2	Fan 2
FAN3	Fan 3
BLANK	Not Used

Capacities and Specifications

The following approximate capacities are given in English and metric measurements. See *Recommended Fluids and Lubricants on page 548* for more information.

Application	Capacities	
	English	Metric
Air Conditioning Refrigerant R134a	For the air conditioning system refrigerant charge amount, see the refrigerant caution label located under the hood. See your dealer for more information.	
Automatic Transaxle — Pan Removal and Replacement	7.4 qt	7.0 L
Cooling System		
3.9L Engine Front Climate Controls Only	10.77 qt	10.2 L
3.9L Engine with Rear Climate Controls	12.11 qt	11.55 L
Engine Oil with Filter	4.0 qt	3.8 L
Fuel Capacity		
Regular	20.0 gal	75.7 L
Extended	25.1 gal	95.0 L
Wheel Nut Torque	100 ft lb	140 N•m
All capacities are approximate. When adding, be sure to fill to the approximate level, as recommended in this manual. Recheck fluid level after filling.		

Engine	VIN Code	Transaxle	Spark Plug Gap
3.9L V6 Flexible Fuel	W	Automatic	0.040 inches (1.1 mm)
3.9L V6	1	Automatic	0.040 inches (1.1 mm)

NOTES

Section 6 Maintenance Schedule

Maintenance Schedule 536
Introduction 536
Maintenance Requirements 536
Your Vehicle and the Environment 536
Using the Maintenance Schedule 537
Scheduled Maintenance 539
Additional Required Services 542
Maintenance Footnotes 543
Owner Checks and Services 544
At Each Fuel Fill 545
At Least Once a Month 545
At Least Once a Year 546
Recommended Fluids and Lubricants 548
Normal Maintenance Replacement Parts ... 550
Engine Drive Belt Routing 551
Maintenance Record 552

Maintenance Schedule

Introduction

Important: Keep engine oil at the proper level and change as recommended.

Have you purchased the GM Protection Plan? The Plan supplements your new vehicle warranties. See your Warranty and Owner Assistance booklet or your dealer for details.

Maintenance Requirements

Notice: **Maintenance intervals, checks, inspections, replacement parts, and recommended fluids and lubricants as prescribed in this manual are necessary to keep your vehicle in good working condition. Any damage caused by failure to follow scheduled maintenance may not be covered by warranty.**

Your Vehicle and the Environment

Proper vehicle maintenance not only helps to keep your vehicle in good working condition, but also helps the environment. All recommended maintenance is important. Improper vehicle maintenance can even affect the quality of the air we breathe. Improper fluid levels or the wrong tire inflation can increase the level of emissions from your vehicle. To help protect our environment, and to keep your vehicle in good condition, be sure to maintain your vehicle properly.

Using the Maintenance Schedule

We at General Motors want to help you keep your vehicle in good working condition. But we do not know exactly how you will drive it. You may drive very short distances only a few times a week. Or you may drive long distances all the time in very hot, dusty weather. You may use your vehicle in making deliveries. Or you may drive it to work, to do errands, or in many other ways.

Because of all the different ways people use their vehicles, maintenance needs vary. You may need more frequent checks and replacements. So please read the following and note how you drive. If you have any questions on how to keep your vehicle in good condition, see your GM Goodwrench® dealer.

This schedule is for vehicles that:

- carry passengers and cargo within recommended limits. You will find these limits on the Tire and Loading Information label. See *Loading Your Vehicle on page 404*.
- are driven on reasonable road surfaces within legal driving limits.
- use the recommended fuel. See *Gasoline Octane on page 429*.

The services in *Scheduled Maintenance on page 539* should be performed when indicated. See *Additional Required Services on page 542* and *Maintenance Footnotes on page 543* for further information.

⚠ CAUTION:

Performing maintenance work on a vehicle can be dangerous. In trying to do some jobs, you can be seriously injured. Do your own maintenance work only if you have the required know-how and the proper tools and equipment for the job. If you have any doubt, see your GM Goodwrench® dealer to have a qualified technician do the work. See *Doing Your Own Service Work on page 427*.

Some maintenance services can be complex. So, unless you are technically qualified and have the necessary equipment, you should have your GM Goodwrench® dealer do these jobs.

When you go to your GM Goodwrench® dealer for your service needs, you will know that GM-trained and supported service technicians will perform the work using genuine GM parts.

If you want to purchase service information, see *Service Publications Ordering Information on page 574*.

Owner Checks and Services on page 544 tells you what should be checked, when to check it, and what you can easily do to help keep your vehicle in good condition.

The proper replacement parts, fluids, and lubricants to use are listed in *Recommended Fluids and Lubricants on page 548* and *Normal Maintenance Replacement Parts on page 550*. When your vehicle is serviced, make sure these are used. All parts should be replaced and all necessary repairs done before you or anyone else drives the vehicle. We recommend the use of genuine GM parts.

Scheduled Maintenance

When the CHANGE OIL SOON message comes on, it means that service is required for your vehicle. Have your vehicle serviced as soon as possible within the next 600 miles (1 000 km). It is possible that, if you are driving under the best conditions, the engine oil life system may not indicate that vehicle service is necessary for over a year. However, your engine oil and filter must be changed at least once a year and at this time the system must be reset. Your GM Goodwrench® dealer has GM-trained service technicians who will perform this work using genuine GM parts and reset the system.

If the engine oil life system is ever reset accidentally, you must service your vehicle within 3,000 miles (5 000 km) since your last service. Remember to reset the oil life system whenever the oil is changed. See *Engine Oil Life System on page 442* for information on the Engine Oil Life System and resetting the system.

When the CHANGE OIL SOON message appears, certain services, checks, and inspections are required. Required services are described in the following for “Maintenance I” and “Maintenance II.” Generally, it is recommended that your first service be Maintenance I, your second service be Maintenance II, and that you alternate Maintenance I and Maintenance II thereafter. However, in some cases, Maintenance II may be required more often.

Maintenance I — Use Maintenance I if the CHANGE OIL SOON message comes on within 10 months since the vehicle was purchased or Maintenance II was performed.

Maintenance II — Use Maintenance II if the previous service performed was Maintenance I. Always use Maintenance II whenever the message comes on 10 months or more since the last service or if the message has not come on at all for one year.

Scheduled Maintenance

Service	Maintenance I	Maintenance II
Change engine oil and filter. See *Engine Oil on page 439*. Reset oil life system. See *Engine Oil Life System on page 442*. *An Emission Control Service.*	•	•
Lubricate chassis components. *See footnote #.*	•	•
Visually check for any leaks or damage. *See footnote (k).*	•	•
Inspect engine air cleaner filter. If necessary, replace filter. See *Engine Air Cleaner/Filter on page 444*. *See footnote (g).*		•
Rotate tires and check inflation pressures and wear. See *Tire Inspection and Rotation on page 487* and “Tire Wear Inspection” in *At Least Once a Month on page 545*.	•	•
Inspect brake system. *See footnote (a).*	•	•
Check engine coolant and windshield washer fluid levels and add fluid as needed.	•	•

Scheduled Maintenance (cont'd)

Service	Maintenance I	Maintenance II
Perform any needed additional services. See "Additional Required Services" in this section.	•	•
Inspect suspension and steering components. *See footnote (b).*		•
Inspect engine cooling system. *See footnote (c).*		•
Inspect wiper blades. *See footnote (d).*		•
Inspect restraint system components. *See footnote (e).*		•
Lubricate body components. *See footnote (f).*		•
Check transaxle fluid level and add fluid as needed.		•
Replace passenger compartment air filter. *See footnote (l).*		•
Inspect throttle system. *See footnote (j).*		•

Additional Required Services

The following services should be performed at the first maintenance service (I or II) after the indicated miles (kilometers) shown for each item.

Additional Required Services

Service and Miles (Kilometers)	25,000 (40 000)	50,000 (80 000)	75,000 (120 000)	100,000 (160 000)	125,000 (200 000)	150,000 (240 000)
Inspect fuel system for damage or leaks.	•	•	•	•	•	•
Inspect exhaust system for loose or damaged components.	•	•	•	•	•	•
Replace engine air cleaner filter. See *Engine Air Cleaner/Filter on page 444*.		•		•		•
Change automatic transaxle fluid and filter (severe service). *See footnote (h).*		•		•		•
Change automatic transaxle fluid and filter (normal service).				•		
Replace spark plugs and inspect spark plug wires. *An Emission Control Service.*				•		
Engine cooling system service (or every five years, whichever occurs first). *An Emission Control Service. See footnote (i).*						•
Inspect engine accessory drive belt. *An Emission Control Service. See footnote (m).*						•

Maintenance Footnotes

Lubricate the suspension, steering linkage, transaxle shift linkage, and the underbody contact points and linkage.

(a) *Visually inspect brake lines and hoses for proper hook-up, binding, leaks, cracks, chafing, etc. Inspect disc brake pads for wear and rotors for surface condition. Inspect other brake parts, including calipers, parking brake, etc. Check parking brake adjustment.*

(b) *Visually inspect front and rear suspension and steering system for damaged, loose, or missing parts, signs of wear, or lack of lubrication. Inspect power steering lines and hoses for proper hook-up, binding, leaks, cracks, chafing, etc.*

(c) *Visually inspect hoses and have them replaced if they are cracked, swollen, or deteriorated. Inspect all pipes, fittings and clamps; replace with genuine GM parts as needed. To help ensure proper operation, a pressure test of the cooling system and pressure cap and cleaning the outside of the radiator and air conditioning condenser is recommended at least once a year.*

(d) *Visually inspect wiper blades for wear or cracking. Replace wiper blades that appear worn or damaged or that streak or miss areas of the windshield.*

(e) *Make sure the safety belt reminder light and all your belts, buckles, latch plates, retractors, and anchorages are working properly. If your vehicle has a built-in child restraint, make sure the harness straps, latch plates, buckle, clip, child head restraint, and anchorages are working properly. Look for any other loose or damaged safety belt system parts. If you see anything that might keep a safety belt system from doing its job, have it repaired. Have any torn or frayed safety belts replaced. Also look for any opened or broken airbag coverings, and have them repaired or replaced. The airbag system does not need regular maintenance.*

(f) *Lubricate all key lock cylinders, hood latch assemblies, secondary latches, pivots, spring anchor and release pawl, hood and door hinges, rear folding seats, liftgate hinges, fuel door hinge, power sliding door cable, and sliding door track(s). More frequent lubrication may be required when exposed to a corrosive environment.*

Applying silicone grease on weatherstrips with a clean cloth will make them last longer, seal better, and not stick or squeak.

(g) *If you drive regularly under dusty conditions, inspect the filter at each engine oil change.*

(h) *Change automatic transaxle fluid and filter if the vehicle is mainly driven under one or more of these conditions:*

- *In heavy city traffic where the outside temperature regularly reaches 90°F (32°C) or higher.*
- *In hilly or mountainous terrain.*
- *When doing frequent trailer towing.*
- *Uses such as found in taxi, police, or delivery service.*

(i) *Drain, flush, and refill cooling system. See Engine Coolant on page 448 for what to use. Inspect hoses. Clean radiator, condenser, pressure cap, and filler neck. Pressure test the cooling system and pressure cap.*

(j) *Check system for interference or binding and for damaged or missing parts. Replace parts as needed. Replace any components that have high effort or excessive wear. Do not lubricate accelerator or cruise control cables.*

(k) *A fluid loss in any vehicle system could indicate a problem. Have the system inspected and repaired and the fluid level checked. Add fluid if needed.*

(l) *If you drive regularly under dusty conditions, the filter may require replacement more often.*

(m) *Visually inspect belt for fraying, excessive cracks, or obvious damage. Replace belt if necessary.*

Owner Checks and Services

These owner checks and services should be performed at the intervals specified to help ensure the safety, dependability, and emission control performance of your vehicle. Your GM Goodwrench® dealer can assist you with these checks and services.

Be sure any necessary repairs are completed at once. Whenever any fluids or lubricants are added to your vehicle, make sure they are the proper ones, as shown in *Recommended Fluids and Lubricants on page 548*.

At Each Fuel Fill

It is important to perform these underhood checks at each fuel fill.

Engine Oil Level Check

Check the engine oil level and add the proper oil if necessary. See *Engine Oil on page 439* for further details.

Notice: **It is important to check your oil regularly and keep it at the proper level. Failure to keep your engine oil at the proper level can cause damage to your engine not covered by your warranty.**

Engine Coolant Level Check

Check the engine coolant level and add DEX-COOL® coolant mixture if necessary. See *Engine Coolant on page 448* for further details.

Windshield Washer Fluid Level Check

Check the windshield washer fluid level in the windshield washer fluid reservoir and add the proper fluid if necessary.

At Least Once a Month

Tire Inflation Check

Visually inspect your vehicle's tires and make sure they are inflated to the correct pressures. Do not forget to check the spare tire. See *Inflation - Tire Pressure on page 485*. Check to make sure the spare tire is stored securely. See *Changing a Flat Tire on page 500*.

Tire Wear Inspection

Tire rotation may be required for high mileage highway drivers prior to the Engine Oil Life System service notification. Check the tires for wear and, if necessary, rotate the tires. See *Tire Inspection and Rotation on page 487*.

At Least Once a Year

Starter Switch Check

⚠ CAUTION:

When you are doing this inspection, the vehicle could move suddenly. If the vehicle moves, you or others could be injured.

1. Before you start, be sure you have enough room around the vehicle.
2. Firmly apply both the parking brake and the regular brake. See *Parking Brake on page 159*.

   Do not use the accelerator pedal, and be ready to turn off the engine immediately if it starts.
3. Try to start the engine in each gear. The vehicle should start only in PARK (P) or NEUTRAL (N). If the vehicle starts in any other position, contact your GM Goodwrench® dealer for service.

Automatic Transaxle Shift Lock Control System Check

⚠ CAUTION:

When you are doing this inspection, the vehicle could move suddenly. If the vehicle moves, you or others could be injured.

1. Before you start, be sure you have enough room around the vehicle. It should be parked on a level surface.
2. Firmly apply the parking brake. See *Parking Brake on page 159*.

   Be ready to apply the regular brake immediately if the vehicle begins to move.
3. With the engine off, turn the ignition to RUN, but do not start the engine. Without applying the regular brake, try to move the shift lever out of PARK (P) with normal effort. If the shift lever moves out of PARK (P), contact your GM Goodwrench® dealer for service.

Ignition Transaxle Lock Check

While parked, and with the parking brake set, try to turn the ignition to LOCK in each shift lever position.

- The ignition should turn to LOCK only when the shift lever is in PARK (P).
- The ignition key should come out only in LOCK.

Contact your GM Goodwrench® dealer if service is required.

Parking Brake and Automatic Transaxle Park (P) Mechanism Check

⚠ CAUTION:

When you are doing this check, your vehicle could begin to move. You or others could be injured and property could be damaged. Make sure there is room in front of your vehicle in case it begins to roll. Be ready to apply the regular brake at once should the vehicle begin to move.

Park on a fairly steep hill, with the vehicle facing downhill. Keeping your foot on the regular brake, set the parking brake.

- To check the parking brake's holding ability: With the engine running and transaxle in NEUTRAL (N), slowly remove foot pressure from the regular brake pedal. Do this until the vehicle is held by the parking brake only.
- To check the PARK (P) mechanism's holding ability: With the engine running, shift to PARK (P). Then release the parking brake followed by the regular brake.

Contact your GM Goodwrench® dealer if service is required.

Underbody Flushing Service

At least every spring, use plain water to flush any corrosive materials from the underbody. Take care to clean thoroughly any areas where mud and other debris can collect.

Recommended Fluids and Lubricants

Fluids and lubricants identified below by name, part number, or specification may be obtained from your dealer.

Usage	Fluid/Lubricant
Engine Oil	Engine oil which meets GM Standard GM6094M and displays the American Petroleum Institute Certified for Gasoline Engines starburst symbol. GM Goodwrench® oil meets all the requirements for your vehicle. To determine the proper viscosity for your vehicle's engine, see *Engine Oil on page 439*.
Engine Coolant	50/50 mixture of clean, drinkable water and use only DEX-COOL® Coolant. See *Engine Coolant on page 448*.
Hydraulic Brake System	Delco® Supreme 11 Brake Fluid or equivalent DOT-3 brake fluid.
Windshield Washer	GM Optikleen® Washer Solvent.
Power Steering System	GM Power Steering Fluid (GM Part No. U.S. 89021184, in Canada 89021186).
Automatic Transaxle	DEXRON®-VI Automatic Transmission Fluid.
Key Lock Cylinders	Multi-Purpose Lubricant, Superlube (GM Part No. U.S. 12346241, in Canada 10953474).

Usage	Fluid/Lubricant
Chassis Lubrication	Chassis Lubricant (GM Part No. U.S. 12377985, in Canada 88901242) or lubricant meeting requirements of NLGI #2, Category LB or GC-LB.
Hood Latch Assembly, Secondary Latch, Pivots, Spring Anchor, and Release Pawl	Lubriplate Lubricant Aerosol (GM Part No. U.S. 12346293, in Canada 992723) or lubricant meeting requirements of NLGI #2, Category LB or GC-LB.

Usage	Fluid/Lubricant
Hood and Door Hinges, Rear Folding Seat, Fuel Door Hinge, Liftgate Hinges and Power Sliding Door Cable	Multi-Purpose Lubricant, Superlube (GM Part No. U.S. 12346241, in Canada 10953474).
Sliding Door Track	Lubriplate Lubricant Aerosol (GM Part No. U.S. 12346293, in Canada 992723) or lubricant meeting requirements of NLGI #2, Category LB or GC-LB.
Weatherstrip Conditioning	Weatherstrip Lubricant (GM Part No. U.S. 3634770, in Canada 10953518) or Dielectric Silicone Grease (GM Part No. U.S. 12345579, in Canada 992887).

Normal Maintenance Replacement Parts

Replacement parts identified below by name, part number, or specification can be obtained from your dealer.

Part	GM Part Number	ACDelco® Part Number
Engine Air Cleaner/Filter	15222510	—
Engine Oil Filter	89017342	PF61
Spark Plugs	12591131	41-100
Windshield Wiper Blades		
Driver's Side — 22.0 inches (55.0 cm)	12335833	—
Passenger's Side — 24.0 inches (60.0 cm)	12335834	—
Rear — 16.0 inches (40.0 cm)	15192147	—

Engine Drive Belt Routing

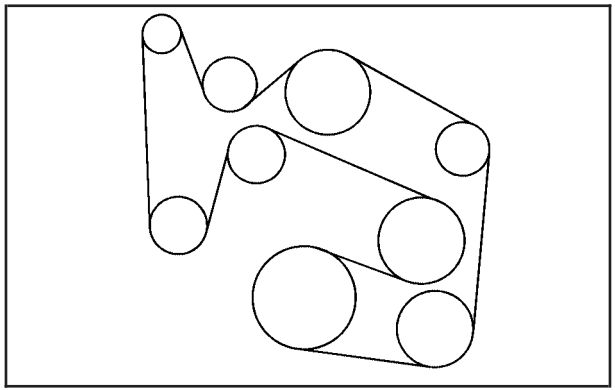

3.9L V6 Engine and 3.9L V6 Flexible Fuel

Maintenance Record

After the scheduled services are performed, record the date, odometer reading, who performed the service, and the type of services performed in the boxes provided. See *Maintenance Requirements on page 536*. Any additional information from *Owner Checks and Services on page 544* can be added on the following record pages. You should retain all maintenance receipts.

Maintenance Record

Date	Odometer Reading	Serviced By	Maintenance I or Maintenance II	Services Performed

Maintenance Record (cont'd)

Date	Odometer Reading	Serviced By	Maintenance I or Maintenance II	Services Performed

Maintenance Record (cont'd)

Date	Odometer Reading	Serviced By	Maintenance I or Maintenance II	Services Performed

Section 7 Customer Assistance Information

Customer Assistance and Information 556
Customer Satisfaction Procedure 556
Online Owner Center 559
Customer Assistance for Text Telephone (TTY) Users 560
Customer Assistance Offices 560
GM Mobility Reimbursement Program 561
Roadside Assistance Program 562
Courtesy Transportation 565
Vehicle Data Collection and Event Data Recorders 567
Collision Damage Repair 568
Reporting Safety Defects 573
Reporting Safety Defects to the United States Government 573
Reporting Safety Defects to the Canadian Government 573
Reporting Safety Defects to General Motors 573
Service Publications Ordering Information 574

Customer Assistance and Information

Customer Satisfaction Procedure

Your satisfaction and goodwill are important to your dealer and to Chevrolet. Normally, any concerns with the sales transaction or the operation of your vehicle will be resolved by your dealer's sales or service departments. Sometimes, however, despite the best intentions of all concerned, misunderstandings can occur. If your concern has not been resolved to your satisfaction, the following steps should be taken:

STEP ONE: Discuss your concern with a member of dealership management. Normally, concerns can be quickly resolved at that level. If the matter has already been reviewed with the sales, service, or parts manager, contact the owner of the dealership or the general manager.

STEP TWO: If after contacting a member of dealership management, it appears your concern cannot be resolved by the dealership without further help, in the U.S., contact the Chevrolet Customer Assistance Center by calling 1-800-222-1020. In Canada, contact General Motors of Canada Customer Communication Centre by calling 1-800-263-3777 (English) or 1-800-263-7854 (French).

We encourage you to call the toll-free number in order to give your inquiry prompt attention. Please have the following information available to give the Customer Assistance Representative:

- Vehicle Identification Number (VIN). This is available from the vehicle registration or title, or the plate at the top left of the instrument panel and visible through the windshield.
- Dealership name and location.
- Vehicle delivery date and present mileage (kilometers).

When contacting Chevrolet, please remember that your concern will likely be resolved at a dealer's facility. That is why we suggest you follow Step One first if you have a concern.

STEP THREE — U.S. Owners: Both General Motors and your dealer are committed to making sure you are completely satisfied with your new vehicle. However, if you continue to remain unsatisfied after following the procedure outlined in Steps 1 and 2, you should file with the BBB Auto Line Program to enforce your rights.

The BBB Auto Line Program is an out of court program administered by the Council of Better Business Bureaus to settle automotive disputes regarding vehicle repairs or the interpretation of the New Vehicle Limited Warranty. Although you may be required to resort to this informal dispute resolution program prior to filing a court action, use of the program is free of charge and your case will generally be heard within 40 days. If you do not agree with the decision given in your case, you may reject it and proceed with any other venue for relief available to you.

You may contact the BBB Auto Line Program using the toll-free telephone number or write them at the following address:

BBB Auto Line Program
Council of Better Business Bureaus, Inc.
4200 Wilson Boulevard
Suite 800
Arlington, VA 22203-1838

Telephone: 1-800-955-5100

This program is available in all 50 states and the District of Columbia. Eligibility is limited by vehicle age, mileage, and other factors. General Motors reserves the right to change eligibility limitations and/or discontinue its participation in this program.

STEP THREE — Canadian Owners: In the event that you do not feel your concerns have been addressed after following the procedure outlined in Steps 1 and 2, General Motors of Canada Limited wants you to be aware of its participation in a no-charge Mediation/Arbitration Program. General Motors of Canada Limited has committed to binding arbitration of owner disputes involving factory-related vehicle service claims. The program provides for the review of the facts involved by an impartial third party arbiter, and may include an informal hearing before the arbiter. The program is designed so that the entire dispute settlement process, from the time you file your complaint to the final decision, should be completed in approximately 70 days. We believe our impartial program offers advantages over courts in most jurisdictions because it is informal, quick, and free of charge.

For further information concerning eligibility in the Canadian Motor Vehicle Arbitration Plan (CAMVAP), call toll-free 1-800-207-0685. Alternatively, you may call the General Motors Customer Communication Centre, 1-800-263-3777 (English), 1-800-263-7854 (French), or you may write to:

The Mediation/Arbitration Program
c/o Customer Communication Centre
General Motors of Canada Limited
Mail Code: CA1-163-005
1908 Colonel Sam Drive
Oshawa, Ontario L1H 8P7

Your inquiry should be accompanied by your Vehicle Identification Number (VIN).

Online Owner Center

Online Owner Center (United States only)

The Owner Center is a resource for your GM ownership needs. Specific vehicle information can be found in one place.

The Online Owner Center allows you to:

- Get e-mail service reminders.
- Access information about your specific vehicle, including tips and videos and an electronic version of this owner manual.
- Keep track of your vehicle's service history and maintenance schedule.
- Find GM dealers for service nationwide.
- Receive special promotions and privileges only available to members.

Refer to www.MyGMLink.com on the web for updated information and to register your vehicle.

My GM Canada (Canada only)

My GM Canada is a password-protected section of gmcanada.com where you can save information on GM vehicles, get personalized offers, and use handy tools and forms with greater ease.

Here are a few of the valuable tools and services you will have access to:

- My Showroom: Find and save information on vehicles and current offers in your area.
- My Dealers/Retailers: Save details such as address and phone number for each of your preferred GM Dealers or Retailers.
- My Driveway: Receive service reminders and helpful advice on owning and maintaining your vehicle.
- My Preferences: Manage your profile, subscribe to E-News and use tools and forms with greater ease.

To sign up to My GM Canada, visit the My GM Canada section within www.gmcanada.com.

Customer Assistance for Text Telephone (TTY) Users

To assist customers who are deaf, hard of hearing, or speech-impaired and who use Text Telephones (TTYs), Chevrolet has TTY equipment available at its Customer Assistance Center. Any TTY user can communicate with Chevrolet by dialing: 1-800-833-CHEV (2438). (TTY users in Canada can dial 1-800-263-3830.)

Customer Assistance Offices

Chevrolet encourages customers to call the toll-free number for assistance. However, if a customer wishes to write or e-mail Chevrolet, the letter should be addressed to:

United States — Customer Assistance

Chevrolet Motor Division
Chevrolet Customer Assistance Center
P.O. Box 33170
Detroit, MI 48232-5170

www.Chevrolet.com
1-800-222-1020
1-800-833-2438 (For Text Telephone devices (TTYs))
Roadside Assistance: 1-800-CHEV-USA (243-8872)
Fax Number: 313-381-0022

From Puerto Rico:
1-800-496-9992 (English)
1-800-496-9993 (Spanish)
Fax Number: 313-381-0022

From U.S. Virgin Islands:
1-800-496-9994
Fax Number: 313-381-0022

Canada — Customer Assistance

General Motors of Canada Limited
Customer Communication Centre, CA1-163-005
1908 Colonel Sam Drive
Oshawa, Ontario L1H 8P7

www.gmcanada.com
1-800-263-3777 (English)
1-800-263-7854 (French)
1-800-263-3830 (For Text Telephone devices (TTYs))
Roadside Assistance: 1-800-268-6800

Overseas — Customer Assistance

Please contact the local General Motors Business Unit.

Mexico, Central America and Caribbean Islands/Countries (Except Puerto Rico and U.S. Virgin Islands) — Customer Assistance

General Motors de Mexico, S. de R.L. de C.V.
Customer Assistance Center
Paseo de la Reforma # 2740
Col. Lomas de Bezares
C.P. 11910, Mexico, D.F.
01-800-508-0000
Long Distance: 011-52-53 29 0 800

GM Mobility Reimbursement Program

GM MOBILITY℠

This program, available to qualified applicants, can reimburse you up to $1,000 of the cost of eligible aftermarket adaptive equipment required for your vehicle, such as hand controls or a wheelchair/scooter lift.

The offer is available for a very limited period of time from the date of vehicle purchase/lease. For more details, or to determine your vehicle's eligibility, visit gmmobility.com or call the GM Mobility Assistance Center at 1-800-323-9935. Text telephone (TTY) users, call 1-800-833-9935.

General Motors of Canada also has a Mobility Program. Call 1-800-GM-DRIVE (463-7483) for details. TTY users call 1-800-263-3830.

Roadside Assistance Program

In the U.S., call **1-800-CHEV-USA (1-800-243-8872)**

In Canada, call **1-800-268-6800**

Service available 24 hours a day, 365 days a year.

As the owner of a new Chevrolet vehicle, you are automatically enrolled in the Chevrolet Roadside Assistance program. This value-added service is intended to provide you with peace of mind as you drive in the city or travel the open road.

Who is Covered?

Roadside Assistance coverage is for the vehicle operator, regardless of ownership. A person driving this vehicle without the consent of the owner is not eligible for coverage.

The following services are provided in the U.S. during the Bumper-to-Bumper warranty period and, in Canada, during the Base Warranty coverage period of the New Vehicle Limited Warranty, up to a maximum coverage of $100.

- **Fuel Delivery:** Delivery of enough fuel for the customer to get to the nearest service station (approximately $5 in the U.S. and 10 litres in Canada). Service to provide diesel may be restricted. For safety reasons, propane and other alternative fuels will not be provided through this service.
- **Lock-out Service:** To ensure security, the driver must present the vehicle registration and personal ID before lock-out service is provided. Lock-out service will be covered at no charge if you are unable to gain entry into your vehicle. If your vehicle will not start, Roadside Assistance will arrange to have your vehicle towed to the nearest authorized dealership. In the U.S., replacement keys made at the customer's expense will be covered within 10 miles (16 km).
- **Emergency Tow From a Public Roadway or Highway:** Tow to the nearest dealership for warranty service or in the event of a vehicle-disabling accident. Winch-out assistance when the vehicle is mired in sand, mud, or snow.

- **Flat Tire Change:** If your vehicle has a spare tire, installation of the tire in good condition will be covered at no charge. The customer is responsible for the repair or replacement of the tire if not covered by a warrantable failure.
- **Jump Start:** No-start occurrences which require a battery jump start will be covered at no charge.

Additional Services for Canadian Customers

- **Trip Routing Service:** Upon Request, Roadside Assistance will send you detailed, computer-personalized maps, highlighting your choice of either the most direct route or the most scenic route to your destination, anywhere in North America, along with any helpful travel information we may have pertaining to your trip. To request this service, please call us toll-free at 1-800-268-6800.

  We will make every attempt to send your personalized trip routing as quickly as possible, but it is best to allow three weeks before your planned departure date. Trip routing requests will be limited to six per calendar year.

- **Trip Interruption Benefits and Assistance:** In the event of a warranty related vehicle disablement, while en route and over 250 kilometres from original point of departure, you may qualify for trip interruption expense assistance. This assistance covers reasonable reimbursement of up to a maximum of $500 (Canadian) for (A) meals (maximum of $50/day), (B) lodging (maximum of $100/night) and (C) alternate ground transportation (maximum of $40/day). This benefit is to assist you with some of the unplanned expense you may incur while waiting for your vehicle to be repaired.

  Pre-authorization, original detailed receipts and a copy of the repair order are required.

  Once authorization has been given, your advisor will help you make any necessary arrangements and explain how to claim for trip interruption expense assistance.

- **Alternative Service:** There may be times, when Roadside Assistance cannot provide timely assistance, your advisor may authorize you to secure local emergency road service, and you will be reimbursed up to $100 upon submission of the original receipt to Roadside Assistance.

In many instances, mechanical failures are covered under Chevrolet's Bumper-to-Bumper warranty, and the duration of the Base Warranty Coverage for Canadian customers of the new Vehicle Limited Warranty. However, any cost for parts and labor for non-warranty repairs are the responsibility of the driver.

For prompt and efficient assistance when calling, please provide the following to the Roadside Assistance Representative:

- Your name, home address, and home telephone number.
- Telephone number of your location.
- Location of the vehicle.
- Model, year, color, and license plate number.
- Odometer reading, Vehicle Identification Number (VIN), and delivery date of the vehicle.
- Description of the problem.

While we hope you never have the occasion to use our service, it is added security while traveling for you and your family. Remember, we are only a phone call away. U.S. customers call Chevrolet Roadside Assistance: **1-800-CHEV-USA (1-800-243-8872)**, text telephone (TTY) users, call **1-888-889-2438**, Canadian customers call **1-800-268-6800**.

Chevrolet and General Motors of Canada Limited reserve the right to limit services or reimbursement to an owner or driver when, in their sole discretion, the claims become excessive in frequency or type of occurrence.

Roadside Assistance is not part of or included in the coverage provided by the New Vehicle Limited Warranty. Chevrolet and General Motors of Canada Limited reserve the right to make any changes or discontinue the Roadside Assistance program at any time without notification.

Towing and Road Service Exclusions

Specifically excluded from Roadside Assistance coverage are towing or services for vehicles operated on a non-public roadway or highway, fines, impound towing caused by a violation of local, Municipal, State, Provincial, or Federal law, and mounting, dismounting or changing of snow tires, chains, or other traction devices.

Courtesy Transportation

To enhance your ownership experience, we and our participating dealers are proud to offer Courtesy Transportation, a customer support program for new vehicles.

For warranty repairs during the Bumper-to-Bumper (U.S.) or Base Warranty Coverage period (Canada), provided by the New Vehicle Limited Warranty, interim transportation may be available under the Courtesy Transportation program. Several courtesy transportation options are available to assist in reducing your inconvenience when warranty repairs are required.

Courtesy Transportation is not a part of the New Vehicle Limited Warranty and is available only at participating dealers. A separate booklet entitled “Warranty and Owner Assistance Information” furnished with each new vehicle provides detailed warranty coverage information.

Scheduling Service Appointments

When your vehicle requires warranty service, you should contact your dealer and request an appointment. By scheduling a service appointment and advising your service consultant of your transportation needs, your dealer can help minimize your inconvenience.

If your vehicle cannot be scheduled into the service department immediately, keep driving it until it can be scheduled for service, unless, of course, the problem is safety-related. If it is, please call your dealership, let them know this, and ask for instructions.

If the dealer requests that you simply drop the vehicle off for service, you are urged to do so as early in the work day as possible to allow for the same day repair.

Transportation Options

Warranty service can generally be completed while you wait. However, if you are unable to wait, GM helps to minimize your inconvenience by providing several transportation options. Depending on the circumstances, your dealer can offer you one of the following:

Shuttle Service

Shuttle service is the preferred means of offering Courtesy Transportation and participating dealers can provide you with shuttle service to get you to your destination with minimal interruption of your daily schedule. This includes one-way or round trip shuttle service within reasonable time and distance parameters for the dealer's area.

Public Transportation or Fuel Reimbursement

If your vehicle requires overnight warranty repairs, and public transportation is used as 'shuttle service,' the reimbursement is limited to the associated shuttle allowance and must be supported by original receipts.

In addition, for U.S. customers, should you arrange transportation through a friend or relative, limited reimbursement for reasonable fuel expenses may be available. Claim amounts should reflect actual costs and be supported by original receipts.

Courtesy Rental Vehicle

Your dealer may arrange to provide you with a courtesy rental vehicle or reimburse you for a rental vehicle that you obtain if your vehicle is kept for an overnight warranty repair. Rental reimbursement will be limited and must be supported by original receipts. This requires that you sign and complete a rental agreement and meet state/provincial, local, and rental vehicle provider requirements. Requirements vary and may include minimum age requirements, insurance coverage, credit card, etc. You are responsible for fuel usage charges and may also be responsible for taxes, levies, usage fees, excessive mileage, or rental usage beyond the completion of the repair.

Generally it is not possible to provide a like-vehicle as a courtesy rental.

Additional Program Information

All program options, such as shuttle service, may not be available at every dealer. Please contact your dealer for specific information about availability. All Courtesy Transportation arrangements will be administered by appropriate dealer personnel.

General Motors reserves the right to unilaterally modify, change or discontinue Courtesy Transportation at any time and to resolve all questions of claim eligibility pursuant to the terms and conditions described herein at its sole discretion.

Vehicle Data Collection and Event Data Recorders

Your vehicle, like other modern motor vehicles, has a number of sophisticated computer systems that monitor and control several aspects of the vehicle's performance. Your vehicle uses on-board vehicle computers to monitor emission control components to optimize fuel economy, to monitor conditions for airbag deployment and, if so equipped, to provide anti-lock braking and to help the driver control the vehicle in difficult driving situations. Some information may be stored during regular operations to facilitate repair of detected malfunctions; other information is stored only in a crash event by computer systems, such as those commonly called Event Data Recorders (EDR).

In a crash event, computer systems, such as the airbag Sensing and Diagnostic Module (SDM) in your vehicle may record information about the condition of the vehicle and how it was operated, such as data related to engine speed, brake application, throttle position, vehicle speed, safety belt usage, airbag readiness, airbag performance, and the severity of a collision. If your vehicle is equipped with StabiliTrak®, steering performance, including yaw rate, steering wheel angle, and lateral acceleration, is also recorded. This information has been used to improve vehicle crash performance and may be used to improve crash performance of future vehicles and driving safety. Unlike the data recorders on many airplanes, these on-board systems do not record sounds, such as conversation of vehicle occupants.

To read this information, special equipment is needed and access to the vehicle or the device that stores the data is required. GM will not access information about a crash event or share it with others other than:

- with the consent of the vehicle owner or, if the vehicle is leased, with the consent of the lessee,
- in response to an official request of police or similar government office,
- as part of GM's defense of litigation through the discovery process, or
- as required by law.

In addition, once GM collects or receives data, GM may:

- use the data for GM research needs,
- make it available for research where appropriate confidentiality is to be maintained and need is shown, or
- share summary data which is not tied to a specific vehicle with non-GM organizations for research purposes.

Others, such as law enforcement, may have access to the special equipment that can read the information if they have access to the vehicle or the device that stores the data.

If your vehicle has OnStar®, please check the OnStar® subscription service agreement or manual for information on its operations and data collection.

Collision Damage Repair

If your vehicle is involved in a collision and it is damaged, have the damage repaired by a qualified technician using the proper equipment and quality replacement parts. Poorly performed collision repairs will diminish your vehicle's resale value, and safety performance can be compromised in subsequent collisions.

Collision Parts

Genuine GM Collision parts are new parts made with the same materials and construction methods as the parts with which your vehicle was originally built. Genuine GM Collision parts are your best choice to assure that your vehicle's designed appearance, durability, and safety are preserved. The use of Genuine GM parts can help maintain your GM New Vehicle Warranty.

Recycled original equipment parts may also be used for repair. These parts are typically removed from vehicles that were total losses in prior accidents. In most cases, the parts being recycled are from undamaged sections of the vehicle. A recycled original equipment GM part, may be an acceptable choice to maintain your vehicle's originally designed appearance and safety performance, however, the history of these parts is not known. Such parts are not covered by your GM New Vehicle Limited Warranty, and any related failures are not covered by that warranty.

Aftermarket collision parts are also available. These are made by companies other than GM and may not have been tested for your vehicle. As a result, these parts may fit poorly, exhibit premature durability/corrosion problems, and may not perform properly in subsequent collisions. Aftermarket parts are not covered by your GM New Vehicle Limited Warranty, and any vehicle failure related to such parts are not covered by that warranty.

Repair Facility

GM also recommends that you choose a collision repair facility that meets your needs before you ever need collision repairs. Your GM dealer may have a collision repair center with GM-trained technicians and state of the art equipment, or be able to recommend a collision repair center that has GM-trained technicians and comparable equipment.

Insuring Your Vehicle

Protect your investment in your GM vehicle with comprehensive and collision insurance coverage. There are significant differences in the quality of coverage afforded by various insurance policy terms. Many insurance policies provide reduced protection to your GM vehicle by limiting compensation for damage repairs by using aftermarket collision parts. Some insurance companies will not specify aftermarket collision parts. When purchasing insurance, we recommend that you assure your vehicle will be repaired with GM original equipment collision parts. If such insurance coverage is not available from your current insurance carrier, consider switching to another insurance carrier.

If your vehicle is leased, the leasing company may require you to have insurance that assures repairs with Genuine GM Original Equipment Manufacturer (OEM) parts or Genuine Manufacturer replacement parts. Read your lease carefully, as you may be charged at the end of your lease for poor quality repairs.

If an Accident Occurs

Here is what to do if you are involved in an accident.

- Try to relax and then check to make sure you are all right. If you are uninjured, make sure that no one else in your vehicle, or the other vehicle, is injured.
- If there has been an injury, call 911 for help. Do not leave the scene of an accident until all matters have been taken care of. Move your vehicle only if its position puts you in danger or you are instructed to move it by a police officer.
- Give only the necessary and requested information to police and other parties involved in the accident. Do not discuss your personal condition, mental frame of mind, or anything unrelated to the accident. This will help guard against post-accident legal action.
- If you need roadside assistance, call GM Roadside Assistance. See *Roadside Assistance Program on page 562* for more information.

- If your vehicle cannot be driven, know where the towing service will be taking it. Get a card from the tow truck operator or write down the driver's name, the service's name, and the phone number.
- Remove any valuables from your vehicle before it is towed away. Make sure this includes your insurance information and registration if you keep these items in your vehicle.
- Gather the important information you will need from the other driver. Things like name, address, phone number, driver's license number, vehicle license plate, vehicle make, model and model year, Vehicle Identification Number (VIN), insurance company and policy number, and a general description of the damage to the other vehicle.
- If possible, call your insurance company from the scene of the accident. They will walk you through the information they will need. If they ask for a police report, phone or go to the police department headquarters the next day and you can get a copy of the report for a nominal fee. In some states/provinces with "no fault" insurance laws, a report may not be necessary. This is especially true if there are no injuries and both vehicles are driveable.
- Choose a reputable collision repair facility for your vehicle. Whether you select a GM dealer or a private collision repair facility to fix the damage, make sure you are comfortable with them. Remember, you will have to feel comfortable with their work for a long time.
- Once you have an estimate, read it carefully and make sure you understand what work will be performed on your vehicle. If you have a question, ask for an explanation. Reputable shops welcome this opportunity.

Managing the Vehicle Damage Repair Process

In the event that your vehicle requires damage repairs, GM recommends that you take an active role in its repair. If you have a pre-determined repair facility of choice, take your vehicle there, or have it towed there. Specify to the facility that any required replacement collision parts be original equipment parts, either new Genuine GM parts or recycled original GM parts. Remember, recycled parts will not be covered by your GM vehicle warranty.

Insurance pays the bill for the repair, but you must live with the repair. Depending on your policy limits, your insurance company may initially value the repair using aftermarket parts. Discuss this with your repair professional, and insist on Genuine GM parts. Remember if your vehicle is leased you may be obligated to have the vehicle repaired with Genuine GM parts, even if your insurance coverage does not pay the full cost.

If another party's insurance company is paying for the repairs, you are not obligated to accept a repair valuation based on that insurance company's collision policy repair limits, as you have no contractual limits with that company. In such cases, you can have control of the repair and parts choices as long as cost stays within reasonable limits.

Reporting Safety Defects

Reporting Safety Defects to the United States Government

If you believe that your vehicle has a defect which could cause a crash or could cause injury or death, you should immediately inform the National Highway Traffic Safety Administration (NHTSA), in addition to notifying General Motors.

If NHTSA receives similar complaints, it may open an investigation, and if it finds that a safety defect exists in a group of vehicles, it may order a recall and remedy campaign. However, NHTSA cannot become involved in individual problems between you, your dealer, or General Motors.

To contact NHTSA, you may call the Vehicle Safety Hotline toll-free at 1-888-327-4236 (TTY: 1-800-424-9153); go to http://www.safercar.gov; or write to:

Administrator, NHTSA
400 Seventh Street, SW.
Washington, D.C. 20590

You can also obtain other information about motor vehicle safety from http://www.safercar.gov.

Reporting Safety Defects to the Canadian Government

If you live in Canada, and you believe that your vehicle has a safety defect, you should immediately notify Transport Canada, in addition to notifying General Motors of Canada Limited. You may call them at 1-800-333-0510 or write to:

Transport Canada
Road Safety Branch
2780 Sheffield Road
Ottawa, Ontario K1B 3V9

Reporting Safety Defects to General Motors

In addition to notifying NHTSA (or Transport Canada) in a situation like this, we certainly hope you will notify General Motors. Please call the Chevrolet Customer Assistance Center at 1-800-222-1020, or write:

Chevrolet Motor Division
Chevrolet Customer Assistance Center
P.O. Box 33170
Detroit, MI 48232-5170

In Canada, please call us at 1-800-263-3777 (English) or 1-800-263-7854 (French). Or, write:

General Motors of Canada Limited
Customer Communication Centre, CA1-163-005
1908 Colonel Sam Drive
Oshawa, Ontario L1H 8P7

Service Publications Ordering Information

Service Manuals

Service Manuals have the diagnosis and repair information on engines, transmission, axle suspension, brakes, electrical, steering, body, etc.

Transmission, Transaxle, Transfer Case Unit Repair Manual

This manual provides information on unit repair service procedures, adjustments, and specifications for GM transmissions, transaxles, and transfer cases.

Service Bulletins

Service Bulletins give technical service information needed to knowledgeably service General Motors cars and trucks. Each bulletin contains instructions to assist in the diagnosis and service of your vehicle.

In Canada, the service bulletin reference number can be obtained by contacting your General Motors dealer or by calling 1-800-GM-DRIVE (1-800-463-7483). This reference number is needed to order the service bulletin from Helm, Inc.

RETAIL SELL PRICE:
$6.00 US + Processing Fee

Owner Information

Owner publications are written specifically for owners and intended to provide basic operational information about the vehicle. The owner manual will include the Maintenance Schedule for all models.

In-Portfolio: Includes a Portfolio, Owner Manual, and Warranty Booklet.

RETAIL SELL PRICE:
$35.00 US + Processing Fee

Without Portfolio: Owner's Manual only.

RETAIL SELL PRICE:
$25.00 US + Processing Fee

Current and Past Model Order Forms

Technical Service Bulletins and Manuals are available for current and past model GM vehicles. To request an order form, please specify year and model name of the vehicle.

ORDER TOLL FREE: 1-800-551-4123
Monday-Friday 8:00 AM - 6:00 PM
Eastern Time

For Credit Card Orders Only (VISA-MasterCard-Discover), visit Helm, Inc. on the World Wide Web at: www.helminc.com

Or you can write to:

Helm, Incorporated
P.O. Box 07130
Detroit, MI 48207

Prices are subject to change without notice and without incurring obligation. Allow ample time for delivery.

Note to Canadian Customers: All listed prices are quoted in U.S. funds. Canadian residents are to make checks payable in U.S. funds.

NOTES

A

Accessories and Modifications 426
Accessory Inflator 496
Accessory Power Outlet(s) 214
Adding Equipment to Your
  Airbag-Equipped Vehicle 113
Additives, Fuel 430
Add-On Electrical Equipment 526
Air Cleaner/Filter, Engine 444
Air Conditioning 217, 220
Airbag
  Passenger Status Indicator 235
  Readiness Light 234
Airbag Sensing and Diagnostic
  Module (SDM) 567
Airbag System 96
  Adding Equipment to Your
    Airbag-Equipped Vehicle 113
  How Does an Airbag Restrain? 104
  Passenger Sensing System 106
  Servicing Your Airbag-Equipped Vehicle 112
  What Makes an Airbag Inflate? 103
  What Will You See After an
    Airbag Inflates? 104
Airbag System (cont.)
  When Should an Airbag Inflate? 101
  Where Are the Airbags? 99
Antenna, Fixed Mast 370
Antenna, XM™ Satellite Radio Antenna
  System 370
Anti-Lock Brake System (ABS) 377
Anti-Lock Brake, System Warning Light 239
Appearance Care
  Aluminum Wheels 523
  Care of Safety Belts and Built-in
    Child Restraint Harness 520
  Chemical Paint Spotting 524
  Child Restraint Pad 520
  Cleaning Exterior Lamps/Lenses 521
  Cleaning the Inside of Your Vehicle 517
  Fabric/Carpet 518
  Finish Care 522
  Finish Damage 524
  Instrument Panel, Vinyl, and Other
    Plastic Surfaces 520
  Leather 519
  Sheet Metal Damage 524
  Tires 523
  Underbody Maintenance 524

Appearance Care (cont.)
Vehicle Care/Appearance Materials 525
Washing Your Vehicle 521
Weatherstrips 521
Windshield, Backglass, and
Wiper Blades 522
Audio System(s) 284
Audio Steering Wheel Controls 367
Care of Your CD and DVD Player 369
Care of Your CDs and DVDs 369
Chime Level Adjustment 370
Fixed Mast Antenna 370
Mobile Digital Media System 345
Navigation/Radio System, see
Navigation Manual 309
Radio with CD 286
Rear Seat Audio (RSA) 340, 343
Setting the Time 285
Theft-Deterrent Feature 367
Understanding Radio Reception 368
XM™ Satellite Radio Antenna System 370
Automatic Door Lock 131
Automatic Transaxle
Fluid 445
Operation 155

B

Battery 465
Electric Power Management 210
Run-Down Protection 211
Before Leaving on a Long Trip 395
Brake
Anti-Lock Brake System (ABS) 377
Emergencies 379
Parking 159
System Warning Light 238
Brakes 462
Braking 376
Braking in Emergencies 379
Break-In, New Vehicle 150
Bucket Seats, Rear 13
Built-in Child Restraint 85
Bulb Replacement 471
Front Turn Signal, Parking and
Daytime Running Lamps 473
Halogen Bulbs 471
License Plate Lamps 475
Replacement Bulbs 475
Taillamps, Turn Signal, Stoplamps and
Back-up Lamps 473
Buying New Tires 490

C

Calibration 254
California Fuel 429
California Proposition 65 Warning 427
Canadian Owners 3
Capacities and Specifications 533
Captain Chairs, Rear 22
Carbon Monoxide 141, 163, 399, 412
Care of
  Safety Belts and Built-in Child Restraint Harness 520
  Your CD and DVD Player 369
  Your CDs and DVDs 369
Cargo Lamp 210
CD, MP3 301
Chains, Tire 496
Charging System Light 237
Check
  Engine Light 242
Checking Things Under the Hood 436
Chemical Paint Spotting 524
Child Restraints
  Built-In Child Restraint 85
  Child Restraint Systems 63
  Infants and Young Children 59
Child Restraints (cont.)
  Lower Anchors and Tethers for Children 70
  Older Children 56
  Securing a Child Restraint in a Rear Seat Position 77
  Securing a Child Restraint in the Right Front Seat Position 80
  Where to Put the Restraint 68
Chime Level Adjustment 370
Cigarette Lighter 216
Cleaning
  Aluminum Wheels 523
  Child Restraint Pad 520
  Exterior Lamps/Lenses 521
  Fabric/Carpet 518
  Finish Care 522
  Inside of Your Vehicle 517
  Instrument Panel, Vinyl, and Other Plastic Surfaces 520
  Leather 519
  Tires 523
  Underbody Maintenance 524
  Washing Your Vehicle 521
  Weatherstrips 521
  Windshield, Backglass, and Wiper Blades 522

Climate Control System 217
Air Filter, Passenger Compartment 228
Dual 220
Outlet Adjustment 223
Rear 224, 226
Collision Damage Repair 568
Comfort Guides, Rear Safety Belt 52
Compact Spare Tire 516
Compass 254
Content Theft-Deterrent 146
Control of a Vehicle 376
Convenience Center 186
Convenience Net 185, 186
Coolant
Engine Temperature Gage 241
Heater, Engine 154
Cooling System 454
Cruise Control 200
Cruise Control Light 247
Cupholder(s) 180
Customer Assistance Information
Courtesy Transportation 565
Customer Assistance for Text
Telephone (TTY) Users 560
Customer Assistance Offices 560
Customer Satisfaction Procedure 556
Customer Assistance Information (cont.)
GM Mobility Reimbursement Program 561
Reporting Safety Defects to
General Motors 573
Reporting Safety Defects to the
Canadian Government 573
Reporting Safety Defects to the
United States Government 573
Roadside Assistance Program 562
Service Publications Ordering
Information 574

D

Daytime Running Lamps/Automatic
Headlamp System 205
Defensive Driving 372
Delayed Lighting 208
Delayed Locking 130
DIC Compass 254
Disc, MP3 301
Doing Your Own Service Work 427
Dome Lamp 207
Door
Automatic Door Lock 131
Delayed Locking 130

Door (cont.)
Dual Sliding Doors 131
Locks 128
Power Door Locks 129
Power Sliding Door 134
Programmable Automatic Door Unlock 131
Driver
Position, Safety Belt 38
Driver Information Center (DIC) 249
DIC Operation and Displays 249
DIC Vehicle Personalization 275
DIC Warnings and Messages 256
Driving
At Night 388
City 393
Defensive 372
Drunken 373
Freeway 394
Hill and Mountain Roads 397
In Rain and on Wet Roads 390
Rocking Your Vehicle to Get it Out 404
Winter 399
Dual Climate Control System 220
DVD
Rear Seat Entertainment System 309, 324

E

Electric Power Management 210
Electrical System
Add-On Equipment 526
Fuses and Circuit Breakers 527
Headlamp Wiring 527
Instrument Panel Fuse Block 528
Power Windows and Other Power Options 527
Underhood Fuse Block 530
Windshield Wiper Fuses 527
Engine
Air Cleaner/Filter 444
Battery 465
Check and Service Engine Soon Light 242
Coolant 448
Coolant Heater 154
Coolant Temperature Gage 241
Drive Belt Routing 551
Engine Compartment Overview 438
Exhaust 163
Oil 439
Oil Life System 442
Overheated Protection Operating Mode 453
Overheating 451
Starting 152

Entry Lighting 208
Event Data Recorders (EDR) 567
Exit Lighting 209
Extender, Safety Belt 55
Exterior Lamps 204

F

Filter
  Engine Air Cleaner 444
Finish Damage 524
Fixed Mast Antenna 370
Flashers, Hazard Warning 194
Flash-to-Pass 197
Flat Tire 499
Flat Tire, Changing 500
Flat Tire, Storing 513
Fluid
  Automatic Transaxle 445
  Power Steering 459
  Windshield Washer 460
Folding Tray 183
Front Console Storage Area 183
Front Reading Lamps 209
Front Turn Signal, Parking and
  Daytime Running Lamps 473
Fuel 428
  Additives 430
  California Fuel 429
  E85 (85% Ethanol) 431
  Filling a Portable Fuel Container 435
  Filling Your Tank 433
  Fuels in Foreign Countries 432
  Gage 248
  Gasoline Octane 429
  Gasoline Specifications 429
  Low Warning Light 248
Fuses
  Fuses and Circuit Breakers 527
  Instrument Panel Fuse Block 528
  Underhood Fuse Block 530
  Windshield Wiper 527

G

Gage
Engine Coolant Temperature 241
Fuel 248
Speedometer 232
Tachometer 232
Garage Door Opener 169, 170
Gasoline
Octane 429
Specifications 429
Glove Box 180
GM Mobility Reimbursement Program 561

H

Hazard Warning Flashers 194
Head Restraints 13
Headlamp Wiring 527
Headlamps
Bulb Replacement 471
Daytime Running Lamps/Automatic
Headlamp System 205
Headlamps (cont.)
Flash-to-Pass 197
Halogen Bulbs 471
Headlamps and Sidemarker Lamps 471
High/Low Beam Changer 197
On Reminder 205
Wiper Activated 205
Headlamps and Sidemarker Lamps 471
Heated Seats 10
Heater 217, 220
Highbeam On Light 247
High-Speed Operation, Tires 486
Highway Hypnosis 396
Hill and Mountain Roads 397
Hood
Checking Things Under 436
Release 437
Horn 194
How to Use This Manual 4
How to Wear Safety Belts Properly 37

I

Ignition Positions 151
Infants and Young Children, Restraints 59
Inflation - Tire Pressure 485
Instrument Panel
  Overview 192
Instrument Panel (I/P)
  Brightness 206
  Cluster 231
Interior Lamps Control 207

J

Jump Starting 466

K

Keyless Entry System 120
Keys 119

L

Labeling, Tire Sidewall 478
Lamps
  Battery Run-Down Protection 211
  Cargo 210
  Dome 207
  Electric Power Management 210
  Exterior 204
  Front Reading 209
  Interior Control 207
  Rear Reading 209
LATCH System
  Child Restraints 70
Level Control 411
License Plate Lamps 475
Liftgate 141
Light
  Airbag Readiness 234
  Anti-Lock Brake System Warning 239
  Brake System Warning 238
  Charging System 237

Light (cont.)
Cruise Control 247
Highbeam On 247
Low Fuel Warning 248
Malfunction Indicator 242
Oil Pressure 246
Passenger Airbag Status Indicator 235
Passenger Safety Belt Reminder 233
Safety Belt Reminder 232
Security 247
TCS Warning Light 240
Traction Control System (TCS) Warning 240
Lighting
Delayed 208
Entry 208
Exit 209
Loading Your Vehicle 404
Lockout Protection 131
Locks
Automatic Door Lock 131
Delayed Locking 130
Door 128
Lockout Protection 131
Power Door 129
Programmable Automatic Door Unlock 131
Loss of Control 387
Low Fuel Warning Light 248
Luggage Carrier 184

M

Maintenance Schedule
Additional Required Services 542
At Each Fuel Fill 545
At Least Once a Month 545
At Least Once a Year 546
Introduction 536
Maintenance Footnotes 543
Maintenance Record 552
Maintenance Requirements 536
Normal Maintenance Replacement Parts 550
Owner Checks and Services 544
Recommended Fluids and Lubricants 548
Scheduled Maintenance 539
Using 537
Your Vehicle and the Environment 536
Malfunction Indicator Light 242
Manual Rear Quarter Windows 144
Manual Seats 9
Message
DIC Warnings and Messages 256
Mirrors
Manual Rearview Mirror 165
Outside Convex Mirror 166
Outside Heated Mirrors 166
Outside Power Mirrors 165

Mobile Digital Media System 345
MP3 301
MyGMLink.com 559

N

Navigation/Radio System, see
  Navigation Manual 309
New Vehicle Break-In 150
Normal Maintenance Replacement Parts 550

O

Odometer 232
Odometer, Trip 232
Off-Road Recovery 385
Oil
  Engine 439
  Pressure Light 246
Oil, Engine Oil Life System 442
Older Children, Restraints 56
Online Owner Center 559
OnStar® System, see OnStar® Manual 167
Other Warning Devices 194
Outlet Adjustment 223
Outlet(s), Accessory Power 214
Outside
  Convex Mirror 166
  Heated Mirrors 166
  Power Mirrors 165
Overhead Console 181
Overhead Console Switchbank 211
Overheated Engine Protection
  Operating Mode 453
Owner Checks and Services 544
Owners, Canadian 3

P

Paint, Damage 524
Park Aid 212
Park (P)
  Shifting Into 160
  Shifting Out of 161
Parking
  Assist 212
  Brake 159
  Over Things That Burn 162
Passenger Airbag Status Indicator 235
Passenger Compartment Air Filter 228
Passenger Sensing System 106
Passing 385

PASS-Key® III 148
PASS-Key® III Operation 148
Power
Accessory Outlet(s) 214
Door Locks 129
Electrical System 527
Outlet 115 Volt Alternating Current 215
Rear Quarter Windows 145
Retained Accessory (RAP) 152
Seat 10
Sliding Door 134
Steering Fluid 459
Windows 144
Pretensioners, Safety Belt 55
Programmable Automatic Door Unlock 131

Q

Questions and Answers About Safety Belts 36

R

Radiator Pressure Cap 451
Radios 284
Care of Your CD and DVD Player 369
Care of Your CDs and DVDs 369
Navigation/Radio System, see
Navigation Manual 309
Radio with CD 286
Rear Seat Audio 340, 343
Setting the Time 285
Theft-Deterrent 367
Understanding Reception 368
Rear Climate Control System 224, 226
Rear Reading Lamps 209
Rear Safety Belt Comfort Guides 52
Rear Seat Audio (RSA) 340, 343
Rear Seat Entertainment System 309, 324
Rear Seat Operation 13
Rear Seat Passengers, Safety Belts 48
Rear Windshield Washer/Wiper 199

Rearview Mirrors 165
Reclining Seatbacks 11
Recommended Fluids and Lubricants 548
Recreational Vehicle Towing 410
Remote Keyless Entry System 120
Remote Keyless Entry System, Operation 121
Removing the Flat Tire and
  Installing the Spare Tire 504
Removing the Spare Tire and Tools 501
Replacement Bulbs 475
Reporting Safety Defects
  Canadian Government 573
  General Motors 573
  United States Government 573
Restraint System Check
  Checking the Restraint Systems 114
  Replacing Restraint System Parts
    After a Crash 115
Retained Accessory Power (RAP) 152
Right Front Passenger Position,
  Safety Belts 48
Roadside
  Assistance Program 562
Rocking Your Vehicle to Get it Out 404
Routing, Engine Drive Belt 551
Running the Engine While Parked 164

S

Safety Belt
  Passenger Reminder Light 233
  Pretensioners 55
  Reminder Light 232
Safety Belts
  Care of Safety Belts and Built-in
    Child Restraint Harness 520
  Driver Position 38
  How to Wear Safety Belts Properly 37
  Questions and Answers About
    Safety Belts 36
  Rear Safety Belt Comfort Guides 52
  Rear Seat Passengers 48
  Right Front Passenger Position 48
  Safety Belt Extender 55
  Safety Belt Use During Pregnancy 48
  Safety Belts Are for Everyone 32
  Shoulder Belt Height Adjuster 47
Safety Warnings and Symbols 4
Scheduled Maintenance 539
Seats
  Bucket Seats, Rear 13
  Captain Chairs 22
  Head Restraints 13

Seats (cont.)
Heated Seats 10
Manual 9
Power Seats 10
Rear Seat Operation 13
Reclining Seatbacks 11
Third Row Seat 27
Second Row Center Console 183
Secondary Latch System 511
Securing a Child Restraint
Rear Seat Position 77
Right Front Seat Position 80
Security Light 247
Service 426
Accessories and Modifications 426
Adding Equipment to the Outside of Your Vehicle 428
California Proposition 65 Warning 427
Doing Your Own Work 427
Engine Soon Light 242
Publications Ordering Information 574
Servicing Your Airbag-Equipped Vehicle 112
Setting the Time 285
Sheet Metal Damage 524
Shifting Into Park (P) 160
Shifting Out of Park (P) 161
Shoulder Belt Height Adjuster 47
Signals, Turn and Lane-Change 196
Sliding Door, Power 134
Sliding Doors, Dual 131
Spare Tire
Accessory Inflator 496
Compact 516
Installing 504
Removing 501
Storing 513
Specifications, Capacities 533
Speedometer 232
StabiliTrak® System 381
Starting Your Engine 152
Steering 383
Steering Wheel Controls, Audio 367
Steering Wheel, Tilt Wheel 195
Storage Areas 180
Convenience Center 186
Convenience Net 185, 186
Cupholder(s) 180
Floor Console Storage Area 183
Folding Tray 183
Glove Box 180
Luggage Carrier 184
Overhead Console 181

Storage Areas (cont.)
Second Row Center Console 183
Stuck in Sand, Mud, Ice, or Snow 403
Sun Visors 145
Switchbanks
Overhead Console 211

T

Tachometer 232
Taillamps
Turn Signal, Stoplamps and Back-up Lamps 473
TCS Warning Light 240
Theft-Deterrent, Radio 367
Theft-Deterrent Systems 145
Content Theft-Deterrent 146
PASS-Key® III 148
PASS-Key® III Operation 148
Third Row Seat 27
Tilt Wheel 195
Tires 477
Aluminum Wheels, Cleaning 523
Buying New Tires 490
Chains 496
Tires (cont.)
Changing a Flat Tire 500
Cleaning 523
Compact Spare Tire 516
Different Size 492
High-Speed Operation 486
If a Tire Goes Flat 499
Inflation - Tire Pressure 485
Inflator, Accessory 496
Inspection and Rotation 487
Installing the Spare Tire 504
Removing the Flat Tire 504
Removing the Spare Tire and Tools 501
Secondary Latch System 511
Storing a Flat or Spare Tire and Tools 513
Tire Sidewall Labeling 478
Tire Terminology and Definitions 482
Uniform Tire Quality Grading 493
Wheel Alignment and Tire Balance 494
Wheel Replacement 494
When It Is Time for New Tires 489
Towing
Recreational Vehicle 410
Towing a Trailer 412
Your Vehicle 410

Traction
Control System (TCS) 379
Control System Warning Light 240
StabiliTrak® System 381
Transaxle
Fluid, Automatic 445
Transaxle Operation, Automatic 155
Trip Odometer 232
Turn and Lane-Change Signals 196
Turn Signal/Multifunction Lever 195

U

Ultrasonic Rear Parking Assist (URPA) 212
Understanding Radio Reception 368
Uniform Tire Quality Grading 493
Universal Home Remote System 169, 170
Operation 171, 176

V

Vehicle
Control 376
Damage Warnings 5
Loading 404
Symbols 5
Vehicle Data Collection and
Event Data Recorders 567
Vehicle Identification
Number (VIN) 526
Service Parts Identification Label 526
Vehicle Personalization
DIC 275
Ventilation Adjustment 223
Visors 145

W

Warning Lights, Gages and Indicators 230
Warnings
DIC Warnings and Messages 256
Hazard Warning Flashers 194
Other Warning Devices 194
Safety and Symbols 4
Vehicle Damage 5
Wheels
Alignment and Tire Balance 494
Different Size 492
Replacement 494
Where to Put the Restraint 68
Windows 143
Manual Rear Quarter 144
Power 144
Power Rear Quarter 145
Windshield
Backglass, and Wiper Blades, Cleaning 522
Washer 198
Washer Fluid 460
Wiper Blade Replacement 476
Wiper Fuses 527
Wipers 197
Windshield, Rear Washer/Wiper 199
Winter Driving 399
Wiper Activated Headlamps 205

X

XM Radio Messages 307
XM™ Satellite Radio Antenna System 370

Y

Your Vehicle and the Environment 536