Protected by copyright. Copying for private or commercial purposes, in part or in whole, is not permitted unless authorised by AUDI AG. AUDI AG does not guarantee or accept any liability with respect to the correctness of information in this document. Copyright by AUDI AG.

Workshop Manual

Audi A3 2013 ➤ ,
Audi A3 Limousine 2014 ➤ ,
Audi A3 Limousine China 2014 ➤ ,
Audi A3 Sportback 2013 ➤ ,
Audi A3 Sportback China 2014 ➤

Brake system

Edition 03.2019

List of Workshop Manual Repair Groups

Repair Group

00 - Technical data
45 - Anti-lock brake system
46 - Brakes - mechanism
47 - Brakes - hydraulics

Protected by copyright. Copying for private or commercial purposes, in part or in whole, is not permitted unless authorised by AUDI AG. AUDI AG does not guarantee or accept any liability with respect to the correctness of information in this document. Copyright by AUDI AG.

Technical information should always be available to the foremen and mechanics, because their careful and constant adherence to the instructions is essential to ensure vehicle road-worthiness and safety. In addition, the normal basic safety precautions for working on motor vehicles must, as a matter of course, be observed.

All rights reserved.
No reproduction without prior agreement from publisher.

Copyright © 2019 Audi AG, Ingolstadt

D3E804C3029

Contents

00 - Technical data . . . 1

1 **Identification** . . . 1
1.1 PR number and type of brake system . . . 1
2 **Safety precautions** . . . 2
2.1 Safety precautions when working on vehicles with high-voltage system . . . 2
2.2 Safety precautions when using testers and measuring instruments during a road test . . . 6
3 **Repair notes** . . . 7
3.1 Rules for cleanliness . . . 7
3.2 General repair instructions . . . 7
3.3 Contact corrosion . . . 7
4 **Technical data** . . . 8
4.1 Technical data for brakes . . . 8
5 **Assessing degree of wear on ceramic brake discs** . . . 13
5.1 Assessing degree of wear on ceramic brake discs . . . 13
5.2 Wear assessment of ceramic brake disc with tester VAS 6813 . . . 19
6 **Brake test** . . . 25
6.1 General notes on brake test . . . 25
6.2 Testing vehicles with front-wheel drive . . . 25
6.3 Testing vehicles with four-wheel drive . . . 25
6.4 Testing parking brake . . . 26

45 - Anti-lock brake system . . . 27

1 **General notes** . . . 27
1.1 Notes for repair work on the ABS . . . 27
2 **Overview of fitting locations** . . . 28
2.1 Overview of fitting locations - ABS/ESP . . . 28
3 **Control unit and hydraulic unit** . . . 30
3.1 Exploded view - control unit and hydraulic unit . . . 30
3.2 Removing and installing ABS control unit J104 / ABS hydraulic unit N55 . . . 32
3.3 Separating control unit from hydraulic unit . . . 53
3.4 Attaching control unit to hydraulic unit . . . 55
4 **Sensors** . . . 58
4.1 Exploded view - front wheel speed sensor . . . 58
4.2 Exploded view - rear wheel speed sensor . . . 59
4.3 Removing and installing brake light switch . . . 61
4.4 Removing and installing front wheel speed sensor G45 / G47 . . . 63
4.5 Removing and installing rear wheel speed sensor G44 / G46 . . . 64
4.6 Checking ABS speed sensor ring . . . 66

46 - Brakes - mechanism . . . 68

1 **Front brakes** . . . 68
1.1 Exploded view - front brakes . . . 68
1.2 Vibration dampers on brake caliper . . . 75
1.3 Removing and installing brake pads . . . 77
1.4 Removing and installing brake caliper . . . 88
1.5 Renewing brake caliper . . . 96
1.6 Removing and installing brake carrier . . . 108
1.7 Removing and installing brake disc . . . 110
1.8 Removing and installing splash plate . . . 112
2 **Rear brakes** . . . 114
2.1 Exploded view - rear brakes . . . 114

Protected by copyright. Copying for private or commercial purposes, in part or in whole, is not permitted unless authorised by AUDI AG. AUDI AG does not guarantee or accept any liability with respect to the correctness of information in this document. Copyright by AUDI AG.

2.2 Removing and installing brake pads . . . 118
2.3 Removing and installing brake caliper . . . 126
2.4 Renewing brake caliper . . . 130
2.5 Removing and installing brake carrier . . . 134
2.6 Removing and installing brake disc . . . 137
2.7 Removing and installing splash plate . . . 139

3 Parking brake . . . 141
3.1 Exploded view - parking brake . . . 141
3.2 Removing and installing parking brake motor V282 / V283 . . . 142
3.3 Releasing parking brake manually . . . 145

4 Brake pedal . . . 147
4.1 Exploded view - brake pedal . . . 147
4.2 Separating brake pedal from brake servo . . . 149
4.3 Connecting brake pedal to brake servo . . . 150
4.4 Removing and installing brake pedal . . . 150
4.5 Removing and installing mounting bracket . . . 152

47 - Brakes - hydraulics . . . 154

1 Front brake caliper . . . 154
1.1 Exploded view - front brake caliper . . . 154
1.2 Removing and installing brake caliper piston . . . 155
1.3 Renewing bearing bushes and guide pins . . . 161

2 Rear brake caliper . . . 162
2.1 Exploded view - rear brake caliper . . . 162
2.2 Removing and installing protective cap . . . 162
2.3 Renewing bearing bushes and guide pins . . . 164

3 Brake servo / brake master cylinder . . . 166
3.1 Exploded view - brake servo / brake master cylinder . . . 166
3.2 Removing and installing brake servo . . . 171
3.3 Removing and installing brake master cylinder . . . 182
3.4 Removing and installing brake fluid reservoir . . . 188
3.5 Removing and installing brake fluid level warning contact F34 . . . 197
3.6 Removing and installing brake system pressure accumulator VX70 . . . 197

4 Vacuum system . . . 202
4.1 Exploded view - electric vacuum pump . . . 202
4.2 Exploded view - vacuum pump . . . 207
4.3 Checking non-return valve . . . 209
4.4 Removing and installing non-return valve . . . 210
4.5 Removing and installing vacuum sender G608 . . . 213
4.6 Checking vacuum system . . . 214
4.7 Removing and installing electric vacuum pump . . . 218
4.8 Removing and installing vacuum pump . . . 222

5 Brake lines . . . 228
5.1 Connection points . . . 228
5.2 Repairing brake lines . . . 228

6 Hydraulic system . . . 233
6.1 General notes on brake fluid . . . 233
6.2 Bleeding hydraulic system . . . 235
6.3 Pre-bleeding brake system pressure accumulator VX70 . . . 243
6.4 Leak test . . . 244

Protected by copyright. Copying for private or commercial purposes, in part or in whole, is not permitted unless authorised by AUDI AG. AUDI AG does not guarantee or accept any liability with respect to the correctness of information in this document. Copyright by AUDI AG.

00 – Technical data

1 Identification

(ARL006361; Edition 03.2019)

⇒ “1.1 PR number and type of brake system”, page 1

Protected by copyright. Copying for private or commercial purposes, in part or in whole, is not permitted unless authorised by AUDI AG. AUDI AG does not guarantee or accept any liability with respect to the correctness of information in this document. Copyright by AUDI AG.

1.1 PR number and type of brake system

Vehicle data sticker (example)

The type of brake system installed in the vehicle is indicated among other things by the corresponding PR number on the vehicle data sticker.

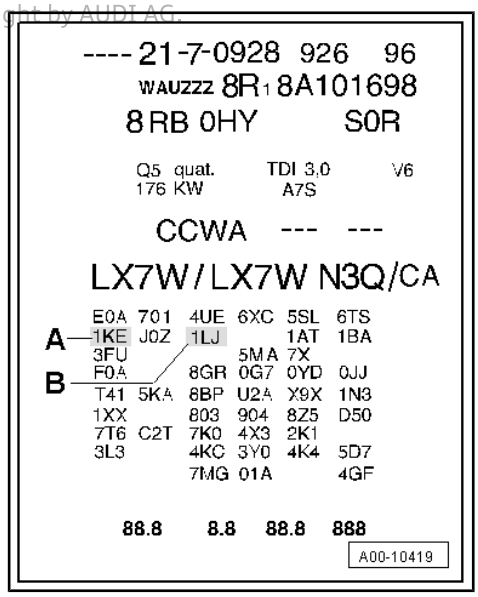

- Example of a vehicle data sticker:

A - Rear brakes (example)

B - Front brakes (example)

Location of vehicle data sticker ⇒ Maintenance ; Booklet 821 ; General information; Vehicle data sticker

Information showing the type of brake installed can also be found in ELSA.

- For correct version refer to ⇒ Electronic parts catalogue “ETKA”
- The tables explain the PR numbers. These are important to obtain the correct combination of brake calipers/brake discs and brake pads ⇒ “4 Technical data”, page 8 .

2 Safety precautions

⇒ “2.1 Safety precautions when working on vehicles with high-voltage system”, page 2

⇒ “2.2 Safety precautions when using testers and measuring instruments during a road test”, page 6

2.1 Safety precautions when working on vehicles with high-voltage system

⇒ “2.1.1 General safety precautions when working on the high-voltage system”, page 2

⇒ “2.1.2 Safety precautions when performing work on the high-voltage system that requires the system to be de-energised”, page 3

⇒ “2.1.3 Safety precautions for re-energising high-voltage system”, page 4

⇒ “2.1.4 Safety precautions when working in the vicinity of high-voltage components”, page 4

⇒ “2.1.5 Safety precautions when performing work on the high-voltage system that requires the ignition to be switched on”, page 5

⇒ “2.1.6 Safety precautions when performing work on the high-voltage system for which the ignition must NOT be switched on”, page 6

This document is subject to copyright. Copying for private or commercial purposes, in part or in whole, is not permitted. AUDI AG does not guarantee or accept any liability with respect to the correctness of information in this document. Copyright by AUDI AG.

2.1.1 General safety precautions when working on the high-voltage system

Note

In the event of queries or uncertainty regarding the terms “high-voltage technician”, “high-voltage expert” or the high-voltage system itself, the relevant importer must be contacted prior to the start of all work.

DANGER!

High voltage! Danger to life!

- *The voltage levels in the high-voltage system constitute a safety hazard. Danger of severe or fatal injuries from electric shock.*
- *Persons with life-sustaining or other electronic medical devices in or on their body must not perform any work on the high-voltage system. Such medical devices include internal analgesic pumps, implanted defibrillators, pacemakers, insulin pumps and hearing aids.*
- *The high-voltage system must be de-energised by a suitably qualified person.*

DANGER!

Safety hazard: the engine can start unexpectedly.

- *It is difficult to determine whether the drive system of an electric vehicle or hybrid vehicle is active. Moving parts can trap or draw in parts of the body and/or clothing (safety hazard).*
- *Switch off ignition.*
- *Place ignition key outside vehicle interior.*

DANGER!

Working on vehicles with high-voltage wiring:

- *Never use high-voltage wiring or high-voltage connectors as a support --> risk of damage to insulation.*
- *Never prop tools against high-voltage wiring or high-voltage connectors --> risk of damage to insulation.*
- *Never bend or kink high-voltage wiring --> risk of damage to insulation.*
- *Pay attention to coding when connecting high-voltage connections.*

2.1.2 Safety precautions when performing work on the high-voltage system that requires the system to be de-energised

The high-voltage system must be de-energised according to the “Guided Fault Finding” routine, and ONLY by this method ⇒ Rep. gr. 93 ; De-energising high-voltage system .

For the types of work for which the high-voltage system has to be de-energised, refer to ⇒ Rep. gr. 00 ; Assessing high-voltage system risk level .

DANGER!

High voltage can cause fatal injury.

Danger of severe or fatal injuries from electric shock.

- *The high-voltage system may only be de-energised by a suitably qualified person (Audi high-voltage technician).*
- *It must be definitely confirmed that the high-voltage system is de-energised. The system may only be de-energised using the vehicle diagnostic tester via “Guided Fault Finding”.*
- *The qualified person (Audi high-voltage technician) confirms that the system is de-energised and uses the padlock - T40262/1- to ensure that the system cannot be re-energised. The ignition key and the key to the padlock - T40262/1- are then stored in a safe place by the qualified person.*
- *The qualified person (Audi high-voltage technician) marks the vehicle by attaching the appropriate warning signs.*

Protected by copyright. Copying for private or commercial purposes, in part or in whole, is not permitted unless authorised by AUDI AG. AUDI AG does not guarantee or accept any liability with respect to the correctness of information in this document. Copyright by AUDI AG.

2.1.3 Safety precautions for re-energising high-voltage system

The high-voltage system must be re-energised according to the “Guided Fault Finding” routine and ONLY by this method ⇒ Rep. gr. 93 ; Re-energising high-voltage system .

DANGER!

High voltage can cause fatal injury.

Danger of severe or fatal injuries from electric shock.

- *The high-voltage system may only be re-energised by a suitably qualified person (Audi high-voltage technician).*
- *The system may only be re-energised using the vehicle diagnostic tester via “Guided Fault Finding”.*
- *The vehicle is then made ready for operation again by the qualified person (Audi high-voltage technician).*
- *The qualified person (Audi high-voltage technician) marks the vehicle by attaching the appropriate warning signs.*

2.1.4 Safety precautions when working in the vicinity of high-voltage components

For the types of work for which the high-voltage system has to be de-energised, refer to ⇒ Rep. gr. 00 ; Assessing high-voltage system risk level .

Protected by copyright. Copying for private or commercial purposes, in part or in whole, is not permitted unless authorised by AUDI AG. AUDI AG does not guarantee or accept any liability with respect to the correctness of information in this document. Copyright by AUDI AG.

DANGER!

Risk of fatal injury if high-voltage components are damaged.

- *The voltage levels in the high-voltage system constitute a safety hazard. Danger of severe or fatal injuries from electric shock if high-voltage components or high-voltage wiring are damaged.*
- *It is not permitted to use cutting or forming tools, or other sharp-edged implements.*
- *Heat sources such as welding, brazing, soldering, hot air or thermal bonding equipment are not permitted.*
- *Before starting work, visually inspect the high-voltage components in the areas involved.*
- *Before working in the engine compartment, visually inspect the maintenance connector for high-voltage system, the power and control electronics for electric drive, electric drive motor, air conditioner compressor, control unit for high-voltage battery charger and high-voltage wiring.*
- *Before working on the vehicle underbody, visually inspect the PTC heating element for high-voltage vehicles, the hybrid battery unit and the high-voltage wiring and covers.*
- *Visually inspect all potential equalisation lines.*

Check the following when making the visual inspection:

- *There must be no external damage on any component.*
- *The insulation of the high-voltage wiring and potential equalisation lines must not be damaged.*
- *There must be no unusual deformation of the high-voltage wiring.*
- *All high-voltage components must be identified by a red warning sticker.*

Protected by copyright. Copying for private or commercial purposes, in part or in whole, is not permitted unless authorised by AUDI AG. AUDI AG does not guarantee or accept any liability with respect to the correctness of information in this document. Copyright by AUDI AG.

2.1.5 Safety precautions when performing work on the high-voltage system that requires the ignition to be switched on

DANGER!

When working on a vehicle with the ignition switched on or while the drive system is active, the engine can start unexpectedly and exhaust fumes can cause a health hazard in closed rooms. Moving parts can trap or draw in parts of the body and/or clothing (safety hazard).

Before switching on the ignition, perform the following steps:

- *Move selector lever to position P*
- *Activate parking brake*
- *Switch off ignition*
- *Open bonnet*
- *Connect 12 V battery charger to jump start terminals of 12 V electrical system*
- *Switch on ignition*

2.1.6 Safety precautions when performing work on the high-voltage system for which the ignition must NOT be switched on

DANGER!

Safety hazard: the engine can start unexpectedly.

- *It is difficult to determine whether the drive system of an electric vehicle or hybrid vehicle is active. Moving parts can trap or draw in parts of the body and/or clothing (safety hazard).*
- *Switch off ignition.*
- *Place ignition key outside vehicle interior.*

2.2 Safety precautions when using testers and measuring instruments during a road test

Please note the following if test and measuring equipment has to be used during a road test:

WARNING

Accidents can be caused if the driver is distracted by test equipment or if test equipment is not secured.

There is a risk of injury if the passenger's airbag is triggered during an accident.

- *The operation of test and measuring equipment during a road test distracts the driver's attention.*
- *There is an increased risk of injury if test and measuring equipment is not secured.*
- *All test equipment must be secured on the rear seat with a belt and operated by a 2nd person from this location.*

Protected by copyright. Copying for private or commercial purposes, in part or in whole, is not permitted unless authorized by AUDI AG. AUDI AG does not guarantee or accept any liability with respect to the correctness of information in this document. Copyright by AUDI AG.

3 Repair notes

⇒ “3.1 Rules for cleanliness”, page 7

⇒ “3.2 General repair instructions”, page 7

⇒ “3.3 Contact corrosion”, page 7

3.1 Rules for cleanliness

- Absolute cleanliness is required when working on the anti-lock brake system; avoid any products that contain mineral oil, such as oil, grease, etc.
- Thoroughly clean all connections and the adjacent areas before loosening, but do not use aggressive cleaning agents such as brake cleaner, petrol, thinners or similar.
- After removal, place parts on a clean surface and cover them.
- If repairs cannot be completed immediately, carefully cover or seal open components (use sealing plugs from assembly parts set - 5Q0 698 311-).
- Only use lint-free cloths.
- Only remove replacement parts from packaging immediately prior to installation.
- Only use genuine spare parts from original packaging.
- When the system is open, do not work with compressed air and do not move the vehicle.
- Ensure that no brake fluid enters electrical connectors.

3.2 General repair instructions

- Clean bolts and nuts before reusing.
- Always renew damaged bolts/nuts.
- Always renew self-locking bolts/nuts.
- When performing repair work on brakes, hairline cracks are often found on the friction surface of the brake discs. Hairline cracks up to a length of 10 mm do not present a technical problem and do not justify a renewal of brake discs.
- Brake discs and pads with cracks going all the way across the friction surface must be renewed.

Protected by copyright. Copying for private or commercial purposes, in part or in whole, is not permitted unless authorised by AUDI AG. AUDI AG does not guarantee or accept any liability with respect to the correctness of information in this document. Copyright by AUDI AG.

3.3 Contact corrosion

Contact corrosion can occur if unsuitable fasteners are used (e.g. bolts, nuts, washers, etc.).

For this reason, only fasteners with a special surface coating are fitted.

In addition, rubber parts, plastic parts and adhesives are made of non-conductive material.

Always install new parts as listed in the ⇒ Electronic parts catalogue “ETKA” if you are unsure of the suitability of parts.

Please note:

- We recommend using only genuine replacement parts; these have been tested and are compatible with aluminium.
- We recommend using Audi Genuine Accessories.
- Damage caused by contact corrosion is not covered by the warranty.

4 Technical data

⇒ “4.1 Technical data for brakes”, page 8

4.1 Technical data for brakes

Front brakes

PR No.		1ZF (15" brakes)
Brake caliper		Continental Teves FS III
Brake disc	∅ mm	276
Thickness when new	mm	24
Wear limit	mm	21

Note

- *Maximum lateral run-out of steel brake disc: 0.06 mm*
- *Perform measurement with brake disc installed.*
- *Use dial gauge bracket VAS 6079/1 and dial gauge VAS 6079.*
- *Remove any dirt and rust from brake disc.*
- *Perform measurement 10 mm from outer edge of brake disc.*

Wear limits of brake pads ⇒ Maintenance ; Booklet 821 ; Maintenance; Brake pads: checking thickness

⇒ “1.1.1 Exploded view - front brakes (1ZF)”, page 68

PR No.		1ZE/1ZP (15" brakes)
Brake caliper		PC-57
Brake disc	∅ mm	288
Thickness when new	mm	25
Wear limit	mm	22

Note

- *Maximum lateral run-out of steel brake disc: 0.06 mm*
- *Perform measurement with brake disc installed.*
- *Use dial gauge bracket VAS 6079/1 and dial gauge VAS 6079.*
- *Remove any dirt and rust from brake disc.*
- *Perform measurement 10 mm from outer edge of brake disc.*

Wear limits of brake pads ⇒ Maintenance ; Booklet 821 ; Maintenance; Brake pads: checking thickness

⇒ “1.1.2 Exploded view - front brakes (1LB/1LC/1LJ/1ZA/1ZD/1ZE/1ZP)”, page 70

Protected by copyright. Copying for private or commercial purposes, in part or in whole, is not permitted unless authorised by AUDI AG. AUDI AG does not guarantee or accept any liability with respect to the correctness of information in this document. Copyright by AUDI AG.

PR No.		1ZA/1ZD (16" brakes)
Brake caliper		PC-57
Brake disc	∅ mm	312
Thickness when new	mm	25

PR No.		1ZA/1ZD (16" brakes)
Wear limit	mm	22

Protected by copyright. Copying for private or commercial purposes, in part or in whole, is not permitted unless authorised by AUDI AG. AUDI AG does not guarantee or accept any liability with respect to the correctness of information in this document. Copyright by AUDI AG.

Note

- *Maximum lateral run-out of steel brake disc: 0.06 mm*
- *Perform measurement with brake disc installed.*
- *Use dial gauge bracket VAS 6079/1 and dial gauge VAS 6079.*
- *Remove any dirt and rust from brake disc.*
- *Perform measurement 10 mm from outer edge of brake disc.*

Wear limits of brake pads ⇒ Maintenance ; Booklet 821 ; Maintenance; Brake pads: checking thickness

⇒ "1.1.2 Exploded view - front brakes (1LB/1LC/1LJ/1ZA/1ZD/1ZE/1ZP)", page 70

PR No.		1LB/1LC/1LJ, S3 (17" brakes)
Brake caliper		PC-60
Brake disc	∅ mm	340
Thickness when new	mm	30
Wear limit	mm	27

Note

- *Maximum lateral run-out of steel brake disc: 0.06 mm*
- *Perform measurement with brake disc installed.*
- *Use dial gauge bracket VAS 6079/1 and dial gauge VAS 6079.*
- *Remove any dirt and rust from brake disc.*
- *Perform measurement 10 mm from outer edge of brake disc.*

Wear limits of brake pads ⇒ Maintenance ; Booklet 821 ; Maintenance; Brake pads: checking thickness

⇒ "1.1.2 Exploded view - front brakes (1LB/1LC/1LJ/1ZA/1ZD/1ZE/1ZP)", page 70

PR No.		1LH, 1LU, 1LL, 1LN, RS3 (19" brakes)
Brake caliper		Brembo
Brake disc	∅ mm	370
Thickness when new	mm	34
Wear limit	mm	32.4

Note

- *Maximum lateral run-out of steel brake disc: 0.06 mm*
- *Perform measurement with brake disc installed.*
- *Use dial gauge bracket VAS 6079/1 and dial gauge VAS 6079.*
- *Remove any dirt and rust from brake disc.*
- *Perform measurement 10 mm from outer edge of brake disc.*

Wear limits of brake pads ⇒ Maintenance ; Booklet 821 ; Maintenance; Brake pads: checking thickness

⇒ "1.1.3 Exploded view - front brakes, RS 3 (1LF/1LH/1LL/1LN/1LU)", page 73

Protected by copyright. Copying for private or commercial purposes, in part or in whole, is not permitted unless authorised by AUDI AG. AUDI AG does not guarantee or accept any liability with respect to the correctness of information in this document. Copyright by AUDI AG.

Front brakes, ceramic version [1]		
Brake		Brembo
PR No.		1LF
Brake disc, ventilated	∅ mm	370
Brake disc, thickness (new)	mm	34
Brake disc, wear limit	mm	Assessing degree of wear ⇒ page 13
Brake pads, wear limit	mm	⇒ Maintenance ; Booklet 821 ; Maintenance work; Brake pads: checking thickness

1) Only installed at front

2) For correct version refer to ⇒ Electronic parts catalogue "ETKA"

⇒ "1.1.3 Exploded view - front brakes, RS 3 (1LF/1LH/1LL/1LN/1LU)", page 73

Rear brakes

PR No.		1KE/1KR
Brake disc	∅ mm	272
Thickness when new	mm	10
Wear limit	mm	8

Note

- *Maximum lateral run-out of steel brake disc: 0.06 mm*
- *Perform measurement with brake disc installed.*
- *Use dial gauge bracket VAS 6079/1 and dial gauge VAS 6079.*
- *Remove any dirt and rust from brake disc.*
- *Perform measurement 10 mm from outer edge of brake disc.*

Wear limits of brake pads ⇒ Maintenance ; Booklet 821 ; Maintenance; Brake pads: checking thickness

⇒ "2.1 Exploded view - rear brakes", page 114

PR No.		1KU
Brake disc	∅ mm	282

PR No.		1KU
Thickness when new	mm	12
Wear limit	mm	10

Note

- *Maximum lateral run-out of steel brake disc: 0.06 mm*
- *Perform measurement with brake disc installed.*
- *Use dial gauge bracket VAS 6079/1 and dial gauge VAS 6079.*
- *Remove any dirt and rust from brake disc.*
- *Perform measurement 10 mm from outer edge of brake disc.*

Wear limits of brake pads ⇒ Maintenance ; Booklet 821 ; Maintenance; Brake pads: checking thickness

⇒ "2.1 Exploded view - rear brakes", page 114

PR No.		2ED
Brake disc	∅ mm	300
Thickness when new	mm	12
Wear limit	mm	10

Note

- *Maximum lateral run-out of steel brake disc: 0.06 mm*
- *Perform measurement with brake disc installed.*
- *Use dial gauge bracket VAS 6079/1 and dial gauge VAS 6079.*
- *Remove any dirt and rust from brake disc.*
- *Perform measurement 10 mm from outer edge of brake disc.*

Wear limits of brake pads ⇒ Maintenance ; Booklet 821 ; Maintenance; Brake pads: checking thickness

⇒ "2.1 Exploded view - rear brakes", page 114

PR No.		1KY/1KJ/1KZ
Brake disc	∅ mm	310
Thickness when new	mm	22
Wear limit	mm	20

Note

- *Maximum lateral run-out of steel brake disc: 0.06 mm*
- *Perform measurement with brake disc installed.*
- *Use dial gauge bracket VAS 6079/1 and dial gauge VAS 6079.*
- *Remove any dirt and rust from brake disc.*
- *Perform measurement 10 mm from outer edge of brake disc.*

Protected by copyright. Copying for private or commercial purposes, in part or in whole, is not permitted unless authorised by AUDI AG. AUDI AG does not guarantee or accept any liability with respect to the correctness of information in this document. Copyright by AUDI AG.

Wear limits of brake pads ⇒ Maintenance ; Booklet 821 ; Maintenance; Brake pads: checking thickness

⇒ "2.1 Exploded view - rear brakes", page 114

PR No.		1KX/2EE
Brake disc	∅ mm	310
Thickness when new	mm	22
Wear limit	mm	20

Note

- *Maximum lateral run-out of steel brake disc: 0.06 mm*
- *Perform measurement with brake disc installed.*
- *Use dial gauge bracket VAS 6079/1 and dial gauge VAS 6079.*
- *Remove any dirt and rust from brake disc.*
- *Perform measurement 10 mm from outer edge of brake disc.*

Wear limits of brake pads ⇒ Maintenance ; Booklet 821 ; Maintenance; Brake pads: checking thickness

⇒ "2.1 Exploded view - rear brakes", page 114

Protected by copyright. Copying for private or commercial purposes, in part or in whole, is not permitted unless authorised by AUDI AG. AUDI AG does not guarantee or accept any liability with respect to the correctness of information in this document. Copyright by AUDI AG.

5 Assessing degree of wear on ceramic brake discs

⇒ “5.1 Assessing degree of wear on ceramic brake discs”, page 13

5.1 Assessing degree of wear on ceramic brake discs

On this model ceramic brake discs are installed on the front axle only.

⇒ “5.1.1 Assessing degree of wear”, page 13

5.1.1 Assessing degree of wear

WARNING

If one brake disc is damaged or worn, the other discs must also be checked for damage and wear.

– The brake disc must first be cleaned before assessing the degree of wear as described below.

Note

The brake disc ventilation drillings must be completely free of brake dust and dirt. Clear out carefully with a suitable tool if necessary. Do not use force.

WARNING

Risk to health

- *Always observe respiratory protection requirements when cleaning ceramic brake discs using compressed air.*

Protected by copyright. Copyies for private or commercial purposes, in part or in whole, is not permitted unless authorised by AUDI AG. AUDI AG does not guarantee or accept any liability with respect to the correctness of information in this document. Copyright by AUDI AG.

– Thoroughly blow out the brake discs with compressed air (including the area between the cooling channels and ventilation drillings).

– To assess the brake disc wear, proceed as follows:

- 1. ⇒ “5.1.2 Wear assessment by checking thickness of brake disc”, page 14
- 2. ⇒ “5.1.4 Wear assessment by weighing brake disc”, page 16

Note

- *Depending on the version, the minimum permissible weight for a used brake disc is stamped on the brake disc hub.*
- *⇒ “5.1.3 Wear assessment by checking thickness of brake disc (if minimum weight is stamped on hub)”, page 15*
- *⇒ “5.1.5 Wear assessment by weighing brake disc (if minimum weight is stamped on hub)”, page 18*

1. ⇒ “5.1.2 Wear assessment by checking thickness of brake disc”, page 14	
Thickness of brake discs in permissible range → brake disc OK	
Brake disc thickness in critical range min. th + 0.2 mm	Value at or below limit
↓↓	↓↓
Further wear assessment according to wear indicators	Renew brake disc
↓↓	----------
2. ⇒ “5.2 Wear assessment of ceramic brake disc with tester VAS 6813 ”, page 19	

WARNING

Accident risk (insufficient braking effect)

- *Ceramic brake discs must be renewed when one of the wear limits defined below has been reached. It is no longer permissible to use these brake discs.*

If one brake disc is damaged or worn, the other discs must also be checked for damage and wear.

5.1.2 Wear assessment by checking thickness of brake disc

Note

- *New measurement tolerance of +0.05 mm for brake discs with “min. weight” stamped on the hub*
- *⇒ “5.1.3 Wear assessment by checking thickness of brake disc (if minimum weight is stamped on hub)”, page 15*

Special tools and workshop equipment required

- Commercially available caliper gauge or micrometer gauge

Protected by copyright. Copying for private or commercial purposes, in part or in whole, is not permitted unless authorised by AUDI AG. AUDI AG does not guarantee or accept any liability with respect to the correctness of information in this document. Copyright by AUDI AG.

Procedure

Example illustration

- The minimum permissible thickness of the brake disc is engraved as “min.th.” -item 3- on the brake disc hub.

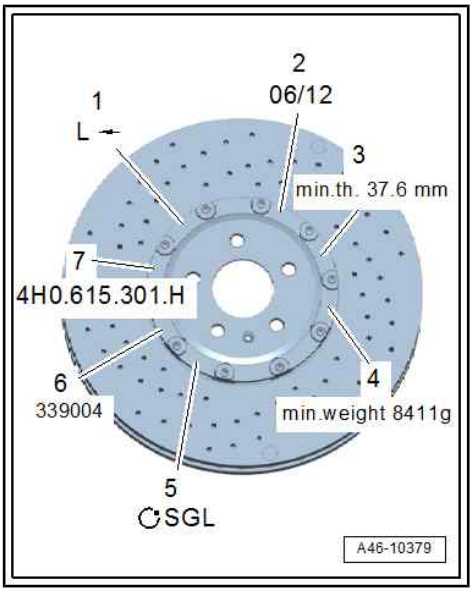

– Measure the thickness -x- of the brake disc next to each wear indicator all around the brake disc (three times).

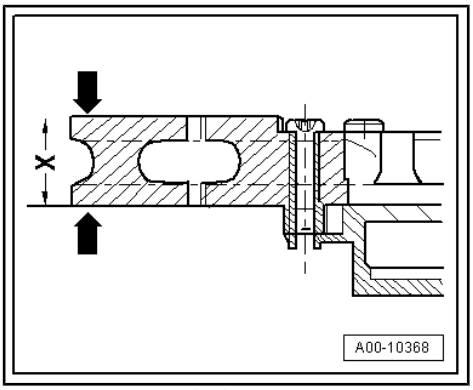

Note

- *New measurement tolerance of 0.05 mm for brake discs with “min. weight” stamped on the hub*
- *⇒ “5.1.5 Wear assessment by weighing brake disc (if minimum weight is stamped on hub)”, page 18* .

WARNING

Accident risk (insufficient braking effect)

- ***Ceramic brake discs must be renewed when one of the wear limits defined below has been reached. It is no longer permissible to use these brake discs.***

If one brake disc is damaged or worn, the other discs must also be checked for damage and wear.

Protected by copyright. Copying for private or commercial purposes, in part or in whole, is not permitted unless authorised by AUDI AG. AUDI AG does not guarantee or accept any liability with respect to the correctness of information in this document. Copyright by AUDI AG.

5.1.3 Wear assessment by checking thickness of brake disc (if minimum weight is stamped on hub)

Note

The minimum weight of the brake disc is stamped onto the brake disc hub; the tolerance for the thickness of the disc is only +0.05 mm.

Special tools and workshop equipment required

- Commercially available caliper gauge or micrometer gauge

Procedure

Example illustration

- The minimum permissible thickness of the brake disc is engraved as “min.th.” -item 3- on the brake disc hub.

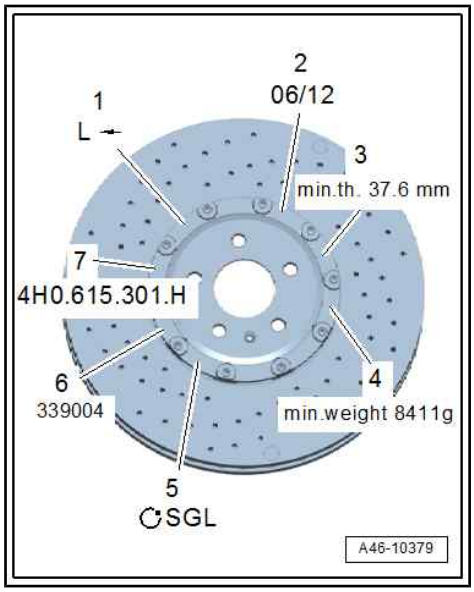

– Measure the thickness -x- of the brake disc next to each wear indicator all around the brake disc (three times).

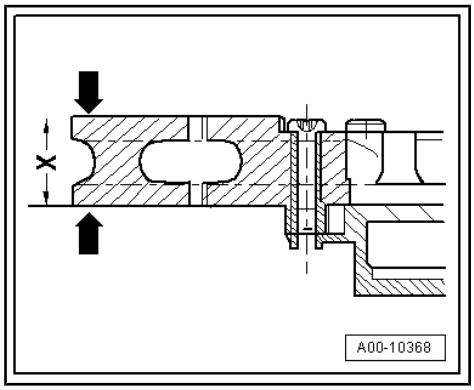

Note

- *For these brake discs, the tolerance is considerably smaller than for standard measurement.*
- *If the thickness is down to x = min. th. plus a tolerance of +0.05 mm, additionally check the wear of the brake disc by inspecting the wear indicators.*

If the thickness of the brake disc is less than or equal to the minimum permissible thickness “min.th.”, do NOT continue using the brake disc. The brake disc must be renewed.

WARNING

If one brake disc is damaged or worn, the other discs must also be checked for damage and wear.

5.1.4 Wear assessment by weighing brake disc

Note

- *New tolerance for brake discs with minimum weight stamped on hub*
- *⇒ “5.1.5 Wear assessment by weighing brake disc (if minimum weight is stamped on hub)”, page 18* .

Special tools and workshop equipment required

- Commercially available scales with a tolerance of ± 1 g

Protected by copyright. Copying for private or commercial purposes, in part or in whole, is not permitted unless authorised by AUDI AG. AUDI AG does not guarantee or accept any liability with respect to the correctness of information in this document. Copyright by AUDI AG.

Procedure

Example illustration

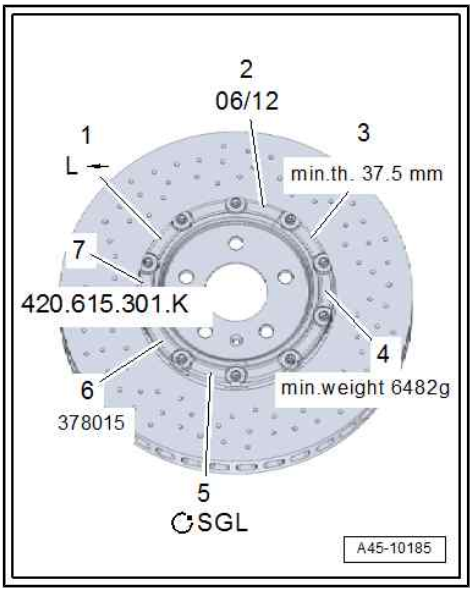

- The minimum permissible weight of the brake disc is engraved as “min.weight” -item 4- on the brake disc hub.

– Remove brake disc for weighing.

- The brake disc must be cleaned and dry before it is weighed.

> **WARNING**
>
> *Risk to health*
>
> ♦ *Always observe respiratory protection requirements when cleaning ceramic brake discs using compressed air.*

> **Caution**
>
> *Risk of incorrect measurements*
>
> ♦ *DO NOT clean the brake disc with water or other fluids.*

Protected by copyright. Copying for private or commercial purposes, in part or in whole, is not permitted unless authorised by AUDI AG. AUDI AG does not guarantee or accept any liability with respect to the correctness of information in this document. Copyright by AUDI AG.

Note

♦ *The brake disc ventilation drillings must be completely free of dirt. Clear out carefully with a suitable tool if necessary.*

♦ *Thoroughly blow out the brake discs with compressed air (including the area between the cooling channels and ventilation drillings).*

– Carefully place the clean brake disc on the scales.

Note

New tolerance
⇒ “5.1.5 Wear assessment by weighing brake disc (if minimum weight is stamped on hub)”, page 18

> **WARNING**
>
> *Accident risk (insufficient braking effect)*
>
> ♦ *Ceramic brake discs must be renewed when one of the defined wear limits has been reached. It is no longer permissible to use these brake discs.*
>
> *If one brake disc is damaged or worn, the other discs must also be checked for damage and wear.*

5.1.5 Wear assessment by weighing brake disc (if minimum weight is stamped on hub)

Note

- *The minimum permitted weight of the brake disc is stamped on the hub; no tolerance is permitted. The brake disc must be renewed if its weight is less than the indicated minimum weight.*
- *It is not necessary to perform any further wear assessment of the brake disc.*

Brake disc with minimum weight stamped on hub:

Special tools and workshop equipment required

- Commercially available scales with a tolerance of ± 1 g

Procedure

– Remove brake disc for weighing.

• The brake disc must be cleaned and dry before it is weighed.

WARNING

Risk to health

- *Always observe respiratory protection requirements when cleaning ceramic brake discs using compressed air.*

Protected by copyright. Copying for private or commercial purposes, in part or in whole, is not permitted unless authorized by AUDI AG. AUDI AG does not guarantee or accept any liability with respect to the correctness of information in this document. Copyright by AUDI AG.

Caution

Risk of incorrect measurements

- *DO NOT clean the brake disc with water or other fluids.*

Note

- *The brake disc ventilation drillings must be completely free of dirt. Clear out carefully with a suitable tool if necessary.*
- *Thoroughly blow out the brake discs with compressed air (including the area between the cooling channels and ventilation drillings).*

– Carefully place the clean brake disc on the scales.

Note

- *The minimum permitted weight of the brake disc is stamped onto the brake disc hub; there is no tolerance. The disc must be renewed if the weight of the disc is less than or equal to the indicated minimum weight.*
- *It is not necessary to perform any further wear assessment of the brake disc.*

WARNING

Accident risk (insufficient braking effect)

- *Ceramic brake discs must be renewed when one of the defined wear limits has been reached. It is no longer permissible to use these brake discs.*

If one brake disc is damaged or worn, the other discs must also be checked for damage and wear.

5.2 Wear assessment of ceramic brake disc with tester - VAS 6813-

⇒ "5.2.2 Checking tester VAS 6813 ", page 21

⇒ "5.2.3 Wear assessment with tester VAS 6813 ", page 22

Note

This is a new method for measuring the wear limit of ceramic brake discs.

⇒ "5.2.4 Notes on brake disc wear limit", page 24

You can identify the brake disc as follows:

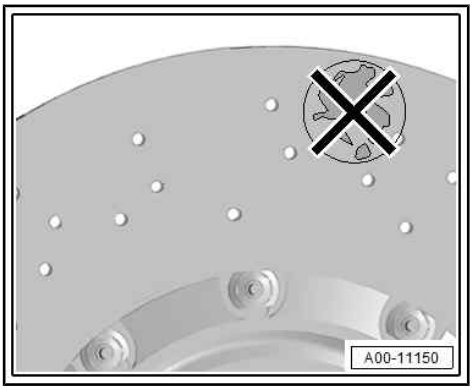

- The wear indicators -arrow- on the friction surface of the brake disc are no longer visible
- By looking at the laser-etched markings -A to D-

Protected by copyright. Copying for private or commercial purposes, in pa
mitted unless authorised by AUDI AG. AUDI AG does not guarantee or
respect to the correctness of information in this document. Copyright by AUDI

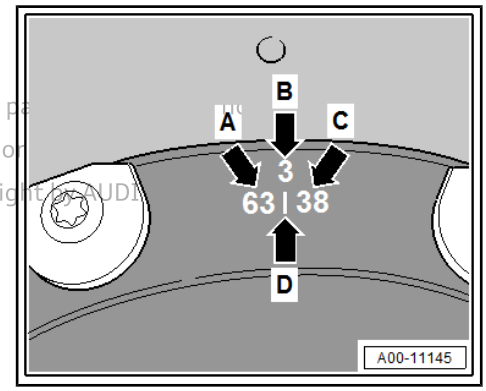

Note

- *The degree of wear is determined by measuring the brake disc thickness AND the wear value using the tester - VAS 6813- ; both values must be measured three times each.*
- *The minimum permissible thickness of the brake disc is engraved as "min.th." on the brake disc hub.*
- *The wear value -C- of the brake disc for the tester - VAS 6813- is engraved on the brake disc hub.*
- *Value -A- is a value from the production of the new brake disc.*
- *Values -A and C- may vary depending on the measuring point.*
- *Values -A and C- may vary depending on the brake disc.*

Example of minimum brake disc thickness (min.th. -3-); the brake disc thickness must not be less than this value.

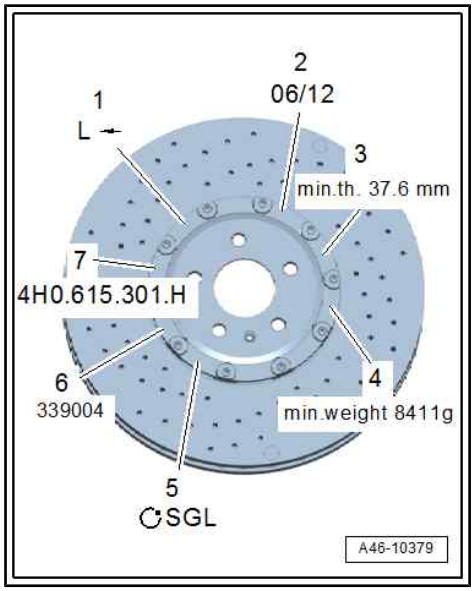

Note

Value -3- may vary depending on the brake disc.

5.2.1 Checking brake disc thickness

For wear assessment of ceramic brake disc with tester - VAS 6813-

⇒ “5.2.4 Notes on brake disc wear limit”, page 24

The markings for measuring the degree of wear are spaced at intervals of 120°.

Measure the brake disc thickness at these three points.

Example shows third measuring point

The minimum permissible thickness of the brake disc is engraved as “min.th.” on the brake disc hub.

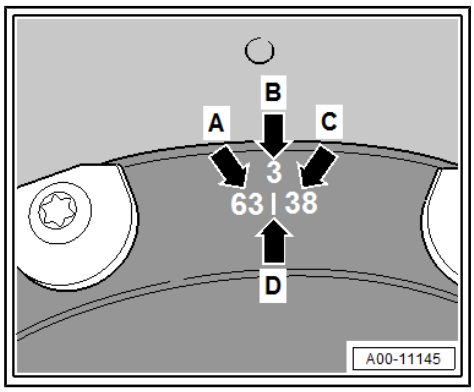

– Measure the thickness -x- of the brake disc at the measuring points all around the brake disc (three times).

If the thickness of the brake disc is below the “min.th.” value at one of the measuring points, the brake disc must be renewed.

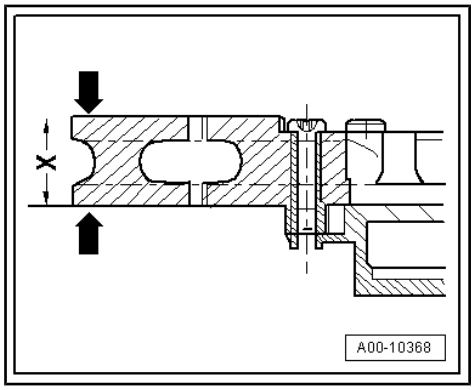

Protected by copyright. Copying for private or commercial purposes, in part or in whole, is not permitted unless authorised by AUDI AG. AUDI AG does not guarantee or accept any liability with respect to the correctness of information in this document. Copyright by AUDI AG.

Example of minimum brake disc thickness (min.th. -3-); the brake disc thickness must not be less than this value.

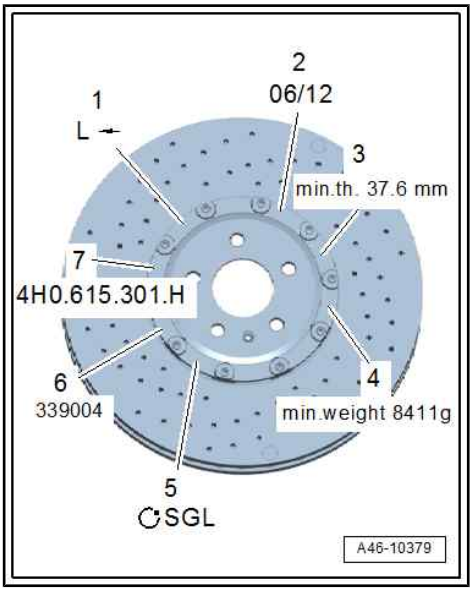

Note

Value -3- may vary depending on the brake disc.

WARNING

If one brake disc is damaged or worn, the other discs must also be checked for damage and wear.

If the thickness of the brake disc is not below the minimum value, proceed to
⇒ "5.2.3 Wear assessment with tester VAS 6813 ", page 22 .

5.2.2 Checking tester - VAS 6813-

Before taking measurements, the tester - VAS 6813- must be checked using the measuring plate provided.

Measuring plate:

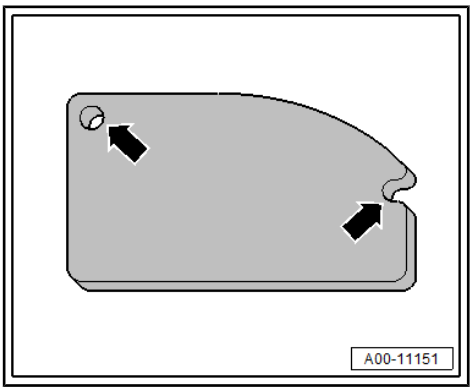

– Place tester in both openings -arrows- of measuring plate so that laser beam points downwards towards marking with affixed reference value.

– Switch on tester.

The value now shown must correspond to the reference value affixed to the measuring plate.

Note

- *If the value shown differs from the reference value by more than ± 2.0 units, the tester must be re-calibrated by the supplier.*
- *Please refer to the enclosed instructions for further information.*

Protected by copyright. Copying for private or commercial purposes, in part or in whole, is not permitted unless authorised by AUDI AG. AUDI AG does not guarantee or accept any liability with respect to the correctness of information in this document. Copyright by AUDI AG.

5.2.3 Wear assessment with tester - VAS 6813-

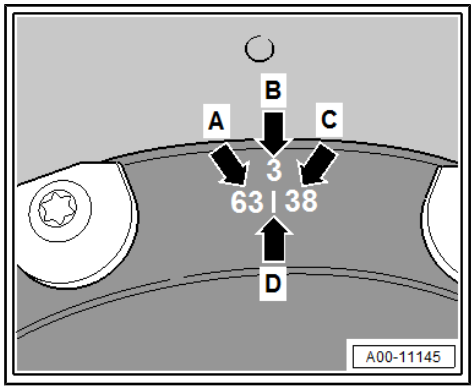

Note

- *The degree of wear is determined by measuring the brake disc thickness AND the wear value using the tester - VAS 6813- ; both values must be measured three times each.*
- *The wear value -C- for the tester - VAS 6813- is engraved on the brake disc hub.*
- *Values -A and C- may vary depending on the measuring point.*
- *Values -A and C- may vary depending on the brake disc.*
- *Value -A- is a value from the production of the new brake disc.*

- Wheel has been removed.
- Brake disc thickness has been checked.
- Tester has been checked
  ⇒ "5.2.2 Checking tester VAS 6813 ", page 21 .

Special tools and workshop equipment required

- Tester - VAS 6813-

Tester - VAS 6813- :

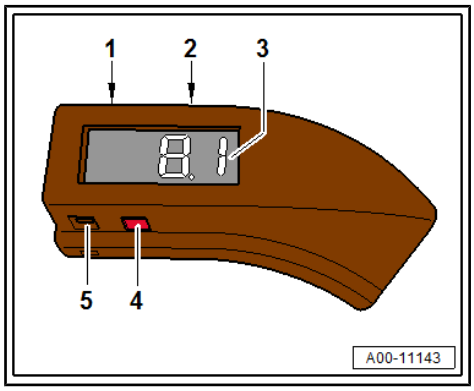

- 1 ON/OFF switch
- 2 Button for taking measurement
- 3 Display for measurement
- 4 Laser beam for positioning
- 5 Interface

Note

Please refer to the enclosed instructions for further information about the tester - VAS 6813- .

Measurement:

- The brake disc must be clean.
- The brake disc must be dry.

WARNING

Risk to health

- *Always observe respiratory protection requirements when cleaning ceramic brake discs using compressed air.*
- *DO NOT clean the brake disc with water or other fluids.*

Protected by copyright. Copying for private or commercial purposes, in part or in whole, is not permitted unless authorised by AUDI AG. AUDI AG does not guarantee or accept any liability with respect to the correctness of information in this document. Copyright by AUDI AG.

The markings for measuring the degree of wear are spaced at intervals of 120°.

The measuring procedure described below must be performed at all three measuring points to ensure that the degree of wear is determined reliably.

-A-: new value; -C-: wear value; -B-: measuring point number; -D-: marking for laser beam for measuring wear value

The third measuring point -B- (of points 1 to 3) can be seen in the example.

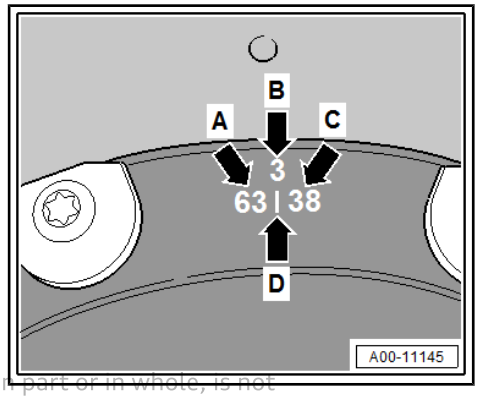

Note

- *Values -A and C- vary depending on the measuring point.*
- *Values -A and C- vary depending on the brake disc.*

– Place tester - VAS 6813- at outer edge of brake disc so that it is flush.

Protected by copyright. Copying for private or commercial purposes, in part or in whole, is not permitted unless authorised by AUDI AG. AUDI AG does not guarantee or accept any liability with respect to the correctness of information in this document. Copyright by AUDI AG.

– Switch on tester - VAS 6813- .

– Move tester - VAS 6813- -1- along outer edge -2- until laser beam points exactly towards marking -D- on brake disc.

– Measure wear at all three measuring points (1 to 3) on brake disc.

– To do so, read off value displayed on tester - VAS 6813- .

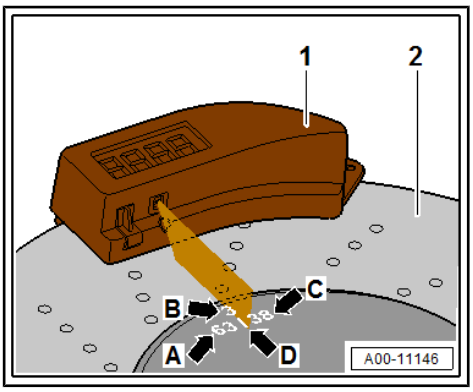

The brake disc must be removed and checked further for wear if the value is less than or equal to one of the three wear values -C- .

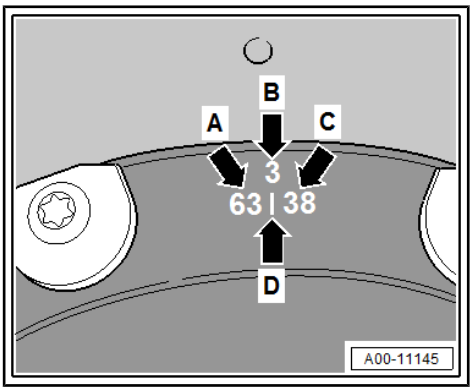

Note

Wear value -C- varies depending on the measuring point.

– Remove brake disc.

– ⇒ “5.2.2 Checking tester VAS 6813 ”, page 21

Note

- *To ensure that the following measurement is completely accurate, place the brake disc on a non-conductive surface (e.g. wooden table).*
- *The surface must be clean and dry.*
- *The brake disc must be clean and dry.*

– Place tester - VAS 6813- at outer edge of brake disc again so that it is flush.

The measuring procedure must be performed at all three measuring points to ensure that the degree of wear is determined reliably.

– Move tester - VAS 6813- -1- along outer edge -2- until laser beam points exactly towards marking -D- on brake disc.
– Measure wear at all three measuring points (1 to 3) on brake disc.
– To do so, read off value displayed on tester - VAS 6813- .

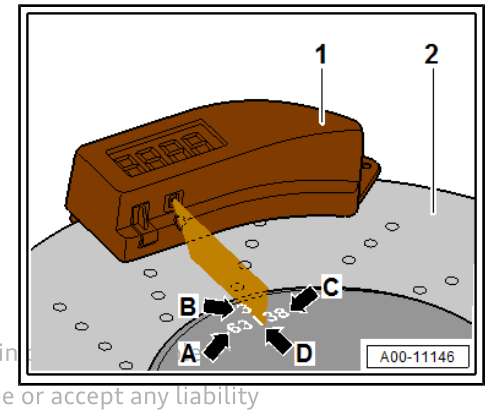

The brake disc must be renewed if the value is less than or equal to one of the three wear values -C- .

WARNING

If one brake disc is damaged or worn, the other discs must also be checked for damage and wear.

Protected by copyright. Copying for private or commercial purposes, in part or in whole, is not permitted unless authorised by AUDI AG. AUDI AG does not guarantee or accept any liability with respect to the correctness of information in this document. Copyright by AUDI AG.

5.2.4 Notes on brake disc wear limit

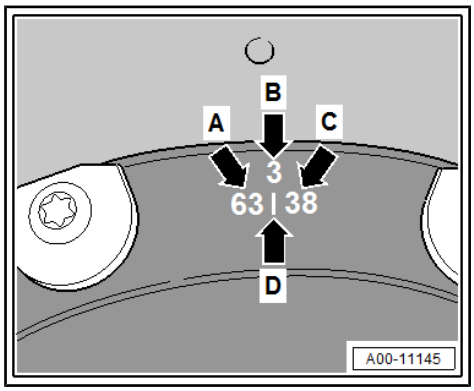

Note

- *The degree of wear is determined by measuring the brake disc thickness AND the wear value using the tester - VAS 6813- ; both values must be measured three times each.*
- *The brake disc hub is engraved with the minimum permissible thickness of the brake disc ("min.th.") and the wear value -C- for the tester - VAS 6813- .*
- *The wear value -C- varies depending on the brake disc and the measuring point.*

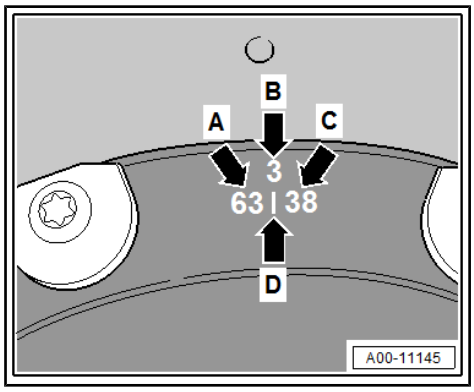

Note

- *If the thickness of the brake disc is below the "min.th." value at one of the measuring points, the brake disc must be renewed.*
- *"Or"*
- *If the value is less than or equal to one of the three wear values -C- when determining the degree of wear with the tester - VAS 6813- , the brake disc must be renewed.*

Note

The wear value -C- varies depending on the brake disc.

WARNING

If one brake disc is damaged or worn, the other discs must also be checked for damage and wear.

6 Brake test

⇒ “6.1 General notes on brake test”, page 25

⇒ “6.2 Testing vehicles with front-wheel drive”, page 25

⇒ “6.3 Testing vehicles with four-wheel drive”, page 25

⇒ “6.4 Testing parking brake”, page 26

6.1 General notes on brake test

- The wheels are driven by the brake test rollers.
- On vehicles with manual gearbox, the engine must be idling.
- On vehicles with automatic gearbox or dual clutch gearbox, shift gearbox into position “N”.
- Follow the instructions provided by the manufacturer of the brake test equipment when performing the test.

Vehicles with vacuum brake servo:

Electronic brake control systems are inoperative when the ignition is switched off.

Vehicles with electromechanical brake servo:

Electronic brake control systems remain operative for a while after the ignition has been switched off.

6.2 Testing vehicles with front-wheel drive

Testing on a single-axle brake dynamometer

- The wheels are driven by the brake test rollers.
- On vehicles with manual gearbox, the engine must be idling.
- On vehicles with automatic gearbox or dual clutch gearbox, shift gearbox into position “N”.

Test sequence:

- Perform brake test on a single-axle brake dynamometer.
- The test speed must not exceed 6 km/h. Otherwise the EDL control can activate the brakes if the rollers start at different points in time.
- All brake test equipment approved by Audi meets these requirements.

Protected by copyright. Copying for private or commercial purposes, in part or in whole, is not permitted unless authorised by AUDI AG. AUDI AG does not guarantee or accept any liability with respect to the correctness of information in this document. Copyright by AUDI AG.

6.3 Testing vehicles with four-wheel drive

⇒ “6.1 General notes on brake test”, page 25

Testing on a single-axle brake dynamometer

Note

- *Brakes on front and rear axles must only be checked with engine switched off.*
- *In order to prevent power transmission from one axle to the other, always switch off the engine during brake tests on single-axle roller dynamometers.*
- *Only start the engine in order to create the necessary brake pressure for the brake test.*
- *Then switch the engine off again.*

Test sequence:

- The wheels are driven by the brake test rollers.
- On vehicles with manual gearbox, the engine must be idling.
- On vehicles with automatic gearbox or dual clutch gearbox, shift gearbox into position “N”.
- The rollers drive the wheels of one axle in opposite directions to avoid transmitting torque to the other axle.
- The test speed must not exceed 6 km/h. Otherwise the EDL control can activate the brakes if the rollers start at different points in time.
- All brake test equipment approved by Audi meets these requirements.

Protected by copyright. Copying for private or commercial purposes, in part or in whole, is not permitted unless authorised by AUDI AG. AUDI AG does not guarantee or accept any liability with respect to the correctness of information in this document. Copyright by AUDI AG.

6.4 Testing parking brake

Activating test mode »TÜV mode«:

- Driver is wearing seat belt
- Rear wheels on single-axle brake dynamometer
- Engine not running; ignition switched on
- Hold assist function (Auto Hold) switched off
- Front wheels stationary
- Rear wheels must rotate for at least 5 seconds at a constant speed between 2.5 and 9 km/h.

The test mode is active when the yellow electric parking brake fault warning lamp - K214- lights up.

– The instrument cluster will then display a crossed-out yellow symbol for the electromechanical parking brake ⇒ Owner's Manual; Instruments and warning/indicator lamps .

Note

In test mode, the electromechanical parking brake does not immediately close fully.

The clamping force is increased gradually by actuating the electromechanical parking brake button - E538- three to four times in succession.

The electromechanical parking brake is released when the electromechanical parking brake button - E538- is actuated a fifth time.

– Start engine and wait for approx. 5 seconds until sufficient vacuum has built up.

Exiting test mode:

- Speed of front wheels above 0 km/ h
- Speed of rear wheels below 2.5 km/h or above 9 km/h
- Ignition off

45 – Anti-lock brake system

Protected by copyright. Copying for private or commercial purposes, in part or in whole, is not permitted unless authorised by AUDI AG. AUDI AG does not guarantee or accept any liability with respect to the correctness of information in this document. Copyright by AUDI AG.

1 General notes

⇒ "1.1 Notes for repair work on the ABS", page 27

1.1 Notes for repair work on the ABS

Malfunctions in the ABS system do not influence the brake system and servo action. The conventional braking system remains functional even without ABS. However, the vehicle's braking behaviour can change. After the ABS warning lamp comes on, the rear wheels can lock early when braking.

> ⚠ WARNING
>
> - *The anti-lock brake system is basically maintenance-free.*
> - *Testing, removing, installing and repair work may only be performed by qualified personnel.*
> - *Failure to observe the information described in this Workshop Manual may result in damage to the system and could make the vehicle unsafe.*

Vehicles with high-voltage system

> ⚠ WARNING
>
> *Note general warnings for work on the high-voltage system ⇒ Rep. gr. 00 ; Safety precautions; Safety precautions when working on vehicles with high-voltage system .*

All vehicles

- Before carrying out repair work on the anti-lock brake system, determine the cause of the problem using self-diagnosis.
- When installing a new hydraulic control unit, always check its coding ⇒ Vehicle diagnostic tester.
- With ignition switched off, disconnect battery earth strap.
- Observe the relevant safety precautions and information when handling brake fluid.
- Always bleed the brake system (using brake filling and bleeding equipment - VAS 5234-) after all work which involves opening the hydraulic system. In addition, a high and low-pressure test should be carried out on the brake system.
- During the final road test, ensure that at least one ABS-controlled braking operation is performed (pulsations must be felt at the brake pedal) ⇒ Vehicle diagnostic tester.

2 Overview of fitting locations

⇒ “2.1 Overview of fitting locations - ABS/ESP”, page 28

2.1 Overview of fitting locations - ABS/ESP

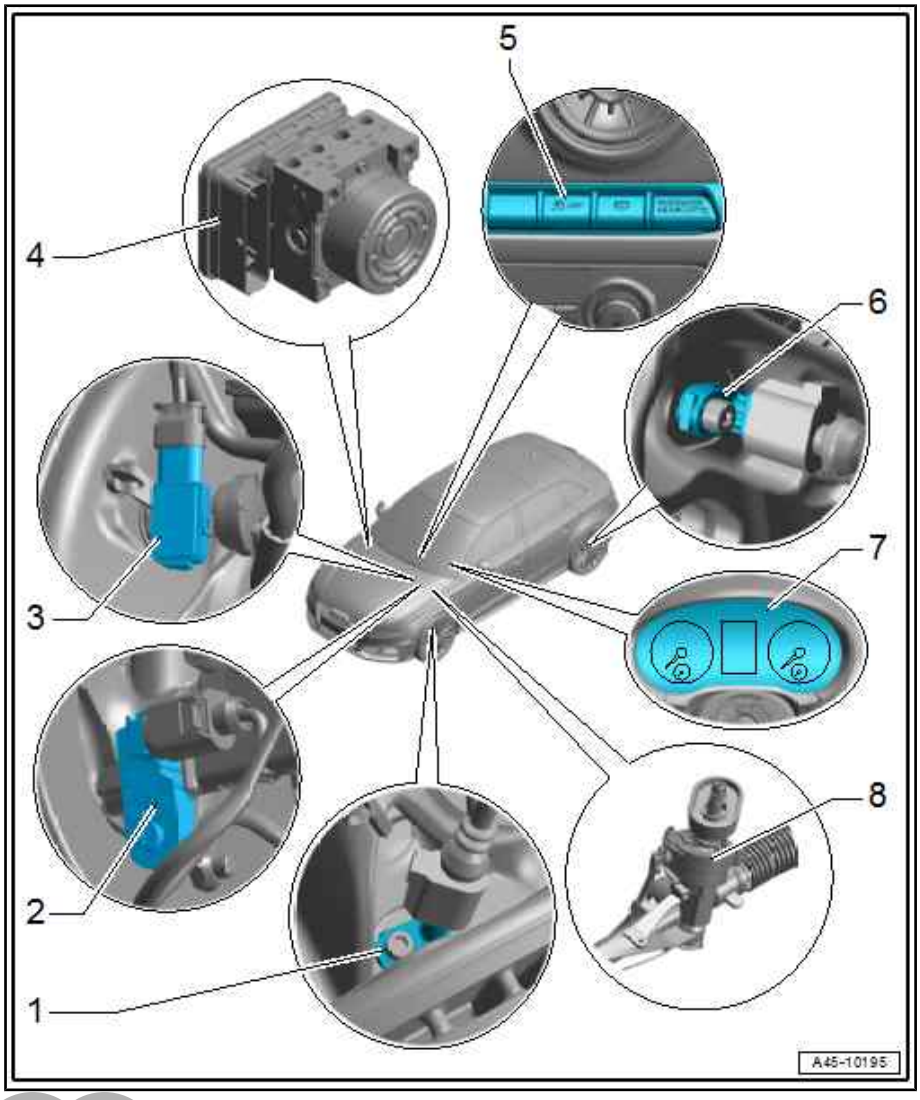

1 - Front speed sensor

- ❑ Front right speed sensor - G45- / front left speed sensor - G47-
- ❑ Check in “Guided Fault Finding” ⇒ Vehicle diagnostic tester
- ❑ ⇒ “4.1 Exploded view - front wheel speed sensor”, page 58

2 - Brake light switch - F- / brake pedal switch - F63-

- ❑ ⇒ “4.3 Removing and installing brake light switch”, page 61

3 - Vacuum sender - G608-

- ❑ Depending on equipment version
- ❑ ⇒ “4.5 Removing and installing vacuum sender G608 ”, page 213

4 - ABS hydraulic unit - N55- with ABS control unit - J104-

- ❑ Fitting location: at rear of engine compartment (right-side)
- ❑ With ABS hydraulic pump - V64- ; hydraulic pump cannot be renewed separately
- ❑ Components in ABS control unit - J104- :

- ♦ Lateral acceleration sender - G200-
- ♦ Yaw rate sender - G202-
- ♦ Brake pressure sender 1 - G201-
- ♦ Longitudinal acceleration sender - G251-
  - ❑ Components cannot be renewed separately
  - ❑ Check in “Guided Fault Finding” ⇒ Vehicle diagnostic tester
  - ❑ ⇒ “3.1 Exploded view - control unit and hydraulic unit”, page 30

Protected by copyright. Copying for private or commercial purposes, in part or in whole, is not permitted unless authorised by AUDI AG. AUDI AG does not guarantee or accept any liability with respect to the correctness of information in this document. Copyright by AUDI AG.

5 - TCS and ESP button - E256-

- ❑ Fitting location: in centre console
- ❑ Check in “Guided Fault Finding” ⇒ Vehicle diagnostic tester
- ❑ Removing and installing ⇒ Electrical system; Rep. gr. 96 ; Controls; Overview of fitting locations - controls in centre console

6 - Rear speed sensor

- ❑ Rear right speed sensor - G44- / rear left speed sensor - G46-
- ❑ Check in “Guided Fault Finding” ⇒ Vehicle diagnostic tester

- ⇒ “4.2 Exploded view - rear wheel speed sensor”, page 59

7 - Dash panel insert

- With ESP and TCS warning lamp - K155-
- Warning lamp cannot be renewed separately

8 - Steering rack

- With steering angle sender - G85-
- Steering angle sender cannot be renewed separately

Protected by copyright. Copying for private or commercial purposes, in part or in whole, is not permitted unless authorised by AUDI AG. AUDI AG does not guarantee or accept any liability with respect to the correctness of information in this document. Copyright by AUDI AG.

3 Control unit and hydraulic unit

⇒ “3.1 Exploded view - control unit and hydraulic unit”, page 30

⇒ “3.2 Removing and installing ABS control unit J104 / ABS hydraulic unit N55 ”, page 32

⇒ “3.3 Separating control unit from hydraulic unit”, page 53

⇒ “3.4 Attaching control unit to hydraulic unit”, page 55

3.1 Exploded view - control unit and hydraulic unit

Control unit and hydraulic unit

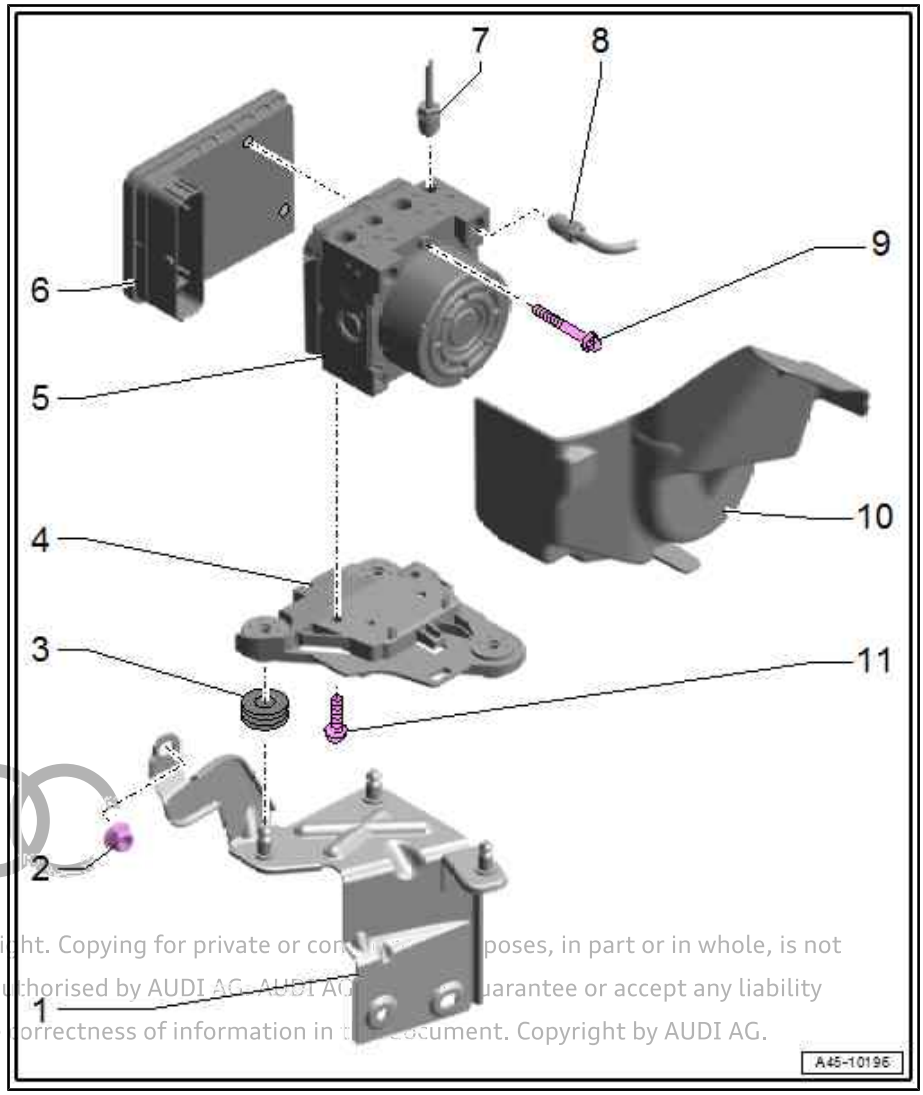

1 - Bracket

2 - Nut
- ❑ 20 Nm

3 - Rubber damper

4 - Mounting bracket

5 - ABS hydraulic unit - N55-
- ❑ Removing and installing ⇒ page 32

6 - ABS control unit - J104-
- ❑ Do not unplug connector before completing self-diagnosis. Switch ignition off before unplugging connector.
- ❑ Removing and installing ⇒ page 32
- ❑ Separating control unit from hydraulic unit ⇒ page 53
- ❑ Attaching control unit to hydraulic unit ⇒ page 55

7 - Brake line
- ❑ From brake master cylinder to hydraulic unit
- ❑ Identification: ∅ 5.25 mm and union screw with M12x1 thread (male pipe union)
- ❑ 14 Nm

8 - Brake line
- ❑ From brake master cylinder to hydraulic unit
- ❑ Identification: ∅ 6 mm and union screw with M12x1 thread (male pipe union)
- ❑ 14 Nm

9 - Torx bolt
- ❑ Tighten new Torx bolts alternately in 2 stages
- ❑ Stage 1: initial tightening torque 1 Nm to 1.5 Nm (to settle seal)
- ❑ Stage 2: final tightening torque 2.5 Nm

Protected by copyright. Copying for private or commercial purposes, in part or in whole, is not permitted unless authorised by AUDI AG. AUDI AG does not guarantee or accept any liability with respect to the correctness of information in this document. Copyright by AUDI AG.

10 - Heat shield

- ❑ Different versions possible. For correct version refer to ⇒ Electronic parts catalogue (ETKA)
- ❑ Bolted version ⇒ page 31

11 - Torx bolt

- ❑ 8 Nm

Heat shield (bolted version)

- Renew self-locking nut after removing.

– Tighten nut -1- to 8 Nm.

– Press on retainer with clamping washer -3- until it makes contact.

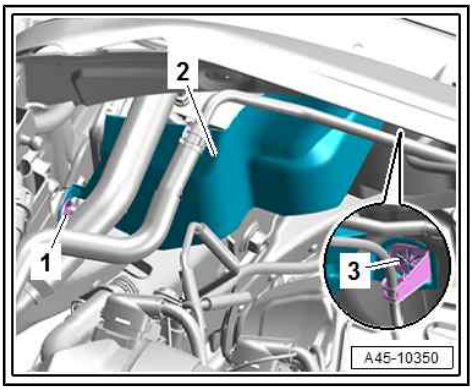

ABS control unit - J104-

1 - Pressure sensor contact

- ❑ Never touch the contacts
- ❑ Some versions may differ from this illustration

2 - Pressure sensor

- ❑ Must not be modified or damaged
- ❑ Cannot be replaced
- ❑ Some versions may differ from this illustration

3 - Seal

- ❑ Do not lift or pull out seal
- ❑ Cannot be replaced

Protected by copyright. Copying for private o
permitted unless authorised by AUDI AG. AU
with respect to the correctness of informatio

4 - Contact pins

- ❑ Must not be damaged or bent
- ❑ Never apply tools

5 - Contact for pump motor

- ❑ Must not be damaged or

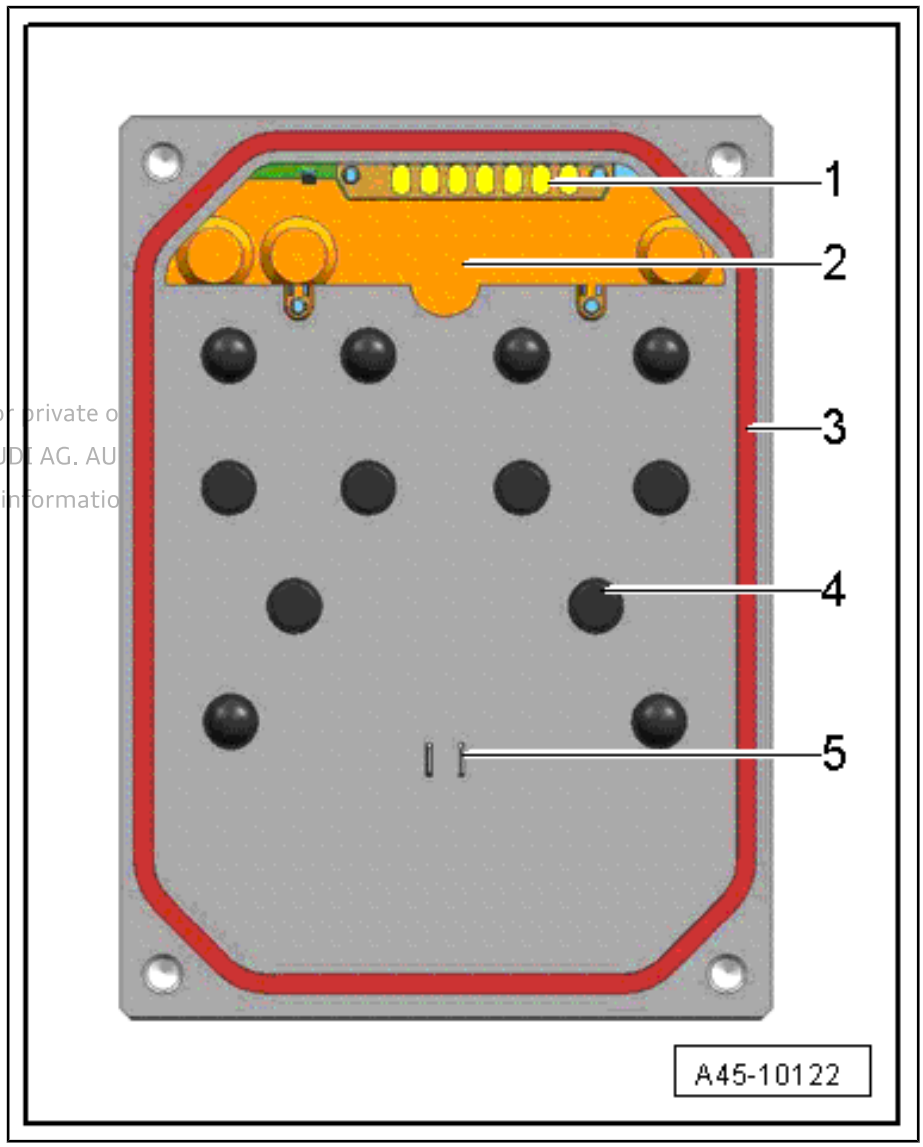

bent

3.2 Removing and installing ABS control unit - J104- / ABS hydraulic unit - N55-

⇒ “3.2.1 Removing and installing ABS control unit J104 / ABS hydraulic unit N55 - vehicles with petrol engine (without high-voltage system)”, page 32

⇒ “3.2.2 Removing and installing ABS control unit J104 and ABS hydraulic unit N55 - vehicles with diesel engine and front-wheel drive”, page 38

⇒ “3.2.3 Removing and installing ABS control unit J104 and ABS hydraulic unit N55 - vehicles with diesel engine and four-wheel drive”, page 43

⇒ “3.2.4 Removing and installing ABS control unit J104 / ABS hydraulic unit N55 - vehicles with high-voltage system”, page 48

Protected by copyright. Copying for private or commercial purposes, in part or in whole, is not permitted unless authorised by AUDI AG. AUDI AG does not guarantee or accept any liability with respect to the correctness of information in this document. Copyright by AUDI AG.

3.2.1 Removing and installing ABS control unit - J104- / ABS hydraulic unit - N55- - vehicles with petrol engine (without high-voltage system)

Note

- *Fitting location ⇒ page 30*
- *When renewing ABS control unit - J104- / ABS hydraulic unit - N55- , select the “Replace” function for the ABS control unit - J104- / ABS hydraulic unit - N55- using ⇒ Vehicle diagnostic tester,* `Guided Functions`.

Special tools and workshop equipment required

- Vehicle diagnostic tester
- Torque wrench - V.A.G 1331-

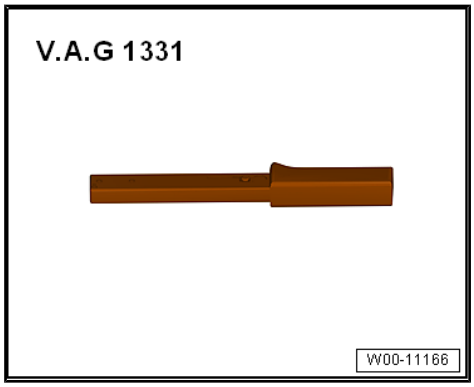

- Brake pedal actuator - V.A.G 1869/2-

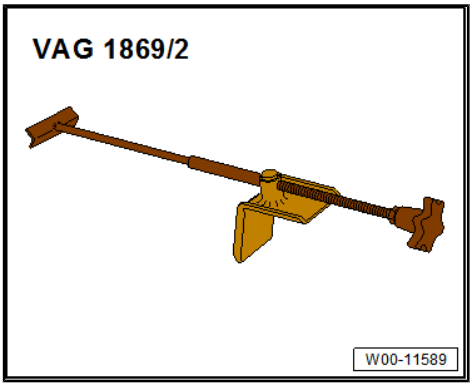

- Bleeder bottle from brake filling and bleeding equipment - VAS 5234-

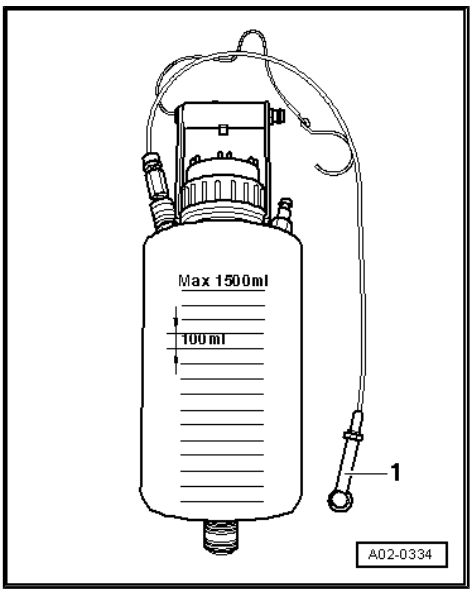

Protected by copyright. Copying for private or commercial purposes, in part or in whole, is not permitted unless authorised by AUDI AG. AUDI AG does not guarantee or accept any liability with respect to the correctness of information in this document. Copyright by AUDI AG.

- Sealing plugs from assembly parts set - 5Q0 698 311-

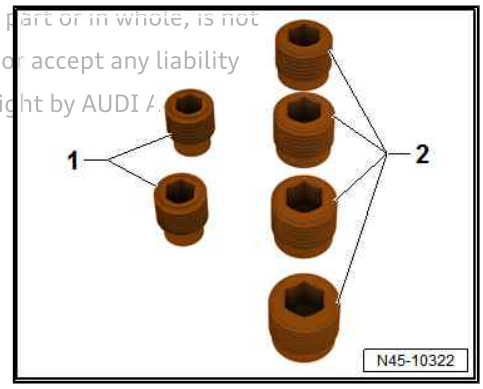

1 - M10 sealing plugs

2 - M12 sealing plugs

Removing

– Insert brake pedal actuator - V.A.G 1869/2- between brake pedal and driver seat. Depress brake pedal by at least 60 mm.

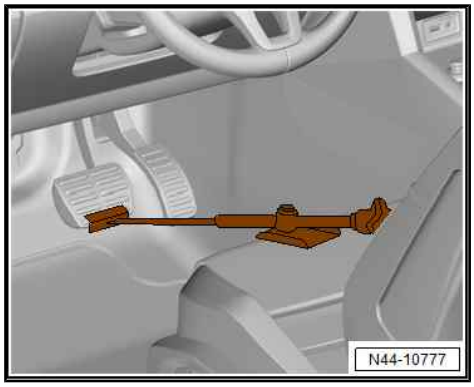

Note

This closes the valves in the brake master cylinder and stops the brake fluid reservoir from running empty.

WARNING

Risk of skin irritation

- ***Always wear chemical-resistant protective gloves to prevent brake fluid from contacting skin.***

– Detach protective cap -3- from bleeder screw -1- on front left brake caliper.

– Connect hose -2- from bleeder bottle, as shown in illustration.

– Open bleeder screw to relieve pressure in brake system.

– Close bleeder screw and remove bleeder bottle.

– Repeat procedure on rear left brake caliper.

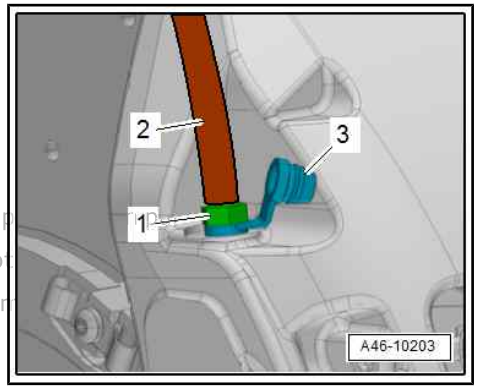

Protected by copyright. Copying for private or commercial p
permitted unless authorised by AUDI AG. AUDI AG does no
with respect to the correctness of information in this docum

Note

The brake pedal actuator - V.A.G 1869/2- must not be removed.

– Remove engine cover panel ⇒ Rep. gr. 10 ; Engine cover panel; Removing and installing engine cover panel .

– Drain coolant ⇒ Rep. gr. 19 ; Cooling system/coolant; Draining and filling cooling system .

– Remove air cleaner housing ⇒ Rep. gr. 24 ; Air cleaner; Removing and installing air cleaner housing .

Note

Place a cloth under heat exchanger for heater to catch escaping coolant.

– Release hose clip -1- and disconnect coolant hose.

– Lift retaining clips -2-, disconnect coolant hoses from heat exchanger for heater and press to side.

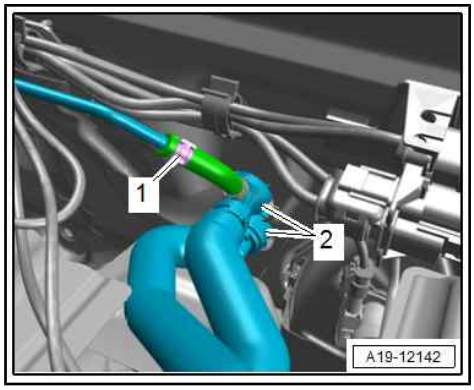

Vehicles with 2.5 ltr. TFSI engine:

– Remove bolts -arrows-.

– Release hose clip -1- and detach air intake pipe.

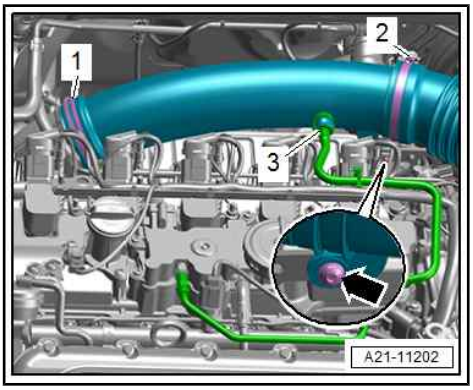

Vehicles with 2.5 ltr. TFSI Evo engine:

– Press release tabs on both sides and disconnect crankcase breather hose -3- from air pipe.

– Remove bolt -arrow-.

– Release hose clip -1- and detach air hose.

Protected by copyright. Copying for private or commercial purp
permitted unless authorised by AUDI AG. AUDI AG does not gu
with respect to the correctness of information in this documen

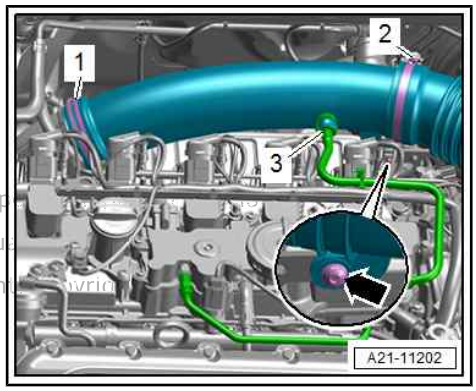

Equipment version with heat shield, version 1:

– Release fastener -arrow-, pull off cover -1- towards left and detach.

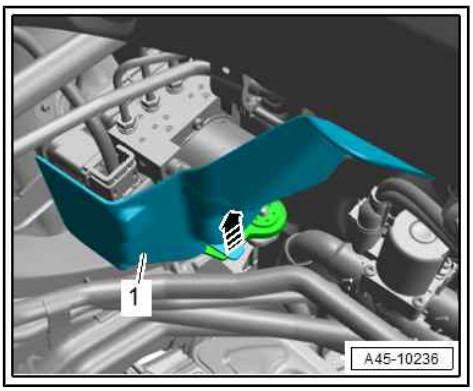

Equipment version with heat shield, version 2:

– Remove nut -1- and detach retainer with clamping washer -3-.

– Detach heat shield -2-.

All:

– Unclip wiring duct.

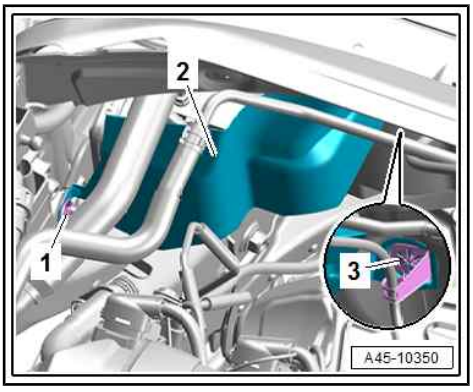

– Press down retainer catch -arrow A-.
– Release electrical connector -arrow B-.
– Unplug electrical connector -1-.

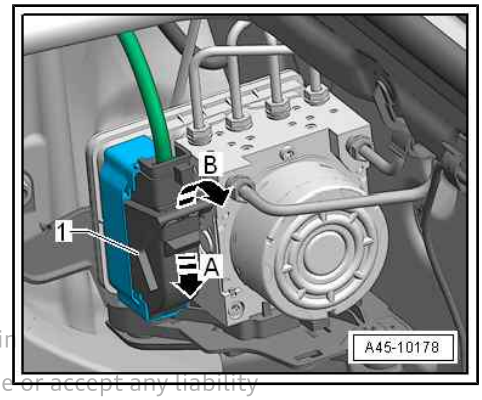

Note

- *Make sure brake fluid does not get into connector housing of control unit. This can result in corrosion of the contacts and failure of the system.*
- *Use compressed air to carefully clean connector housing if necessary.*

Protected by copyright. Copying for private or commercial purposes, in part or in whole, is not permitted unless authorised by AUDI AG. AUDI AG does not guarantee or accept any liability with respect to the correctness of information in this document. Copyright by AUDI AG.

– To protect against escaping brake fluid, place a sufficient number of lint-free cloths in area beneath hydraulic control unit.

DANGER!

Risk of damage to brake lines

- *Do not attempt to bend to a different shape.*

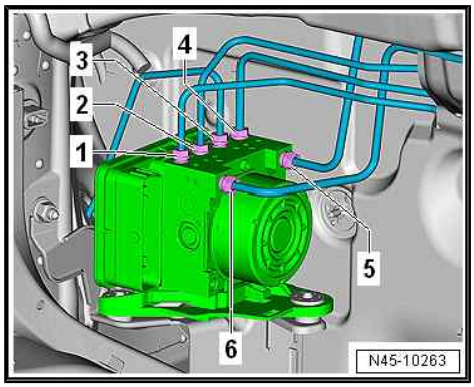

– Mark brake lines to hydraulic control unit.
– Unscrew union screws in the sequence -6 … 1- and push brake lines slightly to the side.
– Seal open connections immediately using clean sealing plugs from assembly parts set - 5Q0 698 311- .

– Detach hydraulic control unit -1- upwards -arrow- and remove.

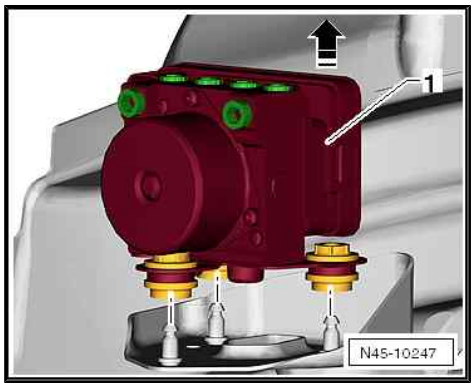

Caution

Risk of irreparable damage.

- *Do not unbolt pump motor.*

– If renewing hydraulic control unit, remove bolts -arrows- and detach mounting bracket -1-.

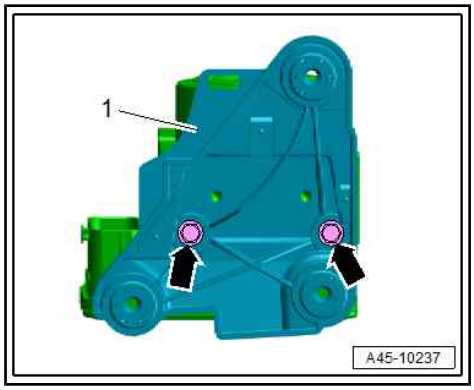

Installing

Installation is carried out in reverse order; note the following:

– Press hydraulic control unit -1- with bracket onto studs in engine compartment -arrows-.

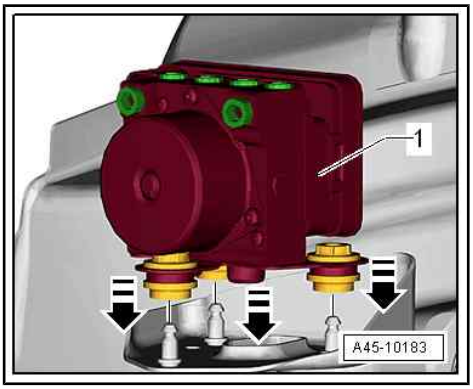

Note

- *The hydraulic control unit must be seated correctly on all studs.*
- *Do not remove sealing plugs from new hydraulic unit until corresponding brake line is ready to be fitted.*
- *If the sealing plugs are removed from the hydraulic unit sooner, brake fluid may escape and it may no longer be possible to fill and bleed the unit properly.*
- *When installing the hydraulic control unit, ensure that the rubber dampers are not pressed out of the bracket.*

Markings on hydraulic unit:

The markings -A, B, 1 to 4- may vary depending on the model.

A - Hydraulic unit to brake master cylinder (primary piston circuit), -HZ2-

B - Hydraulic unit to brake master cylinder (secondary piston circuit), -HZ1-

1 - Hydraulic unit to front right brake caliper, -VR-

2 - Hydraulic unit to rear left brake caliper, -HL-

3 - Hydraulic unit to rear right brake caliper, -HR-

4 - Hydraulic unit to front left brake caliper, -VL-

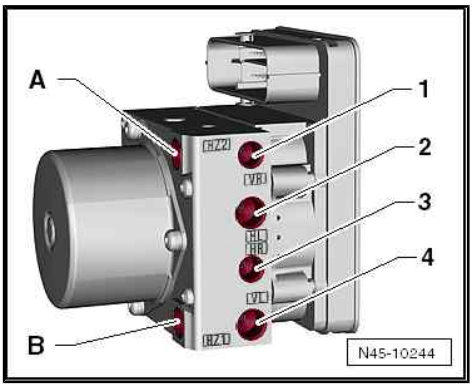

DANGER!

Risk of damage to brake lines

- ***Do not attempt to bend to a different shape.***

Protected by copyright. Copying for private or commercial purposes, in part or in whole, is not permitted unless authorised by AUDI AG. AUDI AG does not guarantee or accept any liability with respect to the correctness of information in this document. Copyright by AUDI AG.

Protected by copyright. Copying for private or commercial purposes, in part or in whole, is not permitted unless authorised by AUDI AG. AUDI AG does not guarantee or assume any liability with respect to the correctness of information in this document. Copyright by AUDI AG.

– Insert all brake lines into ABS hydraulic unit - N55- , screw in union screws by hand and tighten in the sequence -1 … 6-.
– Remove brake pedal actuator - V.A.G 1869/2- .
– Bleed brake system ⇒ page 235 .
– When renewing ABS control unit - J104- / ABS hydraulic unit - N55- , select the “Replace” function for the ABS control unit - J104- / ABS hydraulic unit - N55- using ⇒ Vehicle diagnostic tester, Guided Functions.

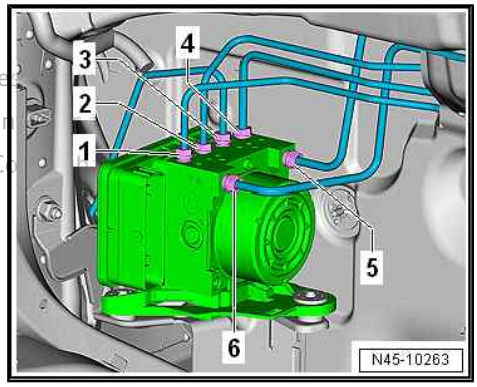

DANGER!

Risk of accident!

- *Make sure that the brakes work properly before the vehicle is driven on the road.*

Tightening torques

- ⇒ “3.1 Exploded view - control unit and hydraulic unit”, page 30

3.2.2 Removing and installing ABS control unit - J104- and ABS hydraulic unit - N55- - vehicles with diesel engine and front-wheel drive

Note

- *Fitting location* *⇒ page 30*
- *When renewing ABS control unit - J104- / ABS hydraulic unit - N55- , select the “Replace” function for the ABS control unit - J104- / ABS hydraulic unit - N55- using ⇒ Vehicle diagnostic tester,* Guided Functions.

Special tools and workshop equipment required

- Vehicle diagnostic tester
- Torque wrench - V.A.G 1331-

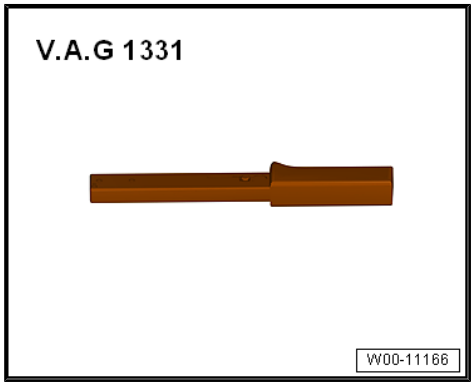

- Brake pedal actuator - V.A.G 1869/2-

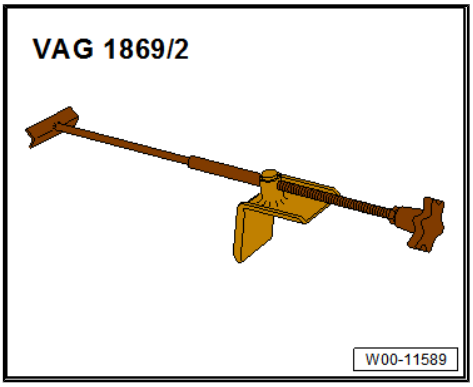

- Bleeder bottle from brake filling and bleeding equipment - VAS 5234-

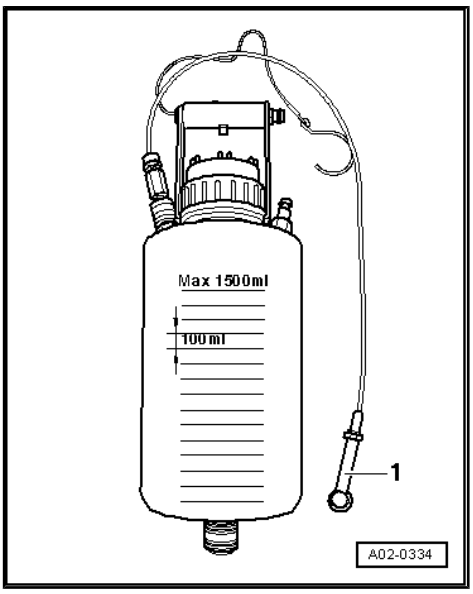

- Sealing plugs from assembly parts set - 5Q0 698 311-

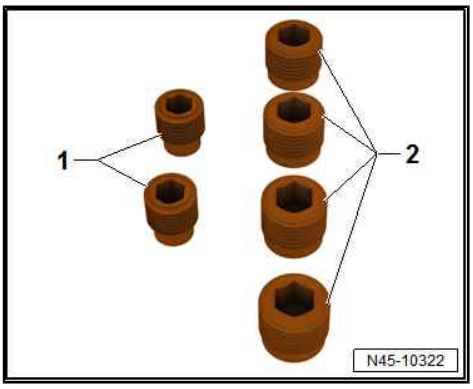

1 - M10 sealing plugs

2 - M12 sealing plugs

Protected by copyright. Copying for private or commercial purposes, in part or in whole, is not permitted unless authorised by AUDI AG. AUDI AG does not guarantee or accept any liability with respect to the correctness of information in this document. Copyright by AUDI AG.

Protected by copyright. Copying for private or ... is not permitted unless authorised by AUDI AG. AUDI ... bility with respect to the correctness of information

Removing

– Insert brake pedal actuator - V.A.G 1869/2- between brake pedal and driver seat. Depress brake pedal by at least 60 mm.

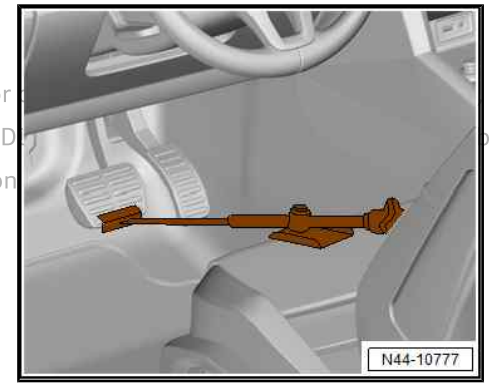

Note

This closes the valves in the brake master cylinder and stops the brake fluid reservoir from running empty.

WARNING

Risk of skin irritation

- ***Always wear chemical-resistant protective gloves to prevent brake fluid from contacting skin.***

– Detach protective cap -3- from bleeder screw -1- on front left brake caliper.

– Connect hose -2- from bleeder bottle, as shown in illustration.

– Open bleeder screw to relieve pressure in brake system.

– Close bleeder screw and remove bleeder bottle.

– Repeat procedure on rear left brake caliper.

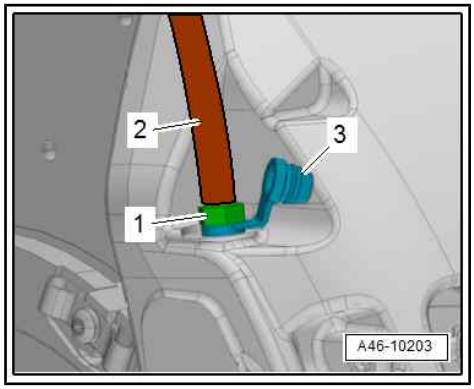

Note

The brake pedal actuator - V.A.G 1869/2- must not be removed.

– Remove engine cover panel ⇒ Rep. gr. 10 ; Engine cover panel; Removing and installing engine cover panel .

– Release fastener -arrow- (if fitted), pull off cover -1- towards left and detach.

– Unclip wiring duct.

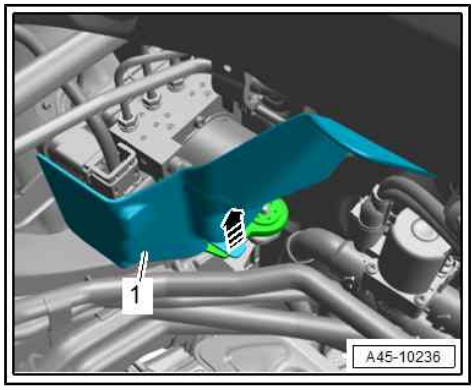

– Press down retainer catch -arrow A-.
– Release electrical connector -arrow B-.
– Unplug electrical connector -1-.

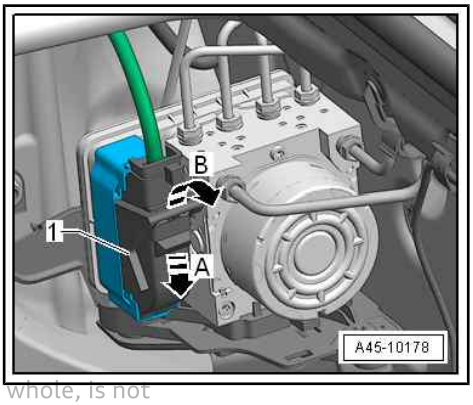

Note

- *Make sure brake fluid does not get into connector housing of control unit. This can result in corrosion of the contacts and failure of the system.*
- *Use compressed air to carefully clean connector housing if necessary.*

Protected by copyright. Copying for private or commercial purposes, in part or in whole, is not permitted unless authorised by AUDI AG. AUDI AG does not guarantee or accept any liability with respect to the correctness of information in this document. Copyright by AUDI AG.

– To protect against escaping brake fluid, place a sufficient number of lint-free cloths in area beneath hydraulic control unit.

Caution

Risk of damage to brake lines

- *Do not attempt to bend to a different shape.*

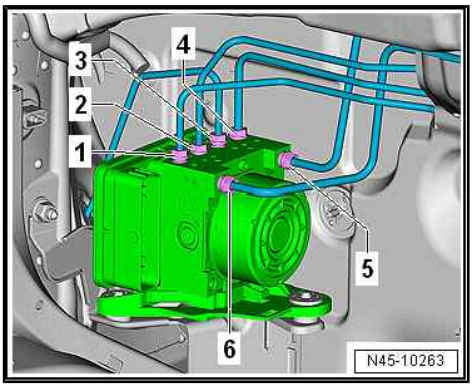

– Mark brake lines to hydraulic control unit.
– Unscrew union screws in the sequence -6 … 1- and push brake lines slightly to the side.
– Seal open connections immediately using clean sealing plugs from assembly parts set - 5Q0 698 311- .

– Detach hydraulic control unit -1- upwards -arrow-.
– Set hydraulic control unit down in engine compartment and secure it so that it does not fall down.
– Remove noise insulation ⇒ General body repairs, exterior; Rep. gr. 66 ; Noise insulation; Removing and installing noise insulation .

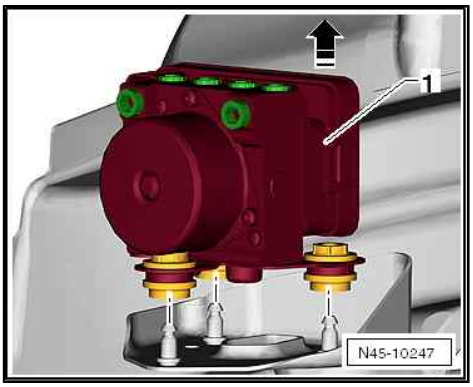

– Remove bolts -arrows- (if fitted) and take off heat shield for drive shaft.

Vehicles with auxiliary/supplementary heater:

– Remove front exhaust pipe ⇒ Rep. gr. 26 ; Exhaust pipes/ silencers; Removing and installing front exhaust pipe .

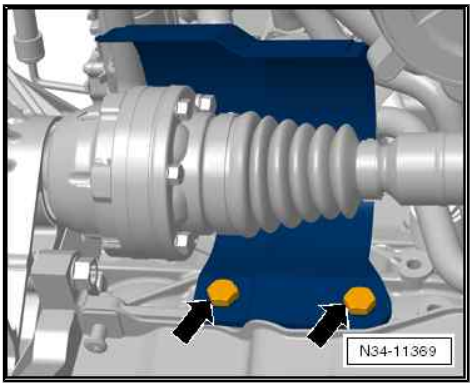

All vehicles (continued):

– Unscrew bolts -arrows- and detach mounting bracket from hydraulic control unit.

– Rotate hydraulic control unit and guide it out downwards.

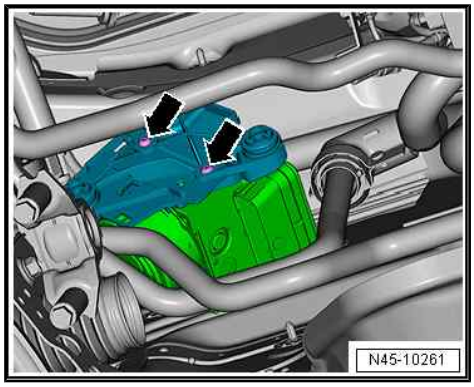

> **Caution**
>
> *Risk of irreparable damage to hydraulic control unit*
>
> ♦ *Do not unscrew pump motor from hydraulic control unit.*

Installing

Installation is carried out in reverse order; note the following:

– Set hydraulic control unit down in engine compartment and secure it so that it does not fall down.

– Attach mounting bracket for hydraulic control unit in vehicle.

– Press hydraulic control unit -1- with bracket onto studs in engine compartment -arrows-.

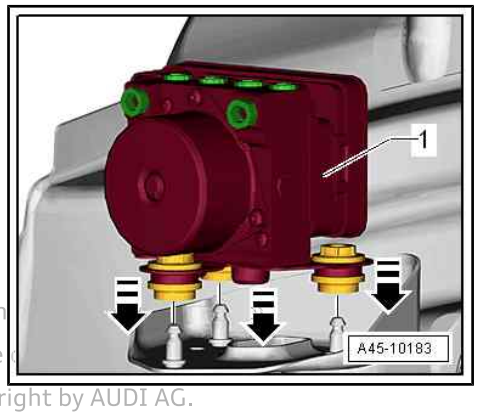

> **Note**
>
> ♦ *The hydraulic control unit must be seated correctly on all studs.*
>
> ♦ *Do not remove sealing plugs from new hydraulic unit until corresponding brake line is ready to be fitted.*
>
> ♦ *If the sealing plugs are removed from the hydraulic unit sooner, brake fluid may escape and it may no longer be possible to fill and bleed the unit properly.*
>
> ♦ *When installing the hydraulic control unit, ensure that the rubber dampers are not pressed out of the bracket.*

Protected by copyright. Copying for private or commercial purposes, in part or in whole, is not permitted unless authorised by AUDI AG. AUDI AG does not guarantee or assume any liability with respect to the correctness of information in this document. Copyright by AUDI AG.

Markings on hydraulic unit:

A - Hydraulic unit to brake master cylinder (primary piston circuit), -HZ2-

B - Hydraulic unit to brake master cylinder (secondary piston circuit), -HZ1-

1 - Hydraulic unit to front right brake caliper, -VR-

2 - Hydraulic unit to rear left brake caliper, -HL-

3 - Hydraulic unit to rear right brake caliper, -HR-

4 - Hydraulic unit to front left brake caliper, -VL-

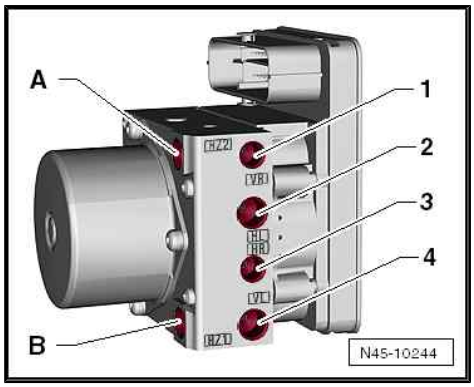

– Insert all brake lines into ABS hydraulic unit - N55- , screw in union screws by hand and tighten in the sequence -1 … 6-.
– Remove brake pedal actuator - V.A.G 1869/2- .
– Bleed brake system ⇒ page 235 .
– When renewing ABS control unit - J104- / ABS hydraulic unit - N55- , select the “Replace” function for the ABS control unit - J104- / ABS hydraulic unit - N55- using ⇒ Vehicle diagnostic tester, Guided Functions.

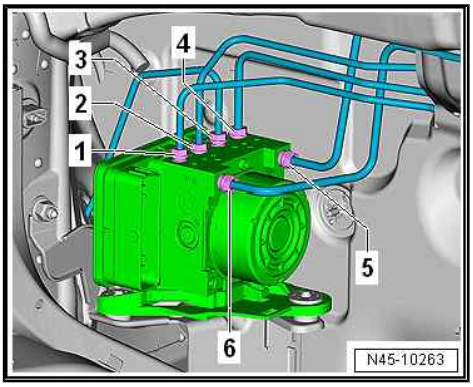

WARNING

Risk of accident!

- *Make sure that the brakes work properly before the vehicle is driven on the road.*

Tightening torques

- ⇒ “3.1 Exploded view - control unit and hydraulic unit”, page 30

3.2.3 Removing and installing ABS control unit - J104- and ABS hydraulic unit - N55- - vehicles with diesel engine and four-wheel drive

Note

- *Fitting location* *⇒ page 30*
- *When renewing ABS control unit - J104- / ABS hydraulic unit - N55- , select the “Replace” function for the ABS control unit - J104- / ABS hydraulic unit - N55- using ⇒ Vehicle diagnostic tester,* Guided Functions.

Special tools and workshop equipment required

- Vehicle diagnostic tester
- Torque wrench - V.A.G 1331-

Protected by copyright. Copying for private or commercial purposes, in part or in whole, is not permitted unless authorised by AUDI AG. AUDI AG does not guarantee or accept any liability with respect to the correctness of information in this document. Copyright by AUDI AG.

- Brake pedal actuator - V.A.G 1869/2-

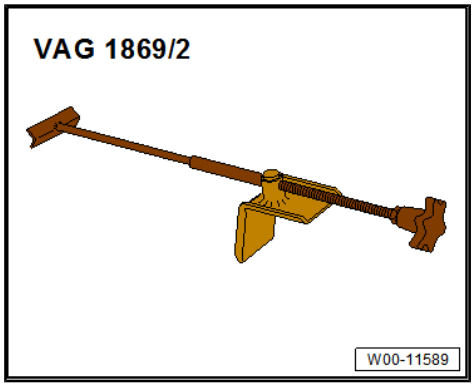

- Bleeder bottle from brake filling and bleeding equipment - VAS 5234-

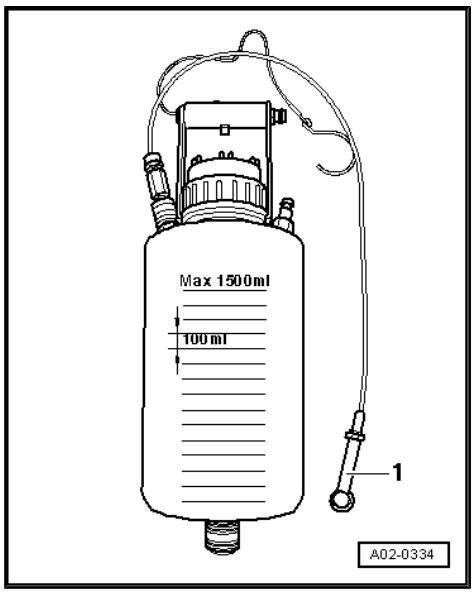

- Sealing plugs from assembly parts set - 5Q0 698 311-

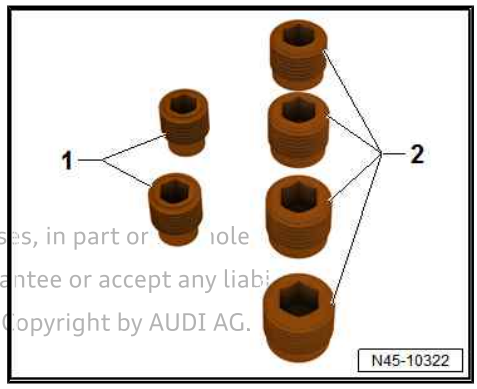

Protected by copyright. Copying for private or commercial purposes, in part or whole
permitted unless authorised by AUDI AG. AUDI AG does not guarantee or accept any liability
with respect to the correctness of information in this document. Copyright by AUDI AG.

1 - M10 sealing plugs

2 - M12 sealing plugs

Removing

– Insert brake pedal actuator - V.A.G 1869/2- between brake pedal and driver seat. Depress brake pedal by at least 60 mm.

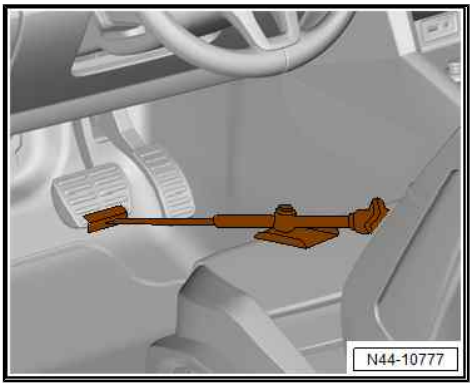

Note

This closes the valves in the brake master cylinder and stops the brake fluid reservoir from running empty.

WARNING

Risk of skin irritation

- ***Always wear chemical-resistant protective gloves to prevent brake fluid from contacting skin.***

– Detach protective cap -3- from bleeder screw -1- on front left brake caliper.

– Connect hose -2- from bleeder bottle, as shown in illustration.

– Open bleeder screw to relieve pressure in brake system.

– Close bleeder screw and remove bleeder bottle.

– Repeat procedure on rear left brake caliper.

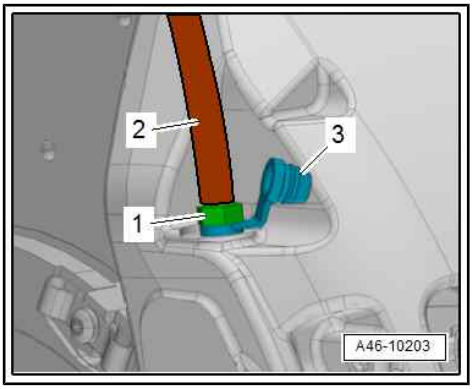

Note

The brake pedal actuator - V.A.G 1869/2- must not be removed.

– Remove engine cover panel ⇒ Rep. gr. 10 ; Engine cover panel; Removing and installing engine cover panel .

– Remove noise insulation ⇒ General body repairs, exterior; Rep. gr. 66 ; Noise insulation; Removing and installing noise insulation .

– Remove front exhaust pipe ⇒ Rep. gr. 26 ; Exhaust pipes/ silencers; Removing and installing front exhaust pipe .

– Remove drive shaft (right-side) ⇒ Running gear, axles, steering; Rep. gr. 40 ; Drive shaft; Removing and installing drive shaft .

Protected by copyright. Copying for private or commercial purposes, in part or in whole, is not permitted unless authorised by AUDI AG. AUDI AG does not guarantee or accept any liability with respect to the correctness of information in this document. Copyright by AUDI AG.

– Release fastener -arrow- (if fitted), pull off cover -1- towards left and detach.

– Unclip wiring duct.

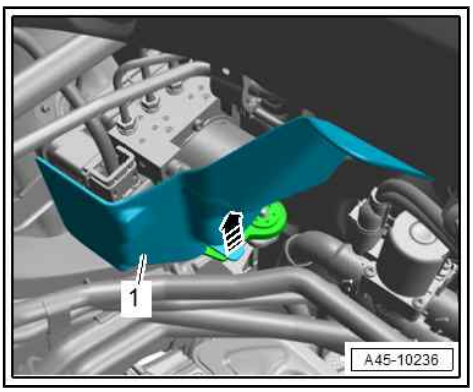

– Press down retainer catch -arrow A-.
– Release electrical connector -arrow B-.
– Unplug electrical connector -1-.

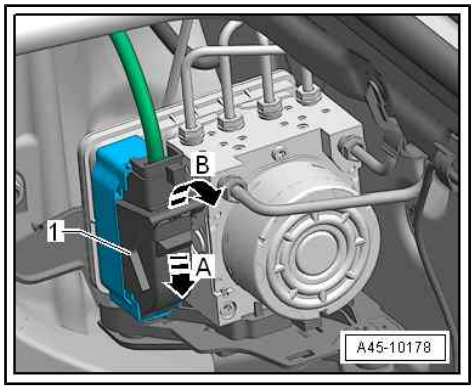

Note

- *Make sure brake fluid does not get into connector housing of control unit. This can result in corrosion of the contacts and failure of the system.*
- *Use compressed air to carefully clean connector housing if necessary.*

– To protect against escaping brake fluid, place a sufficient number of lint-free cloths in area beneath hydraulic control unit.

Caution

Risk of damage to brake lines

- ***Do not attempt to bend to a different shape.***

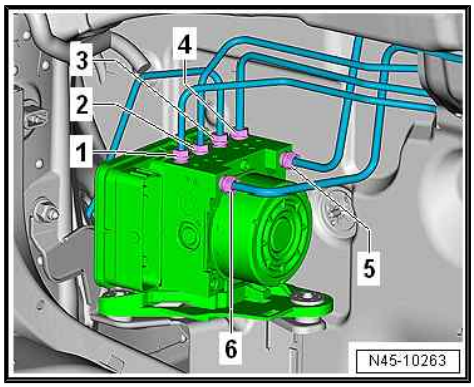

– Mark brake lines to hydraulic control unit.
– Unscrew union screws in the sequence -6 … 1- and push brake lines slightly to the side.
– Seal open connections immediately using clean sealing plugs from assembly parts set - 5Q0 698 311- .

– Detach hydraulic control unit -1- upwards -arrow-.
– Set hydraulic control unit down in engine compartment and secure it so that it does not fall down.

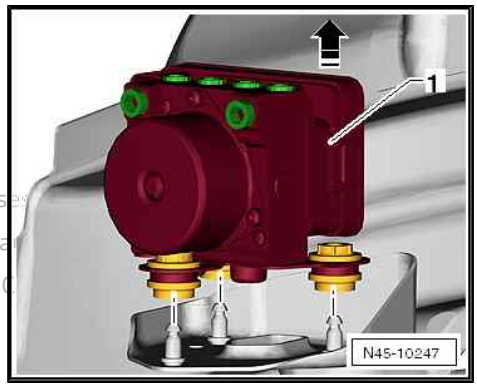

Protected by copyright. Copying for private or commercial purposes
permitted unless authorised by AUDI AG. AUDI AG does not guara
with respect to the correctness of information in this document.

– Unscrew bolts -arrows- and detach mounting bracket from hydraulic control unit.

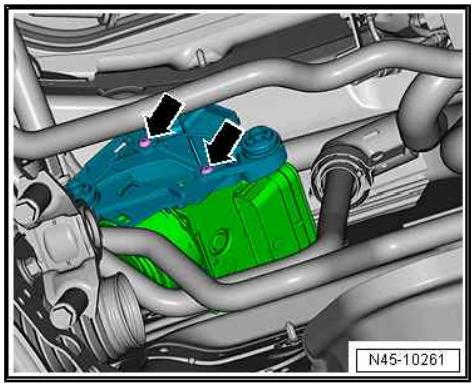

– Pivot suspension strut -1- to side and towards rear; secure in this position with a suitable block of wood -2-.
– Guide hydraulic control unit -3- out through wheel housing.

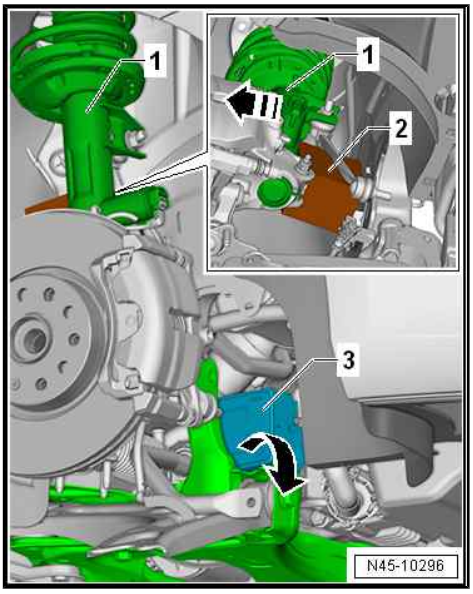

> **Caution**
>
> *Risk of irreparable damage.*
>
> ♦ *Do not unbolt pump motor.*

Installing

Installation is carried out in reverse order; note the following:

– Set hydraulic control unit down in engine compartment and secure it so that it does not fall down.
– Attach mounting bracket for hydraulic control unit in vehicle.

– Press hydraulic control unit -1- with bracket onto studs in engine compartment -arrows-.

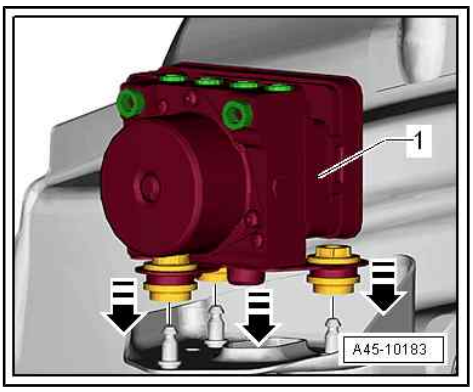

> **Note**
>
> ♦ *The hydraulic control unit must be seated correctly on all studs.*
>
> ♦ *Do not remove sealing plugs from new hydraulic unit until corresponding brake line is ready to be fitted.*
>
> ♦ *If the sealing plugs are removed from the hydraulic unit sooner, brake fluid may escape and it may no longer be possible to fill and bleed the unit properly.*
>
> ♦ *When installing the hydraulic control unit, ensure that the rubber dampers are not pressed out of the bracket.*

Markings on hydraulic unit:

A - Hydraulic unit to brake master cylinder (primary piston circuit), -HZ2-

B - Hydraulic unit to brake master cylinder (secondary piston circuit), -HZ1-

1 - Hydraulic unit to front right brake caliper, -VR-

2 - Hydraulic unit to rear left brake caliper, -HL-

3 - Hydraulic unit to rear right brake caliper, -HR-

4 - Hydraulic unit to front left brake caliper, -VL-

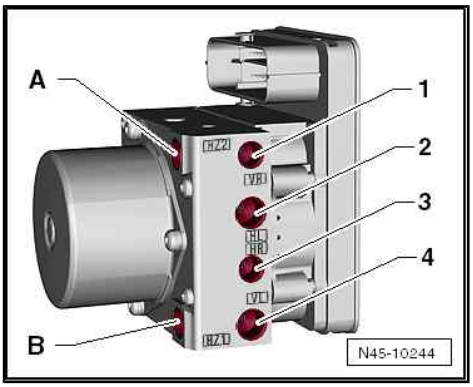

Protected by copyright. Copying for private or commercial purposes, in part or in whole, is not permitted unless authorised by AUDI AG. AUDI AG does not guarantee or accept any liability with respect to the correctness of information in this document. Copyright by AUDI AG.

– Insert all brake lines into ABS hydraulic unit - N55- , screw in union screws by hand and tighten in the sequence -1 … 6-.
– Remove brake pedal actuator - V.A.G 1869/2- .
– Bleed brake system ⇒ page 235 .
– When renewing ABS control unit - J104- / ABS hydraulic unit - N55- , select the “Replace” function for the ABS control unit - J104- / ABS hydraulic unit - N55- using ⇒ Vehicle diagnostic tester, Guided Functions.

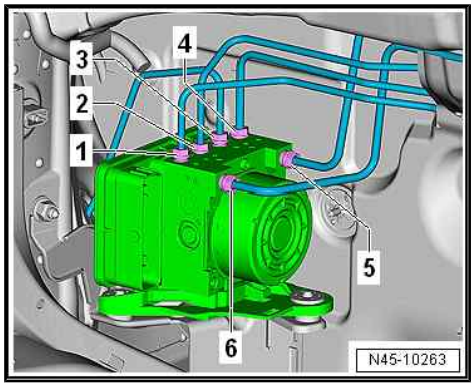

DANGER!

Risk of accident!

- *Make sure that the brakes work properly before the vehicle is driven on the road.*

Tightening torques

- ⇒ “3.1 Exploded view - control unit and hydraulic unit”, page 30

3.2.4 Removing and installing ABS control unit - J104- / ABS hydraulic unit - N55- - vehicles with high-voltage system

Note

- *Fitting location* *⇒ page 30*
- *When renewing ABS control unit - J104- / ABS hydraulic unit - N55- , select the “Replace” function for the ABS control unit - J104- / ABS hydraulic unit - N55- using ⇒ Vehicle diagnostic tester,* Guided Functions.

Special tools and workshop equipment required

- Vehicle diagnostic tester
- Torque wrench - V.A.G 1331-

Protected by copyright. Copying for private or commercial purposes, in part or in whole, is not permitted unless authorised by AUDI AG. AUDI AG does not guarantee or accept any liability with respect to the correctness of information in this document. Copyright by AUDI AG.

- Brake pedal actuator - V.A.G 1869/2-

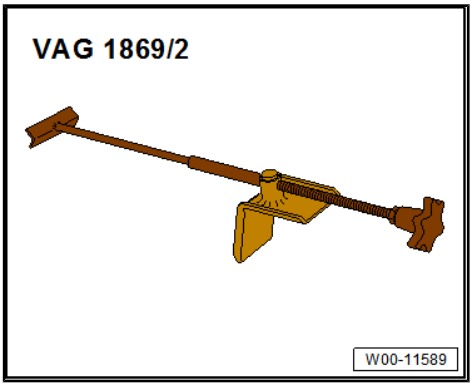

- Bleeder bottle from brake filling and bleeding equipment - VAS 5234-

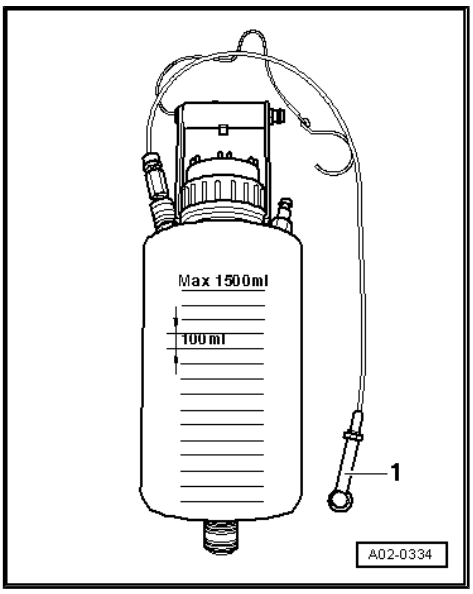

- Sealing plugs from assembly parts set - 5Q0 698 311-

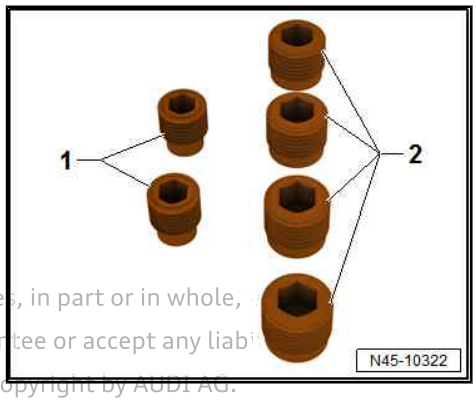

Protected by copyright. Copying for private or commercial purposes, in part or in whole, permitted unless authorised by AUDI AG. AUDI AG does not guarantee or accept any liab with respect to the correctness of information in this document. Copyright by AUDI AG.

1 - M10 sealing plugs

2 - M12 sealing plugs

Removing

– Insert brake pedal actuator - V.A.G 1869/2- between brake pedal and driver seat. Depress brake pedal by at least 60 mm.

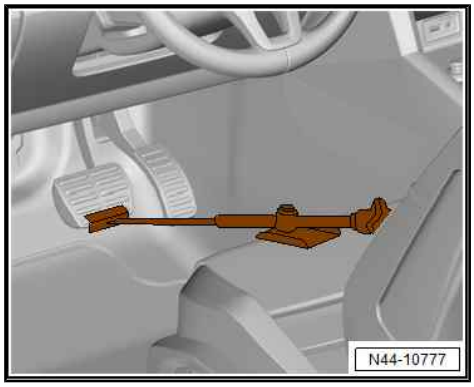

Note

This closes the valves in the brake master cylinder and stops the brake fluid reservoir from running empty.

WARNING

Risk of skin irritation

- ***Always wear chemical-resistant protective gloves to prevent brake fluid from contacting skin.***

– Detach protective cap -3- from bleeder screw -1- on front left brake caliper.

– Connect hose -2- from bleeder bottle, as shown in illustration.

– Open bleeder screw to relieve pressure in brake system.

– Close bleeder screw and remove bleeder bottle.

– Repeat procedure on rear left brake caliper.

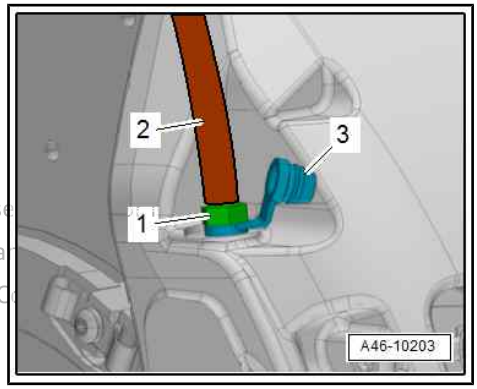

Protected by copyright. Copying for private or commercial purpose
permitted unless authorised by AUDI AG. AUDI AG does not guara
with respect to the correctness of information in this document. C

Note

The brake pedal actuator - V.A.G 1869/2- must not be removed.

– Remove engine cover panel ⇒ Rep. gr. 10 ; Engine cover panel; Removing and installing engine cover panel .

– Release fastener -arrow-, pull off cover -1- towards left and detach.

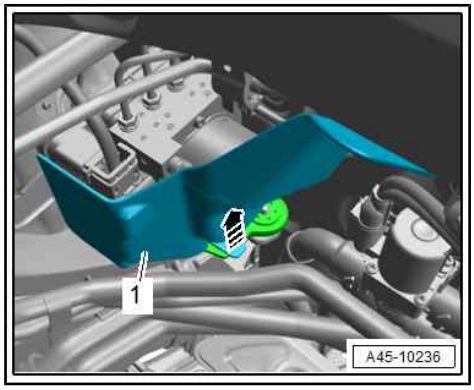

– Press down retainer catch -arrow A-.
– Release electrical connector -arrow B-.
– Unplug electrical connector -1- from control unit.

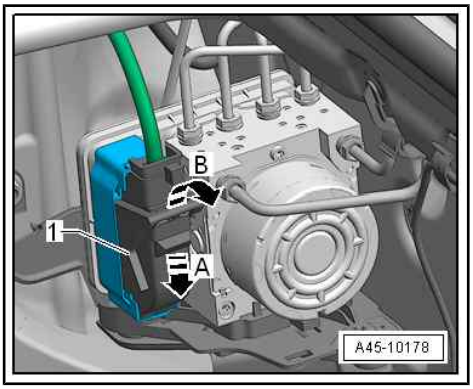

Note

- *Make sure brake fluid does not get into connector housing of control unit. This can result in corrosion of the contacts and failure of the system.*
- *Use compressed air to carefully clean connector housing if necessary.*

– To protect against escaping brake fluid, place a sufficient number of lint-free cloths in area beneath hydraulic control unit.

WARNING

Risk of damage to brake lines

- *Do not attempt to bend to a different shape.*

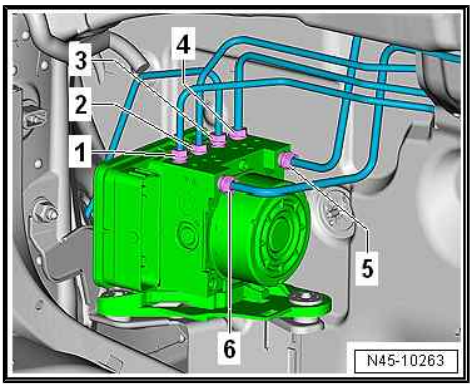

– Mark brake lines to hydraulic control unit.
– Unscrew union screws in the sequence -6 … 1- and push brake lines slightly to the side.
– Seal open connections immediately using clean sealing plugs from assembly parts set - 5Q0 698 311- .
– To protect against escaping brake fluid, place a sufficient number of lint-free cloths in area beneath brake master cylinder.

– Remove clip -1- and push heat shield slightly towards front.
– Unscrew union screws -arrows- for brake lines.
– Move brake lines clear to one side at plenum chamber partition panel.
– Seal open connections immediately using clean sealing plugs from assembly parts set - 5Q0 698 311- .

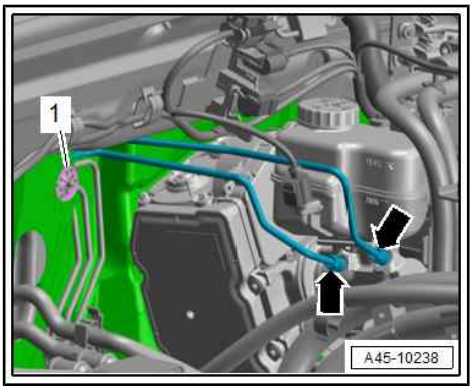

Protected by copyright. Copying for private or commercial purposes, in part or in whole, is not permitted unless authorised by AUDI AG. AUDI AG does not guarantee or accept any liability with respect to the correctness of information in this document. Copyright by AUDI AG.

WARNING

Risk of damage to brake lines

- *Do not attempt to bend to a different shape.*

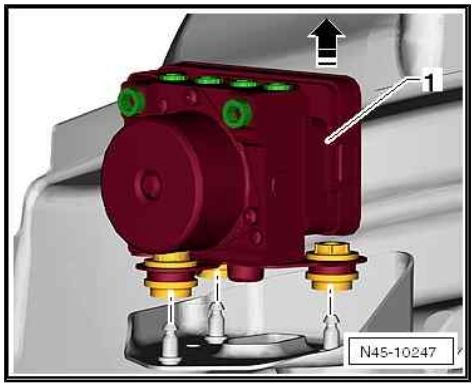

– Detach hydraulic control unit -1- upwards out of bracket -arrow-.

– Pay attention to brake lines when removing hydraulic control unit from engine compartment.

– If renewing hydraulic control unit, remove bolts -arrows- and detach mounting bracket -1-.

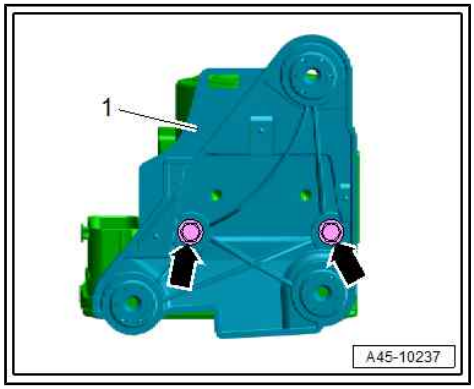

Caution

Risk of irreparable damage to hydraulic control unit

- *Do not unscrew pump motor from hydraulic control unit.*

Installing

Installation is carried out in reverse order; note the following:

Note

To facilitate installation, moisten the rubber mountings in the bracket slightly with water.

– Press ABS control unit - J104- / ABS hydraulic unit - N55- -item 1- and bracket onto studs in engine compartment -arrows-.

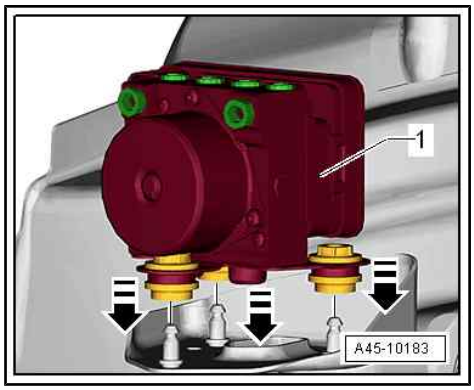

Note

- *Do not remove the sealing plugs from the new hydraulic control unit until you are ready to fit the corresponding brake line.*
- *If the sealing plugs are removed from the hydraulic control unit too soon, brake fluid may escape and it may not be possible to fill and bleed the unit properly.*
- *When installing the hydraulic control unit, ensure that the rubber dampers are not pressed out of the bracket.*

Markings on hydraulic unit:

A - Hydraulic unit to brake master cylinder (primary piston circuit), -HZ2-

B - Hydraulic unit to brake master cylinder (secondary piston circuit), -HZ1-

1 - Hydraulic unit to front right brake caliper, -VR-

2 - Hydraulic unit to rear left brake caliper, -HL-

3 - Hydraulic unit to rear right brake caliper, -HR-

4 - Hydraulic unit to front left brake caliper, -VL-

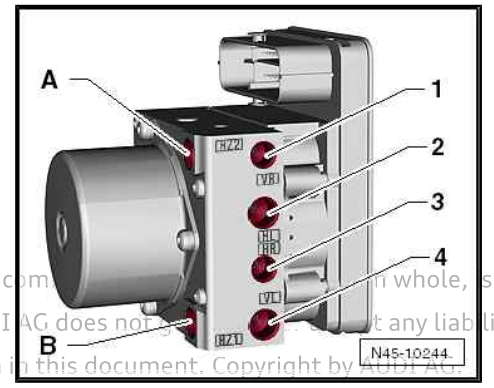

Protected by copyright. Copying for private or com[illegible] whole, is not permitted unless authorised by AUDI AG. AUDI AG does not [illegible] any liability with respect to the correctness of information in this document. Copyright by AUDI AG.

– Insert all brake lines into ABS hydraulic unit - N55- , fit threaded unions by hand and tighten in the sequence -1 … 6-.
– Clip bracket onto plenum chamber partition panel.
– Remove brake pedal actuator - V.A.G 1869/2- .
– Bleed brake system ⇒ page 235 .
– When renewing ABS control unit - J104- / ABS hydraulic unit - N55- , select the “Replace” function for the ABS control unit - J104- / ABS hydraulic unit - N55- using ⇒ Vehicle diagnostic tester, Guided Functions.

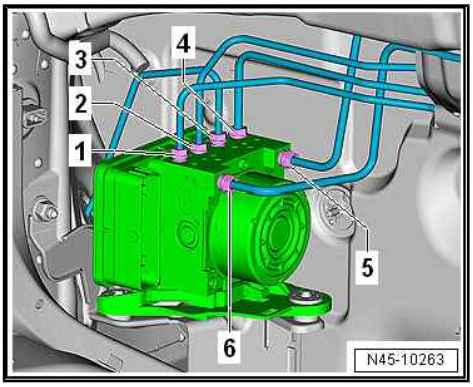

WARNING

Risk of accident!

- *Make sure that the brakes work properly before the vehicle is driven on the road.*

Tightening torques

- ⇒ “3.1 Exploded view - control unit and hydraulic unit”, page 30

3.3 Separating control unit from hydraulic unit

Control unit replacement

The control unit must be renewed:

- If a control unit fault has definitely been detected “Control unit defective” ⇒ Vehicle diagnostic tester.
- If there is visible damage to the control unit housing or connector.
- If the control unit is defective, the control unit can be detached from the hydraulic unit and renewed separately.
- If the hydraulic unit is defective, it must always be renewed together with the control unit.

Caution

Following removal, a control unit must not be bolted onto a different hydraulic unit.

Note

Before removing the control unit, read out the event memory and print out the fault code if applicable.

Protected by copyright. Copying for private or commercial purposes, in part or in whole, is not permitted unless authorised by AUDI AG. AUDI AG does not guarantee or accept any liability with respect to the correctness of information in this document. Copyright by AUDI AG.

The control unit may only be replaced by suitably qualified personnel.

- Use only the new components specified in the repair kit.
- Always use new bolts for attaching the control unit to the hydraulic unit.
- The seal on the control unit must not be lifted or pulled out.
- The seal on the control unit cannot be replaced.

- Do not blow out the control unit or hydraulic unit with compressed air.
- The valve coils in the control unit cannot be re-adjusted.
- The valve coils in the control unit cannot be replaced.
- The pressure sensor must not be modified or damaged
- The pressure sensor cannot be replaced
- Never subject the sensor housing to mechanical load.
- Never take measurements at the contact points in the control unit.
- Never take measurements at the contact points in the hydraulic unit.
- The contact pins in the hydraulic unit must not be damaged or bent.
- The contacts cannot be replaced.
- The use of contact sprays on the contacts and pressure sensor is not permissible.
- There must not be any foreign matter between the control unit and hydraulic unit.

Special tools and workshop equipment required

- ESD (electrostatic discharge) workplace - VAS 6613-

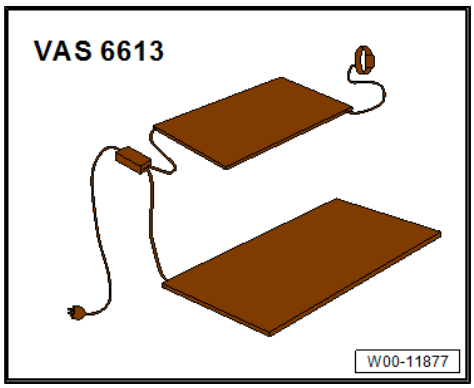

- Torx bit T25

Caution

Risk of irreparable damage to hydraulic unit

- *The return pump must not be separated from the hydraulic unit.*
- *The printed circuit board is exposed when the control unit is removed.*
- *Make sure that no moisture or dirt enters the control unit.*
- *Avoid building up an electrostatic charge.*

Protected by copyright. Copying for private or commercial purposes, in part or in whole, is not permitted unless authorised by AUDI AG. AUDI AG does not guarantee or accept any liability with respect to the correctness of information in this document. Copyright by AUDI AG.

Procedure

– Remove ABS control unit - J104- / ABS hydraulic unit - N55- ⇒ page 32 .

– Touch a suitable earthed object (ESD workplace - VAS 6613-) before working on electrical components. Do not touch the contacts or electronic components directly.

– Set down hydraulic unit with control unit on ESD workplace - VAS 6613- .
– Remove the 3 Torx bolts -arrows- for control unit and dispose of them immediately.
– Set down hydraulic unit with control unit facing upwards on ESD workplace - VAS 6613- .

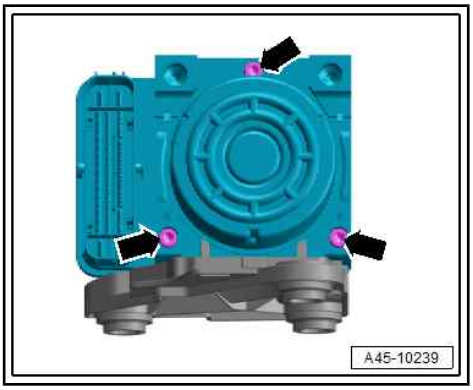

– Pull control unit off hydraulic unit, taking care to keep it straight while removing.
– Cover control unit solenoids with a lint-free cloth.
– Check that sealing surface of hydraulic unit is clean; if necessary clean with methylated spirits and a lint-free cloth.

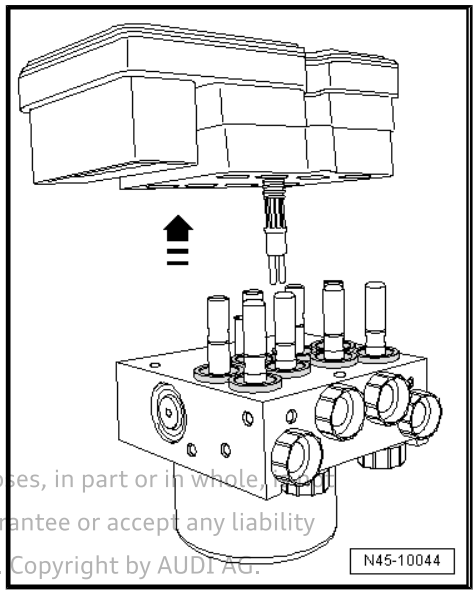

Caution

Protect the contact surfaces of the pressure sensor against mechanical damage and electrostatic discharge. Always use the ESD workplace - VAS 6613- to protect the components from overvoltage and ensure adequate earthing for the personnel.

Protected by copyright. Copying for private or commercial purposes, in part or in whole, is not permitted unless authorised by AUDI AG. AUDI AG does not guarantee or accept any liability with respect to the correctness of information in this document. Copyright by AUDI AG.

3.4 Attaching control unit to hydraulic unit

Special tools and workshop equipment required

♦ Torque screwdriver - V.A.G 1624-

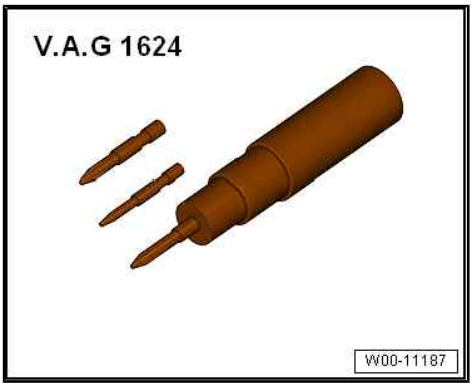

- ESD (electrostatic discharge) workplace - VAS 6613-

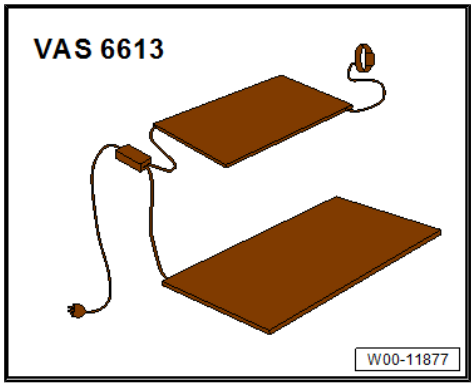

- Torx bit T25

Procedure

Note

Always renew bolts after removal.

Caution

Risk of malfunction

- ***The sealing surface on the hydraulic unit must be clean and smooth.***
- ***The hydraulic unit must be renewed if the sealing surface or the contact lugs are damaged.***
- ***The seal on the control unit cannot be replaced.***
- ***The seal on the control unit must not be lifted or pulled out.***

Reproduced by copyright. Copyright protected and commercial purposes, in part or in whole, is not permitted unless authorised by AUDI AG. AUDI AG does not guarantee or accept any liability with respect to the correctness of information in this document. Copyright by AUDI AG.

Note

- *Use the cleaning agent provided (do not use any aggressive cleaning products).*
- *Check sealing surface for damage (visual inspection).*

Caution

Risk of irreparable damage to ABS control unit

- ***Make sure that no moisture or dirt gets inside the control unit.***
- ***Do not blow out the control unit or hydraulic unit with compressed air.***
- ***Take care to protect the control unit from knocks and impact; if it is dropped, the control unit must no longer be used.***

- Clean surfaces before assembling.

– Place control unit on hydraulic unit, taking care to keep it straight.

Note

The threads in the hydraulic unit for securing the control unit must not be recut. If the thread is damaged (bolts difficult to screw in by hand or cannot be tightened to specified torque) the hydraulic unit must be renewed.

– Secure hydraulic unit and control unit using new Torx bolts provided -arrows- and tighten alternately in two stages to specified torque.

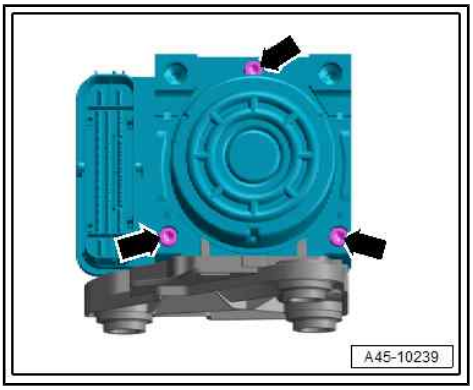

Note

- *To avoid any risk of leakage to the flexible seal, a new control unit must not be fitted more than three times onto an "old" hydraulic unit that is being re-installed.*
- *A control unit which has been in operation while the vehicle is being driven must not be fitted a second time.*

– Install ABS control unit - J104- / ABS hydraulic unit - N55- ⇒ page 32 .

– Bleed brake system ⇒ page 235 .

Note

When renewing ABS control unit - J104- , select "Replace" function for ABS control unit - J104- using ⇒ Vehicle diagnostic tester, `Guided Functions`.

After renewing the control unit and bleeding the brake system:

- All ABS/ESP warning lamps should go out.

WARNING

Risk of accident!

- ***Make sure that the brakes work properly before the vehicle is driven on the road.***

Tightening torques

- ⇒ "3.1 Exploded view - control unit and hydraulic unit", page 30

Protected by copyright. Copying for private or commercial purposes, in part or in whole, is not permitted unless authorised by AUDI AG. AUDI AG does not guarantee or accept any liability with respect to the correctness of information in this document. Copyright by AUDI AG.

4 Sensors

⇒ “4.1 Exploded view - front wheel speed sensor”, page 58

⇒ “4.2 Exploded view - rear wheel speed sensor”, page 59

⇒ “4.3 Removing and installing brake light switch”, page 61

⇒ “4.4 Removing and installing front wheel speed sensor G45 / G47 ”, page 63

⇒ “4.5 Removing and installing rear wheel speed sensor G44 / G46 ”, page 64

⇒ “4.6 Checking ABS speed sensor ring”, page 66

4.1 Exploded view - front wheel speed sensor

1 - Wheel hub with wheel bearing

- ❑ The ABS sensor ring is located on the wheel bearing
- ❑ ⇒ “4.6 Checking ABS speed sensor ring”, page 66

2 - Wheel bearing housing

- ❑ Clean inner surface of bore before inserting speed sensor

3 - Bolt

- ❑ 8 Nm

4 - Front speed sensor

- ❑ Front right speed sensor - G45- / front left speed sensor - G47-
- ❑ Before installing, lubricate speed sensor all round with lubricating paste - G 000 650-
- ❑ Removing and installing ⇒ page 63

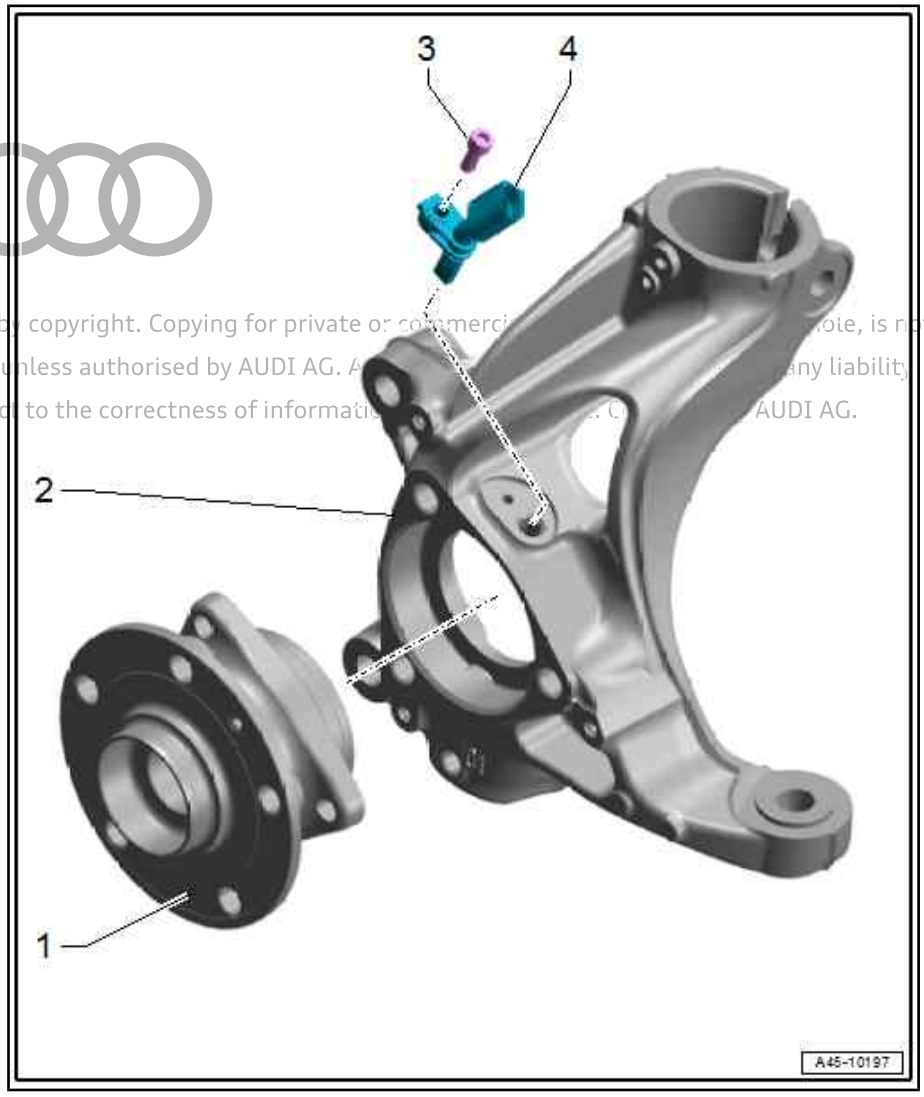

Protected by copyright. Copying for private or commercial purposes, in whole or in part, is not permitted unless authorised by AUDI AG. AUDI AG does not guarantee or assume any liability with respect to the correctness of information in this document. Copyright by AUDI AG.

4.2 Exploded view - rear wheel speed sensor

⇒ “4.2.1 Exploded view - rear wheel speed sensor, vehicles with front-wheel drive and torsion beam axle”, page 59

⇒ “4.2.2 Exploded view - rear wheel speed sensor, vehicles with front-wheel drive and multi-link suspension”, page 60

⇒ “4.2.3 Exploded view - rear wheel speed sensor, vehicles with four-wheel drive”, page 61

4.2.1 Exploded view - rear wheel speed sensor, vehicles with front-wheel drive and torsion beam axle

1 - Wheel hub with wheel bearing

- ❑ The ABS sensor ring is located on the wheel bearing
- ❑ ⇒ “4.6 Checking ABS speed sensor ring”, page 66

2 - Torsion beam axle

- ❑ Clean inner surface of bore before inserting speed sensor

3 - Rear speed sensor

- ❑ Rear right speed sensor - G44- / rear left speed sensor - G46-
- ❑ Before installing, lubricate speed sensor all round with lubricating paste - G 000 650-
- ❑ Removing and installing ⇒ page 64

4 - Bolt

- ❑ 8 Nm

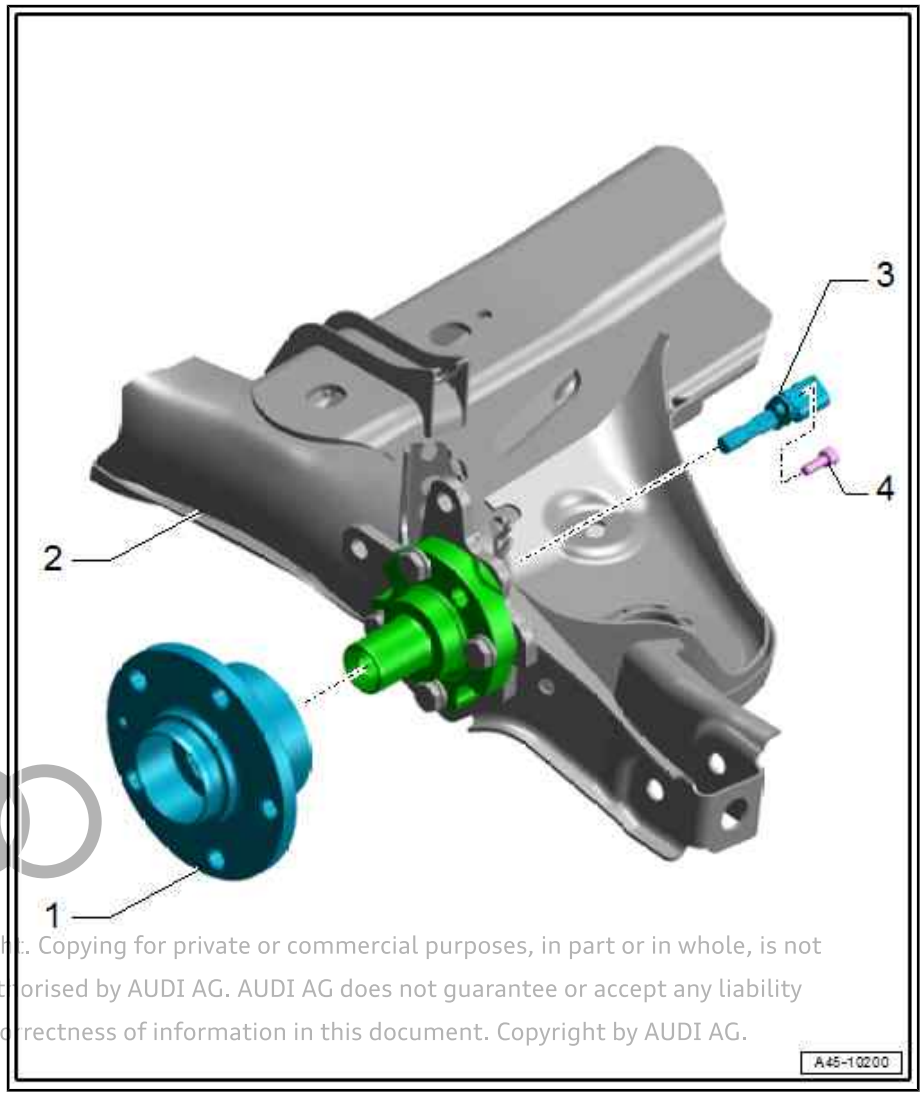

Protected by copyright. Copying for private or commercial purposes, in part or in whole, is not permitted unless authorised by AUDI AG. AUDI AG does not guarantee or accept any liability with respect to the correctness of information in this document. Copyright by AUDI AG.

4.2.2 Exploded view - rear wheel speed sensor, vehicles with front-wheel drive and multi-link suspension

1 - Wheel hub with wheel bearing

- ❑ The ABS sensor ring is located on the wheel bearing
- ❑ ⇒ “4.6 Checking ABS speed sensor ring”, page 66
- ❑ Removing and installing ⇒ Running gear, axles, steering; Rep. gr. 42 ; Wheel bearing, trailing arm; Removing and installing wheel bearing unit

2 - Wheel bearing housing

- ❑ Clean inner surface of bore before inserting speed sensor

3 - Rear speed sensor

- ❑ Rear right speed sensor - G44- / rear left speed sensor - G46-
- ❑ Before installing, lubricate speed sensor all round with lubricating paste - G 000 650-
- ❑ Removing and installing ⇒ page 64

4 - Bolt

- ❑ 8 Nm

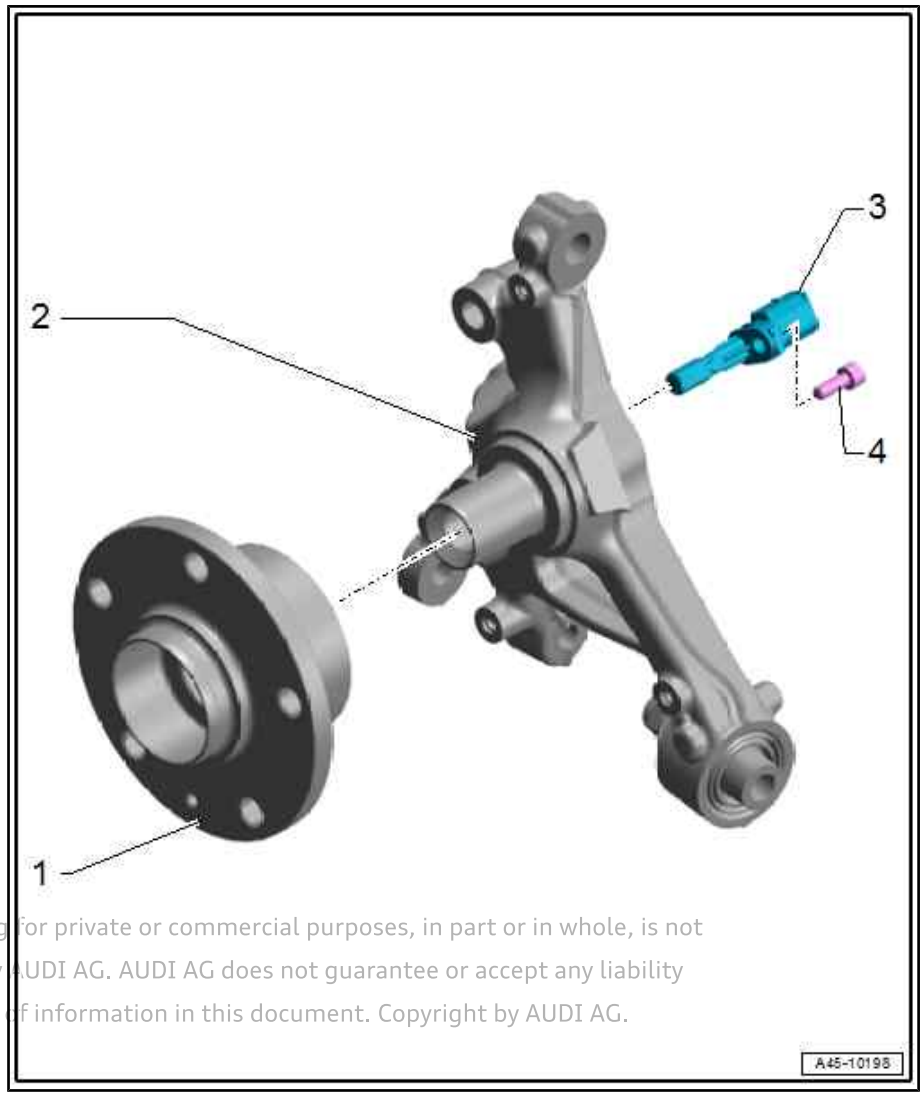

Protected by copyright. Copying for private or commercial purposes, in part or in whole, is not permitted unless authorised by AUDI AG. AUDI AG does not guarantee or accept any liability with respect to the correctness of information in this document. Copyright by AUDI AG.

4.2.3 Exploded view - rear wheel speed sensor, vehicles with four-wheel drive

1 - Wheel bearing unit

- ABS sensor ring is installed in wheel bearing
- ⇒ “4.6 Checking ABS speed sensor ring”, page 66
- Removing and installing ⇒ Running gear, axles, steering; Rep. gr. 42 ; Wheel bearing, trailing arm; Removing and installing wheel bearing unit

2 - Wheel bearing housing

- Clean inner surface of bore before inserting speed sensor

3 - Speed sensor

- Rear right speed sensor - G44- , rear left speed sensor - G46-
- Removing and installing ⇒ page 64
- Before installing, lubricate speed sensor all round with lubricating paste - G 000 650-

4 - Bolt

- 8 Nm

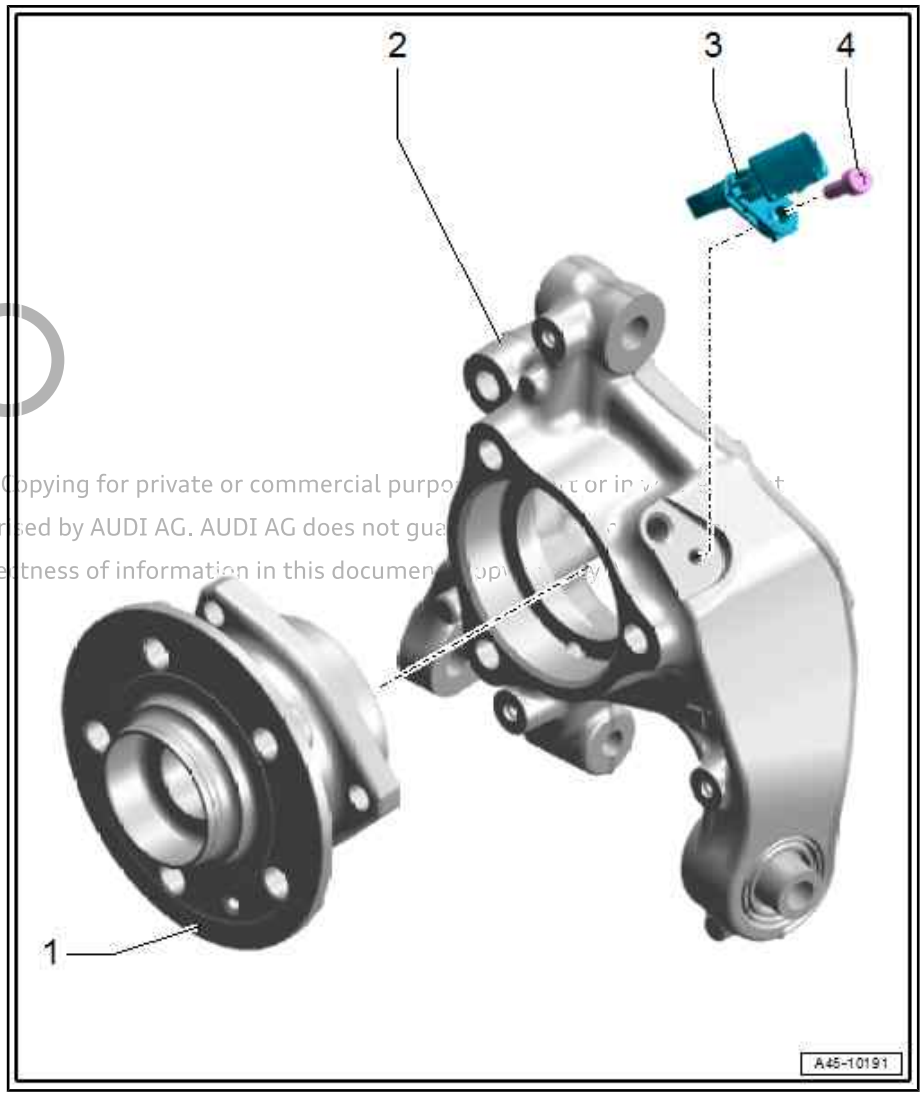

This document is copyright. Copying for private or commercial purposes, in part or in whole, is not permitted unless authorised by AUDI AG. AUDI AG does not guarantee or assume any liability with respect to the correctness of information in this document. Copyright by AUDI AG.

4.3 Removing and installing brake light switch

Note

- *Fitting location ⇒ page 28*
- *The procedure described applies for vehicles without high-voltage system.*
- *There is currently no provision for removing and installing the brake light switch on vehicles with high-voltage system.*

Special tools and workshop equipment required

♦ Torque wrench - V.A.G 1410-

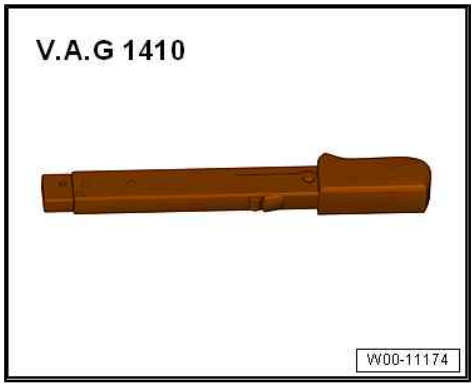

Removing

– Remove engine cover panel ⇒ Rep. gr. 10 ; Engine cover panel; Removing and installing engine cover panel .

Vehicles with 1.5 ltr./1.8 ltr./2.0 ltr. TFSI engine:

– Release hose clips -1, 2- and remove air intake pipe.

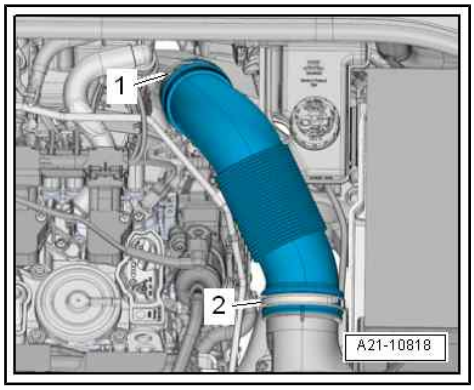

Vehicles with 2.5 ltr. TFSI engine:

– Release hose clips -arrows- and remove air intake pipe.

Protected by copyright. Copying for private or comm
permitted unless authorised by AUDI AG. AUDI AG d
with respect to the correctness of information in this

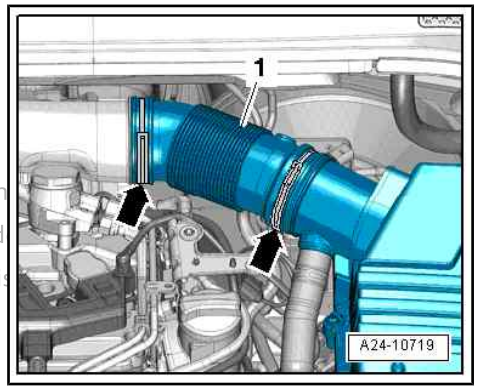

Vehicles with 1.6/2.0 ltr. TDI engine:

– Move vacuum hoses clear -arrows-.

– Release hose clips -1, 2- and remove air intake pipe.

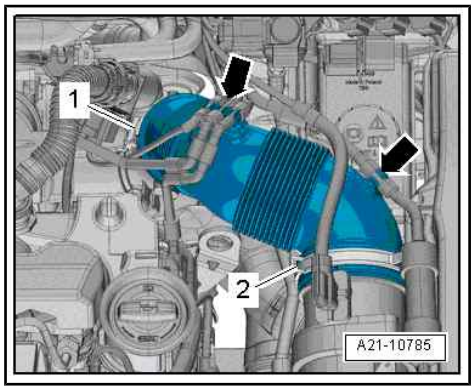

All vehicles (continued):

– Unplug electrical connector -2-.

– Remove bolt -3-.

– Detach brake light switch - F- -item 1- from brake master cylinder.

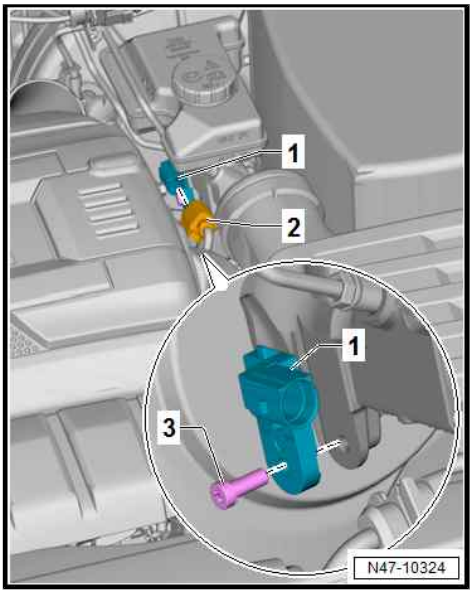

Installing

Installation is carried out in reverse order; note the following:

- Brake light switch -1- must make contact with edge -arrow- of brake master cylinder.

Tightening torques

♦ ⇒ Item 6 (page 167)

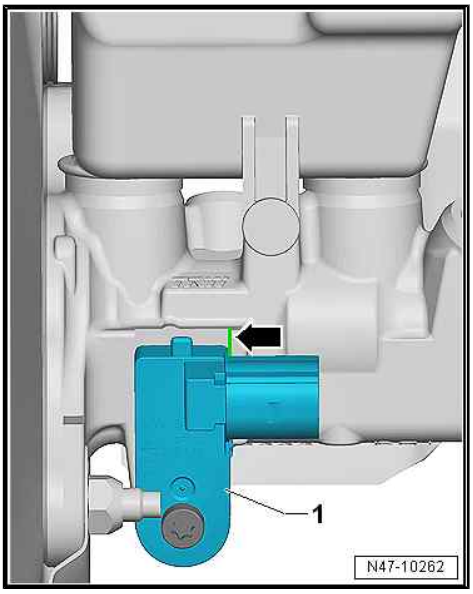

4.4 Removing and installing front wheel speed sensor -G45- / -G47-

Special tools and workshop equipment required

♦ Torque wrench - V.A.G 1410-

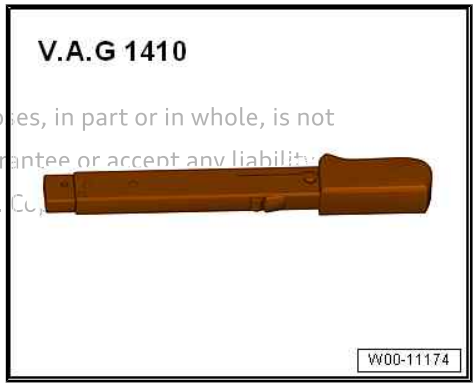

Protected by copyright. Copying for private or commercial purposes, in part or in whole, is not permitted unless authorised by AUDI AG. AUDI AG does not guarantee or accept any liability with respect to the correctness of information in this document. Co

♦ Lubricating paste - G 000 650- ⇒ Electronic parts catalogue

Removing

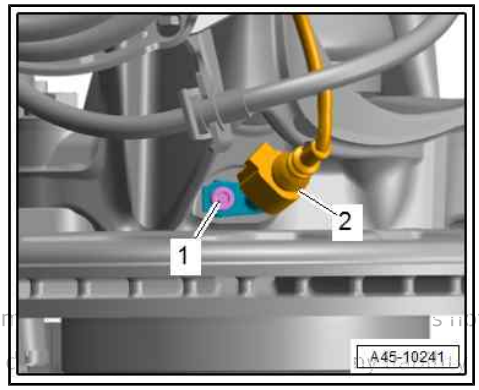

– Remove front wheel ⇒ Running gear, axles, steering; Rep. gr. 44 ; Wheels, tyres .

– Unplug electrical connector -2- from speed sensor.

– Unscrew bolt -1- and pull speed sensor out of wheel bearing housing.

Installing

Installation is carried out in reverse order; note the following:

– Before inserting speed sensor, clean inner surface of fitting hole and coat speed sensor thoroughly with grease - G 000 650- .

Protected by copyright. Copying for private or comm... permitted unless authorised by AUDI AG. AUDI AG ... with respect to the correctness of information in this document. Copyright by AUDI AG.

Tightening torques

♦ ⇒ “4.1 Exploded view - front wheel speed sensor”, page 58

♦ ⇒ Running gear, axles, steering; Rep. gr. 44 ; Wheels, tyres

4.5 Removing and installing rear wheel speed sensor -G44- / -G46-

⇒ “4.5.1 Removing and installing rear wheel speed sensor G44 / G46 - vehicles with front-wheel drive and torsion beam axle”, page 64

⇒ “4.5.2 Removing and installing rear wheel speed sensor G44 / G46 - vehicles with front-wheel drive and multi-link suspension”, page 65

⇒ “4.5.3 Removing and installing rear wheel speed sensor G44 / G46 - vehicles with four-wheel drive”, page 65

4.5.1 Removing and installing rear wheel speed sensor -G44- / -G46- - vehicles with front-wheel drive and torsion beam axle

Special tools and workshop equipment required

♦ Torque wrench - V.A.G 1410-

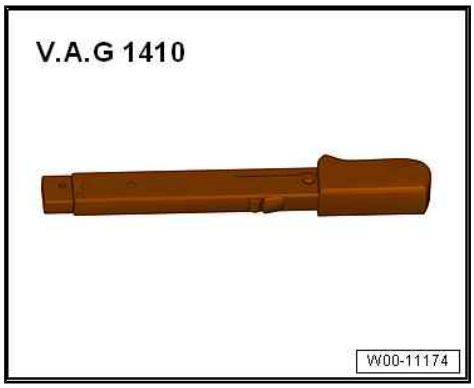

♦ Lubricating paste - G 000 650- ⇒ Electronic parts catalogue

Removing

– Unplug electrical connector -2- from speed sensor.

– Unscrew bolt -1- and pull speed sensor out of torsion beam axle.

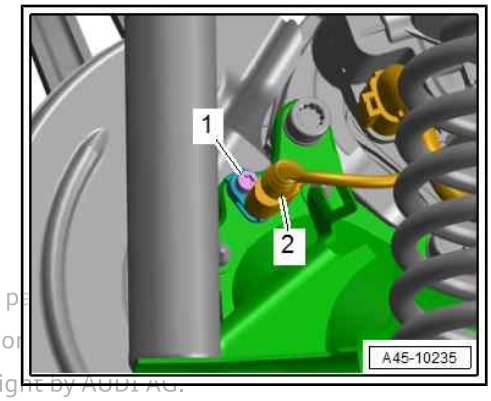

Installing

Installation is carried out in reverse order; note the following:

– Before inserting speed sensor, clean inner surface of fitting hole and coat speed sensor thoroughly with grease - G 000 650- .

Protected by copyright. Copying for private or commercial purposes, in p
permitted unless authorised by AUDI AG. AUDI AG does not guarantee or
with respect to the correctness of information in this document. Copyright by AUDI AG.

Tightening torques

♦ ⇒ “4.2.1 Exploded view - rear wheel speed sensor, vehicles with front-wheel drive and torsion beam axle”, page 59

4.5.2 Removing and installing rear wheel speed sensor -G44- / -G46- - vehicles with front-wheel drive and multi-link suspension

Special tools and workshop equipment required

♦ Torque wrench - V.A.G 1410-

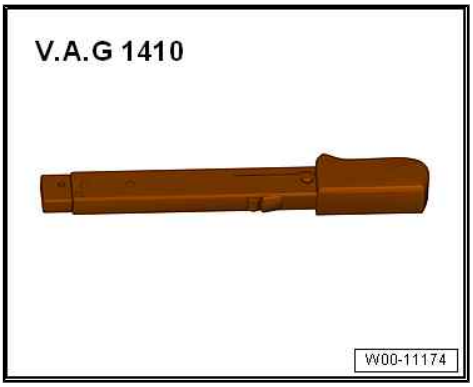

♦ Lubricating paste - G 000 650- ⇒ Electronic parts catalogue

Removing

– Unplug electrical connector -2- from speed sensor.

– Unscrew bolt -1- and pull speed sensor out of wheel bearing housing.

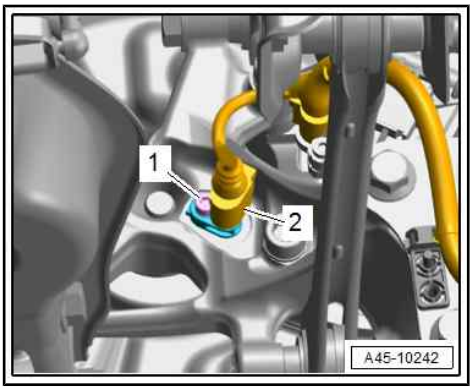

Installing

Installation is carried out in reverse order; note the following:

– Before inserting speed sensor, clean inner surface of fitting hole and coat speed sensor thoroughly with grease - G 000 650- .

Tightening torques

♦ ⇒ “4.2.2 Exploded view - rear wheel speed sensor, vehicles with front-wheel drive and multi-link suspension”, page 60

4.5.3 Removing and installing rear wheel speed sensor -G44- / -G46- - vehicles with four-wheel drive

Special tools and workshop equipment required

- Torque wrench - V.A.G 1410-

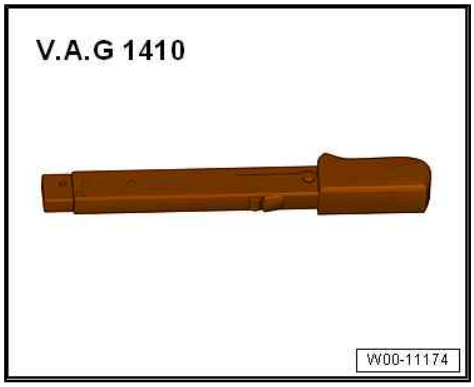

- Lubricating paste - G 000 650- ⇒ Electronic parts catalogue

Protected by copyright. Copying for private or commercial purposes, in part or in
permitted unless authorised by AUDI AG. AUDI AG does not guarantee or accept a
with respect to the correctness of information in this document. Copyright by AUDI AG.

Removing

– Unplug electrical connector -2- from speed sensor.
– Unscrew bolt -1- and pull speed sensor out of wheel bearing housing.

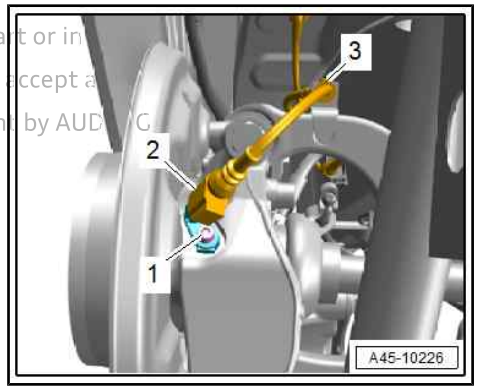

Note

Disregard -item 3-.

Installing

Installation is carried out in reverse order; note the following:

– Before inserting speed sensor, clean inner surface of fitting hole and coat speed sensor thoroughly with grease - G 000 650- .

Tightening torques

- ⇒ “4.2.3 Exploded view - rear wheel speed sensor, vehicles with four-wheel drive”, page 61

4.6 Checking ABS speed sensor ring

Special tools and workshop equipment required

- Sensor gauge - T10473-

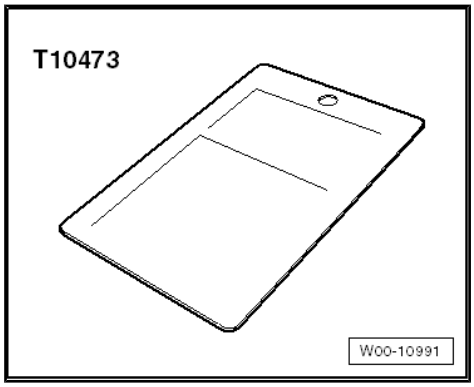

Procedure

- Wheel bearing unit removed ⇒ Running gear, axles, steering; Rep. gr. 40 ; Wheel bearing; Removing and installing wheel bearing unit / ⇒ Running gear, axles, steering; Rep. gr. 42 ; Wheel bearing, trailing arm; Removing and installing wheel bearing unit .

– Check entire circumference of sensor ring for ABS speed sensor using sensor gauge - T10473- , as shown.

1 - Wheel bearing unit

2 - Seal with integrated sensor ring for ABS speed sensor

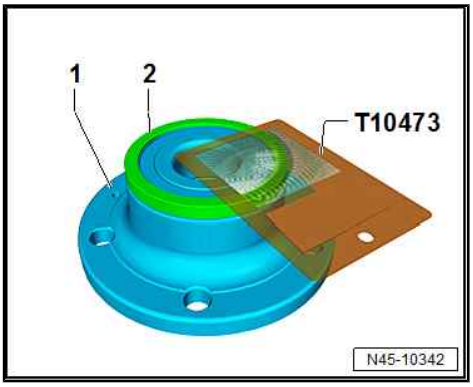

Inspection image of sensor ring for ABS speed sensor

A - Sensor ring OK

B - Sensor ring faulty

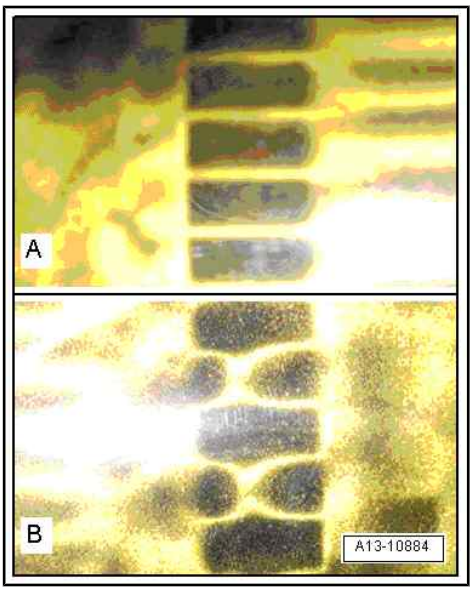

Protected by copyright. Copying for private or commercial purposes, in part or in whole, is not permitted unless authorised by AUDI AG. AUDI AG does not guarantee or accept any liability with respect to the correctness of information in this document. Copyright by AUDI AG.

46 – Brakes - mechanism

1 Front brakes

⇒ “1.1 Exploded view - front brakes”, page 68

⇒ “1.2 Vibration dampers on brake caliper”, page 75

⇒ “1.3 Removing and installing brake pads”, page 77

⇒ “1.4 Removing and installing brake caliper”, page 88

⇒ “1.5 Renewing brake caliper”, page 96

⇒ “1.6 Removing and installing brake carrier”, page 108

⇒ “1.7 Removing and installing brake disc”, page 110

⇒ “1.8 Removing and installing splash plate”, page 112

Protected by copyright. Copying for private or commercial purposes, in part or in whole, is not permitted unless authorised by AUDI AG. AUDI AG does not guarantee or accept any liability with respect to the correctness of information in this document. Copyright by AUDI AG.

1.1 Exploded view - front brakes

⇒ “1.1.1 Exploded view - front brakes (1ZF)”, page 68

⇒ “1.1.2 Exploded view - front brakes (1LB/1LC/1LJ/1ZA/1ZD/1ZE/1ZP)”, page 70

⇒ “1.1.3 Exploded view - front brakes, RS 3 (1LF/1LH/1LL/1LN/1LU)”, page 73

1.1.1 Exploded view - front brakes (1ZF)

Note

- *Clean bolts and nuts before reusing.*
- *Always renew self-locking bolts/nuts.*
- *Always renew damaged bolts/nuts.*

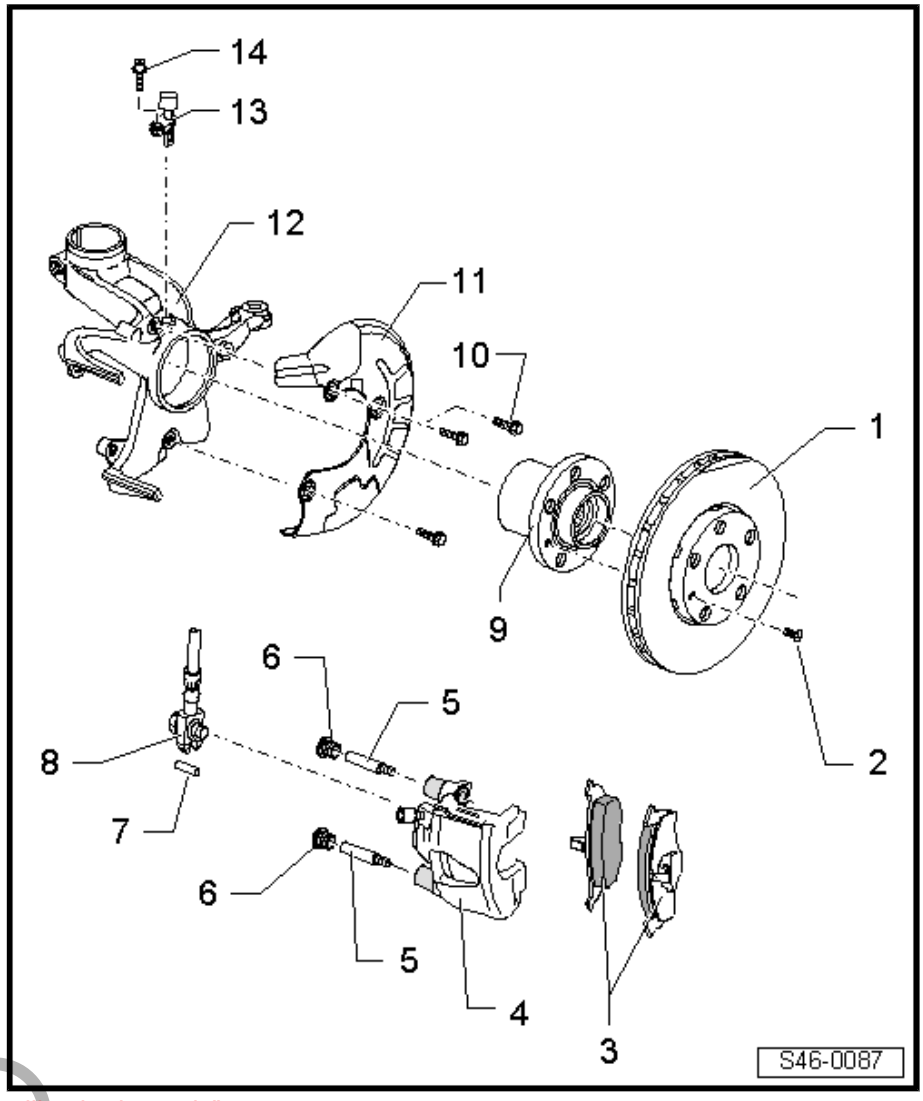

1 - Brake disc

- ❑ Internally ventilated
- ❑ Detach brake caliper prior to removing
- ❑ Do not force brake discs off wheel hub; if necessary, use rust remover, otherwise brake discs could be damaged.
- ❑ ⇒ "1.7 Removing and installing brake disc", page 110

> **WARNING**
> *If one brake disc is damaged or worn, the other discs must also be checked for damage and wear.*

2 - Torx bolt

- ❑ 8 Nm

3 - Brake pads

- ❑ Thickness: 12 mm not including backplate
- ❑ Wear limit: 2 mm (without backplate)
- ❑ Checking thickness ⇒ Maintenance ; Booklet 821 ; Maintenance; Brake pads: checking thickness
- ❑ Always renew on both sides of axle
- ❑ ⇒ "1.3 Removing and installing brake pads", page 77

4 - Brake caliper

- ❑ Do not disconnect brake hose when changing brake pads
- ❑ ⇒ "1.4 Removing and installing brake caliper", page 88
- ❑ ⇒ "1.5 Renewing brake caliper", page 96

Protected by copyright. Copying for private or commercial purposes, in part or in whole, is not permitted unless authorised by AUDI AG. AUDI AG does not guarantee or accept any liability with respect to the correctness of information in this document. Copyright by AUDI AG.

5 - Guide pin

- ❑ 30 Nm

> **Note**
> *Always renew self-locking guide pin.*

6 - Trim cap

- ❑ Take off

7 - Spring pin

8 - Brake hose with banjo union and banjo bolt

- ❑ 35 Nm

> **Note**
> *If damaged, renew bolt together with brake hose*

9 - Wheel hub with wheel bearing

- ❑ Pressing in and out ⇒ Running gear, axles, steering; Rep. gr. 40 ; Wheel bearing; Exploded view - wheel bearing

10 - Torx bolts

- ❑ 12 Nm

Note

- ♦ *Clean bolts and nuts before re-using.*
- ♦ *Always renew self-locking bolts/ nuts.*
- ♦ *Always renew damaged bolts/ nuts.*

Protected by copyright. Copying for private or commercial purposes, in part or in whole, is not permitted unless authorised by AUDI AG. AUDI AG does not guarantee or accept any liability with respect to the correctness of information in this document. Copyright by AUDI AG.

11 - Splash plate for brakes

- ❑ ⇒ “1.8 Removing and installing splash plate”, page 112

12 - Wheel bearing housing

- ❑ With integrated brake carrier
- ❑ Grease guide surfaces lightly with lithium grease - G 052 150 A2-

13 - Speed sensor

- ❑ Before inserting sensor, clean inside surface of bore and apply high-temperature paste - G 052 112 A3-

14 - Hexagon socket-head bolt

- ❑ 8 Nm

Note

- ♦ *Clean bolts and nuts before re-using.*
- ♦ *Always renew self-locking bolts/ nuts.*
- ♦ *Always renew damaged bolts/ nuts.*

1.1.2 Exploded view - front brakes (1LB/1LC/ 1LJ/1ZA/1ZD/1ZE/1ZP)

Note

- ♦ *Clean bolts and nuts before reusing.*
- ♦ *Always renew self-locking bolts/nuts.*
- ♦ *Always renew damaged bolts/nuts.*

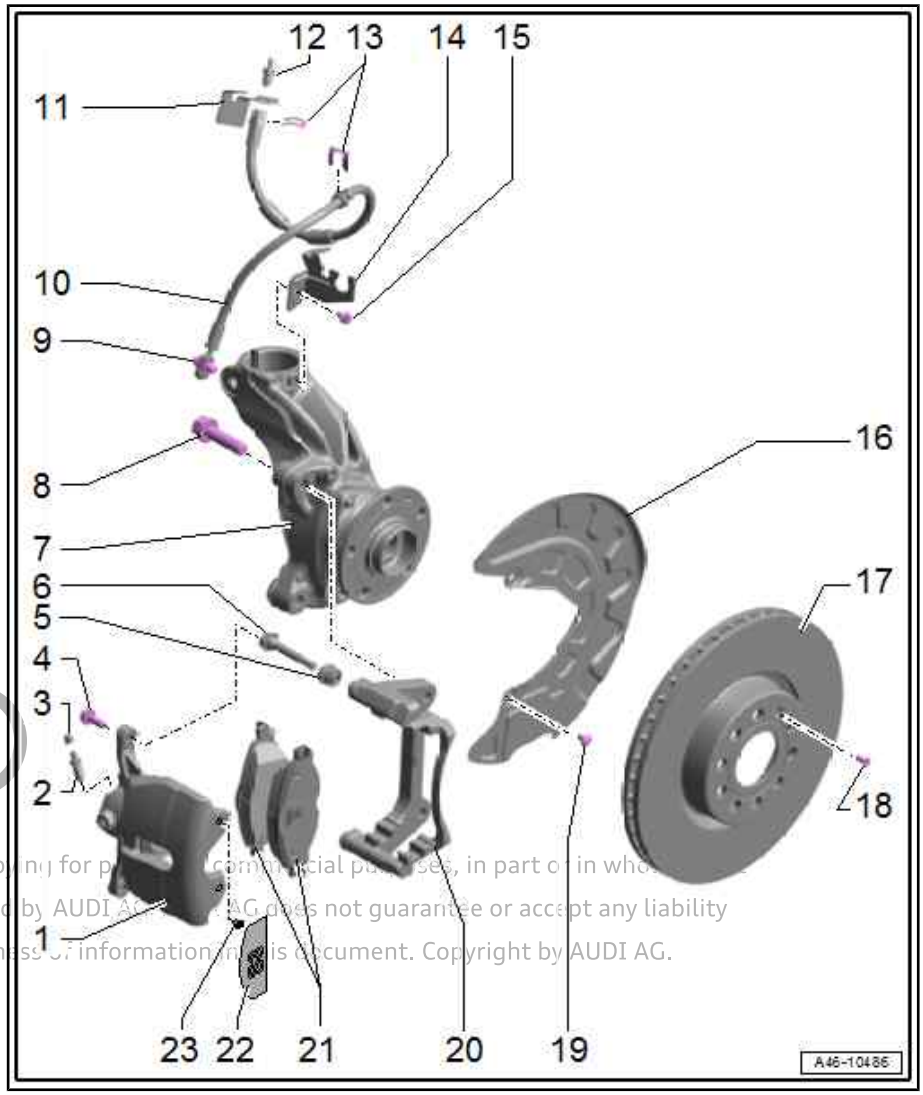

1 - Brake caliper

- ❑ For correct version refer to ⇒ Electronic parts catalogue
- ❑ ⇒ "1.4 Removing and installing brake caliper", page 88
- ❑ ⇒ "1.5.2 Renewing brake caliper - front brakes (1LB/1LC/1LJ/1ZA/1ZD/1ZE/1ZP)", page 98
- ❑ ⇒ "1.2 Removing and installing brake caliper piston", page 155
- ❑ ⇒ "1.2 Vibration dampers on brake caliper", page 75

2 - Bleeder screw

- ❑ Apply a thin coat of assembly paste - G 052 150 A2- before fitting
- ❑ 10 Nm

3 - Protective cap

4 - Bolt

- ❑ 35 Nm

5 - Bearing bush

6 - Guide pin

7 - Wheel bearing housing

8 - Bolt

- ❑ 200 Nm

Protected by copyright. Copying for private or commercial purposes, in part or in whole, is not permitted unless authorised by AUDI AG. AUDI AG does not guarantee or accept any liability with respect to the correctness of information in this document. Copyright by AUDI AG.

9 - Banjo bolt

- ❑ Captive version with seals
- ❑ Clean sealing surface on brake caliper to remove corrosion
- ❑ 35 Nm

10 - Brake hose

- ❑ Make sure the brake hose is routed correctly. The brake hose must not be kinked, crushed or twisted or chafe against parts of the vehicle at any point.
- ❑ Renew if damaged
- ❑ Ensure that lugs are properly seated in grooves in bracket

11 - Bracket

- ❑ For brake line/hose

12 - Brake line

- ❑ Tightening torque, brake line to brake hose: 14 Nm

13 - Retaining springs

- ❑ Renew if damaged

14 - Bracket

- ❑ For brake hose and electrical wiring

15 - Bolt

- ❑ 8 Nm

16 - Splash plate for brakes

- ⇒ “1.8 Removing and installing splash plate”, page 112

17 - Brake disc

- For correct version refer to ⇒ Electronic parts catalogue
- Do not force brake discs off wheel hub; if necessary, use rust remover, otherwise brake discs could be damaged.
- For correct version refer to ⇒ Electronic parts catalogue
- ⇒ “1.7 Removing and installing brake disc”, page 110

> **WARNING**
> *If one brake disc is damaged or worn, the other discs must also be checked for damage and wear.*

18 - Bolt

- 4.5 Nm

19 - Bolt

- 12 Nm

20 - Brake carrier

- Apply a thin coat of lithium grease - G 052 150 A2- to contact surfaces for brake pads

21 - Brake pads

- For correct version refer to ⇒ Electronic parts catalogue
- Checking brake pad thickness ⇒ Maintenance ; Booklet 821 ; Maintenance; Brake pads: checking thickness
- Always renew on both sides of axle
- ⇒ “1.3 Removing and installing brake pads”, page 77
- Note correct position: inner brake pad (right-side) with pad wear sender

22 - Trim plate with emblem

- Equipment version

23 - Grommet

- For version with trim plate

Installation position of brake pads (depending on model)

There are letters on the brake pads (depending on model).

Explanation of lettering -arrows-:

H - Outer left and right brake pads

X - Inner left brake pad

Y - Inner right brake pad

Note the lettering when installing the brake pads (depending on model).

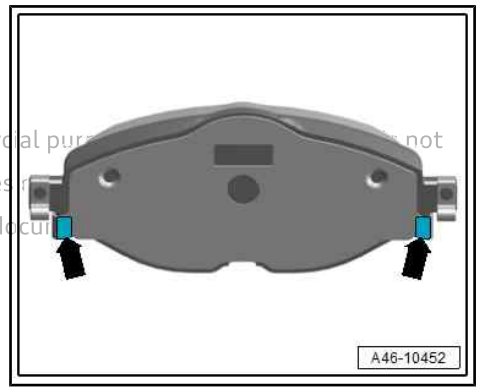

Protected by copyright. Copying for private or commercial pur not
permitted unless authorised by AUDI AG. AUDI AG does
with respect to the correctness of information in this docu

1.1.3 Exploded view - front brakes, RS 3 (1LF/1LH/1LL/1LN/1LU)

Note

- *Clean bolts and nuts before reusing.*
- *Always renew self-locking bolts/nuts.*
- *Always renew damaged bolts/nuts.*

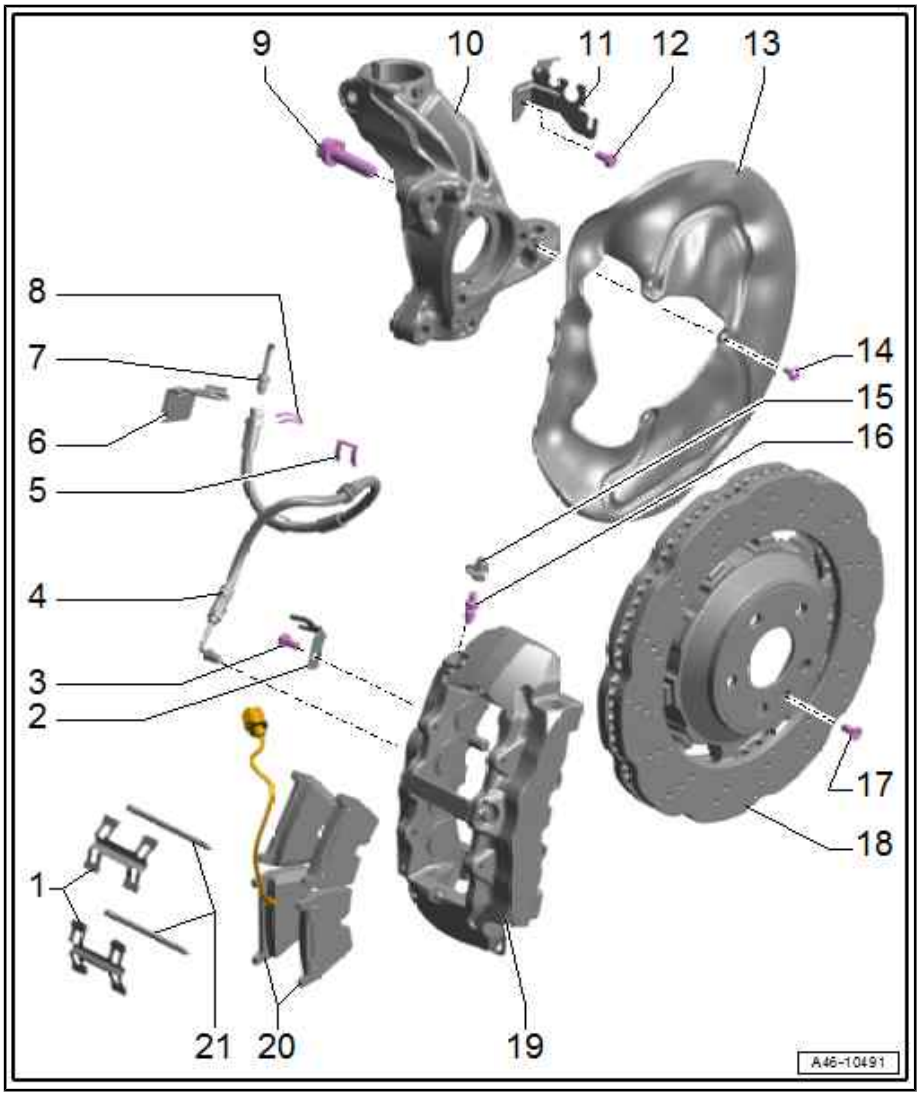

1 - Pad retaining springs
- ❑ Renew when changing pads
- ❑ Ensure correct positioning in brake caliper

2 - Bracket
- ❑ For brake hose

3 - Bolt
- ❑ 8 Nm

4 - Brake hose
- ❑ Make sure the brake hose is routed correctly. The brake hose must not be kinked, crushed or twisted or chafe against parts of the vehicle at any point.
- ❑ Renew if damaged
- ❑ Ensure that lugs are properly seated in grooves in bracket
- ❑ Tightening torque, brake hose to brake caliper: 15 Nm

5 - Retaining spring
- ❑ Renew if damaged

6 - Bracket
- ❑ For brake hose

7 - Brake line
- ❑ Tightening torque, brake line to brake hose: 14 Nm

8 - Retaining spring
- ❑ Renew if damaged

9 - Bolt
- ❑ With washer
- ❑ 200 Nm

10 - Wheel bearing housing

11 - Bracket
- ❑ For brake hose and electrical wiring

Protected by copyright. Copying for private or commercial purposes, in part or in whole, is not permitted unless authorised by AUDI AG. AUDI AG does not guarantee or accept any liability with respect to the correctness of information in this document. Copyright by AUDI AG.

12 - Bolt

- ❑ 8 Nm

13 - Splash plate for brakes

- ❑ ⇒ “1.8 Removing and installing splash plate”, page 112

14 - Bolt

- ❑ 12 Nm

15 - Protective cap

16 - Bleeder screw

- ❑ Apply a thin coat of assembly paste - G 052 150 A2- before fitting
- ❑ 10 Nm

17 - Bolt

- ❑ 5.0 Nm

18 - Brake disc

- ❑ Do not force brake discs off wheel hub; if necessary, use rust remover, otherwise brake discs could be damaged.
- ❑ ⇒ “1.7 Removing and installing brake disc”, page 110

cted by copyright. Copying for private or commercial purposes, in part or in whole, is not permitted unless authorised by AUDI AG. AUDI AG does not guarantee or accept any liability with respect to the correctness of information in this document. Copyright by AUDI AG.

> **WARNING**
>
> *If one brake disc is damaged or worn, the other discs must also be checked for damage and wear.*

19 - Brake caliper

- ❑ For correct version refer to ⇒ Electronic parts catalogue
- ❑ Must not be unbolted from brake carrier ⇒ page 75
- ❑ ⇒ “1.4.3 Removing and installing brake caliper - front brakes, RS 3 (1LF/1LH/1LL/1LN/1LU)”, page 92
- ❑ ⇒ “1.5.3 Renewing brake caliper - front brakes, RS 3 (1LF/1LH/1LL/1LN/1LU)”, page 103
- ❑ ⇒ “1.1.2 Exploded view - front brake caliper, eight-piston brakes”, page 155
- ❑ ⇒ “1.2 Vibration dampers on brake caliper”, page 75

20 - Brake pads

- ❑ Checking brake pad thickness ⇒ Maintenance ; Booklet 821 ; Maintenance; Brake pads: checking thickness
- ❑ Always renew on both sides of axle
- ❑ ⇒ “1.3.3 Removing and installing brake pads - front brakes, RS 3 (1LF/1LH/1LL/1LN/1LU)”, page 84
- ❑ Note correct position: inner brake pad (right-side) with pad wear sender

21 - Pad retaining pins

- ❑ Renew when changing pads
- ❑ Note correct installation position
- ❑ Knock out inwards

Do not slacken bolts securing brake caliper/brake carrier or bolts securing centre retaining pin -arrows-

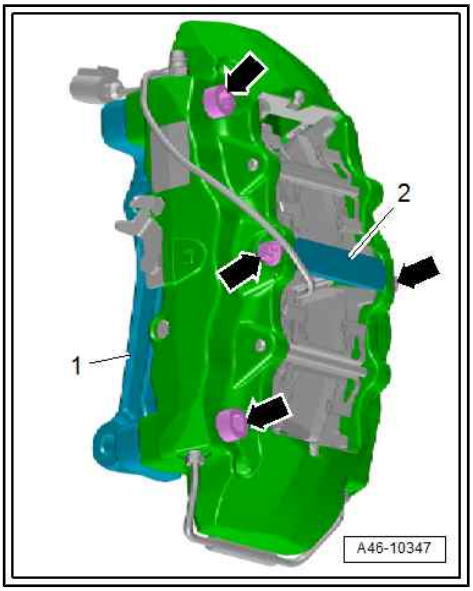

Caution

Risk of malfunction

- *DO NOT slacken off bolts -arrows- securing brake carrier -1- to brake caliper or bolts securing centre retaining pin -2-.*

Protected by copyright. Copying for private or commercial purposes, in part or in whole, is not permitted unless authorised by AUDI AG. AUDI AG does not guarantee or accept any liability with respect to the correctness of information in this document. Copyright by AUDI AG.

1.2 Vibration dampers on brake caliper

Note

- *Clean bolts and nuts before reusing.*
- *Always renew self-locking bolts/nuts.*
- *Always renew damaged bolts/nuts.*

Depending on the model, two vibration dampers are fitted on each front brake caliper.

1 - Bolt

- ❑ 10 Nm

2 - Vibration damper

- ❑ Two fitted on each front brake caliper
- ❑ ⇒ “1.2.1 Removing and installing vibration dampers”, page 76

3 - Brake caliper

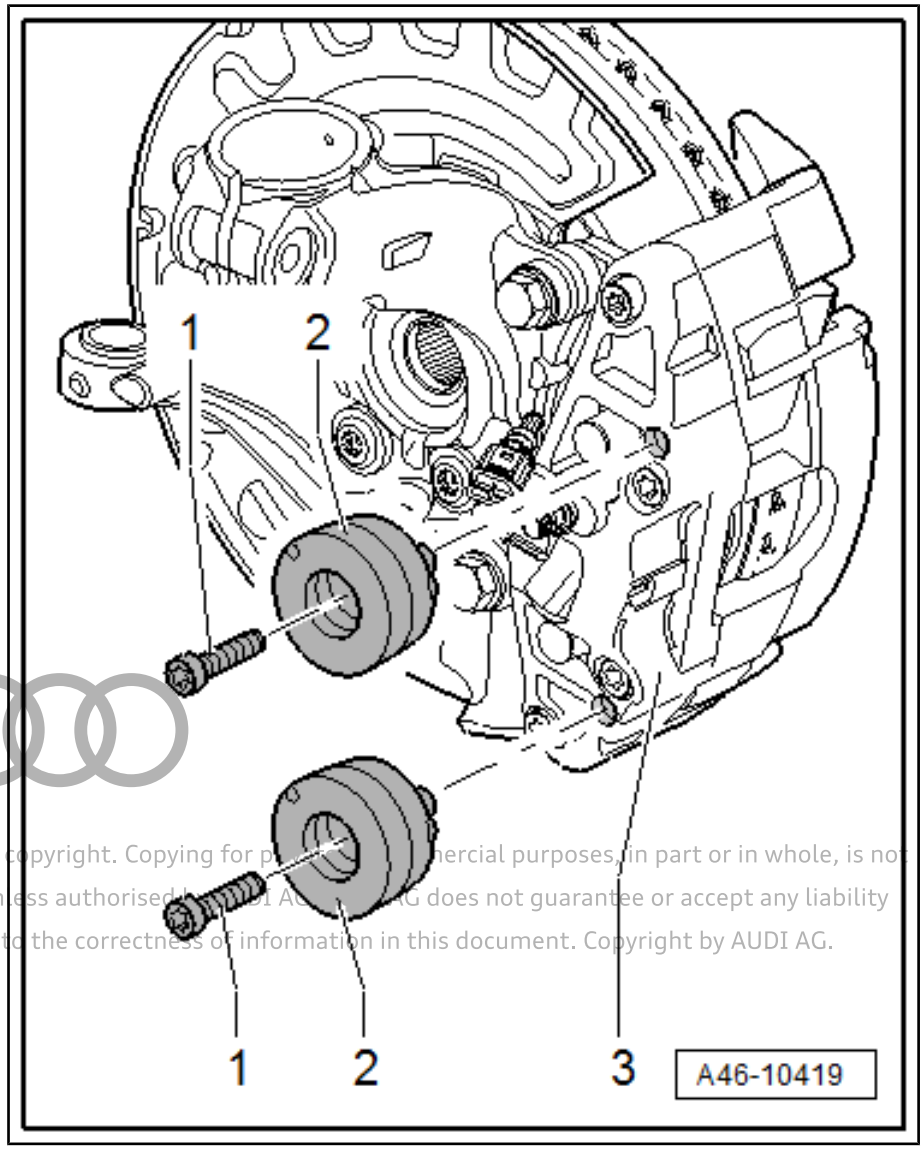

Protected by copyright. Copying for private or commercial purposes, in part or in whole, is not permitted unless authorised by AUDI AG. AUDI AG does not guarantee or accept any liability with respect to the correctness of information in this document. Copyright by AUDI AG.

1.2.1 Removing and installing vibration dampers

Depending on the model, two vibration dampers are fitted on each front brake caliper.

Removing

– Remove protective cap if fitted.

– Remove bolt -1-.
– Remove vibration damper -2- from brake caliper.

Installing

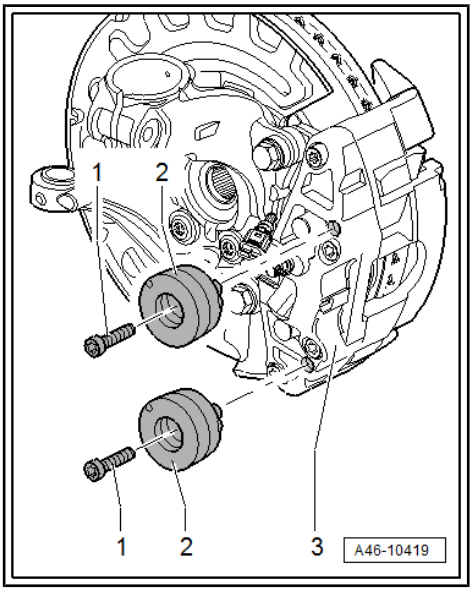

Note

- *Clean bolts and nuts before reusing.*
- *Always renew self-locking bolts/nuts.*
- *Always renew damaged bolts/nuts.*

Depending on the model, two vibration dampers are fitted on each front brake caliper.

– Clean brake caliper in area of vibration damper.
– Clean vibration damper.
– Fit vibration damper in brake caliper.
– Insert bolts -1- and tighten to 10 Nm.
– Install protective cap if originally fitted.

1.3 Removing and installing brake pads

⇒ "1.3.1 Removing and installing brake pads - front brakes (1ZF)", page 77

⇒ "1.3.2 Removing and installing brake pads - front brakes (1LB/1LC/1LJ/1ZA/1ZD/1ZE/1ZP)", page 79

⇒ "1.3.3 Removing and installing brake pads - front brakes, RS 3 (1LF/1LH/1LL/1LN/1LU)", page 84

1.3.1 Removing and installing brake pads - front brakes (1ZF)

Special tools and workshop equipment required

- Torque wrench - V.A.G 1331-

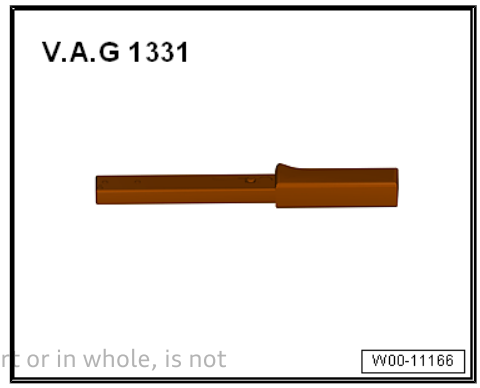

Protected by copyright. Copying for private or commercial purposes, in part or in whole, is not permitted unless authorised by AUDI AG. AUDI AG does not guarantee or accept any liability with respect to the correctness of information in this document. Copyright by AUDI AG.

♦ Piston resetting appliance - T10145-

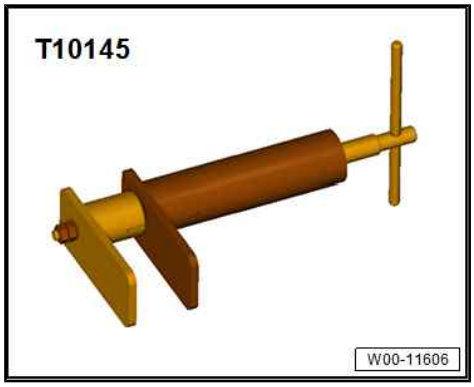

♦ Lithium grease - G 052150 A2-

Removing

Mark brake pads when removing them if they are to be reinstalled. Reinstall in their original position to prevent uneven braking.

– Remove wheels.

– Remove protective caps.

– Unscrew and remove both guide pins -arrows- from brake caliper.

– Detach brake caliper and secure with wire so that weight of brake caliper does not strain or damage brake hose.

– Take brake pads out of brake caliper.

– Thoroughly clean contact surfaces for brake pads on brake carrier and remove corrosion.

– Clean brake caliper.

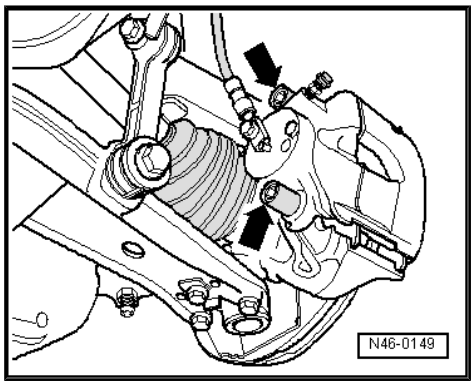

Note

Use only methylated spirits to clean the brake caliper.

Protected by copyright. Copying for private or commercial purposes, in part or in whole, is not permitted unless authorised by AUDI AG. AUDI AG does not guarantee or accept any liability with respect to the correctness of information in this document. Copyright by AUDI AG.

Installing

– Check brake discs for wear when renewing brake pads ⇒ page 8 .

Before pressing the pistons back, draw off a small amount of brake fluid from the reservoir using a bleeder bottle. Otherwise, fluid can overflow and cause damage, particularly if the reservoir has been topped up.

– Grease guide surface on brake carrier lightly with lithium grease - G 052150 A2- .

– Press piston back.

– Insert brake pads into brake caliper and piston.

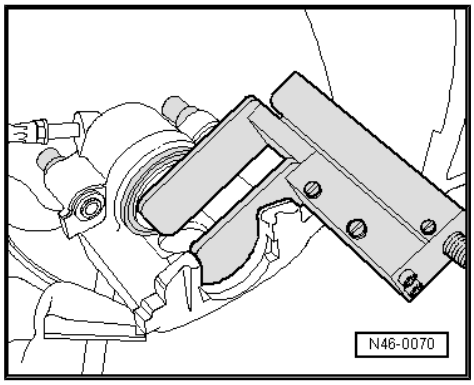

– Insert brake pad with marking “Kolbenseite” (piston side) on backing plate into brake piston.

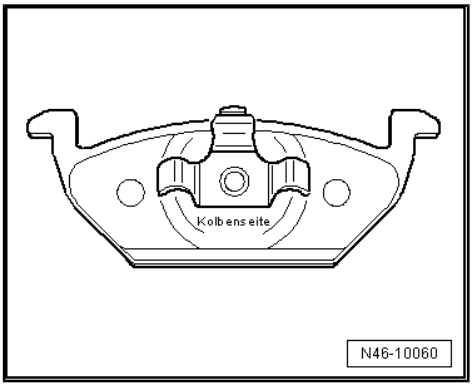

– Install brake caliper with brake pads on wheel bearing housing.
– First locate brake caliper at bottom of brake carrier -arrow-.
• Stud on brake caliper must be positioned behind guide on brake carrier.
– Bolt brake caliper to brake carrier with both guide pins.
– Fit both caps.
– Fit wheels.

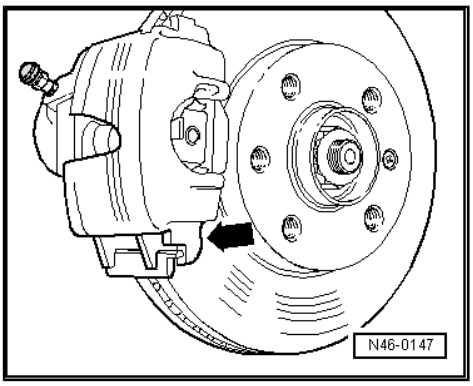

Note

Protected by copyright. Copying for private or commercial purposes, in part or in whole, is not permitted without the prior written consent of AUDI AG. We do not guarantee or accept any liability with respect to the correctness of information in this document. Copyright by AUDI AG.

♦ *Every time after changing the brake pads, depress the brake pedal firmly several times with the vehicle stationary, so that the pads are properly seated in their normal operating position.*

♦ *Check brake fluid level after changing brake pads.*

Tightening torques

♦ Wheel bolts ⇒ Running gear, axles, steering; Rep. gr. 44 ; Wheels, tyres; Tightening torque for wheel bolts

WARNING

Risk of accident!

♦ *Depress brake pedal firmly several times with vehicle stationary so that brake pads are properly seated in normal operating position.*

♦ *Make sure that the brakes work properly before the vehicle is driven on the road.*

1.3.2 Removing and installing brake pads - front brakes (1LB/1LC/1LJ/1ZA/1ZD/ 1ZE/1ZP)

Note

♦ *Clean bolts and nuts before reusing.*

♦ *Always renew self-locking bolts/nuts.*

♦ *Always renew damaged bolts/nuts.*

Special tools and workshop equipment required

- Torque wrench - V.A.G 1331-

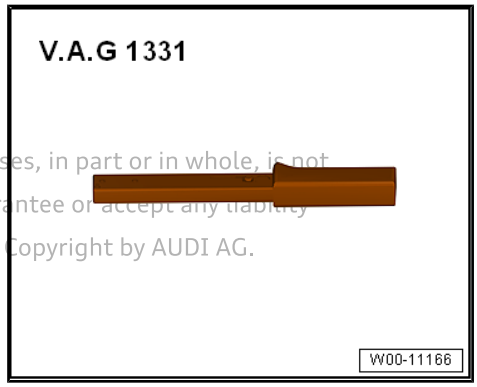

Protected by copyright. Copying for private or commercial purposes, in part or in whole, is not permitted unless authorised by AUDI AG. AUDI AG does not guarantee or accept any liability with respect to the correctness of information in this document. Copyright by AUDI AG.

- Piston resetting appliance - T10145-

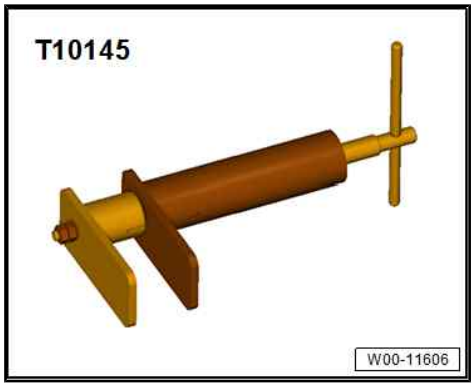

- Lithium grease - G 052 150 A2- ⇒ Electronic parts catalogue "ETKA"

Removing

Note

Mark brake pads when removing them if they are to be reinstalled. Reinstall in their original position to prevent uneven braking.

– Remove front wheel ⇒ Running gear, axles, steering; Rep. gr. 44 ; Wheels, tyres .
– Counterhold guide pins -1 and 2- and remove bolts -arrows-.
– Detach brake caliper.

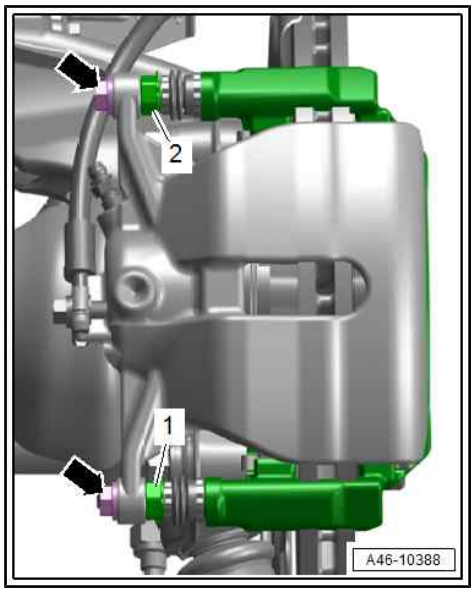

Caution

Risk of damage to brake hose

- *Do not leave the brake caliper hanging from the brake hose. Take care that brake hose is not damaged by weight of brake components.*
- *The brake hose must be renewed if it is damaged.*

Risk of damage to brake caliper pistons

- *Do not apply brake when brake caliper is removed.*

– Tie brake caliper to body with suitable wire.

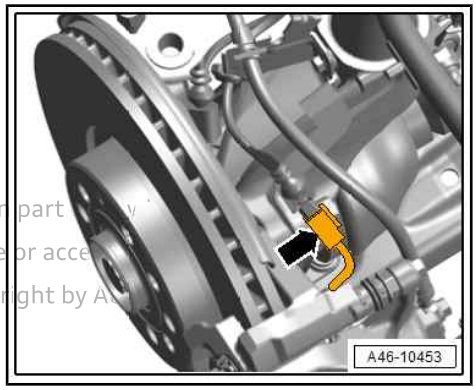

– Unplug electrical connector -arrow- on contact for brake pad wear indicator on brake caliper (right-side).

– Remove brake pads.

Installing

Installation is carried out in reverse order; note the following:

Protected by copyright. Copying for private or commercial purposes, in part or in whole, is not permitted unless authorised by AUDI AG. AUDI AG does not guarantee or accept any liability with respect to the correctness of information in this document. Copyright by AUDI AG.

Note

- *Clean bolts and nuts before reusing.*
- *Always renew self-locking bolts/nuts.*
- *Always renew damaged bolts/nuts.*

– Check brake discs for wear when renewing brake pads ⇒ page 8 .

Note

- *Always renew brake pads on both sides of axle.*
- *Install all parts supplied in the repair kit when fitting new brake pads.*

WARNING

Risk to health

- ***Do not blow out the brake system with compressed air.***

Note

- *Use only methylated spirits to clean the brake caliper.*
- *Check protective caps on brake caliper pistons for damage; if necessary, install all parts supplied in repair kit* *⇒ "1.2 Removing and installing brake caliper piston", page 155* .
- *Check bearing bushes on guide pins for damage and ensure that guide pins move freely; if necessary, install all parts supplied in repair kit* *⇒ "1.3 Renewing bearing bushes and guide pins", page 161* .

Caution

Escaping brake fluid can cause the vehicle to become dirty and may damage the paintwork.

- ***If the brake pads are worn and brake fluid has been topped up unnecessarily, brake fluid can overflow when the brake caliper pistons are pressed back into the brake cylinders.***
- ***Before pressing the pistons back, check the brake fluid level. Brake fluid must be extracted if the fluid level is up to the "MAX" mark.***
- ***Use brake filling and bleeding equipment - VAS 5234- to extract brake fluid from brake fluid reservoir.***

Protected by copyright. Copying for private or com... cial purposes, i... is not permitted unless authorised by AUDI AG. AUDI AG doe... ot guarantee... ility ... mation in this docu...

– Press brake caliper pistons all the way back into caliper using piston resetting appliance - T10145- .

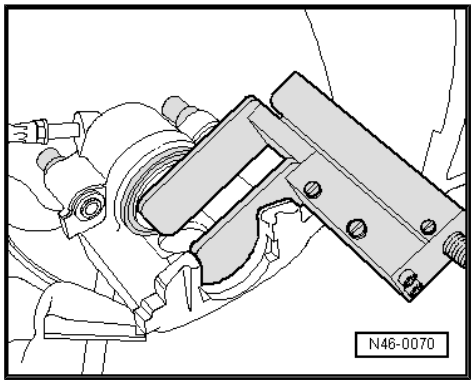

– Clean pad contact surfaces -2- on brake carrier -1- and apply a small amount of lithium grease - G 052 150 A2- .

– If fitted, pull protective foil off pad backplates.

– If used pads are being re-fitted, take care to install the marked pads in their original positions.

– Insert brake pads, paying attention to installation position ⇒ page 72 .

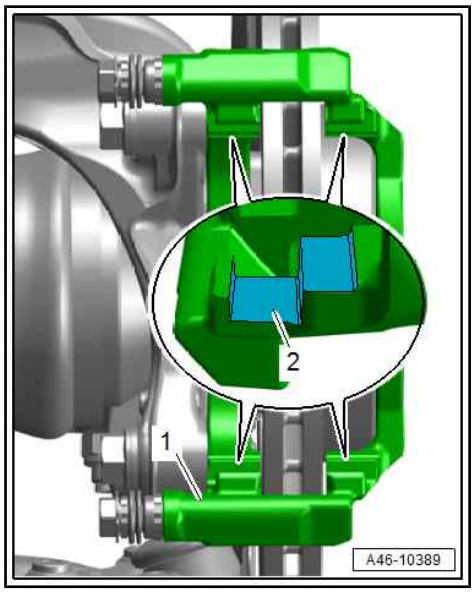

– Fit brake pads -1- so that retaining springs -2- engage in cut-outs in brake carrier -3-.

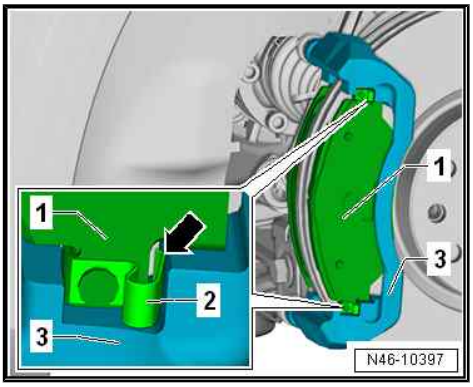

Note

Check that all retaining springs -2- are seated correctly after fitting brake pads.

– Slide brake caliper over fitted brake pads.

– Counterhold guide pins -1 and 2- and tighten bolts -arrows- for brake caliper.

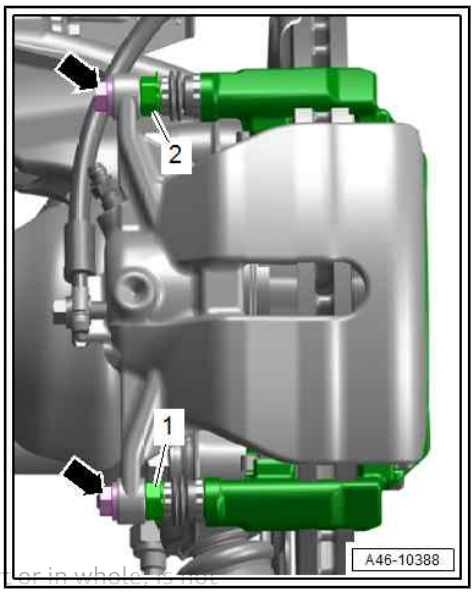

Note

- *Make sure the brake hose is routed correctly.*
- *The brake hose must not be kinked, crushed or twisted or chafe against parts of the vehicle at any point.*

Protected by copyright. Copying for private or commercial purposes, in part or in whole is not permitted unless authorised by AUDI AG. AUDI AG does not guarantee or accept any liability with respect to the correctness of information in this document. Copyright by

– Plug in electrical connector -arrow- on contact for pad wear indicator on brake caliper (right-side).

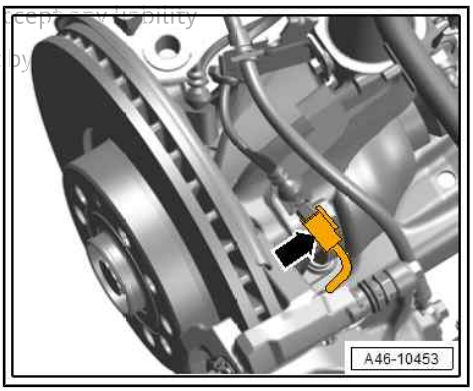

WARNING

Risk of accident!

- ***Depress brake pedal firmly several times with vehicle stationary so that brake pads are properly seated in normal operating position.***
- ***Make sure that the brakes work properly before the vehicle is driven on the road.***

– Check brake fluid level and top up if necessary.

Tightening torques

- ⇒ “1.1.2 Exploded view - front brakes (1LB/1LC/1LJ/1ZA/1ZD/1ZE/1ZP)”, page 70
- ⇒ Running gear, axles, steering; Rep. gr. 44 ; Wheels, tyres

1.3.3 Removing and installing brake pads - front brakes, RS 3 (1LF/1LH/1LL/1LN/1LU)

Note

- *Clean bolts and nuts before reusing.*
- *Always renew self-locking bolts/nuts.*
- *Always renew damaged bolts/nuts.*

Protected by copyright. Copying for private or commercial purposes, in part or in whole, is not permitted unless authorised by AUDI AG. AUDI AG does not guarantee or accept any liability with respect to the correctness of information in this document. Copyright by AUDI AG.

Special tools and workshop equipment required

- Piston resetting appliance - T10145-

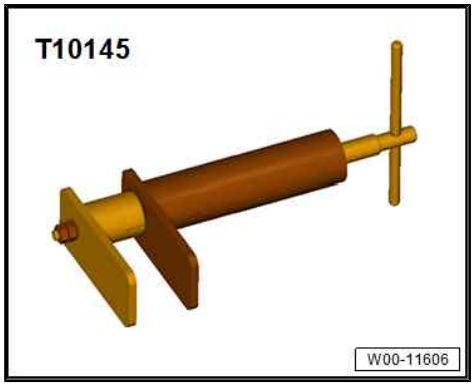

- Punch (commercially available)
- Lithium grease - G 052 150 A2- ⇒ Electronic parts catalogue “ETKA”

Removing

Note

Mark brake pads when removing them if they are to be reinstalled. Reinstall in their original position to prevent uneven braking.

– Remove front wheel ⇒ Running gear, axles, steering; Rep. gr. 44 ; Wheels, tyres .

– Unplug electrical connector -1- for pad wear sender on brake caliper (right-side) and move clear; to do so, open dust cap -2-.

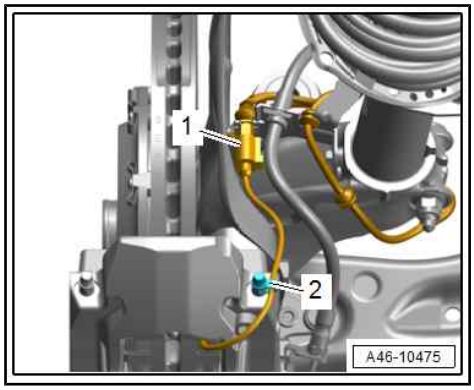

Note

To make it easier to detach the brake caliper from the brake disc, use suitable pliers -1- to press back the brake pads -3, 4- slightly. To avoid damaging the paint on the caliper, insert a piece of rubber -2- or similar between the caliper and the pliers.

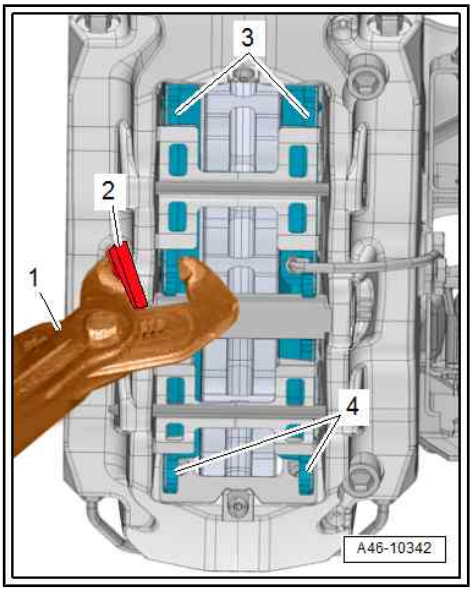

Note

Take care not to damage paint on brake caliper when knocking out pad retaining pins.

WARNING

Risk of injury.

- ***The brake pad retaining springs -1, 5- are under tension. Hold down the pad retaining spring by hand while knocking out the retaining pin.***

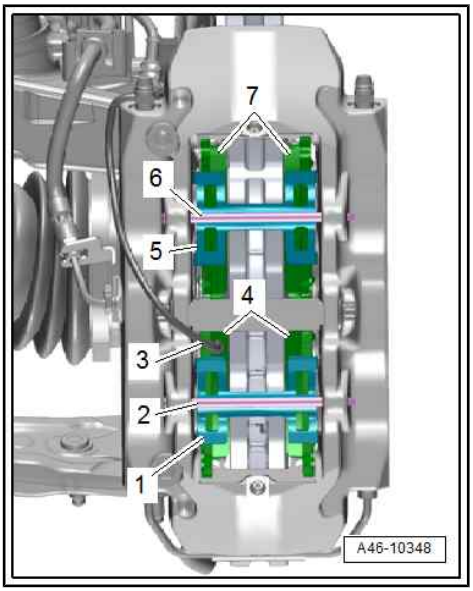

Protected by copyright. Copying for private or commercial purposes, in part or in whole, is not permitted unless authorised by AUDI AG. AUDI AG does not guarantee or accept any liability with respect to the correctness of information in this document. Copyright by AUDI AG.

– Use a suitable punch to knock pad retaining pins -2 and 6- inwards out of brake caliper and detach pad retaining springs -1 and 5-.

– Take brake pads -4 and 7- out of brake caliper.

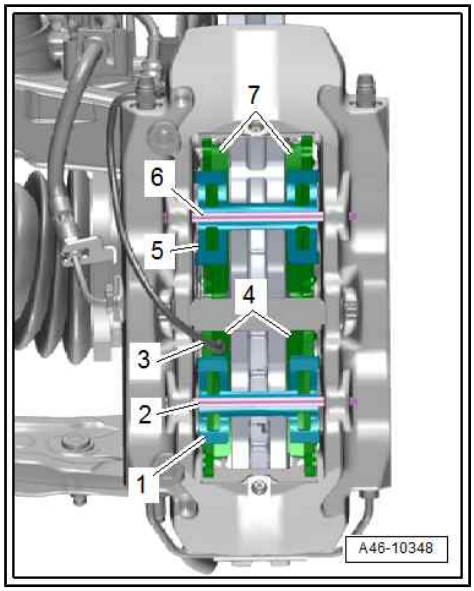

Caution

Risk of damage to brake caliper pistons

- *Never press the brake pedal with the brake pads removed.*

Installing

Installation is carried out in reverse order; note the following:

Note

- *Clean bolts and nuts before reusing.*
- *Always renew self-locking bolts/nuts.*
- *Always renew damaged bolts/nuts.*

– Check brake discs for wear when renewing brake pads ⇒ page 8 .

Note

- *Install all parts supplied in the repair kit when fitting new brake pads.*
- *Always renew brake pads on both sides of the axle.*

Protected by copyright. Copying for private or commercial purposes, in part or in whole, is not permitted unless authorised by AUDI AG. AUDI AG does not guarantee or accept any liability with respect to the correctness of information in this document. Copyright by AUDI AG.

Caution

Escaping brake fluid can cause the vehicle to become dirty and may damage the paintwork.

- *If the brake pads are worn and brake fluid has been topped up unnecessarily, brake fluid can overflow when the piston (s) are pressed back into the brake cylinders.*
- *Before pressing the piston(s) back, check the brake fluid level. Brake fluid must be extracted if the fluid level is up to the "MAX" mark.*
- *Use brake filling and bleeding equipment - VAS 5234- to extract brake fluid from brake fluid reservoir.*

Note

- *Use only methylated spirits to clean the brake caliper.*
- *Check protective caps on brake pistons for damage; if necessary, install all parts supplied in repair kit* *⇒ "1.2.2 Removing and installing brake caliper pistons - eight-piston brake", page 158* .

WARNING

Risk to health

- *Do not blow out the brake system with compressed air.*

– Press brake pistons all the way back into caliper using piston resetting appliance - T10145- .

– Clean brake caliper at contact surfaces -1, 2, 3- between brake pads and caliper and at retaining pins -arrows-, and apply a small amount of lithium grease.

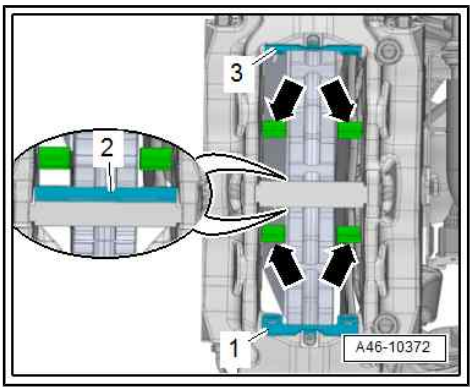

– If reinstalling used brake pads, check electrical wire -arrow- for pad wear sender on brake caliper (right-side) for damage.

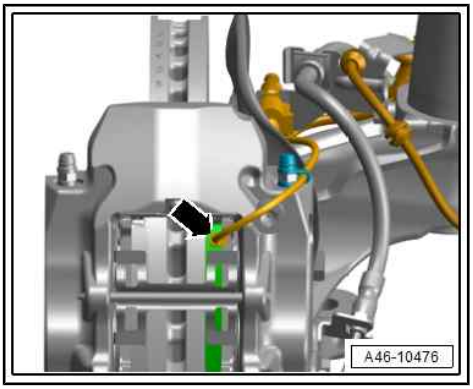

Note

Protected by copyright. Copying for private or commercial purposes, in part o
permitted unless authorised by AUDI AG. AUDI AG does not guarantee or acce
with respect to the correctness of information in this document. Copyright by A

Renew brake pads if pad wear sender is damaged.

– Fit brake pads -4 and 7- in brake caliper.

- The brake pad with the pad wear sender is fitted at the bottom left on the inside.

– Press down pad retaining springs -1, 5- one at a time and knock pad retaining pins -2, 6- into brake caliper as far as stop.

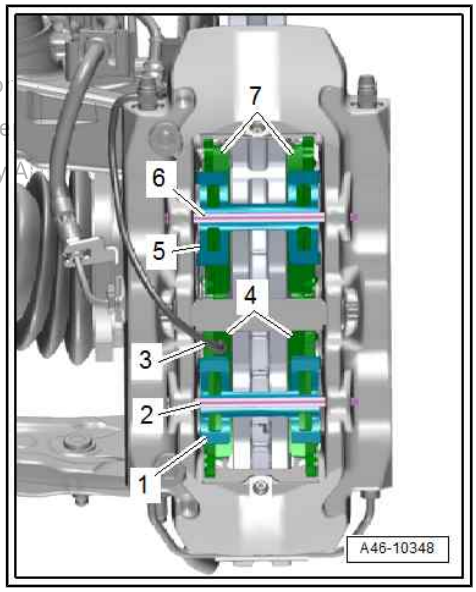

Note

Take care not to damage paint on brake caliper when driving in pad retaining pins.

– Plug in electrical connector -1- on brake caliper (right-side) and secure pad wear sender wire with dust cap -2-.

– Fit front wheel ⇒ Running gear, axles, steering; Rep. gr. 44 ; Wheels, tyres .

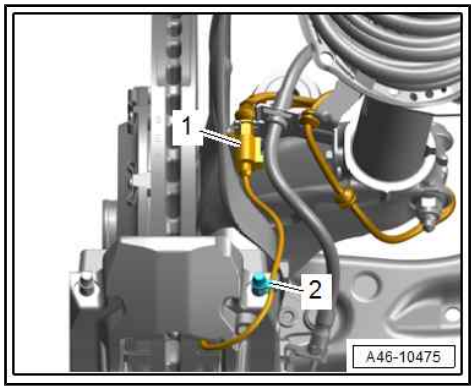

WARNING

Risk of accident!

- *Depress brake pedal firmly several times with vehicle stationary so that brake pads are properly seated in normal operating position.*
- *Make sure that the brakes work properly before the vehicle is driven on the road.*

This document is protected by copyright. Copying for private or commercial purposes, in part or in whole, is not permitted unless authorised by AUDI AG. AUDI AG does not guarantee or accept any liability with respect to the correctness of information in this document. Copyright by AUDI AG.

– Check brake fluid level and top up if necessary.

1.4 Removing and installing brake caliper

⇒ "1.4.1 Removing and installing brake caliper - front brakes (1ZF)", page 88

⇒ "1.4.2 Removing and installing brake caliper - front brakes (1LB/1LC/1LJ/1ZA/1ZD/1ZE/1ZP)", page 89

⇒ "1.4.3 Removing and installing brake caliper - front brakes, RS 3 (1LF/1LH/1LL/1LN/1LU)", page 92

1.4.1 Removing and installing brake caliper - front brakes (1ZF)

Special tools and workshop equipment required

- Torque wrench - V.A.G 1331-

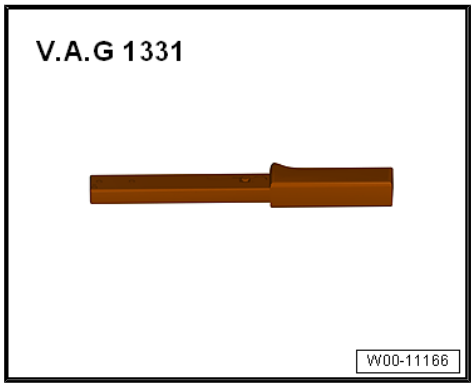

Removing

– Remove wheels.

– Pull both cover caps out of brake caliper bearing bushes.

– Press brake pistons back slightly at brake pads.

When doing so, take care not to damage brake pads and brake caliper.

– Unscrew both guide pins and remove from brake caliper.

Caution

Risk of damage to brake hose

- *Do not leave the brake caliper hanging from the brake hose. Take care that brake hose is not damaged by weight of brake components.*
- *The brake hose must be renewed if it is damaged.*

Risk of damage to brake caliper pistons

- *Do not apply brake when brake caliper is removed.*

Protected by copyright. Copying for private or commercial purposes, in part or in whole, is not permitted unless authorised by AUDI AG. AUDI AG does not guarantee or accept any liability with respect to the correctness of information in this document. Copyright by AUDI AG.

Installing

- Piston is pressed back.
- Brake pads are fitted.
- Fit brake caliper together with brake pads.
- Bolt brake caliper to brake carrier with both guide pins.
- Stud on brake caliper must be positioned behind guide on brake carrier.
- Fit both caps.
- Fit wheels.

Tightening torques

- Wheel bolts ⇒ Running gear, axles, steering; Rep. gr. 44 ; Wheels, tyres; Tightening torque for wheel bolts

WARNING

Risk of accident!

- *Depress brake pedal firmly several times with vehicle stationary so that brake pads are properly seated in normal operating position.*
- *Make sure that the brakes work properly before the vehicle is driven on the road.*

1.4.2 Removing and installing brake caliper - front brakes (1LB/1LC/1LJ/1ZA/1ZD/1ZE/1ZP)

Note

- *Clean bolts and nuts before reusing.*
- *Always renew self-locking bolts/nuts.*
- *Always renew damaged bolts/nuts.*

Note

In the following procedure the brake caliper is removed together with the brake carrier and brake pads. The brake hose remains connected.

Protected by copyright. Copying for private or commercial purposes, in part or in whole, is not permitted unless authorised by AUDI AG. AUDI AG does not guarantee or accept any liability with respect to the correctness of information in this document. Copyright by AUDI AG.

Special tools and workshop equipment required

- Torque wrench - V.A.G 1332-

Removing

– Remove front wheel ⇒ Running gear, axles, steering; Rep. gr. 44 ; Wheels, tyres .

– Unplug electrical connector -arrow- on contact for brake pad wear indicator on brake caliper (right-side).

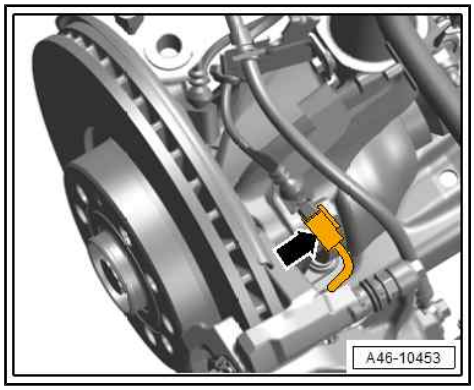

Note

- *To make it easier to remove the brake caliper from the brake disc, use suitable pliers -1- to press back the brake pad -3- slightly as shown in the illustration.*
- *To avoid damaging the paint on the caliper, insert a piece of rubber -2- or similar between the caliper and the pliers.*

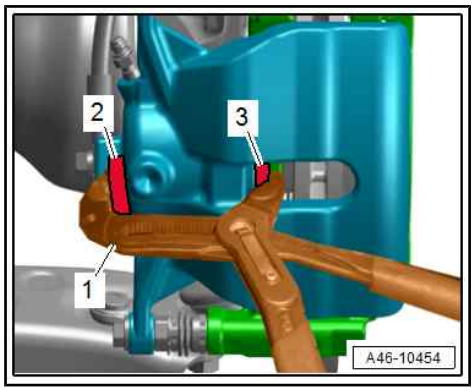

– Remove bolts -arrows- and carefully pull brake caliper and brake carrier off brake disc with pads installed.

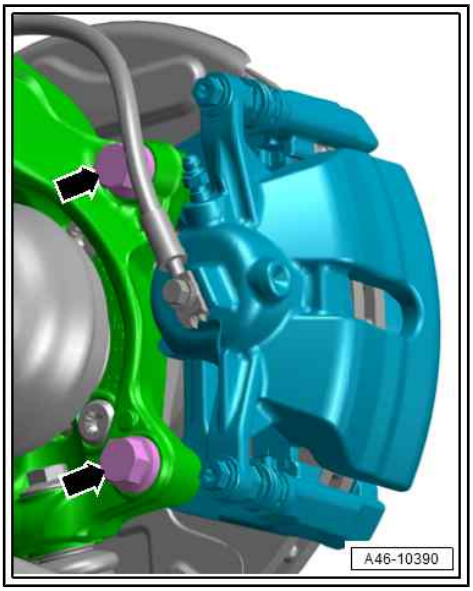

Caution

Risk of damage to brake hose

- *Do not leave the brake caliper hanging from the brake hose. Take care that brake hose is not damaged by weight of brake components.*
- *The brake hose must be renewed if it is damaged.*

Risk of damage to brake caliper pistons

- *Do not apply brake when brake caliper is removed.*

– Tie brake caliper to body with suitable wire.

Installing

Installation is carried out in reverse order; note the following:

Note

- *Clean bolts and nuts before reusing.*
- *Always renew self-locking bolts/nuts.*
- *Always renew damaged bolts/nuts.*

WARNING

Risk to health

- *Do not blow out the brake system with compressed air.*

Note

Use only methylated spirits to clean the brake caliper.

– Clean brake caliper.

Protected by copyright. Copying for private or commercial purposes, in part or in whole, is not permitted unless authorised by AUDI AG. AUDI AG does not guarantee or accept any liability with respect to the correctness of information in this document. Copyright by AUDI AG.

– Slide brake caliper with brake carrier and brake pads fitted carefully over brake disc.
– Tighten bolts -arrows-.

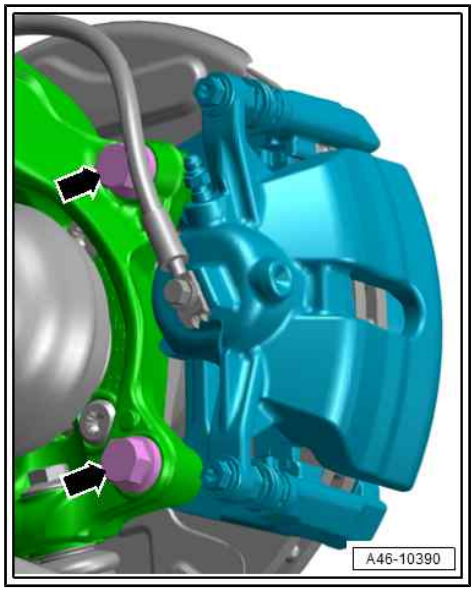

Note

- *Make sure the brake hose is routed correctly.*
- *The brake hose must not be kinked, crushed or twisted or chafe against parts of the vehicle at any point.*

– Plug in electrical connector -arrow- on contact for pad wear indicator on brake caliper (right-side).

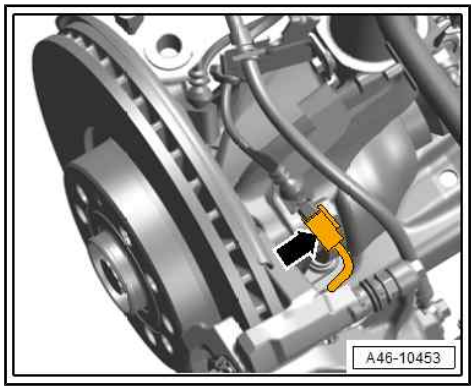

WARNING

Risk of accident!

- ***Depress brake pedal firmly several times with vehicle stationary so that brake pads are properly seated in normal operating position.***
- ***Make sure that the brakes work properly before the vehicle is driven on the road.***

Tightening torques

- ⇒ “1.1.2 Exploded view - front brakes (1LB/1LC/1LJ/1ZA/1ZD/1ZE/1ZP)”, page 70
- ⇒ Running gear, axles, steering; Rep. gr. 44 ; Wheels, tyres

1.4.3 Removing and installing brake caliper - front brakes, RS 3 (1LF/1LH/1LL/1LN/1LU)

Note

- *Clean bolts and nuts before reusing.*
- *Always renew self-locking bolts/nuts.*
- *Always renew damaged bolts/nuts.*

Note

In the following procedure the brake caliper is removed together with the brake pads. The brake hose remains connected.

Protected by copyright. Copying for private or commercial purposes, in part or in whole, is not permitted unless authorised by AUDI AG. AUDI AG does not guarantee or accept any liability with respect to the correctness of information in this document. Copyright by AUDI AG.

Special tools and workshop equipment required

- Torque wrench - V.A.G 1332-

Removing

DO NOT slacken off bolts -arrows- securing brake carrier -1- to brake caliper or bolts securing centre retaining pin -2-.

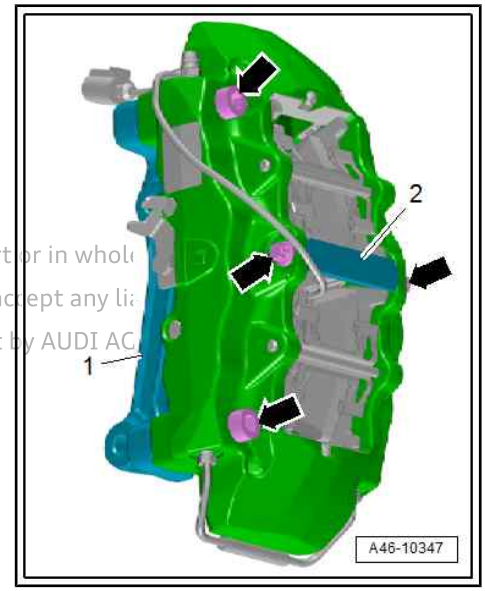

Caution

Risk of malfunction

- *DO NOT slacken off bolts -arrows- securing brake carrier -1- to brake caliper or bolts securing centre retaining pin -2-.*

Protected by copyright. Copying or distribution for commercial purposes, in part or in whole, is not permitted unless authorised by AUDI AG. AUDI AG does not guarantee or accept any liability with respect to the correctness of information in this document. Copyright by AUDI AG.

– Remove front wheel ⇒ Running gear, axles, steering; Rep. gr. 44 ; Wheels, tyres .

– Unplug electrical connector -1- for pad wear sender on brake caliper (right-side).

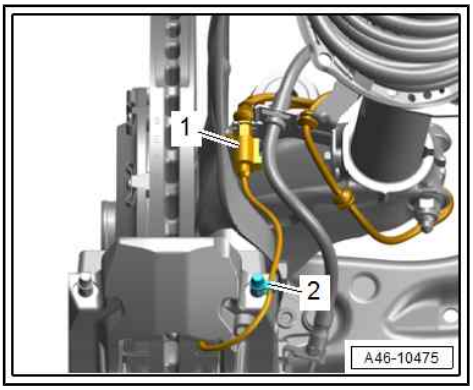

Note

Disregard -item 2-.

Note

To make it easier to detach the brake caliper from the brake disc, use suitable pliers -1- to press back the brake pads -3, 4- slightly. To avoid damaging the paint on the caliper, insert a piece of rubber -2- or similar between the caliper and the pliers.

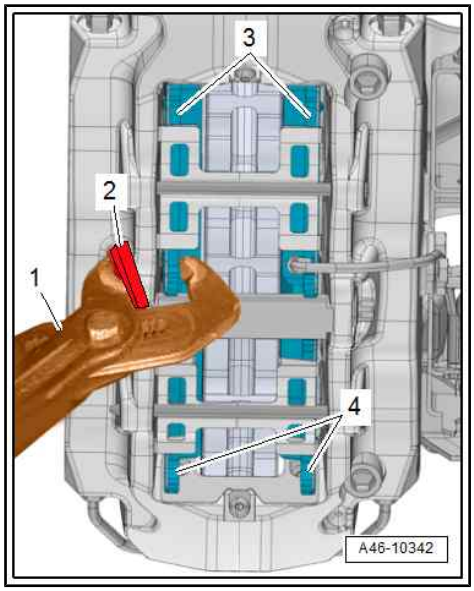

– Remove bolts -arrows- and carefully pull brake caliper off brake disc with brake pads installed.

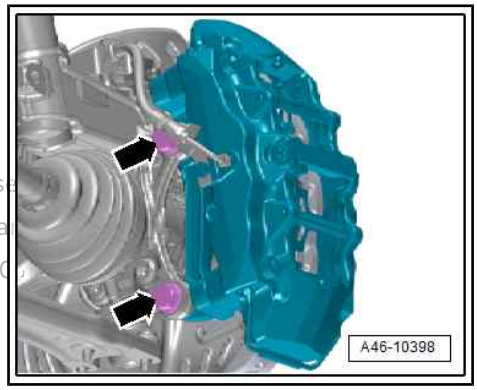

Caution

- ***Do not leave the brake caliper hanging from the brake hose. Take care that brake hose is not damaged by weight of brake components.***
- ***The brake hose must be renewed if it is damaged.***
- ***Do not apply brake when brake caliper is removed.***

Protected by copyright. Copying for private or commercial purpose
is prohibited unless authorised by AUDI AG. AUDI AG does not guara
with respect to the correctness of information in this document. C

– Tie brake caliper to body with suitable wire.

Installing

Installation is carried out in reverse order; note the following:

Note

- *Clean bolts and nuts before reusing.*
- *Always renew self-locking bolts/nuts.*
- *Always renew damaged bolts/nuts.*

WARNING

Risk to health

- ***Do not blow out the brake system with compressed air.***

DO NOT slacken off bolts -arrows- securing brake carrier -1- to brake caliper or bolts securing centre retaining pin -2-.

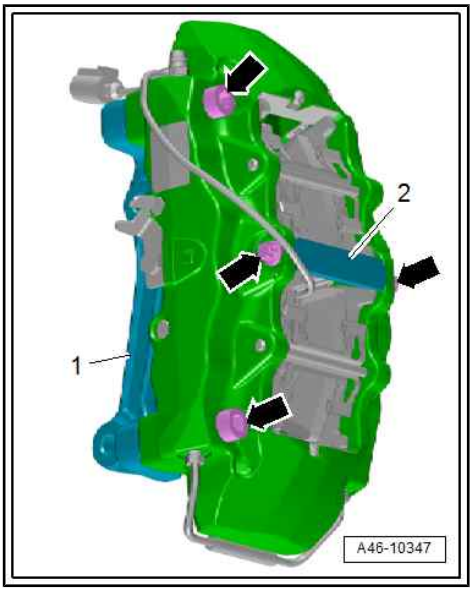

Caution

Risk of malfunction

- *DO NOT slacken off bolts -arrows- securing brake carrier -1- to brake caliper or bolts securing centre retaining pin -2-.*

Note

Use only methylated spirits to clean the brake caliper.

– Clean brake caliper.

– Carefully fit brake caliper (with pads installed) over brake disc.

– Tighten bolts -arrows-.

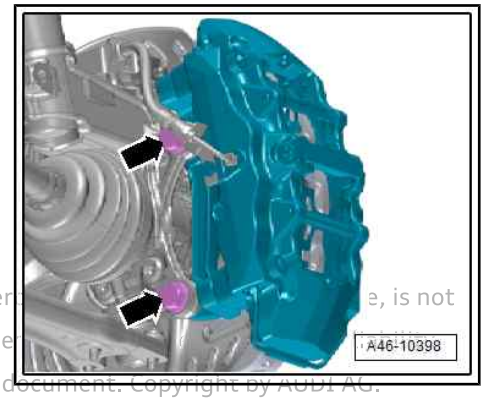

Protected by copyright. Copying for private or commer e, is not permitted unless authorised by AUDI AG. AUDI AG doe with respect to the correctness of information in this document. Copyright by AUDI AG.

– Plug in electrical connector -1-.

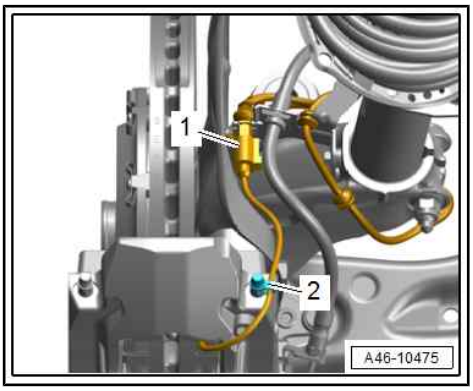

Note

- *Make sure the electrical connector and brake hose are positioned correctly.*
- *The brake hose must not be kinked, crushed or twisted or chafe against parts of the vehicle at any point.*

– Fit front wheel ⇒ Running gear, axles, steering; Rep. gr. 44 ; Wheels, tyres .

WARNING

Risk of accident!

- *Depress brake pedal firmly several times with vehicle stationary so that brake pads are properly seated in normal operating position.*
- *Make sure that the brakes work properly before the vehicle is driven on the road.*

Tightening torques

- ⇒ “1.1.3 Exploded view - front brakes, RS 3 (1LF/1LH/1LL/1LN/1LU)”, page 73

1.5 Renewing brake caliper

⇒ “1.5.1 Renewing brake caliper - front brakes (1ZF)”, page 96

⇒ “1.5.2 Renewing brake caliper - front brakes (1LB/1LC/1LJ/1ZA/1ZD/1ZE/1ZP)”, page 98

⇒ “1.5.3 Renewing brake caliper - front brakes, RS 3 (1LF/1LH/1LL/1LN/1LU)”, page 103

Protected by copyright. Copying for private or commercial purposes, in part or in whole, is not permitted unless authorised by AUDI AG. AUDI AG does not guarantee or accept any liability with respect to the correctness of information in this document. Copyright by AUDI AG.

1.5.1 Renewing brake caliper - front brakes (1ZF)

Note

- *Clean bolts and nuts before reusing.*
- *Always renew self-locking bolts/nuts.*
- *Always renew damaged bolts/nuts.*

Special tools and workshop equipment required

- Torque wrench - V.A.G 1331-

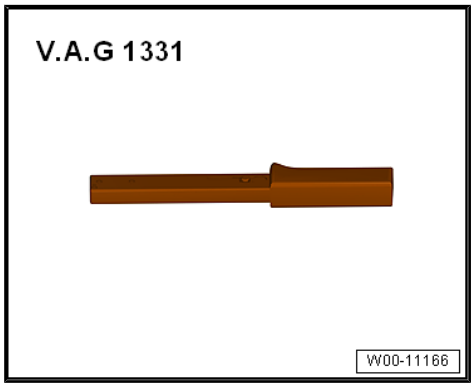

- Brake pedal actuator - V.A.G 1869/2-

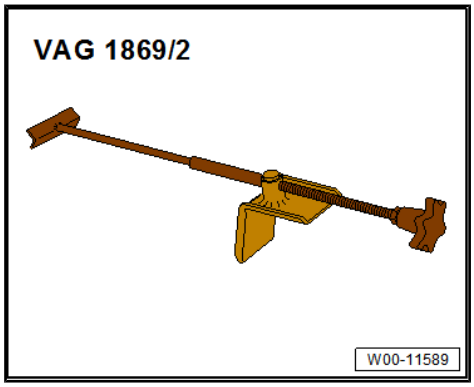

Removing

Note

This procedure applies only when the brake caliper is being renewed or removed for repair.

– Remove wheels.

– Attach bleeder hose of a bleeder bottle to bleeder valve of brake caliper.

– Open bleeder valve.
– Set up brake pedal actuator - V.A.G 1869/2- .
– Close bleeder valve and remove bleeder bottle.
– Disconnect brake hose.
– Pull both cover caps out of brake caliper bearing bushes.
– Unscrew both guide pins and remove from brake caliper.
– Remove brake caliper from brake carrier.
– Take brake pads out of brake caliper.

WARNING

Risk to health

- *Do not blow out the brake system with compressed air.*

Installing

Note

- *Clean bolts and nuts before reusing.*
- *Always renew self-locking bolts/nuts.*
- *Always renew damaged bolts/nuts.*

• Piston is pressed back.
– Insert brake pads into brake caliper and piston.
– Insert brake pad with marking “Kolbenseite” (piston side) on backing plate into brake piston.

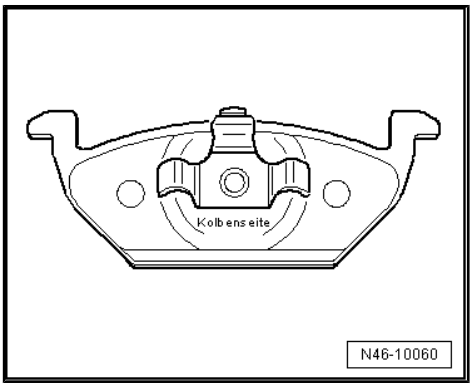

– Install brake caliper with brake pads on wheel bearing housing.

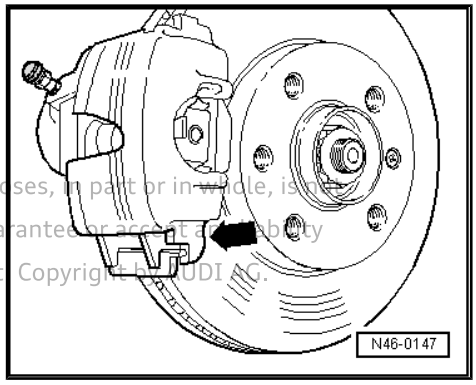

Protected by copyright. Copying for private or commercial purposes, in part or in whole, is not permitted unless authorised by AUDI AG. AUDI AG does not guarantee or accept any liability with respect to the correctness of information in this document. Copyright by AUDI AG.

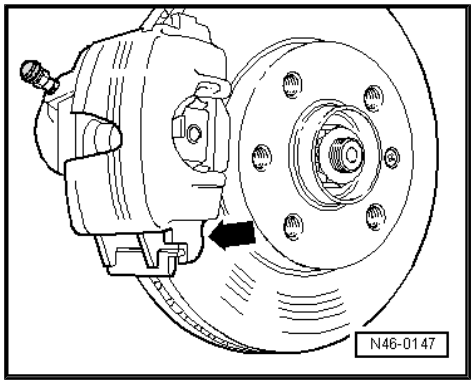

– First locate brake caliper with brake pads at bottom of brake carrier -arrow-.
– Bolt brake caliper to brake carrier with both guide pins.
• Stud on brake caliper must be positioned behind guide on brake carrier.
– Fit both caps.
– Secure brake hose to brake caliper.
– Remove brake pedal actuator - V.A.G 1869/2- .
– Bleed brake system.
– Fit wheels.

Tightening torques

♦ Wheel bolts ⇒ Running gear, axles, steering; Rep. gr. 44 ; Wheels, tyres; Tightening torque for wheel bolts

Protected by copyright. Copying for private or commercial purposes, in part or in whole, is not permitted unless authorised by AUDI AG. AUDI AG does not guarantee or accept any liability with respect to the correctness of information in this document. Copyright by AUDI AG.

WARNING

Risk of accident!

♦ *Depress brake pedal firmly several times with vehicle stationary so that brake pads are properly seated in normal operating position.*

♦ *Make sure that the brakes work properly before the vehicle is driven on the road.*

1.5.2 Renewing brake caliper - front brakes (1LB/1LC/1LJ/1ZA/1ZD/1ZE/1ZP)

Note

♦ *Clean bolts and nuts before reusing.*

♦ *Always renew self-locking bolts/nuts.*

♦ *Always renew damaged bolts/nuts.*

Note

In the following procedure the brake caliper is removed and disconnected from the hydraulic system. The brake hose is disconnected.

Special tools and workshop equipment required

- Torque wrench - V.A.G 1332-

- Brake pedal actuator - V.A.G 1869/2-

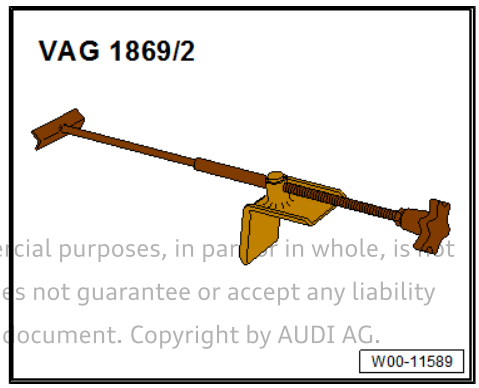

Protected by copyright. Copying for private or commercial purposes, in part or in whole, is not permitted unless authorised by AUDI AG. AUDI AG does not guarantee or accept any liability with respect to the correctness of information in this document. Copyright by AUDI AG.

- Bleeder bottle from brake filling and bleeding equipment - VAS 5234-

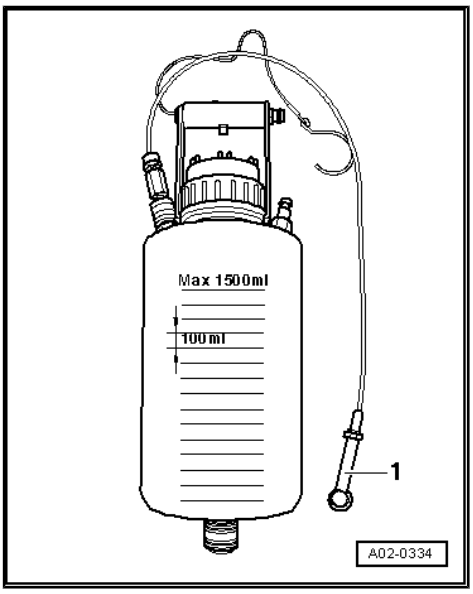

- Sealing plugs from assembly parts set - 5Q0 698 311-

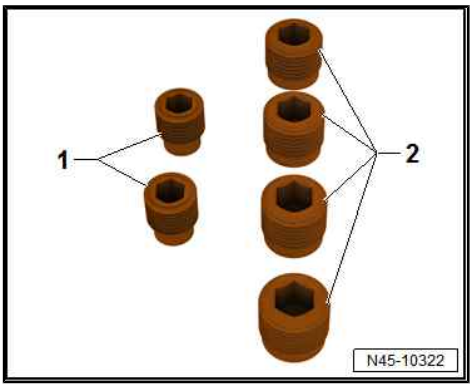

1 - M10 sealing plugs

2 - M12 sealing plugs

Removing

– Insert brake pedal actuator - V.A.G 1869/2- between brake pedal and driver seat. Depress brake pedal at least 60 mm.

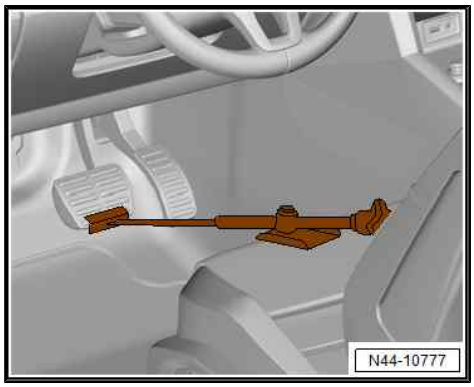

Note

This closes the valves in the brake master cylinder and stops the brake fluid reservoir from running empty.

– Remove front wheel ⇒ Running gear, axles, steering; Rep. gr. 44 ; Wheels, tyres .

WARNING

Risk of skin irritation

- *Always wear chemical-resistant protective gloves to prevent brake fluid from contacting skin.*

Protected by copyright. Copying for private or commercial purposes, in part or in whole, is not permitted unless authorised by AUDI AG. AUDI AG does not guarantee or assume liability with respect to the correctness of information in this document.

– Detach protective cap -3- from bleeder screw -1-.

– Fit bleeder hose -2- of bleeder bottle onto bleeder screw.

– Open bleeder screw to relieve pressure in hydraulic system.

– Close bleeder screw and remove bleeder bottle.

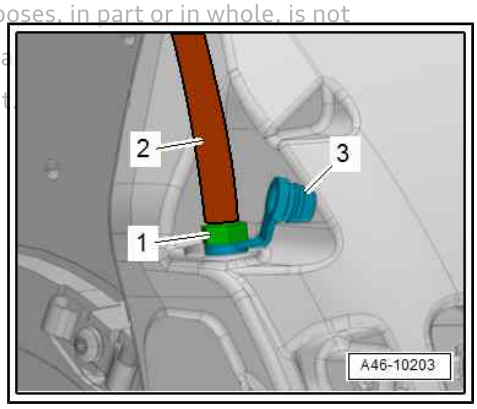

Note

The brake pedal actuator - V.A.G 1869/2- must not be removed.

– Place a cloth under the connection to catch escaping brake fluid.

WARNING

Risk of malfunction if brake fluid comes into contact with fluids containing mineral oils.

- *Brake fluid must NOT come into contact with fluids containing mineral oils (oil, petrol, cleaning agents). Protective gloves must be free of oil and grease.*

Risk of damage to paintwork surfaces

- *Due to its corrosive effect, brake fluid must not be allowed to come into contact with paintwork. Rinse off brake fluid spillages immediately using plenty of water.*

Protected by copyright. Copying for private or commercial purposes, in part or in
permitted unless authorised by AUDI AG. AUDI AG does not guarantee or accept
with respect to the correctness of information in this document. Copyright by AU

– Unscrew banjo bolt -arrow- and detach brake hose from brake caliper.

– Seal open connections immediately using clean sealing plugs from assembly parts set - 5Q0 698 311- .

– Remove brake pads ⇒ page 77 .

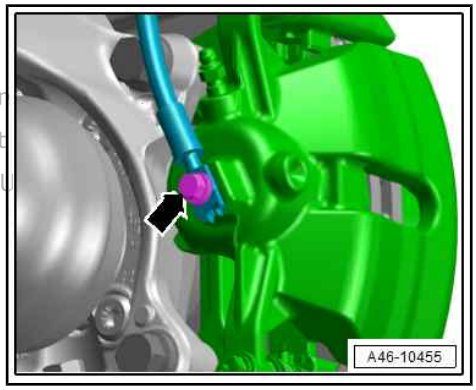

Installing

Installation is carried out in reverse order; note the following:

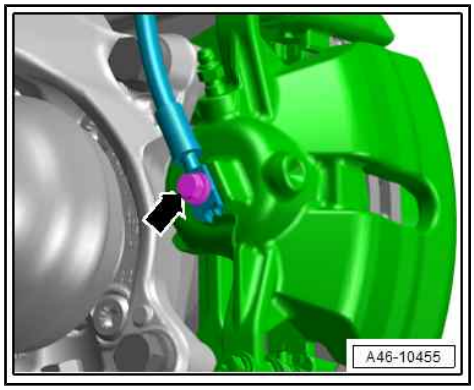

Note

- *Clean bolts and nuts before reusing.*
- *Always renew self-locking bolts/nuts.*
- *Always renew damaged bolts/nuts.*

– Install brake pads ⇒ page 77 .

– Screw banjo bolt -arrow- into caliper and tighten connection.

Protected by copyright. Copying for private or commercial purposes, in part or in whole, is not permitted unless authorised by AUDI AG. AUDI AG does not guarantee or accept any liability with respect to the correctness of information in this document. Copyright by AUDI AG.

Note

- *Make sure the brake hose is routed correctly.*
- *The brake hose must not be kinked, crushed or twisted or chafe against parts of the vehicle at any point.*

– Remove brake pedal actuator - V.A.G 1869/2- .

– Bleed brake system (only at wheel where caliper was detached and brake hose disconnected)
⇒ “6.2 Bleeding hydraulic system”, page 235 .

Note

If the brake pedal still feels “soft”, bleed the complete brake system *⇒ “6.2 Bleeding hydraulic system”, page 235* *.*

WARNING

Risk of accident!

- ***Depress brake pedal firmly several times with vehicle stationary so that brake pads are properly seated in normal operating position.***
- ***Make sure that the brakes work properly before the vehicle is driven on the road.***

– Check brake fluid level and top up if necessary.

Tightening torques

- ⇒ “1.1.2 Exploded view - front brakes (1LB/1LC/1LJ/1ZA/1ZD/1ZE/1ZP)”, page 70
- ⇒ Running gear, axles, steering; Rep. gr. 44 ; Wheels, tyres

1.5.3 Renewing brake caliper - front brakes, RS 3 (1LF/1LH/1LL/1LN/1LU)

Note

- *Clean bolts and nuts before reusing.*
- *Always renew self-locking bolts/nuts.*
- *Always renew damaged bolts/nuts.*

Note

Intellectual property copyright. Copying for private or commercial purposes, in part or in whole, is not permitted unless authorised by AUDI AG. AUDI AG does not guarantee or accept any liability with respect to the correctness of information in this document. Copyright by AUDI AG.

In the following procedure the brake caliper is removed and renewed. The brake hose is disconnected.

Special tools and workshop equipment required

- Torque wrench - V.A.G 1332-

- Brake pedal actuator - V.A.G 1869/2-

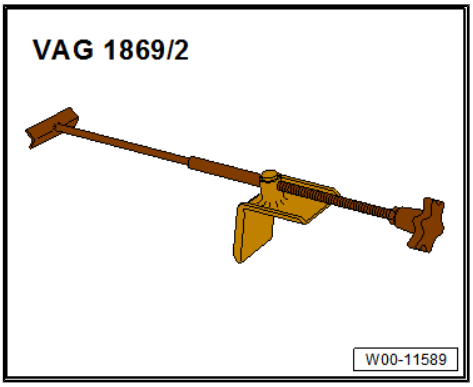

- Bleeder bottle from brake filling and bleeding equipment - VAS 5234-

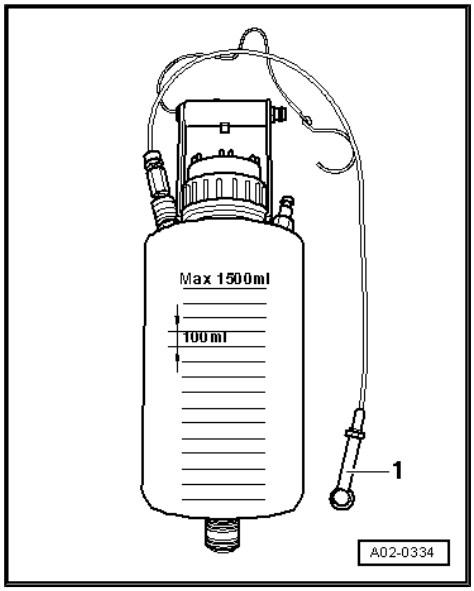

- Sealing plugs from assembly parts set - 5Q0 698 311-

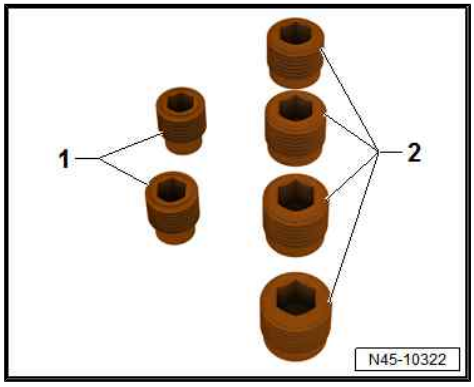

Removing

– Remove front wheel ⇒ Running gear, axles, steering; Rep. gr. 44 ; Wheels, tyres .

– Insert brake pedal actuator - V.A.G 1869/2- between brake pedal and driver seat. Depress brake pedal at least 60 mm.

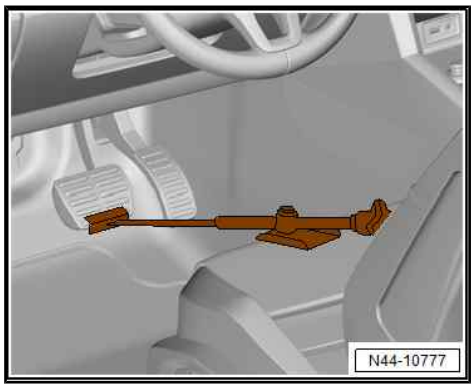

Note

This closes the valves in the brake master cylinder and stops the brake fluid reservoir from running empty.

Protected by copyright. Copying for private or commercial purposes, in part or in whole, is not permitted unless authorised by AUDI AG. AUDI AG does not guarantee or accept any liability with respect to the correctness of information in this document. Copyright by AUDI AG.

WARNING

Risk of skin irritation

- *Always wear chemical-resistant protective gloves to prevent brake fluid from contacting skin.*

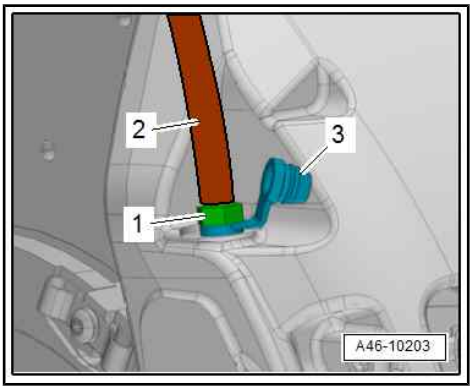

– Detach protective cap -3- from bleeder screw -1-.
– Connect hose -2- from bleeder bottle as shown in illustration.
– Open bleeder screw to relieve pressure in brake system.
– Close bleeder screw and remove bleeder bottle.

Note

The brake pedal actuator - V.A.G 1869/2- must not be removed.

Note

Place a cloth under the connection to catch escaping brake fluid.

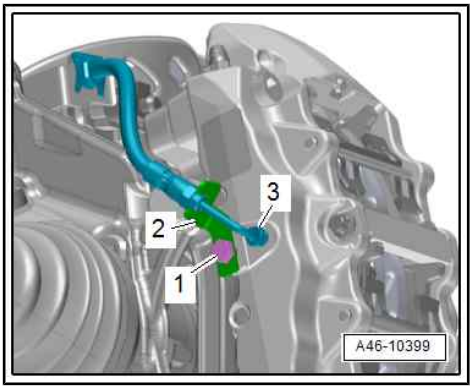

– Remove union screw -3- and bolt -1-.
– Detach bracket -2- and move brake hose to one side.
– Seal open brake hose immediately using sealing plug from repair kit - 1H0 698 311 A- .

– Unplug electrical connector -1- for pad wear sender on brake caliper (right-side).

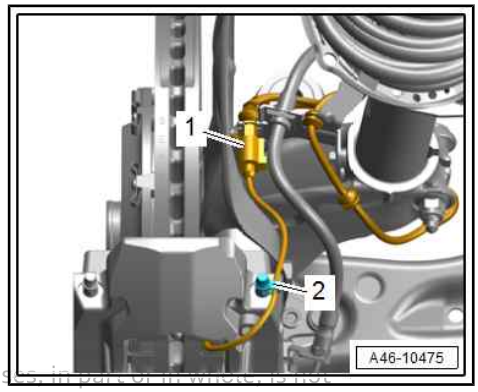

Protected by copyright. Copying for private or commercial purposes, in part or in whole, is not permitted unless authorised by AUDI AG. AUDI AG does not guarantee or accept any liability with respect to the correctness of information in this document. Copyright by AUDI AG.

Note

To make it easier to detach the brake caliper from the brake disc, use suitable pliers -1- to press back the brake pads -3, 4- slightly. To avoid damaging the paint on the caliper, insert a piece of rubber -2- or similar between the caliper and the pliers.

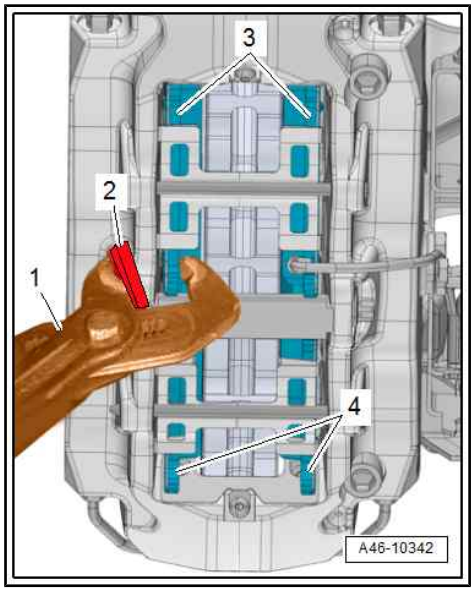

Caution

Risk of contamination from escaping brake fluid

- ***Brake fluid will escape when brake pads are pressed back.***

– Seal off open connection at brake caliper immediately using sealing plug from repair kit - 1H0 698 311 A- .

DO NOT slacken off bolts -arrows- securing brake carrier -1- to brake caliper or bolts securing centre retaining pin -2-.

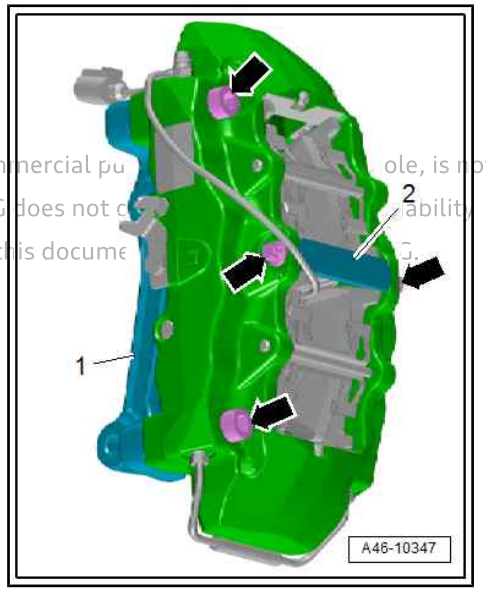

Caution

Risk of malfunction

- ***DO NOT slacken off bolts -arrows- securing brake carrier -1- to brake caliper or bolts securing centre retaining pin -2-.***

Protected by copyright. Copying for private or commercial pu ole, is not permitted unless authorised by AUDI AG. AUDI AG does not c abilit tion in this docume

– Remove bolts -arrows- and carefully pull brake caliper off brake disc with brake pads installed.

– Remove brake pads if necessary ⇒ page 84 .

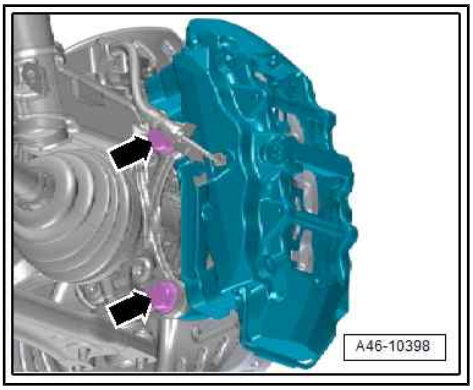

Installing

Installation is carried out in reverse order; note the following:

Note

- *Clean bolts and nuts before reusing.*
- *Always renew self-locking bolts/nuts.*
- *Always renew damaged bolts/nuts.*

WARNING

Risk to health

- ***Do not blow out the brake system with compressed air.***

– Locate brake caliper in installation position and tighten bolts -arrows-.

– Install brake pads ⇒ page 84 .

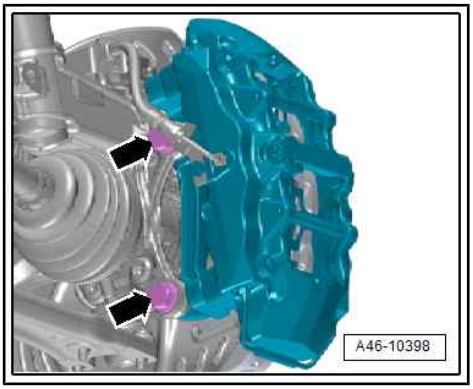

– Secure brake hose -3- and bracket -2- with bolt -1-.

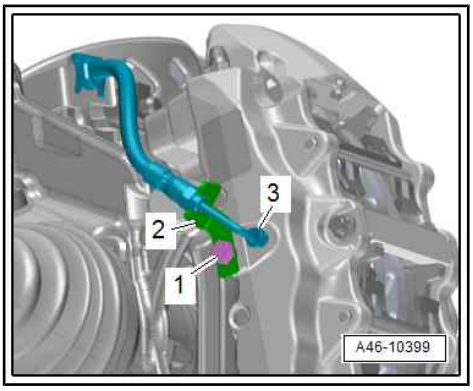

Protected by copyright. Copying for private or commercial purposes, in part or in whole, is not permitted unless authorised by AUDI AG. AUDI AG does not guarantee or accept any liability with respect to the correctness of information in this document. Copyright by AUDI AG.

– Plug in electrical connector -1-.

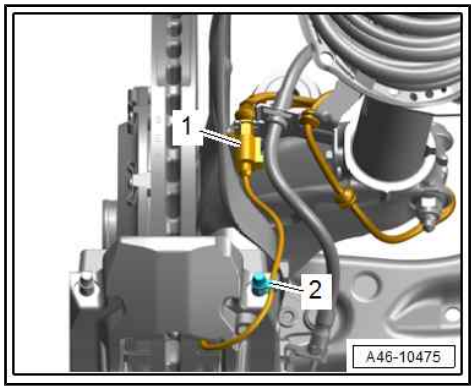

Note

- *Make sure the electrical connector and brake hose are positioned correctly.*
- *The brake hose must not be kinked, crushed or twisted or chafe against parts of the vehicle at any point.*

– Remove brake pedal actuator - V.A.G 1869/2- .

– Bleed brake system (only at wheel where caliper was detached and brake hose disconnected)
⇒ “6.2 Bleeding hydraulic system”, page 235 .

Note

If the brake pedal still feels “soft”, bleed the complete brake system *⇒ “6.2 Bleeding hydraulic system”, page 235* .

– Fit front wheel ⇒ Running gear, axles, steering; Rep. gr. 44 ; Wheels, tyres .

WARNING

Risk of accident!

- ***Depress brake pedal firmly several times with vehicle stationary so that brake pads are properly seated in normal operating position.***
- ***Make sure that the brakes work properly before the vehicle is driven on the road.***

Tightening torques

- ⇒ “1.1.3 Exploded view - front brakes, RS 3 (1LF/1LH/1LL/1LN/1LU)”, page 73

1.6 Removing and installing brake carrier

Note

- *Clean bolts and nuts before reusing.*
- *Always renew self-locking bolts/nuts.*
- *Always renew damaged bolts/nuts.*

Note

The procedure described applies only to brakes 1LB/1LC/1LJ/1ZA/1ZD/1ZE/1ZP.

Protected by copyright. Copying for private or commercial purposes, in part or in whole, is not permitted unless authorised by AUDI AG. AUDI AG does not guarantee or accept any liability with respect to the correctness of information in this document. Copyright by AUDI AG.

Special tools and workshop equipment required

- Torque wrench - V.A.G 1332-

Removing

– Remove brake pads ⇒ page 77 .

– Remove bolts -arrows- and detach brake carrier -1-.

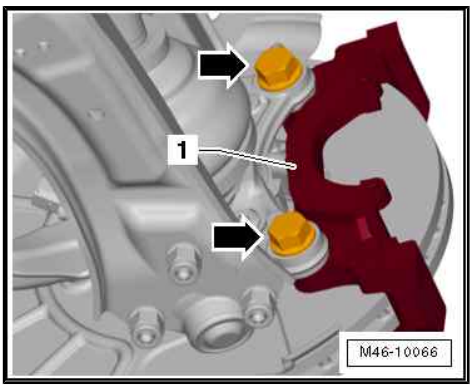

Installing

Installation is carried out in reverse order; note the following:

Note

- *Clean bolts and nuts before reusing.*
- *Always renew self-locking bolts/nuts.*
- *Always renew damaged bolts/nuts.*

WARNING

Risk to health

- ***Do not blow out the brake system with compressed air.***

Note

Use only methylated spirits for cleaning the brake carrier.

– Install brake pads ⇒ page 77 .

WARNING

Risk of accident!

- ***Depress brake pedal firmly several times with vehicle stationary so that brake pads are properly seated in normal operating position.***
- ***Make sure that the brakes work properly before the vehicle is driven on the road.***

Protected by copyright. Copying for private or commercial purposes, in part or in whole, is not permitted unless authorised by AUDI AG. AUDI AG does not guarantee or accept any liability with respect to the correctness of information in this document. Copyright by AUDI AG.

Tightening torques

- ⇒ “1.1.2 Exploded view - front brakes (1LB/1LC/1LJ/1ZA/1ZD/1ZE/1ZP)”, page 70

1.7 Removing and installing brake disc

Applies to all brakes

Note

- *Clean bolts and nuts before reusing.*
- *Always renew self-locking bolts/nuts.*
- *Always renew damaged bolts/nuts.*

Special tools and workshop equipment required

- Torque wrench - V.A.G 1331-

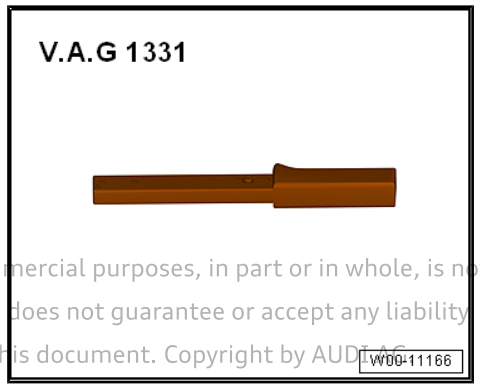

Protected by copyright. Copying for private or commercial purposes, in part or in whole, is not permitted unless authorised by AUDI AG. AUDI AG does not guarantee or accept any liability with respect to the correctness of information in this document. Copyright by AUDI AG.

Removing

– Remove relevant brake caliper ⇒ page 88 .

– Remove bolt -arrow- and take off brake disc.

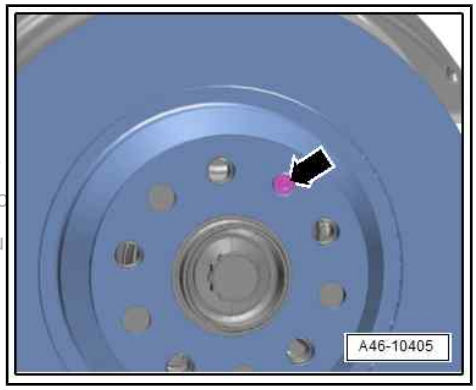

Protected by copyright. Copying for private or commercial
permitted unless authorised by AUDI AG. AUDI AG does no
correctness of information in this docu

Caution

Risk of damage to brake discs

- ***Do not force brake disc off wheel hub. Use rust remover if necessary.***

Installing

Installation is carried out in reverse order; note the following:

Note

- *Clean bolts and nuts before reusing.*
- *Always renew self-locking bolts/nuts.*
- *Always renew damaged bolts/nuts.*

– Check brake discs for wear and damage before reinstalling:

- Wear limit of brake discs ⇒ “4 Technical data”, page 8

WARNING

If one brake disc is damaged or worn, the other discs must also be checked for damage and wear.

– Clean contact surface of brake disc and wheel hub thoroughly and remove corrosion.

– Fit brake disc onto wheel hub.

Note

Take care to keep the brake disc straight when fitting it on the wheel hub.

– Tighten bolt -arrow-.
– Install brake caliper ⇒ page 88 .

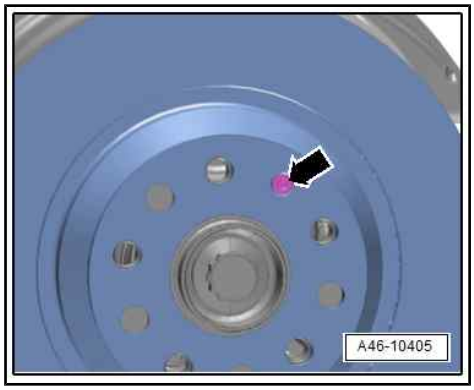

WARNING

Risk of accident!

- *Depress brake pedal firmly several times with vehicle stationary so that brake pads are properly seated in normal operating position.*
- *Make sure that the brakes work properly before the vehicle is driven on the road.*

Tightening torques

- ⇒ “1.1 Exploded view - front brakes”, page 68

1.8 Removing and installing splash plate

Applies to all brakes

Note

- *Clean bolts and nuts before reusing.*
- *Always renew self-locking bolts/nuts.*
- *Always renew damaged bolts/nuts.*

Special tools and workshop equipment required

- Torque wrench - V.A.G 1331-

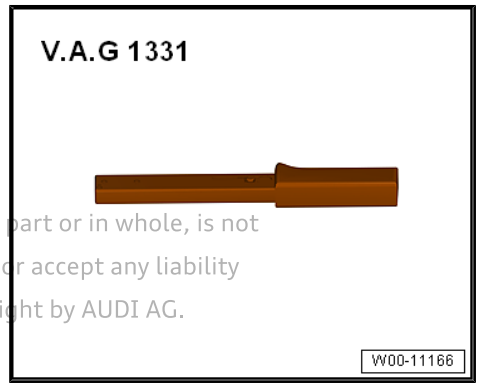

Protected by copyright. Copying for private or commercial purposes, in part or in whole, is not permitted unless authorised by AUDI AG. AUDI AG does not guarantee or accept any liability with respect to the correctness of information in this document. Copyright by AUDI AG.

Protected by copyright. Copying for private or commercial purposes, in part or in
permitted unless authorised by AUDI AG. AUDI AG does not guarantee or accept
with respect to the correctness of information in this document. Copyright by AU

Removing

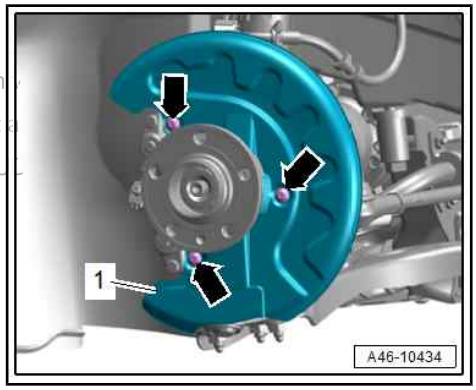

– Remove relevant brake disc ⇒ page 110 .
– Remove bolts -arrows-.
– Take off splash plate -1-.

Installing

Installation is carried out in reverse order; note the following:

Note

- *Clean bolts and nuts before reusing.*
- *Always renew self-locking bolts/nuts.*
- *Always renew damaged bolts/nuts.*

– Clean splash plate and wheel hub.
– Install brake disc ⇒ page 110 .

WARNING

Risk of accident!

- *Depress brake pedal firmly several times with vehicle stationary so that brake pads are properly seated in normal operating position.*
- *Make sure that the brakes work properly before the vehicle is driven on the road.*

Tightening torques

- ⇒ “1.1 Exploded view - front brakes”, page 68

2 Rear brakes

⇒ “2.1 Exploded view - rear brakes”, page 114
⇒ “2.2 Removing and installing brake pads”, page 118
⇒ “2.3 Removing and installing brake caliper”, page 126
⇒ “2.4 Renewing brake caliper”, page 130
⇒ “2.5 Removing and installing brake carrier”, page 134
⇒ “2.6 Removing and installing brake disc”, page 137
⇒ “2.7 Removing and installing splash plate”, page 139

2.1 Exploded view - rear brakes

Applies to all brakes

Note

- *Clean bolts and nuts before reusing.*
- *Always renew self-locking bolts/nuts.*
- *Always renew damaged bolts/nuts.*

Protected by copyright. Copying for private or commercial purposes, in part or in whole, is not permitted unless authorised by AUDI AG. AUDI AG does not guarantee or accept any liability with respect to the correctness of information in this document. Copyright by AUDI AG.

Note

The illustration shows the rear brakes on a vehicle with front-wheel drive and multi-link suspension as an example.

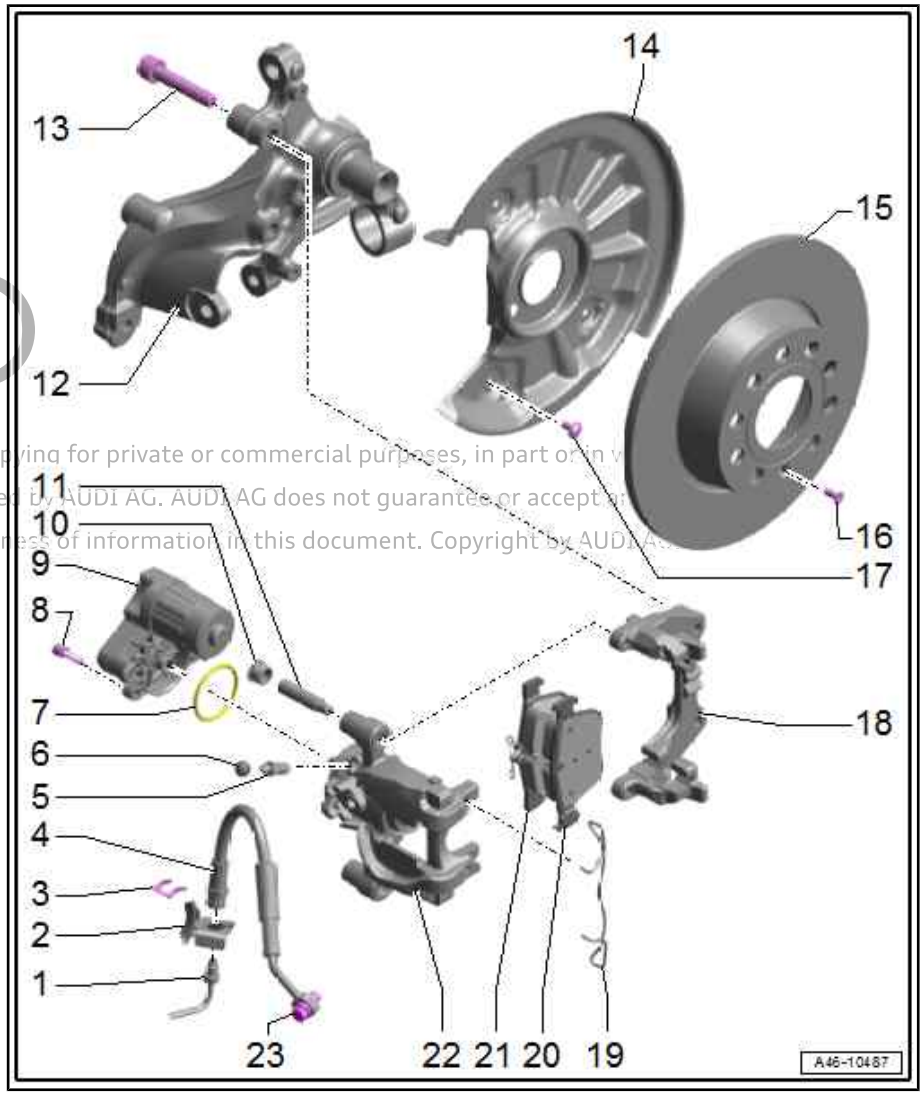

1 - Brake line

- ❑ 14 Nm

> ⚠ **Caution**
>
> *Do not damage brake line.*
>
> *Do not bend brake line out of shape.*
>
> *Brake lines must be renewed if they are damaged or bent.*

2 - Bracket

- ❑ For brake line/hose
- ❑ On body

3 - Retaining spring

- ❑ Renew if damaged

4 - Brake hose

- ❑ Ensure correct installation position

> ⚠ **WARNING**
>
> *If the banjo bolt is damaged, it must be renewed together with the brake hose.*
>
> *If the brake hose is damaged, it must be renewed together with the banjo bolt.*
>
> *The banjo bolt and the brake hose cannot be renewed separately.*

Protected by copyright. Copying for private or commercial purposes, in part or in whole, is not permitted unless authorised by AUDI AG. AUDI AG does not guarantee or accept any liability with respect to the correctness of information in this document. Copyright by AUDI AG.

5 - Bleeder screw

- ❑ Apply a thin coat of assembly paste - G 052 150 A2- before fitting
- ❑ 10 Nm

6 - Protective cap

7 - Seal

- ❑ Renew after removing

8 - Bolt

- ❑ 8 Nm

> ℹ **Note**
>
> - *Clean bolts and nuts before reusing.*
> - *Always renew self-locking bolts/nuts.*
> - *Always renew damaged bolts/nuts.*

9 - Parking brake motor

- ❑ Removing and installing ⇒ page 142

10 - Trim cap

- ❑ For guide pin

11 - Guide pin

- ❑ 35 Nm

12 - Wheel bearing housing

13 - Bolt

- ❑ Renew after removing
- ❑ 90 Nm +90°

14 - Splash plate for brakes

- ❑ Removing and installing ⇒ page 139

15 - Brake disc

- ❑ Never remove brake disc from wheel hub by force; if necessary use rust remover, as brake disc may otherwise be damaged
- ❑ Removing and installing ⇒ page 137

> ⚠ **WARNING**
>
> *If one brake disc is damaged or worn, the other discs must also be checked for damage and wear.*

16 - Bolt

- ❑ 12 Nm

Note

- *Clean bolts and nuts before re-using.*
- *Always renew self-locking bolts/ nuts.*
- *Always renew damaged bolts/ nuts.*

Protected by copyright. Copying for private or commercial purposes, in part or in whole, is not permitted unless authorised by AUDI AG. AUDI AG does not guarantee or accept any liability with respect to the correctness of information in this document. Copyright by AUDI AG.

17 - Bolt

- ❑ 8 Nm

Note

- *Clean bolts and nuts before re-using.*
- *Always renew self-locking bolts/ nuts.*
- *Always renew damaged bolts/ nuts.*

18 - Brake carrier

- ❑ Removing and installing ⇒ page 134

19 - Retaining spring

20 - Outer brake pad

- ❑ Checking brake pad thickness ⇒ Maintenance ; Booklet 821 ; Maintenance; Brake pads: checking thickness
- ❑ Removing and installing ⇒ page 118
- ❑ Always renew on both sides of axle
- ❑ ⇒ “2.1.1 Installation position of brake pads”, page 118

21 - Inner brake pad

- ❑ With spring
- ❑ Checking brake pad thickness ⇒ Maintenance ; Booklet 821 ; Maintenance; Brake pads: checking thickness
- ❑ Removing and installing ⇒ page 118
- ❑ Always renew on both sides of axle
- ❑ ⇒ “2.1.1 Installation position of brake pads”, page 118

22 - Brake caliper

- ❑ Do not disconnect brake hose when changing brake pads
- ❑ Removing and installing ⇒ page 126
- ❑ Renewing ⇒ page 130
- ❑ Perform “basic setting” after servicing or renewing ⇒ Vehicle diagnostic tester

23 - Banjo bolt

- ❑ Captive version with seals
- ❑ Clean sealing surface on brake caliper to remove corrosion
- ❑ 35 Nm

WARNING

If the banjo bolt is damaged, it must be renewed together with the brake hose.

If the brake hose is damaged, it must be renewed together with the banjo bolt.

The banjo bolt and the brake hose cannot be renewed separately.

Protected by copyright. Copying for private or commercial purposes, in part or in whole, is not permitted unless authorised by AUDI AG. AUDI AG does not guarantee or accept any liability with respect to the correctness of information in this document. Copyright by AUDI AG.

2.1.1 Installation position of brake pads

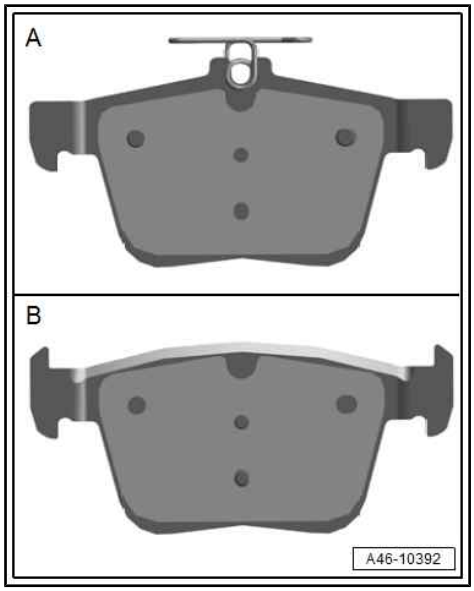

Installation position of brake pads

A - Inner piston-side brake pad

B - Outer brake pad

- Make sure that spring is seated in backplate of inner brake pad.

2.2 Removing and installing brake pads

Note

- *Clean bolts and nuts before reusing.*
- *Always renew self-locking bolts/nuts.*
- *Always renew damaged bolts/nuts.*

Protected by copyright. Copying for private or commercial purposes, in part or in whole, is not permitted unless authorised by AUDI AG. AUDI AG does not guarantee or assume liability with respect to the correctness of information in this document. Copyright by AUDI AG.

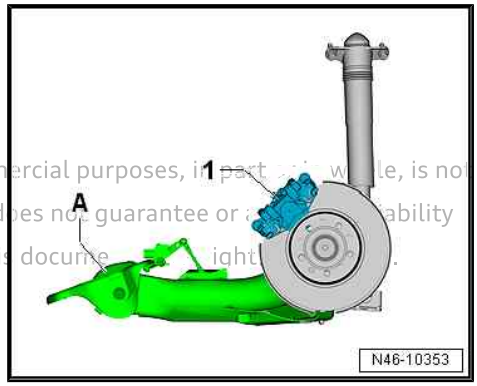

Installation position of brake caliper with torsion beam axle -A-:

1 - Brake caliper

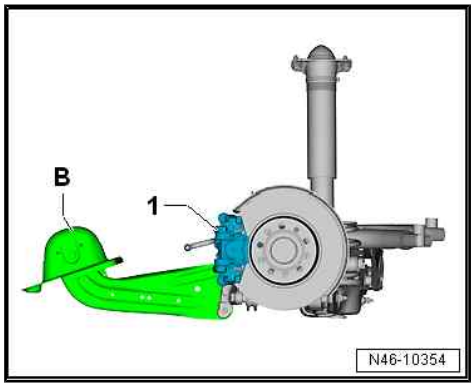

Installation position with multi-link suspension -B-:

1 - Brake caliper

Special tools and workshop equipment required

- Vehicle diagnostic tester

- Torque wrench - V.A.G 1331-

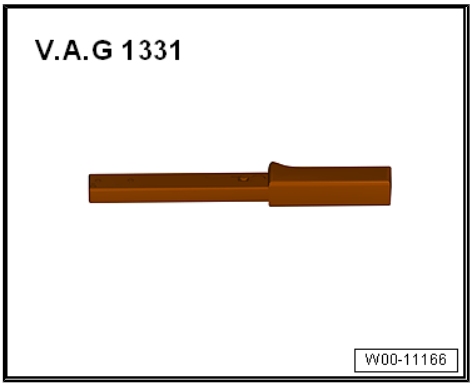

- -VAS 6564/2- from tool set for brake bleeding - VAS 6564-

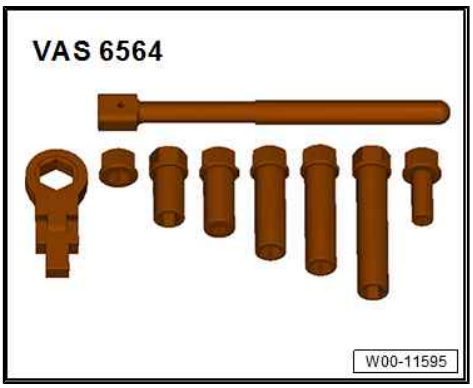

- Ratchet insert - VAS 6784-

Protected by copyright. Copying for private or commercial purpose
permitted unless authorised by AUDI AG. AUDI AG does not gua
with respect to the correctness of information in this document.

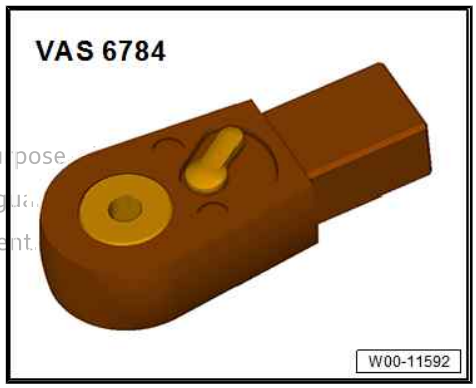

- Piston resetting appliance - T10145-

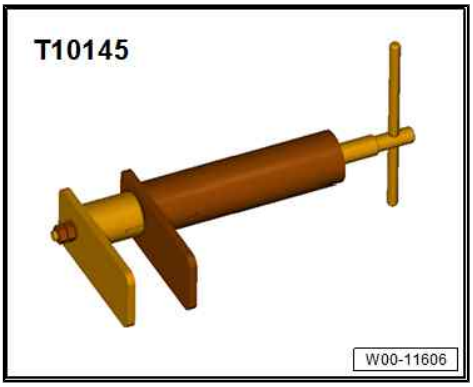

♦ Bit (7 mm) - T10503-

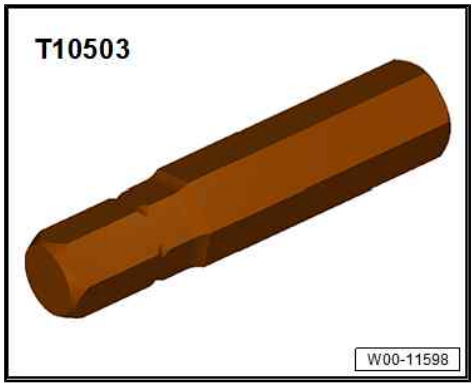

♦ Lithium grease - G 052 150 A2- ⇒ Electronic parts catalogue "ETKA"

Removing

Note

♦ *Mark brake pads when removing them if they are to be reinstalled. Reinstall in their original position to prevent uneven braking.*

♦ *Do not unplug electrical connectors of parking brake motors.*

– Release parking brake.

– Switch off ignition.

– Remove relevant rear wheel ⇒ Running gear, axles, steering; Rep. gr. 44 ; Wheels, tyres .

Note

The parking brake pistons must be moved back with the vehicle diagnostic tester if the brake pads are being renewed.

– With ignition switched off, connect vehicle diagnostic tester to diagnostic connection in vehicle.

– Switch on ignition.

– After entering vehicle identification data, select `Guided Functions` mode.

– Move parking brake motors back:

Running gear/brake system
01 Self-diagnosis compatible systems
03 J104 - ABS control unit, integrated parking brake
03 Functions - electromechanical parking brake
03 46 Removing brake pads

– Continue to follow the instructions on the vehicle diagnostic tester display.

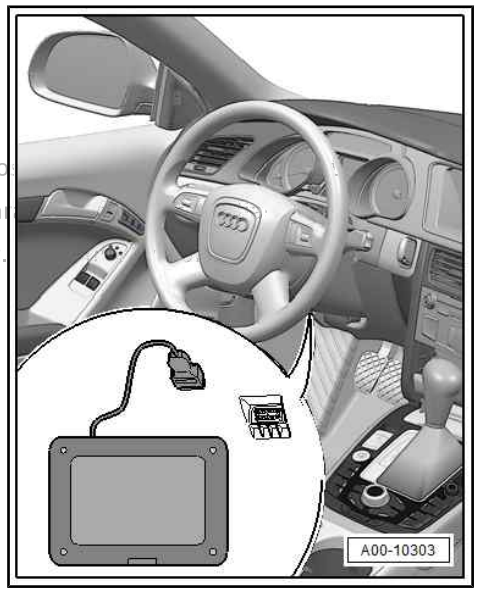

Protected by copyright. Copying for private or commercial purposes, in part, is not permitted unless authorised by AUDI AG. AUDI AG does not guarantee or assume any liability with respect to the correctness of information in this document.

Vehicles with front-wheel drive:

– Unplug electrical connector -2- from speed sensor -G44- / -G46- and move electrical wire clear.

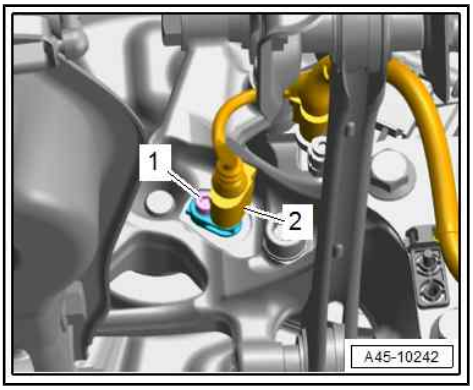

Note

- *Illustration shows installation position on a vehicle with multi-link suspension as an example.*
- *Disregard -item 1-.*

Vehicles with 2.5 ltr. TFSI engine:

– Unplug electrical connector -2- for pad wear sender and move clear; to do so, open dust cap -1-.

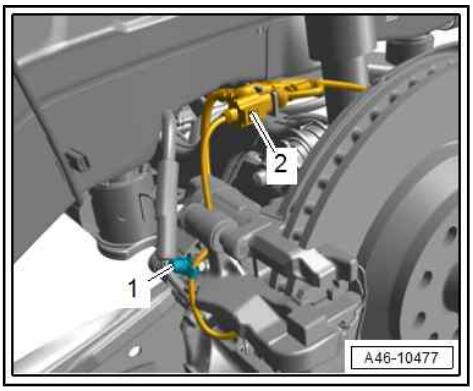

All vehicles (continued):

WARNING

Risk of injury.

- ***The retaining spring -1- is under tension. When removing, hold retaining spring with your other hand -B-.***

Protected by copyright. Copying for private or commercial purposes, in part or in whole, is not permitted unless authorised by AUDI AG. AUDI AG does not guarantee or assume any liability with respect to the correctness of information. Copyright by AUDI AG.

– Lever brake pad retaining spring -1- out of brake caliper -arrow- with a screwdriver -A-, making sure that you do not damage paintwork on brake caliper.

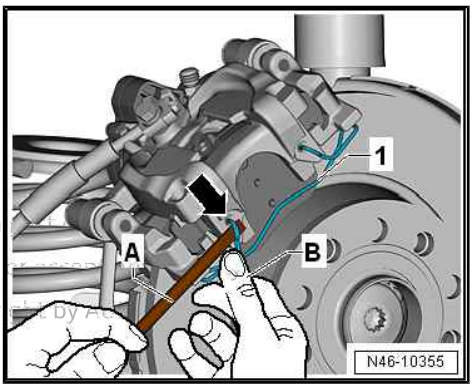

– Remove protective caps -arrows- from guide pins.

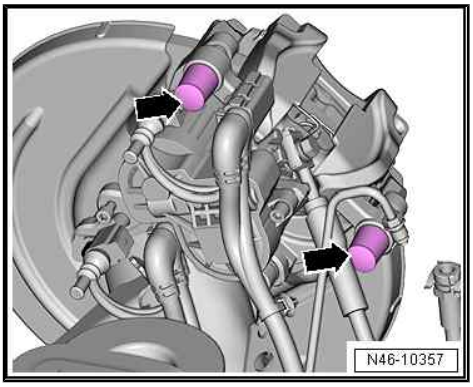

– Unscrew both guide pins from brake caliper using bit (7 mm) - T10503- and ratchet insert - VAS 6784- .

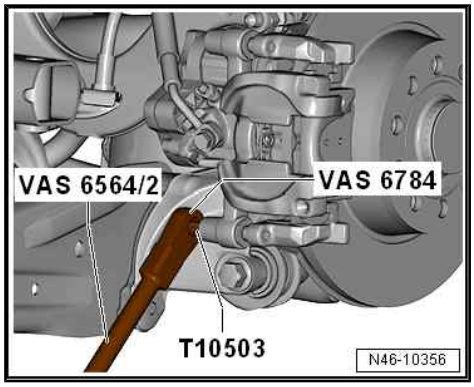

Caution

Risk of damage to brake hose

- *Do not leave the brake caliper hanging from the brake hose. Take care that brake hose is not damaged by weight of brake components.*
- *The brake hose must be renewed if it is damaged.*

Risk of damage to brake caliper pistons

- *The brake and the electromechanical parking brake must not be operated when the brake caliper has been detached.*

Protected by copyright. Copying for private or commercial purposes, in part or in whole, is not permitted unless authorised by AUDI AG. AUDI AG does not guarantee or accept any liability with respect to the correctness of information in this document. Copyright by AUDI AG.

– Tie brake caliper -1- to body with suitable wire -A-.
– Detach brake pads -2, 3-.

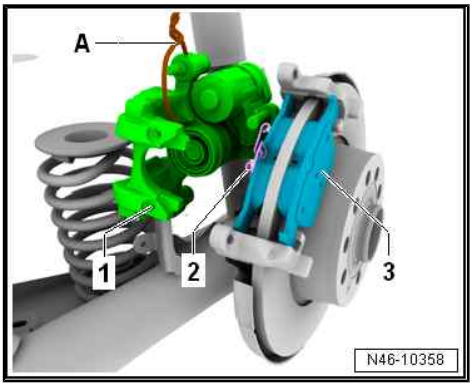

Installing

Installation is carried out in reverse order; note the following:

> **Caution**
>
> *Do not damage brake line.*
>
> *Do not bend brake line out of shape.*
>
> *Brake lines must be renewed if they are damaged or bent.*

Note

- *Clean bolts and nuts before reusing.*
- *Always renew self-locking bolts/nuts.*
- *Always renew damaged bolts/nuts.*

– Check brake discs for wear and damage when renewing brake pads.
- Wear limit of brake discs ⇒ page 8

Note

- *Always renew brake pads on both sides of axle.*
- *Install all parts supplied in the repair kit when fitting new brake pads.*

Protected by copyright. Copying for private or commercial purposes, in part or in whole, is not permitted unless authorised by AUDI AG. AUDI AG does not guarantee or accept any liability with respect to the correctness of information in this document. Copyright by AUDI AG.

> **WARNING**
>
> *Risk to health*
>
> - *Do not blow out the brake system with compressed air.*

Note

- *Use only methylated spirits to clean the brake caliper.*
- *Check protective caps on brake caliper pistons for damage; if necessary, install all parts supplied in repair kit* ⇒ page 155 .
- *Check bearing bushes on guide pins for damage and ensure that guide pins move freely; if necessary, install all parts supplied in repair kit* ⇒ page 164 .

Caution

Escaping brake fluid can cause the vehicle to become dirty and may damage the paintwork.

- *If the brake pads are worn and brake fluid has been topped up unnecessarily, brake fluid can overflow when the piston (s) are pressed back into the brake cylinders.*
- *Before pressing the piston(s) back, check the brake fluid level. Brake fluid must be extracted if the fluid level is up to the "MAX" mark.*
- *Use brake filling and bleeding equipment - VAS 5234- to extract brake fluid from brake fluid reservoir.*

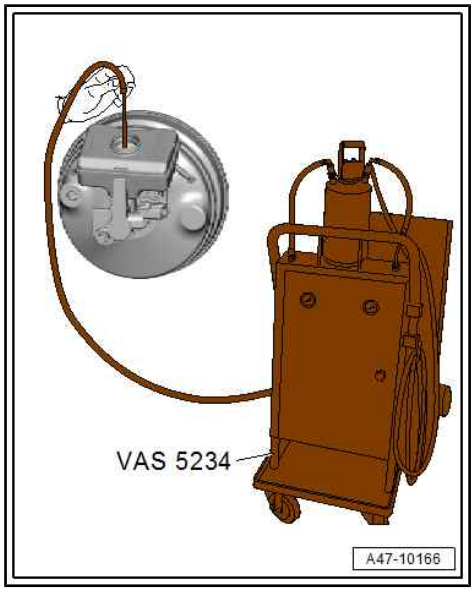

Caution

Risk of irreparable damage to brake caliper

- *The compressor nut is moved back on the spindle when the pistons are moved back using the vehicle diagnostic tester .*
- *The piston must then (and NOT before) be pressed back fully with the piston resetting appliance - T10145- .*

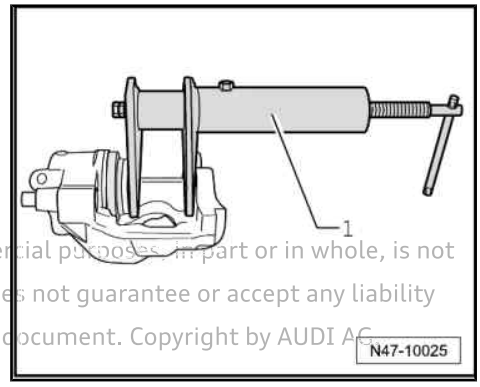

Protected by copyright. Copying for private or commercial purposes, in part or in whole, is not permitted unless AUDI AG. AUDI AG does not guarantee or accept any liability with respect to the correctness of information in this document. Copyright by AUDI AG.

– Press back piston completely with piston resetting appliance - T10145- .

– Clean pad contact surfaces -1, 2- on brake carrier and apply a small amount of lithium grease - G 052 150 A2- .

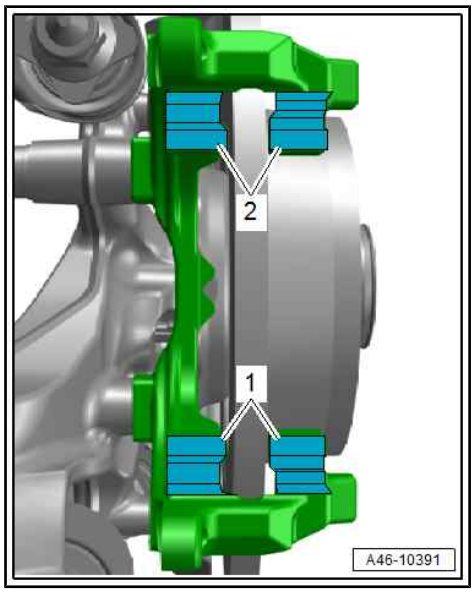

– If fitted, pull protective foil off pad backplates.

– If used pads are being re-fitted, take care to install the marked pads in their original positions.

– Insert brake pads -2, 3- in brake caliper, paying attention to installation position
⇒ Fig. ""Installation position of brake pads"" , page 118 .

– Install brake caliper.

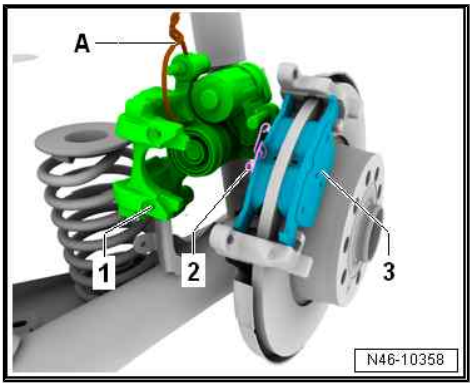

– Fit both guide pins using bit (7 mm) - T10503- and ratchet insert - VAS 6784- and tighten to specified torque
⇒ "2.1 Exploded view - rear brakes", page 114 .

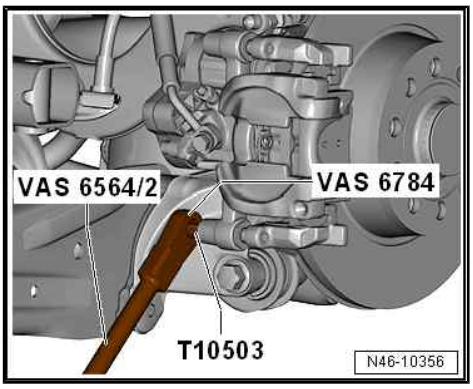

– Fit caps -arrows-.

Protected by copyright. Copying for private or commercial purposes, in pa
permitted unless authorised by AUDI AG. AUDI AG does not guarantee or
with respect to the correctness of information in this document. Copyrigh

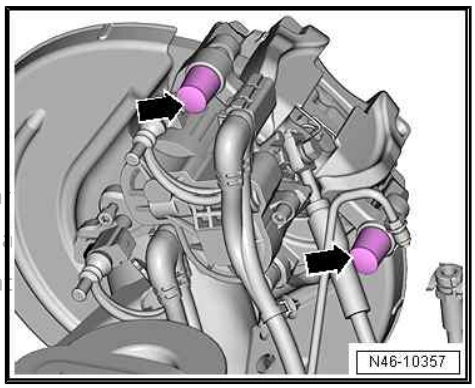

– Insert pad retaining spring in brake caliper -arrow-.

• Make sure that spring is seated properly in holes in brake caliper.

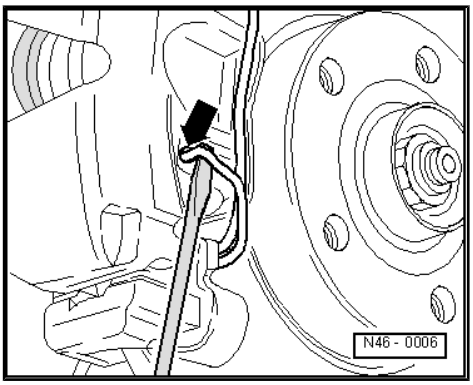

Vehicles with 2.5 ltr. TFSI engine:

– Plug in electrical connector -2- and secure pad wear sender wire with dust cap -1-.

All vehicles (continued):

– Depress brake pedal firmly several times with vehicle stationary so that brake pads are properly seated in normal operating position.

– Move parking brake motors forward using ⇒ Vehicle diagnostic tester; to do so follow the instructions on the screen.

– Check brake fluid level and top up if necessary.

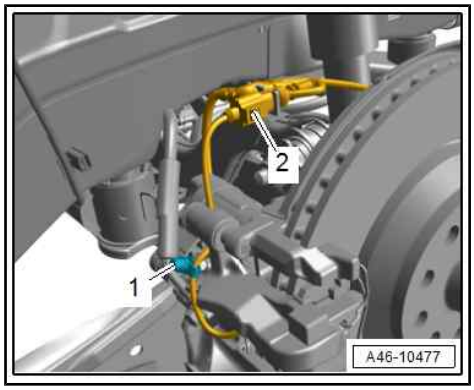

Note

- *Clean bolts and nuts before reusing.*
- *Always renew self-locking bolts/nuts.*
- *Always renew damaged bolts/nuts.*

Tightening torques

- ⇒ "2.1 Exploded view - rear brakes", page 114
- ⇒ Running gear, axles, steering; Rep. gr. 44 ; Wheels, tyres

WARNING

Risk of accident!

- *Depress brake pedal firmly several times with vehicle stationary so that brake pads are properly seated in normal operating position.*
- *Make sure that the brakes work properly before the vehicle is driven on the road.*

2.3 Removing and installing brake caliper

Protected by copyright. Copying for private or commercial purposes, in part or in whole, is not permitted unless authorised by AUDI AG. AUDI AG does not guarantee or accept any liability with respect to the correctness of information in this document. Copyright by AUDI AG.

Note

- *Clean bolts and nuts before reusing.*
- *Always renew self-locking bolts/nuts.*
- *Always renew damaged bolts/nuts.*

Note

In the following procedure the brake caliper is removed together with the brake carrier and brake pads. The brake hose remains connected.

Special tools and workshop equipment required

- Torque wrench - V.A.G 1332-

Protected by copyright. Copying for private or commercial purposes, in part or in whole, is not permitted unless authorised by AUDI AG. AUDI AG does not guarantee or accept any liability with respect to the correctness of information in this document. Copyright by AUDI AG.

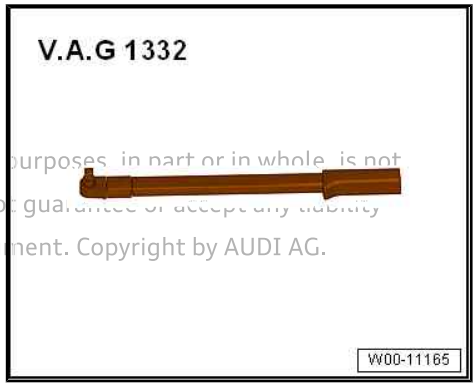

- Socket - T10035-

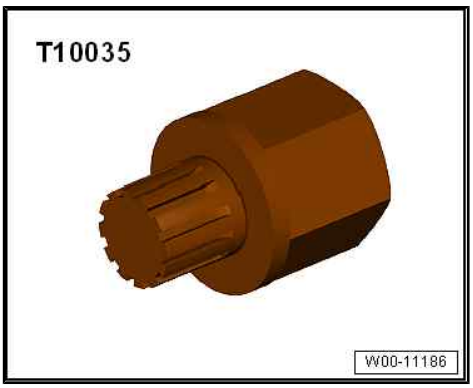

Removing

– Release parking brake.
– Switch off ignition.

Note

Do not unplug electrical connectors of parking brake motors.

– Remove relevant rear wheel ⇒ Running gear, axles, steering; Rep. gr. 44 ; Wheels, tyres .

Vehicles with 2.5 ltr. TFSI engine:

– Unplug electrical connector -2- for pad wear sender.

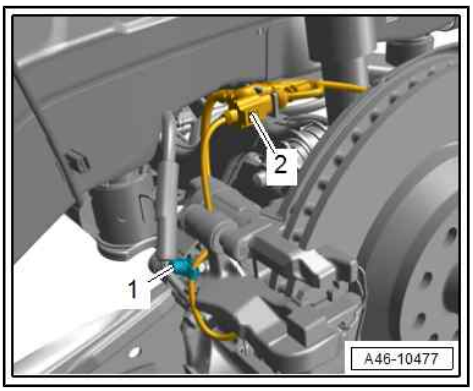

Note

Disregard -item 1-.

Vehicles with front-wheel drive:

– Unplug electrical connector -1- from speed sensor -G44- / -G46- .

All vehicles (continued):

– Remove bolts -arrows- for brake carrier using special wrench - T10035- .

– Pull brake caliper with brake carrier and brake pads fitted off brake disc.

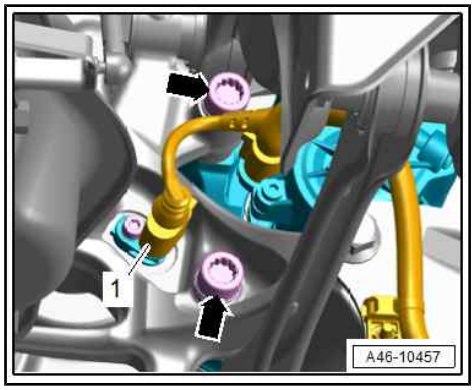

Note

- *Illustration shows installation position on a vehicle with multi-link suspension as an example.*
- *If the brake disc is worn down to such an extent that the brake caliper cannot be pulled off, the parking brake must be retracted as required* *⇒ page 118* *.*

Caution

Risk of damage to brake hose

- ***Do not leave the brake caliper hanging from the brake hose. Take care that brake hose is not damaged by weight of brake components.***
- ***The brake hose must be renewed if it is damaged.***

Risk of damage to brake caliper pistons

- ***The brake and the electromechanical parking brake must not be operated when the brake caliper has been detached.***

Protected by copyright. Copying for private or commercial purposes, in part or in whole, is not permitted unless authorised by AUDI AG. AUDI AG does not guarantee or accept any liability with respect to the correctness of information in this document. Copyright by AUDI AG.

– Use a suitable length of wire to tie up brake caliper with brake carrier on the body.

Installing

Installation is carried out in reverse order; note the following:

Caution

Do not damage brake line.

Do not bend brake line out of shape.

Brake lines must be renewed if they are damaged or bent.

Note

- *Clean bolts and nuts before reusing.*
- *Always renew self-locking bolts/nuts.*
- *Always renew damaged bolts/nuts.*

WARNING

Risk to health

- *Do not blow out the brake system with compressed air.*

Note

Use only methylated spirits to clean the brake caliper.

– Slide brake caliper with brake carrier and brake pads fitted carefully over brake disc.

– Tighten bolts -arrows- for brake carrier to specified torque ⇒ "2.1 Exploded view - rear brakes", page 114 .

– Plug in electrical connector -1-.

Protected by copyright. Copying for private or commercial purposes, in part permitted unless authorised by AUDI AG. AUDI AG does not guarantee or ac with respect to the correctness of information in this document. Copyright b

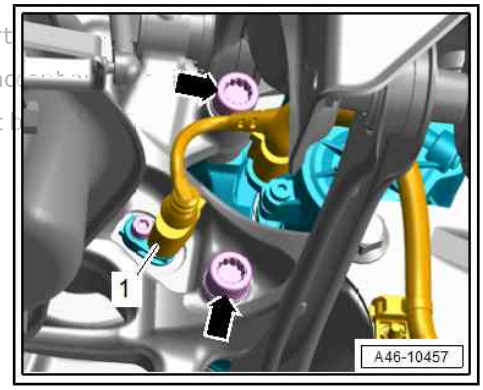

Note

- *Make sure the electrical wiring and brake hose are positioned correctly.*
- *The brake hose must not be kinked, crushed or twisted or chafe against parts of the vehicle at any point.*

Vehicles with 2.5 ltr. TFSI engine:

– Connect electrical connector -2- for pad wear sender.

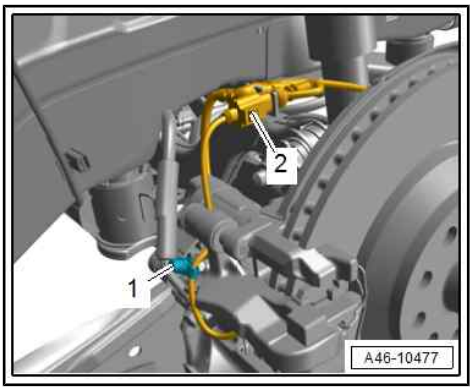

Note

Disregard -item 1-.

All vehicles (continued):

– Depress brake pedal firmly several times with vehicle stationary so that brake pads are properly seated in normal operating position.

– Move parking brake motors forward using ⇒ Vehicle diagnostic tester; to do so follow the instructions on the screen.

Tightening torques

- ⇒ "2.1 Exploded view - rear brakes", page 114
- ⇒ Running gear, axles, steering; Rep. gr. 44 ; Wheels, tyres

WARNING

Risk of accident!

- *Depress brake pedal firmly several times with vehicle stationary so that brake pads are properly seated in normal operating position.*
- *Make sure that the brakes work properly before the vehicle is driven on the road.*

2.4 Renewing brake caliper

Note

- *Clean bolts and nuts before reusing.*
- *Always renew self-locking bolts/nuts.*
- *Always renew damaged bolts/nuts.*

Note

In the following procedure the brake caliper is removed and disconnected from the hydraulic system. The brake hose is disconnected.

Protected by copyright. Copying for private or commercial purposes, in part or in whole, is not permitted unless authorised by AUDI AG. AUDI AG does not guarantee or accept any liability with respect to the correctness of information in this document. Copyright by AUDI AG.

Special tools and workshop equipment required

- Torque wrench - V.A.G 1331-

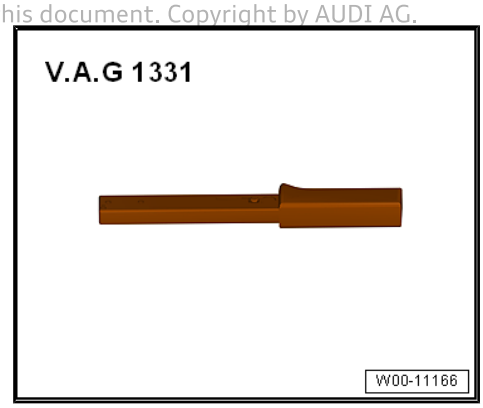

- Brake pedal actuator - V.A.G 1869/2-

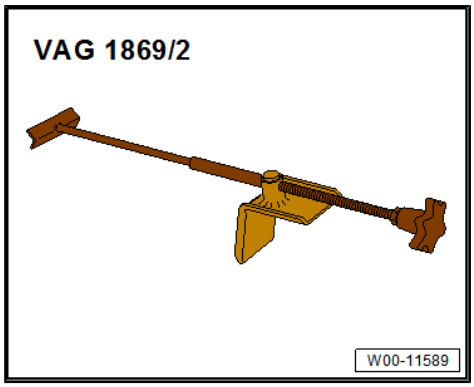

- Bleeder bottle from brake filling and bleeding equipment - VAS 5234-

Protected by copyright. Copying for private or commercial purposes, in part or in whole, is not permitted unless authorised by AUDI AG. AUDI AG does not guarantee or accept any liability with respect to the correctness of information in this document. Copyright by AUDI AG.

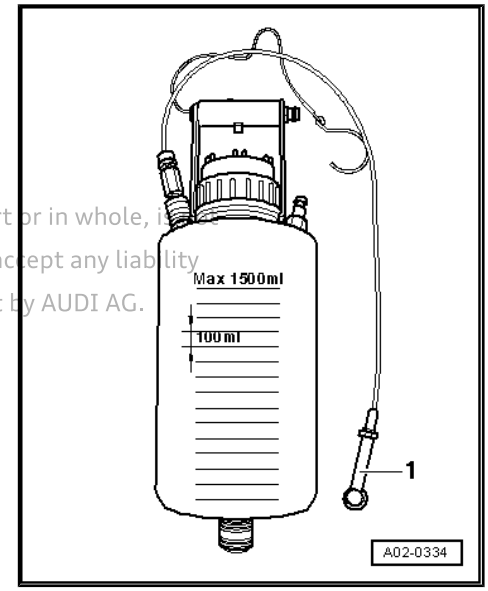

- Sealing plugs from assembly parts set - 5Q0 698 311-

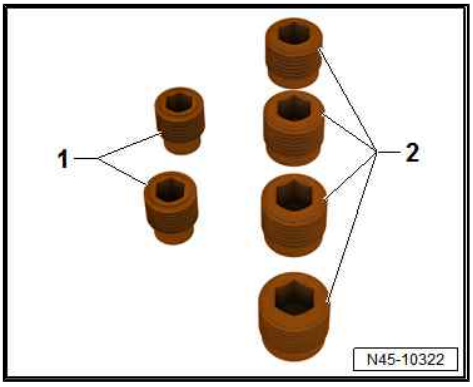

1 - M10 sealing plugs

2 - M12 sealing plugs

Removing

– Release parking brake.

– Switch off ignition.

– Insert brake pedal actuator - V.A.G 1869/2- between brake pedal and driver seat. Depress brake pedal at least 60 mm.

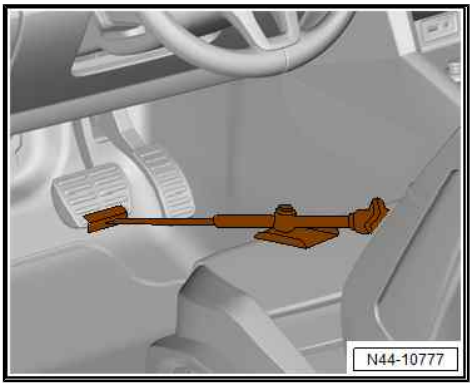

Note

This closes the valves in the brake master cylinder and stops the brake fluid reservoir from running empty.

– Remove relevant rear wheel ⇒ Running gear, axles, steering; Rep. gr. 44 ; Wheels, tyres .

WARNING

Risk of skin irritation

- *Always wear chemical-resistant protective gloves to prevent brake fluid from contacting skin.*

– Detach protective cap -3- from bleeder screw -1- on front left brake caliper.
– Connect hose -2- from bleeder bottle, as shown in illustration.
– Open bleeder screw to relieve pressure in brake system.
– Close bleeder screw and remove bleeder bottle.
– Repeat procedure on rear left brake caliper.

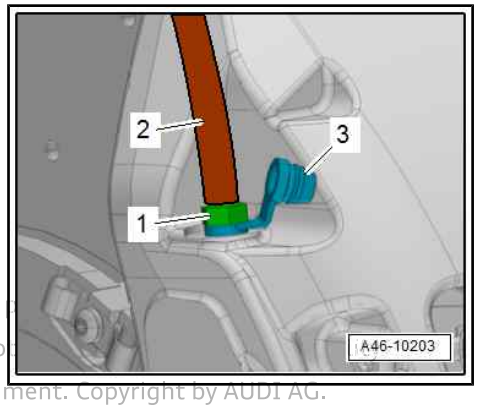

Note

The brake pedal actuator - V.A.G 1869/2- must not be removed.

Protected by copyright. Copying for private or commercial purposes, in part or in whole, is not permitted unless authorised by AUDI AG. AUDI AG does not make any representation or warranty with respect to the correctness of information in this document. Copyright by AUDI AG.

– Remove bolts -arrows- for parking brake motor.
– Detach parking brake motor and place to one side, leaving electrical connector -1- attached.

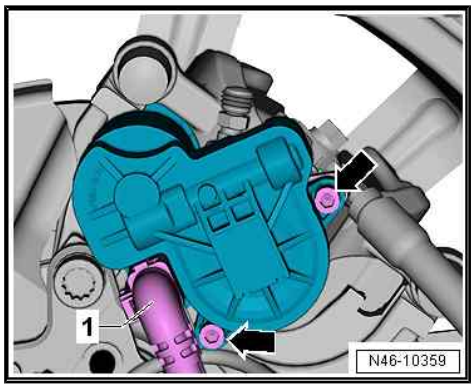

WARNING

Risk of malfunction if brake fluid comes into contact with fluids containing mineral oils.

- *Brake fluid must NOT come into contact with fluids containing mineral oils (oil, petrol, cleaning agents). Protective gloves must be free of oil and grease.*

Risk of damage to paintwork surfaces

- *Due to its corrosive effect, brake fluid must not be allowed to come into contact with paintwork. Rinse off brake fluid spillages immediately using plenty of water.*

– Unscrew banjo bolt -arrow- for brake hose on brake caliper.

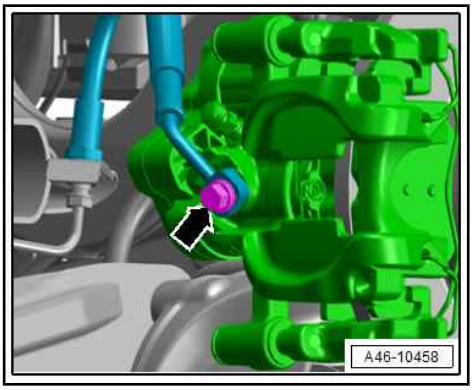

WARNING

If the banjo bolt -arrow- is damaged, it must be renewed together with the brake hose.

If the brake hose is damaged, it must be renewed together with the banjo bolt.

The banjo bolt and the brake hose cannot be renewed separately.

– Seal open connections immediately using clean sealing plugs from assembly parts set - 5Q0 698 311- .

– Remove brake pads ⇒ page 118 .

Installing

Installation is carried out in reverse order; note the following:

Caution

Do not damage brake line.

Do not bend brake line out of shape.

Brake lines must be renewed if they are damaged or bent.

Protected by copyright. Copying for private or commercial purposes, in part or in whole, is not permitted unless authorised by AUDI AG. AUDI AG does not guarantee or accept any liability with respect to the correctness of information in this document. Copyright by AUDI AG.

Note

- *Clean bolts and nuts before reusing.*
- *Always renew self-locking bolts/nuts.*
- *Always renew damaged bolts/nuts.*

– Install brake pads ⇒ page 118 .

– Install electromechanical parking brake motor ⇒ page 142 .

– Tighten banjo bolt -arrow- for brake hose to specified torque at brake caliper
⇒ “2.1 Exploded view - rear brakes”, page 114 .

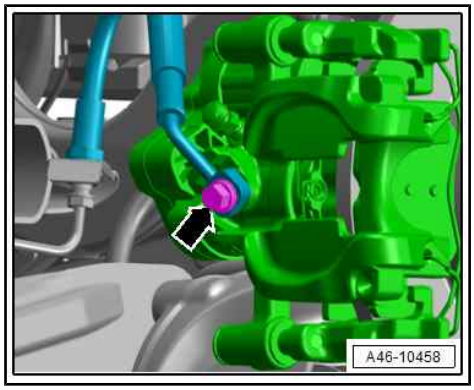

WARNING

If the banjo bolt -arrow- is damaged, it must be renewed together with the brake hose.

If the brake hose is damaged, it must be renewed together with the banjo bolt.

The banjo bolt and the brake hose cannot be renewed separately.

Note

- *Make sure the brake hose is routed correctly.*
- *The brake hose must not be kinked, crushed or twisted or chafe against parts of the vehicle at any point.*

– Remove brake pedal actuator - V.A.G 1869/2- .

– Bleed brake system (only at wheel where caliper was detached and brake hose disconnected) ⇒ page 235 .

Note

If the brake pedal still feels “soft”, bleed the complete brake system *⇒ page 235* *.*

Tightening torques

- ⇒ “2.1 Exploded view - rear brakes”, page 114
- ⇒ Running gear, axles, steering; Rep. gr. 44 ; Wheels, tyres

WARNING

Risk of accident!

- *Depress brake pedal firmly several times with vehicle stationary so that brake pads are properly seated in normal operating position.*
- *Make sure that the brakes work properly before the vehicle is driven on the road.*

2.5 Removing and installing brake carrier

Note

- *Clean bolts and nuts before reusing.*
- *Always renew self-locking bolts/nuts.*
- *Always renew damaged bolts/nuts.*

Special tools and workshop equipment required

Protected by copyright. Copying for private or commercial purposes, in part or in whole, is not permitted unless authorised by AUDI AG. AUDI AG does not guarantee or accept any liability with respect to the correctness of information in this document. Copyright by AUDI AG.

- Torque wrench - V.A.G 1332-

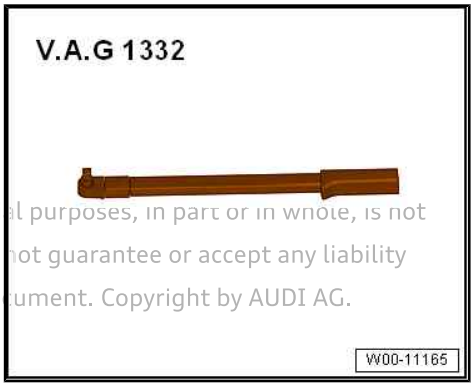

Protected by copyright. Copying for private or commercial purposes, in part or in whole, is not permitted unless authorised by AUDI AG. AUDI AG does not guarantee or accept any liability with respect to the correctness of information in this document. Copyright by AUDI AG.

- Socket - T10035-

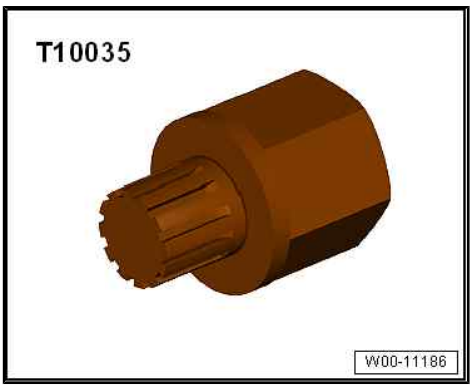

Removing

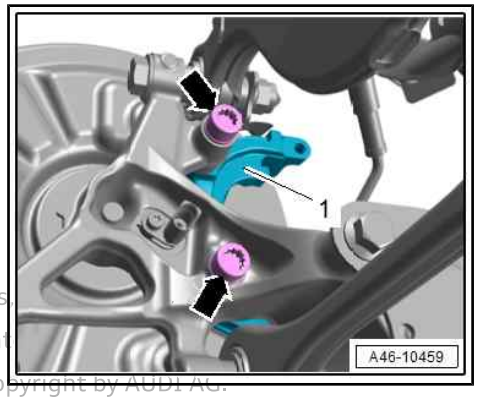

– Remove brake pads ⇒ page 118 .

– Remove bolts -arrows- using special wrench - T10035- and detach brake carrier -1-.

Note

Illustration shows installation position on a vehicle with multi-link suspension as an example.

Protected by copyright. Copying for private or commercial purposes, permitted unless authorised by AUDI AG. AUDI AG does not guarant th respect to the correctness of information in this document. Copyright by AUDI AG.

WARNING

Risk to health

- *Do not blow out the brake system with compressed air.*

Note

Use only methylated spirits for cleaning the brake carrier.

Installing

Installation is carried out in reverse order; note the following:

Note

- *Clean bolts and nuts before reusing.*
- *Always renew self-locking bolts/nuts.*
- *Always renew damaged bolts/nuts.*

– Tighten bolts to specified torque ⇒ “2.1 Exploded view - rear brakes”, page 114 .

– Install brake pads ⇒ page 118 .

Tightening torques

- ⇒ “2.1 Exploded view - rear brakes”, page 114

WARNING

Risk of accident!

- *Depress brake pedal firmly several times with vehicle stationary so that brake pads are properly seated in normal operating position.*
- *Make sure that the brakes work properly before the vehicle is driven on the road.*

2.6 Removing and installing brake disc

Note

- *Clean bolts and nuts before reusing.*
- *Always renew self-locking bolts/nuts.*
- *Always renew damaged bolts/nuts.*

Special tools and workshop equipment required

- Torque wrench - V.A.G 1331-

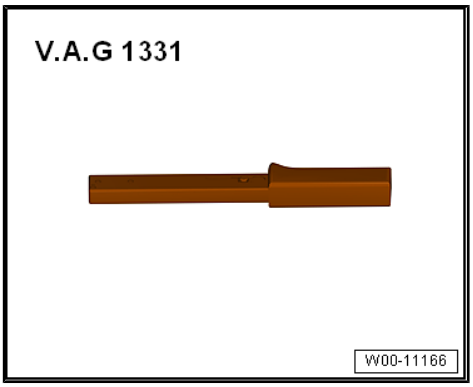

Protected by copyright. Copying for private or commercial purposes, in part or in whole, is not permitted unless authorised by AUDI AG. AUDI AG does not guarantee or accept any liability with respect to the correctness of information in this document. Copyright by AUDI AG.

Removing

– Remove brake caliper ⇒ page 126 .

– Remove bolt -arrow- and take off brake disc.

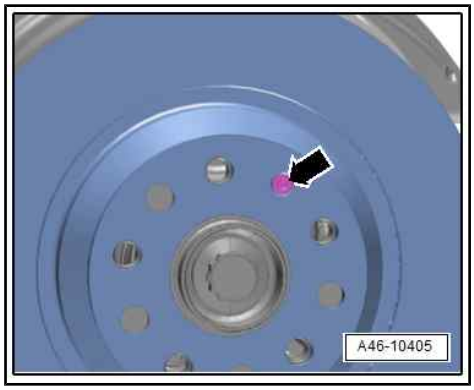

Caution

Risk of damage to brake discs

- *Do not force brake disc off wheel hub. Use rust remover if necessary.*

Installing

Note

- *Clean bolts and nuts before reusing.*
- *Always renew self-locking bolts/nuts.*
- *Always renew damaged bolts/nuts.*

– Check brake discs for wear and damage before reinstalling:

- Wear limit of brake discs ⇒ page 8

WARNING

If one brake disc is damaged or worn, the other discs must also be checked for damage and wear.

WARNING

Risk to health

- *Do not blow out the brake system with compressed air.*

Protected by copyright. Copying for private or commercial purposes, in part or in whole, is not permitted unless authorised by AUDI AG. AUDI AG does not guarantee or accept any liability with respect to the correctness of information in this document. Copyright by AUDI AG.

Note

Use only methylated spirits to clean the brake caliper.

– Clean contact surface of brake disc and wheel hub thoroughly and remove corrosion.

– Fit brake disc onto wheel hub.

– Tighten bolt -arrow- to specified torque
⇒ “2.1 Exploded view - rear brakes”, page 114 .

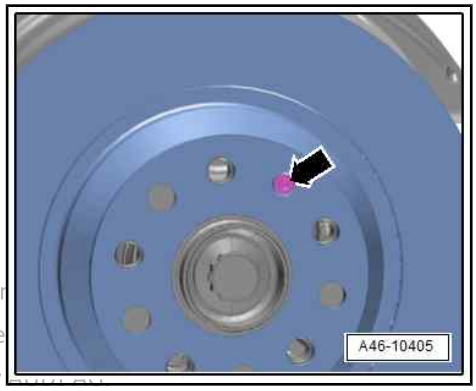

WARNING

Risk of accident!

- *Depress brake pedal firmly several times with vehicle stationary so that brake pads are properly seated in normal operating position.*
- *Make sure that the brakes work properly before the vehicle is driven on the road.*

Protected by copyright. Copying for private or commercial purposes, in part or
permitted unless authorised by AUDI AG. AUDI AG does not guarantee or acce
with respect to the correctness of information in this document. Copyright by

2.7 Removing and installing splash plate

Note

- *Clean bolts and nuts before reusing.*
- *Always renew self-locking bolts/nuts.*
- *Always renew damaged bolts/nuts.*

Removing

– Remove brake disc ⇒ page 137 .

Vehicles with splash plate (closed version):

– Remove wheel bearing unit ⇒ Rear suspension; Rep. gr. 42 ; Wheel bearing, trailing arm; Removing and installing wheel bearing unit .

– Remove brake carrier ⇒ page 134 .

All vehicles (continued):

– Remove bolts -arrows- and detach splash plate -1-.

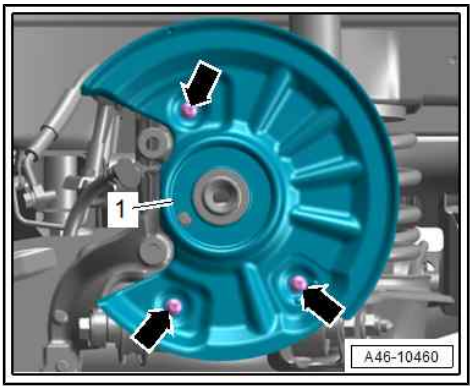

Installing

Installation is carried out in reverse order; note the following:

Note

- *Clean bolts and nuts before reusing.*
- *Always renew self-locking bolts/nuts.*
- *Always renew damaged bolts/nuts.*

– Clean contact surfaces on splash plate and wheel hub.

– Fit bolts for splash plate and tighten.

– Install brake carrier ⇒ page 134 .

– Install wheel bearing unit ⇒ Rear suspension; Rep. gr. 42 ; Wheel bearing, trailing arm; Removing and installing wheel bearing unit .

– Tighten bolts -arrows- to specified torque
⇒ “2.1 Exploded view - rear brakes”, page 114 .

– Install brake disc ⇒ page 137 .

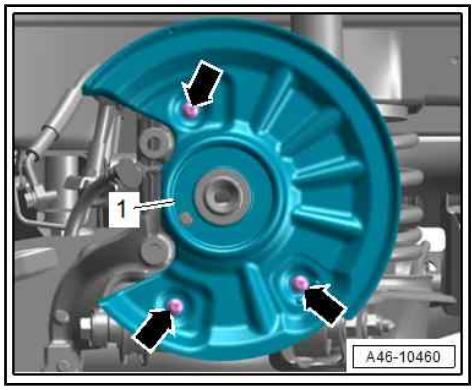

WARNING

Risk of accident!

- *Depress brake pedal firmly several times with vehicle stationary so that brake pads are properly seated in normal operating position.*
- *Make sure that the brakes work properly before the vehicle is driven on the road.*

Protected by copyright. Copying for private or commercial purposes, in part or in whole, is not permitted unless authorised by AUDI AG. AUDI AG does not guarantee or accept any liability with respect to the correctness of information in this document. Copyright by AUDI AG.

3 Parking brake

⇒ “3.1 Exploded view - parking brake”, page 141

⇒ “3.2 Removing and installing parking brake motor V282 / V283 ”, page 142

⇒ “3.3 Releasing parking brake manually”, page 145

3.1 Exploded view - parking brake

Note

- *Clean bolts and nuts before reusing.*
- *Always renew self-locking bolts/nuts.*
- *Always renew damaged bolts/nuts.*

Note

A mechanical or electrical fault may make it necessary to release the parking brake mechanically in order to move the vehicle ⇒ page 145 .

Protected by copyright. Copying for private or commercial purposes, in part or in whole, is not permitted unless authorised by AUDI AG. AUDI AG does not guarantee or accept any liability with respect to the correctness of information in this document. Copyright by AUDI AG.

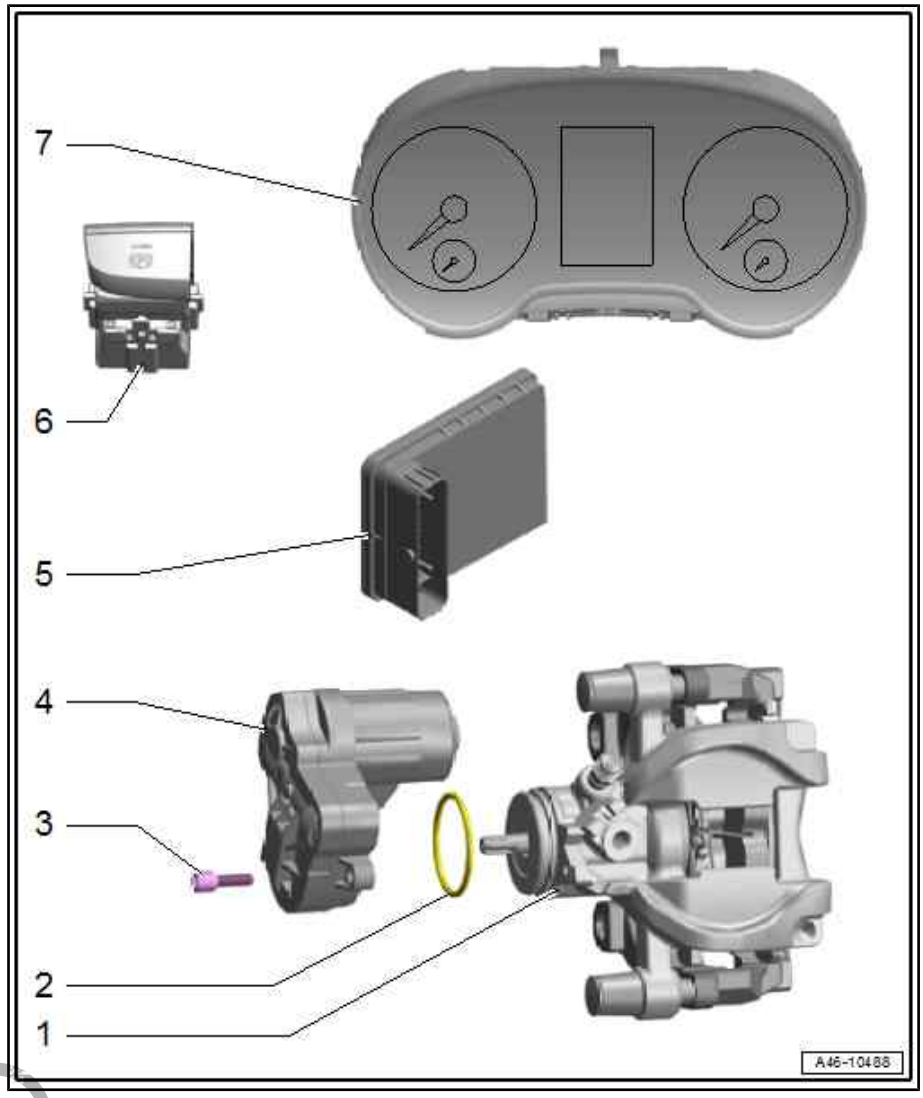

1 - Rear brake caliper

2 - Seal

- ❑ Renew after removing

3 - Bolt

- ❑ 8 Nm

4 - Parking brake motor

- ❑ Left parking brake motor - V282-
- ❑ Right parking brake motor - V283-
- ❑ Removing and installing ⇒ page 142

> **WARNING**
>
> *Risk of accident!*
> *Before removing parking brake motor, secure vehicle to prevent it from rolling. The parking brake is released when the parking brake motor is detached.*

5 - ABS control unit - J104-

- ❑ The control function for electromechanical parking brake is integrated in ABS control unit - J104-
- ❑ Removing and installing ⇒ page 32

6 - Electromechanical parking brake button - E538-

- ❑ With electromechanical parking brake warning lamp - K213-
- ❑ Fitting location, removing and installing ⇒ Electrical system; Rep. gr. 96 ; Controls; Overview of fitting locations - controls in centre console

7 - Dash panel insert

- ❑ With brake system warning lamp - K118-

Protected by copyright. Copying for private or commercial purposes, in part or in whole, is not permitted unless authorised by AUDI AG. AUDI AG does not guarantee or accept any liability with respect to the correctness of information in this document. Copyright by AUDI AG.

3.2 Removing and installing parking brake motor -V282- / -V283-

Note

- *Clean bolts and nuts before reusing.*
- *Always renew self-locking bolts/nuts.*
- *Always renew damaged bolts/nuts.*

Special tools and workshop equipment required

- Vehicle diagnostic tester

- Torque wrench - V.A.G 1331-

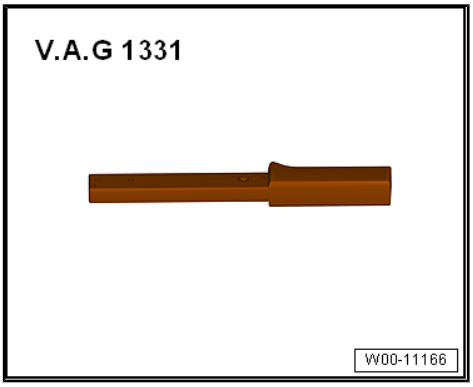

- Lithium grease - G 052 150 A2- ⇒ Electronic parts catalogue "ETKA"

Removing

> **WARNING**
>
> *Risk of accident!*
>
> - *Before removing parking brake motor, secure vehicle to prevent it from rolling. The parking brake is released when the parking brake motor is detached.*

Copyright. Copying for private or commercial purposes, in part or in whole, is not permitted without the consent of AUDI AG. AUDI AG does not guarantee or accept any liability with respect to the correctness of information in this document. Copyright by AUDI AG.

– Release parking brake.
– Switch off ignition.
– Unplug electrical connector -1-.
– Remove bolts -arrows-.
– Remove parking brake motor from brake caliper, turning parking brake motor back and forth slightly.
– Take out seal.

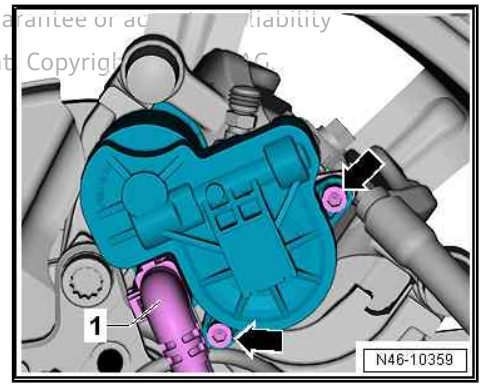

Installing

Installation is carried out in reverse order; note the following:

Note

- *Clean bolts and nuts before reusing.*
- *Always renew self-locking bolts/nuts.*
- *Always renew damaged bolts/nuts.*

Note

Always renew seal if removed.

- The annular groove for the seal and the contact surface of the parking brake motor must not be damaged.

– Clean annular groove and contact surface of parking brake motor.

– Apply a thin coat of lithium grease - G 052 150 A2- to new seal and install seal.

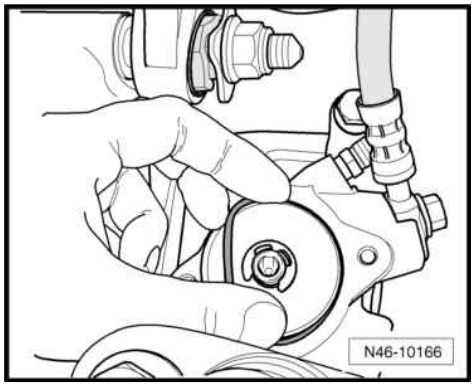

– Use an E11 Torx bit -item A- to turn drive shaft back slightly until parking brake motor can be fitted correctly.

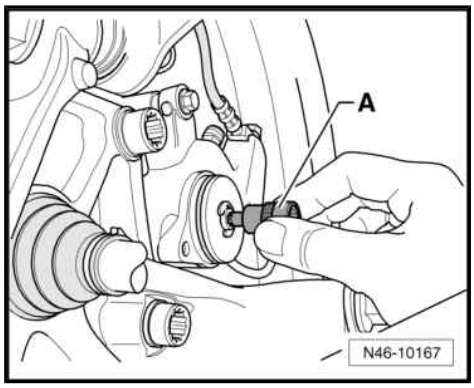

> **Caution**
>
> ***The seal must not move out of position while the parking brake motor is being installed.***

– Turn parking brake motor until threaded hole and thread are aligned.

• The parking brake motor must make flush contact with the brake caliper; it must NOT be pulled down against the brake caliper with the bolts.

– Tighten bolts -arrows-.

– Plug in electrical connector -1-.

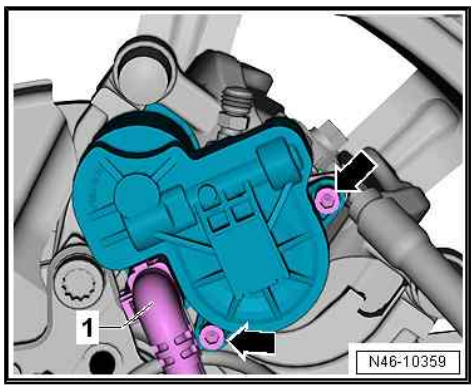

Protected by copyright. Copying for private or commercial purposes, in part or in whole, is not permitted unless authorised by AUDI AG. AUDI AG does not guarantee or accept any liability with respect to the correctness of information in this document. Copyright by AUDI AG.

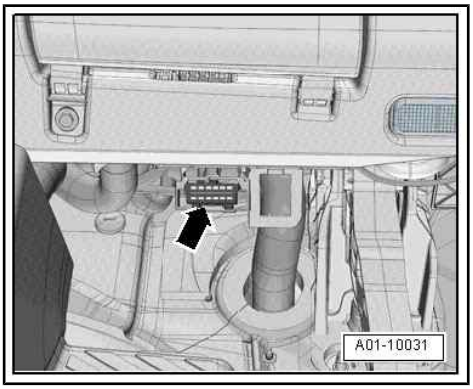

– With ignition switched off, connect vehicle diagnostic tester to diagnostic connection in vehicle -arrow-.
– Switch on ignition.
– After entering vehicle identification data, select `Guided Functions` mode.
– Perform basic setting:

Running gear/brake system
01 Self-diagnosis compatible systems
03 J104 - ABS control unit, integrated parking brake
03 Functions - electromechanical parking brake
03 46 Basic setting

– Continue to follow the instructions on the vehicle diagnostic tester display.

WARNING

Risk of accident!

- *Make sure that the brakes work properly before the vehicle is driven on the road.*

Tightening torques

- ⇒ “3.1 Exploded view - parking brake”, page 141

3.3 Releasing parking brake manually

Note

- *Clean bolts and nuts before reusing.*
- *Always renew self-locking bolts/nuts.*
- *Always renew damaged bolts/nuts.*

Note

A mechanical or electrical fault may make it necessary to release the parking brake mechanically in order to move the vehicle.

Procedure

WARNING

Risk of accident!

- *Before removing parking brake motor -V282- / -V283- , secure vehicle to prevent it from rolling.*

Protected by copyright. Copying for private or commercial purposes, in part or in whole, is not permitted unless authorised by AUDI AG. AUDI AG does not guarantee or accept any liability with respect to the correctness of information in this document. Copyright by AUDI AG.

– Remove rear wheel ⇒ Running gear, axles, steering; Rep. gr. 44 ; Wheels, tyres .

– Unplug electrical connector -1-.
– Remove bolts -arrows-.
– Remove parking brake motor from brake caliper, turning parking brake motor back and forth slightly.

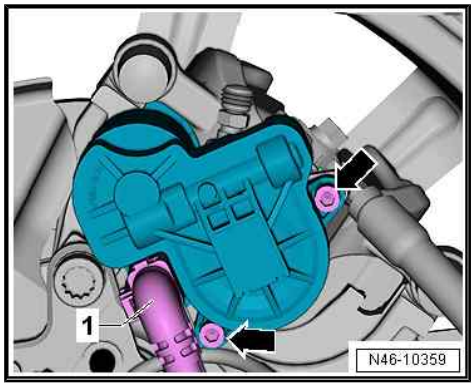

– Use an E11 Torx bit -item A- to turn drive shaft back until brake is released.

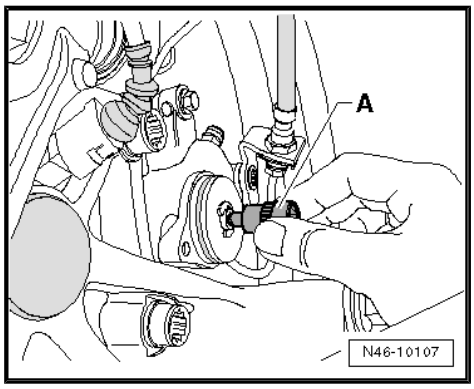

Note

After repairing fault, install parking brake motor *⇒ page 142* *.*

Tightening torques

- ⇒ “3.1 Exploded view - parking brake”, page 141
- ⇒ Running gear, axles, steering; Rep. gr. 44 ; Wheels, tyres

Protected by copyright. Copying for private or commercial purposes, in part or in whole, is not permitted unless authorised by AUDI AG. AUDI AG does not guarantee or accept any liability with respect to the correctness of information in this document. Copyright by AUDI AG.

4 Brake pedal

⇒ “4.1 Exploded view - brake pedal”, page 147
⇒ “4.2 Separating brake pedal from brake servo”, page 149
⇒ “4.3 Connecting brake pedal to brake servo”, page 150
⇒ “4.4 Removing and installing brake pedal”, page 150
⇒ “4.5 Removing and installing mounting bracket”, page 152

4.1 Exploded view - brake pedal

Note

- *Clean bolts and nuts before reusing.*
- *Always renew self-locking bolts/nuts.*
- *Always renew damaged bolts/nuts.*

WARNING

Risk of accident!

- *The brake pedal travel must not be restricted by additional floor coverings.*

Protected by copyright. Copying for private or commercial purposes, in part or in whole, is not permitted unless authorised by AUDI AG. AUDI AG does not guarantee or accept any liability with respect to the correctness of information in this document. Copyright by AUDI AG.

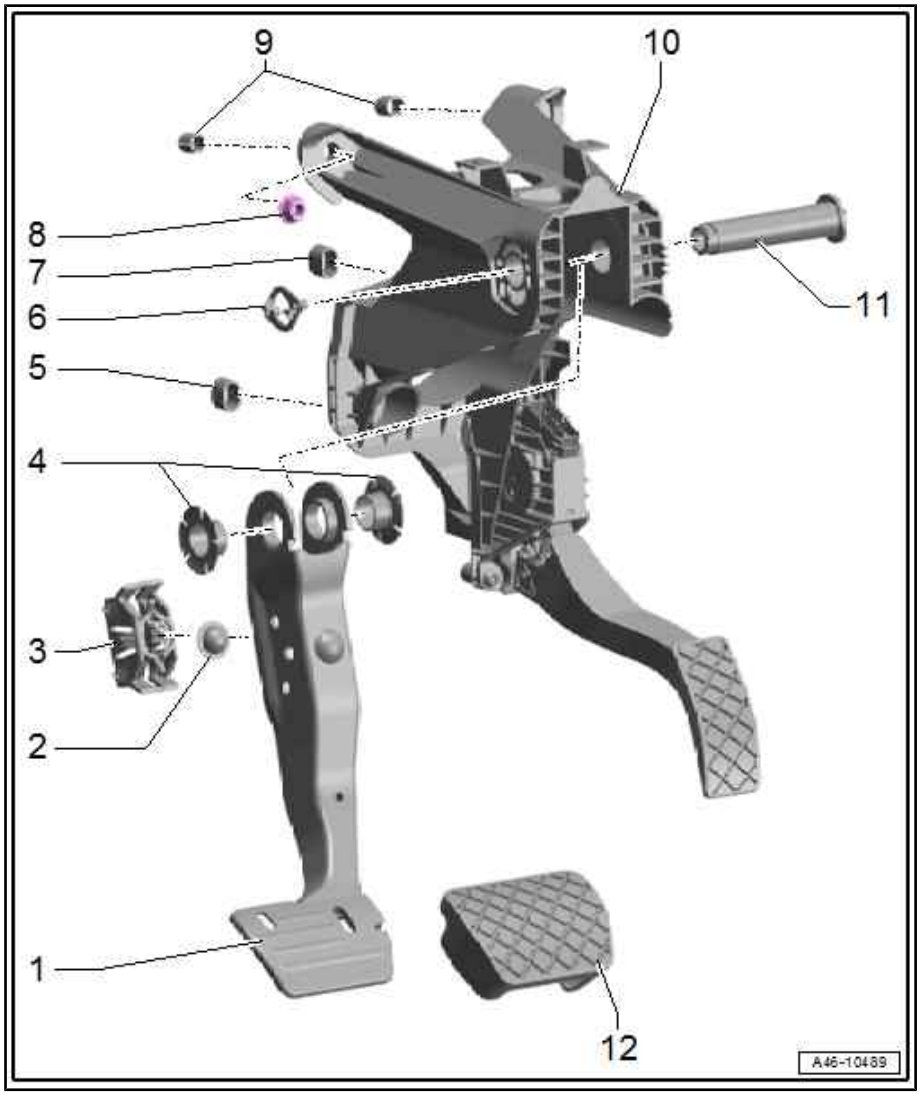

1 - Brake pedal

- ⇒ “4.4 Removing and installing brake pedal”, page 150
- ⇒ “4.2 Separating brake pedal from brake servo”, page 149
- ⇒ “4.3 Connecting brake pedal to brake servo”, page 150

2 - Bearing shell

- Fitted between brake pedal and mounting for brake servo

3 - Mounting

- For ball head of brake servo

4 - Bearing bush

- Cannot be renewed
- Note correct installation position

5 - Bush

- Oval-shaped

6 - Retaining clip

- For pivot pin
- Renew after removing

7 - Bush

- Oval-shaped

8 - Nuts

- Self-locking
- Renew after removing
- ⇒ Fig. ““Mounting bracket - tightening torque and tightening sequence”“ , page 149

9 - Bushes

- Round

10 - Pedal cluster/mounting bracket

- ⇒ “4.5 Removing and installing mounting bracket”, page 152

11 - Pivot pin

- To remove, first remove mounting bracket
- Cannot be removed without damage

> ⚠ **Caution**
>
> *Do not lubricate or grease pivot pin. Pivot pin must remain dry.*

12 - Pedal rubber

Protected by copyright. Copying for private or commercial purposes, in part or in whole, is not permitted unless authorised by AUDI AG. AUDI AG does not guarantee or accept any liability with respect to the correctness of information in this document. Copyright by AUDI AG.

Mounting bracket - tightening torque and tightening sequence

– Tighten nuts to 25 Nm in the sequence -1 … 4-.

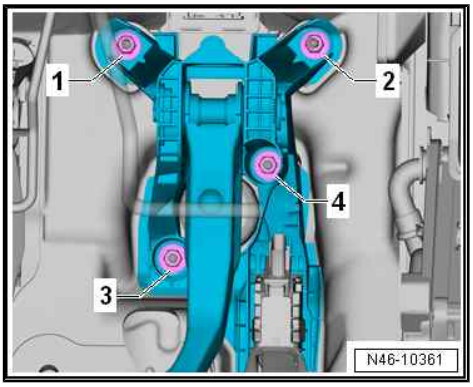

4.2 Separating brake pedal from brake servo

Special tools and workshop equipment required

♦ Release tool - T10159B-

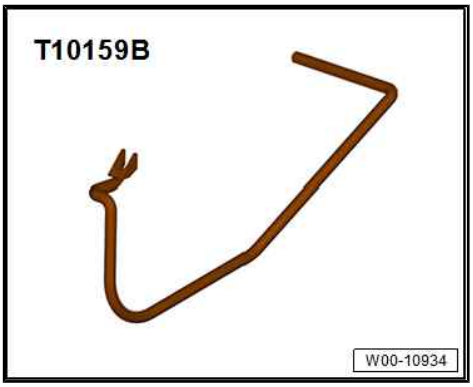

Separating

– First press brake pedal -1- in towards brake servo and hold.

– Insert release tool - T10159B- -item A- and pull towards driver's seat, at the same time holding brake pedal in position to stop it moving towards the rear. This will press the retaining lugs -3- of the mounting off the ball head of the push rod -2-.

– Pull release tool - T10159- and brake pedal together towards driver's seat (this will pull the brake pedal off the ball head of the push rod).

4 - Mounting bracket

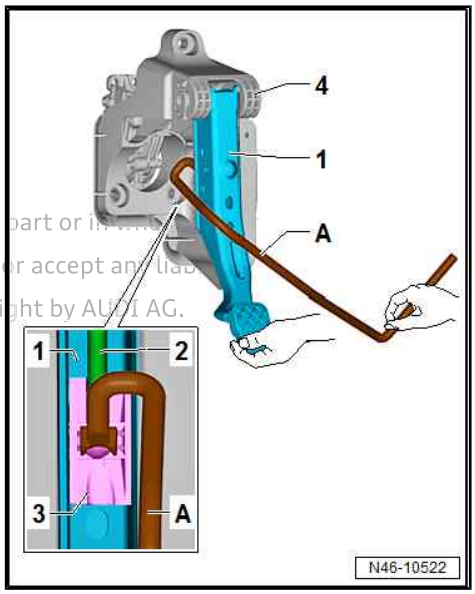

Protected by copyright. Copying for private or commercial purposes, in part or in ... is not permitted unless authorised by AUDI AG. AUDI AG does not guarantee or accept any liability with respect to the correctness of information in this document. Copyright by AUDI AG.

4.3 Connecting brake pedal to brake servo

– Hold ball head of push rod in front of mounting and push brake pedal towards brake servo -arrow- until ball head audibly locks into place.

WARNING

Risk of accident!

- *Make sure that the brakes work properly before the vehicle is driven on the road.*

4.4 Removing and installing brake pedal

Note

- *Clean bolts and nuts before reusing.*
- *Always renew self-locking bolts/nuts.*
- *Always renew damaged bolts/nuts.*

Special tools and workshop equipment required

- 14 mm AF hexagon key

Removing

– Remove mounting bracket ⇒ page 152 .

Protected by copyright. Copying for private or commercial purposes, in part or in whole, is not permitted unless authorised by AUDI AG. AUDI AG does not guarantee or accept any liability with respect to the correctness of information in this document. Copyright by AUDI AG.

– Turn pivot pin -2- clockwise using 14 mm AF hexagon key until arrow marking is in line with cast rib -3- on mounting bracket.

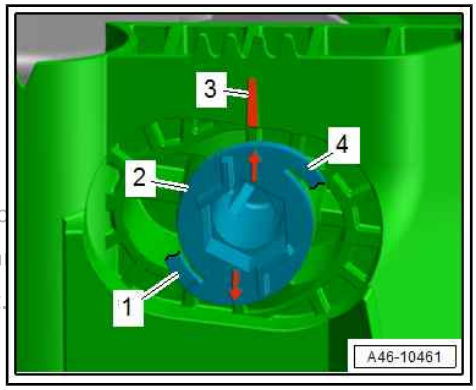

Note

The tabs -1- and -4- will break off in the process.

Protected by copyright. Copying for private or commercial purpo
permitted unless authorized by AUDI AG. AUDI AG does not gua
with respect to the correctness of information in this document.

– Pull off pivot pin and detach brake pedal from mounting bracket.
– Detach retaining clip.

Installing

Note

- *Clean bolts and nuts before reusing.*
- *Always renew self-locking bolts/nuts.*
- *Always renew damaged bolts/nuts.*

Note

Renew pivot pin and retaining clip after removal.

Caution

- ***Do not lubricate or grease pivot pin. Pivot pin must remain dry.***
- ***Both bearing bushes must be fitted in the brake pedal bearing to ensure that the brake pedal is seated securely in the mounting bracket.***

– Insert new retaining clip -1- into holes on mounting bracket -arrows-.

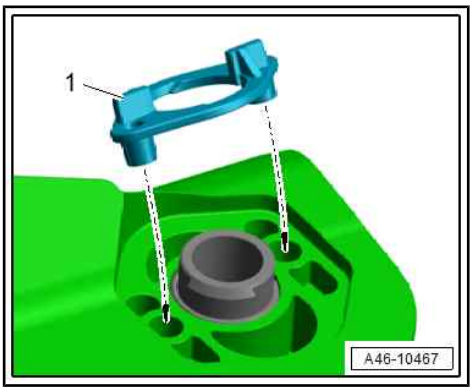

– Guide in new pivot pin -1-, ensuring that retaining clip does not drop out.

– Turn pivot pin anticlockwise using 14 mm AF hexagon key until tabs -3- and -4- engage audibly.

• Arrow marking must align with cast rib -2- on mounting bracket, as shown in illustration.

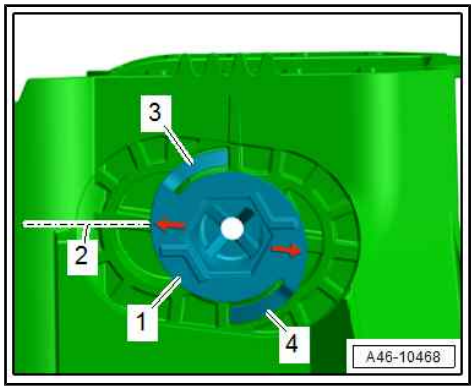

WARNING

Risk of accident!

- *Make sure that the brakes work properly before the vehicle is driven on the road.*

4.5 Removing and installing mounting bracket

Note

- *Clean bolts and nuts before reusing.*
- *Always renew self-locking bolts/nuts.*
- *Always renew damaged bolts/nuts.*

Removing

Protected by copyright. Copying for private or commercial purposes, in part or in whole, is not permitted without the consent of AUDI AG. AUDI AG does not guarantee or accept any liability with respect to the correctness of information in this document. Copyright by AUDI AG.

– Remove crash bar ⇒ General body repairs, interior; Rep. gr. 70 ; Dash panel cross member; Exploded view - dash panel cross member .

– Separate brake pedal from brake servo ⇒ page 149 .

– Unscrew nuts -arrows- and detach footwell trim.

– Unscrew bolt -1- and detach intermediate steering shaft -2- from steering rack -arrow-.

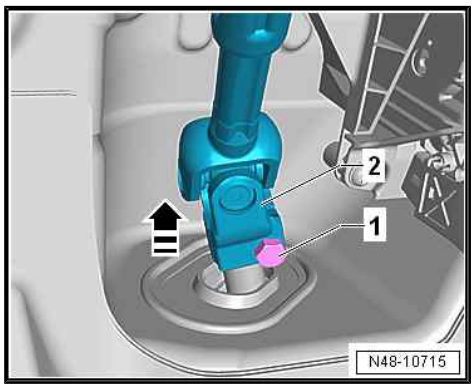

– Move electrical wiring for accelerator pedal module clear.
– Remove nuts -1 … 4- and pull mounting bracket slightly towards rear.

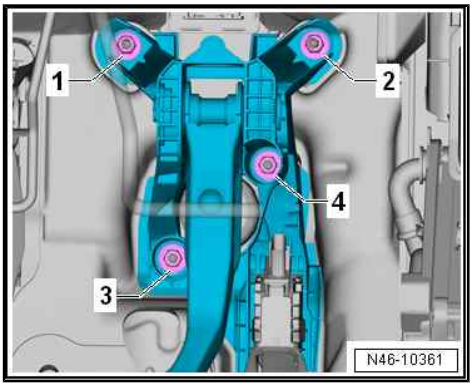

– Unplug electrical connectors -2, 3-.
– Remove spreader rivet -1- and detach headlight range control unit.
– Remove mounting bracket.

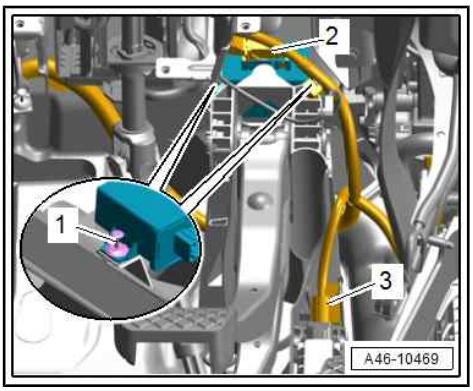

Installing

Installation is carried out in reverse order; note the following:

Note

- *Clean bolts and nuts before reusing.*
- *Always renew self-locking bolts/nuts.*
- *Always renew damaged bolts/nuts.*

– Locate mounting bracket (with brake pedal fitted) in installation position.

Note

- *When fitting the mounting bracket, make sure the wiring for the accelerator pedal module remains free and is not trapped.*
- *Make sure the mounting bracket is seated on all the studs.*

– ⇒ “4.3 Connecting brake pedal to brake servo”, page 150
– Install crash bar ⇒ General body repairs, interior; Rep. gr. 70 ; Dash panel cross member; Exploded view - dash panel cross member .

WARNING

Risk of accident!

- *Make sure that the brakes work properly before the vehicle is driven on the road.*

Tightening torques

- ⇒ Fig. ““Mounting bracket - tightening torque and tightening sequence”, page 149
- Intermediate steering shaft ⇒ Running gear, axles, steering; Rep. gr. 48 ; Steering column; Exploded view - steering column

Protected by copyright. Copying for private or commercial purposes, in part or in whole, is not permitted unless authorised by AUDI AG. AUDI AG does not guarantee or accept any liability with respect to the correctness of information in this document. Copyright by AUDI AG.

47 – Brakes - hydraulics

1 Front brake caliper

⇒ “1.1 Exploded view - front brake caliper”, page 154

⇒ “1.2 Removing and installing brake caliper piston”, page 155

⇒ “1.3 Renewing bearing bushes and guide pins”, page 161

1.1 Exploded view - front brake caliper

⇒ “1.1.1 Exploded view - front brake caliper, single-piston brakes”, page 154

⇒ “1.1.2 Exploded view - front brake caliper, eight-piston brakes”, page 155

1.1.1 Exploded view - front brake caliper, single-piston brakes

1 - Brake caliper

2 - Guide pin

- ⇒ “1.3 Renewing bearing bushes and guide pins”, page 161

3 - Bearing bush

- For guide pin
- ⇒ “1.3 Renewing bearing bushes and guide pins”, page 161

4 - Seal

- Removing and installing ⇒ page 155
- Do not damage when inserting brake caliper piston

5 - Brake caliper piston

- ⇒ “1.2.1 Removing and installing brake caliper piston - single-piston brake”, page 155
- Apply a small amount of lithium grease - G 052 150 A2- ⇒ Electronic parts catalogue “ETKA”

6 - Protective cap

- Removing and installing ⇒ page 155
- Push outer sealing lip onto brake caliper piston
- Do not damage when inserting brake caliper piston

Protected by copyright. Copying for p mercial purposes, in part or in whole, is not permitted unless authorised by AU ot guarantee or accept any liability with respect to the correctness o . Copyright by AUDI AG

1.1.2 Exploded view - front brake caliper, eight-piston brakes

1 - Brake caliper

2 - Seal

- ❑ 8x
- ❑ Removing and installing ⇒ page 158

3 - Brake caliper piston

- ❑ 8x
- ❑ Removing and installing ⇒ “1.2.2 Removing and installing brake caliper pistons - eight-piston brake”, page 158

4 - Protective cap

- ❑ 8x
- ❑ If damaged, install all parts supplied in repair kit ⇒ Electronic parts catalogue .
- ❑ Removing and installing ⇒ page 158

Protected by copyright. Copying for private or commercial purposes, in part or in whole, is not permitted unless authorized by AUDI AG. AUDI AG does not guarantee or assume any liability with respect to the correctness of information in this document. Copyright by AUDI AG.

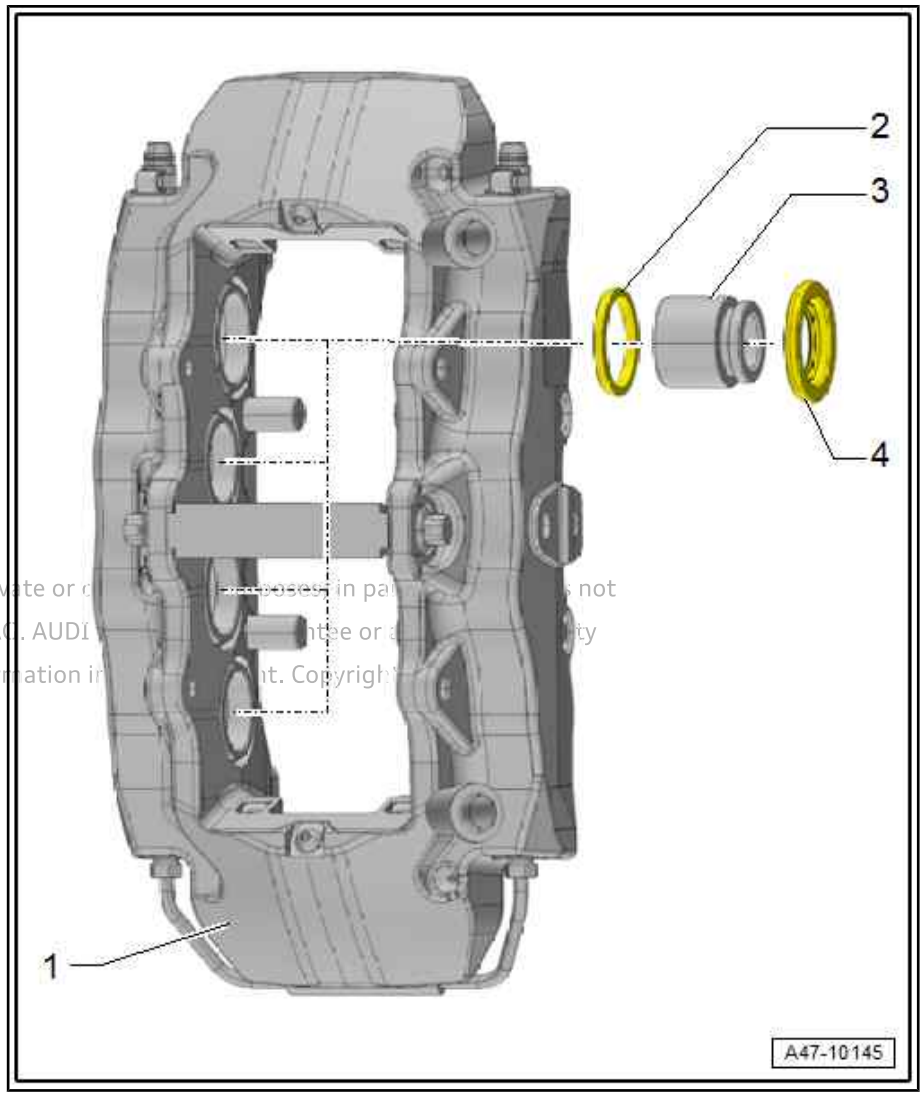

1.2 Removing and installing brake caliper piston

⇒ “1.2.1 Removing and installing brake caliper piston - single-piston brake”, page 155

⇒ “1.2.2 Removing and installing brake caliper pistons - eight-piston brake”, page 158

1.2.1 Removing and installing brake caliper piston - single-piston brake

Special tools and workshop equipment required

♦ Removal wedge - 3409-

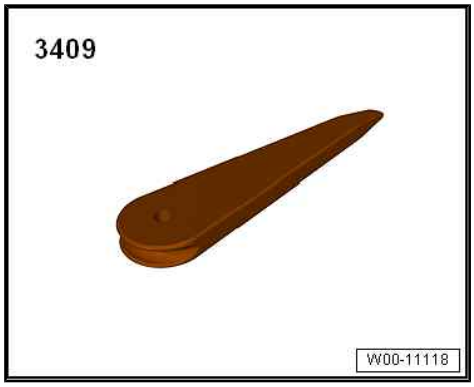

♦ Piston resetting appliance - T10145-

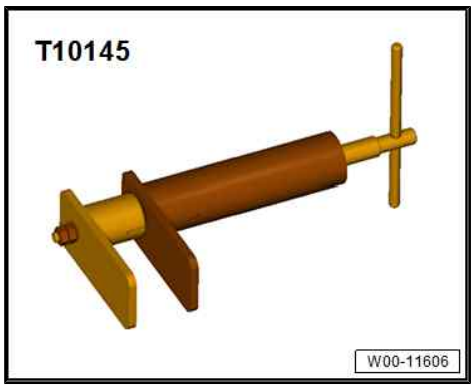

♦ Lithium grease - G 052 150 A2-

Removing

- Brake caliper removed
- Place a piece of wood in the recess to prevent damaging the brake caliper piston.

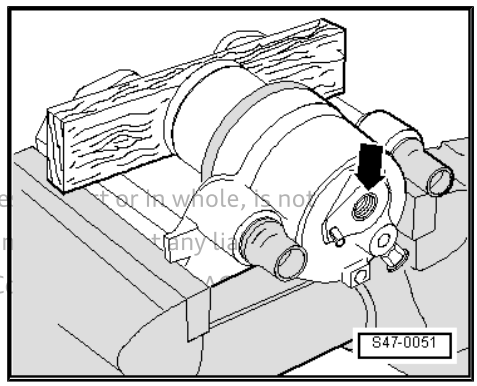

Protected by copyright. Copying for private or commercial purposes, in part or in whole, is not permitted unless authorised by AUDI AG. AUDI AG does not guarantee or assume any liability with respect to the correctness of information in this document. Copyright by AUDI AG.

WARNING

Risk of injury.

- *Put on safety goggles.*
- *When pressing out brake caliper piston, DO NOT reach into brake caliper with your fingers.*
- *Place a cloth over bore in brake caliper to catch any brake fluid spatter. Wrap another cloth tightly around nozzle of compressed-air gun applied to brake caliper.*
- *Always wear chemical-resistant protective gloves to prevent brake fluid from contacting skin.*

– To catch any brake fluid which sprays out, wrap a cloth tightly around nozzle of compressed-air gun applied to brake caliper.

– Apply compressed air nozzle to threaded hole for brake hose -arrow- and press piston out of caliper.

– Lever off protective cap from brake caliper using removal wedge - 3409- .

A - Jaw covers for vice

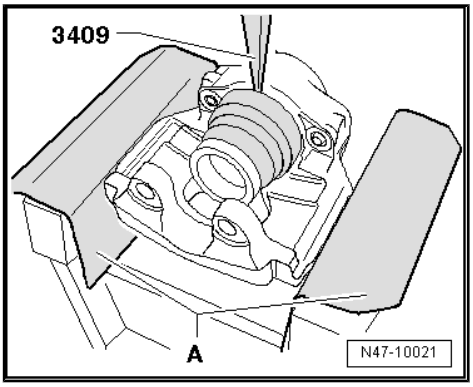

– Remove seal using removal wedge - 3409- .

• When removing ensure that the bore of the cylinder is not damaged.

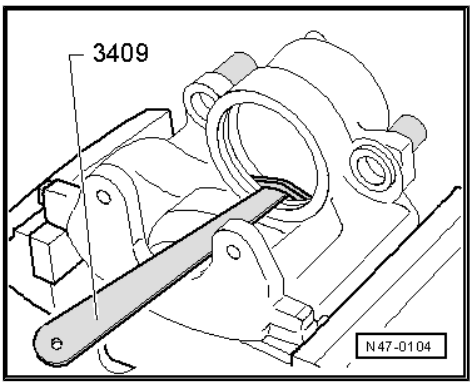

Installing

– The surfaces of the brake caliper piston and seal must be cleaned (with methylated spirits only) and then dried.

– Before installing, lightly lubricate brake caliper piston and seal with lithium grease - G 052 150 A2- .

– Insert seal in brake caliper.

– Place outer sealing lip of protective cap on brake caliper piston.

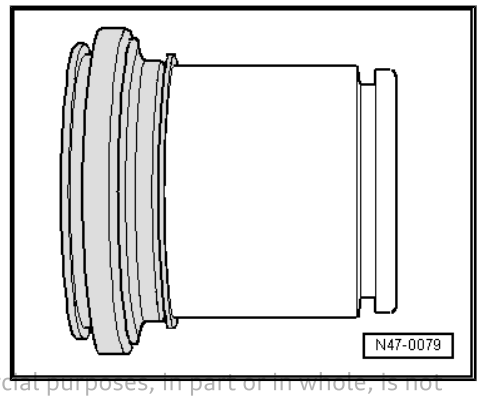

Protected by copyright. Copying for private or commercial purposes, in part or in whole, is not permitted unless authorised by AUDI AG. AUDI AG does not guarantee or accept any liability with respect to the correctness of information in this document. Copyright by AUDI AG.

– Insert inner sealing lip into groove on cylinder using removal wedge - 3409- ; to do so, hold piston in front of brake caliper.

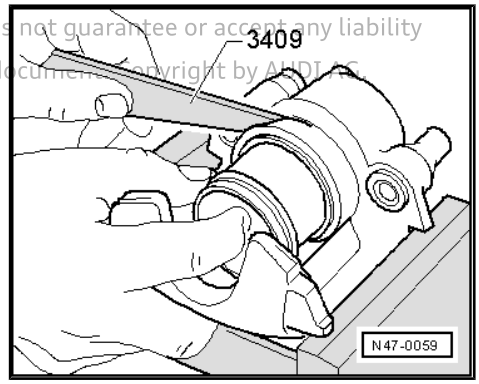

– Press brake caliper piston into brake caliper using piston resetting tool -1-, making sure piston is straight.

• The outer sealing lip of the protective cap will then lock in the groove on the piston.

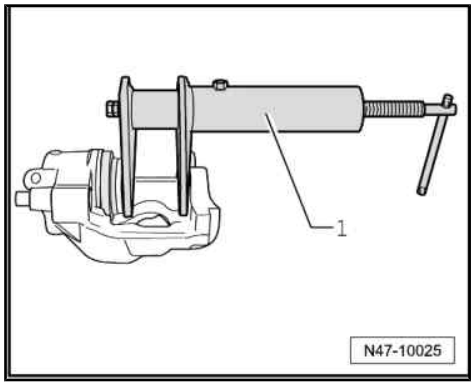

1.2.2 Removing and installing brake caliper pistons - eight-piston brake

Special tools and workshop equipment required

♦ Piston resetting appliance - T10145-

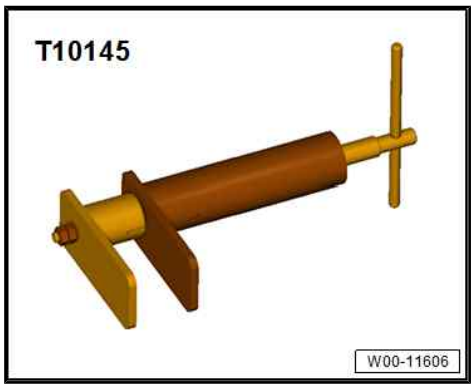

♦ Removal tool - VAS 40338-

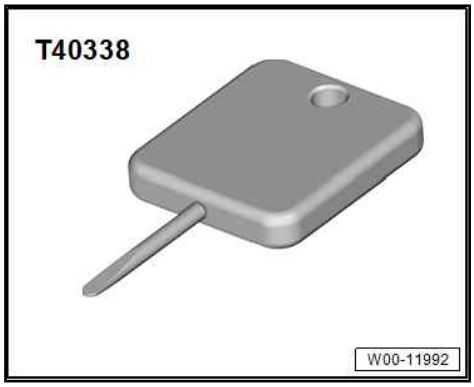

♦ Safety goggles

♦ Protective gloves

♦ Lithium grease ⇒ Electronic parts catalogue

Protected by copyright. Copying for private or commercial purposes, in part or in whole, is not permitted unless authorised by AUDI AG. AUDI AG does not guarantee or accept any liability with respect to the correctness of information in this document. Copyright by AUDI AG.

Removing

• Brake caliper removed

WARNING

Risk of injury.

- *Put on safety goggles.*
- *When pressing out brake caliper piston, DO NOT reach into brake caliper with your fingers.*
- *Place a cloth over bore in brake caliper to catch any brake fluid spatter. Wrap another cloth tightly around nozzle of compressed-air gun applied to brake caliper.*
- *Always wear chemical-resistant protective gloves to prevent brake fluid from contacting skin.*

Protected by copyright. Copying for private or commercial purposes, in part or in whole, is not permitted unless authorised by AUDI AG. AUDI AG does not guarantee or accept any liability with respect to the correctness of information in this document. Copyright by AUDI AG.

Note

- *Take care not to damage paint on brake caliper when removing brake caliper pistons and protective caps.*
- *The brake caliper pistons can only be removed one at a time.*

– Use the piston resetting appliance - T10145- -item a- to hold the opposite brake caliper piston in place in the brake caliper.
– To avoid damaging the paint on the caliper, insert a piece of rubber between the piston resetting appliance - T10145- and the caliper.

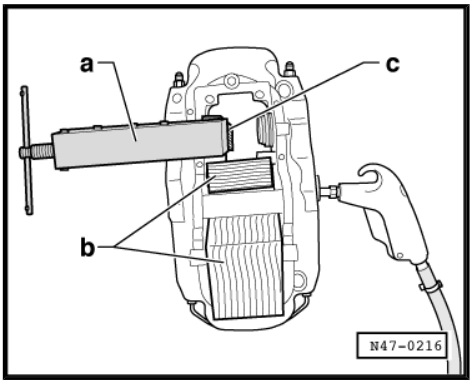

– Use blocks of wood or similar -b- to keep the other pistons in place. Also place a piece of wood -c- against the piston resetting appliance - T10145- to prevent the brake caliper piston from being damaged when it is forced out.
– Carefully press the brake caliper piston out of the brake caliper using compressed air.

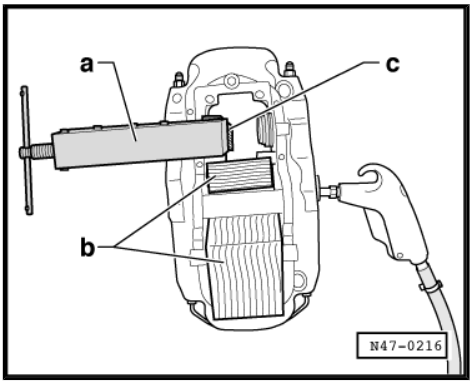

– Carefully lever protective cap -1- and seal out of brake caliper with gentle movements using removal tool - VAS 40338- -2-; take care not to damage groove for protective cap in brake caliper.

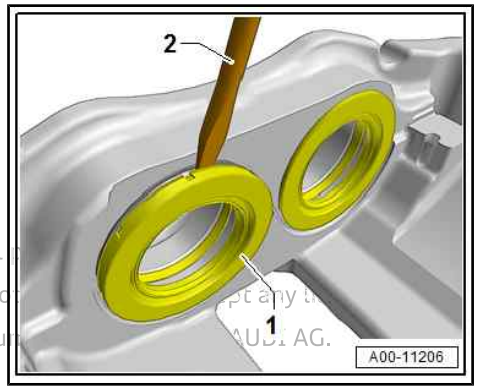

Installing

– The surfaces of the piston and seal must be cleaned only with methylated spirits and then dried.

Protected by copyright. Copying for private or commercial
permitted unless authorised by AUDI AG. AUDI AG does no
with respect to the correctness of information in this docu
AUDI AG.

Note

The brake caliper must be replaced if a brake caliper piston or piston bore is damaged.

– Apply thin coat of lithium grease to brake caliper piston and seal ⇒ Electronic parts catalogue .

– Insert seal in brake caliper.

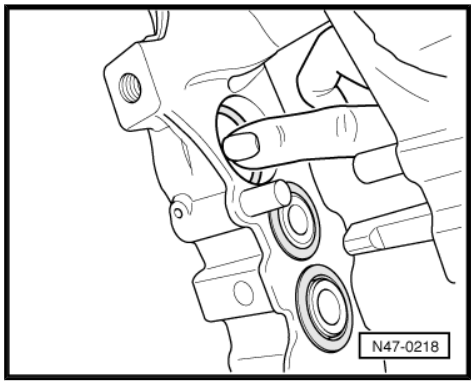

– Fit protective cap onto brake caliper piston.

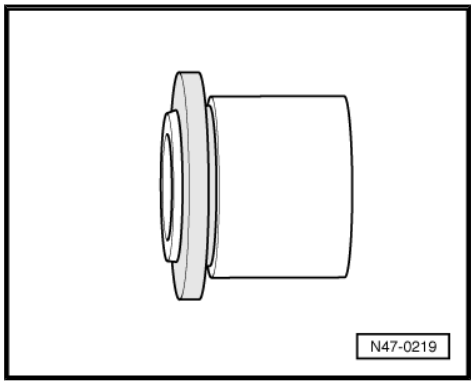

– Push piston into caliper, exerting even pressure and making sure piston is straight.

– Press protective cap into groove on brake caliper.

• The protective cap must be securely seated in the groove. If necessary, press in further using piston resetting appliance - T10145- .

– Repeat procedure on next brake caliper piston.

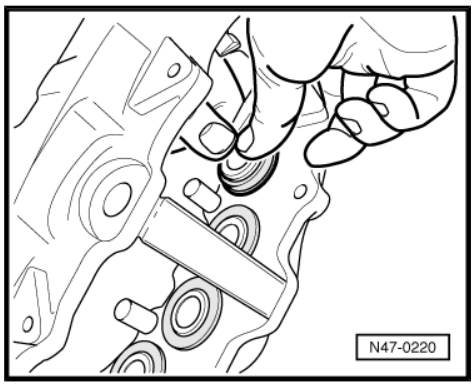

1.3 Renewing bearing bushes and guide pins

Note

If bearing bushes or guide pins are damaged, renew using repair kit. Use grease sachet supplied to lubricate guide pins.

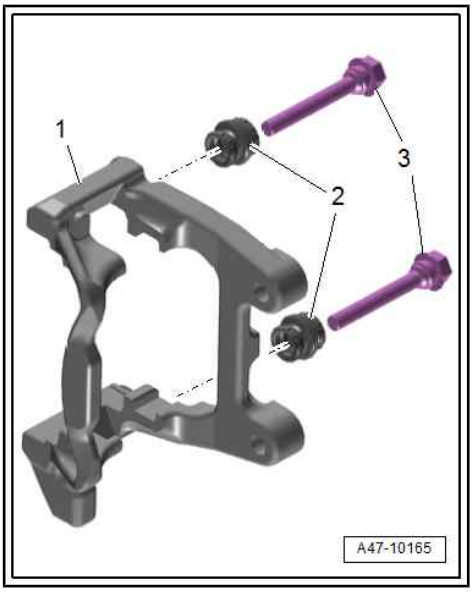

Removing

- Remove brake caliper ⇒ page 126 .
- Pull bearing bush -2- out of groove in brake carrier -1-.
- Pull guide pin -3- out of brake carrier.
- Pull bearing bush off guide pin.

Installing

- Grease guide pin before installing.
- Slide bearing bush over groove on guide pin.
- Push guide pin -3- with bearing bush -2- through brake carrier -1-.
- Press bearing bush over groove on brake carrier.
- Install brake caliper ⇒ page 126 .

Protected by copyright. Copying for private or commercial purposes, in part or in whole, is not permitted unless authorised by AUDI AG. AUDI AG does not guarantee or accept any liability with respect to the correctness of information in this document. Copyright by AUDI AG.

2 Rear brake caliper

⇒ “2.1 Exploded view - rear brake caliper”, page 162
⇒ “2.2 Removing and installing protective cap”, page 162
⇒ “2.3 Renewing bearing bushes and guide pins”, page 164

2.1 Exploded view - rear brake caliper

1 - Brake caliper

- ❑ Brake caliper piston cannot be removed

> ⚠ **Caution**
> *Risk of irreparable damage to drive thread*
> *The piston must not be unscrewed too far.*

2 - Guide pin

- ❑ Renewing ⇒ page 164

3 - Bearing bush

- ❑ Renewing ⇒ page 164

4 - Caps

5 - Bearing bush

- ❑ Renewing ⇒ page 164

6 - Guide pin

- ❑ Renewing ⇒ page 164

7 - Protective cap

- ❑ Removing and installing ⇒ page 162

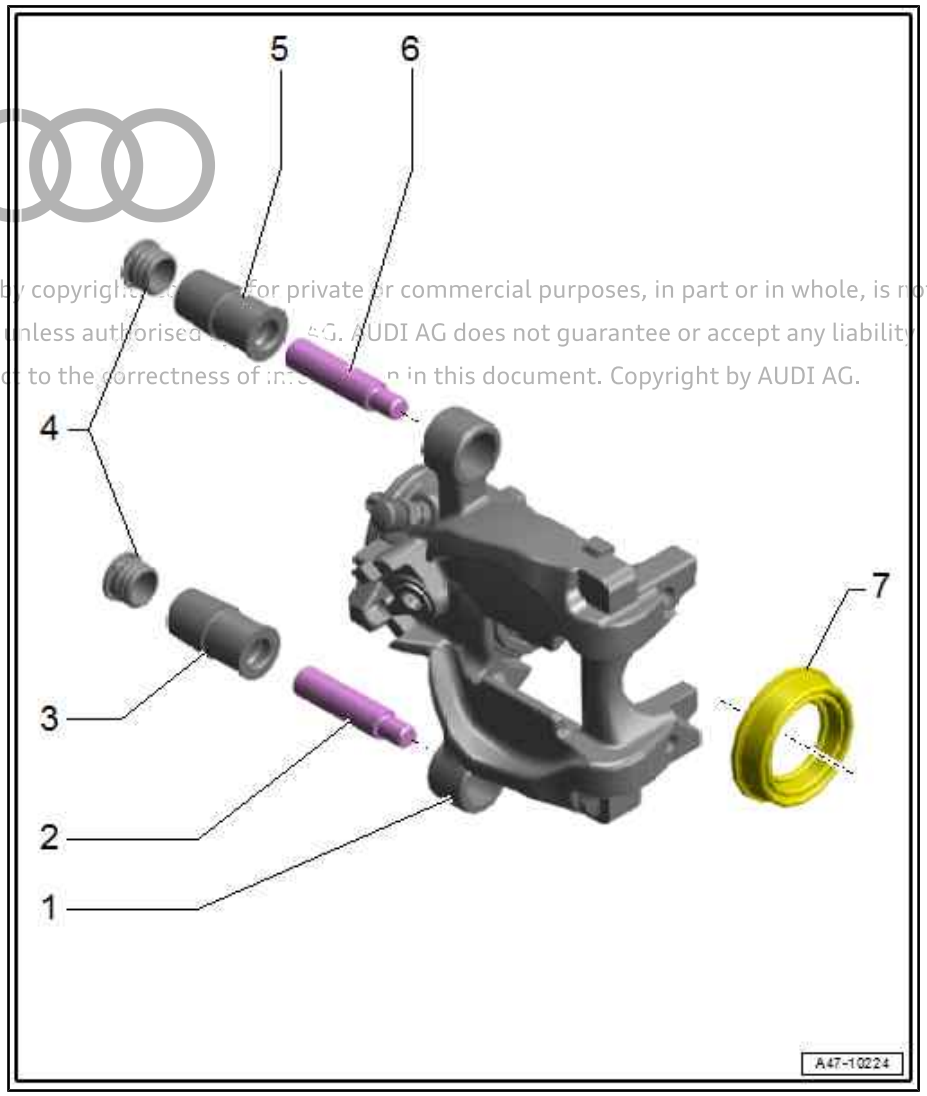

Protected by copyright. Copying for private or commercial purposes, in part or in whole, is not permitted unless authorised by AUDI AG. AUDI AG does not guarantee or accept any liability with respect to the correctness of information in this document. Copyright by AUDI AG.

2.2 Removing and installing protective cap

Special tools and workshop equipment required

♦ Removal wedge - 3409-

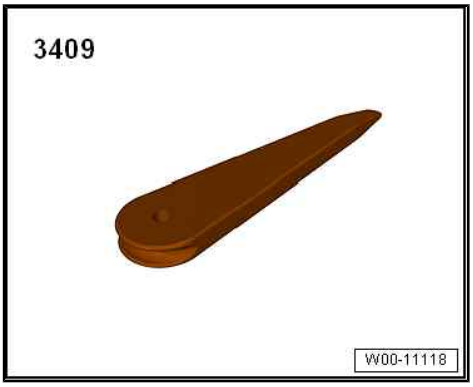

♦ Piston resetting appliance - T10145-

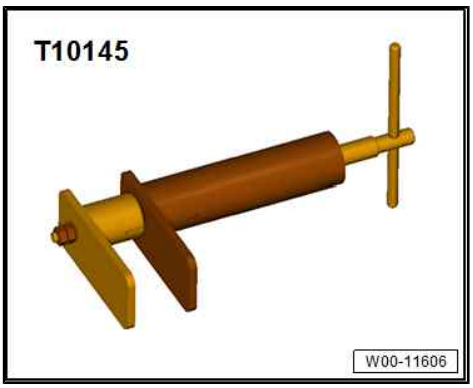

Protected by copyright. Copying for private or commercial purposes, in part or in whole, is not permitted unless authorised by AUDI AG. AUDI AG does not guarantee or accept any liability with respect to the correctness of information in this document. Copyright by AUDI AG.

♦ Assembly tool - T10502-

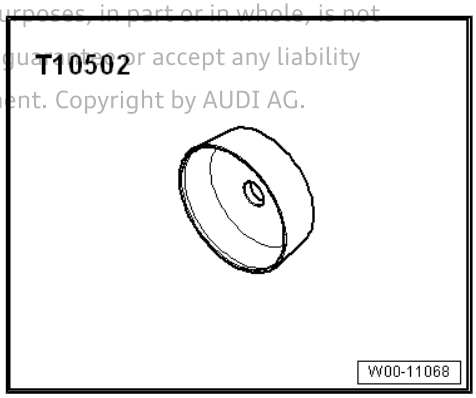

Removing

- Brake caliper piston has been moved back.
- Parking brake motor removed ⇒ page 142
- Install complete repair kit when servicing.

> ⚠ **Caution**
>
> *Risk of irreparable damage to drive thread*
>
> ♦ *The piston must not be unscrewed too far.*

– Using Torx bit, unscrew brake caliper piston anti-clockwise -arrow- no further than 20 mm (distance -a-).

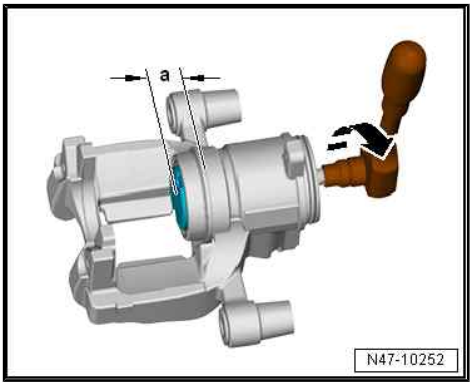

Protected by copyright. Copying for private or commercial purposes, in part or in whole, is not permitted unless authorised by AUDI AG. AUDI AG does not guarantee or accept any liability with respect to the correctness of information in this document. Copyright

– Lever off protective cap from brake caliper using removal wedge - 3409- .

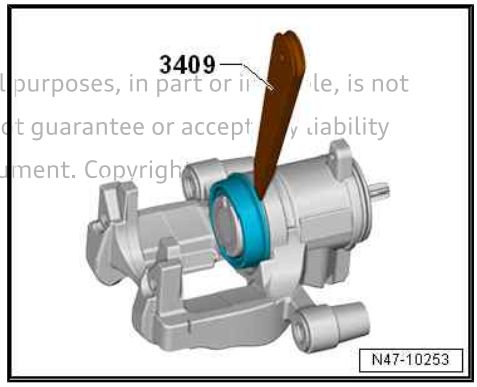

Installing

- Use only methylated spirits to clean the components.

– Clean surfaces of brake caliper piston and brake caliper with methylated spirits and then dry.

– Fit protective cap in groove -arrow- on brake caliper piston.

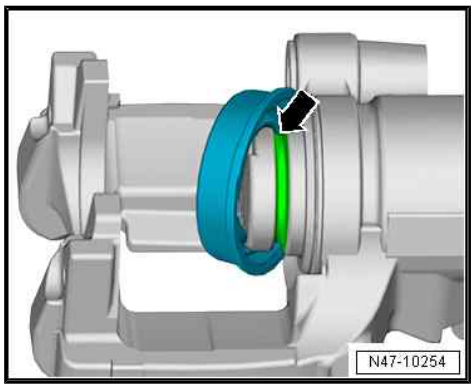

– Install brake caliper piston by turning clockwise -arrow-.

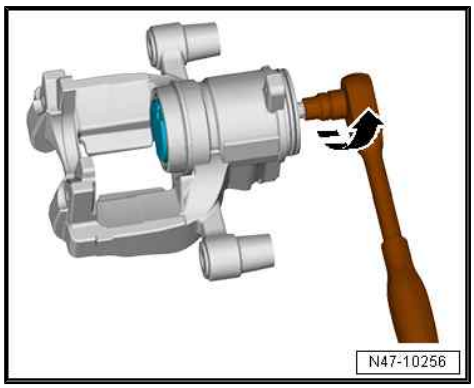

– Using assembly tool - T10502- -item 2- and piston resetting tool - T10145- -item 1-, press protective cap onto brake caliper so that it makes full contact with brake caliper all around.

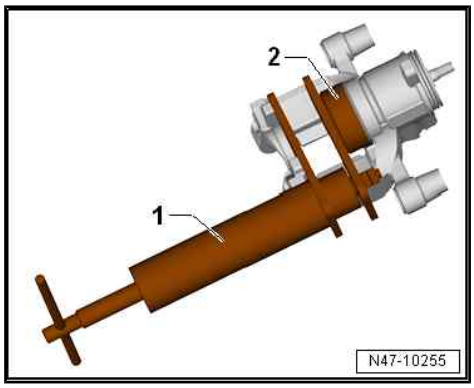

2.3 Renewing bearing bushes and guide pins

Special tools and workshop equipment required

♦ Lithium grease - G 052 150 A2- ⇒ Electronic parts catalogue

Removing

– Remove brake pads ⇒ page 118 .

– Pull guide pin -2- outwards out of bearing bush.
– Pull bearing bush -1- out of brake caliper.

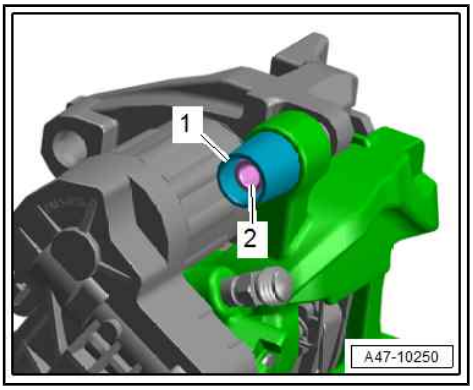

Installing

– Insert new bearing bush in brake caliper.
• Bearing bush must be seated centrally in brake caliper.
– Apply a small amount of grease (from repair kit) to guide pin.
– Push guide pin into bearing bush.
– Check both guide pins for ease of movement.
• It should be possible to slide both guide pins in and out.
– Install brake pads ⇒ page 118 .

Protected by copyright. Copying for private or commercial purposes, in part or in whole, is not permitted unless authorised by AUDI AG. AUDI AG does not guarantee or accept any liability with respect to the correctness of information in this document. Copyright by AUDI AG.

Protected by copyright. Copying for private and commercial purposes, in part or in whole, is not permitted unless authorised by AUDI AG. AUDI AG does not guarantee or accept any liability with respect to the correctness of information in this document. Copyright by AUDI AG.

3 Brake servo / brake master cylinder

⇒ “3.1 Exploded view - brake servo / brake master cylinder”, page 166

⇒ “3.2 Removing and installing brake servo”, page 171

⇒ “3.3 Removing and installing brake master cylinder”, page 182

⇒ “3.4 Removing and installing brake fluid reservoir”, page 188

⇒ “3.5 Removing and installing brake fluid level warning contact F34 ”, page 197

⇒ “3.6 Removing and installing brake system pressure accumulator VX70 ”, page 197

3.1 Exploded view - brake servo / brake master cylinder

⇒ “3.1.1 Exploded view - brake servo / brake master cylinder, vehicles without high-voltage system”, page 166

⇒ “3.1.2 Exploded view - brake servo / brake master cylinder, vehicles with high-voltage system”, page 168

⇒ “3.1.3 Exploded view - brake servo / brake master cylinder, brake system pressure accumulator VX70 , vehicles with high-voltage system”, page 170

3.1.1 Exploded view - brake servo / brake master cylinder, vehicles without high-voltage system

Note

- *Clean bolts and nuts before reusing.*
- *Always renew self-locking bolts/nuts.*
- *Always renew damaged bolts/nuts.*

Note

Complete master cylinder and brake servo can be replaced independently of each other.

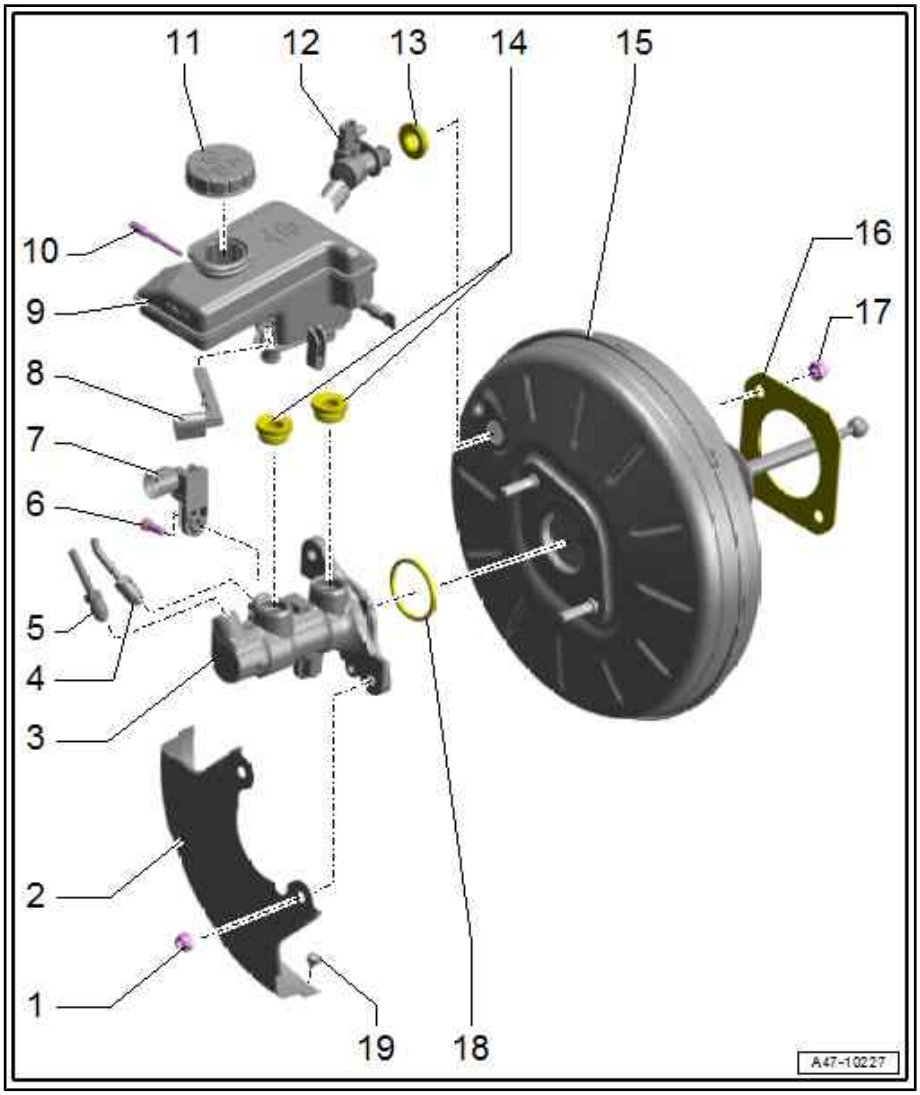

1 - Nut

- ❑ 23 Nm

2 - Heat shield

- ❑ Depending on vehicle equipment

3 - Brake master cylinder

- ❑ Cannot be repaired. Renew complete unit if defective
- ❑ Removing and installing ⇒ page 182

4 - Brake line

- ❑ Brake master cylinder/ primary piston circuit to hydraulic unit
- ❑ 14 Nm

5 - Brake line

- ❑ Brake master cylinder/ secondary piston circuit to hydraulic unit
- ❑ 14 Nm

6 - Bolt

- ❑ 8 Nm

7 - Brake light switch - F- / brake pedal switch - F63-

- ❑ Removing and installing ⇒ page 61

8 - Brake fluid level warning contact - F34-

- ❑ Removing and installing ⇒ page 197

9 - Brake fluid reservoir

- ❑ Removing and installing ⇒ page 188

10 - Locking pin or stud

- ❑ Slide through brake fluid reservoir and brake master cylinder
- ❑ Locking pin must be pressed into lug on brake fluid reservoir
- ❑ Tighten stud to 5 Nm

11 - Filler cap

Protected by copyright. Copying for private or commercial purposes, in part or in whole, is not permitted without the consent of AUDI AG. AUDI AG does not guarantee or accept any liability with respect to the correctness of information in this document. Copyright by AUDI AG.

12 - Vacuum hose

- ❑ With non-return valve

13 - Seal

- ❑ Renew after removing

14 - Sealing plug

- ❑ Moisten with brake fluid when fitting

15 - Brake servo

- ❑ Functional check:
  - – With the engine switched off, firmly depress the brake pedal several times (this reduces the vacuum present in the servo unit).
- ❑ Removing and installing ⇒ page 171

16 - Gasket

- ❑ Renew after removing

17 - Nut

- ❑ Tightening torque and tightening sequence ⇒ page 168

18 - Seal

- ❑ Renew after removing

19 - Rubber buffer

Brake servo - tightening torque and tightening sequence

– Tighten bolts to 25 Nm in the sequence -3, 4-.

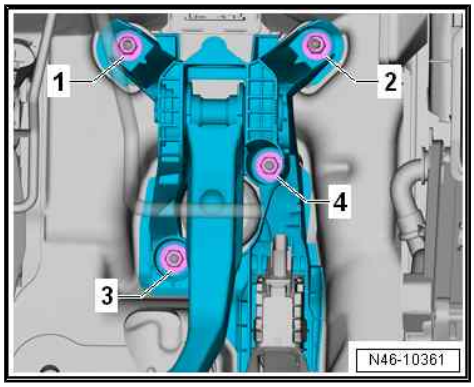

3.1.2 Exploded view - brake servo / brake master cylinder, vehicles with high-voltage system

Note

- *Clean bolts and nuts before reusing.*
- *Always renew self-locking bolts/nuts.*
- *Always renew damaged bolts/nuts.*

Protected by copyright. Copying for private or commercial purposes, in part or in whole, is not permitted unless authorised by AUDI AG. AUDI AG does not guarantee or accept any liability with respect to the correctness of information in this document. Copyright by AUDI AG.

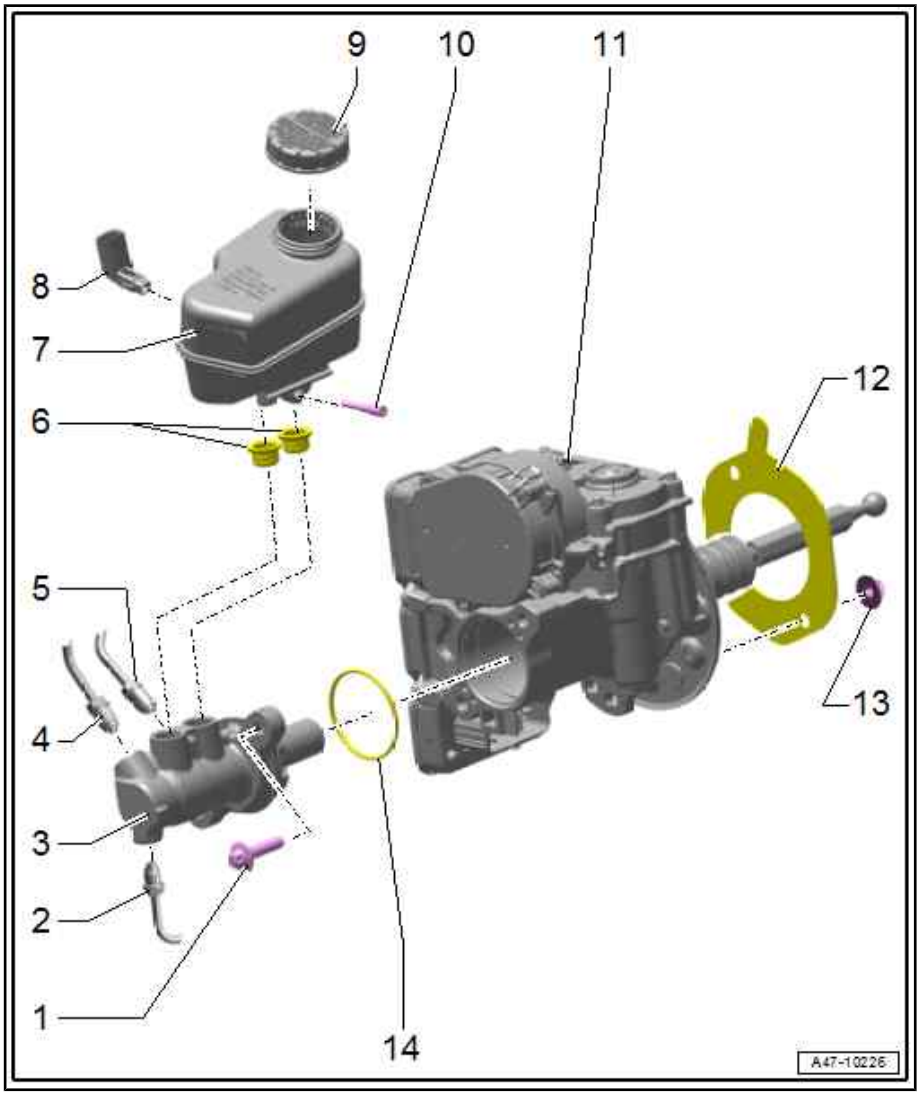

1 - Bolt

- ❑ 22 Nm

2 - Brake line

- ❑ To brake system pressure accumulator - VX70-
- ❑ 14 Nm

3 - Brake master cylinder

- ❑ Cannot be repaired. Renew complete unit if defective
- ❑ Removing and installing ⇒ page 185

4 - Brake line

- ❑ Brake master cylinder/ primary piston circuit to hydraulic unit
- ❑ 14 Nm

5 - Brake line

- ❑ Brake master cylinder/ secondary piston circuit to hydraulic unit
- ❑ 14 Nm

6 - Sealing plug

- ❑ Moisten with brake fluid when fitting

7 - Brake fluid reservoir

- ❑ Removing and installing ⇒ page 191

8 - Brake fluid level warning contact - F34-

- ❑ Removing and installing ⇒ page 197

9 - Filler cap

10 - Bolt

- ❑ 4 Nm

11 - Brake servo - NX6-

- ❑ Components in brake servo:

- ♦ Brake pedal position sender - G100-
- ♦ Brake pedal position sender 2 - G836-
- ♦ Voltage supply sender 1 - G730-
- ♦ Voltage supply sender 2 - G731-
- ♦ Brake servo current sensor - G822-
- ♦ Brake servo temperature sender 1 - G838-
- ♦ Brake servo temperature sender 2 - G839-
- ♦ Motor position sender for brake servo - G840-
- ♦ Brake servo control unit - J539-
- ♦ Electromechanical brake servo motor - V548-

- ❑ Components cannot be renewed separately

Protected by copyright. Copying for private or commercial purposes, in part or in whole, is not permitted unless authorised by AUDI AG. AUDI AG does not guarantee or accept any liability with respect to the correctness of information in this document. Copyright by AUDI AG.

- ❑ Removing and installing brake servo ⇒ page 177

12 - Gasket

- ❑ Renew after removing

13 - Nut

- ❑ Tightening torque and tightening sequence ⇒ page 168

14 - Seal

- ❑ Renew after removing

3.1.3 Exploded view - brake servo / brake master cylinder, brake system pressure accumulator - VX70- , vehicles with high-voltage system

Note

- *Clean bolts and nuts before reusing.*
- *Always renew self-locking bolts/nuts.*
- *Always renew damaged bolts/nuts.*

Protected by copyright. Copying for private or commercial purposes, in part or in whole, is not permitted unless authorised by AUDI AG. AUDI AG does not guarantee or accept any liability with respect to the correctness of information in this document. Copyright by AUDI AG.

1 - Nut
- ❑ 20 Nm

2 - Bracket

3 - Bolt
- ❑ 8 Nm

4 - Bracket

5 - Brake system pressure accumulator - VX70-
- ❑ Removing and installing ⇒ page 197

6 - Bleeder screw
- ❑ 10 Nm
- ❑ Apply a thin coat of assembly paste - G 052 150 A2- before fitting

7 - Protective cap

8 - Brake line
- ❑ 14 Nm

9 - Bolt
- ❑ 8 Nm

10 - Rubber damper

11 - Nut
- ❑ 20 Nm

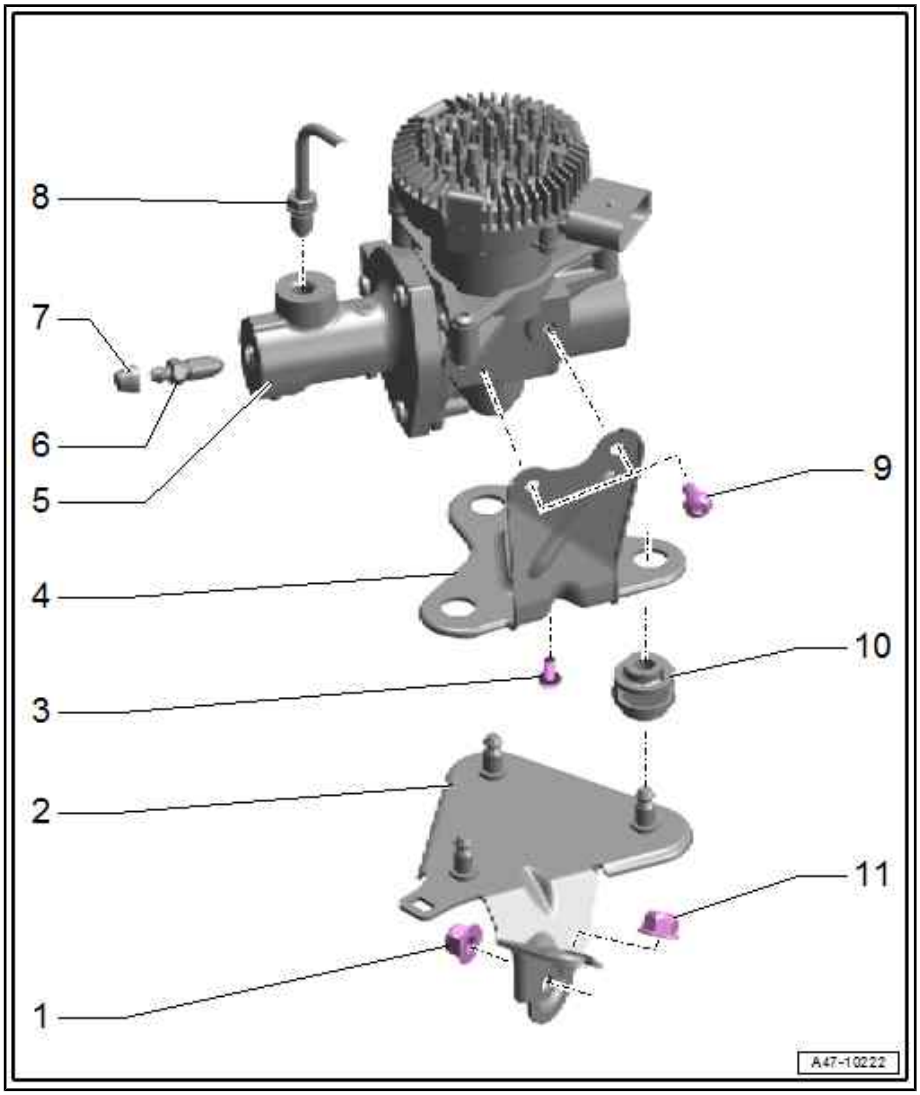

3.2 Removing and installing brake servo

⇒ "3.2.1 Removing and installing brake servo - vehicles without high-voltage system", page 171

⇒ "3.2.2 Removing and installing brake servo - vehicles with high-voltage system", page 177

3.2.1 Removing and installing brake servo - vehicles without high-voltage system

Protected by copyright. Copying for private or commercial purposes, in part or in whole, is not permitted unless authorised by AUDI AG. AUDI AG does not guarantee or accept any liability with respect to the correctness of information in this document. Copyright by AUDI AG.

Note

- *Clean bolts and nuts before reusing.*
- *Always renew self-locking bolts/nuts.*
- *Always renew damaged bolts/nuts.*

Special tools and workshop equipment required

- Torque wrench - V.A.G 1331-

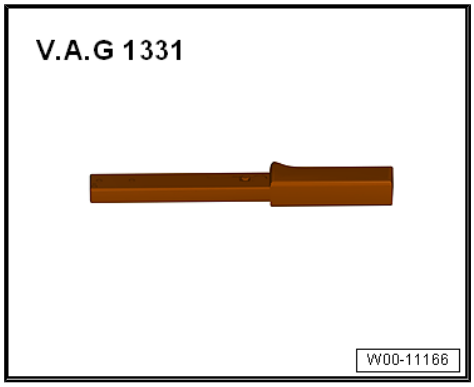

- Brake filling and bleeding equipment - VAS 5234- and adapter - VAS 5234/1A-

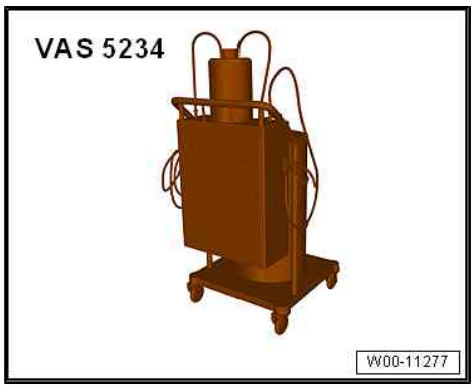

- Sealing tool - T10249-

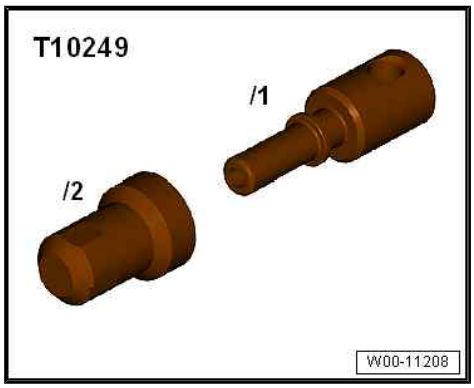

- Hot air blower, e.g. -VAS 1978/14A-
- Sealing plugs from assembly parts set - 5Q0 698 311-

Protected by copyright. Copying for private or commercial purposes, in part or in whole, is not permitted unless authorised by AUDI AG. AUDI AG does not guarantee or accept any liability with respect to the correctness of information in this document. Copyright by AUDI AG.

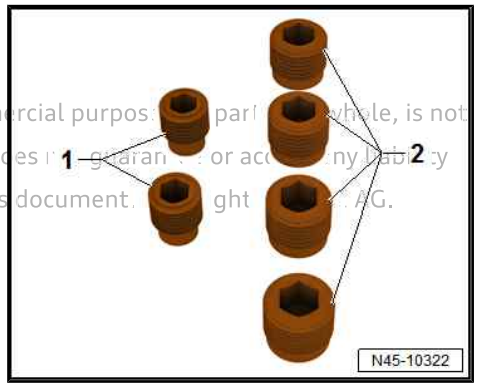

1 - M10 sealing plugs

2 - M12 sealing plugs

Removing:

– Remove engine cover panel ⇒ Rep. gr. 10 ; Engine cover panel; Removing and installing engine cover panel .

Vehicles with 1.5 ltr./1.8 ltr./2.0 ltr. TFSI engine:

– Release hose clips -1, 2- and remove air intake pipe.

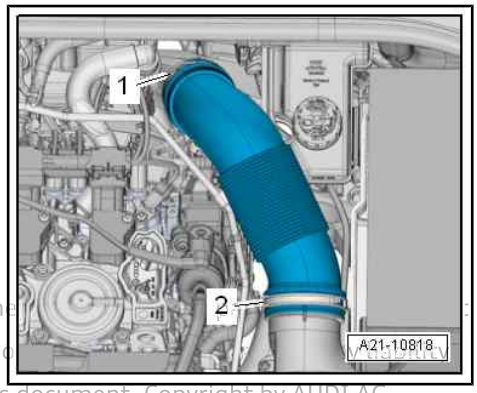

Protected by copyright. Copying for private or comme
permitted unless authorised by AUDI AG. AUDI AG do
with respect to the correctness of information in this document. Copyright by AUDI AG.

Vehicles with 1.6/2.0 ltr. TDI engine:

– Move vacuum hoses clear -arrows-.

– Release hose clips -1, 2- and remove air intake pipe.

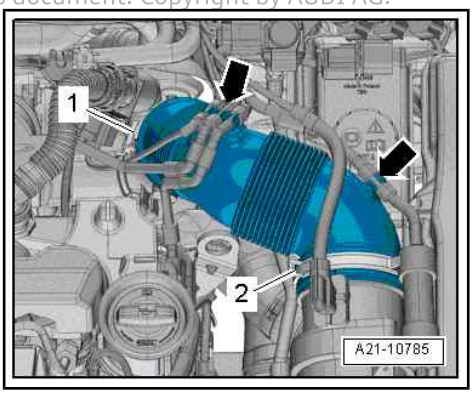

Vehicles with 4-cylinder engine:

– Remove battery tray ⇒ Electrical system; Rep. gr. 27 ; Battery; Removing and installing battery tray .

Vehicles with 2.5 ltr. TFSI engine:

– Remove jump start terminal from bracket and move to side ⇒ Electrical system; Rep. gr. 27 ; Jump start terminal; Removing and installing jump start terminal .

All vehicles (continued):

– Place sufficient lint-free cloths in area of engine and gearbox.

– Draw off as much brake fluid as possible from brake fluid reservoir using brake filling and bleeding equipment - VAS 5234- with adapter - VAS 5234/1A- .

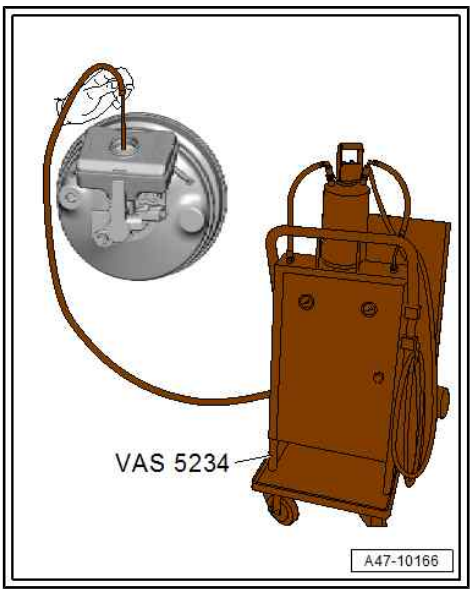

Vehicles with manual gearbox:

– Pull off clutch master cylinder supply hose -1-, seal with sealing tool - T10249- and tie up.

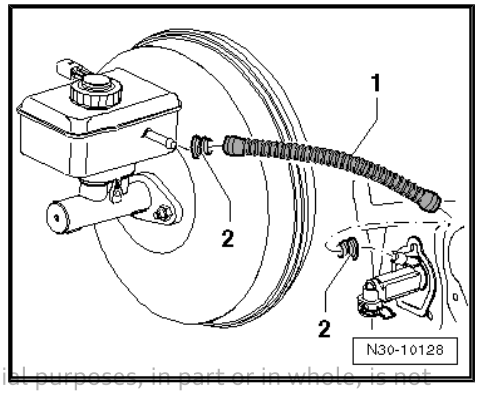

Protected by copyright. Copying for private or commercial purposes, in part or in whole, is not permitted unless authorised by AUDI AG. AUDI AG does not guarantee the correctness of information in this document.

All vehicles (continued):

– Unplug electrical connectors:

1 - at brake light switch - F-

2 - at vacuum sender - G608- (if fitted)

3 - at brake fluid level warning contact - F34-

– Release brake servo vacuum by pressing the brake pedal several times.

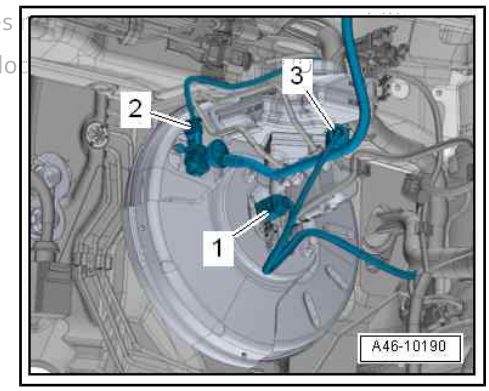

> ⚠ **Caution**
>
> *Risk of damage to vacuum hose when disconnecting hose.*
>
> ♦ *Damaged vacuum hoses must be renewed.*

– Carefully pull vacuum hose -arrow- out of brake servo.

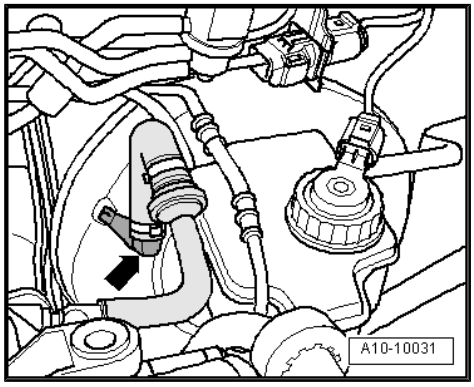

– Unscrew union screws -1- for brake lines.

– Seal open connections immediately using clean sealing plugs from assembly parts set - 5Q0 698 311- .

– Unscrew nuts -2- for brake master cylinder.

– Detach heat shield if fitted.

– Carefully remove brake master cylinder from brake servo.

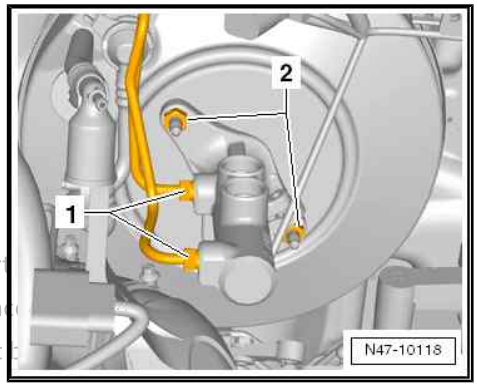

Protected by copyright. Copying for private or commercial purposes, in part
pe ... less authorised by AUDI AG. AUDI AG does not guarantee or a
with respect to the correctness of information in this document. Copyright

Note

For ease of illustration, the brake master cylinder is shown without the brake fluid reservoir.

Vehicles with dual clutch gearbox:

– Detach selector lever cable and cable support bracket from gearbox ⇒ Rep. gr. 34 ; Selector mechanism; Exploded view - selector mechanism .

All vehicles (continued):

– Remove crash bar ⇒ General body repairs, interior; Rep. gr. 70 ; Dash panel cross member; Exploded view - dash panel cross member .

– Separate brake pedal from brake servo ⇒ page 149 .

– Unscrew nuts -arrows- and move footwell trim to one side.

– Unscrew nuts -3, 4- for brake servo.

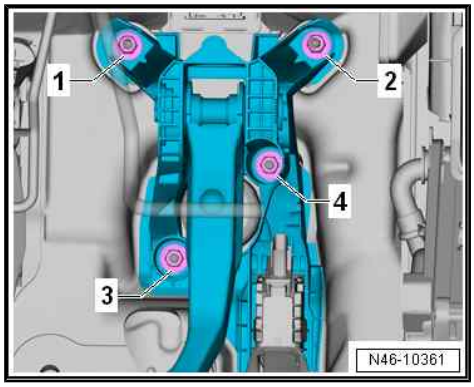

Note

Disregard items -1 and 2-.

– Detach brake servo from adhesive bond on bulkhead and remove.

Installing

Installation is carried out in reverse order; note the following:

Note

- *Clean bolts and nuts before reusing.*
- *Always renew self-locking bolts/nuts.*
- *Always renew damaged bolts/nuts.*

Note

- *Renew gasket between brake servo and bulkhead.*
- *New gasket is not bonded.*

– Remove remaining adhesive from brake servo and bulkhead.

– For ease of removal, use hot air blower at a low setting to warm up remaining adhesive.

– Clean surfaces thoroughly.

– Connect brake pedal to brake servo ⇒ page 150 .

– Install crash bar ⇒ General body repairs, interior; Rep. gr. 70 ; Dash panel cross member; Exploded view - dash panel cross member .

– Install selector lever cable and cable support bracket ⇒ Rep. gr. 34 ; Selector mechanism; Exploded view - selector mechanism .

– Install battery tray ⇒ Electrical system; Rep. gr. 27 ; Battery; Removing and installing battery tray .

– Install jump start terminal ⇒ Electrical system; Rep. gr. 27 ; Jump start terminal; Removing and installing jump start terminal .

– Bleed brake system ⇒ page 235 .

– Bleed clutch hydraulics ⇒ Rep. gr. 30 ; Clutch mechanism; Bleeding clutch hydraulics .

WARNING

Risk of accident!

- ***Make sure that the brakes work properly before the vehicle is driven on the road.***

Protected by copyright. Copying for private or commercial purposes, in part or in whole, is not permitted unless authorised by AUDI AG. AUDI AG does not guarantee or accept any liability with respect to the correctness of information in this document. Copyright by AUDI AG.

Tightening torques

- ⇒ “3.1 Exploded view - brake servo / brake master cylinder”, page 166
- ⇒ Rep. gr. 21 ; Charge air system; Exploded view - hose connections for charge air system

3.2.2 Removing and installing brake servo - vehicles with high-voltage system

Note

- *Clean bolts and nuts before reusing.*
- *Always renew self-locking bolts/nuts.*
- *Always renew damaged bolts/nuts.*

Special tools and workshop equipment required

- Torque wrench - V.A.G 1331-

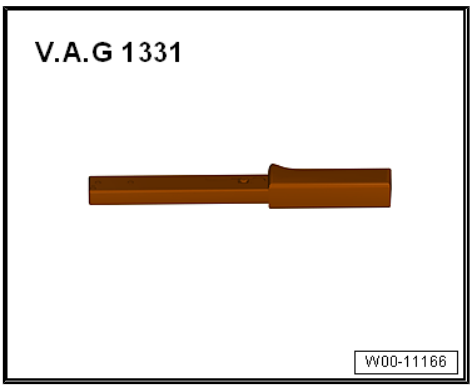

- Brake filling and bleeding equipment - VAS 5234- and adapter - VAS 5234/1A-

Protected by copyright. Copying for private or commercial purposes, in part or in whole, is not permitted unless authorised by AUDI AG. AUDI AG does not guarantee or accept any liability with respect to the correctness of information in this document. Copyright by AUDI AG.

- Hot air blower, e.g. -VAS 1978/14A-

- Sealing plugs from assembly parts set - 5Q0 698 311-

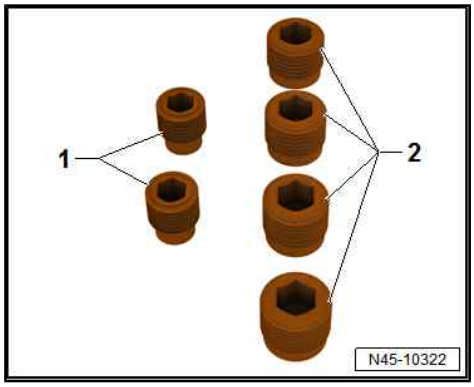

1 - M10 sealing plugs

2 - M12 sealing plugs

Removing

> **DANGER!**
>
> *High voltage! Danger to life!*
>
> *Danger of severe or fatal injuries from electric shock.*
>
> - *The high-voltage system must be de-energised by a "high-voltage technician".*
> - *Work on the de-energised high-voltage system may only be performed by an "electrically instructed person".*

Protected by copyright. Copying for private or commercial purposes, in part or in whole, is not permitted unless authorised by AUDI AG. AUDI AG does not guarantee or accept any liability with respect to the correctness of information in this document. Copyright by AUDI AG.

– De-energise high-voltage system ⇒ Rep. gr. 93 ; De-energising high-voltage system .

– Remove engine cover panel ⇒ Rep. gr. 10 ; Engine cover panel; Removing and installing engine cover panel .

– Draw off as much brake fluid as possible from brake fluid reservoir using brake filling and bleeding equipment - VAS 5234- with adapter - VAS 5234/1A- .

– Remove brake system pressure accumulator - VX70- with motor in brake pressure accumulator for energy recovery - V545- ⇒ page 197 .

– Remove power and control electronics for electric drive - JX1- ⇒ Rep. gr. 93 ; Power and control electronics for electric drive; Removing and installing power and control electronics for electric drive .

– Remove bracket for power and control electronics for electric drive - JX1- ⇒ Rep. gr. 93 ; Power and control electronics for electric drive; Removing and installing power and control electronics for electric drive .

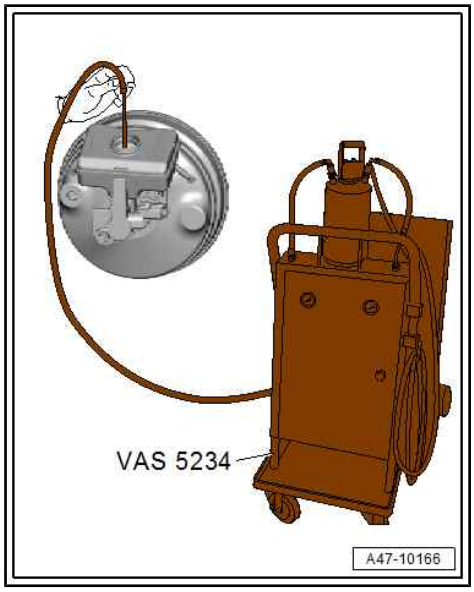

– Unplug electrical connectors -1, 2-.

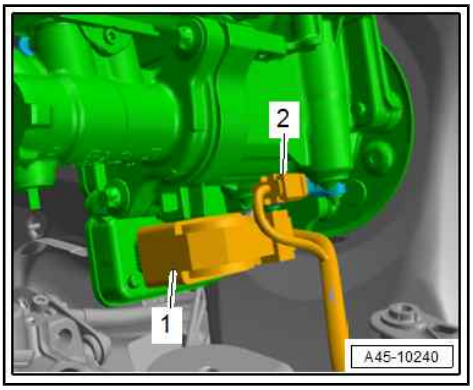

– Unplug electrical connector -arrow- at brake fluid level warning contact - F34- .

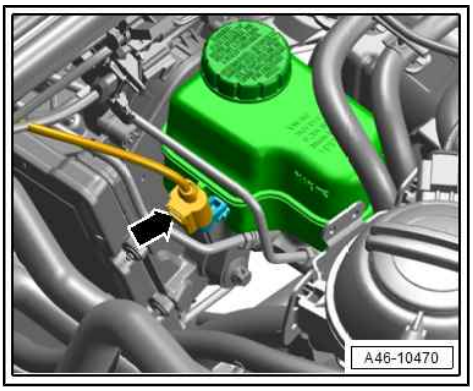

WARNING

Risk of skin irritation

- *Always wear chemical-resistant protective gloves to prevent brake fluid from contacting skin.*

Risk of malfunction if brake fluid comes into contact with fluids containing mineral oils.

- *Brake fluid must NOT come into contact with fluids containing mineral oils (oil, petrol, cleaning agents). Protective gloves must be free of oil and grease.*

Risk of damage to paintwork surfaces

- *Due to its corrosive effect, brake fluid must not be allowed to come into contact with paintwork. Rinse off brake fluid spillages immediately using plenty of water.*

Protected by copyright. Copying for private or commercial purposes, in part or in whole, is not permitted unless authorised by AUDI AG. AUDI AG does not guarantee or accept any liability with respect to the correctness of information in this document. Copyright by AUDI AG.

– To protect against escaping brake fluid, place a sufficient number of lint-free cloths in area beneath brake master cylinder.

– Remove clip -1- and push heat shield slightly towards front.

– Unscrew union screws -arrows- for brake lines.

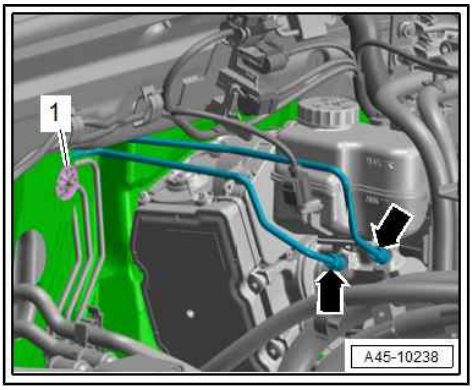

Caution

Risk of damage to brake lines

- *Do not attempt to bend to a different shape.*

– Move brake lines clear to one side at plenum chamber partition panel.

– Seal open connections immediately using clean sealing plugs from assembly parts set - 5Q0 698 311- .

– Separate brake pedal from brake servo ⇒ page 149 .

– Unscrew nuts -arrows- and move footwell trim to one side.

Protected by copyright. Copying for private or commercial purposes, in part or in whole, is not permitted unless authorised by AUDI AG. AUDI AG does not guarantee or accept any liability with respect to the correctness of information in this document. Copyright by AUDI AG.

– Unscrew nuts -3, 4- for brake servo.

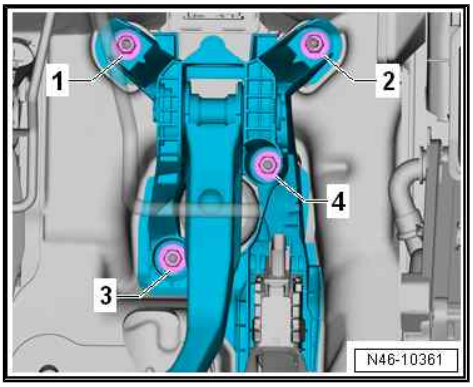

Note

Disregard items -1 and 2-.

– Detach brake servo from adhesive bond on bulkhead and remove.

– Remove brake fluid reservoir (if necessary) ⇒ page 191 .

Installing

Installation is carried out in reverse order; note the following:

Note

- *Clean bolts and nuts before reusing.*
- *Always renew self-locking bolts/nuts.*
- *Always renew damaged bolts/nuts.*

Note

- *Renew gasket between brake servo and bulkhead.*
- *New gasket is not bonded.*

– Remove remaining adhesive from brake servo and bulkhead.

– For ease of removal, use hot air blower at a low setting to warm up remaining adhesive.

– Clean surfaces thoroughly.

– Connect brake pedal to brake servo ⇒ page 150 .

Protected by copyright. Copying for private or commercial purposes, in part or in whole, is not permitted unless authorised by AUDI AG. AUDI AG does not guarantee or accept any liability with respect to the correctness of information in this document. Copyright by AUDI AG.

– Install bracket for power and control electronics for electric drive - JX1- ⇒ Rep. gr. 93 ; Power and control electronics for electric drive; Removing and installing power and control electronics for electric drive .

– Install brake system pressure accumulator - VX70- with motor in brake pressure accumulator for energy recovery - V545- ⇒ page 197 .

– Install power and control electronics for electric drive - JX1- ⇒ Rep. gr. 93 ; Power and control electronics for electric drive; Removing and installing power and control electronics for electric drive .

DANGER!

High voltage! Danger to life!

Danger of severe or fatal injuries from electric shock.

- ***The high-voltage system must be re-energised by a "high-voltage technician".***

– Re-energise high-voltage system ⇒ Rep. gr. 93 ; Re-energising high-voltage system .

WARNING

Risk of accident!

- *Make sure that the brakes work properly before the vehicle is driven on the road.*

Tightening torques

- ⇒ “3.1.2 Exploded view - brake servo / brake master cylinder, vehicles with high-voltage system”, page 168
- ⇒ Fig. ““Brake servo - tightening torque and tightening sequence”“ , page 168

3.3 Removing and installing brake master cylinder

⇒ “3.3.1 Removing and installing brake master cylinder - vehicles without high-voltage system”, page 182

⇒ “3.3.2 Removing and installing brake master cylinder - vehicles with high-voltage system”, page 185

Protected by copyright. Copying for private or commercial purposes, in part or in whole, is not permitted unless authorised by AUDI AG. AUDI AG does not guarantee or accept any liability with respect to the correctness of information in this document. Copyright by AUDI AG.

3.3.1 Removing and installing brake master cylinder - vehicles without high-voltage system

Note

- *Clean bolts and nuts before reusing.*
- *Always renew self-locking bolts/nuts.*
- *Always renew damaged bolts/nuts.*

Special tools and workshop equipment required

- Torque wrench - V.A.G 1331-

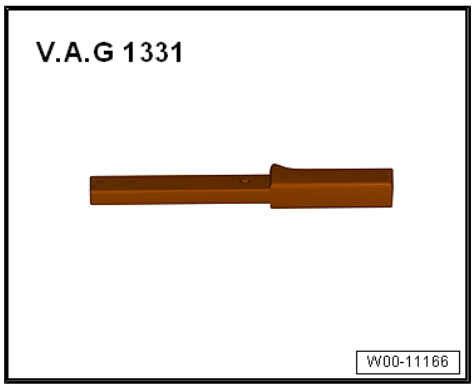

- Sealing plugs from assembly parts set - 5Q0 698 311-

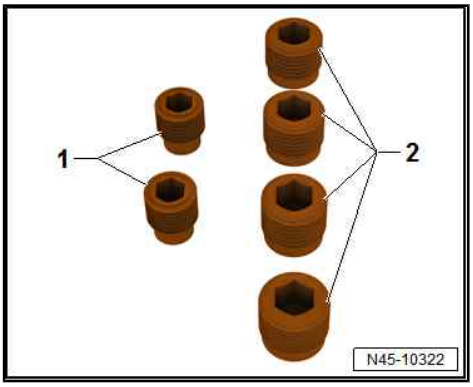

1 - M10 sealing plugs

2 - M12 sealing plugs

Removing

– Remove brake fluid reservoir ⇒ page 188 .

– Unplug electrical connectors:

1 - at brake light switch - F-

2 - at vacuum sender - G608- (if fitted)

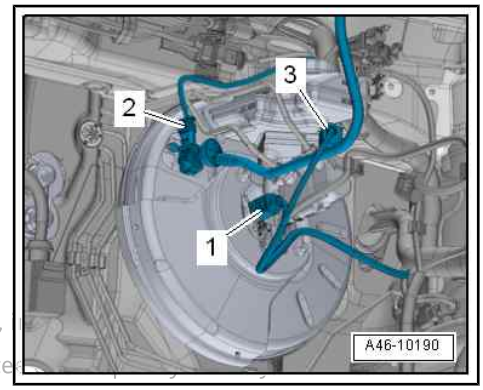

Note

Disregard -item 3-.

Protected by copyright. Copying for private or commercial purposes, in part, is not permitted unless authorised by AUDI AG. AUDI AG does not guarantee or assume any liability with respect to the correctness of information in this document. Copyright by AUDI AG.

WARNING

Brake fluid is corrosive; danger of skin injuries.

Brake fluid must not be drawn off using your mouth.

Brake fluid is poisonous and must not be swallowed.

- *Always wear chemical-resistant protective gloves to prevent brake fluid from contacting skin.*

Risk of malfunction if brake fluid comes into contact with fluids containing mineral oils.

- *Brake fluid must NOT come into contact with fluids containing mineral oils (oil, petrol, cleaning agents). Protective gloves must be free of oil and grease.*

Risk of damage to paintwork surfaces

- *Due to its corrosive effect, brake fluid must not be allowed to come into contact with paintwork. Rinse off brake fluid spillages immediately using plenty of water.*

– Lay out a sufficient number of lint-free cloths around brake master cylinder.
– Disconnect brake lines -1- from brake master cylinder.
– Seal open connections immediately using clean sealing plugs from assembly parts set - 5Q0 698 311- .
– Remove nuts -2-.
– Detach brake master cylinder from brake servo.

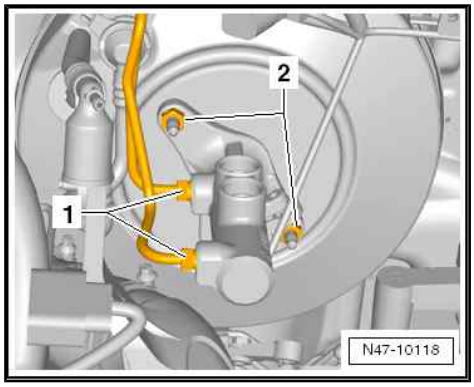

Caution

Risk of irreparable damage to brake servo

- *Brake fluid must not be allowed to enter the brake servo.*

Installing

Installation is carried out in reverse order; note the following:

Note

- *Clean bolts and nuts before reusing.*
- *Always renew self-locking bolts/nuts.*
- *Always renew damaged bolts/nuts.*

Note

Renew seal between brake master cylinder and brake servo.

Caution

Risk of irreparable damage to brake servo

- *Brake fluid must not be allowed to enter the brake servo.*

– When fitting brake master cylinder, make sure that push rod is correctly positioned in brake servo.
– Install brake fluid reservoir ⇒ page 188 .

WARNING

Risk of accident!

- *Make sure that the brakes work properly before the vehicle is driven on the road.*

Tightening torques

- ⇒ “3.1 Exploded view - brake servo / brake master cylinder”, page 166

Protected by copyright. Copying for private or commercial purposes, in part or in whole, is not permitted unless authorised by AUDI AG. AUDI AG does not guarantee or accept any liability with respect to the correctness of information in this document. Copyright by AUDI AG.

3.3.2 Removing and installing brake master cylinder - vehicles with high-voltage system

Protected by copyright. Copying for private or commercial purposes, in part or in whole, is not permitted unless authorised by AUDI AG. AUDI AG does not guarantee or accept any liability with respect to the correctness of information in this document. Copyright by AUDI AG.

Note

- *Clean bolts and nuts before reusing.*
- *Always renew self-locking bolts/nuts.*
- *Always renew damaged bolts/nuts.*

Special tools and workshop equipment required

- Torque wrench - V.A.G 1331-

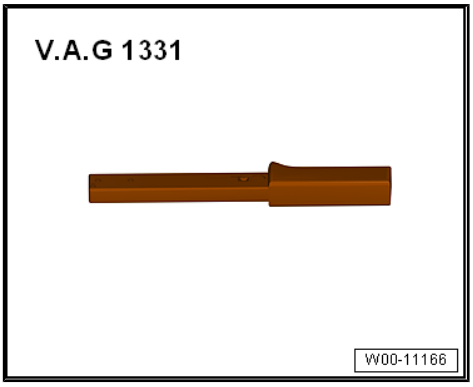

- Brake filling and bleeding equipment - VAS 5234- and adapter - VAS 5234/1A-

- Sealing plugs from assembly parts set - 5Q0 698 311-

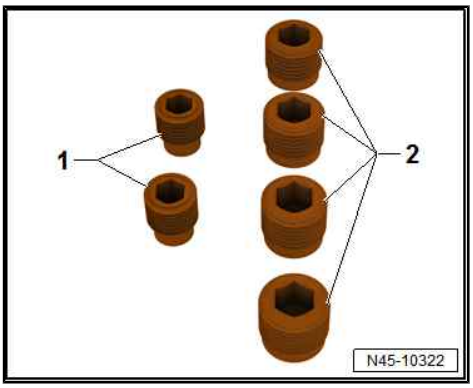

1 - M10 sealing plugs

2 - M12 sealing plugs

Removing

DANGER!

High voltage! Danger to life!

Danger of severe or fatal injuries from electric shock.

- *The high-voltage system must be de-energised by a "high-voltage technician".*
- *Work on the de-energised high-voltage system may only be performed by an "electrically instructed person".*

– De-energise high-voltage system ⇒ Rep. gr. 93 ; De-energising high-voltage system .

– Remove brake fluid reservoir ⇒ page 191 .

– Disconnect brake lines -2, 3, 4- from brake master cylinder -1-.

– Seal open connections immediately using clean sealing plugs from assembly parts set - 5Q0 698 311- .

Protected by copyright. Copying for private or com ot
permitted unless authorised by AUDI AG. AUDI AG
with respect to the correctness of information in t

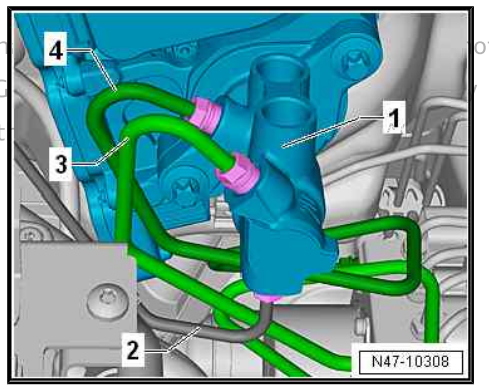

– Remove bolts -arrows-.

– Detach brake master cylinder -1- carefully from brake servo.

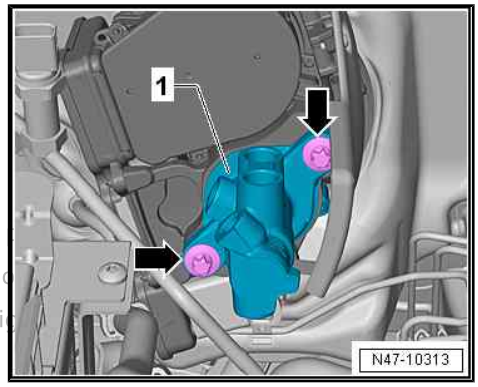

Caution

Risk of irreparable damage to brake servo

- *Brake fluid must not be allowed to enter the brake servo.*

Protected by copyright. Copying for private or commercial purposes, in part or in whole, is not permitted unless authorised by AUDI AG. AUDI AG does not guarantee or assume liability with respect to the correctness of information in this document. Copyright by AUDI AG.

Installing

Installation is carried out in reverse order; note the following:

Note

- *Clean bolts and nuts before reusing.*
- *Always renew self-locking bolts/nuts.*
- *Always renew damaged bolts/nuts.*

Note

- *Renew seal between brake master cylinder and brake servo.*
- *Always clean threaded holes for bolts (using a thread tap or similar).*

Caution

Risk of irreparable damage to brake servo

- *Brake fluid must not be allowed to enter the brake servo.*

– When fitting brake master cylinder, make sure that push rod is correctly positioned in brake servo.

– Install brake fluid reservoir ⇒ page 191 .

DANGER!

High voltage! Danger to life!

Danger of severe or fatal injuries from electric shock.

- *The high-voltage system must be re-energised by a "high-voltage technician".*

– Re-energise high-voltage system ⇒ Rep. gr. 93 ; Re-energising high-voltage system .

WARNING

Risk of accident!

- *Make sure that the brakes work properly before the vehicle is driven on the road.*

3.4 Removing and installing brake fluid reservoir

⇒ "3.4.1 Removing and installing brake fluid reservoir - vehicles without high-voltage system", page 188

⇒ "3.4.2 Removing and installing brake fluid reservoir - vehicles with high-voltage system", page 191

Protected by copyright. Copying for private or commercial purposes, in part or in whole, is not permitted unless authorised by AUDI AG. AUDI AG does not guarantee or accept any liability with respect to the correctness of information in this document. Copyright by AUDI AG.

3.4.1 Removing and installing brake fluid reservoir - vehicles without high-voltage system

Note

- *Clean bolts and nuts before reusing.*
- *Always renew self-locking bolts/nuts.*
- *Always renew damaged bolts/nuts.*

Special tools and workshop equipment required

- Brake filling and bleeding equipment - VAS 5234- with adapter - VAS 5234/1A-

- Sealing tool - T10249-

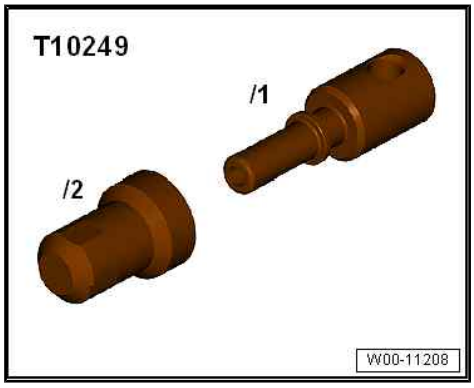

Removing

– Draw off as much brake fluid as possible from brake fluid reservoir using brake filling and bleeding equipment - VAS 5234- with adapter - VAS 5234/1A- .

Protected by copyright. Copying for private or commercial purposes, in part or in w
permitted unless authorised by AUDI AG. AUDI AG does not guarantee or accept a
with respect to the correctness of information in this document. Copyright by AUDI AG.

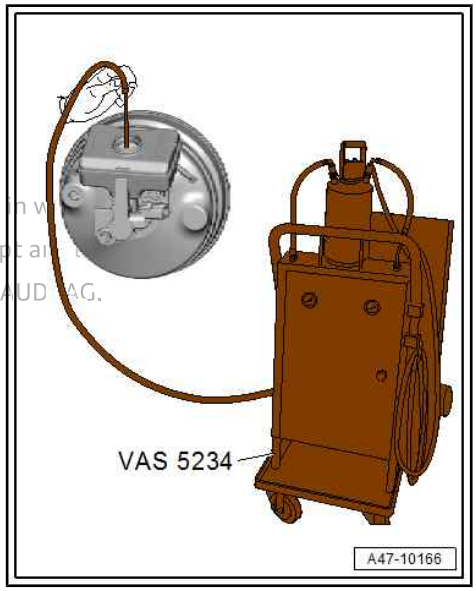

Vehicles with 1.5 ltr./1.8 ltr./2.0 ltr. TFSI engine:

– Release hose clips -1, 2- and remove air intake pipe.

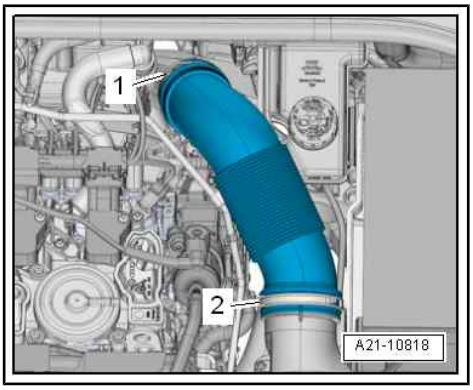

Vehicles with 1.6/2.0 ltr. TDI engine:

– Remove engine cover panel ⇒ Rep. gr. 10 ; Engine cover panel; Removing and installing engine cover panel .
– Move vacuum hoses clear -arrows-.
– Release hose clips -1, 2- and remove air intake pipe.

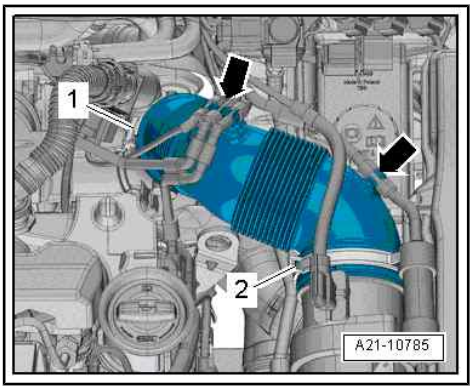

Vehicles with 2.5 ltr. TFSI engine:

– Remove engine cover panel ⇒ Rep. gr. 10 ; Engine cover panel; Removing and installing engine cover panel .
– Release hose clips -arrows- and remove air intake pipe.

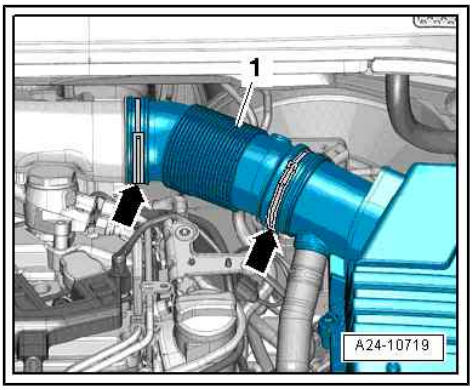

Protected by copyright. Copying for private or commercial purposes, in part or in whole, is not permitted unless authorised by AUDI AG. AUDI AG does not guarantee or accept any liability with respect to the correctness of information in this document. Copyright by AUDI AG.

Vehicles with manual gearbox:

– Pull off clutch master cylinder supply hose -1-, seal with sealing tool - T10249/1- and tie up.

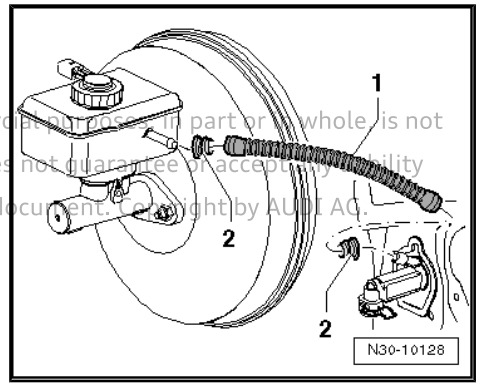

All vehicles (continued):

– Unplug electrical connector -2- from brake fluid level warning contact - F34- .

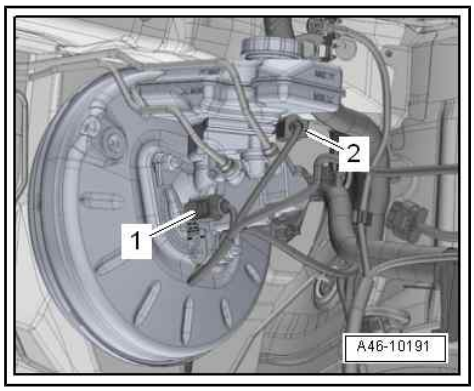

Note

Disregard -item 1-.

– To protect against escaping brake fluid, place a sufficient number of lint-free cloths in area beneath brake master cylinder.

– Unscrew stud/pull out locking pin -1-.
– Pull brake fluid reservoir -2- off sealing plugs.

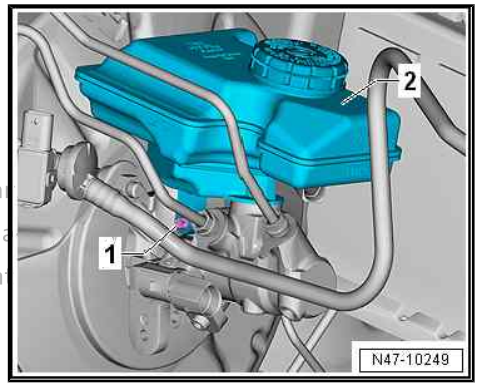

Installing

Installation is carried out in reverse order; note the following:

Protected by copyright. Copying for private or commercial purposes, in pa
p ttt unless authorised by AUDI AG. AUDI AG does not guarantee or a
with respect to the correctness of information in this document. Copyrigh

Note

- *Clean bolts and nuts before reusing.*
- *Always renew self-locking bolts/nuts.*
- *Always renew damaged bolts/nuts.*

– Lubricate sealing plugs on brake fluid reservoir with brake fluid.
– Insert brake fluid reservoir in sealing plugs in brake master cylinder.

Note

After installing, make sure that the brake fluid reservoir engages in the retainers and is seated securely.

– Secure brake fluid reservoir with locking pin.

Vehicles with manual gearbox:

– Bleed clutch hydraulics ⇒ Rep. gr. 30 ; Clutch mechanism; Bleeding clutch hydraulics .

All vehicles (continued):

– Bleed brake system ⇒ page 235 .

WARNING

Risk of accident!

- *Make sure that the brakes work properly before the vehicle is driven on the road.*

Tightening torques

- ⇒ Rep. gr. 21 ; Charge air system; Exploded view - hose connections for charge air system

3.4.2 Removing and installing brake fluid reservoir - vehicles with high-voltage system

Note

- *Clean bolts and nuts before reusing.*
- *Always renew self-locking bolts/nuts.*
- *Always renew damaged bolts/nuts.*

Special tools and workshop equipment required

- Torque wrench - V.A.G 1331-

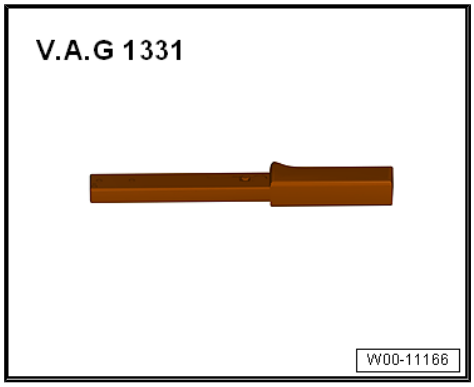

- Torque wrench - V.A.G 1410-

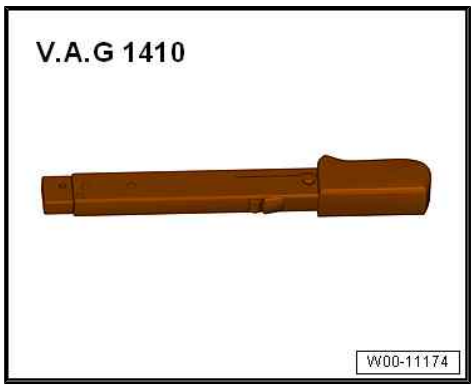

- Brake filling and bleeding equipment - VAS 5234- with adapter - VAS 5234/1A-

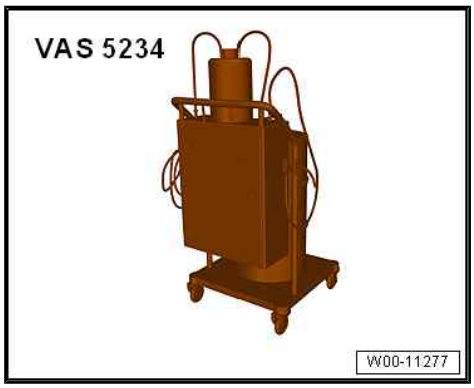

- Sealing plugs from assembly parts set - 5Q0 698 311-

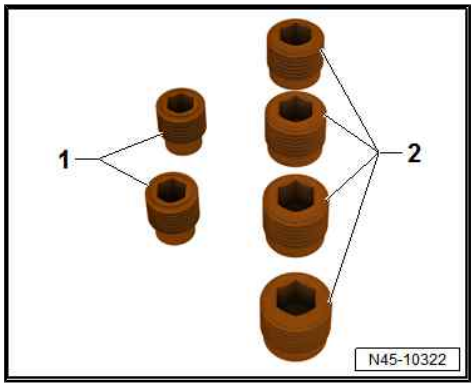

1 - M10 sealing plugs
2 - M12 sealing plugs

Protected by copyright. Copying for private or commercial purposes, in part or in whole, is not permitted unless authorised by AUDI AG. AUDI AG does not guarantee or accept any liability with respect to the correctness of information in this document. Copyright by AUDI AG.

Removing

> **DANGER!**
>
> *High voltage! Danger to life!*
>
> *Danger of severe or fatal injuries from electric shock.*
>
> - *The high-voltage system must be de-energised by a "high-voltage technician".*
> - *Work on the de-energised high-voltage system may only be performed by an "electrically instructed person".*

– De-energise high-voltage system ⇒ Rep. gr. 93 ; De-energising high-voltage system .

– Remove engine cover panel ⇒ Rep. gr. 10 ; Engine cover panel; Removing and installing engine cover panel .

Protected by copyright. Copying for private or commercial purposes, in part or in whole, is not permitted unless authorised by AUDI AG. AUDI AG does not guarantee or accept any liability with respect to the correctness of information in this d

– Unplug electrical connector -1-.

– Release fastener -arrow- and detach brake fluid level warning contact - F34- -item 2-.

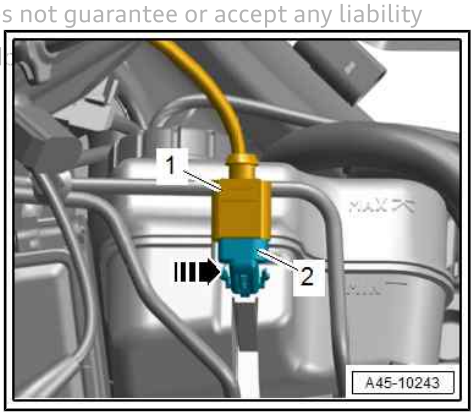

– Unplug electrical connector -3-.

– Release fasteners -2- with a small screwdriver -arrow-, disengage coolant expansion tank -1- from bracket and move to one side.

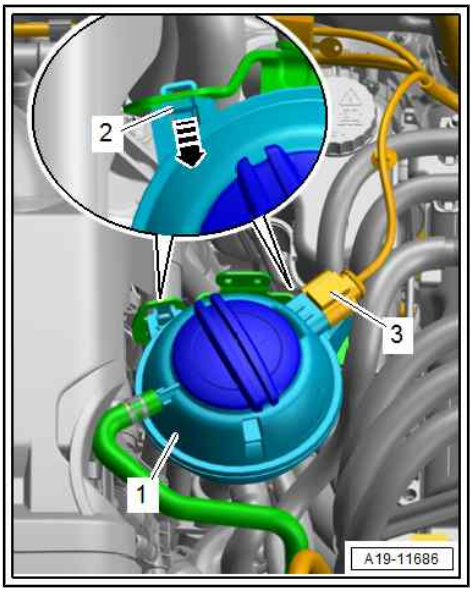

– Remove nuts -2- and detach bracket -1-.

– Remove high-voltage wiring harness for high-voltage battery ⇒ Rep. gr. 93 ; High-voltage wires; Removing and installing high-voltage wiring harness for high-voltage battery .

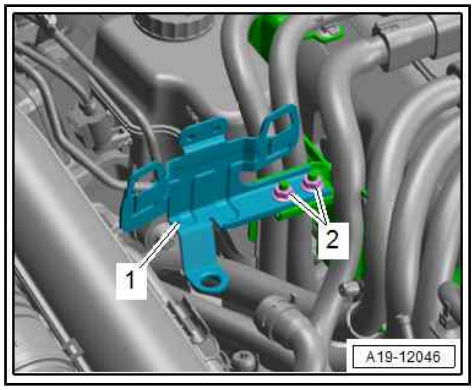

– Disconnect high-voltage wire -2- from power and control electronics for electric drive - JX1- -item 3- and move clear.

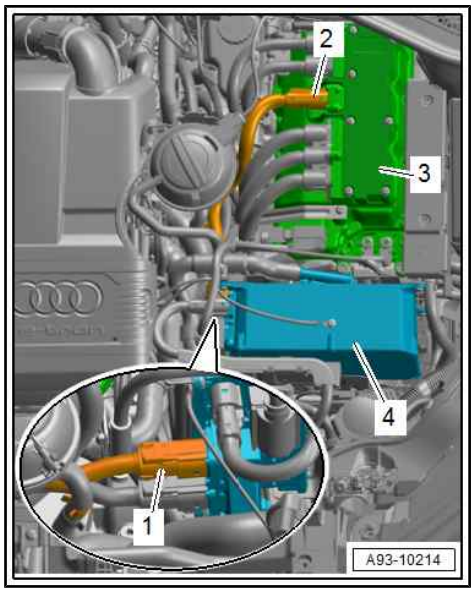

– To unplug connector, pull out connector locking element -3- -arrow A-.

– Press release tab -4- in direction of -arrow B- and pull connector -1- off by approx. 5 mm as far as next stop.

– Press release tab -5- in direction of -arrow D- and pull connector off plug connection -2- -arrow C-.

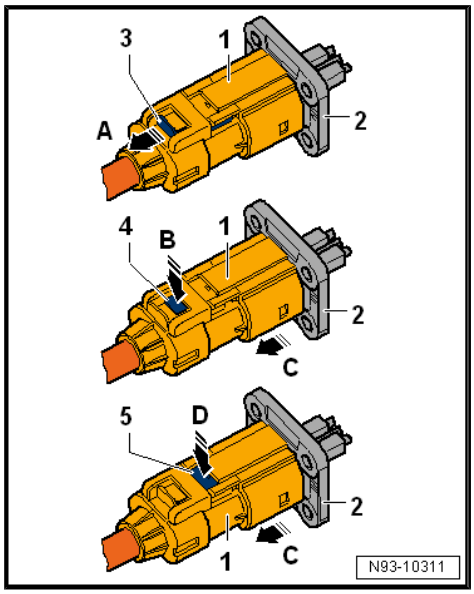

WARNING

Risk to health

- *Always wear chemical-resistant protective gloves to prevent brake fluid from contacting skin.*
- *Always observe the relevant environmental regulations for disposal.*

Risk of malfunction if brake fluid comes into contact with fluids containing mineral oils.

- *Brake fluid must NOT come into contact with fluids containing mineral oils (oil, petrol, cleaning agents). Protective gloves must be free of oil and grease.*

Risk of damage to paintwork surfaces

- *Due to its corrosive effect, brake fluid must not be allowed to come into contact with paintwork. Rinse off brake fluid spillages immediately using plenty of water.*

Only for training purposes. Copying for private or commercial purposes, in part or in whole, is not permitted unless authorised by AUDI AG. AUDI AG does not guarantee or accept any liability with respect to the correctness of information in this document. Copyright by AUDI AG.

– To protect against escaping brake fluid, place a sufficient number of lint-free cloths in area beneath brake servo.
– Draw off as much brake fluid as possible from brake fluid reservoir using brake filling and bleeding equipment - VAS 5234- with adapter - VAS 5234/1A-.

Protected by copyright. Copying for private or commercial use, in whole or in part, is not permitted unless authorised by AUDI AG. AUDI AG does not guarantee or accept any liability with respect to the correctness of information in this document. Copyright by AUDI AG.

– Remove bolts -1, 2-.
– Have a second mechanic lift power and control electronics for electric drive - JX1- -item 3- slightly at front and pull power and control electronics out of grommets at rear -arrow-.
– Lift power and control electronics at rear until stud for brake fluid reservoir can be accessed.

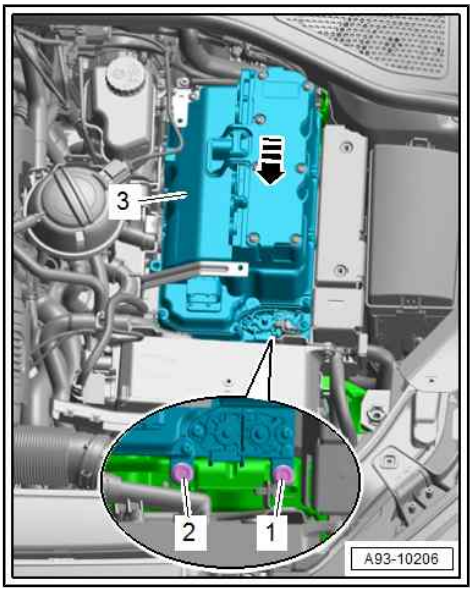

– Unscrew stud -arrow- and pull brake fluid reservoir -1- upwards out of sealing plugs.

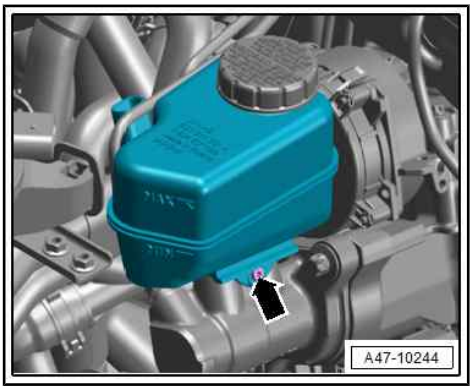

Protected by copyright. Copying for private or commercial
permitted unless authorised by AUDI AG. AUDI AG does no
with respect to the correctness of information in this docu

Installing

Installation is carried out in reverse order; note the following:

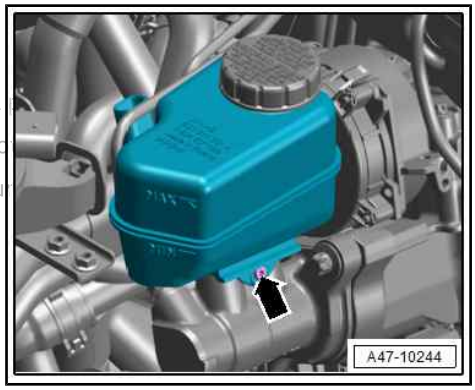

Note

- *Clean bolts and nuts before reusing.*
- *Always renew self-locking bolts/nuts.*
- *Always renew damaged bolts/nuts.*

– Lubricate sealing plugs on brake fluid reservoir with brake fluid.

– Insert brake fluid reservoir in sealing plugs in brake master cylinder.

Note

After installing, make sure that the brake fluid reservoir engages in the retainers and is seated securely.

– Secure brake fluid reservoir with stud -arrow-.

– Install power and control electronics for electric drive - JX1- ⇒ Rep. gr. 93 ; Power and control electronics for electric drive; Removing and installing power and control electronics for electric drive .

DANGER!

High voltage! Danger to life!

Danger of severe or fatal injuries from electric shock.

- ***The high-voltage system must be re-energised by a "high-voltage technician".***

– Re-energise high-voltage system ⇒ Rep. gr. 93 ; Re-energising high-voltage system .

– Install engine cover panel ⇒ Rep. gr. 10 ; Engine cover panel; Removing and installing engine cover panel .

WARNING

Risk of accident!

- ***Make sure that the brakes work properly before the vehicle is driven on the road.***

3.5 Removing and installing brake fluid level warning contact - F34-

⇒ “3.5.1 Removing and installing brake fluid level warning contact F34 - vehicles without high-voltage system”, page 197

⇒ “3.5.2 Removing and installing brake fluid level warning contact F34 - vehicles with high-voltage system”, page 197

3.5.1 Removing and installing brake fluid level warning contact - F34- - vehicles without high-voltage system

Removing

– Unplug electrical connector -1-.

– Release fastener -arrow- and pull brake fluid level warning contact - F34- out of brake fluid reservoir.

Installing

Installation is carried out in reverse sequence.

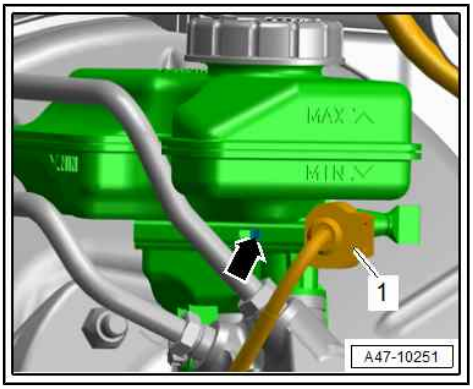

3.5.2 Removing and installing brake fluid level warning contact - F34- - vehicles with high-voltage system

Removing

Protected by copyright. Copying for private or commercial purposes, in part or in whole, is not permitted unless authorised by AUDI AG. AUDI AG does not guarantee or accept any liability with respect to the correctness of information in this document. Copyright by AUDI AG.

– Remove engine cover panel ⇒ Rep. gr. 10 ; Engine cover panel; Removing and installing engine cover panel .

– Unplug electrical connector -1-.

– Release fastener -arrow- and detach brake fluid level warning contact - F34- -item 2-.

Installing

Installation is carried out in reverse sequence.

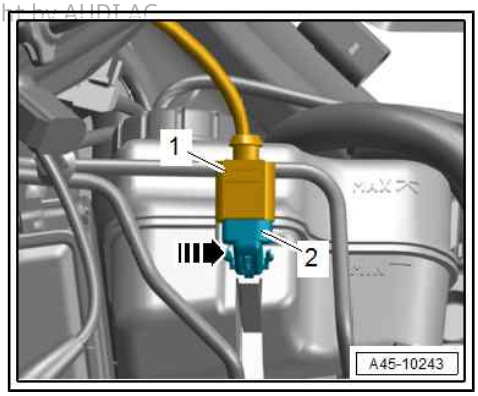

3.6 Removing and installing brake system pressure accumulator - VX70-

Special tools and workshop equipment required

- Brake pedal actuator - V.A.G 1869/2-

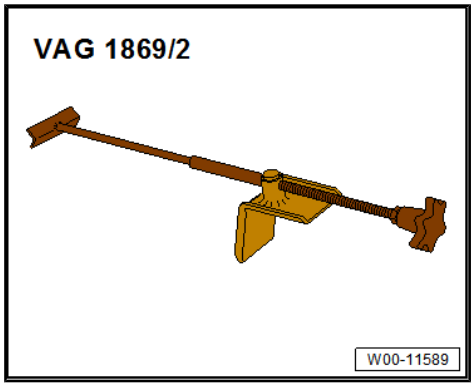

- Bleeder bottle from brake filling and bleeding equipment - VAS 5234-

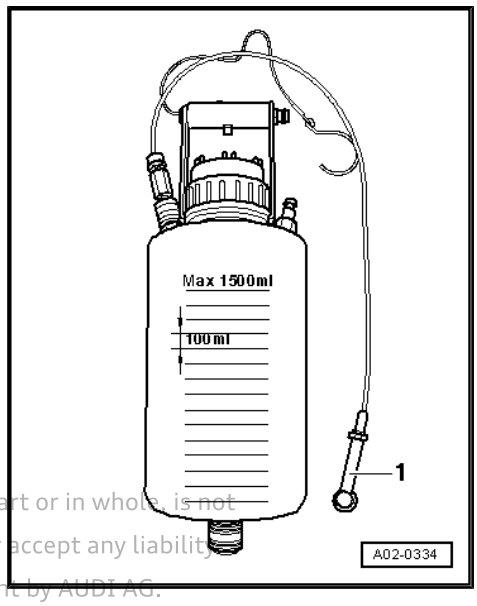

Protected by copyright. Copying for private or commercial purposes, in part or in whole, is not permitted unless authorised by AUDI AG. AUDI AG does not guarantee or accept any liability with respect to the correctness of information in this document. Copyright by AUDI AG.

- Sealing plugs from assembly parts set - 5Q0 698 311-

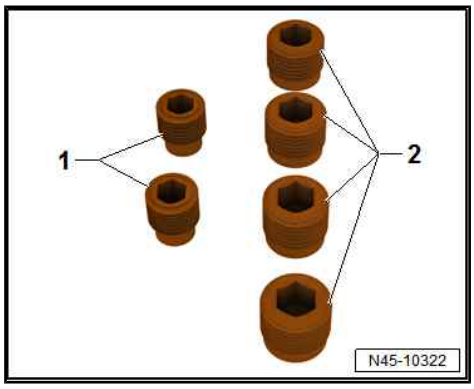

1 - M10 sealing plugs

2 - M12 sealing plugs

Removing

DANGER!

High voltage! Danger to life!

Danger of severe or fatal injuries from electric shock.

- *The high-voltage system must be de-energised by a "high-voltage technician".*
- *Work on the de-energised high-voltage system may only be performed by an "electrically instructed person".*

– De-energise high-voltage system ⇒ Rep. gr. 93 ; De-energising high-voltage system .

– Remove power and control electronics for electric drive - JX1- ⇒ Rep. gr. 93 ; Power and control electronics for electric drive; Removing and installing power and control electronics for electric drive .

– Insert brake pedal actuator - V.A.G 1869/2- between brake pedal and driver seat. Depress brake pedal at least 60 mm.

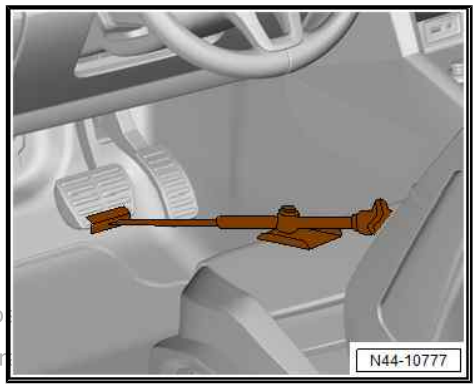

Note

This closes the valves in the brake master cylinder and stops the brake fluid reservoir from running empty.

WARNING

Risk of skin irritation

- *Always wear chemical-resistant protective gloves to prevent brake fluid from contacting skin.*

Protected by copyright. Copying for private or commercial purpo
permitted unless authorised by AUDI AG. AUDI AG does not guar
with respect to the correctness of information in this document. Copyright by AUDI AG.

– Detach protective cap -3- from bleeder screw -1- on front left brake caliper.

– Connect hose -2- from bleeder bottle, as shown in illustration.

– Open bleeder screw to relieve pressure in brake system.

– Close bleeder screw and remove bleeder bottle.

– Repeat procedure on rear left brake caliper.

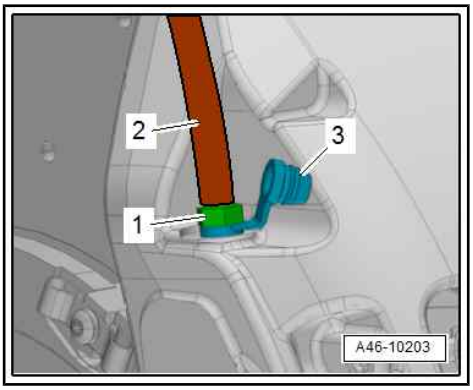

Note

The brake pedal actuator - V.A.G 1869/2- must not be removed.

– Place a cloth under the connection to catch escaping brake fluid.

– Unscrew union screws -arrows- and detach brake line -1-.

– Seal open connections immediately using clean sealing plugs from assembly parts set - 5Q0 698 311- .

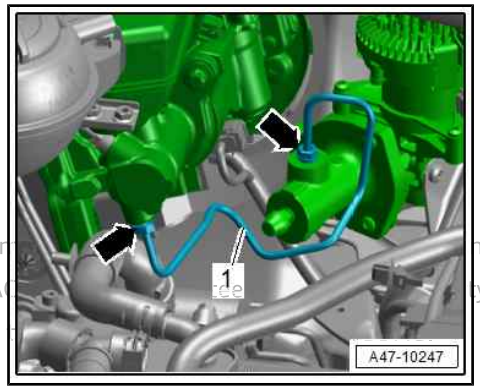

Protected by copyright. Copying for private or com ... not permitted unless authorised by AUDI AG. AUDI A ... ty with respect to the correctness of information in ...

– Unplug electrical connector -2-.

– Pull brake system pressure accumulator - VX70- -item 1- upwards off retaining pins and remove.

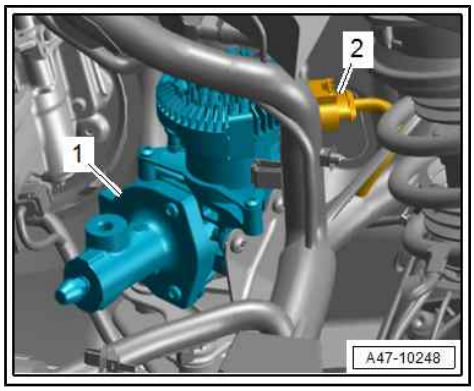

– If renewing brake system pressure accumulator - VX70- , remove bolts -arrows- and detach bracket -1-.

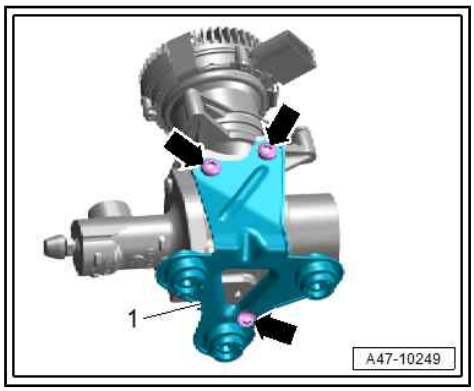

Installing

Installation is carried out in reverse order; note the following:

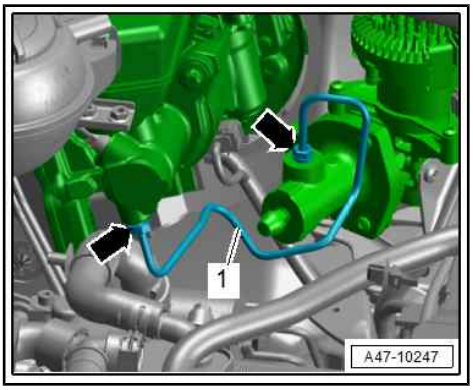

Note

- *Clean bolts and nuts before reusing.*
- *Always renew self-locking bolts/nuts.*
- *Always renew damaged bolts/nuts.*

– Pre-bleed new brake system pressure accumulator - VX70- before installing ⇒ page 243 .

– Insert brake system pressure accumulator - VX70- with bracket in engine compartment.

– Position brake line -1-, screw in union screws -arrows- by hand and tighten.

– Remove brake pedal actuator - V.A.G 1869/2- .

– Bleed brake system ⇒ page 235 .

– Perform basic setting of electromechanical brake servo ⇒ Vehicle diagnostic tester.

Protected by copyright. Copying for private or commercial purposes, in part or in whole, is not permitted unless authorised by AUDI AG. AUDI AG does not guarantee or accept any liability with respect to the correctness of information in this document. Copyright by AUDI AG.

- `0023 - Brake Boost`
- `0023 - Brake servo, functions`
- `0023 - Basic setting`
- `0023 - Brake system pressure accumulator -VX70 basic setting`

DANGER!

High voltage! Danger to life!

Danger of severe or fatal injuries from electric shock.

- *The high-voltage system must be re-energised by a "high-voltage technician".*

– Re-energise high-voltage system ⇒ Rep. gr. 93 ; Re-energising high-voltage system .

WARNING

Risk of accident!

- *Make sure that the brakes work properly before the vehicle is driven on the road.*

Tightening torques

- ⇒ "3.1.3 Exploded view - brake servo / brake master cylinder, brake system pressure accumulator VX70 , vehicles with high-voltage system", page 170

4 Vacuum system

⇒ “4.1 Exploded view - electric vacuum pump”, page 202

⇒ “4.2 Exploded view - vacuum pump”, page 207

⇒ “4.3 Checking non-return valve”, page 209

⇒ “4.4 Removing and installing non-return valve”, page 210

⇒ “4.5 Removing and installing vacuum sender G608 ”, page 213

⇒ “4.6 Checking vacuum system”, page 214

⇒ “4.7 Removing and installing electric vacuum pump”, page 218

⇒ “4.8 Removing and installing vacuum pump”, page 222

4.1 Exploded view - electric vacuum pump

⇒ “4.1.1 Exploded view - electric vacuum pump (at rear of engine)”, page 202

⇒ “4.1.2 Exploded view - electric vacuum pump, vehicles with 1.0 ltr. TFSI engine”, page 203

⇒ “4.1.3 Exploded view - electric vacuum pump, vehicles with 1.5 ltr. TFSI engine (petrol)”, page 204

⇒ “4.1.4 Exploded view - electric vacuum pump, vehicles with 1.5 ltr. TFSI engine (g-tron)”, page 205

4.1.1 Exploded view - electric vacuum pump (at rear of engine)

Note

- *Clean bolts and nuts before reusing.*
- *Always renew self-locking bolts/nuts.*
- *Always renew damaged bolts/nuts.*

Protected by copyright. Copying for private or commercial purposes, in part or in whole, is not permitted unless authorised by AUDI AG. AUDI AG does not guarantee or accept any liability with respect to the correctness of information in this document. Copyright by AUDI AG.

1 - Bolt

- ❑ 8 Nm

2 - Vacuum pump for brakes - V192-

- ❑ Fitting location: at rear of engine
- ❑ Do not dismantle
- ❑ Check in “Guided Fault Finding” ⇒ Vehicle diagnostic tester
- ❑ ⇒ “4.7.1 Removing and installing electric vacuum pump (at rear of engine)”, page 218

3 - Bracket

4 - Rubber damper

- ❑ Must be properly seated
- ❑ Installation position: washer faces upwards

5 - Bolt

- ❑ 8 Nm

6 - Bracket

7 - Rubber damper

- ❑ Must be properly seated
- ❑ Make sure it is not pushed out of bracket during installation

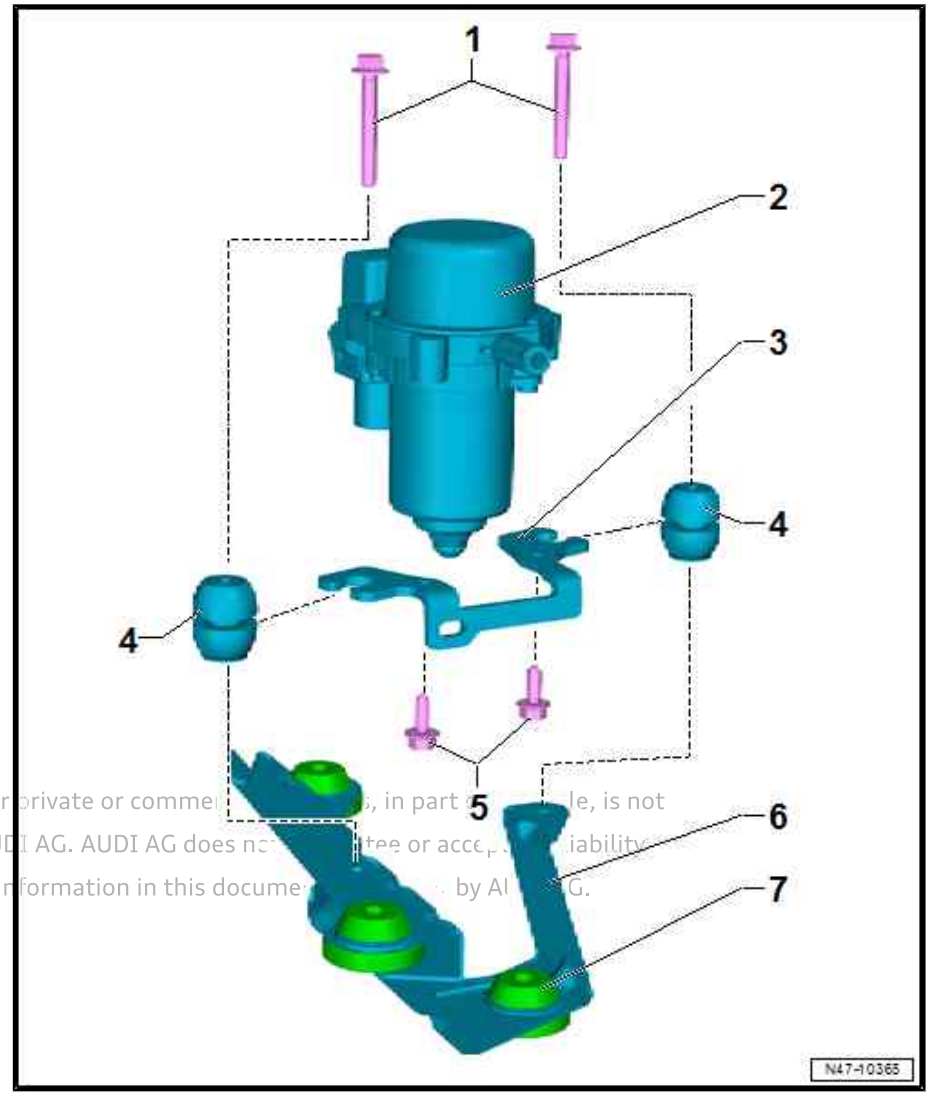

Protected by copyright. Copying for private or commercial purposes, in part or in whole, is not permitted unless authorised by AUDI AG. AUDI AG does not guarantee or accept any liability with respect to the correctness of information in this document copied by AUDI AG.

4.1.2 Exploded view - electric vacuum pump, vehicles with 1.0 ltr. TFSI engine

Note

- *Clean bolts and nuts before reusing.*
- *Always renew self-locking bolts/nuts.*
- *Always renew damaged bolts/nuts.*

1 - Bracket

- ❑ Secured to engine mounting

2 - Vacuum pump for brakes - V192-

- ❑ Fitting location: in front of engine compartment (right-side)
- ❑ Do not dismantle
- ❑ Check in “Guided Fault Finding” ⇒ Vehicle diagnostic tester
- ❑ ⇒ “4.7.2 Removing and installing electric vacuum pump - vehicles with 1.0 ltr. TFSI engine”, page 219

3 - Bracket

4 - Rubber damper

- ❑ Must be properly seated
- ❑ Installation position: washer faces downwards

5 - Bolt

- ❑ 8 Nm

6 - Bolt

- ❑ 8 Nm

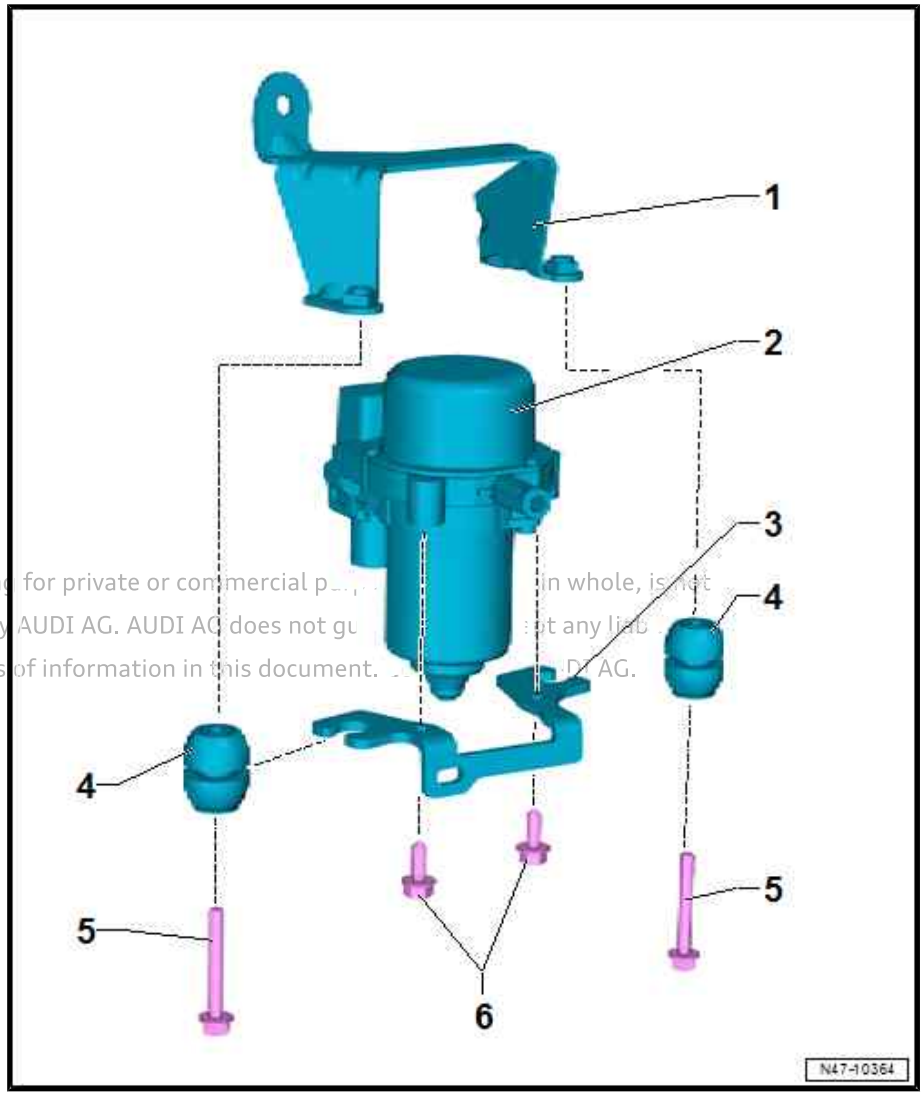

Protected by copyright. Copying for private or commercial p... in whole, is not permitted unless authorised by AUDI AG. AUDI AG does not gu... t any liab... with respect to the correctness of information in this document. ... D AG.

4.1.3 Exploded view - electric vacuum pump, vehicles with 1.5 ltr. TFSI engine (petrol)

Note

- *Clean bolts and nuts before reusing.*
- *Always renew self-locking bolts/nuts.*
- *Always renew damaged bolts/nuts.*

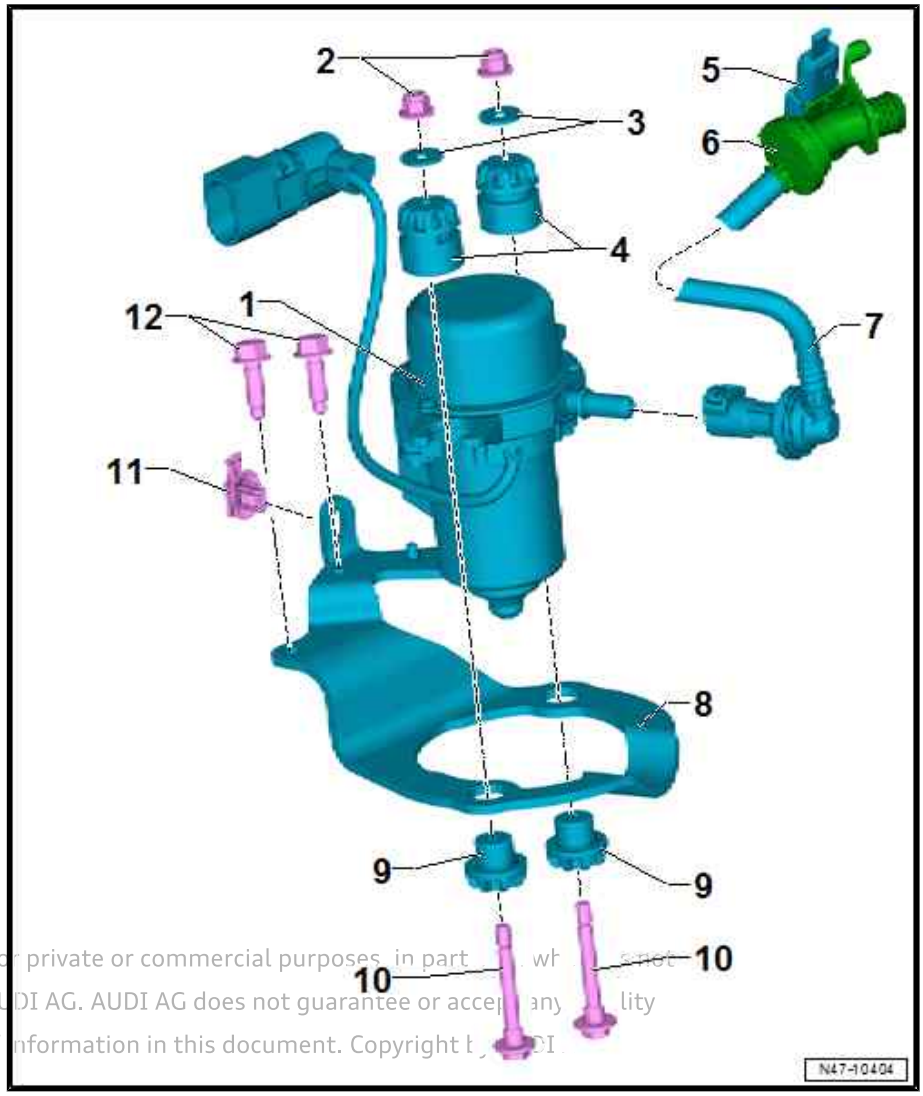

1 - Vacuum pump for brakes - V192-

- ❑ Fitting location: in front of engine compartment (right-side)
- ❑ Do not dismantle
- ❑ Check in “Guided Fault Finding” ⇒ Vehicle diagnostic tester
- ❑

2 - Nut

- ❑ 7 Nm

3 - Washer

4 - Rubber damper

- ❑ Top

5 - Vacuum sender - G608-

- ❑ For correct version refer to ⇒ Electronic parts catalogue
- ❑ ⇒ “4.5 Removing and installing vacuum sender G608 ”, page 213

6 - Non-return valve

7 - Vacuum line

8 - Bracket

9 - Rubber damper

- ❑ Bottom

10 - Bolt

11 - Clip

- ❑ Retainer for connector

12 - Bolt

- ❑ 8 Nm

Protected by copyright. Copying for private or commercial purposes, in part or whole, is not permitted unless authorised by AUDI AG. AUDI AG does not guarantee or accept any liability with respect to the correctness of information in this document. Copyright by AUDI AG.

4.1.4 Exploded view - electric vacuum pump, vehicles with 1.5 ltr. TFSI engine (g-tron)

Note

- *Clean bolts and nuts before reusing.*
- *Always renew self-locking bolts/nuts.*
- *Always renew damaged bolts/nuts.*

1 - Vacuum pump for brakes - V192-

- ❑ Fitting location ⇒ page 206
- ❑ Do not dismantle
- ❑ Check in “Guided Fault Finding” ⇒ Vehicle diagnostic tester

2 - Vacuum line

3 - Vacuum sender - G608-

- ❑ For correct version refer to ⇒ Electronic parts catalogue
- ❑ ⇒ “4.5 Removing and installing vacuum sender G608 ”, page 213

4 - Non-return valve

5 - Retaining clip

6 - Heat shield

7 - Bolt

- ❑ 2.5 Nm

8 - Bolt

- ❑ 20 Nm

9 - Nut

- ❑ 7 Nm

10 - Bracket

11 - Electrical connector

12 - Bracket

13 - Vacuum hose

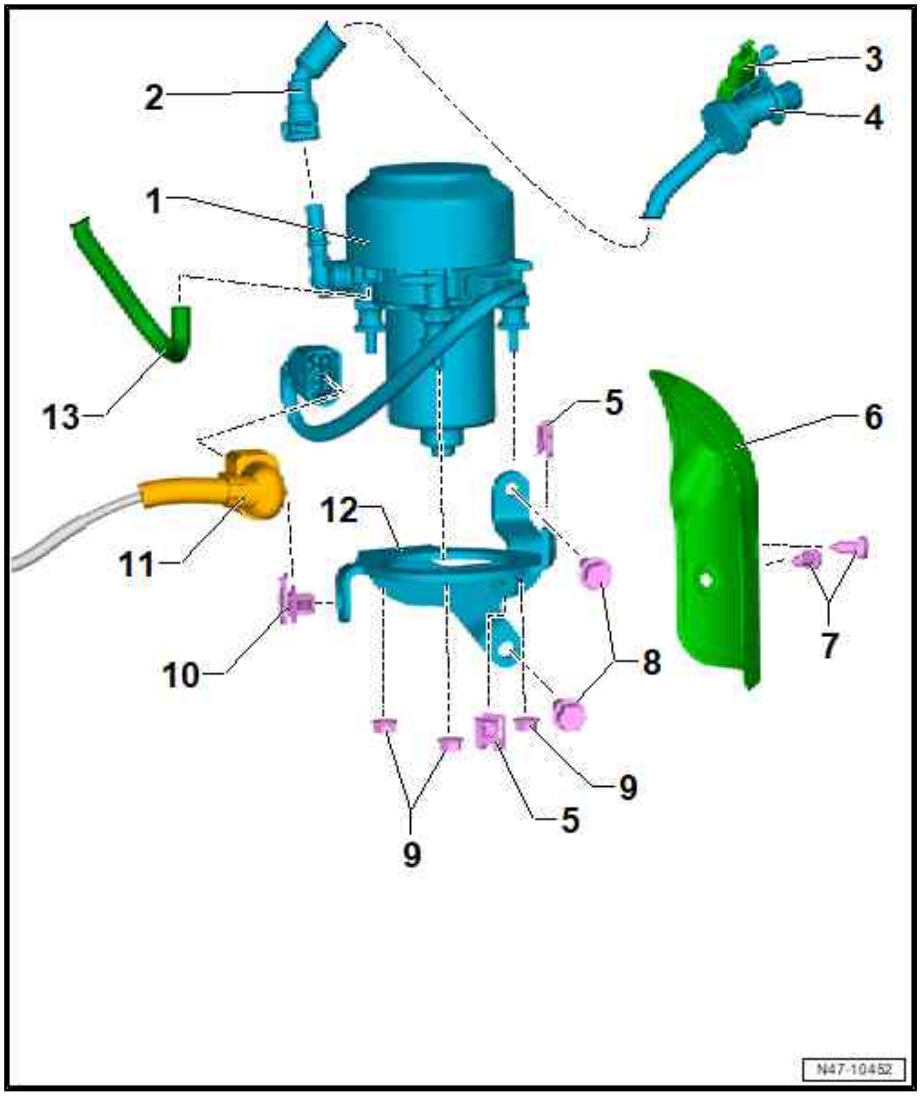

Vacuum pump for brakes - V192- - fitting location

- ♦ -Item 6- at rear in vicinity of engine/gearbox

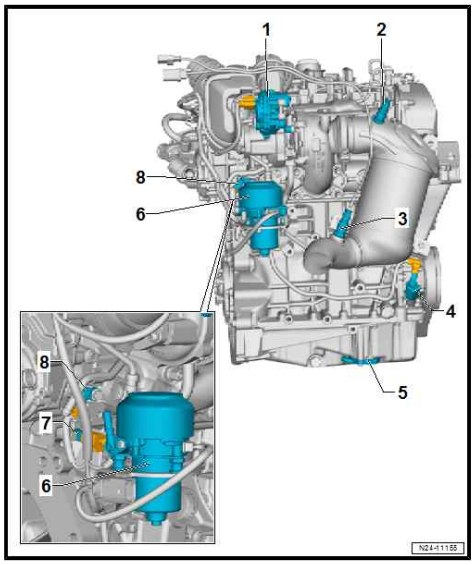

Protected by copyright. Copying for private or commercial purposes, in part or in whole, is not permitted unless authorised by AUDI AG. AUDI AG does not guarantee or accept any liability with respect to the correctness of information in this document. Copyright by AUDI AG.

4.2 Exploded view - vacuum pump

⇒ “4.2.1 Exploded view - vacuum pump, vehicles with 4-cylinder TFSI engine”, page 207

⇒ “4.2.2 Exploded view - vacuum pump, vehicles with 5-cylinder TFSI engine”, page 208

4.2.1 Exploded view - vacuum pump, vehicles with 4-cylinder TFSI engine

Note

- *Clean bolts and nuts before reusing.*
- *Always renew self-locking bolts/nuts.*
- *Always renew damaged bolts/nuts.*

Note

- *The 1.8 ltr./2.0 ltr. TFSI engines have a mechanical vacuum pump. The illustration refers to these engines.*
- *The 1.6 ltr./2.0 ltr. TDI engines have a mechanical vacuum pump which is combined in a single unit with the oil pump. Removing and installing ⇒ Rep. gr. 17 ; Sump/oil pump; Removing and installing oil pump .*

Protected by copyright. Copying for private or commercial purposes, in part or in whole, is not permitted unless authorised by AUDI AG. AUDI AG does not guarantee or accept any liability with respect to the correctness of information in this document. Copyright by AUDI AG.

Protected by copyright. Copying ... es, in part or in whole, is not permitted unless authorised by ... ntee or accept any liability with respect to the correctness ... Copyright by AUDI AG.

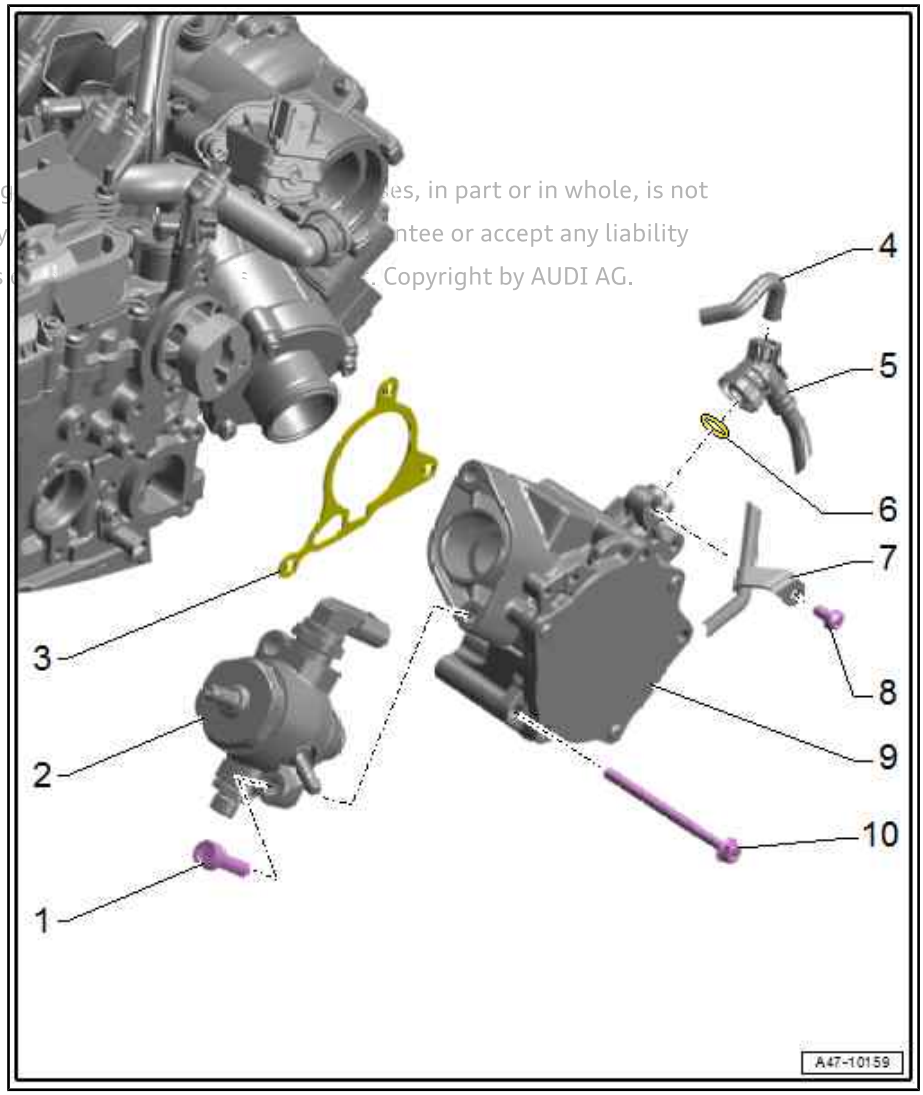

1 - Bolt

- ❑ Tightening torque ⇒ Rep. gr. 24 ; High-pressure pump; Exploded view - high-pressure pump

2 - High-pressure pump

- ❑ Removing and installing ⇒ Rep. gr. 24 ; High-pressure pump; Removing and installing high-pressure pump

3 - Gasket

- ❑ Renew

4 - Vacuum hose

5 - Vacuum hose

- ❑ With vacuum sender - G608-
- ❑ Renew vacuum hose if damaged
- ❑ Removing and installing vacuum sender - G608- ⇒ page 213

6 - O-ring

- ❑ Renew after removing

7 - Coolant line

8 - Bolt

- ❑ 9 Nm

9 - Vacuum pump

- ❑ The vacuum pump is driven mechanically
- ❑ Checking vacuum system ⇒ page 214
- ❑ Removing and installing ⇒ page 222

10 - Bolt

- ❑ 9 Nm

4.2.2 Exploded view - vacuum pump, vehicles with 5-cylinder TFSI engine

Note

- *Clean bolts and nuts before reusing.*
- *Always renew self-locking bolts/nuts.*
- *Always renew damaged bolts/nuts.*

1 - Bolt
- ❑ 9 Nm

2 - Gasket
- ❑ Renew after removing

3 - Timing chain cover (bottom)

4 - Vacuum sender - G608-
- ❑ Removing and installing ⇒ page 213

5 - O-ring
- ❑ Renew if damaged

6 - Vacuum hose
- ❑ With non-return valve
- ❑ Renew vacuum hose if damaged

7 - Vacuum hose

8 - Clip

9 - Vacuum pump
- ❑ The vacuum pump is driven mechanically
- ❑ Checking vacuum system ⇒ page 214
- ❑ Removing and installing ⇒ page 224

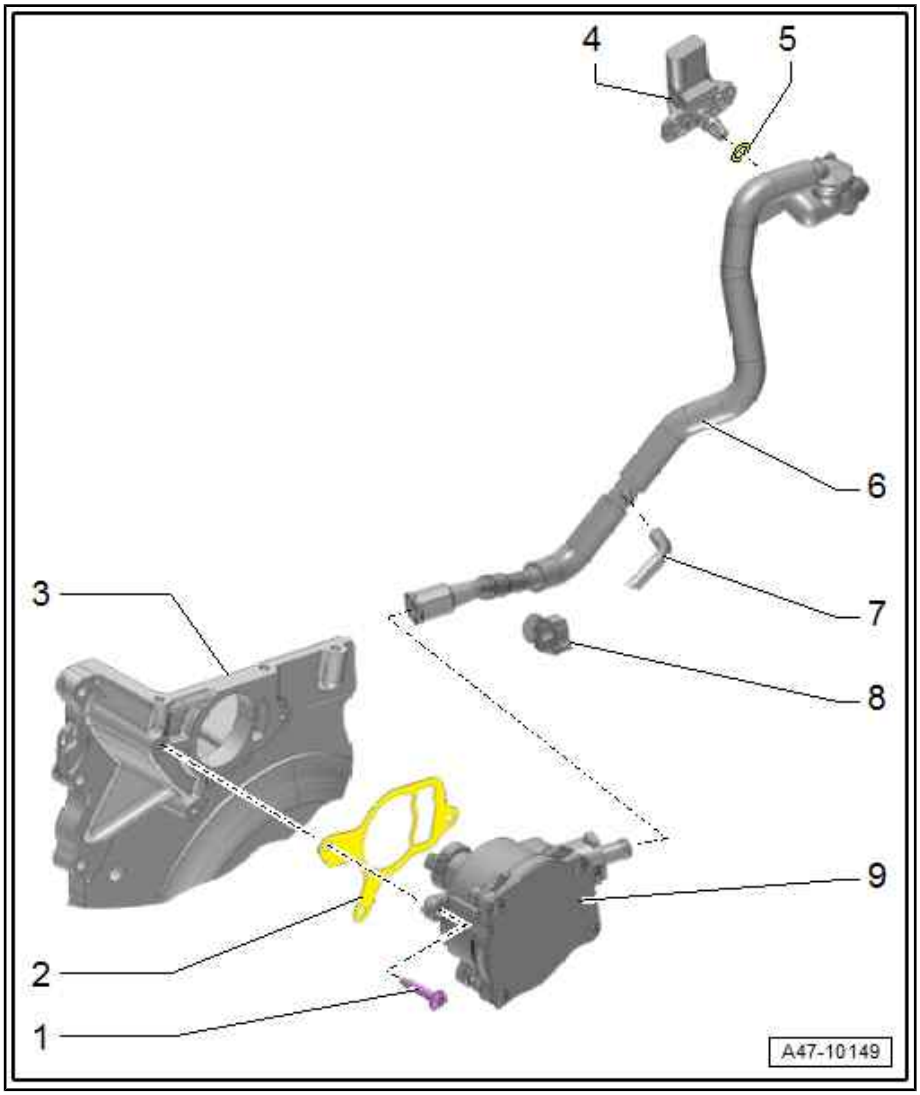

4.3 Checking non-return valve

– Remove non-return valve ⇒ page 210 .

- The valve should allow air to pass in the direction indicated by the arrow.
- Valve must remain closed in opposite direction.

– Install non-return valve ⇒ page 210 .

Note

Pay attention to direction of flow: the arrow symbol points towards the vacuum pump.

Protected by copyright. Copying for private or commercial purposes, in part or in whole, is not permitted unless authorised by AUDI AG. AUDI AG does not guarantee or accept any liability with respect to the correctness of information in this document. Copyright by AUDI AG.

4.4 Removing and installing non-return valve

Note

- *Clean bolts and nuts before reusing.*
- *Always renew self-locking bolts/nuts.*
- *Always renew damaged bolts/nuts.*

Note

The non-return valve is integrated into the vacuum hose and cannot be renewed separately.

Protected by copyright. Copying for private or commercial purposes, in part or in whole, is not permitted unless authorised by AUDI AG. AUDI AG does not guarantee or accept any liability with respect to the correctness of information in this document. Copyright by AUDI AG.

Removing

Vehicles with 1.2/1.4 ltr. TFSI engine:

– Release fastener -arrow- and detach vacuum hose -1-.

– Move vacuum hose clear at air pipe -2-.

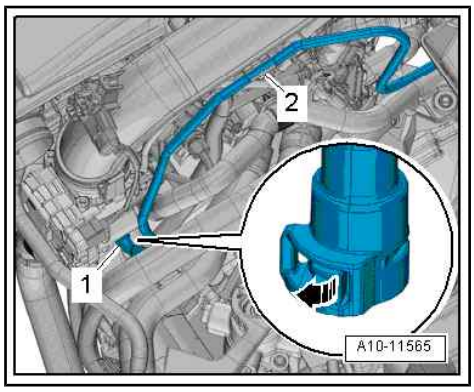

Vehicles with 1.5 ltr./1.8 ltr./2.0 ltr. TFSI engine:

– Remove engine cover panel ⇒ Rep. gr. 10 ; Engine cover panel; Removing and installing engine cover panel .

– Release hose clips -1, 2- and remove air intake pipe.

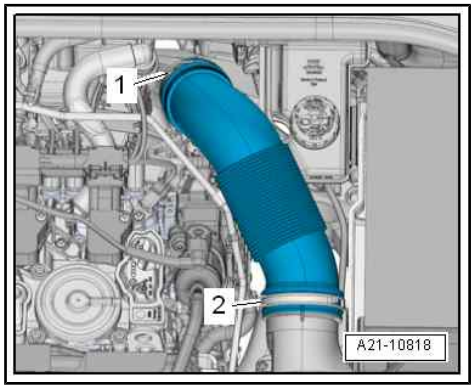

Vehicles with 1.8/2.0 ltr. TFSI engine:

– Disconnect vacuum hose -2-.

– Press release tabs on vacuum hose -1- and disconnect hose from vacuum pump.

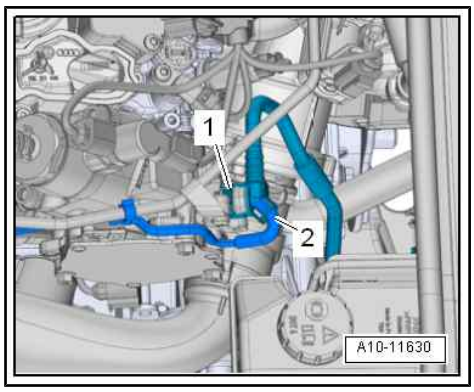

Vehicles with 1.5 ltr. TFSI engine (petrol):

– Release fastener -arrow- and disconnect vacuum hoses, taking care not to damage them.

– Move vacuum hose -1- clear at intake manifold and place it to left side.

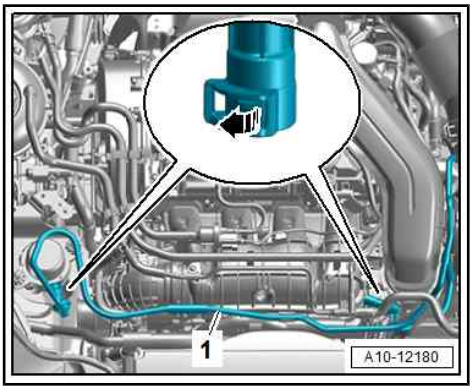

Vehicles with 1.5 ltr. TFSI engine (g-tron):

– Release fastener -arrow- and disconnect vacuum hose -1-, taking care not to damage it.

– Move vacuum hose clear.

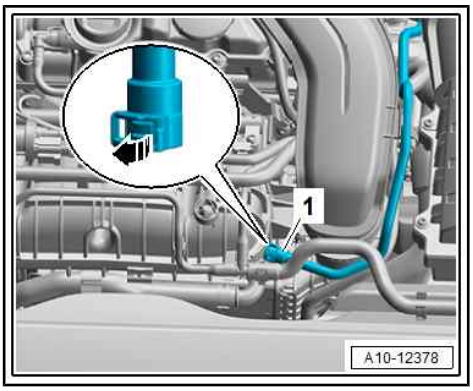

– Release fastener -arrow- and disconnect vacuum hose -1-, taking care not to damage it.

– Move vacuum hose clear and place it to left side.

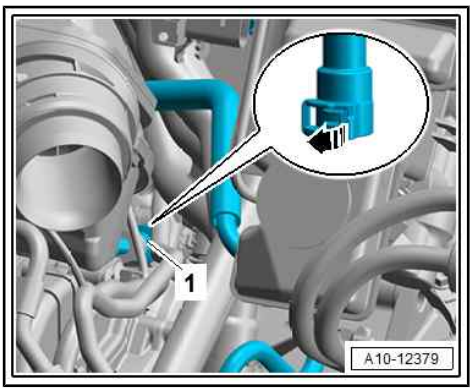

Vehicles with 1.6/2.0 ltr. TDI engine:

– Remove engine cover panel ⇒ Rep. gr. 10 ; Engine cover panel; Removing and installing engine cover panel .

– Move vacuum hoses clear -arrows-.

– Release hose clips -1, 2- and remove air intake pipe.

Protected by copyright. Copying for private or commerc
permitted unless authorised by AUDI AG. AUDI AG does
with respect to the correctness of information in this do

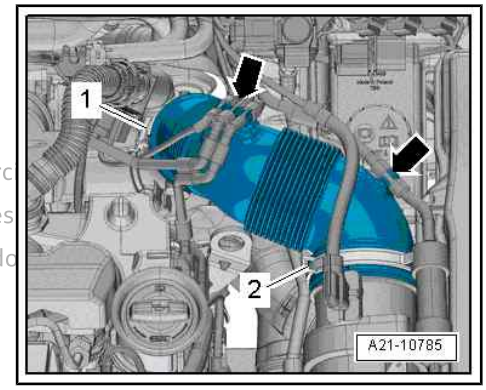

– Release fastener -arrow- and detach vacuum hose -1-.

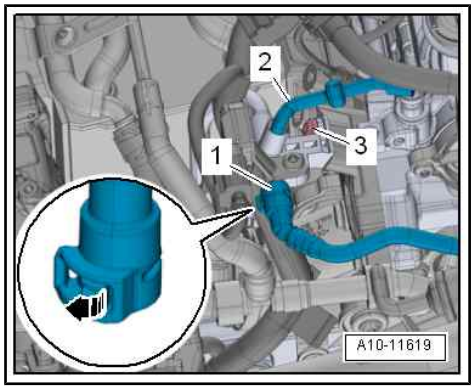

Note

- *Different types depending on vehicle version.*
- *Disregard items -2 and 3-.*

Vehicles with 2.5 ltr. TFSI engine:

– Remove air cleaner housing ⇒ Rep. gr. 24 ; Air cleaner; Removing and installing air cleaner housing .

– Disconnect vacuum hose -2-.

– Move vacuum hose -1- clear, disconnect from brake servo vacuum pump and detach.

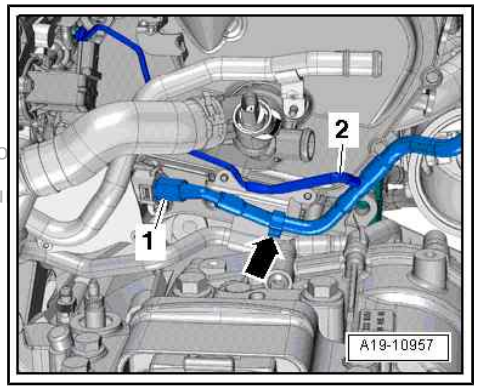

Protected by copyright. Copying for private or commercial
permitted unless authorised by AUDI AG. AUDI AG does no
with respect to the correctness of information in this docu

All engines (continued):

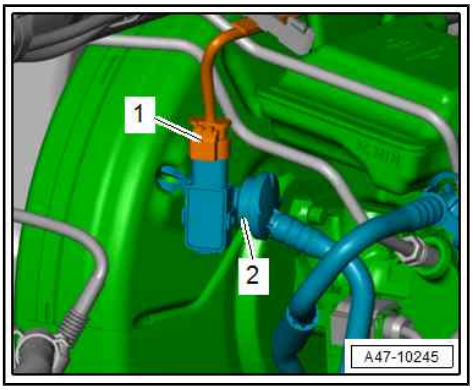

– If fitted, unplug electrical connector -1- from vacuum sender - G608- .

– Detach vacuum hose -2- carefully from brake servo.

Note

Take care not to damage the vacuum hose. Damaged vacuum hoses must be renewed.

Installing

Installation is carried out in reverse order; note the following:

Protected by copyright. Copying for private or commercial purposes, in part or in whole, is not permitted unless authorised by AUDI AG. AUDI AG does not guarantee or accept any liability with respect to the correctness of information in this document. Copyright by AUDI AG.

Note

- *Clean bolts and nuts before reusing.*
- *Always renew self-locking bolts/nuts.*
- *Always renew damaged bolts/nuts.*

– Locate vacuum hose with non-return valve in installation position and attach connections.

Note

To facilitate installation, moisten the non-return valve and vacuum hose slightly with water; do not use oil.

– Install engine cover panel ⇒ Rep. gr. 10 ; Engine cover panel; Removing and installing engine cover panel .

Tightening torques

- ⇒ Rep. gr. 21 ; Charge air system; Exploded view - hose connections for charge air system

4.5 Removing and installing vacuum sender - G608-

Note

- *Clean bolts and nuts before reusing.*
- *Always renew self-locking bolts/nuts.*
- *Always renew damaged bolts/nuts.*

Removing

Vehicles with 4-cylinder engine:

– Remove non-return valve ⇒ page 210 .

Vehicles with 2.5 ltr. TFSI engine:

– Release hose clips -arrows- and remove air intake pipe.

Protected by copyright. Copying for private or commercial
permitted unless authorised by AUDI AG. AUDI AG does n
with respect to the correctness of information in this docu

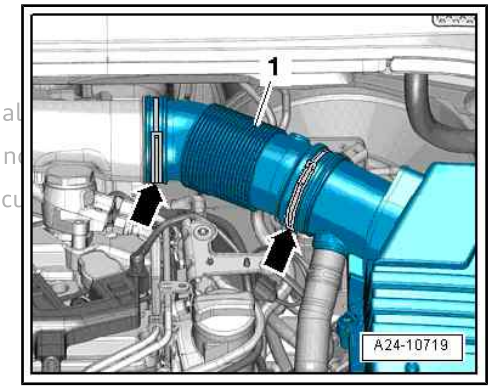

All vehicles (continued):

– Release fasteners -arrows- and detach vacuum sender - G608- -item 1- from non-return valve.

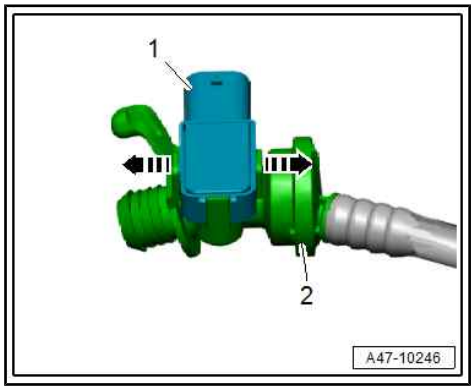

Installing

Installation is carried out in reverse order; note the following:

– Press in vacuum sender - G608- until it engages audibly.

– Install non-return valve ⇒ page 210 .

4.6 Checking vacuum system

⇒ “4.6.1 Test and test requirements”, page 214

⇒ “4.6.2 Connecting brake servo tester”, page 215

⇒ “4.6.3 Checking vacuum generation”, page 216

⇒ “4.6.4 Checking for leaks”, page 216

⇒ “4.6.5 Generating vacuum with hand vacuum pump”, page 217

4.6.1 Test and test requirements

The following instructions are intended to help you trace the causes of faults quickly and effectively in the event of problems involving the brake servo or in the event of a »hard brake pedal«.

This check relates to the following components:

- Brake servo
- Seal between brake master cylinder and brake servo.
- Non-return valve
- Vacuum hoses with connectors
- Vacuum pump (if fitted)

When evaluating the measured results, bear in mind that they will be influenced by your geographical location. The higher your location is above sea level, the lower the air pressure will be.

Before checking the vacuum system, it is important to observe the following test requirements:

- Visual inspection of all vacuum hoses for damage (e.g. cracks or animal bites) and to check that they are correctly and firmly attached
- Ensure cleanliness when working on the vacuum system

- Before starting work, clean the engine compartment if necessary

Special tools and workshop equipment required

- Brake servo tester - VAS 6721-

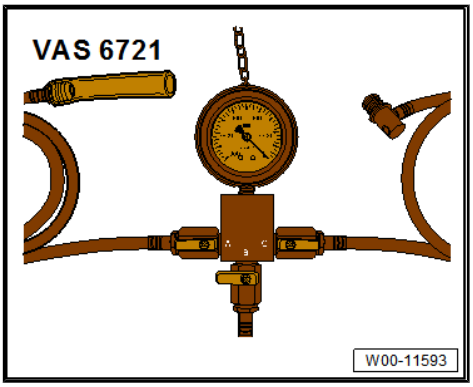

4.6.2 Connecting brake servo tester

– Pull vacuum hose out of brake servo.

Note

First press the brake pedal several times in order to facilitate removal of the vacuum hose.

– Connect brake servo tester - VAS 6721- .

Item	Component	Explanation
A	Shut-off valve	To vacuum hose, non-return valve and (if fitted) vacuum pump
B	Shut-off valve	♦ Open to facilitate removal of brake servo tester - VAS 6721- ♦ Open to simulate a fault ♦ Connection for hand vacuum pump - VAS 6213-
C	Shut-off valve	To brake servo

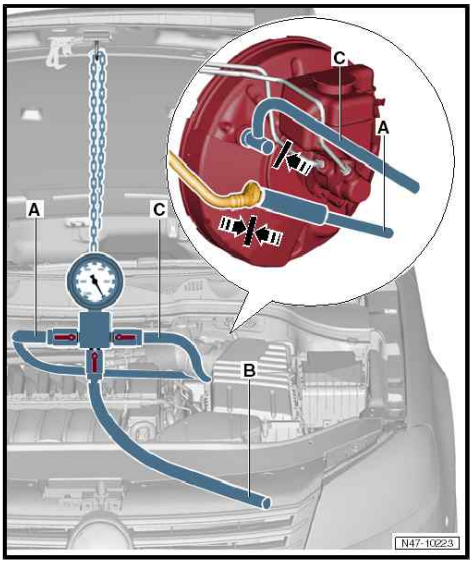

– Push hose -A- of brake servo tester - VAS 6721- onto vacuum hose and press adapter -C- into brake servo.

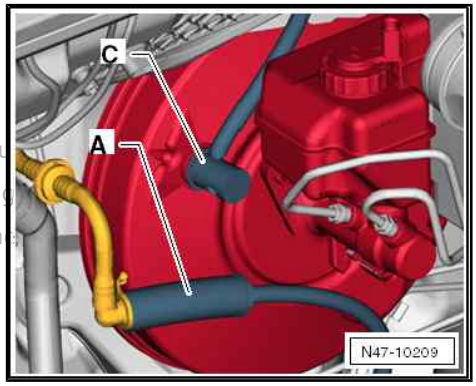

Protected by copyright. Copying for private or commercial pu
permitted unless authorised by AUDI AG. AUDI AG does not g
with respect to the correctness of information in this docum

4.6.3 Checking vacuum generation

Note

- *The mean atmospheric pressure at sea level is 1013 mbar and decreases rapidly with increasing altitude (approx. 100 mbar per 1,000 m of altitude). Fluctuations at different locations and times also influence vacuum generation.*
- *A cold engine, an active air-conditioning system as well as engine idling have an adverse influence on vacuum generation.*

Protected by copyright. Copying for private or commercial purposes, in part or in whole, is not permitted unless authorised by AUDI AG. AUDI AG does not guarantee or accept any liability with respect to the correctness of information in this document. Copyright by AUDI AG.

– Before starting work, check all vacuum hoses for damage (e.g. cracks or animal bites) and make sure they are correctly and securely attached.

– Connect brake servo tester - VAS 6721- ⇒ page 215 .

– Open shut-off valve -A-.

– Close shut-off valves -B and C-.

– Start warm engine (>60° C), press accelerator briefly (engine speed greater than 2000/min).

– Read indicated value.

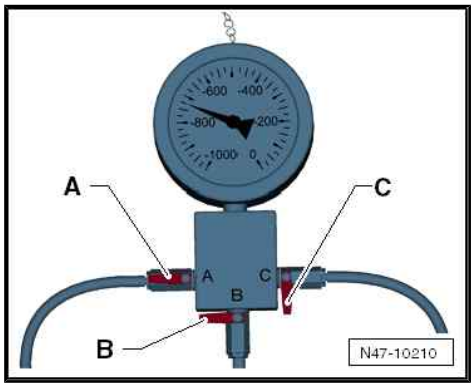

Under normal conditions (see notes), the generated vacuum should be between 600 and 950 mbar (depending on engine version).

If the specified value is not obtained even though the test conditions (see notes) have been met, the vacuum system must first be checked for leaks.

– For comparison purposes, generate the vacuum with the hand vacuum pump - VAS 6213- ⇒ page 217 .

Open shut-off valve -B- to facilitate removal of hose connections and adapter.

4.6.4 Checking for leaks

Note

- *The mean atmospheric pressure at sea level is 1013 mbar and decreases rapidly with increasing altitude (approx. 100 mbar per 1,000 m of altitude). Fluctuations at different locations and times also influence vacuum generation.*
- *A cold engine, an active air-conditioning system as well as engine idling have an adverse influence on vacuum generation.*

– Before starting work, check all vacuum hoses for damage (e.g. cracks or animal bites) and make sure they are correctly and securely attached.

– Connect brake servo tester - VAS 6721- ⇒ page 215 .

– Open shut-off valve -A-.
– Close shut-off valves -B and C-.
– Start warm engine (>60° C), press accelerator briefly (engine speed greater than 2000/min).

Under normal conditions (see notes), the generated vacuum should be between 600 and 950 mbar (depending on engine version).

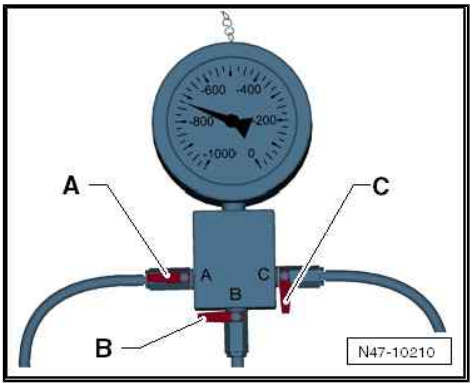

– Open shut-off valve -C- to evacuate brake servo.
– Switch off engine.
– Read and make a note of measured value shown.
• A vacuum decrease of 400 mbar in 12 hours is permissible.

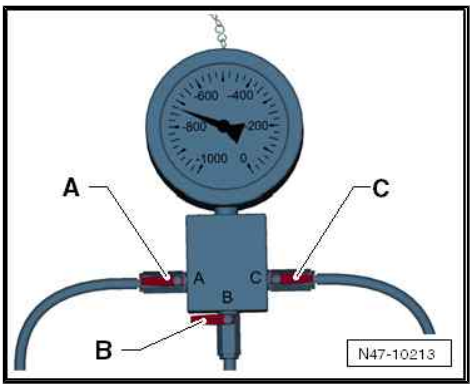

Note

If there are major leaks, the vacuum will decrease rapidly within a few seconds.

– If there is a large drop in vacuum, trace the leak as follows:

A - Vacuum check in vicinity of brake servo

– After building up vacuum, close shut-off valve -A- in order to check brake servo vacuum system.

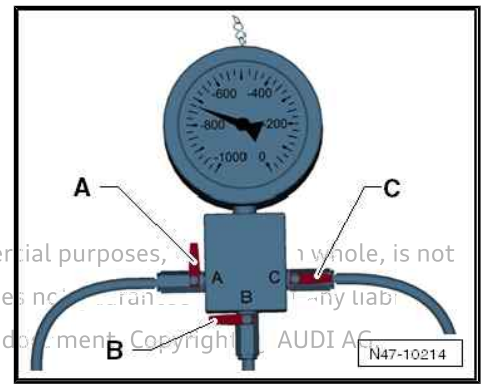

Protected by copyright. Copying for private or commercial purposes, in whole, is not permitted unless authorised by AUDI AG. AUDI AG does not guarantee or assume any liability with respect to the correctness of information in this document. Copyright © AUDI AG.

B - Vacuum check in vicinity of non-return valve, vacuum hoses with connectors and vacuum pump/intake manifold:

– After building up vacuum, close shut-off valve -C- in order to check vacuum system from brake servo tester - VAS 6721- to intake manifold or vacuum pump.

Open shut-off valve -B- to facilitate removal of hose connections and adapter.

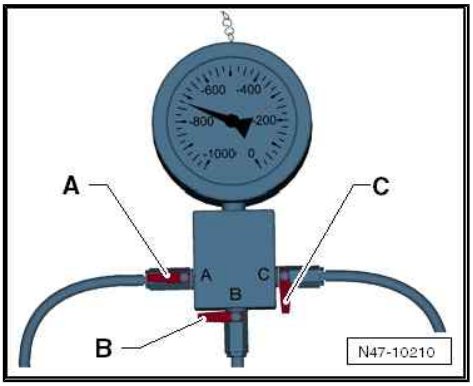

4.6.5 Generating vacuum with hand vacuum pump

Special tools and workshop equipment required

- Hand vacuum pump - VAS 6213-

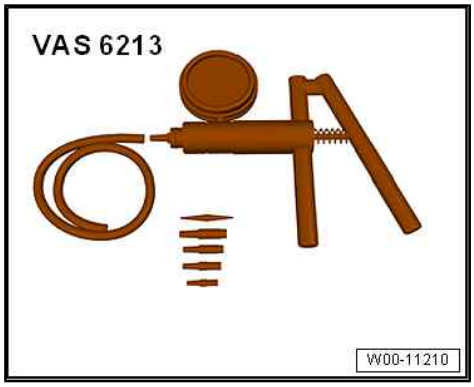

Instead of vacuum generation using the engine or vacuum pump, vacuum can also be generated by means of the hand vacuum pump - VAS 6213- in certain cases.

Protected by copyright. Copying for private or commercial purposes, in part or in whole, is not permitted unless authorised by AUDI AG. AUDI AG does not guarantee or accept any liability with respect to the correctness of information in this document. Copyright by AUDI AG.

– To do this, connect hand vacuum pump - VAS 6213- to vacuum hose from connection -B- on brake servo tester - VAS 6721- .
– Open shut-off valve -B-.
– Generate vacuum with hand vacuum pump - VAS 6213- until brake servo tester - VAS 6721- indicates between 600 and 950 mbar.
– Then carry out the corresponding checks.

4.7 Removing and installing electric vacuum pump

⇒ “4.7.1 Removing and installing electric vacuum pump (at rear of engine)”, page 218

⇒ “4.7.2 Removing and installing electric vacuum pump - vehicles with 1.0 ltr. TFSI engine”, page 219

4.7.1 Removing and installing electric vacuum pump (at rear of engine)

The installation position of the electric vacuum pump varies depending on the engine version ⇒ “4.1 Exploded view - electric vacuum pump”, page 202 . The following procedure applies to all versions with the electric vacuum pump at the rear of engine.

Note

- *Clean bolts and nuts before reusing.*
- *Always renew self-locking bolts/nuts.*
- *Always renew damaged bolts/nuts.*

Removing

– Remove noise insulation ⇒ General body repairs, exterior; Rep. gr. 66 ; Noise insulation; Removing and installing noise insulation .

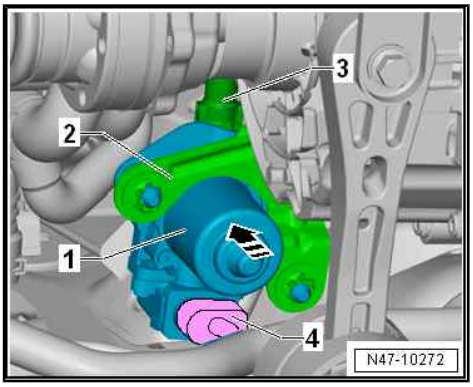

– Unplug electrical connector -4-.
– Disconnect vacuum hose -3-.
– Unbolt vacuum pump for brakes - V192- -item 1- together with bracket -2-.
– If necessary, detach vacuum pump from bracket.

Installing

Installation is carried out in reverse order; note the following:

Note

- *Clean bolts and nuts before reusing.*
- *Always renew self-locking bolts/nuts.*
- *Always renew damaged bolts/nuts.*

Note

The bracket for the electric vacuum pump should be transferred from the old unit if the vacuum pump is being renewed.

Tightening torques

- ⇒ “4.1.1 Exploded view - electric vacuum pump (at rear of engine)”, page 202
- ⇒ General body repairs, exterior; Rep. gr. 66 ; Noise insulation; Exploded view - noise insulation

4.7.2 Removing and installing electric vacuum pump - vehicles with 1.0 ltr. TFSI engine

Note

- *Clean bolts and nuts before reusing.*
- *Always renew self-locking bolts/nuts.*
- *Always renew damaged bolts/nuts.*

Protected by copyright. Copying for private or commercial purposes, in part or in whole, is not permitted unless authorised by AUDI AG. AUDI AG does not guarantee or accept any liability with respect to the correctness of information in this document. Copyright by AUDI AG.

Removing

– Disconnect vacuum hose -3-.
– Unplug electrical connector -1-.
– Remove bolts -arrows-.
– Detach bracket -2- with vacuum pump for brakes - V192- .
– If necessary, detach vacuum pump from bracket.

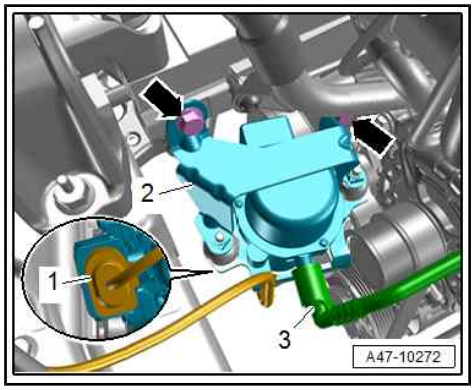

Installing

Installation is carried out in reverse order; note the following:

Note

- *Clean bolts and nuts before reusing.*
- *Always renew self-locking bolts/nuts.*
- *Always renew damaged bolts/nuts.*

Tightening torques

- ⇒ “4.1.2 Exploded view - electric vacuum pump, vehicles with 1.0 ltr. TFSI engine”, page 203

4.7.3 Removing and installing electric vacuum pump - vehicles with 1.5 ltr. TFSI engine (petrol)

Note

- *Clean bolts and nuts before reusing.*
- *Always renew self-locking bolts/nuts.*
- *Always renew damaged bolts/nuts.*

Protected by copyright. Copying for private or commercial purposes, in part or in whole, is not permitted unless authorised by AUDI AG. AUDI AG does not guarantee or accept any liability with respect to the correctness of information in this document. Copyright by AUDI AG.

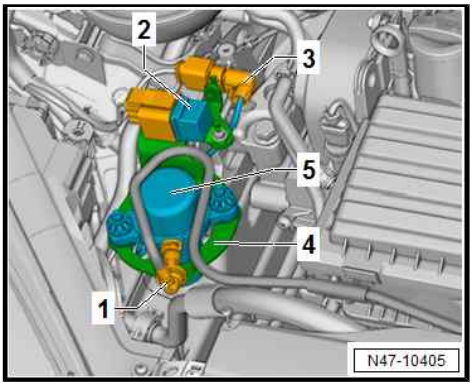

Removing

– Release and disconnect vacuum hose -1-.

– If fitted, detach vacuum pump relay - J318- -item 2- with bracket and place to one side.

– Unplug electrical connector -3-.

– Detach bracket -4- with vacuum pump for brakes - V192- .

– If necessary, detach vacuum pump from bracket.

Installing

Installation is carried out in reverse order; note the following:

Note

- *Clean bolts and nuts before reusing.*
- *Always renew self-locking bolts/nuts.*
- *Always renew damaged bolts/nuts.*

Tightening torques

- ⇒ “4.1.3 Exploded view - electric vacuum pump, vehicles with 1.5 ltr. TFSI engine (petrol)”, page 204

4.7.4 Removing and installing electric vacuum pump - vehicles with 1.5 ltr. TFSI engine (g-tron)

Note

- *Clean bolts and nuts before reusing.*
- *Always renew self-locking bolts/nuts.*
- *Always renew damaged bolts/nuts.*

Removing

– Remove noise insulation ⇒ General body repairs, exterior; Rep. gr. 66 ; Noise insulation; Removing and installing noise insulation .

– Remove underbody trim (centre) ⇒ General body repairs, exterior; Rep. gr. 66 ; Underbody trim; Exploded view - underbody trim .

– If necessary, remove heat shield for drive shaft (right-side) ⇒ Running gear, axles, steering; Rep. gr. 40 ; Drive shaft; Removing and installing heat shield for drive shaft .

Protected by copyright. Copying for private or commercial purposes, in part or in whole, is not permitted unless authorised by AUDI AG. AUDI AG does not guarantee or accept any liability with respect to the correctness of information in this document. Copyright by AUDI AG.

– Remove bolts -3- and detach heat shield -2- from vacuum pump for brakes - V192- -item 1-.

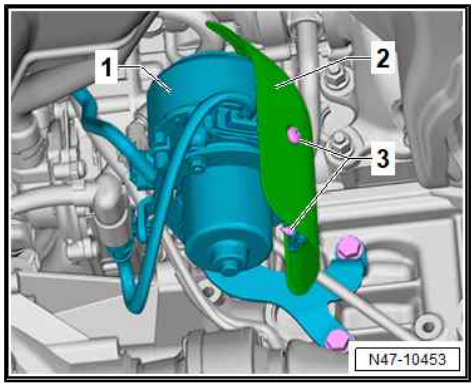

– Unplug electrical connector -3-.
– Disconnect vacuum hose -4-.
– Release fastener -arrow- and disconnect vacuum line.
– Remove bolts -2- and detach bracket with vacuum pump for brakes - V192- -item 1-.
– If necessary, detach vacuum pump from bracket.

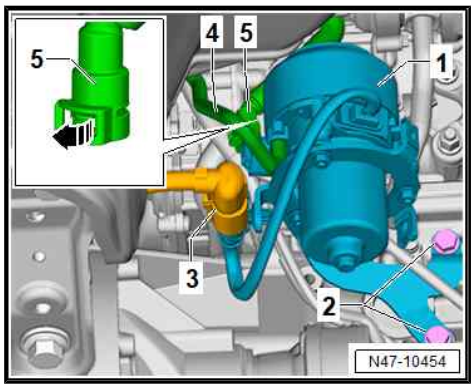

Installing

Installation is carried out in reverse order; note the following:

Note

- *Clean bolts and nuts before reusing.*
- *Always renew self-locking bolts/nuts.*
- *Always renew damaged bolts/nuts.*

Tightening torques

- ⇒ “4.1.4 Exploded view - electric vacuum pump, vehicles with 1.5 ltr. TFSI engine (g-tron)”, page 205

4.8 Removing and installing vacuum pump

⇒ “4.8.1 Removing and installing vacuum pump - vehicles with 4-cylinder TFSI engine”, page 222

⇒ “4.8.2 Removing and installing vacuum pump - vehicles with 5-cylinder TFSI engine”, page 224

⇒ “4.8.3 Removing and installing vacuum pump - vehicles with TDI engine”, page 225

Protected by copyright. Copying for private or commercial purposes, in part or in whole, is not permitted. Disclaimer of liability for AUDI AG. AUDI AG does not guarantee or accept any liability with respect to the correctness of information in this document. Copyright by AUDI AG.

4.8.1 Removing and installing vacuum pump - vehicles with 4-cylinder TFSI engine

Note

- *Clean bolts and nuts before reusing.*
- *Always renew self-locking bolts/nuts.*
- *Always renew damaged bolts/nuts.*

Note

The following procedure applies to the 1.8 ltr. and 2.0 ltr. TFSI engines.

Removing

– Remove high-pressure pump ⇒ Rep. gr. 24 ; High-pressure pump; Removing and installing high-pressure pump .

Caution

Protected by copyright. Copying for private or commercial purposes, in part or in whole, is not permitted unless authorised by AUDI AG. AUDI AG does not make any representation or warranty with respect to the correctness of information in this document.

Risk of damage to coolant line

- ***Do not attempt to bend coolant line to a different shape.***

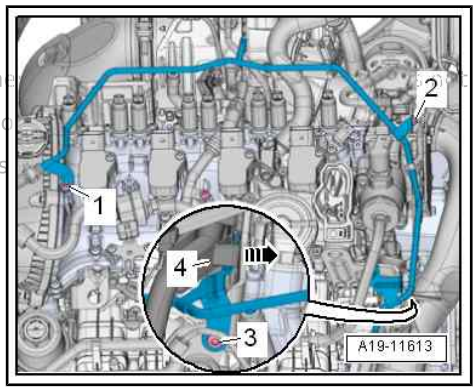

– Remove bolts -1, 2 and 3- and carefully push coolant line slightly to one side.

Note

Disregard items marked -4- and -arrow-.

– Press release tabs on both sides and disconnect vacuum hose -2- from vacuum pump -1-.

– Remove bolts -arrows- and detach vacuum pump.

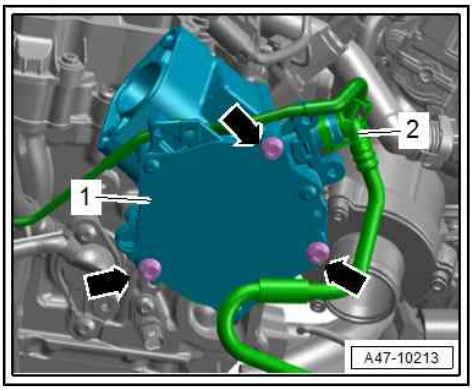

Installing

Installation is carried out in reverse order; note the following:

Note

- *Clean bolts and nuts before reusing.*
- *Always renew self-locking bolts/nuts.*
- *Always renew damaged bolts/nuts.*

Note

Renew gasket.

– Ensure that gasket is seated correctly.

– Turn drive lugs of vacuum pump -1- so they engage in slot in camshaft when vacuum pump is installed -arrows-.

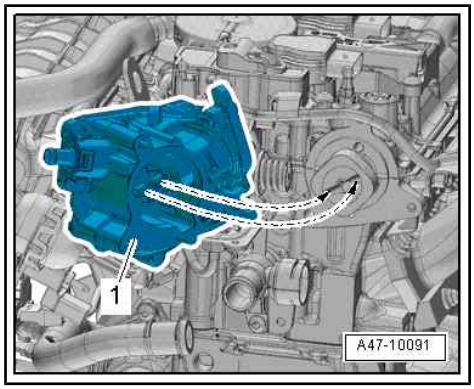

Tightening torques

- ⇒ “4.2 Exploded view - vacuum pump”, page 207
- ⇒ Rep. gr. 24 ; High-pressure pump; Exploded view - high-pressure pump

4.8.2 Removing and installing vacuum pump - vehicles with 5-cylinder TFSI engine

Note

- *Clean bolts and nuts before reusing.*
- *Always renew self-locking bolts/nuts.*
- *Always renew damaged bolts/nuts.*

Removing

– Remove coolant pipe (left-side) ⇒ Rep. gr. 19 ; Coolant pipes; Removing and installing coolant pipes .

– Remove bolts -arrows- and detach vacuum pump -1-.

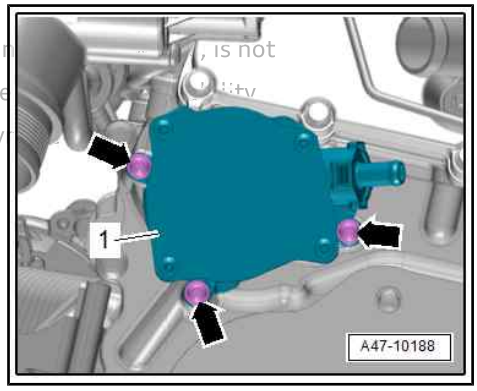

Protected by copyright. Copying for private or commercial purposes, in [illegible], is not permitted unless authorised by AUDI AG. AUDI AG does not guarantee [illegible] with respect to the correctness of information in this document. Copy[illegible]

Installing

Installation is carried out in reverse order; note the following:

Note

- *Clean bolts and nuts before reusing.*
- *Always renew self-locking bolts/nuts.*
- *Always renew damaged bolts/nuts.*

Note

Renew gasket.

– Ensure that gasket is seated correctly.

– Turn drive lugs of vacuum pump -1- so they engage in slots on drive sprocket for camshaft timing chain when vacuum pump is installed -arrows-.

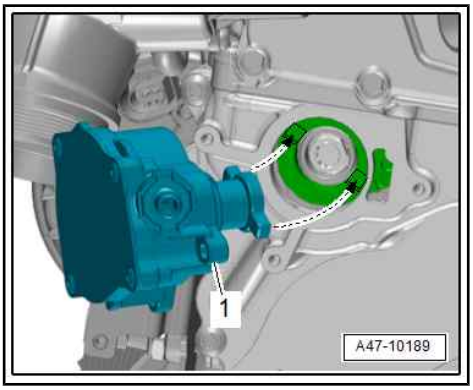

Tightening torques

- ⇒ “4.2.2 Exploded view - vacuum pump, vehicles with 5-cylinder TFSI engine”, page 208
- ⇒ Rep. gr. 19 ; Coolant pipes; Removing and installing coolant pipes

4.8.3 Removing and installing vacuum pump - vehicles with TDI engine

⇒ “4.8.4 Removing and installing vacuum pump - vehicles with 2.0 ltr. TDI engine”, page 225

The TDI engines have a mechanical vacuum pump which is combined in a single unit with the oil pump. Removing and installing ⇒ Rep. gr. 17 ; Sump/oil pump; Removing and installing oil pump .

4.8.4 Removing and installing vacuum pump - vehicles with 2.0 ltr. TDI engine

Depending on the engine version, a brake servo vacuum pump is integrated in the oil pump (EA 288 engine, not Evo engine).

⇒ Rep. gr. 17 ; Sump/oil pump; Removing and installing oil pump

Vehicles with 2.0 ltr. TDI engine (continued):

The vacuum pump is located in the rear of the engine compartment -arrow-, as seen in the direction of travel.

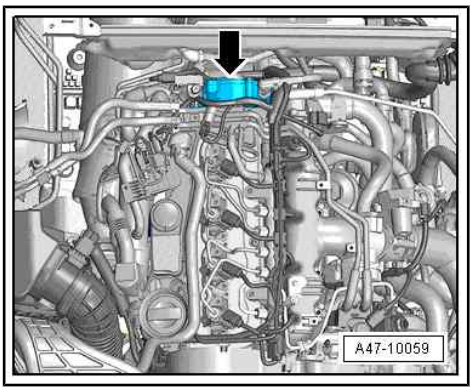

Removing

– Detach engine cover panel.

Protected by copyright. Copying for private or commercial purposes, in part or in whole, is not permitted unless authorised by AUDI AG. AUDI AG does not guarantee or accept any liability with respect to the correctness of information in this document. Copyright by AUDI AG.

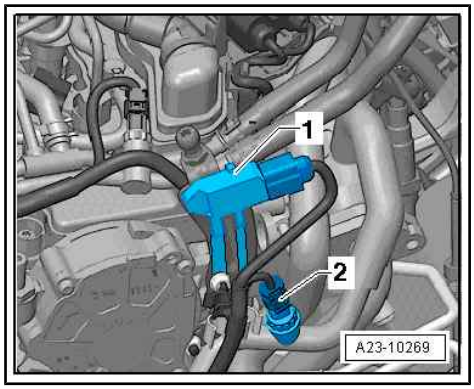

– Remove pressure sensor -1- for diesel particulate filter from bracket.
– Unclip pressure sensor pipe -2- and carefully press to the side.
– Unscrew double clip from bracket.
– Unscrew bracket for pressure sensor at vacuum pump (2 nuts).

Note

There are two more nuts beneath the pressure sensor bracket which also have to be unscrewed.

– Pull coolant pipe off vacuum pump stud and press to side.
– Detach vacuum hose from vacuum pump.
– Remove all bolts from sealing flange of vacuum pump.
– Pull vacuum pump out of its mounting.

Installing

Note

Renew gaskets.

Ensure that seals are seated correctly.

– Turn drive lugs of vacuum pump so they engage in slots in camshaft when vacuum pump is installed.
– Fit vacuum pump.
– Fit all bolts to sealing flange of vacuum pump and tighten.

Tightening torque of bolts on sealing flange: 9 Nm

Protected by copyright. Copying for private or commercial purposes, in part or in whole, is not permitted unless authorised by AUDI AG. AUDI AG does not guarantee or accept any liability with respect to the correctness of information in this document. Copyright by AUDI AG.

Note

Screw in and tighten the two nuts beneath the pressure sensor bracket.

– Fit new hose clip onto vacuum hose.
– Connect the vacuum hose to the vacuum pump.
– Fasten hose clip using suitable pliers.
– Slide coolant pipe over vacuum pump stud.
– Fit bracket for pressure sensor of diesel particulate filter at vacuum pump.
– Secure bracket.
– Clip pressure sensor pipes into bracket.

– Tighten pressure sensor.
– Install engine cover panel.

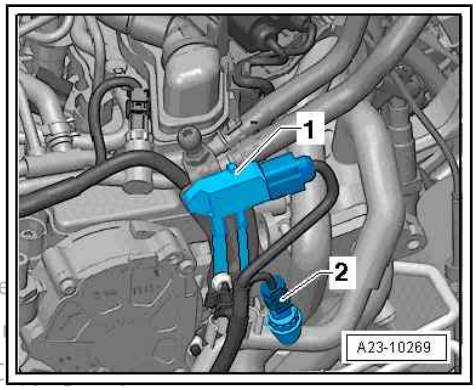

Protected by copyright. Copying for private or commercial purpose
permitted unless authorised by AUDI AG. AUDI AG does not guara
with respect to the correctness of information in this document. C

5 Brake lines

⇒ “5.1 Connection points”, page 228

⇒ “5.2 Repairing brake lines”, page 228

5.1 Connection points

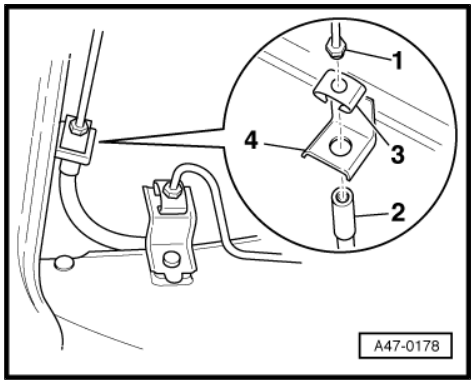

Brake lines on underbody

1 - Brake line

2 - Brake hose

3 - Retaining spring

4 - Brake hose retainer

Brake line to brake line

Protected by copyright. Copying for private or commercial purposes, in part or in whole, is not permitted unless authorised by AUDI AG. AUDI AG does not guarantee or accept any liability with respect to the correctness of information in this document. Copyright by AUDI AG.

– Counterhold union nut -1- when tightening union screw -1-.

• Tightening torque: 14 Nm.

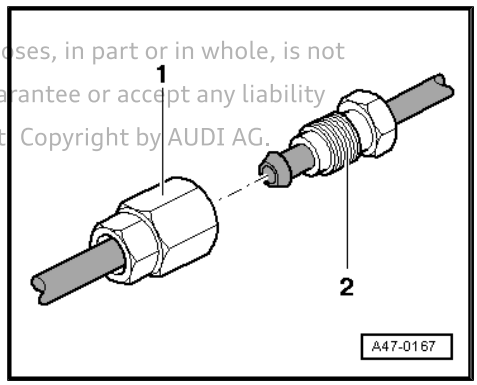

5.2 Repairing brake lines

With the aid of the flanging tool for brake lines - VAS 6056- it is possible to make connections on the ends of the brake lines without damaging the coating. In certain cases this makes it possible to replace sections of brake lines and thus save repair costs.

Caution

Risk of damage to brake lines

- *The flaring tool set V.A.G 1356 must not be used for the black brake lines because of the coating and the diameter of these brake lines.*
- *Do not bend brake lines more than 90°; this would cause kinks or other deformations which would excessively restrict the brake lines.*

Note

- *Wherever possible, disconnect the brake lines on the underside of the vehicle.*
- *Select the position of the connecting pieces so that they cannot chafe against any moving parts.*
- *Do not grease the spindle; clean with methylated spirits only.*

Special tools and workshop equipment required

- Flanging tool for brake lines - VAS 6056-

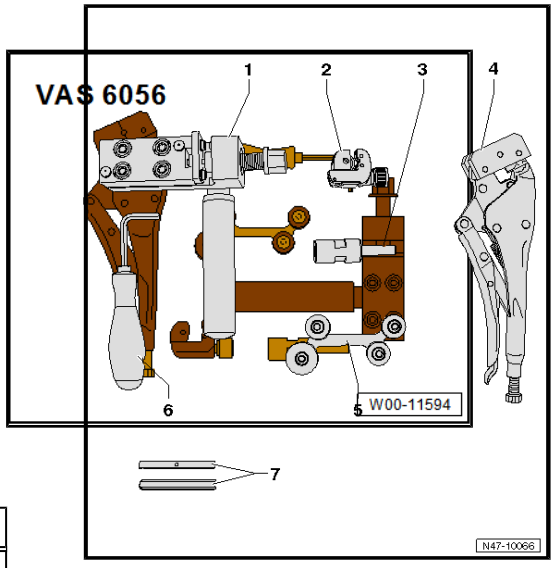

List of tools in set

Item	Tool	Tool number
1	Flanging tool	VAS 6056/1
2	Pipe cutter	VAS 6056/2
3	Brake line scraper tool [1)]	VAS 6056/3
4	Set of grips with plastic jaws	VAS 6056/4
5	Pipe bending tool	VAS 6056/5
6	Allen key (6 mm)	-
7	Jaws for flanging tool	VAS 6056/6 VAS 6056/7

- [1)] The grub screws (in the stem and on the sides of the tool) are pre-set and must not be turned.

Flanging tool (including jaws VAS 6056/6)

Protected by copyright. Copying for private or commercial purposes, in part or in whole, is not permitted unless authorised by AUDI AG. AUDI AG does not guarantee or accept any liability with respect to the correctness of information in this document. Copyright by AUDI AG.

1 - Top section of flanging tool

- ❑ Unscrew this part to change jaws of flanging tool

2 - Mounting for handle

- ❑ Must be removed to access retaining screw for top section

3 - Retaining screw

- ❑ For top section of flanging tool

4 - Grub screws for jaws

- ❑ These screws centralise and secure jaws of flanging tool
- ❑ 2 mm socket head

5 - Jaws for flanging tool

- ❑ Different versions available
- ❑ Assembly instructions ⇒ page 230

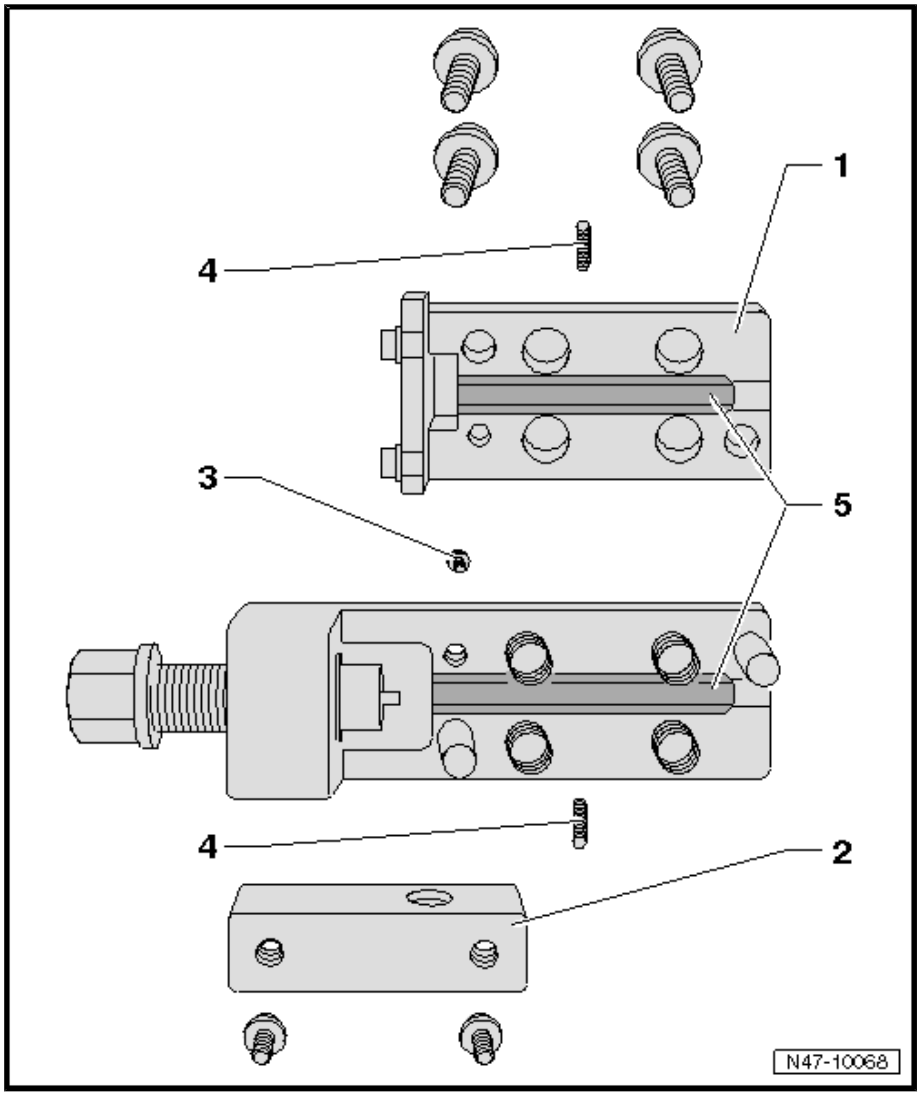

Assembly instructions for jaws of flanging tool:

- ♦ VAS 6056/6 (dark) for black brake lines
- ♦ VAS 6056/7 (light) for green brake lines

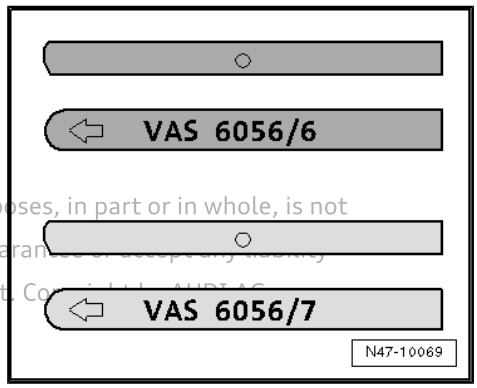

Note

The arrow on the rounded end of the jaws must face the end of the housing and the straight end of the jaws must face the spindle, otherwise the flanged connection on the brake line will not be formed correctly.

Protected by copyright. Copying for private or commercial purposes, in part or in whole, is not permitted unless authorised by AUDI AG. AUDI AG does not guarantee or accept any liability with respect to the correctness of information in this document. Copyright by AUDI AG

Instructions for use

– Unscrew defective brake line at brake caliper. Catch escaping brake fluid and dispose of fluid in the correct manner.

– Cut through brake line at a suitable point (straight, easily accessible section of pipe) using pipe cutter -2-.
– Remove section of pipe to be replaced.
– De-grease outside surface of brake lines.

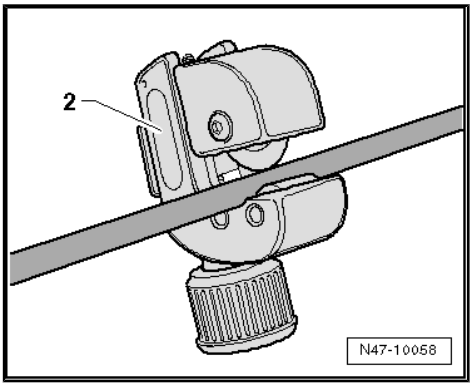

– Clamp brake line in mole grips -4- so that approx. 50mm protrudes out of plastic jaws.
– Clamp brake line scraper tool -3- in electric drill and apply tool to brake line.
– With electric drill running at slow speed, exert light pressure and strip off coating from brake line.

The length of the coating that is stripped off is determined by the limit stop incorporated in the brake line scraper tool.

– Pull scraper tool off brake line and clean off residue of coating.

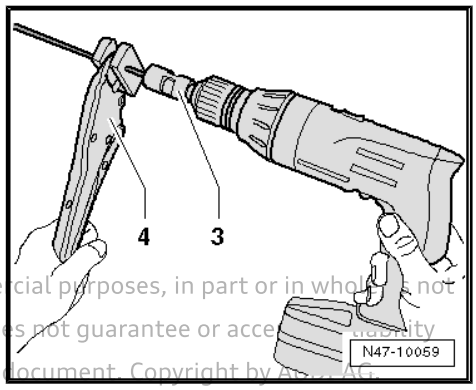

Protected by copyright. Copying for private or commercial purposes, in part or in whole, is not permitted unless authorised by AUDI AG. AUDI AG does not guarantee or accept any liability with respect to the correctness of information in this document. Copyright by AUDI AG.

– Remove mole grips and slide union screw -D- onto brake line.

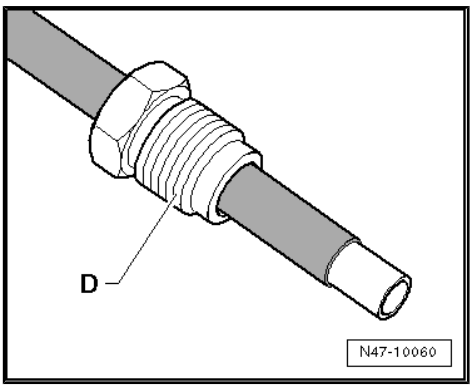

– Push brake line -B- against limit stop -A- in flanging tool.

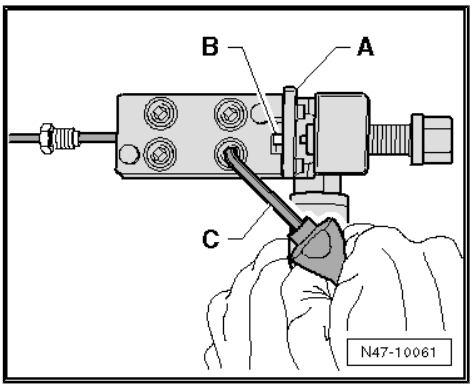

Note

The brake line must be in contact with the limit stop when the socket head bolts are tightened, otherwise the flanged connection on the brake line will not be formed correctly.

C - Allen key

– Clamp brake line in flanging tool until brake line can no longer be moved. Then fold up limit stop -A- and fully tighten socket head bolts in diagonal sequence using Allen key.

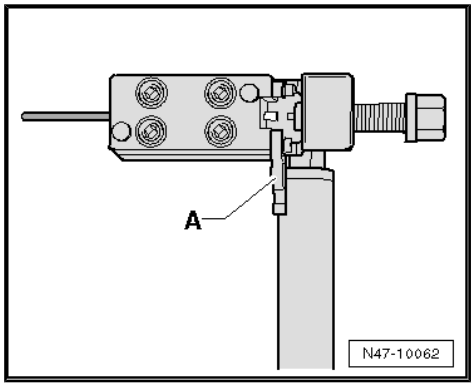

– Screw spindle into flanging tool onto limit stop.
– Unscrew spindle.
– Slacken off socket head bolts in diagonal sequence.
– Take brake line out of flanging tool. Clean and inspect brake line with flanged connection.
– Connect brake filling and bleeding equipment - VAS 5234- and briefly flush out section of pipe remaining in vehicle.
– Attach hose of bleeder bottle to flanged connection of brake line and operate brake filling and bleeding equipment - VAS 5234- briefly until some brake fluid has run through.
– Blow out new section of brake line with compressed air before installing.

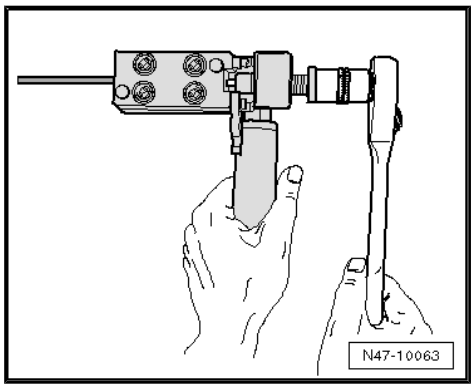

– Join together sections of brake line with connecting piece -E-.
– Install brake line.
– Finally, bleed brake system ⇒ page 235 .

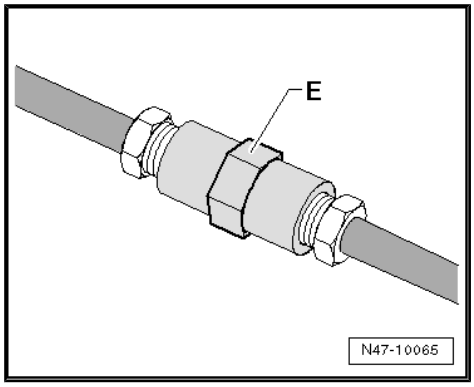

Protected by copyright. Copying for private or commercial purposes, in part or in whole, is not permitted unless authorised by AUDI AG. AUDI AG does not guarantee or accept any liability with respect to the correctness of information in this document. Copyright by AUDI AG.

6 Hydraulic system

⇒ “6.1 General notes on brake fluid”, page 233

⇒ “6.2 Bleeding hydraulic system”, page 235

⇒ “6.2.3 Bleeding hydraulic system (additional bleeding procedure)”, page 241

⇒ “6.3 Pre-bleeding brake system pressure accumulator VX70 ”, page 243

⇒ “6.4 Leak test”, page 244

6.1 General notes on brake fluid

Brake fluid is hygroscopic, i.e. it has the tendency to absorb water and moisture from the atmosphere.

The boiling point decreases as the water content increases, which means a considerable rise in brake fluid temperature can lead to formation of vapour bubbles and brake failure.

The colour of the brake fluid becomes darker over the course of time. A dark brake fluid colour is not an indication of its condition. The change in colour is caused by chemical reactions.

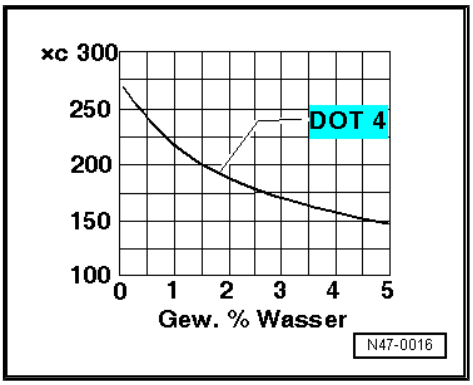

Protected by copyright. Copying for private or commercial purposes, in part or in whole, is not permitted unless authorised by AUDI AG. AUDI AG does not guarantee or accept any liability with respect to the correctness of information in this document. Copyright by AUDI AG.

Even minute quantities coming into contact with a seal or sleeve will affect the component and could impair brake operation. The consequences of a contaminated brake system only become apparent months later, and then give rise to greater expenses, particularly in vehicles equipped with ABS.

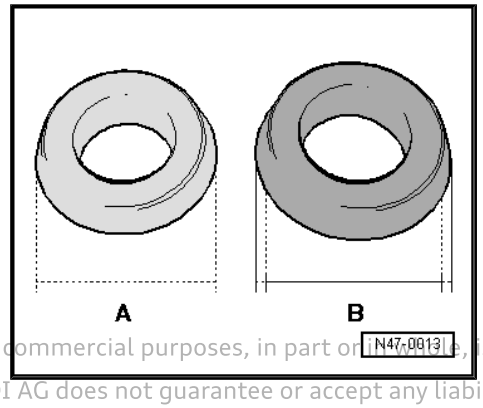

A - Sleeve (original size)

B - Sleeve (swollen due to contact with mineral oil)

Summary of the above mentioned points:

- Always keep brake fluid containers properly sealed. This is the only way of preventing contamination by oil, dirt, cleaning agents or moisture.
- Brake fluid containers should be kept completely separate from oils (including hydraulic fluid) and cleaning agents to prevent any mixture of fluids or even filling of the brake system with an incorrect fluid.

Protected by copyright. Copying for private or commercial purposes, in part or in whole, is not permitted unless authorised by AUDI AG. AUDI AG does not guarantee or accept any liability with respect to the correctness of information in this document. Copyright by AUDI AG.

WARNING

Risk to health

- *Brake fluid is poisonous and must NOT be drawn off by sucking through a hose.*
- *Always wear chemical-resistant protective gloves to prevent brake fluid from contacting skin.*
- *Always observe the relevant environmental regulations for disposal.*

Accident risk: if the water content in the brake fluid is too high, this can cause vapour bubbles in the fluid.

- *Brake fluid is hygroscopic, i.e. it absorbs moisture from the surrounding air.*
- *Seal open brake hoses and brake lines using sealing plugs from assembly parts set - 5Q0 698 311- .*
- *Always keep brake fluid in sealed airtight containers.*

Risk of malfunction if brake fluid comes into contact with fluids containing mineral oils.

- *Brake fluid must NOT come into contact with fluids containing mineral oils (oil, petrol, cleaning agents). Protective gloves must be free of oil and grease.*

Risk of damage to paintwork surfaces

- *Due to its corrosive effect, brake fluid must not be allowed to come into contact with paintwork. Rinse off brake fluid spillages immediately using plenty of water.*

Note

- *Always use fresh brake fluid.*
- *Rinse off brake fluid spillages using plenty of water.*

6.2 Bleeding hydraulic system

⇒ "6.2.1 Bleeding hydraulic system with brake filling and bleeding equipment", page 235

⇒ "6.2.2 Bleeding hydraulic system without brake filling and bleeding equipment", page 238

⇒ "6.2.4 Bleeding using ABS hydraulic unit N55 pump", page 243

6.2.1 Bleeding hydraulic system with brake filling and bleeding equipment

Note

- *Bleeding of the hydraulic system is described using brake filling and bleeding equipment - VAS 5234- .*
- *A pressure of 2 bar is required to bleed the ABS hydraulic unit - N55- .*

Special tools and workshop equipment required

- Brake filling and bleeding equipment - VAS 5234- with adapter - VAS 5234/1A-

- Or
- Brake filling and bleeding equipment - VAS 6860- with adapter - VAS 5234/1A-
- Observe instructions given in operating manual for - VAS 5234- or brake filling and bleeding equipment - VAS 6860- .

Copyright by AUDI AG. Copyright copying for private or commercial purposes, in part or in whole, is not permitted unless authorised by AUDI AG. AUDI AG does not guarantee or accept any liability with respect to the contents of information in this document. Copyright by AUDI AG.

- Tool set for brake bleeding - VAS 6564-

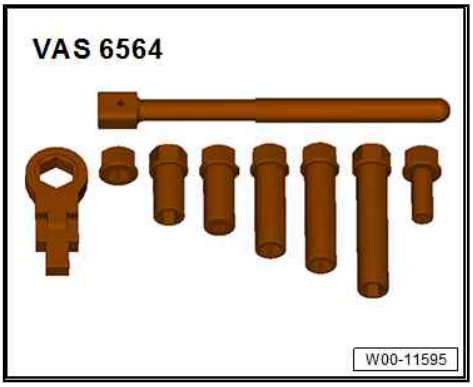

- Brake pipe bleeding wrench - VAS 5519-

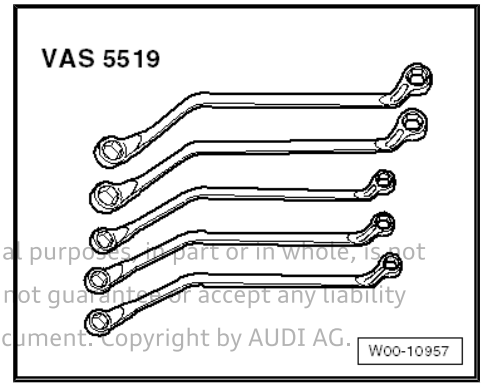

Protected by copyright. Copying for private or commercial purposes, in part or in whole, is not permitted unless authorised by AUDI AG. AUDI AG does not guarantee or accept any liability with respect to the correctness of information in this document. Copyright by AUDI AG.

Procedure

> ⚠ WARNING
>
> - *Brake fluid is poisonous and must NOT be drawn off by sucking through a hose.*
> - *If brake fluid comes into contact with skin, rinse with plenty of water.*
> - *If you get brake fluid in your eyes, rinse your eyes out and consult a doctor.*

– Fill brake fluid into brake fluid reservoir up to “max” marking.

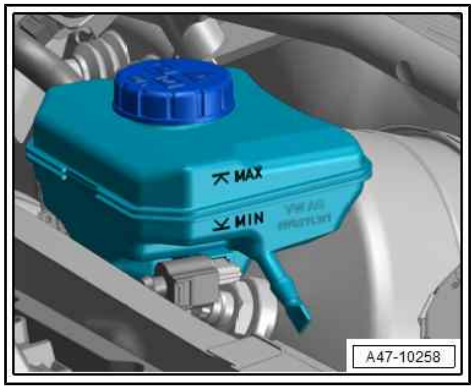

– Connect -VAS 5234- or brake filling and bleeding equipment - VAS 6860- with adapter -VAS 5234/1- .

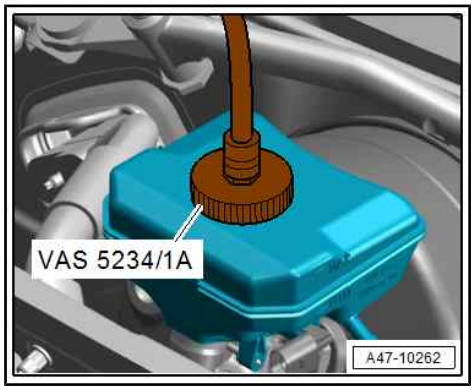

– Remove protective cap -1- from bleeder screw on relevant brake caliper and fit hose from reservoir onto bleeder screw.

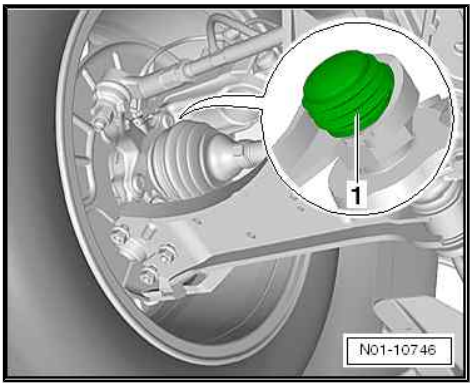

Note

Use appropriate bleeder hose. It must sit tightly on the bleeder screw so that no air can enter the brake system.

Bleeding sequence

1 - Front left brake caliper

2 - Front right brake caliper

3 - Rear left brake caliper

4 - Rear right brake caliper

Note

Bleed brake caliper at each bleeder screw. If brake caliper has two bleeder screws, first bleed at outer screw.

– Leave bleeder valve on one brake caliper open until brake fluid comes out without air bubbles (bleeder hose still fitted).

– Tighten bleeder screw, detach bleeder hose and fit protective cap on bleeder screw.

– Repeat bleeding procedure in stated sequence at other brake calipers.

– Fill brake fluid reservoir up to max. marking (depending on degree of pad wear) and screw on filler cap.

– Start engine and check brake pedal travel and brake pedal pressure.

– In the event of excessive pedal travel, check brake system for leaks and/or repeat bleeding procedure.

Protected by copyright. Copying for private or commercial purposes, in part or in whole, is not permitted unless authorised by AUDI AG. AUDI AG does not guarantee or accept any liability with respect to the correctness of information in this document. Copyright by AUDI AG.

– Fill brake fluid into brake fluid reservoir up to “max” marking.
– Close reservoir.

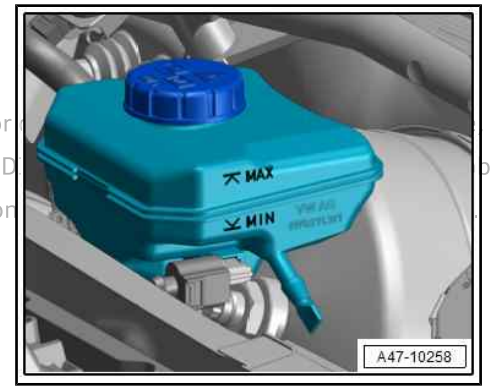

Protected by copyright. Copying for private or ... is not permitted unless authorised by AUDI AG. AUD... bility

Note

Perform road test after completion of bleeding. The ABS must be activated at least once during the test.

Brake fluid change

⇒ Maintenance ; Booklet 821 ; Maintenance; Brake fluid: changing

WARNING

Risk of accident!

- ***Make sure that the brakes work properly before the vehicle is driven on the road.***

Tightening torques

- ⇒ “1.1 Exploded view - front brakes”, page 68
- ⇒ “2.1 Exploded view - rear brakes”, page 114

If it is not possible to bleed hydraulic system properly, proceed with
⇒ “6.2.4 Bleeding using ABS hydraulic unit N55 pump”, page 243 .

6.2.2 Bleeding hydraulic system without brake filling and bleeding equipment

Special tools and workshop equipment required

- Reservoir -1-

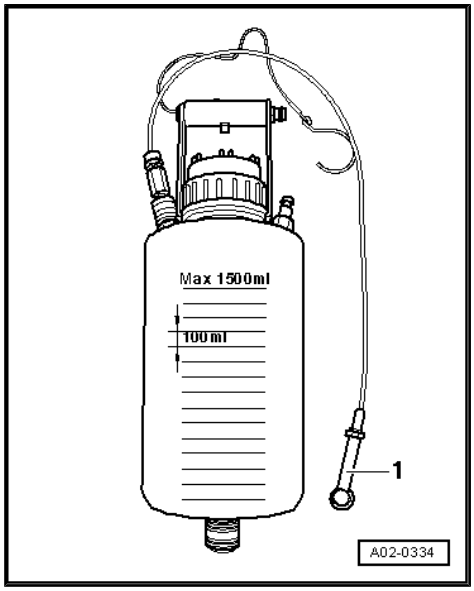

- Tool set for brake bleeding - VAS 6564-

Protected by copyright. Copying for private or commercial pur[illegible]s, in p[illegible] permitted unless authorised by AUDI AG. AUDI AG does not g[illegible]tee or acce[illegible] with respect to the correctness of information in this docum[illegible]pyright by AUDI AG

- Brake pipe bleeding wrench - VAS 5519-

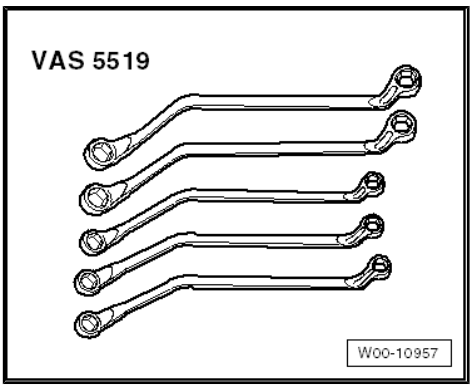

Procedure

– Fill brake fluid into brake fluid reservoir up to “max” marking.
– Close reservoir.

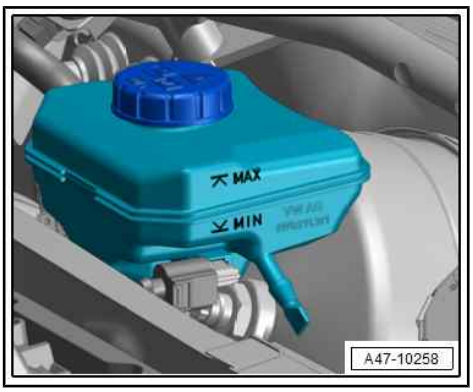

Note

Use appropriate bleeder hose. It must sit tightly on the bleeder screw so that no air can enter the brake system.

– Remove protective cap from bleeder screw on brake caliper and fit hose from bleeder bottle onto bleeder screw.

Bleeding sequence

1 - Front left brake caliper

2 - Front right brake caliper

3 - Rear left brake caliper

4 - Rear right brake caliper

Note

Bleed brake caliper at each bleeder screw. If brake caliper has two bleeder screws, first bleed at outer screw.

– Remove protective cap -1- from bleeder screw on relevant brake caliper and fit hose from reservoir onto bleeder screw.
– Build up pressure in brake system by pumping brake pedal.

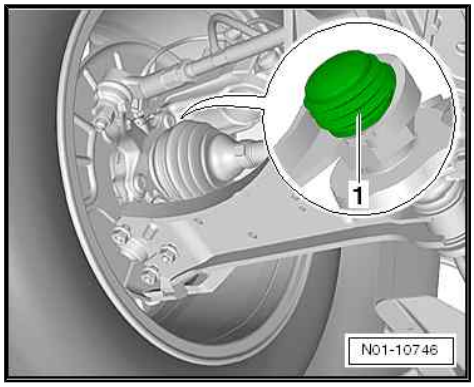

Note

Press brake pedal slowly to avoid formation of bubbles.

– Once pressure has built up, keep brake pedal depressed.
– Open bleeder screw with hose of bleeder bottle attached until pressure has dissipated (pedal sags).
– Keep pedal depressed and close bleeder screw.
– Release brake pedal and wait approx. 2 seconds to allow brake fluid to flow in from brake fluid reservoir.
– Repeat procedure until emerging brake fluid is clear and free from bubbles.
– Tighten bleeder screw, detach bleeder hose and fit protective cap on bleeder screw.
– Repeat bleeding procedure in stated sequence at other brake calipers.
– Fill brake fluid reservoir up to max. marking (depending on degree of pad wear) and screw on filler cap.
– Start engine and check brake pedal travel and brake pedal pressure.
– In the event of excessive pedal travel, check brake system for leaks and/or repeat bleeding procedure.

– Fill brake fluid into brake fluid reservoir up to “max” marking.
– Close reservoir.

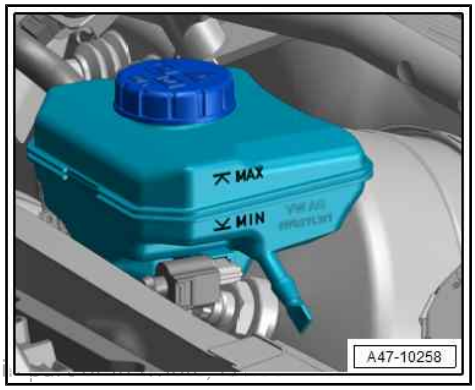

Note

Perform road test after completion of bleeding. The ABS must be activated at least once during the test.

Brake fluid change

⇒ Maintenance ; Booklet 821 ; Maintenance; Brake fluid: changing

Protected by copyright. Copying for private or commercial purposes, in part or in whole, is not permitted unless authorised by AUDI AG. AUDI AG does not guarantee or accept any liability with respect to the correctness of information in this document. Copyright by AUDI AG.

WARNING

Risk of accident!

- ***Make sure that the brakes work properly before the vehicle is driven on the road.***

Tightening torques

- ⇒ “1.1 Exploded view - front brakes”, page 68
- ⇒ “2.1 Exploded view - rear brakes”, page 114

6.2.3 Bleeding hydraulic system (additional bleeding procedure)

The additional bleeding procedure is required:

- If there is excessive brake pedal travel, or if the brake pedal is "soft".

Proceed as follows if brake system cannot be bled properly even after additional bleeding procedure
⇒ "6.2.4 Bleeding using ABS hydraulic unit N55 pump", page 243

Special tools and workshop equipment required

- Brake filling and bleeding equipment - VAS 5234- with adapter - VAS 5234/1A-

- Or
- Brake filling and bleeding equipment - VAS 6860- with adapter - VAS 5234/1A-

- Tool set for brake bleeding - VAS 6564-

Protected by copyright. Copying for private or commercial purposes, in part or in whole is not permitted unless authorised by AUDI AG. AUDI AG does not guarantee or accept any liability with respect to the correctness of information in this document. Copyright by AUDI AG.

- Brake pipe bleeding wrench - VAS 5519-

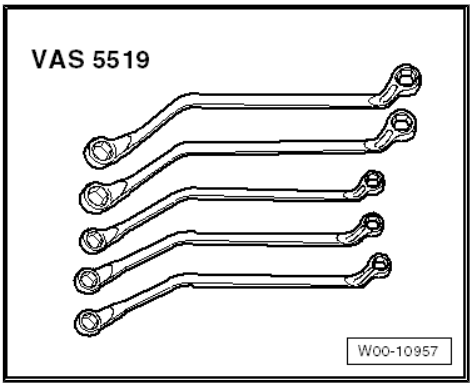

Procedure

Note

A second mechanic is required for the additional bleeding procedure.

– Connect brake filling and bleeding equipment - VAS 5234- .

Note

Use appropriate bleeder hose. It must sit tightly on the bleeder screw so that no air can enter the brake system.

– Connect bleeder bottle hose to bleeder screw.

Bleeding sequence

1 - Front left brake caliper

2 - Front right brake caliper

3 - Rear left brake caliper

4 - Rear right brake caliper

Protected by copyright. Copying for private or commercial purposes, in part or in whole, is not permitted unless authorised by AUDI AG. AUDI AG does not guarantee or accept any liability with respect to the correctness of information in this document. Copyright by AUDI AG.

Note

Bleed brake caliper at each bleeder screw. If brake caliper has two bleeder screws, first bleed at outer screw.

– Depress brake pedal forcefully and hold.

– Open bleeder screw on brake caliper.

– Press brake pedal down onto limit stop.

– With brake pedal held down, close bleeder screw.

– Release brake pedal slowly.

– Repeat bleeding procedure in stated sequence at other brake calipers.

Note

- *This bleeding sequence must be carried out 5 times on each brake caliper.*
- *Perform road test after completion of bleeding. The ABS must be activated at least once during the test.*

WARNING

Risk of accident!

- ***Make sure that the brakes work properly before the vehicle is driven on the road.***

Tightening torques

- ⇒ “1.1 Exploded view - front brakes”, page 68
- ⇒ “2.1 Exploded view - rear brakes”, page 114

6.2.4 Bleeding using ABS hydraulic unit - N55- pump

Proceed as follows if brake system cannot be bled properly:

Note

Hydraulic pump must be activated via interchange check.

– Bleed hydraulic system ⇒ page 235 .

Additionally:

– Connect vehicle diagnostic tester .
– Switch on ignition.
– Select and start `Self-diagnosis` mode.
– Select `003 - Brake electronics`.
– Select `Basic setting`.
– Bleed brake system.
– Use login “40168”.

6.3 Pre-bleeding brake system pressure accumulator - VX70-

Special tools and workshop equipment required

♦ Bleeder bottle from brake filling and bleeding equipment - VAS 5234-

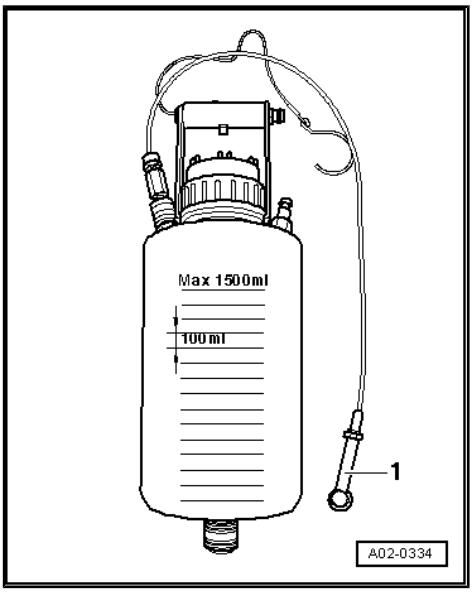

Protected by copyright. Copying for private or commercial purposes, in part or in whole, is not permitted unless authorised by AUDI AG. AUDI AG does not guarantee or accept any liability with respect to the correctness of information in this document. Copyright by AUDI AG.

Protected by copyright. Copying for private or commercial purposes, in part wh not permitted unless authorised by AUDI AG. AUDI AG does not guarantee or any li with respect to the correctness of information in this document. Copyright UDI

- Sealing plugs from assembly parts set - 5Q0 698 311-

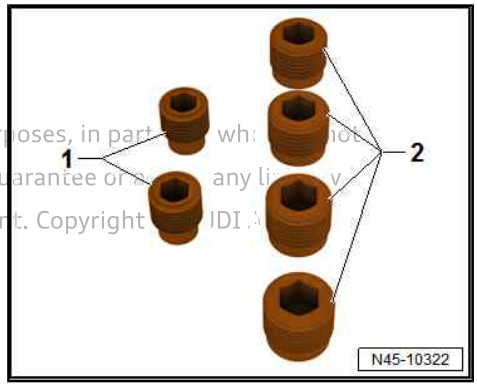

1 - M10 sealing plugs

2 - M12 sealing plugs

Procedure

- Connect bleeder container -2- to brake system pressure accumulator - VX70- using a suitable bleeder hose.
- Open bleeder valve -arrow A-.
- Fill with brake fluid until bubble-free fluid emerges from threaded hole -arrow B-.
- Close bleeder valve.
- Seal threaded hole using sealing plug from assembly parts set - 5Q0 698 311- .
- Install brake system pressure accumulator - VX70- ⇒ page 197 .

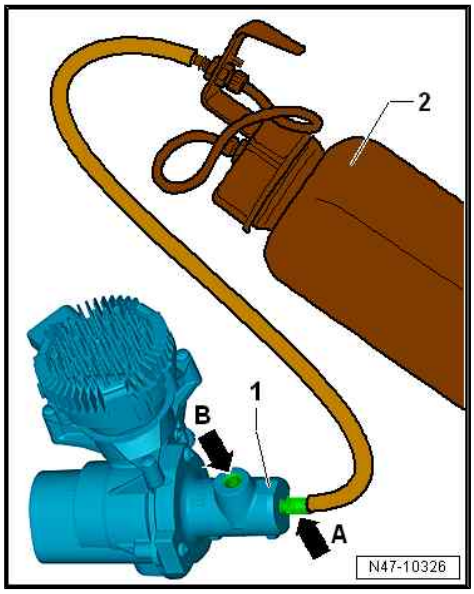

6.4 Leak test

Special tools and workshop equipment required

- Tester for brake pressure regulator - V.A.G 1310A-

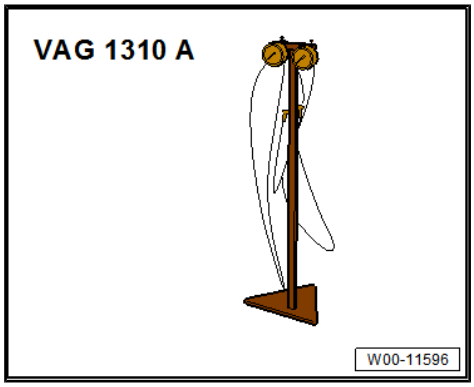

♦ Brake pedal actuator - V.A.G 1869/2-

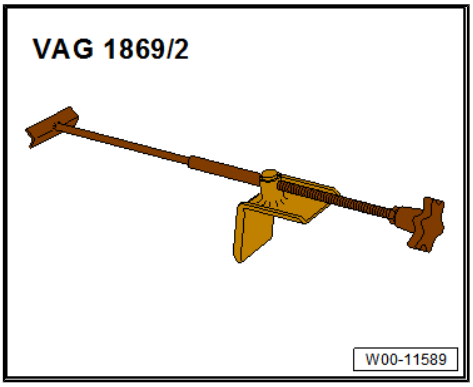

High-pressure test:

- Make sure that the brake system (master cylinder, brake hoses, brake lines and brake calipers) works properly and is free of leaks.

– Unscrew bleeder screw at one of the front brake calipers. Connect tester for brake pressure regulator - V.A.G 1310A- and bleed.

– Insert brake pedal actuator - V.A.G 1869/2- between brake pedal and driver seat. Apply pressure to brake pedal until the gauge indicates a pressure of 50 bar. The pressure must not drop by more than 4 bar during the test period of 45 seconds.

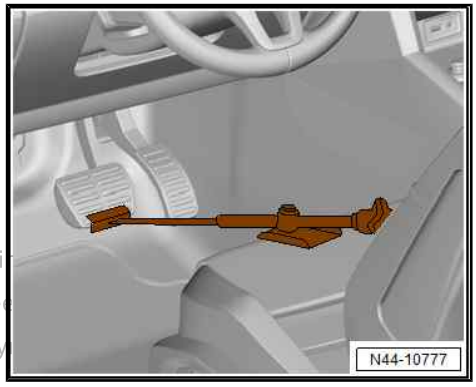

Renew brake master cylinder if drop in pressure exceeds the specification.

Low-pressure test:

– Move the brake pedal actuator back until the pressure gauge indicates a pressure of 6 bar.

– The pressure should not drop by more than 1 bar within the test period of 3 minutes.

Protected by copyright. Copying for private or commercial purposes, i
permitted unless authorised by AUDI AG. AUDI AG does not guarante
with respect to the correctness of information in this document. Copy

Renew brake master cylinder if drop in pressure exceeds the specification.