2002 BRAKES

Disc - MDX, 3.2CL, 3.2TL & 3.5RL

DESCRIPTION

WARNING: DO NOT use air pressure or a dry brush to clean brake assemblies. Avoid breathing brake dust. Use OSHA-approved vacuum cleaner for cleaning and collecting dust. Avoid contaminating brake pads and discs with brake fluid or grease.

All models are equipped with front and rear disc brakes. A cable operates parking brake at rear wheels. The parking brake uses drum brake shoes mounted inside rear disc brake rotor. See **Fig. 1** , **Fig. 2** and **Fig. 3** .

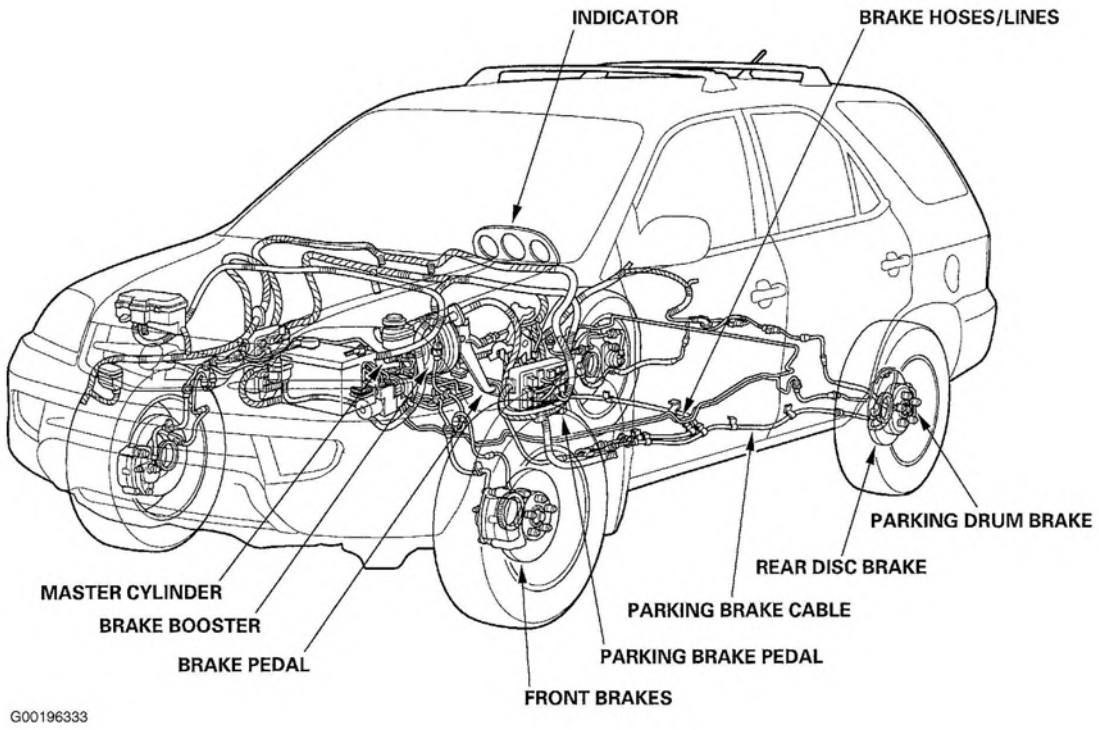

Fig. 1: Locating Brake Components (MDX)
Courtesy of AMERICAN HONDA MOTOR CO., INC.

cardiagn.com

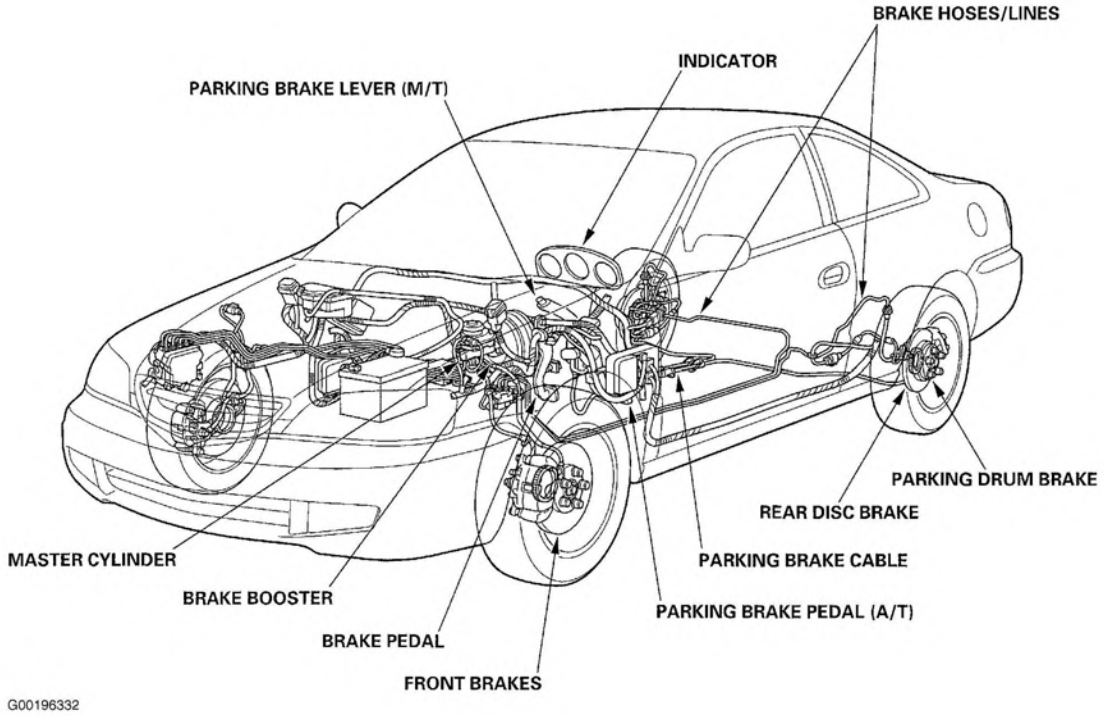

Fig. 2: Locating Brake Components (3.2CL & 3.2TL)
Courtesy of AMERICAN HONDA MOTOR CO., INC.

cardiagn.com

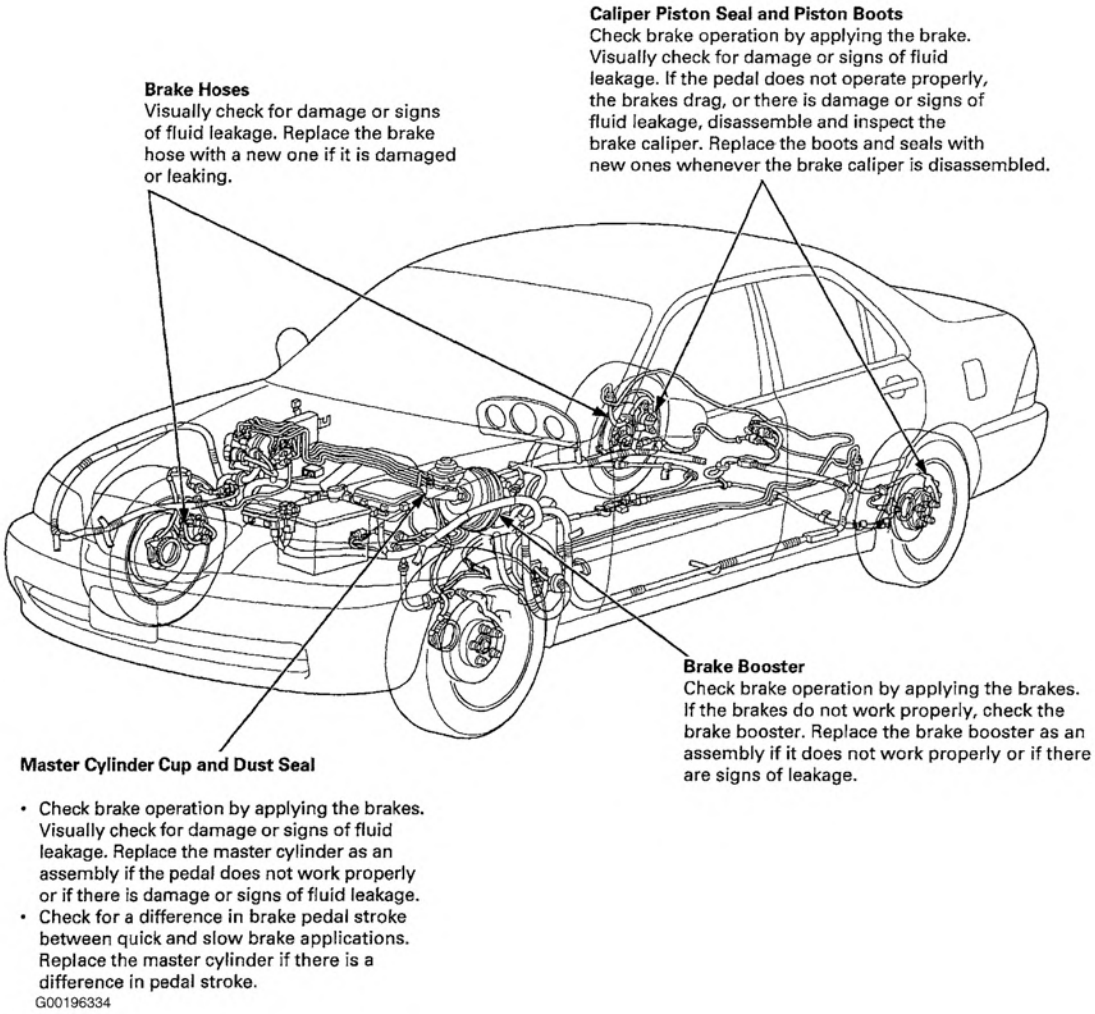

Fig. 3: Locating Brake Components (3.5RL)
Courtesy of AMERICAN HONDA MOTOR CO., INC.

BLEEDING BRAKE SYSTEM

BLEEDING PROCEDURE

CAUTION: Use only clean DOT 3 brake fluid. Ensure no dirt or other foreign matter contaminates brake fluid. DO NOT mix different brands of brake fluid, as they may not be compatible. Avoid spilling brake fluid on car, as it will damage paint. If brake fluid contacts paint, immediately flush with water.

1. Ensure master cylinder reservoir is full before performing bleeding procedure. Refill reservoir after bleeding each wheel. Have an assistant slowly pump brake pedal several times, then apply steady pressure. Loosen brake bleed screw at each wheel to allow air to escape from system. Tighten bleed screw to 80 INCH lbs. (9 N.m). Repeat procedure until air bubbles no longer appear in fluid.

cardiagn.com

2. Bleed brakes in following sequence: LF, RF, RR, LR. Ensure master cylinder reservoir is full. Road test vehicle and check brake performance.

ADJUSTMENTS

BRAKE PEDAL HEIGHT & FREE PLAY

1. Measure pedal height from right side center of pedal pad to floor panel, with carpet cutout turned up. See **BRAKE PEDAL HEIGHT & FREE PLAY** table. See **Fig. 4** .
2. To adjust brake pedal height, disconnect stoplight switch. Loosen stoplight switch lock nut and back off switch until it no longer touches brake pedal. Loosen power brake booster push rod lock nut. Rotate push rod to adjust pedal height. Tighten lock nut to specification. See **TORQUE SPECIFICATIONS** .
3. Turn ignition switch to OFF position. Adjust stoplight switch. See **STOPLIGHT SWITCH** . See **BRAKE PEDAL HEIGHT & FREE PLAY** table.

BRAKE PEDAL HEIGHT & FREE PLAY

Application	In. (mm)
Brake Pedal Free Play	
MDX	.04-.20 (1.0-5.0)
3.2CL & 3.2TL	.04-.20 (1.0-5.0)
3.5RL	.02-.08 (0.5-2.0)
Brake Pedal Height (1)	
MDX	6.44 (164.0)
3.2CL	6.63 (168.0)
3.2TL	6.65 (169.0)
3.5RL	7.17 (182.0)
(1) With carpet cutout turned up.	

cardiagn.com

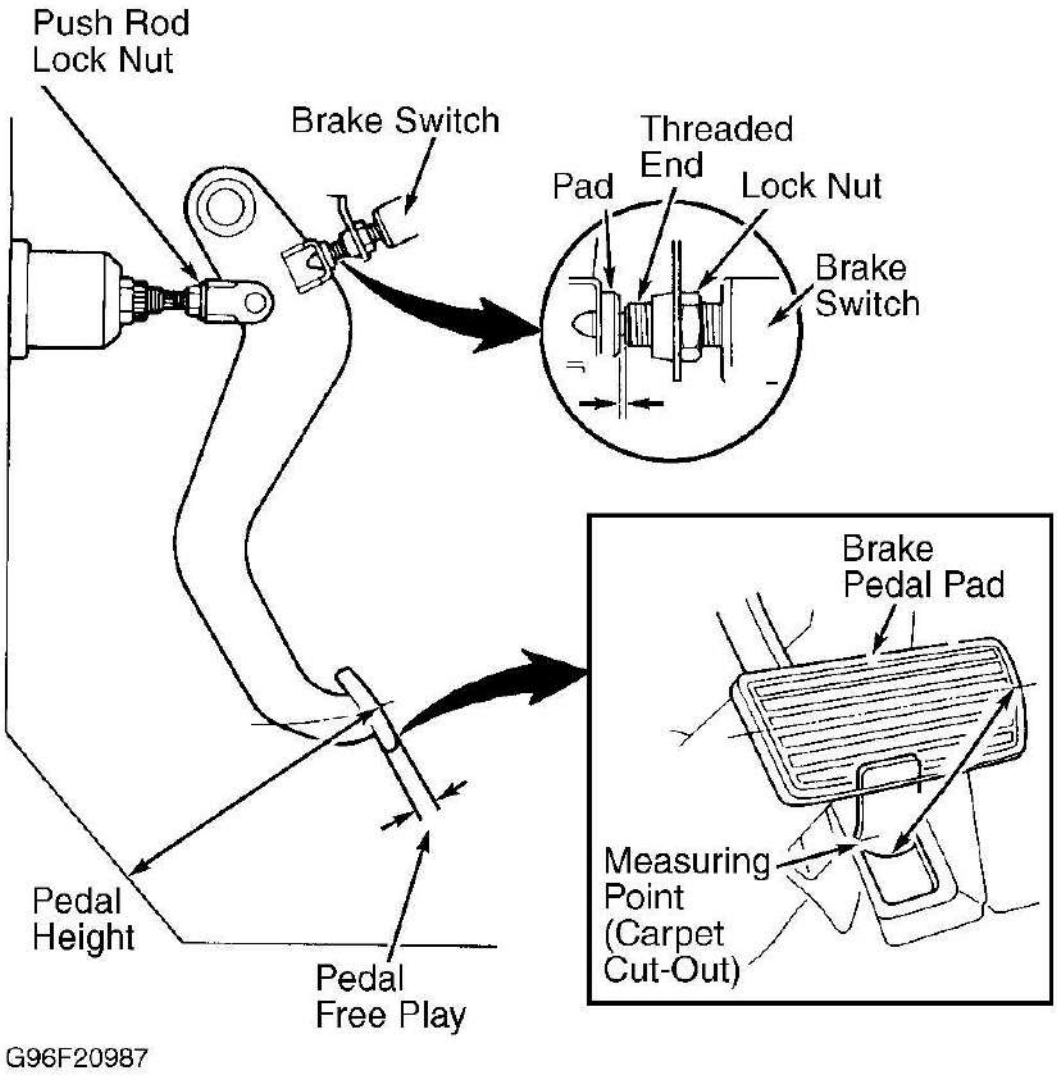

Fig. 4: Adjusting Brake Pedal Height & Free Play (Typical)
Courtesy of AMERICAN HONDA MOTOR CO., INC.

PARKING BRAKE SWITCH

1. Brake system indicator light comes on when parking brake is engaged and/or brake fluid level is low. Parking brake switch is located above parking brake pedal. Ensure BRAKE SYSTEM indicator light comes on when parking brake is engaged or brake fluid reservoir float is lowered.
2. To adjust parking brake switch, turn ignition ON. Increase or decrease parking brake switch plate contact with parking brake switch until brake system indicator light comes on when parking brake is applied one click and goes out when parking brake is released.

MASTER CYLINDER PUSH ROD CLEARANCE

cardiagn.com

NOTE: **Master cylinder push rod-to-piston clearance must be checked and adjusted before installing master cylinder.**

NOTE: **Master cylinder push rod clearance adjustment procedures are not available for MDX models.**

1. Mount Push Rod Adjustment Gauge (07JAG-SD40100) on master cylinder. Rotate adjuster nut until top of center shaft contacts end of secondary piston without changing piston position. See **Fig. 5** .
2. Remove push rod adjustment gauge from master cylinder, and install on brake booster. Tighten master cylinder nuts to specification. See **TORQUE SPECIFICATIONS** . Using engine or outside vacuum source, apply a continuous 20 in. Hg vacuum to brake booster.
3. Using a feeler gauge, ensure clearance between gauge body and adjusting nut is 0.02" (0.4 mm) for TL and CL, and 0.008" (0.2 mm) for RL. See **Fig. 6** .
4. On TL & CL , loosen star lock nut and rotate adjuster nut in or out to adjust clearance. On RL, remove adjustment gauge. Hold push rod, and rotate adjuster in or out for specified clearance. DO NOT pull push rod out of brake booster. On all models, tighten star lock nut securely.

cardiagn.com

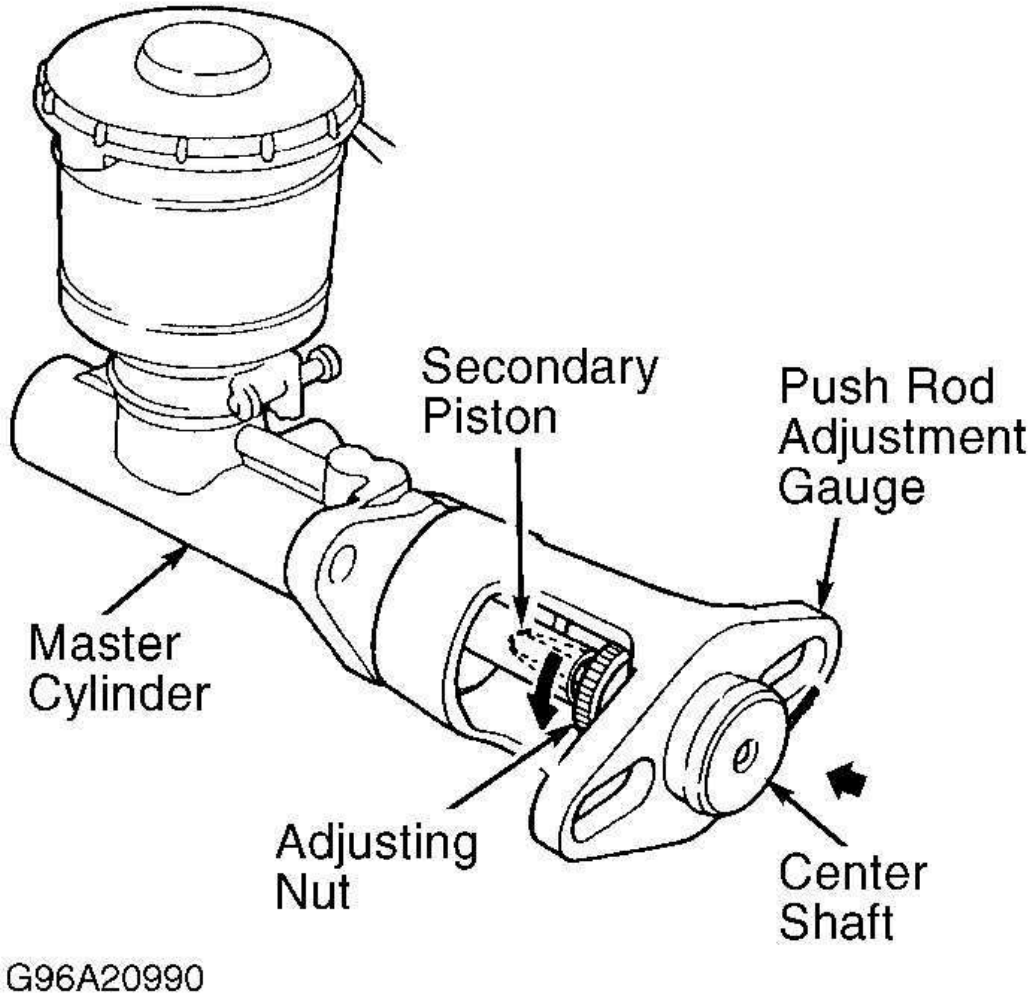

Fig. 5: Setting Push Rod Adjustment Gauge (Typical)
Courtesy of AMERICAN HONDA MOTOR CO., INC.

cardiagn.com

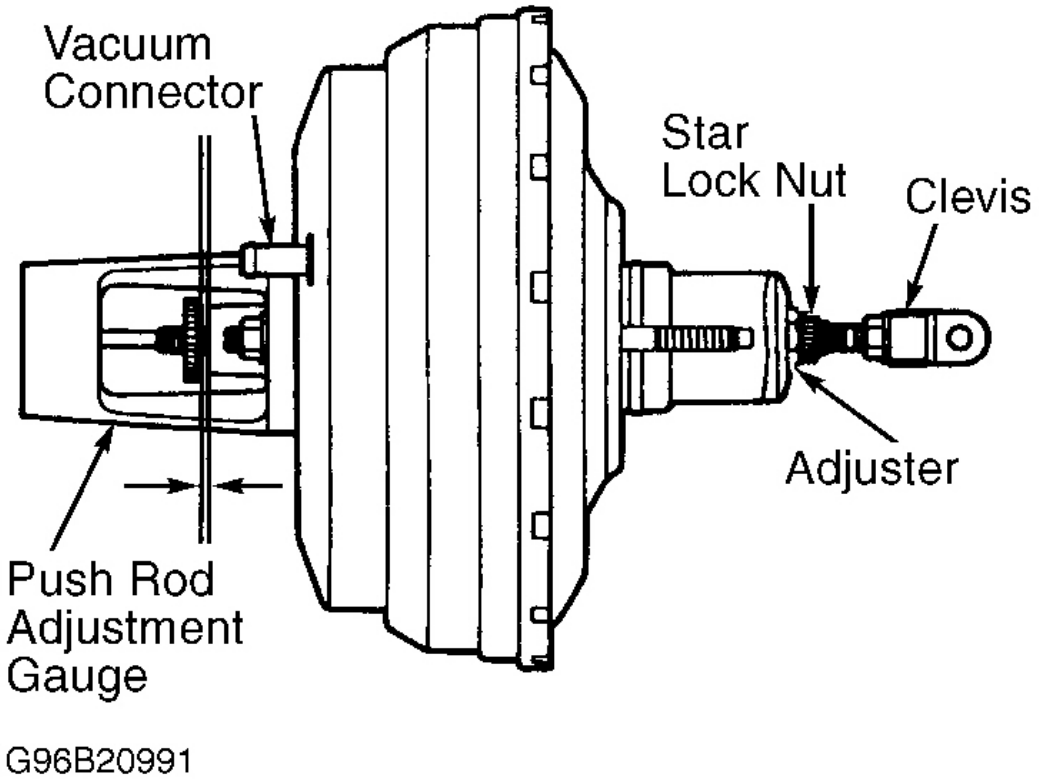

Fig. 6: Measuring Push Rod Clearance (Typical)
Courtesy of AMERICAN HONDA MOTOR CO., INC.

STOPLIGHT SWITCH

1. Locate stoplight switch, above brake pedal. Turn ignition switch to OFF position. Using hand pressure, check brake pedal free play. See **BRAKE PEDAL HEIGHT & FREE PLAY** . If brake pedal free play is not as specified, go to next step.
2. Loosen stoplight switch lock nuts. Turn stoplight switch inward until plunger threaded end is touching pedal arm pad. See **Fig. 4** . Back off switch 1/4 turn for TL, CL & RL, or 3/4 of a turn for MDX, until clearance between threaded end and pedal end is 0.01" (0.3 mm). On all models, tighten lock nuts. Ensure brakelights go off when pedal is released.

TROUBLE SHOOTING

BRAKE SYSTEM OPERATION & LEAKAGE

See **Fig. 7** and **Fig. 8** for view of brake system components and trouble shooting flow charts.

cardiagn.com

Check all of the following items:

Component	Procedure
Brake Booster (A)	Check brake operation by applying the brakes during a test drive. If the brakes do not work properly, check the brake booster. Replace the brake booster as an assembly if it does not work properly or if there are signs of leakage.
Piston Cup and Pressure Cup Inspection (B)	• Check brake operation by applying the brakes. Look for damage or signs of fluid leakage. Replace the master cylinder as an assembly if the pedal does not work properly or if there is damage or signs of fluid leakage. • Check for a difference in brake pedal stroke between quick and slow brake applications. Replace the master cylinder if there is a difference in pedal stroke.
Brake Hoses (C)	Look for damage or signs of fluid leakage. Replace the brake hose with a new one if it is damaged or leaking.
Caliper Piston Seal and Piston Boots (D)	Check brake operation by applying the brakes. Look for damage or signs of fluid leakage. If the pedal does not work properly, the brakes drag, or there is damage or signs of fluid leakage, disassemble and inspect the brake caliper. Replace the boots and seals with new ones whenever the brake caliper is disassembled.

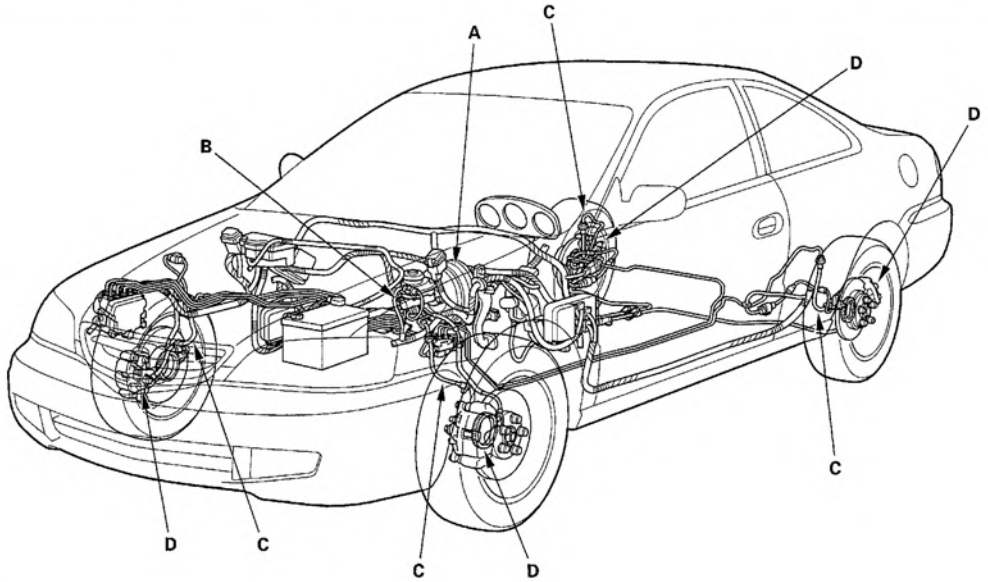

G00196349

Fig. 7: Trouble Shooting Brake System (3.2CL & 3.2TL Shown; 3.5RL Is Similar)
Courtesy of AMERICAN HONDA MOTOR CO., INC.

cardiagn.com

Check all of the following items:

Component	Procedure
Brake Booster (A)	Check brake operation by applying the brakes during a test drive. If the brakes do not work properly, check the brake booster. Replace the brake booster as an assembly if it does not work properly or if there are signs of leakage.
Piston Cup and Pressure Cup Inspection (B)	• Check brake operation by applying the brakes. Look for damage or signs of fluid leakage. Replace the master cylinder as an assembly if the pedal does not work properly or if there is damage or signs of fluid leakage. • Check for a difference in brake pedal stroke between quick and slow brake applications. Replace the master cylinder as an assembly if there is a difference in pedal stroke.
Brake Hoses (C)	Look for damage or signs of fluid leakage. Replace the brake hose with a new one if it is damaged or leaking.
Caliper Piston Seal and Piston Boots (D)	Check brake operation by applying the brakes. Look for damage or signs of fluid leakage. If the pedal does not work properly, the brakes drag, or there is damage or signs of fluid leakage, disassemble and inspect the brake caliper. Replace the boots and seals with new ones whenever the brake caliper is disassembled.

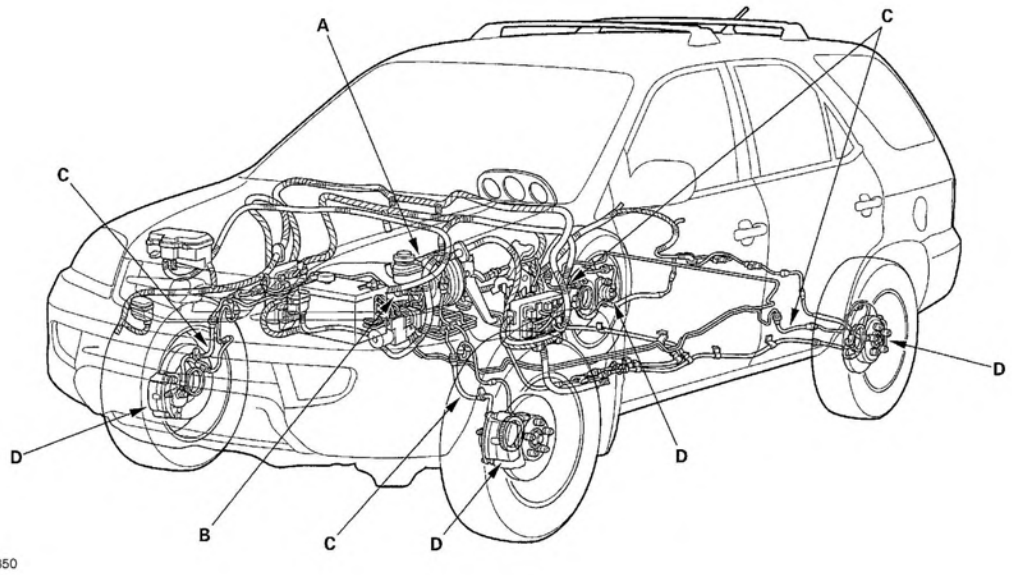

Fig. 8: Trouble Shooting Brake System (MDX)
Courtesy of AMERICAN HONDA MOTOR CO., INC.

TESTING

BRAKE BOOSTER

Functional Test

With engine stopped, press brake pedal several times to deplete vacuum reservoir, then press pedal hard and hold it for 15 seconds. If pedal sinks, either master cylinder is bypassing internally, or brake system (master cylinder, lines, modulator, proportioning valve, or caliper) is leaking. Start engine with pedal pressed. If pedal sinks slightly, vacuum booster is operating normally. If pedal height does not vary, booster or check valve is faulty. With engine running, press brake pedal lightly. Apply just enough pressure to hold back automatic

cardiagn.com

transmission creep. If brake pedal sinks more than 0.4" (10 mm) in 3 minutes, the master cylinder is faulty. A slight change in pedal height when the A/C compressor cycles on and off is normal. (The A/C compressor load changes the vacuum available to booster.)

Leak Test

Press brake pedal with engine running, then stop engine. If pedal height does not vary while pressed for 30 seconds, the vacuum booster is okay. If the pedal rises, booster is faulty. Turn engine off and wait 30 seconds. Press brake pedal several times using normal pressure. When pedal is first pressed, it should be low. On consecutive applications, the pedal height should gradually rise. If pedal position does not vary, check booster check valve. See **BOOSTER CHECK VALVE TEST** .

Booster Check Valve Test

Disconnect brake booster vacuum hose at booster. Check valve is built into hose. See **Fig. 9** . Start engine, and let it idle. There should be vacuum available. If no vacuum is available, check valve is not working properly. Replace brake booster vacuum hose and check valve, and retest.

Start engine, and pinch brake booster vacuum hose between check valve and booster. Turn engine off and wait 30 seconds. Press brake pedal several times using normal pressure. When pedal is first pressed, it should be low. On consecutive applications, the pedal height should gradually rise. If pedal position does not vary, replace brake booster. If pedal position varies, replace brake booster vacuum hose/check valve assembly.

cardiagn.com

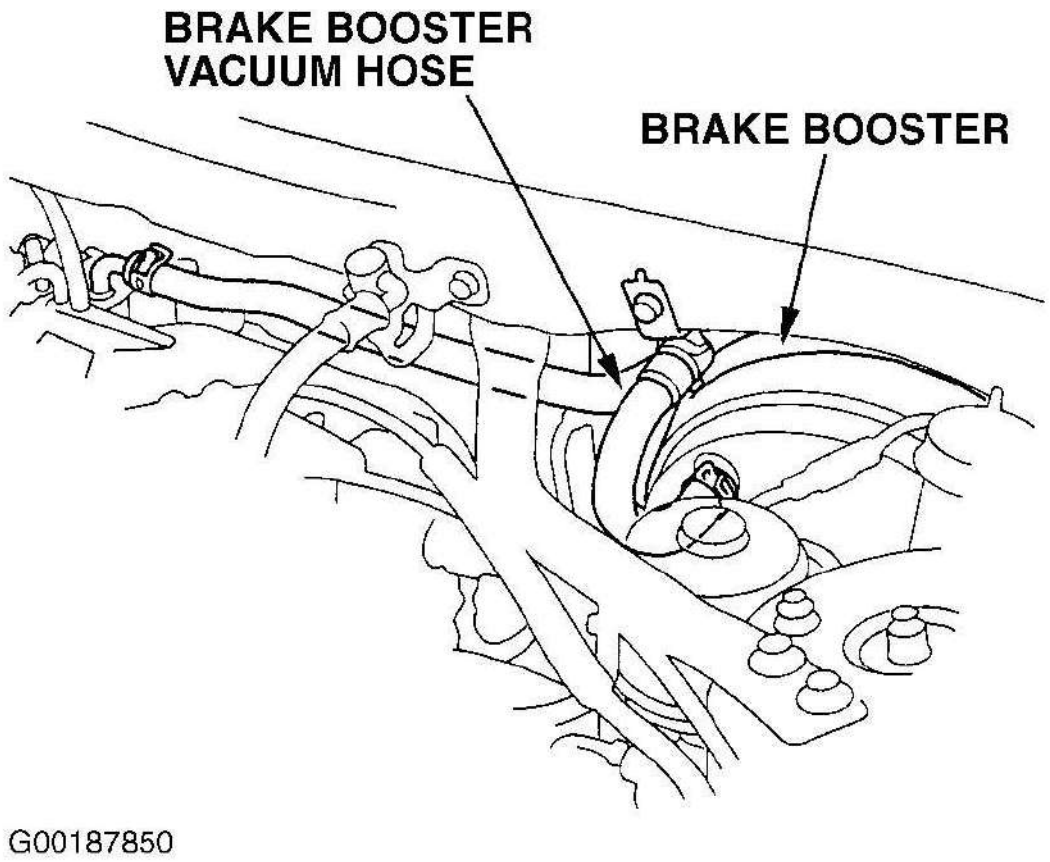

Fig. 9: Locating Brake Booster Vacuum Hose (Typical)
Courtesy of AMERICAN HONDA MOTOR CO., INC.

BRAKE FLUID LEVEL SWITCH

Remove brake fluid reservoir cap. Ensure brake fluid float moves up and down freely. If float does not move freely, replace brake fluid reservoir cap. If float moves freely, check for continuity between brake fluid level switch connector terminals. Continuity should exist with float down. Continuity should not exist with float up. If continuity is not as specified, replace brake fluid reservoir cap.

PARKING BRAKE SWITCH

Remove instrument panel lower cover and knee bolster. Disconnect parking brake switch connector. Check for continuity between switch terminal and ground. Continuity should exist with parking brake applied. Continuity should not exist with parking brake released. If continuity is not as specified, check parking brake switch plate adjustment with parking brake switch. If adjustment is okay, replace parking brake switch.

REMOVAL & INSTALLATION

cardiagn.com

WARNING: DO NOT use air pressure or a dry brush to clean brake assemblies. Avoid breathing brake dust. Use OSHA-approved vacuum cleaner for cleaning and collecting dust. Avoid contaminating brake pads and discs with brake fluid or grease.

BRAKE BOOSTER

NOTE: On 3.5RL, removal and installation procedure is included with master cylinder. See MASTER CYLINDER .

Removal & Installation (MDX)

Remove master cylinder. See **MASTER CYLINDER** . Remove cable bracket from throttle body, then disconnect throttle cable end and actuator cable end from throttle linkage. See **Fig. 10** . Disconnect vacuum hose from brake booster. Remove lock pin and joint pin. Remove brake booster mounting nuts. See **Fig. 11** . Pull brake booster forward, and remove it from engine compartment. Install booster in reverse order of removal.

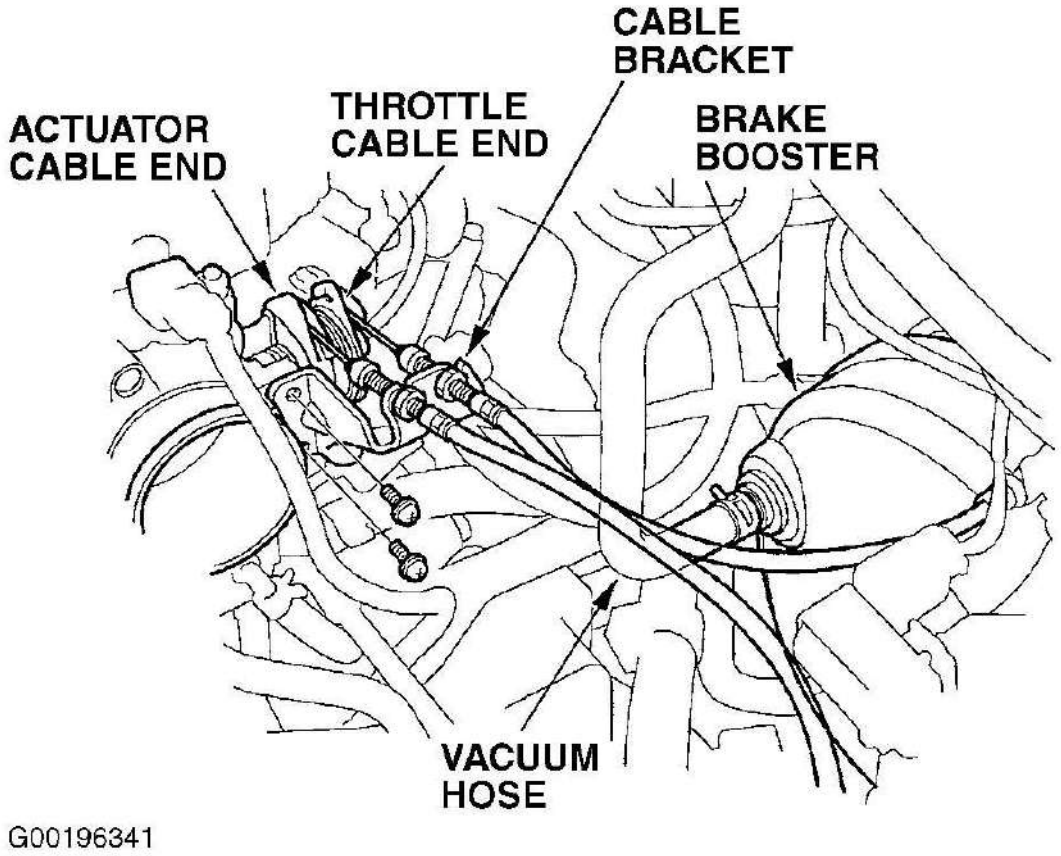

Fig. 10: Identifying Throttle Cables (MDX)

cardiagn.com

Courtesy of AMERICAN HONDA MOTOR CO., INC.

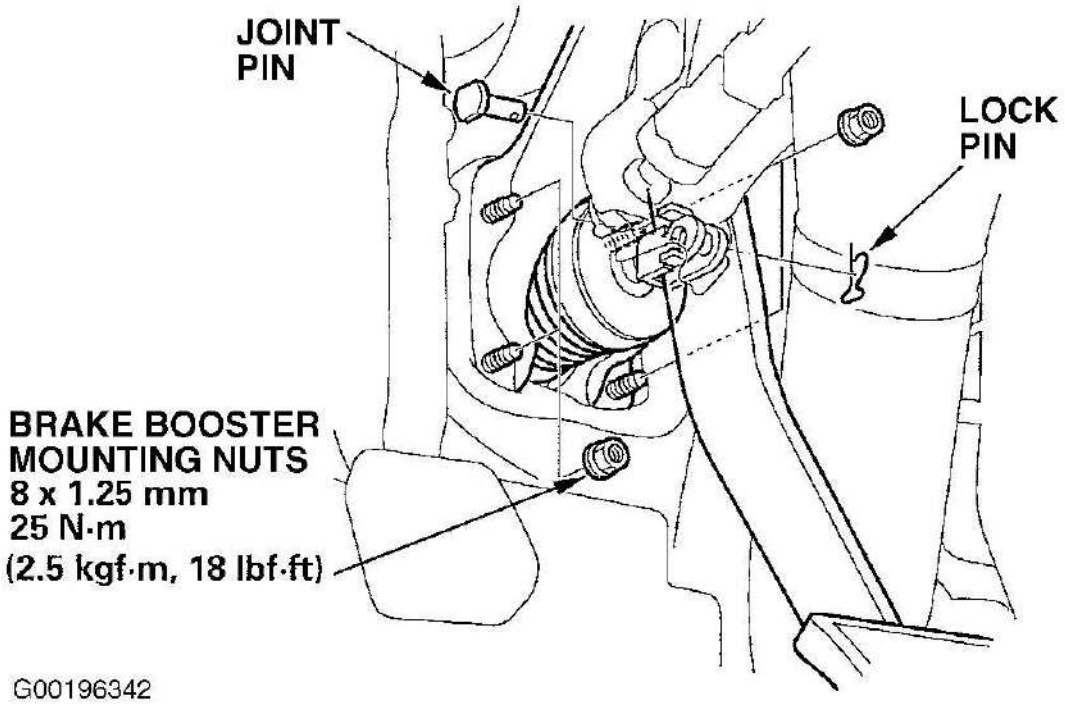

Fig. 11: Identifying Lock Pins & Booster Mounting Bolts (MDX Shown; All Others Similar)
Courtesy of AMERICAN HONDA MOTOR CO., INC.

Removal & Installation (3.2CL & 3.2TL)

Remove master cylinder. See **MASTER CYLINDER** . Disconnect vacuum hose from brake booster. Remove fuel feed line bracket. Remove starter cable clamps and windshield wiper intermittent relay bracket. See **Fig. 12** . Remove lock pin and clevis pin. Remove four booster mounting nuts. See **Fig. 11** . Pull brake booster forward, then turn it to the right until clevis is clear of bulkhead at cutout. See **Fig. 13** . Install booster in reverse order of removal.

cardiagn.com

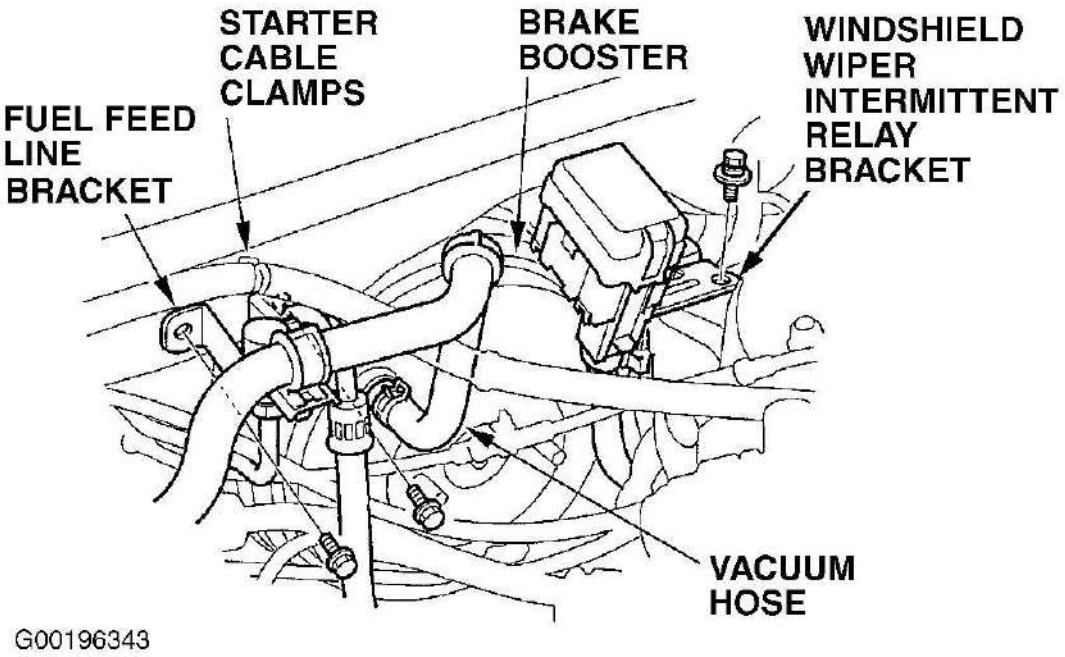

Fig. 12: Identifying Feed Line & Starter Cable Clamps (3.2CL & 3.2TL)
Courtesy of AMERICAN HONDA MOTOR CO., INC.

cardiagn.com

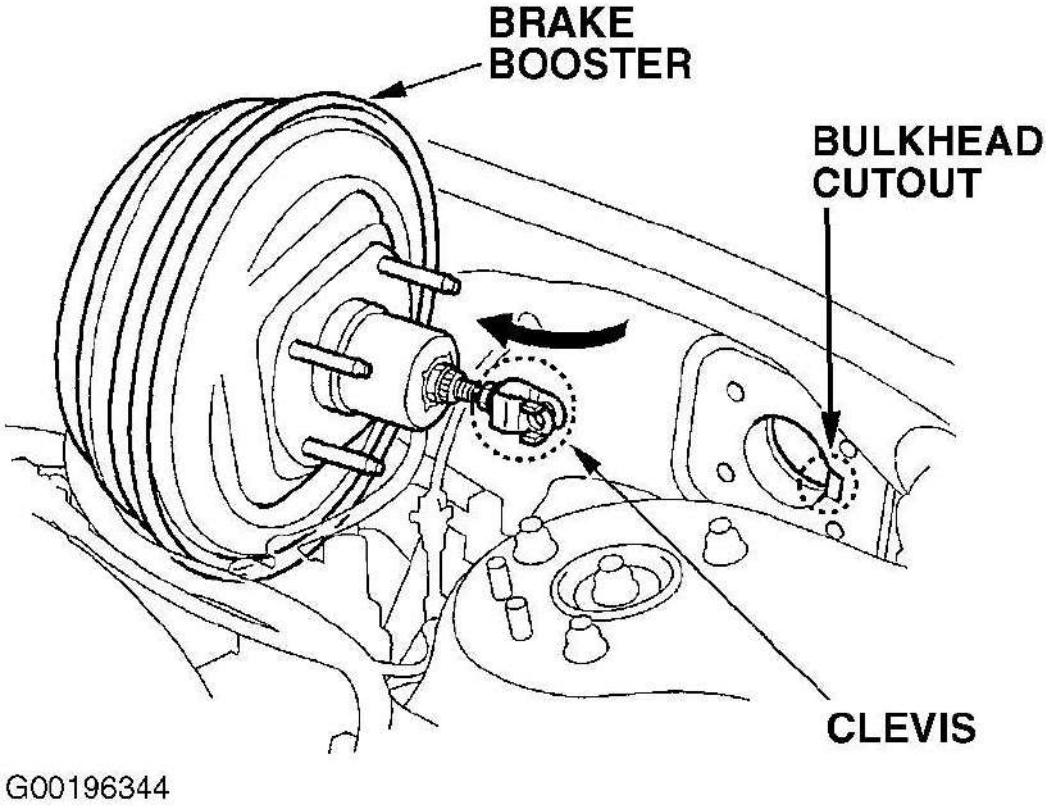

Fig. 13: Removing Brake Booster (3.2CL & 3.2TL)
Courtesy of AMERICAN HONDA MOTOR CO., INC.

DISC BRAKE ROTOR

Removal (Front & Rear)

1. Raise and support vehicle. Remove wheels. Remove caliper assembly, and wire aside. Remove disc brake pads. Remove caliper mounting bracket. Before removing rotor, inspect rotor runout and rotor surfaces for cracks or damage. Using wheel lug nuts and washers, secure rotor to hub. Measure rotor runout 0.4" (10 mm) from edge of rotor. Refinish rotor if runout exceeds specification. See **DISC BRAKE SPECIFICATIONS** .

   NOTE: Manufacturer recommends front rotors be resurfaced using on-vehicle disc brake lathe.

2. Remove 6-mm rotor retaining screws. Install two 8 x 12 mm bolts into existing holes. To prevent warpage, turn bolts alternately 2 turns at a time until rotor can be removed from hub.
3. Clean rust from rotor. Inspect rotor surfaces for cracks or grooves. Resurface or replace rotor as

cardiagn.com

necessary.

Installation

To install, reverse removal procedure. Tighten retaining screws and bolts to specification. See **TORQUE SPECIFICATIONS** . Bleed brake system if necessary. See **BLEEDING BRAKE SYSTEM** . For rear brake disc, perform brake shoe lining break-in procedure. See **PARKING BRAKE LINING BREAK-IN** .

FRONT DISC BRAKE PADS

Removal

1. Raise and support vehicle. Remove front wheels. Remove brake hose bracket from knuckle. Remove lower caliper bolt, and pivot caliper up out of the way.
2. Remove pads, pad shims, and pad retainers. Measure thickness of brake lining. Minimum brake pad thickness is .06" (1.60 mm). Clean caliper and bracket, and check for cracks or grooves. Check disc rotor for damage and cracks. Repair or replace as necessary. See **Fig. 14** or **Fig. 15** .

NOTE: Replace brake pads in axle sets. DO NOT allow grease, brake fluid, or other contaminants to contact lining surface. Inspect, clean, and resurface rotor as necessary.

Installation

1. Lubricate shim and sliding surfaces with high-temperature silicone grease. Install pad retainers. Apply Molykote(R) M77 (or equivalent) compound to both sides of pad shims and back of pads.
2. Install inner and outer pad shims. Install brake pads in brackets. Install inner brake pad with pad wear indicator on the inside. Push piston into caliper bore with finger pressure so caliper will fit over pads.
3. Pivot caliper down and install lower caliper bolt. Tighten bolts to specification. See **TORQUE SPECIFICATIONS** . Depress brake pedal several times to restore normal brake pedal stroke. If necessary, bleed brakes. See **BLEEDING BRAKE SYSTEM** .

cardiagn.com

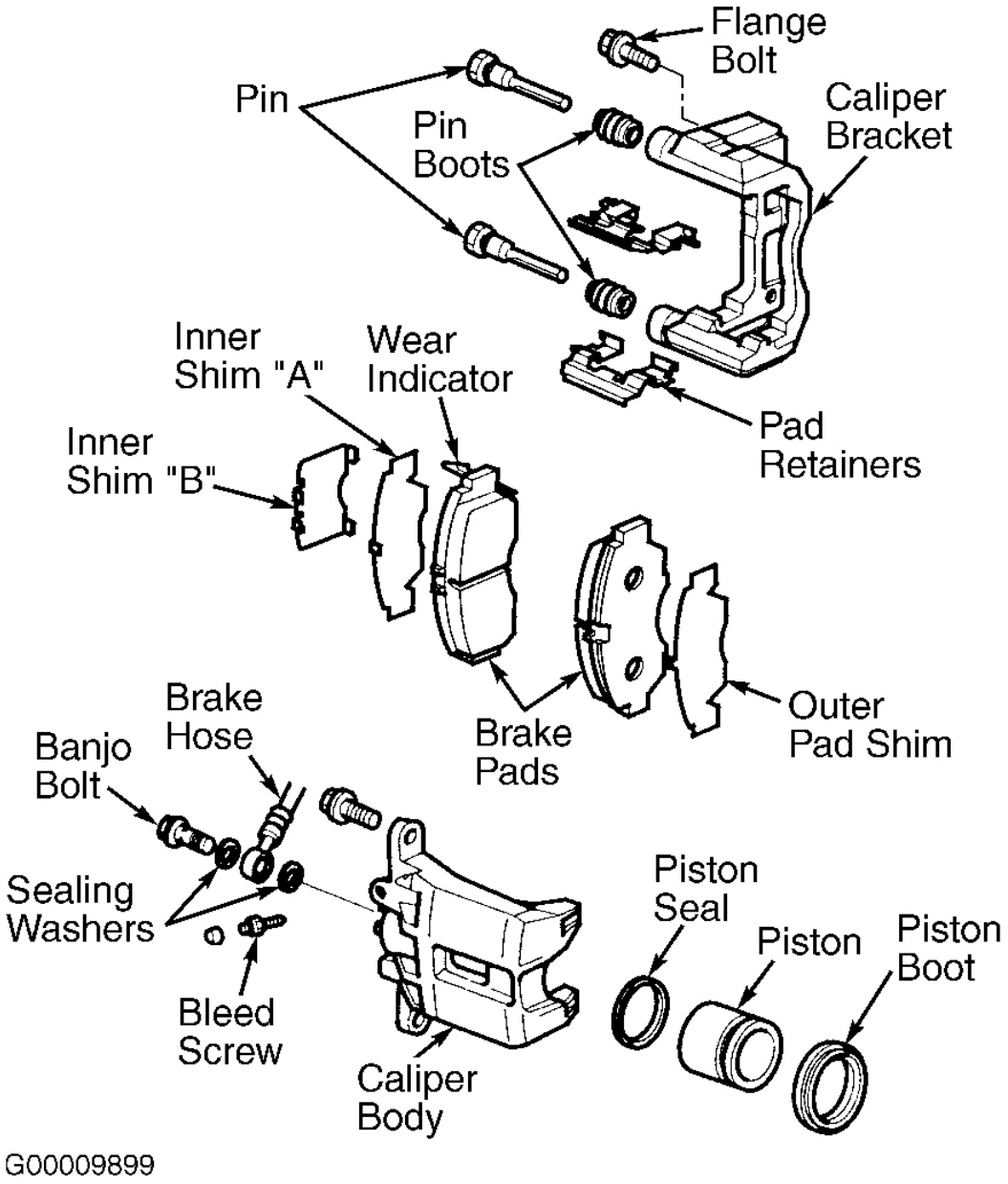

Fig. 14: Exploded View Of Front Brake Caliper (MDX, 3.2CL & 3.2TL)
Courtesy of AMERICAN HONDA MOTOR CO., INC.

cardiagn.com

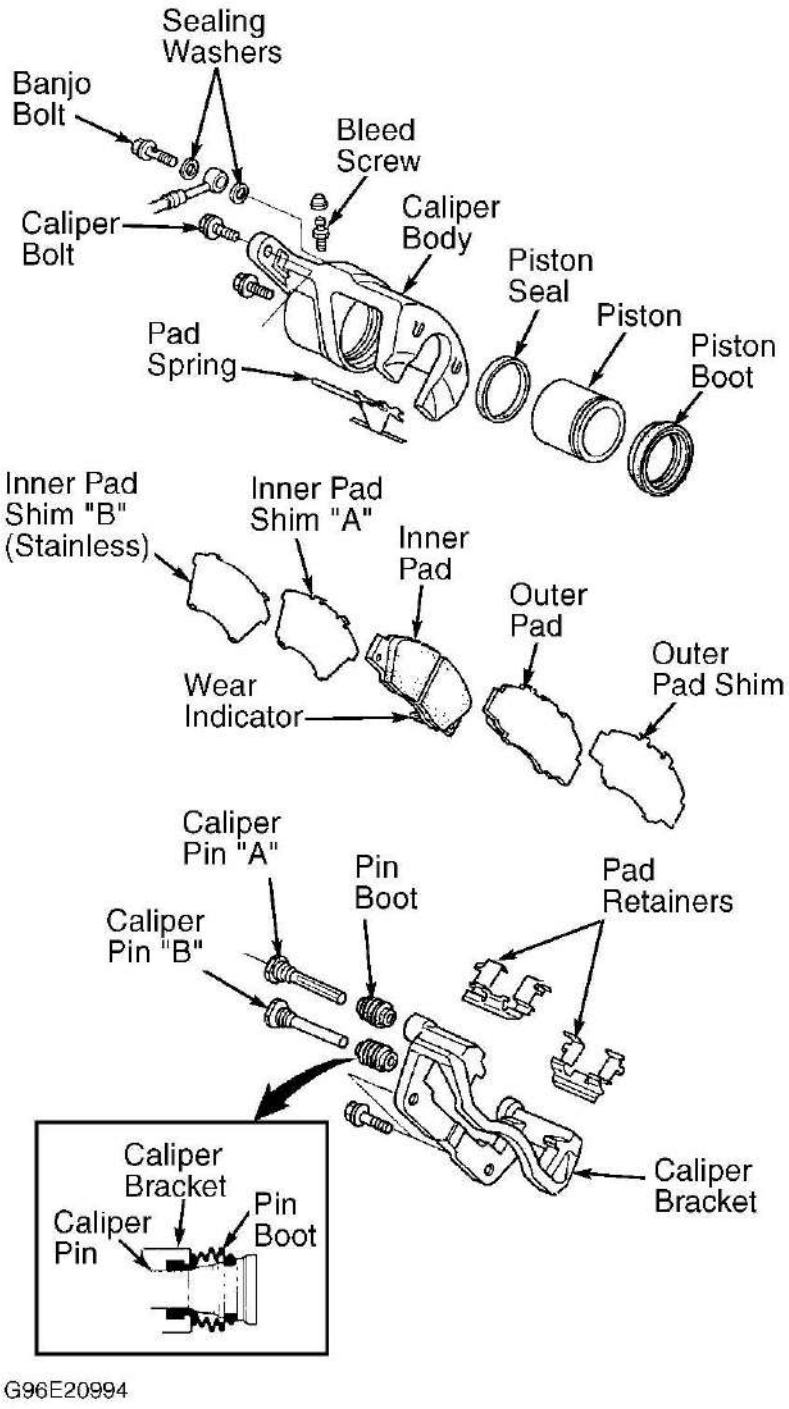

Fig. 15: Exploded View Of Front Brake Caliper (3.5RL)
Courtesy of AMERICAN HONDA MOTOR CO., INC.

MASTER CYLINDER

cardiagn.com

Removal & Installation (MDX)

Remove intake air duct. Remove throttle cable holder. Disconnect brake fluid level switch connectors, and remove reservoir cap. Remove brake fluid from master cylinder reservoir with a syringe. Disconnect brake lines from master cylinder. To prevent spills, cover hose joints with rags. Remove master cylinder mounting nuts. Remove master cylinder from brake booster. Be careful not to damage brake lines. Install master cylinder in reverse order of removal.

Removal & Installation (3.2CL & 3.2TL)

Remove 8 mm flange bolts. Remove strut brace. Disconnect brake fluid level switch connectors, and remove reservoir cap. Remove brake fluid from master cylinder reservoir with a syringe. Disconnect brake lines from master cylinder. To prevent spills, cover hose joints with rags. Remove master cylinder mounting nuts and washers. Remove master cylinder from brake booster. Be careful not to damage brake lines. Install master cylinder in reverse order of removal.

Removal & Installation (Master Cylinder & Booster - 3.5RL)

CAUTION: Do not disconnect clevis by removing it from operating rod of brake booster. If clevis is loosened, adjust pushrod length before installing brake booster.

Disconnect brake fluid level switch connectors. See **Fig. 16** . Remove reservoir cap. Remove brake fluid from master cylinder reservoir with a syringe. Disconnect brake lines from master cylinder. Remove master cylinder mounting nuts. Remove master cylinder from brake booster. Disconnect vacuum hose from brake booster. Remove cotter pin and clevis pin from clevis. Remove 4 booster mounting nuts. Pull booster forward until clevis is clear of bulkhead. Remove booster from engine compartment. Install in reverse order of removal.

cardiagn.com

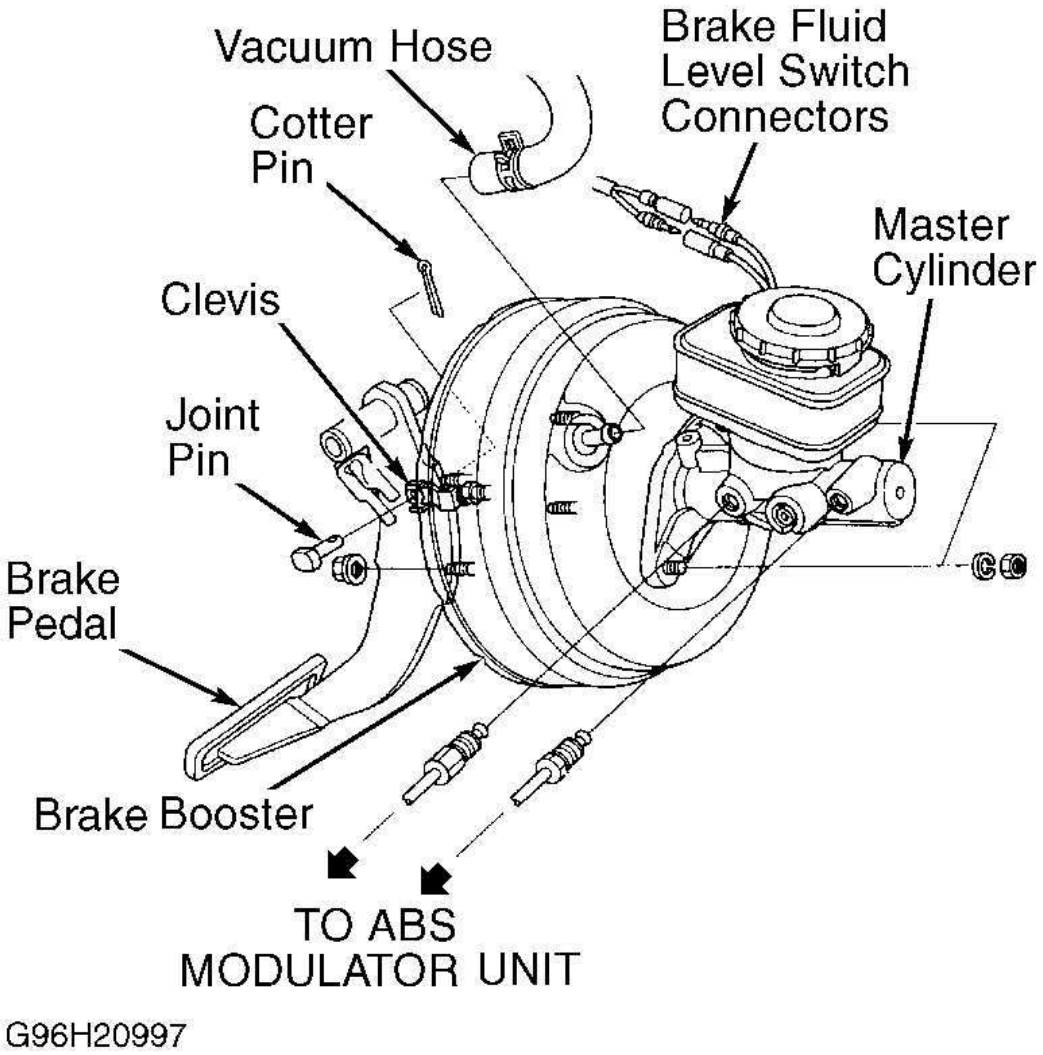

Fig. 16: Locating Master Cylinder & Booster Components (3.5RL)
Courtesy of AMERICAN HONDA MOTOR CO., INC.

PARKING BRAKE SHOES

Removal

1. Raise and support vehicle. Remove rear wheels. Remove rear caliper and disc/drum.
2. Remove brake shoe upper return springs. Remove hold-down springs and tension pins. Remove upper connecting rod and rod spring. Lower parking brake shoes and remove lower return spring and adjuster. Disconnect parking brake cable from parking brake lever. Remove "U" clip, wave washer, parking brake lever, and pivot pin from brake shoes. See **Fig. 17** , **Fig. 18** and **Fig. 19** .

cardiagn.com

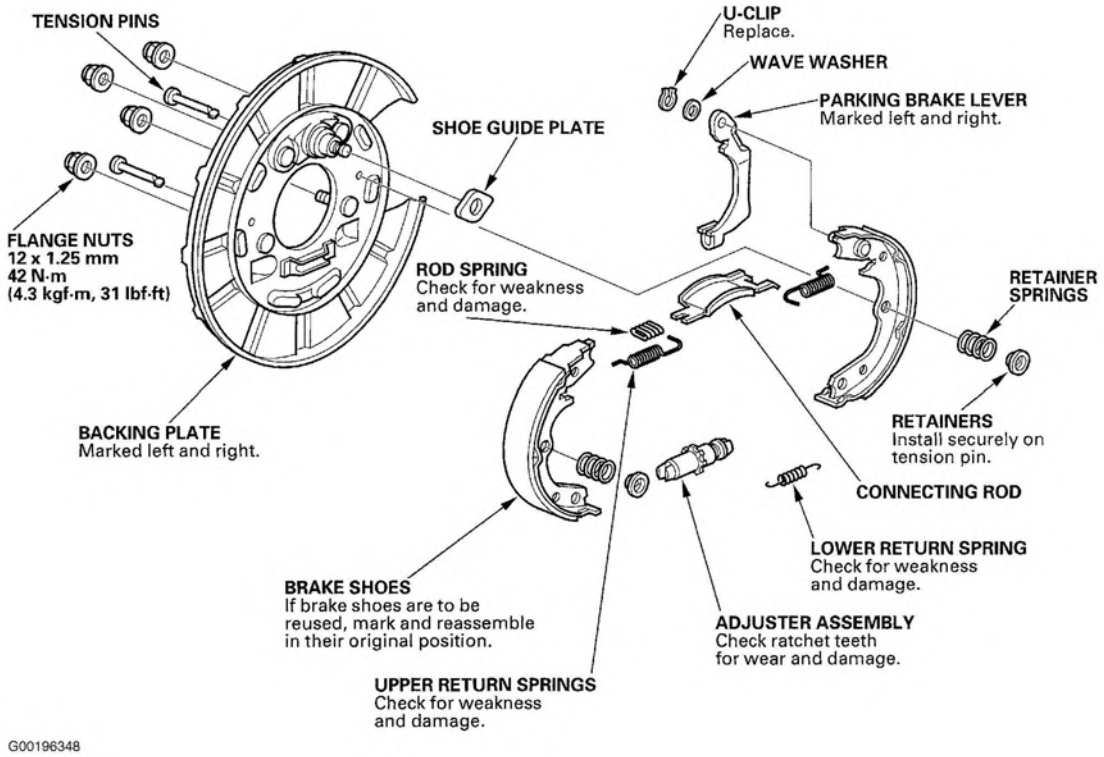

Fig. 17: Identifying Parking brake Components (MDX)
Courtesy of AMERICAN HONDA MOTOR CO., INC.

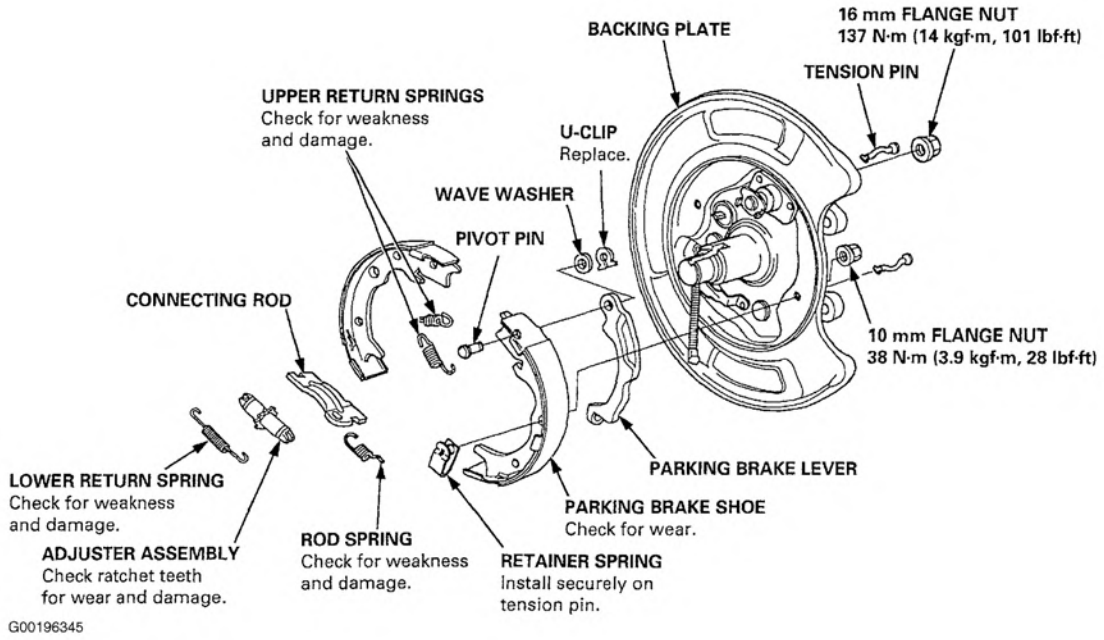

Fig. 18: Exploded View Of Parking Brake Components (3.5RL)

cardiagn.com

Courtesy of AMERICAN HONDA MOTOR CO., INC.

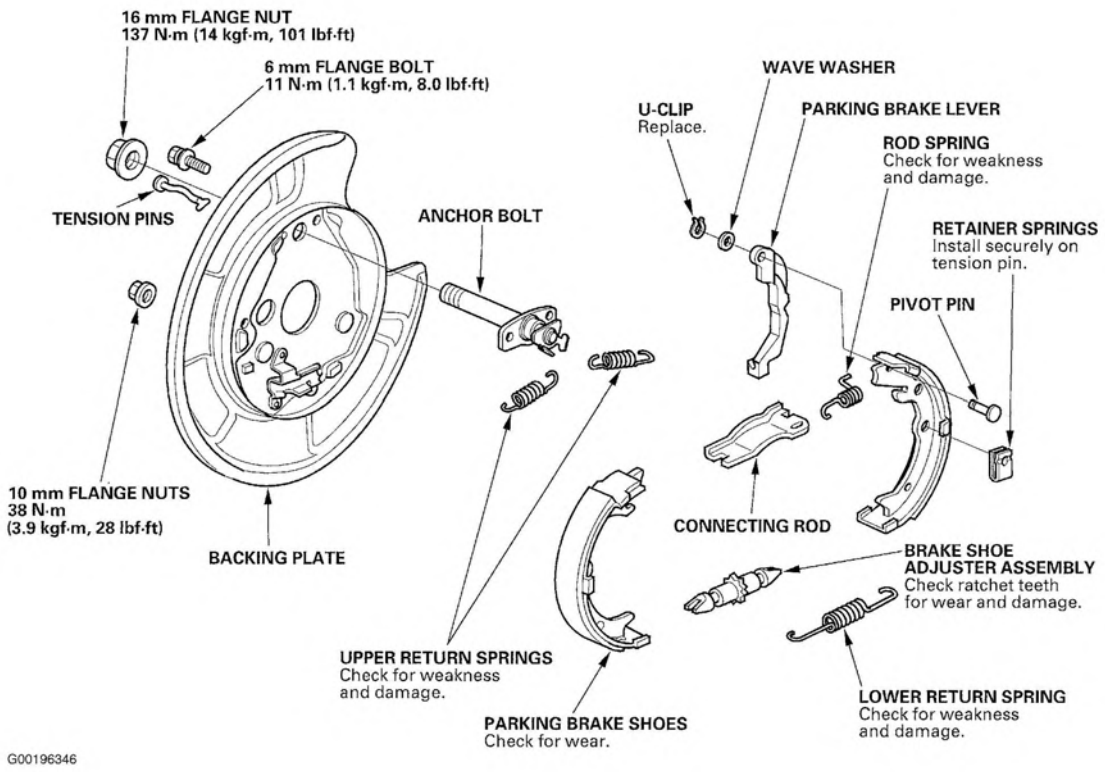

Fig. 19: Exploded View Of Parking Brake Components (3.2CL & 3.2TL)
Courtesy of AMERICAN HONDA MOTOR CO., INC.

Inspection

Check brake linings for cracking, glazing, wear and contamination. Replace brake linings as a set if thickness is less than .04" (1.0 mm). Check inside of disc/drum brake rotor for scoring, grooves and cracks. Replace disc/drum brake rotor if drum inside diameter is more than 8.307" (211 mm) on MDX or 6.732" (171 mm) on 3.2CL, 3.2TL & 3.5RL models.

Installation

1. Apply Molykote(R) M44 (or equivalent) grease to sliding surface of pivot pin. Install pivot pin into brake shoe. Install parking brake lever and wave washer onto pivot pin, and secure using NEW "U" clip. Connect parking brake cable to parking brake lever. Apply Molykote(R) M44 (or equivalent) grease to brake shoe contact points. See **Fig. 20** .
2. Clean threaded portions of adjuster assembly clevis, and coat with grease. To shorten clevis, turn adjuster bolt. Install adjuster assembly and lower return spring. Connect rod spring to connecting rod with hook pointing downward. Install tension pins and hold-down springs. Install upper return springs.
3. Install disc and 6-mm screws. Adjust parking brake. Install rear brake caliper. Bleed hydraulic system if necessary. See **BLEEDING BRAKE SYSTEM** . If new parking brake shoes or new brake discs have

cardiagn.com

been installed, perform brake shoe lining break-in procedure. See **PARKING BRAKE LINING BREAK-IN** .

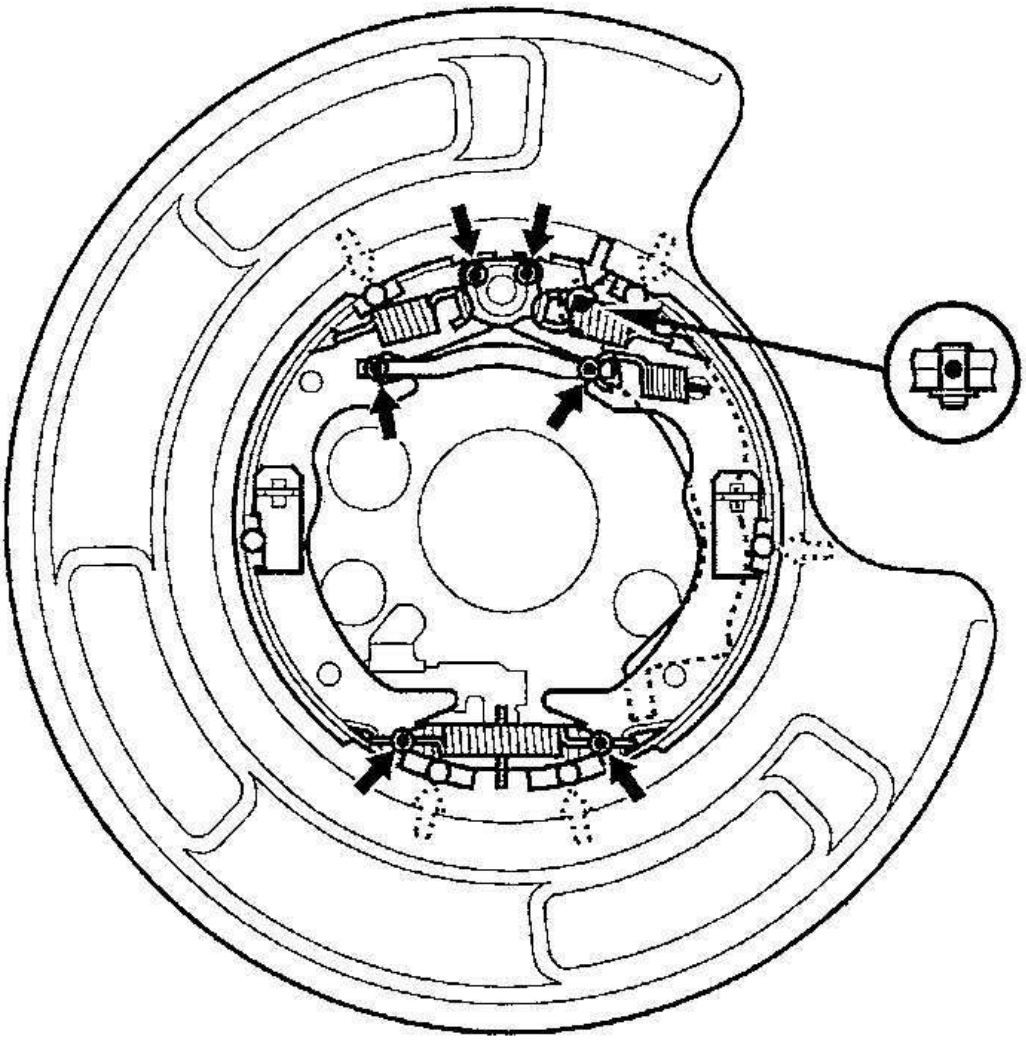

Greasing symbols:

Brake shoe ends

Sliding surface

Opposite edge of the shoe

G00196347

Fig. 20: Greasing Contact Points Of Parking Brakes (3.2CL Shown, All Others Similar)

cardiagn.com

Courtesy of AMERICAN HONDA MOTOR CO., INC.

Parking Brake Lining Break-In

1. Perform this procedure only when new parking brake shoes or new rear brake discs (drums) have been installed. Depress parking brake pedal while counting number of clicks. If number of clicks to fully set parking brake is not 2-4 (MDX, 3.2CL & 3.2TL) or 6-8 (3.5RL), adjust parking brake.
2. With parking brake adjusted correctly, park car on firm, level surface. Pull parking brake release lever up so parking brake is released. Hold lever in up position for testing. Or push parking brake pedal 1-4 clicks drive vehicle about 30 MPH for 1/4 mile. Release parking brake and park vehicle for 5-10 minutes to allow brake discs to cool.
3. Repeat step 2 , 2-4 more times. Check and adjust parking brake as necessary.

REAR DISC BRAKE PADS

Removal (MDX, 3.2CL & 3.2TL)

Raise and support vehicle. Remove wheels. Remove caliper mounting bolts and caliper from caliper bracket. Remove brake pad shims, brake pads and retainers. Measure friction pad thickness. Service limit is .06" (1.6 mm).

Installation

1. Clean caliper thoroughly. Remove rust and check for grooves or cracks. Install pad retainers in correct positions. Apply Molykote(R) M77 (or equivalent) compound to pad side of pad shims. Install brake pads and shims. See **Fig. 21** .
2. Push in piston so caliper will fit over brake pads. Align cut-out in piston with tab on inner pad. Apply a rubber lubricant to piston boot to keep boot from twisting. Install brake caliper and caliper bracket. Pump brake pedal several times to seat pads. If necessary, bleed brakes. See **BLEEDING BRAKE SYSTEM** . Depress brake pedal several times to restore normal brake pedal stroke. Adjust parking brake if necessary.

Removal (3.5RL)

Raise and support vehicle. Remove rear wheels. Remove brake hose bracket from trailing arm. Remove lower caliper mounting bolt, and pivot caliper upward. Remove shims, pads, and retainers. Measure thickness of pad lining. Service limit is .06" (1.60 mm). See **Fig. 21** .

Installation

1. Install caliper bracket and mounting bolts. Tighten bolts to specification. See **TORQUE SPECIFICATIONS** . Install pad retainers. Apply Molykote(R) M77 (or equivalent) compound to both sides of inner and outer pad shims. Install brake pads and shims on caliper bracket. Install inner pad with wear indicator downward.
2. Push in piston so caliper will fit over brake pads. Install brake caliper and mounting bolt. Tighten caliper mounting bolt to specification. See **TORQUE SPECIFICATIONS** . Pump brake pedal several times to seat pads. Check for leaks at hose and line joints or connections. Retighten or repair as necessary. Bleed

cardiagn.com

brakes if necessary. See **BLEEDING BRAKE SYSTEM** .

cardiagn.com

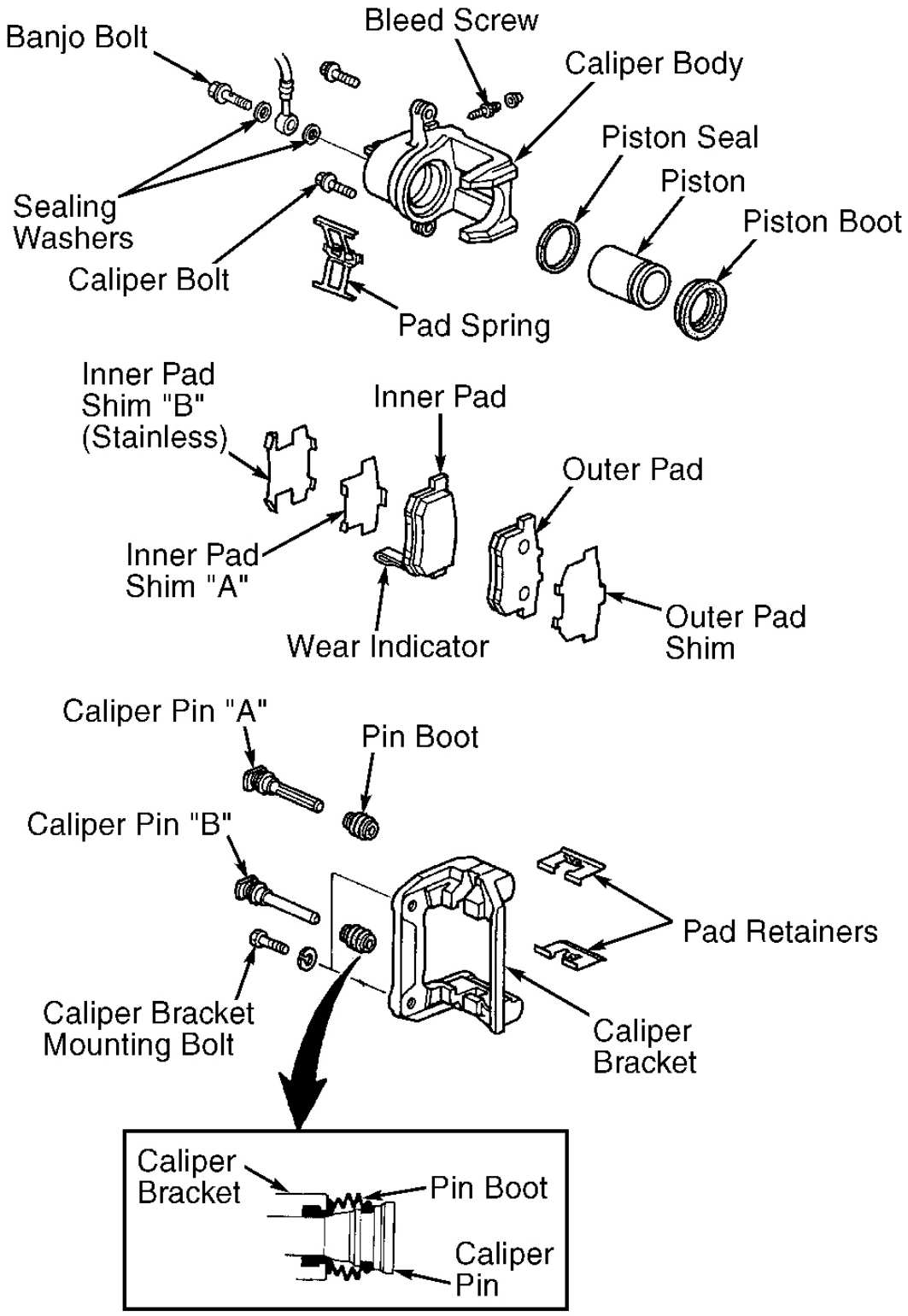

G96F20995

cardiagn.com

Fig. 21: Exploded View Of Rear Brake Caliper (3.5RL Shown; MDX, 3.2CL & 3.2TL Are Similar)
Courtesy of AMERICAN HONDA MOTOR CO., INC.

OVERHAUL

FRONT & REAR DISC BRAKE CALIPERS

WARNING: DO NOT put hand in front of piston when using air pressure to remove piston.

CAUTION: Ensure brake fluid does not spill on painted surfaces, as damage to finish will result.

See **Fig. 22** -**Fig. 27** for exploded views of brake caliper components and procedures.

cardiagn.com

⚠CAUTION

Frequent inhalation of brake pad dust, regardless of material composition, could be hazardous to your health.
- Avoid breathing dust particles.
- Never use an air hose or brush to clean brake assemblies. Use an OSHA-approved vacuum cleaner.

Remove, disassemble, inspect, reassemble, and install the caliper, and note these items:

- Do not spill brake fluid on the vehicle; it may damage the paint. If brake fluid gets on the paint, wash it off immediately with water.
- To prevent dripping brake fluid, cover disconnected hose joints with rags or shop towels.
- Clean all parts in brake fluid and air dry; blow out all passages with compressed air.
- Before reassembling, check that all parts are free of dirt and other foreign particles.
- Replace parts with new ones as specified in the illustration.
- Make sure no dirt or other foreign matter gets in the brake fluid.
- Make sure no grease or oil gets on the brake discs or pads.
- When reusing pads, always reinstall them in their original positions to prevent loss of braking efficiency.
- Do not reuse drained brake fluid. Use only clean Genuine Honda DOT 3 Brake Fluid. Non-Honda brake fluid can cause corrosion and shorten the life of the system.
- Coat the piston, piston seal groove, and caliper bore with clean brake fluid.
- Replace all rubber parts with new ones.
- After installing the caliper, check the brake hose and line for leaks, interference, and twisting.

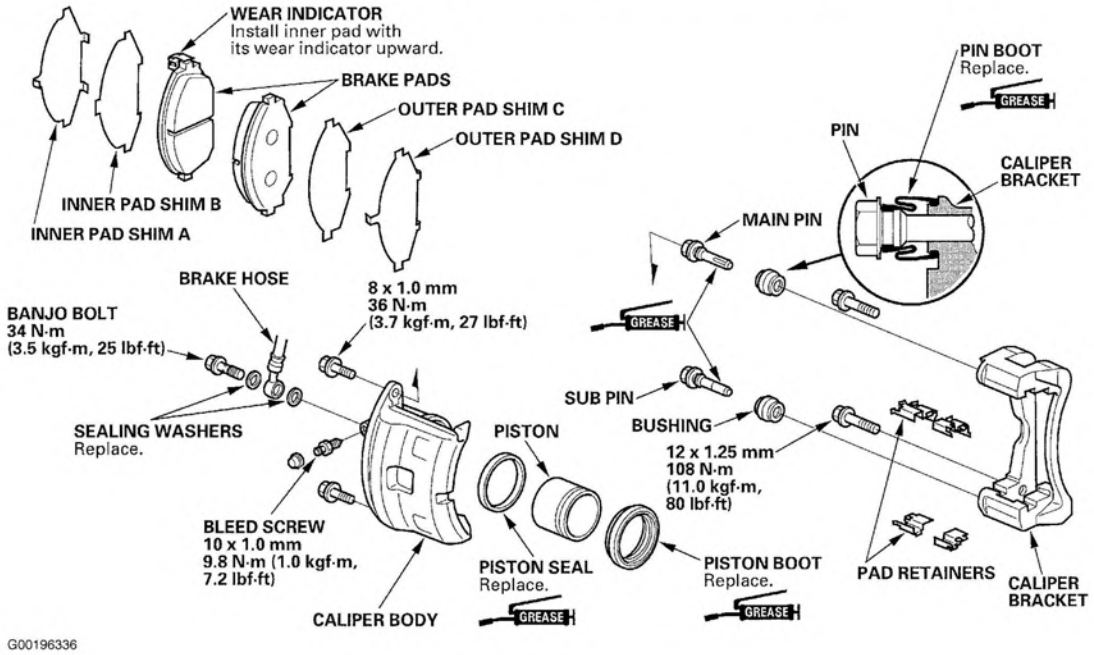

Fig. 22: Exploded View Of Front Brake Caliper Components (MDX)
Courtesy of AMERICAN HONDA MOTOR CO., INC.

cardiagn.com

⚠CAUTION

Frequent inhalation of brake pad dust, regardless of material composition, could be hazardous to your health.
- Avoid breathing dust particles.
- Never use an air hose or brush to clean brake assemblies. Use an OSHA-approved vacuum cleaner.

Remove, disassemble, inspect, reassemble, and install the caliper, and note these items:

- Do not spill brake fluid on the vehicle; it may damage the paint. If brake fluid gets on the paint, wash it off immediately with water.
- To prevent dripping brake fluid, cover disconnected hose joints with rags or shop towels.
- Clean all parts in brake fluid and air dry; blow out all passages with compressed air.
- Before reassembling, check that all parts are free of dirt and other foreign particles.
- Replace parts with new ones as specified in the illustration.
- Make sure no dirt or other foreign matter gets into the brake fluid.
- Make sure no grease or oil gets on the brake discs or pads.
- When reusing pads, always reinstall them in their original positions to prevent loss of braking efficiency.
- Do not reuse drained brake fluid. Use only clean Genuine Honda DOT 3 Brake Fluid. Non-Honda brake fluid can cause corrosion and shorten the life of the system.
- Coat the piston, piston seal groove, and caliper bore with clean brake fluid.
- Replace all rubber parts with new ones.
- After installing the caliper, check the brake hose and line for leaks, interference, and twisting.

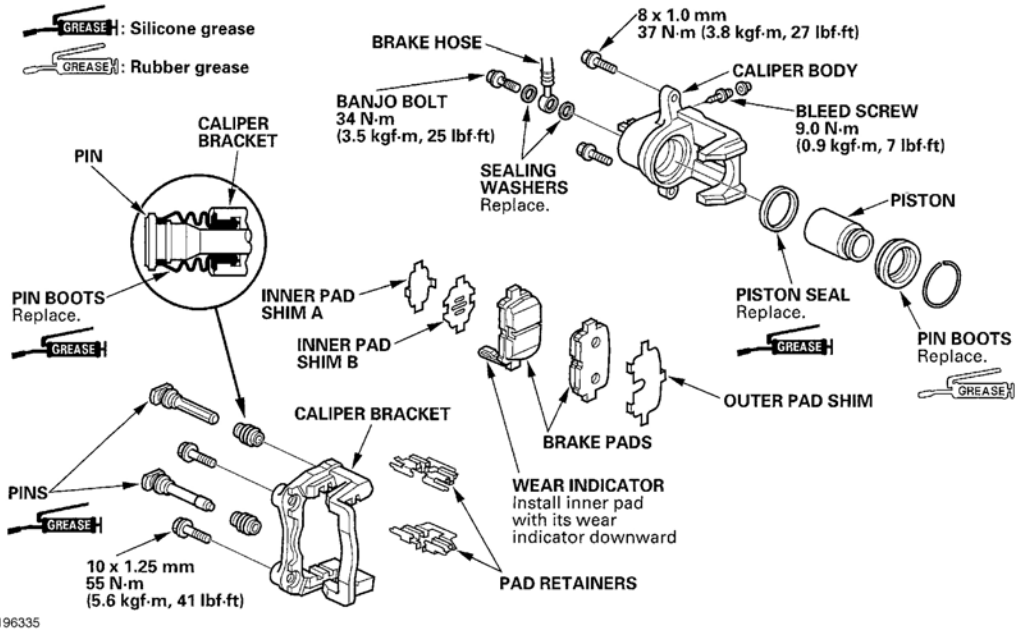

Fig. 23: Exploded View Of Rear Brake Caliper Components (MDX)
Courtesy of AMERICAN HONDA MOTOR CO., INC.

cardiagn.com

⚠CAUTION

Frequent inhalation of brake pad dust, regardless of material composition, could be hazardous to your health.
- Avoid breathing dust particles.
- Never use an air hose or brush to clean brake assemblies. Use an OHSA-approved vacuum cleaner.

Remove, disassemble, inspect, reassemble, and install the caliper, and note these items:

- Do not spill brake fluid on the vehicle; it may damage the paint. If brake fluid gets on the paint, wash it off immediately with water.
- To prevent dripping, cover disconnected hose joints with rags or shop towels.
- Clean all parts in brake fluid and air dry; blow out all passages with compressed air.
- Before reassembling, check that all parts are free of dirt and other foreign particles.
- Replace parts with new ones as specified in the illustration.
- Make sure no dirt or other foreign matter gets in the brake fluid.
- Make sure no grease or oil gets on the brake discs or pads.
- When reusing pads, always reinstall them in their original positions to prevent loss of braking efficiency.
- Do not reuse drained brake fluid. Use only clean Honda DOT 3 or DOT 4 brake fluid. Non-Honda brake fluid can cause corrosion and shorten the life of the system.
- Coat the piston, piston seal groove, and caliper bore with clean brake fluid.
- Replace all rubber parts with new ones.
- After installing the caliper,check the brake hose and line for leaks, interference, and twisting.

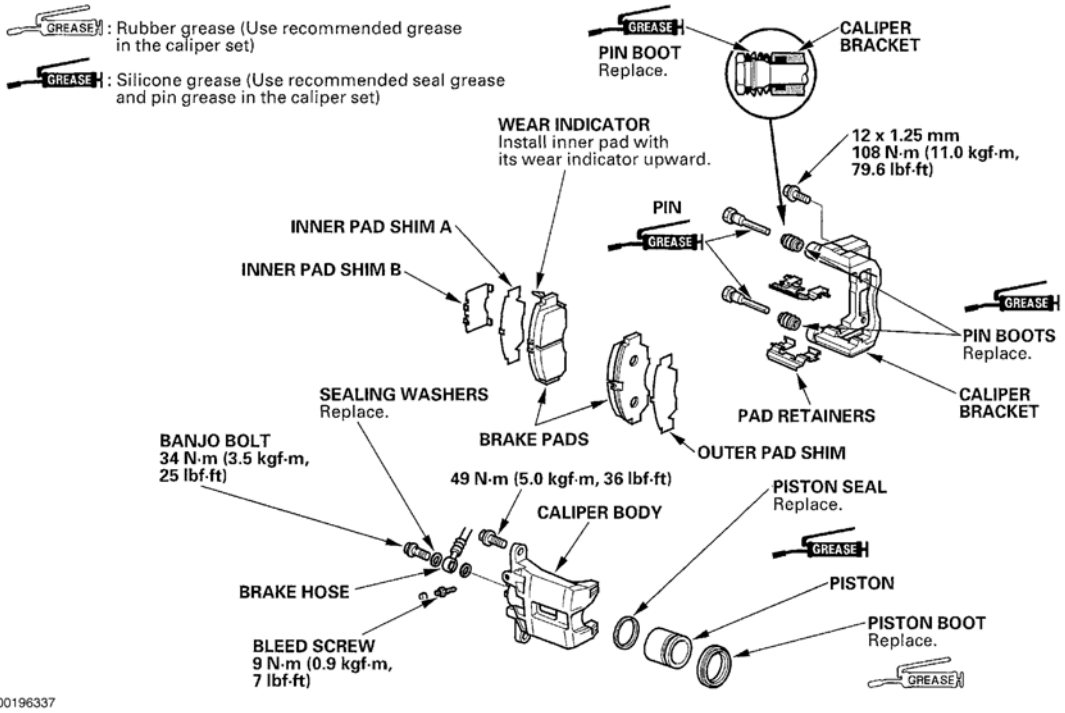

Fig. 24: Exploded View Of Front Brake Caliper Components (3.2CL & 3.2TL)
Courtesy of AMERICAN HONDA MOTOR CO., INC.

cardiagn.com

⚠CAUTION

Frequent inhalation of brake pad dust, regardless of material composition, could be hazardous to your health.
- Avoid breathing dust particles.
- Never use an air hose or brush to clean brake assemblies. Use an OHSA-approved vacuum cleaner.

Remove, disassemble, inspect, reassemble, and install the caliper, and note these items:

- Do not spill brake fluid on the vehicle; it may damage the paint. If brake fluid gets on the paint, wash it off immediately with water.
- Clean all parts in brake fluid and air dry; blow out all passages with compressed air.
- Before reassembling, check that all parts are free of dirt and other foreign particles.
- Replace parts with new ones as specified in the illustration.
- Make sure no dirt or other foreign matter gets in the brake fluid.
- Make sure no grease or oil gets on the brake discs or pads.
- When reusing pads, always reinstall them in their original positions to prevent loss of braking efficiency.
- Do not reuse drained brake fluid. Use only clean Honda DOT 3 Brake Fluid. Non-Honda brake fluid can cause corrosion and shorten the life of the system.
- Coat the piston, piston seal groove, and caliper bore with clean brake fluid.
- Replace all rubber parts with new ones.
- After installing the caliper, check the brake hose and line for leaks, interference, and twisting.

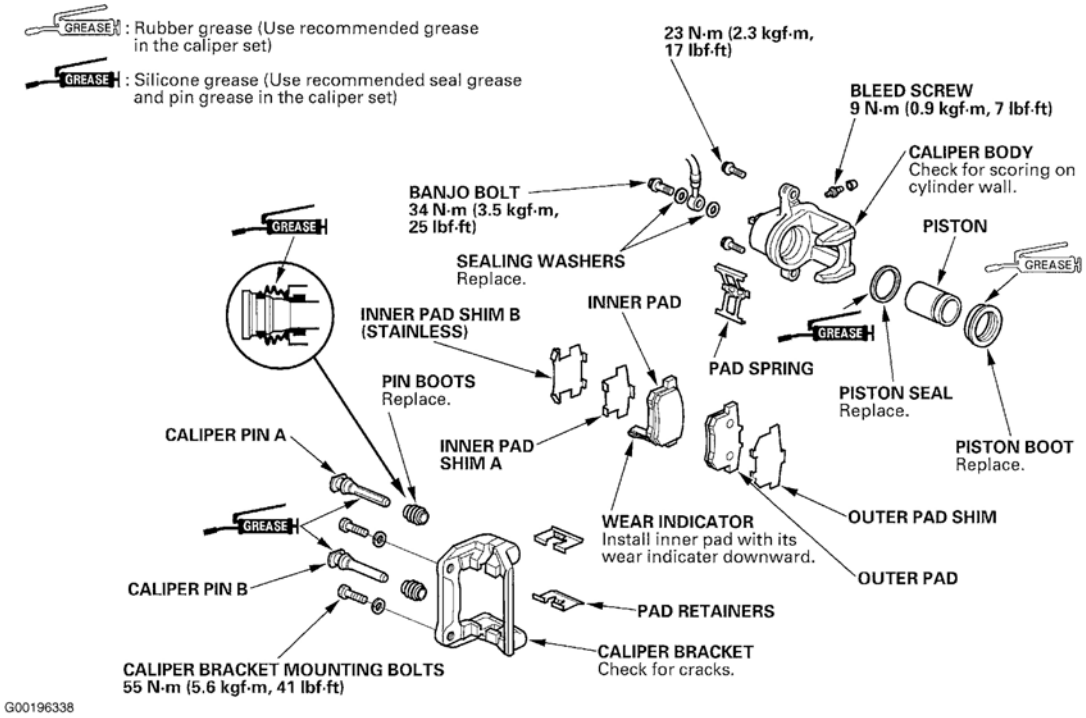

Fig. 25: Exploded View Of Rear Brake Caliper Components (3.2CL & 3.2TL)
Courtesy of AMERICAN HONDA MOTOR CO., INC.

cardiagn.com

Disassembly/Reassembly

WARNING

- **Never use an air hose or dry brush to clean brake assemblies.**
- **Use an OSHA-approved vacuum cleaner to avoid breathing brake dust.**
- **Contaminated brake discs or pads reduce stopping ability.**
- **When reusing the pads, always reinstall the brake pads in their original positions to prevent loss of braking efficiency.**

CAUTION:

- **Do not spill brake fluid on the vehicle; it may damage the paint. If brake fluid does contact the paint, wash it off immediately with water.**
- **To prevent spills, cover the hose joints with rags or shop towels.**
- **Clean all parts in brake fluid and air dry; blow out all passages with compressed air.**
- **Before reassembling, check that all parts are free of dust and other foreign particles.**
- **Replace parts with new ones whenever specified to do so.**
- **Make sure no dirt or other foreign matter is allowed to contaminate the brake fluid.**
- **Always use Genuine Honda DOT 3 Brake Fluid. Using a non-Honda brake fluid can cause corrosion and decrease the life of the system.**

NOTE:

- Coat the piston, piston seal, and caliper bore with clean brake fluid.
- Replace all rubber parts with new ones whenever disassembled.
- After installing the front brake caliper:
  - — Check for leaks at hose and line joints and connections, and retighten if necessary.
  - — Check the brake hoses for interference and twisting.

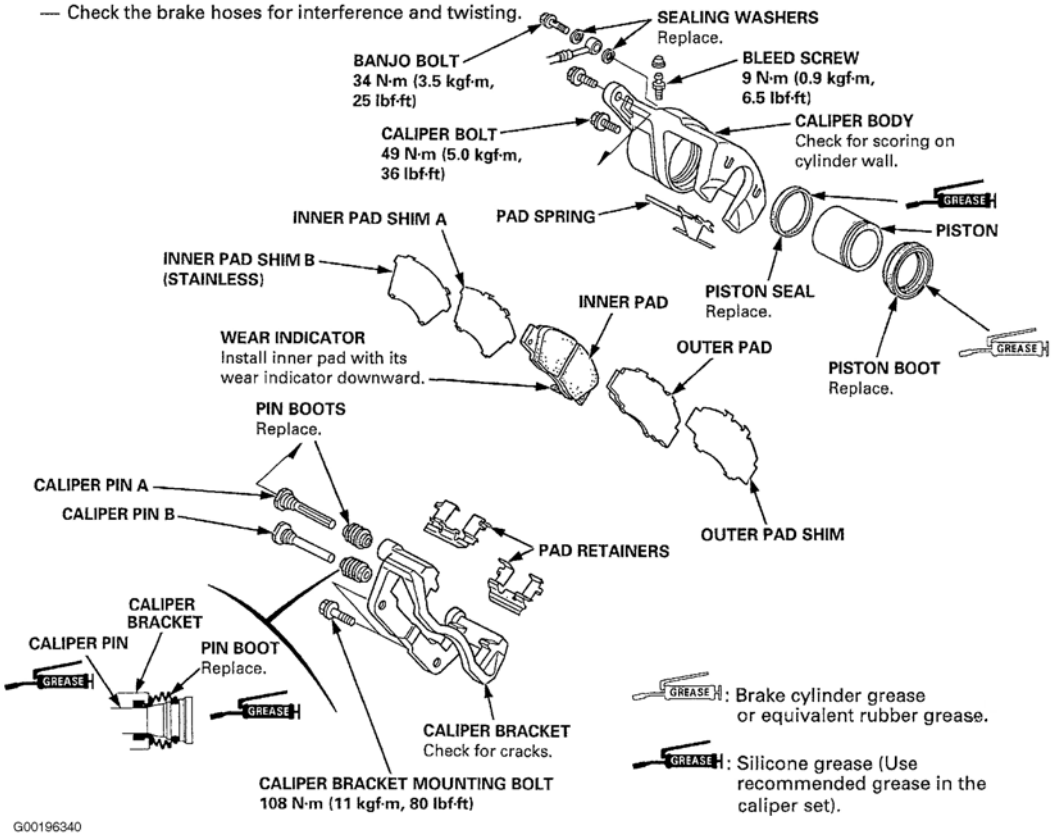

Fig. 26: Exploded View Of Front Brake Caliper Components (3.5RL)
Courtesy of AMERICAN HONDA MOTOR CO., INC.

cardiagn.com

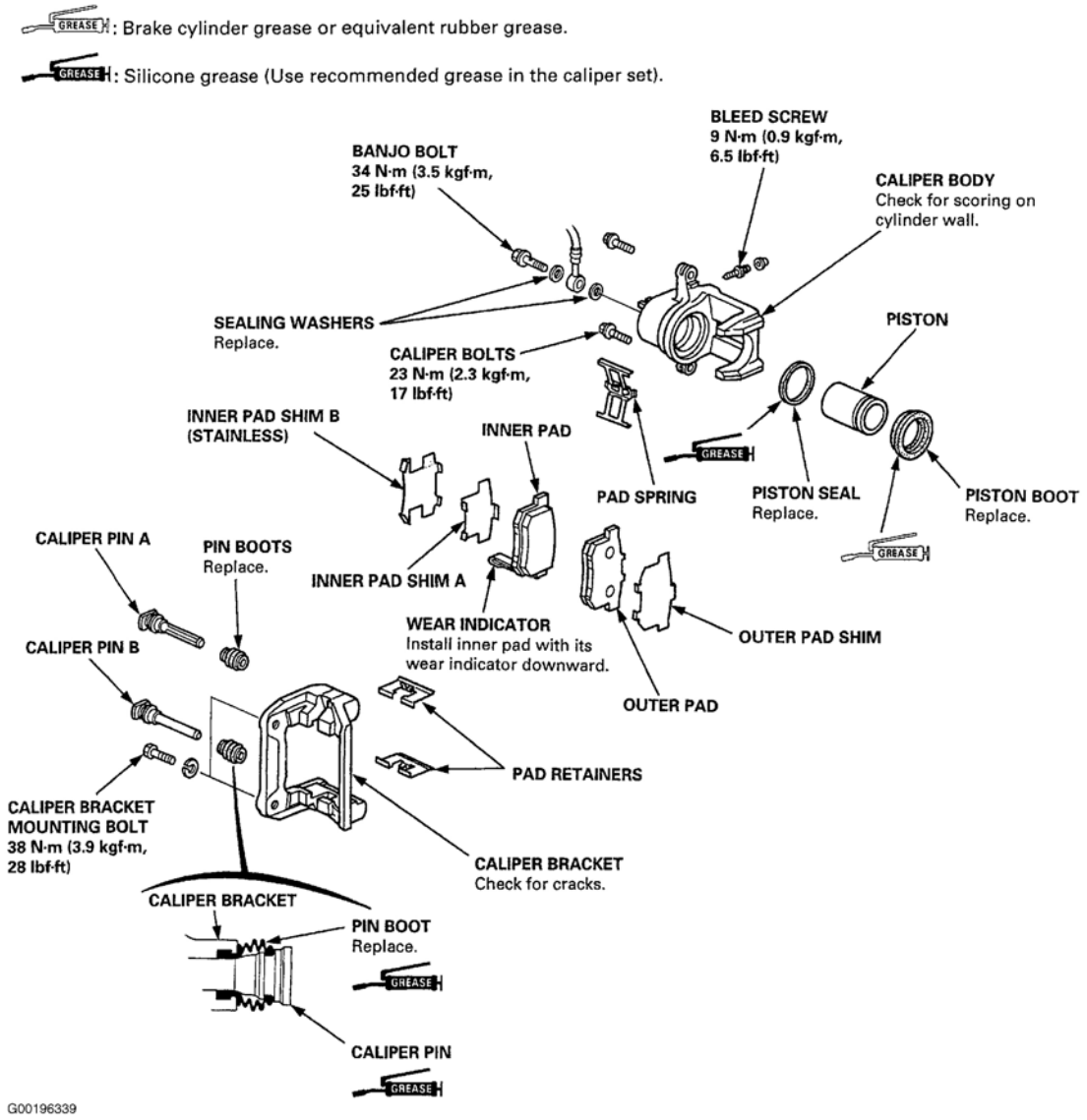

Fig. 27: Exploded View Of Rear Brake Caliper Components (3.5RL)
Courtesy of AMERICAN HONDA MOTOR CO., INC.

MASTER CYLINDER

Disassembly & Reassembly

DO NOT disassemble master cylinder. Replace master cylinder if defective.

POWER BRAKE BOOSTER

Disassembly & Reassembly

cardiagn.com

DO NOT disassemble power brake unit. Replace power brake booster if defective.

TORQUE SPECIFICATIONS

TORQUE SPECIFICATIONS

Application	Ft. Lbs. (N.m)
Brake Booster	
Push Rod Lock Nut	11 (15)
Mounting Nut	
MDX	18 (25)
3.2CL & 3.2TL	9 (13)
3.5RL	9 (13)
Brakeline-To-Flex Hose	11 (15)
Brakeline-To-Master Cylinder	
3.2CL & 3.2TL	
(1)	14 (19)
(2)	11 (15)
MDX & 3.5RL	11 (15)
Brakeline-To-ABS Modulator Unit	
3.2CL & 3.2TL	14 (19)
MDX & 3.5RL	11 (15)
Caliper Mounting Bracket Bolt	
Front	80 (108)
Rear	
Except 3.5RL	41 (55)
3.5RL	28 (38)
Caliper-To-Bracket Mounting Bolt	
Front	
Except MDX	36 (49)
MDX	27 (36)
Rear	
Except MDX	17 (23)
MDX	27 (37)
Flex Hose-To-Caliper Banjo Bolt	25 (34)
Master Cylinder Mounting Nut	
MDX	18 (24)
3.2CL & 3.2TL	11 (15)
3.5RL	10 (13)
Wheel Lug Nut	80 (108)
	INCH Lbs. (N.m)
Brake Bleed Screw	80 (9)

cardiagn.com

Rotor Retaining Screws	89 (10)

(1) With Traction Control System (TCS).

(2) With Vehicle Stability Assist (VSA)

DISC BRAKE SPECIFICATIONS

DISC BRAKE SPECIFICATIONS

Application	In. (mm)
Brake Disc	
MDX	
Parallelism	.0006 (.015)
Maximum Runout	(1) .004 (.10)
Standard Thickness	
Front	1.10-1.11 (27.9-28.1)
Rear	.43-.44 (10.9-11.1)
Minimum Refinish Thickness (2)	
Front	1.02 (26.0)
Rear	.35 (9.0)
3.2CL & 3.2TL	
Parallelism	.0006 (.015)
Maximum Runout	(1) .004 (.10)
Standard Thickness	
Front	1.10-1.11 (27.9-28.1)
Rear	.350-.358 (8.9-9.1)
Minimum Refinish Thickness (2)	
Front	1.02 (26.0)
Rear	.30 (7.5)
3.5RL	
Parallelism	.0006 (.015)
Maximum Runout (1)	
Front	.004 (.10)
Rear	.006 (.15)
Standard Thickness	
Front	.90-.91 (22.9-23.1)
Rear	.469-.476 (11.9-12.1)
Minimum Refinish Thickness (2)	
Front	1.02 (26.0)
Rear	.39 (10.0)
Parking Brake Drum (Rear)	

cardiagn.com

MDX	
Diameter	
Standard	8.264-8.267 (209.9-210.0)
Service Limit	8.307 (211.0)
Lining Thickness	
Standard	.16 (4.0)
Service Limit	.04 (1.0)
3.2CL, 3.2TL & 3.5RL	
Diameter	
Standard	6.689-6.693 (169.9-170.0)
Service Limit	6.732 (171.0)
Lining Thickness	
Standard	.075-.098 (1.9-2.5)
Service Limit	.04 (1.0)
Disc Pad Standard Thickness	
Front	.41-.45 (10.5-11.5)
Rear	
MDX	.37-.41 (9.5-10.5)
All Others	.33-.37 (8.5-9.5)
Limit	.06 (1.6)

(1) Measured 0.4" (10 mm) from outer edge of rotor. Resurface rotor if runout exceeds specification.

(2) Use discard thickness stamped on rotor if different from minimum refinish thickness shown in table.

cardiagn.com