Workshop Manual

Audi 100 1991 ➤ , Audi 80 1992 ➤ ,
Audi A1 2011 ➤ ,
Audi A1 Sportback 2018 ➤ ,
Audi A2 2001 ➤ , Audi A3 1997 ➤ ,
Audi A3 2004 ➤ , Audi A3 2013 ➤ ,
Audi A3 Cabriolet 2015 ➤ ,
Audi A3 Limousine 2014 ➤ ,
Audi A3 Limousine China 2014 ➤ ,
Audi A3 Sportback 2013 ➤ ,
Audi A3 Sportback China 2014 ➤ ,
Audi A4 1995 ➤ , Audi A4 2001 ➤ ,
Audi A4 2008 ➤ , Audi A4 2015 ➤ ,
Audi A4 Avant 2015 ➤ ,
Audi A4 Cabriolet 2003 ➤ ,
Audi A4 China 2016 ➤ ,
Audi A4 allroad quattro 2016 ➤ ,
Audi A5 2016 ➤ ,
Audi A5 Cabriolet 2009 ➤ ,
Audi A5 Coupé 2008 ➤ ,
Audi A5 Sportback 2010 ➤ ,
Audi A6 1995 ➤ , Audi A6 1998 ➤ ,
Audi A6 2005 ➤ , Audi A6 2011 ➤ ,
Audi A6 2019 ➤ , Audi A6 China 2012 ➤ ,
Audi A6 China 2019 ➤ ,
Audi A7 Sportback 2011 ➤ ,
Audi A7 Sportback 2018 ➤ ,
Audi A8 1994 ➤ , Audi A8 2003 ➤ ,
Audi A8 2010 ➤ , Audi A8 2018 ➤ ,
Audi Cabriolet 1991 ➤ , Audi Q2 2016 ➤ ,
Audi Q2 China 2019 ➤ , Audi Q3 2012 ➤ ,

Protected by copyright. Copying for private or commercial purposes, in part or in whole, is not permitted unless authorised by AUDI AG. AUDI AG does not guarantee or assume any liability with respect to the correctness of information. Copyright by AUDI AG.

Audi Q3 2019 ➤ , Audi Q3 China 2013 ➤ , Audi Q3 China 2019 ➤ , Audi Q5 2008 ➤ , Audi Q5 2017 ➤ , Audi Q5 China 2010 ➤ , Audi Q5 China 2019 ➤ , Audi Q7 2007 ➤ , Audi Q7 2016 ➤ , Audi Q8 2018 ➤ , Audi R8 2007 ➤ , Audi R8 2015 ➤ , Audi TT 1999 ➤ , Audi TT 2007 ➤ , Audi TT 2015 ➤ , Audi e-tron 2019 ➤

Air conditioner with refrigerant R134a

Protected by copyright. Copying for private or commercial purposes, in part or in whole, is not permitted unless authorised by AUDI AG. AUDI AG does not guarantee or accept any liability with respect to the correctness of information in this document. Copyright by AUDI AG.

Edition 05.2019

List of Workshop Manual Repair Groups

Protected by copyright. Copying for private or commercial purposes, in part or in whole, is not permitted without the prior consent of AUDI AG. AUDI AG does not guarantee or accept any liability with respect to the correctness of information in this document. Copyright by AUDI AG.

Repair Group
87 - Air conditioning system

Technical information should always be available to the foremen and mechanics, because their careful and constant adherence to the instructions is essential to ensure vehicle road-worthiness and safety. In addition, the normal basic safety precautions for working on motor vehicles must, as a matter of course, be observed.

All rights reserved.
No reproduction without prior agreement from publisher.

Copyright © 2019 Audi AG, Ingolstadt

Protected by copyright. Copying for private or commercial purposes, in part or in whole, is not permitted unless authorised by AUDI AG. AUDI AG does not guarantee or accept any liability with respect to the correctness of information in this document. Copyright by AUDI AG.

All rights reserved.
No reproduction without prior agreement from publisher.

Copyright © 2019 Audi AG, Ingolstadt

A0053300220

Contents

87 - Air conditioning system . . . 1

1 Safety precautions . . . 1
1.1 Safety precautions when working on air conditioners . . . 1
1.2 Safety precautions when handling refrigerants . . . 1
1.3 Safety precautions when working on vehicles with start/stop system . . . 2
1.4 Safety precautions when working on vehicles with high-voltage system . . . 2
1.5 Safety precautions when working in the vicinity of high-voltage components . . . 3
1.6 Safety precautions when using testers and measuring instruments during a road test . . . 4

2 General information on air conditioning systems . . . 5
2.1 Introduction . . . 5
2.2 Other reference material . . . 5
2.3 Principles of air conditioning systems . . . 6
2.4 Refrigerant R134a . . . 8
2.5 Properties of refrigerant R134a . . . 10
2.6 Refrigerant oil . . . 12
2.7 How air conditioning works . . . 13
2.8 General work safety . . . 14
2.9 Product properties . . . 15
2.10 Handling refrigerant . . . 15
2.11 Handling pressure vessels . . . 16
2.12 Basic rules for working on refrigerant circuit . . . 17
2.13 Before using air conditioner after system has been re-charged . . . 19

3 General information on refrigerant circuit . . . 21
3.1 Components of refrigerant circuit . . . 21
3.2 Layout of components of refrigerant circuit and their influence on high-pressure and low-pressure sides . . . 21
3.3 Design of refrigerant circuit . . . 39
3.4 Refrigerant circuit with electrically driven air conditioner compressor . . . 40
3.5 Connections for quick-release coupling in refrigerant circuit . . . 41
3.6 Switches and senders in refrigerant circuit and related connections . . . 47
3.7 Electrical components not installed in refrigerant circuit . . . 55
3.8 Pressures and temperatures in refrigerant circuit . . . 55
3.9 Tests and measurements performed with pressure gauge . . . 60
3.10 Air conditioner service and recycling units . . . 61
3.11 Repair notes for refrigerant circuit . . . 62

4 Laws and regulations . . . 63
4.1 Laws and regulations . . . 63

5 Refrigerant circuit . . . 68
5.1 Important repair notes for air conditioning systems . . . 68
5.2 Converting refrigerant circuits from refrigerant R12 to refrigerant R134a . . . 68
5.3 Working with the air conditioner service station . . . 69
5.4 Blowing out refrigerant circuit with compressed air and nitrogen . . . 84
5.5 Cleaning (flushing) refrigerant circuit with refrigerant R134a . . . 88
5.6 Tracing leaks in refrigerant circuit . . . 161

6 Problems with refrigerant circuit . . . 176
6.1 Possible complaints about refrigerant circuit . . . 176

7 Connecting air conditioner service station . . . 178
7.1 Connecting air conditioner service station - vehicles with a connection on the low-pressure and high-pressure side of the refrigerant circuit . . . 178
7.2 Connecting air conditioner service station - vehicles with no connection on the low-pressure side of the refrigerant circuit . . . 179

8 Checking pressures . . . 183

Protected by copyright. Copying for private or commercial purposes, in part or in whole, is not permitted unless authorised by AUDI AG. AUDI AG does not guarantee or accept any liability with respect to the correctness of information in this document. Copyright by AUDI AG.

8.1 Checking pressures in refrigerant circuit with air conditioner service station (with ignition switched off) . . . 183
8.2 Checking pressures - vehicles with restrictor and reservoir (with internally regulated air conditioner compressor) . . . 189
8.3 Checking pressures - vehicles with expansion valve and receiver (with internally regulated air conditioner compressor) . . . 194
8.4 Checking pressures - vehicles with restrictor, reservoir and air conditioner compressor regulating valve N280 (with externally regulated air conditioner compressor) . . . 200
8.5 Checking pressures - vehicles with expansion valve, receiver and air conditioner compressor regulating valve N280 (with externally regulated air conditioner compressor) . . . 207
8.6 Checking pressures - vehicles with electrically driven air conditioner compressor (vehicles with high-voltage system) . . . 218

9 Renewing components of refrigerant circuit . . . 258
9.1 Renewing components . . . 258

10 Capacities for refrigerant R134a/refrigerant oil and approved refrigerant oils . . . 276
10.1 Capacities for refrigerant R134a . . . 276
10.2 Approved refrigerant oils and refrigerant oil capacities . . . 317

11 Test equipment and tools . . . 361
11.1 List of testers, tools and materials . . . 361
11.2 Tools and materials available from regional sales centre or importer . . . 363
11.3 Commercially available tools and materials . . . 366
11.4 Improvised tools . . . 367

Protected by copyright. Copying for private or commercial purposes, in part or in whole, is not permitted unless authorised by AUDI AG. AUDI AG does not guarantee or accept any liability in respect to the correctness of information in this document. Copyright by AUDI AG.

87 – Air conditioning system

permitted unless authorised by AUDI AG. AUDI AG does not guarantee or accept any liability with respect to the correctness of information in this document. Copyright by AUDI AG.

1 Safety precautions

(ARL006445; Edition 05.2019)

⇒ "1.1 Safety precautions when working on air conditioners", page 1

⇒ "1.2 Safety precautions when handling refrigerants", page 1

⇒ "1.3 Safety precautions when working on vehicles with start/stop system", page 2

⇒ "1.4 Safety precautions when working on vehicles with high-voltage system", page 2

⇒ "1.5 Safety precautions when working in the vicinity of high-voltage components", page 3

⇒ "1.6 Safety precautions when using testers and measuring instruments during a road test", page 4

1.1 Safety precautions when working on air conditioners

Risk of explosion due to ignition sources - risk of death!

Danger to life and risk of explosion if ignition sources are close to air conditioners and refrigerant vessels. Escaping refrigerant may ignite and cause an explosion. Danger of severe or fatal injuries due to explosion.

- Always keep ignition sources away from air conditioners or refrigerant vessels.
- Avoid electrostatic discharge, sparks from the striking of tools and hot surfaces.

Risk of irreparable damage to refrigerant lines

Risk of irreparable damage to refrigerant lines if the inside film is torn.

- Never bend refrigerant lines which have a radius smaller than r = 100 mm.

1.2 Safety precautions when handling refrigerants

Danger of asphyxiation and poisoning from refrigerant

Refrigerant vapour can cause dry coughs, nausea and even asphyxiation or poisoning.

- Never inhale refrigerant vapour.
- Always perform work on the refrigerant circuit and keep refrigerant vessels in well ventilated areas.
- Never work in cellars, near cellar entrances or in or near other underground areas.
- Switch on extraction systems.

Risk of frostbite from refrigerant

Pressurised refrigerant can escape during work on the air conditioner. Risk of frostbite on skin and other parts of the body

- Put on protective gloves.
- Put on safety goggles.
- Extract/drain refrigerant and then immediately open up refrigerant circuit.
- Extract/drain refrigerant again if more than 10 minutes have passed since initial extraction and refrigerant circuit has not been opened up. Renewed evaporation has created pressure in the refrigerant circuit.

1.3 Safety precautions when working on vehicles with start/stop system

Risk of injury - engine may start unexpectedly

The engine can start unexpectedly if the vehicle's start/stop system is activated. A message in the instrument cluster indicates whether the start/stop system is activated.

- To deactivate the start/stop system, switch off the ignition.

1.4 Safety precautions when working on vehicles with high-voltage system

High voltage can cause fatal injury.

The voltage levels in the high-voltage system constitute a safety hazard. Danger of severe or fatal injuries from electric shock or electric arcs.

- The high-voltage system must be de-energised before any work is performed on the high-voltage system.
- For work that does not affect the high-voltage system directly, the high-voltage system must also be de-energised in some cases.
- Please note the work for which the high-voltage system must be de-energised ⇒ Rep. gr. 00 ; Assessing high-voltage system risk level .
- Have an Audi high-voltage technician (HVT) or an Audi high-voltage expert (HVE) de-energise the high-voltage system.

Protected by copyright. Copying for private or commercial purposes, in part or in whole, is not permitted unless authorised by AUDI AG. AUDI AG does not guarantee or accept any liability with respect to the correctness of information in this document. Copyright by AUDI AG.

Risk of injury - engine may start unexpectedly

It is difficult to determine whether the drive system of an electric vehicle or hybrid vehicle is active. Moving parts can trap or draw in parts of the body.

– Switch off ignition.
– Place ignition key outside vehicle.

Risk of injury if auxiliary air conditioner is activated

On electric and hybrid vehicles, the auxiliary air conditioner can switch itself on if it has been activated. The radiator fans can start up automatically and trap or draw in parts of the body.

– Deactivate auxiliary air conditioner.

1.5 Safety precautions when working in the vicinity of high-voltage components

High voltage can cause fatal injury.

The voltage levels in the high-voltage system constitute a safety hazard. Danger of severe or fatal injuries from electric shock or electric arcs if high-voltage components or high-voltage wiring are damaged.

– Carry out a visual check of high-voltage components and high-voltage wiring.
– Never use cutting/forming tools or other sharp-edged implements in the vicinity of high-voltage components and high-voltage wires.
– Never perform work using welding, brazing, thermal bonding or hot air in the vicinity of high-voltage components or high-voltage wires.

Risk of damage to high-voltage wiring

Incorrect handling may result in damage to the insulation of high-voltage wires or high-voltage connectors.

– Never use high-voltage wiring or high-voltage connectors as a support.
– Never prop tools against high-voltage wiring or high-voltage connectors.
– High-voltage cables must not be excessively bent or kinked.
– Pay attention to coding when connecting high-voltage connections.

Protected by copyright. Copying for private or commercial purposes, in part or in whole, is not permitted unless authorised by AUDI AG. AUDI AG does not guarantee or accept any liability with respect to the correctness of information in this document. Copyright by AUDI AG.

1.6 Safety precautions when using testers and measuring instruments during a road test

Risk of injury if test equipment is not secured

If an accident occurs and the front passenger's airbag is triggered, test equipment which is not secured adequately may be catapulted through the vehicle with potentially serious consequences.

– Secure test equipment on the rear seat with a strap.

Or:

– Have a second mechanic operate test equipment on the rear seat.

Protected by copyright. Copying for private or commercial purposes, in part or in whole, is not permitted unless authorised by AUDI AG. AUDI AG does not guarantee or accept any liability with respect to the correctness of information in this document. Copyright by AUDI AG.

2 General information on air conditioning systems

⇒ “2.1 Introduction”, page 5

⇒ “2.2 Other reference material ”, page 5

⇒ “2.3 Principles of air conditioning systems”, page 6

⇒ “2.4 Refrigerant R134a”, page 8

⇒ “2.5 Properties of refrigerant R134a”, page 10

⇒ “2.6 Refrigerant oil”, page 12

⇒ “2.7 How air conditioning works”, page 13

⇒ “2.8 General work safety”, page 14

⇒ “2.9 Product properties”, page 15

⇒ “2.10 Handling refrigerant”, page 15

⇒ “2.11 Handling pressure vessels”, page 16

⇒ “2.12 Basic rules for working on refrigerant circuit”, page 17

⇒ “2.13 Before using air conditioner after system has been recharged”, page 19

Protected by copyright. Copying for private or commercial purposes, in part or in whole, is not permitted unless authorised by AUDI AG. AUDI AG does not guarantee or accept any liability with respect to the correctness of information in this document. Copyright by AUDI AG.

2.1 Introduction

This manual is intended to provide foremen and mechanics with the basic knowledge needed to ensure reliable and successful repairs.

Note

This requires careful study of the manual, coupled with suitable training on automotive air conditioning systems (with a qualification test if applicable) and the ability to apply the acquired expertise in practice.

This document is a compact reference work which should be kept at the workplace. It should also be available for presentation to the responsible supervisory agency on request.

2.2 Other reference material

- Workshop Manual for model-specific maintenance work ⇒ Heating, air conditioning; Rep. gr. 87 ; Overview of fitting locations - air conditioner (vehicle-specific Workshop Manual) and ⇒ Current flow diagrams, Electrical fault finding and Fitting locations
- Technical Service Handbook (TPI) outlining action to be taken to rectify current problems
- Self-study programmes, e.g. ⇒ Self-study programme No. 208 ; Air conditioning systems in motor vehicles
- Video training courses for dealerships
- List of special tools and workshop equipment required for repairing the air conditioner ⇒ Electronic parts catalogue (Tools; Workshop equipment/tools; Air conditioner/heater).
- Service Organisation Handbook, Vol. 1 “Additional equipment” ⇒ Audi ServiceNet, Handbooks

- Workshop Manual: Air conditioner with refrigerant R12 (for vehicles built up to model year 1993; this Workshop Manual is available in hardcopy form only)

2.3 Principles of air conditioning systems

⇒ “2.3.1 Physical principles”, page 6

⇒ “2.3.2 Pressure and boiling point”, page 6

⇒ “2.3.3 Vapour pressure table for refrigerant R134a”, page 7

⇒ “2.5 Properties of refrigerant R134a”, page 10

2.3.1 Physical principles

The four familiar states of water apply to air conditioning refrigerants, too.

1 - Gas (invisible)

2 - Vapour

3 - Liquid

4 - Solid

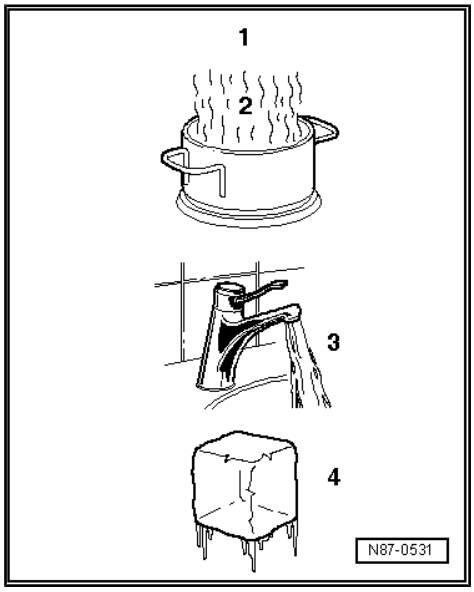

When water is heated in a vessel (heat absorption), water vapour can be seen to rise. If the vapour is further heated through heat absorption, the visible vapour turns into invisible gas. The process is reversible. If heat is extracted from gaseous water -A-, it changes first to vapour -B-, then to water and finally to ice.

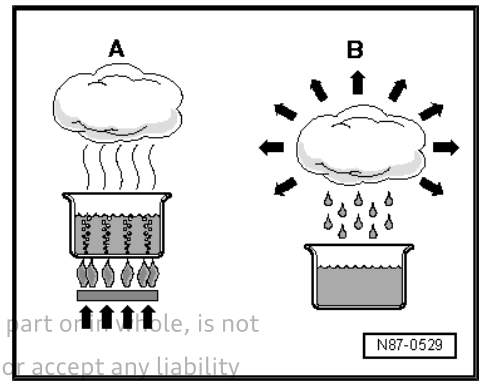

A - Heat absorption

B - Heat emission

Heat always flows from a warmer to a colder substance

Every substance consists of a mass of moving molecules. The fast-moving molecules of a warmer substance give off some of their energy to the cooler and thus slower molecules. As a result, the molecular motion of the warmer substance slows down and that of the colder substance is accelerated. This process continues until the molecules of both substances are moving at the same speed. They are then at the same temperature and no further heat exchange takes place.

Protected by copyright. Copying for private or commercial purposes, in part or in whole, is not permitted unless authorised by AUDI AG. AUDI AG does not guarantee or accept any liability with respect to the correctness of information in this document. Copyright by AUDI AG.

2.3.2 Pressure and boiling point

The boiling point given in tables for a liquid is always referenced to an atmospheric pressure of 1 bar. If the pressure acting on a liquid changes, its boiling point also changes.

Note

Pressure can be measured in various units: 1 MPa (megapascal) is equivalent to 10 bar gauge pressure, or 145 psi; 1 bar absolute pressure is the same as 0 bar gauge pressure, which is roughly equivalent to atmospheric pressure.

Protected by copyright. Copying for private or commercial purposes, in part or in whole, is not permitted unless authorised by AUDI AG. AUDI AG does not guarantee or accept any liability with respect to the correctness of information in this document. Copyright by AUDI AG.

For example, water boils at a lower temperature the lower the pressure.

The vapour pressure curves for water and refrigerant R134a show, for example, that, at constant pressure, reducing the temperature changes vapour to liquid (in the condenser) or that, for instance, reducing the pressure causes the refrigerant to change from liquid to vapour (in the evaporator).

Vapour pressure curve for water

A - Liquid

B - Gaseous

C - Vapour pressure curve for water

1 - Pressure acting on liquid in bar (absolute)

2 - Temperature in °C

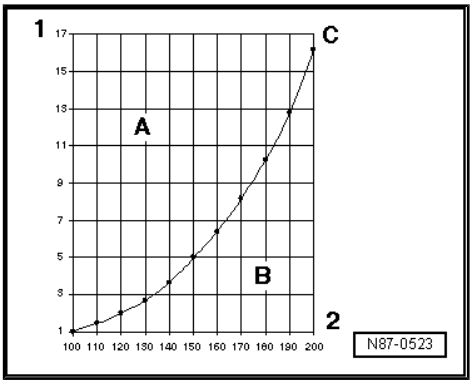

Vapour pressure curve for refrigerant R134a

A - Liquid

B - Gaseous

D - Vapour pressure curve for refrigerant R134a

1 - Pressure acting on liquid in bar (absolute)

2 - Temperature in °C

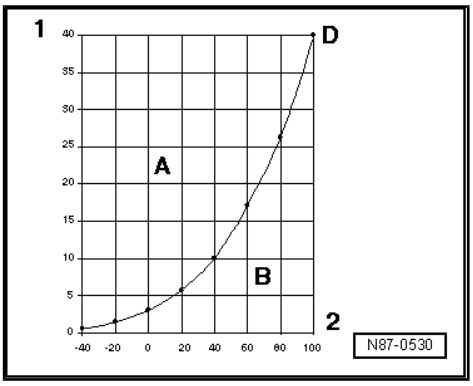

2.3.3 Vapour pressure table for refrigerant R134a

The vapour pressure table for every refrigerant is published in the literature for refrigeration system engineers. This table makes it possible to determine the vapour pressure acting on the column of liquid in a vessel if the temperature of the vessel is known.

As there is a characteristic vapour pressure table for every refrigerant, it is possible to identify the type of refrigerant by measuring pressure and temperature.

Note

- *"0 bar absolute pressure" corresponds to an absolute vacuum. The normal ambient pressure (atmospheric pressure) corresponds to approx. "1 bar absolute pressure". On the scales of most pressure gauges, "0 bar" corresponds to an absolute pressure of 1 bar (this is also indicated by the value "-1" appearing below "0").*
- *Pressure can be measured in various units: 1 MPa (megapascal) is equivalent to 10 bar gauge pressure, or 145 psi; 1 bar absolute pressure is the same as 0 bar gauge pressure, which is roughly equivalent to atmospheric pressure.*

Temperature in °C	Pressure in bar (gauge pressure), R134a
-45	-0.61
-40	-0.49
-35	-0.34
-30	-0.16
-25	0.06
-20	0.32
-15	0.63
-10	1.00
-5	1.43
0	1.92
5	2.49
10	3.13
15	3.90
20	4.70
25	5.63
30	6.70
35	7.83
40	9.10
45	10.54
50	12.11
55	13.83
60	15.72
65	17.79
70	20.05
75	22.52
80	25.21
85	28.14
90	31.34

Protected by copyright. Copying for private or commercial purposes, in part or in whole, is not permitted unless authorised by AUDI AG. AUDI AG does not guarantee or accept any liability with respect to the correctness of information in this document. Copyright by AUDI AG.

2.4 Refrigerant R134a

Air conditioning systems in vehicles use a vaporisation and condensation process. These systems employ a substance with a low boiling point, referred to as refrigerant.

The refrigerant used is tetrafluoroethane or R134a, which boils at -26.5°C at a vapour pressure of "1 bar absolute pressure" (corresponds approx. to ambient pressure).

⇒ “2.4.1 Physical properties of refrigerant R134a”, page 9

⇒ “2.4.2 Critical point”, page 9

⇒ “2.4.3 Environmental aspects of refrigerant R134a”, page 9

2.4.1 Physical properties of refrigerant R134a

Chemical formula	CH2F–CF3 or CF3–CH2F
Chemical designation	Tetrafluoroethane
Boiling point at 1 bar	-26.5 °C
Solidification point	-101.6 °C
Critical temperature	100.6 °C
Critical pressure	40.56 bar (absolute)

2.4.2 Critical point

The critical point (critical temperature and critical pressure) is the point above which there is no longer a boundary between liquid and gas.

A substance above its critical point is always in the gaseous state.

At temperatures below the critical point, all types of refrigerant in pressure vessels exhibit both a liquid and a gas phase, i.e. there is a layer of gas above the liquid.

As long as both liquid and gas are present in the vessel, the pressure is governed by ambient temperature ⇒ page 7 “Vapour pressure table”.

Note

Different types of refrigerant must never be mixed. The refrigerant specified for the respective air conditioning system must be used exclusively.

2.4.3 Environmental aspects of refrigerant R134a

- R134a is a fluorocarbon and contains no chlorine.
- R134a has a shorter atmospheric lifespan than refrigerant R12.
- R134a does not damage the ozone layer; the ozone-depleting potential is zero.
- The global warming potential (GWP) of R134a is approx. 1400 (GWP of carbon dioxide = 1). To reduce the impact of refrigerant R134a on global warming, the European Commission has ruled that vehicles with air conditioners using refrigerant with a GWP higher than 150 may no longer be made available on the market from 1 January 2017 onwards. Air conditioners in vehicles which were made available on the market before 31 December 2016 may be filled and operated with refrigerant R134a until further notice.
- The global warming effect of R134a is ten times less than that of refrigerant R12.

Protected by copyright. Copying or distribution in any form, in part or in whole, is not permitted unless authorised by AUDI AG. AUDI AG does not guarantee or accept any liability with respect to the correctness of information in this document. Copyright by AUDI AG.

2.5 Properties of refrigerant R134a

⇒ "2.5.1 Trade names and designations", page 10

⇒ "2.5.2 Colour", page 10

⇒ "2.5.3 Vapour pressure", page 10

⇒ "2.5.4 Physical properties of R134a", page 10

⇒ "2.5.5 Reaction with metals", page 11

⇒ "2.5.6 Critical temperature/critical pressure", page 11

⇒ "2.5.7 Water content", page 11

⇒ "2.5.8 Combustibility", page 11

⇒ "2.5.9 Charge factor", page 11

⇒ "2.5.10 Tracing leaks", page 11

2.5.1 Trade names and designations

The refrigerant R134a is currently available under the following trade names:

- H-FKW 134a
- SUVA 134a
- KLEA 134a

Note

- *Different trade names may be used in other countries.*
- *Of the wide range of refrigerants available, this is the only one which may be used for vehicles. The designations Frigen and Freon are trade names. They also apply to refrigerants which should not be used in vehicles.*

2.5.2 Colour

Like water, refrigerants are colourless in both vapour and liquid form. Gas is invisible. Only the boundary layer between gas and liquid is visible (liquid level in tube of charging cylinder or bubbles in a sight glass). Liquid refrigerant R134a may have a coloured (milky) appearance in a sight glass. This cloudiness is caused by partially dissolved refrigerant oil and does not indicate a fault.

2.5.3 Vapour pressure

In a partially filled, closed vessel, the quantity of refrigerant evaporating from the surface equals the quantity returning to the liquid state as vapour particles condense. This state of equilibrium occurs when the system is pressurised and is often called vapour pressure. Vapour pressure is dependent on temperature ⇒ page 7 "Vapour pressure table".

Protected by copyright. Copying for private or commercial purposes, in part or in whole, is not permitted unless authorised by AUDI AG. AUDI AG does not guarantee or accept any liability with respect to the correctness of information in this document. Copyright by AUDI AG.

2.5.4 Physical properties of R134a

As the vapour pressure curves of R134a and other refrigerants are sometimes very similar, a clear identification is not possible based merely on the pressure.

When using R134a, the air conditioner compressor is lubricated with special synthetic refrigerant oils, e.g. PAG oils (polyalkylene glycol oils).

2.5.5 Reaction with metals

In its pure state, refrigerant R134a is chemically stable and does not corrode iron or aluminium.

However, refrigerant impurities such as chlorine compounds cause corrosion of certain metals and plastics. This can cause blockages, leaks and deposits on the air conditioner compressor piston.

Protected by copyright. Copying for private or commercial purposes, in part or in whole, is not permitted unless authorised by AUDI AG. AUDI AG does not guarantee or accept any liability with respect to the correctness of information in this document. Copyright by AUDI AG.

2.5.6 Critical temperature/critical pressure

The refrigerant R134a remains chemically stable up to a gas pressure of 39.5 bar (40.56 bar absolute pressure; corresponds to a temperature of 101 °C). Above this temperature, the refrigerant decomposes (see "Combustibility").

2.5.7 Water content

Only very small amounts of water are soluble in liquid refrigerant. In contrast, refrigerant vapour and water vapour mix in any ratio.

Any water in the refrigerant circuit will be entrained in droplet form once the dryer in the receiver or reservoir has absorbed approx. 7 g of water. This water flows as far as the expansion valve nozzle or the restrictor and turns to ice. The air conditioner will then no longer provide any cooling effect.

Water causes irreparable damage to the air conditioner because at high pressures and temperatures it combines with other impurities to form acids.

2.5.8 Combustibility

Refrigerant is non-flammable. In fact it has a fire-inhibiting or fire-extinguishing effect. Refrigerant decomposes when exposed to flames or red-hot surfaces. UV light (produced for example during electric welding) also causes refrigerant decomposition. The resultant decomposition products are toxic and must not be inhaled. However, these chemicals irritate the mucous membranes, giving adequate warning of their presence.

2.5.9 Charge factor

A container must have space for vapour as well as liquid. As the temperature rises, the liquid expands. The vapour-filled space becomes smaller. At a certain point, there will only be liquid in the vessel. Beyond this, even a slight increase in temperature causes great pressure to build up in the vessel as the liquid attempts to continue expanding despite the absence of the necessary space. The resultant forces are sufficient to rupture the vessel. To stop containers being overfilled, regulations governing the storage of compressed gases specify the number of kilograms of refrigerant with which a container may be filled per litre of internal volume. The maximum permissible capacity is calculated by multiplying this "charge factor" by the internal volume of the vessel. The charge factor for refrigerant used in motor vehicles is 1.15 kg/litre.

2.5.10 Tracing leaks

External damage, for example, can cause a leak in the refrigerant circuit. Minor leaks where only a small amount of refrigerant is escaping can be detected using, for example, an electronic leak detector or by adding a UV leak detection additive to the refrigerant circuit. Electronic leak detectors are capable of registering leaks with refrigerant losses of less than 5 g per year.

Note

It is important to use leak detectors that are designed for the composition of the respective refrigerant type. For example, a leak detector for R12 refrigerant is not suitable for R134a refrigerant because R134a has no chlorine atoms and the leak detector therefore does not respond.

2.6 Refrigerant oil

Caution

- ***For information on how to handle refrigerant oil, refer to ⇒ Audi ServiceNet, HSO Environmental Protection (or ⇒ Volkswagen ServiceNet, Handbooks, Service Handbook; Environmental Protection) and observe local regulations.***

Refrigerant oil mixes with the refrigerant (in a ratio of about 20 - 40 %, depending on compressor type and quantity of refrigerant) and circulates constantly in the system, lubricating the moving parts.

Special synthetic refrigerant oils, e.g. polyalkylene glycol (PAG) oil, are used in conjunction with R134a air conditioning systems. This is necessary as mineral oil, for example, does not mix with R134a. In addition, the materials of the R134a air conditioning system could be corroded as a result of mixture flowing through the refrigerant circuit under pressure at high temperatures or breakdown of the lubricating film in the air conditioner compressor. The use of non-approved oils can lead to the failure of the air conditioning system, so it is important to use only the approved types of oil.

⇒ Electronic parts catalogue.

Type of oil for R134a in motor vehicles: PAG (polyalkylene-glycol)

Note

- *Do not store refrigerant oil in open containers as it is extremely hygroscopic (it attracts water).*
- *Always keep oil containers sealed.*
- *Do not re-use old refrigerant oil. Refrigerant oil must be disposed of as used oil of unknown origin (observe local regulations) ⇒ Audi ServiceNet, HSO Environmental Protection (or ⇒ Volkswagen ServiceNet, Handbooks, Service Handbook; Environmental Protection).*
- *Ester-based oils are currently only intended for use with large systems (not for motor vehicle air conditioners).*

⇒ “2.6.1 Properties of refrigerant oil”, page 12

Protected by copyright. Copying for private or commercial purposes, in part or in whole, is not permitted unless authorised by AUDI AG. AUDI AG does not guarantee or accept any liability with respect to the correctness of information in this document. Copyright by AUDI AG.

2.6.1 Properties of refrigerant oil

The most important properties are a high degree of solubility with refrigerant, good lubricity, absence of acid and minimal water content. It is therefore only permissible to use certain oils. For a list of approved refrigerant oils and capacities, refer to ⇒ page 317 .

PAG oils for refrigerant R134a are highly hygroscopic and do not mix with other oils. Opened containers should therefore be closed again immediately to prevent moisture from entering. Moisture

and acids cause refrigerant oil to age, making it dark, viscous and corrosive to metals.

Note

- *Due to its chemical properties, refrigerant oil must not be disposed of together with engine oil or gear oil. Refrigerant oil must be disposed of as used oil of unknown origin (observe local regulations) ⇒ Audi ServiceNet, HSO Environmental Protection (or ⇒ Volkswagen ServiceNet, Handbooks, Service Handbook; Environmental Protection).*
- *Only oil approved for the air conditioner compressor may be used for refrigerant circuits containing refrigerant R134a ⇒ Electronic parts catalogue and capacities* *⇒ page 317* *.*

Important information:

As refrigerant oil is extremely hygroscopic, open containers must be closed and re-sealed immediately after use to prevent moisture from entering.

Note

- *A use-by date for the refrigerant oil is stated on the bottle in which the refrigerant oil is supplied.*
- *This date is not relevant if the bottle is sealed air-tight.*
- *If the bottle is sealed air-tight, the refrigerant oil can also be used after the date stated on the bottle.*

Protected by copyright. Copying for private or commercial purposes, in part or in whole, is not permitted unless authorised by AUDI AG. AUDI AG does not guarantee or accept any liability with respect to the correctness of information in this document. Copyright by AUDI AG.

2.7 How air conditioning works

The temperature in the passenger compartment depends on the amount of heat radiated into the vehicle through the windows and conducted by the metal parts of the body. In hot weather some of the heat must be pumped off to achieve a more comfortable temperature for the occupants.

As heat is always transmitted away from warmer areas and into cooler areas, the passenger compartment is fitted with a unit for generating low temperatures in which refrigerant is constantly evaporated. The heat required for this is extracted from the air flowing through the evaporator.

After absorbing heat, the refrigerant is pumped off by the air conditioner compressor. Thanks to the action of the compressor, the heat content and temperature of the refrigerant increases. Its temperature is then substantially higher than that of the surrounding air.

The hot refrigerant flows with its heat content to the condenser. where the refrigerant dissipates its heat to the surrounding air via the condenser due to the temperature gradient between the refrigerant and the surrounding air.

The refrigerant thus acts as a heat transfer medium. As it will be needed again, the refrigerant is returned to the evaporator.

For this reason all air conditioning systems are based on the refrigerant circulation principle. There are however differences as regards the units used.

⇒ “2.7.1 Comfort of vehicle occupants”, page 14

⇒ “2.7.2 Environmental aspects”, page 14

2.7.1 Comfort of vehicle occupants

A basic requirement for safety and concentration while driving is a feeling of comfort in the passenger compartment. Especially when conditions are hot and humid, a good level of comfort can only be achieved with air conditioning. Passenger comfort can of course also be improved by opening the windows or sun roof, or by increasing the air flow. This, however, involves several drawbacks for the occupants, e.g. more noise, draughts, exhaust fumes and unfiltered pollen (unpleasant for allergy sufferers).

Climate control together with a good heating and ventilation system can create a sense of well-being and comfort by regulating temperature, humidity and air circulation in the passenger compartment to suit ambient conditions, both when the vehicle is stationary and when it is moving.

Other important advantages of air conditioning:

- Filtration of the air supplied to the passenger compartment (dust and pollen, for example, are washed out by the moist fins of the evaporator and discharged with the condensation).
- Pleasant temperature levels (example: mid-size car after short travelling time, ambient temperature 30 °C in the shade and vehicle exposed to sunlight)

	With air conditioning	Without air conditioning
At head height	23 °C	42 °C
At chest level	24 °C	40 °C
In footwell	30 °C	35 °C

2.7.2 Environmental aspects

Since about 1992, the air conditioning systems of newly manufactured cars have been successively changed to refrigerant R134a. This refrigerant contains no chlorine and therefore does not deplete the ozone layer.

Protected by copyright. Copying for private or commercial purposes, in part or in whole, is not permitted unless authorised by AUDI AG. AUDI AG does not guarantee or accept any liability with respect to the correctness of information in this document. Copyright by AUDI AG.

Up until roughly 1992, refrigerant R12 was used for air conditioning systems. Due to its chlorine atoms, this CFC had a high ozone depletion potential as well as potential for intensifying the greenhouse effect.

Conversion programmes are available for old existing systems filled with the ozone-depleting substance R12 ⇒ Workshop Manual for air conditioners with refrigerant R12 (this Workshop Manual is available in hardcopy form only).

The global warming potential (GWP) of R134a is approx. 1400; the European Commission has therefore ruled that vehicles using this refrigerant may no longer be made available on the market from 1 January 2017 onwards ⇒ page 9 . From 2016 onwards, refrigerant with a GWP of less than 150 will be used for newly manufactured vehicles (e.g. refrigerant R1234yf with a GWP of less than 5).

For environmental reasons, refrigerants must not be released into the atmosphere ⇒ page 63 (see the relevant environmental legislation).

2.8 General work safety

- In accordance with regulations of the German industrial liability insurance association, VBG 20, (other regulations may apply in other countries)

- ♦ Observe specific instructions relating to workplaces where refrigerants are handled ⇒ Audi-ServiceNet, HSO Environmental Protection . These instructions must be posted at the workplace.

2.9 Product properties

Refrigerants used in motor vehicle air conditioning systems belong to the new generation of refrigerants based on chlorine-free, partially fluorinated hydrocarbons (H-FKW, R134a; other names may be used in other countries).

With regard to their physical properties, these are refrigerants which have been liquefied under pressure. They are subject to the regulations governing pressure vessels and may only be used in approved and appropriately marked containers.

Specific requirements must be observed to ensure safe and proper handling:

2.10 Handling refrigerant

If refrigerant vessels are opened, the contents may escape in liquid or vapour form. The higher the pressure in the vessel, the more vigorous the process.

The pressure level is governed by two factors:

- The type of refrigerant in the vessel. “Rule: The lower the boiling point, the higher the pressure.”
- The temperature level. “Rule: The higher the temperature, the higher the pressure.”

> ⚠ WARNING
>
> ♦ *Risk of injury (frostbite).*
>
> ♦ *The refrigerant may escape as liquid or vapour.*
>
> ♦ *Do not open vessels containing refrigerant.*

Wear safety goggles.

Put on safety goggles to prevent refrigerant getting into the eyes, as this could cause severe injury through frostbite.

Wear protective gloves and apron.

Grease and oils dissolve readily in refrigerants. They would therefore damage the protective layer of grease if allowed to come into contact with the skin. Degreased skin is however sensitive to the cold and germs.

Protected by copyright. Copying for private or commercial purposes, in part or in whole, is not permitted unless authorised by AUDI AG. AUDI AG does not guarantee or accept any liability with respect to the correctness of information in this document. Copyright by AUDI AG.

Do not allow liquid refrigerant to come into contact with the skin

The refrigerant draws heat for evaporation from the surrounding area - even if this is the skin. This may give rise to extremely low temperatures and result in local frostbite (boiling point of R134a: -26.5 °C at ambient pressure).

Do not inhale refrigerant vapours

If refrigerant vapour escapes in concentrated form, it mixes with the surrounding air and displaces the oxygen necessary for breathing.

Smoking is absolutely prohibited

A burning cigarette can cause refrigerant to decompose. The resultant substances are toxic and must not be inhaled.

Welding and soldering on refrigeration systems

Before performing welding, brazing or soldering work on vehicles in the vicinity of air conditioning system components, extract refrigerant and remove any remaining refrigerant by blowing out with nitrogen.

The products of refrigerant decomposition due to the effect of heat are not only toxic, but may also have a highly corrosive effect on pipes and system components. The principal substance is hydrogen fluoride.

Pungent odour

A pungent odour indicates that the products of decomposition mentioned above have already formed. Do NOT inhale these substances, otherwise the respiratory tract, lungs and other organs could be damaged.

First aid

- Following accidental contact with eyes or mucous membranes, immediately rinse with copious amounts of running water and consult an eye specialist.
- Following accidental contact with the skin, immediately remove clothing affected and rinse skin with copious amounts of water.
- Following accidental inhalation of concentrated refrigerant vapours, the person concerned must be taken immediately into the open air. Call a doctor. Administer oxygen in the event of breathing difficulties. If the person affected is having great difficulty breathing or is not breathing at all, tilt back head and administer artificial respiration.

Protected by copyright. Copying for private or commercial purposes, in part or in whole, is not permitted unless authorised by AUDI AG. AUDI AG does not guarantee or accept any liability with respect to the correctness of information in this document. Copyright by AUDI AG.

⇒ “2.11 Handling pressure vessels”, page 16

2.11 Handling pressure vessels

Secure vessels to prevent them falling over.

Secure upright cylinders to stop them falling over and cylinders lying flat to stop them rolling away.

Pressure vessels must never be thrown.

If dropped, the vessels could be so severely deformed that they rupture. The refrigerant evaporates immediately, liberating considerable force. Flying fragments of cylinders can cause severe injuries.

To protect the valves, cylinders may only be transported with the protective cap screwed on.

Valves may break off if cylinders are not properly transported.

Never store in the vicinity of radiators.

High temperatures may occur in such areas. High temperatures are also accompanied by high pressures and the maximum permissible vessel pressure may be exceeded.

Do not heat to temperatures above 50 °C

To avoid possible risk, pressure vessel regulations specify that vessels must not be heated to temperatures exceeding 50 °C.

Do not heat in an uncontrolled manner

Do NOT heat with a naked flame. Local overheating can cause structural changes in the material of the vessel, which then reduce its ability to withstand pressure. There is also a danger of refrigerant decomposition due to localised overheating.

Sealing empty vessels

Empty refrigerant vessels must always be sealed to prevent moisture from entering. Moisture can cause steel vessels to rust. This weakens the vessel walls. In addition, any rust particles which enter refrigeration systems from storage vessels will cause malfunctioning.

2.12 Basic rules for working on refrigerant circuit

⇒ "2.12.1 General notes", page 17

⇒ "2.12.2 Cleaning refrigerant circuit", page 17

⇒ "2.12.3 Additionally for vehicles with air conditioner compressor without magnetic clutch (with air conditioner compressor regulating valve N280 only)", page 18

⇒ "2.12.4 Additional information on vehicles with high-voltage system", page 18

⇒ "2.12.5 O-rings", page 19

Protected by copyright. Copying for private or commercial purposes, in part or in whole, is not permitted unless authorized by AUDI AG. AUDI AG does not guarantee or accept any liability with respect to the correctness of information in this document. Copyright by AUDI AG.

2.12.1 General notes

- Observe specific instructions relating to workplaces ⇒ Audi ServiceNet, HSO Environmental Protection .
- Ensure absolute cleanliness when working.
- Wear safety goggles and gloves when working with refrigerant and nitrogen.
- Switch on the available workshop exhaust extraction systems.
- Always use air conditioner service station to discharge refrigerant circuit, then unfasten screw connections and renew defective components.
- Use caps to seal off opened components and hoses to prevent moisture and dirt from entering the system.
- Use only tools and materials intended for refrigerant R134a.
- Seal opened refrigerant oil containers to guard against moisture.

Note

- *After completing service work, screw sealing caps (with seals) onto service connections and all connections with valves.*
- *Before starting up air conditioning system, check specified capacity for vehicle ⇒ page 276 .*
- *Do not top up refrigerant in circuit; discharge existing refrigerant and re-charge system.*

2.12.2 Cleaning refrigerant circuit

The refrigerant circuit must be cleaned (flushed) with refrigerant R134a ⇒ page 88 (or blown out with compressed air and nitrogen ⇒ page 84) in the following cases:

– If moisture or dirt has entered the refrigerant circuit (e.g. following an accident)

– If the refrigerant oil is dark and viscous

– If there is too much refrigerant oil in the refrigerant circuit after renewing compressor

– If the air conditioner compressor has to be renewed due to “internal” damage (e.g. noise or no output)

Note

When blowing out components with compressed air and nitrogen, always extract the gas mixture escaping from the components with suitable extraction units (workshop extraction system).

Protected by copyright. Copying for private or commercial purposes, in part or in whole, is not permitted unless authorised by AUDI AG. AUDI AG does not guarantee or accept any liability with respect to the correctness of information in this document. Copyright by AUDI AG.

2.12.3 Additionally for vehicles with air conditioner compressor without magnetic clutch (with air conditioner compressor regulating valve - N280- only)

- Only start the engine after the refrigerant circuit has been assembled completely (constant air conditioner compressor operation).
- If the engine has to be operated with the refrigerant circuit empty, only do so for as long as absolutely essential and avoid increased engine speeds.

2.12.4 Additional information on vehicles with high-voltage system

Vehicles with high-voltage system (hybrid vehicles)

♦ For further information on the high-voltage system, refer to ⇒ Rep. gr. 00 ; Safety precautions or ⇒ Electrical system; Rep. gr. 93 ; General warning instructions for work on the high-voltage system .

♦ If work on high-voltage system components is necessary, de-energise high-voltage system ⇒ Rep. gr. 00 ; Safety precautions or ⇒ Electrical system; Rep. gr. 93 ; General warning instructions for work on the high-voltage system .

- The engine should only be started after the refrigerant circuit has been assembled completely.
- On vehicles with battery cooling, hybrid operation is only possible with the air conditioner charged and with no air conditioner faults stored ⇒ Vehicle diagnostic tester in “Guided Fault Finding” mode for air conditioner and battery regulation
- After installing the electrically driven air conditioner compressor and then charging the refrigerant circuit, first start up the compressor via the “Compressor run-in” function of the basic setting routine. Otherwise, the air conditioner compressor may be damaged if refrigerant oil has accumulated in the compression chamber of the air conditioner compressor due to inappropriate storage prior to installation. ⇒ Vehicle diagnostic tester, “Guided Fault Finding” function for air conditioner and battery regulation
- An electrically driven air conditioner compressor may only be activated when the refrigerant circuit is charged. Running the air conditioner compressor with the refrigerant circuit empty could lead to compressor damage ⇒ Vehicle diagnostic tester (“Guided Fault Finding” mode for air conditioner and battery regulation) .
- Before the refrigerant circuit can be discharged, evacuated and charged, specific electrically operated valves (may vary depending on the refrigerant circuit layout) must be opened (e.g. on the Audi Q7 e-tron) ⇒ Heating, air conditioning; Rep. gr. 87 ; Refrigerant circuit and ⇒ Vehicle diagnostic tester in “Guided Fault Finding” mode.

- To check whether the air conditioner is functioning properly, specific electrically operated valves must be opened or closed (e.g. on the Audi Q7 e-tron) ⇒ Heating, air conditioning; Rep. gr. 87 ; Refrigerant circuit and ⇒ Vehicle diagnostic tester in “Guided Fault Finding” mode.
- Depending on the vehicle, high pressure may not be available at the service connection on the high-pressure side in all air conditioner operating modes (e.g. on the Audi Q7 e-tron). The senders installed in the refrigerant circuit must therefore be used to check that the air conditioner in these vehicles is functioning properly ⇒ Heating, air conditioning; Rep. gr. 87 ; Refrigerant circuit and ⇒ Vehicle diagnostic tester in “Guided Fault Finding” mode.

– To minimise the number of automatic engine starts when the vehicle's drive system is active during test and measurement work, charge the vehicle batteries e.g. with the battery charger 60A - VAS 5904- in battery standby mode ⇒ Electrical system; General information; Rep. gr. 27 ; Charging battery and ⇒ Electrical system; Rep. gr. 93 ; General warning instructions for work on the high-voltage system .

– For test and measurement work that requires the vehicle's drive system to be active (READY) or the ignition to be switched on, move the selector lever to position “P”, activate the parking brake and take care to keep well clear of the engine when it is running. Set up any tools needed so that they cannot come into contact with moving parts.

Protected by copyright. Copying for private or commercial purposes, in part or in whole, is not permitted unless authorised by AUDI AG. AUDI AG does not guarantee or accept any liability with respect to the correctness of information contained in this document. Copyright by AUDI AG.

2.12.5 O-rings

- ♦ Use only seals which are resistant to refrigerant R134a and the corresponding refrigerant oils. Colour coding of O-ring seals is no longer employed. Black and coloured O-rings are used.
- ♦ Note the correct inside diameter of the seals used ⇒ Electronic parts catalogue , ⇒ Heating, air conditioning; Rep. gr. 87 ; Refrigerant circuit (vehicle-specific Workshop Manual).
- ♦ Seals may only be used once.
- ♦ Before fitting, lightly lubricate seals with refrigerant oil (PAG oil).

2.13 Before using air conditioner after system has been re-charged

Mechanically driven air conditioner compressor

After air conditioner compressor is attached to engine (before belt is fitted or drive shaft is installed)
⇒ “5.3.6 Starting up air conditioner after charging”, page 81 and ⇒ Heating, air conditioning; Rep. gr. 87 ; Air conditioner compressor .

– Rotate air conditioner compressor about 10 revolutions by hand using the magnetic clutch pulley or belt pulley.

After re-charging
⇒ “5.3.6 Starting up air conditioner after charging”, page 81

– Start engine with air conditioner switched off (air conditioning system magnetic clutch - N25- and air conditioner compressor regulating valve - N280- are not activated).

– When engine idling speed has stabilised, switch on air conditioner compressor and run it for at least 10 minutes at idling speed with maximum cooling output.

Electrically driven air conditioner compressor

– After charging the refrigerant circuit, start the electrically driven air conditioner compressor first using the “Compressor run-in” function of the basic setting
⇒ “5.3.6 Starting up air conditioner after charging”, page 81 and ⇒ Vehicle diagnostic tester, “Guided Fault Finding” function for air conditioner and battery regulation

Protected by copyright. Copying for private or commercial purposes, in part or in whole, is not permitted unless authorised by AUDI AG. AUDI AG does not guarantee or accept any liability with respect to the correctness of information in this document. Copyright by AUDI AG.

3 General information on refrigerant circuit

⇒ “3.1 Components of refrigerant circuit”, page 21

⇒ “3.2 Layout of components of refrigerant circuit and their influence on high-pressure and low-pressure sides”, page 21

⇒ “3.3 Design of refrigerant circuit”, page 39

⇒ “3.4 Refrigerant circuit with electrically driven air conditioner compressor”, page 40

⇒ “3.5 Connections for quick-release coupling in refrigerant circuit”, page 41

⇒ “3.6 Switches and senders in refrigerant circuit and related connections ”, page 47

⇒ “3.7 Electrical components not installed in refrigerant circuit”, page 55

⇒ “3.8 Pressures and temperatures in refrigerant circuit”, page 55

⇒ “3.9 Tests and measurements performed with pressure gauge”, page 60

⇒ “3.10 Air conditioner service and recycling units”, page 61

⇒ “3.11 Repair notes for refrigerant circuit”, page 62

3.1 Components of refrigerant circuit

Caution

Tools or materials (e.g. sealing additives) that have not been approved can damage or impair the system.

Use only tools and materials that have been approved by the manufacturer.

Warranty claims are not accepted if tools or materials that have not been approved are used.

- All components of the refrigerant circuit submitted for quality analysis should always be sealed (use original sealing caps of replacement part).
- Renew damaged or leaking components of refrigerant circuit ⇒ page 258 .

Protected by copyright. Copying for private or commercial purposes, in part or in whole, is not permitted unless authorised by AUDI AG. AUDI AG does not guarantee or accept any liability with respect to the correctness of information in this document. Copyright by AUDI AG.

Note

The following replacement parts were previously filled with nitrogen gas: air conditioner compressor, reservoir, evaporator and condenser. This charge is being gradually discontinued. Therefore, little or no pressure equalisation can be perceived when the sealing plugs of the replacement part are unscrewed.

3.2 Layout of components of refrigerant circuit and their influence on high-pressure and low-pressure sides

High-pressure side: Condenser, receiver and restrictor or expansion valve to separate the high and low-pressure liquid ends.

High pressure results from the restrictor or expansion valve forming a constriction and causing the refrigerant to build up, thus leading to an increase in pressure and temperature.

Protected by copyright. Copying for private or commercial purposes, in part or in whole, is not permitted unless authorised by AUDI AG. AUDI AG does not guarantee or accept any liability with respect to the correctness of information in this document. Copyright by AUDI AG.

Excess pressure occurs if too much refrigerant or refrigerant oil is used, the condenser is contaminated, the radiator fan is defective, the system is blocked or in the event of moisture in the refrigerant circuit (icing-up of restrictor or expansion valve).

Low-pressure side: Evaporator, evaporator temperature sensor and air conditioner compressor to separate the sections with high and low gas pressure.

A drop in system pressure can be caused by a loss of refrigerant, the restrictor or expansion valve (constrictions), a defective air conditioner compressor or an iced-up evaporator.

⇒ “3.2.1 Mechanically driven air conditioner compressor”, page 23

⇒ “3.2.2 Electrically driven air conditioner compressor for vehicles with a high-voltage system”, page 25

⇒ “3.2.3 Condenser”, page 27

⇒ “3.2.4 Evaporator”, page 27

⇒ “3.2.5 Heat exchanger for heat pump operation”, page 28

⇒ “3.2.6 Fluid collector”, page 28

⇒ “3.2.7 Reservoir”, page 29

⇒ “3.2.8 Restrictor”, page 29

⇒ “3.2.9 Receiver”, page 31

⇒ “3.2.10 Expansion valve”, page 32

⇒ “3.2.11 Expansion valve with shut-off valve”, page 32

⇒ “3.2.12 Refrigerant shut-off valves”, page 33

⇒ “3.2.13 Refrigerant line with internal heat exchanger”, page 35

⇒ “3.2.14 Quick-release couplings on refrigerant line”, page 35

⇒ “3.2.15 O-rings”, page 37

⇒ “3.2.16 Pipes and hoses of refrigerant circuit”, page 37

⇒ “3.2.17 High-pressure safety valve”, page 37

⇒ “3.2.18 Non-return valves”, page 38

3.2.1 Mechanically driven air conditioner compressor

Protected by copyright. Copying for private or commercial purposes, in part or in whole, is not permitted unless authorised by AUDI AG. AUDI AG does not guarantee or accept any liability with respect to the correctness of information in this document. Copyright by AUDI AG.

The air conditioner compressor is driven by the engine via a poly V-belt or a drive shaft.

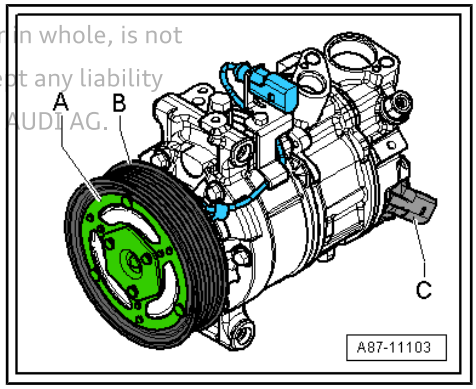

Air conditioner compressor with magnetic clutch:

- An electromagnetic clutch -A- attached to the air conditioner compressor provides the power link between the pulley -B- and the compressor crankshaft when the air conditioning is switched on.
- An overload protection attached to the clutch plate or fitted in the solenoid of the air conditioner compressor is triggered if the air conditioner compressor is not running smoothly in order to protect the belt drive against overload.

Air conditioner compressor with no magnetic clutch:

- An overload protection attached to the pulley -B- or fitted in the drive unit of the air conditioner compressor is triggered if the air conditioner compressor is not running smoothly in order to protect the belt drive against overload.

All air conditioner compressors

The air conditioner compressor draws in refrigerant gas from the evaporator, compresses it and conveys it to the condenser.

Note

- *The air conditioner compressor contains refrigerant oil which mixes with refrigerant R134a at all temperatures.*
- *The type plate indicates the refrigerant for which the air conditioner compressor is designed. A valve regulates the pressure on the low-pressure side within the specified range (control characteristic).*
- *At present, actuation is effected externally by way of a regulating valve -C- on air conditioner compressors with or without magnetic clutch.*
- *On air conditioner compressors with no magnetic clutch, the engine is only to be started following complete assembly of the refrigerant circuit.*
- *To prevent air conditioner compressor damage if the refrigerant circuit is empty, the magnetic clutch is deactivated and the air conditioner compressor regulating valve - N280- no longer actuated (air conditioner compressor idles with engine).*
- *If the refrigerant circuit is empty, an air conditioner compressor with no air conditioning system magnetic clutch - N25- (with air conditioner compressor regulating valve - N280-) is switched to internal lubrication by way of a valve.*
- *Depending on the version of the air conditioner compressor, there may be a valve on the high-pressure side of the compressor which prevents liquid refrigerant from flowing back into the compressor after the air conditioner has been switched off. If an air conditioner compressor with such a valve is installed in a vehicle with a refrigerant circuit with an expansion valve, it may take a relatively long time before the pressure in the high-pressure side drops (the expansion valve is cold and the pressure in the low-pressure side increases rapidly after the compressor is switched off; the expansion valve is closed and the refrigerant can only flow slowly to the low-pressure side). If the air conditioner compressor is switched on, the pressure in the low-pressure side drops, the expansion valve is opened and the refrigerant can flow to the low-pressure side.*
- *On air conditioner compressors with an electromagnetic clutch -A- and a regulating valve -C-, the electromagnetic clutch -A- is usually only activated in conjunction with regulating valve -C- ⇒ Heating, air conditioning; Rep. gr. 87 ; Refrigerant circuit .*

Protected by copyright. Copying for private or commercial purposes, in part or in whole, is not permitted unless authorised by AUDI AG. AUDI AG does not guarantee or accept any liability with respect to the correctness of information in this document. Copyright by AUDI AG.

3.2.2 Electrically driven air conditioner compressor for vehicles with a high-voltage system

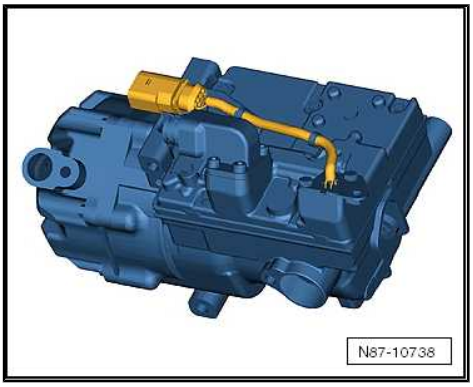

WARNING

Danger of short circuit

The air conditioner compressor operates at up to 288 V in a speed range between 800 and 8600 rpm.

Avoid contact with the air conditioner compressor when switching on the ignition or starting the drive units - danger of short circuit.

- The air conditioner compressor draws in refrigerant gas from the evaporator, compresses it and conveys it to the condenser.
- The electric motor of the air conditioner compressor is supplied with power by the power and control electronics for electric drive - JX1- .
- The control unit for air conditioning compressor - J842- integrated in the air conditioner compressor regulates the speed and thereby the output of the air conditioner compressor (electrical air conditioner compressor - V470-) based on the request received via the data bus ⇒ Vehicle diagnostic tester, “Guided Fault Finding” function for air conditioner and battery regulation .
- The electrically driven air conditioner compressor is not fitted with an air conditioner compressor regulating valve - N280- .
- Prior to installation, check the air conditioner compressor and bracket attachment points. The contact surfaces must be clean and free of rust and grease. If this is not the case, treat the contact surfaces accordingly with the contact surface cleaning set - VAS 6410- ⇒ Electrical system; General information; Rep. gr. 97 ; Repairing wiring harnesses and connectors .

Protected by copyright. Copying for private or commercial purposes, in part or in whole, is not permitted unless authorised by AUDI AG. AUDI AG does not guarantee or accept any liability with respect to the correctness of information in this document. Copyright by AUDI AG.

Note

- *If the control unit for air conditioning compressor - J842- is defective, the amount of refrigerant oil in the new air conditioner compressor must be adjusted. The refrigerant circuit does not have to be flushed with R134a.*
- *The control unit for air conditioning compressor - J842- and the electrical air conditioner compressor - V470- form one component and cannot be separated at present.*
- *The electrically driven air conditioner compressor is not fitted with -N280- . The output of the air conditioner compressor is regulated externally by way of the air conditioner compressor speed ⇒ Current flow diagrams, Electrical fault finding and Fitting locations and ⇒ Vehicle diagnostic tester, "Guided Fault Finding" function for air conditioner and battery regulation .*
- *At present, the electrically driven air conditioner compressor operates on the principle of a scroll-type supercharger (similar to the "G-Lader" supercharger).*
- *The air conditioner compressor contains refrigerant oil which mixes with refrigerant R134a at all temperatures.*
- *The type plate indicates the refrigerant for which the air conditioner compressor is designed.*
- *The integrated electronics regulate the output of the air conditioner compressor (and thus the pressure on the low-pressure side) within the specified range (control characteristic) by way of the speed.*
- *The engine should only be started after the refrigerant circuit has been assembled completely.*
- *The air conditioner compressor is fitted with a secured oil supply to prevent damage if the refrigerant circuit is empty. This means that approx. 40 to 50 cm^3 of refrigerant oil remains in the air conditioner compressor.*
- *Like the mechanically driven air conditioner compressor, the electrically driven air conditioner compressor has a pressure relief valve.*
- *On vehicles with battery cooling, hybrid operation is only possible with the air conditioner charged and with no air conditioner faults stored ⇒ Vehicle diagnostic tester, "Guided Fault Finding" function for air conditioner and battery regulation .*
- *After installing the electrically driven air conditioner compressor and then charging the refrigerant circuit, first start up the compressor via the "Compressor run-in" function of the basic setting routine. Otherwise, the air conditioner compressor may be damaged if refrigerant oil has accumulated in the compression chamber of the air conditioner compressor due to inappropriate storage prior to installation ⇒ Vehicle diagnostic tester in "Guided Fault Finding" mode for air conditioner and battery regulation .*
- *An electrically driven air conditioner compressor may only be activated when the refrigerant circuit is charged. Running the air conditioner compressor with the refrigerant circuit empty could lead to compressor damage ⇒ Vehicle diagnostic tester ("Guided Fault Finding" mode for air conditioner and battery regulation) .*

Protected by copyright. Copying for private or commercial purposes, in part or in whole, is not permitted unless authorised by AUDI AG. AUDI AG does not guarantee or accept any liability with respect to the correctness of information in this document. Copyright by AUDI AG.

3.2.3 Condenser

The condenser transfers heat from the compressed refrigerant gas to the surrounding air.

When this happens, the refrigerant gas condenses to liquid.

Protected by copyright. Copying for private or commercial purposes, in part or in whole, is not permitted unless authorised by AUDI AG. AUDI AG does not guarantee or accept any liability with respect to the correctness of information in this document. Copy

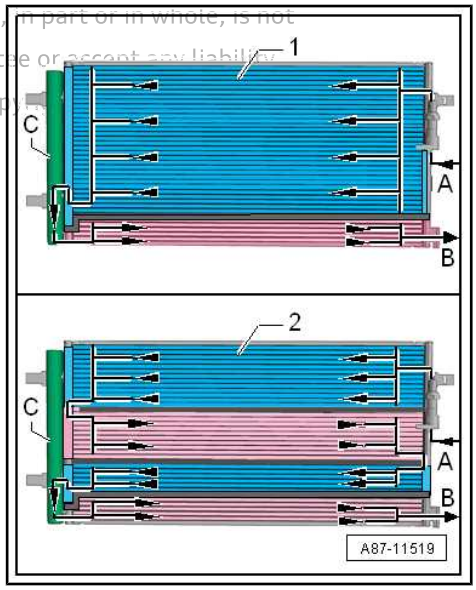

Note

- *Depending on the design of the refrigerant circuit, the receiver may be attached to the condenser or integrated in the condenser ⇒ Heating, air conditioning; Rep. gr. 87 ; Refrigerant circuit (vehicle-specific Workshop Manual) and ⇒ Electronic parts catalogue .*
- *There are different versions of the condenser; from the outside these versions can only be identified by their part number. Version -1- of the condenser is split into two sections ("two-pass condenser"). Version -2- of the condenser is split into four sections ("four-pass condenser").*
- *This illustration shows a condenser with the receiver -C- attached.*
- *The gaseous refrigerant enters the condenser at connection -A-; the refrigerant is then cooled down in the condenser and turns into liquid.*
- *The liquid refrigerant accumulates in receiver -C- (with dryer) and flows through the bottom cooling section to connection -B-.*
- *The refrigerant capacity in a refrigerant circuit may differ depending on the design of the condenser (internal volume, flow, etc.). Therefore always pay attention to the correct version and allocation of the condenser ⇒ page 276 and ⇒ Electronic parts catalogue .*

3.2.4 Evaporator

Evaporators come in different versions. Depending on the layout and function, the thermal energy required to evaporate the refrigerant is taken from the air flowing through the evaporator (e.g. in the case of the evaporator in the air conditioning unit or in the battery cooling module) or the coolant flowing through the evaporator (e.g. in the case of the heat exchanger for high-voltage battery) ⇒ Heating, air conditioning; Rep. gr. 87 ; Refrigerant circuit (vehicle-specific Workshop Manual).

Note

Two evaporator versions are described below.

Evaporator in the air conditioning unit (or in the battery cooling module)

The liquid refrigerant evaporates in the tubes of the evaporator. The heat required for this is extracted from the air flowing past the evaporator fins. The air cools down. The refrigerant evaporates and is extracted from the air conditioner compressor with the absorbed heat.

A defined quantity of refrigerant is supplied to the evaporator by way of a restrictor or expansion valve. In systems with an expansion valve, the flow rate is regulated so that only gaseous refrigerant emerges at the evaporator outlet.

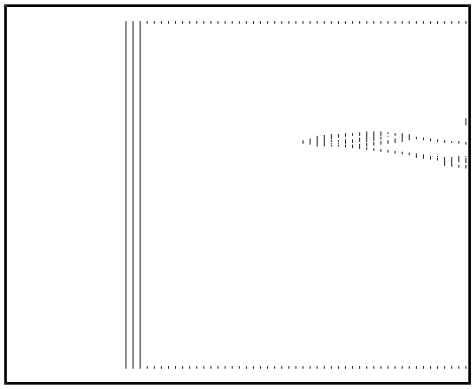

Evaporator/heat exchanger for high-voltage battery (chiller)

The liquid refrigerant evaporates in the evaporator (heat exchanger). The heat required for this is extracted from the coolant flowing through the evaporator. The coolant cools off, and the refrigerant evaporates and is drawn in by the air conditioner compressor with the absorbed heat.

A specified quantity of refrigerant is supplied to the evaporator via a restrictor (or an expansion valve) and a shut-off valve. The flow rate of the refrigerant (or coolant) is regulated so that the refrigerant emerging from the evaporator outlet is in gaseous form only ⇒ Heating, air conditioning; Rep. gr. 87 ; Refrigerant circuit (vehicle-specific Workshop Manual).

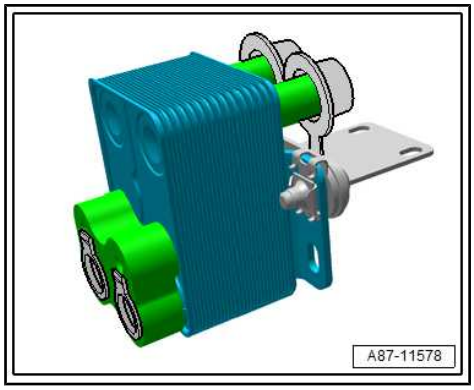

3.2.5 Heat exchanger for heat pump operation

The refrigerant (gaseous or vaporous) compressed by the air conditioner compressor is liquefied in the heat exchanger -A-; the released heat is transferred to the coolant flowing through ⇒ Heating, air conditioning; Rep. gr. 87 ; Refrigerant circuit (vehicle-specific Workshop Manual).

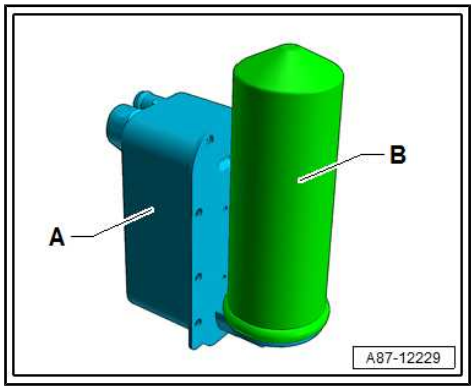

3.2.6 Fluid collector

In certain operating modes (e.g. in heat pump mode), the receiver (e.g. on the condenser). is not incorporated in the refrigerant circuit. The fluid collector -B- collects the refrigerant, stores a certain amount of it (if not required) and then transfers it as a continuous flow to the expansion valve (in front of the evaporator in the heater and air conditioning unit) or to the heat exchanger in the high-voltage system's coolant circuit ⇒ Heating, air conditioning; Rep. gr. 87 ; Refrigerant circuit (vehicle-specific Workshop Manual).

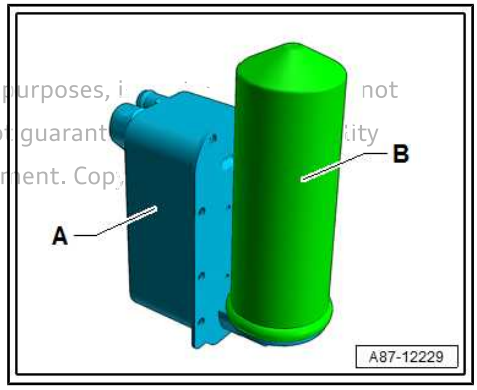

Protected by copyright. Copying for private or commercial purposes, i not
Translation provided by Volkswagen Group of America does not guarant ity
with respect to the correctness of information in this document. Cop

3.2.7 Reservoir

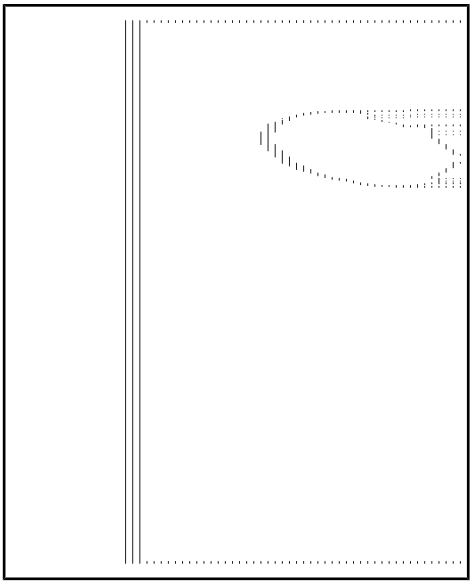

The reservoir collects the vapour and gas mixture coming from the evaporator to ensure that the air conditioner compressor only receives gaseous refrigerant. The vapour turns into gaseous refrigerant.

Refrigerant oil entrained in the circuit does not remain in the reservoir as there is an oil extraction hole.

Any moisture which enters the refrigerant circuit during assembly is trapped by a filter (desiccant bag) in the reservoir.

Gaseous refrigerant with oil is drawn in by the air conditioner compressor.

Note

- *Renew reservoir if refrigerant circuit has been open for a relatively long period and moisture has entered, or if renewal is stipulated due to a specific complaint* ⇒ page 258 *.*
- *Do not remove sealing plugs -A- and -B- until immediately prior to installation.*
- *If a reservoir is not sealed, the desiccant bag soon becomes saturated with moisture and can no longer be used.*
- *When installing, observe arrow indicating direction of flow (if applicable).*

3.2.8 Restrictor

Protected by copyright. Copying for private or commercial purposes, in part or in whole, is not permitted unless authorised by AUDI AG. AUDI AG does not guarantee or accept any liability with respect to the correctness of information in this document. Copyright by AUDI AG.

Restrictor upstream of evaporator

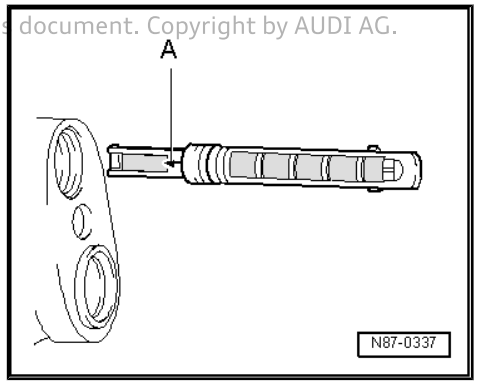

The restrictor creates a constriction. The restriction restricts the flow, thus separating the refrigerant circuit into high and low-pressure sides. Upstream of the restrictor, the refrigerant is warm due to the high pressure. Downstream of the restrictor, the refrigerant is cold due to the low pressure. A strainer is fitted upstream of the constriction to trap dirt. The strainer downstream of the constriction is designed to atomise the refrigerant before it enters the evaporator.

Note

- *Arrow -A- on restrictor faces evaporator.*
- *Always renew after opening circuit.*
- *There are different versions; observe the notes in the service information media available ⇒ Heating, air conditioning; Rep. gr. 87 ; Refrigerant circuit (vehicle-specific Workshop Manual) and ⇒ Electronic parts catalogue .*

Restrictor upstream of heat exchanger for high-voltage battery (chiller)

The restrictor creates a restriction, which restricts the flow, thus separating the refrigerant circuit into high and low-pressure sides. Upstream of the restrictor, the refrigerant is warm due to the high pressure. Downstream of the restrictor, the refrigerant is cold due to the low pressure.

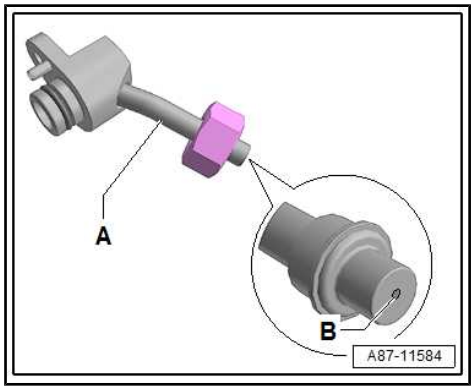

Note

- *The illustration shows a refrigerant line -A- with a permanently installed restrictor -B- (without strainer).*
- *The diameter of the restrictor hole -B- is approx. 0.7 mm. Depending on the version of the refrigerant line, the restrictor is either only inserted or fixed in position in the refrigerant line. If it is inserted, there may be a strainer for separating float elements, which may block off the restrictor hole.*
- *Prior to installation, check for dirt, and clean or renew the component as necessary.*
- *There are different versions; observe the notes in the service information media available ⇒ Heating, air conditioning; Rep. gr. 87 ; Refrigerant circuit (vehicle-specific Workshop Manual) and ⇒ Electronic parts catalogue .*

Protected by copyright. Copying for private or commercial purposes, in part or in whole, is not permitted unless authorised by AUDI AG. AUDI AG does not guarantee or accept any liability with respect to the correctness of information in this document. Copyright by AUDI AG.

3.2.9 Receiver

The receiver collects the droplets of liquid and conveys them in a continuous stream to the expansion valve. Any moisture ingressing into the refrigerant circuit during assembly is collected by a dryer in the receiver.

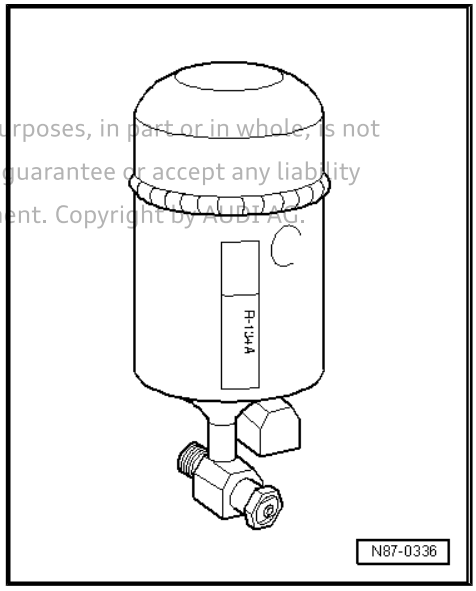

Protected by copyright. Copying for private or commercial purposes, in part or in whole, is not permitted unless authorised by AUDI AG. AUDI AG does not guarantee or accept any liability with respect to the correctness of information in this document. Copyright by AUDI AG.

Note

- *Renew receiver if refrigerant circuit has been open for a relatively long period and moisture has entered, or if renewal is stipulated due to a specific complaint* *⇒ page 258* *.*
- *Do not remove sealing plugs until just before installation.*
- *If the receiver is not sealed, the desiccant bag soon becomes saturated with moisture and thus unusable.*
- *When installing, observe arrow indicating direction of flow (if applicable).*
- *Depending on the design of the refrigerant circuit, the receiver may also be attached to the condenser or integrated in the condenser ⇒ Heating, air conditioning; Rep. gr. 87 ; Refrigerant circuit (vehicle-specific Workshop Manual) and ⇒ Electronic parts catalogue .*
- *The procedure for dealing with problems differs depending on the version of the receiver / desiccant cartridge. If, for example, the receiver is attached to the condenser, it can be renewed together with the desiccant cartridge. If, for example, the receiver is integrated into the condenser, it is usually possible to renew the desiccant cartridge and any additional filter element separately. If the receiver is integrated into the condenser and it is not possible to renew the receiver/desiccant cartridge separately, it may be necessary to renew the entire condenser ⇒ Heating, air conditioning; Rep. gr. 87 ; Refrigerant circuit (vehicle-specific Workshop Manual) and ⇒ Electronic parts catalogue .*
- *Depending on the design of the refrigerant circuit, the desiccant bag (desiccant cartridge) may also be installed in the condenser ⇒ Heating, air conditioning; Rep. gr. 87 ; Refrigerant circuit (vehicle-specific Workshop Manual) and ⇒ Electronic parts catalogue .*

3.2.10 Expansion valve

The expansion valve atomises the refrigerant flowing in and controls the flow rate according to the heat transfer so that it does not vaporise before reaching the evaporator outlet.

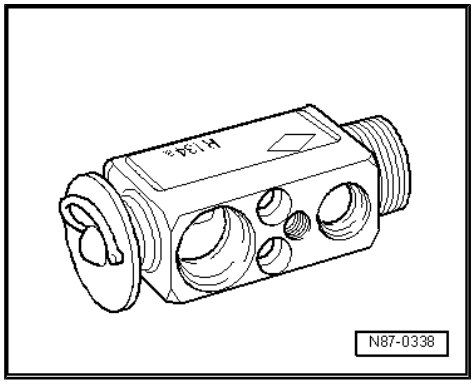

Note

- *Pay attention to the correct part number on renewing the expansion valve. ⇒ Electronic parts catalogue.*
- *Different characteristic curves are matched to the relevant circuit ⇒ Heating, air conditioning; Rep. gr. 87 ; Refrigerant circuit (vehicle-specific Workshop Manual) and ⇒ Electronic parts catalogue .*
- *Depending on the version of the air conditioner compressor, there may be a valve on the high-pressure side of the compressor which prevents liquid refrigerant from flowing back into the compressor after the air conditioner has been switched off. If an air conditioner compressor with such a valve is installed in a vehicle with a refrigerant circuit with an expansion valve, it may take a relatively long time before the pressure in the high-pressure side drops (the expansion valve is cold and the pressure in the low-pressure side increases rapidly after the compressor is switched off; the expansion valve is closed and the refrigerant can only flow slowly to the low-pressure side). If the air conditioner compressor is switched on, the pressure in the low-pressure side drops, the expansion valve is opened and the refrigerant can flow to the low-pressure side.*

3.2.11 Expansion valve with shut-off valve

Protected by copyright. Copying for private or commercial purposes, in part or in whole, is not permitted unless authorised by AUDI AG. AUDI AG does not guarantee or accept any liability with respect to the correctness of information in this document. Copyright by AUDI AG.

Note

There are different shut-off valve versions with different functions and designations. On the Audi Q5 hybrid, for example, the refrigerant shut-off valve 2 for hybrid battery - N517- (as illustrated below) is installed in the battery cooling module ⇒ Heating, air conditioning; Rep. gr. 87 ; Refrigerant circuit (vehicle-specific Workshop Manual).

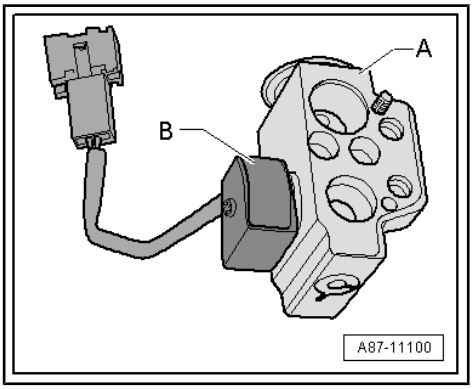

- The expansion valve -A- with -N517- -B- atomises the refrigerant flowing through and regulates the flow of refrigerant to the evaporator in the battery cooling module of the hybrid battery unit - AX1- so that - depending on the heat transferred - the vapour only turns into gas at the outlet of the evaporator.
- When -N517- -B- is actuated by the electronic system, it is open and allows refrigerant to flow through the expansion valve -A- to the evaporator in the battery cooling module.
- The expansion valve -A- with -N517- -B- is installed on vehicles with battery cooling module. It is actuated in air conditioning mode if the hybrid battery unit - AX1- needs to be cooled.
- If -N517- -B- is actuated by the electronic system (e.g. by the battery regulation control unit - J840-), it is opened and allows refrigerant to flow to the evaporator in the battery cooling module according to its control characteristics.
- The solenoid -N517- -B- (fitted at expansion valve -A-) is activated e.g. by the battery regulation control unit - J840- ⇒ Current flow diagrams, Electrical fault finding and Fitting locations and ⇒ Vehicle diagnostic tester (“Guided Fault Finding” for air conditioner and battery regulation) .
- If, on a vehicle with two evaporators (one each in the air conditioning unit and battery cooling module as e.g. on the Audi Q5 Hybrid), the measured temperature corresponds to or is below the specified value at one evaporator but the required specified value is not attained at the other evaporator, the system is controlled as follows: the battery regulation control unit - J840- actuates the electric air conditioner compressor at a higher speed via the power and control electronics for electric drive - JX1- and the control unit for air conditioning compressor - J842- . This causes the cooling output of the air conditioner to increase and the pressure on the low-pressure side and the evaporator temperature to drop. If the required temperature value is then not reached at one evaporator, -J840- activates the refrigerant shut-off valve 1 for hybrid battery - N516- or the refrigerant shut-off valve 2 for hybrid battery - N517- so that refrigerant no longer flows through the evaporator which is too cold ⇒ Vehicle diagnostic tester in “Guided Fault Finding” mode for air conditioner .

3.2.12 Refrigerant shut-off valves

Note

- *There are different shut-off valve versions with different functions and designations. For example, the refrigerant shut-off valve 1 for hybrid battery - N516- (as illustrated below) is installed in the Audi Q5 hybrid ⇒ Heating, air conditioning; Rep. gr. 87 ; Refrigerant circuit (vehicle-specific Workshop Manual).*
- *Different designations, depending on the function and vehicle ⇒ Heating, air conditioning; Rep. gr. 87 ; Refrigerant circuit (vehicle-specific Workshop Manual).*

Protected by copyright. Copying for private or commercial purposes, in part or in whole, is not permitted unless authorised by AUDI AG. AUDI AG does not guarantee or accept any liability with respect to the correctness of information in this document. Copyright by AUDI AG.

Shut-off valve with two switch statuses (open and closed)

- Refrigerant shut-off valve 1 for hybrid battery - N516- (e.g. on the Audi Q5 hybrid)
- Refrigerant shut-off valve for heater and air conditioner unit - N541- (e.g. on the Audi A3 e-tron)

- Refrigerant shut-off valve for high-voltage battery heat exchanger - N542- (e.g. on the Audi A3 e-tron)
- Refrigerant shut-off valve - V424- (e.g. on the Audi Q7 e-tron)
- When the shut-off valve -A- is not actuated by the electronic system, it is open and allows refrigerant to flow to the evaporator in the air conditioning unit.
- The shut-off valve -A- is e.g. installed on vehicles with battery cooling module. It is actuated in hybrid mode if the air conditioner is not set to cooling mode for the passenger compartment, but the hybrid battery unit - AX1- needs to be cooled.
- Observe the arrow -B- on the shut-off valve -A-; it shows the flow direction of the refrigerant (from condenser to evaporator in the air conditioning unit).
- The solenoid -C- (fitted at the shut-off valve) is actuated e.g. by the battery regulation control unit - J840- ⇒ Current flow diagrams, Electrical fault finding and Fitting locations and ⇒ Vehicle diagnostic tester in “Guided Fault Finding” mode for air conditioner and battery regulation .
- If e.g. on a vehicle with two evaporators (one each in the air conditioning unit and battery cooling module as e.g. on the Audi Q5 Hybrid), the measured temperature corresponds to or is below the specified value at one evaporator but the required specified value is not attained at the other evaporator, the system is controlled as follows: the relevant control unit (e.g. the control unit for battery regulation - J840- on the Audi Q5 Hybrid) actuates the electric air conditioner compressor at a higher speed via the control unit for air conditioning compressor - J842- . This causes the cooling output of the air conditioner to increase and the pressure on the low-pressure side and the evaporator temperature to drop. If the required temperature value is then not reached at one evaporator, the responsible control unit (e.g. -J840- on the Q5 hybrid) activates the refrigerant shut-off valve 1 for hybrid battery - N516- or the refrigerant shut-off valve 2 for hybrid battery - N517- so that refrigerant no longer flows through the evaporator which is too cold ⇒ Vehicle diagnostic tester in “Guided Fault Finding” mode for air conditioner and ⇒ Heating, air conditioning; Rep. gr. 87 ; Refrigerant circuit (vehicle-specific Workshop Manual).

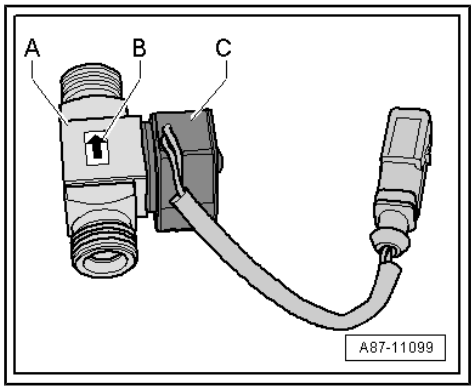

Protected by copyright. Copying for private or commercial purposes, in part or in whole, is not permitted unless authorised by AUDI AG. AUDI AG does not guarantee or accept any liability with respect to the correctness of information in this document. Copyright by AUDI AG.

Shut-off valves controlled via characteristic curves

- Refrigerant shut-off valve 2 - N640- to refrigerant shut-off valve 5 - N643- (e.g. on the Audi Q7 e-tron)
- Refrigerant expansion valve 1 - N636- (e.g. on the Audi Q7 e-tron)

- Shut-off valve -A- is activated using a stepper motor -B- of the corresponding control unit via characteristic curves (open or closed).
- If the shut-off valve is operating as a control valve (e.g. as the refrigerant expansion valve 1 - N636- on the Audi Q7) it is only opened as far as necessary until the specified temperature for the heat exchanger is reached ⇒ Heating, air conditioning; Rep. gr. 87 ; Refrigerant circuit (vehicle-specific Workshop Manual).
- The shut-off valves activated by stepper motors have no specified rest position. They must therefore be moved to a specific position (open or closed) before any work is performed on the refrigerant circuit ⇒ Heating, air conditioning; Rep. gr. 87 ; Refrigerant circuit (vehicle-specific Workshop Manual).
- Depending on the layout of the refrigerant circuit, several shut-off valves may be combined in one valve block (e.g. on the Audi Q7 e-tron) ⇒ Heating, air conditioning; Rep. gr. 87 ; Refrigerant circuit (vehicle-specific Workshop Manual).
- The stepper motor is adapted and activated via data lines (LIN bus) by the corresponding control unit according to their fitting location ⇒ Heating, air conditioning; Rep. gr. 87 ; Refrigerant circuit (vehicle-specific Workshop Manual) and ⇒ Vehicle diagnostic tester (“Guided Fault Finding”).

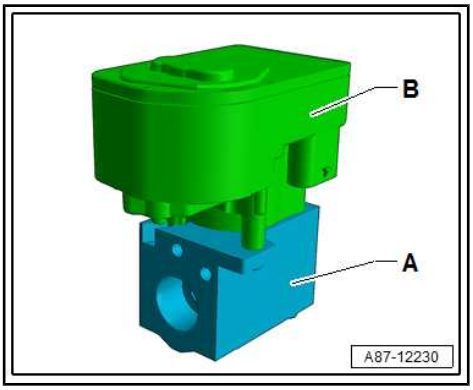

3.2.13 Refrigerant line with internal heat exchanger

In this refrigerant line, the hot refrigerant (liquid) flowing through the high-pressure side gives off energy to the cold refrigerant (gaseous or vaporous) flowing through the low-pressure side, thus enhancing the efficiency of the air conditioner.

Note

This illustration shows a refrigerant line with internal heat exchanger as fitted e.g. on the Audi A4 2008 > and the Audi A5 Coupé 2008 > ⇒ Heating, air conditioning; Rep. gr. 87 ; Refrigerant circuit (vehicle-specific Workshop Manual).

Protected by copyright. Copying for private or commercial purposes, in part or in whole, is not permitted unless authorised by AUDI AG. AUDI AG does not guarantee or accept any liability with respect to the correctness of information in this document. Copyright by AUDI AG.

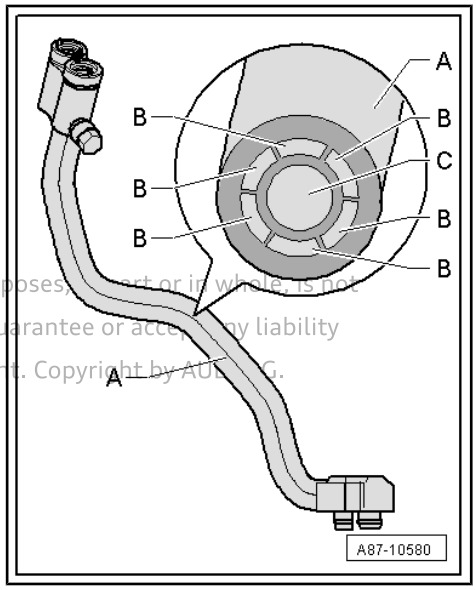

A - Refrigerant line with internal heat exchanger

B - Passages in refrigerant line, in which hot liquid refrigerant flows to evaporator (high-pressure side of refrigerant circuit)

C - Passage in refrigerant line, in which cold gaseous or vaporous refrigerant flows to air conditioner compressor (low-pressure side of refrigerant circuit)

3.2.14 Quick-release couplings on refrigerant line

WARNING

Only release and open the quick-release couplings after completely discharging the refrigerant circuit.

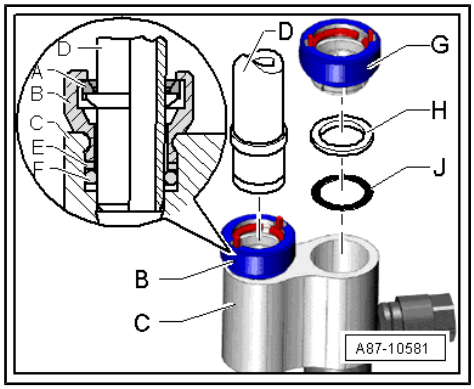

Note

- *This illustration shows the quick-release couplings with a refrigerant line with internal heat exchanger as fitted e.g. on the Audi A4 2008 > and the Audi A5 Coupé 2008 > ⇒ Heating, air conditioning; Rep. gr. 87 ; Refrigerant circuit (vehicle-specific Workshop Manual).*
- *Removal of the refrigerant line -D- involves opening the retaining ring -A- with the refrigerant line release tool -T40149/- for example ⇒ Heating, air conditioning; Rep. gr. 87 ; Refrigerant circuit (vehicle-specific Workshop Manual).*
- *Following removal of the applicable refrigerant line, renew the quick-release couplings -B- and -G- together with the corresponding support ring -E- or -H- and the corresponding O-ring -F- or -J- ⇒ Heating, air conditioning; Rep. gr. 87 ; Refrigerant circuit (vehicle-specific Workshop Manual) and ⇒ Electronic parts catalogue .*

A - Retaining ring (in quick-release coupling, high-pressure side)

B - Quick-release coupling with retaining ring (high-pressure side)

C - Refrigerant line with internal heat exchanger

D - Refrigerant line (high-pressure side)

E - Support ring (high-pressure side)

F - O-ring (“high-pressure side”)

G - Quick-release coupling with retaining ring (low-pressure side)

H - Support ring (low-pressure side)

J - O-ring (“low-pressure side”)

Protected by copyright. Copying for private or commercial purposes, in part or in whole, is not permitted unless authorised by AUDI AG. AUDI AG does not guarantee or accept any liability with respect to the correctness of information in this document.

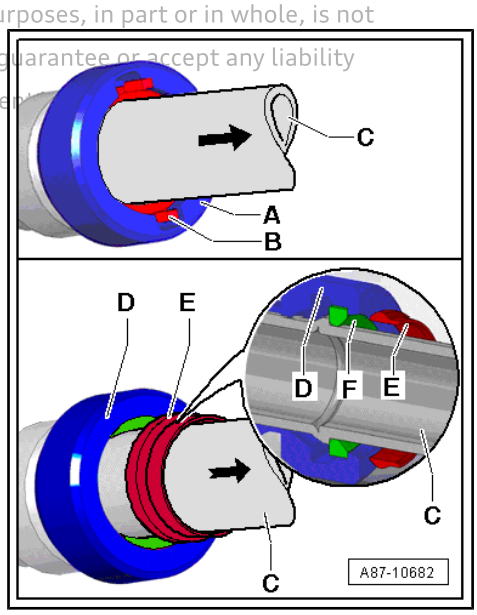

Note

- *There are different versions of the quick-release couplings -A- and -D-. With both versions of these quick-release couplings, the refrigerant lines -C- can be released in the identical manner using the refrigerant line release tool -T40149/1- for example and removed.*
- *With the quick-release coupling -A- fitted at the start of production, the pins -B- become visible after fitting the refrigerant line -C- if the locked refrigerant line -C- is pulled in arrow direction.*
- *With the quick-release coupling -D- installed from model year 2010 onwards (gradual introduction), the refrigerant line -C- is installed in the same way as with the quick-release coupling -A-. If, on this version, the refrigerant line -C- is pulled in the direction of the arrow after it is assembled, the snap ring -E- emerges from the quick-release coupling -D-, showing that the retaining ring -F- is completely locked onto the refrigerant line -C-. The snap ring -E- is then to be detached from the refrigerant line -C-.*

3.2.15 O-rings

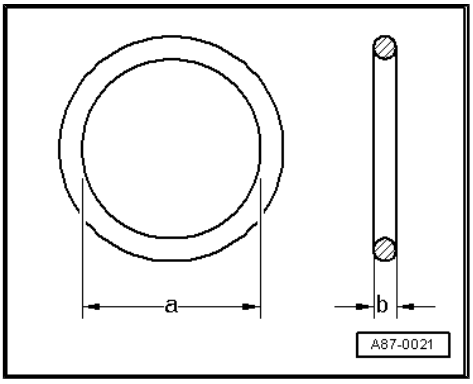

These rings seal the joints between the individual components of the refrigerant circuit.

Only O-rings resistant to R134a refrigerant and the related refrigerant oils are to be used. This is guaranteed if genuine replacement parts are used.

O-rings:

- Use only once.
- Observe correct diameters -a- and -b-.
- Before installing, lubricate lightly with refrigerant oil ⇒ Heating, air conditioning; Rep. gr. 87 ; Refrigerant circuit (vehicle-specific Workshop Manual) and ⇒ Electronic parts catalogue .

Note

Protected by copyright. Copying for private or commercial purposes, in part or in whole, is not permitted unless authorised by AUDI AG. AUDI AG does not guarantee or accept any liability with respect to the correctness of information in this document. Copyright by AUDI AG.

The colour coding of O-rings for R134a refrigerant circuits has been discontinued. Black and coloured O-rings are used ⇒ Electronics parts catalogue and ⇒ Heating, air conditioning; Rep. gr. 87 ; Refrigerant circuit (vehicle-specific Workshop Manual).

3.2.16 Pipes and hoses of refrigerant circuit

The mixture of refrigerant oil and refrigerant R134a corrodes certain metals (e.g. copper) and alloys and dissolves certain hose materials. Therefore, always use genuine replacement parts.

The pipes and hoses are joined with bolted connections or special connectors.

Note

Observe specified torques for bolted joints and use the specified release tools for connectors.

3.2.17 High-pressure safety valve

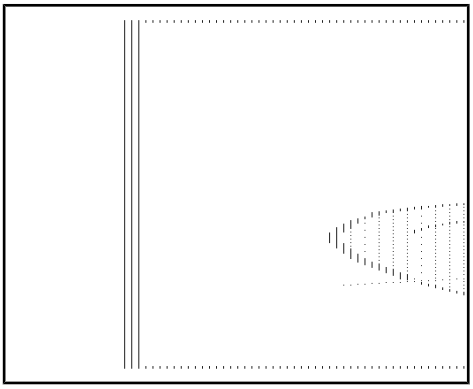

The high-pressure safety valve is attached to the air conditioner compressor or the receiver.

The valve opens at a pressure of approx. 38 bar and closes again when the pressure has dropped (approx. 30 bar).

Not all the refrigerant escapes.

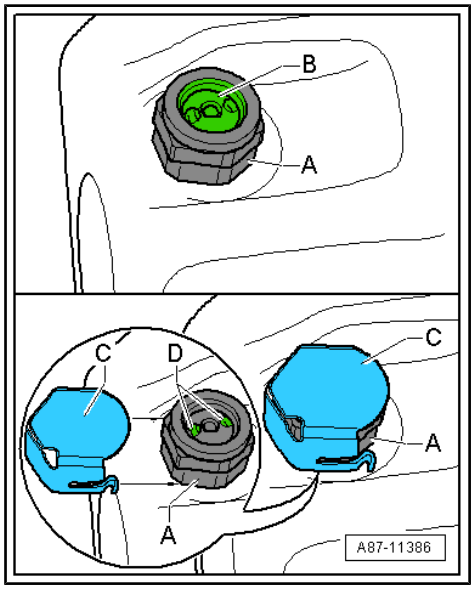

Note

- *Depending on the version, a transparent plastic disc -B- may be attached to the high-pressure safety valve -A-. The disc breaks off as soon as the valve is actuated.*
- *Depending on the version of the high-pressure safety valve -A-, there may also be a cover -C- on the high-pressure safety valve -A-. Should the pressure in the refrigerant circuit ever exceed the opening pressure of the high-pressure safety valve -A-, causing the high-pressure safety valve to open, the refrigerant does not emerge in one direction but is distributed through the openings -D- under the cover -C-.*
- *Should it be necessary to renew a high-pressure safety valve -A-, please observe the correct tightening torque when installing (dependent on air conditioner compressor manufacturer and version). On air conditioner compressors manufactured by Denso (or Nippondenso), Sanden or Zexel/Valeo, an O-ring is fitted (tightening torque: currently 10 Nm for Denso and Zexel/Valeo; 15 Nm for Sanden). On Delphi air conditioner compressors, a seal is fitted (tightening torque: currently 15 Nm).*
- *Renew seal/O-ring ⇒ Electronic parts catalogue .*
- *If the seal/O-ring fitted at the high-pressure safety valve cannot be supplied as a replacement part, the removed component can be re-installed as an exception; it must be checked for damage before being re-installed. If the removed seal/O-ring is damaged or deformed, it must be replaced by a commercially available component ⇒ Electronic parts catalogue .*
- *After charging the refrigerant circuit, check the installed high-pressure safety valve for leaks, e.g. with an electronic leak detector.*

3.2.18 Non-return valves

Non-return valves separate the refrigerant circuit into different sections.

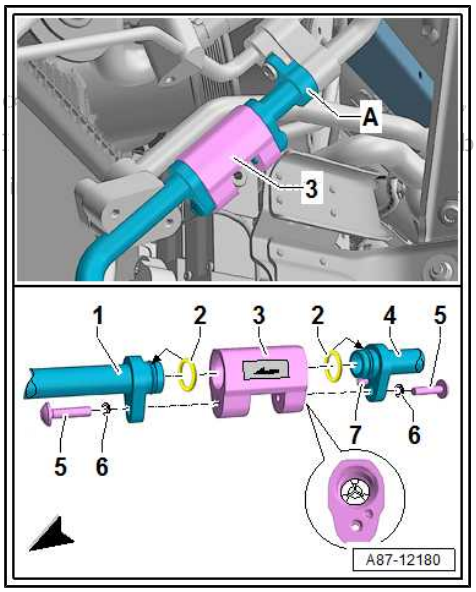

Protected by copyright. Copying for private or commercial purposes, in part, is not permitted unless authorised by AUDI AG. AUDI AG does not guarantee or assume liability with respect to the correctness of information in this document.

Note

- *The non-return valve -3- in the illustration is installed e.g. on the Audi Q7 e-tron.*
- *Non-return valves in the refrigerant circuit have a specific holding pressure (approx. 0.1 bar or 100 mbar) in the forward direction. All electrically activated valves must therefore be open so that the refrigerant circuit can be evacuated fully (residual pressure less than 5 mbar).*
- *Depending on the version, there may be a sticker indicating the direction of flow.*

3.3 Design of refrigerant circuit

⇒ "3.3.1 Refrigerant circuit with expansion valve and evaporator", page 39

⇒ "3.3.2 Refrigerant circuit with restrictor and reservoir", page 39

⇒ "3.4 Refrigerant circuit with electrically driven air conditioner compressor", page 40

3.3.1 Refrigerant circuit with expansion valve and evaporator

The following illustration only shows the general layout of a typical refrigerant circuit; refer to the vehicle-specific Workshop Manual for the layout of that vehicle's refrigerant circuit ⇒ Heating, air conditioning; Rep. gr. 87 ; Refrigerant circuit (vehicle-specific Workshop Manual).

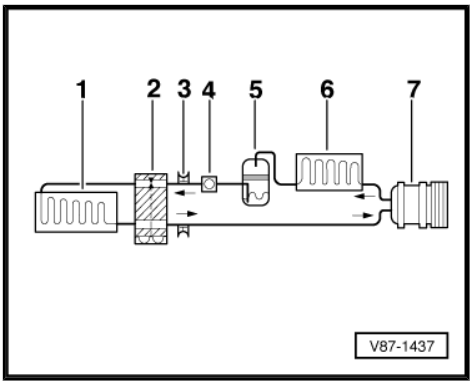

1 - Evaporator

2 - Expansion valve

3 - Valve for extraction, charging and measurement

4 - Sight glass (not fitted with R134a circuits)

5 - Receiver with dryer

6 - Condenser

7 - Air conditioner compressor

Note

Arrows show direction of refrigerant flow.

3.3.2 Refrigerant circuit with restrictor and reservoir

The following illustration only shows the general layout of a typical refrigerant circuit; refer to the vehicle-specific Workshop Manual for the layout of that vehicle's refrigerant circuit ⇒ Heating, air conditioning; Rep. gr. 87 ; Refrigerant circuit (vehicle-specific Workshop Manual).

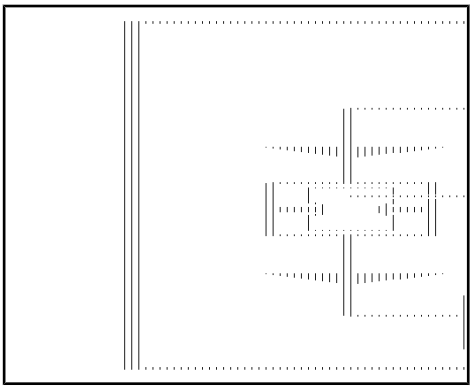

1 - Air conditioner compressor

2 - Condenser

3 - Restrictor

4 - Evaporator

5 - Reservoir

Note

Arrows show direction of refrigerant flow.

Protected by copyright. Copying for private or commercial purposes, in part or in whole, is not permitted unless authorised by AUDI AG. AUDI AG does not guarantee or accept any liability with respect to the correctness of information in this document. Copyright by AUDI AG.

3.4 Refrigerant circuit with electrically driven air conditioner compressor

Note

The following illustration shows the refrigerant circuit fitted in the Audi Q5 hybrid as an example; refer to the vehicle-specific Workshop Manual for the layout of that vehicle's refrigerant circuit ⇒ Heating, air conditioning; Rep. gr. 87 ; Refrigerant circuit (vehicle-specific Workshop Manual).

Protected by copyright. Copyright for private or commercial purposes, in part or in whole, is not permitted unless authorised by AUDI AG. AUDI AG does not guarantee or accept any liability with respect to the correctness of information in this document. Copyright by AUDI AG.

Arrows show direction of refrigerant flow.

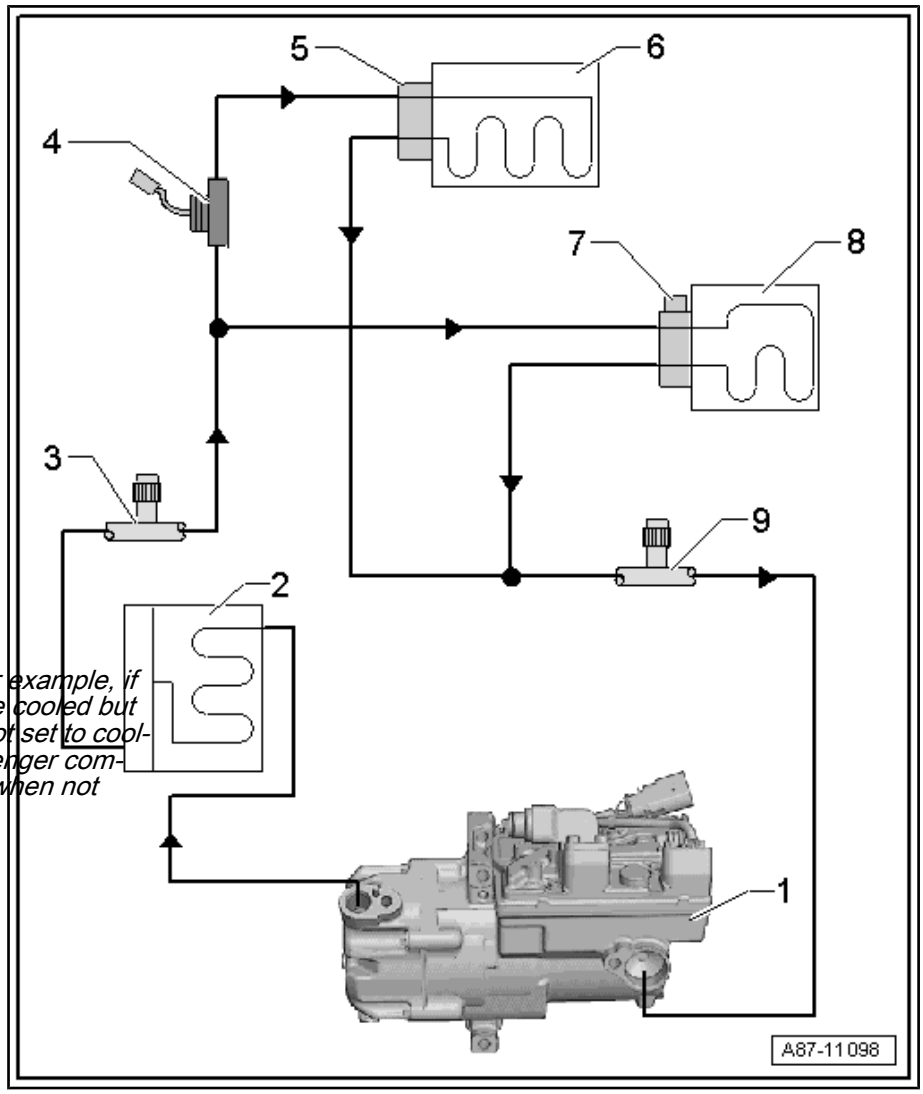

1 - Electrically driven air conditioner compressor

- With control unit for air conditioning compressor - J842- and electrical air conditioner compressor - V470-

2 - Condenser

- With receiver and desiccant cartridge

3 - Service connection (high-pressure side)

4 - Refrigerant shut-off valve 1 for hybrid battery - N516-

- Only on vehicles with battery cooling module for hybrid battery unit - AX1-

Note

-N516- is activated, for example, if the battery needs to be cooled but the air conditioner is not set to cooling mode for the passenger compartment (valve open when not activated).

5 - Expansion valve

- At evaporator in air conditioning unit

6 - Evaporator

- Evaporator in air conditioning unit

7 - Expansion valve with refrigerant shut-off valve 2 for hybrid battery - N517-

- At evaporator in battery cooling module
- Only on vehicles with battery cooling module for hybrid battery unit - AX1-

Note

-N517- is activated if battery needs to be cooled (closed when not activated).

8 - Evaporator

- ❑ Evaporator in battery cooling module
- ❑ Only on vehicles with battery cooling module for hybrid battery unit - AX1-

9 - Service connection (low-pressure side)

3.5 Connections for quick-release coupling in refrigerant circuit

- Only use valves and connections that are resistant to R134a refrigerant and related refrigerant oils.
- There are different connections (outer diameter) for high and low-pressure sides.
- Discharge refrigerant circuit before removing valves or valve cores.
- Always screw on sealing caps.

Protected by copyright. Copying for private or commercial purposes, in part or in whole, is not permitted unless authorised by AUDI AG. AUDI AG does not guarantee or accept any liability with respect to the correctness of information in this document. Copyright by AUDI AG.

Layout in vehicle ⇒ Heating, air conditioning; Rep. gr. 87 ; Refrigerant circuit (vehicle-specific Workshop Manual)

> ⚠ WARNING
>
> *Risk of injury (frostbite).*
>
> *Refrigerant may escape if the refrigerant circuit has not been discharged.*
>
> *Extract refrigerant before opening refrigerant circuit. Renewed evaporation may create pressure in refrigerant circuit if refrigerant circuit is not opened within 10 minutes following extraction. Extract refrigerant again.*

⇒ “3.5.1 Connections with Schrader valve (needle valve)”, page 42

⇒ “3.5.2 Connections with primary sealing valve (ball valve)”, page 42
⇒ “3.5.3 Differences in service connections depending on refrigerant (R134a or R1234yf)”, page 45

3.5.1 Connections with Schrader valve (needle valve)

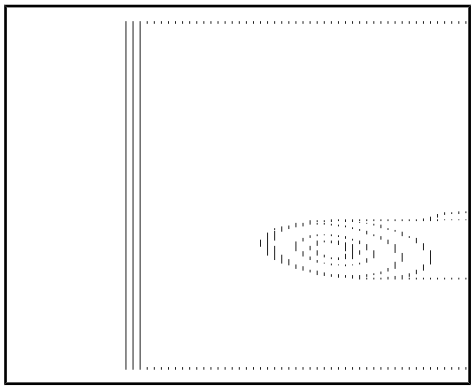

- -A- Service connection (soldered in)
- -B- Valve core (designation: Schrader valve or needle valve)
- -C- O-ring (for valve)
- -D- Sealing cap with seal

Note

- *After connecting, carefully screw handwheel of service coupling into quick-release coupling adapter only to the extent required to reliably open valve in service connection (observe pressure gauge; do not open valve too far).*
- *When removing and installing valve core -B- with refrigerant circuit discharged, use e.g. adapter from socket - T10364- .*
- *Take care when tightening valve core -B- (low torque).*
- *There are different versions of these valves; therefore tightening torques vary. For a valve core -B- with a VG5 thread (5.2 x 0.7 mm, tyre valve) the tightening torque is 0.4 Nm +/- 0.1 Nm; for a valve core with an M6 x 0.75 mm thread, the tightening torque is 0.9 Nm +/- 0.1 Nm, and for a valve core with an M8 x 1.0 mm thread, the tightening torque is 2.0 Nm +/- 0.2 Nm.*
- *There are different versions of these valves, valve cores and corresponding sealing caps. Note the correct version of the valve core and correct assignment of the sealing caps ⇒ Electronic parts catalogue .*

3.5.2 Connections with primary sealing valve (ball valve)

WARNING

Before unscrewing the connection, connect the air conditioner service station and extract refrigerant. The refrigerant circuit must be empty; danger of injury.

Protected by copyright. Copying for private or commercial purposes, in part or in whole, is not permitted unless authorised by AUDI AG. AUDI AG does not guarantee or accept any liability with respect to the correctness of information in this document. Copyright by AUDI AG.

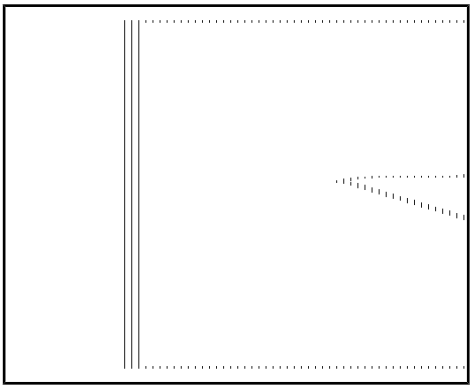

Connection with high-pressure valve

1 - Connection with internal thread (soldered in)

2 - O-ring (version and identification: black or coloured ⇒ Electronic parts catalogue)

3 - Valve with external thread and groove for O-ring (designation: ball valve)

4 - Seal for cap

5 - Cap

Depending on the vehicle, high pressure may not be available at the service connection on the high-pressure side in all air conditioner operating modes (e.g. on the Audi Q7 e-tron). The senders installed in the refrigerant circuit must therefore be used to check that the air conditioner in these vehicles is functioning properly ⇒ Heating, air conditioning; Rep. gr. 87 ; Refrigerant circuit (vehicle-specific Workshop Manual) and ⇒ Vehicle diagnostic tester in "Guided Fault Finding" mode.

Protected by copyright. Copying for private or commercial purposes, in part or in whole, is not permitted unless authorised by AUDI AG. AUDI AG does not guarantee or accept any liability with respect to the correctness of information in this document. Copyright by AUDI AG.

Note

- *After connecting, carefully screw handwheel of service coupling into quick-release coupling adapter only to the extent required to reliably open valve in service connection (observe pressure gauge; do not open valve too far).*
- *When removing and installing valve -3- with refrigerant circuit discharged, use e.g. an adapter from socket - T10364- .*
- *There are different versions of these valves (with internal or external thread); therefore the tightening torques may vary. For the valves -3- currently in use (external thread M12 x 1.5 mm) the tightening torque is 9 Nm +/- 1 Nm.*
- *There are different versions of these valves and the corresponding sealing caps. Note the correct version of the valve and correct assignment of the sealing cap ⇒ Electronic parts catalogue .*

Connection with low-pressure valve

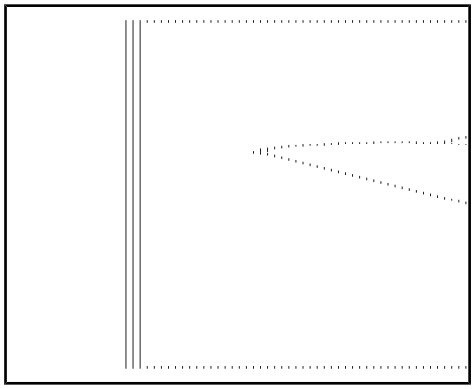

1 - Connection with external thread and groove for O-ring (soldered in)

2 - O-ring (version and identification: black or coloured ⇒ Electronic parts catalogue)

3 - Valve with internal thread

4 - Seal for cap

5 - Cap

Note

- *Screw handwheel of service coupling into quick-release coupling adapter carefully and only to the extent required to reliably open valve in service connection (observe pressure gauge; do not open valve too far).*
- *When removing and installing valve -3- with refrigerant circuit discharged, use e.g. an adapter from socket - T10364- .*
- *There are different versions of these valves (with internal or external thread); therefore the tightening torques may vary. For the valves -3- currently in use (internal thread M10 x 1.25 mm) the tightening torque is 9 Nm +/- 1 Nm.*
- *There are different versions of these valves and the corresponding sealing caps. Note the correct version of the valve and correct assignment of the sealing cap ⇒ Electronic parts catalogue .*

Protected by copyright. Copying for private or commercial purposes, in part or in whole, is not permitted unless authorised by AUDI AG. AUDI AG does not guarantee or accept any liability with respect to the correctness of information in this document. Copyright by AUDI AG.

3.5.3 Differences in service connections depending on refrigerant (R134a or R1234yf)

Note

- *Only use valves and connections which are resistant to the corresponding refrigerant (R134a and/or R1234yf) and related refrigerant oils ⇒ Electronic parts catalogue .*
- *The service connections for the refrigerant circuits are designed such that only the specified service couplings for the specified refrigerant (R134a or R1234yf) can be connected.*
- *These illustrations show service connections in which a Schrader valve (needle valve or push pin) is installed. However, depending on the vehicle version or the type of refrigerant etc., service connections with a primary sealing valve (ball valve) may also be installed (different technology)*
  ⇒ "3.5.2 Connections with primary sealing valve (ball valve)", page 42 .
- *Layout in vehicle and on refrigerant circuit ⇒ Heating, air conditioning; Rep. gr. 87 ; Refrigerant circuit (vehicle-specific Workshop Manual).*
- *There are different connections (outer diameter) for high and low-pressure sides.*
- *Discharge refrigerant circuit before removing valves or valve cores*
  ⇒ "5.3.3 Discharging refrigerant circuit with air conditioner service station", page 73 .
- *Removing and installing valve from service connection (low and high-pressure sides)*
  ⇒ "3.5.1 Connections with Schrader valve (needle valve)", page 42 .
- *Always screw on sealing caps with seal.*

Protected by copyright. Copying for private or commercial purposes, in part or in whole, is not permitted unless authorised by AUDI AG. AUDI AG does not guarantee or accept any liability with respect to the correctness of information in this document. Copyright by AUDI AG.

Service connections (refrigerant R134a and R1234yf)

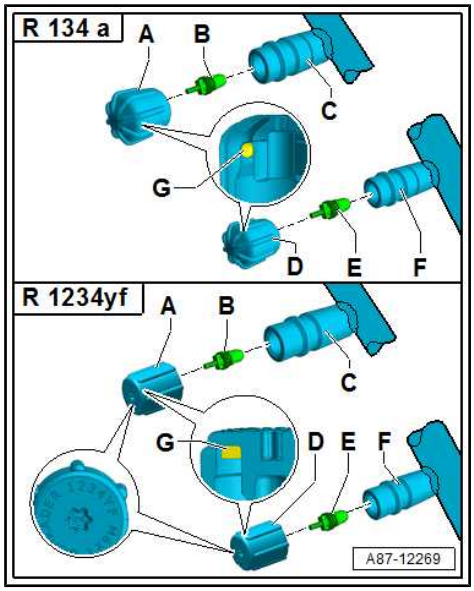

WARNING

Before removing valves -B, E-, connect the air conditioner service station and extract refrigerant. Refrigerant circuit must be empty; danger of injury ***⇒ "5.3.3 Discharging refrigerant circuit with air conditioner service station", page 73*** ***.***

- Cap for service connection (high-pressure side) -A- with seal -G-
- Valve core on high-pressure side (version: Schrader valve or needle valve) -B-
- Service connection (high-pressure side) -C-
- Cap for service connection (low-pressure side) -D- with seal -G-
- Valve core on low-pressure side (version: Schrader valve or needle valve) -E-
- Service connection (low-pressure side) -F-

Note

- *Service connections -C, F- for refrigerant R134a and R1234yf are available in different versions (depending on manufacturer), with different sealing caps -A, D- and valves -B, E-. Ensure correct assignment ⇒ Electronic parts catalogue .*
- *Sealing caps -A, D- for the service connections on the R134a refrigerant circuit are currently black. The sealing caps for the service connections on the R1234yf refrigerant circuit are currently grey. The refrigerant type (e.g. "R1234yf") may also be printed on the sealing caps.*
- *After connecting, carefully screw the handwheel of the service coupling into the quick-release coupling adapter only to the extent required to reliably open the valve -B, E- in the service connection (observe the pressure gauge; do not open the valve -B, E- too far).*
- *The service connections -C, F- for R134a and R134yf refrigerant circuits are designed such that only the service couplings specified for the corresponding refrigerant can be connected (different dimensions* *⇒ page 47* *).*
- *Service connections -C, F-, for example, are soldered into a refrigerant line and therefore cannot be renewed separately.*
- *To remove and install the valves -B, E- (with the refrigerant circuit drained), make use of an adapter from the socket -T10364- for example.*
- *Take care when tightening the valves -B, E- (low torque).*
- *These valves are available in different versions with differing tightening torques. Tightening torque for valve core -C-with a VG5 thread (5.2 x 0.7 mm tyre valve): 0.4 Nm. +- 0.1 Nm; tightening torque for valve core with an M6 x 0.75 mm thread: 0.9 Nm +- 0.1 Nm; tightening torque for valve core with an M8 x 1.0 mm: 2.0 Nm +- 0.2 Nm.*
- *There are different versions of valve caps -A, D-; therefore tightening torques vary. Tightening torque for valve cap with M8 x 1 mm or M10 x 1 mm thread: 0.4 Nm +- 0.1 Nm.*

Downloaded from www.vwhandbook.info. Copyright by AUDI AG. Any other use, in particular for commercial purposes, in part or in whole, is not permitted without the prior consent of AUDI AG. AUDI AG does not guarantee or accept any liability with respect to the correctness of information in this document. Copyright by AUDI AG.

Dimensions of service connections

- Valve core -A- (different versions; refer to ⇒ Electronic parts catalogue)
- Service connection -B- (different versions on high-pressure and low-pressure side depending on refrigerant)

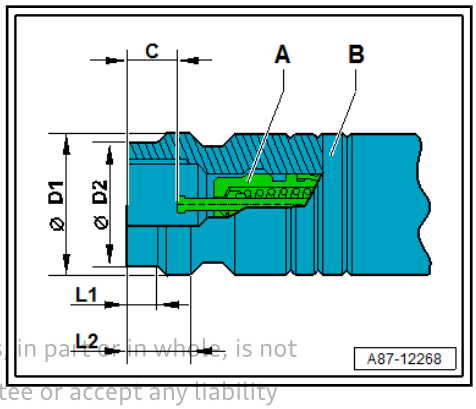

Dimensions of service connections -B-	Service connection (refrigerant R134a)		Service connection (refrigerant R1234yf)	
	High-pressure side	Low-pressure side	High-pressure side	Low-pressure side
Outer diameter -D1-	16.0 mm	13.0 mm	17.0 mm	14.0 mm
Outer diameter -D2-	14.0 mm	11.0 mm	13.0 mm	12.0 mm
Offset -L1-	4.6 mm	6.15 mm	9.0 mm	4.75 mm
Offset -L2-	8.16 mm	9.16 mm	12.5 mm	7.2 mm
Installation position of valve (not actuated) -C-	6.1 - 7.1 mm	6.1 - 7.1 mm	8.3 - 9.3 mm	8.3 - 9.3 mm

Protected by copyright. Copying for private or commercial purposes, in part or in whole, is not permitted unless authorised by AUDI AG. AUDI AG does not guarantee or accept any liability with respect to the correctness of information in this document. Copyright by AUDI AG.

3.6 Switches and senders in refrigerant circuit and related connections

Note

Refer to vehicle-specific refrigerant circuit for switching pressures, removing and installing switches and location/design of switches ⇒ Heating, air conditioning; Rep. gr. 87 ; Refrigerant circuit (vehicle-specific Workshop Manual).

⇒ “3.6.1 High-pressure switch for air conditioning system F23 ”, page 48

⇒ “3.6.2 High-pressure switch for magnetic clutch F118 ”, page 48

⇒ “3.6.3 Low-pressure switch for air conditioning system F73 ”, page 49

⇒ “3.6.5 Air conditioning system pressure switch F129 ”, page 49

⇒ “3.6.6 High-pressure sender G65 and pressure sender for refrigerant circuit G805 ”, page 50

⇒ “3.6.7 Refrigerant pressure and temperature sender”, page 51

⇒ “3.6.4 Connections with valve for refrigerant circuit switches”, page 49

⇒ “3.6.8 Air conditioner compressor regulating valve N280 ”, page 54

⇒ “3.6.9 Air conditioner compressor speed sender G111 ”, page 54

⇒ “3.6.10 Refrigerant temperature sender G454 ”, page 55

3.6.1 High-pressure switch for air conditioning system - F23-

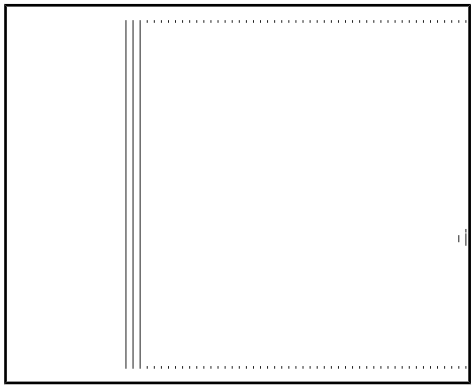

Function:

Switches the radiator fan up to the next speed setting in the event of a pressure increase in the refrigerant circuit (approx. 16 bar).

3.6.2 High-pressure switch for magnetic clutch - F118-

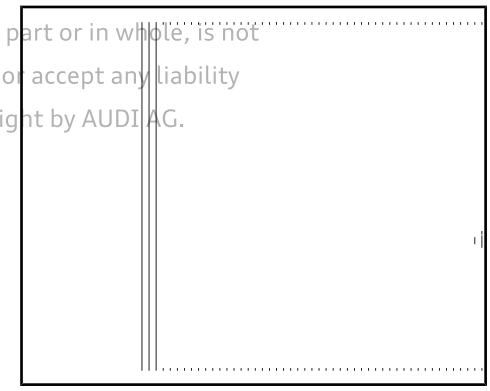

Protected by copyright. Copying for private or commercial purposes, in part or in whole, is not permitted unless authorised by AUDI AG. AUDI AG does not guarantee or accept any liability with respect to the correctness of information in this document. Copyright by AUDI AG.

Function:

Switches off the air conditioner compressor in the event of excess pressure in the refrigerant circuit (approx. 32 bar).

3.6.3 Low-pressure switch for air conditioning system - F73-

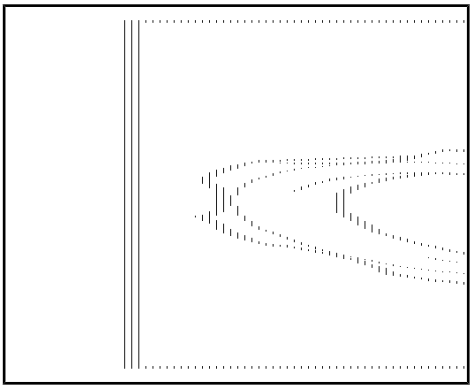

Function:

Switches off the air conditioner compressor in the event of a pressure drop in the refrigerant circuit (approx. 2 bar).

3.6.4 Connections with valve for refrigerant circuit switches

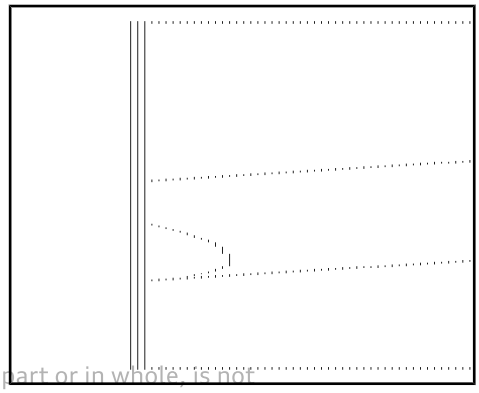

- Different threads for switches on high- and low pressure sides.
- Only valves and O-rings resistant to R134a refrigerant and the related refrigerant oils are to be used.

A - Connection (soldered in)

B - O-ring

C - Valve (with O-ring)

Note

When removing and installing the valve core -C- with refrigerant circuit discharged, use e.g. adapter from socket - T10364- (tightening torque *⇒ page 42* *).*

Protected by copyright. Copying for private or commercial purposes, in part or in whole, is not permitted unless authorised by AUDI AG. AUDI AG does not guarantee or accept any liability with respect to the correctness of information in this document. Copyright by AUDI AG.

3.6.5 Air conditioning system pressure switch - F129-

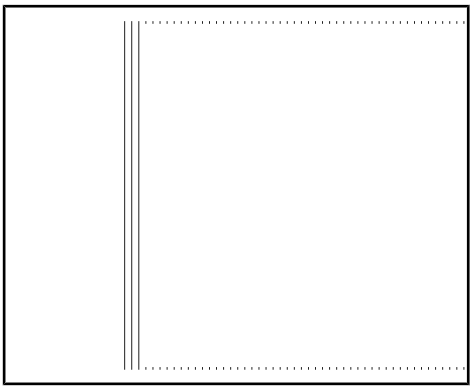

This pressure switch has 3 functions:

1. Switches the radiator fan up to the next speed setting in the event of a pressure increase (approx. 16 bar) in the refrigerant circuit.

2. Switches off the air conditioner in the event of excessive pressure (approx. 32 bar) caused, for example, by inadequate engine cooling.

3. Switches off the air conditioner in the event of insufficient pressure (approx. 2 bar) caused, for example, by a loss of refrigerant.

Note

The air conditioning system pressure switch - F129- replaces the high-pressure switch for air conditioning system - F23- , the low-pressure switch for air conditioning system - F73- and the high-pressure switch for magnetic clutch - F118- .

3.6.6 High-pressure sender - G65- and pressure sender for refrigerant circuit - G805-

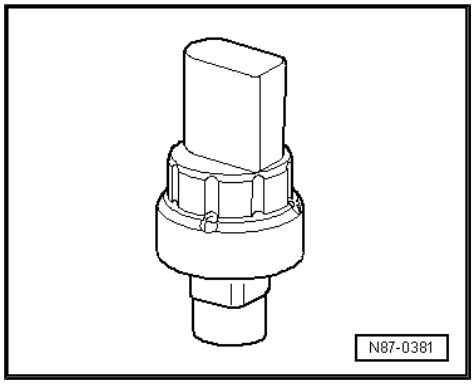

- -G65- is installed instead of the air conditioning system pressure switch - F129- or the refrigerant pressure and temperature sender - G395- .
- On some vehicles from a certain version and production date onwards, -G805- replaces -G65- .
- When voltage is applied, one version of -G65- generates a square-wave signal and the other generates a data telegram. This signal changes with the pressure in the system. The other version and -G805- exchange information with the corresponding control unit via the data bus (e.g. via the “LIN bus”) when voltage is applied ⇒ Heating, air conditioning; Rep. gr. 87 ; Refrigerant circuit (vehicle-specific Workshop Manual).
- -G65- is installed e.g. in the Audi A3 2005> and the Audi Q3. It transmits its measured values as square-wave signals to the corresponding control unit (e.g. to the air conditioning system control unit - J301- or the Climatronic control unit - J255-). -G65- is installed e.g. in the Audi Q7 2016>. It transmits its measured values via a “LIN bus” ⇒ Vehicle diagnostic tester (“Self-diagnosis” or “Guided Fault Finding” function for air conditioner) and ⇒ Current flow diagrams, Electrical fault finding and Fitting locations.
- -G805- is installed e.g. in the Audi A3 2013>. It exchanges information with the corresponding control unit over a data bus (e.g. in the Audi A3 with the air conditioning system control unit - J301- or the Climatronic control unit - J255-). ⇒ Current flow diagrams, Electrical fault finding and Fitting locations
- There are different versions of the refrigerant pressure and temperature sender - G395- , the pressure sender for refrigerant circuit - G805- and the high-pressure sender - G65- ; depending on the version, they can currently only be distinguished by the part number. Therefore pay attention to the correct assignment when renewing the components (part number ⇒ Electronic parts catalogue). Reason: These two senders emit different signals, and the relevant control units can only evaluate the signal to which they have been matched ⇒ Vehicle diagnostic tester (“Self-diagnosis” or “Guided Fault Finding” function for air conditioner), and ⇒ Heating, air conditioning; Rep. gr. 87 ; Refrigerant circuit (vehicle-specific Workshop Manual).
- -G65- and -G805- transmit only the measured value for the pressure in the refrigerant circuit to the connected control unit. -G395- transmits the measured value for the pressure in the refrigerant circuit and the measured temperature to the connected control unit. Even if only the pressure signal is evaluated for a vehicle, a vehicle in which -G65- or -G805- is intended to be installed must not be fitted with a -G395- ⇒ Electronic parts catalogue .
- The control units downstream (radiator fan control unit, engine control unit, operating and display unit for front air conditioning system - E87- or Climatronic control unit - J255- etc.) use this signal to calculate the pressure in the refrigerant circuit; the control units then actuate the radiator fans, motor and air conditioning system magnetic clutch - N25- accordingly or modify the activation of the air conditioner compressor regulating valve - N280- ⇒ Vehicle diagnostic tester (“Self-diagnosis” or “Guided Fault Finding” function) and ⇒ Heating, air conditioning; Rep. gr. 87 ; Refrigerant circuit (vehicle-specific Workshop Manual).

Protected by copyright. Copying for private or commercial purposes, in part or in whole, is not permitted unless authorised by AUDI AG. AUDI AG does not guarantee or accept any liability with respect to the accuracy of the contents of this document. Copyright by AUDI AG.

3.6.7 Refrigerant pressure and temperature sender

There are different versions of these senders with different functions and designations. For the exact designation, assignment and information on the corresponding function, refer to ⇒ Heating, air conditioning; Rep. gr. 87 ; Refrigerant circuit (vehicle-specific Workshop Manual).

Protected by copyright. Copying for private or commercial purposes, in part or in whole, is not permitted unless authorised by AUDI AG. AUDI AG does not guarantee or accept any liability with respect to the correctness of information. Copyright by AUDI AG.

WARNING

Risk of injury (frostbite).

Refrigerant may escape if the refrigerant circuit has not been discharged.

There are different versions of these senders (sender for a connection on the refrigerant circuit with or without valve) ⇒ Heating, air conditioning; Rep. gr. 87 ; Refrigerant circuit (vehicle-specific Workshop Manual).

- *Before loosening the bolt securing the sender, check the version of the sender ⇒ Heating, air conditioning; Rep. gr. 87 ; Refrigerant circuit (vehicle-specific Workshop Manual).*
- *With a sender for connecting to a refrigerant circuit without valve. Extract the refrigerant before undoing the threaded joint. Renewed evaporation may create pressure in the refrigerant circuit if the sender is not removed within 10 minutes following extraction. Extract refrigerant again.*

Senders for a connection with valve at refrigerant circuit

Note

- *There are different versions of these senders with different functions and designations. For example, the refrigerant pressure and temperature sender - G395- (as illustrated below) is installed in the Audi A4, Audi Q5 and Audi Q5 hybrid ⇒ Heating, air conditioning; Rep. gr. 87 ; Refrigerant circuit (vehicle-specific Workshop Manual).*
- *Different designations, depending on the function and vehicle ⇒ Heating, air conditioning; Rep. gr. 87 ; Refrigerant circuit (vehicle-specific Workshop Manual).*

Possible designations for these senders

- Refrigerant pressure and temperature sender - G395- (e.g. on the Audi Q5 hybrid)
- High-pressure sender - G65- (e.g. on the Audi A4)
- Pressure sender for refrigerant circuit - G805- (e.g. on the Audi A3 e-tron)

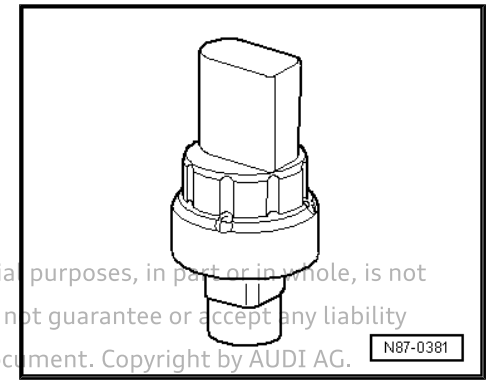

Protected by copyright. Copying for private or commercial purposes, in part or in whole, is not permitted unless authorised by AUDI AG. AUDI AG does not guarantee or accept any liability with respect to the correctness of information in this document. Copyright by AUDI AG.

Note

The pressure sender for refrigerant circuit - G805- is installed e.g. instead of the high-pressure sender - G65- or the refrigerant pressure and temperature sender - G395- ⇒ Heating, air conditioning; Rep. gr. 87 ; Refrigerant circuit (vehicle-specific Workshop Manual).

- There are different versions of the refrigerant pressure and temperature sender - G395- , the pressure sender for refrigerant circuit - G805- and the high-pressure sender - G65- ; depending on the version, they can currently only be distinguished by the part number. Therefore pay attention to the correct assignment when renewing the components (part number ⇒ Electronic parts catalogue). Reason: These two senders emit different signals, and the relevant control units can only evaluate the signal to which they have been matched ⇒ Vehicle diagnostic tester (“Self-diagnosis” or “Guided Fault Finding” function for air conditioner), and ⇒ Heating, air conditioning; Rep. gr. 87 ; Refrigerant circuit (vehicle-specific Workshop Manual).
- When voltage is applied, the refrigerant pressure and temperature sender - G395- (and the pressure sender for refrigerant circuit - G805-) exchange information with the corresponding control unit via the data bus (e.g. “LIN bus”). The corresponding control unit uses this information to calculate the pressure (and temperature) in the refrigerant circuit; any faults detected are signalled to the control unit.
- -G395- transmits the measured value for the pressure in the refrigerant circuit and the measured temperature to the connected control unit. -G805- transmits only the measured value for the pressure in the refrigerant circuit to the connected control unit. Even if only the pressure signal is evaluated on most vehicles, a vehicle in which a -G395- is intended to be installed must not be fitted with a -G805- ⇒ Electronic parts catalogue .
- The temperature measured by the refrigerant pressure and temperature sender - G395- differs from the actual temperature of the refrigerant in the refrigerant circuit due to the design of -G395- and the fitting location. Therefore it is currently not evaluated by all control units and used for air conditioner control ⇒ Heating, air conditioning; Rep. gr. 87 ; Refrigerant circuit (vehicle-specific Workshop Manual).
- This information is used, for example, by the operating and display unit (Climatronic control unit - J255-) or the onboard supply control unit - J519- to calculate the pressure in the refrigerant circuit and to actuate the control units downstream (radiator fan control unit, engine control unit etc.) by way of the data bus. These control units then activate e.g. the air conditioning system magnetic clutch - N25- , the radiator fans and the motor accordingly ⇒ Vehicle diagnostic tester , “Self-diagnosis” or “Guided Fault Finding” function and ⇒ Heating, air conditioning; Rep. gr. 87 ; Refrigerant circuit (vehicle-specific Workshop Manual).

Senders for a connection without valve at refrigerant circuit

Note

- *There are different versions of these senders with different functions and designations. For example, the refrigerant pressure and temperature sender - G395- (as illustrated below) is installed in the Audi Q7 e-tron ⇒ Heating, air conditioning; Rep. gr. 87 ; Refrigerant circuit (vehicle-specific Workshop Manual).*
- *Different designations, depending on the function and vehicle ⇒ Heating, air conditioning; Rep. gr. 87 ; Refrigerant circuit (vehicle-specific Workshop Manual).*

Protected by copyright. Copying for private or commercial purposes, in part or in whole, is not permitted unless authorised by AUDI AG. AUDI AG does not guarantee or accept any liability with respect to the correctness of information in this document. Copyright by AUDI AG.

Possible designations for these senders

- Refrigerant pressure and temperature sender - G395- (e.g. on the Audi Q7 e-tron)
- Refrigerant pressure and temperature sender 2 - G826- (e.g. on the Audi Q7 e-tron)
- Refrigerant pressure and temperature sender 3 - G827- (e.g. on the Audi Q7 e-tron)

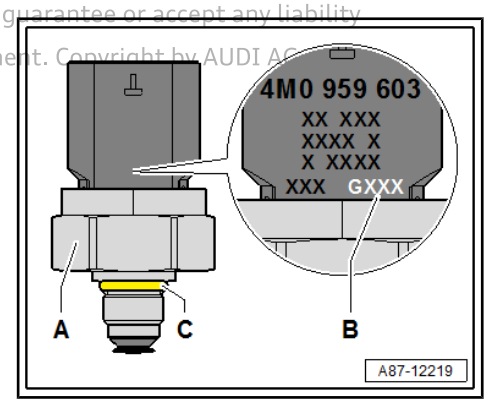

There are different versions of these senders -A-; depending on the version, they can currently only be distinguished by the part number or by the printed designation -B- if the part number is the same. Therefore pay attention to the correct assignment when renewing the components; for part number and designation, refer to ⇒ Electronic parts catalogue and ⇒ Heating, air conditioning; Rep. gr. 87 ; Refrigerant circuit (vehicle-specific Workshop Manual).

When voltage is applied, these senders exchange information with the corresponding control unit via the data bus (e.g. via the “LIN bus”). The corresponding control unit uses this information to calculate the pressure (and temperature) in the refrigerant circuit; any faults detected are signalled to the control unit ⇒ Vehicle diagnostic tester (“Guided Fault Finding”).

The corresponding control unit uses this information to calculate the pressure in the refrigerant circuit and activates downstream control units or components (control unit for radiator fan, pumps, valves etc.) via the data bus according to requirements ⇒ Vehicle diagnostic tester (“Guided Fault Finding”) and ⇒ Heating, air conditioning; Rep. gr. 87 ; Refrigerant circuit (vehicle-specific Workshop Manual).

3.6.8 Air conditioner compressor regulating valve - N280-

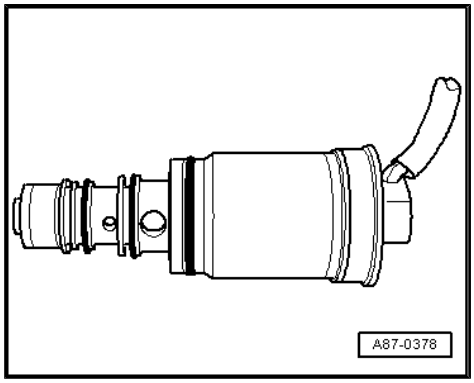

The regulating valve is installed in the air conditioner compressor. It is activated by the operating and display unit for front air conditioning system - E87- , the air conditioning system control unit - J301- or the Climatronic control unit - J255- (possibly via the data bus and an additional control unit, depending on the vehicle) ⇒ Heating, air conditioning; Rep. gr. 87 ; Refrigerant circuit (vehicle-specific Workshop Manual). The regulating valve influences the pressure on the low-pressure side and thus regulates the temperature in the evaporator.

Note

The air conditioner compressor regulating valve - N280- is part of the air conditioner compressor and cannot be renewed separately on all air conditioner compressors ⇒ Electronic parts catalogue and
⇒ "9.1.8 Removing/installing and renewing air conditioner compressor regulating valve N280 ", page 269 .

3.6.9 Air conditioner compressor speed sender - G111-

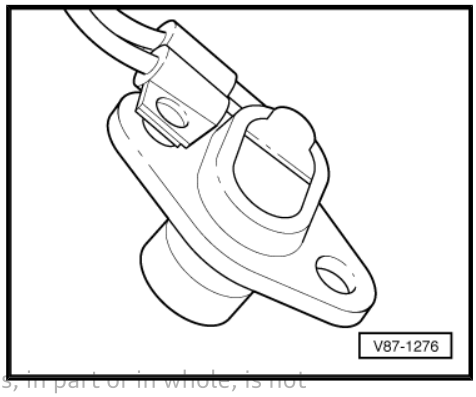

Inductive sender

The sender pulses (4 per compressor revolution) and the engine speed enable the operating and display unit for front air conditioning system - E87- or the Climatronic control unit - J255- to calculate the belt slip.

If the belt slip exceeds a specified value, the air conditioner compressor is switched off by the control unit via the magnetic clutch.

Protected by copyright. Copying for private or commercial purposes, in part or in whole, is not permitted unless authorised by AUDI AG. AUDI AG does not guarantee or accept any liability with respect to the correctness of information in this document. Copyright by AUDI AG.

Note

- *This component is installed in Audi vehicles with compressor drive via poly V-belt and Zexel compressor ⇒ Heating, air conditioning; Rep. gr. 87 ; Refrigerant circuit (vehicle-specific Workshop Manual).*
- *The logo of the compressor manufacturer "Zexel" attached to the air conditioner compressor was modified from "Zexel" to "Valeo" from year of production 2006 onwards (change in manufacturer's name).*

3.6.10 Refrigerant temperature sender - G454-

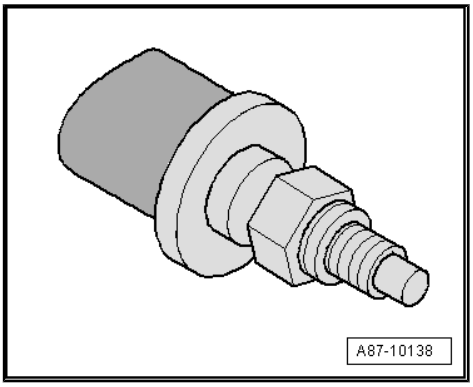

The refrigerant temperature sender (with a temperature-sensitive resistor) is installed, for example, in the high-pressure line near the air conditioner compressor (only for certain vehicles manufactured within a specific period, e.g. on Audi Q7 2007>).

In the refrigerant circuit, there is a direct relationship between temperature and pressure. If there is insufficient refrigerant in the circuit, the temperature in the refrigerant circuit during air conditioner operation will increase more sharply than envisaged for this pressure.

Note

- *Installed e.g. in Audi Q7 with certain engines ⇒ Heating, air conditioning; Rep. gr. 87 ; Refrigerant circuit (vehicle-specific Workshop Manual) and ⇒ Current flow diagrams, Electrical fault finding and Fitting locations.*
- *The operating and display unit (Climatronic control unit - J255-) evaluates the pressure and the temperature in the refrigerant circuit and switches off the air conditioner compressor if the temperature increases above the value stored for this pressure ⇒ Heating, air conditioning; Rep. gr. 87 ; Refrigerant circuit (vehicle-specific Workshop Manual) and ⇒ Vehicle diagnostic tester ("Self-diagnosis" or "Guided Fault Finding" function for air conditioner).*

3.7 Electrical components not installed in refrigerant circuit

⇒ "3.7.1 Radiator fan control unit J293 ", page 55

3.7.1 Radiator fan control unit - J293-

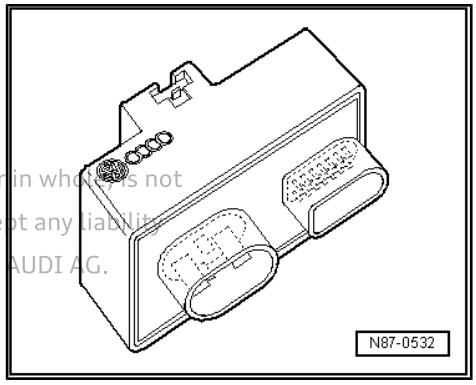

This control unit switches the magnetic clutch and thus the air conditioner compressor on and off. It switches the radiator fans and calculates the pressure in the refrigerant circuit on vehicles with a high-pressure sender - G65- . Refer to ⇒ Current flow diagrams, Electrical fault finding and Fitting locations and ⇒ Heating, air conditioning; Rep. gr. 87 ; Refrigerant circuit (vehicle-specific Workshop Manual).

Protected by copyright. Copying for private or commercial purposes, in part or in whole, is not permitted unless authorised by AUDI AG. AUDI AG does not guarantee or accept any liability with respect to the correctness of information in this document. Copyright by AUDI AG.

3.8 Pressures and temperatures in refrigerant circuit

Caution

- ***When working on the refrigerant circuit, observe generally valid safety precautions and pressure vessel regulations.***

The pressures and temperatures in the refrigerant circuit depend on the instantaneous operating statuses (e.g. engine speed, radiator fan speed 1, 2, or 3, engine temperature, air conditioner compressor on or off) as well as environmental influences (e.g. ambient temperature, humidity, required cooling output).

On vehicles with air conditioner compressor regulating valve -N280- the pressure on the low-pressure side is altered by actuating -N280- .

On vehicles with an electrical air conditioner compressor - V470- , the pressure in the refrigerant circuit (high-pressure and low-pressure sides) is regulated via the speed of the air conditioner compressor.

On vehicles with an electrical air conditioner compressor - V470- where the air conditioner is used not only to cool the passenger compartment but also to cool high-voltage system components and as a heat pump to heat the passenger compartment, different conditions, pressures and temperatures apply in the refrigerant circuit (e.g. on the Audi Q7 e-tron) ⇒ Vehicle diagnostic tester in "Guided Fault Finding" mode and ⇒ Heating, air conditioning; Rep. gr. 87 ; Refrigerant circuit (vehicle-specific Workshop Manual).

Protected by copyright. Copying for private or commercial purposes, in part or in whole, is not permitted unless authorised by AUDI AG. AUDI AG does not guarantee or accept any liability with respect to the correctness of information in this document. Copyright by AUDI AG.

For this reason, the values given in the following table are for reference only. They are attained at an engine speed of 1500 to 2000 rpm and an ambient temperature of 20 °C after about 20 minutes.

Refer to the vehicle-specific refrigerant circuit for the locations of the pressure gauge connections ⇒ Heating, air conditioning; Rep. gr. 87 ; Refrigerant circuit (vehicle-specific Workshop Manual).

At 20 °C with the engine not running, the pressure in the refrigerant circuit is 4.7 bar ⇒ page 7 (vapour pressure table).

Note

Pressure can be measured in various units: 1 MPa (megapascal) is equivalent to 10 bar gauge pressure, or 145 psi; 1 bar absolute pressure is the same as 0 bar gauge pressure, which is roughly equivalent to atmospheric pressure.

⇒ "3.8.1 Refrigerant circuit with expansion valve", page 56

⇒ "3.8.2 Refrigerant circuit with restrictor and reservoir", page 58

3.8.1 Refrigerant circuit with expansion valve

Note

Only applies with restrictions to vehicles with an electrical air conditioner compressor - V470- .

HP – High-pressure side of refrigerant circuit (HD in illustration)

LP – Low-pressure side of refrigerant circuit (ND in illustration)

Component	State of refrigerant	Pressure (bar)	Temperature in degrees centigrade
-1- Evaporator, from inlet to outlet	Vapour	approx. 1.2 bar[1)]1	approx. -7 °C [2)]2
-2- Expansion valve	Liquid, expanded to vapour	approx. 14 bar	approx. +55 °C (high-pressure side), reduced to -7 °C (low-pressure side)
-3- High-pressure switch / high-pressure sender	Liquid	approx. 14 bar	approx. +55 °C

Component	State of refrigerant	Pressure (bar)	Temperature in degrees centigrade
-4- Service connection (high-pressure side) and -5- Receiver	Liquid	approx. 14 bar	approx. +55 °C
-6- Condenser	From gas (at inlet) via vapour to liquid (at outlet)	approx. 14 bar	From approx. +65 °C (at inlet) to approx. +55 °C (at outlet)
-7- High-pressure safety valve and -8- Air conditioner compressor (HP side)	Gas	approx. 14 bar	approx. +65 °C
-9- Air conditioner compressor (low-pressure side)	Gas	approx. 1.2 bar[1)]1	approx. -1 °C [2)]2
-10- Damping chamber (not fitted on all vehicles) and -11- Service connection (low-pressure side)	Gas	approx. 1.2 bar[1)]1	approx. -1 °C [2)]2

Protected by copyright. Copying for private or commercial purposes, in part or in whole, is not permitted unless authorised by AUDI AG. AUDI AG does not guarantee or accept any liability with respect to the correctness of information in this document. Copyright by AUDI AG.

1) 1 - The pressure in a refrigerant circuit with a regulating air conditioner compressor is maintained at approx. 2 bar absolute (corresponding to approx. 1 bar gauge) despite varying heat transfer and fluctuating engine speeds. This applies however only within the rated range of the air conditioner compressor; if the rated range of the air conditioner compressor is exceeded, the pressure will increase ⇒ page 183 .

2) 2 - The temperature in a refrigerant circuit with a regulating air conditioner compressor is maintained within the regulating range of the air conditioner compressor despite varying heat transfer and fluctuating engine speeds. This however only applies within the output range of the air conditioner compressor. If the output limits of the air conditioner compressor are exceeded, the temperature will increase ⇒ page 183 .

Note

- *Non self-regulating air conditioner compressors are switched off by the relevant control unit via the air conditioner compressor regulating valve - N280- at evaporator temperatures below 0 °C.*
- *On vehicles with air conditioner compressor regulating valve - N280- the pressure on the low pressure side is altered by actuating the valve.*
- *On vehicles with two evaporators and two expansion valves, the temperature and the pressure in the refrigerant circuit correspond to those on vehicles with only one evaporator and one expansion valve (parallel connection).*
- *Depending on the version of the refrigerant circuit, a component with internal heat exchanger may be fitted (e.g. a refrigerant line with internal heat exchanger is installed in the Audi A4 2008 > and in the Audi A5 Coupé 2008 >). In the internal heat exchanger, the hot refrigerant (liquid) flowing through the high-pressure side gives off energy to the cold refrigerant (gaseous or vaporous) flowing through the low-pressure side, thus enhancing the efficiency of the air conditioner* *⇒ page 35* .

Arrows show direction of refrigerant flow.

HP – High-pressure side of refrigerant circuit (HD in illustration)

LP – Low-pressure side of refrigerant circuit (ND in illustration)

1 - Evaporator

2 - Expansion valve

3 - High-pressure switch / high-pressure sender

- ❑ Different versions depending on vehicle

4 - Service connection (high-pressure side)

5 - Receiver

- ❑ Different versions depending on vehicle

6 - Condenser

7 - High-pressure safety valve

8 - Air conditioner compressor (high-pressure side)

9 - Air conditioner compressor (low-pressure side)

10 - Damping chamber

- ❑ Not fitted on all vehicles

11 - Service connection (low-pressure side)

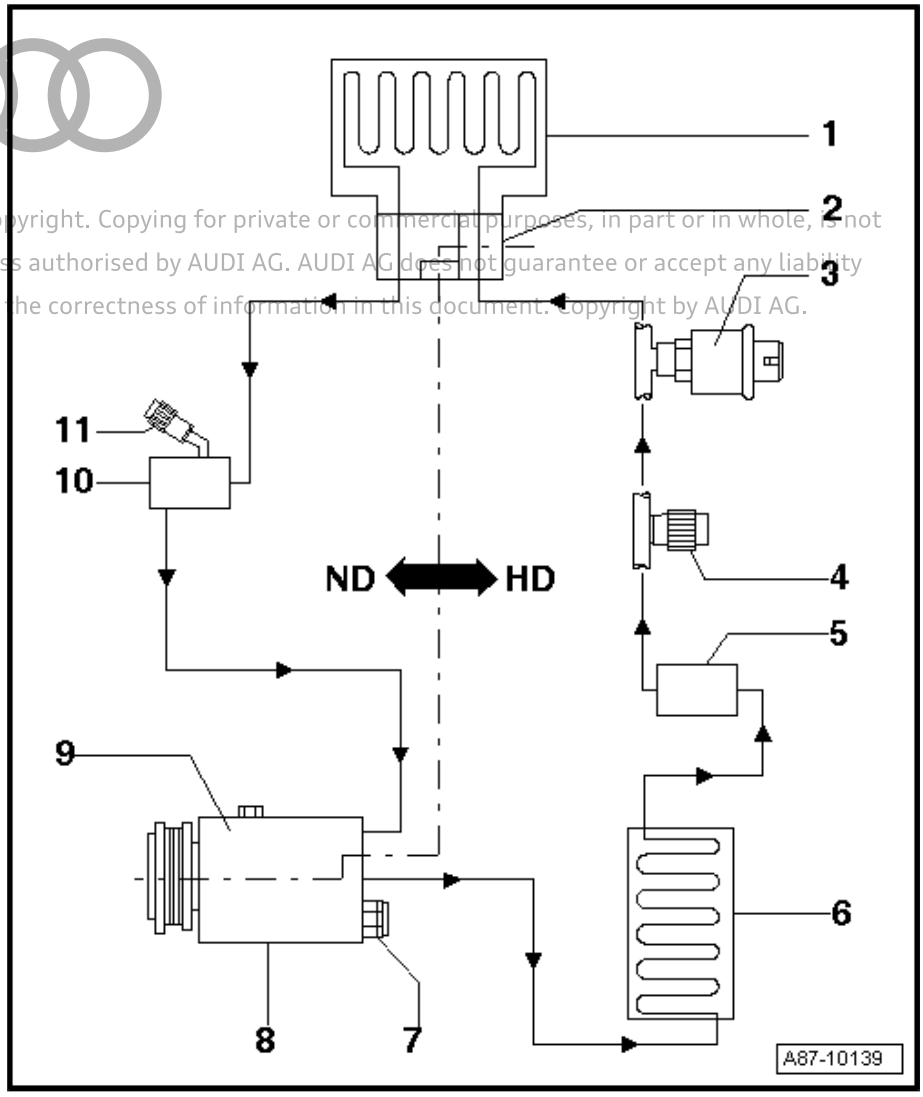

Protected by copyright. Copying for private or commercial purposes, in part or in whole, is not permitted unless authorised by AUDI AG. AUDI AG does not guarantee or accept any liability with respect to the correctness of information in this document. Copyright by AUDI AG.

3.8.2 Refrigerant circuit with restrictor and reservoir

HP – High-pressure side of refrigerant circuit (HD in illustration)

LP – Low-pressure side of refrigerant circuit (ND in illustration)

Component	State of refrigerant	Pressure (bar)	Temperature in degrees centigrade
-1- Air conditioner compressor (high-pressure side)	Gas	Up to 20 bar	Up to +70 °C
-2- Condenser	From gas to vapour to liquid	Up to 20 bar	Up to +70 °C
-3- Restrictor	From liquid to vapour	HP side up to 20 bar, LP side greater than 1.0 bar	HP end up to +60 °C LP end warmer than -4 °C
-4- Evaporator	From vapour to gas	Greater than 1.0 bar	Warmer than -4 °C
-5- Reservoir	Gas		
-6- Air conditioner compressor (low-pressure side)	Gas		

The pressures on the low-pressure side are maintained at approx.
2 bar absolute (corresponding to approx. 1 bar gauge) by the

"regulating" air conditioner compressor even at varying engine speeds. This applies however only within the rated range of the air conditioner compressor ; if the rated range of the air conditioner compressor is exceeded, the pressure will increase ⇒ page 183 .

Note

On vehicles with air conditioner compressor regulating valve - N280- the pressure on the low pressure side is altered by actuating the valve.

Arrows show direction of refrigerant flow.

HP – High-pressure side of refrigerant circuit (HD in illustration)

LP – Low-pressure side of refrigerant circuit (ND in illustration)

1 - Air conditioner compressor (high-pressure side)

2 - Condenser

3 - Restrictor

4 - Evaporator

5 - Reservoir

6 - Air conditioner compressor (low-pressure side)

Protected by copyright. Copying for private or commercial purposes, in part or in whole, is not permitted unless authorised by AUDI AG. AUDI AG does not guarantee or accept any liability with respect to the correctness of information in this document. Copyright by AUDI AG.

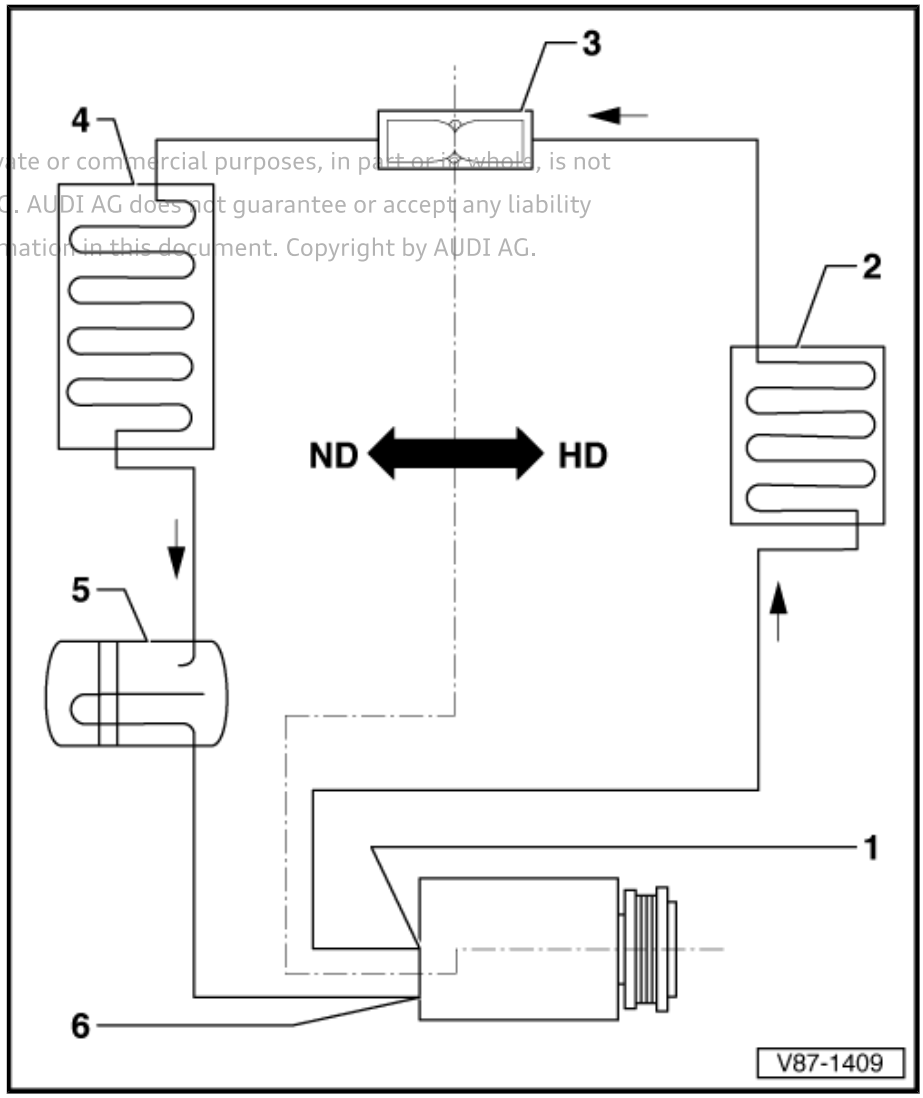

3.9 Tests and measurements performed with pressure gauge

Pressure gauge scales

1 - Temperature scale for refrigerant R134a CF3– CH2F or CH2F– CF3

2 - Pressure scale

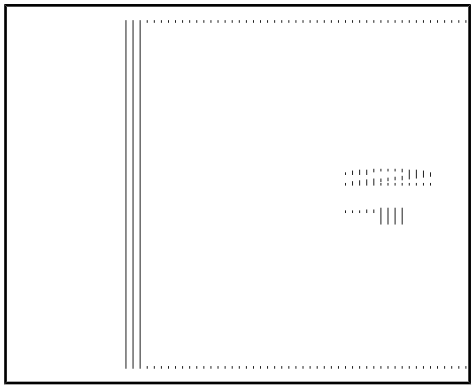

Note

Pressure can be measured in various units: 1 MPa (megapascal) is equivalent to 10 bar gauge pressure, or 145 psi; 1 bar absolute pressure is the same as 0 bar gauge pressure, which is roughly equivalent to atmospheric pressure.

Pressure gauges may have one or more temperature scales in addition to the pressure scale. The scale values for R134a are assigned according to the vapour pressure table. As different refrigerants develop different vapour pressures at the same temperature, there is a temperature scale for each refrigerant.

⇒ “3.9.1 Tests and measurements which can be performed using pressure gauges”, page 60

Protected by copyright. Copying for private or commercial purposes, in part or in whole, is not permitted. Distribution via electronic media or internet only with explicit consent. We do not guarantee or accept any liability with respect to the correctness of information contained in this document. Copyright by AUDI AG.

3.9.1 Tests and measurements which can be performed using pressure gauges

Refrigerant circuit pressure and temperature measurements

- The high-pressure gauge measures the pressure and temperature propagated evenly from the air conditioner compressor outlet via the condenser to the constriction (restrictor or expansion valve) when the air conditioning system is switched on.
- The low-pressure gauge measures the pressure and temperature propagated evenly from the constriction (restrictor or expansion valve) via the evaporator to the inlet of the air conditioner compressor when the air conditioning system is switched on.

Note

The relationship between pressure and temperature indicated on the pressure gauges only applies in a refrigerant circuit containing liquid or vapour, but not gas. In gaseous form, the temperature is approx. 10 °C to 30 °C higher than the pressure gauge reading.

Detection of refrigerant in a closed vessel

In a closed vessel or in the refrigerant circuit, refrigerant R134a is present if the temperature indicated on the pressure gauge corresponds to the temperature of the refrigerant (standing liquid assumes ambient temperature).

A closed vessel or a deactivated refrigerant circuit is empty if the temperature indicated on the pressure gauge is below the temperature of the refrigerant.

Note

The relationship between pressure and temperature no longer applies if no liquid is present and f the pressure is only built up by gas.

Protected by copyright. Copying for private or commercial purposes, in part or in whole, is not permitted unless authorised by AUDI AG. AUDI AG does not guarantee or accept any liability with respect to the correctness of information in this document. Copyright by AUDI AG.

3.10 Air conditioner service and recycling units

Air conditioner service units for the extraction, cleaning and transfer of refrigerant for motor vehicle air conditioning systems are currently available from various manufacturers.

Only certain air conditioner service stations (with appropriate additional equipment and various adapters if applicable) can be used for cleaning the refrigerant circuit (flushing it with refrigerant R134a) ⇒ page 88 .

⇒ "3.10.1 Classification of extraction systems", page 61

⇒ "3.10.2 Charging systems that do not require a permit", page 62

3.10.1 Classification of extraction systems

WARNING

When working on the refrigerant circuit and handling refrigerant, observe the generally valid safety precautions and pressure vessel regulations.

Note

- *The air conditioner service and recycling units used in motor vehicle workshops are extraction and charging systems that do not require a permit (Group "3") but which should only be operated by qualified personnel. Instructions for the operation and service of the devices may be found in the respective manufacturer's documentation.*
- *Extraction and charging systems of groups "1" and "2" are not used in motor vehicle workshops.*

Group "3" extraction and charging systems:

Mobile extraction and charging systems for filling compressed-gas vessels permanently connected to the system

The refrigerant or refrigerant/oil mixture is transferred to compressed-gas vessels which are permanently connected to the mobile systems. In accordance with § 3 Para. 5 No. 3 of the German pressure vessel regulations (different regulations may apply in other countries), compressed-gas vessels are classified as pressure vessels in this case.

The charging systems:

– Do not require a permit.
– Do not require expert testing, as the gas is transferred to compressed-gas vessels which are classed as being pressure vessels (On the other hand, a permit is required for the system to fill a pressurised gas container for transfer to another party from this pressurised container, and the permit requires an examination.)

3.10.2 Charging systems that do not require a permit

This document is copyright. Copying for private or commercial purposes, in part or in whole, is not permitted unless authorised by AUDI AG. AUDI AG does not guarantee or accept any liability with respect to the accuracy of information in this document. Copyright by AUDI AG.

WARNING

When working on the refrigerant circuit and handling refrigerant, observe the generally valid safety precautions and pressure vessel regulations.

Charging systems not requiring a permit are ones used for transferring compressed gases to mobile compressed-gas vessels for internal use only.

Note:

Some air conditioner service units are charging systems not requiring a permit. When working with such equipment, the refrigerant is not transferred to mobile compressed-gas vessels, but rather into a permanently installed charging cylinder with visible level gauge and float switch.

Recommendation:

It is advisable to use a portable cylinder with visible level gauge and high-pressure safety valve for surplus refrigerant for internal use.

Various technical regulations (e.g. TRGS 400, TRGS 402, TRGS 407, TRGS 510, TRGS 725/TRBS 3145) must be noted when filling compressed gases into other compressed-gas vessels.

3.11 Repair notes for refrigerant circuit

WARNING

- ***When working on the refrigerant circuit, observe generally valid safety precautions and pressure vessel regulations.***

Special tools and accessories:

The performance of proper workmanlike repairs on an air conditioning system

- Requires the use of special tools and materials as listed on ⇒ page 361 .
- Requires compliance with the basic instructions for use of leak detectors ⇒ page 161 .
- Requires expert knowledge.

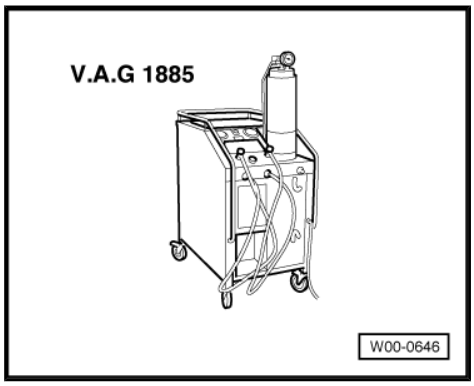

Note

Releasing refrigerant into the environment is prohibited *⇒ page 63* *(laws and regulations).*

4 Laws and regulations

Note

The laws and regulations listed below are applicable in Germany. Different or additional laws and regulations may apply in other countries.

⇒ "4.1 Laws and regulations", page 63

4.1 Laws and regulations

By now the effects of climate change can be seen across the globe. Climate protection is thus one of the most important problems to be tackled. Solving this problem does however represent an enormous challenge for everybody.

Protected by copyright. Copying for private or commercial purposes, in part or in whole, is not permitted unless authorised by AUDI AG. AUDI AG does not guarantee or accept any liability with respect to the correctness of information in this document. Copyright by AUDI AG.

One aspect of the Kyoto protocol is the definition of the worldwide climate protection targets. This protocol contains reduction targets both for carbon dioxide and fluorinated greenhouse gases, e.g. for refrigerant R134a, due to their high global warming potential.

A number of laws of relevance to the automotive industry have been passed at European level, for example. In Germany for example, the climate protection regulation on chemicals additionally came into force on 1st August 2008 to set down the European legislation more precisely.

- Regulation (EC) no. 1005/2009
- Regulation (EC) no. 2037/2000
- Regulation (EC) no. 842/2006 (from 01.01.2015 onwards: regulation (EU) no. 517/2014)
- Regulation (EC) no. 706/2007
- Regulation (EC) no. 307/2008
- Directive 2006/40/EC
- Climate protection regulation on chemicals, recycling and refuse law (for Germany).

Maintenance and repair work on air conditioner refrigerant circuits

Anyone performing maintenance and repair work on motor vehicle air conditioning systems must have received the relevant instruction or attended a training course and be able to furnish certification of the appropriate qualifications. Other or additional regulations may apply in countries outside the European Community.

However, the following is generally applicable:

Operation, maintenance, shut-down, take-back obligation

- With regard to the operation, repair and shut-down of products containing refrigerants (which do not comply with the state of the art), it is prohibited to allow the substances contained in these to escape into the atmosphere.
- A record should be kept of the quantities used during operation and for maintenance work ⇒ Audi-ServiceNet, HSO Environmental Protection to be able to submit certification of use to the relevant authorities on request. According to a regulation of the European parliament from 2005, it is no longer necessary to keep a record sheet in the EC. Other regulations may apply in countries not belonging to the EC.

- Distributors of the substances and compounds specified in the regulations listed above are obliged to take back such substances and compounds after use or to ensure that these are taken back by a third party specified by the distributor.
- The maintenance and shutdown of items containing refrigerants listed in the regulations mentioned as well as acceptance of return of the substances and preparations listed in these regulations may only be undertaken by persons with the necessary expert knowledge and technical equipment.

Criminal offences and infringements of the law

- An infringement in terms of the regulations and laws mentioned above is constituted by any wilful or negligent action during the operation, maintenance or shutdown of items containing the refrigerants mentioned which allows substances contained in these to escape into the atmosphere contrary to the state of the art or by the wilful or negligent contravention of the applicable regulations and laws mentioned above.

Protected by copyright. Copying for private or commercial purposes, in part or in whole, is not permitted unless authorised by AUDI AG. AUDI AG does not guarantee or accept any liability with respect to the correctness of information in this document. Copyright by AUDI AG.

Various technical regulations (e.g. TRGS 400, TRGS 402, TRGS 407, TRGS 510, TRGS 725/TRBS 3145) must be noted when handling and filling compressed gases.

Note

Only excerpts from the TRGS are given in the following (sections applicable to motor vehicle manufacturers and workshops).

- TRGS 400 (Risk assessment for activities involving hazardous substances)
- TRGS 402 (Identification and assessment of the risks from activities involving hazardous substances: inhalation exposure)
- TRGS 407 (Activities involving gases - risk assessment)
- TRGS 510 (Storage of hazardous substances in non-stationary containers)
- TRBS 3145/TRGS 725 (Non-stationary compressed-gas vessels - filling, keeping, in-house transportation, emptying)

Note

- *The technical regulations for compressed gases (TRG), hazardous substances (TRGS) and workplace safety (TRBS) reflect the current state of the art in occupational safety and hygiene as well as other ergonomic findings for the provision and use of work equipment as well as for the operation of systems requiring supervision and/or for activities involving hazardous substances.*
- *The specified technical regulations apply to Germany; in other countries, rules and regulations differing from these may apply.*

Various technical regulations (e.g. TRGS 400, TRGS 402, TRGS 407, TRGS 510, TRGS 725/TRBS 3145) must be noted when handling and filling compressed gases.

- General provisions for charging systems
- Definition of terms and explanatory notes
- Constructing and operating charging systems

Charging systems

- Does not apply to vehicle manufacturers or workshops.
- Charging systems are systems for filling mobile compressed-gas vessels. The charging system includes the premises and facilities concerned.
- Charging systems requiring a permit are ones used to transfer compressed gases to mobile compressed-gas vessels for supplying to third parties.
- Charging systems not requiring a permit are ones used for transferring compressed gases to mobile compressed-gas vessels for internal use only.

Employees and employee instruction

– Employees are to be given instruction on the following topics before beginning work and at regular, appropriate intervals, however at least once a year:

- Hazards specifically associated with handling compressed gases
- Safety regulations, particularly the applicable TRGS and TRBS
- Procedures in the event of malfunction, damage and accidents
- The use of fire-extinguishing and protective equipment
- Operation and maintenance of the charging system on the basis of the instructions for use

Protected by copyright. Copying for private or commercial purposes, in part or in whole, is not permitted unless authorised by AUDI AG. AUDI AG does not guarantee or accept any liability with respect to the correctness of information in this document. Copyright by AUDI AG.

Charging systems may only be operated and maintained by persons:

- Aged 18 and above
- Possessing the necessary technical knowledge.
- Who can be relied upon to work diligently.

Note

Work under supervision may also be performed by persons who fail to comply with the above-mentioned prerequisites.

Filling compressed-gas vessels (other technical regulations not mentioned here may apply to vessels from other countries and filling of these vessels).

- A compressed-gas vessel is only to be filled with the compressed gas declared on it and the quantity must comply with the stipulated pressure, weight or volume data (refer to pressure vessel regulations).
- In the case of vessels approved for use with several types of compressed gas, the compressed gas with which it is to be filled and - if the compressed gas has a tc ≥ -10°C (tc = critical temperature) - the maximum permissible charging weight in line with TRGS must be marked on the vessel prior to connection for filling.
- Compressed-gas vessels marked with the maximum permissible charge pressure in bar at 15 °C must be filled manometrically. If, at the time of filling, the temperature is not 15 °C, the pressure corresponding to the prevailing temperature must be established; it must be ensured that the permissible charge pressure at 15 °C is not exceeded in the compressed-gas vessel. The charged vessels must be checked by way of random pressure measurements to determine possible overfilling.

- Compressed-gas vessels on which the maximum permissible capacity is indicated by the net weight (filling weight, permissible weight of fill) in kilograms must be filled gravimetrically. The vessels must be weighed during filling and subsequently subjected to a weight check on special scales to detect possible overfilling. Scales used for this purpose must be calibrated.
- Under certain conditions, gases with a tc greater than/equal to +70°C may be transferred volumetrically from compressed-gas vessels with a maximum volume of 150 l to compressed-gas vessels with a volume of max. 1000 ccm. The stipulations of the TRGS apply to filling workmen's cylinders with liquefied gas.
- Different TRGS apply to vessels in vehicles:

– For gases with tc ≥ +70°C.

– For technical gas mixtures with tc ≥ +70°C.

– Liquefied extremely low-temperature compressed gases may also be filled volumetrically (with the exception of vessels in vehicles) if the charging system and/or the vessels is/are equipped with devices for measuring or limiting the volume of the charge and for measuring the temperature of the charge. When filling volumetrically, it must be ensured that the permissible charge weight indicated on the vessel is not exceeded. To determine possible overfilling, the charged vessels are to be checked gravimetrically on calibrated scales or volumetrically, provided that the compressed gases are not highly toxic. Volumetric checking requires the use of appropriate equipment with completely separate charging and checking devices.

- Charging and check measurements must be performed by different people. Check measurements must be performed immediately upon completion of the filling process.
- Overfilled vessels must be discharged immediately and safely until the permissible filling quantity is reached. The compressed-gas fill must then be determined again.
- Certain parts of TRGS 407 do not apply or only apply to a limited extent to vessels for liquefied, extremely low-temperature compressed gases which are neither flammable nor toxic; this does not affect the provisions of road traffic legislation.
- When filling compressed gas vessels with liquefied gases at charging temperatures ≤ -20°C, the compressed gas vessel (if the vessel material has not been tested for temperatures ≤ -20°C) is not to be released from the charging system for transportation until the vessel wall temperature is ≤ +20°C.

Recycling and refuse law

- Regulations and rules for the handling and disposal of refrigerants and refrigerant oils can be found in the climate protection regulation on chemicals and in the recycling and refuse law (applicable in Germany, different regulations and rules may apply in other countries).

Disposal of refrigerant

Refrigerants intended for disposal must be transferred to marked recycling cylinders, observing the permissible filling quantity. In Germany, reference should be made for example to the climate protection regulation on chemicals and the recycling and refuse law (different regulations and rules may apply in other countries).

Disposal of refrigerant oil

Used refrigerant machine oils from systems with halogenated hydrocarbons must be disposed of as waste requiring particular care. They are not to be mixed with other oils or substances.

Protected by copyright. Copying for private or commercial purposes, in part or in whole, is not permitted unless authorised by AUDI AG. AUDI AG does not guarantee or accept any liability with respect to the correctness of information in this document. Copyright by AUDI AG.

Proper storage and disposal must be ensured in line with local regulations. In Germany, reference should be made for example to the climate protection regulation on chemicals and the recycling and refuse law (different regulations and rules may apply in other countries) ⇒ Audi-ServiceNet, HSO Environmental Protection .

⇒ "4.1.1 Conversion of an R12 refrigerant circuit to an R134a refrigerant circuit and servicing (retrofit)", page 67

⇒ "4.1.2 Keeping refrigerant records", page 67

4.1.1 Conversion of an R12 refrigerant circuit to an R134a refrigerant circuit and servicing (retrofit)

Note

- *For environmental reasons and on account of the corresponding legislation, refrigerant R12 can no longer be manufactured or supplied. Refrigerant R134a has been developed as a replacement for R12.*
- *However, air conditioning systems developed and designed for refrigerant R12 cannot simply be charged with refrigerant R134a. To ensure trouble-free operation of the air conditioning system even after conversion, various components of the refrigerant circuit must be renewed.*
- *A precise description of the conversion procedure and information on the servicing of converted refrigerant circuits can be found in ⇒ Workshop Manual: Air conditioner with refrigerant R12 Parts 2 and 3 (this Workshop Manual is only available in hardcopy form).*

4.1.2 Keeping refrigerant records

The environmental statistics law requires records to be kept on the use of refrigerants exceeding a certain quantity per year.

Consequently, motor vehicle workshops may well have to provide the relevant local authorities with information on their use of refrigerant. It is therefore advisable to always keep a record sheet ⇒ Audi-ServiceNet, HSO Environmental Protection .

Note

- *On the basis of a regulation of the European parliament from 2005, it is generally no longer necessary in the EC to keep a record sheet for the quantity of refrigerant handled in motor vehicle workshops. A record sheet is currently only necessary as of an annual consumption of 50 kg or more (refer also to directive (EC) No. 1005/2009 for example).*
- *As the relevant local authorities may demand information on refrigerant consumption as of a certain quantity (currently as of 20 kg per year), it is advisable to always keep an appropriate record sheet.*
- *Other regulations may apply in countries not belonging to the EC.*

Protected by copyright. Copying for private or commercial purposes, in part or in whole, is not permitted unless authorised by AUDI AG. AUDI AG does not guarantee or accept any liability with respect to the correctness of information in this document. Copyright by AUDI AG.

5 Refrigerant circuit

⇒ “5.1 Important repair notes for air conditioning systems”, page 68

⇒ “5.2 Converting refrigerant circuits from refrigerant R12 to refrigerant R134a ”, page 68

⇒ “5.3 Working with the air conditioner service station”, page 69

⇒ “5.4 Blowing out refrigerant circuit with compressed air and nitrogen ”, page 84

⇒ “5.5 Cleaning (flushing) refrigerant circuit with refrigerant R134a”, page 88

⇒ “5.6 Tracing leaks in refrigerant circuit ”, page 161

Protected by copyright. Copying for private or commercial purposes, in part or in whole, is not permitted unless authorised by AUDI AG. AUDI AG does not guarantee or accept any liability with respect to the correctness of information in this document. Copyright by AUDI AG.

5.1 Important repair notes for air conditioning systems

- Air conditioners for refrigerant R12 may only be filled with refrigerant R134a if certain prerequisites are satisfied ⇒ page 67 and ⇒ Workshop Manual: Air conditioner with refrigerant R12 Part 2 and 3 . This Workshop Manual is only available in hardcopy form.
- The refrigerant oils specifically developed for R134a and R12 refrigerant circuits are never to be mixed.
- Air conditioner service stations which come into contact with the refrigerant should only be used for the intended refrigerant.
- The components of an R134a refrigerant circuit are accordingly labelled, marked with green stickers or designed (e.g. a different thread) such that interchange with components for refrigerant R12 is not possible.
- Within the engine compartment, on the bonnet catch striker plate or in the plenum chamber there is an information plate which states what refrigerant is used.
- Never mix different refrigerants.

Note

When working on the refrigerant circuit, please observe the information given in the section “Basic rules for working on refrigerant circuit”
⇒ “2.12 Basic rules for working on refrigerant circuit”, page 17 .

5.2 Converting refrigerant circuits from refrigerant R12 to refrigerant R134a

CFC refrigerants are no longer used in the automotive industry.

For conversion of refrigerant circuits from R12 to R134a and servicing converted circuits, refer to

⇒ Workshop Manual: Air conditioner with refrigerant R12 Parts 2 and 3 (this Workshop Manual is only available in printed form).

5.3 Working with the air conditioner service station

Caution

- *If there is a possibility that chemical substances (sealing additives) for sealing leaks have been added to the refrigerant circuit from which the refrigerant is to be extracted, do not connect the air conditioner service station to this refrigerant circuit and do not extract the refrigerant.*
- *Chemical substances (sealing additives) for sealing leaks form deposits in the refrigerant circuit which will impair operation of the air conditioning system and lead to failure of the system (and of the air conditioner service station).*
- *Customers should be informed that the air conditioner in their vehicle contains substances not approved by Audi and that the system can therefore not be discharged and serviced by your workshop.*

Protected by copyright. Copying for private or commercial purposes, in part or in whole, is not permitted unless authorised by AUDI AG. AUDI AG does not guarantee or accept any liability with respect to the correctness of information in this document. Copyright by AUDI AG.

Note

- *Commercially available chemical substances (sealing additives) for sealing refrigerant circuit leaks are not approved by Audi AG. Damage to or malfunctioning of the air conditioner or air conditioner service station cannot be precluded as no tests have been performed to establish long-term action, effectiveness and material compatibility.*
- *Commercially available sealing additives have different physical and chemical properties. They may have a lasting detrimental effect on operation of the air conditioner and air conditioner service station or even be the cause of total failure.*
- *Audi objects to the use of chemical substances (sealing additives) for sealing leaks in refrigerant circuits.*
- *Chemical substances (sealing additives) for sealing leaks in the refrigerant circuit generally react with the ambient air or the humidity contained in it. They cause malfunctioning of valves and other components with which they come into contact on account of deposits in the refrigerant circuit (and in the air conditioner service station being used). These deposits can no longer be completely removed from the components (not even by cleaning/flushing with refrigerant R134a).*
- *Chemical substances (sealing additives) used to seal leaks in refrigerant circuits usually cannot be detected from the outside; mostly the stickers that are supposed to be attached to identify these chemical substances are missing. Therefore, act with caution when working on a vehicle whose past you are not familiar with.*
- *On the accessories market, vessels with integrated filters are available which are supposed to intercept these chemical substances (additives used to seal leaks). As Audi are not aware of the composition and thus the physical and chemical properties of these substances, no information can be given here as to the effectiveness and the separation rate of such filters.*
- *The sealant filter - VAS 6592- available as "Workshop equipment" provides a certain degree of protection for air conditioner service stations. This filter is incorporated between the air conditioner service station and the service connection on the low-pressure side of the vehicle refrigerant circuit (the air conditioner service station is not to be attached to the service connection on the high-pressure side of the refrigerant circuit for drainage, evacuation and measurement). The filter separates out certain substances added to the circuit to seal refrigerant circuit leaks. It thus prevents the unimpeded and unrestricted ingress of these substances into the air conditioner service station (together with the refrigerant and refrigerant oil) where they would cause damage. Protection is however only provided if the built-in filter is replaced at regular intervals exactly as specified by the manufacturer in the applicable instructions. As Audi do not approve the use of chemical substances (sealing additives) for sealing leaks in the refrigerant circuit and the composition of such chemical substances (sealing additives) marketed for example as so-called "refrigerant circuit sealants" varies greatly, it is again not possible to provide any information on the action and efficiency of the sealant filter - VAS 6592- .*

Protected by copyright. Copying for private or commercial purposes, in part or in whole, is not
permitted unless authorised by AUDI AG. AUDI AG does not guarantee or accept any liability
with respect to the correctness of information in this document. Copyright by AUDI AG.

If air conditioner refrigerant circuit repair work has to be performed on a vehicle on which chemical substances (sealing additives) have been added to the refrigerant circuit to seal leaking components (or if you have good reason to believe that such substances have been added), the customer (vehicle owner) must be notified of the following:

- The air conditioner refrigerant cannot be extracted on account of the substances added (sealing additives), as these could damage the air conditioner service station. The refrigerant must be extracted for example by a company authorised to extract and then dispose of the contaminated refrigerant using the appropriate equipment (e.g. a local refuse disposal company specialising in the disposal of refrigerants).
- The air conditioning system can only be properly repaired by renewing all the refrigerant circuit components which have come into contact with the sealing additive. The sealing additive may already have damaged certain refrigerant circuit components (e.g. the air conditioner compressor regulating valve - N280-) or lead to damage and subsequent failure shortly after renewed start-up. Furthermore, sealing additive deposits may subsequently come loose in the refrigerant circuit components and then cause the air conditioner to fail again (full cleaning of these components with workshop equipment is currently not possible).

Work on the air conditioner refrigerant circuit

⇒ "5.3.1 Important notes for working with the air conditioner service station", page 71

⇒ "5.3.2 Connecting air conditioner service station for measuring and testing", page 72

⇒ "5.3.3 Discharging refrigerant circuit with air conditioner service station", page 73

⇒ "5.3.4 Evacuating refrigerant circuit with air conditioner service station", page 75

⇒ "5.3.5 Charging refrigerant circuit with air conditioner service station", page 80

⇒ "5.3.6 Starting up air conditioner after charging", page 81

⇒ "5.3.7 Pouring refrigerant into reservoir (charging cylinder or storage vessel) of air conditioner service station", page 83

⇒ "5.3.8 Discharging air conditioner service station", page 83

5.3.1 Important notes for working with the air conditioner service station

Observe the following in order to operate the air conditioner service stations, currently available air conditioner service stations ⇒ Electronic parts catalogue (Tools; Workshop equipment/tools; Air conditioning/heating):

- The fitted filter and dryer must be renewed by no later than when the operational time specified in the related operating instructions has been reached.
- If an air conditioner service station is also used to clean (flush) the refrigerant circuit, the dryers and filters fitted must be renewed more frequently ⇒ page 84 .
- Use only refrigerant oils which are also approved for the vehicle-specific refrigerant circuit (if applicable, add the refrigerant oil directly to the refrigerant circuit). ⇒ Electronic parts catalogue.

In cases of doubt about the composition of the refrigerant extracted from the refrigerant circuit, this is not to be re-used even after cleaning in the air conditioner service station.

- In such cases, discharge the air conditioner service station ⇒ page 178 , clean the system if necessary and renew the filters, dryers and refrigerant oil.

Protected by copyright. Copying for private or commercial purposes, in part or in whole, is not permitted unless authorised by AUDI AG. AUDI AG does not guarantee or accept any liability with respect to the correctness of information in this document. Copyright by AUDI AG.

Protected by copyright. Copying for private or commercial purposes, in part or in whole, is not permitted unless authorised by AUDI AG. AUDI AG does not guarantee or accept any liability with respect to the correctness of information in this document. Copyright by AUDI AG.

– In Germany, for example, contaminated refrigerant can be returned to the refrigerant supplier in so-called recycling cylinders for treatment or environmentally friendly disposal (different or additional regulations may apply in individual countries).

Commercially available air conditioner service stations can be classified in 2 groups:

- Air conditioner service stations which clean the refrigerant extracted from a vehicle for re-use (so-called extraction and recycling stations, for currently available air conditioner service stations) ⇒ Electronic parts catalogue (Tools; Workshop equipment/tools; Air conditioning/heating).
- Air conditioner service stations which transfer extracted refrigerant to recycling cylinders (for large-scale recycling); these are referred to as extraction systems.

5.3.2 Connecting air conditioner service station for measuring and testing

- Work procedure may vary depending on the type of tools selected; therefore it is important to observe the tool-specific operating instructions.

Note

The work procedure must always be performed as described in the operating instructions of the air conditioner service station.

The filler hoses should be connected as follows to prevent air or moisture from entering into the refrigerant circuit:

– On vehicles with high-voltage system, switch off (deactivate) auxiliary air conditioner function ⇒ Owner's Manual and ⇒ Infotainment/MMI Operating Manual .

– Switch off ignition.

– Connect air conditioner service station to power supply.

– Unscrew sealing caps from service connections / connections with valve ⇒ Heating, air conditioning; Rep. gr. 87 ; Refrigerant circuit (vehicle-specific Workshop Manual).

– Evacuate filler hoses if necessary.

– Connect quick-release coupling to service connection of refrigerant circuit.

WARNING

- ***Do not open the valves on the low or high-pressure end with the engine running, as otherwise the air conditioner compressor or the air conditioner service station could be destroyed by a short circuit between the high and low-pressure ends of the refrigerant circuit if the air conditioning system is switched on.***

– Only screw the handwheel into the quick-release coupling adapter to the extent required to reliably open the valve in the service connection (observe the pressure gauge; take care not to open the valve too far).

– Start the engine and perform the intended tests and measurements.

– Compare the values determined to the specified measured values ⇒ page 183 .

– Before detaching quick-release coupling, close it by screwing out handwheel.

Vehicles with one service connection only:

Note

Screw valve adapters - V.A.G 1785/9- , -V.A.G 1785/10- or adapter set - V.A.G 1786- onto refrigerant circuit connections with valve and bleed filler hoses while connecting to adapters (faintly audible escape of refrigerant gas is permitted) *⇒ page 178* *.*

– The filler hose must be fitted with a valve opener for opening valve in valve adapter.

On vehicles with high-voltage system and additional air conditioner functions (e.g. on the Audi Q7 e-tron):

Note

On vehicles with the "heat pump" and/or "high-voltage battery cooling" function, high pressure is not available at the service connection on the high-pressure side in all air conditioner operating modes. On these vehicles, the pressure in the refrigerant circuit on the high-pressure side can only be measured via the pressure/temperature senders installed in the refrigerant circuit (depending on the air conditioner operating mode) ⇒ Heating, air conditioning; Rep. gr. 87 ; Refrigerant circuit (vehicle-specific Workshop Manual) and ⇒ Vehicle diagnostic tester ("Guided Fault Finding").

To check the various functions of these air conditioners:

– On the vehicle diagnostic tester, select the corresponding function ("passenger compartment cooling", "heat pump operation" or "high-voltage battery cooling") and perform the function according to requirements ⇒ Vehicle diagnostic tester in "Guided Fault Finding" mode.

– On the vehicle diagnostic tester, select and read out the measurements from the various pressure/temperature senders installed in the refrigerant circuit ⇒ Vehicle diagnostic tester in "Guided Fault Finding" mode.

5.3.3 Discharging refrigerant circuit with air conditioner service station

- Work procedure may vary depending on the type of tools selected; it is therefore important to observe the tool-specific operating instructions.
- The refrigerant circuit must be discharged if you intend to remove parts of the refrigerant circuit, if there is any doubt about the quantity of refrigerant in the circuit or if safety precautions require you to do so.
- All the necessary usage information for working with the refrigerant air conditioner service station can be found in the air conditioner service station operating instructions.

Discharging:

– On vehicles with high-voltage system, switch off (deactivate) auxiliary air conditioner function ⇒ Owner's Manual and ⇒ Infotainment/MMI Operating Manual .

Protected by copyright. Copying for private or commercial purposes, in part or in whole, is not permitted unless authorised by AUDI AG. AUDI AG does not guarantee or accept any liability with respect to the correctness of information in this document. Copyright by AUDI AG.

– Switch off ignition.

– Connect air conditioner service station to vehicle service connections according to operating instructions (refer to vehicle-specific refrigerant circuit) and start up service station ⇒ Heating, air conditioning; Rep. gr. 87 ; Refrigerant circuit (vehicle-specific Workshop Manual).

Additionally on vehicles with electrically operated valves in the refrigerant circuit which are not open when the system is de-energised (e.g. on the Audi Q7 e-tron):

Note

On vehicles with high-voltage system and additional air conditioner functions ("heat pump operation" or "high-voltage battery cooling"), valves which are not open when the system is de-energised may be fitted in the refrigerant circuit. These valves are opened and closed e.g. via stepper motors and are not activated after the ignition is switched off. However, for the refrigerant circuit to be discharged fully, evacuated correctly and filled there must be no separated areas; these valves must therefore be opened before performing such work ⇒ Heating, air conditioning; Rep. gr. 87 ; Refrigerant circuit (vehicle-specific Workshop Manual), and ⇒ Vehicle diagnostic tester ("Guided Fault Finding").

Protected by copyright. Copying for private or commercial purposes, in part or in whole, is not
permitted without the prior consent of AUDI AG. AUDI AG does not guarantee or accept any liability
with respect to the correctness of information in this document. Copyright by AUDI AG.

– Use the vehicle diagnostic tester to open the electrically activated valves which are not open when the system is de-energised ⇒ Vehicle diagnostic tester ("Guided Fault Finding").

All vehicles:

– Drain the refrigerant circuit with the air conditioner service station in line with the corresponding operating instructions.

Caution

Risk of air conditioner compressor damage if the refrigerant circuit is empty

Never start the engine when the refrigerant circuit is empty.

- ***Depending on the version of the air conditioner service station, the pressure in the refrigerant circuit may be less than 1 bar absolute following drainage.***
- ***Depending on the version, the air conditioner compressor may be damaged by running it when the pressure in the refrigerant circuit is low.***
- ***Never start the engine if the pressure in the refrigerant circuit is below ambient pressure.***

WARNING

Risk of injury (frostbite).

Refrigerant may escape if the refrigerant circuit has not been discharged.

Extract refrigerant before opening refrigerant circuit. Renewed evaporation may create pressure in refrigerant circuit if refrigerant circuit is not opened within 10 minutes following extraction. Extract refrigerant again.

Note

- *It is impossible to exclude the possibility that refrigerant oil may be extracted from the refrigerant circuit along with the refrigerant. To ensure air conditioner compressor lubrication, the refrigerant oil in the circuit must be topped up with fresh oil* *⇒ page 276* *.*
- *On vehicles fitted with an air conditioner compressor without magnetic clutch (with air conditioner compressor regulating valve - N280-), the engine should not be run for longer than absolutely necessary with the refrigerant circuit empty; avoid high engine speeds (with air conditioner compressor always in operation).*
- *On vehicles with an air conditioner compressor without a magnetic clutch, the engine should only be started following the complete assembly of the refrigerant circuit (avoid high engine speeds).*
- *Depending on the version of the air conditioner compressor, there may be a valve on the high-pressure side of the compressor which prevents liquid refrigerant from flowing back into the compressor after the air conditioner has been switched off. If an air conditioner compressor with such a valve is installed in a vehicle with a refrigerant circuit with an expansion valve, it may take a relatively long time before the pressure in the high-pressure side drops (the expansion valve is cold and the pressure in the low-pressure side increases rapidly after the compressor is switched off; the expansion valve is closed and the refrigerant can only flow slowly to the low-pressure side). If the air conditioner compressor is switched on (or the refrigerant circuit is discharged via the low-pressure side), the pressure on the low-pressure side drops, the expansion valve is opened and the refrigerant can flow to the low-pressure side.*
- *The quantity of refrigerant R134a extracted as displayed by the air conditioner service station may differ from the amount actually extracted depending on the version of the air conditioner service station, the mode in which the air conditioner service station was last operated and the ambient temperature etc. The quantity of refrigerant extracted as displayed by the air conditioner service station is therefore only a guide to the amount of refrigerant actually extracted from the refrigerant circuit. Attention should also be paid to the operating instructions and technical product description of the air conditioner service station.*

If, after drainage, work not requiring the air conditioner service station is to be performed on the vehicle,

– disconnect the air conditioner service station from the refrigerant circuit and switch it off.

If evacuating and re-charging refrigerant circuit after it is discharged, refer to ⇒ page 80 .

5.3.4 Evacuating refrigerant circuit with air conditioner service station

- The work procedure must always be performed as described in the operating instructions of the air conditioner service station.
- Quantity of refrigerant oil in refrigerant circuit checked and if necessary corrected ⇒ page 276 .
- Quantity of refrigerant in air conditioner service station checked

Protected by copyright. Copying for private or commercial purposes, in part or in whole, is not permitted unless authorised by AUDI AG. AUDI AG does not guarantee or accept any liability with respect to the correctness of information in this document. Copyright by AUDI AG.

The refrigerant circuit must be evacuated (emptied of air) before it is charged with refrigerant. Moisture is also extracted from the circuit.

Leaks can be detected on evacuating the refrigerant circuit.

Evacuating:

Caution

- *Do not start the engine during the evacuating procedure and while there is a vacuum in the refrigerant circuit.*
- *The air conditioner compressor may be damaged if the engine is started whilst there is a vacuum in the refrigerant circuit.*
- *Always charge the refrigerant circuit before starting the engine.*

– On vehicles with high-voltage system, switch off (deactivate) auxiliary air conditioner function ⇒ Owner's Manual and ⇒ Infotainment/MMI Operating Manual .

– Switch off ignition.

– Connect air conditioner service station to power supply.

– Connect filler hoses of air conditioner service station to vehicle refrigerant circuit with quick-release coupling adapter (refer to vehicle-specific refrigerant circuit) ⇒ Heating, air conditioning; Rep. gr. 87 ; Refrigerant circuit (vehicle-specific Workshop Manual).

– Screw in the handwheel of the quick-release coupling adapters to the extent required to reliably open the valves of the service connections (take care not to open the valve too far).

Note

If you intend to measured the pressure on only one side of the refrigerant circuit after charging the system (on vehicles with a service connection), use the valve adapter and filler hose with valve opener *⇒ page 178* *.*

Protected by copyright. Copying for private or commercial purposes, in part or in whole, is not permitted unless authorised by AUDI AG. AUDI AG does not guarantee or accept any liability with respect to the correctness of information in this document. Copyright by AUDI AG.

Additionally on vehicles with electrically operated valves in the refrigerant circuit which are not open when the system is de-energised (e.g. on the Audi Q7 e-tron):

Note

- *On vehicles with high-voltage system and additional air conditioner functions ("heat pump operation" or "high-voltage battery cooling"), valves which are not open when the system is de-energised may be fitted in the refrigerant circuit. These valves are opened and closed e.g. via stepper motors and are not activated after the ignition is switched off. However, for the refrigerant circuit to be discharged fully, evacuated correctly and filled there must be no separated areas; these valves must therefore be opened before performing such work ⇒ Heating, air conditioning; Rep. gr. 87 ; Refrigerant circuit (vehicle-specific Workshop Manual), and ⇒ Vehicle diagnostic tester ("Guided Fault Finding").*
- *Non-return valves in the refrigerant circuit have a specific holding pressure (approx. 0.1 bar or 100 mbar) in the forward direction. All electrically activated valves must therefore be open so that the refrigerant circuit can be evacuated fully (residual pressure less than 5 mbar).*

– Use the vehicle diagnostic tester to open the electrically activated valves which are not open when the system is de-energised ⇒ Vehicle diagnostic tester ("Guided Fault Finding").

All vehicles:

– Switch on air conditioner service station and evacuate the refrigerant circuit for at least 30 minutes. In this process, the pressure reading must be less than 10 mbar absolute (corresponding to a vacuum of 990 mbar).

Note

On the air conditioner service station V.A.G 1885 for currently available air conditioner service stations ⇒ Electronic parts catalogue (Tools; Workshop equipment/tools; Air conditioning/heating), the two green LEDs light at this pressure, for example.

– Switch off air conditioner service station and allow to stand for at least 1 hour.

• If the vacuum display (LED chain) does not change, the system is free of leaks and can be charged.

Protected by copyright. Copying for private or commercial purposes, in part or in whole, is not permitted unless authorised by AUDI AG. AUDI AG does not guarantee or accept any liability with respect to the correctness of information in this document. Copyright by AUDI AG.

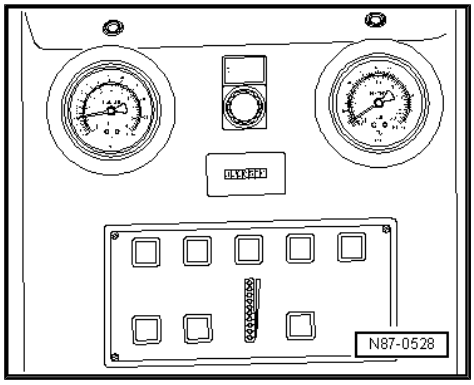

Note

- *With V.A.G 1885 for example, for currently available air conditioner service stations ⇒ Electronic parts catalogue (Tools; Workshop equipment/tools; Air conditioning/heating), a current vacuum display (LED) is only obtained after pressing the* `Evacuation` *button again.*
- *If, with this air conditioner service station, the upper (green) LEDs do not light immediately after switching on, either the refrigerant circuit is leaking or there is still residual moisture/ refrigerant in the circuit.*

Proceed as follows if the vacuum is not maintained or an adequate vacuum cannot be generated:

- The pressure in the refrigerant circuit only increases slowly following evacuation, e.g. due to the evaporation of refrigerant from the refrigerant oil.

– If it is not certain whether the refrigerant circuit is really leakproof, repeat evacuation and observe the vacuum display over a lengthy period. Only charge circuit if vacuum is maintained.

– If it is certain that there are no leaks in the refrigerant circuit, charging can be performed.

Protected by copyright. Copying for private or commercial purposes, in part or in whole, is not permitted unless authorised by AUDI AG. AUDI AG does not guarantee or accept any liability with respect to the correctness of information in this document. Copyright by AUDI AG.

- In the event of a leak of such a magnitude that the ingress of air on evacuation is already sufficient to prevent the air conditioner service station generating an adequate vacuum or the vacuum gauge already indicates the ingress of air and the loss of vacuum immediately after switching off the air conditioner service station.

– Determine the leakage location in the refrigerant circuit as follows:

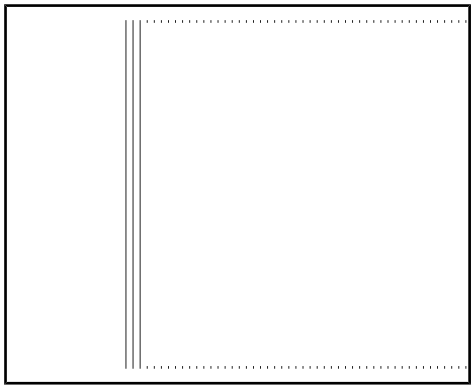

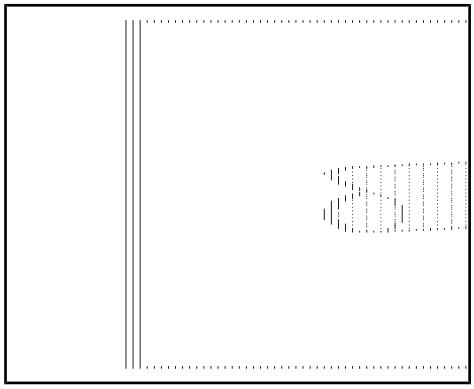

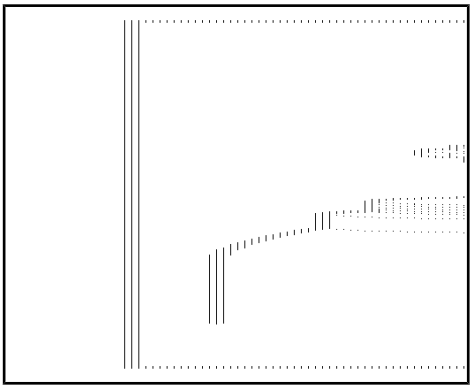

Note

- *A major leak can be determined for example by building up a pressure of max. 15 bar in the refrigerant circuit with pure, dry compressed air or with nitrogen ⇒ page 84 . If the leak is of large enough, the location of the leak can be found due to the noise of the gas escaping.*
- *Apply the compressed air or the nitrogen to the closed refrigerant circuit by way of the service connection to which a quick-release coupling adapter for service connections has been attached.*
- *The quick-release coupling adapter for service connections can be connected to the workshop compressed air system using e.g. a modified filler hose -A- (e.g. with a 5/8"-18 UNF thread, depending on thread on quick-release coupling adapter) and an appropriate adapter -B- ⇒ page 367 . To prevent moisture, oil and dirt from the workshop compressed air system from entering the air conditioner refrigerant circuit, also use a combination fine filter unit for the compressed air system, with an oil, dirt and water separator, as commonly used for painting systems. Install this unit between the compressed air system and the filler hose -A- ⇒ Electronic parts catalogue (Tools; Workshop equipment/tools; Air conditioning/heating).*
- *Using a pressure gauge set with nitrogen pressure reducer -1- (max. reducing pressure: 15 bar), a compressed-gas cylinder -3- filled with nitrogen can be connected to the service connection (quick-release coupling adapter for service connections attached) at the closed refrigerant circuit ⇒ page 366 with a filler hose -2- (e.g. with a 5/8"-18 UNF thread).*

– Slowly increase the pressure in the refrigerant circuit to max. 15 bar.

WARNING

- ***There may be an uncontrolled flow of nitrogen out of the cylinder.***
- ***Only use pressure reducer for nitrogen cylinders (max. working pressure 15 bar).***
- ***For leak detection with nitrogen (max. permissible operating pressure 15 bar) always work with pressure reducers for nitrogen cylinders.***
- ***Use appropriate extraction units to draw off the gas mixture escaping from the components.***

– Determine the leakage location by way of the noise caused by the escaping gas at this point.

– Eliminate the leakage.

– Evacuate and again observe the vacuum display over a period of hours. Only charge circuit if vacuum is maintained.

- In the event of a leakage of a magnitude permitting the ingress of no or very little air and the air conditioner service station can generate an adequate vacuum. The vacuum display does not increase or only increases very slowly after switching off the air conditioner service station, indicating that air is only ingressing and vacuum is being lost through a minor leak.

Protected by copyright. Copying for private or commercial purposes, in part or in whole, is not permitted unless authorised by AUDI AG. AUDI AG does not guarantee or accept any liability with respect to the correctness of information in this document. Copyright by AUDI AG.

– Pour 100 g of refrigerant into the circuit and use an electronic leak detector to locate and eliminate any leaks ⇒ page 163 or pour in refrigerant with UV contrast medium and use the leak detection system VAS 6201 to search for and eliminate the leak in the refrigerant circuit ⇒ page 165 .
– If necessary, discharge refrigerant circuit ⇒ page 73 .
– Evacuate refrigerant circuit and observe vacuum display again over a period of hours. Only charge circuit if vacuum is maintained.

5.3.5 Charging refrigerant circuit with air conditioner service station

Note

The entire refrigerant charge can be added to either the high or low-pressure side *⇒ page 276* *.*

- The work procedure must always be performed as described in the operating instructions of the air conditioner service station.
- Before pouring in refrigerant, correct the quantity of refrigerant oil ⇒ page 276 .
- When charging the refrigerant circuit, the air conditioner service station must be on the same level as the vehicle in which the refrigerant circuit is to be charged (maximum difference 50 cm). Depending on the design of the air conditioner service station , an excessive difference in height could lead to differences between the quantity of refrigerant displayed and that actually poured in. The charging accuracy of the air conditioner service station may change.

– On vehicles with high-voltage system, switch off (deactivate) auxiliary air conditioner function ⇒ Owner's Manual and ⇒ Infotainment/MMI Operating Manual .
– Switch off ignition.
– Evacuate refrigerant circuit with air conditioner service station ⇒ page 75 .

Protected by copyright. Copying for private or commercial purposes, in part or in whole, is not permitted unless authorised by AUDI AG. AUDI AG does not guarantee or accept any liability with respect to the correctness of information in this document. Copyright by AUDI AG.

Additionally on vehicles with electrically operated valves in the refrigerant circuit which are not open when the system is de-energised (e.g. on the Audi Q7 e-tron):

Note

On vehicles with high-voltage system and additional air conditioner functions (“heat pump operation” or “high-voltage battery cooling”), valves which are not open when the system is de-energised may be fitted in the refrigerant circuit. These valves are opened and closed e.g. via stepper motors and are not activated after the ignition is switched off. However, for the refrigerant circuit to be discharged fully, evacuated correctly and filled there must be no separated areas; these valves must therefore be opened before performing such work ⇒ Heating, air conditioning; Rep. gr. 87 ; Refrigerant circuit (vehicle-specific Workshop Manual), and ⇒ Vehicle diagnostic tester (“Guided Fault Finding”).

– Use the vehicle diagnostic tester to open the electrically activated valves which are not open when the system is de-energised ⇒ Vehicle diagnostic tester (“Guided Fault Finding”).

All vehicles:

– Unscrew the handwheel at the quick-release coupling adapter (to close it).
– Allow refrigerant to flow into filler hose.
– Take the charging cylinder reading.
– Screw in the handwheel at the quick-release coupling adapter (to open it) and charge with the specified quantity of refrigerant.
– Switch off air conditioner service station.

On vehicles for which the Service Schedule specifies that the refrigerant circuit must be drained/filled after a specific mileage:

– After performing the work, enter “air conditioner refilled” in the appropriate field in the Service Schedule ⇒ Maintenance tables and/or “Maintenance” manual.

Note

Draining and filling the refrigerant circuit is only specified as maintenance work in the Service Schedule for certain vehicles (currently e.g. for the Audi Q7 e-tron and Audi A6 e-tron).

5.3.6 Starting up air conditioner after charging

Note

- *If it has been removed, give the mechanically driven air conditioner compressor approx. 10 turns by hand prior to initial start-up (on or after installation, e.g. before fitting the belt) to prevent damage caused by fluid lock when first switched on (any oil in the air conditioner compressor cylinder is forced out by the cranking action).*
- *If it has been removed, the electrically driven air conditioner compressor is to be started up, prior to initial commissioning of the air conditioner and following charging, by way of the “Basic setting, compressor run-in” function of the Guided Fault Finding routine ⇒ Vehicle diagnostic tester, “Guided Fault Finding” function for air conditioner and battery regulation . This guards the air conditioner compressor against damage caused for example by fluid lock when first switched on (any oil in the combustion chamber of the air conditioner compressor is forced out).*
- *The mechanically driven air conditioner compressor is driven via a belt or shaft by the engine. The electrically driven air conditioner compressor is driven via an electric motor attached directly to the air conditioner compressor (e.g. on vehicles with hybrid drive).*

Protected by copyright. Copying for private or commercial purposes, in part or in whole, is not permitted unless authorised by AUDI AG. AUDI AG does not guarantee or accept any liability with respect to the correctness of information in this document. Copyright by AUDI AG.

Starting up air conditioner with mechanically driven air conditioner compressor

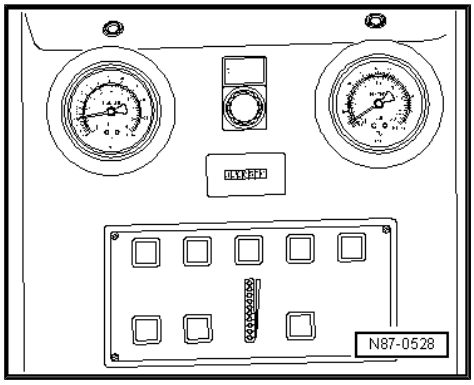

- Start the engine with the air conditioner compressor switched off (version with magnetic clutch).
- Set the air conditioner compressor to minimum output, i.e. "Econ" or A/C off mode (version with no magnetic clutch with regulating valve).
- Wait for idling speed to stabilise.
- Switch on air conditioner compressor and operate system for at least two minutes at idling speed.
- If necessary, check pressures in refrigerant circuit with air conditioner service station.
- Switch off engine.
- Screw out handwheel on quick-release coupling adapter.
- Detach filler hoses from refrigerant circuit.
- Screw the sealing caps back on.

Starting up air conditioner with electrically driven air conditioner compressor

- Start up air conditioner compressor via “Basic setting, compressor run-in” function of Guided Fault Finding ⇒ Vehicle diagnostic tester in “Guided Fault Finding” mode for air conditioner and battery regulation .

Additionally on vehicles with electrically operated valves in the refrigerant circuit which are not open when the system is de-energised (e.g. on the Audi Q7 e-tron):

- Via respective control unit, enable activation of electrically operated valves (for opening or closing) which are not open without current for air conditioner operation ⇒ Vehicle diagnostic tester (“Guided Fault Finding”).

Note

On vehicles with high-voltage system and additional air conditioner functions (“heat pump operation” or “high-voltage battery cooling”), valves which are not open when the system is de-energised may be fitted in the refrigerant circuit. These valves are opened and closed e.g. via stepper motors and are not activated after the ignition is switched off. However, for the refrigerant circuit to be discharged fully, evacuated correctly and filled there must be no separated areas; these valves must therefore be opened before performing such work. After completing work on the refrigerant circuit, the valves which are activated e.g. via stepper motors must be re-activated via the corresponding control unit ⇒ Heating, air conditioning; Rep. gr. 87 ; Refrigerant circuit (vehicle-specific Workshop Manual) and ⇒ Vehicle diagnostic tester in “Guided Fault Finding” mode.

Protected by copyright. Copying for private or commercial purposes, in part or in whole, is not permitted unless authorised by AUDI AG. AUDI AG does not guarantee or accept any liability with respect to the correctness of information in this document. Copyright by AUDI AG.

All vehicles:

- If necessary, check the pressures in the refrigerant circuit with the air conditioner service station on completion of basic setting ⇒ page 72 .
- Screw out handwheel on quick-release coupling adapter.
- Detach filler hoses from refrigerant circuit.
- Screw the sealing caps back on.

5.3.7 Pouring refrigerant into reservoir (charging cylinder or storage vessel) of air conditioner service station

- The work procedure must always be performed as described in the operating instructions of the air conditioner service station.
- A certain quantity of refrigerant is specified as charge for each air conditioning system. To ensure that neither too much nor too little refrigerant is added (either would reduce the cooling output), the charging cylinder has a scale indicating the weight for example.
- The volume of a refrigerant changes as a function of pressure. The scale must therefore be set according to the pressure in the charging cylinder.

Note

Do not completely empty the charging cylinder or storage vessel, as the liquid column boundary layer cannot be traced in the indicator tube during filling (outside visible range).

WARNING

Do not overfill. A completely filled charging cylinder or storage vessel will explode when the temperature rises.

5.3.8 Discharging air conditioner service station

Note

- *If it is necessary to discharge the air conditioner service station (e.g. due to extraction of contaminated refrigerant), always renew all filters and dryers (do not remove filter and dryer from the air-tight packaging until immediately before installation to minimise absorption of moisture).*
- *Refrigerant cylinders filled with contaminated or used refrigerant are termed “recycling cylinders ”.*
- *Always evacuate recycling cylinders before initial filling with refrigerant (if there is air in a refrigerant vessel it must not be filled with refrigerant).*
- *Do not mix various types of refrigerant (refrigerant mixtures cannot be recycled and must be disposed of). If there is any doubt about the composition of the contents of the container, the refrigerant recycling company must be informed.*

Protected by copyright. Copying for private or commercial purposes, in part or in whole, is not
[illegible] AUDI AG does not guarantee or accept any liability
with respect to the correctness of information in this document. Copyright by AUDI AG.

Caution

- *Observe the applicable regulations, technical rules and laws when charging recycling cylinders (compressed gas cylinders).*
- *Recycling cylinders must never be overfilled. If recycling cylinders are overfilled, the gas cushion is too small to withstand the expansion of liquid caused by exposure to heat. There is a risk of bursting.*
- *For your own safety, only use recycling cylinders with a built-in safety valve.*
- *Recycling cylinders must be weighed on calibrated scales during the filling process. The maximum permissible capacity is 75% (filling factor 0.75) of the filling weight indicated on the recycling cylinder (the possibility of refrigerant oil entering the recycling cylinder along with the refrigerant cannot be ruled out).*

5.4 Blowing out refrigerant circuit with compressed air and nitrogen

The best way of removing moisture, impurities and old refrigerant oil from the refrigerant circuit without any unnecessary loss of refrigerant and without extensive assembly work, whilst at the same time ensuring environmental compatibility, is to clean (flush) the refrigerant circuit with refrigerant R134a or to blow it out with compressed air and nitrogen.

Note

- *Blowing out the refrigerant circuit with compressed air and nitrogen usually involves far more work than cleaning (flushing) with refrigerant R134a. Cleaning (flushing) with refrigerant R134a also provides far better cleaning of the components. Flushing should therefore always be employed in the event of complaints (blowing out should only be applied when dealing with certain problems and for particular components).*
- *Under certain conditions it may, for example, be sufficient to blow out specific components (e.g. individual refrigerant pipes or refrigerant hoses) with compressed air and nitrogen (for instance to force old refrigerant oil out of individual components following removal).*
- *Certain impurities are impossible or difficult to remove properly from the refrigerant circuit using compressed air. Such impurities can be removed for example by cleaning (flushing) with refrigerant R134a* *⇒ page 88* *.*
- *A maximum working pressure of 15 bar is not to be exceeded when blowing out (corresponds to the pressure prevailing in a charged refrigerant circuit at an ambient temperature of approx. 60 °C; use pressure reducer for compressed air as well if applicable).*

Protected by copyright. Copying for private or commercial purposes, in part or in whole, is not permitted unless authorised by AUDI AG. AUDI AG does not guarantee or accept any liability with respect to the correctness of information in this document. Copyright by AUDI AG.

WARNING

- *There may be an uncontrolled flow of nitrogen out of the cylinder.*
- *Only use pressure reducer for nitrogen cylinders (max. working pressure 15 bar).*
- *Use appropriate extraction units to draw off the gas mixture escaping from the components.*

– Always flush or blow out components in direction opposite to refrigerant flow.

Note

The restrictor, expansion valve, air conditioner compressor, receiver and reservoir cannot be flushed with compressed air and nitrogen.

Protected by copyright. Copying for private or commercial purposes, in part or in whole, is not permitted unless authorised by AUDI AG. AUDI AG does not guarantee or accept any liability with respect to the correctness of information in this document. Copyright by AUDI AG.

– In the case of condensers fitted with a desiccant cartridge in the integrated receiver, this cartridge is to be removed.

Note

- *On vehicles with condensers with an integrated receiver/desiccant cartridge which cannot be renewed separately, the condenser must be renewed after it has been cleaned (flushed).*
- *Depending on the version, receivers on which the desiccant cartridge can be renewed separately may be provided with an additional filter element which may have to be renewed together with the desiccant cartridge.*

– First flush out the old refrigerant oil and dirt with compressed air and then use nitrogen to remove the moisture from the components.

– For adapter for connecting pressure hose to refrigerant circuit, refer to ⇒ page 178 .

Observe the following to prevent oil and moisture from the compressed-air system from entering the refrigerant circuit.

– The compressed air must be passed through a compressed-air purifier to clean and dry it. Use is therefore to be made of filter and dryer for compressed air (included in scope of delivery as tool for painting work).

– For refrigerant lines with thread or union nut at connection, use adapters from adapter set - V.A.G 1785- (adapter - V.A.G 1785/1- to adapter - V.A.G 1785/8-) for connecting 5/8" -18 UNF filler hoses (some of these adapters are also contained in the adapter set for refrigerant circuits - VAS 6338/1-).

– For refrigerant lines with no thread or union nut at connection (for connecting adapters), use adapters from adapter set for refrigerant circuits - VAS 6338/1- or commercially available blow-out gun with rubber mouthpiece.

Note

- *The refrigerant circuit is only to be blown out with compressed air and then nitrogen if no means of cleaning (flushing) the refrigerant circuit with refrigerant R134a are available or if flushing of individual components would involve too much work (blowing minor impurities and small quantities of moisture out of refrigerant pipes for example is not particularly time-consuming).*
- *Compressed air/nitrogen emerging from components must be drawn off using an appropriate system (e.g. workshop extractor).*

The refrigerant circuit (or individual components) is/are to be blown out if no means of cleaning (flushing with refrigerant R134a) are available or if cleaning (flushing with refrigerant R134a) seems inappropriate

Protected by copyright. Copying for private or commercial purposes, in part or in whole, is not permitted unless authorised by AUDI AG. AUDI AG does not guarantee or accept any liability with respect to the correctness of information in this document. Copyright by AUDI AG.

- In the event of dirt or other impurities in individual circuit components
- If vacuum reading is not maintained on evacuating a leak-free refrigerant circuit (pressure build-up due to moisture in refrigerant circuit)
- If the refrigerant circuit has been left open for longer than the normal assembly time (e.g. following an accident).
- If pressure and temperature measurements in the refrigerant circuit indicate that there is moisture in the circuit.
- If it is uncertain how much refrigerant oil is in the refrigerant circuit.
- If the air conditioner compressor has to be renewed on account of internal damage (e.g. noise or no output).

Note

For vehicles with an electrically driven air conditioner compressor, see the notes on renewing the electrical air conditioner compressor - V470- (damage to the air conditioner compressor electronics does not always mean that the refrigerant circuit has to be cleaned) *⇒ page 262*

- If stipulated by the vehicle-specific Workshop Manual after renewing certain components

Note

Certain impurities and old refrigerant oil are impossible or difficult to remove properly from the refrigerant circuit using compressed air. Such impurities can be removed for example by cleaning (flushing) with refrigerant R134a *⇒ page 88* *.*

⇒ “5.4.1 Blowing out refrigerant circuit”, page 87

5.4.1 Blowing out refrigerant circuit

Note

- *In the case of vehicles on which the refrigerant lines have no threads for connection of adapters V.A.G - 1785- , use is to be made, for example, for blowing out the individual components of a blow-out gun with rubber mouthpiece or an adapter from the VW/Audi passenger vehicle adapter set - VAS 6338/1- . Take special care not to damage the connections by crushing or scratching them when using an air pistol with a rubber end piece.*
- *The evaporator must be blown out via the connection for the low-pressure line (large diameter) after removing the expansion valve or restrictor.*
- *Always clean (flush or blow out) components in the opposite direction to the refrigerant flow.*
- *Check expansion valve and renew if dirty or corroded.*
- *If dark, sticky deposits cannot be removed with compressed air, clean (flush) the components concerned with refrigerant R134a or renew.*
- *Thin, light grey deposits on the insides of pipes do not impair the function of the components.*
- *After flushing, always renew receiver or reservoir and restrictor. In the case of condensers fitted with a desiccant cartridge in the integrated receiver, this cartridge must be renewed.*
- *On vehicles with condensers with an integrated receiver/desiccant cartridge which cannot be renewed separately or which are not available as a replacement part, the condenser must be renewed after cleaning (flushing) ⇒ Electronic parts catalogue and ⇒ Heating, air conditioning; Rep. gr. 87 ; Refrigerant circuit (vehicle-specific Workshop Manual).*
- *Depending on the version, receivers on which the desiccant cartridge can be renewed separately may be provided with an additional filter element which may have to be renewed together with the desiccant cartridge.*

Protected by copyright. Copying for private or commercial purposes, in part or in whole, is not permitted unless authorized by AUDI AG. AUDI AG does not guarantee or accept any liability with respect to the correctness of information in this document. Copyright by AUDI AG.

After blowing out refrigerant circuit:

– Renew the following components (vehicle-specific): restrictor and reservoir, expansion valve and receiver / desiccant cartridge ⇒ Heating, air conditioning; Rep. gr. 87 ; Refrigerant circuit (vehicle-specific Workshop Manual) and ⇒ Electronic parts catalogue .

– Depending on the problem, renew air conditioner compressor ⇒ Heating, air conditioning; Rep. gr. 87 ; Air conditioner compressor (vehicle-specific Workshop Manual) and ⇒ Electronic parts catalogue , or drain off remaining refrigerant oil from air conditioner compressor (removed earlier) ⇒ page 258 (renewing components of refrigerant circuit) and add specified quantity of new refrigerant oil again ⇒ page 317 (approved refrigerant oils and refrigerant oil capacities).

Note

- *Replacement compressors contain a certain specified quantity of refrigerant oil. For vehicles with two evaporators, it may be necessary to additionally add a certain quantity of refrigerant oil to the circuit ⇒ Heating, air conditioning; Rep. gr. 87 ; Refrigerant circuit (vehicle-specific Workshop Manual) and ⇒ page 317 (approved refrigerant oils and refrigerant oil capacities).*
- *If the air conditioner compressor is not supposed to be renewed, the refrigerant oil quantity in the air conditioner compressor must be topped up in line with the specified capacity (pour out refrigerant oil and add the specified quantity to the air conditioner compressor or the refrigerant circuit again) ⇒ page 258 (Renewing refrigerant circuit components) and ⇒ page 317 (Approved refrigerant oils and refrigerant oil capacities).*

Protected by copyright. Copies or extracts may not be made for commercial purposes, in part or in whole, is not permitted unless authorised by AUDI AG. AUDI AG does not guarantee or accept any liability with respect to the correctness of information in this document. Copyright by AUDI AG.

– Completely re-assemble the refrigerant circuit ⇒ Heating, air conditioning; Rep. gr. 87 ; Refrigerant circuit (vehicle-specific Workshop Manual).
– Evacuate and charge the refrigerant circuit as specified ⇒ page 75 and ⇒ page 80 .
– Start up air conditioner as specified ⇒ Heating, air conditioning; Rep. gr. 87 ; Refrigerant circuit; Starting up air conditioner after charging refrigerant circuit (vehicle-specific Workshop Manual) and ⇒ page 81 .

5.5 Cleaning (flushing) refrigerant circuit with refrigerant R134a

Caution

- ***If there is a possibility that chemical substances (sealing additives) for sealing leaks have been added to the refrigerant circuit to be flushed, do not connect the air conditioner service station to this refrigerant circuit and do not clean (flush) this refrigerant circuit.***
- ***Chemical substances (sealing additives) for sealing leaks form deposits in the refrigerant circuit which will impair operation of the air conditioning system and lead to failure of the system (and of the air conditioner service station).***
- ***Customers should be informed that the air conditioner in their vehicle contains substances not approved by Audi and that the system can therefore not be cleaned (flushed) and serviced by your workshop.***

Note

- *Audi objects to the use of chemical substances (sealing additives) for sealing leaks in refrigerant circuits.*
- *Chemical substances (sealing additives) for sealing leaks in the refrigerant circuit generally react with the ambient air or the humidity contained in it. They cause malfunctioning of valves and other components with which they come into contact on account of deposits in the refrigerant circuit (and in the air conditioner service station being used). These deposits cannot be completely removed from the components affected (even by cleaning/flushing). Therefore the refrigerant circuit can only be serviced by renewing all components that have come into contact with the chemical substances.*
- *Chemical substances (sealing additives) used to seal leaks in refrigerant circuits usually cannot be detected from the outside; mostly the stickers that are supposed to be attached to identify these chemical substances are missing. Therefore, act with caution when working on a vehicle whose past you are not familiar with.*

- The best way of removing moisture, impurities (e.g. abrasion from a defective air conditioner compressor) and old refrigerant oil without any unnecessary loss of refrigerant and without extensive assembly work, whilst at the same time ensuring environmental compatibility, is to clean (flush) the refrigerant circuit with refrigerant R134a.

The refrigerant circuit is to be flushed:

– If there is any dirt or similar in the circuit.

– If vacuum reading is not maintained on evacuating a leak-free refrigerant circuit (pressure build-up due to moisture in refrigerant circuit)

– If the refrigerant circuit has been left open for longer than the normal assembly time (e.g. following an accident).

– If pressure and temperature measurements in the refrigerant circuit indicate that there is moisture in the circuit.

– If it is uncertain how much refrigerant oil is in the refrigerant circuit.

– If the air conditioner compressor has to be renewed on account of internal damage (e.g. noise or no output).

Protected by copyright. Copying for private or commercial purposes, in part or in whole, is not permitted unless authorised by AUDI AG. AUDI AG does not guarantee or accept any liability with respect to the correctness of information in this document. Copyright by AUDI AG.

Note

- *For vehicles with an electrically driven air conditioner compressor, see the notes on renewing the electrical air conditioner compressor - V470- (damage to the air conditioner compressor electronics does not always mean that the refrigerant circuit has to be cleaned)* *⇒ page 262*
- *If a defective air conditioner compressor is replaced by a compressor from a different manufacturer, it is important to check whether the refrigerant oil already in the refrigerant circuit (from the removed compressor) is also approved for the new compressor. If a different refrigerant oil is approved for the new air conditioner compressor than for the removed compressor, the refrigerant circuit must be flushed* *⇒ page 319* *.*

– If stipulated by the vehicle-specific Workshop Manual after renewing certain components

Protected by copyright. Copying for private or commercial purposes, in part or in whole, is not permitted unless authorised by AUDI AG. AUDI AG does not guarantee or accept any liability with respect to the correctness of information in this document. Copyright by AUDI AG.

Tools required

- Air conditioner service station with flushing kit (these air conditioner service stations feature the additional function “Flushing refrigerant circuit” and the necessary flushing kit for refrigerant circuits) ⇒ Electronic parts catalogue (Tools; Workshop equipment/tools; Air conditioning/heating).
- VW/Audi passenger vehicle adapter set - VAS 6338/1- ⇒ page 111 and ⇒ Electronic parts catalogue (Tools; Workshop equipment/tools; Air conditioning/heating).

Note

- *If no air conditioner service station with flushing kit is available ⇒ Electronic parts catalogue (Tools; Workshop equipment/tools; Air conditioning/heating) and depending on the version of the air conditioner service station being used, the refrigerant circuit can also be cleaned (flushed with refrigerant R134a) using the refrigerant circuit flushing kit ⇒ Electronic parts catalogue , (Tools; Workshop equipment/tools; Air conditioning/heating) however this must then be performed manually. ⇒ page 96*
- *Use can be made for vehicles with screw connections at the refrigerant circuit of the adapter - V.A.G 1785/7- and adapter - V.A.G 1785/8- from the VW/Audi passenger vehicle adapter set - VAS 6338/1- . Two adapters - V.A.G 1785/8- are required for a vehicle with screw connections at the air conditioner compressor and reservoir.*
- *The adapter set for refrigerant circuits - VAS 6338/1- also contains a short filler hose - VAS 6338/31- with 5/8 -18 UNF connections and a large inside diameter (commercially available).*

Preparations

– Discharge the refrigerant circuit ⇒ page 73 .

– Remove air conditioner compressor ⇒ Heating, air conditioning; Rep. gr. 87 ; Air conditioner compressor (vehicle-specific Workshop Manual).

Vehicle with restrictor and reservoir

– Remove restrictor (vehicle-specific) and re-connect pipes ⇒ Heating, air conditioning; Rep. gr. 87 ; Refrigerant circuit (vehicle-specific Workshop Manual).

– Remove reservoir (vehicle-specific) and re-connect pipes (for this purpose, use adapter and filler hose - VAS 6338/31- from adapter set for refrigerant circuits - VAS 6338/1-) ⇒ page 111 and ⇒ Heating, air conditioning; Rep. gr. 87 ; Refrigerant circuit (vehicle-specific Workshop Manual).

Note

- *Although it may be possible to flush the reservoir (depending on version), its large internal volume means that it holds too much liquid refrigerant. When this refrigerant is extracted the reservoir ices up severely, the refrigerant only evaporates very slowly and the extraction process takes too long.*
- *Although it may be possible to flush the receiver (depending on version; refer to the description for the specific vehicle), its large internal volume means that it may hold too much liquid refrigerant. When this refrigerant is extracted the reservoir ices up severely, the refrigerant only evaporates very slowly and the extraction process takes too long.*

Protected by copyright. Copying for private or commercial purposes, in part or in whole, is not permitted unless authorised by AUDI AG. AUDI AG does not guarantee or accept any liability with respect to the correctness of information in this document. Copyright by AUDI AG.

Vehicle with expansion valve and receiver

– Remove receiver (vehicle-specific; not necessary on all vehicles) and re-connect pipes (for this purpose, use adapter and filler hose - VAS 6338/31- from adapter set for refrigerant circuits - VAS 6338/1-) ⇒ page 111 and ⇒ Heating, air conditioning; Rep. gr. 87 ; Refrigerant circuit (vehicle-specific Workshop Manual).

Note

- *Depending on the design, the receiver can be flushed (if necessary, remove desiccant cartridge installed in receiver) ⇒ page 111 and ⇒ Heating, air conditioning; Rep. gr. 87 ; Refrigerant circuit (vehicle-specific Workshop Manual).*
- *If the receiver is attached to the condenser (e.g. on the Audi A3 from model year 2004 onwards), it must not be removed for flushing (its design makes it suitable for flushing, and it is only renewed after flushing) ⇒ page 111 and ⇒ Heating, air conditioning; Rep. gr. 87 ; Refrigerant circuit (vehicle-specific Workshop Manual).*
- *In the case of condensers with an integrated receiver / desiccant cartridge which cannot be renewed separately or which are not available separately, the condenser is to be renewed after flushing. On these vehicles, renew the condenser together with the receiver ⇒ Heating, air conditioning; Rep. gr. 87 ; Refrigerant circuit (vehicle-specific Workshop Manual) and ⇒ Electronic parts catalogue .*
- *Depending on the version, receivers on which the desiccant cartridge can be renewed separately may be provided with an additional filter element which may have to be renewed together with the desiccant cartridge.*

– On vehicles with a desiccant cartridge in the receiver at the condenser (vehicle-specific), remove the desiccant cartridge and re-seal the opening at the receiver ⇒ Heating, air conditioning; Rep. gr. 87 ; Refrigerant circuit (vehicle-specific Workshop Manual).

– Remove the expansion valve (vehicle-specific) and replace it with an adapter from the adapter set for refrigerant circuits - VAS 6338/1- ⇒ page 111 and ⇒ Heating, air conditioning; Rep. gr. 87 ; Refrigerant circuit (vehicle-specific Workshop Manual).

– On vehicles with one or more shut-off valves/non-return valves, remove the valves and replace with suitable adapters (or hand shut-off valves) from the VW/Audi passenger vehicle adapter set - VAS 6338/1- ⇒ page 111 , ⇒ Heating, air con-

ditioning; Rep. gr. 87 ; Refrigerant circuit (vehicle-specific Workshop Manual).

Note

If there is no suitable adapter for the expansion valve in the VW/ Audi passenger vehicle adapter set - VAS 6338/1- , the removed expansion valve can also be drilled open (the old expansion valve generally has to be renewed and is therefore no longer needed).

Note

- *Item -3- can be disregarded.*
- *When drilling open the expansion valve, make sure that the openings -2- and -4- in the valve -1- are offset.*
- *If you do not do so, the sealing surface on the expansion valve -1- could be damaged when drilling open the valve; the expansion valve can then no longer be used for setting up the flushing circuit.*

Protected by copyright. Copying for private or commercial purposes, in part
permission of AUDI AG. AUDI AG does not guarantee or ac
with respect to the correctness of information in this document. Copyright b

Drill open expansion valve.

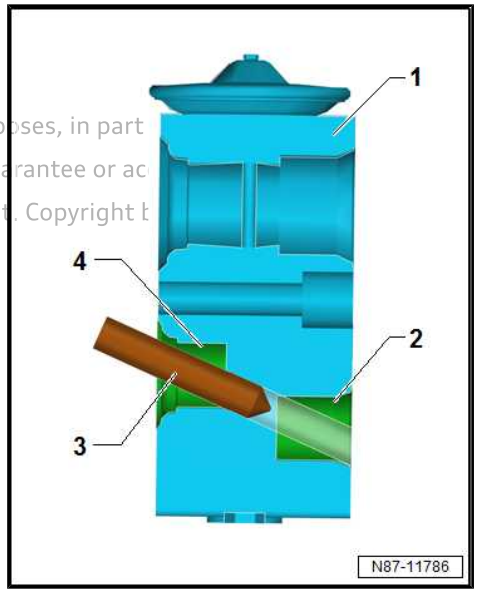

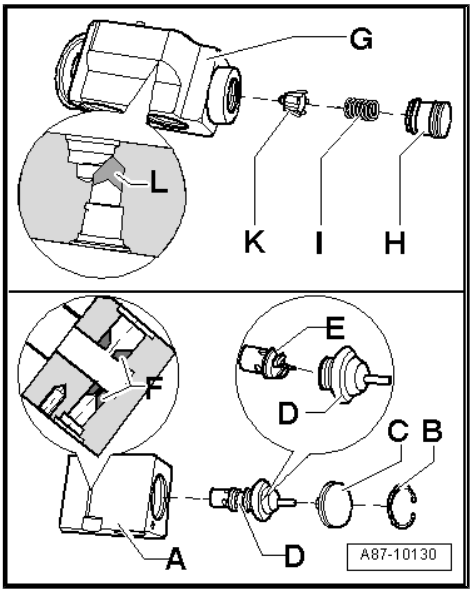

Note

- *Before drilling open, remove the control element and then drill open the expansion valve using a suitable drill bit for example (bit diameter e.g. 6.0 mm).*
- *Certain components have to be removed from the expansion valve before drilling it open.*
- *There are different expansion valve versions with different designs. With version -A-, the parts -B-, -C- and -D- have to be removed for example. Then separate part -E- (control element) from part -D-. After doing so, use a suitable bit to drill open the expansion valve in area -F-.*
- *With version -G-, the parts -H-, -I- and -K- must be removed for example and the area -L- then drilled open using a suitable bit.*

– Remove swarf remnants from the expansion valve after drilling open.

– Re-install the parts -B-, -C- and -D- with version -A- or part -H- with version -G-.

Protected by copyright. Copying for private or commercial purposes, in part or in whole, is not permitted unless authorised by AUDI AG. AUDI AG does not guarantee or accept any liability with respect to the correctness of information in this document. Copyright by AUDI AG.

Note

On vehicles with two evaporators, the circuit to the second evaporator must be separated from the circuit of the first evaporator and flushed in a separate operation *⇒ page 111* *and ⇒ Heating, air conditioning; Rep. gr. 87 ; Refrigerant circuit (vehicle-specific Workshop Manual).*

Flushing

– Check that the air conditioner service station contains at least 6 kg of refrigerant R134a.

Note

If applicable, switch on the heater attached to the air conditioner service station for the refrigerant cylinder installed in the air conditioner service station prior to the first flushing operation (to increase the pressure in the refrigerant cylinder) and switch it off again before the first extraction operation during the flushing cycle.

– Discharge the used oil container of the air conditioner service station.

– Connect the supply hose (high-pressure end) of the air conditioner service station with an adapter to the low-pressure pipe to the air conditioner compressor (pipe with larger diameter) ⇒ page 111 .

– Connect the return hose (low-pressure or suction end) of the air conditioner service station to the outlet of the refrigerant circuit flushing kit.

– Connect the inlet of the refrigerant circuit flushing kit with an adapter to the high-pressure pipe to the air conditioner compressor (pipe with smaller diameter) ⇒ page 111 .

Note

- *The components are always (with the exception of the electric air conditioner compressor) flushed in the opposite direction to the refrigerant flow during air conditioner operation* *⇒ page 98* *.*
- *When flushing, impurities from the refrigerant circuit ingress into the refrigerant circuit flushing kit and the air conditioner service station, where they are retained in the built-in filters and dryer. Depending on the nature of the impurities, these components should be renewed more frequently in accordance with the operating instructions for the air conditioner service station or the refrigerant circuit flushing kit.*
- *Depending on the nature and severity of the contamination of the flushed refrigerant circuits, the filter in the refrigerant circuit flushing kit should be renewed at the latest after 5 to 10 flushing cycles (flushed vehicles). After flushing a severely contaminated refrigerant circuit (the refrigerant oil from the refrigerant circuit is black and viscous or there is a lot of swarf in the refrigerant circuit), renew the filter. In the case of such severely contaminated refrigerant circuits it is also appropriate to flush the circuit again after renewing the filter.*
- *Depending on the nature of the impurities, dirt (used refrigerant oil and abrasion from air conditioner compressor) accumulates at the sight glass of the refrigerant circuit flushing kit. If applicable, clean this sight glass after flushing and flush the refrigerant circuit again in one operation as a check (one operation is then sufficient).*
- *Liquid refrigerant cannot be routed through the expansion valve, restrictor and desiccant bag of certain receivers at the necessary rate. Therefore remove these components and replace them with adapters if applicable ⇒ Heating, air conditioning; Rep. gr. 87 ; Refrigerant circuit (vehicle-specific Workshop Manual).*
- *Adapters for connection of air conditioner service station and for bridging certain refrigerant circuit components* *⇒ page 111* *.*

– Connect flushing circuit in vehicle (depending on refrigerant circuit) ⇒ page 111 .

Vehicles with 2 evaporators in refrigerant circuit:

Note

- *The refrigerant circuit is cleaned in 2 flushing cycles (first the section with the evaporator in the front heater and air conditioning unit and then the section with the evaporator in the rear heater and air conditioning unit)* *⇒ page 111* *.*
- *On vehicles with two evaporators, the circuit to the second evaporator must be separated from the circuit of the first evaporator and flushed in a separate operation* *⇒ page 111* *and ⇒ Heating, air conditioning; Rep. gr. 87 ; Refrigerant circuit (vehicle-specific Workshop Manual).*

Protected by copyright. Copyright by AUDI AG. All rights reserved. Any reproduction or distribution of the content, in whole or in part, is not permitted unless authorised by AUDI AG. AUDI AG does not guarantee or accept any liability with respect to the correctness of information in this document. Copyright by AUDI AG.

Vehicles with high-voltage system (without additional air conditioner functions, e.g. Audi A3 e-tron, Audi Q5 hybrid)

Note

Protected by copyright. Copying for private or commercial purposes, in part or in whole, is not permitted unless authorized by AUDI AG. AUDI AG does not guarantee or accept any liability with respect to the correctness and completeness of this document. Copyright by AUDI AG.

- *The refrigerant circuit is cleaned in 2 flushing cycles (first the section with the evaporator in the front heater and air conditioning unit and then the section with the heat exchanger for high-voltage battery / evaporator in the battery cooling module) ⇒ page 111 .*
- *On vehicles with two evaporators or with an evaporator and a heat exchanger, the circuit to the second evaporator or to the heat exchanger must be separated from the circuit of the first evaporator using hand shut-off valves and flushed in a separate operation ⇒ page 111 and ⇒ Heating, air conditioning; Rep. gr. 87 ; Refrigerant circuit (vehicle-specific Workshop Manual).*
- *A flushing cycle currently comprises three consecutive flushing operations (depending on the program in the air conditioner service station) ⇒ page 96 .*

– Close or open the appropriate hand shut-off valves installed, depending on which section of the refrigerant circuit you wish to flush in this flushing cycle.

– Close or open the installed electrically operated valves via the routine stored in the vehicle's corresponding control unit, depending on which section of the refrigerant circuit you wish to flush in this flushing cycle.

Vehicles with high-voltage system (with additional air conditioner functions such as heat pump operation, e.g. Audi Q7 e-tron)

Note

- *The refrigerant circuit is cleaned in multiple flushing cycles ⇒ page 111 and ⇒ Heating, air conditioning; Rep. gr. 87 ; Refrigerant circuit; Cleaning air conditioner refrigerant circuit .*
- *To perform the flushing procedure, the circuit is separated into multiple sections, which are then flushed in one flushing cycle each. The circuit is separated by activation of the installed electrically activated valves and via the installed manual shut-off valves (must be activated manually) ⇒ Heating, air conditioning; Rep. gr. 87 ; Refrigerant circuit; Cleaning air conditioner refrigerant circuit .*
- *A flushing cycle currently comprises three consecutive flushing operations (depending on the program in the air conditioner service station) ⇒ page 96 .*
- *The layout of the different flushing circuits for these vehicles is described in the corresponding vehicle-specific Workshop Manual ⇒ Heating, air conditioning; Rep. gr. 87 ; Refrigerant circuit; Cleaning air conditioner refrigerant circuit .*

– Close or open the hand shut-off valves installed, depending on which section of the refrigerant circuit you wish to flush in this flushing cycle ⇒ Heating, air conditioning; Rep. gr. 87 ; Refrigerant circuit; Cleaning air conditioner refrigerant circuit .

– Close or open any installed electrically operated valves via the routine stored in the vehicle's corresponding control unit, depending on which section of the refrigerant circuit you wish to flush in this flushing cycle ⇒ Vehicle diagnostic tester in “Guided Fault Finding” mode and ⇒ Heating, air conditioning; Rep. gr. 87 ; Refrigerant circuit; Cleaning air conditioner refrigerant circuit .

All vehicles

– Switch on the air conditioner service station and flush the refrigerant circuit (duration approx. 1 to 1.5 hours for one flushing cycle with three flushing operations).

Note

- *The flushing operation is to be performed in line with the operating instructions for the air conditioner service station ⇒ Operating instructions for air conditioner service station .*
- *Depending on the version of the air conditioner service station, the used oil container may only hold approx. 125 cm ^{3} of refrigerant oil. If a system with a larger refrigerant oil quantity is to be flushed, it may be necessary to empty the used oil container after the first flushing operation in a flushing cycle.*
- *Observe the refrigerant flowing back out of the refrigerant circuit into the air conditioner service station. Refrigerant circuit cleaning has not been completed until the refrigerant flowing through the inspection port of the refrigerant circuit flushing kit into the air conditioner service station is clear and completely colourless.*
- *During flushing, the entire refrigerant oil is rinsed out of the refrigerant circuit (with the exception of slight residue in the evaporator, for example; this can however be ignored).*
- *In the case of extremely severe contamination, it may be necessary to perform flushing twice (two flushing cycles with three flushing operations each).*

Protected by copyright. Copying for private or commercial purposes, in part or in whole, is not permitted unless authorised by AUDI AG. AUDI AG does not guarantee or accept any liability with respect to the correctness of information in this document. Copyright by AUDI AG.

Sequence of flushing operation (sequence takes place automatically in line with air conditioner service station program)

- After switch-on, the flushing circuit (refrigerant circuit with connecting hoses and refrigerant circuit flushing kit) is initially evacuated and the refrigerant circuit checked for leaks Depending on the version of the air conditioner service station, manual switching to next step may be necessary ⇒ Operating instructions for air conditioner service station .
- A specified quantity of refrigerant (e.g. 5 kg) is added to the evacuated refrigerant circuit via the high-pressure end of the air conditioner service station (in the direction opposite to the normal flow direction during air conditioner operation and thus on the low-pressure end of the vehicle refrigerant circuit) or refrigerant is added until the refrigerant circuit and the inspection ports of the refrigerant circuit flushing kit have been completely filled with liquid refrigerant (depending on the version of the air conditioner service station, the system detects that there has been no further inflow of refrigerant over a certain period for example).
- Once the specified quantity of refrigerant has been added, the heater of the refrigerant circuit flushing kit may be switched on for example depending on the version of the air conditioner service station and the refrigerant circuit flushing kit (only if the refrigerant is extracted in gaseous form from the refrigerant circuit flushing kit).

Reproduction or duplication of this document or any part thereof for commercial purposes, in part or in whole, is not permitted unless authorised by AUDI AG. AUDI AG does not guarantee or accept any liability with respect to the correctness of information in this document. Copyright by AUDI AG.

- After the refrigerant has been extracted, the heater of the refrigerant circuit flushing kit is switched off (if fitted). Depending on the version, the refrigerant circuit may be briefly evacuated again and, following evacuation, the refrigerant oil extracted from the refrigerant circuit is separated by the air conditioner service station.
- The refrigerant charging, extraction (and evacuation) process is repeated twice (in other words it is implemented a total of three times) ⇒ Operating instructions for air conditioner service station .
- Following extraction for the third time, the flushing circuit is evacuated depending on the version of the air conditioner service station.

– After flushing is completed, check the sight glass(es) of the refrigerant circuit flushing kit. If these are contaminated, clean as necessary according to the operating instructions for the refrigerant circuit flushing kit or air conditioner service station. Perform flushing again as a check (duration of approx. 30 min. is sufficient) ⇒ Operating instructions for air conditioner service station .

– Check the pressure in the refrigerant circuit. There must not be any positive pressure in the refrigerant circuit (evacuate briefly again if necessary).

– Detach the connections to the air conditioner service station from the vehicle refrigerant circuit (there must not be any positive pressure in the refrigerant circuit).

– Renew the following components (vehicle-specific): restrictor and reservoir, expansion valve and receiver / desiccant cartridge in receiver ⇒ Heating, air conditioning; Rep. gr. 87 ; Refrigerant circuit (vehicle-specific Workshop Manual) and ⇒ Electronic parts catalogue .

– Depending on the problem, renew air conditioner compressor ⇒ Heating, air conditioning; Rep. gr. 87 ; Air conditioner compressor (vehicle-specific Workshop Manual) and ⇒ Electronic parts catalogue , or drain off remaining refrigerant oil from air conditioner compressor (removed earlier) ⇒ page 258 (renewing components of refrigerant circuit) and add specified quantity of new refrigerant oil again ⇒ page 317 (approved refrigerant oils and refrigerant oil capacities).

Note

- *Replacement compressors contain a certain specified quantity of refrigerant oil. For vehicles with two evaporators, it may be necessary to additionally add a certain quantity of refrigerant oil to the circuit ⇒ Heating, air conditioning; Rep. gr. 87 ; Refrigerant circuit (vehicle-specific Workshop Manual) and ⇒ page 317 (approved refrigerant oils and refrigerant oil capacities).*
- *If the air conditioner compressor is not supposed to be renewed, the refrigerant oil quantity in the air conditioner compressor must be topped up in line with the specified capacity (pour out refrigerant oil and add the specified quantity to the air conditioner compressor or the refrigerant circuit again) ⇒ page 258 (Renewing refrigerant circuit components) and ⇒ page 317 (Approved refrigerant oils and refrigerant oil capacities).*

– Completely re-assemble the refrigerant circuit ⇒ Heating, air conditioning; Rep. gr. 87 ; Refrigerant circuit (vehicle-specific Workshop Manual).

– Evacuate and charge the refrigerant circuit as specified ⇒ page 75 and ⇒ page 80 .

– Start up air conditioner as specified ⇒ Heating, air conditioning; Rep. gr. 87 ; Refrigerant circuit; Starting up air conditioner after charging refrigerant circuit (vehicle-specific Workshop Manual) and ⇒ page 81 .

⇒ “5.5.1 Block diagrams for various flushing circuits”, page 98

⇒ “5.5.3 Adapters for connecting flushing circuits”, page 111

⇒ “5.5.2 Flushing electrically driven air conditioner compressor (removing refrigerant oil)”, page 106

5.5.1 Block diagrams for various flushing circuits

Note

- *The arrows in the following illustrations indicate the direction of refrigerant flow on flushing (during flushing, the refrigerant flows in the direction opposite to that in air conditioner operation; the high-pressure end of the air conditioner service station is thus connected to the low-pressure connection of the refrigerant circuit to the air conditioner compressor).*
- *The block diagrams illustrate a refrigerant circuit with restrictor and reservoir and a refrigerant circuit with expansion valve, receiver and a second evaporator (optional extra for certain vehicles).*
- *Depending on the design of the air conditioner service station, non-return valves may be fitted between the refrigerant circuit and the air conditioner service station (to guarantee the correct direction of refrigerant flow on flushing).*

Protected by copyright. Copying for private or commercial purposes, in part or in whole, is not permitted unless authorized by AUDI AG. AUDI AG does not guarantee or accept any liability with respect to the correctness of information in this document. Copyright by AUDI AG.

Flushing circuit on vehicles with high-voltage system

Refrigerant circuit with restrictor and reservoir ⇒ page 98

Refrigerant circuit with expansion valve, receiver and second evaporator ⇒ page 102

Vehicles with high-voltage system (without additional air conditioner functions, e.g. Audi A3 e-tron, Audi Q5 hybrid) ⇒ page 105

Vehicles with high-voltage system (with additional air conditioner functions such as heat pump operation, e.g. Audi Q7 e-tron) ⇒ page 106

Refrigerant circuit with restrictor and reservoir

Note

On vehicles with a restrictor and reservoir, the restrictor and reservoir are removed, and the lines unfastened to remove the restrictor are assembled again. The pipe connections to the reservoir removed are connected together with two adapters and the filler hose - VAS 6338/31- (from the adapter set for refrigerant circuits - VAS 6338/1-).

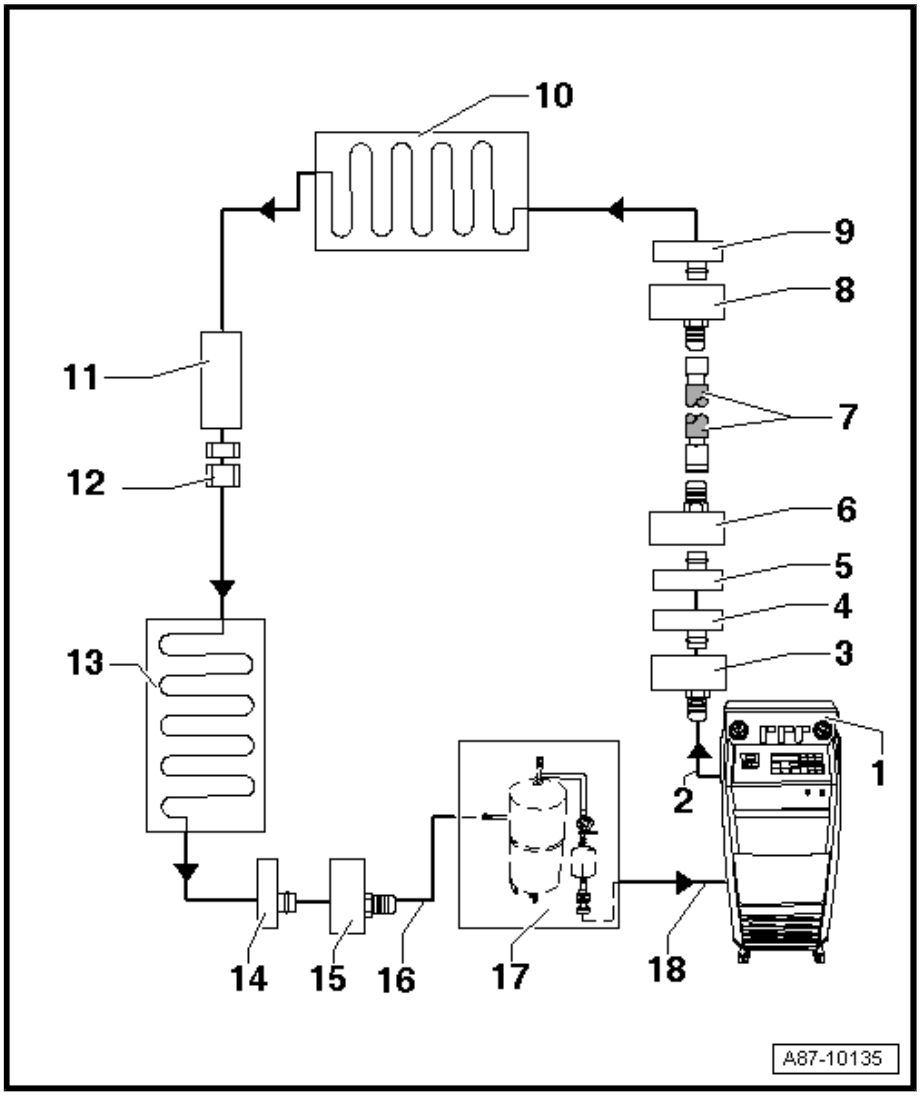

1 - Air conditioner service station

- With electronics and a flushing program, e.g. Air conditioner service station with flushing kit ⇒ Electronic parts catalogue (Tools; Workshop equipment/tools; Air conditioning/heating).
- If use is made of an air conditioner service station with no flushing program, the process is to be implemented manually (evacuation, 3x flushing with at least 4 kg of refrigerant each time, extraction of refrigerant again, evacuation).

2 - Refrigerant hose of air conditioner service station

- From the high-pressure side of the air conditioner service station (generally red coloured) to the connection for the low-pressure side of the air conditioner compressor at the refrigerant circuit (larger diameter)

3 - Adapter for connection (low-pressure side) at refrigerant circuit

- Different versions depending on vehicle ⇒ page 111
- From adapter set for refrigerant circuits - VAS 6338/1-

4 - Connection (low-pressure side) at refrigerant circuit

- Different versions depending on vehicle ⇒ page 111
- At refrigerant line from air conditioner compressor to reservoir

Protected by copyright. Copying for private or commercial purposes, in part or in whole, is not permitted unless authorised by AUDI AG. AUDI AG does not guarantee or accept any liability with respect to the correctness of information in this document. Copyright by AUDI AG.

5 - Connection to reservoir

- Different versions depending on vehicle ⇒ page 111
- At refrigerant line from air conditioner compressor to reservoir

6 - Adapter for bridging reservoir after removal

- Different versions depending on vehicle ⇒ page 111
- From adapter set for refrigerant circuits - VAS 6338/1-

7 - Filler hose for refrigerant ⇒ page 111

- For example filler hose - VAS 6338/31- (from adapter set for refrigerant circuits - VAS 6338/1-)

8 - Adapter for bridging reservoir after removal

- Different versions depending on vehicle ⇒ page 111
- From adapter set for refrigerant circuits - VAS 6338/1-

9 - Connection to reservoir

- Different versions depending on vehicle ⇒ page 111

10 - Evaporator

11 - Fitting location for restrictor

- ❑ Restrictor removed.
- ❑ Removing restrictor ⇒ Heating, air conditioning; Rep. gr. 87 ; Refrigerant circuit (vehicle-specific Workshop Manual)

12 - Bolt connection in refrigerant line

- ❑ Screw back together after removing restrictor ⇒ Heating, air conditioning; Rep. gr. 87 ; Refrigerant circuit (vehicle-specific Workshop Manual).

13 - Condenser

14 - Connection (high-pressure side) at refrigerant circuit

- ❑ Different versions depending on vehicle ⇒ page 111

15 - Adapter for connection (high-pressure side) at refrigerant circuit

- ❑ Different versions depending on vehicle ⇒ page 111
- ❑ From adapter set for refrigerant circuits - VAS 6338/1-

16 - Filler hose to refrigerant circuit flushing kit

- ❑ From connection (high-pressure side) of air conditioner compressor at refrigerant circuit (smaller diameter) to inlet of flushing kit for refrigerant circuits

17 - Refrigerant circuit flushing kit

- ❑ Different versions and different designs of the refrigerant circuit flushing kit ⇒ Electronic parts catalogue (Tools; Workshop equipment/tools; Air conditioning/heating).
- ❑ With filter, sight glass, safety valve, heater, refrigerant vessel etc. (depending on version)
- ❑ Depending on the design of the air conditioner service station and the refrigerant circuit flushing kit, a non-return valve may be fitted at the outlet of the refrigerant circuit flushing kit (to guarantee the correct direction of refrigerant flow when flushing).
- ❑ Depending on the design of the refrigerant circuit flushing kit, a connection for a service coupling for refrigerant circuits may be fitted at the inlet (and possibly also at the outlet) of the flushing kit (instead of a 5/8-18 UNF external thread). If a service connection with valve is fitted at the outlet of the flushing kit, this valve must be fully open when the service connection is connected (if the valve is not fully open this creates a constriction). If there is a connection for a service coupling at the inlet of the flushing device, modify the inlet so that the refrigerant hose that comes from the vehicle can be directly connected (a service coupling and a valve in the inlet of the flushing device creates a constriction, which hinders the flow of refrigerant out of the vehicle into the flushing device and therefore hampers the flushing process).

Protected by copyright. Copying for private or commercial purposes, in part or in whole, is not permitted unless authorised by AUDI AG. AUDI AG does not guarantee or accept any liability with respect to the correctness of information in this document. Copyright by AUDI AG.

Caution

Danger of flushing kit outlet icing up if a valve is fitted but not fully open.
If a valve is fitted in the connection but not fully open, this creates a constriction which obstructs the flow of refrigerant in the flushing process and which may ice up due to excessive cooling.

If there is a service connection with valve at the outlet of the flushing kit, this valve must be fully open during the flushing process.

If excessive cooling (icing-up) occurs at the outlet of the flushing kit during the flushing process, abort the flushing process and extract the refrigerant from the flushing kit and from the vehicle via the high-pressure and low-pressure sides. Then check the valve in the outlet of the flushing kit and repair it if necessary.

Danger of flushing kit inlet icing up in the event of a constriction caused by a service coupling and a valve fitted in the service connection.
Remove the service connection fitted to this connection and connect the service hose from the vehicle directly (without constriction) to the flushing kit, using an adapter if necessary (this depends on the thread at the flushing kit inlet).

18 - Refrigerant hose of air conditioner service station

- ❑ From low-pressure side of air conditioner service station (usually blue) to outlet of flushing kit for refrigerant circuits

Protected by copyright. Copying for private or commercial purposes, in part or in whole, is not permitted unless authorised by AUDI AG. AUDI AG does not guarantee or accept any liability with respect to the correctness of information in this document. Copyright by AUDI AG.

Refrigerant circuit with expansion valve, receiver and second evaporator

Note

- *This block diagram shows a refrigerant circuit with expansion valve, receiver and a second evaporator (optional extra for certain vehicles).*
- *On vehicles with expansion valve and receiver, the expansion valve is removed and replaced with an adapter. Depending on the vehicle, the receiver is also removed and the pipe connections to the receiver are connected using two adapters and a filler hose.*
- *On vehicles with only one evaporator, the components from item "16" onwards are not fitted / are not required.*

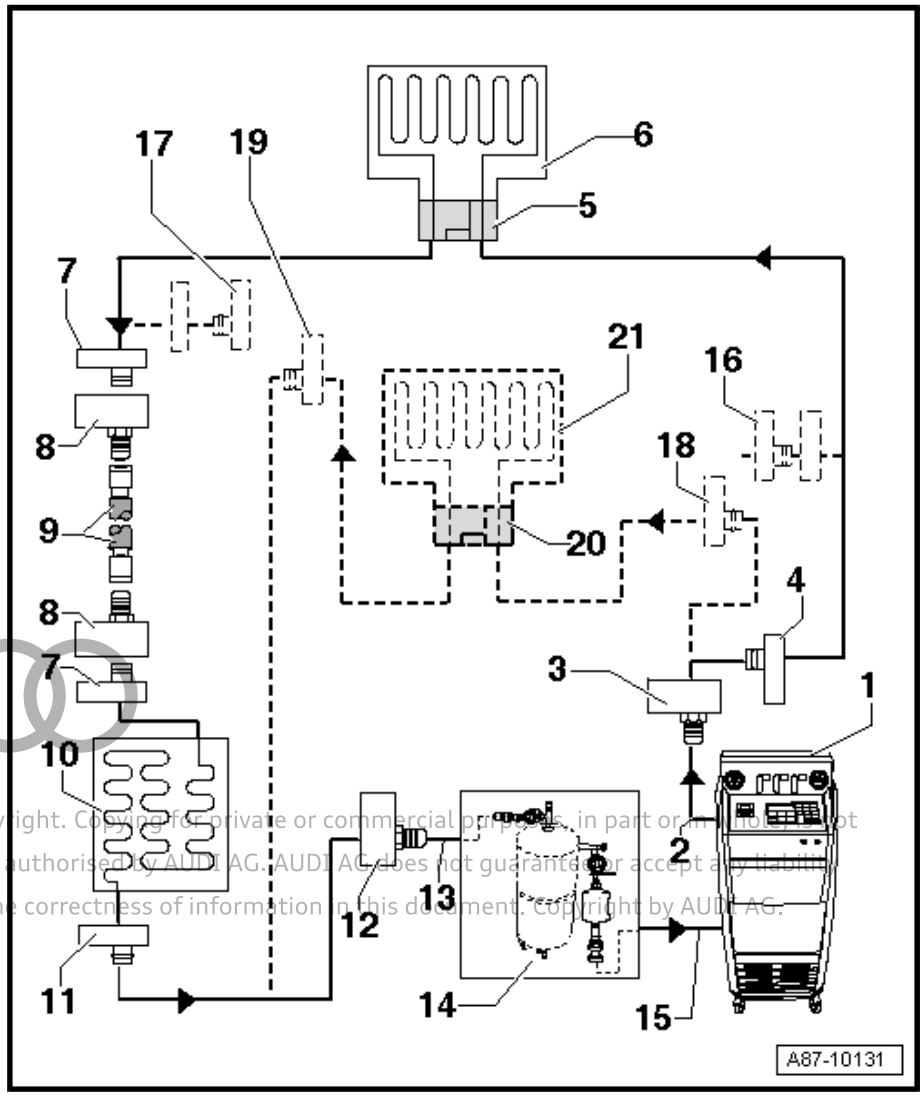

1 - Air conditioner service station

- With electronics and a flushing program, Air conditioner service station with flushing kit ⇒ Electronic parts catalogue (Tools; Workshop equipment/tools; Air conditioning/heating).
- If use is made of an air conditioner service station with no flushing program, the process is to be implemented manually (evacuation, 3x flushing with at least 4 kg of refrigerant each time, extraction of refrigerant again, evacuation).

2 - Refrigerant hose of air conditioner service station

- From the high-pressure side of the air conditioner service station (generally red coloured) to the connection for the low-pressure side of the air conditioner compressor at the refrigerant circuit (larger diameter)

3 - Adapter for connection (low-pressure side) at refrigerant circuit

- Different versions depending on vehicle ⇒ page 111
- From adapter set for refrigerant circuits - VAS 6338/1-

4 - Connection (low-pressure side) at refrigerant circuit

- Different versions depending on vehicle ⇒ page 111

5 - Adapter for removed expansion valve

- Different versions depending on vehicle ⇒ page 111

Protected by copyright. Copying for private or commercial purposes, in part or in whole, is not permitted unless authorised by AUDI AG. AUDI AG does not guarantee or accept any liability with respect to the correctness of information in this document. Copyright by AUDI AG.

- From adapter set for refrigerant circuits - VAS 6338/1-

6 - Evaporator

7 - Connection to receiver

- Different versions depending on vehicle ⇒ page 111
- Not fitted on vehicles with a desiccant cartridge in the receiver at the condenser or with a receiver installed in the condenser ⇒ Heating, air conditioning; Rep. gr. 87 ; Refrigerant circuit (vehicle-specific Workshop Manual).

8 - Adapter for bridging removed receiver

- Not necessary on all vehicles
- Different versions depending on vehicle ⇒ page 111
- From adapter set for refrigerant circuits - VAS 6338/1-

Protected by copyright. Copying for private or commercial purposes, in part or in whole, is not permitted unless authorised by AUDI AG. AUDI AG does not guarantee or accept any liability with respect to the correctness of information in this document. Copyright by AUDI AG.

9 - Filler hose for refrigerant ⇒ page 111

- For example filler hose - VAS 6338/31- (from adapter set for refrigerant circuits - VAS 6338/1-)

10 - Condenser

- If a receiver with desiccant cartridge is fitted at the condenser, the desiccant cartridge must be removed (seal receiver at or in condenser again following removal) ⇒ Heating, air conditioning; Rep. gr. 87 ; Refrigerant circuit (vehicle-specific Workshop Manual).
- If the receiver is attached directly to the condenser, flush the system before removing and renewing the receiver ⇒ Heating, air conditioning; Rep. gr. 87 ; Refrigerant circuit (vehicle-specific Workshop Manual).

Note

On certain vehicles, the receiver is integrated into the condenser, and the desiccant cartridge cannot be renewed separately or is not available separately. On these vehicles, renew the condenser together with the receiver / desiccant cartridge after flushing ⇒ Heating, air conditioning; Rep. gr. 87 ; Refrigerant circuit (vehicle-specific Workshop Manual) and ⇒ Electronic parts catalogue .

11 - Connection (high-pressure side) at refrigerant circuit

- Different versions depending on vehicle ⇒ page 111

12 - Adapter for connection (high-pressure side) at refrigerant circuit

- Different versions depending on vehicle ⇒ page 111
- From adapter set for refrigerant circuits - VAS 6338/1-

13 - Filler hose to refrigerant circuit flushing kit

- From connection (high-pressure side) of air conditioner compressor at refrigerant circuit (smaller diameter) to inlet of flushing kit for refrigerant circuits

14 - Refrigerant circuit flushing kit

- Different versions and different designs of the refrigerant circuit flushing kit ⇒ Electronic parts catalogue (Tools; Workshop equipment/tools; Air conditioning/heating).
- With filter, sight glass, safety valve, heater, refrigerant vessel etc. (depending on version)
- Depending on the design of the air conditioner service station and the refrigerant circuit flushing kit, a non-return valve may be fitted at the outlet of the refrigerant circuit flushing kit (to guarantee the correct direction of refrigerant flow when flushing).
- Depending on the design of the refrigerant circuit flushing kit, a connection for a service coupling for refrigerant circuits may be fitted at the inlet (and possibly also at the outlet) of the flushing kit (instead of a 5/8-18 UNF external thread). If a service connection with valve is fitted at the outlet of the flushing kit, this valve must be fully open when the service connection is connected (if the valve is not fully open this creates a constriction). If there is a connection for a service coupling at the inlet of the flushing device, modify the inlet so that the refrigerant hose that comes from the vehicle can be directly connected (a

service coupling and a valve in the inlet of the flushing device creates a constriction, which hinders the flow of refrigerant out of the vehicle into the flushing device and therefore hampers the flushing process).

Caution

Danger of flushing kit outlet icing up if a valve is fitted but not fully open.
If a valve is fitted in the connection but not fully open, this creates a constriction which obstructs the flow of refrigerant in the flushing process and which may ice up due to excessive cooling.

If there is a service connection with valve at the outlet of the flushing kit, this valve must be fully open during the flushing process.

If excessive cooling (icing-up) occurs at the outlet of the flushing kit during the flushing process, abort the flushing process and extract the refrigerant from the flushing kit and from the vehicle via the high-pressure and low-pressure sides. Then check the valve in the outlet of the flushing kit and repair it if necessary.

Danger of flushing kit inlet icing up in the event of a constriction caused by a service coupling and a valve fitted in the service connection.
Remove the service connection fitted to this connection and connect the service hose from the vehicle directly (without constriction) to the flushing kit, using an adapter if necessary (this depends on the thread at the flushing kit inlet).

Copyright. Copying for private or commercial purposes, in part or in whole, is not permitted unless authorised by AUDI AG. AUDI AG does not guarantee or accept any liability with respect to the correctness of information in this document. Copyright by AUDI AG.

15 - Refrigerant hose of air conditioner service station

- From low-pressure side of air conditioner service station (usually blue) to outlet of flushing kit for refrigerant circuits

16 - Adapter for sealing outlet to second evaporator

- Only required for certain vehicles with “second evaporator” as optional extra
- From adapter set for refrigerant circuits - VAS 6338/1-

17 - Adapter for sealing outlet to second evaporator

- Only required for certain vehicles with “second evaporator” as optional extra
- From adapter set for refrigerant circuits - VAS 6338/1-

18 - Connection (low-pressure side) at refrigerant circuit to second evaporator

- ❑ Different versions depending on vehicle ⇒ page 111
- ❑ Only fitted on certain vehicles with “second evaporator” as optional extra

19 - Connection (high-pressure side) at refrigerant circuit to second evaporator

- ❑ Different versions depending on vehicle ⇒ page 111
- ❑ Only fitted on certain vehicles with “second evaporator” as optional extra

20 - Adapter for expansion valve (removed) at second evaporator

- ❑ Different versions depending on vehicle ⇒ page 111
- ❑ Only required for certain vehicles with “second evaporator” as optional extra
- ❑ From adapter set for refrigerant circuits - VAS 6338/1-

21 - Second evaporator

- ❑ Only fitted on certain vehicles with “second evaporator” as optional extra

Vehicles with high-voltage system (without additional air conditioner functions, e.g. Audi A3 e-tron, Audi Q5 hybrid)

Note

- *The refrigerant circuit is flushed in one or two flushing cycles, depending on the circuit’s set-up.*
- *On vehicles without a heat exchanger for the high-voltage battery (⇒ Heating, air conditioning; Rep. gr. 87 ; Refrigerant circuit; System overview - refrigerant circuit), the refrigerant circuit is flushed in one flushing cycle ⇒ page 102 .*
- *On vehicles with a heat exchanger for the high-voltage battery / evaporator in the battery cooling module (⇒ Heating, air conditioning; Rep. gr. 87 ; Refrigerant circuit; System overview - refrigerant circuit), the refrigerant circuit is flushed in two flushing cycles (first the section with the evaporator in the heater and air conditioning unit, front, and subsequently the section with the heat exchanger for the high-voltage battery/ evaporator in the battery cooling module)*
  ⇒ “5.5.3 Adapters for connecting flushing circuits”, page 111 .
- *On vehicles with two evaporators or with an evaporator and a heat exchanger, the circuit to the second evaporator or to the heat exchanger must be separated from the circuit of the first evaporator using hand shut-off valves and flushed in a separate operation*
  ⇒ “5.5.3 Adapters for connecting flushing circuits”, page 111 and ⇒ Heating, air conditioning; Rep. gr. 87 ; Refrigerant circuit (vehicle-specific Workshop Manual).
- *The layout of the different flushing circuits for these vehicles is similar to the layout on a vehicle with 2 evaporators ⇒ page 102 .*

Protected by copyright. Copying for private or commercial purposes, in part or in whole, is not permitted unless authorised by AUDI AG. AUDI AG does not guarantee or accept any liability with respect to the correctness of information in this document. Copyright by AUDI AG.

Vehicles with high-voltage system (with additional air conditioner functions such as heat pump operation, e.g. Audi Q7 e-tron)

Note

- *The refrigerant circuit is cleaned in multiple flushing cycles ⇒ page 111 and ⇒ Heating, air conditioning; Rep. gr. 87 ; Refrigerant circuit; Cleaning air conditioner refrigerant circuit .*
- *To perform the flushing procedure, the circuit is separated into multiple sections, which are then flushed in one flushing cycle each. The circuit is separated by activation of the installed electrically activated valves and via the installed manual shut-off valves (must be activated manually) ⇒ Heating, air conditioning; Rep. gr. 87 ; Refrigerant circuit; Cleaning air conditioner refrigerant circuit .*
- *The layout of the different flushing circuits for these vehicles is described in the corresponding vehicle-specific Workshop Manual ⇒ Heating, air conditioning; Rep. gr. 87 ; Refrigerant circuit; Cleaning air conditioner refrigerant circuit .*

Protected by copyright. Copying for private or commercial purposes, in part or in whole, is not permitted unless authorised by AUDI AG. AUDI AG does not guarantee or accept any liability with respect to the correctness of information in this document. Copyright by AUDI AG.

5.5.2 Flushing electrically driven air conditioner compressor (removing refrigerant oil)

Notes on removing refrigerant oil from the electrically driven air conditioner compressor (by flushing)

Note

- *With the electrically driven air conditioner compressor, the refrigerant oil cannot be poured out in the same way and to the same extent as with the mechanically driven air conditioner compressor. There is no oil drain plug and the internal structure means that, depending on the version, it may only be possible to pour out a small amount of refrigerant oil (or even none at all). Depending on the version of the air conditioner compressor and how it is stored, approx. 30 to 80 cm ^{3} of refrigerant oil may remain in the air conditioner compressor after the pouring operation (the electric air conditioner compressor cannot be turned). Depending on the problem, the air conditioner compressor must therefore be flushed in order to remove the refrigerant oil and determine the quantity of refrigerant oil in the air conditioner compressor ⇒ "9.1.3 Renewing air conditioner compressor without having to clean refrigerant circuit", page 262 .*
- *On the electrically driven air conditioner compressor, the refrigerant oil can be removed by flushing in the flow direction (flushing in the opposite direction is not possible on account of the built-in valves).*
- *For the flushing procedure, position the air conditioner compressor so that t.he connection for the refrigerant line on the high-pressure side is as low down as possible.*
- The electrically driven air conditioner compressor must be flushed if there is a possibility that there is too much refrigerant oil in the refrigerant circuit or in order to remove contaminated (moisture-laden) refrigerant oil from the air conditioner compressor. In these cases, the refrigerant circuit must also be flushed to clean it and allow the correct quantity of refrigerant oil for the refrigerant circuit to be set once again ⇒ "10.2.2 Refrigerant oil capacities", page 321 .
- If an electrically driven air conditioner compressor is renewed, it is not always necessary to flush the refrigerant circuit. The

quantity of refrigerant oil in the removed air conditioner compressor can be determined by flushing the removed air conditioner compressor. The quantity of refrigerant oil in the new air conditioner compressor must then be matched to the quantity flushed out of the old air conditioner compressor (plus 10 cm ^{3}) by pouring out the excess
⇒ "9.1.3 Renewing air conditioner compressor without having to clean refrigerant circuit", page 262 .

- To determine the quantity of refrigerant oil in the removed air conditioner compressor, the refrigerant oil must be flushed out of the air conditioner compressor to be removed and the flushed quantity measured (empty the vessels for old oil provided at the air conditioner service station before flushing the air conditioner compressor). Refrigerant oil must then be poured out of the new air conditioner compressor until the quantity remaining in the new air conditioner compressor corresponds to the quantity of refrigerant oil flushed out from the old air conditioner compressor (plus 10 cm ^{3}). Dispose of refrigerant oil flushed out of the defective air conditioner compressor and poured out of the new air conditioner compressor ⇒ Audi ServiceNet, HSO Environmental Protection (observe local regulations).

Protected by copyright. Copying for private or commercial purposes, in part or in whole, is not permitted unless authorized by AUDI AG. AUDI AG does not guarantee or accept any liability with respect to the correctness and completeness of this document. Copyright by AUDI AG.

- The air conditioner compressor to be newly installed must be flushed if the quantity of refrigerant oil that can be poured out of it is insufficient. After flushing, the air conditioner compressor to be installed must be filled up with the same quantity of new refrigerant oil as was flushed out of the old air conditioner. Example: If 120 cm^3 of refrigerant oil was flushed out of the removed air conditioner compressor, and the new compressor contains 200 cm^3 (see type plate and
⇒ "10.2.2 Refrigerant oil capacities", page 321), 110 cm^3 (120 cm^3 minus 10 cm^3) must be poured out of the new compressor so that the refrigerant circuit contains the correct quantity of refrigerant oil after the new compressor is installed. If the required quantity of refrigerant oil cannot be poured out, then the air conditioner compressor to be newly installed must also be flushed. The new air conditioner compressor must then be filled up with the same quantity of refrigerant oil as was previously flushed out of the old air conditioner compressor.

Flushing the electrically driven air conditioner compressor

Note

Depending on the air conditioner compressor, a new compressor can be filled with a larger quantity of refrigerant oil (e.g. 290 cm^3 on the Audi Q7 e-tron); refer to the manufacturer's label on the air conditioner compressor and
⇒ "10.2.2 Refrigerant oil capacities", page 321). Before flushing new air conditioner compressors filled with more than 100 cm^3, pour out as much refrigerant oil as possible. Reason: Depending on the version of the air conditioner service station, the quantity of oil which can be separated in one operation may be limited (e.g. 150 cm^3). Further notes ⇒ Item 5 (page 108)

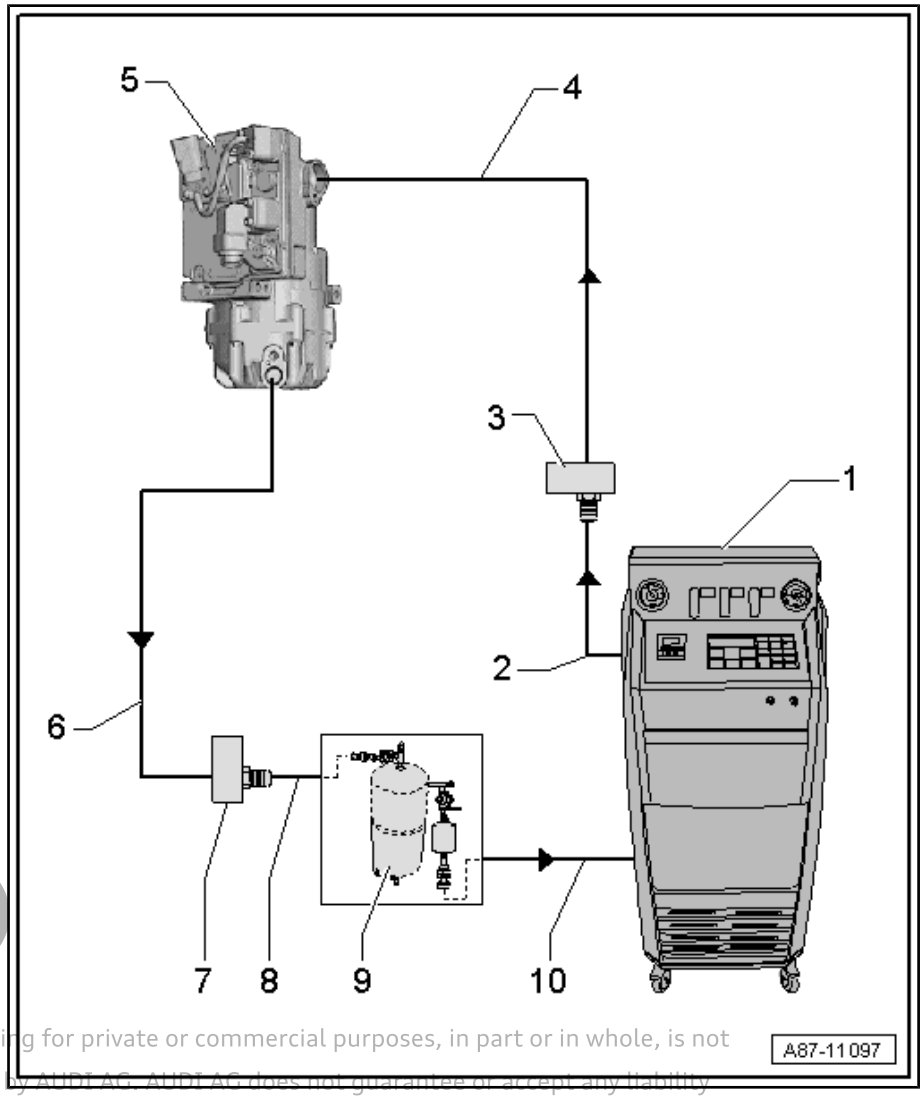

1 - Air conditioner service station

- With electronics and a flushing program, Air conditioner service station with flushing kit ⇒ Electronic parts catalogue (Tools; Workshop equipment/tools; Air conditioning/heating).
- If use is made of an air conditioner service station with no flushing program, the process is to be implemented manually (evacuation, 3x flushing with at least 2 kg of refrigerant each time, extraction of refrigerant again, evacuation).

2 - Refrigerant hose of air conditioner service station

- From the high-pressure side of the air conditioner service station (generally red coloured) to the connection for the low-pressure side of the air conditioner compressor at the refrigerant circuit (larger diameter)

3 - Adapter for connection (low-pressure side) to air conditioner compressor

- Different versions depending on vehicle ⇒ page 111
- Use the adapter from the VW/Audi passenger vehicle adapter set - VAS 6338/1- (here adapter - VAS 6338/41-).

Protected by copyright. Copying for private or commercial purposes, in part or in whole, is not permitted unless authorised by AUDI AG. AUDI AG does not guarantee or accept any liability with respect to the correctness of information in this document. Copyright by AUDI AG.

4 - Refrigerant line

- For connecting air conditioner compressor to adapter ⇒ Item 3 (page 108)

Note

- *A refrigerant line must only be used if an adapter - VAS 6338/41- is not available.*
- *If an adapter - VAS 6338/41- for setting up the flushing circuit is not available, remove e.g. the refrigerant line to the condenser from the vehicle (or use a refrigerant line with part number 7L6 820 744 AD) ⇒ Electronic parts catalogue .*

5 - Electrically driven air conditioner compressor

- The air conditioner compressor is flushed in flow direction (from the low-pressure end inlet to the high-pressure end outlet)
- To flush as much refrigerant oil as possible out of the air conditioner compressor, the compressor should be positioned with the high-pressure end outlet as low down as possible when flushing

Caution

Danger of impairing operation of the air conditioner service station (depending on version and quantity of refrigerant oil in the air conditioner compressor).

- *Depending on the version of the air conditioner service station, the quantity of oil which can be separated in one operation may be limited (e.g. 100 cm³). Observe the operating instructions and technical product description for the air conditioner service station.*
- *Depending on the air conditioner compressor, a new compressor can be filled with a larger quantity of refrigerant oil (e.g. 290 cm³ on the Audi Q7 e-tron)*
  ⇒ "10.2.2 Refrigerant oil capacities", page 321
  and
  ⇒ "9.1.3 Renewing air conditioner compressor without having to clean refrigerant circuit", page 262
- *Before flushing new air conditioner compressors filled with more than 150 cm³, pour out as much refrigerant oil as possible (into a clean container, via the high-pressure and low-pressure connection). This prevents the oil separator of your air conditioner service station from being overfilled during the flushing process.*
- *Then flush any remaining refrigerant oil out of the air conditioner compressor.*

Protected by copyright. Copying for private or commercial purposes, in part or in whole, is not permitted unless authorised by AUDI AG. AUDI AG does not guarantee or accept any liability with respect to the accuracy of the information in this document. Copyright by AUDI AG.

Note

If you pour the clean refrigerant oil out of a new air conditioner compressor into a clean container and then seal the container so that it is air-tight, you can re-use this oil to adjust the quantity of refrigerant oil in the refrigerant circuit.

6 - Refrigerant line

- ❑ For connecting air conditioner compressor to adapter ⇒ Item 7 (page 110)

Note

otected by copyright. Copying for private or commercial purposes, in part or in whole, is not permitted without the consent of AUDI AG. AUDI AG does not guarantee or accept any liability with respect to the correctness of information in this document. Copyright by AUDI AG.

- ♦ *A refrigerant line must only be used if an adapter - VAS 6338/40- is not available.*
- ♦ *If an adapter - VAS 6338/40- for setting up the flushing circuit is not available, use e.g. a refrigerant line with part number 7L6 820 721 BF or 4G0 260 701 AB ⇒ Electronic parts catalogue .*

7 - Adapter for connecting (high-pressure side) to air conditioner compressor

- ❑ Different versions depending on vehicle ⇒ page 111
- ❑ Use the adapter from the VW/Audi passenger vehicle adapter set - VAS 6338/1- (here adapter - VAS 6338/40-).

8 - Filler hose to refrigerant circuit flushing kit

- ❑ From connection (high-pressure side) of air conditioner compressor at refrigerant circuit (smaller diameter) to inlet of flushing kit for refrigerant circuits

9 - Refrigerant circuit flushing kit

- ❑ Different versions and different designs of the refrigerant circuit flushing kit ⇒ Electronic parts catalogue (Tools; Workshop equipment/tools; Air conditioning/heating).
- ❑ With filter, sight glass, safety valve, heater, refrigerant vessel etc. (depending on version)
- ❑ Depending on the design of the air conditioner service station and the refrigerant circuit flushing kit, a non-return valve may be fitted at the outlet of the refrigerant circuit flushing kit (to guarantee the correct direction of refrigerant flow when flushing).
- ❑ Depending on the design of the refrigerant circuit flushing kit, a connection for a service coupling for refrigerant circuits may be fitted at the inlet (and possibly also at the outlet) of the flushing kit (instead of a 5/8-18 UNF external thread). If a service connection with valve is fitted at the outlet of the flushing kit, this valve must be fully open when the service connection is connected (if the valve is not fully open this creates a constriction). If there is a connection for a service coupling at the inlet of the flushing device, modify the inlet so that the refrigerant hose that comes from the vehicle can be directly connected (a service coupling and a valve in the inlet of the flushing device creates a constriction, which hinders the flow of refrigerant out of the vehicle into the flushing device and therefore hampers the flushing process).

Caution

Danger of flushing kit outlet icing up if a valve is fitted but not fully open.
If a valve is fitted in the connection but not fully open, this creates a constriction which obstructs the flow of refrigerant in the flushing process and which may ice up due to excessive cooling.

If there is a service connection with valve at the outlet of the flushing kit, this valve must be fully open during the flushing process.

If excessive cooling (icing-up) occurs at the outlet of the flushing kit during the flushing process, abort the flushing process and extract the refrigerant from the flushing kit and from the vehicle via the high-pressure and low-pressure sides. Then check the valve in the outlet of the flushing kit and repair it if necessary.

Danger of flushing kit inlet icing up in the event of a constriction caused by a service coupling and a valve fitted in the service connection.
Remove the service connection fitted to this connection and connect the service hose from the vehicle directly (without constriction) to the flushing kit, using an adapter if necessary (this depends on the thread at the flushing kit inlet).

This document is copyright. Copying for private or commercial purposes, in part or in whole, is not permitted unless authorised by AUDI AG. AUDI AG does not guarantee or accept any liability with respect to the correctness of information in this document. Copyright by AUDI AG.

10 - Refrigerant hose of air conditioner service station

- ❑ From low-pressure side of air conditioner service station (usually blue) to outlet of flushing kit for refrigerant circuits

5.5.3 Adapters for connecting flushing circuits

- ♦ The following table lists the various adapters required for connecting the air conditioner service station to the refrigerant circuit for flushing and for bridging the removed receiver or reservoir and expansion valve (vehicle-specific).
- ♦ Use a filler hose with 5/8 -18 UNF connections (short version e.g. filler hose - VAS 6338/31-) to connect the two adapters

fitted instead of the reservoir or receiver removed earlier (contained in adapter set for refrigerant circuits - VAS 6338/1-).

- If a flushed refrigerant circuit is not supposed to be re-assembled immediately after flushing, leave the adapters in place at the connections and seal the connections at the adapters with the caps - VAS 6338/30- (from the adapter set for refrigerant circuits - VAS 6338/1-).
- Depending on the version of the air conditioner compressor and the production period, different connection and sealing methods may have been used for the refrigerant circuit ⇒ Heating, air conditioning; Rep. gr. 87 ; Refrigerant circuit (vehicle-specific Workshop Manual).
- The logo of the compressor manufacturer “Zexel” attached to the air conditioner compressor was modified from “Zexel” to “Valeo” from year of production 2006 onwards (change in manufacturer's name).

Block or screw connections

– Screw connection -A-

– Block connection -B-

Block connections with different types of seal

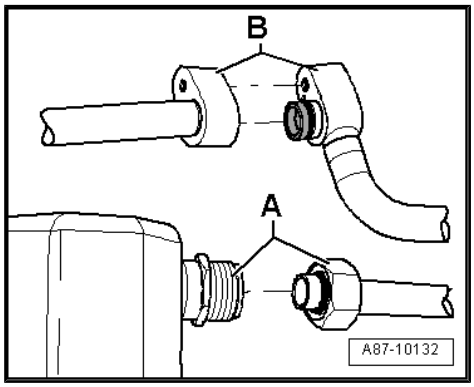

– Block connection with radial seal -A- (with plastic or metal guide -B-)

– Block connection with axial seal -C-

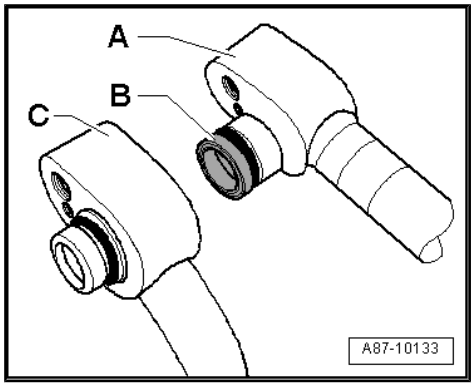

Assembling flushing circuit	
Audi A1 (8X_) and Audi A2	⇒ page 113
Audi A1 (GB)	⇒ page 114
Audi Q2, Audi A3, Audi Q3 and Audi TT	⇒ page 114
Audi Q2L e-tron (GAG), from 2019 onwards	⇒ page 116
Audi A3 e-tron	⇒ page 118
Audi 80, Audi 90, Audi Coupé, Audi Cabriolet and Audi A4	⇒ page 121
Audi A5 Coupé and Sportback, Audi Q5, Audi A5 Cabriolet	⇒ page 124
Audi Q5 hybrid	⇒ page 126
Audi 100, Audi A6 (4A_, 4B_ and 4F_), Audi allroad and Audi V8	⇒ page 130
Audi A6 (4G_ or 4X_ for China), Audi A7 (4G_ or 4X_ for China)	⇒ page 131

Copyright by AUDI AG. Copying for private or commercial purposes, in part or in whole, is not permitted unless authorised by AUDI AG. AUDI AG does not guarantee or accept any liability with respect to the correctness of information in this document. Copyright by AUDI AG.

Protected by copyright. Copying for private or commercial purposes, in part or in whole, is not permitted unless authorised by AUDI AG. AUDI AG does not guarantee or accept any liability with respect to the correctness of information in this document. Copyright by AUDI AG.

Assembling flushing circuit	
Audi A6 hybrid, Audi A6 e-tron	⇒ page 132
Audi A6 (4A_ or 48_ for China), Audi A7 (4K_)	⇒ page 136
Audi A7 TFSI e (4K), from 2018 onwards	⇒ page 137
Audi A8 (4D_, 4E_ and 4H_)	⇒ page 139
Audi A8 hybrid (4H_)	⇒ page 142
Audi A8 (4N)	⇒ page 147
Audi A8 (4N_) TFSI e 2019 ▸	⇒ page 149
Audi Q7 (4L_)	⇒ page 151
Audi Q7 (4M_), Audi Q8 (4M_)	⇒ page 153
Audi Q7 e-tron (4M_)	⇒ page 155
Audi R8 (42_)	⇒ page 157
Audi R8 (4S_)	⇒ page 158
Audi e-tron (GE_) 2019 ▸	⇒ page 160

Audi A1 (8X_) 2011 ▸ and Audi A2

Vehicle	Adapters required for connections to air conditioner compressor	Adapters required for connections to reservoir/receiver	Other requirements
Audi A1 (8X_) 2011 ▸	– Compressor manufacturer “Denso”, “Sanden” or “Delphi/ Mahle” ♦ Low-pressure side: adapter - VAS 6338/12- ♦ High-pressure side: adapter - VAS 6338/3- or adapter - VAS 6338/2- (depending on layout of air conditioner compressor and corresponding refrigerant line)	Different versions – Version 1 (receiver integrated in condenser): No adapter required; the desiccant bag is removed from the receiver at the condenser and the opening is sealed again for flushing. – Version 2 (receiver attached to condenser): No adapter required; the receiver is left installed (renewed after flushing).	Expansion valve removed and adapter - VAS 6338/34- or adapter - VAS 6338/39- (see notes below) fitted (or old removed expansion valve drilled open for flushing and re-installed) ⇒ page 92

Vehicle	Adapters required for connections to air conditioner compressor	Adapters required for connections to reservoir/receiver	Other requirements
Audi A2 (8Z_) 2001 ►	– Compressor manufacturer “Denso” ◆ Low-pressure side: adapter - VAS 6338/12- ◆ High-pressure side: adapter - VAS 6338/2-	Reservoir – Screw connection at inlet Adapter - VAS 6338/9- – Block connection with axial seal at outlet Adapter - VAS 6338/10-	- Restrictor removed, pipe connections re-assembled

Note

- *Depending on the version of the condenser, the receiver may be attached to or integrated into the condenser on the Audi A1/S1. The integrated receiver is fitted with a desiccant cartridge which can be renewed separately. If an attached receiver (introduction not yet finalised) is fitted, it must be renewed after flushing ⇒ Electronic parts catalogue and ⇒ Heating, air conditioning; Rep. gr. 87 ; Refrigerant circuit (vehicle-specific Workshop Manual).*
- *Different versions of air conditioning unit (different heat exchanger, seals, expansion valve etc.), depending on production period and vehicle identification number of Audi A1/S1 ⇒ Electronic parts catalogue . Vehicles with type codes “8X1” and “8XA” in the vehicle identification number are fitted with an expansion valve on which the two refrigerant lines are secured at top (adapter - VAS 6338/34- is compatible). Vehicles with the type codes “8XF” and “8XK” in the vehicle identification number are fitted with an expansion valve with two refrigerant lines bolted on at the bottom; the adapter - VAS 6338/39- is compatible here ⇒ Heating, air conditioner; Rep. gr. 87 ; Refrigerant circuit (vehicle-specific Workshop Manual).*

Protected by copyright. Copying for private or commercial purposes, in part or in whole, is not permitted unless authorised by AUDI AG. AUDI AG does not guarantee or accept any liability with respect to the correctness of information in this document. Copyright by AUDI AG.

Audi Q2, Audi A3, Audi Q3, Audi TT, Audi A1 (GB) 2019 ►

Vehicle	Adapters required for connections to air conditioner compressor	Adapters required for connections to reservoir/receiver	Other requirements
Audi A3 (8L_) 1997 ► Audi TT (8N_) 1999 ►	– Compressor manufacturer “Sanden” or “Zexel / Valeo” ◆ Low-pressure side: adapter - VAS 6338/7- ◆ High-pressure side: adapter - VAS 6338/2-	Receiver – Block connections with axial seal at inlet and outlet Adapter - VAS 6338/2- (2x required)	Expansion valve removed and Adapter - VAS 6338/19- fitted (or drilled-open expansion valve e.g. 6N0 820 679 C fitted ⇒ page 92)

Vehicle	Adapters required for connections to air conditioner compressor	Adapters required for connections to reservoir/receiver	Other requirements
Audi A3 (8P_) 2004 ► Audi TT (8J_) 2007 ► Audi Q3 (8U_ / 84_) 2012 ►	– Compressor manufacturer for Audi A3 / Audi Q3: “Sanden”, “Denso”, “Delphi/ Mahle” or “Zexel/Valeo” – Compressor manufacturer for Audi TT: “Denso”, “Sanden” or “Delphi/ Mahle” ♦ Low-pressure side: adapter - VAS 6338/12- ♦ High-pressure side: adapter - VAS 6338/3-	Receiver (different versions) – Adapter not required, receiver remains in position – Depending on the version of the condenser, it may be necessary to remove the desiccant cartridge from the receiver on the condenser before flushing and to seal the opening again (see note).	Expansion valve removed and adapter - VAS 6338/18- (or drilled-out expansion valve e.g. 1K0 820 6 79 X) installed ⇒ page 92
Audi Q2 (GA_), Audi A3 (8V_/ 85_) 2013 ► Audi TT (FV_) 2015 ► Audi Q2 (G1_) 2019► Audi Q3 (F3_/ G2_) 2019 ► Audi A1 (GB) 2019 ►	– Compressor manufacturer “Denso” or “Sanden” ♦ Low-pressure side: adapter - VAS 6338/12- ♦ High-pressure side: adapter - VAS 6338/3- ♦	Receiver (different versions) – No adapter required; receiver is not removed (or is integrated in condenser). – Depending on the version of the condenser, it may be necessary to remove the desiccant cartridge from the receiver on the condenser before flushing and to seal the opening again (see note).	Expansion valve removed and adapter - VAS 6338/38- (or drilled-out expansion valve e.g. 5Q0 820 6 79 X) installed ⇒ page 92

Protected by copyright. Copying for private or commercial purposes, in part or in whole, is not permitted unless authorised by AUDI AG. AUDI AG does not guarantee or accept any liability with respect to the correctness of information in this document. Copyright by AUDI AG.

Note

- *The design of the receiver on the Audi A3, Audi Q3 and Audi TT differs depending on the condenser manufacturer. On the Audi TT (8J_) 2007 ► with a 5-cyl. engine for example, a different condenser version is installed than in vehicles with 4-cyl. or 6-cyl. engines. This condenser e.g. has an integrated receiver. The integrated receiver contains a desiccant cartridge which is currently not always available as a replacement part. Therefore it may be necessary to renew the complete condenser after eliminating any faults on vehicles fitted with this condenser ⇒ Electronic parts catalogue and ⇒ Heating, air conditioning; Rep. gr. 87 ; Refrigerant circuit (vehicle-specific Workshop Manual).*
- *On vehicles with condensers with an integrated receiver / desiccant cartridge which cannot be renewed separately or which are not available as separate replacement parts, the condenser must be renewed (together with integrated desiccant cartridge) after flushing ⇒ Heating, air conditioning; Rep. gr. 87 ; Refrigerant circuit (vehicle-specific Workshop Manual) and ⇒ Electronic parts catalogue .*

Protected by copyright. Copying for private or commercial purposes, in part or in whole, is not permitted without the consent of AUDI AG. AUDI AG does not guarantee or accept any liability with respect to the correctness of information in this document. Copyright by AUDI AG.

Audi Q2L e-tron (GAG), from 2019 onwards

Vehicle	Adapters required for connections to air conditioner compressor	Adapters required for connections to reservoir/receiver	Other requirements
Audi Q2L e-tron (GAG), from 2019 onwards	♦ Low-pressure side: adapter - VAS 6338/12- ♦ High-pressure side: adapter - VAS 6338/3-	– Remove desiccant cartridge from receiver on condenser before flushing and seal opening again (see note).	♦ Expansion valve removed and adapter - VAS 6338/38- (or old, drilled-out expansion valve ⇒ page 92) installed

Vehicle	Adapters required for connections to air conditioner compressor	Adapters required for connections to reservoir/receiver	Other requirements
	Adapters/lines required for connections on electrically driven air conditioner compressor (for flushing air conditioner compressor) ⇒ page 107 (Flushing electrically driven air conditioner compressor)		♦ On the electrically driven air conditioner compressor, the refrigerant oil is to be removed by flushing in the direction of flow (it is not possible to flush in the opposite direction due to the valves installed) ♦ For the flushing procedure, position the air conditioner compressor so that the connection for the refrigerant line on the high-pressure side is as low down as possible

Protected by copyright. Copying for private or commercial purposes, in part or in whole, is not permitted unless authorised by AUDI AG. AUDI AG does not guarantee or accept any liability with respect to the correctness of information in this document. Copyright by AUDI AG.

Note

After flushing, the desiccant cartridge in the receiver on the condenser must be renewed ⇒ Heating, air conditioning; Rep. gr. 87 ; Refrigerant circuit .

Protected by copyright. Copying for private or commercial purposes, in part or in whole, is not permitted unless authorised by AUDI AG. AUDI AG does not guarantee or accept any liability with respect to the correctness of information in this document. Copyright by AUDI AG.

Audi A3 e-tron

Vehicle	Adapters required for connections to air conditioner compressor	Adapters required for connections to reservoir/receiver	Other requirements
Audi A3 (8V_/ 85_) 2013 ➤	– Compressor manufacturer “Denso” or “Sanden” ◆ Low-pressure side: adapter - VAS 6338/12- ◆ High-pressure side: adapter - VAS 6338/3-	Receiver (different versions) – No adapter required; receiver is not removed (or is integrated in condenser). – Depending on the version of the condenser, it may be necessary to remove the desiccant cartridge from the receiver on the condenser before flushing and to seal the opening again (see note). ◆ Shut-off valve - VAS 6338/42-	◆ Expansion valve removed and adapter - VAS 6338/38- (or drilled-out expansion valve e.g. 5Q0 820 679 X) installed ⇒ page 92 ◆ Shut-off valves - N541- and - N542- removed and two shut-off valves - VAS 6338/42- installed instead (see notes below) Renew shut-off valves -N541- and -N542- after flushing. ◆ Restrictor in refrigerant line to heat exchanger for high-voltage battery removed or refrigerant line drilled open (see notes below) Renew after flushing

Vehicle	Adapters required for connections to air conditioner compressor	Adapters required for connections to reservoir/receiver	Other requirements
	Adapters / lines required for connections on electrically driven air conditioner compressor (for flushing air conditioner compressor) ⇒ page 107 (Flushing the electrically driven air conditioner compressor)		♦ On the electrically driven air conditioner compressor, the refrigerant oil is to be removed by flushing in the direction of flow (it is not possible to flush in the opposite direction due to the valves installed) ♦ For the flushing procedure, position the air conditioner compressor so that the connection for the refrigerant line on the high-pressure side is as low down as possible

Protected by copyright. Copying for private or commercial purposes, in part or in whole, is not permitted unless authorised by AUDI AG. AUDI AG does not guarantee or accept any liability with respect to the correctness of information in this document. Copyright by AUDI AG.

Note

- *The refrigerant circuit on the Audi A3 e-tron is flushed in 2 sections. In the first flushing cycle, the adapter installed for shut-off valve -N541- is opened and the adapter installed for shut-off valve -N542- is closed. The refrigerant circuit is flushed with the evaporator in the conditioning unit. In the second flushing cycle, the adapter installed for shut-off valve -N541- is closed and the adapter installed for shut-off valve -N542- is opened. The refrigerant circuit is flushed with the evaporator in the heat exchanger for high-voltage battery ⇒ Heating, air conditioning; Rep. gr. 87 ; Refrigerant circuit (vehicle-specific Workshop Manual).*
- *The illustration shows a refrigerant line -A- with a permanently installed restrictor -B- (without strainer). This refrigerant line must be drilled open (5.0 mm) with a suitable drill bit in order to flush the refrigerant circuit (remove restrictor if fitted) and must be cleaned before it is installed in the flushing circuit. After flushing, refrigerant line/inserted restrictor must be renewed ⇒ Electronic parts catalogue .*
- *The diameter of the restrictor hole -B- is approx. 0.7 mm. Depending on the version of the refrigerant line, the restrictor is either only inserted or fixed in position in the refrigerant line. If it is inserted, there may be a strainer for separating float elements, which may block off the restrictor hole.*
- *The design of the receiver on the Audi A3 differs depending on the manufacturer of the condenser. This condenser e.g. has an integrated receiver. The integrated receiver contains a desiccant cartridge which is currently not always available as a replacement part. Therefore it may be necessary to renew the complete condenser after eliminating any faults on vehicles fitted with this condenser ⇒ Electronic parts catalogue and ⇒ Heating, air conditioning; Rep. gr. 87 ; Refrigerant circuit (vehicle-specific Workshop Manual).*
- *On vehicles with condensers with an integrated receiver / desiccant cartridge which cannot be renewed separately or which are not available as separate replacement parts, the condenser must be renewed (together with integrated desiccant cartridge) after flushing ⇒ Heating, air conditioning; Rep. gr. 87 ; Refrigerant circuit (vehicle-specific Workshop Manual) and ⇒ Electronic parts catalogue .*

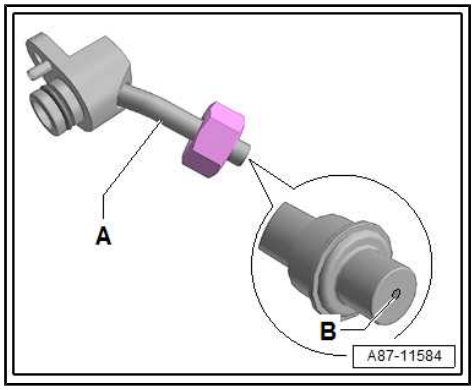

Protected by copyright. Copying for private or commercial purposes, in part or in whole, is not permitted unless authorised by AUDI AG. AUDI AG does not guarantee or accept any liability with respect to the correctness of information in this document. Copyright by AUDI AG.

Audi 80, Audi 90, Audi Coupé, Audi Cabriolet and Audi A4

Vehicle	Adapters required for connections to air conditioner compressor	Adapters required for connections to reservoir/receiver	Other requirements
Audi 80 (8A_/ 8C_), Audi Coupé (8B_), Audi Cabriolet (8G_) ► 2002 Audi A4 (8D_) 1995►	– Compressor manufacturer “Zexel / Valeo” (screw connections) ♦ Low-pressure side: adapter - VAG 1785/8- ♦ High-pressure side: adapter - VAG 1785/7-	Reservoir with different connection versions ♦ Version 1 – Screw connection at inlet Adapter - VAS 6338/9- – Screw connection at outlet Adapter - VAG 1785/8-	- Restrictor removed, pipe connections re-assembled
	– Compressor manufacturer “Denso” (block connections with radial and axial seal) ♦ Low-pressure side: adapter - VAS 6338/12- ♦ High-pressure side: adapter - VAS 6338/2-	♦ Version 2 – Screw connection at inlet Adapter - VAS 6338/9- – Block connection with axial seal at outlet Adapter - VAS 6338/10-	
Audi A4 (8E_) 2001 ► Audi A4 Cabriolet (8H_) 2003 ►	– Compressor manufacturer “Denso” (block connections with radial and axial seal) ♦ Low-pressure side: adapter - VAS 6338/12- ♦ High-pressure side: adapter - VAS 6338/2-	Reservoir with different connection versions ♦ Version 1 – Block connections with axial seal at inlet and outlet ♦ Adapter - VAS 6338/10- (2x required)	- Restrictor removed, pipe connections re-assembled

Protected by copyright. Copying for private or commercial purposes, in part or in whole, is not permitted unless authorised by AUDI AG. AUDI AG does not guarantee or accept any liability with respect to the correctness of information in this document. Copyright by AUDI AG.

Vehicle	Adapters required for connections to air conditioner compressor	Adapters required for connections to reservoir/receiver	Other requirements
	– Compressor manufacturer “Denso” (block connections with radial seal) ⇒ Heating, air conditioner; Rep. gr. 87 ; Refrigerant circuit (vehicle-specific Workshop Manual) ◆ Low-pressure side: adapter - VAS 6338/12- ◆ High-pressure side: adapter - VAS 6338/3-	◆ Version 2 – Block connections with radial seal at inlet and outlet ◆ Adapter - VAS 6338/8- (2x required)	
Audi A4 (8K_) 2008 ►	– Compressor manufacturer “Denso” ◆ Low-pressure side: adapter - VAS 6338/12- ◆ High-pressure side: adapter - VAS 6338/3-	Receiver (different versions) – Adapter not required, receiver remains in position – Depending on the version of the condenser, it may be necessary to remove the desiccant cartridge from the receiver on the condenser before flushing and to seal the opening again (see note).	Expansion valve removed and Adapter - VAS 6338/36- (or drilled-open expansion valve e.g. 8K0 820 679 A) fitted ⇒ page 92 – Refrigerant line with internal heat exchanger is not removed or is reinstalled after installation of adapter.

Protected by copyright. Copying for private or commercial purposes, in part or in whole, is not permitted unless authorised by AUDI AG. AUDI AG does not guarantee or accept any liability with respect to the correctness of information in this document. Copyright by AUDI AG.

Vehicle	Adapters required for connections to air conditioner compressor	Adapters required for connections to reservoir/receiver	Other requirements
Audi A4 (8W_) 2016 ► Audi A4 (86_) 2017 ►	– Compressor manufacturer “Denso” or “Sanden” ♦ Low-pressure side: adapter - VAS 6338/12- ♦ High-pressure side: adapter - VAS 6338/3-	– No adapter required; the dryer is removed from the receiver at the condenser and the opening is sealed off again.	Expansion valve removed and adapter - VAS 6338/44- installed (or an old expansion valve is drilled open and installed as an adapter ⇒ page 92) ⇒ Electronic parts catalogue .

Note

- *The design of the receiver on the Audi A4 (8K_) 2008 > differs depending on the condenser manufacturer ⇒ Heating, air conditioning; Rep. gr. 87 ; Refrigerant circuit (vehicle-specific Workshop Manual). Depending on the version of the condenser, the receiver may be attached to or integrated into the condenser. The integrated receiver contains a desiccant cartridge which is currently not always available as a replacement part. Therefore it may be necessary to renew the condenser after eliminating any faults on vehicles fitted with this condenser ⇒ Electronic parts catalogue .*
- *On vehicles with condensers with an integrated receiver / desiccant cartridge which cannot be renewed separately or which are not available as separate replacement parts, the condenser must be renewed (together with integrated desiccant cartridge) after flushing ⇒ Heating, air conditioning; Rep. gr. 87 ; Refrigerant circuit (vehicle-specific Workshop Manual) and ⇒ Electronic parts catalogue .*

Protected by copyright. Copying or distribution of this document, in part or in whole, is not permitted unless authorised by AUDI AG. AUDI AG does not guarantee or accept any liability with respect to the correctness of information in this document. Copyright by AUDI AG.

Audi A5 Coupé and Sportback, Audi Q5, Audi A5 Cabriolet

Vehicle	Adapters required for connections to air conditioner compressor	Adapters required for receiver connections	Other requirements
Audi A5 Coupé and Sportback (8T_) 2008 ► Audi Q5 (8R_ / 83_) 2008 ► Audi A5 Cabriolet (8F_) 2009 ►	– Compressor manufacturer “Denso” ◆ Low-pressure side: adapter - VAS 6338/12- ◆ High-pressure side: adapter - VAS 6338/3-	Receiver (different versions) – Adapter not required, receiver remains in position – Depending on the version of the condenser, it may be necessary to remove the desiccant cartridge from the receiver on the condenser before flushing and to seal the opening again (see note).	Expansion valve removed and adapter - VAS 6338/36- (or drilled-open expansion valve e.g. 8K0 820 679 A) fitted ⇒ page 92 – Refrigerant line with internal heat exchanger is not removed or is reinstalled after installation of adapter.
Audi A5 (F5_) 2016 ► Audi Q5 (FY_) 2017 ► Audi Q5 (87_) 2019	– Compressor manufacturer “Denso” or “Sanden” ◆ Low-pressure side: adapter - VAS 6338/12- ◆ High-pressure side: adapter - VAS 6338/3-	– No adapter required; the dryer is removed from the receiver at the condenser and the opening is sealed off again.	Expansion valve removed and adapter - VAS 6338/44- installed (or an old expansion valve is drilled open and installed as an adapter ⇒ page 92) ⇒ Electronic parts catalogue .

Protected by copyright. Copying for private or commercial purposes, in part or in whole, is not permitted unless authorised by AUDI AG. AUDI AG does not guarantee or accept any liability with respect to the correctness of information in this document. Copyright by AUDI AG.

Note

- *The receiver version varies on these vehicles depending on the manufacturer of the condenser ⇒ Heating, air conditioning; Rep. gr. 87 ; Refrigerant circuit (vehicle-specific Workshop Manual). Depending on the version of the condenser, the receiver may be attached to or integrated into the condenser. The integrated receiver contains a desiccant cartridge which is currently not always available as a replacement part. Therefore it may be necessary to renew the condenser after eliminating any faults on vehicles fitted with this condenser ⇒ Electronic parts catalogue .*
- *On vehicles with condensers with an integrated receiver / desiccant cartridge which cannot be renewed separately or which are not available as separate replacement parts, the condenser must be renewed (together with integrated desiccant cartridge) after flushing ⇒ Heating, air conditioning; Rep. gr. 87 ; Refrigerant circuit (vehicle-specific Workshop Manual) and ⇒ Electronic parts catalogue .*

Protected by copyright. Copying for private or commercial purposes, in part or in whole, is not permitted unless authorised by AUDI AG. AUDI AG does not guarantee or accept any liability with respect to the correctness of information in this document. Copyright by AUDI AG.

Audi Q5 hybrid

Vehicle	Adapters required for connections to/on air conditioner compressor	Adapters required for receiver connections	Other requirements
Audi Q5 (8R_) 2011 ►	Adapters required for connections to air conditioner compressor – Compressor manufacturer “Denso” ◆ Low-pressure side: adapter - VAS 6338/12- ◆ High-pressure side: adapter - VAS 6338/3-	Receiver (different versions) – Adapter not required, receiver remains in position – Depending on the version of the condenser, it may be necessary to remove the desiccant cartridge from the receiver on the condenser before flushing and to seal the opening again (see note).	Expansion valve removed and adapter - VAS 6338/36- (or drilled-open expansion valve e.g. 8K0 820 679 A) fitted ⇒ page 92 – Refrigerant line with internal heat exchanger is not removed or is reinstalled after installation of adapter.

Protected by copyright. Copying for private or commercial purposes, in part or in whole, is not permitted unless authorised by AUDI AG. AUDI AG does not guarantee or accept any liability with respect to the correctness of information in this document. Copyright by AUDI AG.

Vehicle	Adapters required for connections to/on air conditioner compressor	Adapters required for receiver connections	Other requirements
♦ Additionally for a vehicle with battery cooling module		For flushing circuit with evaporator in front air conditioning unit and condenser ♦ Adapter - VAS 6338/5- for sealing connection on low-pressure side (to second evaporator in battery cooling module) ♦ Adapter - VAS 6338/11- for sealing connection on high-pressure side (to second evaporator in battery cooling module) ♦ Shut-off valve - VAS 6338/42- or adapter - VAG 1785/5- to replace removed refrigerant shut-off valve 1 for hybrid battery - N516- (see notes)	There are various ways of flushing the circuit: ♦ Shut-off valve - N516- removed and shut-off valve - VAS 6338/42- installed in its place (see notes below). Renew shut-off valve - N516- after flushing. ♦ Flushing the circuit in one or two steps (see notes)
		To flush the evaporator in the battery cooling module and the attached lines ♦ Adapter - VAS 6338/3- for connecting air conditioner service station to connection on low-pressure side (to second evaporator). ♦ Adapter - VAS 6338/4- for connecting air conditioner service station to connection on high-pressure side (to second evaporator).	Expansion valve in refrigerant lines to second evaporator removed and adapter - VAS 6338/36- installed (or old expansion valve removed, drilled open for flushing and re-installed ⇒ page 92).

Protected by copyright. Copying for private or commercial purposes, in part or in whole, is not permitted unless authorized by AUDI AG. AUDI AG does not guarantee or accept any liability with respect to the correctness of information in this document. Copyright by AUDI AG.

Protected by copyright. Copying for private or commercial purposes, in part or in whole, is not permitted unless authorised by AUDI AG. AUDI AG does not guarantee or accept any liability with respect to the correctness of information in this document. Copyright by AUDI AG.

Vehicle	Adapters required for connections to/on air conditioner compressor	Adapters required for receiver connections	Other requirements
	Adapters / lines required for connections on electrically driven air conditioner compressor (for flushing air conditioner compressor) ⇒ page 107 (Flushing the electrically driven air conditioner compressor)		♦ On the electrically driven air conditioner compressor, the refrigerant oil is to be removed by flushing in the direction of flow (it is not possible to flush in the opposite direction due to the valves installed) ♦ For the flushing procedure, position the air conditioner compressor so that the connection for the refrigerant line on the high-pressure side is as low down as possible

Note

- *On vehicles with two evaporators, the refrigerant circuit is flushed in two / three steps.*
- *Currently the connections on the expansion valves at the evaporator in the air conditioning unit and at the evaporator in the battery cooling module are identical; the only differences are the control characteristics and the refrigerant shut-off valve 2 for hybrid battery - N517- .*
- *If a refrigerant shut-off valve 1 for hybrid battery - N516- is installed in the circuit to the evaporator in the air conditioning unit, the refrigerant circuit cannot be flushed. -N516- forms a constriction and prevents the refrigerant from flowing through at an adequate rate. If a shut-off valve - VAS 6338/42- is available, install on the -N516- and open. If there is no shut-off valve - VAS 6338/42- , but two adapters - VAG 1785/5- are available, the circuit can be flushed with the evaporator in the air conditioning unit in one work step (re-assemble circuit with one filler hose and two adapters - VAG 1785/5-). If there is no shut-off valve - VAS 6338/42- and only one adapter - VAG 1785/5- , the circuit must be flushed in two operations. From the low-pressure connection on the air conditioner compressor via the evaporator in the air conditioning unit through to the connection for the removed -N516- and from the connection for the removed -N516- via the condenser to the high-pressure connection on the air conditioner compressor.*
- *After flushing, the refrigerant shut-off valve 1 for hybrid battery - N516- must be renewed ⇒ Heating, air conditioning; Rep. gr. 87 ; Refrigerant circuit (vehicle-specific Workshop Manual).*
- *The receiver version varies on these vehicles depending on the manufacturer of the condenser ⇒ Heating, air conditioning; Rep. gr. 87 ; Refrigerant circuit (vehicle-specific Workshop Manual). Depending on the version of the condenser, the receiver may be attached to or integrated into the condenser. The integrated receiver contains a desiccant cartridge which is currently not always available as a replacement part. Therefore it may be necessary to renew the condenser after eliminating any faults on vehicles fitted with this condenser ⇒ Electronic parts catalogue .*
- *On vehicles with condensers with an integrated receiver / desiccant cartridge which cannot be renewed separately or which are not available as separate replacement parts, the condenser must be renewed (together with integrated desiccant cartridge) after flushing ⇒ Heating, air conditioning; Rep. gr. 87 ; Refrigerant circuit (vehicle-specific Workshop Manual) and ⇒ Electronic parts catalogue .*

Protected by copyright. Copying for private or commercial purposes, in part or in whole, is not permitted unless authorised by AUDI AG. AUDI AG does not guarantee or accept any liability with respect to the correctness of information in this document. Copyright by AUDI AG.

Audi 100, Audi A6 (4A_, 4B_ and 4F_), Audi allroad and Audi V8

Vehicle	Adapters required for connections to air conditioner compressor	Adapters required for reservoir connections	Other requirements
Audi 100 / Audi A6 (4A_) ► 1998 Audi A6 (4B_) 1998 ► Audi allroad (4B_) ► 2005 Audi V8 (4C_) ► 1994	– Compressor manufacturer “Zexel / Valeo” (screw connections) ◆ Low-pressure side: adapter - VAG 1785/8- ◆ High-pressure side: adapter - VAG 1785/7-	Reservoir with different connection versions ◆ Version 1 – Screw connection at inlet Adapter - VAS 6338/9- – Screw connection at outlet Adapter - VAG 1785/8-	- Restrictor removed, pipe connections re-assembled
	– Compressor manufacturer “Denso” (block connections with radial and axial seal) ◆ Low-pressure side: adapter - VAS 6338/12- ◆ High-pressure side: adapter - VAS 6338/2-	◆ Version 2 – Screw connection at inlet Adapter - VAS 6338/9- – Block connection with axial seal at outlet Adapter - VAS 6338/10- ◆ Version 3 – Block connections with axial seal at inlet and outlet Adapter - VAS 6338/10- (2x required)	
Audi A6 (4F_) 2005 ►	– Compressor manufacturer “Denso” (block connections with radial seal) ◆ Low-pressure side: adapter - VAS 6338/12- ◆ High-pressure side: adapter - VAS 6338/3-	– Reservoir with block connections with radial seal at inlet and outlet ◆ Adapter - VAS 6338/8- (2x required)	- Restrictor removed, pipe connections re-assembled

Note

The specifications for the Audi A6 (4F_) 2005 ► also apply to the Audi S6 and Audi RS 6.

Copyright. Copying for private or commercial purposes, in part or in whole, is not permitted unless authorised by AUDI AG. AUDI AG does not guarantee or accept any liability with respect to the correctness of information in this document. Copyright by AUDI AG.

Audi A6 (4G_ or 4X_ for China), Audi A7 (4G_ or 4X_ for China)

Vehicle	Adapters required for connections to air conditioner compressor	Adapters required for receiver connections	Other requirements
Audi A6 (4G_ / 4X_) 2011 ► Audi A7 (4G_ / 4X_) 2011 ►	– Compressor manufacturer "Denso" ♦ Low-pressure side: adapter - VAS 6338/12- ♦ High-pressure side: adapter - VAS 6338/3-	Receiver (different versions) – Adapter not required, receiver remains in position – Depending on the version of the condenser, it may be necessary to remove the desiccant cartridge from the receiver on the condenser before flushing and to seal the opening again (see note).	Expansion valve removed and adapter - VAS 6338/18- fitted (or old expansion valve removed, drilled open for flushing and re-installed ⇒ page 92).

Note

- *On certain versions for China the type designation 4X_ is used instead of 4G_.*
- *The receiver version varies on these vehicles depending on the manufacturer of the condenser ⇒ Heating, air conditioning; Rep. gr. 87 ; Refrigerant circuit (vehicle-specific Workshop Manual) and ⇒ Electronic parts catalogue .*
- *On vehicles with condensers with an integrated receiver / desiccant cartridge which cannot be renewed separately or which are not available as separate replacement parts, the condenser must be renewed (together with integrated desiccant cartridge) after flushing ⇒ Heating, air conditioning; Rep. gr. 87 ; Refrigerant circuit (vehicle-specific Workshop Manual) and ⇒ Electronic parts catalogue .*

Protected by copyright. Copying for private or commercial purposes, in part or in whole, is not permitted unless authorised by AUDI AG. AUDI AG does not guarantee or accept any liability with respect to the correctness of information in this document. Copyright by AUDI AG.

Audi A6 hybrid, Audi A6 e-tron

Vehicle	Adapters required for connections to/on air conditioner compressor	Adapters required for receiver connections	Other requirements
Audi A6 (4G_) 2012 ►	Adapters required for connections to air conditioner compressor – Compressor manufacturer “Denso” (A6 hybrid) or “Sanden” (A6 e-tron) ◆ Low-pressure side: adapter - VAS 6338/12- ◆ High-pressure side: adapter - VAS 6338/3-	Receiver (different versions) – Adapter not required, receiver remains in position A6 hybrid – Depending on the version of the condenser, it may be necessary to remove the desiccant cartridge from the receiver on the condenser before flushing and to seal the opening again (see note). A6 e-tron – Detach receiver from bracket, turn it through 180 degrees with refrigerant lines attached, and secure it so that connections are at the bottom (this ensures that the refrigerant is extracted in liquid form during the flushing process and that the receiver does not ice up; refer to note).	Expansion valve removed and adapter - VAS 6338/18- (or old, drilled-out and cleaned expansion valve ⇒ page 92) installed. – Refrigerant line with internal heat exchanger is not removed or is reinstalled after installation of adapter.

Protected by copyright. Copying for private or commercial purposes, in part or in whole, is not permitted unless authorised by AUDI AG. AUDI AG does not guarantee or accept any liability with respect to the correctness of information in this document. Copyright by AUDI AG.

Vehicle	Adapters required for connections to/on air conditioner compressor	Adapters required for receiver connections	Other requirements
♦ Additionally for vehicles with battery cooling module or heat exchanger		For flushing circuit with evaporator in front air conditioning unit and condenser ♦ Adapter - VAS 6338/5- for sealing connection on low-pressure side (to second evaporator in battery cooling module or on heat exchanger) ♦ Adapter - VAS 6338/11- for sealing connection on high-pressure side (to second evaporator in battery cooling module or on heat exchanger) ♦ Shut-off valve - VAS 6338/42- or adapter - VAG 1785/5- for installation in place of removed shut-off valve -N516- or -V424- (see notes)	There are various ways of flushing the circuit: ♦ Shut-off valve - N516- / -V424- removed and shut-off valve - VAS 6338/42- installed in its place (see notes below) ♦ Flushing the circuit in one or two steps (see notes)
		For flushing evaporator in battery cooling module (Audi A6 hybrid) or on heat exchanger for high-voltage battery (Audi A6 e-tron) and attached lines ♦ Adapter - VAS 6338/3- for connecting air conditioner service station to connection on low-pressure side (to second evaporator). ♦ Adapter - VAS 6338/4- for connecting air conditioner service station to connection on high-pressure side (to second evaporator). ♦ Shut-off valve - VAS 6338/42- for installation in place of removed shut-off valve -N516- / -V424-	Expansion valve in refrigerant lines to second evaporator / heat exchanger removed and adapter -VAS 6338/36- or -VAS 6338/18- (different connections, depending on version) installed (or old expansion valve removed, drilled open for flushing and re-installed ⇒ page 92).

Protected by copyright. Copying for private or commercial purposes, in part or in whole, is not permitted unless authorised by AUDI AG. AUDI AG does not guarantee or accept any liability with respect to the correctness of information in this document. Copyright by AUDI AG.

Vehicle	Adapters required for connections to/on air conditioner compressor	Adapters required for receiver connections	Other requirements
	Adapters / lines required for connections on electrically driven air conditioner compressor (for flushing air conditioner compressor) ⇒ page 107 (Flushing the electrically driven air conditioner compressor)		♦ On the electrically driven air conditioner compressor, the refrigerant oil is to be removed by flushing in the direction of flow (it is not possible to flush in the opposite direction due to the valves installed) ♦ For the flushing procedure, position the air conditioner compressor so that the connection for the refrigerant line on the high-pressure side is as low down as possible

Protected by copyright. Copying for private or commercial purposes, in part or in whole, is not permitted unless authorised by AUDI AG. AUDI AG does not guarantee or accept any liability with respect to the correctness of information in this document. Copyright by AUDI AG.

Note

Protected by copyright. Copies or extracts otherwise than for private use and other than for personal or commercial purposes, in part or in whole, is not permitted unless authorised by AUDI AG. AUDI AG does not guarantee or accept any liability with respect to the correctness of information in this document. Copyright by AUDI AG.

- *On certain versions for China the type designation 4X_ is used instead of 4G_.*
- *On vehicles with two evaporators (one in the air conditioning unit and one in the battery cooling module or on the heat exchanger for high-voltage battery, e.g. on the Audi A6 e-tron), the refrigerant circuit is flushed in two/three operations.*
- *The expansion valve on the evaporator in the air conditioning unit and on the evaporator in the battery cooling module (refrigerant shut-off valve 2 for hybrid battery - N517- on the A6 hybrid and the expansion valve with refrigerant shut-off valve 2 - N640- on the A6 e-tron) do not always have the same connections (and if they have the same connections, they also differ in terms of their characteristic curve) ⇒ Heating, air conditioning; Rep. gr. 87 ; Refrigerant circuit (vehicle-specific Workshop Manual).*
- *If a shut-off valve (refrigerant shut-off valve 1 for hybrid battery - N516- on the A6 hybrid / refrigerant shut-off valve - V424- on the A6 e-tron) is installed in the circuit to the evaporator in the air conditioning unit, the refrigerant circuit cannot be flushed; -N516- (-V424-) forms a constriction and prevents the refrigerant from flowing through at an adequate rate. If a shut-off valve - VAS 6338/42- is fitted, install it in place of -N516- (-V424-) and open it. If there is no shut-off valve - VAS 6338/42- but two adapters - VAG 1785/5- are available, the circuit can be flushed with the evaporator in the air conditioning unit in one work step (re-assemble circuit with one filler hose and two adapters - VAG 1785/5-). If there is no shut-off valve - VAS 6338/42- and only one adapter - VAG 1785/5- , the circuit must be flushed in two operations. From the low-pressure connection on the air conditioner compressor via the evaporator in the air conditioning unit through to the connection for the removed -N516- (the -V424-) and from the connection for the removed -N516- (the -V424-) via the condenser to the high-pressure connection on the air conditioner compressor.*
- *After flushing, the refrigerant shut-off valve 1 for hybrid battery - N516- (-V424-) must be renewed ⇒ Heating, air conditioning; Rep. gr. 87 ; Refrigerant circuit (vehicle-specific Workshop Manual).*
- *On the Audi A6 e-tron, the receiver must be renewed after flushing ⇒ Heating, air conditioning; Rep. gr. 87 ; Refrigerant circuit; Removing and installing receiver .*
- *The receiver version varies on these vehicles depending on the manufacturer of the condenser ⇒ Heating, air conditioning; Rep. gr. 87 ; Refrigerant circuit (vehicle-specific Workshop Manual). Depending on the version of the condenser, the receiver may be attached to or integrated into the condenser. The integrated receiver contains a desiccant cartridge which is currently not always available as a replacement part. Therefore it may be necessary to renew the condenser after eliminating any faults on vehicles fitted with this condenser ⇒ Electronic parts catalogue .*
- *On vehicles with condensers with an integrated receiver / desiccant cartridge which cannot be renewed separately or which are not available as separate replacement parts, the condenser must be renewed (together with integrated desiccant cartridge) after flushing ⇒ Heating, air conditioning; Rep. gr. 87 ; Refrigerant circuit (vehicle-specific Workshop Manual) and ⇒ Electronic parts catalogue .*

- *On the Audi A6 hybrid, it may be sensible to remove the two refrigerant lines in the engine compartment from the internal heat exchanger in order to flush the components in the battery cooling module and the associated refrigerant lines. As a result, the adapters and associated refrigerant hoses necessary for the flushing process can be more easily fitted and removed ⇒ Heating, air conditioning; Rep. gr. 87 ; Refrigerant circuit (vehicle-specific Workshop Manual).*
- *On the Audi A6 hybrid, it is possible that the knurled nut for the filler hose cannot be screwed onto the connection properly if adapter - VAS 6338/3- is installed on the refrigerant line leading to the evaporator in the battery cooling module (depending on the tolerance at the outlet of the refrigerant pipe leading from the connection); if this is the case, carefully bend the refrigerant pipe approx. 1 mm to one side.*

Audi A6 (4A_ or 48_ for China), Audi A7 (4K_)

Vehicle	Adapters required for connections to air conditioner compressor	Adapters required for receiver connections	Other requirements
Audi A6 (4A_ or for 48_ for China) 2019 ► Audi A7 (4K) 2018 ►	– Compressor manufacturer “Denso” ◆ Low-pressure side: adapter - VAS 6338/12- connected to air conditioner service station and adapter - VAS 6338/48- ◆ High-pressure side: adapter - VAS 6338/3-	– No adapter required; the dryer is removed from the receiver at the condenser and the opening is sealed off again.	Expansion valve removed and adapter - VAS 6338/44- installed (or an old expansion valve is drilled open and installed as an adapter ⇒ page 92) ⇒ Electronic parts catalogue .

Protected by copyright. Copying for private or commercial purposes, in part or in whole, is not permitted unless authorised by AUDI AG. AUDI AG does not guarantee or accept any liability with respect to the correctness of information in this document. Copyright by AUDI AG.

Note

On vehicles with condensers with an integrated receiver / desiccant cartridge which cannot be renewed separately or which are not available as separate replacement parts, the condenser must be renewed (together with integrated desiccant cartridge) after flushing ⇒ Heating, air conditioning; Rep. gr. 87 ; Refrigerant circuit (vehicle-specific Workshop Manual) and ⇒ Electronic parts catalogue .

Audi A7 (4K_) TFSI e, from 2019 onwards

Vehicle	Adapters required for connections to air conditioner compressor	Adapters required for connections to receiver / for non-return and shut-off valves	Other requirements
Audi A7 (4K_) TFSI e, from 2019 onwards ♦ Vehicle with one evaporator	– Compressor manufacturer “Sanden” (block connections with radial seal) ♦ Low-pressure side: adapter - VAS 6338/12- ♦ High-pressure side: adapter - VAS 6338/3-	Receiver – No adapter required; the dryer is removed from the receiver at the condenser and the opening is sealed off again.	Expansion valve removed and adapter - VAS 6338/44- installed (or an old expansion valve is drilled open and installed as an adapter ⇒ page 92) ⇒ Electronic parts catalogue .
		Non-return valves – 4 non-return valves removed, and shut-off valves (-6338/47-1- and -6338/47-2-) from shut-off valve set - 6338/47- installed	Open or close the shut-off valves (installed in place of the non-return valves) according to the area to be cleaned ⇒ Heating, air conditioning; Rep. gr. 87 ; Refrigerant circuit (vehicle-specific Workshop Manual).
		Shut-off valve – Fitted shut-off valve -V424- removed and shut-off valve - VAS 6338/42- fitted instead	Open or close the shut-off valve (installed in place of the shut-off valve) according to the area to be cleaned. Renew refrigerant shut-off valve - V424- after flushing.

Protected by copyright. Copying for private or commercial purposes, in part or in whole, is not permitted unless authorised by AUDI AG. AUDI AG does not guarantee or accept any liability with respect to the correctness of information in this document. Copyright by AUDI AG.

Note

- *On the Audi A7 TFSI e, the refrigerant circuit is flushed in four steps (flushing cycles) ⇒ Heating, air conditioning; Rep. gr. 87 ; Refrigerant circuit (Cleaning air conditioner refrigerant circuit).*
- *To flush the entire refrigerant circuit on the Audi A7 TFSI e, it is not merely sufficient for the installed shut-off valves to be in the correct position (open or closed); the electrically activated valves (in the valve block) must also be in the correct position. The electrical valves are activated via different routines stored in the corresponding control unit (e.g. in the thermal management control unit - J1024-) ⇒ Heating, air conditioning; Rep. gr. 87 ; Refrigerant circuit; Cleaning air conditioner refrigerant circuit .*
- *To perform the flushing procedure on the Audi A7 TFSI e, the circuit is separated into multiple sections, which are then flushed in one flushing cycle each. The circuit is separated by activation of the electrically activated valves and via the manual shut-off valves (must be activated manually) ⇒ Heating, air conditioning; Rep. gr. 87 ; Refrigerant circuit; Cleaning air conditioner refrigerant circuit , ⇒ Vehicle diagnostic tester ("Guided Fault Finding").*
- *The layout of the different flushing circuits for the Audi A7 TFSI e is described in the vehicle-specific Workshop Manual ⇒ Heating, air conditioning; Rep. gr. 87 ; Refrigerant circuit; Cleaning air conditioner refrigerant circuit .*
- *On vehicles with condensers with an integrated receiver / desiccant cartridge which cannot be renewed separately or which are not available as separate replacement parts, the condenser must be renewed (together with integrated desiccant cartridge) after flushing ⇒ Heating, air conditioning; Rep. gr. 87 ; Refrigerant circuit (vehicle-specific Workshop Manual) and ⇒ Electronic parts catalogue .*
- *After flushing, the refrigerant receiver at the heat exchanger for heat pump operation must be renewed ⇒ Heating, air conditioning; Rep. gr. 87 ; Refrigerant circuit .*
- *After flushing, the refrigerant shut-off valve - V424- must be renewed ⇒ Heating, air conditioning; Rep. gr. 87 ; Refrigerant circuit .*

Protected by copyright. Copying for private or commercial purposes, in part or in whole, is not permitted unless authorised by AUDI AG. AUDI AG does not guarantee or accept any liability with respect to the correctness of information in this document. Copyright by AUDI AG.

Audi A8

Vehicle	Adapters required for connections to air conditioner compressor	Adapters required for connections to reservoir/receiver	Other requirements
Audi A8 (4D_) 1994 ►	– Compressor manufacturer “Zexel / Valeo” (screw connections) ◆ Low-pressure side: adapter - VAG 1785/8- ◆ High-pressure side: adapter - VAG 1785/7-	Reservoir with different connection versions ◆ Version 1 – Screw connection at inlet Adapter - VAS 6338/9- – Screw connection at outlet Adapter - VAG 1785/8-	- Restrictor removed, pipe connections re-assembled
	– Compressor manufacturer “Denso” (block connections with radial and axial seal) ◆ Low-pressure side: adapter - VAS 6338/12- ◆ High-pressure side: adapter - VAS 6338/2-	◆ Version 2 – Screw connection at inlet Adapter - VAS 6338/9- – Block connection with axial seal at outlet Adapter - VAS 6338/10- ◆ Version 3 – Block connections with axial seal at inlet and outlet Adapter - VAS 6338/10- (2x required)	
Audi A8 (4E_) 2003 ►	– Compressor manufacturer “Denso” (block connections with radial seal) ◆ Low-pressure side: adapter - VAS 6338/12- ◆ High-pressure side: adapter - VAS 6338/3-	Reservoir – Block connections with radial seal at inlet and outlet ◆ Adapter - VAS 6338/8- (2x required)	- Restrictor removed, pipe connections re-assembled

Protected by copyright. Copying for private or commercial purposes, in part or in whole, is not permitted unless authorised by AUDI AG. AUDI AG does not guarantee or accept any liability with respect to the accuracy of information in this document. Copyright by AUDI AG.

Vehicle	Adapters required for connections to air conditioner compressor	Adapters required for connections to reservoir/receiver	Other requirements
Audi A8 (4H_) 2010 ➤	– Compressor manufacturer “Denso” (block connections with radial seal) ◆ Low-pressure side: adapter - VAS 6338/12- ◆ High-pressure side: adapter - VAS 6338/3-	– No adapter required, the desiccant bag is removed from the receiver at the condenser and the opening sealed off again for flushing.	Expansion valve removed and adapter - VAS 6338/18- fitted (or old expansion valve removed, drilled open for flushing and re-installed ⇒ page 92).
◆ Additionally for vehicles with two evaporators (4-zone air conditioner)		For flushing circuit with evaporator in front air conditioning unit ◆ Adapter - VAS 6338/5- for sealing connection (“low-pressure side”) to second evaporator ◆ Adapter - VAS 6338/11- for sealing connection (“high-pressure side”) to second evaporator • An additional hole may have to be drilled in the adapters (see below) to be able to seal the refrigerant lines with adapters - VAS 6338/5- and -VAS 6338/11- .	

Protected by copyright. Copying for private or commercial purposes, in part or in whole, is not permitted unless authorised by AUDI AG. AUDI AG does not guarantee or accept any liability with respect to the correctness of information in this document. Copyright by AUDI AG.

Vehicle	Adapters required for connections to air conditioner compressor	Adapters required for connections to reservoir/receiver	Other requirements
		For flushing second evaporator and corresponding pipes ♦ Adapter - VAS 6338/3- for connecting air conditioner service station to connection on low-pressure side (to second evaporator). ♦ Adapter - VAS 6338/4- for connecting air conditioner service station to connection on high-pressure side (to second evaporator). • The adapter may have to be reworked (see below) to be able to connect the refrigerant line to adapter - VAS 6338/3- .	Expansion valve in refrigerant lines to second evaporator removed and adapter - VAS 6338/18- installed (or old expansion valve removed, drilled open for flushing and re-installed ⇒ page 92).

Protected by copyright. Copying for private or commercial purposes, in part or in whole, is not permitted unless authorised by AUDI AG. AUDI AG does not guarantee or accept any liability with respect to the correctness of information in this document. Copyright by AUDI AG.

Note

♦ *On vehicles with two evaporators, the refrigerant circuit is flushed in two steps.*

♦ *Currently, the front and rear expansion valves have identical connections (only the control characteristic curves differ).*

Drilling additional hole in adapters - VAS 6338/5- and -VAS 6338/11- .

– Drill hole -A- in addition to hole provided (dimensions in illustration are given in mm).

Rework adapter - VAS 6338/3- .

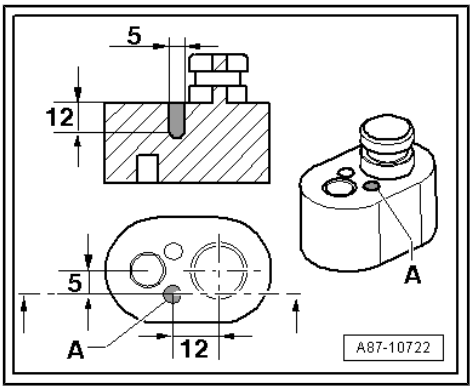

– By grinding or filing off material in area -A-, rework the adapter - VAS 6338/3- such that it can be connected without bending the refrigerant line (the dimensions in the illustration are given in mm).

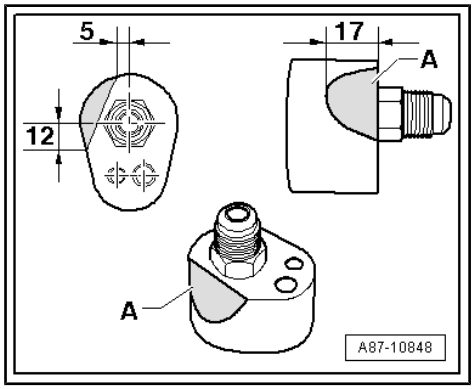

Protected by copyright. Copying for private or commercial purposes, in part or in whole, is not permitted unless authorised by AUDI AG. AUDI AG does not guarantee or accept any liability with respect to the correctness of information in this document. Copyright by AUDI AG.

Audi A8 hybrid

Vehicle	Adapters required for connections to/on air conditioner compressor	Adapters required for receiver connections	Other requirements
Audi A8 (4H_) 2012 ►	Adapters required for connections to air conditioner compressor – Compressor manufacturer “Denso” ◆ Low-pressure side: adapter - VAS 6338/12- ◆ High-pressure side: adapter - VAS 6338/3-	Receiver (different versions) – Adapter not required, receiver remains in position – Depending on the version of the condenser, it may be necessary to remove the desiccant cartridge from the receiver on the condenser before flushing and to seal the opening again (see note).	Expansion valve removed and adapter - VAS 6338/18- (or old, drilled-out and cleaned expansion valve ⇒ page 92) installed. – Refrigerant line with internal heat exchanger is not removed or is reinstalled after installation of adapter.

Protected by copyright. Copying for private or commercial purposes, in part or in whole, is not permitted unless authorised by AUDI AG. AUDI AG does not guarantee or accept any liability with respect to the correctness of information in this document. Copyright by AUDI AG.

Vehicle	Adapters required for connections to/on air conditioner compressor	Adapters required for receiver connections	Other requirements
♦ Additionally for a vehicle with battery cooling module		For flushing circuit with evaporator in front air conditioning unit and condenser ♦ Adapter - VAS 6338/5- for sealing connection on low-pressure side (to second evaporator in battery cooling module) ♦ Adapter - VAS 6338/11- for sealing connection on high-pressure side (to second evaporator in battery cooling module) ♦ Shut-off valve - VAS 6338/42- or adapter - VAG 1785/5- to replace removed refrigerant shut-off valve 1 for hybrid battery - N516- (see notes)	There are various ways of flushing the circuit: ♦ Shut-off valve - N516- removed and shut-off valve - VAS 6338/42- installed in its place (see notes below). Renew shut-off valve - N516- after flushing. ♦ Flushing the circuit in one or two steps (see notes)
		To flush the evaporator in the battery cooling module and the attached lines ♦ Adapter - VAS 6338/3- for connecting air conditioner service station to connection on low-pressure side (to second evaporator). ♦ Adapter - VAS 6338/4- for connecting air conditioner service station to connection on high-pressure side (to second evaporator).	Expansion valve in refrigerant lines to second evaporator removed and adapter - VAS 6338/36- installed (or old expansion valve removed, drilled open for flushing and re-installed ⇒ page 92).

Protected by copyright. Copying for private or commercial purposes, in part or in whole, is not permitted unless authorised by AUDI AG. AUDI AG does not guarantee or accept any liability with respect to the correctness of information in this document. Copyright by AUDI AG.

Vehicle	Adapters required for connections to/on air conditioner compressor	Adapters required for receiver connections	Other requirements
	Adapters / lines required for connections on electrically driven air conditioner compressor (for flushing air conditioner compressor) ⇒ page 107 (Flushing the electrically driven air conditioner compressor)		♦ On the electrically driven air conditioner compressor, the refrigerant oil is to be removed by flushing in the direction of flow (it is not possible to flush in the opposite direction due to the valves installed) ♦ For the flushing procedure, position the air conditioner compressor so that the connection for the refrigerant line on the high-pressure side is as low down as possible

Protected by copyright. Copying for private or commercial purposes, in part or in whole, is not permitted unless authorised by AUDI AG. AUDI AG does not guarantee or accept any liability with respect to the correctness of information in this document. Copyright by AUDI AG.

Note

- *On vehicles with two evaporators, the refrigerant circuit is flushed in two / three steps.*
- *Currently the expansion valve at the evaporator in the air conditioning unit and at the evaporator in the battery cooling module do not have the same connections.*
- *If a refrigerant shut-off valve 1 for hybrid battery - N516- is installed in the circuit to the evaporator in the air conditioning unit, the refrigerant circuit cannot be flushed. -N516- forms a constriction and prevents the refrigerant from flowing through at an adequate rate. If there is a shut-off valve - VAS 6338/42- , install it in place of -N516- and open it; if there is no shut-off valve - VAS 6338/42- but two adapters - VAG 1785/5- are available, the circuit can be flushed with the evaporator in the air conditioning unit in one work step (re-assemble circuit with one filler hose and two adapters - VAG 1785/5-). If there is no shut-off valve - VAS 6338/42- and only one adapter - VAG 1785/5- , the circuit must be flushed in two operations. From the low-pressure connection on the air conditioner compressor via the evaporator in the air conditioning unit through to the connection for the removed -N516- and from the connection for the removed -N516- via the condenser to the high-pressure connection on the air conditioner compressor.*
- *After flushing, the refrigerant shut-off valve 1 for hybrid battery - N516- must be renewed ⇒ Heating, air conditioning; Rep. gr. 87 ; Refrigerant circuit (vehicle-specific Workshop Manual).*
- *The receiver version varies on these vehicles depending on the manufacturer of the condenser ⇒ Heating, air conditioning; Rep. gr. 87 ; Refrigerant circuit (vehicle-specific Workshop Manual). Depending on the version of the condenser, the receiver may be attached to or integrated into the condenser. The integrated receiver contains a desiccant cartridge which is currently not always available as a replacement part. Therefore it may be necessary to renew the condenser after eliminating any faults on vehicles fitted with this condenser ⇒ Electronic parts catalogue .*
- *On vehicles with condensers with an integrated receiver / desiccant cartridge which cannot be renewed separately or which are not available as separate replacement parts, the condenser must be renewed (together with integrated desiccant cartridge) after flushing ⇒ Heating, air conditioning; Rep. gr. 87 ; Refrigerant circuit (vehicle-specific Workshop Manual) and ⇒ Electronic parts catalogue .*

Protected by copyright. Copying for private or commercial purposes, in part or in whole, is not permitted unless authorised by AUDI AG. AUDI AG does not guarantee or accept any liability with respect to the correctness of information in this document. Copyright by AUDI AG.

Audi A8 (4N)

Vehicle	Adapters required for connections to air conditioner compressor	Adapters required for connections to receiver / to second evaporator	Other requirements
Audi A8 (4N) 2018 ➤ ◆ Vehicle with one evaporator	– Compressor manufacturer “Denso” (block connections with radial seal) ◆ Low-pressure side: adapter - VAS 6338/12- connected to air conditioner service station and adapter - VAS 6338/48- ◆ High-pressure side: adapter - VAS 6338/3-	– No adapter required; the dryer is removed from the receiver at the condenser and the opening is sealed off again.	Expansion valve removed and adapter - VAS 6338/44- installed (or an old expansion valve is drilled open and installed as an adapter ⇒ page 92) ⇒ Electronic parts catalogue .
◆ Additionally for vehicles with 2 evaporators (4-zone air conditioner)		For flushing circuit with evaporator in front air conditioning unit ◆ Adapter - VAS 6338/44- and adapter - VAS 6338/43- (for sealing refrigerant circuit off from second evaporator)	Expansion valve to evaporator in front air conditioning unit removed and adapter - VAS 6338/44- installed. Expansion valve in refrigerant lines to evaporator in rear air conditioning unit removed and adapter - VAS 6338/43- installed.

Protected by copyright. Copying for private or commercial purposes, in part or in whole, is not permitted unless authorised by AUDI AG. AUDI AG does not guarantee or accept any liability with respect to the correctness of information in this document. Copyright by AUDI AG.

Vehicle	Adapters required for connections to air conditioner compressor	Adapters required for connections to receiver / to second evaporator	Other requirements
		For flushing second evaporator and corresponding pipes ♦ Adapter - VAS 6338/44- and adapter - VAS 6338/43- (for sealing refrigerant circuit off from evaporator in front air conditioning unit)	Expansion valve to evaporator in front air conditioning unit removed and adapter - VAS 6338/43- installed. Expansion valve in refrigerant lines to evaporator in rear air conditioning unit removed and adapter - VAS 6338/44- installed.

Note

- *On vehicles with two evaporators, the refrigerant circuit is flushed in two steps.*
- *On vehicles with two evaporators, the refrigerant circuit with the evaporator in the front air conditioning unit is flushed first. The refrigerant circuit to the second evaporator (in the rear air conditioning unit) must be separated so that the refrigerant flows in the specified direction when the circuit is flushed. This is done by removing the expansion valve in the refrigerant lines to the second evaporator and installing the adapter - VAS 6338/43- (closed adapter). After the refrigerant circuit with the evaporator in the air conditioning unit has been flushed, the two adapters -VAS 6338/43- and -VAS 6338/44- are renewed and the refrigerant circuit with the evaporator in the rear air conditioning unit is flushed.*

Protected by copyright. Copying for private or commercial purposes, in part or in whole, is not permitted unless authorised by AUDI AG. AUDI AG does not guarantee or accept any liability with respect to the correctness of information in this document. Copyright by AUDI AG.

Audi A8 (4N_) TFSI e 2019 ▸

Protected by copyright. Copying for private or commercial purposes, in part or in whole, is not permitted unless authorized by AUDI AG. AUDI AG does not guarantee or accept any liability with respect to the correctness of information in this document. Copyright by AUDI AG.

Vehicle	Adapters required for connections to air conditioner compressor	Adapters required for connections to receiver / for non-return and shut-off valves	Other requirements
Audi A8 (4N_) TFSI e 2019 ▸ ◆ Vehicle with one evaporator	– Compressor manufacturer “Sanden” (block connections with radial seal) ◆ Low-pressure side: adapter - VAS 6338/12- ◆ High-pressure side: adapter - VAS 6338/3-	Receiver – No adapter required; the dryer is removed from the receiver at the condenser and the opening is sealed off again.	Expansion valve removed and adapter - VAS 6338/44- installed (or an old expansion valve is drilled open and installed as an adapter ⇒ page 92) ⇒ Electronic parts catalogue .
		Non-return valves – 4 non-return valves removed, and shut-off valves (-6338/47-1- and -6338/47-2-) from shut-off valve set - 6338/47- installed	Open or close the shut-off valves (installed in place of the non-return valves) according to the area to be cleaned ⇒ Heating, air conditioning; Rep. gr. 87 ; Refrigerant circuit (vehicle-specific Workshop Manual).
		Shut-off valve – Fitted shut-off valve -V424- removed and shut-off valve - VAS 6338/42- fitted instead	Open or close the shut-off valve (installed in place of the shut-off valve) according to the area to be cleaned. Renew refrigerant shut-off valve - V424- after flushing.

Note

- *The refrigerant circuit is flushed in 4 operations (flushing cycles) on the Audi A8 TFSI e ⇒ Heating, air conditioning; Rep. gr. 87 ; Refrigerant circuit; Cleaning air conditioner refrigerant circuit .*
- *To flush the entire refrigerant circuit on the Audi A8 TFSI e, it is not merely sufficient for the installed shut-off valves to be in the correct position (open or closed); the electrically activated valves (in the valve block) must also be in the correct position. The electrical valves are activated via different routines stored in the corresponding control unit (e.g. in the thermal management control unit - J1024-) ⇒ Heating, air conditioning; Rep. gr. 87 ; Refrigerant circuit; Cleaning air conditioner refrigerant circuit .*
- *To perform the flushing procedure on the Audi A8 TFSI e, the circuit is separated into multiple sections, which are then flushed in one flushing cycle each. The circuit is separated by activation of the electrically activated valves and via the manual shut-off valves (must be activated manually) ⇒ Heating, air conditioning; Rep. gr. 87 ; Refrigerant circuit; Cleaning air conditioner refrigerant circuit , ⇒ Vehicle diagnostic tester ("Guided Fault Finding").*
- *The layout of the different flushing circuits for the Audi A8 TFSI e is described in the vehicle-specific Workshop Manual ⇒ Heating, air conditioning; Rep. gr. 87 ; Refrigerant circuit; Cleaning air conditioner refrigerant circuit .*
- *On vehicles with condensers with an integrated receiver / desiccant cartridge which cannot be renewed separately or which are not available as separate replacement parts, the condenser must be renewed (together with integrated desiccant cartridge) after flushing ⇒ Heating, air conditioning; Rep. gr. 87 ; Refrigerant circuit (vehicle-specific Workshop Manual) and ⇒ Electronic parts catalogue .*
- *After flushing, the refrigerant receiver at the heat exchanger for heat pump operation must be renewed ⇒ Heating, air conditioning; Rep. gr. 87 ; Refrigerant circuit .*
- *After flushing, the refrigerant shut-off valve - V424- must be renewed ⇒ Heating, air conditioning; Rep. gr. 87 ; Refrigerant circuit .*

Protected by copyright. Copying for private or commercial purposes, in part or in whole, is not
permitted unless authorised by AUDI AG. AUDI AG does not guarantee or accept any liability
with respect to the correctness of information in this document. Copyright by AUDI AG.

Audi Q7 (4L_)

Vehicle	Adapters required for connections to air conditioner compressor	Adapters required for connections to receiver / to second evaporator	Other requirements
Audi Q7 (4L_) 2006 ➤ ◆ Vehicle with one evaporator (2 zone air conditioner)	– Compressor manufacturer “Denso” (block connections with radial seal) ◆ Low-pressure side: adapter - VAS 6338/12- ◆ High-pressure side: adapter - VAS 6338/3-	– No adapter required; the dryer is removed from the receiver at the condenser and the opening is sealed off again.	Expansion valve removed and adapter - VAS 6338/17- or adapter - VAS 6338/33- fitted depending on version of expansion valve (or drilled-open expansion valve e.g. 7L0 820 712 A, 7H0 820 679 B or 7L0 820 679 C fitted ⇒ page 92) ⇒ Electronic parts catalogue .
◆ Additionally for vehicles with 2 evaporators (4-zone air conditioner)		For flushing circuit with evaporator in front air conditioning unit ◆ Adapter - VAS 6338/5- for sealing connection (“low-pressure side”) to second evaporator ◆ Adapter - VAS 6338/11- for sealing connection (“high-pressure side”) to second evaporator	

Protected by copyright. Copying for private or commercial purposes, in part or in whole, is not permitted unless authorised by AUDI AG. AUDI AG does not guarantee or accept any liability with respect to the correctness of information in this document. Copyright by AUDI AG.

Vehicle	Adapters required for connections to air conditioner compressor	Adapters required for connections to receiver / to second evaporator	Other requirements
		For flushing second evaporator and corresponding pipes ◆ Adapter - VAS 6338/3- for connecting air conditioner service station to connection on low-pressure side (to second evaporator). ◆ Adapter - VAS 6338/4- for connecting air conditioner service station to connection on high-pressure side (to second evaporator).	Expansion valve at second evaporator removed and Adapter - VAS 6338/17- fitted (or drilled-open expansion valve e.g. 7L0 820 712 A fitted ⇒ page 92) ⇒ Electronic parts catalogue

Note

On vehicles with two evaporators, the refrigerant circuit is flushed in two steps.

Protected by copyright. Copying for private or commercial purposes, in part or in whole, is not permitted unless authorised by AUDI AG. AUDI AG does not guarantee or accept any liability with respect to the correctness of information in this document. Copyright by AUDI AG.

Audi Q7 (4M_), Audi Q8 (4M_)

Vehicle	Adapters required for connections to air conditioner compressor	Adapters required for connections to receiver / to second evaporator	Other requirements
Audi Q7 (4M_) 2016 ➤ Audi Q8 (4M_) 2018 ◆ Vehicle with one evaporator	– Compressor manufacturer “Denso” (block connections with radial seal) ◆ Low-pressure side: adapter - VAS 6338/12- ◆ High-pressure side: adapter - VAS 6338/3-	– No adapter required; the dryer is removed from the receiver at the condenser and the opening is sealed off again.	Expansion valve removed and adapter - VAS 6338/44- installed (or an old expansion valve is drilled open and installed as an adapter ⇒ page 92) ⇒ Electronic parts catalogue .
◆ Additionally for vehicles with 2 evaporators (4-zone air conditioner)		For flushing circuit with evaporator in front air conditioning unit ◆ Adapter - VAS 6338/44- and adapter - VAS 6338/43- (for sealing refrigerant circuit off from second evaporator)	Expansion valve to evaporator in front air conditioning unit removed and adapter - VAS 6338/44- installed. Expansion valve in refrigerant lines to evaporator in rear air conditioning unit removed and adapter - VAS 6338/43- installed.

Protected by copyright. Copying for private or commercial purposes, in part or in whole, is not permitted unless authorised by AUDI AG. AUDI AG does not guarantee or accept any liability with respect to the correctness of information in this document. Copyright by AUDI AG.

Vehicle	Adapters required for connections to air conditioner compressor	Adapters required for connections to receiver / to second evaporator	Other requirements
		For flushing second evaporator and corresponding pipes ♦ Adapter - VAS 6338/44- and adapter - VAS 6338/43- (for sealing refrigerant circuit off from evaporator in front air conditioning unit)	Expansion valve to evaporator in front air conditioning unit removed and adapter - VAS 6338/43- installed. Expansion valve in refrigerant lines to evaporator in rear air conditioning unit removed and adapter - VAS 6338/44- installed.

Note

- *On vehicles with two evaporators, the refrigerant circuit is flushed in two steps.*
- *On vehicles with two evaporators, the refrigerant circuit with the evaporator in the front air conditioning unit is flushed first. The refrigerant circuit to the second evaporator (in the rear air conditioning unit) must be separated so that the refrigerant flows in the specified direction when the circuit is flushed. This is done by removing the expansion valve in the refrigerant lines to the second evaporator and installing the adapter - VAS 6338/43- (closed adapter). After the refrigerant circuit with the evaporator in the air conditioning unit has been flushed, the two adapters -VAS 6338/43- and -VAS 6338/44- are renewed and the refrigerant circuit with the evaporator in the rear air conditioning unit is flushed.*

Protected by copyright. Copying for private or commercial purposes, in part or in whole, is not permitted unless authorised by AUDI AG. AUDI AG does not guarantee or accept any liability with respect to the correctness of information in this document. Copyright by AUDI AG.

Audi Q7 e-tron (4M_)

Vehicle	Adapters required for connections to air conditioner compressor	Adapters required for connections to receiver / for non-return and shut-off valves	Other requirements
Audi Q7 e-tron (4M_) 2016 ➤ ◆ Vehicle with one evaporator	– Compressor manufacturer "Sanden" (block connections with radial seal) ◆ Low-pressure side: adapter - VAS 6338/12- ◆ High-pressure side: adapter - VAS 6338/3-	Receiver – No adapter required; the dryer is removed from the receiver at the condenser and the opening is sealed off again.	Expansion valve removed and adapter - VAS 6338/44- installed (or an old expansion valve is drilled open and installed as an adapter ⇒ page 92) ⇒ Electronic parts catalogue .
		Non-return valves – 4 non-return valves removed, and shut-off valves (-6338/47-1- and -6338/47-2-) from shut-off valve set - 6338/47- installed	Open or close the shut-off valves (installed in place of the non-return valves) according to the area to be cleaned ⇒ Heating, air conditioning; Rep. gr. 87 ; Refrigerant circuit .
		Shut-off valve – Fitted shut-off valve -V424- removed and shut-off valve - VAS 6338/42- fitted instead	Open or close the shut-off valve (installed in place of the shut-off valve) according to the area to be cleaned. Renew refrigerant shut-off valve - V424- after flushing.

Protected by copyright. Copying for private or commercial purposes, in part or in whole, is not permitted unless authorised by AUDI AG. AUDI AG does not guarantee or accept any liability with respect to the correctness of information in this document. Copyright by AUDI AG.

Note

- *The refrigerant circuit is flushed in 4 operations (flushing cycles) on the Audi Q7 e-tron ⇒ Heating, air conditioning; Rep. gr. 87 ; Refrigerant circuit; Cleaning air conditioner refrigerant circuit .*
- *In order for the entire refrigerant circuit to be flushed in the Audi Q7 e-tron, it is not just the installed shut-off valves that have to be in the correct position (open or closed). In addition, the electrically operated valves (in the valve block) also have to be in the right position. The electrical valves are activated via different routines stored in the corresponding control unit (e.g. in the thermal management control unit - J1024-) ⇒ Heating, air conditioning; Rep. gr. 87 ; Refrigerant circuit; Cleaning air conditioner refrigerant circuit .*
- *To perform the flushing procedure on the Audi Q7 e-tron, the circuit is separated into multiple sections, which are then flushed in one flushing cycle each. The circuit is separated by activation of the electrically activated valves and via the manual shut-off valves (must be activated manually) ⇒ Heating, air conditioning; Rep. gr. 87 ; Refrigerant circuit; Cleaning air conditioner refrigerant circuit , ⇒ Vehicle diagnostic tester ("Guided Fault Finding").*
- *The layout of the different flushing circuits for the Audi Q7 e-tron is described in the vehicle-specific Workshop Manual ⇒ Heating, air conditioning; Rep. gr. 87 ; Refrigerant circuit; Cleaning air conditioner refrigerant circuit .*
- *On vehicles with condensers with an integrated receiver / desiccant cartridge which cannot be renewed separately or which are not available as separate replacement parts, the condenser must be renewed (together with integrated desiccant cartridge) after flushing ⇒ Heating, air conditioning; Rep. gr. 87 ; Refrigerant circuit (vehicle-specific Workshop Manual) and ⇒ Electronic parts catalogue .*
- *After flushing, the refrigerant receiver at the heat exchanger for heat pump operation must be renewed ⇒ Heating, air conditioning; Rep. gr. 87 ; Refrigerant circuit .*
- *After flushing, the refrigerant shut-off valve - V424- must be renewed ⇒ Heating, air conditioning; Rep. gr. 87 ; Refrigerant circuit .*

Protected by copyright. Copying for private or commercial purposes, in part or in whole, is not permitted unless authorised by AUDI AG. AUDI AG does not guarantee or accept any liability with respect to the correctness of information in this document. Copyright by AUDI AG.

Audi R8 (42_)

Vehicle	Adapters required for connections to air conditioner compressor	Adapters required for reservoir connections	Other requirements
Audi R8 (42_) 2008 ►	– Compressor manufacturer “Denso” (block connections with radial seal) ♦ Low-pressure side: adapter - VAS 6338/12- ♦ High-pressure side: adapter - VAS 6338/3-	Reservoir – Block connections with radial seal at inlet and outlet ♦ Adapter - VAS 6338/8- (2x required)	- Restrictor removed, pipe connections re-assembled

Protected by copyright. Copying for private or commercial purposes, in part or in whole, is not permitted unless authorised by AUDI AG. AUDI AG does not guarantee or accept any liability with respect to the correctness of information in this document. Copyright by AUDI AG.

Note

- *On the Audi R8, the engine must be removed to renew the air conditioner compressor. However, to flush the refrigerant circuit the refrigerant lines can be detached with the air conditioner compressor installed ⇒ Heating, air conditioning; Rep. gr. 87 ; Refrigerant circuit (vehicle-specific Workshop Manual). However, it is not advisable to flush the refrigerant circuit with the air conditioner compressor installed because the quantity of refrigerant oil cannot be measured while the air conditioner compressor is installed.*
- *The two condensers are flushed while installed and in the direction opposite to that of the refrigerant flow.*

Audi R8 (4S_)

Vehicle	Adapters required for connections to air conditioner compressor	Adapters required for connections to receiver (with dryer)	Other requirements
Audi R8 (4S_) 2015 ►	– Compressor manufacturer “Denso” (block connections with radial seal) ◆ Low-pressure side: adapter - VAS 6338/12- ◆ High-pressure side: adapter - VAS 6338/3-	Receiver – Block connections with radial seal at inlet and outlet ◆ Adapter - VAS 6338/45- (2x required)	Expansion valve removed and adapter - VAS 6338/36- installed (or an old expansion valve is drilled open and installed as an adapter ⇒ page 92) ⇒ Electronic parts catalogue . Receiver removed and both refrigerant line connections connected to each other with two adapters - VAS 6338/45- and a commercially available filler hose (short version with 5/8" thread on both sides)

Protected by copyright. Copying for private or commercial purposes, in part or in whole, is not permitted unless authorised by AUDI AG. AUDI AG does not guarantee or accept any liability with respect to the correctness of information in this document. Copyright by AUDI AG.

Note

- *On the Audi R8, the engine may have to be removed before renewing the air conditioner compressor (depending on engine version). However, to flush the refrigerant circuit the refrigerant lines can be detached with the air conditioner compressor installed ⇒ Heating, air conditioning; Rep. gr. 87 ; Refrigerant circuit (vehicle-specific Workshop Manual). However, it is not advisable to flush the refrigerant circuit with the air conditioner compressor installed because the quantity of refrigerant oil cannot be measured while the air conditioner compressor is installed.*
- *The two condensers are flushed while installed and in the direction opposite to that of the refrigerant flow.*
- *A short filler hose is also included in the adapter set for refrigerant circuits - VAS 6338/1- .*
- *Although it may be possible to flush the receiver, its large internal volume means that it may hold too much liquid refrigerant. When this refrigerant is extracted the reservoir ices up severely, the refrigerant only evaporates very slowly and the extraction process takes too long.*

Protected by copyright. Copying for private or commercial purposes, in part or in whole, is not permitted unless authorised by AUDI AG. AUDI AG does not guarantee or accept any liability with respect to the correctness of information in this document. Copyright by AUDI AG.

Audi e-tron (GE_) 2019 ►

Vehicle	Adapters required for connections to air conditioner compressor	Adapters required for connections to receiver / for non-return and shut-off valves	Other requirements
Audi e-tron (GE_) 2019 ►	– Compressor manufacturer “Sanden” (block connections with radial seal) ◆ Low-pressure side: adapter - VAS 6338/12- ◆ High-pressure side: adapter - VAS 6338/3-	Receiver – No adapter required; the dryer is removed from the receiver at the condenser and the opening is sealed off again.	Expansion valve removed and adapter - VAS 6338/44- installed (or an old expansion valve is drilled open and installed as an adapter ⇒ page 92) ⇒ Electronic parts catalogue .
		Non-return valves – 4 non-return valves removed, and shut-off valves (-6338/47-1- and -6338/47-2-) from shut-off valve set - 6338/47- installed	Open or close the shut-off valves (installed in place of the non-return valves) according to the area to be cleaned ⇒ Heating, air conditioning; Rep. gr. 87 ; Refrigerant circuit .
		Shut-off valve – Fitted shut-off valve -V424- removed and shut-off valve - VAS 6338/42- fitted instead	Open or close the shut-off valve (installed in place of the shut-off valve) according to the area to be cleaned. Renew refrigerant shut-off valve - V424- after flushing.

Provided by copyright. Copying for private or commercial purposes, in part or in whole, is not permitted unless authorised by AUDI AG. AUDI AG does not guarantee or accept any liability with respect to the correctness of information in this document. Copyright by AUDI AG.

Note

- *The refrigerant circuit is flushed in 4 operations (flushing cycles) on the Audi e-tron ⇒ Heating, air conditioning; Rep. gr. 87 ; Refrigerant circuit; Cleaning air conditioner refrigerant circuit .*
- *To flush the entire refrigerant circuit on the Audi e-tron, it is not merely sufficient for the installed shut-off valves to be in the correct position (open or closed); the electrically activated valves (in the valve block) must also be in the correct position. The electrical valves are activated via different routines stored in the corresponding control unit (e.g. in the thermal management control unit - J1024-) ⇒ Heating, air conditioning; Rep. gr. 87 ; Refrigerant circuit; Cleaning air conditioner refrigerant circuit .*
- *To perform the flushing procedure on the Audi e-tron, the circuit is separated into multiple sections, which are then flushed in one flushing cycle each. The circuit is separated by activation of the electrically activated valves and via the manual shut-off valves (must be activated manually) ⇒ Heating, air conditioning; Rep. gr. 87 ; Refrigerant circuit; Cleaning air conditioner refrigerant circuit , ⇒ Vehicle diagnostic tester ("Guided Fault Finding").*
- *The layout of the different flushing circuits for the Audi e-tron is described in the vehicle-specific Workshop Manual ⇒ Heating, air conditioning; Rep. gr. 87 ; Refrigerant circuit; Cleaning air conditioner refrigerant circuit .*
- *On vehicles with condensers with an integrated receiver / desiccant cartridge which cannot be renewed separately or which are not available as separate replacement parts, the condenser must be renewed (together with integrated desiccant cartridge) after flushing ⇒ Heating, air conditioning; Rep. gr. 87 ; Refrigerant circuit (vehicle-specific Workshop Manual) and ⇒ Electronic parts catalogue .*
- *After flushing, the refrigerant receiver at the heat exchanger for heat pump operation must be renewed ⇒ Heating, air conditioning; Rep. gr. 87 ; Refrigerant circuit .*
- *After flushing, the refrigerant shut-off valve - V424- must be renewed ⇒ Heating, air conditioning; Rep. gr. 87 ; Refrigerant circuit .*

5.6 Tracing leaks in refrigerant circuit

WARNING

Risk of injury (frostbite).

Refrigerant may escape if the refrigerant circuit has not been discharged.

Protected by copyright. Copying for private or commercial purposes, in part or in whole, is not permitted unless authorised by AUDI AG. AUDI AG does not guarantee or accept any liability with respect to the correctness of information in this document. Copyright by AUDI AG.

Note

- *Minor leaks can be detected with e.g. an electronic leak detector or UV leak detection lamp.*
- *This Workshop Manual describes two ways of tracing leaks in refrigerant circuits. These procedures have been tested and lead to a reliable result under the different usage conditions if they are performed correctly and in accordance with the specific complaint.*
- *Numerous systems are available on the market for the detection of refrigerant circuit leaks. Not all of these yield unequivocal results and, if not employed in the specified manner, may indicate leaks at various refrigerant circuit components although these are actually intact. In addition, certain procedures can lead to damage to components of refrigerant circuits.*
- Do not service components that have been identified as leaking; they must always be renewed.
- Leaking refrigerant circuits are not to be filled with refrigerant. Empty refrigerant circuits are therefore to be evacuated before filling with refrigerant and checked for leaks in this process ⇒ page 75 .

Protected by copyright. Copying for private or commercial purposes, in part or in whole, is not permitted without the express consent of AUDI AG. AUDI AG does not guarantee or accept any liability with respect to the correctness of information in this document. Copyright by AUDI AG.

Caution

- ***Audi objects to the use of chemical substances (sealing additives) for sealing leaks in refrigerant circuits.***
- ***Chemical substances for sealing leaks form deposits in the refrigerant circuit which will impair operation of the air conditioning system and lead to failure of the system (and of the air conditioner service station).***

Note

Chemical substances (sealing additives) for sealing leaks in the refrigerant circuit generally react with the ambient air or the humidity contained in it. They cause malfunctioning of valves and other components with which they come into contact on account of deposits in the refrigerant circuit (and in the air conditioner service station being used). These deposits cannot be completely removed from the components affected (even by flushing). Therefore the refrigerant circuit can only be serviced by renewing all components that have come into contact with the chemical substances.

⇒ "5.6.1 Tracing leaks in refrigerant circuit using electronic leak detector (e.g. V.A.G 1796)", page 163

⇒ "5.6.2 Tracing leaks in refrigerant circuit with leak detection system VAS 6201", page 165

⇒ "5.6.3 Locating leaks using vacuum test with air conditioner service station or nitrogen pressure test", page 175

5.6.1 Tracing leaks in refrigerant circuit using electronic leak detector (e.g. V.A.G 1796)

Protected by copyright. Copying for private or commercial purposes, in part or in whole, is not permitted unless authorised by AUDI AG. AUDI AG does not guarantee or accept any liability with respect to the correctness of information in this document. Copyright by AUDI AG.

Note

- *The various refrigerants have a different molecular structure. The sensors of the electronic leak detectors are matched to these molecules. If use is made of an electronic leak detector not specially designed for refrigerant R134a, this will not respond to refrigerant R134a or only in the event of a high refrigerant concentration in the vicinity of the leak.*
- *Depending on the design of the air conditioning unit it may be possible to determine a leak at the evaporator by inserting the test prod of the leak detector through the connection for glove compartment cooling into the air conditioning unit or - with the condensation drain hose detached - by holding the test prod at the open connection for the condensation drain of the air conditioning unit.*

Leak detection procedure for a refrigerant circuit completely empty as a result of leakage:

Caution

Proceed as follows with a completely empty refrigerant circuit to avoid allowing more refrigerant than is absolutely necessary for leak detection to escape into the environment:

– Evacuate the refrigerant circuit using the air conditioner service station ⇒ page 75 .

Note

- *If evacuation already reveals a major leak, this is to be located and eliminated as described ⇒ page 75 .*
- *Continue as follows if evacuation does not reveal any leakage or if the leakage is so slight that it is not possible to determine the leakage location with the vacuum test.*

– Pour roughly 100 g of refrigerant into the evacuated refrigerant circuit and perform leak detection as for a refrigerant circuit charged with refrigerant ⇒ page 163 .

Performing a leak test on a refrigerant circuit charged with refrigerant:

– On vehicles with high-voltage system, switch off (deactivate) auxiliary air conditioner function ⇒ Owner's Manual and ⇒ Infotainment/MMI Operating Manual .

– Switch off ignition.

– Start up leak detector in line with relevant operating instructions.
– Always hold tip of test probe beneath suspected leak.

If clicking rate increases or a warning tone sounds (depends on model), this indicates that the leak has been located (refer to operating instructions for leak detector).

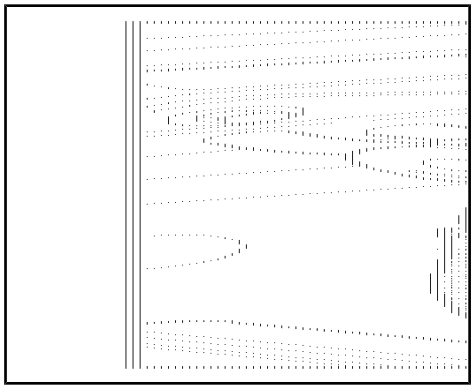

Note

- *Refrigerant gas is quickly dispersed by movement of air. Draughts must therefore be avoided during leak detection.*
- *Refrigerant gas is heavier than air and therefore sinks to a lower level at the exit location.*

Protected by copyright. Copying for private or commercial purposes, in part or in whole, is not permitted unless authorised by AUDI AG. AUDI AG does not guarantee or accept any liability with respect to the correctness of information in this document. Copyright by AUDI AG.

5.6.2 Tracing leaks in refrigerant circuit with leak detection system VAS 6201

Note

- *Certain leaks are difficult or even impossible to find using an electronic leak detector. In such cases, the leak detection system VAS 6201 can be used.*
- *Refrigerant circuit leaks result in a loss of refrigerant oil together with the refrigerant. This oil generally remains in the vicinity of the leak location. Adding a small quantity of fluorescent fluid to the refrigerant circuit makes this oil visible under UV light. The fluid (PAG oil containing an additive which shows up under UV light) is poured into the refrigerant circuit and is distributed with the refrigerant oil when the air conditioner is switched on.*
- *The air conditioner must be operated for at least 60 min. to distribute the additive through the entire refrigerant circuit (the air conditioner compressor must be running). Depending on the extent of the leak, the leakage location may already become visible under UV light within this period.*
- *The refrigerant oil containing the additive (which shows up under UV light) can either be poured directly into the open circuit or pumped in with the circuit charged using the hand pump VAS 6201/1 (from the leak detection system VAS 6201) via the service connection on the low-pressure end.*
- *If the UV leak detection additive is applied via the service connection on the low-pressure end with the refrigerant circuit charged, a small quantity of UV leak detection additive remains in the service connection. This is to be carefully removed so as to avoid subsequent erroneous leak detection.*
- *If a component forming part of a circuit, into which the UV leak detection additive has been poured, has to be renewed, thoroughly clean joints with other components after assembling refrigerant circuit. Otherwise, the residual UV leak detection additive at the joint could be erroneously identified as a leakage location during subsequent leak localisation.*
- *On discharging the refrigerant circuit, refrigerant oil and thus also UV leak detection additive ingresses into the air conditioner service station. The refrigerant oil is removed from the refrigerant in the oil separator of the air conditioner service station and discharged from the air conditioner service station via the drain. Do not pour the refrigerant oil drained off back in. It must be replaced with fresh refrigerant oil.*
- *Observe the following if leak detection fluid has already been poured into a refrigerant circuit in the course of previous repair work: Only add new leak detection fluid if refrigerant oil is renewed. If only some of the refrigerant oil has been renewed, just add the corresponding quantity of leak detection fluid. After replacing 100 ml of refrigerant oil on a vehicle containing 250 ml for example, just add 1 ml (cm^3) of UV leak detection additive.*
- *Certain materials and their compounds (e.g. oxidation products on aluminium components, anti-corrosion waxes) also show up under UV light.*
- *Certain types of air conditioner service station allow you to introduce the UV leak detection additive directly (observe the information in the operating instructions of the air conditioner service station).*

Protected by copyright. Copying for private or commercial purposes, in part or in whole, is not permitted unless AUDI AG granted. AUDI AG does not guarantee or accept any liability with respect to the correctness of information in this document. Copyright by AUDI AG.

Proceed as follows with a completely empty refrigerant circuit to avoid allowing more refrigerant than is absolutely necessary for leak detection to escape into the environment when localising refrigerant circuit leaks:

– Evacuate the refrigerant circuit using the air conditioner service station ⇒ page 75 .

Note

- *If evacuation already reveals a major leak, this is to be located and eliminated as described ⇒ page 175 and ⇒ page 75 .*
- *With the leak detection system - VAS 6201- , it is also possible to add UV leak detection additive to a charged or open refrigerant circuit ⇒ page 167 .*

Continue as follows if evacuation does not reveal any leakage or if the leakage is so slight that it is not possible to determine the leakage location on evacuation:

- Adding UV leak detection additive to the refrigerant circuit using the air conditioner service station ⇒ page 166 .
- Adding UV leak detection additive to the refrigerant circuit using the leak detection system - VAS 6201- ⇒ page 167 .

Adding UV leak detection additive to the refrigerant circuit using the air conditioner service station

– Adding UV leak detection additive and the specified quantity of refrigerant to the refrigerant circuit using the air conditioner service station ⇒ page 276 .

Note

The quantity of UV leak detection additive to be added to a refrigerant circuit with a refrigerant oil quantity of 100 to 150 cm^3 using the hand-operated pump - VAS 6201- of the leak detection system - VAS 6201- is 2.5 +/- 0.5 cm^3. If the quantity of refrigerant oil in the refrigerant circuit is greater, a corresponding quantity of UV leak detection additive must be added (e.g. 5.0 +/- 0.5 cm^3 for a refrigerant circuit with a refrigerant oil quantity of 250 cm^3). When adding the UV leak detection additive with an air conditioner service station, the amount required may differ and attention must therefore be paid to the corresponding operating instructions. For the corresponding refrigerant oil quantity in the refrigerant circuit, refer to ⇒ page 317 .

Special tools and workshop equipment required

- Air conditioner service station with facility for adding UV leak detection additive to the refrigerant circuit ⇒ Electronic parts catalogue (Tools; Workshop equipment/tools; Air conditioning/heating).
- Approved leak detection additive ⇒ Electronic parts catalogue (Tools; Workshop equipment/tools; Air conditioning/heating).

Protected by copyright. Copying for private or commercial purposes, in part or in whole, is not permitted unless authorised by AUDI AG. AUDI AG does not guarantee or accept any liability with respect to the correctness of information in this document. Copyright by AUDI AG.

- Cleaning agent - VAS 6201/3- -3-

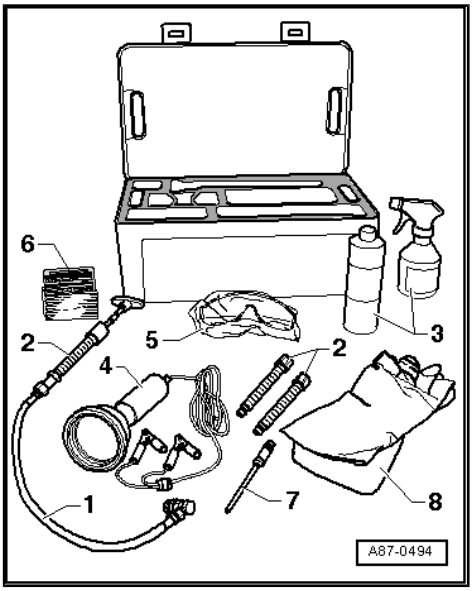

- UV leak detector lamp - VAS 6201/4- -4-
- UV-absorbing safety goggles - VAS 6201/6- -5-
- Sticker - VAS 6201/7- -6-

– Affix a sticker next to the service connections to indicate that UV leak detection additive has been added to this refrigerant circuit.

– Start up the air conditioner.

Note

- *The air conditioner must be operated for at least 60 min. to distribute the additive through the entire refrigerant circuit (the air conditioner compressor must be running). Depending on the extent of the leak, the leakage location may already become visible under UV light within this period.*
- *Depending on its size and location, it may now take several days for sufficient refrigerant oil with UV leak detection additive to emerge to identify the leakage point clearly.*

– Use a UV lamp VAS 6196/4 to locate the refrigerant circuit leak ⇒ page 173 .

Adding UV leak detection additive to the refrigerant circuit using the leak detection system - VAS 6201-

Special tools and workshop equipment required

- Leak detection system - VAS 6201-

Protected by copyright. Copying for private or commercial purposes, in part or in whole, is not permitted unless authorised by AUDI AG. AUDI AG does not guarantee or accept any liability with respect to the correctness of information in this document. Copyright by AUDI AG.

The VAS 6201 leak detection system includes the following tools ⇒ Electronic parts catalogue (Tools; Workshop equipment/tools; Air conditioning/heating).

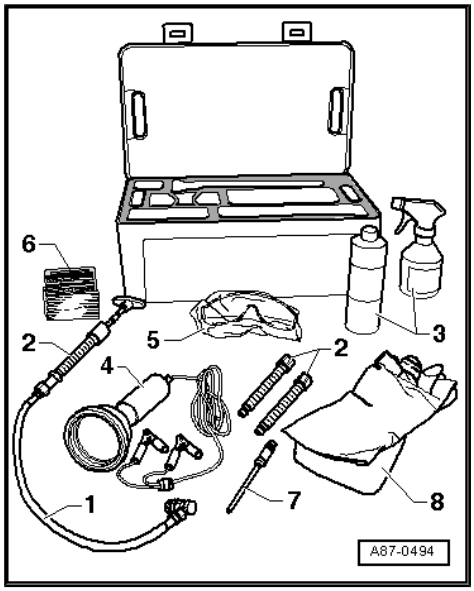

1 - Hand pump with low-pressure service hose, service coupling and non-return valve - VAS 6201/1-

2 - Cartridge - VAS 6201/2- (with UV leak detection additive)

3 - Cleaning solution - VAS 6201/3-

4 - UV leak detection lamp - VAS 6201/4-

5 - UV-absorbing eye protection - VAS 6201/6-

6 - Sticker - VAS 6201/7-

7 - Tube
VAS 6201/8

8 - Protective gloves - VAS 6201/9-

Note

- *The following procedure describes the addition of UV leak detection additive using the hand pump - VAS 6201- . Observe the corresponding operating instructions if the UV leak detection additive is to be added to the refrigerant circuit using a different tool (e.g. an air conditioner service station).*
- *The quantity of UV leak detection additive to be added to a refrigerant circuit with a refrigerant oil quantity of 100 to 150 cm³ using the hand-operated pump - VAS 6201- is indicated in the following (2.5 +/- 0.5 cm³). If the quantity of refrigerant oil in the refrigerant circuit is greater, a corresponding quantity of UV leak detection additive must be added (e.g. 5.0 +/- 0.5 cm³ for a refrigerant circuit with a refrigerant oil quantity of 250 cm³). For the corresponding refrigerant oil quantity in the refrigerant circuit, refer to ⇒ page 317 .*
- *Observe the quantity of UV leak detection additive given in the corresponding operating instructions if the UV leak detection additive is to be added to the refrigerant circuit using a different tool (e.g. an air conditioner service station).*

Reproduction of this document or parts thereof in any form or by any other means for commercial purposes, in part or in whole, is not permitted unless authorised by AUDI AG. AUDI AG does not guarantee or accept any liability with respect to the correctness of information in this document. Copyright by AUDI AG.

Adding UV leak detection additive with refrigerant circuit empty

The cartridge -A- contains 15.4 ml of UV leak detection additive (one unit -B- corresponds to 2.5 ml).

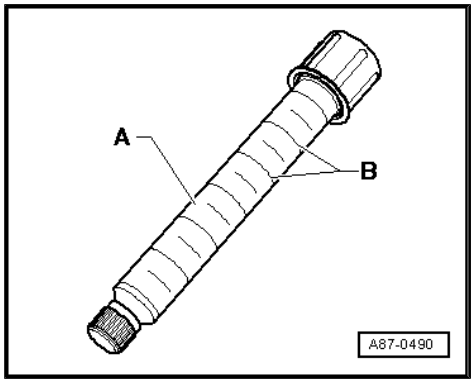

– Assemble hand pump - VAS 6201- , item -1- with cartridge, item -2- -VAS 6201/2- .
– Insert filler tube - VAS 6201/8- (⇒ page 168 item -7-) in hand pump.
– Open hand pump service valve.

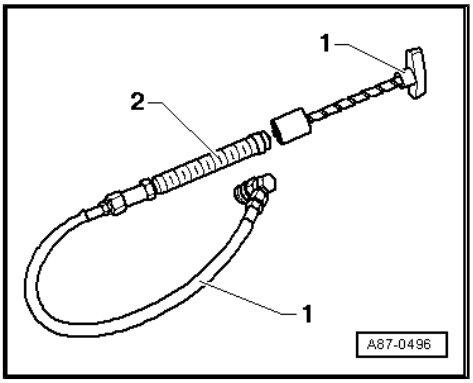

Note

- *When the refrigerant circuit is empty, the UV leak detection additive can be added to the circuit via a service connection or an open connection.*
- *If the refrigerant circuit is empty, it may be better to add the UV leak detection additive by way of a joint (e.g. if a joint has already been unfastened). In this way, no UV leak detection additive is left in the service connection and the connection does not have to be cleaned.*

- Addition of UV leak detection additive to the refrigerant circuit by way of a service connection ⇒ page 171 .
- Addition of UV leak detection additive to the refrigerant circuit by way of an open connection ⇒ page 170 .

Protected by copyright. Copying for private or commercial purposes, in part or in whole, is not permitted unless authorised by AUDI AG. AUDI AG does not guarantee or accept any liability with respect to the correctness of information in this document. Copyright by AUDI AG.

Addition of UV leak detection additive to the refrigerant circuit by way of an open connection.

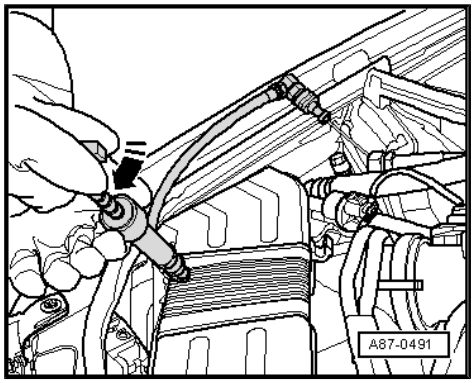

– Open the refrigerant circuit at a readily accessible connection.

– Cover the surrounding area with sheeting or absorbent paper.

– Hold filler tube upwards.

– Screw in the toggle of the hand pump until the UV leak detection additive emerges from the tube.

– Add 2.5 +/-0.5 ml (millilitre = cm^3) of UV leak detection additive to the refrigerant circuit (for a refrigerant circuit with a refrigerant oil quantity of 100 to 150 cm^3).

Note

Observe the following if UV leak detection fluid has already been poured into a refrigerant circuit in the course of previous repair work: Only add new UV leak detection fluid if refrigerant oil is renewed. If only some of the refrigerant oil has been renewed, only add the corresponding quantity of UV leak detection additive. After replacing 100 ml of refrigerant oil on a vehicle containing 250 ml for example, just add 2 ml (cm^3) of UV leak detection additive.

– Renew O-ring at open connection.

– Assemble refrigerant circuit.

– Affix a sticker next to the service connections to indicate that leak detection fluid has been added to this refrigerant circuit.

– Evacuate and charge the refrigerant circuit as specified ⇒ page 75 and ⇒ page 80 .

Protected by copyright. Copying for private or commercial purposes, in part or in whole, is not permitted unless authorised by AUDI AG. AUDI AG does not guarantee or accept any liability with respect to the correctness of information in this document. Copyright by AUDI AG.

– Start up the air conditioner.

Note

- *The air conditioner must be operated for at least 60 min. to distribute the additive through the entire refrigerant circuit (the air conditioner compressor must be running). Depending on the extent of the leak, the leakage location may already become visible under UV light within this period.*
- *Depending on its magnitude and location, it may now take several days for sufficient refrigerant oil with additive to emerge to clearly localise the leakage point.*

– Use a UV lamp VAS 6196/4 to locate the refrigerant circuit leak ⇒ page 173 .

Adding UV leak detection additive with refrigerant circuit charged

Protected by copyright. Copying for private or commercial purposes, in part or in whole, is not permitted unless authorised by AUDI AG. AUDI AG does not guarantee or accept any liability with respect to the correctness of information in this document. Copyright by AUDI AG.

Note

- *Observe the following if leak detection fluid has already been poured into a refrigerant circuit in the course of previous repair work: Only add new leak detection fluid if refrigerant oil is renewed. If only some of the refrigerant oil has been renewed, just add the corresponding quantity of leak detection fluid. After replacing 100 ml of refrigerant oil on a vehicle containing 250 ml for example, just add 1 ml (cm^3) of UV leak detection additive.*
- *A small quantity of UV leak detection additive remains in the service connection. This is to be carefully removed so as to avoid subsequent erroneous leak detection.*

The cartridge -A- contains 15.4 ml of UV leak detection additive (one unit -B- corresponds to 2.5 ml).

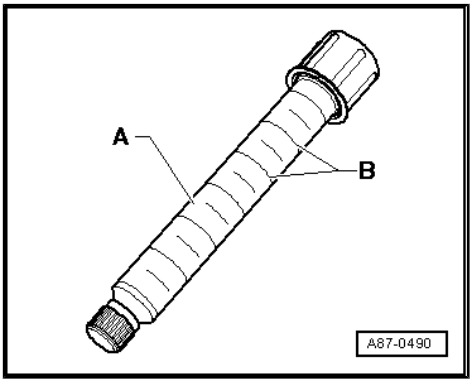

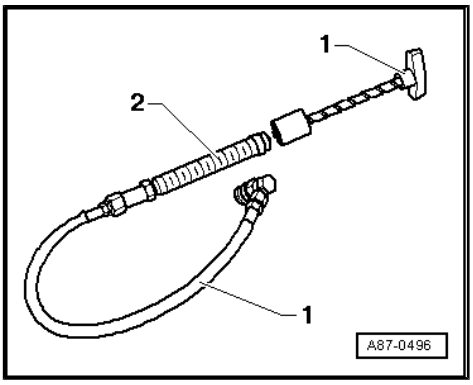

- Switch off ignition.
- Detach cap from service connection on low-pressure side of refrigerant circuit.
- Assemble hand pump - VAS 6201- , item -1- with cartridge, item -2- -VAS 6201/2- .
- Insert the tube - VAS 6201/8- (⇒ page 168 item -7-) in the service coupling and open the service coupling by screwing in the handwheel. Hold the hose upwards and screw in the toggle of the hand pump until the UV leak detection additive starts to emerge from the tube.

Note

Make sure hand pump hose is completely filled with refrigerant.

- Close service coupling and remove filler tube from locking mechanism.

- Cover area around service connection on vehicle with sheeting or absorbent paper.
- Connect filler unit to refrigerant circuit service connection on vehicle.
- Open service connection by screwing in handwheel.
- Screw in toggle of hand-operated pump and add 2.5 +/-0.5 ml (millilitre = cm^3) of UV leak detection additive to the refrigerant circuit (for a refrigerant circuit with a refrigerant oil quantity of 100 to 150 cm^3).

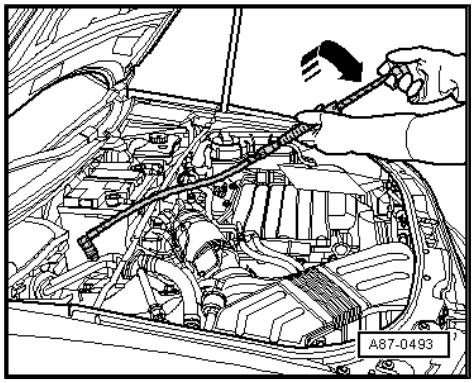

Protected by copyright. Copying for private or commercial purposes, in part or in whole, is not permitted unless authorised by AUDI AG. AUDI AG does not guarantee or accept any liability with respect to the correctness of information in this document. Copyright by AUDI AG.

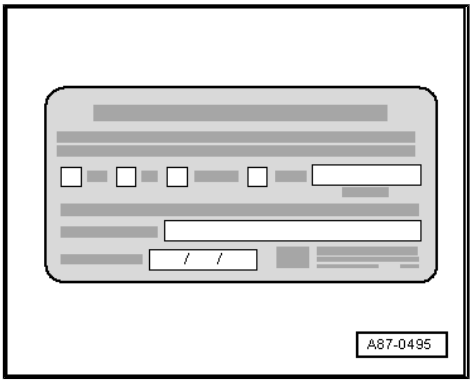

– Detach filler unit from service connection.
– Use absorbent paper, for example, to remove the residual UV leak detection additive from the service connection.
– Seal service connection with cap.
– If necessary, use cleaning solution to clean area around service connection.
– Affix sticker next to service connections to indicate that leak detection fluid has been added to the refrigerant circuit.
– Start up the air conditioner.

Note

♦ *The air conditioner must be operated for at least 60 min. to distribute the additive through the entire refrigerant circuit (the air conditioner compressor must be running). Depending on the extent of the leak, the leakage location may already become visible under UV light within this period.*

♦ *Depending on its magnitude and location, it may now take several days for sufficient refrigerant oil with additive to emerge to clearly localise the leakage point.*

Protected by copyright. Copying for private or commercial purposes, in part or in whole, is not permitted unless authorised by AUDI AG. AUDI AG does not guarantee or accept any liability with respect to the correctness of information in this document. Copyright by AUDI AG.

– Use a UV lamp VAS 6196/4 to locate the refrigerant circuit leak ⇒ page 173 .

Finding leaks in refrigerant circuit with UV lamp VAS 6196/4

WARNING

Never look into UV lamp.

Never point UV lamp at other people.

Note

- *The air conditioner must be operated for at least 60 min. after adding the UV leak detection additive so that the additive is distributed through the entire refrigerant circuit (the air conditioner compressor must be running). Depending on the extent of the leak, the leakage location may already become visible under UV light within this period.*
- *Depending on its magnitude and location, it may take several days for sufficient refrigerant oil with additive to emerge to clearly localise the leakage point.*
- *In the event of leaks at the evaporator, the additive may be washed out with the condensation and emerge via the condensation drain. As considerable work is required on most vehicles to gain access to the evaporator, a check e.g. at the condensation drain can provide an indication of evaporator leakage. However, this requires the additive to have been in the refrigerant circuit for a lengthy period (several days).*
- *The safety goggles are not only designed to provide eye protection. They also make the UV leak detection additive more readily visible under UV light.*
- *Depending on the accessibility of various parts of the refrigerant circuit, it may be necessary to remove certain vehicle components (e.g. the bumper or air cleaner).*
- *Certain parts of the refrigerant circuit are only supplied with a small quantity of refrigerant oil in the course of air conditioner operation (e.g. top-mounted cap of receiver attached to condenser on Audi A8 2010 >). In the event of leakage at such locations, it may take longer for a sufficient amount of refrigerant with refrigerant oil and additive which shows up under ultraviolet light to emerge for leak detection. It may therefore be advisable to use an electronic leak detector to search for leaks in these areas*
  ⇒ "5.6.1 Tracing leaks in refrigerant circuit using electronic leak detector (e.g. V.A.G 1796)", page 163 .
- .

Protected by copyright. Copy, distribution or use for commercial purposes, in part or in whole, is not permitted unless authorised by AUDI AG. AUDI AG does not guarantee or accept any liability with respect to the correctness of information in this document. Copyright by AUDI AG.

- Move vehicle to a poorly lit area of the workshop (daylight or bright artificial lighting diminishes the effect of the UV light).
- Check the accessibility of the various parts of the refrigerant circuit and remove any components in the surrounding area which prevent a clear view of the refrigerant circuit components (e.g. noise insulation and bumper).
- Wear safety goggles to protect the eyes.
- Connect the UV lamp to a 12 V battery (vehicle battery). Take care to ensure correct polarity of connections.
- Switch on UV lamp and illuminate components of refrigerant circuit. Locations at which leakage has caused refrigerant, refrigerant oil and therefore also UV leak detection additive to emerge are lit up under UV light (fluorescent).

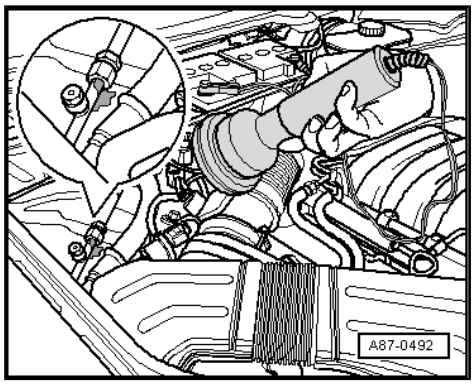

5.6.3 Locating leaks using vacuum test with air conditioner service station or nitrogen pressure test

Protected by copyright. Copying for private or commercial purposes, in part or in whole, is not permitted unless authorised by AUDI AG. AUDI AG does not guarantee or accept any liability with respect to the correctness of information contained in this document. Copyright by AUDI AG.

Vehicles with high-voltage system (hybrid vehicles)

– On vehicles with high-voltage system, switch off (deactivate) auxiliary air conditioner function ⇒ Owner's Manual and ⇒ Infotainment/MMI Operating Manual .

All vehicles

– Switch off ignition.

♦ Establishing leaks by way of vacuum test with air conditioner service station or nitrogen pressure test
⇒ "5.3.4 Evacuating refrigerant circuit with air conditioner service station", page 75

Note

♦ *Minor refrigerant circuit leaks (loss amounting to less than 100 g of refrigerant per year) can generally not be established by way of the vacuum test or nitrogen pressure test. The quantity of air ingressing or nitrogen escaping is not sufficient to be audible.*

♦ *Depending on the ambient conditions (ambient noise, leakage location etc.), it may also not always be possible to establish refrigerant circuit leaks involving a loss of more than 100 g of refrigerant per year using the vacuum or nitrogen pressure test. The quantity of air entering or the quantity of nitrogen escaping may not be sufficient to produce any noise which would make it possible to identify the location of the leak.*

♦ *Depending on the ambient conditions, it may be possible to detect major refrigerant circuit leaks (e.g. caused by flying stones at the condenser, loss of refrigerant more than 100 g per day) from the noise occurring at the fault location during the vacuum or nitrogen pressure test for example*
⇒ "5.3.4 Evacuating refrigerant circuit with air conditioner service station", page 75 .

6 Problems with refrigerant circuit

⇒ “6.1 Possible complaints about refrigerant circuit”, page 176

6.1 Possible complaints about refrigerant circuit

⇒ “6.1.1 Test requirements:”, page 176

⇒ “6.1.2 Possible complaints”, page 176

6.1.1 Test requirements:

- Electrical system, vacuum system and air duct fault-finding has not revealed any faults ⇒ Vehicle diagnostic tester (“Self-diagnosis” or “Guided Fault Finding” function for air conditioner), ⇒ Current flow diagrams, Electrical fault finding and Fitting locations and ⇒ Heating, air conditioning or ⇒ Air conditioning .
- Air conditioner self-diagnosis/Guided Fault Finding with the ⇒ Vehicle diagnostic tester has not revealed any faults, no compressor shut-off criteria displayed in measured value block (vehicles with “air conditioner” self-diagnosis only) ⇒ Heating, air conditioning or ⇒ Air conditioning or “Guided Fault Finding” function ⇒ Vehicle diagnostic tester .

6.1.2 Possible complaints

Note

- *For all complaints marked *, refer to ⇒ page 183 “Checking pressures”.*
- *If problems are only encountered at one evaporator on vehicles fitted with two evaporators, also check the pressures in the refrigerant circuit.*
- *Observe test requirements ⇒ page 176 .*

Vehicles without high-voltage system

- The cooling system has failed completely.*
- Insufficient cooling output at all vehicle speeds/engine speeds.*
- No or insufficient cooling after driving a few miles. *
- No or insufficient cooling at one or via both evaporators (on vehicles with two air conditioning units). *
- Air conditioner compressor, air conditioning system magnetic clutch - N25- or air conditioner compressor regulating valve - N280- are shut off by a pressure switch (e.g. -F73-, -F118-, -F129- or by the operating and display unit for front air conditioning system - E87- or the Climatronic control unit - J255-) on account of excessive or inadequate pressure. * ⇒ Heating, air conditioner; Rep. gr. 87 ; Refrigerant circuit (vehicle-specific Workshop Manual).
- Fresh air supply is not available or is reduced significantly after driving several miles (evaporator iced up). *

Vehicles with high-voltage system

- The cooling system has failed completely.*
- Insufficient cooling output at all vehicle speeds/air conditioner compressor speeds.*

Protected by copyright. Copying for private or commercial purposes, in part or in whole, is not permitted unless authorised by AUDI AG. AUDI AG does not guarantee or accept any liability with respect to the correctness of information in this document. Copyright by AUDI AG.

- No or insufficient cooling after driving a few miles. *
- No or insufficient cooling at evaporator or at one of the heat exchangers (e.g. heat exchanger for high-voltage battery). * ⇒ Heating, air conditioner; Rep. gr. 87 ; Refrigerant circuit (vehicle-specific Workshop Manual).
- No or insufficient heating output at heat exchanger for heat pump operation (e.g. on the Audi Q7 e-tron)* ⇒ Heating, air conditioning; Rep. gr. 87 ; Refrigerant circuit (vehicle-specific Workshop Manual).
- The electrical air conditioner compressor - V470- is switched off by a control unit (e.g. operating and display unit for front air conditioning system - E87- , Climatronic control unit - J255- or thermal management control unit - J1024-) if the pressure is too high or too low. * ⇒ Vehicle diagnostic tester in “Guided Fault Finding” mode
- Fresh air supply is not available or is reduced significantly after driving several miles (evaporator iced up). *

All vehicles

In addition, the following problems may occur:

The air conditioner compressor is noisy

– Re-tighten the bolts for the air conditioner compressor and the compressor holder using a torque wrench.

– Check routing of refrigerant pipes; they must not touch other components and must not be subject to strain (align if necessary).

Noise (refrigerant hammer) occurring immediately after switching on the air conditioner and/or when cornering or braking

– Discharge, evacuate and re-charge refrigerant circuit (too much refrigerant in circuit).

Note

Too much refrigerant oil in the circuit may also result in this problem (no adjustment of refrigerant oil quantity, for example, when renewing compressor).

Protected by copyright. Copying for private or commercial purposes, in part or in whole, is not permitted unless authorised by AUDI AG. AUDI AG does not guarantee or accept any liability with respect to the correctness of information in this document. Copyright by AUDI AG.

Water sprays out of the vents (in the dash panel or footwell) although the air conditioning system is otherwise functioning properly

– Check proper routing of condensation drain; it must not be crushed or kinked.

– Check the condensation drain valve; it must not be gummed up with wax or underseal and must close properly.

– Check the plenum chamber cover; it must be undamaged and be installed correctly (no water must flow into the evaporator).

– Check water drains in plenum chamber; they must not be blocked (e.g. by leaves).

7 Connecting air conditioner service station

- If work on high-voltage system components is necessary, de-energise high-voltage system ⇒ Rep. gr. 93 ; De-energising high-voltage system or ⇒ Electrical system; Rep. gr. 93 ; De-energising high-voltage system .

Note

Protected by copyright. Copying for private or commercial purposes, in part or in whole, is not permitted unless authorised by AUDI AG. AUDI AG does not guarantee or accept any liability with respect to the correctness of information in this document. Copyright by AUDI AG.

When working on the refrigerant circuit using the air conditioner service station, the high-voltage system does not usually have to be de-energised.

– Switch off ignition.

⇒ "7.1 Connecting air conditioner service station - vehicles with a connection on the low-pressure and high-pressure side of the refrigerant circuit", page 178

⇒ "7.2 Connecting air conditioner service station - vehicles with no connection on the low-pressure side of the refrigerant circuit", page 179

7.1 Connecting air conditioner service station - vehicles with a connection on the low-pressure and high-pressure side of the refrigerant circuit

Connecting air conditioner service station for measuring and testing

– Switch off ignition.

– Connect air conditioner service station to power supply.

– Connect quick-release coupling adapter to filler hoses of air conditioner service station (handwheels not screwed in/hand shut-off valve not open).

– Switch on the air conditioner service station and evacuate the filler hoses (only necessary if there is air in the filler hoses).

– Switch on air conditioner service station.

– Unscrew sealing caps from service connections (with valve).

– Connect air conditioner service station to vehicle refrigerant circuit via service connections with quick-release coupling adapters.

– Only screw in the handwheel of the quick-release coupling adapters to the extent required to reliably open the valves at the refrigerant circuit connection (observe pressure gauge, do not open valves further than necessary).

On vehicles with high-voltage system and additional air conditioner functions (e.g. on the Audi Q7 e-tron):

Note

On vehicles with the "heat pump" and/or "high-voltage battery cooling" function, high pressure is not available at the service connection on the high-pressure side in all air conditioner operating modes. On these vehicles, the pressure in the refrigerant circuit on the high-pressure side can only be measured via the pressure/temperature senders installed in the refrigerant circuit (depending on the air conditioner operating mode) ⇒ Heating, air conditioning; Rep. gr. 87 ; Refrigerant circuit (vehicle-specific Workshop Manual) and ⇒ Vehicle diagnostic tester ("Guided Fault Finding").

To check the various functions of these air conditioners:

– On the vehicle diagnostic tester, select the corresponding function ("passenger compartment cooling", "heat pump operation" or "high-voltage battery cooling") and perform the function according to requirements ⇒ Vehicle diagnostic tester in "Guided Fault Finding" mode.

– On the vehicle diagnostic tester, select and read out the measurements from the various pressure/temperature senders installed in the refrigerant circuit ⇒ Vehicle diagnostic tester in "Guided Fault Finding" mode.

All vehicles

– Perform planned tests and measurements.

7.2 Connecting air conditioner service station - vehicles with no connection on the low-pressure side of the refrigerant circuit

On the following vehicles, no service connection is provided for the air conditioner service station on the low-pressure side of the refrigerant circuit. Adapters are required for connecting the air conditioner service station to the refrigerant circuit of these vehicles.

- Audi 80, Audi Cabriolet, Audi Coupé
- Audi A4 up to 07/96
- Audi 100 / Audi A6 up to 03/97
- Audi A8 up to 11/97

Protected by copyright. Copying for private or commercial purposes, in part or in whole, is not permitted unless authorised by AUDI AG. AUDI AG does not guarantee or accept any liability with respect to the correctness of information in this document. Copyright by AUDI AG.

Note

On vehicles without a connection or with an inaccessible connection at the air conditioner compressor, remove the low pressure switch for air conditioning system - F73- (bridge contacts in connector for low pressure switch for air conditioning system - F73-) and screw adapter onto this connection ⇒ Heating, air conditioning; Rep. gr. 87 ; Refrigerant circuit (vehicle-specific Workshop Manual).

Note

- *The tools listed below are commercially available or can be obtained from the regional sales centre or importer.*
- *Should it be necessary to measure pressures at switch connections on high-pressure side, use adapter from adapter set for refrigerant circuit - V.A.G 1785/9- and proceed in the same manner.*

⇒ “7.2.1 Connecting air conditioner service station to refrigerant circuit with adapter set for refrigerant circuit V.A.G 1786 ”, page 180

⇒ “7.2.2 Connecting air conditioner service station to refrigerant circuit with adapter V.A.G 1785/10”, page 181

⇒ “7.2.3 Connecting air conditioner service station for measuring and testing”, page 181

Protected by copyright. Copying for private or commercial purposes, in part or in whole, is not permitted unless authorised by AUDI AG. AUDI AG does not guarantee or accept any liability with respect to the correctness of information in this document. Copyright by AUDI AG.

7.2.1 Connecting air conditioner service station to refrigerant circuit with adapter set for refrigerant circuit - V.A.G 1786-

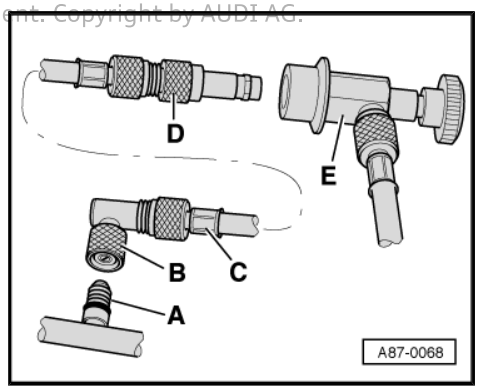

A - Connection with valve (small valve core) at low-pressure side of refrigerant circuit

B - Adapter with union nut - V.A.G 1786/1-

C - Commercially available filler hose (short version with 5/8" thread on each end)

D - Adapter with service connection - V.A.G 1786/2- (for connection of quick-release coupling of air conditioner service station -E-)

Note

- *Assemble adapter and filler hose as shown and start by connecting to connection with valve -A-.*
- *The adapter with union nut - V.A.G 1786/1- is only to be used at connections with a “small” valve core (standard for connection with valve for low-pressure switch for air conditioning system - F73- and also gradually introduced as of 10.94 at the air conditioner compressor).*
- *Instead of adapter with union nut - V.A.G 1786/1- , you can also use adapter - V.A.G 1785/10- (remove valve from adapter - V.A.G 1785/10- or install valve opener in filler hose).*

7.2.2 Connecting air conditioner service station to refrigerant circuit with adapter V.A.G 1785/10

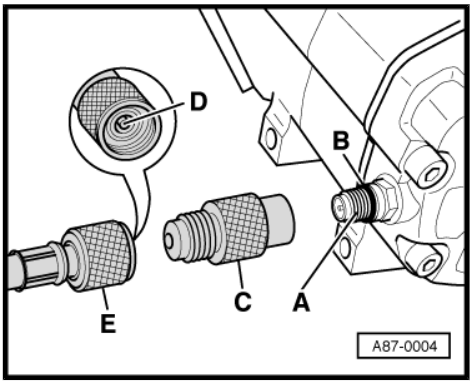

– Unscrew the sealing cap from the connection with valve -A- (at the air conditioner compressor).
– Attach O-ring -B- to connection (8.9 mm; 1.8 mm).
– Screw adapter V.A.G 1785/10 -C- onto connection -B-.
– Install valve opener -D- with appropriate seal in filler hose connection.

Note

- *The type of valve opener -D- and seals required depends on the filler hose used (specific to manufacturer).*
- *The quick-release coupling adapter is not required for connection on the low-pressure side of Audi vehicles.*
- *Screw filler hose -E- (to air conditioner service station) onto adapter - V.A.G 1785/10- .*

Note

To minimise the amount of air and moisture entering the filler hoses and thus into the refrigerant circuit, the filler hoses should be connected as illustrated.

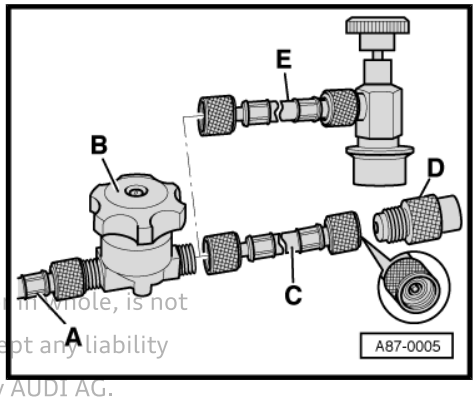

A - Filler hose to air conditioner service station

B - Hand shut-off valve

C - Filler hose (short version) with valve opener for connection to adapter -D-

D - Adapter - V.A.G 1785/10-

E - Filler hose (short version) with quick-release coupling adapter (for vehicles with quick-release coupling adapter on low-pressure side)

– Perform planned tests and measurements.

Protected by copyright. Copying for private or commercial purposes, in part or in whole, is not permitted unless authorised by AUDI AG. AUDI AG does not guarantee or accept any liability with respect to the correctness of information in this document. Copyright by AUDI AG.

7.2.3 Connecting air conditioner service station for measuring and testing

– On vehicles with high-voltage system, switch off (deactivate) auxiliary air conditioner function ⇒ Owner's Manual and ⇒ Infotainment/MMI Operating Manual .
– Switch off ignition.
– Connect air conditioner service station to power supply.
– Assemble adapter set and screw onto connection on low-pressure side.
– Connect quick-release coupling adapter to filler hoses of air conditioner service station (handwheels not screwed in/hand shut-off valve not open).
– Switch on air conditioner service station and evacuate filler hoses (only necessary if there is air in the filler hoses).

- Switch off air conditioner service station.
- Unscrew the sealing cap from the service connection or the connection with valve (or remove the low-pressure switch and jumper the corresponding electrical connections).
- Connect air conditioner service station to vehicle refrigerant circuit via service connections with quick-release coupling adapters.
- Only screw in the handwheel of the quick-release coupling adapters to the extent required to reliably open the valve at the refrigerant circuit connection (observe pressure gauge, do not open valve too far).
- Perform planned tests and measurements.

Protected by copyright. Copying for private or commercial purposes, in part or in whole, is not permitted unless authorised by AUDI AG. AUDI AG does not guarantee or accept any liability with respect to the correctness of information in this document. Copyright by AUDI AG.

8 Checking pressures

⇒ "8.1 Checking pressures in refrigerant circuit with air conditioner service station (with ignition switched off)", page 183

⇒ "8.2 Checking pressures - vehicles with restrictor and reservoir (with internally regulated air conditioner compressor)", page 189

⇒ "8.3 Checking pressures - vehicles with expansion valve and receiver (with internally regulated air conditioner compressor)", page 194

⇒ "8.4 Checking pressures - vehicles with restrictor, reservoir and air conditioner compressor regulating valve N280 (with externally regulated air conditioner compressor)", page 200

⇒ "8.5 Checking pressures - vehicles with expansion valve, receiver and air conditioner compressor regulating valve N280 (with externally regulated air conditioner compressor)", page 207

⇒ "8.6 Checking pressures - vehicles with electrically driven air conditioner compressor (vehicles with high-voltage system)", page 218

8.1 Checking pressures in refrigerant circuit with air conditioner service station (with ignition switched off)

Note

- *All test requirements marked with an * are vehicle-specific and are described in the Workshop Manual for the relevant vehicle.*
- *Check cooling output.**
- *Connections with valve and service connections for measuring and testing ⇒ Heating, air conditioning; Rep. gr. 87 ; Refrigerant circuit (vehicle-specific Workshop Manual).*
- *Depending on the version of the air conditioner compressor, there may be a valve on the high-pressure side of the compressor which prevents liquid refrigerant from flowing back into the compressor after the air conditioner has been switched off. If an air conditioner compressor with such a valve is installed in a vehicle with a refrigerant circuit with an expansion valve, it may take a relatively long time before the pressure in the high-pressure side drops (the expansion valve is cold and the pressure in the low-pressure side increases rapidly after the compressor is switched off; the expansion valve is closed and the refrigerant can only flow slowly to the low-pressure side). If the air conditioner compressor is switched on, the pressure in the low-pressure side drops, the expansion valve is opened and the refrigerant can flow to the low-pressure side.*

Under certain operating conditions, residual moisture in the coolant circuit may lead to the formation of ice at the air conditioner compressor regulating valve. Such ice formation impedes the control of the air conditioner compressor. The evaporator is cooled down too much and ices up. An iced-up evaporator may cause the following problems:

- The air conditioning system fails repeatedly or sporadically (no cooling/heating output) after extended driving; after the vehicle has been stopped, the air conditioner functions properly again (after a short wait).
- Misting up of the windows (front windscreen, side windows and / or rear windscreen) on the inside after a long journey;

Protected by copyright. Copying for private or commercial purposes, in part or in whole, is not permitted unless authorised by AUDI AG. AUDI AG does not guarantee or accept any liability with respect to the correctness of information in this document. Copyright by AUDI AG.

the windows are initially not cleared even by pressing the De-frost button; the air conditioner functions properly again after a short delay following engine shut-off.

Remedy:

– In the case of vehicles as of Model Year 2001 and an air conditioner compressor with air conditioner compressor regulating valve - N280- , check the measured value of the evaporator output temperature sender - G263- (by way of the “Reading measured value block” function). If the measured value of the sender is too low under the usage conditions outlined by the customer (at ambient temperatures above 0 °C, below 0 °C for a lengthy period although -N280- is not being activated) or too high (above approx. 10 °C although air conditioner is operating properly), The evaporator may ice up due to the incorrect measured value ⇒ Vehicle diagnostic tester (“self-diagnosis” or “Guided Fault Finding” function for air conditioner) and ⇒ Heating, air conditioning; Rep. gr. 87 ; Refrigerant circuit (vehicle-specific Workshop Manual).

– On vehicles without an evaporator output temperature sender - G263- , use for example footwell vent temperature sender - G192- to check vent temperature under operating conditions described by customer in the following settings: "Lo temperature" for driver and passenger side, 4 or 5 bars for fresh air blower speed, air outlet to footwell and fresh-air mode. If measured value of sender is too low (at ambient temperature above 0°C, colder than 0°C for lengthy period).

Protected by copyright. Copying for private or commercial purposes, in part or in whole, is not permitted unless authorised by AUDI AG. AUDI AG does not guarantee or accept any liability with respect to the correctness of information in this document. Copyright by AUDI AG.

– Check refrigerant line between evaporator and reservoir (thick line, low-pressure side) with engine running. If this line is severely iced up when the problem occurs (thin layer of ice is permissible), this also indicates that evaporator temperature is too low.

– Discharge refrigerant circuit, renew reservoir or receiver with dryer and then evacuate refrigerant circuit for at least 3 hours.

⇒ “8.1.1 Test requirements”, page 184

⇒ “8.1.2 Checking pressures ”, page 186

8.1.1 Test requirements

Note

This section describes the test requirements for a vehicle with a mechanically driven air conditioner compressor as an example. These requirements differ on vehicles with high-voltage system (e.g. Audi A3 e-tron, Audi Q7 e-tron) or with additional air conditioner functions (e.g. Audi Q7 e-tron). On these vehicles, note the corresponding information in the Workshop Manual and in Guided Fault Finding ⇒ Heating, air conditioning; Rep. gr. 00 ; Repair instructions; Checking cooling output (vehicle-specific Workshop Manual) and ⇒ Vehicle diagnostic tester in “Guided Fault Finding” mode.

- Radiator and condenser clean (clean if necessary)
- Thermal insulation at expansion valve OK and properly installed*
- Poly V-belt OK and properly tensioned. / belts for air conditioner compressor and alternator OK and properly tensioned.*
- All air ducts, covers and seals OK and properly installed
- No faults detected during fault-finding on electrical system and vacuum system* ⇒ Vehicle diagnostic tester (“self-diagnosis” or “Guided Fault Finding” function for air conditioner) and ⇒

Protected by copyright. Copying for private or commercial purposes, in part or in whole, is not permitted unless authorised by AUDI AG. AUDI AG does not guarantee or accept any liability with respect to the correctness of information in this document. Copyright by AUDI AG.

Heating, air conditioning; Rep. gr. 87 ; Refrigerant circuit (vehicle-specific Workshop Manual).

- No fault detected during air conditioner self-diagnosis (with engine running and air conditioning system switched on), no compressor shutoff criteria displayed in measured value block (vehicles with “air conditioning system” self-diagnosis only).* ⇒ Vehicle diagnostic tester (“self-diagnosis” or “Guided Fault Finding” function for air conditioner) and ⇒ Heating, air conditioning; Rep. gr. 87 ; Refrigerant circuit (vehicle-specific Workshop Manual).
- Check whether the various pressure/temperature senders and temperature sensors installed in the refrigerant circuit deliver plausible measured values during operation of the air conditioner ⇒ Vehicle diagnostic tester (“Guided Fault Finding”) and ⇒ Heating, air conditioning; Rep. gr. 87 ; Overview of fitting locations - air conditioner . If no fault is found, extract refrigerant.
- Air flow through dust and pollen filter not impeded by dirt*
- Air conditioning unit not drawing in secondary air at maximum fresh air blower speed; evaporator and heater not drawing in secondary air at maximum fresh air blower speed*
- Air flaps in air conditioning unit, heater and evaporator reach end position*
- Fresh-air intake ducts beneath bonnet and in passenger compartment as well as corresponding water drain valves OK* ⇒ Heating, air conditioning; Rep. gr. 87 ; Air ducting (vehicle-specific Workshop Manual).
- Engine at operating temperature
- Vehicle not exposed to sunlight ⇒ Heating, air conditioning; Rep. gr. 00 ; Repair instructions; Checking cooling output (vehicle-specific Workshop Manual)
- Ambient temperature above 15 °C
- All dash panel vents open

– Start engine.

Setting on the air conditioning system control unit, e.g. on the operating and display unit for front air conditioning system - E87- or the Climatronic control unit - J255- (and the rear Climatronic operating and display unit - E265- on vehicles with two air conditioning units):

– Select “Auto” mode (air conditioner compressor switched on).

– Set “LO” temperature for driver and front passenger side (and rear left and right of passenger compartment in vehicles with two air conditioning units).

Settings on heater controls:

– Press A/C button and "Rec" or recirculated air button.

– Turn the rotary temperature control towards the “cold” stop.

– Set rotary fresh air blower control to “4”.

Subsequently, the following system test requirements should be met:

- Radiator fan - V7- (and radiator fan 2 - V177- if fitted) must be running (at least at speed 1).*

Note

With some versions, the fan is not switched on until the pressure in the refrigerant circuit has exceeded a specified value.

- Fresh air blower - V2- (and rear fresh air blower - V80- on vehicles with two air conditioning units) run(s) at maximum speed.
- Air recirculation flap/fresh air flap is in “Air recirculation mode” position (air flow flap is closed and air recirculation flap opened within 1 min. after the vehicle is started).*
- Coolant shut-off valve closed.*
- Valves of pump valve unit closed and no coolant circulation pump delivery*
- Air conditioner compressor is actually driven (air conditioning system magnetic clutch - N25- energised, overload protection (if fitted) not tripped).*

Note

Depending on the engine, the air conditioner compressor is driven by different components (belt or drive shaft). To protect these components and the engine, the pulley or the drive unit of the air conditioner compressor are fitted with an overload protection device, which is triggered if the air conditioner compressor is not operating smoothly ⇒ Heating, air conditioning; Rep. gr. 87 ; Air conditioner compressor (vehicle-specific Workshop Manual).

8.1.2 Checking pressures

◆ Observe test requirements ⇒ page 184 .

– On vehicles with high-voltage system, switch off (deactivate) auxiliary air conditioner function ⇒ Owner's Manual and ⇒ Infotainment/MMI Operating Manual .

– Switch off ignition.

– Connect air conditioner service station ⇒ page 178 .

Vehicles with electrically operated valves in the refrigerant circuit which are not open when the system is de-energised (e.g. on the Audi Q7 e-tron):

Note

Protected by copyright. Copying for private or commercial purposes, in part or in whole, is not permitted unless authorised by AUDI AG. AUDI AG does not guarantee or accept any liability with respect to the correctness of information in this document. Copyright by AUDI AG.

On vehicles with high-voltage system and additional air conditioner functions (“heat pump operation” or “high-voltage battery cooling”), valves which are not open when the system is de-energised may be fitted in the refrigerant circuit. These valves are opened and closed e.g. via stepper motors and are not activated after the ignition is switched off. However, for the pressure in the refrigerant circuit to be checked when the air conditioner is switched off, no part of the circuit may be closed off; these valves must therefore be opened before performing such work ⇒ Heating, air conditioning; Rep. gr. 87 ; Refrigerant circuit (vehicle-specific Workshop Manual) and ⇒ Vehicle diagnostic tester (“Guided Fault Finding”).

– Use the vehicle diagnostic tester to open the electrically activated valves which are not open when the system is de-

energised ⇒ Vehicle diagnostic tester (“Guided Fault Finding”).

All vehicles

– Read pressures off pressure gauges; there are two possible results:

♦ The pressure in the refrigerant circuit is lower than indicated in the table.

♦ The pressure in the refrigerant circuit corresponds to that indicated in the table or is higher.

Ambient temperature (in degrees centigrade)	Pressure in refrigerant circuit in bar
+15 °C	3.9
+20 °C	4.7
+25 °C	5.6
+30 °C	6.7
+35 °C	7.8
+40 °C	9.1
+45 °C	10.5

Protected by copyright. Copying for private or commercial purposes, in part or in whole, is not permitted unless authorised by AUDI AG. AUDI AG does not guarantee or accept any liability with respect to the correctness of information in this document. Copyright by AUDI AG.

Note

♦ *The temperature of the refrigerant circuit components should be equal to the ambient temperature. (the pressure will deviate from the values in the table if individual components of the refrigerant circuit are warmer or colder).*

♦ *On the absolute pressure scale, 0 bar corresponds to an absolute vacuum. The normal ambient pressure (atmospheric pressure) corresponds to 1 bar absolute pressure. On the scales of most pressure gauges, 0 bar corresponds to an absolute pressure of 1 bar (can be seen from -1 bar mark below 0).*

♦ *On vehicles with a high-pressure sender - G65- , pressure sender for refrigerant circuit - G805- or refrigerant pressure and temperature sender - G395- etc. for which the measured pressure is displayed in the measured value block, the pressure measured should coincide with the values in the table ⇒ Vehicle diagnostic tester (“Self-diagnosis” or “Guided Fault Finding” function for air conditioner) and ⇒ Heating, air conditioning; Rep. gr. 87 ; Refrigerant circuit (vehicle-specific Workshop Manual).*

♦ *Pressure can be measured in various units: 1 MPa (megapascal) is equivalent to 10 bar gauge pressure, or 145 psi; 1 bar absolute pressure is the same as 0 bar gauge pressure, which is roughly equivalent to atmospheric pressure.*

The pressure in the refrigerant circuit is lower than indicated in the table.

Not enough refrigerant in circuit

– Locate leaks in refrigerant circuit ⇒ page 161 .

– Check high-pressure safety valve.

If the high-pressure safety valve has blown off:

– Check actuation of the radiator fans.

– Check for constricted refrigerant pipe and hose cross-sections caused by inadequate bending radii.

– Check refrigerant lines and hoses for external damage.

– If no fault is found, clean refrigerant circuit (by flushing with refrigerant R134a ⇒ page 88 or blowing out with compressed air and nitrogen ⇒ page 84).

The pressure in the refrigerant circuit corresponds to that indicated in the table or is higher.

– Start engine or activate drive system (e.g. on vehicles with high-voltage system).

– Set air conditioning system to maximum cooling output.

Note

- *On vehicles with an air conditioner compressor regulating valve - N280- , the control current can be read out in the measured value block ⇒ Vehicle diagnostic tester ("Self-diagnosis" or "Guided Fault Finding" function for air conditioner) and ⇒ Heating, air conditioning; Rep. gr. 87 ; Air conditioner compressor (vehicle-specific Workshop Manual).*
- *On vehicles with an electrical air conditioner compressor - V470- you can read out the air conditioner compressor speed via different control units (e.g. via the corresponding air conditioner control unit or the thermal management control unit - J1024-) ⇒ Vehicle diagnostic tester in "Guided Fault Finding" mode.*

Vehicles with a mechanically driven air conditioner compressor

If air conditioner compressor is not driven with engine running or regulating valve is not actuated:

– Establish and eliminate the cause e.g. by interrogating the air conditioner event memory.

– Observe test requirements.

– Check the power supply for the air conditioning system magnetic clutch - N25- . If this is OK, service the magnetic clutch.

– Check activation of air conditioner compressor regulating valve - N280- ⇒ Vehicle diagnostic tester ("Self-diagnosis" or "Guided Fault Finding" function for air conditioner) and ⇒ Heating, air conditioning; Rep. gr. 87 ; Air conditioner compressor (vehicle-specific Workshop Manual).

This document is copyright protected. Any use for private or commercial purposes, in part or in whole, is not permitted without the consent of AUDI AG. AUDI AG does not guarantee or accept any liability with respect to the correctness of information in this document. Copyright by AUDI AG.

Note

- *If low-pressure switch has been removed to connect air conditioner service station, jumper electrical connections in relevant connector for pressure measurement.*
- *Air conditioner compressor is driven by engine via air conditioning system magnetic clutch - N25- .*
- *The air conditioner compressor regulating valve - N280- is activated by the operating and display unit for front air conditioning system - E87- or the Climatronic control unit - J255- ⇒ Vehicle diagnostic tester ("Self-diagnosis" or "Guided Fault Finding" function for air conditioner) and ⇒ Heating, air conditioning; Rep. gr. 87 ; Refrigerant circuit (vehicle-specific Workshop Manual).*

Vehicles with electrical air conditioner compressor - V470- (vehicles with high-voltage system)

If the drive system is active but the electrical air conditioner compressor is not activated:

– Check activation of air conditioner compressor via corresponding control unit ⇒ Heating, air conditioning; Rep. gr. 87 ; Refrigerant circuit (vehicle-specific Workshop Manual) and ⇒ Vehicle diagnostic tester in “Guided Fault Finding” mode.

All vehicles

- Checking pressures on vehicles with a restrictor and reservoir (with internally regulated air conditioner compressor) ⇒ page 189
- Checking pressures on vehicles with an expansion valve and receiver (with internally regulated air conditioner compressor) ⇒ page 194
- Checking pressures on vehicles with restrictor, reservoir and air conditioner compressor regulating valve - N280- (with externally regulated air conditioner compressor) ⇒ page 200
- Checking pressures on vehicles with expansion valve, receiver and air conditioner compressor regulating valve - N280- (with externally regulated air conditioner compressor) ⇒ page 207
- Check pressures on vehicles with electrically driven air conditioner compressor (Audi A3 e-tron, Audi Q5 hybrid, Audi Q7 e-tron etc.) ⇒ page 218 .

8.2 Checking pressures - vehicles with restrictor and reservoir (with internally regulated air conditioner compressor)

Note

- *Connect air conditioner service station* *⇒ page 178* *.*
- *Observe test requirements* *⇒ page 183* *.*

– Check the pressures in the refrigerant circuit (with the air conditioner service station) with the ignition switched off ⇒ page 183 .

The pressures with the ignition switched off correspond to the specifications.

– Start engine.

– Set engine speed to 2000 rpm.

– Observe the pressure reading (e.g. pressure gauge) of the air conditioner service station.

Protected by copyright. Copying for private or commercial purposes, in part or in whole, is not permitted unless authorised by AUDI AG. AUDI AG does not guarantee or accept any liability with respect to the correctness of information in this document. Copyright by AUDI AG.

Note

- *Switching pressures for refrigerant circuit switches are vehicle-specific.*
- *The port with a valve for the low-pressure switch or on the evaporator should only be used where the vehicle does not have a service port on the low-pressure side and access to the port on the air conditioning system compressor or reservoir is not possible (measurement accuracy). Only applies for certain vehicles ⇒ Heating, air conditioning; Rep. gr. 87 ; Refrigerant circuit (vehicle-specific Workshop Manual).*

⇒ "8.2.1 Specifications for pressures in refrigerant circuit", page 190

8.2.1 Specifications for pressures in refrigerant circuit

High-pressure side:

Increasing from initial pressure (when connecting pressure gauges) up to max. 20 bar

Low-pressure side:

Decreasing from initial pressure (on connecting pressure gauges) to value in graph

A - High pressure (measured at service connection) in bar

B - Low pressure (measured at connection with valve at air conditioner compressor or at reservoir) in bar

C - Permissible tolerance range

D - Low pressure (measured at connection with valve for low-pressure switch or at service connection) in bar

E - Permissible tolerance range

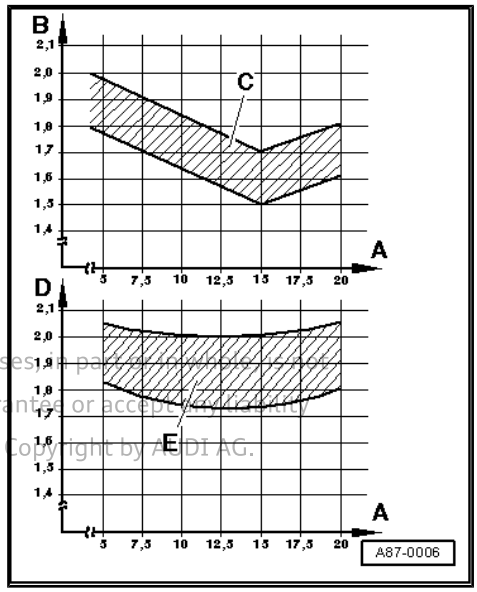

Protected by copyright. Copying for private or commercial purposes, in part or in whole, is not permitted unless authorised by AUDI AG. AUDI AG does not guarantee or accept any liability with respect to the correctness of information in this document. Copyright by AUDI AG.

Possible deviation from specification	Possible causes of fault	Fault elimination
• High pressure remains constant or only increases slightly (above pressure with engine stopped) • Low pressure quickly drops to value in graph or below • Required cooling output is not attained.	Not enough refrigerant in circuit	– Localise leak with leak detector and eliminate. – Re-charge refrigerant circuit.
• High pressure normal • Low pressure in line with value in graph • Required cooling output is not attained.		

Possible deviation from specification	Possible causes of fault	Fault elimination
• High pressure normal • Low pressure too low (see graph) • Required cooling output is not attained.		

Note

If no fault is found for this problem, clean refrigerant circuit (by flushing with refrigerant R134a ⇒ page 88 or blowing out with compressed air and nitrogen ⇒ page 84).

Possible deviation from specification	Possible causes of fault	Fault elimination
• High pressure does not rise or only rises slightly above the pressure with the engine stopped. • Low pressure does not drop or only drops slightly. • Required cooling output is not attained.	♦ No actuation of the air conditioner compressor (magnetic clutch). ♦ The air conditioner compressor is not driven.	– Check actuation and drive of the air conditioner compressor and perform repair ⇒ Heating, air conditioning; Rep. gr. 87 ; Air conditioner compressor (vehicle-specific Workshop Manual).
	♦ Constriction or blockage in refrigerant circuit (e.g. in refrigerant line between service connection on low-pressure side and air conditioner compressor).	– Clean refrigerant circuit (flush with refrigerant R134a ⇒ page 88 or blow out with compressed air and nitrogen ⇒ page 84). – Renew hose or pipe if kinked or constricted.
	♦ Air conditioner compressor defective	– Renew air conditioner compressor.

Protected by copyright. Copying for private or commercial purposes, in part or in whole, is not permitted unless authorised by AUDI AG. AUDI AG does not guarantee or accept any liability with respect to the correctness of information in this document. Copyright by AUDI AG.

Possible deviation from specification	Possible causes of fault	Fault elimination
• High pressure increases above specification • Low pressure quickly drops to value in graph or below • Required cooling output is not attained.	Constriction or blockage in refrigerant circuit	– Run hand over refrigerant circuit to check for differences in temperature ⇒ Heating, air conditioning; Rep. gr. 87 ; Refrigerant circuit (vehicle-specific Workshop Manual). • If there is a difference in temperature at one component: – Renew hose or pipe if kinked or constricted. – In the event of clogging, clean refrigerant circuit (flush with refrigerant R134a ⇒ page 88 or blow out with compressed air and nitrogen ⇒ page 84). • If no fault is found: – Clean refrigerant circuit (flush with refrigerant R134a ⇒ page 88 or blow out with compressed air and nitrogen ⇒ page 84).
• High and low pressure normal at first • High pressure rises above specified value • Low pressure drops to value in graph or below • Required cooling output is no longer attained.	Moisture in refrigerant circuit	– Check and if necessary renew reservoir (with dryer) and restrictor, then evacuate refrigerant circuit for at least 3 hours (see note). – Clean refrigerant circuit (flush with refrigerant R134a ⇒ page 88 or blow out with compressed air and nitrogen ⇒ page 84).
• High and low pressure normal at first • After lengthy operating period, low pressure drops excessively (evaporator ices up)		

Protected by copyright. Copying for private or commercial purposes, in part or in whole, is not permitted unless authorised by AUDI AG. AUDI AG does not guarantee or accept any liability with respect to the correctness of information in this document. Copyright by AUDI AG.

Note

- *If an issue involving moisture in the refrigerant circuit only occurs after a lengthy operating period or only infrequently (low pressure drops below specified value and evaporator ices up), it is sufficient to renew the dryer (adjust quantity of refrigerant oil). Subsequently, evacuate refrigerant circuit for at least 3 hours.*
- *It is not initially necessary to clean the refrigerant circuit (flush with refrigerant R134a ⇒ page 88 or blow out with compressed air and nitrogen ⇒ page 84) when this problem occurs. Normally, there is only a small quantity of moisture in the system which can be removed by lengthy evacuation.*

Possible deviation from specification	Possible causes of fault	Fault elimination
• High pressure normal • Low pressure too low (see graph) • Required cooling output is attained.	Air conditioner compressor defective	– Clean refrigerant circuit (flush with refrigerant R134a ⇒ page 88 or blow out with compressed air and nitrogen ⇒ page 84). – Renew air conditioner compressor.

Note

- *Observe the following regarding fault "High pressure normal, low pressure too low": This fault may cause the evaporator to ice up or the low-pressure switch - F73- to shut off the air conditioner compressor although the amount of refrigerant in the circuit is OK.*
- *On the Audi 100, Audi A6 (up to and including model year 1997) and Audi V8, this fault may result in the air conditioner compressor being shut off by the operating and display unit (if the temperature at the fresh air blower drops below -3 °C) ⇒ Heating, air conditioning; Rep. gr. 87 ; Refrigerant circuit (vehicle-specific Workshop Manual) or ⇒ Heating, air conditioning; Rep. gr. 87 ; Overview of fitting locations - air conditioner (vehicle-specific Workshop Manual).*

Possible deviation from specification	Possible causes of fault	Fault elimination
• High pressure normal or too high • Low pressure too high (see graph) • Noise from air conditioner compressor (particularly after being switched on) • Required cooling output is not attained.	Too much refrigerant in circuit	– Extract refrigerant from refrigerant circuit. • If quantity of refrigerant extracted roughly corresponds to specified capacity: – Renew air conditioner compressor. • The quantity of refrigerant extracted is significantly greater than the prescribed charge quantity. – Re-charge refrigerant circuit. – Repeat test.

Protected by copyright. Copying for private or commercial purposes, in part or in whole, is not permitted unless authorised by AUDI AG. AUDI AG does not guarantee or accept any liability with respect to the correctness of information in this document. Copyright by AUDI AG.

Possible deviation from specification	Possible causes of fault	Fault elimination
• High and low pressure normal • Required cooling output is not attained.	Too much refrigerant oil in circuit	– Discharge refrigerant circuit. – Clean refrigerant circuit (flush with refrigerant R134a ⇒ page 88 or blow out with compressed air and nitrogen ⇒ page 84).
• High and low pressure normal • Noise from air conditioner compressor (particularly after being switched on) • Required cooling output is attained.		

Note

- *Overfilling with refrigerant oil may occur if, for example, the air conditioner compressor has been renewed without adjusting the quantity of refrigerant oil.*
- *If there is too much refrigerant oil in the circuit, discharge the air conditioner compressor and renew the receiver. After cleaning the refrigerant circuit (flush with refrigerant R134a ⇒ page 88 or blow out with compressed air and nitrogen ⇒ page 84), add the correct amount of refrigerant oil to the circuit ⇒ page 317 .*

Protected by copyright. Copying for private or commercial purposes, in part or in whole, is not permitted unless authorised by AUDI AG. AUDI AG does not guarantee or accept any liability with respect to the correctness of information in this document. Copyright by AUDI AG.

8.3 Checking pressures - vehicles with expansion valve and receiver (with internally regulated air conditioner compressor)

Note

- *Connect air conditioner service station ⇒ page 178 .*
- *Observe test requirements ⇒ page 183 .*

– Check the pressures in the refrigerant circuit (with the air conditioner service station) with the ignition switched off ⇒ page 183 .

The pressures with the ignition switched off correspond to the specifications.

– Start engine.

– Set engine speed to 2000 rpm.

– Observe the pressure reading (e.g. pressure gauge) of the air conditioner service station.

Protected by copyright. Copying for private or commercial purposes, in part or in whole, is not permitted unless authorised by AUDI AG. AUDI AG does not guarantee or accept any liability with respect to the correctness of information in this document. Copyright by AUDI AG.

Note

- *Switching pressures and design of refrigerant circuit switches are vehicle-specific.*
- *Measure the pressures at the service connections; the fitting locations of these connections are vehicle-specific ⇒ Heating, air conditioning; Rep. gr. 87 ; Refrigerant circuit (vehicle-specific Workshop Manual).*

⇒ "8.3.1 Specifications for pressures in refrigerant circuit", page 195

8.3.1 Specifications for pressures in refrigerant circuit

High-pressure side:

Increasing from initial pressure (when connecting pressure gauges) up to max. 20 bar

Low-pressure side:

Decreasing from initial pressure (on connecting pressure gauges) to value in graph

A - High pressure in bar

B - Low pressure in bar

C - Permissible tolerance range

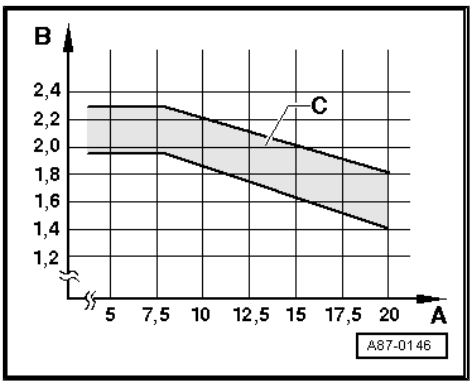

Possible deviation from specification	Possible causes of fault	Fault elimination
• High pressure remains constant or only increases slightly (above pressure with engine stopped) • Low pressure quickly drops to value in graph or below • Required cooling output is not attained.	Not enough refrigerant in circuit or expansion valve defective	– Extract refrigerant from refrigerant circuit. • If quantity of refrigerant extracted roughly corresponds to specified capacity: – Renew expansion valve. – Re-charge refrigerant circuit. – Repeat test.
• High pressure normal • Low pressure in line with value in graph • Required cooling output is not attained.		• The quantity of refrigerant extracted is substantially less than the specified capacity. – Locate leak with leak detector and repair it. – Re-charge refrigerant circuit. – Repeat test.

Note

If no fault can be found and air conditioner operation is not OK when the test is repeated, clean the refrigerant circuit (flush with refrigerant R134a ⇒ page 88 or blow out with compressed air and nitrogen ⇒ page 84).

Possible deviation from specification	Possible causes of fault	Fault elimination
• High pressure does not rise or only rises slightly above the pressure with the engine stopped. • Low pressure does not drop or only drops slightly. • Required cooling output is not attained.	♦ No actuation of the air conditioner compressor (magnetic clutch) ♦ The air conditioner compressor is not driven.	– Check actuation and drive of the air conditioner compressor and perform repair ⇒ Heating, air conditioning; Rep. gr. 87 ; Air conditioner compressor (vehicle-specific Workshop Manual).
	♦ Constriction or blockage in refrigerant circuit (e.g. in refrigerant line between service connection on low-pressure side and air conditioner compressor).	– Clean refrigerant circuit (flush with refrigerant R134a ⇒ page 88 or blow out with compressed air and nitrogen ⇒ page 84). – Renew hose or pipe if kinked or constricted.
	♦ Air conditioner compressor defective	– Renew air conditioner compressor.

Protected by copyright. Copying for private or commercial purposes, in part or in whole, is not permitted unless authorised by AUDI AG. AUDI AG does not guarantee or accept any liability with respect to the correctness of information in this document. Copyright by AUDI AG.

Possible deviation from specification	Possible causes of fault	Fault elimination
• High pressure increases above specification • Low pressure quickly drops to value in graph or below • Required cooling output is not attained.	♦ Constriction or blockage in refrigerant circuit ♦ Expansion valve defective	– Run hand over refrigerant circuit to check for differences in temperature ⇒ Heating, air conditioning; Rep. gr. 87 ; Refrigerant circuit; System overview - refrigerant circuit (vehicle-specific Workshop Manual). • If there is a difference in temperature at one component: – Renew hose or pipe if kinked or constricted. – In the event of clogging, clean refrigerant circuit (flush with refrigerant R134a ⇒ page 88 or blow out with compressed air and nitrogen ⇒ page 84 and renew expansion valve if applicable). • If no fault is found: – Clean refrigerant circuit (flush with refrigerant R134a ⇒ page 88 or blow out with compressed air and nitrogen ⇒ page 84 and renew expansion valve if applicable). – Repeat test.

Protected by copyright. Copying for private or commercial purposes, in part or in whole, is not permitted unless authorised by AUDI AG. AUDI AG does not guarantee or accept any liability with respect to the correctness of information in this document. Copyright by AUDI AG.

Note

If operation is not OK after cleaning the refrigerant circuit (flushing with refrigerant R134a ⇒ page 88 or blowing out with compressed air and nitrogen ⇒ page 84), renew the expansion valve.

Possible deviation from specification	Possible causes of fault	Fault elimination
• High and low pressure normal at first • After some time, high pressure increases above specification and low pressure drops to value in graph or below • Required cooling output is no longer attained.	♦ Expansion valve defective ♦ Moisture in refrigerant circuit	– Renew receiver (with dryer) and evacuate refrigerant circuit for at least 3 hours (see notes). – Check expansion valve for dirt or corrosion and renew if necessary – Clean refrigerant circuit (flush with refrigerant R134a ⇒ page 88 or blow out with compressed air and nitrogen ⇒ page 84).
• High and low pressure normal at first • After lengthy operating period, low pressure drops excessively (evaporator ices up)		

Note

- *It is not initially necessary to clean the refrigerant circuit (flush with refrigerant R134a ⇒ page 88 or blow out with compressed air and nitrogen ⇒ page 84) when this problem occurs. Normally, there is only a small quantity of moisture in the system which can be removed by lengthy evacuation.*
- *If an issue involving moisture in the refrigerant circuit only occurs after a lengthy operating period or only infrequently (low pressure drops below specified value and evaporator ices up), it is sufficient to renew the dryer (adjust quantity of refrigerant oil). Subsequently, evacuate refrigerant circuit for at least 3 hours.*

Protected by copyright. Copying for private or commercial purposes, in part or in whole, is not permitted unless authorised by AUDI AG. AUDI AG does not guarantee or accept any liability with respect to the correctness of information in this document. Copyright by AUDI AG.

Possible deviation from specification	Possible causes of fault	Fault elimination
• High pressure normal or too high • Low pressure too high (see graph) • Required cooling output is not attained • Air conditioner compressor noise (particularly after switch-on).	♦ Too much refrigerant in circuit ♦ Expansion valve or air conditioner compressor defective.	– Extract refrigerant from refrigerant circuit. • If amount of refrigerant extracted roughly corresponds to specified capacity: – Renew expansion valve. – Re-charge refrigerant circuit. – Repeat test. • The quantity of refrigerant extracted is significantly greater than the prescribed charge quantity. – Re-charge refrigerant circuit. – Repeat test.

Note

If operation of the air conditioning system is not OK when the test is repeated, re-fit the old expansion valve and clean the refrigerant circuit (flush with refrigerant R134a ⇒ page 88 or blow out with compressed air and nitrogen ⇒ page 84). Then renew the air conditioner compressor and receiver.

Possible deviation from specification	Possible causes of fault	Fault elimination
• High pressure only increases slightly above pressure with engine stopped • Low pressure only drops slightly • Required cooling output is not attained.	Air conditioner compressor defective	– Clean refrigerant circuit (flush with refrigerant R134a ⇒ page 88 or blow out with compressed air and nitrogen ⇒ page 84). – Renew the air conditioner compressor and receiver.

Possible deviation from specification	Possible causes of fault	Fault elimination
• High pressure normal • Low pressure too low (see graph) • Required cooling output is attained.	Expansion valve or air conditioner compressor defective.	– Renew expansion valve. – Re-charge refrigerant circuit. – Repeat test.

Note

- *If operation of the air conditioning system is not OK when the test is repeated, re-fit the old expansion valve and clean the refrigerant circuit (flush with refrigerant R134a ⇒ page 88 or blow out with compressed air and nitrogen ⇒ page 84). Then renew the air conditioner compressor and receiver.*
- *In this case, the evaporator may ice up although the amount of refrigerant in the refrigerant circuit is OK.*

Possible deviation from specification	Possible causes of fault	Fault elimination
• High and low pressure normal • Required cooling output is not attained.	Too much refrigerant oil in circuit	– Discharge refrigerant circuit. – Clean refrigerant circuit (flush with refrigerant R134a ⇒ page 88 or blow out with compressed air and nitrogen ⇒ page 84).
• High and low pressure normal • Noise from air conditioner compressor (particularly after being switched on) • Required cooling output is attained.		

Note

- *Overfilling with refrigerant oil may occur if, for example, the air conditioner compressor has been renewed without adjusting the quantity of refrigerant oil.*
- *If there is too much refrigerant oil in the circuit, discharge the air conditioner compressor and renew the receiver. After cleaning the refrigerant circuit (flush with refrigerant R134a ⇒ page 88 or blow out with compressed air and nitrogen ⇒ page 84), add the correct amount of refrigerant oil to the circuit ⇒ page 317 .*

Protected by copyright. Copying for private or commercial purposes, in part or in whole, is not permitted unless authorised by AUDI AG. AUDI AG does not guarantee or accept any liability with respect to the correctness of information in this document. Copyright by AUDI AG.

8.4 Checking pressures - vehicles with restrictor, reservoir and air conditioner compressor regulating valve - N280- (with externally regulated air conditioner compressor)

Note

- *Connect air conditioner service station* *⇒ page 178* *.*
- *Observe test requirements* *⇒ page 183* *.*

– Check the pressures in the refrigerant circuit (with the air conditioner service station) with the ignition switched off ⇒ page 183 .

The pressures with the ignition switched off correspond to the specifications.

– Start engine.

– Set engine speed to 2000 rpm.

– Observe the pressure reading (e.g. pressure gauge) of the air conditioner service station.

Note

- *The switching pressures for actuation of -N280- and the radiator fans - V7- are vehicle-specific.*
- *Measure the pressures at the service connections; the fitting locations of these connections are vehicle-specific ⇒ Heating, air conditioning; Rep. gr. 87 ; Refrigerant circuit (vehicle-specific Workshop Manual).*

Protected by copyright. Commercial private or commercial purposes, in part or in whole, is not permitted unless authorised by AUDI AG. AUDI AG does not guarantee or accept any liability with respect to the correctness of information in this document. Copyright by AUDI AG.

⇒ "8.4.1 Specifications for pressures in refrigerant circuit", page 200

8.4.1 Specifications for pressures in refrigerant circuit

High-pressure side:

Increasing from initial pressure (on connection of pressure gauges) up to 20 bar

Low-pressure side:

Decreasing from initial pressure (on connecting pressure gauges) to value in graph

A - Low pressure (measured at service connection) in bar absolute pressure.

B - Control current for air conditioner compressor regulating valve - N280- in amps

C - Permissible tolerance range

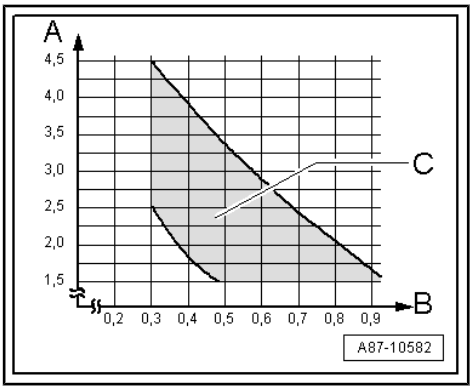

Protected by copyright. Copying for private or commercial purposes, in part or in whole, is not permitted unless authorised by AUDI AG. AUDI AG does not guarantee or accept any liability with respect to the correctness of information in this document. Copyright by AUDI AG.

Note

- *In the event of a very high cooling output requirement (e.g. high ambient temperature and high fresh air blower speed at low engine speed), the air conditioner compressor cannot initially set the pressure on the low-pressure end to the value -C- given in the graph (e.g. for a certain time after switching on the air conditioner). The air conditioner compressor is actuated with the maximum specified control current, however the delivery volume of the air conditioner compressor is no longer sufficient under these ambient conditions and at this engine speed to reduce the pressure on the low-pressure end to the value in the graph. One way of checking the control action of the air conditioner compressor under these conditions is to activate the fresh air blower with only approx. 40% of the maximum voltage and to check the pressures at reduced fresh air blower speed ⇒ Vehicle diagnostic tester ("self-diagnosis" or "Guided Fault Finding" function for air conditioner) and ⇒ Heating, air conditioning; Rep. gr. 00 ; Repair instructions; Checking cooling output or ⇒ Heating, air conditioning; Rep. gr. 87 ; Refrigerant circuit (vehicle-specific Workshop Manual).*
- *Under unfavourable conditions (very high ambient temperatures, high humidity), pressure on high-pressure end may increase to max. 29 bar.*
- *Control current -B- is displayed in measured value block of operating and display unit for front air conditioning system - E87- or operating and display unit (Climatronic control unit - J255-).*
- *The pressure in the refrigerant circuit measured by the high-pressure sender - G65- or the refrigerant pressure and temperature sender - G395- is displayed in the measured value block of -E87- or of the operating and display unit (Climatronic control unit - J255-) ⇒ Vehicle diagnostic tester ("Self-diagnosis" or "Guided Fault Finding" function for air conditioner) and ⇒ Heating, air conditioning; Rep. gr. 87 ; Refrigerant circuit (vehicle-specific Workshop Manual).*
- *The low pressure settles as a function of the control current for the air conditioner compressor regulating valve - N280- within the air conditioner compressor output range in the tolerance band.*
- *Under unfavourable conditions (very high ambient temperatures, high humidity), the air conditioner compressor output may not always be sufficient to attain the specified value.*
- *If the compressor capacity utilisation is greater than 90 %, the pressure on the low-pressure end may be in excess of the tolerance range "C" shown in the graph (the compressor output no longer suffices).*
- *The specified operating current for the regulating valve must be greater than 0.3 A to ensure reliable actuation of the regulating valve.*
- *"0 bar absolute pressure" corresponds to an absolute vacuum. Normal ambient pressure corresponds to an absolute pressure of 1 bar. On the scales of most pressure gauges, 0 bar corresponds to an absolute pressure of one bar (can be seen from "-1 bar" mark below "0").*

http://www.vw-service-online.com/ Copyright: Copying for private or commercial purposes, in part or in whole, is not permitted unless authorised by AUDI AG. AUDI AG does not guarantee or accept any liability with respect to the correctness of information in this document. Copyright by AUDI AG.

- *In the "maximum cooling output" setting, the control current is regulated to approx. 0.65 (up to 0.85 A for specific vehicles); this is displayed in the measured value block ⇒ Vehicle diagnostic tester ("Self-diagnosis" or "Guided Fault Finding" function for air conditioner) and ⇒ Heating, air conditioning; Rep. gr. 00 ; Repair instructions; Checking cooling output or ⇒ Heating, air conditioning; Rep. gr. 87 ; Overview of fitting locations - air conditioner (vehicle-specific Workshop Manual).*

Possible deviation from specification	Possible causes of fault	Fault elimination
• High pressure remains constant or only increases slightly (above pressure with engine stopped) • Low pressure quickly drops to value in graph or below • Required cooling output is not attained.	♦ Actuation of air conditioner compressor regulating valve - N280- not OK ♦ Not enough refrigerant in circuit	– Check activation of -N280- ⇒ Heating, air conditioning; Rep. gr. 87 ; Refrigerant circuit (vehicle-specific Workshop Manual). – Locate leak with leak detector and repair it. – Re-charge refrigerant circuit.
• High pressure normal • Low pressure too low (see graph) • Required cooling output is not attained.		

Note

If no fault is found for this problem, clean refrigerant circuit (by flushing with refrigerant R134a ⇒ page 88 or blowing out with compressed air and nitrogen ⇒ page 84).

Possible deviation from specification	Possible causes of fault	Fault elimination
• High pressure does not rise or only rises slightly above the pressure with the engine stopped. • Low pressure does not drop or only drops slightly. • Required cooling output is not attained.	♦ No actuation of the air conditioner compressor (air conditioner compressor regulating valve - N280-) ♦ The air conditioner compressor is not driven.	– Check actuation and drive of the air conditioner compressor and perform repair ⇒ Heating, air conditioning; Rep. gr. 87 ; Air conditioner compressor (vehicle-specific Workshop Manual). – Check actuation and operation of -N280- .
	♦ Constriction or blockage in refrigerant circuit (e.g. in refrigerant line between service connection on low-pressure side and air conditioner compressor).	– Clean refrigerant circuit (flush with refrigerant R134a ⇒ page 88 or blow out with compressed air and nitrogen ⇒ page 84). – Renew hose or pipe if kinked or constricted.
	♦ Air conditioner compressor regulating valve - N280- defective	– Check operation of -N280- , remove -N280- if applicable and check for contamination ⇒ page 269 .

Protected by copyright. Copying for private or commercial purposes, in part or in whole, is not permitted unless authorised by AUDI AG. AUDI AG does not guarantee or accept any liability with respect to the correctness of information in this document. Copyright by AUDI AG.

Possible deviation from specification	Possible causes of fault	Fault elimination
	♦ Air conditioner compressor defective	– Renew air conditioner compressor.

Possible deviation from specification	Possible causes of fault	Fault elimination
• High pressure increases above specification • Low pressure quickly drops to value in graph or below • Required cooling output is not attained.	♦ Actuation of air conditioner compressor regulating valve - N280- not OK ♦ Constriction or blockage in refrigerant circuit	– Check activation of -N280- ⇒ Heating, air conditioning; Rep. gr. 87 ; Refrigerant circuit (vehicle-specific Workshop Manual). – Run hand over refrigerant circuit to check for differences in temperature. • If there is a difference in temperature at one component: – Renew hose or pipe if kinked or constricted. – Flush the refrigerant circuit with compressed air and nitrogen in the event of an obstruction. • If no fault is found: – Clean refrigerant circuit (flush with refrigerant R134a ⇒ page 88 or blow out with compressed air and nitrogen ⇒ page 84).

Possible deviation from specification	Possible causes of fault	Fault elimination
• High and low pressure normal at first, after some time high pressure increases above specification and • Low pressure drops to value in graph or below • Required cooling output is no longer attained.	♦ Actuation of air conditioner compressor regulating valve - N280- not OK	– Check activation of -N280- ⇒ Heating, air conditioning; Rep. gr. 87 ; Refrigerant circuit (vehicle-specific Workshop Manual). – Renew reservoir (with dryer) and evacuate refrigerant circuit for at least 3 hours (see note).
• High and low pressure normal at first • After lengthy operating period, low pressure drops excessively (evaporator ices up)	♦ Air conditioner compressor regulating valve - N280- defective ♦ Moisture in refrigerant circuit	– Check operation of -N280- , remove -N280- if applicable and check for contamination ⇒ page 269 . – Clean refrigerant circuit (flush with refrigerant R134a ⇒ page 88 or blow out with compressed air and nitrogen ⇒ page 84).

Protected by copyright. Copying for private or commercial purposes, in part or in whole, is not permitted unless authorised by AUDI AG. AUDI AG does not guarantee or accept any liability with respect to the correctness of information in this document. Copyright by AUDI AG.

Note

- *It is not initially necessary to clean the refrigerant circuit (flush with refrigerant R134a ⇒ page 88 or blow out with compressed air and nitrogen ⇒ page 84) when this problem occurs. Normally, there is only a small quantity of moisture in the system which can be removed by lengthy evacuation.*
- *If an issue involving moisture in the refrigerant circuit only occurs after a lengthy operating period or only infrequently (low pressure drops below specified value and evaporator ices up), it is sufficient to renew the dryer (adjust quantity of refrigerant oil). Subsequently, evacuate refrigerant circuit for at least 3 hours.*
- *A problem with evaporator output temperature sender - G263- can also cause icing-up of refrigerant circuit. If this problem occurs, you should also check the measured value of the evaporator output temperature sender - G263- ⇒ Vehicle diagnostic tester ("Self-diagnosis" or "Guided Fault Finding" function for air conditioner) and ⇒ Heating, air conditioning; Rep. gr. 00 ; Repair instructions; Checking cooling output or ⇒ Heating, air conditioning; Rep. gr. 87 ; Refrigerant circuit (vehicle-specific Workshop Manual).*

Possible deviation from specification	Possible causes of fault	Fault elimination
• High pressure normal • Low pressure too low (see graph) • Required cooling output is attained.	♦ Actuation of air conditioner compressor regulating valve - N280- not OK ♦ Air conditioner compressor regulating valve - N280- defective	– Check activation of -N280- ⇒ Heating, air conditioning; Rep. gr. 87 ; Refrigerant circuit (vehicle-specific Workshop Manual). – Check operation of -N280- , remove -N280- if applicable and check for contamination ⇒ page 269 .
	♦ Air conditioner compressor defective	– Clean refrigerant circuit (flush with refrigerant R134a ⇒ page 88 or blow out with compressed air and nitrogen ⇒ page 84). – Renew air conditioner compressor.

Note

Observe the following regarding fault "High pressure normal, low pressure too low": This fault may cause the evaporator to ice up although the amount of refrigerant in the circuit is OK. Check measured values of evaporator output temperature sender - G263- and actuation of air conditioner compressor regulating valve - N280- . If the measured value of the evaporator output temperature sender - G263- is incorrect, the evaporator may ice up or the cooling output may not be attained ⇒ Vehicle diagnostic tester ("Self-diagnosis" or "Guided Fault Finding" function for air conditioner) and ⇒ Heating, air conditioning; Rep. gr. 00 ; Repair instructions; Checking cooling output or ⇒ Heating, air conditioning; Rep. gr. 87 ; Refrigerant circuit (vehicle-specific Workshop Manual).

Protected by copyright. Copying or passing on to third parties, in part or in whole, is not permitted unless authorised by AUDI AG. AUDI AG does not guarantee or accept any liability with respect to the correctness of information in this document. Copyright by AUDI AG.

Possible deviation from specification	Possible causes of fault	Fault elimination
• High pressure normal or too high • Low pressure too high (see graph) • Noise from air conditioner compressor (particularly after being switched on) • Required cooling output is not attained.	♦ Actuation of air conditioner compressor regulating valve - N280- not OK ♦ Too much refrigerant in circuit	– Check activation of -N280- ⇒ Heating, air conditioning; Rep. gr. 87 ; Refrigerant circuit (vehicle-specific Workshop Manual). – Extract refrigerant from refrigerant circuit. • If amount of refrigerant extracted roughly corresponds to specified capacity: – Renew air conditioner compressor. • The quantity of refrigerant extracted is significantly greater than the prescribed charge quantity. – Re-charge refrigerant circuit. – Repeat test.
• High and low pressure normal • Required cooling output is not attained.	♦ Actuation of air conditioner compressor regulating valve - N280- not OK ♦ Too much refrigerant oil in circuit	– Check actuation of -N280- . – Discharge refrigerant circuit.
• High and low pressure normal. • Air conditioner compressor noise (particularly after switch-on). • Required cooling output is attained.		– Clean refrigerant circuit (flush with refrigerant R134a ⇒ page 88 or blow out with compressed air and nitrogen ⇒ page 84).

Note

♦ *Overfilling with refrigerant oil may occur if, for example, the air conditioner compressor has been renewed without adjusting the quantity of refrigerant oil.*

♦ *If there is too much refrigerant oil in the circuit, discharge the air conditioner compressor and renew the receiver. After cleaning the refrigerant circuit (flush with refrigerant R134a ⇒ page 88 or blow out with compressed air and nitrogen ⇒ page 84), add the correct amount of refrigerant oil to the circuit ⇒ page 317 .*

Protected by copyright. Copying for private or commercial purposes, in part or in whole, is not permitted unless authorised by AUDI AG. AUDI AG does not guarantee or accept any liability with regard to the correctness of information in this document. Copyright by AUDI AG.

8.5 Checking pressures - vehicles with expansion valve, receiver and air conditioner compressor regulating valve - N280- (with externally regulated air conditioner compressor)

Note

- *Connect air conditioner service station* *⇒ page 178* *.*
- *Observe test requirements* *⇒ page 183* *.*
- *If problems are only encountered at one evaporator on vehicles fitted with two evaporators, check whether the pressures in the refrigerant circuit are OK. Check for cross-sectional restriction or blockage of line connection between faulty evaporator and outgoing line connection at refrigerant line distribution point. If no fault is found, discharge the refrigerant circuit and re-fill it with the specified quantity of refrigerant. Then check the pressures and the cooling output of the air conditioner again. If the problem persists, renew the expansion valve upstream of the faulty evaporator ⇒ Heating, air conditioning; Rep. gr. 87 ; Refrigerant circuit (vehicle-specific Workshop Manual).*

– Check the pressures in the refrigerant circuit (with the air conditioner service station) with the ignition switched off ⇒ page 183 .

The pressures with the ignition switched off correspond to the specifications.

– Start engine.

– Set engine speed to 2000 rpm.

– Observe the pressure reading (e.g. pressure gauge) of the air conditioner service station.

Note

- *The switching pressures for actuation of the air conditioner compressor regulating valve - N280- and the radiator fans - V7- are vehicle-specific.*
- *Measure the pressures at the service connections; the fitting locations of these connections are vehicle-specific ⇒ Heating, air conditioning; Rep. gr. 87 ; Refrigerant circuit (vehicle-specific Workshop Manual).*

Protected by copyright. Copying for private or commercial purposes, in part or in whole, is not
permitted without the prior written consent of AUDI AG. AUDI AG does not guarantee or accept any liability
with respect to the correctness of information in this document. Copyright by AUDI AG.

⇒ "8.5.1 Specifications for pressures in refrigerant circuit", page 207

8.5.1 Specifications for pressures in refrigerant circuit

High-pressure side:

Increasing from initial pressure (when connecting pressure gauges) up to max. 20 bar

Low pressure:

Decreasing from initial pressure (on connecting pressure gauges) to value in graph

A - Low pressure (measured at service connection) in bar absolute pressure.

B - Control current for air conditioner compressor regulating valve - N280- in amps

C - Permissible tolerance range (applicable to compressor capacity utilisation of 10...90 %).

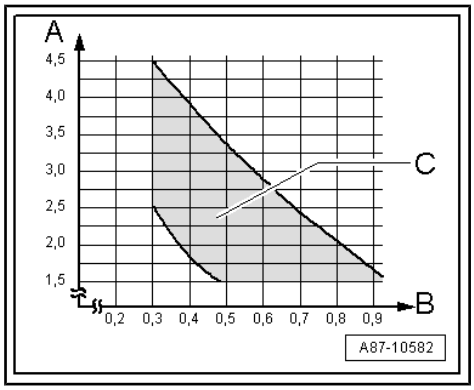

Protected by copyright. Copying for private or commercial purposes, in part or in whole, is not permitted unless authorised by AUDI AG. AUDI AG does not guarantee or accept any liability with respect to the correctness of information in this document. Copyright by AUDI AG.

Note

- *In the event of a very high cooling output requirement (e.g. high ambient temperature and high fresh air blower speed at low engine speed), the air conditioner compressor cannot initially set the pressure on the low-pressure end to the value -C- given in the graph (e.g. for a certain time after switching on the air conditioner). The air conditioner compressor is actuated with the maximum specified control current, however the delivery volume of the air conditioner compressor is no longer sufficient under these ambient conditions and at this engine speed to reduce the pressure on the low-pressure end to the value in the graph. One way of checking the control action of the air conditioner compressor under these conditions is to activate the fresh air blower with only approx. 40% of the maximum voltage and to check the pressures at reduced fresh air blower speed ⇒ Vehicle diagnostic tester ("self-diagnosis" or "Guided Fault Finding" function for air conditioner) and ⇒ Heating, air conditioning; Rep. gr. 00 ; Repair instructions; Checking cooling output or ⇒ Heating, air conditioning; Rep. gr. 87 ; Refrigerant circuit (vehicle-specific Workshop Manual).*
- *Under unfavourable conditions (very high ambient temperatures, high humidity), the pressure on the high-pressure side may increase to max. 29 bar.*
- *Control current -B- is displayed in measured value block of operating and display unit for front air conditioning system - E87- or Climatronic control unit - J255- .*
- *High pressure measured by the high-pressure sender - G65- (or refrigerant pressure and temperature sender - G395- / pressure sender for refrigerant circuit - G805-) is displayed as a measured value of -E87- or of the air conditioning system control unit - J301- / operating and display unit (Climatronic control unit - J255-).*
- *The low pressure settles as a function of the control current for the air conditioner compressor regulating valve - N280- and the control characteristic of the expansion valve within the air conditioner compressor output range in the tolerance band.*
- *Under unfavourable conditions (very high ambient temperatures, high humidity), the air conditioner compressor output may not always be sufficient to attain the specified value.*
- *If the compressor capacity utilisation is greater than 90 %, the pressure on the low-pressure end may be in excess of the tolerance range "C" shown in the graph (the compressor output no longer suffices).*
- *The specified operating current for the air conditioner compressor regulating valve - N280- must be greater than 0.3 A to ensure reliable valve actuation.*
- *In the "maximum cooling output" setting, the control current for the air conditioner compressor regulating valve - N280- is regulated to approx. 0.65 A (up to 0.85 A). This measured value is vehicle-specific and displayed in the measured value block.*

Protected by copyright. Copying for private or commercial purposes, in part or in whole, is not permitted unless authorised by AUDI AG. AUDI AG does not guarantee or accept any liability with respect to the correctness of information in this document. Copyright by AUDI AG.

- *On the absolute pressure scale, 0 bar corresponds to an absolute vacuum. Normal ambient pressure corresponds to an absolute pressure of 1 bar. On the scale of most pressure gauges, 0 bar corresponds to an absolute pressure of 1 bar (can be seen from -1 bar mark below 0) ⇒ Vehicle diagnostic tester ("Self-diagnosis" or "Guided Fault Finding" function for air conditioner) and ⇒ Heating, air conditioning; Rep. gr. 00 ; Repair instructions; Checking cooling output or ⇒ Heating, air conditioning; Rep. gr. 87 ; Refrigerant circuit (vehicle-specific Workshop Manual).*

Possible deviation from specification	Possible causes of fault	Fault elimination
• High pressure remains constant or only increases slightly (above pressure with engine stopped) • Low pressure quickly drops to value in graph or below • Required cooling output is not attained.	♦ Actuation of air conditioner compressor regulating valve - N280- not OK ♦ Not enough refrigerant in circuit ♦ Expansion valve defective	– Check activation of -N280- ⇒ Heating, air conditioning; Rep. gr. 87 ; Refrigerant circuit (vehicle-specific Workshop Manual). – Extract refrigerant from refrigerant circuit. • If quantity of refrigerant extracted is substantially less than specified capacity: – Locate leak with leak detector and repair it. – Re-charge refrigerant circuit. – Repeat test.
• High pressure normal • Low pressure in line with value in graph • Required cooling output is not attained.		
• High pressure normal • Low pressure too low (see graph) • Required cooling output is not attained.		• If amount of refrigerant extracted roughly corresponds to specified capacity: – Renew expansion valve. – Re-charge refrigerant circuit. – Repeat test.

Protected by copyright. Copying for private or commercial purposes, in part or in whole, is not permitted unless authorised by AUDI AG. AUDI AG does not guarantee or accept any liability with respect to the correctness of information in this document. Copyright by AUDI AG.

Note

- *If no fault is found for this problem, clean refrigerant circuit (by flushing with refrigerant R134a ⇒ page 88 or blowing out with compressed air and nitrogen ⇒ page 84).*
- *Check the measured values of the evaporator output temperature sender - G263- and actuation of -N280- . If the measured value of the evaporator output temperature sender - G263- is not OK, the evaporator may ice up or the cooling output is not attained.*
- *If, after renewing the expansion valve, operation of the air conditioning system is not OK when the test is repeated (re-fit old expansion valve), clean the refrigerant circuit (flush with refrigerant R134a ⇒ page 88 or blow out with compressed air and nitrogen ⇒ page 84). Then renew the air conditioner compressor and receiver.*
- *In this case, the evaporator may ice up although the amount of refrigerant in the refrigerant circuit is OK.*
- *If the expansion valve is defective (permanently closed or does not open sufficiently), -N280- is actuated to maximum output and the low pressure drops to the value in the graph or below (the air conditioner compressor draws off refrigerant from the low-pressure end). However, as refrigerant cannot flow via the expansion valve, the cooling output is not attained and the high pressure may also not increase or only increase slightly since there is no energy exchange ⇒ Vehicle diagnostic tester ("Self-diagnosis" or "Guided Fault Finding" function for air conditioner) and ⇒ Heating, air conditioning; Rep. gr. 00 ; Repair instructions; Checking cooling output or ⇒ Heating, air conditioning; Rep. gr. 87 ; Refrigerant circuit (vehicle-specific Workshop Manual).*

Protected by copyright. Copying for private or commercial purposes, in part or in whole, is not permitted unless authorised by AUDI AG. AUDI AG does not guarantee or accept any liability with respect to the correctness of information in this document. Copyright by AUDI AG.

Possible deviation from specification	Possible causes of fault	Fault elimination
• High pressure does not rise or only rises slightly above the pressure with the engine stopped. • Low pressure does not drop or only drops slightly. • Required cooling output is not attained.	♦ No actuation of the air conditioner compressor (air conditioner compressor regulating valve - N280-) ♦ The air conditioner compressor is not driven.	– Check actuation and drive of the air conditioner compressor and perform repair ⇒ Heating, air conditioning; Rep. gr. 87 ; Air conditioner compressor (vehicle-specific Workshop Manual).
	♦ Air conditioner compressor regulating valve - N280- defective.	– Check operation of -N280- , remove - N280- if applicable and check for contamination ⇒ page 269 .

Possible deviation from specification	Possible causes of fault	Fault elimination
	♦ Constriction or blockage in refrigerant circuit (e.g. in refrigerant line between service connection on low-pressure side and air conditioner compressor).	– Clean refrigerant circuit (flush with refrigerant R134a ⇒ page 88 or blow out with compressed air and nitrogen ⇒ page 84). – Renew hose or pipe if kinked or constricted.
	♦ Air conditioner compressor defective	– Renew air conditioner compressor.

Note

- *In the event of this problem, make sure the air conditioner compressor (air conditioner compressor shaft) is actually being driven via the pulley/drive unit ⇒ Heating, air conditioning; Rep. gr. 87 ; Air conditioner compressor (vehicle-specific Workshop Manual).*
- *As of Model Year 2012, air conditioner compressors with both -N280- and an air conditioning system magnetic clutch - N25- fitted at the pulley are to be introduced for certain engines and models. In the event of this problem, make sure -N25- is actually being actuated and that the air conditioner compressor (air conditioner compressor shaft) is being driven via the pulley ⇒ Heating, air conditioning; Rep. gr. 87 ; Air conditioner compressor (vehicle-specific Workshop Manual) and ⇒ Electronic parts catalogue .*

Protected by copyright. Copying for private or commercial purposes, in part or in whole, is not permitted unless authorised by AUDI AG. AUDI AG does not guarantee or accept any liability with respect to the correctness of information in this document. Copyright by AUDI AG.

Possible deviation from specification	Possible causes of fault	Fault elimination
• High pressure increases above specification • Low pressure quickly drops to value in graph • Required cooling output is not attained.	♦ Actuation of air conditioner compressor regulating valve - N280- not OK ♦ Constriction or blockage in refrigerant circuit ♦ Expansion valve defective	– Check activation of -N280- ⇒ Heating, air conditioning; Rep. gr. 87 ; Refrigerant circuit (vehicle-specific Workshop Manual). – Run hand over refrigerant circuit to check for differences in temperature. • If there is a difference in temperature at one component: – Renew hose or pipe if kinked or constricted. – In the event of clogging, clean refrigerant circuit (flush with refrigerant R134a ⇒ page 88 or blow out with compressed air and nitrogen ⇒ page 84). – Re-charge refrigerant circuit. – Repeat test. • If no fault is found: – Clean refrigerant circuit (flush with refrigerant R134a ⇒ page 88 or blow out with compressed air and nitrogen ⇒ page 84). – Re-charge refrigerant circuit. – Repeat test if operation is not OK: – Renew expansion valve and receiver.

Protected by copyright. Copying for private or commercial purposes, in part or in whole, is not permitted unless authorised by AUDI AG. AUDI AG does not guarantee or accept any liability with respect to the correctness of information in this document. Copyright by AUDI AG.

Note

- *If the function of the air conditioning system is not OK when the test is repeated, renew expansion valve and receiver.*
- *In this case, the evaporator may ice up although the amount of refrigerant in the refrigerant circuit is OK.*
- *If the expansion valve is defective (permanently closed or does not open sufficiently), the air conditioner compressor regulating valve - N280- is actuated to maximum output and the low pressure drops to the value in the graph or below (the air conditioner compressor draws off refrigerant from the low-pressure end). However, as refrigerant cannot flow via the expansion valve, the cooling output is not attained and the high pressure may also not increase or only increase slightly since there is no energy exchange ⇒ Vehicle diagnostic tester ("Self-diagnosis" or "Guided Fault Finding" function for air conditioner) and ⇒ Heating, air conditioning; Rep. gr. 00 ; Repair instructions; Checking cooling output or ⇒ Heating, air conditioning; Rep. gr. 87 ; Refrigerant circuit (vehicle-specific Workshop Manual).*
- *If there is too much refrigerant oil in the circuit, discharge the air conditioner compressor and renew the receiver. After cleaning the refrigerant circuit (flush with refrigerant R134a ⇒ page 88 or blow out with compressed air and nitrogen ⇒ page 84), add the correct amount of refrigerant oil to the circuit ⇒ page 317 .*

Possible deviation from specification	Possible causes of fault	Fault elimination
• High and low pressure normal at first, but after a while: • High pressure rises above specified value • Low pressure drops to value in graph or below • Required cooling output is no longer attained.	♦ Actuation of air conditioner compressor regulating valve - N280- not OK ♦ Moisture in refrigerant circuit	– Check activation of -N280- ⇒ Heating, air conditioning; Rep. gr. 87 ; Refrigerant circuit (vehicle-specific Workshop Manual). – Clean refrigerant circuit (flush with refrigerant R134a ⇒ page 88 or blow out with compressed air and nitrogen ⇒ page 84). – Renew receiver with dryer. – Evacuate refrigerant circuit for at least 3 hours. – Re-charge refrigerant circuit. – Repeat test.
• High and low pressure normal at first • After lengthy driving time, low pressure drops below specification (evaporator ices up)	♦ Air conditioner compressor regulating valve - N280- defective	– Check operation of -N280- , remove -N280- if applicable and check for contamination ⇒ page 269 .

Protected by copyright. Copying for private or commercial purposes, in part or in whole, is not permitted unless authorised by AUDI AG. AUDI AG does not guarantee or assume any liability with respect to the correctness of information in this document. Copyright by AUDI AG.

Note

- *It is not initially necessary to clean the refrigerant circuit (flush with refrigerant R134a ⇒ page 88 or blow out with compressed air and nitrogen ⇒ page 84) when this problem occurs. Normally, there is only a small quantity of moisture in the system which can be removed by lengthy evacuation.*
- *If an issue involving moisture in the refrigerant circuit only occurs after a lengthy operating period or only infrequently (low pressure drops below specified value and evaporator ices up), it is sufficient to renew the dryer in the receiver (adjust quantity of refrigerant oil). Subsequently, evacuate refrigerant circuit for at least 3 hours.*
- *In this case, the evaporator may ice up although the amount of refrigerant in the refrigerant circuit is OK.*
- *A problem with evaporator output temperature sender - G263- can also cause icing-up of refrigerant circuit. If this problem occurs, you should also check the measured value of the evaporator output temperature sender - G263- ⇒ Vehicle diagnostic tester ("Self-diagnosis" or "Guided Fault Finding" function for air conditioner) and ⇒ Heating, air conditioning; Rep. gr. 00 ; Repair instructions; Checking cooling output or ⇒ Heating, air conditioning; Rep. gr. 87 ; Refrigerant circuit (vehicle-specific Workshop Manual).*

Possible deviation from specification	Possible causes of fault	Fault elimination
• High pressure normal • Low pressure too low (see graph) • Required cooling output is attained.	♦ Actuation of air conditioner compressor regulating valve - N280- not OK	– Check activation of -N280- ⇒ Heating, air conditioning; Rep. gr. 87 ; Refrigerant circuit (vehicle-specific Workshop Manual). – Clean refrigerant circuit (flush with refrigerant R134a ⇒ page 88 or blow out with compressed air and nitrogen ⇒ page 84) (not always necessary, refer to notes).
	♦ Air conditioner compressor regulating valve - N280- defective	– Check operation of -N280- , remove -N280- if applicable and check for contamination ⇒ page 269 .
	♦ Expansion valve or air conditioner compressor defective.	– Renew expansion valve and receiver.
	♦ Air conditioner compressor defective	– Re-charge refrigerant circuit. – Repeat test if operation is not OK: – Renew air conditioner compressor. – Re-charge refrigerant circuit. – Repeat test.

Protected by copyright. Copying for private or commercial purposes, in part or in whole, is not permitted unless authorised by AUDI AG. AUDI AG does not guarantee or accept any liability with respect to the correctness of information in this document. Copyright by AUDI AG.

Note

- *Observe the following regarding fault “High pressure normal, low pressure too low”: This fault may cause the evaporator to ice up although the amount of refrigerant in the circuit is OK.*
- *If the problem is with -N280- (the regulating valve is not actuated but the air conditioner compressor operates nevertheless), the refrigerant circuit does not have to be cleaned (by flushing with refrigerant R134a ⇒ page 88 or blowing out with compressed air and nitrogen ⇒ page 84). In this case it is sufficient to renew the air conditioner compressor (observe quantity of refrigerant oil in compressor).*
- *If the expansion valve is defective (permanently closed or does not open sufficiently), -N280- is actuated to maximum output and the low pressure drops to the value in the graph or below (the air conditioner compressor draws off refrigerant from the low-pressure end). As refrigerant cannot however flow via expansion valve, cooling output is not attained and high pressure may either not increase or only slightly due to the absence of energy conversion.*
- *Check the measured values of the evaporator output temperature sender - G263- and actuation of -N280- . If the measured value of the evaporator output temperature sender - G263- is incorrect, the evaporator may ice up or the cooling output may not be attained ⇒ Vehicle diagnostic tester (“Self-diagnosis” or “Guided Fault Finding” function for air conditioner) and ⇒ Heating, air conditioning; Rep. gr. 00 ; Repair instructions; Checking cooling output or ⇒ Heating, air conditioning; Rep. gr. 87 ; Refrigerant circuit (vehicle-specific Workshop Manual).*

Protected by copyright. Copying for private or commercial purposes, in part or in whole, is not permitted unless authorised by AUDI AG. AUDI AG does not guarantee or accept any liability with respect to the correctness of information in this document. Copyright by AUDI AG.

Possible deviation from specification	Possible causes of fault	Fault elimination
• High pressure normal or too high • Low pressure too high (see graph) • Noise from air conditioner compressor (particularly after being switched on) • Required cooling output is attained.	♦ Actuation of air conditioner compressor regulating valve - N280- not OK ♦ Too much refrigerant in circuit ♦ Expansion valve defective ♦ Air conditioner compressor defective	– Check activation of -N280- ⇒ Heating, air conditioning; Rep. gr. 87 ; Refrigerant circuit (vehicle-specific Workshop Manual). – Extract refrigerant from refrigerant circuit. • The quantity of refrigerant extracted corresponds roughly to the actual capacity. – Renew expansion valve and receiver. – Re-charge refrigerant circuit. – Repeat test if operation is not OK: – Renew air conditioner compressor. • If quantity of refrigerant extracted is significantly greater than specified capacity: – Re-charge refrigerant circuit. – Repeat test.

Protected by copyright. Copying for private or commercial purposes, in part or in whole, is not permitted unless authorised by AUDI AG. AUDI AG does not guarantee or accept any liability with respect to the correctness of information in this document. Copyright by AUDI AG.

Note

♦ *This fault may also be caused by too much refrigerant oil in the circuit. Overfilling with refrigerant oil may occur if, for example, the air conditioner compressor has been renewed without adjusting the quantity of refrigerant oil.*

♦ *If the expansion valve is defective (permanently closed or does not open sufficiently), -N280- is actuated to maximum output and the low pressure drops to the value in the graph or below (the air conditioner compressor draws off refrigerant from the low-pressure end). However, as refrigerant cannot flow via the expansion valve, the cooling output is not attained and the high pressure may also not increase or only increase slightly since there is no energy exchange ⇒ Vehicle diagnostic tester ("Self-diagnosis" or "Guided Fault Finding" function for air conditioner) and ⇒ Heating, air conditioning; Rep. gr. 00 ; Repair instructions; Checking cooling output or ⇒ Heating, air conditioning; Rep. gr. 87 ; Refrigerant circuit (vehicle-specific Workshop Manual).*

Possible deviation from specification	Possible causes of fault	Fault elimination
• High and low pressure normal • Required cooling output is attained.	♦ Actuation of air conditioner compressor regulating valve - N280- not OK ♦ Too much refrigerant in circuit ♦ Expansion valve defective	– Check activation of -N280- ⇒ Heating, air conditioning; Rep. gr. 87 ; Refrigerant circuit (vehicle-specific Workshop Manual). – Discharge refrigerant circuit. – Clean refrigerant circuit (flush with refrigerant R134a ⇒ page 88 or blow out with compressed air and nitrogen ⇒ page 84). – Add correct quantity of refrigerant oil to circuit (refer to note). – Re-charge refrigerant circuit. – Repeat test if operation is not OK: – Renew expansion valve. – Re-charge refrigerant circuit. – Repeat test.
• High and low pressure normal • Noise from air conditioner compressor (particularly after being switched on) • Required cooling output is attained.		

Note

♦ *Overfilling with refrigerant oil may occur if, for example, the air conditioner compressor has been renewed without adjusting the quantity of refrigerant oil.*

♦ *If the expansion valve is defective (permanently open), the evaporator temperature is no longer regulated such that only refrigerant in gas form exits from the evaporator. Under certain usage conditions, liquid droplets may then be drawn in by the air conditioner compressor and result in noise (liquid cannot be compressed).*

♦ *If there is too much refrigerant oil in the circuit, discharge the air conditioner compressor and renew the receiver. After cleaning the refrigerant circuit (flush with refrigerant R134a ⇒ page 88 or blow out with compressed air and nitrogen ⇒ page 84), add the correct amount of refrigerant oil to the circuit ⇒ page 317 .*

8.6 Checking pressures - vehicles with electrically driven air conditioner compressor (vehicles with high-voltage system)

Protected by copyright. Copying for private or commercial purposes, in part or in whole, is not permitted unless authorised by AUDI AG. AUDI AG does not guarantee or accept any liability with respect to the correctness of information in this document. Copyright by AUDI AG.

– On vehicles with high-voltage system, switch off (deactivate) auxiliary air conditioner function ⇒ Owner's Manual and ⇒ Infotainment/MMI Operating Manual .

– Switch off ignition.

⇒ “7 Connecting air conditioner service station ”, page 178

⇒ “8 Checking pressures”, page 183

Note

If problems are only encountered at one evaporator on vehicles fitted with two evaporators (one in air conditioning unit and one in battery cooling module or heat exchanger for high-voltage battery), check whether the pressures in the refrigerant circuit are OK. Check the pipe connection between the problematic evaporator and the outgoing pipe connection at the refrigerant pipe distribution point (for cross-sectional restriction or blockage, e.g. in restrictor in the refrigerant line to the heat exchanger for high-voltage battery). If no fault is found, discharge the refrigerant circuit and re-fill it with the specified quantity of refrigerant. Then check the pressures and the cooling output of the air conditioner again. If the problem persists, check/renew the following components: if the problem only occurs on the evaporator in the air conditioning unit, check/renew the shut-off valve upstream of the evaporator (e.g. -N516- or -N541-). When not activated, this component is open and allows the refrigerant to flow through. Renew the expansion valve at the evaporator in the air conditioning unit if no fault is found on -N516- / -N541- . If the problem only occurs on the evaporator for cooling the high-voltage components (e.g. in the battery cooling module), check the actuation of shut-off valve -N517- on the expansion valve on the evaporator in the battery cooling module (when not activated, it is closed and does not allow the refrigerant to flow through). If the problem only occurs on the heat exchanger for high-voltage battery, check the shut-off valve -N542- (the valve is open when it is not activated and allows refrigerant to flow through) and the restrictor integrated in the refrigerant line ⇒ Heating, air conditioning; Rep. gr. 87 ; Refrigerant circuit (vehicle-specific Workshop Manual).

– Check the pressures in the refrigerant circuit (with the air conditioner service station) with the ignition switched off ⇒ page 183 .

The pressures with the ignition switched off correspond to the specifications.

– To minimise the number of automatic engine starts when the vehicle's drive system is active during test and measurement work, charge the vehicle batteries e.g. with the battery charger 60A - VAS 5904- in battery standby mode ⇒ Electrical system; General information; Rep. gr. 27 ; Battery; Charging battery and ⇒ Electrical system; Rep. gr. 93 ; General warning instructions for work on the high-voltage system .

Protected by copyright. Copying for private or commercial purposes, in part or in whole, is not permitted unless authorised by AUDI AG. AUDI AG does not guarantee or accept any liability with respect to the correctness and completeness of this document. Copyright by AUDI AG.

Note

- *Move the selector lever to position “P” and activate the parking brake before performing test and measurement work for which the ignition must be switched on but where the vehicle's drive system does not need to be active.*
- *On vehicles with a high-voltage system, the engine does not have to be running to check the pressures in the refrigerant circuit.*
- *The status of the drive system (READY) is shown by the control unit in dash panel insert - J285- via the “power meter” ⇒ Owner's Manual .*
- *Activating vehicle drive system (check "READY" display in control unit in dash panel insert - J285-) ⇒ Owner's Manual*

Protected by copyright. Copying for private or commercial purposes, in part or in whole, is not permitted unless authorised by AUDI AG. AUDI AG does not guarantee or accept any liability with respect to the correctness of information in this document. Copyright by AUDI AG.

– Activate vehicle drive system ⇒ Owner's Manual .
– Switch on air conditioner.
– Observe the pressure reading (e.g. pressure gauge) of the air conditioner service station.

Note

- *The electrically driven air conditioner compressor is actuated by the vehicle electronics. The engine speed has no influence on the cooling output of the air conditioner.*
- *When the vehicle is stationary or only moving slowly (up to a speed of approx. 45 km/h), the air conditioner compressor is not activated at the maximum specified speed (of approx. 8500 rpm); the air conditioner compressor speed is limited to approx. 5000 rpm.*
- *Activation of the electrically driven air conditioner compressor can be monitored via Guided Fault Finding ⇒ Vehicle diagnostic tester, "Guided Fault Finding" mode for air conditioner and battery regulation .*
- *Measure the pressures at the service connections; the fitting locations of these connections are vehicle-specific ⇒ Heating, air conditioning; Rep. gr. 87 ; Refrigerant circuit (vehicle-specific Workshop Manual).*

⇒ "8.6.1 Specifications for pressures in refrigerant circuit on vehicles without heat pump", page 220

⇒ "8.6.2 Specifications for pressures in refrigerant circuit on vehicles with heat pump", page 240

8.6.1 Specifications for pressures in refrigerant circuit on vehicles without heat pump

Note

No non-return valves are installed in the refrigerant circuit on vehicles with high-voltage system on which no heat pump is fitted (e.g. Audi A3 e-tron, Audi Q5 hybrid, Audi A6 hybrid and Audi A8 hybrid). On these vehicles, however, valves are installed in the refrigerant circuit with regulate the flow of refrigerant to the evaporator (in the heater and air conditioning unit) or to the heat exchanger for cooling high-voltage system components. These valves only have 2 operating positions (open or closed) ⇒ Heating, air conditioning; Rep. gr. 87 ; Refrigerant circuit (vehicle-specific Workshop Manual) and ⇒ Vehicle diagnostic tester in "Guided Fault Finding" mode for air conditioner and battery regulation .

High-pressure side:

Increasing from initial pressure (when connecting pressure gauges) up to max. 20 bar

Low-pressure side:

Dropping from initial pressure (when connecting pressure gauges) to a value between 1.5 and 2.3 bar absolute (depending on cooling output required)

Air conditioner compressor speed:

Between 800 and 8600 rpm depending on cooling output required (currently max. 5000 rpm with vehicle stationary)

Note

- *The temperature of the air downstream of the evaporator, the current air conditioner compressor speed and the refrigerant pressure on the high-pressure side are displayed as measured values by various control units depending on the vehicle (e.g. operating and display unit, Climatronic control unit - J255- , operating and display unit for front air conditioning system - E87- , thermal management control unit - J1024- etc.) ⇒ Vehicle diagnostic tester in "Guided Fault Finding" mode for air conditioner and ⇒ Current flow diagrams, Electrical fault finding and Fitting locations.*
- *If a very high cooling output is required (e.g. high ambient temperature and high fresh air blower speed), the air conditioner compressor cannot initially set the pressure on the low-pressure side to the necessary value (e.g. for a certain time after switching on the air conditioner). When the vehicle is stationary or only moving slowly (up to a speed of approx. 45 km/h), the air conditioner compressor is not activated at the maximum specified speed (of approx. 8500 rpm); the air conditioner compressor speed is limited to approx. 5000 rpm. Limitation of the maximum permissible air conditioner compressor speed is only cancelled at vehicle speeds above approx. 45 km/h. At an air conditioner compressor speed of 5000 rpm, with a high ambient temperature and a high fresh air blower speed (unfavourable ambient conditions), the output (delivery volume) of the air conditioner compressor is not initially sufficient to reduce the pressure on the low-pressure side to the specified value. One way of checking the control action of the air conditioner compressor under these conditions is to actuate the fresh air blower with only approx. 40 % of the maximum voltage and to check the pressures at reduced fresh air blower speed ⇒ Vehicle diagnostic tester using the "Guided Fault Finding" function of the air conditioner and the battery regulation and ⇒ Heating, air conditioning; Rep. gr. 00 ; Repair instructions; Checking the cooling output (vehicle-specific Workshop Manual).*
- *Under unfavourable conditions (very high ambient temperatures, high humidity), the pressure on the high-pressure side may increase to max. 29 bar.*
- *The specified speed of the air conditioner compressor is displayed as a measured value by various control units depending on the vehicle (e.g. operating and display unit, Climatronic control unit - J255-) ⇒ Vehicle diagnostic tester in "Guided Fault Finding" mode for air conditioning system and ⇒ Current flow diagrams, Electrical fault finding and Fitting locations).*
- *The high pressure measured by the corresponding sender (e.g. refrigerant pressure and temperature sender - G395- or pressure sender for refrigerant circuit - G805-) is displayed as a measured value by the corresponding control unit (e.g. operating and display unit, Climatronic control unit - J255-) ⇒ Vehicle diagnostic tester in "Guided Fault Finding" mode for air conditioner and ⇒ Heating, air conditioning; Rep. gr. 00 ; Repair instructions; Checking cooling output (vehicle-specific Workshop Manual).*
- *Depending on the speed of the air conditioner compressor and the control characteristic of the expansion valve, the low pressure settles in the tolerance band within the air conditioner compressor output range (1.5 to 2.3 bar).*
- *The specified air conditioner compressor speed must be higher than 1500 rpm for this test.*

Protected by copyright. Copying for private or commercial purposes, in part or in whole, is not permitted unless authorised by AUDI AG. AUDI AG does not guarantee or accept any liability with respect to the correctness of information in this document. Copyright by AUDI AG.

- *In the “maximum cooling output” setting, the specified speed is regulated to approx. 4000 to 5000 rpm. This value is vehicle-specific and is displayed as a measured value by the corresponding control unit (e.g. operating and display unit, Climatronic control unit - J255-) ⇒ Vehicle diagnostic tester in “Guided Fault Finding” mode for air conditioner and battery regulation .*
- *On the absolute pressure scale, 0 bar corresponds to an absolute vacuum. Normal ambient pressure corresponds to an absolute pressure of 1 bar. On the scale of most pressure gauges, 0 bar corresponds to an absolute pressure of 1 bar (can be seen from -1 bar mark below 0) ⇒ Vehicle diagnostic tester using the “Guided Fault Finding” function for the air conditioner and ⇒ Heating, air conditioning; Rep. gr. 00 ; Repair instructions; Checking the cooling output (vehicle-specific Workshop Manual).*
- *On vehicles with two evaporators (e.g. Audi A8 hybrid: one in the air conditioning unit and one for cooling the high-voltage components e.g. in the battery cooling module / Audi A3 e-tron: in the heat exchanger for high-voltage battery), if the measured temperature corresponds to or is below the specified value at one evaporator but the required specified value is not attained at the other evaporator, the system is controlled as follows: the responsible control unit (-J840- or -J255-) activates the electric air conditioner compressor - JX1- at a higher speed via various other control units (e.g. power and control electronics for electric drive - J842- and control unit for air conditioning compressor - V470-). This causes the cooling output of the air conditioner to increase and the pressure on the low-pressure side and the evaporator temperature to drop. If the required temperature value is then not reached at one evaporator, the relevant control unit (e.g. the -J840- or -J255-) actuates the integrated shut-off valves (-N516- , -N541- , -N517- or -N542-) so that refrigerant no longer flows through the evaporator which is too cold ⇒ Vehicle diagnostic tester in “Guided Fault Finding” mode for air conditioner , ⇒ Current flow diagrams, Electrical fault finding and Fitting locations and ⇒ Heating, air conditioning; Rep. gr. 00 ; Repair instructions; Checking the cooling output (vehicle-specific Workshop Manual).*
- *As the output of the evaporator for cooling the high-voltage components (in the battery cooling module and in the high-voltage battery heat exchanger) is considerably less than that of the evaporator in the air conditioning unit, the required temperature may still be reached in the evaporator for cooling the high-voltage components when there is insufficient refrigerant in the circuit, but the required temperature will no longer be reached at the evaporator in the air conditioning unit (although the air conditioner compressor is being activated at a higher speed).*

Protected by copyright. Copying for private or commercial purposes, in part or in whole, is not permitted unless authorised by AUDI AG. AUDI AG does not guarantee or accept any liability with respect to the correctness of information in this document. Copyright by AUDI AG.

Possible deviation from specification	Possible causes of fault	Fault elimination
• High pressure remains constant or only increases slightly (above pressure with engine stopped) • Low pressure drops quickly to specified value or below. • Required cooling output is not attained in evaporator in air conditioning unit and in evaporator for cooling high-voltage components.	♦ Actuation of air conditioner compressor not OK ⇒ Vehicle diagnostic tester, “Guided Fault Finding” function for air conditioner, air conditioner compressor and battery regulation . ♦ Not enough refrigerant in circuit ♦ Expansion valve for evaporator in air conditioning unit defective. ♦ Shut-off valve upstream of evaporator in air conditioning unit (e.g. -N516- or -N541- , depending on vehicle) faulty (blocked) ⇒ Heating, air conditioning; Rep. gr. 87 ; Refrigerant circuit (vehicle-specific Workshop Manual).	– Check actuation and operation of the air conditioner compressor – Extract refrigerant from refrigerant circuit. • If quantity of refrigerant extracted is substantially less than specified capacity: – Locate leak with leak detector and repair it. – Re-charge refrigerant circuit. – Repeat test.
• High pressure normal • Low pressure corresponds to specified value • Required cooling output is not attained.		• If amount of refrigerant extracted roughly corresponds to specified capacity: – Shut-off valve upstream of evaporator in air conditioning unit (e.g. -N516- or -N541- , depending on vehicle) faulty (blocked) ⇒ Heating, air conditioning; Rep. gr. 87 ; Refrigerant circuit (vehicle-specific Workshop Manual). – Renew expansion valve. – Re-charge refrigerant circuit. – Repeat test.

Note

Observe notes ⇒ page 225 .

Protected by copyright. Copying for private or commercial purposes, in part or in whole, is not permitted unless authorised by AUDI AG. AUDI AG does not guarantee or accept any liability with respect to the correctness of information in this document. Copyright by AUDI AG.

Possible deviation from specification	Possible causes of fault	Fault elimination
On vehicles without shut-off valve upstream of evaporator in air conditioning unit (e.g. -N516- or -N541- , depending on vehicle) ⇒ Heating, air conditioning; Rep. gr. 87 ; Refrigerant circuit (vehicle-specific Workshop Manual). • High pressure normal • low pressure too low (below specified value) • Required cooling output is not attained at evaporator in air conditioning unit.	♦ Actuation of air conditioner compressor not OK ⇒ Vehicle diagnostic tester, “Guided Fault Finding” function for air conditioner, air conditioner compressor and battery regulation . ♦ Not enough refrigerant in circuit ♦ Expansion valve for evaporator in air conditioning unit defective.	– Extract refrigerant from refrigerant circuit. • If quantity of refrigerant extracted is substantially less than specified capacity: – Locate leak with leak detector and repair it. – Re-charge refrigerant circuit. – Repeat test. • If amount of refrigerant extracted roughly corresponds to specified capacity: – Renew expansion valve for evaporator in air conditioning unit. – Re-charge refrigerant circuit. – Repeat test.
On a vehicle with a shut-off valve upstream of the evaporator in the air conditioning unit (e.g. -N516- or -N541- (depending on vehicle) ⇒ Heating, air conditioning; Rep. gr. 87 ; Refrigerant circuit (vehicle-specific Workshop Manual). • High pressure normal • low pressure too low (below specified value) • The required cooling output is not attained at the evaporator in the air conditioning unit and at the evaporator for cooling the high-voltage components.	♦ Actuation of air conditioner compressor not OK ⇒ Vehicle diagnostic tester, “Guided Fault Finding” function for air conditioner, air conditioner compressor and battery regulation . ♦ Not enough refrigerant in circuit ♦ Expansion valve for evaporator in air conditioning unit defective. ♦ Shut-off valve upstream of the evaporator in the air conditioning unit (e.g. -N516- or -N541- (depending on vehicle) defective (closed) ⇒ Heating, air conditioning; Rep. gr. 87 ; Refrigerant circuit (vehicle-specific Workshop Manual).	– Extract refrigerant from refrigerant circuit. • The quantity of refrigerant extracted is much less than the specified capacity (continue in same way as a vehicle without a shut-off valve upstream of the evaporator in the air conditioning unit) • If amount of refrigerant extracted roughly corresponds to specified capacity: – Check activation and operation of shut-off valve upstream of evaporator in air conditioning unit (e.g. -N516- or -N541-) and shut-off valve upstream of evaporator for cooling high-voltage components (e.g. -N517- or -N542- , depending on vehicle) ⇒ Heating, air conditioning; Rep. gr. 87 ; Refrigerant circuit (vehicle-specific Workshop Manual). – Renew expansion valve upstream of evaporator in air conditioning unit. – Replace expansion valve (or restrictor) upstream of the evaporator for cooling the high-voltage components. – Re-charge refrigerant circuit. – Repeat test.

Protected by copyright. Copying for private or commercial purposes, in part or in whole, is not permitted unless authorised by AUDI AG. AUDI AG does not guarantee or accept any liability with respect to the correctness of information in this document. Copyright by AUDI AG.

Note

Protected by copyright. Copying for private or commercial purposes, in part or in whole, is not permitted unless authorised by AUDI AG. AUDI AG does not guarantee or accept any liability with respect to the correctness of information in this document. Copyright by AUDI AG.

- *If no fault is found for this problem, clean refrigerant circuit (by flushing with refrigerant R134a ⇒ page 88 or blowing out with compressed air and nitrogen ⇒ page 84). Constriction or blockage in the refrigerant circuit may also lead to one of these problems.*
- *Depending on vehicle, check measured values of evaporator output temperature sender - G263- and, if fitted, of temperature sensor before evaporator for hybrid battery - G756- and of temperature sensor after evaporator for hybrid battery - G757- as well as activation of air conditioner compressor via corresponding control units, e.g. control unit for air conditioning compressor - J842- by battery regulation control unit - J840- or by air conditioner operating and display unit (Climatronic control unit - J255-) ⇒ Vehicle diagnostic tester in "Guided Fault Finding" mode for air conditioner and battery regulation , ⇒ Heating, air conditioning; Rep. gr. 87 ; Refrigerant circuit (vehicle-specific Workshop Manual) and ⇒ Current flow diagrams, Electrical fault finding and Fitting locations.*
- *Incorrect measured values from -G263- (or e.g. -G756- / -G757-) can also cause problems with the cooling output, or the evaporator in the air conditioning unit may ice up ⇒ Vehicle diagnostic tester in "Guided Fault Finding" mode for air conditioner and battery regulation and ⇒ Heating, air conditioning; Rep. gr. 87 ; Refrigerant circuit (vehicle-specific Workshop Manual).*
- *If, e.g. after renewing the expansion valve, operation of the air conditioning system is not OK when the test is repeated (re-fit old expansion valve), clean the refrigerant circuit (flush with refrigerant R134a ⇒ page 88 or blow out with compressed air and nitrogen ⇒ page 84). Then renew the air conditioner compressor and receiver/desiccant cartridge.*
- *If a temperature sensor is faulty, the evaporator may ice up although the quantity of refrigerant in the circuit is OK.*
- *If the expansion valve at the evaporator in the air conditioning unit (or e.g. -N516- / -N541- , depending on vehicle) is defective (i.e. is permanently closed or does not open sufficiently), the air conditioner compressor is activated to maximum output and the low pressure drops to the value in the graph or below (air conditioner compressor draws off refrigerant from low-pressure side). However, because no refrigerant can flow via the expansion valve, the cooling output is not attained and the high pressure may also not increase or only increase slightly since there is no energy exchange ⇒ Vehicle diagnostic tester in "Guided Fault Finding" mode for air conditioner and battery regulation , ⇒ Heating, air conditioning; Rep. gr. 87 ; Refrigerant circuit (vehicle-specific Workshop Manual) and ⇒ Heating, air conditioning; Rep. gr. 00 ; Repair instructions; Checking cooling output (vehicle-specific Workshop Manual).*

- *The evaporator in the air conditioning unit has a higher output than the evaporator for cooling the high-voltage components (e.g. in the battery cooling module or heat exchanger for high-voltage battery, depending on vehicle). The shut-off valve (e.g. refrigerant shut-off valve 2 for hybrid battery - N517- on the expansion valve in the battery cooling module or refrigerant shut-off valve for high-voltage battery heat exchanger - N542-) is activated by the battery regulation control unit - A2- or air conditioner operating and display unit (Climatronic control unit - AX1-) when the battery reaches or exceeds a certain temperature, depending on the type of cooling used for the drive battery - J840- / hybrid battery unit - J255- (hybrid battery); energy exchange via the evaporator for cooling the high-voltage components (in the battery cooling module or heat exchanger for high-voltage battery) is not increased or only slightly increased ⇒ Vehicle diagnostic tester in "Guided Fault Finding" mode for air conditioner and battery regulation , ⇒ Heating, air conditioning; Rep. gr. 87 ; Refrigerant circuit (vehicle-specific Workshop Manual), and ⇒ Heating, air conditioning; Rep. gr. 00 ; Repair instructions; Checking cooling output .*

Protected by copyright. Copying for private or commercial purposes, in part or in whole, is not permitted unless authorised by AUDI AG. AUDI AG does not guarantee or accept any liability with respect to the correctness of information in this document. Copyright by AUDI AG.

Possible deviation from specification	Possible causes of fault	Fault elimination
On a vehicle with a shut-off valve upstream of the evaporator in the air conditioning unit (e.g. -N516- or -N541- (depending on vehicle) ⇒ Heating, air conditioning; Rep. gr. 87 ; Refrigerant circuit (vehicle-specific Workshop Manual). • High pressure normal • low pressure too low (below specified value) • The required cooling output is not attained solely at the evaporator in the air conditioning unit (the cooling output is OK at the evaporator for cooling the high-voltage components).	♦ Actuation of air conditioner compressor not OK ⇒ Vehicle diagnostic tester, "Guided Fault Finding" function for air conditioner, air conditioner compressor and battery regulation . ♦ Not enough refrigerant in circuit ♦ Expansion valve for evaporator in air conditioning unit defective. ♦ Shut-off valve upstream of the evaporator in the air conditioning unit (e.g. -N516- or -N541- (depending on vehicle) defective (closed) ⇒ Heating, air conditioning; Rep. gr. 87 ; Refrigerant circuit (vehicle-specific Workshop Manual).	– Extract refrigerant from refrigerant circuit. • If the amount of refrigerant extracted is significantly less than the specified capacity: – Locate leak with leak detector and repair it. – Re-charge refrigerant circuit. – Repeat test. • If amount of refrigerant extracted roughly corresponds to specified capacity: – Check activation and operation of shut-off valve (e.g. -N516- or -N541- , depending on vehicle); renew expansion valve at evaporator in air conditioning unit if no fault is found ⇒ Heating, air conditioning; Rep. gr. 87 ; Refrigerant circuit (vehicle-specific Workshop Manual). – Re-charge refrigerant circuit. – Repeat test.

Possible deviation from specification	Possible causes of fault	Fault elimination
• High pressure normal • low pressure too low (below specified value) • The required cooling output is not attained solely at the evaporator for cooling the high-voltage components (the cooling output is OK at the evaporator in the air conditioning unit).	On vehicles with a battery cooling module ◆ Actuation or operation of refrigerant shut-off valve 2 for hybrid battery - N517- , of a control motor, blower or temperature sensor in or at battery cooling module not OK. ◆ Constriction or blockage in the refrigerant line to or from the expansion valve at the battery cooling module ◆ Expansion valve for evaporator for cooling high-voltage components defective ◆ Not enough refrigerant in circuit	– Check operation and activation of the components for cooling the high-voltage components ⇒ Vehicle diagnostic tester in “Guided Fault Finding” mode for air conditioner, air conditioner compressor and battery regulation – Check refrigerant lines – Extract refrigerant from refrigerant circuit. – Depending on vehicle, fit - N517- in place of expansion valve ⇒ Heating, air conditioning; Rep. gr. 87 ; Refrigerant circuit (vehicle-specific Workshop Manual).
	On vehicles with a heat exchanger for high-voltage battery ◆ Activation or operation of shut-off valve (e.g. refrigerant shut-off valve for high-voltage battery heat exchanger - N542- , faulty refrigerant pump or fault in refrigerant circuit for high-voltage components ⇒ Heating, air conditioning; Rep. gr. 87 ; Refrigerant circuit (vehicle-specific Workshop Manual). ◆ Constriction or obstruction in the refrigerant lines leading to or from the heat exchanger for high-voltage battery ◆ Restrictor in the refrigerant line to the heat exchanger for high-voltage battery blocked ◆ Not enough refrigerant in circuit	– Check restrictor in refrigerant line to heat exchanger for high-voltage battery and clean or renew, if necessary. – Re-charge refrigerant circuit. – Repeat test.

Protected by copyright. Copying for private or commercial purposes, in part or in whole, is not permitted unless authorised by AUDI AG. AUDI AG does not guarantee or accept any liability with respect to the correctness of information in this document. Copyright by AUDI AG.

Protected by copyright. Copying for private or commercial purposes, in part or in whole, is not permitted unless authorised by AUDI AG. AUDI AG does not guarantee or accept any liability with respect to the correctness of information in this document. Copyright by AUDI AG.

Note

- *On vehicles with battery cooling module, the refrigerant shut-off valve 2 for hybrid battery - A2- is currently activated by the battery regulation control unit - N517- in order to cool the drive battery - J840- (hybrid battery) only when the battery reaches a certain temperature. If air conditioning mode has not already been activated at this point, the electrical air conditioner compressor - V470- is actuated via the control unit for air conditioning compressor - J842- by -J840- . The temperature of the air upstream and downstream of the evaporator in the battery cooling module is determined by -J840- . If it is established that the cooling is not sufficient, this is stored in -J840- ⇒ Vehicle diagnostic tester in "Guided Fault Finding" mode for air conditioner, air conditioner compressor and battery regulation and ⇒ Heating, air conditioning; Rep. gr. 87 ; Refrigerant circuit (vehicle-specific Workshop Manual).*
- *On vehicles with a battery cooling module, the temperature of the air (and thus the cooling output of the evaporator) in the battery cooling module is determined by way of built-in temperature sensors (at present it cannot be measured with a thermometer during operation) and can only be checked using the Guided Fault Finding routine ⇒ Vehicle diagnostic tester, "Guided Fault Finding" function for air conditioner, air conditioner compressor and battery regulation .*
- *On vehicles with a battery cooling module, observe additional information ⇒ page 225 .*
- *On some vehicles with a heat exchanger for high-voltage battery (e.g. Audi A3 e-tron; components may have a different designation on other vehicles), the refrigerant shut-off valve for high-voltage battery heat exchanger - A2- is no longer activated by the operating unit (Climatronic control unit - J1050-) above a certain temperature in order to cool the high-voltage components, e.g. the drive battery - N542- and the high-voltage battery charger control unit - J255- (-N542- is open when the system is de-energised. If air conditioning mode has not already been activated at this point, the operating unit -V470- actuates the electrical air conditioner compressor - J842- via the control unit for air conditioning compressor - J255- . Other components in this circuit must be actuated (e.g. refrigerant circulation pump 2 - V178- and solenoid valve 1 - N88-) and the refrigerant must flow through the heat exchanger for high-voltage battery to ensure that the refrigerant actually cools the high-voltage components. If it is established that the cooling of the high-voltage components is not sufficient, this is stored in various control units ⇒ Vehicle diagnostic tester in "Guided Fault Finding" mode for air conditioner, air conditioner compressor and battery regulation , ⇒ Heating, air conditioning; Rep. gr. 87 ; Refrigerant circuit (vehicle-specific Workshop Manual) and ⇒ Rep. gr. 19 ; Cooling system/coolant; Connection diagram - coolant hoses .*
- *If no fault is found for this problem, clean refrigerant circuit (by flushing with refrigerant R134a ⇒ page 88 or blowing out with compressed air and nitrogen ⇒ page 84). Constriction or blockage in the refrigerant circuit may also lead to one of these problems.*

Possible deviation from specification	Possible causes of fault	Fault elimination
On a vehicle with a shut-off valve upstream of the evaporator in the air conditioning unit (e.g. -N516- or -N541- (depending on vehicle) ⇒ Heating, air conditioning; Rep. gr. 87 ; Refrigerant circuit (vehicle-specific Workshop Manual). • High pressure does not rise or only rises slightly above the pressure with the engine stopped. • Low pressure does not drop or only drops slightly. • Required cooling output is not attained in evaporator in air conditioning unit (and in evaporator for cooling high-voltage components)	♦ Air conditioner compressor is not activated or driven. ♦ Shut-off valve -N516- or -N541- (depending on vehicle) faulty (blocked) ⇒ Heating, air conditioning; Rep. gr. 87 ; Refrigerant circuit (vehicle-specific Workshop Manual).	– Check actuation and operation of the air conditioner compressor and repair if necessary ⇒ Vehicle diagnostic tester, “Guided Fault Finding” function for air conditioner and battery regulation – Check activation and operation of shut-off valve (e.g. -N516- or -N541- , depending on vehicle); renew expansion valve at evaporator in air conditioning unit if no fault is found ⇒ Heating, air conditioning; Rep. gr. 87 ; Refrigerant circuit (vehicle-specific Workshop Manual).
	♦ Constriction or blockage in refrigerant circuit (e.g. in refrigerant line between service connection on low-pressure side and air conditioner compressor).	– Clean refrigerant circuit (flush with refrigerant R134a ⇒ page 88 or blow out with compressed air and nitrogen ⇒ page 84). – Renew hose or pipe if kinked or constricted.
	♦ Air conditioner compressor defective	– Renew air conditioner compressor.

Protected by copyright. Copying for private or commercial purposes, in part or in whole, is not permitted unless authorised by AUDI AG. AUDI AG does not guarantee or accept any liability with respect to the correctness of information in this document. Copyright by AUDI AG.

Possible deviation from specification	Possible causes of fault	Fault elimination
On a vehicle without a shut-off valve upstream of the evaporator in the air conditioning unit (e.g. -N516- or -N541- (depending on vehicle) ⇒ Heating, air conditioning; Rep. gr. 87 ; Refrigerant circuit (vehicle-specific Workshop Manual). • High pressure increases above specification • Low pressure drops quickly to specified value • Required cooling output is not attained in evaporator in air conditioning unit (and in evaporator for cooling high-voltage components)	♦ Activation or operation of air conditioner compressor not OK ♦ Constriction or blockage in refrigerant circuit ♦ Expansion valve defective	– Check actuation and operation of the air conditioner compressor and repair if necessary ⇒ Vehicle diagnostic tester, “Guided Fault Finding” function for air conditioner and battery regulation – Run hand over refrigerant circuit to check for differences in temperature. • If there is a difference in temperature at one component: – Renew hose or pipe if kinked or constricted. – In the event of clogging, clean refrigerant circuit (flush with refrigerant R134a ⇒ page 88 or blow out with compressed air and nitrogen ⇒ page 84). – Re-charge refrigerant circuit. – Repeat test. • If operation is not OK and no fault is found: – Clean refrigerant circuit (flush with refrigerant R134a ⇒ page 88 or blow out with compressed air and nitrogen ⇒ page 84). – Re-charge refrigerant circuit. – Repeat test if operation is not OK: – Renew expansion valve upstream of evaporator in air conditioning unit and receiver.
On a vehicle with a shut-off valve upstream of the evaporator in the air conditioning unit (e.g. -N516- or -N541- (depending on vehicle) ⇒ Heating, air conditioning; Rep. gr. 87 ; Refrigerant circuit (vehicle-specific Workshop Manual). • High pressure increases above specification • low pressure quickly drops to specified value, • Required cooling output is not attained in evaporator in air conditioning unit (and in evaporator for cooling high-voltage components)	♦ Activation or operation of air conditioner compressor or shut-off valve (e.g. -N516- or -N541- , depending on vehicle) faulty. ⇒ Heating, air conditioning; Rep. gr. 87 ; Refrigerant circuit (vehicle-specific Workshop Manual). ♦ Constriction or blockage in refrigerant circuit ♦ Expansion valve defective	– Check activation and operation of air conditioner compressor and shut-off valves (e.g. -N516-) ⇒ Vehicle diagnostic tester in “Guided Fault Finding” mode for air conditioner and battery regulation and ⇒ Heating, air conditioning; Rep. gr. 87 ; Refrigerant circuit (vehicle-specific Workshop Manual). – Perform further testing as described for vehicles without shut-off valve upstream of evaporator.

Protected by copyright. Copying for private or commercial purposes, in part or in whole, is not permitted unless authorised by AUDI AG. AUDI AG does not guarantee or assume any liability with respect to the correctness of information in this document. Copyright by AUDI AG.

Note

- *If the operation of the air conditioner is not OK when the test is repeated, renew the expansion valve and receiver (and -N516- / -N541- if fitted) ⇒ Heating, air conditioning; Rep. gr. 87 ; Refrigerant circuit (vehicle-specific Workshop Manual).*
- *In this case, the evaporator may ice up although the amount of refrigerant in the refrigerant circuit is OK.*
- *If the expansion valve at the evaporator in the air conditioning unit or the shut-off valve (e.g. -N516- or -N541-) is defective (is permanently closed or does not open sufficiently), the air conditioner compressor is activated to maximum output and the low pressure drops to the specified value or below (air conditioner compressor draws off refrigerant from low-pressure side). However, because no refrigerant (or only a small amount) can flow via the expansion valve (the corresponding shut-off valve), the cooling output is not attained and the high pressure may also not increase or only increase slightly since there is no energy exchange ⇒ Vehicle diagnostic tester in "Guided Fault Finding" mode for air conditioner and battery regulation , ⇒ Heating, air conditioning; Rep. gr. 87 ; Refrigerant circuit (vehicle-specific Workshop Manual) and ⇒ Heating, air conditioning; Rep. gr. 00 ; Repair instructions; Checking cooling output (vehicle-specific Workshop Manual).*
- *If a vehicle has a battery cooling module and the expansion valve on the evaporator in the battery cooling module is defective (or refrigerant shut-off valve 2 for hybrid battery - N517- is not operating or is not actuated properly), or if the expansion valve is permanently closed or does not open sufficiently, the air conditioner compressor is also actuated to maximum output (the required temperatures in the battery cooling module are not reached). The pressure on the low-pressure side then only drops to or below the specified value if no cooling output is requested in the air conditioning unit at the same time (the shut-off valve upstream of the evaporator in the air conditioning unit, e.g. -N516- , is activated and closed). The air conditioner compressor draws off the refrigerant from the low-pressure side of both evaporators. However, as no refrigerant can flow via the expansion valve in the air conditioning unit (e.g. -N516-) and the cooling output is not reached in the battery cooling module (fault in area of battery cooling module), the electric air conditioner compressor is activated at a higher speed. However, as no more refrigerant can flow, the pressure on the low-pressure side drops below the specified value and the high pressure may also not increase or only increase slightly since there is no energy exchange ⇒ Vehicle diagnostic tester in "Guided Fault Finding" mode for air conditioner and battery regulation , ⇒ Heating, air conditioning; Rep. gr. 87 ; Refrigerant circuit (vehicle-specific Workshop Manual) and ⇒ Heating, air conditioning; Rep. gr. 00 ; Repair instructions; Checking cooling output (vehicle-specific Workshop Manual).*

Not to be copied or reproduced for commercial purposes, in part or in whole, is not permitted unless authorised by AUDI AG. AUDI AG does not guarantee or accept any liability with respect to the correctness of information in this document. Copyright by AUDI AG.

- *On vehicles with a high-voltage battery heat exchanger, if the restrictor installed in the refrigerant line to the high-voltage battery heat exchanger is blocked or the shut-off valve (e.g. refrigerant shut-off valve for high-voltage battery heat exchanger - N542- on the Audi A3 e-tron) installed in this line is faulty, permanently closed or does not open far enough, the air conditioner compressor is also activated to maximum output (the required temperatures in the refrigerant circuit are not reached with the high-voltage battery heat exchanger). The pressure on the low-pressure side then only drops to or below the specified value if no cooling output is requested in the air conditioning unit at the same time (-N541- is activated and closed, e.g. on the Audi A3 e-tron). The air conditioner compressor draws off the refrigerant from the low-pressure side of both evaporators. However, because refrigerant cannot flow via the expansion valve into the air conditioning unit (via the shut-off valve, e.g. -N541-) and the cooling output in the high-voltage battery heat exchanger is not reached, the electric air conditioner compressor is activated at a higher speed. However, as no more refrigerant can flow, the pressure on the low-pressure side drops below the specified value and the high pressure may also not increase or only increase slightly since there is no energy exchange ⇒ Vehicle diagnostic tester in "Guided Fault Finding" mode for air conditioner and battery regulation , ⇒ Heating, air conditioning; Rep. gr. 87 ; Refrigerant circuit (vehicle-specific Workshop Manual) and ⇒ Heating, air conditioning; Rep. gr. 00 ; Repair instructions; Checking cooling output (vehicle-specific Workshop Manual). The same applies if a fault occurs in the coolant circuit where the high-voltage battery heat exchanger is installed (e.g. coolant circulation pump 2 - V178- or solenoid valve 1 - N88- (on Audi A3 e-tron) are not activated correctly or are faulty). Although the high-voltage battery heat exchanger is cooled, the coolant does not reach the high-voltage components which need to be cooled ⇒ Heating, air conditioning; Rep. gr. 87 ; Coolant circuit (vehicle-specific Workshop Manual) and ⇒ Rep. gr. 19 ; Cooling system/coolant; Connection diagram - coolant hoses .*
- *As the cooling output of the evaporator for cooling the high-voltage battery is less than that of the evaporator in the air conditioning unit, the required temperature in the evaporator for cooling the high-voltage battery may still be reached when there is not enough refrigerant in the circuit, but the required temperature will no longer be reached at the evaporator in the air conditioning unit (although the air conditioner compressor is activated at a higher speed).*
- *If there is too much refrigerant oil in the circuit, also discharge (flush) the air conditioner compressor and renew the receiver/desiccant cartridge. After cleaning the refrigerant circuit (flushing with refrigerant R134a ⇒ page 88 or blowing out with compressed air and nitrogen ⇒ page 84), add the correct amount of refrigerant oil to the circuit (to the air conditioner compressor) ⇒ page 317 .*

Protected copyright. Copying for private or commercial purposes, in part or in whole, is not permitted unless authorised by AUDI AG. AUDI AG does not guarantee or accept any liability with respect to the correctness and completeness of this document. Copyright by AUDI AG.

Possible deviation from specification	Possible causes of fault	Fault elimination
• High and low pressure normal at first, but after a while: • High pressure rises above specified value • Low pressure drops to specified value or below • Required cooling output is not attained in evaporator in air conditioning unit (and in evaporator for cooling high-voltage components)	♦ Activation or operation of air conditioner compressor or shut-off valve (e.g. -N516- or -N541- , depending on vehicle) faulty ⇒ Heating, air conditioning; Rep. gr. 87 ; Refrigerant circuit (vehicle-specific Workshop Manual). ♦ Moisture in refrigerant circuit	– Check activation of air conditioner compressor and shut-off valve (e.g. -N516- or -N541-) ⇒ Vehicle diagnostic tester in “Guided Fault Finding” mode for air conditioner and battery regulation . – Clean refrigerant circuit (flush with refrigerant R134a ⇒ page 88 or blow out with compressed air and nitrogen ⇒ page 84). – Renew receiver with dryer. – Evacuate refrigerant circuit for at least 3 hours. – Re-charge refrigerant circuit. – Repeat test.
• High and low pressure normal at first • After driving for a while, low pressure drops below specified value (evaporator in air conditioning unit ices up)		

Note

♦ *It is not initially necessary to clean the refrigerant circuit (flush with refrigerant R134a ⇒ page 88 or blow out with compressed air and nitrogen ⇒ page 84) when this problem occurs. Normally, there is only a small quantity of moisture in the system which can be removed by lengthy evacuation.*

♦ *If an issue involving moisture in the refrigerant circuit only occurs after a lengthy operating period or only infrequently (low pressure drops below specified value and evaporator ices up), it is sufficient to renew the dryer in the receiver (adjust quantity of refrigerant oil). Subsequently, evacuate refrigerant circuit for at least 3 hours.*

♦ *In this case, the evaporator may ice up although the amount of refrigerant in the refrigerant circuit is OK.*

♦ *A faulty evaporator output temperature sender - G263- and/or, if fitted, temperature sensor after evaporator for hybrid battery - G757- (depending on vehicle) may also cause the refrigerant circuit to ice up. If this problem occurs, also observe the measured value for -G263- and -G757- (e.g. on vehicles with a battery cooling module) ⇒ Vehicle diagnostic tester; in “Guided Fault Finding” mode for air conditioner, ⇒ Heating, air conditioning; Rep. gr. 87 ; Refrigerant circuit (vehicle-specific Workshop Manual) and ⇒ Heating, air conditioning; Rep. gr. 00 ; Repair instructions; Checking cooling output (vehicle-specific Workshop Manual).*

Protected by copyright. Copying or publication in other media, in part or in whole, is not permitted unless authorised by AUDI AG. AUDI AG does not guarantee or accept any liability with respect to the correctness of information in this document. Copyright by AUDI AG.

Possible deviation from specification	Possible causes of fault	Fault elimination
• High pressure normal • Low pressure too low • Required cooling output is not attained in evaporator in air conditioning unit (and in evaporator for cooling high-voltage components)	♦ Activation or operation of air conditioner compressor or, if fitted, shut-off valves (e.g. -N516- , -N517- , -N541- or -N542- , depending on vehicle) faulty ⇒ Heating, air conditioning; Rep. gr. 87 ; Refrigerant circuit (vehicle-specific Workshop Manual). ♦ Expansion valve in air conditioning unit or, if fitted, in battery cooling module defective. ♦ Expansion valve in the air conditioning unit faulty or restrictor in the refrigerant line to the heat exchanger for high-voltage battery blocked (if available). ♦ Air conditioner compressor defective	– Check activation and operation of air conditioner compressor and, if fitted, shut-off valves (e.g. -N516- and -N517-) ⇒ Vehicle diagnostic tester in “Guided Fault Finding” mode for air conditioner and battery regulation and ⇒ Heating, air conditioning; Rep. gr. 87 ; Refrigerant circuit (vehicle-specific Workshop Manual). – Clean refrigerant circuit (flush with refrigerant R134a ⇒ page 88 or blow out with compressed air and nitrogen ⇒ page 84) (not always necessary, refer to notes). – Renew expansion valve for evaporator in air conditioning unit and for receiver/dryer. – If fitted, renew expansion valve for evaporator in battery cooling module or clean/renew refrigerant line with restrictor to the heat exchanger for high-voltage battery. – Re-charge refrigerant circuit. – Repeat test if operation is not OK: – Renew air conditioner compressor. – Re-charge refrigerant circuit. – Repeat test.

Protected by copyright. Copying for private or commercial purposes, in part or in whole, is not permitted unless authorised by AUDI AG. AUDI AG does not guarantee or accept any liability with respect to the correctness of information in this document. Copyright by AUDI AG.

Note

- *If the fault "High pressure normal, low pressure too low" occurs, please note that the evaporator in the air conditioning unit may ice up although the amount of refrigerant in the circuit is OK.*
- *If the problem is with the air conditioner compressor (the air conditioner compressor is actuated at excessively high speed by the air conditioner compressor regulating valve - J842-), the refrigerant circuit does not have to be cleaned (by flushing with refrigerant R134a ⇒ page 88 or blowing out with compressed air and nitrogen ⇒ page 84). In this case it is sufficient to renew the air conditioner compressor (observe quantity of refrigerant oil in compressor and adjust if necessary).*
- *On vehicles with a battery cooling module, if the expansion valve for the evaporator in the air conditioning unit or the expansion valve for the evaporator in the battery cooling module is defective (permanently closed or does not open sufficiently), the air conditioner compressor is also actuated to maximum output and the pressure on the low-pressure side drops to the value in the graph or below (the air conditioner compressor draws off refrigerant from the low-pressure side). As refrigerant cannot however flow via the defective expansion valve, the cooling output is not attained in the downstream evaporator and the high pressure may either not increase or only increase slightly due to the absence of energy conversion. However, the air conditioner compressor may be activated at a higher speed, as the required cooling output is not attained in one evaporator. This also applies if operation or activation of a shut-off valve (e.g. refrigerant shut-off valve 1 for hybrid battery - N516- or refrigerant shut-off valve 2 for hybrid battery - N517- , depending on vehicle) is not OK ⇒ Vehicle diagnostic tester; in "Guided Fault Finding" mode for air conditioner, ⇒ Heating, air conditioning; Rep. gr. 87 ; Refrigerant circuit (vehicle-specific Workshop Manual) and ⇒ Heating, air conditioning; Rep. gr. 00 ; Repair instructions; Checking cooling output (vehicle-specific Workshop Manual).*
- *On vehicles with a high-voltage battery heat exchanger, if the expansion valve for the evaporator in the air conditioning unit is defective (permanently closed or does not open far enough) or the restrictor in the refrigerant line to the high-voltage battery heat exchanger is blocked, the air conditioner compressor is also activated to maximum output and the pressure on the low-pressure side drops to the value in the graph or below (the air conditioner compressor draws off refrigerant from the low-pressure side). However, as refrigerant cannot flow via the defective expansion valve or blocked restrictor, the cooling output is not attained in the downstream evaporator and the high pressure may either not increase or only increase slightly since there is no energy exchange. However, the air conditioner compressor may be activated at a higher speed, as the required cooling output is not attained in one evaporator. This also applies if operation or activation of a shut-off valve (e.g. refrigerant shut-off valve for heater and air conditioner unit - N541- or refrigerant shut-off valve for high-voltage battery heat exchanger - N542- , depending on vehicle) or a component installed in the refrigerant circuit for high-voltage components (e.g. coolant circulation pump 2 - V178- or solenoid valve 1 - N88- on Audi A3 e-tron, depending on vehicle) is not OK ⇒ Vehicle diagnostic tester; in "Guided Fault Finding" mode for air conditioner, ⇒ Rep. gr. 19 ; Cooling system/coolant; Connection diagram - coolant hoses and ⇒ Heating, air conditioning; Rep. gr. 87 ; Refrigerant circuit (vehicle-specific Workshop Manual).*

Protected by copyright. Copying for private or commercial purposes, in part or in whole, is not permitted unless authorised by AUDI AG. AUDI AG does not guarantee or accept any liability with respect to the correctness of information in this document. Copyright by AUDI AG.

- *Check the measured values for the evaporator output temperature sender - G263- (and if applicable the measured values for the temperature sensor before evaporator for hybrid battery - G756- and temperature sensor after evaporator for hybrid battery - G757- , depending on vehicle) as well as activation of the air conditioner compressor by the battery regulation control unit - J840- , the air conditioner operating unit (Climatronic control unit - J255-) / operating and display unit for front air conditioning system - E87- or thermal management control unit - J1024- (depending on vehicle). If the measured value of -G263- (or -G756- / -G757- , depending on vehicle) or activation of the air conditioner compressor is not OK, the evaporator may ice up or the required cooling output is not attained ⇒ Vehicle diagnostic tester; in "Guided Fault Finding" mode for air conditioner, ⇒ Heating, air conditioning; Rep. gr. 87 ; Refrigerant circuit (vehicle-specific Workshop Manual) and ⇒ Heating, air conditioning; Rep. gr. 00 ; Repair instructions; Checking cooling output (vehicle-specific Workshop Manual).*

Protected by copyright. Copying for private or commercial purposes, in part or in whole, is not permitted unless authorised by AUDI AG. AUDI AG does not guarantee or accept any liability with respect to the correctness of information in this document. Copyright by AUDI AG.

Possible deviation from specification	Possible causes of fault	Fault elimination
• High pressure normal or too high • Low pressure too high • Noise from air conditioner compressor (particularly after being switched on) • The required cooling output is not attained in the evaporator in the air conditioning unit and / or in the evaporator for cooling the high-voltage components.	♦ Activation or operation of air conditioner compressor not OK ♦ Depending on refrigerant circuit version, activation or operation of one of these shut-off valves (-N516- , -N517- , -N541- or -N542- , depending on vehicle) is not OK ⇒ Heating, air conditioning; Rep. gr. 87 ; Refrigerant circuit (vehicle-specific Workshop Manual). ♦ Too much refrigerant in circuit ♦ Expansion valve defective ♦ Air conditioner compressor defective	– Check activation and operation of air conditioner compressor and, if fitted, these shut-off valves (-N516- , -N517- , -N541- and -N542- , depending on vehicle) ⇒ Vehicle diagnostic tester in “Guided Fault Finding” mode for air conditioner and battery regulation and ⇒ Heating, air conditioning; Rep. gr. 87 ; Refrigerant circuit (vehicle-specific Workshop Manual). – Extract refrigerant from refrigerant circuit. • The quantity of refrigerant extracted corresponds roughly to the actual capacity. – Renew expansion valve for evaporator in air conditioning unit and for receiver/dryer. – Renew expansion valve with -N517- . – Check restrictor in refrigerant line to heat exchanger for high-voltage battery and clean or renew, if necessary. – Re-charge refrigerant circuit. – Repeat test if operation is not OK. – Renew air conditioner compressor. • If quantity of refrigerant extracted is significantly greater than specified capacity: – Re-charge refrigerant circuit. – Repeat test.

Protected by copyright. Copying for private or commercial purposes, in part or in whole, is not permitted unless authorised by AUDI AG. Audi AG does not guarantee or accept any liability with respect to the correctness and completeness of this document. Copyright by AUDI AG.

Note

- *This fault may also be caused by too much refrigerant oil in the circuit. Overfilling with refrigerant oil may occur if, for example, the air conditioner compressor has been renewed without adjusting the quantity of refrigerant oil.*
- *On vehicles with a battery cooling module, if the expansion valve for the evaporator in the air conditioning unit or the expansion valve for the evaporator in the battery cooling module is defective (permanently closed or does not open sufficiently), the air conditioner compressor is also actuated to maximum output and the pressure on the low-pressure side drops to the value in the graph or below (the air conditioner compressor draws off refrigerant from the low-pressure side). As refrigerant cannot however flow via the defective expansion valve, the cooling output is not attained in the downstream evaporator and the high pressure may either not increase or only increase slightly due to the absence of energy conversion. However, the air conditioner compressor may be activated at a higher speed, as the required cooling output is not attained in one evaporator. This also applies if operation or activation of a shut-off valve (e.g. refrigerant shut-off valve 1 for hybrid battery - N516- or refrigerant shut-off valve 2 for hybrid battery - N517- , depending on vehicle) is not OK ⇒ Vehicle diagnostic tester; in "Guided Fault Finding" mode for air conditioner and ⇒ Heating, air conditioning; Rep. gr. 87 ; Refrigerant circuit (vehicle-specific Workshop Manual).*
- *On vehicles with a high-voltage battery heat exchanger, if the expansion valve for the evaporator in the air conditioning unit is defective (permanently closed or does not open far enough) or the restrictor in the refrigerant line to the high-voltage battery heat exchanger is blocked, the air conditioner compressor is also activated to maximum output and the pressure on the low-pressure side drops to the value in the graph or below (the air conditioner compressor draws off refrigerant from the low-pressure side). However, as refrigerant cannot flow via the defective expansion valve or blocked restrictor, the cooling output is not attained in the downstream evaporator and the high pressure may either not increase or only increase slightly since there is no energy exchange. However, the air conditioner compressor may be activated at a higher speed, as the required cooling output is not attained in one evaporator. This also applies if operation or activation of refrigerant shut-off valve for heater and air conditioner unit - N541- , refrigerant shut-off valve for high-voltage battery heat exchanger - N542- (e.g. on Audi A3 e-tron) or a component installed in the refrigerant circuit for high-voltage components (e.g. coolant circulation pump 2 - V178- or solenoid valve 1 - N88- on Audi A3 e-tron) is not OK ⇒ Vehicle diagnostic tester; in "Guided Fault Finding" mode for air conditioner, ⇒ Rep. gr. 19 ; Cooling system/coolant; Connection diagram - coolant hoses and ⇒ Heating, air conditioning; Rep. gr. 87 ; Refrigerant circuit (vehicle-specific Workshop Manual).*

Protected by copyright. Copying for private or commercial purposes, in part or in whole, is not permitted unless authorised by AUDI AG. AUDI AG does not guarantee or accept any liability with respect to the correctness of information in this document. Copyright by AUDI AG.

Possible deviation from specification	Possible causes of fault	Fault elimination
• High and low pressure normal • Required cooling output is not attained in evaporator in air conditioning unit (and in evaporator for cooling high-voltage components)	♦ Activation or operation of air conditioner compressor not OK ♦ Depending on refrigerant circuit version, activation or operation of one of these shut-off valves (e.g. -N516- , -N517- , -N541- or -N542- , depending on vehicle) is not OK ⇒ Heating, air conditioning; Rep. gr. 87 ; Refrigerant circuit (vehicle-specific Workshop Manual). ♦ Too much refrigerant in circuit ♦ Expansion valve defective	– Check activation and operation of air conditioner compressor and, if fitted, these shut-off valves (e.g. -N516- , -N517- , -N541- and -N542-) ⇒ Vehicle diagnostic tester in “Guided Fault Finding” mode for air conditioner and battery regulation and ⇒ Heating, air conditioning; Rep. gr. 87 ; Refrigerant circuit (vehicle-specific Workshop Manual). – Discharge refrigerant circuit. – Clean refrigerant circuit (flush with refrigerant R134a ⇒ page 88 or blow out with compressed air and nitrogen ⇒ page 84).
• High and low pressure normal • Noise from air conditioner compressor (particularly after being switched on) • Required cooling output is not attained in evaporator in air conditioning unit (and/or in evaporator for cooling high-voltage components)		– Add correct quantity of refrigerant oil to circuit (refer to note). – Re-charge refrigerant circuit. – Repeat test if operation is not OK: – Renew expansion valve. – Re-charge refrigerant circuit. – Repeat test.

Protected by copyright. Copying for private or commercial purposes, in part or in whole, is not permitted unless authorised by AUDI AG. AUDI AG does not guarantee or accept any liability with respect to the correctness of information in this document. Copyright by AUDI AG.

Note

- *Overfilling with refrigerant oil may occur if, for example, the air conditioner compressor has been renewed without adjusting the quantity of refrigerant oil.*
- *If for example the expansion valve for the evaporator in the air conditioning unit is defective (permanently open), the evaporator temperature (in the air conditioning unit) is no longer regulated such that only refrigerant in gas form exits from the evaporator. Under certain usage conditions, liquid droplets may then be drawn in by the air conditioner compressor and result in noise (liquid cannot be compressed).*
- *If there is too much refrigerant oil in the circuit, discharge the air conditioner compressor and renew the receiver. After cleaning the refrigerant circuit (flushing with refrigerant R134a ⇒ page 88), add the correct amount of refrigerant oil to the circuit ⇒ page 317 .*

8.6.2 Specifications for pressures in refrigerant circuit on vehicles with heat pump

Note

- *On vehicles with high-voltage system and heat pump (e.g. Audi Q7 e-tron), non-return valves and electrically activated valves are installed in the refrigerant circuit which regulate the flow of refrigerant in the refrigerant circuit depending on the current operating mode. There are different versions of these valves ⇒ Heating, air conditioning; Rep. gr. 87 ; Refrigerant circuit (vehicle-specific Workshop Manual) and ⇒ Vehicle diagnostic tester in "Guided Fault Finding" mode.*
- *On vehicles with the "heat pump" and/or "high-voltage battery cooling" function, high pressure is not available at the service connection on the high-pressure side in all air conditioner operating modes. On these vehicles, the pressure in the refrigerant circuit on the high-pressure side can only be measured via the pressure/temperature senders installed in the refrigerant circuit (depending on the air conditioner operating mode) ⇒ Heating, air conditioning; Rep. gr. 87 ; Refrigerant circuit (vehicle-specific Workshop Manual) and ⇒ Vehicle diagnostic tester ("Guided Fault Finding").*
- *On these vehicles, the air conditioning system's refrigerant circuit is used not only to cool the passenger compartment but also to cool the hybrid battery unit - AX1- (via the high-voltage system's coolant circuit) and heat the passenger compartment via the heat pump function when ambient temperatures are low. To operate these functions, various valves, pressure/temperature senders and pumps in the refrigerant circuit and the high-voltage system's coolant circuit must be correctly installed and working properly ⇒ Heating, air conditioning; Rep. gr. 87 ; Refrigerant circuit (vehicle-specific Workshop Manual), ⇒ Vehicle diagnostic tester in "Guided Fault Finding" mode and ⇒ Engine, mechanics; Rep. gr. 19 ; Cooling system/coolant; Draining and filling cooling system .*
- *To locate the possible cause of a malfunction, various routines have been stored in the basic setting of -J1024- ; these routines activate the "Air conditioner cooling", "Heat pump" and "Cooling of high-voltage system components" functions ⇒ Vehicle diagnostic tester ("Guided Fault Finding").*

High-pressure side:

Increasing from initial pressure (when connecting pressure gauges) up to max. 20 bar

Note

Depending on the layout of the service connection (high-pressure side) and on the operating mode, it may only be possible to measure the high pressure via the pressure/temperature senders installed in the refrigerant circuit ⇒ Heating, air conditioning; Rep. gr. 87 ; Refrigerant circuit (vehicle-specific Workshop Manual).

Protected by copyright. Copying for private or commercial purposes, in part or in whole, is not permitted unless authorised by AUDI AG. AUDI AG does not guarantee or accept any liability with respect to the correctness of information in this document. Copyright by AUDI AG.

Low-pressure side:

Dropping from initial pressure (when connecting pressure gauges) to a value between 1.5 and 2.3 bar absolute (depending on cooling output required)

Air conditioner compressor speed:

Between 800 and 8600 rpm depending on cooling output required
(currently max. 5000 rpm with vehicle stationary)

Protected by copyright. Copying for private or commercial purposes, in part or in whole, is not permitted unless authorised by AUDI AG. AUDI AG does not guarantee or accept any liability with respect to the correctness of information in this document. Copyright by AUDI AG.

Note

- *The temperature of the air downstream of the evaporator, the current air conditioner compressor speed and the refrigerant pressure on the high-pressure side are displayed as measured values by various control units depending on the vehicle (e.g. by the thermal management control unit - J1024- , operating and display unit for front air conditioning system - E87- or Climatronic control unit - J255-) ⇒ Heating, air conditioning; Rep. gr. 87 ; Refrigerant circuit (vehicle-specific Workshop Manual), and ⇒ Vehicle diagnostic tester in "Guided Fault Finding" mode.*
- *If a very high cooling output is required (e.g. high ambient temperature and high fresh air blower speed), the air conditioner compressor cannot initially set the pressure on the low-pressure side to the necessary value (e.g. for a certain time after switching on the air conditioner). When the vehicle is stationary or only moving slowly (up to a speed of approx. 45 km/h), the air conditioner compressor is not activated at the maximum specified speed (of approx. 8500 rpm); the air conditioner compressor speed is limited to approx. 5000 rpm. Limitation of the maximum permissible air conditioner compressor speed is only cancelled at vehicle speeds above approx. 45 km/h. At an air conditioner compressor speed of 5000 rpm, with a high ambient temperature and a high fresh air blower speed (unfavourable ambient conditions), the output (delivery volume) of the air conditioner compressor is not initially sufficient to reduce the pressure on the low-pressure side to the specified value. One way of checking the control action of the air conditioner compressor under these conditions is to activate the fresh air blower with only approx. 40 % of the maximum voltage and to check the pressures at reduced fresh air blower speed ⇒ Vehicle diagnostic tester in "Guided Fault Finding" mode for air conditioner and battery regulation, and ⇒ Heating, air conditioning; Rep. gr. 00 ; Repair instructions; Checking cooling output (vehicle-specific Workshop Manual).*
- *Under unfavourable conditions (very high ambient temperatures, high humidity), the pressure on the high-pressure side may increase to max. 29 bar.*
- *The specified speed of the air conditioner compressor is displayed as a measured value e.g. by thermal management control unit - J1024- ⇒ Vehicle diagnostic tester in "Guided Fault Finding" mode.*
- *The pressure (low or high pressure) in the refrigerant circuit, as measured by the various pressure/temperature senders depending on the corresponding operating mode, is displayed as a measured value by the corresponding control unit ⇒ Vehicle diagnostic tester in "Guided Fault Finding" mode and ⇒ Heating, air conditioning; Rep. gr. 87 ; Refrigerant circuit (vehicle-specific Workshop Manual).*
- *Depending on the air conditioner compressor speed and the characteristic curve of the expansion valve (on the evaporator for the front heater and air conditioning unit), the low pressure settles within the air conditioner compressor output range in the tolerance band (1.5 to 2.3 bar).*
- *The specified air conditioner compressor speed must be higher than 1500 rpm for this test.*
- *In the "maximum cooling output" setting, the specified speed is regulated to approx. 4000 to 5000 rpm. This value is vehicle-specific and is displayed as a measured value by the corresponding control unit ⇒ Vehicle diagnostic tester in "Guided Fault Finding" mode.*

Protected by copyright. Copying for private or commercial purposes, in part or in whole, is not permitted unless authorised by AUDI AG. AUDI AG does not guarantee or accept any liability with respect to the correctness of information in this document. Copyright by AUDI AG.

- *On the absolute pressure scale, 0 bar corresponds to an absolute vacuum. Normal ambient pressure corresponds to an absolute pressure of 1 bar. On the scales of most pressure gauges, 0 bar corresponds to an absolute pressure of one bar (can be seen from -1 mark below 0).*
- *On vehicles with 2 evaporators (one in the heater and air conditioning unit and one for cooling the high-voltage components, e.g. the high-voltage battery heat exchanger) and 2 condensers (one on the front end for the air conditioner and one as a heat exchanger for the heat pump function): If the measured temperatures or pressures correspond to the specifications for one component but not for another component (depending on the selected function), check the activation of the electrically activated valves installed in the refrigerant circuit. Also observe the pressure distribution in the refrigerant circuit (depending on the non-return valves installed) ⇒ Vehicle diagnostic tester in "Guided Fault Finding" mode and ⇒ Heating, air conditioning; Rep. gr. 87 ; Refrigerant circuit (vehicle-specific Workshop Manual).*
- *For correct operation of the air conditioner, it is also necessary for sufficient heat to be supplied to or discharged from the corresponding heat exchangers (depending on the selected function). You should therefore also pay attention to the incorporation of the heat exchanger into the corresponding coolant circuits for the engine and for the high-voltage system, and to the operation of the pumps and valves installed in these ⇒ Vehicle diagnostic tester in "Guided Fault Finding" mode and ⇒ Heating, air conditioning; Rep. gr. 87 ; Refrigerant circuit (vehicle-specific Workshop Manual).*
- *As the output of the evaporator for cooling the high-voltage components (in the battery cooling module and in the high-voltage battery heat exchanger) is less than that of the evaporator in the heater and air conditioning unit, the required temperature may still be reached in the evaporator for cooling the high-voltage components when there is insufficient refrigerant in the circuit, but the required temperature will no longer be reached at the evaporator in the heater and air conditioning unit (although the air conditioner compressor is being activated at a higher speed).*

Protected by copyright. Copying for private or commercial purposes, in part or in whole, is not permitted unless authorised by AUDI AG. AUDI AG does not guarantee or accept any liability with respect to the correctness of information in this document. Copyright by AUDI AG.

Possible deviation from specification	Possible causes of fault	Fault elimination
• High pressure remains constant or only increases slightly (above pressure with engine stopped) • Low pressure drops quickly to specified value or below. • Required cooling output is not attained in evaporator in air conditioning unit and in evaporator for cooling high-voltage components.	♦ Not enough refrigerant in circuit	– Extract refrigerant from refrigerant circuit. • If quantity of refrigerant extracted is substantially less than specified capacity: – Locate leak with leak detector and repair it. – Re-charge refrigerant circuit. – Repeat test. • If amount of refrigerant extracted roughly corresponds to specified capacity: – Check activation and operation of air conditioner compressor and of valves installed in refrigerant circuit (see below).

Possible deviation from specification	Possible causes of fault	Fault elimination
	♦ Activation of air conditioner compressor not OK	– Check activation and operation of air conditioner compressor ⇒ Vehicle diagnostic tester in “Guided Fault Finding” mode
• High pressure normal • Low pressure corresponds to specified value • Required cooling output is not attained.	♦ One of the valves installed in the refrigerant circuit is defective or does not function properly ⇒ Heating, air conditioning; Rep. gr. 87 ; Refrigerant circuit (vehicle-specific Workshop Manual).	– Check operation and activation of the various valves installed in refrigerant circuit by observing pressure distribution in refrigerant circuit ⇒ Vehicle diagnostic tester in “Guided Fault Finding” mode and ⇒ Heating, air conditioning; Rep. gr. 87 ; Refrigerant circuit (vehicle-specific Workshop Manual).
	♦ Not enough refrigerant in circuit ♦ Shut-off valve upstream of expansion valve for evaporator in front heater and air conditioning unit defective ♦ Expansion valve for evaporator in front heater and air conditioning unit defective	– Discharge and refill refrigerant circuit (see above). – Repeat test. – Check shut-off valve ⇒ Heating, air conditioning; Rep. gr. 87 ; Refrigerant circuit (vehicle-specific Workshop Manual). – Renew expansion valve.

Protected by copyright. Copying for private or commercial purposes, in part or in whole, is not permitted unless authorised by AUDI AG. AUDI AG does not make any representation or warranty with respect to the correctness of information in this document. Copyright by AUDI AG.

Note

- *To locate the possible cause of a malfunction, various routines have been stored in the basic setting of the corresponding control unit (e.g. -J1024-); these routines activate the "Air conditioner cooling", "Heat pump" and "Cooling of high-voltage system components" functions ⇒ Vehicle diagnostic tester in "Guided Fault Finding" mode.*
- *If no fault is detected for this issue, first check the activation of the electrically activated valves installed in the refrigerant circuit. If no fault can be detected, remove and check the non-return valves installed in the refrigerant circuit; if it is still not possible to detect a fault, clean the refrigerant circuit (with refrigerant R134a); the issue may alternatively have been caused by a constriction or blockage in the refrigerant circuit ⇒ Heating, air conditioning; Rep. gr. 87 ; Refrigerant circuit (vehicle-specific Workshop Manual) and ⇒ page 88 .*
- *On vehicles with the "heat pump" and/or "high-voltage battery cooling" function, high pressure is not available at the service connection on the high-pressure side in all air conditioner operating modes. On these vehicles, the pressure in the refrigerant circuit on the high-pressure side can only be measured via the pressure/temperature senders installed in the refrigerant circuit (depending on the air conditioner operating mode) ⇒ Heating, air conditioning; Rep. gr. 87 ; Refrigerant circuit (vehicle-specific Workshop Manual) and ⇒ Vehicle diagnostic tester ("Guided Fault Finding").*
- *Before starting repair work, also check the measured values of the various pressure/temperature senders installed in the refrigerant circuit. An incorrect measured value from a pressure/temperature sender can also cause problems with the cooling output, or the evaporator in the front heater and air conditioning unit may ice up ⇒ Heating, air conditioning; Rep. gr. 87 ; Refrigerant circuit (vehicle-specific Workshop Manual), ⇒ Vehicle diagnostic tester in "Guided Fault Finding" mode and ⇒ Current flow diagrams, Electrical fault finding and Fitting locations.*
- *When checking the various functions (heat pump or high-voltage battery cooling), also observe the activation and operation of the coolant circuit components associated with these functions ⇒ Heating, air conditioning; Rep. gr. 87 ; Coolant circuit (vehicle-specific Workshop Manual).*
- *If the test is repeated and operation of the air conditioner is not OK, e.g. after renewing the expansion valve (re-fit old expansion valve), clean the refrigerant circuit (flush with refrigerant R134a ⇒ page 88). Then renew the air conditioner compressor and receiver/desiccant cartridge.*
- *If a temperature sensor is faulty, the evaporator may ice up although the quantity of refrigerant in the circuit is OK.*
- *If the expansion valve at the evaporator in the heater and air conditioning unit is defective (is permanently closed or does not open far enough), the air conditioner compressor is activated to maximum output and the low pressure drops to the value in the graph or below (air conditioner compressor draws off refrigerant from low-pressure side). However, as refrigerant cannot flow via the expansion valve, the cooling output is not attained and the high pressure may also not increase or only increase slightly since there is no energy exchange ⇒ Vehicle diagnostic tester in "Guided Fault Finding" mode and ⇒ Heating, air conditioning; Rep. gr. 00 ; Repair instructions; Checking cooling output (vehicle-specific Workshop Manual).*

Protected by copyright. Copying for private or commercial purposes, in part or in whole, is not permitted unless authorised by AUDI AG. AUDI AG does not guarantee or accept any liability with respect to the correctness of information in this document. Copyright by AUDI AG.

- *The evaporator in the heater and air conditioning unit has a higher output than the evaporator for cooling the high-voltage components. Depending on the version, the expansion valve upstream of this evaporator (the heat exchanger for cooling the high-voltage system components) is currently activated by the corresponding control unit in order to cool the drive battery - A2- / hybrid battery unit - AX1- (hybrid battery) only above/ below a certain battery temperature, which means that energy exchange via this evaporator does not rise or only rises slightly ⇒ Vehicle diagnostic tester in "Guided Fault Finding" mode and ⇒ Heating, air conditioning; Rep. gr. 00 ; Repair instructions; Checking cooling output (vehicle-specific Workshop Manual).*
- *If there is too much refrigerant oil in the circuit, also discharge (flush) the air conditioner compressor and renew the receiver/ desiccant cartridge. After cleaning the refrigerant circuit (flushing with refrigerant R134a ⇒ page 88), add the correct amount of refrigerant oil to the circuit (to the air conditioner compressor) ⇒ page 317 .*

Possible deviation from specification	Possible causes of fault	Fault elimination
• High pressure normal • Low pressure normal or too low (below specified value) • The required cooling output is not attained solely at the evaporator in the air conditioning unit (the cooling output is OK at the evaporator for cooling the high-voltage components).	♦ Not enough refrigerant in circuit	– Extract refrigerant from refrigerant circuit. • If the amount of refrigerant extracted is significantly less than the specified capacity: – Locate leak with leak detector and repair it. – Re-charge refrigerant circuit. – Repeat test. • If amount of refrigerant extracted roughly corresponds to specified capacity: – Check activation and operation of air conditioner compressor and of valves installed in refrigerant circuit (see below).
	♦ Activation of air conditioner compressor faulty ⇒ Vehicle diagnostic tester in "Guided Fault Finding" mode ♦ Expansion valve for evaporator in front heater and air conditioning unit defective	– Check activation and operation of air conditioner compressor ⇒ Vehicle diagnostic tester in "Guided Fault Finding" mode
	♦ One of the valves installed in the refrigerant circuit is defective or does not function properly ⇒ Heating, air conditioning; Rep. gr. 87 ; Refrigerant circuit (vehicle-specific Workshop Manual).	– Check operation and activation of the various valves installed in refrigerant circuit by observing pressure distribution in refrigerant circuit ⇒ Vehicle diagnostic tester in "Guided Fault Finding" mode and ⇒ Heating, air conditioning; Rep. gr. 87 ; Refrigerant circuit (vehicle-specific Workshop Manual).

Protected by copyright. Copying for private or commercial purposes, in part or in whole, is not permitted unless authorised by AUDI AG. AUDI AG does not guarantee or accept any liability with respect to the correctness of information in this document. Copyright by AUDI AG.

Possible deviation from specification	Possible causes of fault	Fault elimination
	◆ Shut-off valve upstream of expansion valve for evaporator in front heater and air conditioning unit defective ◆ Expansion valve for evaporator in front heater and air conditioning unit defective	– Check shut-off valve ⇒ Heating, air conditioning; Rep. gr. 87 ; Refrigerant circuit (vehicle-specific Workshop Manual). – Renew expansion valve – Re-charge refrigerant circuit. – Repeat test.

Note

Observe notes ⇒ page 245 .

Possible deviation from specification	Possible causes of fault	Fault elimination
• High pressure normal • Low pressure normal or too low (below specified value) • The required cooling output is not attained solely at the evaporator for cooling the high-voltage components (the cooling output is OK at the evaporator in the front heater and air conditioning unit).	◆ One of the valves installed in the refrigerant circuit is defective or does not function properly ⇒ Heating, air conditioning; Rep. gr. 87 ; Refrigerant circuit (vehicle-specific Workshop Manual). ◆ One of the pumps or valves in the high-voltage system's coolant circuit is defective or does not function properly ⇒ Heating, air conditioning; Rep. gr. 87 ; Coolant circuit (vehicle-specific Workshop Manual).	– Check operation and activation of the various valves installed in refrigerant circuit by observing pressure distribution in refrigerant circuit ⇒ Vehicle diagnostic tester in “Guided Fault Finding” mode and ⇒ Heating, air conditioning; Rep. gr. 87 ; Refrigerant circuit (vehicle-specific Workshop Manual). – Check operation and activation of components for cooling high-voltage components ⇒ Vehicle diagnostic tester (“Guided Fault Finding”).
	◆ Constriction or blockage in refrigerant line to or from expansion valve at evaporator for cooling high-voltage components ◆ Expansion valve for evaporator for cooling high-voltage components defective	– Extract refrigerant from refrigerant circuit. – Check refrigerant line to expansion valve and clean or renew if necessary. – Re-charge refrigerant circuit. – Repeat test.

Note

Protected by copyright. Copying for private or commercial purposes, in part or in whole, is not permitted unless authorised by AUDI AG. AUDI AG does not guarantee or accept any liability with respect to the correctness of information in this document. Copyright by AUDI AG.

Observe notes ⇒ page 245 .

Possible deviation from specification	Possible causes of fault	Fault elimination
• High pressure does not rise or only rises slightly above the pressure with the engine stopped. • Low pressure does not drop or only drops slightly. • Required cooling output is not attained in evaporator in air conditioning unit (and in evaporator for cooling high-voltage components)	♦ Air conditioner compressor is not activated or driven. ♦ One of the valves installed in the refrigerant circuit is defective or does not function properly ⇒ Heating, air conditioning; Rep. gr. 87 ; Refrigerant circuit (vehicle-specific Workshop Manual).	– Check activation and operation of air conditioner compressor and perform servicing ⇒ Vehicle diagnostic tester in “Guided Fault Finding” mode. – Check operation and activation of the various valves installed in refrigerant circuit by observing pressure distribution in refrigerant circuit ⇒ Vehicle diagnostic tester in “Guided Fault Finding” mode and ⇒ Heating, air conditioning; Rep. gr. 87 ; Refrigerant circuit (vehicle-specific Workshop Manual).
	♦ Constriction or blockage in refrigerant circuit (e.g. in refrigerant line between service connection on low-pressure side and air conditioner compressor).	– Clean refrigerant circuit (flush with refrigerant R134a) ⇒ page 88 . – Renew hose or pipe if kinked or constricted.
	♦ Air conditioner compressor defective	– Renew air conditioner compressor.

Protected by copyright. Copying for private or commercial purposes, in part or in whole, is not permitted unless authorised by AUDI AG. AUDI AG does not guarantee or accept any liability with respect to the correctness of information in this document. Copyright by AUDI AG.

Note

Observe notes ⇒ page 245 .

Possible deviation from specification	Possible causes of fault	Fault elimination
• High pressure increases above specification • Low pressure drops quickly to specified value • Required cooling output is not attained in evaporator in front heater and air conditioning unit (and/or in evaporator for cooling high-voltage components)	♦ Activation or operation of air conditioner compressor not OK ♦ One of the valves installed in the refrigerant circuit is defective or does not function properly ⇒ Heating, air conditioning; Rep. gr. 87 ; Refrigerant circuit (vehicle-specific Workshop Manual). ♦ Constriction or blockage in refrigerant circuit ♦ Expansion valve defective	– Check activation and operation of air conditioner compressor and perform servicing ⇒ Vehicle diagnostic tester in “Guided Fault Finding” mode. – Check operation and activation of the various valves installed in refrigerant circuit by observing pressure distribution in refrigerant circuit ⇒ Vehicle diagnostic tester in “Guided Fault Finding” mode and ⇒ Heating, air conditioning; Rep. gr. 87 ; Refrigerant circuit (vehicle-specific Workshop Manual). – Run hand over refrigerant circuit to check for differences in temperature. • If there is a difference in temperature at one component: – Renew hose or pipe if kinked or constricted. – In the event of a blockage, clean refrigerant circuit (flush with refrigerant R134a ⇒ page 88). – Re-charge refrigerant circuit. – Repeat test.

Protected by copyright. Copying for private or commercial purposes, in part or in whole, is not permitted unless authorised by AUDI AG. AUDI AG does not guarantee or accept any liability with respect to the correctness of information in this document. Copyright by AUDI AG.

Note

- *In this case, the evaporator may ice up although the amount of refrigerant in the refrigerant circuit is OK.*
- *If the expansion valve at the evaporator in the heater and air conditioning unit or the shut-off valve installed upstream is defective (is permanently closed or does not open sufficiently), the air conditioner compressor is activated to maximum output and the low pressure drops to the specified value or below (air conditioner compressor draws off refrigerant from low-pressure side). However, as no refrigerant (or an insufficient amount) can flow via the expansion valve, the cooling output is not attained and the high pressure may also not increase or only increase slightly since there is no energy exchange ⇒ Vehicle diagnostic tester in "Guided Fault Finding" mode and ⇒ Heating, air conditioning; Rep. gr. 00 ; Repair instructions; Checking cooling output (vehicle-specific Workshop Manual).*
- *If the expansion valve upstream of the evaporator for cooling the high-voltage components is defective (or its operation or activation is faulty), permanently closed or does not open sufficiently, the air conditioner compressor is also activated to maximum output (the required temperatures in the heat exchanger are not reached). The pressure on the low-pressure side then only drops to or below the specified value if no cooling output is requested in the front heater and air conditioning unit at the same time. The air conditioner compressor draws off the refrigerant from the low-pressure side of both evaporators. However, as no refrigerant can flow via the expansion valve in the front heater and air conditioning unit, and the cooling output is not reached in the evaporator for cooling the high-voltage components (there is a fault in the area of the evaporator for cooling the high-voltage components), the electric air conditioner compressor is activated at a higher speed. However, as no more refrigerant can flow, the pressure on the low-pressure side drops below the specified value and the high pressure may also not increase or only increase slightly since there is no energy exchange. The same applies if a valve in the refrigerant circuit is not OK, if there is a fault in the incorporation of the evaporator for cooling the high-voltage components in the high-voltage system's coolant circuit, or if a pump installed there or a valve is not OK. Although the high-voltage battery heat exchanger is cooled, the coolant does not reach the high-voltage components which need to be cooled ⇒ Vehicle diagnostic tester in "Guided Fault Finding" mode and ⇒ Heating, air conditioning; Rep. gr. 87 ; Coolant circuit (vehicle-specific Workshop Manual).*
- *Further notes* ⇒ page 245

Protected by copyright. Copying for private or commercial purposes, in part or in whole, is not permitted unless authorised by AUDI AG. AUDI AG does not guarantee or accept any liability with respect to the correctness of information in this document. Copyright by AUDI AG.

Possible deviation from specification	Possible causes of fault	Fault elimination
• High and low pressure normal at first, but after a while: • High pressure rises above specified value • Low pressure drops to specified value or below • Required cooling output is not attained in evaporator in air conditioning unit (and/or in evaporator for cooling high-voltage components) Or • High and low pressure normal at first • After driving for a while, low pressure drops below specified value (evaporator in air conditioning unit ices up)	♦ Activation of air conditioner compressor faulty ⇒ Vehicle diagnostic tester in “Guided Fault Finding” mode ♦ One of the valves installed in the refrigerant circuit is defective or does not function properly ⇒ Heating, air conditioning; Rep. gr. 87 ; Refrigerant circuit (vehicle-specific Workshop Manual). ♦ Moisture in refrigerant circuit	– Check activation and operation of air conditioner compressor and perform servicing ⇒ Vehicle diagnostic tester in “Guided Fault Finding” mode. – Check operation and activation of the various valves installed in refrigerant circuit by observing pressure distribution in refrigerant circuit ⇒ Vehicle diagnostic tester in “Guided Fault Finding” mode and ⇒ Heating, air conditioning; Rep. gr. 87 ; Refrigerant circuit (vehicle-specific Workshop Manual). – Clean refrigerant circuit (flush with refrigerant R134a ⇒ page 88). – Renew receiver with dryer. – Evacuate refrigerant circuit for at least 3 hours. – Re-charge refrigerant circuit. – Repeat test.

Protected by copyright. Copying for private or commercial purposes, in part or in whole, is not permitted unless authorised by AUDI AG. AUDI AG does not guarantee or accept any liability with respect to the correctness of information in this document. Copyright by AUDI AG.

Note

- *It is not necessary at first to clean the refrigerant circuit (to flush it with refrigerant R134a ⇒ page 88) when this issue occurs as there is usually only a small quantity of moisture in the system which can be removed by lengthy evacuation.*
- *If an issue involving moisture in the refrigerant circuit only occurs after a lengthy operating period or only infrequently (low pressure drops below specified value and evaporator ices up), it is sufficient to renew the dryer in the receiver (adjust quantity of refrigerant oil). Subsequently, evacuate refrigerant circuit for at least 3 hours.*
- *In this case, the evaporator may ice up although the amount of refrigerant in the refrigerant circuit is OK.*
- *A faulty evaporator output temperature sender - G263- or pressure/temperature sender can also cause the refrigerant circuit to ice up. If this issue occurs, you should therefore also check the measured valves of the various pressure/temperature senders in the refrigerant circuit ⇒ Vehicle diagnostic tester in “Guided Fault Finding” mode and ⇒ Heating, air conditioning; Rep. gr. 00 ; Repair instructions; Checking cooling output (vehicle-specific Workshop Manual).*
- *Further notes ⇒ page 245*

Possible deviation from specification	Possible causes of fault	Fault elimination
• High pressure normal • Low pressure too low • Required cooling output is not attained in evaporator in air conditioning unit (and/or in evaporator for cooling high-voltage components)	♦ Activation of air conditioner compressor faulty ⇒ Vehicle diagnostic tester in “Guided Fault Finding” mode ♦ One of the valves installed in the refrigerant circuit is defective or does not function properly ⇒ Heating, air conditioning; Rep. gr. 87 ; Refrigerant circuit (vehicle-specific Workshop Manual). ♦ One of the pressure/temperature senders in the refrigerant circuit is supplying incorrect values	– Check activation and operation of air conditioner compressor and perform servicing ⇒ Vehicle diagnostic tester in “Guided Fault Finding” mode. – Check operation and activation of the various valves installed in refrigerant circuit by observing pressure distribution in refrigerant circuit ⇒ Vehicle diagnostic tester in “Guided Fault Finding” mode and ⇒ Heating, air conditioning; Rep. gr. 87 ; Refrigerant circuit (vehicle-specific Workshop Manual). – Clean refrigerant circuit (flush with refrigerant R134a ⇒ page 88).
	♦ Shut-off valve upstream of expansion valve for evaporator in front heater and air conditioning unit defective ♦ Expansion valve for evaporator in front heater and air conditioning unit defective	– Clean refrigerant circuit (flush with refrigerant R134a ⇒ page 88). Not always necessary; refer to notes. – Renew expansion valve for evaporator in front heater and air conditioning unit and for receiver/dryer. – Re-charge refrigerant circuit. – Repeat test if operation is not OK: – Renew air conditioner compressor. – Re-charge refrigerant circuit. – Repeat test.

Protected by copyright. Copying for private or commercial purposes, in part or in whole, is not permitted unless authorised by AUDI AG. AUDI AG does not guarantee or accept any liability with respect to the correctness of information in this document. Copyright by AUDI AG.

Note

- *If the fault "High pressure normal, low pressure too low" occurs, please note that the evaporator in the air conditioning unit may ice up although the amount of refrigerant in the circuit is OK.*
- *If the fault is caused by the air conditioner compressor (the air conditioner compressor is activated at excessively high speed by the control unit for air conditioning compressor - J842-), it is not necessary to clean the refrigerant circuit (to flush it with refrigerant R134a ⇒ page 88). In this case it is sufficient to renew the air conditioner compressor (observe quantity of refrigerant oil in compressor and adjust if necessary).*
- *If the expansion valve upstream of the evaporator for cooling the high-voltage components is defective (or its operation or activation is faulty), permanently closed or does not open sufficiently, the air conditioner compressor is also activated to maximum output (the required temperatures in the heat exchanger are not reached). The pressure on the low-pressure side then only drops to or below the specified value if no cooling output is requested in the front heater and air conditioning unit at the same time. The air conditioner compressor draws off the refrigerant from the low-pressure side of both evaporators. However, as no refrigerant can flow via the expansion valve in the front heater and air conditioning unit, and the cooling output is not reached in the evaporator for cooling the high-voltage components (there is a fault in the area of the evaporator for cooling the high-voltage components), the electric air conditioner compressor is activated at a higher speed. However, as no more refrigerant can flow, the pressure on the low-pressure side drops below the specified value and the high pressure may also not increase or only increase slightly since there is no energy exchange. The same applies if a valve in the refrigerant circuit is not OK, if there is a fault in the incorporation of the evaporator for cooling the high-voltage components in the high-voltage system's coolant circuit, or if a pump installed there or a valve is not OK. Although the high-voltage battery heat exchanger is cooled, the coolant does not reach the high-voltage components which need to be cooled ⇒ Vehicle diagnostic tester in "Guided Fault Finding" mode and ⇒ Heating, air conditioning; Rep. gr. 87 ; Coolant circuit (vehicle-specific Workshop Manual).*
- *A faulty evaporator output temperature sender - G263- or pressure/temperature sender can also cause this issue. You should therefore also check the measured valves of the various pressure/temperature senders in the refrigerant circuit ⇒ Vehicle diagnostic tester in "Guided Fault Finding" mode and ⇒ Heating, air conditioning; Rep. gr. 00 ; Repair instructions; Checking cooling output (vehicle-specific Workshop Manual).*
- *Further notes ⇒ page 245*

Protected by copyright. Copying for private or commercial purposes, in part or in whole, is not permitted unless authorised by AUDI AG. AUDI AG does not guarantee or accept any liability with respect to the correctness of information in this document. Copyright by AUDI AG.

Possible deviation from specification	Possible causes of fault	Fault elimination
• High pressure normal or too high • Low pressure too high • Noise from air conditioner compressor (particularly after being switched on) • Required cooling output is not attained in evaporator in front heater and air conditioning unit and/or in evaporator for cooling high-voltage components	♦ Activation of air conditioner compressor faulty ⇒ Vehicle diagnostic tester in “Guided Fault Finding” mode ♦ One of the valves installed in the refrigerant circuit is defective or does not function properly ⇒ Heating, air conditioning; Rep. gr. 87 ; Refrigerant circuit (vehicle-specific Workshop Manual). ♦ One of the pressure/temperature senders in the refrigerant circuit is supplying incorrect values	– Check activation and operation of air conditioner compressor and perform servicing ⇒ Vehicle diagnostic tester in “Guided Fault Finding” mode. – Check operation and activation of the various valves and pressure/temperature senders installed in refrigerant circuit by observing pressure distribution in refrigerant circuit ⇒ Vehicle diagnostic tester in “Guided Fault Finding” mode and ⇒ Heating, air conditioning; Rep. gr. 87 ; Refrigerant circuit (vehicle-specific Workshop Manual).
	♦ Too much refrigerant in circuit	– Extract refrigerant from refrigerant circuit. • If quantity of refrigerant extracted is significantly greater than specified capacity: – Re-charge refrigerant circuit. – Repeat test. • The quantity of refrigerant extracted corresponds roughly to the actual capacity. – Check activation and operation of air conditioner compressor and of valves installed in refrigerant circuit (see below).
	♦ Shut-off valve upstream of expansion valve for evaporator in front heater and air conditioning unit defective ♦ Expansion valve for evaporator in front heater and air conditioning unit defective ♦ Air conditioner compressor defective	– Check shut-off valve ⇒ Heating, air conditioning; Rep. gr. 87 ; Refrigerant circuit (vehicle-specific Workshop Manual). – Renew expansion valve for evaporator in front heater and air conditioning unit and for receiver/dryer. – Re-charge refrigerant circuit. – Repeat test if operation is not OK. – Renew air conditioner compressor.

Protected by copyright. Copying for private or commercial purposes, in part or in whole, is not permitted unless authorised by AUDI AG. AUDI AG does not guarantee or accept any liability with respect to the correctness of information in this document. Copyright by AUDI AG.

Note

- *This fault may also be caused by too much refrigerant oil in the circuit. Overfilling with refrigerant oil may occur if, for example, the air conditioner compressor has been renewed without adjusting the quantity of refrigerant oil.*
- *Further notes ⇒ page 245*

Protected by copyright. Copying for private or commercial purposes, in part or in whole, is not permitted unless authorised by AUDI AG. AUDI AG does not guarantee or accept any liability with respect to the correctness of information in this document. Copyright by AUDI AG.

Possible deviation from specification	Possible causes of fault	Fault elimination
• High and low pressure normal • Required cooling output is not attained in evaporator in air conditioning unit (and in evaporator for cooling high-voltage components) Or • High and low pressure normal • Noise from air conditioner compressor (particularly after being switched on) • Required cooling output is not attained in evaporator in air conditioning unit (and/or in evaporator for cooling high-voltage components)	♦ Activation of air conditioner compressor faulty ⇒ Vehicle diagnostic tester in “Guided Fault Finding” mode ♦ One of the valves installed in the refrigerant circuit is defective or does not function properly ⇒ Heating, air conditioning; Rep. gr. 87 ; Refrigerant circuit (vehicle-specific Workshop Manual). ♦ One of the pressure/temperature senders in the refrigerant circuit is supplying incorrect values	– Check activation and operation of air conditioner compressor and perform servicing ⇒ Vehicle diagnostic tester in “Guided Fault Finding” mode. – Check operation and activation of the various valves and pressure/temperature senders installed in refrigerant circuit by observing pressure distribution in refrigerant circuit ⇒ Vehicle diagnostic tester in “Guided Fault Finding” mode and ⇒ Heating, air conditioning; Rep. gr. 87 ; Refrigerant circuit (vehicle-specific Workshop Manual).
	♦ Too much refrigerant in circuit ♦ Expansion valve for evaporator in front heater and air conditioning unit defective ♦ Too much refrigerant oil in circuit	– Discharge refrigerant circuit. – Clean refrigerant circuit (flush with refrigerant R134a ⇒ page 88). – Add correct quantity of refrigerant oil to circuit (refer to note). – Re-charge refrigerant circuit. – Repeat test.

Note

- *Overfilling with refrigerant oil may occur if, for example, the air conditioner compressor has been renewed without adjusting the quantity of refrigerant oil.*
- *If, for example, the expansion valve for the evaporator in the air conditioning unit or for the evaporator for cooling the high-voltage components is defective (permanently open), the evaporator temperature (in the front heater and air conditioning unit or in the evaporator for cooling the high-voltage components) is no longer regulated such that the refrigerant emerging from the evaporator outlet is in gaseous form only. Under certain usage conditions, liquid droplets may then be drawn in by the air conditioner compressor and result in noise (liquid cannot be compressed).*
- *If there is too much refrigerant oil in the circuit, discharge the air conditioner compressor and renew the receiver. After cleaning the refrigerant circuit (flushing with refrigerant R134a ⇒ page 88), add the correct amount of refrigerant oil to the circuit ⇒ page 317 .*
- *Further notes ⇒ page 245*

Possible deviation from specification	Possible causes of fault	Fault elimination
• High and low pressure normal • Required cooling output is not attained in evaporator at front heater and air conditioning unit (and at evaporator for cooling high-voltage components) • Required cooling output is not attained at evaporator for heat pump operation	♦ Activation of air conditioner compressor faulty ⇒ Vehicle diagnostic tester in “Guided Fault Finding” mode ♦ One of the valves installed in the refrigerant circuit is defective or does not function properly ⇒ Heating, air conditioning; Rep. gr. 87 ; Refrigerant circuit (vehicle-specific Workshop Manual). ♦ One of the pressure/temperature senders in the refrigerant circuit is supplying incorrect values	– Check activation and operation of air conditioner compressor and perform servicing ⇒ Vehicle diagnostic tester in “Guided Fault Finding” mode. – Check operation and activation of the various valves and pressure/temperature senders installed in refrigerant circuit by observing pressure distribution in refrigerant circuit ⇒ Vehicle diagnostic tester in “Guided Fault Finding” mode and ⇒ Heating, air conditioning; Rep. gr. 87 ; Refrigerant circuit (vehicle-specific Workshop Manual).
	One of the pumps or valves in the high-voltage system's coolant circuit or the engine coolant circuit is defective or does not function properly ⇒ Heating, air conditioning; Rep. gr. 87 ; Coolant circuit (vehicle-specific Workshop Manual).	– Check operation and activation of components for cooling high-voltage components ⇒ Vehicle diagnostic tester in “Guided Fault Finding” mode for air conditioner, air conditioner compressor and battery regulation. – Check incorporation of heat exchanger into engine coolant circuit and function and activation of the various pumps and valves ⇒ Heating, air conditioning; Rep. gr. 87 ; Coolant circuit .

Protected by copyright. Copying for private or commercial purposes, in part or in whole, is not permitted unless authorised by AUDI AG. AUDI AG does not guarantee or accept any liability with respect to the correctness of information in this document. Copyright by AUDI AG.

Note

- *If the required cooling output of the evaporator in the front heater and air conditioning unit (and the evaporator for cooling the high-voltage components) is OK and there is a problem due to a lack of heating output at the heat exchanger for heat pump operation. The cause may lie in the coolant circuit of the high-voltage system or the engine coolant circuit. If the pumps and valves in the high-voltage system's coolant circuit are not activated correctly or if their operation is not OK, not enough heat energy can be absorbed from the coolant via the evaporator (heat exchanger) for the high-voltage system components. If the pumps and valves in the engine coolant circuit are not activated correctly or if their operation is not OK, the absorbed heat energy cannot be transferred via the heat exchanger for heat pump function to the coolant flowing to the heat exchanger in the heater and air conditioning unit ⇒ Vehicle diagnostic tester in "Guided Fault Finding" mode and ⇒ Heating, air conditioning; Rep. gr. 87 ; Coolant circuit (vehicle-specific Workshop Manual).*
- *Further notes* ⇒ page 245

Protected by copyright. Copying or distribution to third parties, in part or in whole, is not permitted unless authorized by AUDI AG. AUDI AG does not make any or accept any liability with respect to the correctness of information in this document. Copyright by AUDI AG.

9 Renewing components of refrigerant circuit

⇒ “9.1 Renewing components”, page 258

9.1 Renewing components

WARNING

Risk of injury (frostbite).

Refrigerant may escape if the refrigerant circuit has not been discharged.

Extract refrigerant before opening refrigerant circuit. Renewed evaporation may create pressure in refrigerant circuit if refrigerant circuit is not opened within 10 minutes following extraction. Extract refrigerant again.

- All components of the refrigerant circuit submitted for quality analysis must always be sealed (use original sealing caps of replacement part).
- To date, the replacement parts "air conditioner compressor, reservoir, receiver, evaporator and condenser" have been filled with nitrogen gas. This filling is being gradually discontinued/the pressure of the nitrogen filling is now so low that it is no longer possible to perceive gas escaping upon initial opening.
- On vehicles fitted with an air conditioner compressor without a magnetic clutch, the engine should only be started following the complete assembly of the refrigerant circuit (with compressor always in operation).
- When the refrigerant circuit is empty, the air conditioner compressor with air conditioner compressor regulating valve -N280- (no magnetic clutch) is switched to internal lubrication with the result that only a minimal amount of oil is pumped from the air conditioner compressor into the circuit.

Protected by copyright. Copying for private or commercial purposes, in part or in whole, is not permitted unless authorised by AUDI AG. AUDI AG does not guarantee or accept any liability with respect to the correctness of information in this document. Copyright by AUDI AG.

Note

- *As parts are sometimes stored for lengthy periods and at different locations within the spare parts organisation, it is entirely possible that gas will escape from some parts and not from others on initial opening (even in the case of identical spare part numbers). Sealing caps at replacement part connections must therefore be detached carefully and the nitrogen gas allowed to escape slowly.*
- *Refrigerant circuits are fitted either with a restrictor and reservoir or with an expansion valve and receiver.*
- *Always renew desiccant cartridge or components with desiccant bag (reservoir, receiver) after cleaning refrigerant circuit (flushing with refrigerant R134a ⇒ page 88 or blowing out with compressed air and nitrogen ⇒ page 84); when doing so, leave sealed as long as possible to minimise the absorption of moisture.*
- *Renew desiccant cartridge or components with desiccant bag (reservoir, receiver) if required for certain repair operations or if the refrigerant circuit has been open for a relatively long period and moisture has entered (e.g. following an accident) ⇒ page 260 .*
- *The period of time for which a refrigerant circuit may be left open without having to renew a component with desiccant bag (reservoir, receiver) depends strongly on ambient influences. At high ambient temperatures and high humidity levels, or if the vehicle has been standing e.g. in the open or driven (in wet, foggy weather conditions), this period of time will be considerably shorter than for a vehicle which has been standing in a heated, dry area. The size of the opening through which moisture may enter into the circuit also influences the period for which a refrigerant circuit can be left open without having to renew components with desiccant bag ⇒ page 260 .*
- *Seal open connections and lines (to prevent absorption of moisture).*
- *Always renew restrictor.*

Protected by copyright. Copying for private or commercial purposes, in part or in whole, is not permitted unless authorised by AUDI AG. AUDI AG does not guarantee or accept any liability with respect to the correctness of information in this document. Copyright by AUDI AG.

Caution

- ***Contaminated refrigerant oils must be disposed of as used oils of unknown origin (observe local regulations) ⇒ Audi ServiceNet, HSO Environmental Protection .***

⇒ “9.1.1 Leaking or damaged components (except air conditioner compressor, reservoir or receiver)”, page 260

⇒ “9.1.2 Leaking or damaged components (except air conditioner compressor, reservoir or receiver)”, page 262

⇒ “9.1.3 Renewing air conditioner compressor without having to clean refrigerant circuit”, page 262

⇒ “9.1.4 Renewing air conditioner compressor due to leakage or internal damage”, page 265

⇒ “9.1.5 Renewing receiver or reservoir and restrictor after cleaning refrigerant circuit”, page 266

⇒ “9.1.6 Renewing receiver or reservoir without having to clean refrigerant circuit”, page 268

⇒ “9.1.7 Renewing desiccant cartridge/desiccant bag without having to clean refrigerant circuit”, page 269

⇒ “9.1.8 Removing/installing and renewing air conditioner compressor regulating valve N280 ”, page 269

Protected by copyright. Copying for private or commercial purposes, in part or in whole, is not permitted unless authorised by AUDI AG. AUDI AG does not guarantee or accept any liability with respect to the correctness of information in this document. Copyright by AUDI AG.

9.1.1 Leaking or damaged components (except air conditioner compressor, reservoir or receiver)

Refrigerant circuit completely empty (e.g. in the event of major leakage or a burst hose)

Note

- *In the event of only a minor leak with slow escape of refrigerant (e.g. at a small leakage point), the amount of refrigerant oil lost and the amount of moisture ingressing is not sufficient to influence operation of the air conditioner.*
- *The work marked * must only be performed if there is a major leak (e.g. following an accident).*

Electrically driven air conditioner compressor

– Remove faulty component ⇒ Heating, air conditioning; Rep. gr. 87 ; Refrigerant circuit (vehicle-specific Workshop Manual).

– Remove and flush the electrically driven air conditioner compressor ⇒ page 106 *.

– Clean the refrigerant circuit (flush with refrigerant R134a) ⇒ page 88 *.

– Pour the full specified quantity of refrigerant oil into the air conditioner compressor or circuit *.

Mechanically driven air conditioner compressor

– Remove faulty component ⇒ Heating, air conditioning; Rep. gr. 87 ; Refrigerant circuit (vehicle-specific Workshop Manual).

– Removing the air conditioner compressor ⇒ Heating, air conditioning; Rep. gr. 87 ; Air conditioner compressor (vehicle-specific Workshop Manual)*.

– Remove oil drain plug -B-/-D- from air conditioner compressor -A-.*

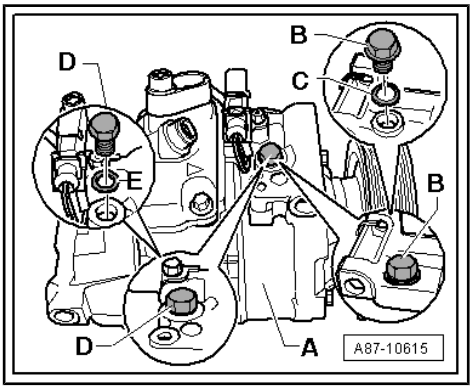

Note

- *The design of the oil drain plug -B- / -D- and the seal -C- / -E- varies (depending on the air conditioner compressor manufacturer).*
- *Observe the correct tightening torque when fitting the oil drain plug -B- / -D- (depends on the air conditioner compressor manufacturer and the design of the oil drain plug). For example, on air conditioner compressors manufactured by Denso or Delphi, a seal is fitted at the oil drain plug (tightening torque: currently 30 Nm for Denso, and 15 Nm for Delphi). On air conditioner compressors manufactured by Sanden or Zexel/Valeo, an O-ring or a seal is fitted at the oil drain plug depending on the version (tightening torque: currently 10 Nm for O-ring and seal).*
- *On Denso/Nippondenso or Delphi air conditioner compressors, for example, a seal -E- is fitted at the oil drain plug -D-; renewing seal ⇒ Electronic parts catalogue .*
- *On air conditioner compressors manufactured by Sanden or Zexel/Valeo, an O-ring or a seal -C- is fitted at the oil drain plug -B-, depending on the version; renewing O-ring/seal ⇒ Electronic parts catalogue .*

Protected by copyright. Copying for private or commercial purposes, in part or in whole, is not permitted unless authorized by AUDI AG. AUDI AG does not guarantee or accept any liability with respect to the correctness of information in this document. Copyright by AUDI AG.

- *If the seal/O-ring fitted at the oil drain plug cannot be supplied as a replacement part, the removed component can be re-installed as an exception; it must be checked for damage before being re-installed. If the removed seal/O-ring is damaged or deformed, it must be replaced by a commercially available component.*
- *To accelerate discharging of refrigerant oil, rotate air conditioner compressor e.g. via clutch plate of magnetic clutch.*
- *After charging the refrigerant circuit, check the installed oil drain plug for leaks, e.g. with an electronic leak detector.*
- *Pour the old refrigerant oil out of the air conditioner compressor (disposal ⇒ Audi ServiceNet, HSO Environmental Protection).*

All vehicles:

Note

- *Then fill the air conditioner compressor with the quantity of fresh refrigerant oil corresponding to the quantity of refrigerant oil in the replacement compressor ⇒ page 317 *.*
- *Use different refrigerant oils and quantities for the various air conditioner compressors ⇒ page 317 .*
- *To ensure air conditioner compressor lubrication on start-up, at least 40 cm^3 of refrigerant oil must be poured into the air conditioner compressor. The remainder can be added for example to the new reservoir or receiver ⇒ page 317 .*
- *If dirt has entered into the air conditioner compressor with the refrigerant circuit open (e.g. after an accident), renew the air conditioner compressor.*
- *Clean refrigerant circuit (flush with refrigerant R134a ⇒ page 88 or blow out with compressed air or nitrogen ⇒ page 84)*.*

– Renew desiccant cartridge*, receiver* or reservoir* and restrictor ⇒ Heating, air conditioning; Rep. gr. 87 ; Refrigerant circuit (vehicle-specific Workshop Manual).

– Assemble, evacuate and re-charge refrigerant circuit.

9.1.2 Leaking or damaged components (except air conditioner compressor, reservoir or receiver)

Refrigerant circuit still contains refrigerant (e.g. in the event of a minor leak)

– Discharge refrigerant circuit.

– Remove defective component, flush with compressed air and collect escaping refrigerant oil.

– Charge new component with amount of refrigerant oil blown out (plus 20 cm^3 for evaporator, plus 10 cm^3 for condenser, refrigerant lines and refrigerant hoses) as fresh refrigerant oil fill.

Protected by copyright. Copying for private or commercial purposes, in part or in whole, is not permitted unless authorised by AUDI AG. AUDI AG does not guarantee or accept any liability with respect to the correctness of information in this document. Copyright by AUDI AG.

Note

Disposal of old refrigerant oil ⇒ Audi ServiceNet, HSO Environmental Protection .

– Renew restrictor ⇒ Heating, air conditioning; Rep. gr. 87 ; Refrigerant circuit (vehicle-specific Workshop Manual).

– Assemble, evacuate and charge refrigerant circuit.

9.1.3 Renewing air conditioner compressor without having to clean refrigerant circuit

Note

- *Cleaning the refrigerant circuit means flushing it with refrigerant R134a ⇒ page 88 .*
- *If a defective air conditioner compressor is replaced by a compressor from a different manufacturer, it is important to check whether the refrigerant oil already in the refrigerant circuit (from the removed compressor) is also approved for the new compressor. If a different refrigerant oil is approved for the new air conditioner compressor than for the removed compressor, the refrigerant circuit must be flushed ⇒ page 319 .*

For example in the event of exterior damage after an accident (or in the event of an electrical fault)

– Discharge refrigerant circuit.

– Remove air conditioner compressor ⇒ Heating, air conditioning; Rep. gr. 87 ; Air conditioner compressor (vehicle-specific Workshop Manual).

Note

Use different refrigerant oils and quantities for the various air conditioner compressors
⇒ "10.2.2 Refrigerant oil capacities", page 321 .

Electrically driven air conditioner compressor

- If an electrically driven air conditioner compressor is renewed, the quantity of refrigerant oil in the removed air conditioner compressor must be determined by flushing (⇒ “5.5.2 Flushing electrically driven air conditioner compressor (removing refrigerant oil)”, page 106) the air conditioner compressor. You must then pour enough refrigerant oil out of the new air conditioner compressor so that the quantity of refrigerant oil remaining in the compressor is the same as the quantity flushed from the removed compressor (⇒ “10.2.2 Refrigerant oil capacities”, page 321).

Example:

- 120 cm^3 was flushed out of the air conditioner compressor to be renewed ⇒ “5.5.2 Flushing electrically driven air conditioner compressor (removing refrigerant oil)”, page 106 .
- The air conditioner compressor to be installed contains 200 cm^3 of refrigerant oil (see rating plate and ⇒ “10.2.2 Refrigerant oil capacities”, page 321).

– Pour refrigerant oil out of the new air conditioner compressor (first using the connection for the refrigerant line on the low-pressure side) until the quantity of refrigerant oil remaining is the same as the quantity previously flushed out of the air conditioner compressor to be renewed (plus 10 cm^3). In the example, this is 110 cm^3 of refrigerant oil (this ensures that the refrigerant circuit contains the correct quantity of refrigerant oil after the new air conditioner compressor is installed).

Protected by copyright. Copying for private or commercial purposes, in part or in whole, is not permitted unless authorised by AUDI AG. AUDI AG does not guarantee or accept any liability with respect to the correctness of information in this document. Copyright by AUDI AG.

Note

- *With the electrically driven air conditioner compressor, the refrigerant oil cannot be poured out in the same way and to the same extent as with the mechanically driven air conditioner compressor. There is no oil drain plug, the air conditioner compressor cannot be turned and the internal structure means that, depending on the version of the air conditioner compressor and how it was stored, only a small amount of the refrigerant oil can be poured out (due to differences in how the refrigerant oil is distributed in the air conditioner compressor). A residual quantity of between 30 and 80 cm^3 will usually remain in the air conditioner compressor after the pouring operation. Depending on the problem, the removed air conditioner compressor must therefore be flushed in order to remove the refrigerant oil and determine the quantity contained* *⇒ "5.5.2 Flushing electrically driven air conditioner compressor (removing refrigerant oil)", page 106* .
- *If the required quantity of refrigerant oil cannot be poured out of the air conditioner compressor to be newly installed, then the new air conditioner compressor must also be flushed. The new air conditioner compressor must then be filled up with the same quantity of new refrigerant oil as was previously flushed out of the old air conditioner compressor* *⇒ "5.5.2 Flushing electrically driven air conditioner compressor (removing refrigerant oil)", page 106* .
- *The refrigerant oil has roughly the same density as water at room temperature (1 kg corresponds to one litre).*
- *Even electric air conditioner compressors of the same construction (same manufacturer, same part number) do not weigh the same, which means that the quantity of refrigerant oil they contain cannot be determined by weighing them (the tolerances are too large to determine the quantity of refrigerant oil by weighing).*
- *The distribution of the refrigerant oil in the air conditioner compressor differs depending on the structure and how the air conditioner compressor is stored. There can be some in the compression chamber and some in the area of the electric motor, in which case the refrigerant oil must be alternately poured out via the two connections for the refrigerant pipes (high and low-pressure side). The air conditioner compressor must be positioned so that the respective connection is as low as possible.*
- *Dispose of refrigerant oil which is no longer required after flushing out of the defective air conditioner compressor and pouring out of the new air conditioner compressor ⇒ Audi ServiceNet, HSO Environmental Protection (observe local regulations).*

Mechanically driven air conditioner compressor

– Remove the oil drain plug from the air conditioner compressor (mechanically driven air conditioner compressor).

Note

There are different versions of the oil drain plug and the corresponding seal (an O-ring or a seal may be fitted, always renew) *⇒ page 260* *and ⇒ Electronic parts catalogue .*

– To accelerate discharging of refrigerant oil, rotate air conditioner compressor e.g. via clutch plate of magnetic clutch.

©2020 Copyright by AUDI AG. Copying for private or commercial purposes, in part or in whole, is not permitted unless authorised by AUDI AG. AUDI AG does not guarantee or accept any liability with respect to the correctness of information in this document. Copyright by AUDI AG.

– Pour the old refrigerant oil out of the air conditioner compressor and dispose of it ⇒ Audi ServiceNet, HSO Environmental Protection (observe local regulations).

– Remove the oil drain plug from the replacement compressor, pour out the refrigerant oil into a clean vessel and only add a quantity of fresh refrigerant oil equal to the amount poured out of the defective air conditioner compressor.

Caution

Risk of damage to the air conditioner compressor due to contaminated refrigerant oil

- ***Refrigerant oil that has been poured out of a new air conditioner compressor may only be re-used if it is in a clean vessel and the required quantity is added back into the air conditioner compressor immediately after pouring.***
- ***Do not re-use refrigerant oil into which dirt or moisture has gotten; it must be disposed of.***

Note

- *If, for example, 70 cm^3 of refrigerant oil has been poured out of the defective air conditioner compressor and 220 cm^3 out of the replacement compressor (a small quantity of refrigerant oil remains in the air conditioner compressor), In this case, fill up the air conditioner compressor to be installed with 70 cm^3 of refrigerant oil. The refrigerant oil poured out of the new (replacement) air conditioner compressor may be used if there is no dirt or moisture in it).*
- *Use different refrigerant oils and quantities for the various air conditioner compressors* *⇒ page 276* *.*
- *If a greater quantity of refrigerant oil (more than approx. 40 cm^3) has been poured out of the defective air conditioner compressor, the remaining refrigerant oil can also be added to the evaporator or reservoir/receiver* *⇒ page 276* *.*

All vehicles:

– Renew restrictor (only if installed in this refrigerant circuit).

– Assemble, evacuate and charge refrigerant circuit.

Protected by copyright. Copying for private or commercial purposes, in part or in whole, is not permitted unless authorized by AUDI AG. AUDI AG does not guarantee or accept any liability with respect to the correctness of information in this document. Copyright by AUDI AG.

9.1.4 Renewing air conditioner compressor due to leakage or internal damage

For example due to noise from the air conditioner compressor or no air conditioner compressor output

Note

- *The refrigerant circuit does not always need to be cleaned in the event of damage to the electrical components of the air conditioner compressor, for example the air conditioner compressor regulating valve - N280- of the mechanically driven air conditioner compressor or the air conditioner compressor control unit - J842- of the electrically driven air conditioner compressor. In this case it is usually sufficient to renew the air conditioner compressor without cleaning the refrigerant circuit (adjust the quantity of refrigerant oil)*
  ⇒ "9.1.3 Renewing air conditioner compressor without having to clean refrigerant circuit", page 262 .
- *If a defective air conditioner compressor is replaced by a compressor from a different manufacturer, it is important to check whether the refrigerant oil already in the refrigerant circuit (from the removed compressor) is also approved for the new compressor. If a different refrigerant oil is approved for the new air conditioner compressor than for the removed compressor, the refrigerant circuit must be flushed* *⇒ page 319* .

– Discharge refrigerant circuit.

– Remove air conditioner compressor ⇒ Heating, air conditioning; Rep. gr. 87 ; Air conditioner compressor (vehicle-specific Workshop Manual).

– Clean refrigerant circuit (flush with refrigerant R134a)
⇒ page 88 .

Note

- *In the event of internal (air conditioner compressor) damage, check refrigerant hoses and condenser. If e.g. swarf has entered, clean refrigerant hoses and condenser (flush with refrigerant R134a* *⇒ page 88*) *and renew refrigerant hoses if necessary.*
- *On vehicles with two evaporators, the quantity of refrigerant oil in the refrigerant circuit may be greater than the quantity in the replacement compressor. On such vehicles, add the extra quantity of refrigerant oil to the refrigerant circuit as necessary* *⇒ page 84* .

– Renew desiccant cartridge, receiver or reservoir and restrictor ⇒ Heating, air conditioning; Rep. gr. 87 ; Refrigerant circuit (vehicle-specific Workshop Manual).

Protected by copyright. Copying for private or commercial purposes, in part or in whole, is not permitted unless authorised by AUDI AG. AUDI AG does not guarantee or accept any liability with respect to the correctness of information in this document. Copyright by AUDI AG.

– Check expansion valve for dirt and corrosion, and renew if necessary ⇒ Heating, air conditioning; Rep. gr. 87 ; Refrigerant circuit (vehicle-specific Workshop Manual).

– Assemble, evacuate and charge refrigerant circuit.

9.1.5 Renewing receiver or reservoir and restrictor after cleaning refrigerant circuit

Note

Cleaning refrigerant circuit means flushing with refrigerant R134a *⇒ page 88* *or blowing out with compressed air or nitrogen* *⇒ page 84* .

Due to moisture entering (refrigerant circuit open for lengthy period) or contamination (example)

- Discharge refrigerant circuit.
- Remove air conditioner compressor ⇒ Heating, air conditioning; Rep. gr. 87 ; Air conditioner compressor (vehicle-specific Workshop Manual).
- Eliminate cause of fault.
- Clean refrigerant circuit (flush with refrigerant R134a) ⇒ page 88 .
- Check expansion valve for dirt or corrosion and renew if necessary

Electrically driven air conditioner compressor

- Flush old refrigerant oil out of air conditioner compressor ⇒ "5.5.2 Flushing electrically driven air conditioner compressor (removing refrigerant oil)", page 106 .

Mechanically driven air conditioner compressor

- Remove oil drain plug from air conditioner compressor.

Note

There are different versions of the oil drain plug and the corresponding seal (an O-ring or a seal may be fitted; renew) ⇒ page 260 and ⇒ Electronic parts catalogue .

- To accelerate discharging of refrigerant oil, rotate air conditioner compressor e.g. via clutch plate of magnetic clutch.
- Pour old refrigerant oil out of air conditioner compressor.

Note

Dispose of old refrigerant oil ⇒ Audi ServiceNet, HSO Environmental Protection (observe local regulations).

All air conditioner compressors

- Then add the quantity of fresh refrigerant oil to the air conditioner compressor corresponding to the quantity of refrigerant oil in the replacement compressor (or the specified quantity of refrigerant oil on vehicles with two evaporators if applicable) ⇒ page 317 .

Protected by copyright. Copying for private or commercial purposes, in part or in whole, is not permitted unless authorised by AUDI AG. AUDI AG does not guarantee or accept any liability with respect to the correctness of information in this document. Copyright by AUDI AG.

Note

- *Use different refrigerant oils and quantities for the various air conditioner compressors ⇒ page 317 .*
- *To ensure air conditioner compressor lubrication on start-up, at least 40 cm^3 of refrigerant oil must be poured into the air conditioner compressor. The remainder can be added for example to the new reservoir or receiver ⇒ page 276 .*
- *If dirt has entered into the air conditioner compressor with the refrigerant circuit open (e.g. after an accident), renew the air conditioner compressor.*
- *On vehicles with two evaporators, the quantity of refrigerant oil in the refrigerant circuit may be greater than the quantity in the replacement compressor. On such vehicles, add the extra quantity of refrigerant oil to the refrigerant circuit as necessary ⇒ page 84 .*

Protected by copyright. Copying for private or commercial purposes, in part or in whole, is not permitted unless authorised by AUDI AG. AUDI AG does not guarantee or accept any liability with respect to the correctness of information in this document. Copyright by AUDI AG.

All vehicles

– Renew receiver or reservoir and restrictor ⇒ Heating, air conditioning; Rep. gr. 87 ; Refrigerant circuit (vehicle-specific Workshop Manual).

– Assemble, evacuate and charge refrigerant circuit.

9.1.6 Renewing receiver or reservoir without having to clean refrigerant circuit

Note

Cleaning refrigerant circuit means flushing with refrigerant R134a ⇒ page 88 or blowing out with compressed air or nitrogen ⇒ page 84 .

For example in the event of accident damage; no refrigerant escaped and no ingress of moisture and dirt into the circuit.

– Discharge refrigerant circuit.

– Renew restrictor ⇒ Heating, air conditioning; Rep. gr. 87 ; Refrigerant circuit (vehicle-specific Workshop Manual).

– Remove receiver or reservoir ⇒ Heating, air conditioning; Rep. gr. 87 ; Refrigerant circuit (vehicle-specific Workshop Manual).

– Remove dirt from receiver or reservoir.

– Weigh receiver or reservoir removed.

– Fill the new receiver or reservoir with refrigerant oil until it attains the weight of the vessel removed.

– Install new receiver or reservoir.

– Assemble, evacuate and charge refrigerant circuit.

9.1.7 Renewing desiccant cartridge/desiccant bag without having to clean refrigerant circuit

Protected by copyright. Copying for private or commercial purposes, in part or in whole, is not permitted unless authorized by AUDI AG. AUDI AG does not guarantee or accept any liability with respect to the correctness of information in this document. Copyright by AUDI AG.

Note

Cleaning refrigerant circuit means flushing with refrigerant R134a *⇒ page 88* *or blowing out with compressed air or nitrogen* *⇒ page 84* *.*

In the event of a leak, refrigerant has escaped but no dirt has entered the circuit (example)

– Discharge refrigerant circuit.

– Renew desiccant cartridge ⇒ Heating, air conditioning; Rep. gr. 87 ; Refrigerant circuit (vehicle-specific Workshop Manual).

– Assemble, evacuate and charge refrigerant circuit.

9.1.8 Removing/installing and renewing air conditioner compressor regulating valve - N280-

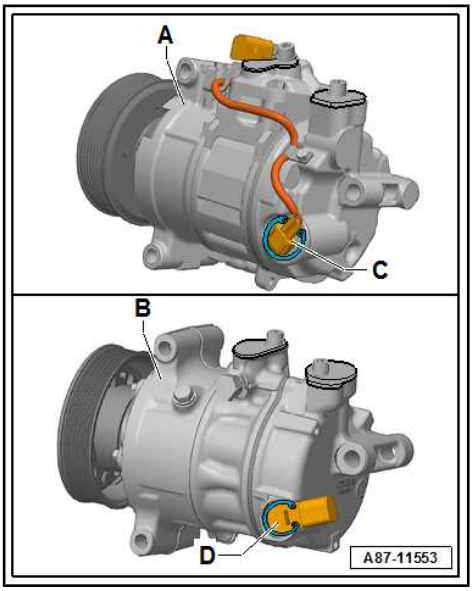

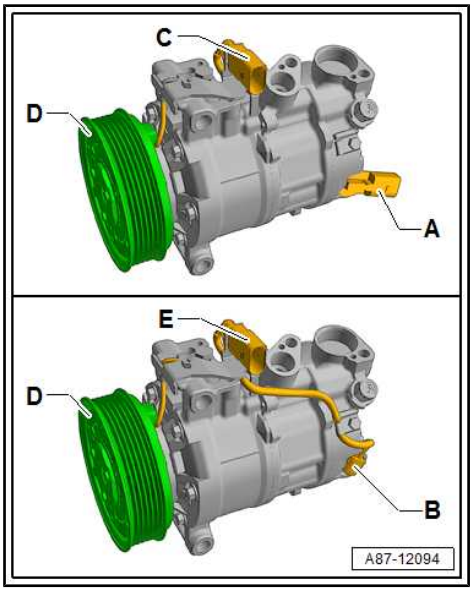

Note

- *Certain malfunctions of -N280- (e.g. sticking valve or open circuit in coil) can lead to problems with air conditioner compressor (no cooling output from air conditioner, evaporator icing up etc.). If -N280- is the cause (and not the actual air conditioner compressor), the air conditioner compressor can be repaired by renewing -N280- -C, D-.*
- *-N280- -C, D- is not available as a replacement part for all air conditioner compressors. If -N280- cannot be obtained separately for a particular air conditioner compressor, the entire air conditioner compressor must be renewed ⇒ Electronic parts catalogue .*
- *-N280- is available in different versions and with different settings ⇒ Electronic parts catalogue . On the air conditioner compressor -A- (in this case a "Denso" air conditioner compressor without air conditioning system magnetic clutch -N25-), the connector for connection to the vehicle wiring harness is attached to -N280- -C- via a short wiring harness. On the air conditioner compressor -B- (in this case a "Sanden" air conditioner compressor), the connector for connection to the vehicle wiring harness is attached directly to -N280- -C-. The procedures for removing and installing versions -C and D - of -N280- for other air conditioner compressors (different version, different manufacturer) are essentially the same and usually only differ slightly from the procedure described below.*
- *-N280- is available in different versions and with different settings ⇒ Electronic parts catalogue . On air conditioner compressors with -N25- (in this case a "Denso" air conditioner compressor), the connector for connection to the vehicle wiring harness is attached directly to -N280- -A-. On the other air conditioner compressor, the connector for connection to the vehicle wiring harness is incorporated into a 3-pin connector -E- for -N25- and -N280- .*
- *On version -B- of -N280- , the wiring may be connected directly to -N280- or there may be an additional connector at -N280- .*
- *The procedure for removing and installing versions -A and B- of -N280- is essentially the same and usually only differs slightly from the procedure described below. On air conditioner compressors with a 3-pin connector -E-, disconnect the wires to -N280- from -N280- , unplug them from the connector -E- or sever them at a suitable location (and reconnect them using wiring connectors from wiring harness repair set - VAS 1978 B- .*
- *If, after removing -N280- , the cause of the problem at -N280- is found to be dirt, swarf or some other form of air conditioner compressor abrasion, clean the refrigerant circuit and renew the air conditioner compressor*
  ⇒ "9.1.4 Renewing air conditioner compressor due to leakage or internal damage", page 265 and
  ⇒ "5.5 Cleaning (flushing) refrigerant circuit with refrigerant R134a", page 88

Protected by copyright. Copying for private or commercial purposes, in part or in whole, is not permitted unless authorised by AUDI AG. AUDI AG does not guarantee or accept any liability with respect to the correctness of information in this document. Copyright by AUDI AG.

Removing

– Discharging refrigerant circuit
⇒ "5.3 Working with the air conditioner service station", page 69

Caution

Risk of air conditioner compressor damage if the refrigerant circuit is empty

Never start the engine when the refrigerant circuit is empty.

- *Depending on the version of the air conditioner service station, the pressure in the refrigerant circuit may be less than 1 bar absolute following drainage.*
- *Depending on the version, the air conditioner compressor may be damaged by running it when the pressure in the refrigerant circuit is low.*
- *Never start the engine if the pressure in the refrigerant circuit is below ambient pressure.*

– Depending on vehicle and fitting location of air conditioner compressor, remove components impeding access to -N280- ⇒ Heating, air conditioning; Rep. gr. 87 ; Refrigerant circuit (vehicle-specific Workshop Manual).

Vehicles where it is not possible to detach or remove at least one of the two refrigerant lines and -N280- with the air conditioner compressor attached to the engine

– Remove air conditioner compressor ⇒ Heating, air conditioning; Rep. gr. 87 ; Air conditioner compressor (vehicle-specific Workshop Manual).

Note

With the air conditioner compressor in position, a refrigerant line has to be detached to ensure that the pressure in the air conditioner compressor is the same as the ambient pressure.

Vehicles where it is possible to detach or remove at least one of the two refrigerant lines and -N280- with the air conditioner compressor attached to the engine (air conditioner compressor is not removed)

WARNING

Risk of injury (frostbite).

- *Before removing -N280- , connect the air conditioner service station and extract refrigerant. The refrigerant circuit must be empty; danger of injury.*
- *Refrigerant and refrigerant oil will emerge if the refrigerant circuit has not been drained.*
- *The refrigerant is to be extracted before removing -N280- . Renewed evaporation may create pressure in the refrigerant circuit if -N280- is not removed within 10 minutes following extraction. Extract refrigerant again.*

Protected by copyright. Copying for private or commercial purposes, in part or in whole, is not permitted unless authorised by AUDI AG. AUDI AG does not guarantee or accept any liability with respect to the correctness of information in this document. Copyright by AUDI AG.

– Check the pressure in the refrigerant circuit again by way of the pressure gauge of the air conditioner service station.

- If the pressure displayed is higher than the ambient pressure (greater than approx. 1 bar absolute), switch the air conditioner service station on again and extract the refrigerant causing the pressure build-up.

– Detach one of the two refrigerant lines from air conditioner compressor ⇒ Heating, air conditioning; Rep. gr. 87 ; Refrigerant circuit (vehicle-specific Workshop Manual).

Note

With the air conditioner compressor in position, a refrigerant line has to be detached to ensure that the pressure in the air conditioner compressor is the same as the ambient pressure.

All vehicles

– Before removing -N280- , check again whether the air conditioner compressor is actually being driven by the pulley/drive unit. If the overload protection device of the pulley or drive unit has been tripped, the malfunction is usually not caused by the regulating valve, but by the air conditioner compressor (e.g. because it is stiff).

Note

Protected by copyright. Copying for private or commercial purposes, in part or in
permitted unless authorised by AUDI AG. AUDI AG does not g
No liability for the correctness of the information in this document
by AUDI

- *This illustration shows -N280- -B- for a "Sanden" air conditioner compressor of type "PXE 14". On these air conditioner compressors, the connector for connection to the vehicle wiring harness is attached directly to -N280- -B-. Removal and installation of -N280- -B- for other air conditioner compressors (different type, different make e.g. "Denso", -N280- with a short wiring harness to the connector for example) may differ. The basic procedure is however the same, as described below for the "Sanden" air conditioner compressor of type "PXE 14".*
- *This illustration shows an -N280- -B- with an O-ring -E- (not fitted on all versions).*
- *In the case of an -N280- -B- with no O-ring -E-, dirt may ingress into the mounting for -N280- -C- as far as the O-ring -F-.*

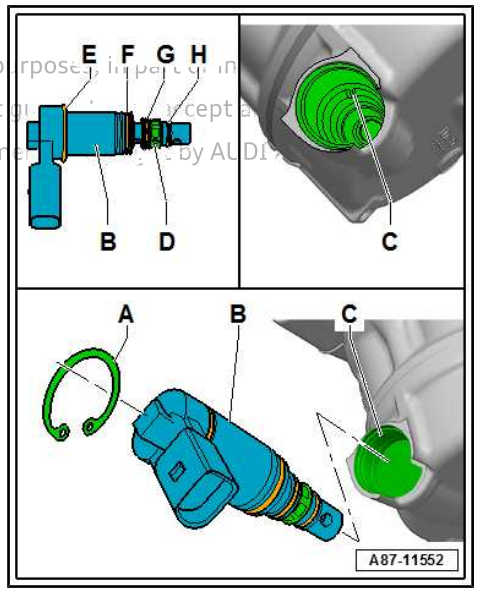

– If fitted, unfasten wiring connecting -N280- -B- to vehicle wiring harness connector from air conditioner compressor.

Note

- *On air conditioner compressors with air conditioning system magnetic clutch - N25- on which -N25- is activated via the same connector as -N280- -B-, eject the corresponding wires from the connector (e.g. with an ejector from the wiring harness repair set - VAS 1978 B-) ⇒ Heating, air conditioning; Rep. gr. 87 ; Refrigerant circuit (vehicle-specific Workshop Manual).*
- *If an air conditioner compressor with air conditioning system magnetic clutch - N25- has a connector from which the electrical wires cannot be ejected, sever the wires to -N280- (or to -N25-) at a suitable location and re-connect using wiring connectors from the wiring harness repair set - VAS 1978 B- (or renew the connector; refer to ⇒ Electronic parts catalogue) ⇒ Electrical system; Rep. gr. 97 ; Connectors; Repairing electrical wiring harnesses and electrical connectors .*

– Thoroughly clean the air conditioner compressor in the area of the circlip -A- and -N280- -B-.

Caution

The pressure in the air conditioner compressor must be the same as the ambient pressure.

- *Refrigerant and refrigerant oil may emerge in the event of higher pressure in the air conditioner compressor.*
- *Dirt may be drawn into the air conditioner compressor in the event of lower pressure in the air conditioner compressor.*
- *Ensure pressure equalisation before removing -N280- -B-.*

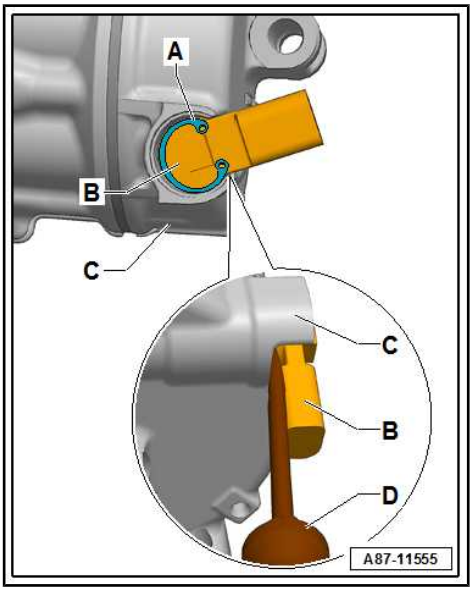

– Remove circlip -A-.

– Carefully remove -N280- -B- from the mounting on the air conditioner compressor -C- using a suitable screwdriver -D- for example.

Protected by copyright. Copying for private or commercial purposes, in part or in whole, is not permitted unless authorised by AUDI AG. AUDI AG does not guarantee or accept any liability with respect to the correctness of information in this document. Copyright by AUDI AG.

– After removal, check -N280- -B- and mounting on air conditioner compressor -C- for dirt.

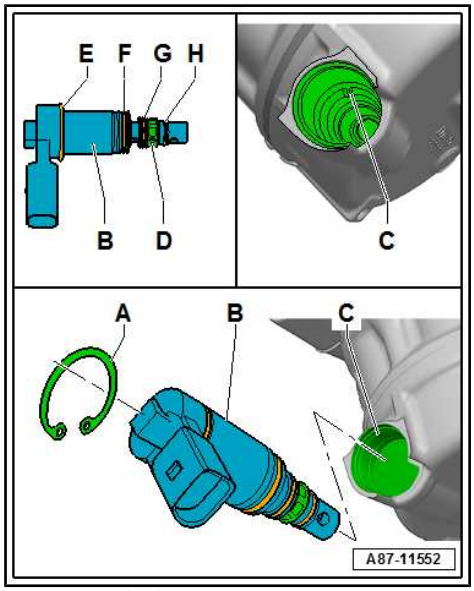

Note

- *If the strainer -D-, -N280- -B- as far as the O-ring -F- or the mounting on the air conditioner compressor -C- is severely contaminated in this area (e g. with swarf or dark, tacky abrasion), this is an indication of air conditioner compressor damage. In this case, clean the refrigerant circuit and renew air conditioner compressor*
  ⇒ "9.1.4 Renewing air conditioner compressor due to leakage or internal damage", page 265 and
  ⇒ "5.5 Cleaning (flushing) refrigerant circuit with refrigerant R134a", page 88
- *If the strainer -D- at -N280- -B- and the mounting on the air conditioner compressor -C- as far as the sealing surface of the O-ring -F- are only slightly contaminated (e g. with light grey deposits from normal air conditioner compressor operation), the cause of air conditioner compressor malfunctioning may be a problem with -N280- -B-.*
- *If -N280- -B- does not have an O-ring -E-, dirt may have entered the mounting -C- as far as the O-ring -E- during operation. Carefully remove all dirt using a lint-free cloth or similar (do not use compressed air).*

Protected by copyright. Copying for private or commercial purposes, in part or in whole, is not permitted unless authorised by AUDI AG. AUDI AG does not guarantee or accept any liability with respect to the correctness of information in this document. Copyright by AUDI AG.

Installing

– Check the mounting on the air conditioner compressor -C- and the groove for the circlip for contamination and clean carefully and thoroughly with a fresh lint-free cloth if necessary.

Caution

Dirt in the air conditioner compressor or damage to the sealing surfaces in the mounting could lead to renewed failure of -N280- -B- or the air conditioner compressor

- ***If necessary, carefully clean the mounting on the air conditioner compressor -C- with a fresh lint-free cloth (do not use compressed air).***
- ***When cleaning the mounting -C-, make sure no dirt ingresses into the area beneath the sealing surface for the O-ring -F- or into the ducts provided and that none of the sealing surfaces of the mounting are damaged.***

– Check air conditioner compressor mounting -C- for damage (also check for small scratches on surface; renew air conditioner compressor if damage is found).

– Check the O-rings -F,G,H- and -E- (if fitted) of -N280- -B- for damage.

– Moisten the O-rings -F,G,H- and -E- (if fitted) of -N280- -B- with a small quantity of refrigerant oil and check for proper attachment.

– Insert -N280- -B- as far as it will go in air conditioner compressor mounting -C-.

– Fit a new circlip -A- and check for correct positioning in the groove.

– Re-install all parts removed in reverse order.

– Evacuate and re-charge the refrigerant circuit
⇒ “5.3 Working with the air conditioner service station”, page 69 .

Note

If refrigerant oil has emerged with -N280- -B- removed, use the air conditioner service station to add this quantity of refrigerant oil when charging the refrigerant circuit
⇒ “5.3 Working with the air conditioner service station”, page 69 .

– Check operation of air conditioner
⇒ “8 Checking pressures”, page 183 and ⇒ Heating, air conditioning; Rep. gr. 87 ; Refrigerant circuit (vehicle-specific Workshop Manual).

Protected by copyright. Copying for private or commercial purposes, in part or in whole, is not permitted unless authorised by AUDI AG. AUDI AG does not guarantee or accept any liability with respect to the correctness of information in this document. Copyright by AUDI AG.

10 Capacities for refrigerant R134a/refrigerant oil and approved refrigerant oils

⇒ “10.1 Capacities for refrigerant R134a”, page 276

⇒ “10.2 Approved refrigerant oils and refrigerant oil capacities”, page 317

10.1 Capacities for refrigerant R134a

- On vehicles from Audi A8 (4N) 2018 onwards, the capacity for refrigerant R134a can be found in the vehicle-specific Workshop Manual ⇒ Heating, air conditioning; Rep. gr. 00 ; Technical data .

Note

- *When charging the high-pressure side of refrigerant circuits, always fill to the upper tolerance limit (some liquid refrigerant will remain in the filler hoses).*
- *Unless otherwise stated, the capacities specified for refrigerant R134a also apply to the S and RS versions of this vehicle model.*
- *When charging the refrigerant circuit, the air conditioner service station must be on the same level as the vehicle in which the refrigerant circuit is to be charged (maximum difference 50 cm). Depending on the design of the air conditioner service station , an excessive difference in height could lead to differences between the quantity of refrigerant displayed and that actually poured in. The charging accuracy of the air conditioner service station may change.*
- *For the assignment of the air conditioner compressor (“Zexel/Valeo”, “Sanden” or “Denso/Nippondenso”), refer to ⇒ Electronic parts catalogue and ⇒ Heating, air conditioning; Rep. gr. 87 ; Refrigerant circuit (vehicle-specific Workshop Manual).*
- *Refrigerant circuits converted from R12 to R134a are to be filled with the quantity indicated in the Workshop Manual “Air conditioner with refrigerant R12”. ⇒ Air conditioning system with refrigerant R12 (this Workshop Manual is only available in hardcopy form).*
- *The logo of the compressor manufacturer “Zexel” attached to the air conditioner compressor was modified from “Zexel” to “Valeo” from year of production 2006 onwards (change in manufacturer's name).*

Protected by copyright. Copying for private or commercial purposes, in part or in whole, is not permitted unless authorised by AUDI AG. AUDI AG does not guarantee or accept any liability with respect to the correctness of information in this document. Copyright by AUDI AG.

- ⇒ “10.1.1 Capacities for Audi A1 (8X_) 2011 ►”, page 277
- ⇒ “10.1.2 Capacities for Audi A2 (8Z_) 2001 ►”, page 278
- ⇒ “10.1.3 Capacities for Audi A3 (8L_) 1997 ► and Audi TT (8N_) 1999 ►”, page 279
- ⇒ “10.1.4 Capacities for Audi A3 (8P_) 2004 ►, Audi Q3 (8U_ or 84_ for China) 2012 ►”, page 282
- ⇒ “10.1.5 Capacities for Audi Q2 (GA_) 2017 ►, Audi A3 (8V_ or 85_ for China) 2013 ►, Audi A3 e-tron (8V_) 2015 ►, Audi RS 3 (8V_) 2016 ►”, page 283
- ⇒ “10.1.6 Capacities for Audi TT (8J_) 2007 ►”, page 284
- ⇒ “10.1.7 Capacities for Audi TT (FV_) 2015 ►”, page 285

- ⇒ “10.1.8 Capacities for Audi 80 (8A_/8C_), Audi Coupé (8B_), Audi Cabriolet (8G_) ► 2002”, page 286
- ⇒ “10.1.9 Capacities for Audi A4 (8D_) 1995 ► ”, page 286
- ⇒ “10.1.10 Capacities for Audi A4 (8E_) 2001 ►, Audi A4 Cabriolet (8H_) 2003 ►”, page 289
- ⇒ “10.1.11 Capacities for Audi A4 (8K_) 2008 ►, Audi A5 Coupé and Sportback (8T_) 2008 ►, Audi Q5 (8R_ or 83_ for China) 2008 ►, Audi A5 Cabriolet (8F_) 2009 ►, Audi Q5 hybrid (8R_) 2011 ►”, page 291
- ⇒ “10.1.12 Capacities for Audi A4 (8W_) 2016 ►, Audi A4 (86_ for China) 2017 ►, Audi A5 (F5_) 2016 ►, Audi Q5 (FY_) 2017 ►, Audi Q5 (87_ for China) 2019 ►”, page 301
- ⇒ “10.1.13 Capacities for Audi 100/Audi A6 (4A_) ► 1998”, page 302
- ⇒ “10.1.14 Capacities for Audi A6 (4B_) 1998 ► and Audi allroad (4B_) ► 2005”, page 303
- ⇒ “10.1.15 Capacities for Audi A6 (4F_) 2005 ►”, page 308
- ⇒ “10.1.16 Capacities for Audi A6 (4G_ or 4X_ for China) 2011 ►, Audi A7 (4G_ or 4X_ for China) 2011 ►, Audi A6 hybrid (4G_) 2012 ►, A6 e-tron (4G_) 2017 ►”, page 309
- ⇒ “10.1.17 Capacities for Audi V8 (4C_) ► 1994”, page 311
- ⇒ “10.1.18 Capacities for Audi A8 (4D_) 1994 ►”, page 312
- ⇒ “10.1.19 Capacities for Audi A8 (4E_) 2003 ►”, page 313
- ⇒ “10.1.20 Capacities for Audi A8 (4H_) 2010 ►, Audi A8 hybrid (4H_) 2012 ►”, page 314
- ⇒ “10.1.21 Capacities for Audi Q7 (4E_) 2006”, page 315
- ⇒ “10.1.22 Capacities for Audi Q7 (4M_) 2016 ►”, page 316
- ⇒ “10.1.23 Capacities for Audi R8 (42_) 2008 ►, Audi R8 (4S_) 2015 ►”, page 316

Protected by copyright. Copying for private or commercial purposes, in part or in whole, is not permitted unless authorised by AUDI AG. AUDI AG does not guarantee or accept any liability with respect to the correctness of information in this document. Copyright by AUDI AG.

10.1.1 Capacities for Audi A1 (8X_) 2011 ►

Characteristics of refrigerant circuit:

- Expansion valve
- Receiver
- “Denso”, “Sanden” (or “Delphi/Mahle”) air conditioner compressor with air conditioner compressor regulating valve - N280- ⇒ Heating, air conditioning; Rep. gr. 87 ; Refrigerant circuit (vehicle-specific Workshop Manual) and ⇒ Electronic parts catalogue

Vehicle model	Production period	Capacity in grams	Differing characteristics of this refrigerant circuit
Audi A1 (type code 8X1 or 8XA)	From 08.10 to 06.14 (gradual introduction)	500 +/- 15	• Refrigerant lines bolted to installed expansion valve (top)
Audi A1 (type code 8XF or 8XK)	From 06.14 onwards (gradual introduction)	475 +/- 15	• Refrigerant lines bolted to installed expansion valve (bottom)

Protected by copyright. Copying for private or commercial purposes, in part or in whole, is not permitted unless authorised by AUDI AG. AUDI AG does not guarantee or accept any liability with respect to the correctness of information in this document. Copyright by AUDI AG.

Note

- *Various air conditioner compressors have been fitted depending on the production period and engine (these air conditioner compressors have no magnetic clutch).*
- *At the start of production, "Denso" air conditioner compressors (type "6 SEU 14C") or "Sanden" air conditioner compressors ("7 PXE 16/14") were fitted; see ⇒ Electronic parts catalogue and ⇒ Heating, air conditioning; Rep. gr. 87 ; Refrigerant circuit (vehicle-specific Workshop Manual).*
- *Depending on the engine, "Sanden" air conditioner compressors (type "11 PXC 14") or "Delphi" air conditioner compressors (type "6 CVC 140") may also be fitted at a later date (introduction not yet finalised, planned from 09.12 onwards); see ⇒ Electronic parts catalogue and ⇒ Heating, air conditioning; Rep. gr. 87 ; Refrigerant circuit (vehicle-specific Workshop Manual).*
- *As of 11.2012, the quantity of refrigerant oil for the "Denso" air conditioner compressor with part number "5Q0 xxx xxx" was increased from 80 ccm to 110 ccm. The increased quantity of refrigerant oil applies retroactively to all vehicles with this air conditioner compressor. On vehicles manufactured with this air conditioner compressor up to 11.2012, check whether the quantity of refrigerant oil has already been increased during a previous workshop visit. If not, add 30 ccm of refrigerant oil to the refrigerant circuit*
  ⇒ "10.2.3 Capacities for Audi A1 (8X_) 2011 ►", page 322 .
  Then enter the refrigerant oil capacity on the label in waterproof ink ⇒ Heating, air conditioning; Rep. gr. 87 ; Installation location overview - Air conditioning (vehicle-specific Workshop Manual) and fill the refrigerant circuit with the quantity of refrigerant indicated above.
- *From 06.14 onwards, the evaporator, expansion valve and the corresponding refrigerant lines have been modified (different lines, attachment points etc.). In the period from 06.14 to 11.14, these air conditioners were still filled with 500 grams of refrigerant at the factory. From 11.14 onwards, the amount of refrigerant was reduced from 500 grams to 475 grams. Reason: In unfavourable ambient conditions (high ambient temperatures, dirt in condenser etc.), adding 500 grams of refrigerant may lead to excessive pressures in the refrigerant circuit on these vehicles. On vehicles built within this period, check the refrigerant capacity indicated on the label and correct it if necessary to 475 grams with a waterproof pen (or renew the label) ⇒ Heating, air conditioning; Rep. gr. 87 ; Refrigerant capacity (vehicle-specific Workshop Manual) and ⇒ Electronic parts catalogue .*

10.1.2 Capacities for Audi A2 (8Z_) 2001 ►

Characteristics of refrigerant circuit:

- Restrictor (coloured).
- Reservoir.
- "Denso" air conditioner compressor with no magnetic clutch and with air conditioner compressor regulating valve - N280- .

Vehicle model	Production period	Capacity in grams	Differing characteristics of this refrigerant circuit
Audi A2	From 06.00 to 07.01	525 +/- 25	• Yellow-coloured restrictor • Condenser, no. 8Z0 260 401 (403) with index “B” or “C”.
	From 07.01 onwards	500 +/- 25	• Red-coloured restrictor • Condenser, no. 8Z0 260 401 (403) with index “D”.

Protected by copyright. Copying for private or commercial purposes, in part or in whole, is not permitted unless authorised by AUDI AG. AUDI AG does not guarantee or accept any liability with respect to the correctness of information in this document. Copyright by AUDI AG.

Note

- *Replacement restrictors with different holes are available (yellow-coloured 1.54 mm, red-coloured 1.42 mm).*
- *Depending on manufacturer, colour of red restrictor may tend more towards orange.*
- *To avoid altering the cooling output of the air conditioner, restrictors with the same hole diameter must always be used.*
- *A restrictor with a smaller hole (red-coloured) and a condenser with a smaller internal volume are installed from model year 2002 onwards. The capacity has therefore been slightly modified (condenser -70 g, smaller restrictor +50 g) ⇒ Heating, air conditioning; Rep. gr. 87 ; Refrigerant circuit (vehicle-specific Workshop Manual) and ⇒ Electronic parts catalogue .*

10.1.3 Capacities for Audi A3 (8L_) 1997 ► and Audi TT (8N_) 1999 ►

Characteristics of refrigerant circuit:

- Expansion valve
- Receiver
- “Sanden” or “Zexel/Valeo” air conditioner compressor ⇒ Heating, air conditioning; Rep. gr. 87 ; Refrigerant circuit (vehicle-specific Workshop Manual) and ⇒ Electronic parts catalogue

Capacity for Audi A3 (8L_) 1997 to 2004

Vehicle model	Production period	Capacity in grams	Differing characteristics of this refrigerant circuit
Audi A3	From 08.96	750 + 50	• None

Note

- *Exclusive use was made at the start of production of "Sanden" air conditioner compressors. From model year 1999 onwards, "Zexel/Valeo" air conditioner compressors have also been used ⇒ Heating, air conditioning; Rep. gr. 87 ; Refrigerant circuit (vehicle-specific Workshop Manual) and ⇒ Electronic parts catalogue .*
- *If no replacement condenser with a flat tube width = 20 mm is available for an Audi A3, and a condenser with a flat tube width = 16 mm is fitted, only 650 +/- 20 g of refrigerant may be added (instead of 750 + 50 g). In addition the capacity given on the label must be altered accordingly (observe notes on Audi TT ⇒ page 281).*
- *The logo of the compressor manufacturer "Zexel" attached to the air conditioner compressor was modified from "Zexel" to "Valeo" from year of production 2006 onwards (change in manufacturer's name).*

Audi TT (8N_) 1999 ► capacity

Vehicle model	Production period	Capacity in grams	Differing characteristics of this refrigerant circuit
Audi TT	From 10.98 to 10.03 (and from 06.04 to 08.04 ⇒ page 281)	750 + 50	• Condenser with flat tube width of 20 mm ⇒ page 281
	From 10.03 onwards (except 06.04 to 08.04 ⇒ page 281)	650 +/- 20	• Condenser with flat tube width of 16 mm ⇒ page 281

Protected by copyright. Copying for private or commercial purposes, in part or in whole, is not permitted unless authorised by AUDI AG. AUDI AG does not guarantee or accept any liability with respect to the correctness of information in this document. Copyright by AUDI AG.

Note

- *Exclusive use was made at the start of production of "Sanden" air conditioner compressors. From model year 1999 onwards, "Zexel/Valeo" air conditioner compressors have also been used ⇒ Heating, air conditioning; Rep. gr. 87 ; Refrigerant circuit (vehicle-specific Workshop Manual) and ⇒ Electronic parts catalogue .*
- *The air conditioner compressor designation "Zexel / Valeo" was changed as of 2006 to "Valeo".*
- *With effect from 10.03 (as of vehicle identification number 8N41015239), production of the Audi TT was switched from the condenser with part no. "1J0 820 411 J" (with a flat tube width of 20 mm) to the condenser with part no. "8N0 820 411 A" (with a flat tube width of 16 mm) ⇒ page 281 . In the period between 06.04 and 08.04, a certain number of vehicles was again fitted with condensers with a flat tube width of 20 mm.*
- *Condensers with a flat tube width = 16 mm must be filled with approx. 120 g less refrigerant than condensers with a flat tube width = 20 mm ⇒ Electronic parts catalogue .*
- *In the period between 10.03 (vehicles as of vehicle identification number 8N41015239) and 06.04, the Audi TT was fitted at the factory with a condenser with a flat tube width of 16 mm (part no. "8N0 820 411 A") and the refrigerant circuit filled with 750 + 50 grams of refrigerant. These vehicles were also provided with a sticker showing the incorrect capacity - namely 750 grams (or 700 grams in 06.04) instead of 650 grams ⇒ page 281 . Under certain ambient conditions (e.g. high ambient temperatures), over-filling of the systems may result in the air conditioner compressor being shut off on account of excess pressure in the refrigerant circuit. Complaints may also be received about engine performance (e.g. humming and drumming; the engine is subjected to greater load as the air conditioner compressor constantly has to cope with excessively high pressure). Remedy: Discharge the refrigerant circuit, then re-charge with the correct quantity and replace the label with a label indicating the correct capacity or delete the old capacity indicated on the label and enter the new capacity in waterproof ink for example.*
- *Pay attention to flat tube dimensions if condenser is renewed. If a condenser with different flat tube dimensions is to be fitted, also replace the label indicating the refrigerant R134a capacity or delete the old capacity and enter the new capacity in waterproof ink for example ⇒ Electronic parts catalogue .*

Protected by copyright. Copying for private or commercial purposes, in part or in whole, is not permitted unless authorised by AUDI AG. AUDI AG does not guarantee or accept any liability with respect to the correctness of information in this document. Copyright by AUDI AG.

Reading flat tube dimensions of condenser

- Flat tubes of condenser -A-
- Width of flat tubes -B-

Label indicating refrigerant R134a capacity

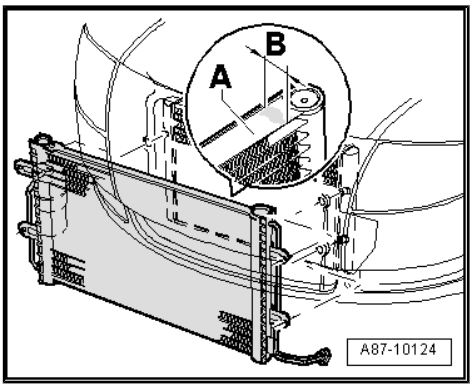

Pay attention to flat tube dimensions if condenser is renewed. If a condenser with different dimensions is to be fitted, also replace the label -A- indicating the refrigerant R134a capacity or delete the old capacity and enter the new capacity in waterproof ink for example ⇒ Electronic parts catalogue .

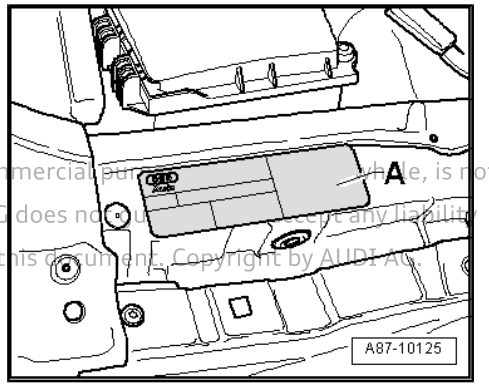

Protected by copyright. Copying for private or commercial purposes, in whole or in part, is not permitted unless authorised by AUDI AG. AUDI AG does not guarantee or assume any liability with respect to the correctness of information in this document. Copyright by AUDI AG.

10.1.4 Capacities for Audi A3 (8P_) 2004 ►, Audi Q3 (8U_ or 84_ for China) 2012 ►

Note

- *The refrigerant capacities in the following table apply to the Audi A3, Audi A3 Sportback, Audi RS 3, Audi A3 Cabriolet and Audi Q3 (and RS Q3).*
- *On certain versions for China the type designation 84_ is used instead of 8U_.*

Characteristics of refrigerant circuit:

- Expansion valve
- Receiver
- “Denso”, “Delphi/Mahle”, “Sanden” or “Zexel/Valeo” air conditioner compressor with air conditioner compressor regulating valve - N280- ⇒ Heating, air conditioning; Rep. gr. 87 ; Refrigerant circuit (vehicle-specific Workshop Manual) and ⇒ Electronic parts catalogue

Vehicle model	Production period	Capacity in grams	Differing characteristics of this refrigerant circuit
Audi A3 • With 4 or 6-cyl. engine	From 05.03 onwards	525 +/- 25	• None
Audi RS 3 • With 5-cyl. engine	From 01.11 onwards	500 +/- 25	• Different type of condenser fitted ⇒ Electronic parts catalogue and ⇒ Heating, air conditioning; Rep. gr. 87 ; Refrigerant circuit (vehicle-specific Workshop Manual).
Audi Q3 (and RS Q3)	From 07.11 onwards	520 +/- 20	• None

Note

- *Various air conditioner compressors have been fitted depending on the production period and engine (these air conditioner compressors have no magnetic clutch).*
- *At the start of production exclusive use was made of type “7 SEU 16” air conditioner compressors from “Denso”. From model year 2004 onwards, a different “Denso” compressor (type “7 SEU 17”) has gradually been replacing the old one.*
- *From model year 2004 onwards, “Zexel/Valeo” (type “DSC17E”) and “Sanden” (type “PXE16”) air conditioner compressors are gradually being introduced, depending on the engine ⇒ Electronic parts catalogue and ⇒ Heating, air conditioning; Rep. gr. 87 ; Refrigerant circuit (vehicle-specific Workshop Manual).*
- *From model year 2008 onwards, “Denso” compressors (type “6 SEU 14”) and “Delphi/Mahle” air conditioner compressors are also gradually being introduced depending on the engine ⇒ Electronic parts catalogue and ⇒ Heating, air conditioning; Rep. gr. 87 ; Refrigerant circuit (vehicle-specific Workshop Manual).*
- *The logo of the compressor manufacturer “Zexel” attached to the air conditioner compressor was modified from “Zexel” to “Valeo” from year of production 2006 onwards (change in manufacturer's name).*

10.1.5 Capacities for Audi Q2 (GA_) 2017 ►, Audi A3 (8V_ or 85_ for China) 2013 ►, Audi A3 e-tron (8V_) 2015 ►, Audi RS 3 (8V_) 2016 ►

Note

The capacity for the Audi A3 (8V_ or 85_ for China) applies to all versions (saloon, Sportback, cabriolet, etc.)

Protected by copyright. Copying for private or commercial purposes, in part or in whole, is not permitted unless authorised by AUDI AG. AUDI AG does not guarantee or accept any liability with respect to the correctness of information in this document. Copyright by AUDI AG.

Characteristics of refrigerant circuit:

- Expansion valve
- Receiver
- Mechanically driven “Denso” or “Sanden” air conditioner compressor with air conditioner compressor regulating valve - N280- ⇒ Heating, air conditioning; Rep. gr. 87 ; Refrigerant circuit (vehicle-specific Workshop Manual) and ⇒ Electronic parts catalogue (all vehicles except A3 e-tron)
- On vehicles with high-voltage system (A3 e-tron): electrically driven “Sanden” or “Visteon” air conditioner compressors ⇒ Heating, air conditioning; Rep. gr. 87 ; Refrigerant circuit (vehicle-specific Workshop Manual) and ⇒ Electronic parts catalogue

Vehicle model	Production period	Capacity in grams	Differing characteristics of this refrigerant circuit
Audi Q2	From 07.16 onwards	500 +/- 15	• None

Vehicle model	Production period	Capacity in grams	Differing characteristics of this refrigerant circuit
Audi A3	From 05.12 onwards	500 +/- 15	• None
A3 e-tron	From 09.14 onwards	500 +/- 15	• Electrically driven air conditioner compressor • With second evaporator in heat exchanger for high-voltage battery ("chiller")
Audi RS 3 • With 5-cyl. engine	From 02.15 onwards	570 +/- 15	• Different type of condenser fitted ⇒ Electronic parts catalogue and ⇒ Heating, air conditioning; Rep. gr. 87 ; Refrigerant circuit (vehicle-specific Workshop Manual).

Note

- *Various air conditioner compressors are fitted depending on the production period and the engine (these compressors do not have a magnetic clutch) ⇒ Heating, air conditioning; Rep. gr. 87 ; Refrigerant circuit (vehicle-specific Workshop Manual).*
- *As of 11.2012, the quantity of refrigerant oil for the "Denso" air conditioner compressor is being increased from 80 ccm to 110 ccm. The increased quantity of refrigerant oil applies retroactively to all vehicles with this make of air conditioner compressor. On vehicles manufactured up to 11.2012, check whether the quantity of refrigerant oil has already been increased during a previous workshop visit. If not, add 30 ccm of refrigerant oil to the refrigerant circuit* *⇒ "10.2.7 Capacities for Audi Q2 (GA_) 2017 ►, Audi A3 (8V_ or 85_ for China) 2013 ►, Audi A3 e-tron (8V_) 2015 ►, Audi RS 3 (8V_) 2016 ►", page 328* *. Then enter the refrigerant oil capacity on the label in waterproof ink ⇒ Heating, air conditioning; Rep. gr. 87 ; Installation location overview - Air conditioning (vehicle-specific Workshop Manual) and fill the refrigerant circuit with the quantity of refrigerant indicated above.*

Protected by copyright. Copying for private or commercial purposes, in part or in whole, is not permitted unless authorised by AUDI AG. AUDI AG does not guarantee or accept any liability whatsoever for the correctness of information in this document. Copyright by AUDI AG.

10.1.6 Capacities for Audi TT (8J_) 2007 ►

Characteristics of refrigerant circuit:

- Expansion valve
- Receiver
- "Denso", "Delphi/Mahle" or "Sanden" air conditioner compressor with air conditioner compressor regulating valve - N280- ⇒ Heating, air conditioning; Rep. gr. 87 ; Refrigerant circuit (vehicle-specific Workshop Manual) and ⇒ Electronic parts catalogue

Vehicle model	Production period	Capacity in grams	Differing characteristics of this refrigerant circuit
Audi TT • With 4 or 6-cyl. engine	From 08.06 onwards	525 +/- 25	• None

Vehicle model	Production period	Capacity in grams	Differing characteristics of this refrigerant circuit
Audi TT • With 5-cyl. engine	From 03.09 onwards	500 +/- 25	• Different type of condenser fitted ⇒ Electronic parts catalogue and ⇒ Heating, air conditioning; Rep. gr. 87 ; Refrigerant circuit (vehicle-specific Workshop Manual).

Protected by copyright. Copying for private or commercial purposes, in part or in whole, is not permitted unless authorised by AUDI AG. AUDI AG does not guarantee or accept any liability with respect to the correctness of information in this document. Copyright by AUDI AG.

Note

- *At the start of production, exclusive use was made of air conditioner compressors of type "6 SEU 14" manufactured by "Denso". This air conditioner compressor has no magnetic clutch (it is constantly driven by the engine). Air conditioner compressors produced by other manufacturers may also be fitted at a later date (depending on the engine) ⇒ Electronic parts catalogue and ⇒ Heating, air conditioning; Rep. gr. 87 ; Refrigerant circuit (vehicle-specific Workshop Manual).*
- *From model year 2008 onwards, "Sanden" air conditioner compressors (type "PXE16") are gradually being introduced for certain engines; these air conditioner compressors do not have a magnetic clutch (they are driven continuously by the engine) ⇒ Heating, air conditioning; Rep. gr. 87 ; Refrigerant circuit (vehicle-specific Workshop Manual).*
- *From model year 2011 onwards, "Delphi" air conditioner compressors are also gradually being introduced depending on the engine ⇒ Electronic parts catalogue and ⇒ Heating, air conditioning; Rep. gr. 87 ; Refrigerant circuit (vehicle-specific Workshop Manual).*

10.1.7 Capacities for Audi TT (FV_) 2015 ►

Characteristics of refrigerant circuit:

- Expansion valve
- Receiver
- Mechanically driven "Denso" or "Sanden" air conditioner compressor with air conditioner compressor regulating valve - N280- ⇒ Heating, air conditioning; Rep. gr. 87 ; Refrigerant circuit (vehicle-specific Workshop Manual) and ⇒ Electronic parts catalogue

Vehicle model	Production period	Capacity in grams	Differing characteristics of this refrigerant circuit
Audi TT	From 10.14 onwards	500 +/- 15	• None
Audi TT RS • With 5-cyl. engine	From 07.16 onwards	570 +/- 15	• Different type of air conditioner compressor and condenser fitted ⇒ Electronic parts catalogue and ⇒ Heating, air conditioning; Rep. gr. 87 ; Refrigerant circuit (vehicle-specific Workshop Manual).

Note

Various air conditioner compressors are fitted depending on the production period and the engine (these compressors do not have a magnetic clutch) ⇒ Heating, air conditioning; Rep. gr. 87 ; Refrigerant circuit (vehicle-specific Workshop Manual).

10.1.8 Capacities for Audi 80 (8A_/8C_), Audi Coupé (8B_), Audi Cabriolet (8G_) ► 2002

Characteristics of refrigerant circuit:

- Restrictor (not coloured).
- Reservoir
- "Zexel/Valeo" air conditioner compressor ⇒ Heating, air conditioning; Rep. gr. 87 ; Refrigerant circuit (vehicle-specific Workshop Manual) and ⇒ Electronic parts catalogue

Vehicle model	Production period	Capacity in grams	Differing characteristics of this refrigerant circuit
Audi 80 Audi Coupé Audi Cabriolet	From 10.92	750 + 50 • Vehicles with 5-cyl. engine	• None
		650 + 50 • Vehicles with 4 or 6-cyl. engine	

Note

- *Replacement restrictors with different holes are available. If these vehicles are fitted with a yellow-coloured restrictor, add 50 g more refrigerant than specified in the table. After charging, amend capacity stated on label or affix label indicating new capacity.*
- *In order to distinguish between the two restrictor versions, the one with the smaller hole (1.54 mm) is yellow-coloured. The restrictor with the larger hole (1.83 mm) is not coloured.*
- *The logo of the compressor manufacturer "Zexel" attached to the air conditioner compressor was modified from "Zexel" to "Valeo" from year of production 2006 onwards (change in manufacturer's name).*

10.1.9 Capacities for Audi A4 (8D_) 1995 ►

Note

Also applies to the Audi RS 4.

Characteristics of refrigerant circuit:

- Restrictor
- Reservoir

Protected by copyright. Copying for private or commercial purposes, in part or in whole, is not permitted unless authorised by AUDI AG. AUDI AG does not guarantee or accept any liability with respect to the correctness of information in this document. Copyright by AUDI AG.

- “Denso” or “Zexel/Valeo” air conditioner compressor ⇒ Heating, air conditioning; Rep. gr. 87 ; Refrigerant circuit (vehicle-specific Workshop Manual) and ⇒ Electronic parts catalogue

Vehicle model	Production period	Capacity in grams	Differing characteristics of this refrigerant circuit
Audi A4	From 11.94 to 11.97	650 + 50	• Restrictor not coloured
	From 11.97	700 + 50	• Restrictor coloured (yellow) • “Showa/ Keihin” condenser (distinguishing feature ⇒ page 288)
	From 11.98	550 + 50	• Restrictor coloured (yellow) • “AWG” condenser (distinguishing feature ⇒ page 288)
Audi RS 4	From 05.00 onwards	650 + 50	• Restrictor coloured (yellow)

Protected by copyright. Copying for private or commercial purposes, in part or in whole, is not permitted unless authorised by AUDI AG. AUDI AG does not guarantee or accept any liability with respect to the correctness of information in this document. Copyright by AUDI AG.

Note

- *Restrictors with a modified hole have been installed at the factory since November 1997 (yellow-coloured). The capacity was increased by 50 g for vehicles with a yellow-coloured restrictor.*
- *In order to distinguish between the two restrictor versions, the one with the smaller hole (1.54 mm) is yellow-coloured. The restrictor with the larger hole (1.83 mm) is not coloured.*
- *The Audi A4 was fitted with different air conditioner compressors depending on the engine and production period. Exclusive use was made at the start of production of "Zexel / Valeo" air conditioner compressors. As of Model Year 1996, "Denso" air conditioner compressors were gradually introduced for vehicles with 6-cylinder engines.*
- *The logo of the compressor manufacturer "Zexel" attached to the air conditioner compressor was modified from "Zexel" to "Valeo" from year of production 2006 onwards (change in manufacturer's name).*
- *Replacement restrictors with different holes (not coloured, yellow-coloured, red-coloured) are available. If a vehicle is fitted with a different restrictor, add more or less refrigerant depending on type (⇒ Table). After charging, amend capacity stated on label or affix label indicating new capacity.*
- *Depending on manufacturer, colour of red restrictor may tend more towards orange.*
- *From November 1998 onwards, Audi A4 models have also been fitted with "AWG" condensers (initially approx. 10000 vehicles with chassis numbers between 8DXA 065 253 and 8DXA 077 026). The specified capacity for vehicles with these condensers differs from those with "Showa/ Keihin" condensers. The condensers can be identified on the basis of certain characteristic features* *⇒ page 288* *.*
- *If the condenser installed is replaced by one with a different part number, check the capacity indicated on the label in the vehicle and amend if necessary or affix a label with the correct capacity over the existing one ⇒ Heating, air conditioning; Rep. gr. 87 ; Installation location overview - Air conditioning (vehicle-specific Workshop Manual) and ⇒ Electronic parts catalogue .*

Protected by copyright. Copying or distribution, in part or in whole, is not permitted unless authorised by AUDI AG. AUDI AG does not guarantee or accept any liability with respect to the correctness of information in this document. Copyright by AUDI AG.

Distinguishing features of "Showa/ Keihin" and "AWG" condensers

Different manifolds:

A - Manifold on "Showa/ Keihin" condenser

B - Manifold on "AWG" condenser

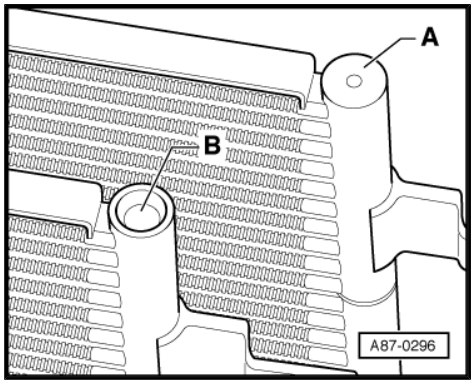

Different connections to the pressure switch.

A - Connection area on “Showa/ Keihin” condenser

B - Connection area on “AWG” condenser

Protected by copyright. Copying for private or commercial purposes, in part or in whole, is not permitted unless authorised by AUDI AG. AUDI AG does not guarantee or accept any liability with respect to the correctness of information in this document. Copyright by AUDI AG.

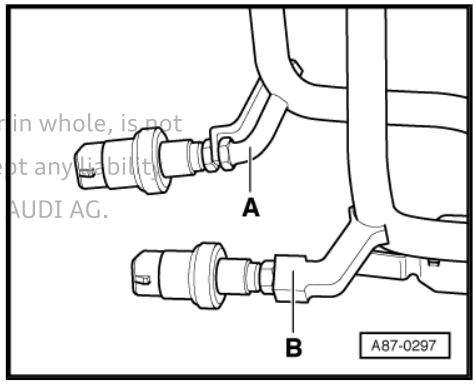

10.1.10 Capacities for Audi A4 (8E_) 2001 ►, Audi A4 Cabriolet (8H_) 2003 ►

Note

Also applies to the Audi RS 4.

Characteristics of refrigerant circuit:

- Restrictor (yellow or red-coloured).
- Reservoir
- “Denso” air conditioner compressor with air conditioner compressor regulating valve - N280- (no magnetic clutch)

Vehicle model	Production period	Capacity in grams	Differing characteristics of this refrigerant circuit
Audi A4	From 11.00 onwards	500 +/- 20	• Yellow or red-coloured restrictor
Audi RS 4	From 07.05 onwards	440 +/- 20	• Red-coloured restrictor

Note

- *Replacement restrictors with different holes are available (yellow-coloured 1.54 mm, red-coloured 1.42 mm).*
- *Depending on manufacturer, colour of red restrictor may tend more towards orange.*
- *To avoid altering the cooling output of the air conditioner, only red or yellow-coloured restrictors are to be fitted. Yellow-coloured restrictors were fitted in model year 2001. Red-coloured restrictors were introduced in model year 2002. The change to the restrictor (on vehicles produced in model year 2001, a red-coloured restrictor may also be fitted instead of a yellow-coloured one) does not alter the capacity for these vehicles.*
- *Various air conditioner compressors have been fitted depending on the production period and engine (these air conditioner compressors have no magnetic clutch).*
- *At the start of production exclusive use was made of type “6 SEU 12” and “7 SEU 16” air conditioner compressors from “Denso”. From model year 2004 onwards, different “Denso” compressors (types “6 SEU 14” and “7 SEU 17”) have gradually replaced the old ones ⇒ Heating, air conditioning; Rep. gr. 87 ; Refrigerant circuit (vehicle-specific Workshop Manual) and ⇒ Electronic parts catalogue .*
- *The Audi RS 4 is fitted with a condenser with a smaller internal volume. The capacity for this vehicle is therefore lower than for the other vehicles ⇒ Electronic parts catalogue .*

Protected by copyright. Copying for private or commercial purposes, in part or in whole, is not permitted unless authorised by AUDI AG. AUDI AG does not guarantee or accept any liability with respect to the correctness of information in this document. Copyright by AUDI AG.

10.1.11 Capacities for Audi A4 (8K_) 2008 ►, Audi A5 Coupé and Sportback (8T_) 2008 ►, Audi Q5 (8R_ or 83_ for China) 2008 ►, Audi A5 Cabriolet (8F_) 2009 ►, Audi Q5 hybrid (8R_) 2011 ►

Protected by copyright. Copying for private or commercial purposes, in part or in whole, is not permitted unless authorised by AUDI AG. AUDI AG does not guarantee or accept any liability with respect to the correctness of information in this document. Copyright by AUDI AG.

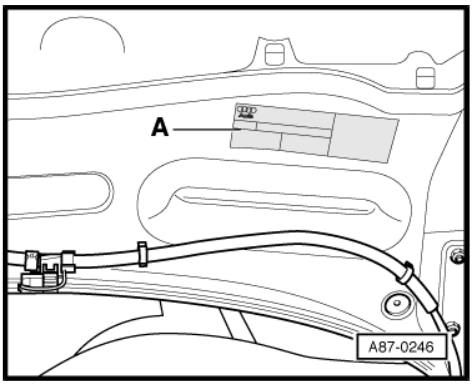

Note

- *Also applies for the Audi RS 4, Audi S5, Audi SQ5 and Audi RS 5.*
- *Different capacities depending on version and production period (see the following tables)*
- *On certain Audi Q5 versions for China the type designation 83_ is used instead of 8R_.*
- *A label -A- indicating the refrigerant R134a capacity for the refrigerant circuit concerned can be found in the engine compartment (shown here on the front lid). This label provides information on the refrigerant R134a capacity (for the refrigerant circuit fitted in the vehicle at the factory). If this label is missing or if you are uncertain about the correct capacity (e.g. after the condenser has been renewed), compare the capacity indicated on the label with the figures in the following table. If the value on the label differs from the one in the table, renew label -A- indicating the refrigerant R134a capacity or remove the old capacity and record the new capacity on the label using a waterproof pen ⇒ Electronic parts catalogue .*

Characteristics of refrigerant circuit:

- Expansion valve
- Receiver
- Refrigerant line with internal heat exchanger
- Mechanically driven “Denso” air conditioner compressor with air conditioner compressor regulating valve - N280- (and with air conditioning system magnetic clutch - N25- from model year 2012 onwards, depending on the engine) ⇒ Heating, air conditioning; Rep. gr. 87 ; Refrigerant circuit (vehicle-specific Workshop Manual) and ⇒ Electronic parts catalogue (all vehicles except Audi Q5 hybrid).
- On vehicles with a high-voltage system (Audi Q5 hybrid): electrically driven “Denso” air conditioner compressors ⇒ Heating, air conditioning; Rep. gr. 87 ; Refrigerant circuit (vehicle-specific Workshop Manual) and ⇒ Electronic parts catalogue .
- Different condenser versions (and consequently also different capacities for the refrigerant R134a)

- Capacity for Audi A4, Audi A5 and Audi A5 Cabriolet ⇒ page 292
- Capacity for Audi Q5 and Audi Q5 hybrid ⇒ page 295
- Capacity for Audi RS 4, Audi RS 5 ⇒ page 299
- Distinguishing features of condensers ⇒ page 300

Audi A4, Audi A5 and Audi A5 Cabriolet

Note

- *Also applies to the Audi S5.*
- *Capacity for Audi RS 5 Cabriolet* ⇒ page 299

Protected by copyright. Copying for private or commercial purposes, in part or in whole, is not permitted without the consent of AUDI AG. AUDI AG does not guarantee or assume any liability with respect to the correctness of information in this document. Copyright by AUDI AG.

Vehicle model	Production period	Capacity in grams	Differing characteristics of this refrigerant circuit
Audi A4, Audi A5 (Coupé, Cabriolet and Sportback)	♦ Audi A4, from 10.07 to 03.12 ♦ Audi A5 Coupé and Sportback, from 05.07 to 03.12 ♦ Audi A5 Cabriolet, from 03.09 to 03.12	570 +/- 20	• Air conditioner compressor without magnetic clutch with part number 8K0 xxx xxx (manufactured by “Denso”, type “6 SEU 14” or “7 SEU 17”) • Air conditioner compressor with magnetic clutch with part number 8T0 xxx xxx (manufactured by “Denso”, type “6 SAS 14”) • Condenser with part number 8K0 xxx xxx, manufactured by “Denso” or “Showa / Keihin” (distinguishing features ⇒ page 300) • For vehicles with 4-cyl., 6-cyl. or 8-cyl. engine (except Audi RS 5)
	From 03.12 to 10.13 onwards (gradual changeover; see notes)	550 +/- 15	• Air conditioner compressor with part number 8T0 xxx xxx (manufactured by “Denso”, with and without magnetic clutch, type “6 SES 14” or “6 SAS 14”) • Condenser with part number 8T0 xxx xxx manufactured by “Denso” or manufactured by “Showa/Keihin” with same part number and index “D” or later (distinguishing features ⇒ page 300) • These condensers manufactured by “Denso” are predominantly installed on vehicles with a 4-cyl. engine. • The condensers manufactured by “Showa/Keihin” with part number 8T0 xxx xxx and index “D” or later will be gradually installed in all vehicles with 4 or 6-cyl. engines from 10.13 onwards.

Vehicle model	Production period	Capacity in grams	Differing characteristics of this refrigerant circuit
		630 +/- 15	• Air conditioner compressor with part number 8T0 xxx xxx (manufactured by “Denso”, with and without magnetic clutch, type “6 SES 14” or “6 SAS 14”) • Condenser manufactured by “Showa/ Keihin” with part number 8T0 xxx xxx and index “C” or earlier (distinguishing features ⇒ page 300) • The condensers manufactured by “Showa/Keihin” with part number 8T0 xxx xxx and index “C” or earlier were predominantly installed in vehicles with a 6-cyl. engine up to 10.13. • The capacity valid as of 10.13 applies if a condenser with part number 8T0 xxx xxx and index “D” or later is installed instead of the condenser with part number 8T0 xxx xxx and index “C” or earlier
	From 10.13 onwards (gradual use)	550 +/- 15	♦ Air conditioner compressor (manufacturer “Denso”) all versions, belt-driven, with and without magnetic clutch ♦ Condenser manufactured by “Showa/ Keihin” with part number 8T0 xxx xxx and index “D” or later (distinguishing features ⇒ page 300) ♦ Does not apply to certain vehicles manufactured in China, see notes.
	From 06.12 onwards (only for certain vehicles manufactured in China; see notes)	600 +/- 15	• Air conditioner compressor with part number 8T0 xxx xxx (manufactured by “Denso”, with and without magnetic clutch, type “6 SES 14” or “6 SAS 14”) • Condenser with part number 8KD xxx xxx, manufactured by “Showa / Keihin” (distinguishing features ⇒ page 300) • This condenser manufactured by “Showa / Keihin” is currently only installed on vehicles produced in China.

Protected by copyright. Copying for private or commercial purposes, in part or in whole, is not permitted unless authorised by AUDI AG. AUDI AG does not guarantee or accept any liability with respect to the correctness of information in this document. Copyright by AUDI AG.

Protected by copyright. Copying for private or commercial purposes, in part or in whole, is not permitted unless authorised by AUDI AG. AUDI AG does not guarantee or accept any liability with respect to the correctness of information in this document. Copyright by AUDI AG.

Note

- *Starting with the product changeover in March 2012, Audi A4 and Audi A5 vehicles (except RS models) are no longer available with 8-cyl. engines.*
- *The air conditioner compressors fitted at the start of production were manufactured by "Denso" (type "6 SEU 14" for vehicles with 4-cyl. and 6-cyl. engine and type "7 SEU 17" for vehicles with 8-cyl. engine); these air conditioner compressors do not have a magnetic clutch (they are driven continuously by the engine). In model year 2012, the air conditioner compressor type "6 SEU 14" is gradually being replaced by type "6 SES 14". Air conditioner compressors produced by other manufacturers may also be fitted at a later date (depending on the engine) ⇒ Electronic parts catalogue and ⇒ Heating, air conditioning; Rep. gr. 87 ; Refrigerant circuit (vehicle-specific Workshop Manual).*
- *From model year 2012 onwards, air conditioner compressors with an additional air conditioning system magnetic clutch - N25- on the pulley (type "6 SAS 14") were gradually introduced for vehicles with certain engines (e.g. vehicles with 4-cyl. TDI engine) ⇒ Heating, air conditioning; Rep. gr. 87 ; Refrigerant circuit (vehicle-specific Workshop Manual) and ⇒ Electronic parts catalogue .*
- *From August 2011 onwards, air conditioners with air conditioning system magnetic clutch - N25- are gradually being introduced for certain 4-cyl. TDI engines ⇒ Electronic parts catalogue .*
- *From March 2012 onwards, the refrigerant circuit (air conditioner compressor, condenser, evaporator etc.) was gradually modified depending on the engine. This means that the refrigerant and refrigerant oil capacity for these vehicles has also changed (indicated on label for refrigerant circuit) ⇒ page 336 ⇒ Heating, air conditioning; Rep. gr. 87 ; Refrigerant circuit (vehicle-specific Workshop Manual) and ⇒ Electronic parts catalogue .*
- *From June 2012 onwards, condensers manufactured by "Showa / Keihin" (part number 8KD xxx xxx) are gradually being installed on vehicles produced in China. This condenser has a different internal design, thus resulting in a different refrigerant capacity. Identification ⇒ page 300*
- *From October 2013 onwards, condensers manufactured by "Showa/Keihin" with part number 8T0 xxx xxx and index "D" or later are gradually being installed in all vehicles (apart from the RS models). This condenser has a different structure (flat tubes are not as high (1.5 mm instead of 2.0 mm), therefore the internal volume is smaller) than the condenser manufactured by "Showa/Keihin" with part number 8T0 xxx xxx and index "C" or earlier, therefore the refrigerant capacity is also different. Identification ⇒ page 300*
- *If a condenser manufactured by "Showa/Keihin" with part number 8T0 xxx xxx and index "D" or later or a condenser manufactured by "Denso" is installed in a vehicle in which a condenser manufactured by "Showa/Keihin" with part number 8T0 xxx xxx and index "C" or earlier (or a condenser with part number 8K0 xxx xxx or 8KD xxx xxx) was previously installed, then the capacity valid for this condenser must be added (see table). The same applies if a condenser manufactured by "Denso" is replaced with a condenser with a different manufacturer or part number. In addition, the capacity specified on the label in the vehicle is to be checked and amended if necessary or the existing label is to be replaced with one indicating the correct capacity (affix over old label).*

- *From the outside, the modified components (air conditioner compressor, condenser) can only be identified by the part numbers (label on air conditioner compressor, type plate or lettering on condenser) ⇒ page 300 and ⇒ Electronic parts catalogue .*
- *Distinguishing features of condensers ⇒ page 300*

Audi Q5 and Audi Q5 hybrid

Note

Also applies for the Audi SQ5.

Vehicle model	Production period	Capacity in grams	Differing characteristics of this refrigerant circuit
Audi Q5	From 09.08 to 06.12 / 08.12 (gradual change-over; see notes)	570 +/- 20	• Air conditioner compressor without magnetic clutch with part number 8K0 xxx xxx (manufactured by “Denso”, type “6 SEU 14”) • Air conditioner compressor with magnetic clutch with part number 8T0 xxx xxx (type “6 SAS 14”) • Condenser with part number 8K0 xxx xxx, manufactured by “Denso” or “Showa / Keihin” (distinguishing features ⇒ page 300)
	From 06.12/08.12 to 10.13 (gradual change-over; see notes)	550 +/- 15	• Air conditioner compressor with part number 8T0 xxx xxx (manufactured by “Denso”, with and without magnetic clutch, type “6 SES 14” or “6 SAS 14”) • Condenser with part number 8T0 xxx xxx manufactured by “Denso” or manufactured by “Showa/Keihin” with same part number and index “D” or later (distinguishing features ⇒ page 300) • The condensers manufactured by “Denso” are not currently being installed in the Audi Q5 (mainly installed in the Audi A4 and Audi A5 with 4-cyl. engine; no decision has been made about use in the Audi Q5). Identification ⇒ page 300 • The condensers manufactured by “Showa/Keihin” with part number 8T0 xxx xxx and index “D” or later will be gradually installed in all vehicles from 10.13 onwards.

Protected by copyright. Copying for private or commercial purposes, in part or in whole, is not permitted unless authorised by AUDI AG. AUDI AG does not guarantee or accept any liability with respect to the correctness of information in this document. Copyright by AUDI AG.

Vehicle model	Production period	Capacity in grams	Differing characteristics of this refrigerant circuit
	From 06.12/08.12 to 10.13 (gradual change-over; see notes)	630 +/- 15	• Air conditioner compressor with part number 8T0 xxx xxx (manufactured by “Denso”, with and without magnetic clutch, type “6 SES 14” or “6 SAS 14”) • Condenser manufactured by “Showa/ Keihin” with part number 8T0 xxx xxx and index “C” or earlier (distinguishing features ⇒ page 300) • The condensers manufactured by “Showa/Keihin” with part number 8T0 xxx xxx and index “C” or earlier will be installed in the Audi Q5 as of the change-over on 06.12 or 08.12 (no decision has been made about the use of the “Denso” condenser in the Audi Q5; see below for vehicles manufactured in China). • The capacity valid as of 10.13 applies if a condenser with part number 8T0 xxx xxx and index “D” or later is installed instead of the condenser with part number 8T0 xxx xxx and index “C” or earlier
	From 10.13 onwards (gradual use)	550 +/- 15	♦ Air conditioner compressor (manufacturer “Denso”) all versions, belt-driven, with and without magnetic clutch ♦ Condenser manufactured by “Showa/ Keihin” with part number 8T0 xxx xxx and index “D” or later (distinguishing features ⇒ page 300) ♦ Does not apply to certain vehicles manufactured in China, see notes.
	From 08.12 onwards (only for certain vehicles manufactured in China; see notes)	600 +/- 15	• Air conditioner compressor with part number 8T0 xxx xxx (manufactured by “Denso”, with and without magnetic clutch, type “6 SES 14” or “6 SAS 14”) • Condenser with part number 8KD xxx xxx, manufactured by “Showa / Keihin” (distinguishing features ⇒ page 300) • The condenser manufactured by “Showa/Keihin” with part number 8KD xxx xxx is currently only installed in vehicles produced in China. • If a condenser with another part number (e.g. 8T0 xxx xxx and index “D” or later) is installed instead of the condenser with part number 8KD xxx xxx, the capacity specified for this condenser applies.

Protected by copyright. Copying for private or commercial purposes, in part or in whole, is not permitted unless authorised by AUDI AG. AUDI AG does not guarantee or accept any liability with respect to the correctness of information in this document. Copyright by AUDI AG.

Vehicle model	Production period	Capacity in grams	Differing characteristics of this refrigerant circuit
Audi Q5 hybrid	From 05.11 to 07.12 (see notes)	840 +/- 20 (see notes)	• Electrically driven air conditioner compressor • Condenser with part number 8R0 xxx xxx, manufactured by "Denso" (distinguishing features ⇒ page 300) • Air conditioner operating and display unit (Climatronic control unit - J255- with part number 8Rx xxx xxx and an air conditioning unit with part number 8Kx xxx xxx ⇒ Electronic parts catalogue and ⇒ Heating, air conditioning; Rep. gr. 87 ; Refrigerant circuit (vehicle-specific Workshop Manual). • With second evaporator in battery cooling module
	From 07.12 onwards	900 +/- 15 ♦ The refrigerant capacity of these vehicles was originally 840 g from 07.12 to 10.13, but this was then increased to 900 g (see notes).	• Electrically driven air conditioner compressor • Condenser with part number 8R0 xxx xxx, manufactured by "Denso" (distinguishing features ⇒ page 300) • Air conditioner operating and display unit (Climatronic control unit - J255- with part number 8Kx xxx xxx and an air conditioning unit with part number 8Tx xxx xxx ⇒ Electronic parts catalogue and ⇒ Heating, air conditioning; Rep. gr. 87 ; Refrigerant circuit (vehicle-specific Workshop Manual). • With second evaporator in battery cooling module

Protected by copyright. Copying for private or commercial purposes, in part or in whole, is not permitted unless authorised by AUDI AG. AUDI AG does not guarantee or accept any liability with respect to the correctness of information in this document. Copyright by AUDI AG.

Note

- *At the start of production, all vehicles (except the Audi Q5 hybrid) are fitted with a mechanically driven air conditioner compressor manufactured by "Denso" (e.g. type "6 SEU 14"); these air conditioner compressors do not have a magnetic clutch (they are driven continuously by the engine). In model year 2012, the air conditioner compressor type "6 SEU 14" is gradually being replaced by type "6 SES 14". Air conditioner compressors produced by other manufacturers may also be fitted at a later date (depending on the engine) ⇒ Electronic parts catalogue and ⇒ Heating, air conditioning; Rep. gr. 87 ; Refrigerant circuit (vehicle-specific Workshop Manual).*
- *From model year 2012 onwards, air conditioner compressors with an additional air conditioning system magnetic clutch - N25- on the pulley (type "6 SAS 14") were gradually introduced for vehicles with certain engines (e.g. vehicles with 4-cyl. TDI engine) ⇒ Heating, air conditioning; Rep. gr. 87 ; Refrigerant circuit (vehicle-specific Workshop Manual) and ⇒ Electronic parts catalogue .*
- *From August 2011 onwards, air conditioners with air conditioning system magnetic clutch - N25- are gradually being introduced for certain 4-cyl. TDI engines ⇒ Electronic parts catalogue .*
- *From June 2012 onwards, the refrigerant circuit (air conditioner compressor, condenser, evaporator etc.) was gradually modified depending on the engine. This means that the refrigerant and refrigerant oil capacity for these vehicles has also changed (indicated on label for refrigerant circuit) ⇒ Heating, air conditioning; Rep. gr. 87 ; Refrigerant circuit (vehicle-specific Workshop Manual) and ⇒ Electronic parts catalogue .*
- *From June 2012 onwards, condensers manufactured by "Showa/Keihin" (part number 8KD xxx xxx) are gradually being installed on vehicles produced in China. This condenser has a different internal design, thus resulting in a different refrigerant capacity. Identification ⇒ page 300*
- *From October 2013 onwards, condensers manufactured by "Showa/Keihin" with part number 8T0 xxx xxx and index "D" or later are gradually being installed in all vehicles (apart from the RS models). This condenser has a different structure (flat tubes are not as high (1.5 mm instead of 2.0 mm), therefore the internal volume is smaller) than the condenser manufactured by "Showa/Keihin" with part number 8T0 xxx xxx and index "C" or earlier, therefore the refrigerant capacity is also different. Identification ⇒ page 300*
- *If a condenser manufactured by "Showa/Keihin" with part number 8T0 xxx xxx and index "D" or later or a condenser manufactured by "Denso" is installed in a vehicle in which a condenser manufactured by "Showa/Keihin" with part number 8T0 xxx xxx and index "C" or earlier (or a condenser with part number 8K0 xxx xxx or 8KD xxx xxx) was previously installed, then the capacity valid for this condenser must be added (see table). The same applies if a condenser manufactured by "Denso" is replaced with a condenser with a different manufacturer or part number. In addition, the capacity specified on the label in the vehicle is to be checked and amended if necessary or the existing label is to be replaced with one indicating the correct capacity (affix over old label).*
- *From the outside, the modified components (air conditioner compressor, condenser) can only be identified by the part numbers (label on air conditioner compressor, type plate or lettering on condenser) ⇒ page 300 and ⇒ Electronic parts catalogue .*

This document is protected by copyright. Copying or publication for commercial purposes, in part or in whole, is not permitted unless authorised by AUDI AG. AUDI AG does not guarantee or accept any liability with respect to the correctness of information in this document. Copyright by AUDI AG.

- *At the start of production, the Audi Q5 hybrid is fitted with an electrically driven "Denso" air conditioner compressor (electrical air conditioner compressor - V470- with control unit for air conditioning compressor - J842-). There is no provision for an air conditioner compressor regulating valve - N280- on this air conditioner compressor.*
- *From October 2013 onwards, the refrigerant quantity for the refrigerant circuit on the Audi Q5 Hybrid was increased from 840 g to 900 g. The increased quantity of refrigerant applies retroactively to all vehicles from July 2012 onwards with an operating and display unit for the air conditioning, the control unit for Climatronic - J255- with part number 8Kx xxx xxx and an air conditioning unit with part number 8Tx xxx xxx (different software and different evaporator in the air conditioning unit) with the next filling. The refrigerant circuit does not have to be specially emptied to fill it with the increased quantity. It is enough to pour in the increased quantity e.g. after performing an operation on the refrigerant circuit for which emptying and refilling is required anyway. On vehicles manufactured up to October 2013, check whether the increased quantity of refrigerant has already been added during a previous workshop visit and the indicated capacity on the label has been changed. If not, check the refrigerant capacity on the label and if necessary stick on a new label with the correct capacity and language ⇒ Electronic parts catalogue and ⇒ Heating, air conditioning; Rep. gr. 87 ; Installation location overview - Air conditioning (vehicle-specific Workshop Manual). If no label with the correct capacity and the appropriate language is available, alter the capacity indicated on the existing label accordingly with a waterproof pen. If necessary, subsequently fill the refrigerant circuit with the higher refrigerant quantity indicated above.*
- *Distinguishing features of condensers* ⇒ page 300

Audi RS 4, Audi RS 5

Note

Also applies for the Audi RS 5 Cabriolet.

Vehicle model	Production period	Capacity in grams	Differing characteristics of this refrigerant circuit
Audi RS 4 and Audi RS 5	♦ RS 4 from 05.12 onwards ♦ RS 5 from 03.10 onwards	570 +/- 20	• Air conditioner compressor without magnetic clutch with part number 8K0 xxx xxx (manufactured by "Denso", type "7 SEU 17") • Condenser with part number 8K0 xxx xxx, manufactured by "Denso" (distinguishing features ⇒ page 300)

Protected by copyright. Copying for private or commercial purposes, in part or in whole, is not permitted unless authorised by AUDI AG. AUDI AG does not guarantee or accept any liability with respect to the correctness of information in this document. Copyright by AUDI AG.

Note

- *The air conditioner compressors fitted at the start of production were manufactured by "Denso" (type "7 SEU 17"); these air conditioner compressors do not have a magnetic clutch (they are driven continuously by the engine via a shaft). Air conditioner compressors produced by other manufacturers may also be fitted at a later date (depending on the engine) ⇒ Electronic parts catalogue and ⇒ Heating, air conditioning; Rep. gr. 87 ; Refrigerant circuit (vehicle-specific Workshop Manual).*
- *On the Audi RS 4 and RS 5 there is no changeover of the refrigerant circuit in model year 2012 (see other versions).*

Distinguishing features of condensers

Note

- *Different condensers are installed in these vehicles depending on the production period, vehicle version and engine ⇒ Electronic parts catalogue . The distinguishing features of these condensers are the internal design and the internal volume. This means that the capacity of the refrigerant circuit varies depending on the condenser. Therefore it is important to observe the version of the condenser when determining the refrigerant capacity.*
- *Currently condensers by different manufacturers ("Denso" and "Showa/Keihin") are installed; they can be identified by certain features.*
- *The design of condensers by one manufacturer can also vary; from the outside this can only be identified by the part number. Due to the differences in design (flow distribution, internal volume), the refrigerant capacity for the refrigerant circuit varies* *⇒ page 27* .
- *These condensers are available in different versions with different designs (can be identified e.g. by part numbers 8K0 xxx xxx , 8Rx xxx xxx, 8KD xxx xxx or 8T0 xxx xxx)* *⇒ page 27* ; *for the correct version refer to the ⇒ Electronic parts catalogue .*

Protected by copyright. Copying for private or commercial purposes, in part or in whole, is not permitted unless authorised by AUDI AG. AUDI AG does not guarantee or accept any liability with respect to the correctness of information in this document. Copyright by AUDI AG.

Features of a condenser manufactured by “Denso” -A-

- End strip (top) -B-: U-profile
- Part number and data of condenser manufacturer -C- (currently printed on directly); allocation ⇒ Electronic parts catalogue
- Receiver -D- integrated in condenser (desiccant cartridge can be renewed after removing plastic plug/cap -E-) ⇒ Heating, air conditioning; Rep. gr. 87 ; Refrigerant circuit (vehicle-specific Workshop Manual).

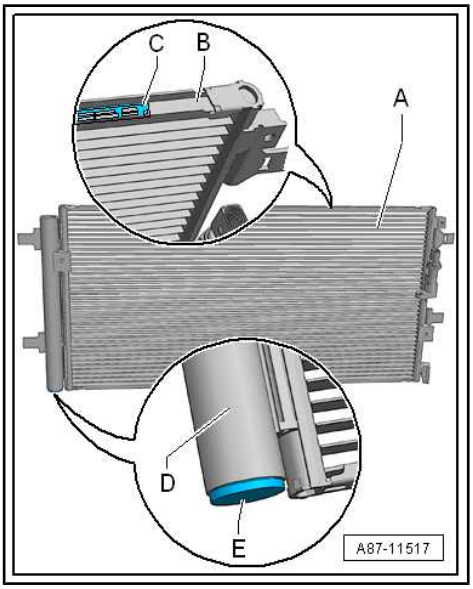

Features of a condenser manufactured by “Showa/Keihin” -A-

- End strip (top) -B-: flat profile
- Part number and data of condenser manufacturer -C- (currently on a label bonded on); allocation ⇒ Electronic parts catalogue
- Receiver -D- attached to condenser (receiver -D- can be renewed after removing bolts -E-) ⇒ Heating, air conditioning; Rep. gr. 87 ; Refrigerant circuit (vehicle-specific Workshop Manual).

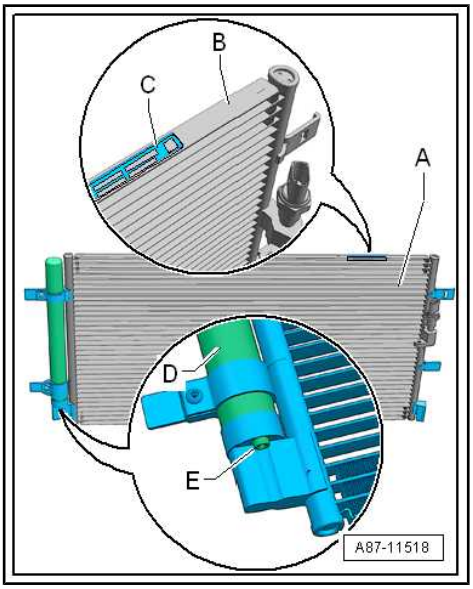

Note

From October 2013 onwards, condensers manufactured by “Showa/Keihin” with part number 8T0 xxx xxx and index “D” or later are gradually being installed in all vehicles (apart from the RS models). This condenser has a different structure (flat tubes are not as high (1.5 mm instead of 2.0 mm), therefore the internal volume is smaller) than the condenser manufactured by “Showa/Keihin” with part number 8T0 xxx xxx and index “C” or earlier, therefore the refrigerant capacity is also different. The only way to tell these condensers apart is by the part number; there is no way to unambiguously determine the different flat tube heights using workshop equipment.

Protected by copyright. Copying for private or commercial purposes, in part or in whole, is not permitted unless authorised by AUDI AG. AUDI AG does not guarantee or accept any liability with respect to the correctness of information in this document. Copyright by AUDI AG.

10.1.12 Capacities for Audi A4 (8W_) 2016 ►, Audi A4 (86_ for China) 2017 ►, Audi A5 (F5_) 2016 ►, Audi Q5 (FY_) 2017 ►, Audi Q5 (87_ for China) 2019 ►

Note

Also applies for Audi A4 allroad, Audi A4 (type 86_ for China), Audi A5 (all versions), Audi Q5 (type 87_ for China) as well as S and RS models.

Characteristics of refrigerant circuit:

- Expansion valve

- Receiver
- Refrigerant line with internal heat exchanger
- Mechanically driven “Denso” or “Sanden” air conditioner compressor with air conditioner compressor regulating valve - N280- , with or without air conditioning system magnetic clutch - N25- (depending on engine) ⇒ Heating, air conditioning; Rep. gr. 87 ; Refrigerant circuit (vehicle-specific Workshop Manual) and ⇒ Electronic parts catalogue .

Protected by copyright. Copying and distribution for commercial purposes, in part or in whole, is not permitted unless authorised by AUDI AG. AUDI AG does not guarantee or accept any liability with respect to the correctness of information in this document. Copyright by AUDI AG.

Vehicle model	Production period	Capacity in grams	Differing characteristics of this refrigerant circuit
Audi A4 Audi A5 Audi Q5	From 07.15 onwards	590 +/- 15	• None

10.1.13 Capacities for Audi 100/Audi A6 (4A_) ► 1998

Characteristics of refrigerant circuit:

- Restrictor not coloured
- Reservoir
- “Denso” or “Zexel/Valeo” air conditioner compressor ⇒ Heating, air conditioning; Rep. gr. 87 ; Refrigerant circuit (vehicle-specific Workshop Manual) and ⇒ Electronic parts catalogue

Vehicle model	Production period	Capacity in grams	Differing characteristics of this refrigerant circuit
Audi 100 / Audi A6	From 10.92 to 03.97	750 + 50	• None

Note

- *If a vehicle is fitted with a yellow-coloured restrictor as replacement for a non-coloured restrictor, add 50 g more refrigerant than specified in the table. In addition, the capacity specified on the label in the vehicle is to be checked and amended if necessary or the existing label is to be replaced with one indicating the correct capacity (affix over old label).*
- *Restrictors with modified hole (coloured) have been installed at the factory since November 1997. In order to distinguish between the two restrictor versions, the one with the smaller hole (1.54 mm) is yellow-coloured. The restrictor with the larger hole (1.83 mm) is not coloured.*
- *The Audi 100 / Audi A6 features different air conditioner compressors depending on the engine and production period. Exclusive use was made at the start of production of "Zexel / Valeo" air conditioner compressors. As of Model Year 1996, "Denso" air conditioner compressors were gradually introduced for vehicles with 6-cylinder engines.*
- *The air conditioner compressor designation "Zexel / Valeo" was changed as of 2006 to "Valeo".*
- *From September 1994, production was gradually switched from condenser 4A0 260 403 AB to condenser 4A0 260 403 AC.*
- *The refrigerant capacity of 750+50 g applies to all Audi 100 models (regardless of condenser).*
- *Only condensers with part number 4A0 260 403 AC are now available as replacement parts (if necessary make use of label, part no. 8A0 010 126 P).*
- *After charging the refrigerant circuit of vehicles manufactured up to October 1994, check the capacity stated on the label in the vehicle and amend if necessary or affix the label, part no. 8A0 010 126 P over the existing label (modified capacity) ⇒ Heating, air conditioning; Rep. gr. 87 ; Installation location overview - Air conditioning (vehicle-specific Workshop Manual) and ⇒ Electronic parts catalogue .*

10.1.14 Capacities for Audi A6 (4B_) 1998 ► and Audi allroad (4B_) ► 2005

Characteristics of refrigerant circuit:

- Restrictor
- Reservoir
- "Denso" or "Zexel / Valeo" air conditioner compressor ⇒ Heating, air conditioning; Rep. gr. 87 ; Installation location overview - Air conditioning (vehicle-specific Workshop Manual) and ⇒ Electronic parts catalogue

Protected by copyright. Copying for private or commercial purposes, in part or in whole, is not permitted unless authorised by AUDI AG. AUDI AG does not guarantee or accept any liability with respect to the correctness of information in this document. Copyright by AUDI AG.

Protected by copyright. Copying for private or commercial purposes, in part or in whole, is not permitted unless authorised by AUDI AG. AUDI AG does not guarantee or accept any liability with respect to the correctness of information in this document. Copyright by AUDI AG.

Vehicle model	Production period	Capacity in grams	Differing characteristics of this refrigerant circuit
Audi A6	From 04.97 to 11.97	800 + 50	• Restrictor not coloured • Air conditioner unit version “1” ⇒ Heating, air conditioning; Rep. gr. 87 ; Installation location overview - Air conditioning (vehicle-specific Workshop Manual). • Condenser with flat tube dimensions 20 mm x 3 mm ⇒ page 308
	From 11.97 to 08.98	850 + 50	• Restrictor coloured (yellow) • Air conditioner unit version “1” ⇒ Heating, air conditioning; Rep. gr. 87 ; Installation location overview - Air conditioning (vehicle-specific Workshop Manual). • Condenser with flat tube dimensions 20 mm x 3 mm ⇒ page 308

Note

- *Restrictors with a modified hole have been installed at the factory since November 1997 (yellow-coloured). The capacity was increased by 50 g for vehicles in which a yellow-coloured restrictor was installed.*
- *In order to distinguish between the two restrictor versions, the one with the smaller hole (1.54 mm) is yellow-coloured. The restrictor with the larger hole (1.83 mm) is not coloured.*
- *If a vehicle is fitted with a coloured restrictor as replacement for a non-coloured restrictor, add 50 g more refrigerant (see table). In addition, the capacity specified on the label in the vehicle is to be checked and amended if necessary or the existing label is to be replaced with one indicating the correct capacity (affix over old label).*
- *The Audi A6 is fitted with different air conditioner compressors depending on the engine and production period.*
- *In August/September 1998, production was gradually switched from air conditioning unit version “1” to air conditioning unit version “2”. A reduction in capacity was achieved as the evaporator was also modified together with the air conditioning unit.*
- *The two air conditioning unit versions can be identified on the basis of certain characteristics described in the vehicle-specific Workshop Manual ⇒ Heating, air conditioning; Rep. gr. 87 ; Installation location overview - Air conditioning (vehicle-specific Workshop Manual) and ⇒ Electronic parts catalogue .*
- *The logo of the compressor manufacturer “Zexel” attached to the air conditioner compressor was modified from “Zexel” to “Valeo” from year of production 2006 onwards (change in manufacturer's name).*

Vehicle model	Production period	Capacity in grams	Differing characteristics of this refrigerant circuit
Audi A6 • With 4-cyl. engine • With 6-cyl. petrol engine	From 08.98 to 04.99	750 + 50	• Restrictor coloured (yellow) • Air conditioner unit version “2” ⇒ Heating, air conditioning; Rep. gr. 87 ; Installation location overview - Air conditioning (vehicle-specific Workshop Manual). • Condenser with part no. 4B0 260 401 (403) and index “D”, “E” or “F” (flat tube dimensions 20 mm x 3 mm ⇒ page 308) ⇒ Electronic parts catalogue .
Audi A6 • With 6-cyl. diesel engine	♦ From 08.98 to 10.98 ♦ From 12.98 to 10.99 (see notes)	750 + 50	• Restrictor coloured (yellow) • Air conditioner unit version “2” ⇒ Heating, air conditioning; Rep. gr. 87 ; Installation location overview - Air conditioning (vehicle-specific Workshop Manual). • Condenser with part no. 4B0 260 401 (403) and index “D”, “E” or “F” (flat tube dimensions 20 mm x 3 mm ⇒ page 308) ⇒ Electronic parts catalogue .

Vehicle model	Production period	Capacity in grams	Differing characteristics of this refrigerant circuit
Audi A6/ Audi allroad • With 6-cyl. diesel engine	♦ From 10.98 to 12.98 ♦ From 10.99 onwards (see notes)	550 + 50	• Restrictor coloured (yellow) • Air conditioner unit version “2 or 3” ⇒ Heating, air conditioning; Rep. gr. 87 ; Installation location overview - Air conditioning (vehicle-specific Workshop Manual). • Condenser with part no. 4B0 260 401 (403) and index “G” or “R” (flat tube dimensions 16 mm x 1.7 mm ⇒ page 308) and ⇒ Electronic parts catalogue
Audi A6/ Audi allroad • With 4-cyl. engine except 2.0 ltr. • With 6-cyl. petrol engine except 3.0 ltr. engine • With 6-cyl. diesel engine (see notes)	From 04.99	650 + 50	• Restrictor coloured (yellow) • Air conditioner unit version “2 or 3” ⇒ Heating, air conditioning; Rep. gr. 87 ; Installation location overview - Air conditioning (vehicle-specific Workshop Manual). • Condenser with part no. 4B0 260 401 (403) and index “H”, “J”, “K”, “S”, “T” or “N” (flat tube dimensions 18 mm x 1.7 mm ⇒ page 308) and ⇒ Electronic parts catalogue .

Protected by copyright. Copying for private or commercial purposes, in part or in whole, is not permitted unless authorised by AUDI AG. AUDI AG does not guarantee or assume any liability with respect to the correctness of information in this document. Copyright by AUDI AG.

Protected by copyright. Copying for private or commercial purposes, in part or in whole, is not permitted unless authorised by AUDI AG. AUDI AG does not guarantee or accept any liability with respect to the correctness of information in this document. Copyright by AUDI AG.

Vehicle model	Production period	Capacity in grams	Differing characteristics of this refrigerant circuit
Audi A6 • With 2.0 ltr. 4-cyl. engine • With 3.0 ltr. 6-cyl. engine	From 05.01 onwards	550 + 50	• Restrictor coloured (yellow) • Air conditioner unit version “3” ⇒ Heating, air conditioning; Rep. gr. 87 ; Installation location overview - Air conditioning (vehicle-specific Workshop Manual). • Condenser with part no. 8E0 260 401 (403) and index A (flat tube dimensions 18 mm x 1.7 mm ⇒ page 308) and ⇒ Electronic parts catalogue . • Air conditioner compressor regulating valve - N280-

Note

- *Condensers with air conditioning system pressure switch - F129- or high-pressure sender - G65- are supplied for factory use as part no. XXX XXX 401 X. This condenser is supplied without an air conditioning system pressure switch - F129- or high-pressure sender - G65- for replacement purposes as part no. XXX XXX 403 X.*
- *From 10.98 to 12.98 vehicles with 6-cyl. diesel engine (initially about 10000) were fitted with condensers of a different design. The capacity is different for vehicles with these condensers. The condensers can be identified on the basis of certain characteristics and the part number ⇒ page 308 .*
- *The Audi A6 is fitted with different air conditioner compressors depending on the engine and production period.*
- *When renewing a condenser, pay attention to the index of the part number (different flat tube versions, flat tube dimensions 16 mm x 1.7 mm, 18 mm x 1.7 mm or 20 mm x 3 mm) and the different capacities. If a condenser with a different part number index is installed, the capacity specified on the label must be checked and amended if necessary or a label indicating the modified capacity must be affixed over the existing label. The part number can be found on a sticker attached to the bottom of the condenser.*
- *From 04.99 onwards, production was gradually switched from condensers with flat tube dimensions 20 mm x 3 mm to condensers with flat tube dimensions 18 mm x 1.7 mm or 16 mm x 1.7 mm. The change in production took place gradually during the course of 1999 depending on the engine and existing supplies of the different versions. Refer to the Electronic parts catalogue for precise assignment of the different condensers ⇒ Electronic parts catalogue .*
- *Vehicles with 6-cyl. diesel engine produced from 04.99 onwards may be equipped with a condenser with index “D”, “G”, “R” or “K”. Observe the different capacities ⇒ Heating, air conditioning; Rep. gr. 87 ; Installation location overview - Air conditioning (vehicle-specific Workshop Manual) and ⇒ Electronic parts catalogue .*

Protected by copyright. Copying for private or commercial purposes, in part or in whole, is not permitted unless authorised by AUDI AG. AUDI AG does not guarantee or accept any liability with respect to the correctness of information in this document. Copyright by AUDI AG.

Vehicle model	Production period	Capacity in grams	Differing characteristics of this refrigerant circuit
Audi A6 • With 8-cyl. engine	• Up to 03.99 And again • From 02.00 onwards	550 + 50	• Restrictor coloured (yellow) • Air conditioner unit version “2 or 3” ⇒ Heating, air conditioning; Rep. gr. 87 ; Installation location overview - Air conditioning (vehicle-specific Workshop Manual). • Condenser with part no. 4B3 260 401 (403) B, D, E (flat tube dimensions 18 mm x 1.7 mm ⇒ page 308) ⇒ Electronic parts catalogue .
Audi A6 • With 8-cyl. engine	From 03.99 to 02.00	650 + 50	• Restrictor coloured (yellow) • Air conditioner unit version “2” ⇒ Heating, air conditioning; Rep. gr. 87 ; Installation location overview - Air conditioning (vehicle-specific Workshop Manual). • Condenser with part no. 4B3 260 401 (403) C (flat tube dimensions 18 mm x 1.7 mm ⇒ page 308) ⇒ Electronic parts catalogue .

Note

- *The Audi A6 with 8-cyl. engine is fitted with “Denso” air conditioner compressors.*
- *In August/ September 1998 production was gradually switched from air conditioning unit version “1” to air conditioning unit version “2”. Vehicles with an 8-cyl. engine are only fitted with air conditioning unit from version “2” onwards.*
- *The different air conditioning unit versions can be identified on the basis of certain characteristics described in the Workshop Manual ⇒ Heating, air conditioning; Rep. gr. 87 ; Installation location overview - Air conditioning (vehicle-specific Workshop Manual).*
- *Different condensers were installed in vehicles with 8-cylinder engines. Exclusive use was made for USA vehicles of condensers with part no. 4B3 260 401 (403) C, D, E.*
- *In March 1999, production was gradually switched from condensers with part number 4B3 260 401 (403) B to condensers with part number 4B3 260 401 (403) C.*
- *If the condenser fitted is replaced by one with a different part number, amend the capacity specified on the label or affix a label with the modified capacity over the existing label. The part number can be found on a sticker attached to the bottom of the condenser ⇒ Heating, air conditioning; Rep. gr. 87 ; Installation location overview - Air conditioning (vehicle-specific Workshop Manual) and ⇒ Electronic parts catalogue .*

Deduct the flat tube dimensions from the condenser

Note

- *Production was gradually switched from calendar week 45, 1998 onwards (initially for Audi A6 with 6-cyl. diesel engine) to a condenser with smaller flat tubes.*
- *Pay attention to the part number when renewing a condenser (sometimes the only distinguishing feature) ⇒ Electronic parts catalogue .*

Condensers -A- with flat tube dimensions -B- = 20 mm and -C- = 3.0 mm must be filled with more refrigerant than condensers -D- with flat tube dimensions -E- = 18 mm or 16 mm and -F- = 1.7 mm ⇒ Electronic parts catalogue .

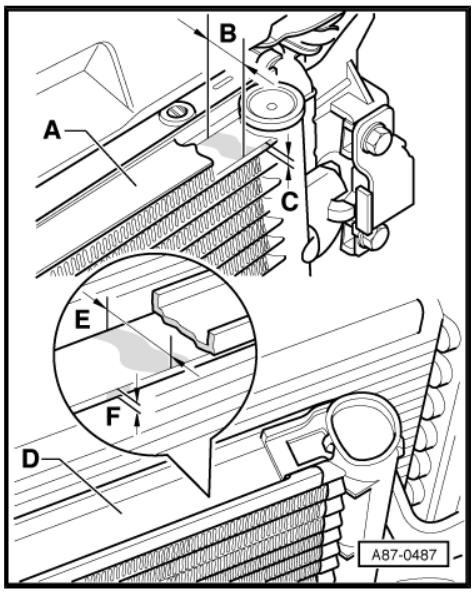

Pay attention to flat tube dimensions if condenser is renewed. If a condenser with different dimensions is to be fitted, also renew label -A- indicating the refrigerant R134a capacity or remove the old capacity and record the new capacity using a waterproof pen ⇒ Electronic parts catalogue .

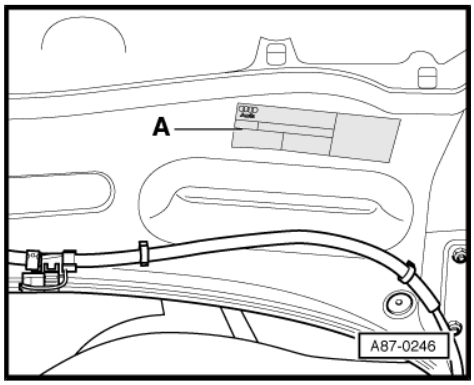

10.1.15 Capacities for Audi A6 (4F_) 2005 ►

Note

Also applies to the Audi S6 and Audi RS 6.

Characteristics of refrigerant circuit:

- Restrictor (red-coloured).
- Reservoir
- “Denso” air conditioner compressor with air conditioner compressor regulating valve -N280- (no magnetic clutch)

Protected by copyright. Copying for private or commercial purposes, in part or in whole, is not permitted unless authorised by AUDI AG. AUDI AG does not guarantee or accept any liability with respect to the correctness of information in this document. Copyright by AUDI AG.

Vehicle model	Production period	Capacity in grams	Differing characteristics of this refrigerant circuit
Audi A6/ S6	From 04.04 onwards	530 +/- 20	• Red-coloured restrictor
Audi RS 6	From 05.08 onwards	500 +/- 20	• Red-coloured restrictor • Condenser with smaller internal volume

Note

- *Replacement restrictors with different holes are available (yellow-coloured 1.54 mm, red-coloured 1.42 mm).*
- *Depending on manufacturer, colour of red restrictor may tend more towards orange.*
- *To avoid altering the cooling output of the air conditioner, only red-coloured restrictors are to be fitted.*
- *Different air conditioner compressors are fitted depending on the model ⇒ Heating, air conditioning; Rep. gr. 87 ; Installation location overview - Air conditioning (vehicle-specific Workshop Manual) and ⇒ Electronic parts catalogue .*
- *The condenser fitted on vehicles with a 10-cyl. TFSI engine (Audi RS 6) has a smaller internal volume than the condenser with other engines. For vehicles with a 10-cyl. TFSI engine the refrigerant capacity is thus also slightly less than for other vehicles ⇒ Electronic parts catalogue .*

10.1.16 Capacities for Audi A6 (4G_ or 4X_ for China) 2011 ►, Audi A7 (4G_ or 4X_ for China) 2011 ►, Audi A6 hybrid (4G_) 2012 ►, A6 e-tron (4G_) 2017 ►

Note

Protected by copyright. Copying for private or commercial purposes, in part or in whole, is not permitted unless authorised by AUDI AG. AUDI AG does not guarantee or accept any liability with respect to the correctness of information in this document. Copyright by AUDI AG.

- *Also applies to Audi S and RS models.*
- *RS models are fitted with a shallower condenser ⇒ Heating, air conditioning; Rep. gr. 87 ; Refrigerant circuit (vehicle-specific Workshop Manual) and ⇒ Electronic parts catalogue .*

Characteristics of refrigerant circuit:

- Expansion valve
- Receiver
- Refrigerant line with internal heat exchanger
- Mechanically driven “Denso” air conditioner compressor with air conditioner compressor regulating valve - N280- (and with air conditioning system magnetic clutch - N25- from model year 2014 onwards, depending on the engine) ⇒ Heating, air conditioning; Rep. gr. 87 ; Refrigerant circuit (vehicle-specific Workshop Manual) and ⇒ Electronic parts catalogue (all vehicles except Audi A6 hybrid).
- On vehicles with a high-voltage system (Audi A6 hybrid): electrically driven “Denso” air conditioner compressors ⇒ Heating,

air conditioning; Rep. gr. 87 ; Refrigerant circuit (vehicle-specific Workshop Manual) and ⇒ Electronic parts catalogue .

- On vehicles with a high-voltage system (Audi A6 e-tron): electrically driven “Sanden” air conditioner compressors ⇒ Heating, air conditioning; Rep. gr. 87 ; Refrigerant circuit (vehicle-specific Workshop Manual) and ⇒ Electronic parts catalogue .

Vehicle model	Production period	Capacity in grams	Differing characteristics of this refrigerant circuit
Audi A6	From 02.11 onwards	570^{+} / - 20	• None
Audi A7	From 10.10 onwards	570^{+} / - 20	• None
Audi RS 6 / RS 7	From 01.13 onwards	540^{+} / - 20	• Condenser with smaller internal volume
Audi A6 hybrid	From 11.11 onwards	860^{+}/- 15 (see notes)	• Electrically driven air conditioner compressor • With second evaporator in battery cooling module
Audi A6 e-tron	From 09.16 onwards	1000^{+} / - 15	• Electrically driven air conditioner compressor • With second evaporator in high-voltage battery heat exchanger

Protected by copyright. Copying for private or commercial purposes, in part or in whole, is not permitted unless authorised by AUDI AG. AUDI AG does not guarantee or accept any liability with respect to the correctness of information in this document. Copyright by AUDI AG.

Note

- *On certain versions for China the type designation 4X_ is used instead of 4G_.*
- *At the start of production, all vehicles except the Audi A6 hybrid (Audi A6 e-tron) were fitted with mechanically driven air conditioner compressors manufactured by "Denso". Air conditioner compressors produced by other manufacturers may also be fitted at a later date ⇒ Electronic parts catalogue and ⇒ Heating, air conditioning; Rep. gr. 87 ; Refrigerant circuit (vehicle-specific Workshop Manual).*
- *At the start of production, the Audi A6 hybrid is fitted with an electrically driven "Denso" air conditioner compressor (electrical air conditioner compressor - V470- with control unit for air conditioning compressor - J842-). There is no provision for an air conditioner compressor regulating valve - N280- on this air conditioner compressor.*
- *At the start of production, the Audi A6 e-tron is fitted with an electrically driven "Sanden" air conditioner compressor (electrical air conditioner compressor - V470- with control unit for air conditioning compressor - J842-). There is no provision for an air conditioner compressor regulating valve - N280- on this air conditioner compressor.*
- *At the start of production, the Audi A6 hybrid was fitted with an air conditioner compressor with a refrigerant oil quantity of 200 ccm. A capacity of 840 +/- 15 g for refrigerant was planned at the factory for these vehicles (specification on label for refrigerant). Shortly after the start of production, the refrigerant oil quantity was reduced to 160 ccm and the refrigerant quantity was raised to 860 +/- 15 g. In after-sales service, a quantity of 860 +/- 15 g of refrigerant always applies for this vehicle irrespective of the refrigerant oil quantity (if necessary, change capacity specification on label with a water-proof pen).*
- *In contrast to vehicles with other engines, on Audi RS 6 / RS 7 a condenser with a smaller internal volume is installed; therefore the refrigerant capacity for these vehicles is slightly lower than for other vehicles in this series ⇒ Electronic parts catalogue .*

Protected by copyright. Copying for private or commercial purposes, in part or in whole, is not permitted unless authorised by AUDI AG. AUDI AG does not guarantee or accept any liability with respect to the correctness of information in this document. Copyright by AUDI AG.

10.1.17 Capacities for Audi V8 (4C_) ► 1994

Characteristics of refrigerant circuit:

- Restrictor (not coloured).
- Reservoir
- "Zexel/Valeo" air conditioner compressor ⇒ Heating, air conditioning; Rep. gr. 87 ; Refrigerant circuit (vehicle-specific Workshop Manual) and ⇒ Electronic parts catalogue

Vehicle model	Production period	Capacity in grams	Differing characteristics of this refrigerant circuit
Audi V8	From 10.92 to 10.93	850 + 50	• None

Note

- *Replacement restrictors with different holes are available. If these vehicles are fitted with a yellow-coloured restrictor, add 50 g more refrigerant than specified in the table. After charging, amend capacity stated on label or affix label indicating new capacity.*
- *In order to distinguish between the different restrictor versions, the ones with a smaller hole are coloured (yellow or red). The red-coloured restrictor is not to be used for these vehicles.*
- *Depending on manufacturer, colour of red restrictor may tend more towards orange.*
- *The logo of the compressor manufacturer "Zexel" attached to the air conditioner compressor was modified from "Zexel" to "Valeo" from year of production 2006 onwards (change in manufacturer's name).*

10.1.18 Capacities for Audi A8 (4D_) 1994 ►

Characteristics of refrigerant circuit:

- Restrictor
- Reservoir
- "Denso" or "Zexel/Valeo" air conditioner compressor ⇒ Heating, air conditioning; Rep. gr. 87 ; Refrigerant circuit (vehicle-specific Workshop Manual) and ⇒ Electronic parts catalogue

Vehicle model	Production period	Capacity in grams	Differing characteristics of this refrigerant circuit
Audi A8	From 05.94 to 11.97	750 + 50	• Restrictor not coloured
	From 11.97	800 + 50	• Restrictor coloured (yellow)

Protected by copyright. Copying for private or commercial purposes, in part or in whole, is not permitted unless authorised by AUDI AG. AUDI AG does not guarantee or accept any liability with respect to the correctness of information in this document. Copyright by AUDI AG.

Note

- *Restrictors with a modified hole have been installed at the factory since November 1997 (yellow-coloured). The capacity was increased by 50 g for vehicles with a yellow-coloured restrictor.*
- *In order to distinguish between the different restrictor versions, the one with the smaller hole is coloured yellow (1.54 mm) or red (1.42 mm). The restrictor with the larger hole (1.83 mm) is not coloured.*
- *If a vehicle is fitted with a yellow-coloured restrictor as replacement for a non-coloured restrictor, add 50 g more refrigerant (see table). In addition, the capacity specified on the label in the vehicle is to be checked and amended if necessary or the existing label is to be replaced with one indicating the correct capacity (affix over old label). The red-coloured restrictor is not to be used for these vehicles.*
- *Exclusive use was made at the start of production of "Zexel / Valeo" air conditioner compressors. From model year 1996 onwards, production was gradually switched to "Denso" air conditioner compressors ⇒ Heating, air conditioning; Rep. gr. 87 ; Refrigerant circuit (vehicle-specific Workshop Manual) and ⇒ Electronic parts catalogue .*
- *The logo of the compressor manufacturer "Zexel" attached to the air conditioner compressor was modified from "Zexel" to "Valeo" from year of production 2006 onwards (change in manufacturer's name).*

10.1.19 Capacities for Audi A8 (4E_) 2003 ►

Characteristics of refrigerant circuit:

- Restrictor (red-coloured).
- Reservoir
- "Denso" air conditioner compressor with air conditioner compressor regulating valve - N280- (without magnetic clutch) ⇒ Heating, air conditioning; Rep. gr. 87 ; Refrigerant circuit (vehicle-specific Workshop Manual).

Vehicle model	Production period	Capacity in grams	Differing characteristics of this refrigerant circuit
Audi A8	From 10.02 onwards	620 +/- 20	• Red-coloured restrictor

Note

- *Replacement restrictors with different holes are available (yellow-coloured 1.54 mm, red-coloured 1.42 mm).*
- *Depending on manufacturer, colour of red restrictor may tend more towards orange.*
- *To avoid altering the cooling output of the air conditioner, only red-coloured restrictors are to be fitted.*
- *Different air conditioner compressors are fitted depending on version ⇒ Heating, air conditioning; Rep. gr. 87 ; Refrigerant circuit (vehicle-specific Workshop Manual) and ⇒ Electronic parts catalogue .*

Reproduction or duplication for private or commercial purposes, in part or in whole, is not permitted unless authorised by AUDI AG. AUDI AG does not guarantee or accept any liability with respect to the correctness of information in this document. Copyright by AUDI AG.

10.1.20 Capacities for Audi A8 (4H_) 2010 ►, Audi A8 hybrid (4H_) 2012 ►

Characteristics of refrigerant circuit:

- Expansion valve
- With one or two evaporator(s) depending on equipment
- Refrigerant line with internal heat exchanger
- Desiccant cartridge in receiver at condenser
- Mechanically driven “Denso” air conditioner compressor with air conditioner compressor regulating valve - N280- ⇒ Heating, air conditioning; Rep. gr. 87 ; Refrigerant circuit (vehicle-specific Workshop Manual) and ⇒ Electronic parts catalogue (all vehicles except Audi A8 hybrid).
- On vehicles with a high-voltage system (Audi A8 hybrid): electrically driven “Denso” air conditioner compressors ⇒ Heating, air conditioning; Rep. gr. 87 ; Refrigerant circuit (vehicle-specific Workshop Manual) and ⇒ Electronic parts catalogue .

Protected by copyright. Copying for private or commercial purposes, in part or in whole, is not permitted unless authorised by AUDI AG. AUDI AG does not guarantee or accept any liability with respect to the correctness of information in this document. Copyright by AUDI AG.

Caution

Different refrigerant and refrigerant oil capacities for vehicles with 8-cyl. TDI engine

- *For vehicles with 8-cylinder TDI engine: Due to the fitting location of the air conditioner compressor at the top of the engine, the amount of refrigerant oil required differs from the quantity indicated on the factory label of the air conditioner compressor.*

Vehicle model	Production period	Capacity in grams	Differing characteristics of this refrigerant circuit
Audi A8 (all engines except 8-cyl. TDI)	From 03.10 onwards		
♦ Vehicle with one evaporator		780 +/- 20	• One evaporator
♦ Vehicle with two evaporators		930 +/- 20	• Two evaporators
Audi A8 (only 8-cyl. TDI engine)	From 03.10 onwards		
♦ Vehicle with one evaporator		740 +/- 15	• One evaporator
♦ Vehicle with two evaporators		915 +/- 15	• Two evaporators

Vehicle model	Production period	Capacity in grams	Differing characteristics of this refrigerant circuit
Audi A8 hybrid	From 01.12 onwards	1080 +/- 15	• One evaporator in air conditioning unit • Electrically driven air conditioner compressor • Second evaporator in battery cooling module

Note

- *For vehicles with 8-cyl. TDI engine, the quantity of refrigerant oil in the refrigerant circuit was increased as of vehicle identification number 4H_ BN 018846 and the refrigerant capacity had to be accordingly reduced slightly. As the capacity specification on the label has not yet been changed, proceed as follows: On vehicles manufactured up to the vehicle identification number mentioned, check whether the refrigerant oil has already been topped up during a previous workshop visit. If not, add 50 ccm of refrigerant oil to the refrigerant circuit. Then correspondingly alter the refrigerant capacity specified on the label in waterproof ink and fill the refrigerant circuit with the quantity of refrigerant stated above. Finally make a record of the change made in the vehicle data. On vehicles manufactured as of the vehicle identification number mentioned, check the refrigerant capacity specified on the label, alter accordingly in waterproof ink if applicable and then fill the refrigerant circuit with the quantity of refrigerant specified above.*
- *At the start of production, all vehicles except the Audi A8 hybrid were fitted with mechanically driven air conditioner compressors manufactured by "Denso". Air conditioner compressors produced by other manufacturers may also be fitted at a later date ⇒ Electronic parts catalogue and ⇒ Heating, air conditioning; Rep. gr. 87 ; Refrigerant circuit (vehicle-specific Workshop Manual).*
- *At the start of production, the Audi A8 hybrid is fitted with an electrically driven "Denso" air conditioner compressor (electrical air conditioner compressor - V470- with control unit for air conditioning compressor - J842-).There is no provision for an air conditioner compressor regulating valve - N280- on this air conditioner compressor.*
- *At the start of production, the Audi A8 hybrid was fitted with an air conditioner compressor with a refrigerant oil quantity of 200 ccm. Shortly after the start of production, the refrigerant oil quantity was reduced to 160 ccm. In after-sales service, a quantity of 1080 +/- 15 g of refrigerant always applies for this vehicle irrespective of the refrigerant oil quantity (if necessary, change capacity specification on label with a water-proof pen).*

Protected by copyright. Copying for private or commercial purposes, in part or in whole, is not permitted unless authorised by AUDI AG. AUDI AG does not guarantee or accept any liability with respect to the correctness of information in this document. Copyright by AUDI AG.

10.1.21 Capacities for Audi Q7 (4L_) 2006

Audi Q7 (4L_) 2006 ►

Characteristics of refrigerant circuit:

- Expansion valve
- With one or two evaporator(s) depending on equipment
- Desiccant cartridge in receiver at condenser
- Denso air conditioner compressor with air conditioner compressor regulating valve - N280- ⇒ Heating, air conditioning;

Rep. gr. 87 ; Refrigerant circuit (vehicle-specific Workshop Manual) and ⇒ Electronic parts catalogue

Vehicle model	Production period	Capacity in grams	Differing characteristics of this refrigerant circuit
Audi Q7 (4L_)	From 02.06 onwards		
♦ Vehicle with one evaporator		700 + 50	• One evaporator
♦ Vehicle with two evaporators		1050 + 50	• Two evaporators

10.1.22 Capacities for Audi Q7 (4M_) 2016 ►

The refrigerant R134a capacities can be found in the vehicle-specific Workshop Manual ⇒ Heating, air conditioning; Rep. gr. 00 ; Technical data; Capacities for refrigerant R1234yf .

Note

- *On the Audi Q7 e-tron, additional components (which are not fitted on other vehicles) are installed in the refrigerant circuit. For the layout of the different refrigerant circuits, refer to ⇒ Heating, air conditioning; Rep. gr. 87 ; Refrigerant circuit (vehicle-specific Workshop Manual).*
- *As the service connection on the high-pressure side is located in the refrigerant circuit, high pressure is only available at the service connection on the high-pressure side during operation of the refrigerant circuit on the Audi Q7 e-tron. When operating the air conditioner, the same pressure is available here as at the service connection on the low-pressure side.*
- *In order to discharge, evacuate and fill the refrigerant circuit on the Audi Q7 e-tron, the electrically actuated valves installed in the refrigerant circuit must be open. The valves must be activated and opened via a routine stored in the thermal management control unit - J1024- ⇒ Heating, air conditioning; Rep. gr. 87 ; Refrigerant circuit (vehicle-specific Workshop Manual) and ⇒ Vehicle diagnostic tester in "Guided Fault Finding" mode.*

Protected by copyright. Copying or distribution of this document, or any part thereof, in part or in whole, is not permitted unless authorised by AUDI AG. AUDI AG does not guarantee or accept any liability with respect to the correctness of information in this document. Copyright by AUDI AG.

10.1.23 Capacities for Audi R8 (42_) 2008 ►, Audi R8 (4S_) 2015 ►

Characteristics of refrigerant circuit for Audi R8 (42_) 2008 ►:

- Restrictor (red-coloured).
- Reservoir
- Two condensers (connected in series)
- Denso air conditioner compressor with air conditioner compressor regulating valve - N280- ⇒ Heating, air conditioning; Rep. gr. 87 ; Refrigerant circuit (vehicle-specific Workshop Manual) and ⇒ Electronic parts catalogue

Characteristics of refrigerant circuit for Audi R8 (4S_) 2015 ►:

- Expansion valve
- Receiver (with dryer)

- Two condensers (connected in series)
- Denso air conditioner compressor with air conditioner compressor regulating valve - N280- ⇒ Heating, air conditioning; Rep. gr. 87 ; Refrigerant circuit (vehicle-specific Workshop Manual) and ⇒ Electronic parts catalogue

Vehicle model	Production period	Capacity in grams	Differing characteristics of this refrigerant circuit
Audi R8 (42_)	From 03.07 to 11.12	680 +/- 20 ◆ The refrigerant capacity of these vehicles was originally 650 g, but this was then increased to 680 g (see notes)	• Red-coloured restrictor
	From 11.12 onwards	680 +/- 20	
Audi R8 (4S_)	From 08.15 onwards	820 +/- 15	• Expansion valve • Receiver (with dryer) as separate component

Note

◆ *Replacement restrictors with different holes are available (yellow-coloured 1.54 mm, red-coloured 1.42 mm).*

◆ *Depending on manufacturer, colour of red restrictor may tend more towards orange.*

◆ *To avoid altering the cooling output of the air conditioner, only red-coloured restrictors are to be fitted.*

◆ *From vehicle identification number 429 DN 000751 onwards (manufactured from 11.2013), the quantity of refrigerant in the circuit was increased from 650 g to 680 g and the quantity of refrigerant oil from 150 ccm to 200 ccm. The increased amount of refrigerant and refrigerant oil also applies to all earlier vehicles. On vehicles manufactured up to the vehicle identification number mentioned, check whether the refrigerant oil has already been topped up during a previous workshop visit. If not, add 50 ccm of refrigerant oil to the refrigerant circuit. Then check the refrigerant capacity indicated on the label and if necessary attach a new label with the correct capacity and the appropriate language (e.g. the label with part number 420 010 535 and index BA in German and English) ⇒ Electronic parts catalogue and ⇒ Heating, air conditioning; Rep. gr. 87 ; Installation location overview - Air conditioning (vehicle-specific Workshop Manual). If no label with the correct capacity and the appropriate language is available, alter the capacity indicated on the existing label accordingly with a waterproof pen. Then increase the refrigerant oil quantity in the refrigerant circuit by 50 ccm and charge the refrigerant circuit with the quantity of refrigerant shown above* *⇒ "10.2.25 Capacities for Audi R8 (42_) 2008 ►, Audi R8 (4S_) 2015 ►", page 358* .

10.2 Approved refrigerant oils and refrigerant oil capacities

Protected by copyright. Copying for private or commercial purposes, in part or in whole, is not permitted unless authorised by AUDI AG. AUDI AG does not guarantee or accept any liability with respect to the correctness of information in this document. Copyright by AUDI AG.

- On vehicles from Audi A8 (4N) 2018 onwards, information on approved refrigerant oils and refrigerant oil capacities can be found in the vehicle-specific Workshop Manual ⇒ Heating, air conditioning; Rep. gr. 00 ; Technical data .

Note

- *PAG (polyalkylene glycol) oil is highly hygroscopic (attracts water); open containers should therefore be closed immediately so that they are air-tight.*
- *A use-by date for the refrigerant oil is stated on the bottle in which the refrigerant oil is supplied. This date is not relevant if the bottle is sealed air-tight. If the bottle is sealed air-tight, the refrigerant oil can also be used after the date stated on the bottle.*
- *PAG oil becomes unusable if it is stored in open containers for a long period of time.*

- Approved refrigerant oils ⇒ page 319
- Refrigerant oil capacities ⇒ page 321

Protected by copyright. Copying for private or commercial purposes, in part or in whole, is not permitted unless authorised by AUDI AG. AUDI AG does not guarantee or accept any liability with respect to the correctness of information in this document. Copyright by AUDI AG.

10.2.1 Approved refrigerant oils

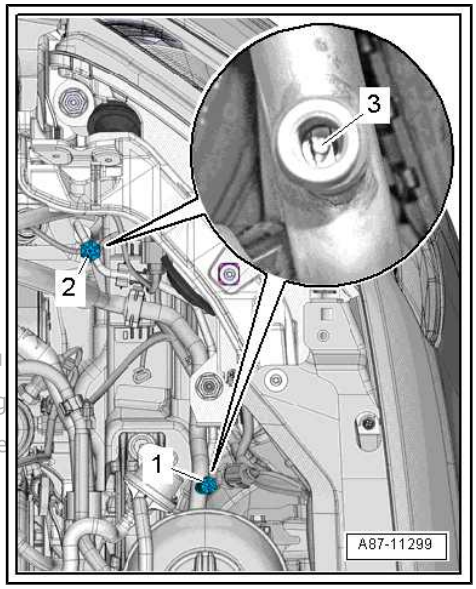

Note

- *The oils used with refrigerant R12 are not suitable for refrigerant R134a.*
- *The name of the compressor manufacturer "Nippondenso" has been changed to "Denso".*
- *The special refrigerant oils to be used exclusively for refrigerant circuits with refrigerant R134a are not always commercially available.*
- *Refrigerant oils intended specifically for a particular air conditioner compressor can therefore be obtained from the replacement parts range ⇒ Electronic parts catalogue .*
- *If a defective air conditioner compressor is replaced by a compressor from a different manufacturer, it is important to check whether the refrigerant oil already in the refrigerant circuit (from the removed compressor) is also approved for the new compressor. If a different refrigerant oil is approved for the new air conditioner compressor than for the removed compressor, the refrigerant circuit must be flushed*
  ⇒ "5.5 Cleaning (flushing) refrigerant circuit with refrigerant R134a", page 88 .
- *Using other refrigerant oils may cause the system to fail, as it cannot be guaranteed that they will mix and circulate with refrigerant R134a to lubricate the air conditioner compressor.*
- *There are different refrigerant oils for "Zexel/Valeo", "Denso", "Delphi/Mahle" and "Sanden" compressors. ⇒ Electronic parts catalogue.*
- *The logo of the compressor manufacturer "Zexel" attached to the air conditioner compressor was modified from "Zexel" to "Valeo" from year of production 2006 onwards (change in manufacturer's name).*
- *The refrigerant oil (part no. G 052 300 A2; external designation ND 8) for use in refrigerant circuits with "Denso" (formerly "Nippondenso") air conditioner compressors is also included in the retrofit kit (part no. 4A0 298 107 A). It is the same for mechanically and electrically driven air conditioner compressors ⇒ Electronic parts catalogue .*
- *For refrigerant circuits with "Zexel/Valeo" air conditioner compressors, use refrigerant oil with part no. G 052 154 A2 ⇒ Electronic parts catalogue .*
- *For refrigerant circuits with mechanically driven "Sanden" air conditioner compressors, use refrigerant oil with part no. G 052 154 A2 (or part no. G 052 535 M2) ⇒ Electronic parts catalogue .*
- *For mechanically driven "Sanden" air conditioner compressors, refrigerant oil with part no. G 052 535 M2 (external designation SP A2) can be used instead of refrigerant oil with part no. G 052 154 A2 (external designation SP 10) ⇒ Electronic parts catalogue .*
- *For refrigerant circuits with electrically driven "Visteon" or "Sanden" air conditioner compressors (e.g. in the Audi A3 e-tron and Audi Q7 e-tron), use refrigerant oil with part no. G 052 535 M2 ⇒ Electronic parts catalogue .*
- *For refrigerant circuits with "Delphi/Mahle" compressor, you can use refrigerant oil with part no. G 052 154 A2 or refrigerant oil with part no. G 052 300 A2 ⇒ Electronic parts catalogue .*

Protected by copyright. Copying for private or commercial purposes, in part or in whole, is not permitted unless authorised by AUDI AG. AUDI AG does not guarantee or assume any liability with respect to the correctness of information in this document.

Reproduced by permitted copying and printing of the original purposes, in part or in whole, is not permitted unless authorised by AUDI AG. AUDI AG does not guarantee or accept any liability with respect to the correctness of information in this document. Copyright by AUDI AG.

- *For refrigerant circuits with "Zexel / Valeo" air conditioner compressors, use can be made of both the refrigerant oil (G 052 154 A2) and the refrigerant oil (G 052 200 A2) contained in the retrofit kit (part no. 4A0 298 107) ⇒ Electronic parts catalogue .*
- *At present, the electrically driven air conditioner compressor (e.g. of "Denso" type on the Audi Q5 Hybrid) is filled with the same refrigerant oil as the mechanically driven air conditioner compressor of the same manufacturer (refer to rating plate on air conditioner compressor) ⇒ Electronic parts catalogue .*
- *To ensure that air conditioner service stations do not always need to be cleaned before starting work on a different type of vehicle (due to the different refrigerant oils used depending on the manufacturer of the air conditioner compressor), specified small quantities (up to max. 10%) of the total quantity of refrigerant oil in the corresponding refrigerant circuit are permitted to meet a different specification from that of the air conditioner compressor installed. On Audi vehicles, this means that it is permitted to use max. 10% refrigerant oil of the type SP 10 (or SP A2) on vehicles with a "Denso" air conditioner compressor (with ND 8 refrigerant oil) or max. 10% refrigerant oil of the type ND 8 on vehicles with a "Sanden", "Delphi/Mahle" or "Visteon" air conditioner compressor (with SP 10 or SP A2 refrigerant oil). However, other refrigerant oils not listed here must not be used (different properties due to different viscosity, different/missing additives etc.).*
- *Instead of using an air conditioner service station, refrigerant oil extracted when emptying the refrigerant circuit can be added via an open connection or, when valve -3- is removed, via a service connection -1- or -2- using a commercially available disposable syringe ⇒ "3.5 Connections for quick-release coupling in refrigerant circuit", page 41 before evacuating the refrigerant circuit. This may be practical e.g. if the refrigerant oil specified for the refrigerant circuit is normally only rarely used. The refrigerant oil added must always be fresh ⇒ "2.6 Refrigerant oil", page 12 and ⇒ Electronic parts catalogue . The positioning of service connection -1- or -2- in the vehicle is different ⇒ Heating, air conditioning; Rep. gr. 87 ; Installation location overview - Air conditioning (vehicle-specific Workshop Manual).*

Important information:

As refrigerant oil is extremely hygroscopic, open containers must be closed and re-sealed immediately after use to prevent moisture from entering.

Note

- *A use-by date for the refrigerant oil is stated on the bottle in which the refrigerant oil is supplied.*
- *This date is not relevant if the bottle is sealed air-tight.*
- *If the bottle is sealed air-tight, the refrigerant oil can also be used after the date stated on the bottle.*

10.2.2 Refrigerant oil capacities

Note

- *For the assignment of the air conditioner compressor ("Zexel/ Valeo", "Sanden" or "Denso"), refer to the vehicle-specific Workshop Manual ⇒ Heating, air conditioning; Rep. gr. 87 ; Refrigerant circuit (vehicle-specific Workshop Manual) and ⇒ Electronic parts catalogue .*
- *The logo of the compressor manufacturer "Zexel" attached to the air conditioner compressor was modified from "Zexel" to "Valeo" from year of production 2006 onwards (change in manufacturer's name).*
- *With "Zexel / Valeo", "Denso" and "Sanden" compressors, the amount of refrigerant oil in the replacement compressor corresponds to the total quantity of oil to be added. When renewing the air conditioner compressor, the quantity of refrigerant oil in the compressor to be fitted must therefore be adjusted (an incorrect refrigerant oil quantity will cause damage to the compressor).*
- *When pouring (flushing) the refrigerant oil out of the replacement compressor (or the defective air conditioner compressor), a small quantity of oil generally remains in the mechanically driven air conditioner compressor (20 to 30 cm^3). This refrigerant oil does not affect the function of the air conditioner and can therefore be ignored (always remains in the compressor). A larger quantity of refrigerant oil may remain in the electrically driven air conditioner compressor depending on the structure and version, which may mean that the air conditioner compressor may need to be flushed to empty it* *⇒ "5.5.2 Flushing electrically driven air conditioner compressor (removing refrigerant oil)", page 106* .
- *On initial switch-on, the refrigerant oil is distributed throughout the refrigerant circuit.*
- *Unless otherwise stated, the refrigerant oil capacities specified also apply to the corresponding "S" and "RS" versions of this vehicle model.*
- *For refrigerant oil quantities required for topping up when renewing defective refrigerant circuit components, refer to* *⇒ page 258**. Also ⇒ Heating, air conditioning; Rep. gr. 87 ; Refrigerant circuit (vehicle-specific Workshop Manual) and ⇒ Electronic parts catalogue*

Protected by copyright. Copying for private or commercial purposes, in part or in whole, is not permitted unless authorised by AUDI AG. AUDI AG does not guarantee or accept any liability with respect to the correctness of information in this document. Copyright by AUDI AG.

- ⇒ "10.2.3 Capacities for Audi A1 (8X_) 2011 ►", page 322
- ⇒ "10.2.4 Capacities for Audi A2 (8Z_) 2001 ►", page 325
- ⇒ "10.2.5 Capacities for Audi A3 (8L_) 1997 ► and Audi TT (8N_) 1999 ►", page 325
- ⇒ "10.2.6 Capacities for Audi A3 (8P_) 2004 ►, Audi Q3 (8U_ or 84_ for China) 2012 ►", page 326
- ⇒ "10.2.7 Capacities for Audi Q2 (GA_) 2017 ►, Audi A3 (8V_ or 85_ for China) 2013 ►, Audi A3 e-tron (8V_) 2015 ►, Audi RS 3 (8V_) 2016 ►", page 328
- ⇒ "10.2.8 Capacities for Audi TT (8J_) 2007 ►", page 330
- ⇒ "10.2.9 Capacities for Audi TT (FV_) 2015 ►", page 332
- ⇒ "10.2.10 Capacities for Audi 80 (8A_/8C_), Audi Coupé (8B_), Audi Cabriolet (8G_) ► 2002", page 333
- ⇒ "10.2.11 Capacities for Audi A4 (8D_) 1995 ►", page 334

- ⇒ “10.2.12 Capacities for Audi A4 (8E_) 2001 ►, Audi A4 Cabriolet (8H_) 2003 ►”, page 334
- ⇒ “10.2.13 Capacities for Audi A4 (8K_) 2008 ►, Audi A5 Coupé and Sportback (8T_) 2008 ►, Audi Q5 (8R_ or 83_ for China) 2008 ►, Audi A5 Cabriolet (8F_) 2009 ►, Audi Q5 hybrid (8R_) 2011 ►”, page 336
- ⇒ “10.2.14 Capacities for Audi A4 (8W_) 2016 ►, Audi A4 (86_ for China) 2017 ►, Audi A5 (F5_) 2016 ►, Audi Q5 (FY_) 2017 ►, Audi Q5 (87_ for China) 2019 ► ”, page 343
- ⇒ “10.2.15 Capacities for Audi 100/Audi A6 (4A_) ► 1998”, page 343
- ⇒ “10.2.16 Capacities for Audi A6 (4B_) 1998 ► and Audi allroad ► 2005”, page 344
- ⇒ “10.2.17 Capacities for Audi A6 (4F_) 2005 ►”, page 346
- ⇒ “10.2.18 Capacities for Audi A6 (4G_ or 4X_ for China) 2011 ►, Audi A7 (4G_ or 4X_ for China) 2011 ►, Audi A6 hybrid (4G_) 2012 ►, A6 e-tron (4G_) 2017 ►”, page 347
- ⇒ “10.2.19 Capacities for Audi V8 (4C_) ► 1994”, page 350
- ⇒ “10.2.20 Capacities for Audi A8 (4D_) 1994 ►”, page 350
- ⇒ “10.2.21 Capacities for Audi A8 (4E_) 2003 ►”, page 351
- ⇒ “10.2.22 Capacities for Audi A8 (4H_) 2010 ►, Audi A8 hybrid (4H_) 2012 ►”, page 352
- ⇒ “10.2.23 Capacities for Audi Q7 (4L_) 2006 ►”, page 356
- ⇒ “10.2.24 Capacities for Audi Q7 (4M_) 2016 ►”, page 358
- ⇒ “10.2.25 Capacities for Audi R8 (42_) 2008 ►, Audi R8 (4S_) 2015 ►”, page 358

Protected by copyright. Copying for private or commercial purposes, in part or in whole, is not permitted unless authorised by AUDI AG. AUDI AG does not guarantee or accept any liability with respect to the correctness of information in this document. Copyright by AUDI AG.

10.2.3 Capacities for Audi A1 (8X_) 2011 ►

Characteristics of refrigerant circuit:

- Expansion valve
- Receiver
- Air conditioner compressor from various manufacturers with air conditioner compressor regulating valve - N280- (without magnetic clutch) ⇒ Heating, air conditioning; Rep. gr. 87 ; Refrigerant circuit (vehicle-specific Workshop Manual) and ⇒ Electronic parts catalogue

Vehicle model	Production period	Total quantity of oil in refrigerant circuit in cm^3	Quantity of refrigerant oil in replacement compressor in cm^3	Differing characteristics of this refrigerant circuit
Audi A1	From 08.10 onwards	110 +/- 10	110 +/- 10	• Air conditioner compressor manufactured by “Sanden” (or “Delphi/Mahle”), part number “5N0 xxx xxx”
		90 +/- 10	90 +/- 10	Air conditioner compressor manufactured by “Denso”, part number “1K0 xxx xxx”
		110+ / - 10	110 +/- 10	Air conditioner compressor manufactured by “Denso”, part number “5Q0 xxx xxx” (see notes)

Vehicle model	Production period	Total quantity of oil in refrigerant circuit in cm^3	Quantity of refrigerant oil in replacement compressor in cm^3	Differing characteristics of this refrigerant circuit
		75^{+} / - 10	75^{+} / - 10	“Sanden” air conditioner compressor, part number “5K0 xxx xxx”
	From 07.12 onwards	75^{+} / - 10	75^{+} / - 10	Air conditioner compressor manufactured by “Sanden”, part number “5Q0 xxx xxx”
		110 $^{+}$/- 10	110 $^{+}$/- 10	• Air conditioner compressor manufactured by “Delphi/Mahle”, part number “5K0 xxx xxx” or “5Q0 xxx xxx”

Protected by copyright. Copying for private or commercial purposes, in part or in whole, is not permitted unless authorised by AUDI AG. AUDI AG does not guarantee or accept any liability with respect to the correctness of information in this document. Copyright by AUDI AG.

Note

- *The replacement compressor contains the full quantity of oil intended for the refrigerant circuit. If the air conditioner compressor is renewed, the quantity of oil in the compressor must therefore be adjusted accordingly* ⇒ page 258 .
- *Different air conditioner compressors are fitted depending on the production period and engine.*
- *At the start of production, "Denso" air conditioner compressors (type "6 SEU 14C") or "Sanden" air conditioner compressors ("7 PXE 16/14") were fitted; see ⇒ Electronic parts catalogue and ⇒ Heating, air conditioning; Rep. gr. 87; Refrigerant circuit (vehicle-specific Workshop Manual).*
- *Depending on the engine, "Sanden" air conditioner compressors (type "11 PXC 14") or "Delphi/Mahle" air conditioner compressors (type "6 CVC 140") may also be fitted at a later date (introduction not yet finalised, planned from 09.12 onwards); see ⇒ Electronic parts catalogue and ⇒ Heating, air conditioning; Rep. gr. 87 ; Refrigerant circuit (vehicle-specific Workshop Manual).*
- *At a later date, air conditioner compressors manufactured by "Denso" or "Sanden" in another version may be installed depending on the engine (introduction not yet finalised) ⇒ Electronic parts catalogue .*
- *These air conditioner compressors are available as replacement parts with different oil capacities, so it is important to pay attention to the oil quantity in the air conditioner compressor and to check the exact part number ⇒ Heating, air conditioning; Rep. gr. 87 ; Refrigerant circuit (vehicle-specific Workshop Manual) and ⇒ Electronic parts catalogue .*
- *The different oil quantities in the air conditioner compressor may result from the design of the air conditioner compressor (with or without oil separator at high-pressure connection) or, in the case of identical air conditioner compressors, from the design of the refrigerant circuit; pay attention to these quantities. Too much oil in the circuit results in higher pressures and a reduced cooling output of the system. Too little oil may lead to lubrication problems in the air conditioner compressor.*
- *The air conditioner compressor may have been fitted at the factory with a type plate indicating the part number and the quantity of refrigerant oil in the air conditioner compressor.*
- *As of 11.2012, the quantity of refrigerant oil for the "Denso" air conditioner compressor with part number "5Q0 xxx xxx" was gradually increased from 80 ccm to 110 ccm. The increased quantity of refrigerant oil applies retroactively to all vehicles with this air conditioner compressor. On vehicles manufactured with this air conditioner compressor up to 11.2012, check whether the quantity of refrigerant oil has already been increased during a previous workshop visit. If not, add 30 ccm of refrigerant oil to the refrigerant circuit . Then enter the refrigerant oil capacity on the label in waterproof ink ⇒ Heating, air conditioning; Rep. gr. 87 ; Installation location overview - Air conditioning (vehicle-specific Workshop Manual) and fill the refrigerant circuit with the quantity of refrigerant indicated above*
  ⇒ "10.1.1 Capacities for Audi A1 (8X) 2011 ►", page 277 .

Protected by copyright. Copying for private or commercial purposes, in part or in whole, is not permitted unless authorised by AUDI AG. AUDI AG does not guarantee or accept any liability with respect to the correctness of information in this document. Copyright by AUDI AG.

10.2.4 Capacities for Audi A2 (8Z_) 2001 ►

Characteristics of refrigerant circuit:

- Restrictor
- Reservoir
- Air conditioner compressor with air conditioner compressor regulating valve - N280- (no magnetic clutch)
- "Denso" air conditioner compressor ⇒ Heating, air conditioning; Rep. gr. 87 ; Refrigerant circuit (vehicle-specific Workshop Manual) and ⇒ Electronic parts catalogue

Protected by copyright. Copying for private or commercial purposes, in part or in whole, is not permitted unless authorised by AUDI AG. AUDI AG does not guarantee or accept any liability with respect to the correctness of information in this document. Copyright by AUDI AG.

Vehicle model	Production period	Total quantity of oil in refrigerant circuit in cm^3	Quantity of refrigerant oil in replacement compressor in cm^3
Audi A2	From 06.00 onwards	180 $^{+}$/-15	180^{+}/-15

Note

- *The replacement compressor contains the full quantity of oil intended for the refrigerant circuit. If the air conditioner compressor is renewed, the quantity of oil in the compressor must therefore be adjusted accordingly* *⇒ page 258* *.*
- *As the air conditioner compressor always runs together with the engine and the entire quantity of refrigerant oil is contained in the air conditioner compressor, the circuit must be assembled completely before the engine is started ⇒ Heating, air conditioning; Rep. gr. 87 ; Refrigerant circuit (vehicle-specific Workshop Manual).*
- *As replacement air conditioner compressors of this type with different oil capacities are available, observe the exact part number. ⇒ Electronic parts catalogue.*

10.2.5 Capacities for Audi A3 (8L_) 1997 ► and Audi TT (8N_) 1999 ►

Characteristics of refrigerant circuit:

- Expansion valve
- Receiver
- "Sanden" or "Zexel/Valeo" air conditioner compressor ⇒ Heating, air conditioning; Rep. gr. 87 ; Refrigerant circuit (vehicle-specific Workshop Manual) and ⇒ Electronic parts catalogue

Vehicle model	Production period	Total quantity of oil in refrigerant circuit in cm^3	Quantity of refrigerant oil in replacement compressor in cm^3
Audi A3	From 08.96	135 $^{+}$/-15	135^{+}/-15
Audi TT	From 10.98	135 $^{+}$/-15	135^{+}/-15

Note

- *The replacement compressor contains the full quantity of oil intended for the refrigerant circuit. If the air conditioner compressor is renewed, the quantity of oil in the compressor must therefore be adjusted accordingly* *⇒ page 258* *.*
- *Exclusive use was made at the start of production of “Sanden” air conditioner compressors. From model year 1999 onwards, “Zexel/Valeo” air conditioner compressors have also been used ⇒ Heating, air conditioning; Rep. gr. 87 ; Refrigerant circuit (vehicle-specific Workshop Manual) and ⇒ Electronic parts catalogue .*
- *The logo of the compressor manufacturer “Zexel” attached to the air conditioner compressor was modified from “Zexel” to “Valeo” from year of production 2006 onwards (change in manufacturer's name).*

Protected by copyright. Copying for private or commercial purposes, in part or in whole, is not permitted unless authorised by AUDI AG. AUDI AG does not guarantee or accept any liability with respect to the correctness of information in this document. Copyright by AUDI AG.

10.2.6 Capacities for Audi A3 (8P_) 2004 ►, Audi Q3 (8U_ or 84_ for China) 2012 ►

Note

- *The refrigerant capacities in the following table apply to the Audi A3, Audi A3 Sportback, Audi RS 3, Audi A3 Cabriolet and Audi Q3 (and RS Q3).*
- *On certain versions for China the type designation 84_ is used instead of 8U_.*

Characteristics of refrigerant circuit:

- Expansion valve
- Receiver
- Air conditioner compressor from various manufacturers with air conditioner compressor regulating valve - N280- (without magnetic clutch) ⇒ Heating, air conditioning; Rep. gr. 87 ; Refrigerant circuit (vehicle-specific Workshop Manual) and ⇒ Electronic parts catalogue

Vehicle model	Production period	Total quantity of oil in refrigerant circuit in cm^3	Quantity of refrigerant oil in replacement compressor in cm^3	Differing characteristics of this refrigerant circuit
Audi A3 Audi Q3	From 05.03 to 10.03	180 +/- 10	180 +/- 10	• “Denso” air conditioner compressor of “7 SEU 16” type
	From 10.03 onwards	120 +/- 10	120 +/- 10	• “Zexel / Valeo” air conditioner compressor
		110 +/- 10	110 +/- 10	Air conditioner compressor manufactured by “Sanden”, except part number “5K0 xxx xxx”
		140 +/- 10	140 +/- 10	“Denso” air conditioner compressor of “7 SEU 17” type

Vehicle model	Production period	Total quantity of oil in refrigerant circuit in cm^3	Quantity of refrigerant oil in replacement compressor in cm^3	Differing characteristics of this refrigerant circuit
	From 06.07 onwards	90 +/- 10	90 +/- 10	• "Denso" air conditioner compressor of "6 SEU 14" type
	From 08.07 onwards	110 +/- 10	110 +/- 10	• "Delphi/Mahle" air conditioner compressor
	From 06.13 onwards	75+ / - 10	75+ / - 10	"Sanden" air conditioner compressor, part number "5K0 xxx xxx"

Protected by copyright. Copying for private or commercial purposes, in part or in whole, is not permitted unless authorised by AUDI AG. AUDI AG does not guarantee or accept any liability with respect to the correctness of information in this document. Copyright by AUDI AG.

Note

- *The replacement compressor contains the full quantity of oil intended for the refrigerant circuit. If the air conditioner compressor is renewed, the quantity of oil in the compressor must therefore be adjusted accordingly* *⇒ page 258* *.*
- *Different air conditioner compressors are fitted depending on the production period and engine.*
- *At the start of production, exclusive use was made of air conditioner compressors of type "7 SEU 16" from "Denso" (e.g. air conditioner compressor with part no. 1K0 820 803 up to index "D"). In Model Year 2004 (as of approx. 10.03), a gradual change was made to a different type of "Denso" compressor ("7 SEU 17" e.g. air conditioner compressor with part no. 1K0 820 803 as of index "E").*
- *With effect from Model Year 2004 (as of approx. 10.03), "Zexel / Valeo" (type "DSC17E") and "Sanden" (type "PXE16") air conditioner compressors are also gradually being introduced depending on the engine ⇒ Electronic parts catalogue .*
- *The logo of the compressor manufacturer "Zexel" attached to the air conditioner compressor was modified from "Zexel" to "Valeo" from year of production 2006 onwards (change in manufacturer's name).*
- *From model year 2008 onwards, "Denso" compressors (type "6 SEU 14") and "Delphi/Mahle" air conditioner compressors are also gradually being introduced depending on the engine ⇒ Electronic parts catalogue and ⇒ Heating, air conditioning; Rep. gr. 87 ; Refrigerant circuit (vehicle-specific Workshop Manual).*
- *This air conditioner compressor is available as a replacement part with different oil capacities, so it is important to pay attention to the oil quantity in the compressor and to check the exact part number ⇒ Heating, air conditioning; Rep. gr. 87 ; Refrigerant circuit (vehicle-specific Workshop Manual) and ⇒ Electronic parts catalogue .*
- *The different oil quantities in the air conditioner compressor may result from the design of the air conditioner compressor (with or without oil separator at high-pressure connection) or, in the case of identical air conditioner compressors, from the design of the refrigerant circuit; pay attention to these quantities. Too much oil in the circuit results in higher pressures and a reduced cooling output of the system. Too little oil may lead to lubrication problems in the air conditioner compressor.*
- *The air conditioner compressor may have been fitted at the factory with a type plate indicating the part number and the quantity of refrigerant oil in the air conditioner compressor.*

Protected by copyright. Copying for private or commercial purposes, in part or in whole, is not permitted unless authorised by AUDI AG. AUDI AG does not guarantee or accept any liability with respect to the correctness of information in this document. Copyright by AUDI AG.

10.2.7 Capacities for Audi Q2 (GA_) 2017 ►, Audi A3 (8V_ or 85_ for China) 2013 ►, Audi A3 e-tron (8V_) 2015 ►, Audi RS 3 (8V_) 2016 ►

Note

The capacities for the Audi A3 (8V_ or 85_ for China) apply to all versions (Saloon, Sportback, Cabriolet, etc.)

Characteristics of refrigerant circuit:

- Expansion valve
- Receiver
- Mechanically driven “Denso” or “Sanden” air conditioner compressor with air conditioner compressor regulating valve - N280- ⇒ Heating, air conditioning; Rep. gr. 87 ; Refrigerant circuit (vehicle-specific Workshop Manual) and ⇒ Electronic parts catalogue (all vehicles except Audi A3 e-tron)
- On vehicles with high-voltage system (Audi A3 e-tron): electrically driven “Sanden” or “Visteon” air conditioner compressors ⇒ Heating, air conditioning; Rep. gr. 87 ; Refrigerant circuit (vehicle-specific Workshop Manual) and ⇒ Electronic parts catalogue

Note

Various mechanically driven air conditioner compressors are fitted depending on the production period and the engine (these compressors do not have a magnetic clutch) ⇒ Heating, air conditioning; Rep. gr. 87 ; Refrigerant circuit (vehicle-specific Workshop Manual).

Vehicle model	Production period	Total quantity of oil in refrigerant circuit in cm^3	Quantity of refrigerant oil in replacement compressor in cm^3	Differing characteristics of this refrigerant circuit
Audi Q2 Audi A3	From 07.16 onwards From 05.12 onwards	110 +/- 10	110 +/- 10	• “Denso” air conditioner compressor
		75+ / - 10	75 +/- 10	• “Sanden” air conditioner compressor
		110 +/- 10	110 +/- 10	• “Delphi/Mahle” air conditioner compressor
Audi A3 e-tron	From 09.14 onwards	120 +/- 10	120 +/- 10	• Electrically driven air conditioner compressor • With second evaporator in high-voltage battery heat exchanger • Different type of refrigerant oil

Vehicle model	Production period	Total quantity of oil in refrigerant circuit in cm^3	Quantity of refrigerant oil in replacement compressor in cm^3	Differing characteristics of this refrigerant circuit
Audi RS 3 • With 5-cyl. engine	From 02.15 onwards	110 +/- 10	110 +/- 10	• “Sanden” air conditioner compressor with double-belt pulley and different type of condenser fitted ⇒ Electronic parts catalogue and ⇒ Heating, air conditioning; Rep. gr. 87 ; Refrigerant circuit (vehicle-specific Workshop Manual).

Protected by copyright. Copying for private or commercial purposes, in part or in whole, is not permitted unless authorised by AUDI AG. AUDI AG does not guarantee or accept any liability with respect to the correctness of information in this document. Copyright by AUDI AG.

Note

- *The replacement compressor contains the full quantity of oil intended for the refrigerant circuit. If the air conditioner compressor is renewed, the quantity of oil in the compressor must therefore be adjusted accordingly* ⇒ page 258 .
- *Different air conditioner compressors are fitted depending on the production period and engine.*
- *This air conditioner compressor is available as a replacement part with different oil capacities, so it is important to pay attention to the oil quantity in the compressor and to check the exact part number ⇒ Heating, air conditioning; Rep. gr. 87 ; Refrigerant circuit (vehicle-specific Workshop Manual) and ⇒ Electronic parts catalogue .*
- *The reason for the different oil quantities in the air conditioner compressor may be the design of the air conditioner compressor, or the design of the refrigerant circuit on vehicles with an identical air conditioner compressor; please note the different oil quantities. Too much oil in the circuit results in higher pressures and a reduced cooling output of the system. Too little oil may lead to lubrication problems in the air conditioner compressor.*
- *The air conditioner compressor may have been fitted at the factory with a type plate indicating the part number and the quantity of refrigerant oil in the air conditioner compressor.*
- *As of 11.2012, the quantity of refrigerant oil for the "Denso" air conditioner compressor was gradually increased from 80 ccm to 110 ccm. The increased quantity of refrigerant oil applies retroactively to all vehicles with this make of air conditioner compressor. On vehicles manufactured up to 06.2013, check whether the quantity of refrigerant oil has already been increased during a previous workshop visit. If not, add 30 ccm of refrigerant oil to the refrigerant circuit . Then enter the refrigerant oil capacity on the label with a waterproof pen ⇒ Heating, air conditioning; Rep. gr. 87 ; Refrigerant circuit (vehicle-specific Workshop Manual), and fill the refrigerant circuit with the quantity of refrigerant indicated above* ⇒ "10.1.5 Capacities for Audi Q2 (GA_) 2017 ►, Audi A3 (8V_ or 85_ for China) 2013 ►, Audi A3 e-tron (8V_) 2015 ►, Audi RS 3 (8V_) 2016 ►", page 283 .
- *The refrigerant oil used in the Audi A3 e-tron must be different to the oil used in vehicles with a mechanically driven air conditioner compressor (e.g. refrigerant oil with the part number G 052 535 M2) ⇒ Electronic parts catalogue . Since the storage tanks in most air conditioner service stations do not contain this refrigerant, the refrigerant oil extracted when emptying the refrigerant circuit cannot be refilled from the air conditioner service station. On these vehicles, refrigerant oil can be refilled via a service connection e.g. before evacuating the refrigerant circuit via an open connection or with valve removed* ⇒ page 319 .
- *For refrigerant circuits with electrically driven "Visteon" or "Sanden" air conditioner compressors (e.g. in the Audi A3 e-tron), use refrigerant oil with part no. G 052 535 M2 ⇒ Electronic parts catalogue .*

Protected by copyright. Copying for private or commercial purposes, in part or in whole, is not permitted unless authorised by AUDI AG. AUDI AG does not guarantee or accept any liability with respect to the correctness of information in this document. Copyright by AUDI AG.

10.2.8 Capacities for Audi TT (8J_) 2007 ►

Characteristics of refrigerant circuit:

- Expansion valve
- Receiver
- Air conditioner compressor from various manufacturers with air conditioner compressor regulating valve - N280- (without magnetic clutch) ⇒ Heating, air conditioning; Rep. gr. 87 ; Refrigerant circuit (vehicle-specific Workshop Manual) and ⇒ Electronic parts catalogue

Vehicle model	Production period	Total quantity of oil in refrigerant circuit in cm^3	Quantity of refrigerant oil in replacement compressor in cm^3	Differing characteristics of this refrigerant circuit
Audi TT	From 08.06 onwards	90 +/- 10	90 +/- 10	• “Denso” air conditioner compressor of “6 SEU 14” type
		110 +/- 10	110 +/- 10	• “Sanden” air conditioner compressor
		110 +/- 10	110 +/- 10	• “Delphi/Mahle” air conditioner compressor

Protected by copyright. Copying for private or commercial purposes, in part or in whole, is not permitted unless authorised by AUDI AG. AUDI AG does not guarantee or accept any liability with respect to the correctness of information in this document. Copyright by AUDI AG.

Note

- *The replacement air conditioner compressor contains the full quantity of oil intended for the refrigerant circuit. If the air conditioner compressor is renewed, the quantity of oil in the compressor must therefore be adjusted accordingly* *⇒ page 258* .
- *At the start of production, exclusive use was made of air conditioner compressors of type "6 SEU 14" manufactured by "Denso". This air conditioner compressor has no magnetic clutch (it is constantly driven by the engine). Air conditioner compressors produced by other manufacturers may also be fitted at a later date (depending on the engine) ⇒ Electronic parts catalogue and ⇒ Heating, air conditioning; Rep. gr. 87 ; Refrigerant circuit (vehicle-specific Workshop Manual).*
- *From model year 2008 onwards, "Sanden" air conditioner compressors (type "PXE16") are gradually being introduced for certain engines; these air conditioner compressors do not have a magnetic clutch (they are driven continuously by the engine) ⇒ Electronic parts catalogue and ⇒ Heating, air conditioning; Rep. gr. 87 ; Refrigerant circuit (vehicle-specific Workshop Manual).*
- *From model year 2011 onwards, "Delphi/Mahle" air conditioner compressors are also gradually being introduced depending on the engine ⇒ Electronic parts catalogue and ⇒ Heating, air conditioning; Rep. gr. 87 ; Refrigerant circuit (vehicle-specific Workshop Manual).*
- *This air conditioner compressor is available as a replacement part with different oil capacities, so it is important to pay attention to the oil quantity in the compressor and to check the exact part number ⇒ Heating, air conditioning; Rep. gr. 87 ; Refrigerant circuit (vehicle-specific Workshop Manual) and ⇒ Electronic parts catalogue .*
- *The different oil quantities in the air conditioner compressor may result from the design of the air conditioner compressor (with or without oil separator at high-pressure connection) or, in the case of identical air conditioner compressors, from the design of the refrigerant circuit; pay attention to these quantities. Too much oil in the circuit results in higher pressures and a reduced cooling output of the system. Too little oil may lead to lubrication problems in the air conditioner compressor.*
- *The air conditioner compressor may have been fitted at the factory with a type plate indicating the part number and the quantity of refrigerant oil in the air conditioner compressor.*

Protected by copyright. Copying for private or commercial purposes, in part or in whole, is not permitted unless authorised by AUDI AG. AUDI AG does not guarantee or accept any liability with respect to the correctness of information in this document. Copyright by AUDI AG.

10.2.9 Capacities for Audi TT (FV_) 2015 ►

Characteristics of refrigerant circuit:

- Expansion valve
- Receiver
- Mechanically driven "Denso" or "Sanden" air conditioner compressor with air conditioner compressor regulating valve - N280- ⇒ Heating, air conditioning; Rep. gr. 87 ; Refrigerant circuit (vehicle-specific Workshop Manual) and ⇒ Electronic parts catalogue

Note

Various mechanically driven air conditioner compressors are fitted depending on the production period and the engine (these compressors do not have a magnetic clutch) ⇒ Heating, air conditioning; Rep. gr. 87 ; Refrigerant circuit (vehicle-specific Workshop Manual).

Protected by copyright. Copying for private or commercial purposes, in part or in whole, is not permitted unless authorised by AUDI AG. AUDI AG does not guarantee or accept any liability with respect to the correctness of information in this document. Copyright by AUDI AG

Vehicle model	Production period	Total quantity of oil in refrigerant circuit in cm^3	Quantity of refrigerant oil in replacement compressor in cm^3	Differing characteristics of this refrigerant circuit
Audi TT	From 10.14 onwards	110 +/- 10	110 +/- 10	• "Denso" air conditioner compressor
		75+ / - 10	75 +/- 10	• "Sanden" air conditioner compressor
		110 +/- 10	110 +/- 10	• "Delphi/Mahle" air conditioner compressor
TT RS • With 5-cyl. engine	From 07.16 onwards	110 +/- 10	110 +/- 10	• "Denso" air conditioner compressor

Note

- *The replacement compressor contains the full quantity of oil intended for the refrigerant circuit. If the air conditioner compressor is renewed, the quantity of oil in the compressor must therefore be adjusted accordingly* *⇒ page 258* *.*
- *Different air conditioner compressors are fitted depending on the production period and engine.*
- *This air conditioner compressor is available as a replacement part with different oil capacities, so it is important to pay attention to the oil quantity in the compressor and to check the exact part number ⇒ Heating, air conditioning; Rep. gr. 87 ; Refrigerant circuit (vehicle-specific Workshop Manual) and ⇒ Electronic parts catalogue .*
- *The reason for the different oil quantities in the air conditioner compressor may be the design of the air conditioner compressor, or the design of the refrigerant circuit on vehicles with an identical air conditioner compressor; please note the different oil quantities. Too much oil in the circuit results in higher pressures and a reduced cooling output of the system. Too little oil may lead to lubrication problems in the air conditioner compressor.*
- *The air conditioner compressor may have been fitted at the factory with a type plate indicating the part number and the quantity of refrigerant oil in the air conditioner compressor.*

10.2.10 Capacities for Audi 80 (8A_/8C_), Audi Coupé (8B_), Audi Cabriolet (8G_) ► 2002

Characteristics of refrigerant circuit:

- Restrictor (not coloured).

- Reservoir
- “Zexel/Valeo” air conditioner compressor ⇒ Heating, air conditioning; Rep. gr. 87 ; Refrigerant circuit (vehicle-specific Workshop Manual) and ⇒ Electronic parts catalogue

Vehicle model	Production period	Total quantity of oil in refrigerant circuit in cm^3	Quantity of refrigerant oil in replacement compressor in cm^3
Audi 80 Audi Coupé Audi Cabriolet	From 10.92	250 + 50	250 + 50

Note

- *The replacement compressor contains the full quantity of oil intended for the circuit. If the air conditioner compressor is renewed, the quantity of oil in the compressor must therefore be adjusted accordingly* *⇒ page 258* *.*
- *The logo of the compressor manufacturer “Zexel” attached to the air conditioner compressor was modified from “Zexel” to “Valeo” from year of production 2006 onwards (change in manufacturer's name).*

10.2.11 Capacities for Audi A4 (8D_) 1995 ►

Characteristics of refrigerant circuit:

- Restrictor
- Reservoir
- “Denso” or “Zexel/Valeo” air conditioner compressor ⇒ Heating, air conditioning; Rep. gr. 87 ; Refrigerant circuit (vehicle-specific Workshop Manual) and ⇒ Electronic parts catalogue

Vehicle model	Production period	Total quantity of oil in refrigerant circuit in cm^3	Quantity of refrigerant oil in replacement compressor in cm^3
Audi A4	From 11.94	250 + 50	250 + 50

Protected by copyright. Copying for private or commercial purposes, in part or in whole, is not permitted unless authorised by AUDI AG. AUDI AG does not guarantee or accept any liability with respect to the correctness of information in this document. Copyright by AUDI AG.

Note

- *The replacement compressor contains the full quantity of oil intended for the refrigerant circuit. If the air conditioner compressor is renewed, the quantity of oil in the compressor must therefore be adjusted accordingly* *⇒ page 258* *.*
- *The Audi A4 is fitted with different air conditioner compressors depending on the engine and production period ⇒ Heating, air conditioning; Rep. gr. 87 ; Refrigerant circuit (vehicle-specific Workshop Manual) and ⇒ Electronic parts catalogue*
- *The logo of the compressor manufacturer “Zexel” attached to the air conditioner compressor was modified from “Zexel” to “Valeo” from year of production 2006 onwards (change in manufacturer's name).*

10.2.12 Capacities for Audi A4 (8E_) 2001 ►, Audi A4 Cabriolet (8H_) 2003 ►

Characteristics of refrigerant circuit:

- Restrictor
- Reservoir
- “Denso” air conditioner compressor with air conditioner compressor regulating valve - N280- (without magnetic clutch) ⇒ Heating, air conditioning; Rep. gr. 87 ; Refrigerant circuit (vehicle-specific Workshop Manual) and ⇒ Electronic parts catalogue

Vehicle model	Production period	Total quantity of oil in refrigerant circuit in cm^3	Quantity of refrigerant oil in replacement compressor in cm^3	Differing characteristics of this refrigerant circuit
Audi A4 Audi RS 4	From 11.00 to 01.04 • All vehicles:	180 +/- 10	180 +/- 10	• Air conditioner compressor type “6 SEU 12” “6 SEU 14” “7 SEU 16” or “7 SEU 17” (refer to notes below)
	From 01.04 onwards • All except 8-cyl. engine	120 +/- 10	120 +/- 10	• Air conditioner compressor type “6 SEU 14” or “7 SEU 17” (refer to notes below)
	From 01.04 onwards • 8-cyl. engine only	130 +/- 10	130 +/- 10	• Air conditioner compressor type “7 SEU 17” (refer to notes below)

Protected by copyright. Copying for private or commercial purposes, in part or in whole, is not permitted unless authorised by AUDI AG. AUDI AG does not guarantee or accept any liability with respect to the correctness of information in this document. Copyright by AUDI AG.

Note

- *The replacement compressor contains the full quantity of oil intended for the refrigerant circuit. If the air conditioner compressor is renewed, the quantity of oil in the compressor must therefore be adjusted accordingly* *⇒ page 258* *.*
- *The Audi A4 is fitted with different air conditioner compressors depending on the engine and production period. This air conditioner compressor is available as a replacement part with different oil capacities, so it is important to pay attention to the exact part number ⇒ Heating, air conditioning; Rep. gr. 87 ; Refrigerant circuit (vehicle-specific Workshop Manual) and ⇒ Electronic parts catalogue .*
- *At the start of production, the compressor types in the first line of the table were supplied with a refrigerant oil quantity of 180 cm ^{3}. These air conditioner compressors can be recognised from the index of the part number (8E0 260 805 with one index or with double index up to "AH"). In model year 2004 (as of approx. 01.04), a gradual change was made to other types of compressor with a refrigerant oil quantity of 120 cm ^{3} or 130 cm ^{3}. These air conditioner compressors can be recognised from the index of the part number 8E0 260 805 (with double index as of "AJ") or 4F0 260 805 (and index "E" for vehicles with 8-cyl. engine) ⇒ Electronic parts catalogue .*
- *The different oil quantities in the air conditioner compressor may result from the design of the air conditioner compressor (with or without oil separator at high-pressure connection) or, in the case of identical air conditioner compressors, from the design of the refrigerant circuit; pay attention to these quantities. Too much oil in the circuit results in higher pressures and a reduced cooling output of the system. Too little oil may lead to lubrication problems in the air conditioner compressor.*
- *The air conditioner compressor may have been fitted at the factory with a type plate indicating the part number and the quantity of refrigerant oil in the air conditioner compressor.*

Protected by copyright. Copying for private or commercial purposes, in part or in whole, is not permitted unless authorised by AUDI AG. AUDI AG does not guarantee or accept any liability with respect to the correctness of information in this document. Copyright by AUDI AG.

10.2.13 Capacities for Audi A4 (8K_) 2008 ►, Audi A5 Coupé and Sportback (8T_) 2008 ►, Audi Q5 (8R_ or 83_ for China) 2008 ►, Audi A5 Cabriolet (8F_) 2009 ►, Audi Q5 hybrid (8R_) 2011 ►

Note

- *Also applies for the Audi RS 4, Audi S5, Audi SQ5 and Audi RS 5.*
- *Different capacities depending on version and production period (see the following tables)*
- *On certain Audi Q5 versions for China the type designation 83_ is used instead of 8R_.*

Characteristics of refrigerant circuit:

- Expansion valve
- Receiver

- Refrigerant pipe with internal heat exchanger.
- Mechanically driven “Denso” air conditioner compressor with air conditioner compressor regulating valve - N280- (and with air conditioning system magnetic clutch - N25- , depending on engine and production period) ⇒ Heating, air conditioning; Rep. gr. 87 ; Refrigerant circuit (vehicle-specific Workshop Manual) and ⇒ Electronic parts catalogue (all vehicles except Audi Q5 hybrid)
- On vehicles with a high-voltage system (Audi Q5 hybrid): electrically driven “Denso” air conditioner compressors ⇒ Heating, air conditioning; Rep. gr. 87 ; Refrigerant circuit (vehicle-specific Workshop Manual) and ⇒ Electronic parts catalogue .

◆ Capacity for Audi A4, Audi A5 and Audi A5 Cabriolet ⇒ page 337

◆ Capacity for Audi Q5 and Audi Q5 hybrid ⇒ page 339

◆ Capacity for Audi RS 4, Audi RS 5 ⇒ page 341

◆ General notes on quantity of refrigerant oil and refrigerant circuit ⇒ page 342

Audi A4, Audi A5 and Audi A5 Cabriolet

Note

◆ *Also applies to the Audi S5.*

◆ *Capacity for Audi RS 5 Cabriolet* *⇒ page 341*

Vehicle model	Production period	Total quantity of oil in refrigerant circuit in cm^3	Quantity of refrigerant oil in replacement compressor in cm^3	Differing characteristics of this refrigerant circuit
Audi A4 Audi A5 (Coupé, Cabriolet and Sportback)	◆ Audi A4, from 10.07 to 03.12 ◆ Audi A5 Coupé and Sportback, from 05.07 to 03.12 ◆ Audi A5 Cabriolet, from 03.09 to 03.12	150 +/- 10	150 +/- 10	• Air conditioner compressor manufactured by “Denso”, type “6 SEU 14” and “7 SEU 17” (air conditioner compressor with part number 8K0 xxx xxx)

Protected by copyright. Copying for private or commercial purposes, in part or in whole, is not permitted unless authorised by AUDI AG. AUDI AG does not guarantee or accept any liability with respect to the correctness of information in this document. Copyright by AUDI AG.

Vehicle model	Production period	Total quantity of oil in refrigerant circuit in cm^3	Quantity of refrigerant oil in replacement compressor in cm^3	Differing characteristics of this refrigerant circuit
	♦ Audi A4, from 08.11 to 03.12 (with a certain engine; see notes)	110 +/- 10	110 +/- 10	• Air conditioner compressor manufactured by “Denso”, type “6 SAS 14” with magnetic clutch (air conditioner compressor with part number 8T0 xxx xxx)
	♦ All vehicles from 03.12 onwards (see notes)	110 +/- 10	110 +/- 10	• Air conditioner compressor manufactured by “Denso”, type “6 SES 14” without magnetic clutch, or type “6 SAS 14” with magnetic clutch (air conditioner compressor with part number 8T0 xxx xxx)

Protected by copyright. Copying for private or commercial purposes, in part or in whole, is not permitted unless authorised by AUDI AG. AUDI AG does not guarantee or accept any liability with respect to the correctness of information in this document. Copyright by AUDI AG.

Note

- *Starting with the product changeover in March 2012, Audi A4 and Audi A5 vehicles (except RS models) are no longer available with 8-cyl. engines.*
- *From March 2012 onwards, the refrigerant circuit (air conditioner compressor, condenser, evaporator etc.) was gradually modified depending on the engine. This means that the refrigerant and refrigerant oil capacity for these vehicles has also changed (indicated on label for refrigerant circuit) ⇒ Heating, air conditioning; Rep. gr. 87 ; Refrigerant circuit (vehicle-specific Workshop Manual) and ⇒ Electronic parts catalogue .*
- *From August 2011 onwards, air conditioner compressors with air conditioning system magnetic clutch - N25- were gradually introduced for certain 4-cyl. TDI engines ⇒ Electronic parts catalogue .*
- *From the outside, the modified components (air conditioner compressor, condenser) can only be identified by the part numbers (label on air conditioner compressor, type plate or lettering on condenser)*
  ⇒ "10.1.11 Capacities for Audi A4 (8K_) 2008 ►, Audi A5 Coupé and Sportback (8T_) 2008 ►, Audi Q5 (8R_ or 83_ for China) 2008 ►, Audi A5 Cabriolet (8F_) 2009 ►, Audi Q5 hybrid (8R_) 2011 ►" page 291 and ⇒ Electronic parts catalogue .
- *Further notes ⇒ page 342*

Protected by copyright. Copyright by AUDI AG. Distribution to third parties and commercial purposes, in part or in whole, is not permitted. Reproduction in any form or by any means only with the express permission of AUDI AG. AUDI AG does not guarantee or accept any liability with respect to the correctness of information in this document. Copyright by AUDI AG.

Audi Q5 and Audi Q5 hybrid

Note

Also applies for the Audi SQ5.

Vehicle model	Production period	Total quantity of oil in refrigerant circuit in cm^3	Quantity of refrigerant oil in replacement compressor in cm^3	Differing characteristics of this refrigerant circuit
Audi Q5	From 09.08 to 06.12 / 08.12 (gradual change-over; see notes)	150 +/- 10	150 +/- 10	• Air conditioner compressor manufactured by "Denso", type "6 SEU 14" (air conditioner compressor with part number 8K0 xxx xxx)

Vehicle model	Production period	Total quantity of oil in refrigerant circuit in cm^3	Quantity of refrigerant oil in replacement compressor in cm^3	Differing characteristics of this refrigerant circuit
	From 08.11 to 06.12 / 08.12 (with a certain engine, gradual conversion; see notes)	110 +/- 10	110 +/- 10	• Air conditioner compressor manufactured by “Denso”, type “6 SAS 14” with magnetic clutch (air conditioner compressor with part number 8T0 xxx xxx)
	From 06.12 / 08.12 onwards (gradual conversion; see notes)	110 +/- 10	110 +/- 10	• Air conditioner compressor manufactured by “Denso”, type “6 SES 14” without magnetic clutch, or type “6 SAS 14” with magnetic clutch (air conditioner compressor with part number 8T0 xxx xxx)
Audi Q5 hybrid	From 05.11 onwards	200 +/- 20	200 +/- 20	• Electrically driven air conditioner compressor manufactured by “Denso”

Protected by copyright. Copying for private or commercial purposes, in part or in whole, is not permitted unless authorised by AUDI AG. AUDI AG does not guarantee or accept any liability with respect to the correctness of information in this document. Copyright by AUDI AG.

Protected by copyright. Copying for private or commercial purposes, in part or in whole, is not permitted unless authorized by AUDI AG. AUDI AG does not guarantee or accept any liability with respect to the correctness of information in this document. Copyright by AUDI AG.

Note

- *Between June and August 2012, the refrigerant circuit (air conditioner compressor, condenser, evaporator etc.) was gradually converted (depending on the engine and the vehicle version). This means that the refrigerant and refrigerant oil capacity for these vehicles has also changed (indicated on label for refrigerant circuit) ⇒ page 291 , ⇒ Heating, air conditioning; Rep. gr. 87 ; Refrigerant circuit (vehicle-specific Workshop Manual) and ⇒ Electronic parts catalogue .*
- *On the Audi Q5 hybrid there is no conversion of the refrigerant circuit in model year 2012 (see other versions).*
- *From August 2011 onwards, air conditioner compressors with air conditioning system magnetic clutch - N25- were gradually introduced for certain 4-cyl. TDI engines ⇒ Electronic parts catalogue .*
- *From the outside, the modified components (air conditioner compressor, condenser) can only be identified by the part numbers (label on air conditioner compressor, type plate or lettering on condenser) ⇒ "10.1.11 Capacities for Audi A4 (8K_) 2008 ►, Audi A5 Coupé and Sportback (8T_) 2008 ►, Audi Q5 (8R_ or 83_ for China) 2008 ►, Audi A5 Cabriolet (8F_) 2009 ►, Audi Q5 hybrid (8R_) 2011 ►", page 291 and ⇒ Electronic parts catalogue .*
- *At the start of production, the Audi Q5 hybrid is fitted with an electrically driven "Denso" air conditioner compressor (electrical air conditioner compressor - V470- with control unit for air conditioning compressor - J842-). There is no provision for an air conditioner compressor regulating valve - N280- on this air conditioner compressor.*
- *At the start of production, the Audi Q5 hybrid was fitted with an air conditioner compressor with a refrigerant oil quantity of 160 ccm. Shortly after the start of production, the refrigerant oil quantity was increased to 200 ccm. The refrigerant oil does not have to be topped up on vehicles fitted with an air conditioner compressor with a refrigerant oil quantity of 160 ccm. However, if the refrigerant circuit has been cleaned (flushed) for example, a total of 200 ccm should also be filled in this vehicle as the specified refrigerant oil quantity. The correct amount of refrigerant oil will already be filled into a replacement air conditioner compressor ⇒ Electronic parts catalogue .*
- *Further notes ⇒ page 342*

Audi RS 4, Audi RS 5

Note

Also applies for the Audi RS 5 Cabriolet.

Vehicle model	Production period	Total quantity of oil in refrigerant circuit in cm^3	Quantity of refrigerant oil in replacement compressor in cm^3	Differing characteristics of this refrigerant circuit
Audi RS 4 and RS 5	♦ RS 4 from 04.12 onwards ♦ RS 5 from 03.10 onwards	150 + /- 10	150 +/- 10	• "Denso" air conditioner compressor "7 SEU 17"

Note

- *On the Audi RS 4 and RS 5 there is no changeover of the refrigerant circuit in model year 2012 (see other versions).*
- *Further notes* *⇒ page 342*

Further notes

Note

- *The replacement compressor contains the full quantity of oil intended for the refrigerant circuit. If the air conditioner compressor is renewed, the quantity of oil in the compressor must therefore be adjusted accordingly* *⇒ page 258* *.*
- *The air conditioner compressors fitted at the start of production were manufactured by "Denso" (type "6 SEU 14" for vehicles with 4-cyl. and 6-cyl. engine and type "7 SEU 17" for vehicles with 8-cyl. engine); these air conditioner compressors do not have a magnetic clutch (they are driven continuously by the engine). In model year 2012, the air conditioner compressor type "6 SEU 14" is gradually being replaced by type "6 SES 14". Air conditioner compressors produced by other manufacturers may also be fitted at a later date (depending on the engine) ⇒ Electronic parts catalogue and ⇒ Heating, air conditioning; Rep. gr. 87 ; Refrigerant circuit (vehicle-specific Workshop Manual).*
- *On the Audi Q5 hybrid, an electrically driven air conditioner compressor with integrated control electronics is installed.*
- *From model year 2012 onwards, air conditioner compressors with an additional air conditioning system magnetic clutch - N25- on the pulley (type "6 SAS 14") were gradually introduced for vehicles with certain engines (e.g. vehicles with 4-cyl. TDI engine) ⇒ Heating, air conditioning; Rep. gr. 87 ; Refrigerant circuit (vehicle-specific Workshop Manual) and ⇒ Electronic parts catalogue .*
- *These air conditioner compressors are available as replacement parts with different oil capacities, so it is important to pay attention to the oil quantity in the air conditioner compressor and to check the exact part number ⇒ Heating, air conditioning; Rep. gr. 87 ; Refrigerant circuit (vehicle-specific Workshop Manual) and ⇒ Electronic parts catalogue .*
- *The different oil quantities in the air conditioner compressor may result from the design of the air conditioner compressor (with or without oil separator at high-pressure connection) or, in the case of identical air conditioner compressors, from the design of the refrigerant circuit; pay attention to these quantities. Too much oil in the circuit results in higher pressures and a reduced cooling output of the system. Too little oil may lead to lubrication problems in the air conditioner compressor.*
- *The air conditioner compressor may have been fitted at the factory with a type plate indicating the part number and the quantity of refrigerant oil in the air conditioner compressor.*
- *At the start of production, air conditioner compressors with air conditioning system magnetic clutch - N25- and with part number 8T0 260 805 with index "C" were installed. The label on these air conditioner compressors indicates a refrigerant oil capacity of 80 +/- 10 cm^3. Shortly after the start of production, the refrigerant oil quantity was raised also to 110 +/- 10 cm^3 for this air conditioner compressor.*

Protected by copyright. Copying for private or commercial purposes, in part or in whole, is not permitted unless authorised by AUDI AG. AUDI AG does not guarantee or accept any liability with respect to the correctness of information in this document. Copyright by AUDI AG.

10.2.14 Capacities for Audi A4 (8W_) 2016 ►, Audi A4 (86_ for China) 2017 ►, Audi A5 (F5_) 2016 ►, Audi Q5 (FY_) 2017 ►, Audi Q5 (87_ for China) 2019 ►

Note

Also applies for Audi A4 allroad, Audi A4 (86_ for China), Audi A5 (all versions) etc.

Characteristics of refrigerant circuit:

- Expansion valve
- Receiver
- Refrigerant line with internal heat exchanger
- Mechanically driven “Denso” or “Sanden” air conditioner compressor with air conditioner compressor regulating valve - N280- , with or without air conditioning system magnetic clutch - N25- (depending on engine) ⇒ Heating, air conditioning; Rep. gr. 87 ; Refrigerant circuit (vehicle-specific Workshop Manual) and ⇒ Electronic parts catalogue .

Vehicle model	Production period	Total quantity of oil in refrigerant circuit in cm^3	Quantity of refrigerant oil in replacement compressor in cm^3	Differing characteristics of this refrigerant circuit
Audi A4 Audi A5 Audi Q5	From 07.15 onwards	110 + /- 10	110 +/- 10	• “Denso” air conditioner compressor
		100 + /- 10	100 +/- 10	• “Sanden” air conditioner compressor

Note

◆ *The replacement compressor contains the full quantity of oil intended for the refrigerant circuit. If the air conditioner compressor is renewed, the quantity of oil in the compressor must therefore be adjusted accordingly ⇒ page 258 .*

◆ *Different refrigerant oils depending on air conditioner compressor manufacturer ⇒ page 319 and ⇒ Electronic parts catalogue .*

Protected by copyright. Copying for private or commercial purposes, in part or in whole, is not permitted unless authorised by AUDI AG. AUDI AG does not guarantee or accept any liability with respect to the correctness of information in this document. Copyright by AUDI AG.

10.2.15 Capacities for Audi 100/Audi A6 (4A_) ► 1998

Characteristics of refrigerant circuit:

- Restrictor
- Reservoir

Protected by copyright. Copying or distribution of this document, or any part of it, is not permitted unless authorised by AUDI AG. AUDI AG does not guarantee or accept any liability with respect to the correctness of information in this document. Copyright by AUDI AG.

- “Denso” or “Zexel/Valeo” air conditioner compressor ⇒ Heating, air conditioning; Rep. gr. 87 ; Refrigerant circuit (vehicle-specific Workshop Manual) and ⇒ Electronic parts catalogue

Vehicle model	Production period	Total quantity of oil in refrigerant circuit in cm^3	Quantity of refrigerant oil in replacement compressor in cm^3
Audi 100 / Audi A6	From 10.92 to 03.97	250 + 50	250 + 50

Note

- *The replacement compressor contains the full quantity of oil intended for the refrigerant circuit. If the air conditioner compressor is renewed, the quantity of oil in the compressor must therefore be adjusted accordingly* *⇒ page 258* *.*
- *The Audi 100 / Audi A6 features different air conditioner compressors depending on the engine and production period. Exclusive use was made at the start of production of “Zexel / Valeo” air conditioner compressors. From model year 1996 onwards, “Denso” air conditioner compressors were gradually introduced for vehicles with 6-cylinder engines ⇒ Heating, air conditioning; Rep. gr. 87 ; Refrigerant circuit (vehicle-specific Workshop Manual) and ⇒ Electronic parts catalogue .*
- *The logo of the compressor manufacturer “Zexel” attached to the air conditioner compressor was modified from “Zexel” to “Valeo” from year of production 2006 onwards (change in manufacturer's name).*

10.2.16 Capacities for Audi A6 (4B_) 1998 ► and Audi allroad ► 2005

Characteristics of refrigerant circuit:

- Restrictor
- Reservoir
- “Denso” or “Zexel/Valeo” air conditioner compressor with air conditioning system magnetic clutch - N25- ⇒ Heating, air conditioning; Rep. gr. 87 ; Refrigerant circuit (vehicle-specific Workshop Manual) and ⇒ Electronic parts catalogue

Vehicle model	Production period	Total quantity of oil in refrigerant circuit in cm^3	Quantity of refrigerant oil in replacement compressor in cm^3	Differing characteristics of this refrigerant circuit
Audi A6/Audi allroad • 4-cyl. petrol engine except 2.0 ltr. • 6-cyl. petrol engine except 3.0 ltr.	From 04.97 onwards All	250 + 50	250 + 50	• Refer to notes below.
Audi A6/Audi allroad • 4-cyl. diesel engine • 6-cyl. diesel engine (see notes for Audi allroad)	From 04.97 to 05.01	250 + 50	250 + 50	• Refer to notes below.

Vehicle model	Production period	Total quantity of oil in refrigerant circuit in cm^3	Quantity of refrigerant oil in replacement compressor in cm^3	Differing characteristics of this refrigerant circuit
Audi A6 • 8-cyl. engine (with camshaft drive via toothed belt)	From 04.97 onwards All	250 + 50	250 + 50	• Refer to notes below.

Note

- *The replacement compressor contains the full quantity of oil intended for the refrigerant circuit. If the air conditioner compressor is renewed, the quantity of oil in the compressor must therefore be adjusted accordingly* *⇒ page 258* *.*
- *The Audi A6 is fitted with different air conditioner compressors depending on the engine and production period.*
- *As of Model Year 2002, the Audi A6 features air conditioner compressors with a magnetic clutch or regulating valve (different oil quantities) depending on the engine. This change was gradually introduced for the Audi allroad with 6-cyl. diesel engine in model year 2003 ⇒ Heating, air conditioning; Rep. gr. 87 ; Refrigerant circuit (vehicle-specific Workshop Manual) and ⇒ Electronic parts catalogue .*
- *The logo of the compressor manufacturer "Zexel" attached to the air conditioner compressor was modified from "Zexel" to "Valeo" from year of production 2006 onwards (change in manufacturer's name).*

Characteristics of refrigerant circuit:

- Restrictor
- Reservoir
- "Denso" air conditioner compressor with air conditioner compressor regulating valve - N280- ⇒ Heating, air conditioning; Rep. gr. 87 ; Refrigerant circuit (vehicle-specific Workshop Manual) and ⇒ Electronic parts catalogue
-

Vehicle model	Production period	Total quantity of oil in refrigerant circuit in cm^3	Quantity of refrigerant oil in replacement compressor in cm^3	Differing characteristics of this refrigerant circuit
Audi A6 • 4-cyl. 2.0 ltr. petrol engine • 6-cyl. 3.0 ltr. petrol engine	All	220 + 20	220 + 20	Air conditioner compressor type "6 SEU 12" or "7 SEU 16" (refer to notes below)
Audi A6/Audi allroad • 4-cyl. diesel engine • 6-cyl. diesel engine (see notes for Audi allroad)	From 05.01 onwards	245 + 20	245 + 20	Air conditioner compressor type "6 SEU 12" or "7 SEU 16" (refer to notes below)

Protected by copyright. Copying for private or commercial purposes, in part or in whole, is not permitted unless authorised by AUDI AG. AUDI AG does not guarantee or accept any liability with respect to the correctness of information in this document. Copyright by AUDI AG.

Vehicle model	Production period	Total quantity of oil in refrigerant circuit in cm^3	Quantity of refrigerant oil in replacement compressor in cm^3	Differing characteristics of this refrigerant circuit
Audi allroad • 8-cyl. engine (with camshaft drive via chain)	All	220 + 20	220 + 20	Air conditioner compressor type “7 SEU 17” (refer to notes below)

Note

- *The replacement compressor contains the full quantity of oil intended for the refrigerant circuit. If the air conditioner compressor is renewed, the quantity of oil in the compressor must therefore be adjusted accordingly* ⇒ page 258 .
- *The Audi A6 is fitted with different air conditioner compressors depending on the engine and production period.*
- *As of Model Year 2002, the Audi A6 features air conditioner compressors with a magnetic clutch or regulating valve (different oil quantities) depending on the engine. This change was gradually introduced for the Audi allroad with 6-cyl. diesel engine in model year 2003.*
- *The air conditioner compressor with air conditioner compressor regulating valve - N280- is available as a replacement part with different oil capacities, so it is important to pay attention to the exact part number ⇒ Heating, air conditioning; Rep. gr. 87 ; Refrigerant circuit (vehicle-specific Workshop Manual) and ⇒ Electronic parts catalogue .*
- *The different oil quantities in the air conditioner compressor may result from the design of the air conditioner compressor (with or without oil separator at high-pressure connection) or, in the case of identical air conditioner compressors, from the design of the refrigerant circuit; pay attention to these quantities. Too much oil in the circuit results in higher pressures and a reduced cooling output of the system. Too little oil may lead to lubrication problems in the air conditioner compressor.*
- *The air conditioner compressor may have been fitted at the factory with a type plate indicating the part number and the quantity of refrigerant oil in the air conditioner compressor.*

Protected by copyright. Copying for private or commercial purposes, in part or in whole, is not permitted unless authorised by AUDI AG. AUDI AG does not guarantee or accept any liability with respect to the correctness of information in this document. Copyright by AUDI AG.

10.2.17 Capacities for Audi A6 (4F_) 2005 ►

Note

Also applies to the Audi S6 and Audi RS 6.

Characteristics of refrigerant circuit:

- Restrictor
- Reservoir
- Denso air conditioner compressor with air conditioner compressor regulating valve - N280- ⇒ Heating, air conditioning; Rep. gr. 87 ; Refrigerant circuit (vehicle-specific Workshop Manual) and ⇒ Electronic parts catalogue

Vehicle model	Production period	Total quantity of oil in refrigerant circuit in cm^3	Quantity of refrigerant oil in replacement compressor in cm^3
Audi A6/S6	From 04.04 onwards	130 +/- 10	130 +/- 10
Audi RS 6	From 05.08 onwards	130 +/- 10	Depending on the version of the air conditioner compressor (refer to note below) ♦ 130 +/- 10

Note

- *The replacement compressor contains the full quantity of oil intended for the refrigerant circuit. If the air conditioner compressor is renewed, the quantity of oil in the compressor must therefore be adjusted accordingly.*
- *The Audi A6 is fitted with different air conditioner compressors depending on the engine and production period.*
- *As different versions of this air conditioner compressor are available as replacement parts, it is important to observe the exact part number ⇒ Electronic parts catalogue .*
- *The air conditioner compressor may have been fitted at the factory with a type plate indicating the part number and the quantity of refrigerant oil in the air conditioner compressor.*
- *On the 10-cyl. TFSI engine (Audi RS 6), an air conditioner compressor with a smaller refrigerant oil capacity (70 +/ - 10 cm^3) than on the 10-cyl. FSI engine (Audi S6) and on other engines (130 +/ - 10 cm^3) is installed due to the differing engine test procedure; currently the air conditioner compressors of the 10-cyl. FSI and 10-cyl. TFSI engines only differ in the part number and the refrigerant oil capacity; also refer to compressor's label. To adjust the total quantity of oil in the refrigerant circuit on the 10-cyl. TFSI engine (Audi RS 6), the quantity of oil that is "missing" in the air conditioner compressor (60 +/ - 10 cm^3) is filled into the refrigerant circuit at a different location during production. This is not necessary during service work as only replacement air conditioner compressors with the original quantity of oil (130 +/- 10 cm^3) are available (this would only be necessary during service work if a new air conditioner compressor with the smaller oil capacity was being installed) ⇒ Electronic parts catalogue .*

Protected by copyright. Copying for private or commercial purposes, in part or in whole, is not permitted unless authorised by AUDI AG. AUDI AG does not guarantee or accept any liability with respect to the correctness of information in this document. Copyright by AUDI AG.

10.2.18 Capacities for Audi A6 (4G_ or 4X_ for China) 2011 ►, Audi A7 (4G_ or 4X_ for China) 2011 ►, Audi A6 hybrid (4G_) 2012 ►, A6 e-tron (4G_) 2017 ►

Note

Also applies to Audi S and RS models.

Characteristics of refrigerant circuit:

- Expansion valve
- Receiver
- Refrigerant pipe with internal heat exchanger.

- Mechanically driven “Denso” air conditioner compressor with air conditioner compressor regulating valve - N280- (and with air conditioning system magnetic clutch - N25- from model year 2014 onwards, depending on the engine) ⇒ Heating, air conditioning; Rep. gr. 87 ; Refrigerant circuit (vehicle-specific Workshop Manual) and ⇒ Electronic parts catalogue (all vehicles except Audi A6 hybrid and A6 e-tron).
- On vehicles with a high-voltage system (Audi A6 hybrid): electrically driven “Denso” air conditioner compressors ⇒ Heating, air conditioning; Rep. gr. 87 ; Refrigerant circuit (vehicle-specific Workshop Manual) and ⇒ Electronic parts catalogue .
- On vehicles with a high-voltage system (Audi A6 e-tron): electrically driven “Sanden” air conditioner compressors ⇒ Heating, air conditioning; Rep. gr. 87 ; Refrigerant circuit (vehicle-specific Workshop Manual) and ⇒ Electronic parts catalogue .

Vehicle model	Production period	Total quantity of oil in refrigerant circuit in cm^3	Quantity of refrigerant oil in replacement compressor in cm^3	Differing characteristics of this refrigerant circuit
Audi A6	From 02.11 onwards	120 +/- 10	120 +/- 10	• “Denso” air conditioner compressor with oil separator • Air conditioner compressor type (e.g. “ 6 SEU 14” or “ 6 SBU 14”)
Audi A7	From 10.10 onwards	120 +/- 10	120 +/- 10	
Audi A6 / A7	06.14 onwards	110+20 / - 10	110 +/- 10	• “Denso” air conditioner compressor (e.g. type “ 6 SES 14” or “ 6 SAS 14”) with oil separator (with and without air conditioning system magnetic clutch - N25-)
Audi A6 hybrid	From 11.11 onwards	160 +/- 20	160 +/- 20	• Electrically driven air conditioner compressor manufactured by “Denso”
Audi A6 e-tron	From 09.16 onwards	220+ / - 10	220+ / - 10	• Electrically driven air conditioner compressor manufactured by “Sanden” (refrigerant oil SP-A2 ⇒ page 319)

Protected by copyright. Copying for private or commercial purposes, in part or in whole, is not permitted unless authorised by AUDI AG. AUDI AG does not guarantee or accept any liability with respect to the correctness of information in this document. Copyright by AUDI AG.

Note

- *On certain versions for China the type designation 4X_ is used instead of 4G_.*
- *The replacement compressor contains the full quantity of oil intended for the refrigerant circuit. If the air conditioner compressor is renewed, the quantity of oil in the compressor must therefore be adjusted accordingly* *⇒ page 258* *.*
- *At the start of production, all vehicles except the Audi A6 hybrid (and Audi A6 e-tron) were fitted with mechanically driven air conditioner compressors manufactured by "Denso". Air conditioner compressors produced by other manufacturers may also be fitted at a later date ⇒ Electronic parts catalogue and ⇒ Heating, air conditioning; Rep. gr. 87 ; Refrigerant circuit (vehicle-specific Workshop Manual).*
- *At the start of production, the Audi A6 hybrid is fitted with an electrically driven "Denso" air conditioner compressor (electrical air conditioner compressor - V470- with control unit for air conditioning compressor - J842-). There is no provision for an air conditioner compressor regulating valve - N280- on this air conditioner compressor.*
- *At the start of production, the Audi A6 e-tron is fitted with an electrically driven "Sanden" air conditioner compressor (electrical air conditioner compressor - V470- with control unit for air conditioning compressor - J842-). There is no provision for an air conditioner compressor regulating valve - N280- on this air conditioner compressor.*
- *At the start of production, the Audi A6 hybrid was fitted with an air conditioner compressor with a refrigerant oil quantity of 200 ccm. Shortly after the start of production, the refrigerant oil quantity was reduced to 160 ccm. The refrigerant oil does not have to be reduced on vehicles fitted with an air conditioner compressor with a refrigerant oil quantity of 200 ccm. However, if the refrigerant circuit has been flushed for example, a total of 160 ccm should also be filled in in this vehicle as the specified refrigerant oil quantity. The correct amount of refrigerant oil will already be filled into a replacement air conditioner compressor ⇒ Electronic parts catalogue .*
- *From model year 2014 onwards, air conditioner compressors with an air conditioning system magnetic clutch - N25- fitted additionally at the pulley will gradually be introduced for certain engines and models (type "6 SES 14" or "6 SAS 14") ⇒ Heating, air conditioning; Rep. gr. 87 ; Refrigerant circuit (vehicle-specific Workshop Manual) and ⇒ Electronic parts catalogue .*
- *From model year 2015 onwards, air conditioner compressors will gradually be introduced for which the quantity of refrigerant oil in the air conditioner compressor is 110 ccm (e.g. type "6 SES 14" or "6 SAS 14") ⇒ Heating, air conditioning; Rep. gr. 87 ; Refrigerant circuit (vehicle-specific Workshop Manual) and ⇒ Electronic parts catalogue . On vehicles with such air conditioner compressors, the quantity of refrigerant oil in the refrigerant circuit is 110 ccm +20 / -10 ccm (the quantity of refrigerant oil stipulated for service thus remains 120 ccm +/- 10 ccm).*
- *On the basis of technical product information (TPI), vehicles manufactured up to and including Model Year 2014 may be retrofitted with an air conditioner compressor of type "6 SES 14" instead of the air conditioner compressor fitted at the factory. A refrigerant oil capacity of 120 ccm remains valid for such vehicles (if applicable, add 10 ccm of refrigerant oil after flushing the refrigerant circuit and installing a new air conditioner compressor).*

Protected by copyright. Copying for private or commercial purposes, in part or in whole, is not permitted unless authorised by AUDI AG. AUDI AG does not guarantee or accept any liability with respect to the correctness and completeness of this document's contents. Copyright by AUDI AG.

- *This air conditioner compressor is available as a replacement part with different oil capacities, so it is important to pay attention to the oil quantity in the compressor and to check the exact part number ⇒ Heating, air conditioning; Rep. gr. 87 ; Refrigerant circuit (vehicle-specific Workshop Manual) and ⇒ Electronic parts catalogue .*
- *The different oil quantities in the air conditioner compressor may result from the design of the air conditioner compressor (with or without oil separator at high-pressure connection) or, in the case of identical air conditioner compressors, from the design of the refrigerant circuit; pay attention to these quantities. Too much oil in the circuit results in higher pressures and a reduced cooling output of the system. Too little oil may lead to lubrication problems in the air conditioner compressor.*
- *The air conditioner compressor may have been fitted at the factory with a type plate indicating the part number and the quantity of refrigerant oil in the air conditioner compressor.*

10.2.19 Capacities for Audi V8 (4C_) ► 1994

Characteristics of refrigerant circuit:

- Restrictor (not coloured).
- Reservoir
- "Zexel/Valeo" air conditioner compressor ⇒ Heating, air conditioning; Rep. gr. 87 ; Refrigerant circuit (vehicle-specific Workshop Manual) and ⇒ Electronic parts catalogue

Vehicle model	Production period	Total quantity of oil in refrigerant circuit in cm^3	Quantity of refrigerant oil in replacement compressor in cm^3
Audi V8	From 10.92 to 10.93	250 + 50	250 + 50

Note

- *The replacement compressor contains the full quantity of oil intended for the refrigerant circuit. If the air conditioner compressor is renewed, the quantity of oil in the compressor must therefore be adjusted accordingly* *⇒ page 258* *.*
- *The logo of the compressor manufacturer "Zexel" attached to the air conditioner compressor was modified from "Zexel" to "Valeo" from year of production 2006 onwards (change in manufacturer's name).*

10.2.20 Capacities for Audi A8 (4D_) 1994 ►

Characteristics of refrigerant circuit:

Protected by copyright. Copying for private or commercial purposes, in part or in whole, is not permitted unless authorised by AUDI AG. AUDI AG does not guarantee or accept any liability with respect to the correctness of information in this document. Copyright by AUDI AG.

- Restrictor
- Reservoir
- "Denso" or "Zexel/Valeo" air conditioner compressor ⇒ Heating, air conditioning; Rep. gr. 87 ; Refrigerant circuit (vehicle-specific Workshop Manual) and ⇒ Electronic parts catalogue

Vehicle model	Production period	Total quantity of oil in refrigerant circuit in cm^3	Quantity of refrigerant oil in replacement compressor in cm^3
Audi A8	From 05.94	250 + 50	250 + 50

Note

- *The replacement compressor contains the full quantity of oil intended for the refrigerant circuit. If the air conditioner compressor is renewed, the quantity of oil in the compressor must therefore be adjusted accordingly* *⇒ page 258* *.*
- *Exclusive use was made at the start of production of "Zexel / Valeo" air conditioner compressors. From model year 1996 onwards, production was gradually switched to "Denso" air conditioner compressors ⇒ Heating, air conditioning; Rep. gr. 87 ; Refrigerant circuit (vehicle-specific Workshop Manual) and ⇒ Electronic parts catalogue .*
- *The logo of the compressor manufacturer "Zexel" attached to the air conditioner compressor was modified from "Zexel" to "Valeo" from year of production 2006 onwards (change in manufacturer's name).*

10.2.21 Capacities for Audi A8 (4E_) 2003 ►

Characteristics of refrigerant circuit:

- Restrictor
- Reservoir
- Denso air conditioner compressor with air conditioner compressor regulating valve - N280- ⇒ Heating, air conditioning; Rep. gr. 87 ; Refrigerant circuit (vehicle-specific Workshop Manual) and ⇒ Electronic parts catalogue

Vehicle model	Production period	Total quantity of oil in refrigerant circuit in cm^3	Quantity of refrigerant oil in replacement compressor in cm^3	Differing characteristics of this refrigerant circuit
Audi A8 • 8 cyl. petrol engine with 3.7 ltr. or 4.2 ltr. (except FSI)	10.02 onwards All	200 +/- 10	200+ / - 10	Air conditioner compressor type "7 SEU 16" (refer to notes below)
• 6-cyl. and 12-cyl. petrol engine • 6-cyl. and 8-cyl. diesel engine	From 10.02 to 01.04	200+ / - 10	200+ / - 10	Air conditioner compressor type "6 SEU 14", "7 SEU 16" or "7 SEU 17" (refer to notes below)
• 6-cyl., 10-cyl. and 12-cyl. petrol engine • 6-cyl. and 8-cyl. diesel engine • 8 cyl. 4.2 ltr. petrol engine (FSI only)	From 01.04 onwards	150 +/- 10	150+ / - 10	Air conditioner compressor type "6 SEU 14" or "7 SEU 17" (refer to notes below)

Protected by copyright. Copying for private or commercial purposes, in part or in whole, is not permitted unless authorised by AUDI AG. AUDI AG does not guarantee or accept any liability with respect to the correctness of information in this document. Copyright by AUDI AG.

Note

- *The replacement compressor contains the full quantity of oil intended for the refrigerant circuit. If the air conditioner compressor is renewed, the quantity of oil in the compressor must therefore be adjusted accordingly* ⇒ page 258 .
- *The Audi A8 is fitted with different air conditioner compressors depending on the engine and production period.*
- *This air conditioner compressor is available as a replacement part with different oil capacities, so it is important to pay attention to the exact part number ⇒ Heating, air conditioning; Rep. gr. 87 ; Refrigerant circuit (vehicle-specific Workshop Manual) and ⇒ Electronic parts catalogue .*
- *At the start of production, the compressor types in the first two lines of the table were supplied with a refrigerant oil quantity of 200 cm ^{3}. These air conditioner compressors can be recognised from the index of the part number (4E0 260 805 with index "C", "D", "E", "F", "J", "L" or "S"). In Model Year 2004 (as of approx. 01.04), a gradual change was made to other types of compressor with a refrigerant oil quantity of 150 cm ^{3}. These air conditioner compressors can be recognised from the index of the part number (4E0 260 805 with index "G", "H", "T", "M", "N", "Q" or double index e.g. "AB") ⇒ Electronic parts catalogue .*

Protected by copyright. Copying for private or commercial purposes, in part or in whole, is not permitted unless authorised by AUDI AG. AUDI AG does not guarantee or accept any liability with respect to the correctness of information in this document. Copyright by AUDI AG.

- *The different oil quantities in the air conditioner compressor may result from the design of the air conditioner compressor (with or without oil separator at high-pressure connection) or, in the case of identical air conditioner compressors, from the design of the refrigerant circuit; pay attention to these quantities. Too much oil in the circuit results in higher pressures and a reduced cooling output of the system. Too little oil may lead to lubrication problems in the air conditioner compressor.*
- *The air conditioner compressor may have been fitted at the factory with a type plate indicating the part number and the quantity of refrigerant oil in the air conditioner compressor.*

10.2.22 Capacities for Audi A8 (4H_) 2010 ►, Audi A8 hybrid (4H_) 2012 ►

Characteristics of refrigerant circuit:

- Expansion valve
- With one or two evaporator(s) depending on equipment
- Refrigerant pipe with internal heat exchanger.
- Desiccant cartridge in receiver at condenser
- Mechanically driven "Denso" air conditioner compressor with air conditioner compressor regulating valve - N280- ⇒ Heating, air conditioning; Rep. gr. 87 ; Refrigerant circuit (vehicle-specific Workshop Manual) and ⇒ Electronic parts catalogue (all vehicles except Audi A8 hybrid).
- On vehicles with a high-voltage system (Audi A8 hybrid): electrically driven "Denso" air conditioner compressors ⇒ Heating, air conditioning; Rep. gr. 87 ; Refrigerant circuit (vehicle-specific Workshop Manual) and ⇒ Electronic parts catalogue .

Caution

Different refrigerant and refrigerant oil capacities for vehicles with 8-cyl. TDI engine

- *For vehicles with 8-cylinder TDI engine: Due to the fitting location of the air conditioner compressor at the top of the engine, the amount of refrigerant oil required differs from the quantity indicated on the factory label of the air conditioner compressor.*

Vehicle model	Production period	Total quantity of oil in refrigerant circuit in cm^3	Quantity of refrigerant oil in replacement compressor in cm^3	Differing characteristics of this refrigerant circuit
Audi A8 (all engines except 8-cyl. TDI)	From 03.10 onwards			
♦ Vehicle with one evaporator		130^{+} / - 10	♦ 130^{+} / - 10	• One evaporator
♦ Vehicle with two evaporators		130^{+} / - 10		• Two evaporators (refer to notes below)
Audi A8 (only 8-cyl. TDI engine)				
♦ Vehicle with one evaporator		180^{+} / - 10	♦ 130^{+} / - 10	• One evaporator
♦ Vehicle with two evaporators		180^{+} / - 10		• Two evaporators (refer to notes below)

Protected by copyright. Copying for private or commercial purposes, in part or in whole, is not permitted unless authorised by AUDI AG. AUDI AG does not guarantee or accept any liability with respect to the correctness of information in this document. Copyright by AUDI AG.

Vehicle model	Production period	Total quantity of oil in refrigerant circuit in cm^3	Quantity of refrigerant oil in replacement compressor in cm^3	Differing characteristics of this refrigerant circuit
Audi A8 hybrid	From 01.12 onwards	160^{+} / - 20	160^{+} / - 20	• One evaporator in air conditioning unit • Electrically driven air conditioner compressor • Second evaporator in battery cooling module

Protected by copyright. Copying for private or commercial purposes, in part or in whole, is not permitted unless authorised by AUDI AG. AUDI AG does not guarantee or accept any liability with respect to the correctness of information in this document. Copyright by AUDI AG.

Note

- *The replacement compressor contains a certain amount of refrigerant oil (currently 130 +/ - 10 cm^3 depending on the air conditioner compressor, refer to label). This quantity of refrigerant oil currently corresponds to the quantity of oil specified for this refrigerant circuit on vehicles with one or two evaporators (except vehicles with 8-cyl. TDI engine; for these vehicles see below). At present, the same amount of oil is used in vehicles with two evaporators as in vehicles with one evaporator. Due to the longer refrigerant lines and the second evaporator, no additional refrigerant oil is currently required in the refrigerant circuit on this vehicle. The refrigerant circuit on this vehicle is constructed so that only a small part of the refrigerant oil passes through the refrigerant lines to the second evaporator and into the second evaporator when the air conditioner is operated. If the air conditioner compressor is renewed after cleaning the refrigerant circuit, it is therefore not necessary to pour additional refrigerant oil into the refrigerant circuit on vehicles with two evaporators (due to the second evaporator). If the air conditioner compressor is renewed without having to clean the refrigerant circuit, the quantity of refrigerant oil in the new compressor to be fitted should be adjusted in line with the quantity of oil poured out of the old compressor* ⇒ page 258 .
- *On vehicles with 8-cyl. TDI engine, the quantity of refrigerant oil in the refrigerant circuit was increased from 130 ccm to 180 ccm from vehicle identification number 4H_ BN 018846 onwards. Accordingly, the refrigerant capacity thus had to be reduced slightly. As the capacity specification on the label has not yet been changed, proceed as follows: On vehicles manufactured up to the vehicle identification number mentioned, check whether the refrigerant oil has already been topped up during a previous workshop visit. If not, add 50 ccm of refrigerant oil to the refrigerant circuit. Then correspondingly alter the refrigerant capacity specified on the label in waterproof ink and fill the refrigerant circuit with the specified quantity of refrigerant. Finally make a record of the change made in the vehicle data. On vehicles manufactured as of the vehicle identification number mentioned, check the refrigerant capacity specified on the label, alter accordingly in waterproof ink if applicable and then fill the refrigerant circuit with the specified quantity of refrigerant.*
- *Vehicles with an 8-cyl. TDI engine up to vehicle identification number 4H_ BN 018845 were filled at the factory with the same quantity of refrigerant oil as for the other engines. As of vehicle identification number 4H_ 018846, the refrigerant circuit on vehicles with an 8-cyl. TDI engine is filled at the factory with a larger quantity of refrigerant oil. This quantity of refrigerant oil applies retroactively to all vehicles with an 8-cyl. TDI engine. If the refrigerant circuit is re-charged on vehicles with an 8-cyl. TDI engine or the air conditioner compressor is renewed, e.g. after cleaning the refrigerant circuit, the quantity of refrigerant oil in the refrigerant circuit must be checked and topped up if necessary, or the correct quantity must be added (e.g. at open lines or component connections or via air conditioner service station prior to filling with refrigerant). If the air conditioner compressor is renewed without having to clean the refrigerant circuit, the quantity of refrigerant oil in the new compressor to be fitted should be adjusted in line with the quantity of oil poured out of the old compressor (and topped up accordingly if necessary on vehicles up to the vehicle identification number specified above)* ⇒ page 258 .

Protected by copyright. Copying for private or commercial purposes, in part or in whole, is not permitted unless authorized by AUDI AG. AUDI AG does not guarantee or accept any liability with respect to the correctness of information in this document. Copyright by AUDI AG.

- *The different oil quantities in the air conditioner compressor may result from the design of the air conditioner compressor (with or without oil separator at high-pressure connection) or, in the case of identical air conditioner compressors, from the design of the refrigerant circuit; pay attention to these quantities. Too much oil in the circuit results in higher pressures and a reduced cooling output of the system. Too little oil may lead to lubrication problems in the air conditioner compressor.*
- *As replacement air conditioner compressors with different oil capacities are available, it is important to observe the exact part number ⇒ Electronic parts catalogue .*
- *Too much oil in the circuit results in higher pressures and a reduction in the cooling output of the air conditioner. Too little oil may lead to lubrication problems in the air conditioner compressor. Therefore it is important to observe the specified refrigerant oil quantities.*
- *The air conditioner compressor may have been fitted at the factory with a type plate indicating the part number and the quantity of refrigerant oil in the air conditioner compressor.*
- *At the start of production, all vehicles except the Audi A8 hybrid were fitted with mechanically driven air conditioner compressors manufactured by "Denso". Air conditioner compressors produced by other manufacturers may also be fitted at a later date ⇒ Heating, air conditioning; Rep. gr. 87 ; Refrigerant circuit (vehicle-specific Workshop Manual).*
- *At the start of production, the Audi A8 hybrid is fitted with an electrically driven "Denso" air conditioner compressor (electrical air conditioner compressor - V470- with control unit for air conditioning compressor - J842-). There is no provision for an air conditioner compressor regulating valve - N280- on this air conditioner compressor.*
- *At the start of production, the Audi A8 hybrid was fitted with an air conditioner compressor with a refrigerant oil quantity of 200 ccm. Shortly after the start of production, the refrigerant oil quantity was reduced to 160 ccm. The refrigerant oil does not have to be reduced on vehicles fitted with an air conditioner compressor with a refrigerant oil quantity of 200 ccm. However, if the refrigerant circuit has been flushed for example, a total of 160 ccm should also be filled in in this vehicle as the specified refrigerant oil quantity. The correct amount of refrigerant oil will already be filled into a replacement air conditioner compressor ⇒ Electronic parts catalogue .*

Protected by copyright. Copying for private or commercial purposes, in part or in whole, is not permitted unless authorised by AUDI AG. AUDI AG does not guarantee or accept any liability with respect to the correctness of information in this document. Copyright by AUDI AG.

10.2.23 Capacities for Audi Q7 (4L_) 2006 ►

Capacities for Audi Q7 (4L_) 2006 ►

Characteristics of refrigerant circuit:

- Expansion valve
- With one or two evaporator(s) depending on equipment
- Desiccant cartridge in receiver at condenser
- Denso air conditioner compressor with air conditioner compressor regulating valve - N280- ⇒ Heating, air conditioning; Rep. gr. 87 ; Refrigerant circuit (vehicle-specific Workshop Manual) and ⇒ Electronic parts catalogue

Vehicle model	Production period	Total quantity of oil in refrigerant circuit in cm^3	Quantity of refrigerant oil in replacement compressor in cm^3	Differing characteristics of this refrigerant circuit
Audi Q7 (4L_)	From 02.06 onwards			
♦ Vehicle with one evaporator		140, 150 or 160^{+} 15/- 10 (depending on the air conditioner compressor fitted)	♦ 140^{+}/- 10 (air conditioner compressor for vehicle with 6-cyl. TDI engine or 12-cyl. engine) ♦ 150^{+}/- 10 (air conditioner compressor for vehicle with 8-cyl. engine or 6-cyl. 3.2 l FSI engine) ♦ 160^{+}/ - 10 (air conditioner compressor for vehicle with 6-cyl. 3.6 l FSI engine)	• One evaporator • Air conditioner compressor type “6 SEU 14” or “7 SEU 16” (refer to notes below)
♦ Vehicle with two evaporators		240, 250 or 260 $^{+}$ 15/- 10 (depending on air conditioner compressor fitted, quantity of refrigerant oil in air conditioner compressor plus 100)		• Two evaporators (refer to notes below)

Protected by copyright. Copying for private or commercial purposes, in part or in whole, is not permitted unless authorised by AUDI AG. AUDI AG does not guarantee or accept any liability with respect to the correctness of information in this document. Copyright by AUDI AG.

Note

- *The replacement compressor contains a certain amount of refrigerant oil (currently 140, 150 or 160 +/- 10 cm³ depending on the air conditioner compressor). This quantity of refrigerant oil currently corresponds to the quantity of oil specified for this refrigerant circuit on vehicles with one evaporator. Because of the longer refrigerant lines and the second evaporator, vehicles with two evaporators require more refrigerant oil in the refrigerant circuit (currently an additional 100 cm³). If the air conditioner compressor is renewed after cleaning the refrigerant circuit, this quantity of refrigerant oil therefore has to be added to the refrigerant circuit on vehicles with two evaporators (e.g. poured into open pipes or component connections). If the air conditioner compressor is renewed without having to clean the refrigerant circuit, the quantity of refrigerant oil in the new compressor to be fitted should be adjusted in line with the quantity of oil poured out of the old compressor* *⇒ page 258* *.*
- *As replacement air conditioner compressors with different oil capacities are available, it is important to observe the exact part number ⇒ Electronic parts catalogue .*
- *The different oil quantities in the air conditioner compressor may result from the design of the air conditioner compressor (with or without oil separator at high-pressure connection) or, in the case of identical air conditioner compressors, from the design of the refrigerant circuit; pay attention to these quantities. Too much oil in the circuit results in higher pressures and a reduced cooling output of the system. Too little oil may lead to lubrication problems in the air conditioner compressor.*
- *The air conditioner compressor may have been fitted at the factory with a type plate indicating the part number and the quantity of refrigerant oil in the air conditioner compressor.*

Protected by copyright. Copying for private or commercial purposes, in part or in whole, is not permitted unless authorised by AUDI AG. AUDI AG does not guarantee or accept any liability with respect to the correctness of information in this document. Copyright by AUDI AG.

10.2.24 Capacities for Audi Q7 (4M_) 2016 ►

Refrigerant oil capacities can be found in the vehicle-specific Workshop Manual ⇒ Heating, air conditioning; Rep. gr. 00 ; Technical data; Approved refrigerant oils and capacities for refrigerant oil .

10.2.25 Capacities for Audi R8 (42_) 2008 ►, Audi R8 (4S_) 2015 ►

Characteristics of refrigerant circuit for Audi R8 (42_) 2008 ►:

- Restrictor
- Reservoir
- Two condensers (connected in series)
- Denso air conditioner compressor with air conditioner compressor regulating valve - N280- ⇒ Heating, air conditioning; Rep. gr. 87 ; Refrigerant circuit (vehicle-specific Workshop Manual) and ⇒ Electronic parts catalogue

Characteristics of refrigerant circuit for Audi R8 (4S_) 2015 ►:

- Expansion valve
- Receiver (with dryer)
- Two condensers (connected in series)
- Denso air conditioner compressor with air conditioner compressor regulating valve - N280- ⇒ Heating, air conditioning; Rep. gr. 87 ; Refrigerant circuit (vehicle-specific Workshop Manual) and ⇒ Electronic parts catalogue

Vehicle model	Production period	Total quantity of oil in refrigerant circuit in cm^3	Quantity of refrigerant oil in replacement compressor in cm^3	Differing characteristics of this refrigerant circuit
Audi R8 (42_)	From 03.07 to 11.12	200 + /- 10 ♦ As of 11.12 the quantity of oil for these vehicles was increased from 150 to 200 cm^3; this also applies to all earlier vehicles.	200+ / - 10 ♦ Depending on the part number, replacement air conditioner compressors may contain only 150 cm^3; if necessary add an additional 50 cm^3 (see notes below).	Air conditioner compressor type “7 SEU 17”
	From 11.12 onwards	200 + /- 10	200 + /- 10	
Audi R8 (4S_)	From 08.15 onwards	150 + /- 10	150 + /- 10	Air conditioner compressor type “6 SES 14”

Protected by copyright. Copying for private or commercial purposes, in part or in whole, is not permitted unless authorised by AUDI AG. AUDI AG does not guarantee or accept any liability with respect to the correctness of information in this document. Copyright by AUDI AG.

Note

- *The replacement compressor contains the full quantity of oil intended for the refrigerant circuit. If the air conditioner compressor is renewed, the quantity of oil in the compressor must therefore be adjusted accordingly* ⇒ page 258 .
- *As replacement air conditioner compressors with different oil capacities are available, it is important to observe the exact part number ⇒ Electronic parts catalogue .*
- *From vehicle identification number 429 DN 000751 onwards (manufactured from 11.2013), the quantity of refrigerant in the circuit was increased from 650 g to 680 g and the quantity of refrigerant oil from 150 ccm to 200 ccm. The increased amount of refrigerant and refrigerant oil also applies to all earlier vehicles. On vehicles manufactured up to the vehicle identification number mentioned, check whether the refrigerant oil has already been topped up during a previous workshop visit. If not, add 50 ccm of refrigerant oil to the refrigerant circuit. Then check the refrigerant capacity indicated on the label and if necessary attach a new label with the correct capacity and the appropriate language (e.g. the label with part number 420 010 535 and index BA in German and English) ⇒ Electronic parts catalogue and ⇒ Heating, air conditioning; Rep. gr. 87 ; Installation location overview - Air conditioning (vehicle-specific Workshop Manual). If no label with the correct capacity and the appropriate language is available, alter the capacity indicated on the existing label accordingly with a waterproof pen. Then increase the refrigerant oil quantity in the refrigerant circuit by 50 ccm and charge the refrigerant circuit with the quantity of refrigerant shown above* ⇒ "10.1.23 Capacities for Audi R8 (42_) 2008 ►, Audi R8 (4S_) 2015 ►", page 316 .
- *The air conditioner compressor may have been fitted at the factory with a type plate indicating the part number and the quantity of refrigerant oil in the compressor (on the Audi R8 this type plate is not visible when the compressor is installed). On vehicles up to the vehicle identification number quoted above, where the air conditioner compressor was filled with a smaller quantity of refrigerant oil at the factory, make a note in the vehicle documentation (and on the label indicating the refrigerant capacity) to show that the quantity of refrigerant oil has already been increased by 50 ccm in the workshop.*
- *The different oil quantities in the air conditioner compressor may result from the design of the air conditioner compressor (with or without oil separator at high-pressure connection) or, in the case of identical air conditioner compressors, from the design of the refrigerant circuit; pay attention to these quantities. Too much oil in the refrigerant circuit results in higher pressures and a reduction in the cooling output of the air conditioner. Too little oil may lead to lubrication problems in the air conditioner compressor. Therefore it is important to observe the specified refrigerant oil quantities.*

Protected by copyright. Copying for private or commercial purposes, in part or in whole, is not permitted unless authorised by AUDI AG. AUDI AG does not guarantee or accept any liability with respect to the correctness of information in this document. Copyright by AUDI AG.

11 Test equipment and tools

⇒ "11.1 List of testers, tools and materials", page 361

⇒ "11.2 Tools and materials available from regional sales centre or importer", page 363

⇒ "11.3 Commercially available tools and materials", page 366

⇒ "11.4 Improvised tools", page 367

11.1 List of testers, tools and materials

Note

This list outlines the testers, tools and materials required for expert refrigerant circuit repair work.

- Tools and materials available from regional sales centre or importer ⇒ page 361 .
- Commercially available tools and materials ⇒ page 362 .
- Improvised tools ⇒ page 363 .

11.1.1 Tools and materials available from regional sales centre or importer

Overview	Page
Air conditioner service station with flushing kit for currently available air conditioner service stations ⇒ Electronic parts catalogue (Tools; Workshop equipment/tools; Air conditioning/heating) – With integrated program for flushing refrigerant circuit with refrigerant R134a as well as the corresponding flushing kit	See Figure and ⇒ Electronic parts catalogue
Refrigerant circuit flushing kit for currently available flushing kits ⇒ Electronic parts catalogue (Tools; Workshop equipment/tools; Air conditioning/heating) – For flushing the refrigerant circuit with refrigerant R134a; also for use with older air conditioner service stations with a vessel for at least 10 kg of refrigerant R134a (flushing must be performed manually)	⇒ Electronic parts catalogue.
VW/Audi passenger vehicle adapter set - VAS 6338/1- ⇒ Electronic parts catalogue (Tools; Workshop equipment/tools; Air conditioning/heating). – For connecting air conditioner service station to refrigerant circuit and for bridging certain removed components when flushing	⇒ Electronic parts catalogue.
Adapters -VAS 6338/40- and -VAS 6338/41- ⇒ Electronic parts catalogue (Tools; Workshop equipment/tools; Air conditioning/heating) – For vehicle with a high-voltage system, for flushing the air conditioner compressor Shut-off valve -VAS 6338/42- ⇒ Electronic parts catalogue (Tools; Workshop equipment/tools; Air conditioning/heating) – For vehicles with a high-voltage system, for bypassing certain removed components when flushing the refrigerant circuit	⇒ Electronic parts catalogue.
Shut-off valve set -VAS 6338/47- ⇒ Electronic parts catalogue (Tools; Workshop equipment/tools; Air conditioning/heating) – For some vehicles with a high-voltage system (e.g. Audi Q7 e-tron); for bypassing removed non-return valves when flushing the refrigerant circuit	⇒ Electronic parts catalogue.
Leak detector, currently available leak detectors⇒ Electronic parts catalogue (Tools; Workshop equipment/tools; Air conditioning/heating)	See Figure and ⇒ Electronic parts catalogue
Detaching device for magnetic clutch (Zexel / Valeo air conditioner compressor) V.A.G 1719 ⇒ Electronic parts catalogue (Tools; Workshop equipment/tools; Air conditioning/heating)	See Figure and ⇒ Electronic parts catalogue

Protected by copyright. Copying for private or commercial purposes, in part or in whole, is not permitted unless authorised by AUDI AG. AUDI AG does not guarantee or accept any liability with respect to the correctness of information in this document. Copyright by AUDI AG.

Overview	Page
Adapter set for refrigerant circuit R134a V.A.G 1785/1-10 ⇒ Electronic parts catalogue (Tools; Workshop equipment/tools; Air conditioning/heating) – For connecting air conditioner service station to refrigerant circuit and for bridging certain components on flushing and blowing out	See Figure and ⇒ Electronic parts catalogue
Valve adapter V.A.G 1785/9 and V.A.G 1785/10 ⇒ Electronic parts catalogue (Tools; Workshop equipment/tools; Air conditioning/heating)	See Figure and ⇒ Electronic parts catalogue
Adapter set with service connection V.A.G 1786 ⇒ Electronic parts catalogue (Tools; Workshop equipment/tools; Air conditioning/heating)	See Figure and ⇒ Electronic parts catalogue
O-rings ⇒ Electronic parts catalogue	See Figure and ⇒ Electronic parts catalogue
Refrigerant oil ⇒ Electronic parts catalogue	See Figure and ⇒ Electronic parts catalogue
The VAS 6201 leak detection system includes the following: ⇒ Electronic parts catalogue (Tools; Workshop equipment/tools; Air conditioning/heating) ◆ Hand pump with low-pressure service hose, service coupling and non-return valve VAS 6201/1 ◆ Cartridge VAS 6201/2 ◆ Cleaning solution VAS 6201/3 ◆ UV leak detection lamp VAS 6201/4 ◆ Replacement bulb for leak detection lamp VAS 6201/5 ◆ Eye protection VAS 6201/6 ◆ Sticker VAS 6201/7 ◆ Protective gloves VAS 6201/9 ◆ Filler tube VAS 6201/8 ◆ System case VAS 6201/10	See Figure and ⇒ Electronic parts catalogue
Adapter set for service connections ⇒ Electronic parts catalogue (Tools; Workshop equipment/tools; Air conditioning/heating)	See Figure and ⇒ Electronic parts catalogue
Refrigerant line release tool -T40149/- ⇒ Electronic parts catalogue (Tools; Special tools)	⇒ Electronic parts catalogue.
Dismantling tool for the refrigerant line quick release couplings -T40232- ⇒ Electronic parts catalogue (Tools; Special tools)	⇒ Electronic parts catalogue.

11.1.2 Commercially available tools and materials

Overview	Page
Fin comb	Refer to illustration
Filler hoses 5/8" - 18 UNF with valve opener	Refer to illustration
Connection piece for refrigerant cylinder and seal with quick-release coupling connection or threaded connection 5/8" - 18 UNF	Refer to illustration
Valve caps 5/8"-18 UNF	Refer to illustration
Pressure gauge set with pressure reducer for nitrogen	Refer to illustration
Quick-release coupling adapter for service connections (2x included in scope of delivery of air conditioner service station)	Refer to illustration
Open-ring spanner, size according to bolted joints at refrigerant lines	Not illustrated
Valve opener for filler hoses	Not illustrated
Connecting nipples for conical seal 5/8"-18 UNF	Not illustrated
Compressed air gun with rubber end piece	Not illustrated

Copyright by AUDI AG. Copyright. Copying for private or commercial purposes, in part or in whole, is not permitted without the consent of AUDI AG. AUDI AG does not guarantee or accept any liability with respect to the correctness of information in this document. Copyright by AUDI AG.

Overview	Page
Combination fine filter unit for compressed air system, oil, dirt and water separator as standard for painting facilities	Not illustrated
Valve opener for Schrader valve	Not illustrated
Manual shut-off valve 5/8"-18 UNF	Not illustrated
Recycling cylinder for refrigerant R134a	Not illustrated
Digital thermometer	Not illustrated
Protective gloves	Not illustrated
Safety goggles	Not illustrated
Refrigerant R134a with cylinder (capacity as required)	Not illustrated

11.1.3 Improvised tools

Overview	Page
Filler hose with connection to compressed-air system for workshop	Not illustrated

11.2 Tools and materials available from regional sales centre or importer

Service station / air conditioner service station (this illustration shows V.A.S 6007A, for example), for currently available air conditioner service stations ⇒ Electronic parts catalogue (Tools; Workshop equipment/tools; Air conditioning/heating).

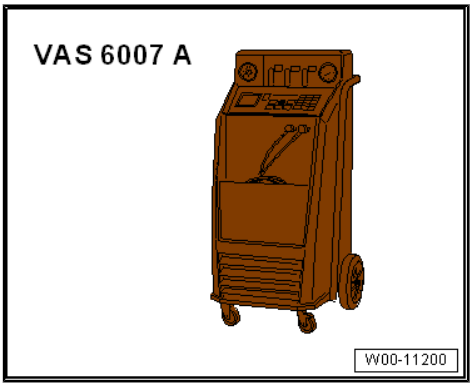

- The operations "testing, extraction (recycling), evacuation, flushing and charging" must be performed according to the relevant operating instructions.
- The filters and dryers fitted must be renewed by no later than the end of the period of use specified in the operating instructions and each time the station is drained (have replacement filter to hand). Available from equipment manufacturer; refer to the operating instructions for the air conditioner service station.
- Air conditioner service stations that are not displayed here may also be used ⇒ Electronic parts catalogue (Tools; Workshop equipment/tools; Air conditioning/heating).
- Currently available air conditioner service stations are provided with a refrigerant circuit flushing program. The scope of delivery of these air conditioner service stations also includes the necessary flushing kit ⇒ Electronic parts catalogue (Tools; Workshop equipment/tools; Air conditioning/heating).

Note

- *This air conditioner service station comprises the following standard components: Charging cylinder, pressure gauge set, vacuum pump, shut-off valves and filler hoses.*
- *One quick-release coupling each (for service connections on high and low-pressure side) is included in the scope of delivery of this air conditioner service station.*
- *Depending on the version, a current vacuum display (LED) may appear after pressing the "Evacuation" button again.*

Protected by copyright. Copying for private or commercial purposes, in part or in whole, is not permitted unless authorised by AUDI AG. AUDI AG does not guarantee or accept any liability with respect to the correctness of information in this document. Copyright by AUDI AG.

Leak detector (e.g. V.A.G 1796), currently available leak detectors⇒ Electronic parts catalogue (Tools; Workshop equipment/ tools; Air conditioning/heating)

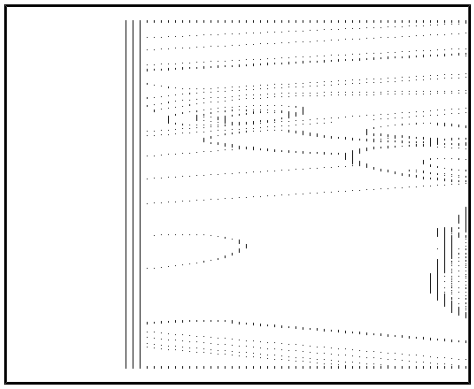

Leak detector (e.g. VAS 6201), currently available leak detector systems ⇒ Electronic parts catalogue (Tools; Workshop equipment/tools; Air conditioning/heating)

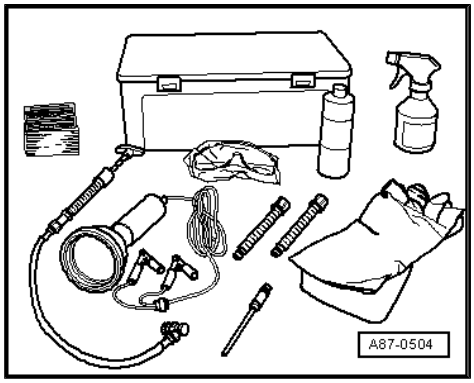

Puller for magnetic clutch V.A.G 1719 (for “Zexel / Valeo” air conditioner compressor)

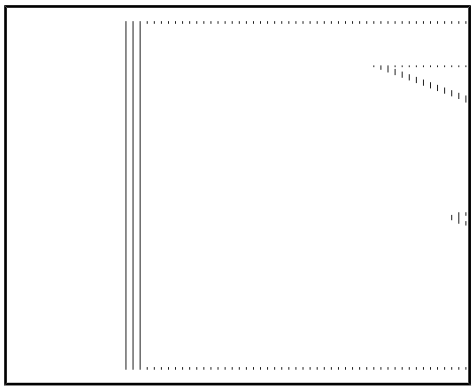

Adapter set for refrigerant circuit R134a V.A.G 1785/1-10

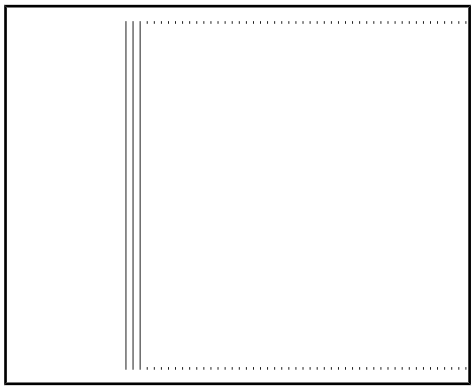

Adapter for cleaning refrigerant circuit (flush with refrigerant R134a) ⇒ page 88 or blow out with compressed air and nitrogen ⇒ page 84 .

A - 5/8"-18 UNF thread for conical seal

B - Union nut (for connection with O-ring) with thread

- M 18x1.5 V.A.G 1785/1
- M 20x1.5 V.A.G 1785/2
- M 24x1.5 V.A.G 1785/3
- M 28x1.5 V.A.G 1785/4

Protected by copyright. Copying for private or commercial purposes, in part or in whole, is not permitted unless authorised by AUDI AG. AUDI AG does not guarantee or accept any liability with respect to the correctness of information in this document. Copyright by AUDI AG.

Adapter

A - 5/8"-18 UNF thread for conical seal

B - Threaded connection for O-ring

- M 18 x 1.5 V.A.G 1785/5
- M 20 x 1.5 V.A.G 1785/6
- M 24 x 1.5 V.A.G 1785/7
- M 28 x 1.5 V.A.G 1785/8

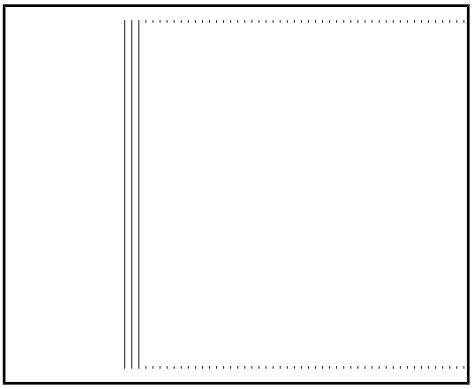

Valve adapter

A - 5/8"-18 UNF thread for conical seal

B - Internal thread with valve opener

- M 10 x 1.25 V.A.G 1785/9 (for connections with valve on high-pressure end)
- M 12 x 1.5 V.A.G 1785/10 (for connections on low-pressure end)

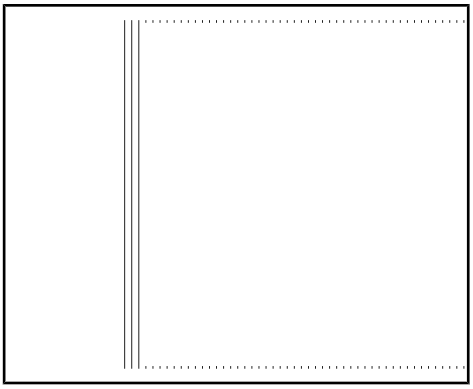

Note

- *A Schrader valve is screwed into connection -A-.*
- *A valve opener must be installed in the filler hose connection.*
- *Various adapters from this adapter set are also included in the VW/Audi passenger vehicle adapter set - VAS 6338/1- .*

Adapter set for service connection V.A.G 1786

A - Adapter with union nut - V.A.G 1786/1- (only for connections with small valve core at low-pressure side)

B - Filler hose with union nut 5/8"-18 UNF (short version)

C - Adapter with service connection - V.A.G 1786/2-

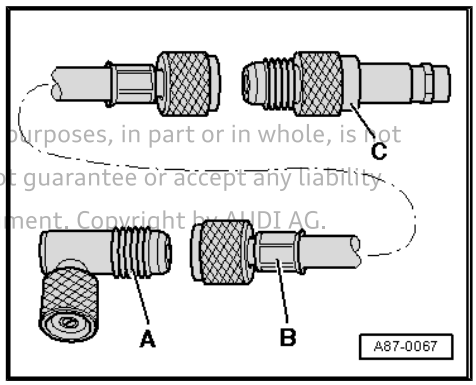

Protected by copyright. Copying for private or commercial purposes, in part or in whole, is not permitted unless authorised by AUDI AG. AUDI AG does not guarantee or accept any liability with respect to the correctness of information in this document. Copyright by AUDI AG.

Note

- *For connections with large valve core (standard on "Zexel/Valeo" compressors, gradual change to small valve core from 10.94 onwards), adapter V.A.G 1785/10 should be used (remove valve from adapter V.A.G 1785/10 or install valve opener in filler hose -B-).*
- *The logo of the compressor manufacturer "Zexel" attached to the air conditioner compressor was modified from "Zexel" to "Valeo" from year of production 2006 onwards (change in manufacturer's name).*

Socket - T10364-

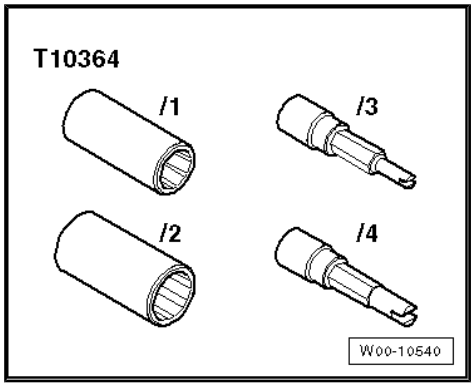

Note

For removing and installing service connections and valve cores with refrigerant circuit discharged.

11.3 Commercially available tools and materials

Fin comb

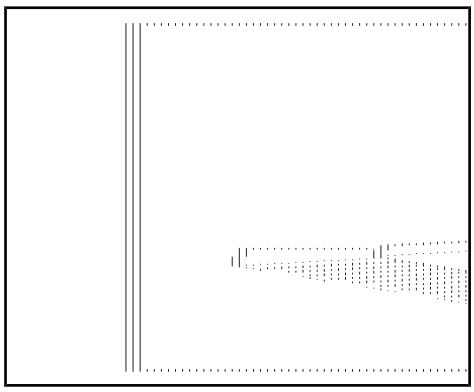

Filler hoses

5/8"-18 UNF thread

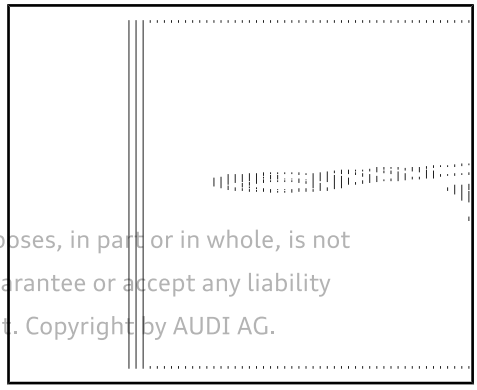

Note

- *Use differently coloured filler hoses (1800 mm long).*
- *Have valve opener and spare seals to hand.*
- *A short filler hose is also included in the adapter set for refrigerant circuits - VAS 6338/1-*

Protected by copyright. Copying for private or commercial purposes, in part or in whole, is not permitted unless authorised by AUDI AG. AUDI AG does not guarantee or accept any liability with respect to the correctness of information in this document. Copyright by AUDI AG.

Connection piece for refrigerant cylinder with seal, quick-release coupling connection or threaded connection 5/8" - 18 UNF

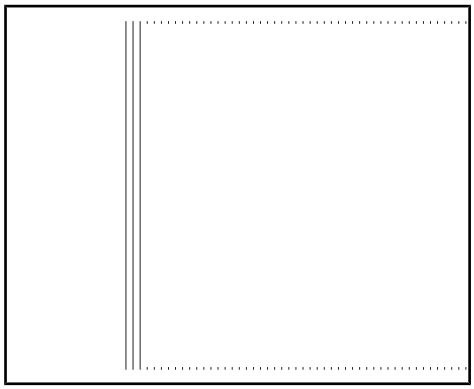

Valve caps with spare seals (for 5/8"-18 UNF thread)

Seals can also be used for filler hoses.

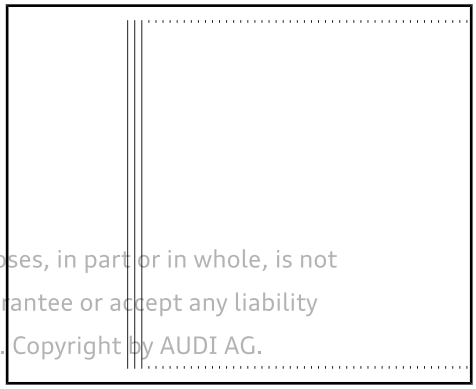

Note

Valve caps with replacement seals are also included in the adapter set for refrigerant circuits - VAS 6338/1- .

Protected by copyright. Copying for private or commercial purposes, in part or in whole, is not permitted unless authorised by AUDI AG. AUDI AG does not guarantee or accept any liability with respect to the correctness of information in this document. Copyright by AUDI AG.

Pressure gauge set with nitrogen pressure reducer (max. reducing pressure: 15 bar).

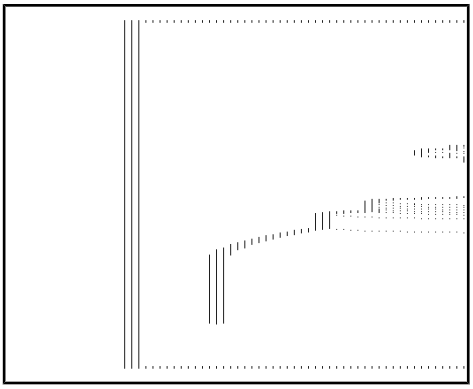

1 - Pressure gauge set

2 - Pressure hose (ID 5 mm, length 2 m)

3 - Nitrogen

4 - Hose fitting

Note

For connection to adapter V.A.G 1785 with 5/8"-18 UNF thread

Quick-release coupling adapter for service connections

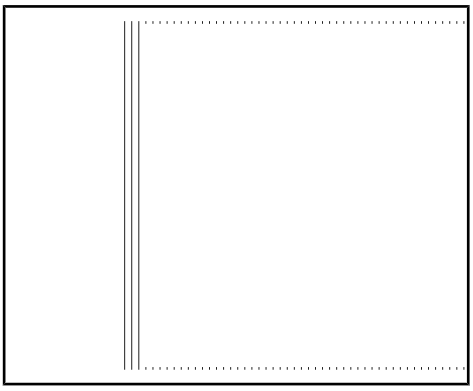

- High-pressure side with nominal diameter of 16 mm
- Low-pressure side with nominal diameter of 13 mm
- Sharan, 2 releasing tools

Note

This quick-release coupling is included in the scope of delivery of the air conditioner service station.

11.4 Improvised tools

Filler hose with connection to compressed-air system for workshop

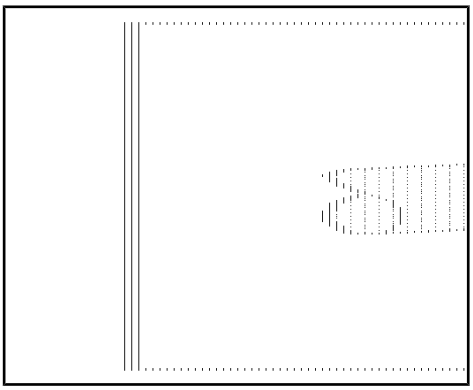

A - Filler hose 5/8" - 18 UNF** (version with large internal diameter)

B - Connection for workshop compressed air system** (always use filter)