INDEX

MODEL	SALES DESIGNATION	MODEL	SALES DESIGNATION
124.026	260E	124.090	300TE
	300E 2.6 ①	124.128	300D 2.5 Turbo
124.030	300E	124.133	300D Turbo
124.034	400E	124.193	300TD Turbo
124.036	500E	124.230	300E 4MATIC
124.050	300CE	124.290	300TE 4MATIC
124.051	300CE		

CIRCUIT	PAGE
Active Bass: Amplifiers and Speakers	132
Anti-Lock Brake System (ABS)	150
ABS with ASD/4matic	151
ABS with ASR	152
ABS with ASR/Electronic Accelerator	152/4
Automatic Antenna	131
Automatic Climate Control	301
Automatic Locking Differential (ASD)	153
Auxiliary Fan	121
CD Changer	131/8
Cellular Telephone	134
Central Locking System	146
Charging System	123
Cigar Lighter	131
Clock	136
Component Locations	201
Controller Area Network (CAN) Data Bus	122
Cruise Control	137
Diagnostic Module	113/6
Diagnostic Socket	113
Electronic Accelerator System	138
Electronic Diesel System	115
Electronic Engine Controls	117
Engine Overload Protection	121
4MATIC System	154
First Gear Start	164
Fuel Delivery	114
Fuse Block Details	108
Fuse Circuit List	103
Fuse/Relay Box	102
Gauges	136
Ground Distribution	165
Headlamp Wiper/Washer	162
Heated Seats	142
Heated Windshield Washer System	162
Horns	145
Ignition	113
Lamps	
—Backup	125
—Center Console	130
—Courtesy	128

CIRCUIT	PAGE
Lamps (continued)	
—Fog	124
—Glove Box	131
—Hazard	127
—Headlamps	124
—Instrument Cluster	130
—License	126
—Park	126
—Reading	129
—Side Marker	126
—Stop	125
—Tail	126
—Turn Signal	127
—Trunk	128
—Vanity	129
Orthopedic Seats	155
Outside Heated Mirrors	149
Power Distribution	105
Power Seats	148
Power Windows	144
Preglow System	112
Radio	131
Rear Defogger	141
Rear Head Restraint System	139
Rear Window Sun Shade	143
Rear Wiper/Washer	161
Seat Backrest Locking System	156
Seat Belt Extenders	157
Sliding Roof	140
Sound System: Amplifiers and Speakers	133
Start	111
Supplemental Restraint System (SRS)	158
Tachometer	133
Tailgate Closing Assist	129/2
Telescopic Steering Column	147
Transmission Shift Point Relay	120/2
Transmission Kick-down	113
Two-Piece Radio with Sound System	131/6
Warning Indicators	136
Warning System	135
Wiper/Washer	159

REVISIONS: ① **AS OF MY 1990**

FUSE/RELAY BOX

TOP VIEW

AS OF MY 1986

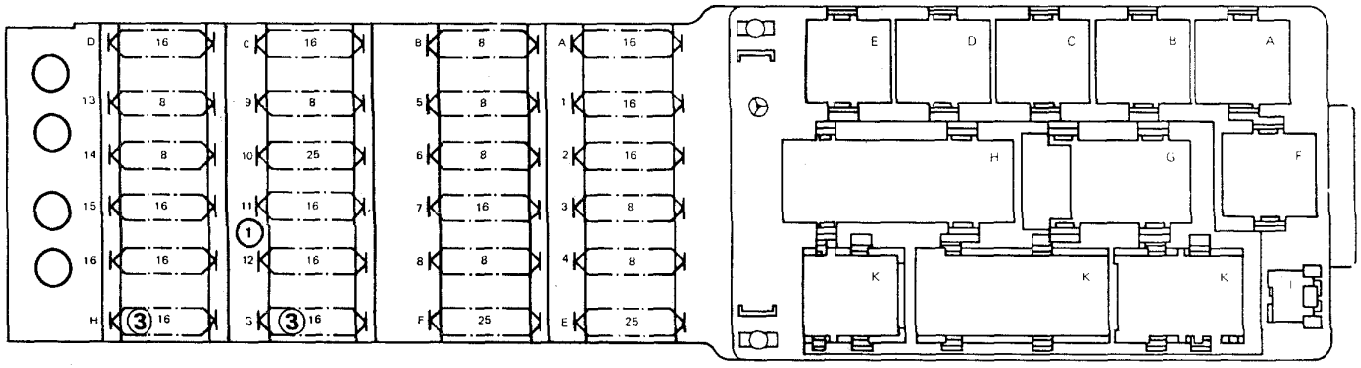

← Driving Direction

RELAY CODE	RELAY USE	RELAY CODE	RELAY USE
A	K5 Power Seat Relay	G	K18 Seat Belt Warning Relay ⑤
B	K10 Auxiliary Fan Preresistor Relay		K29/1 First Gear Start Relay ⑥
	K9k1 Auxiliary Fan Relay ⑥		
C	K9 Auxiliary Fan Relay	H	N10 Combination Relay
	K9k2 Auxiliary Fan Relay Preresistor ⑥	I	V1 Power Seat Diode ④
D	K2 Headlamp Washer Relay		V5 Parking Brake/ASR/ Electronic Accelerator ⑥
E	F14 Auxiliary Fuse Holder	K	N7 Exterior Lamp Failure Monitoring Unit
	K17 Air Injection Relay ⑥		
F	K4 Power Window Relay		
	K24 Convenience Relay ②		

REVISIONS:
① IN LINE FUSE REPLACES FUSE NO. 12 AS OF CHASSIS END NUMBER A292112, F023505
② AS OF MY 1990
③ 25 AMP AS OF MY 1990
④ REPLACED BY K24 AS OF BY 1990
⑤ COUPE MODEL ONLY
⑥ AS OF MY 1992, MODELS 400E/500E

FUSE-CIRCUIT LIST

AS OF MY 1986

No.	Amps (color)	Circuits Protected	Connection to Circuit
1	16 AMPS (PK)	Glove Box Lamp/Cigar Lighter/Radio Rear Head Restraint System Rear Defogger Rear Wiper/Washer System	15R
2	16 AMPS (PK)	Wiper/Washer Headlamp Wiper/Washer Headlamps/Fog Lamps Power Seats Power Windows	15R
3	8 AMPS (WT)	Lamps: Park/Tail/Side Marker/ License (Right) Illumination: Instrument Cluster/Center Console Headlamp Wiper/Washer	58R
4	8 AMPS (WT)	Fog Lamps	58N
5	8 AMPS (WT)	Stop Lamps/Dome Lamp/ Lamp Failure Monitoring Unit Warning Indicators/Gauges/ Clock/Tachometer Cruise Control Warning System ①	15
6	8 AMPS (WT)	Turn Signal/Hazard Lamps Outside Temperature Gauge Warning System Horns	15
7	16 AMPS (PK)	Auxiliary Fan Automatic Climate Control Backup Lamps Heated Washer System	15
8	8 AMPS (WT)	Lamps: Park/Tail/Side Marker License	58L
9	8 AMPS (WT)	Hazard Lamps/Clock Warning System Radio ③ Courtesy Lamps Power Seats	30
10	25 AMPS (BU)	Rear Defogger	30
11④	25 AMPS (BU)	Anti-Theft Alarm System	30
12②	25 AMPS (BU)	Automatic Climate Control (Blower Control)	15X
12④	25 AMPS (BU)	Anti-Theft Alarm System	30
13	8 AMPS (WT)	Headlamps (Left Low Beam) Anti-Theft Alarm System	56b
14	8 AMPS (WT)	Headlamps (Right Low Beam) Anti-Theft Alarm System	56b

(Continued on next page)

REVISIONS:
① AS OF MODEL YEAR 1987
② IN LINE FUSE REPLACES FUSE 12 AS OF CHASSIS END NUMBER A292112, F023505
③ AS OF MY 1992, RADIO CONTROL UNIT (A2/2 OR A2/4) ONLY
④ MODELS 400/500E

FUSE CIRCUIT LIST

AS OF MY 1986

(Continued from previous page)

Fuse No.	Fuse Amps (color)	Circuits Protected	Connection to Circuit
15	8 AMPS (WT) ⑤	Headlamps (Left High Beam)	56a
16	8 AMPS (WT) ⑤	Headlamps (Right High Beam) High Beam Indicator	56a
A	16 AMPS (PK)	Sliding Roof Heated Seats Orthopedic Seats	15R
B	8 AMPS (WT)	Outside Heated Mirrors Rear Window Sun Shade Seat Belt Extender	15
C	16 AMPS (PK)	Anti-Theft Alarm System Central Locking System Automatic Antenna Courtesy Lamps and Trunk Lamp Radio tuner/Amplifier ④ Audio Power Amplifiers ④ CD Changer ④	30
D	16 AMPS (PK)	Auxiliary Fan	30
E	25 AMPS (BU)	Power Seats Driver Power Seat Motors (Memory): Front Height Backrest, Head Restraint Front Passenger Power Seat Motors: Rear-Height, Backrest, Head Restraint	15R/30
F	25 AMPS (BU)	Power Seats/Telescopic Steering Column Driver Power Seat Motors (Memory): Rear Height Fore-Aft Telescopic Steering Column Front Passenger Power Seat Motors: Front-Height, Fore-Aft	15R/30

F13

Fuse No.	Fuse Amps (color)	Circuits Protected	Connection to Circuit
G	16 AMPS (PK) ①	Power Windows (Front Left and Rear Right) ②	15R
H	16 AMPS (PK) ①	Power Windows (Front Right and Rear Left) ③	15R
	8 AMPS (PK) ④	Cellular Telephone	30

F13

F22/2

REVISIONS:
① 25 AMPS AS OF MY 1990
② FRONT WINDOWS ONLY AS OF MY 1990
③ REAR WINDOWS ONLY AS OF MY 1990
④ AS OF MY 1992
⑤ MODELS 400/500E

POWER DISTRIBUTION

AS OF MY 1986

GASOLINE

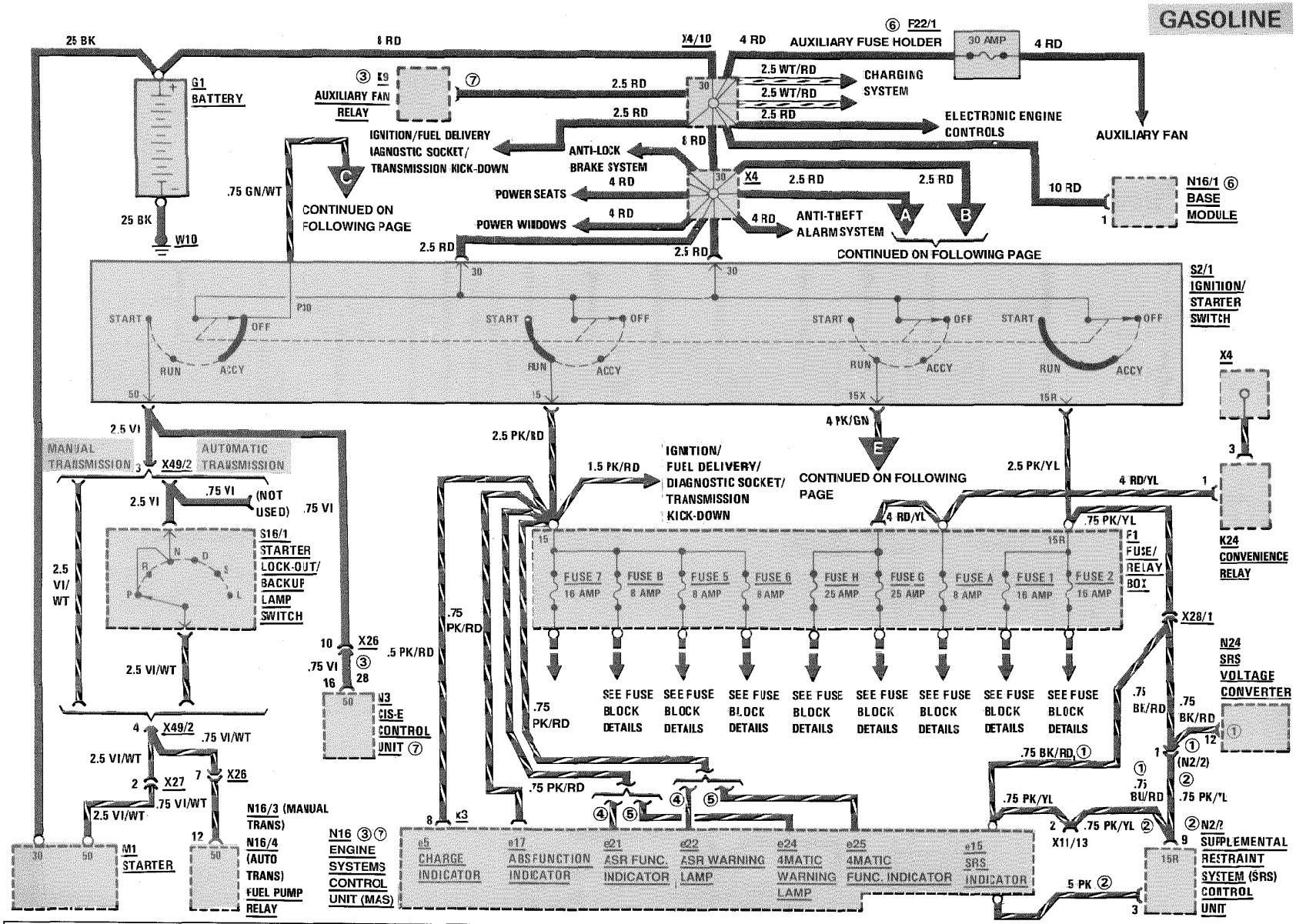

REVISIONS: ① MODEL YEAR 1986 AND 1987 ONLY
② AS OF MY 1988
③ AS OF MY 1990
④ WITH ASR
⑤ WITH 4MATIC
⑥ MODELS 400E/500E
⑦ EXCEPT MODELS 400E/500E

POWER DISTRIBUTION

AS OF MY 1986
DIESEL

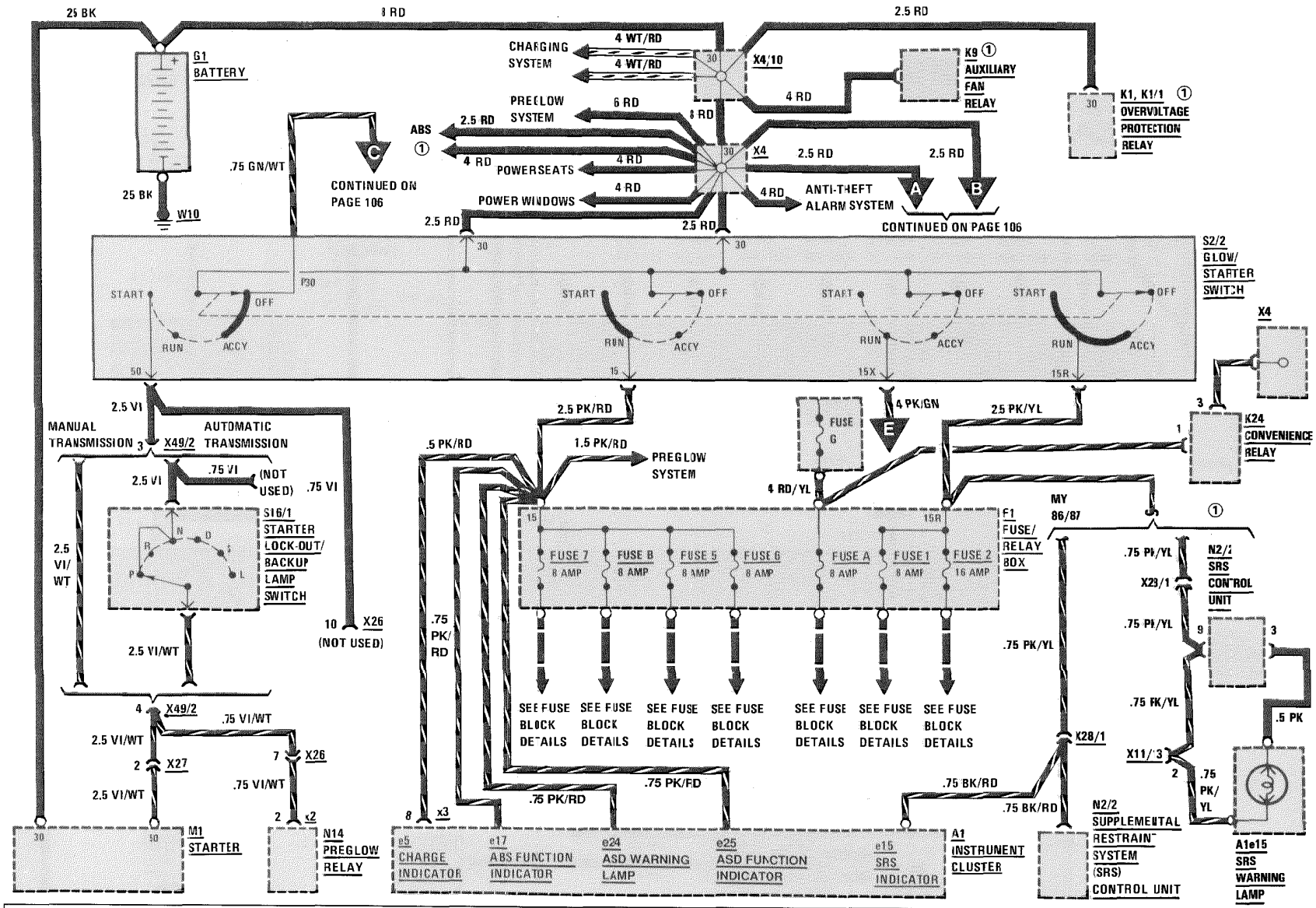

REVISIONS: ① AS OF MY 90

POWER DISTRIBUTION

AS OF MY 1986

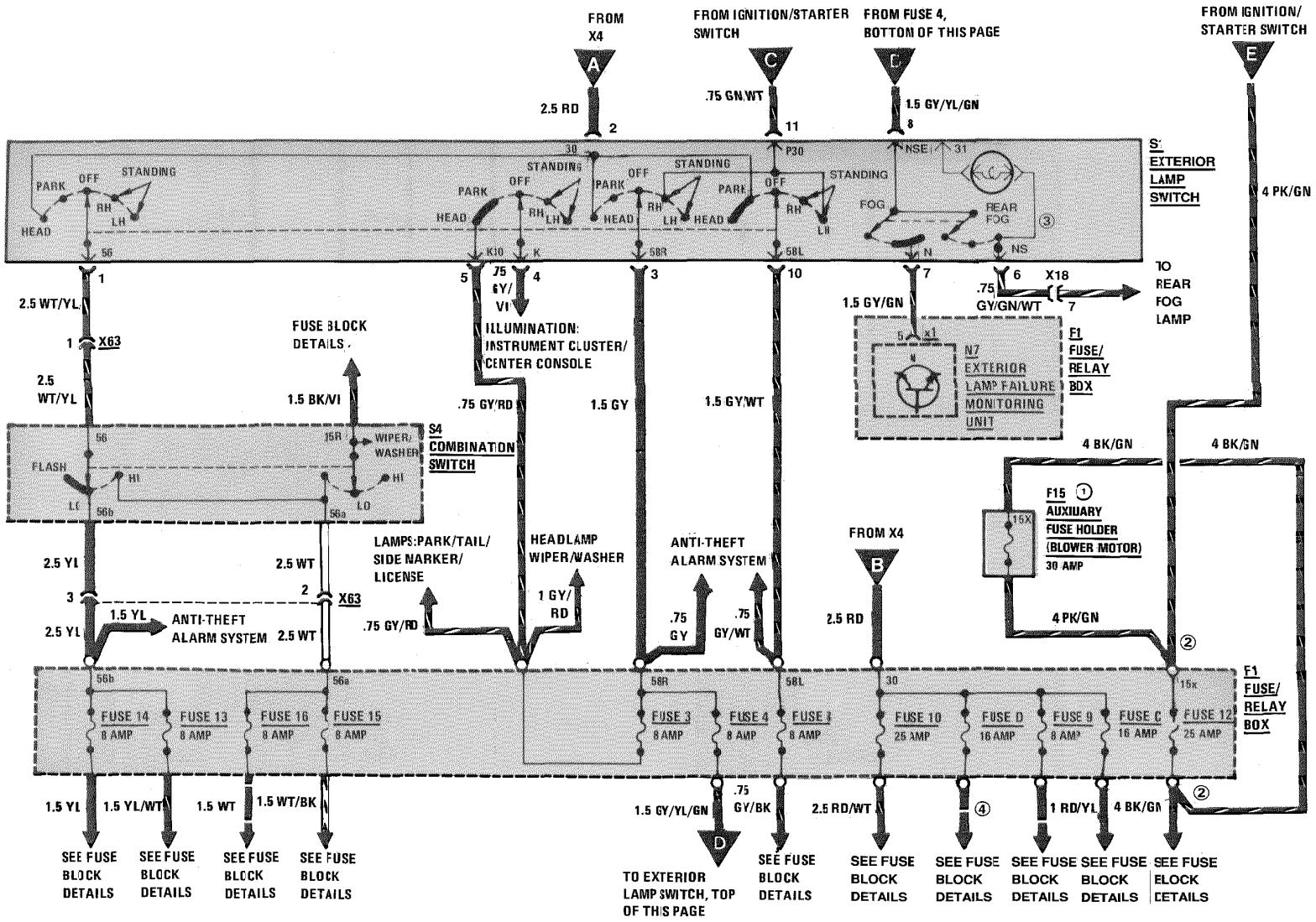

REVISIONS:
① AS OF A CHASSIS END NUMBER A292112, F023505
② AS OF MODEL YEAR 1988, WIRED DIRECTLY THROUGH F15 (F12 NOT USED)
③ AS OF MY 1991
④ EXCEPT MODELS 400E/500E

POWER DISTRIBUTION

AS OF MY 1990

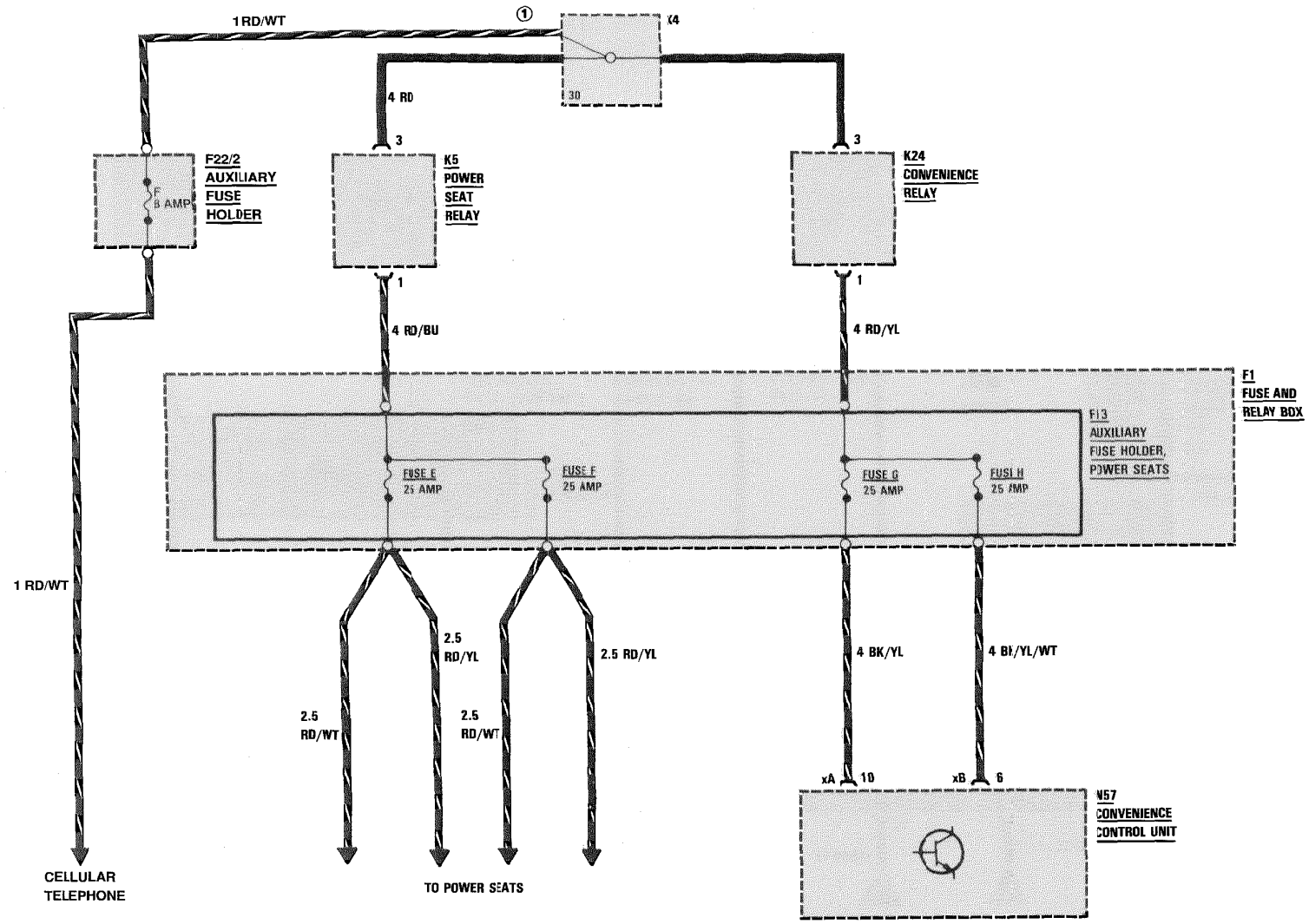

REVISIONS: ① AS OF MY 1992

FUSE BLOCK DETAILS

AS OF MY 1986

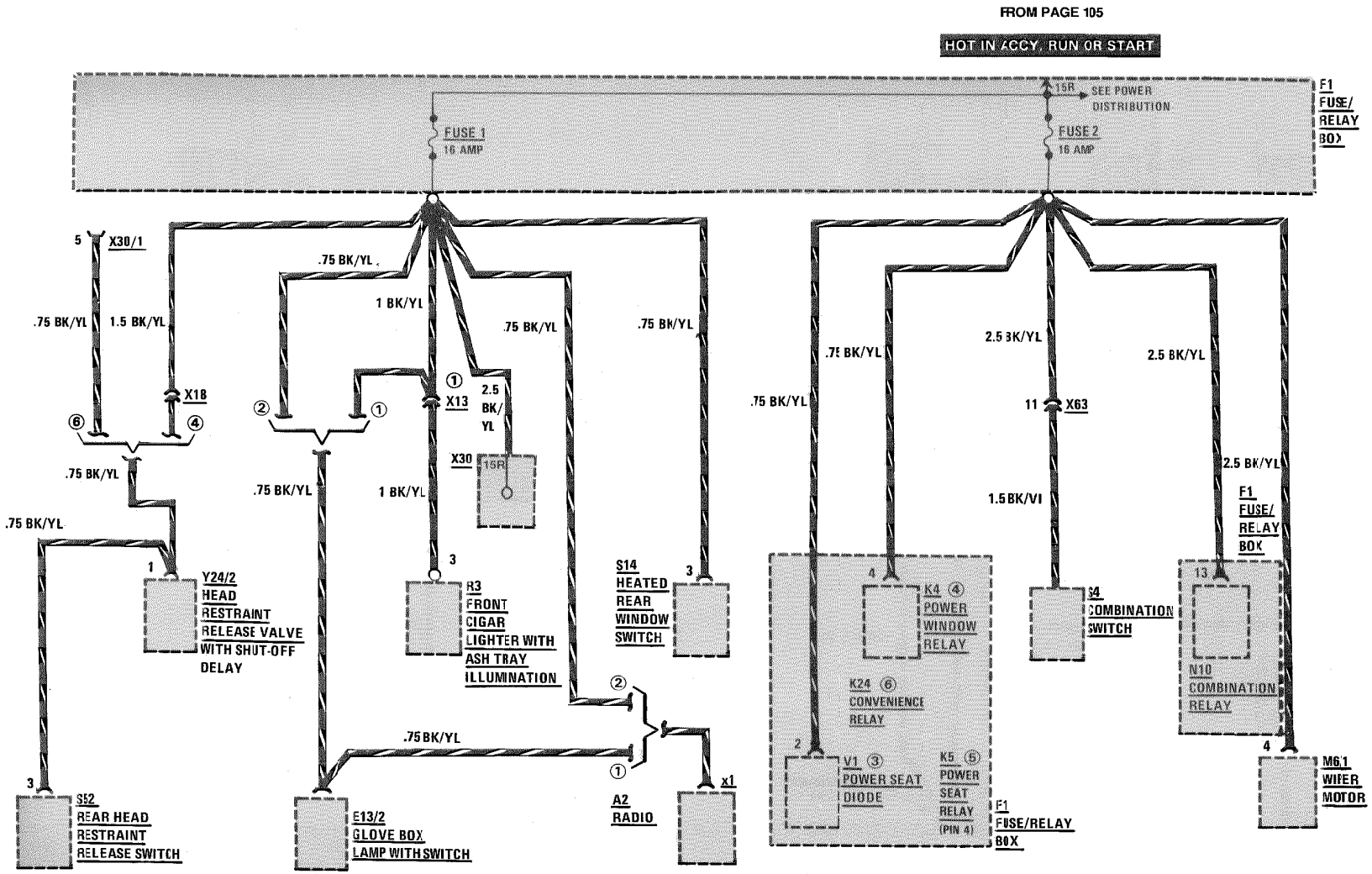

REVISIONS:
① MODEL YEAR 1986 AND 1987 ONLY
② AS OF MODEL YEAR 1988
③ MY 1986-1988
④ MY 1986-1989
⑤ AS OF MY 1989
⑥ AS OF MY 1990

FUSE BLOCK DETAILS

AS OF MY 1986

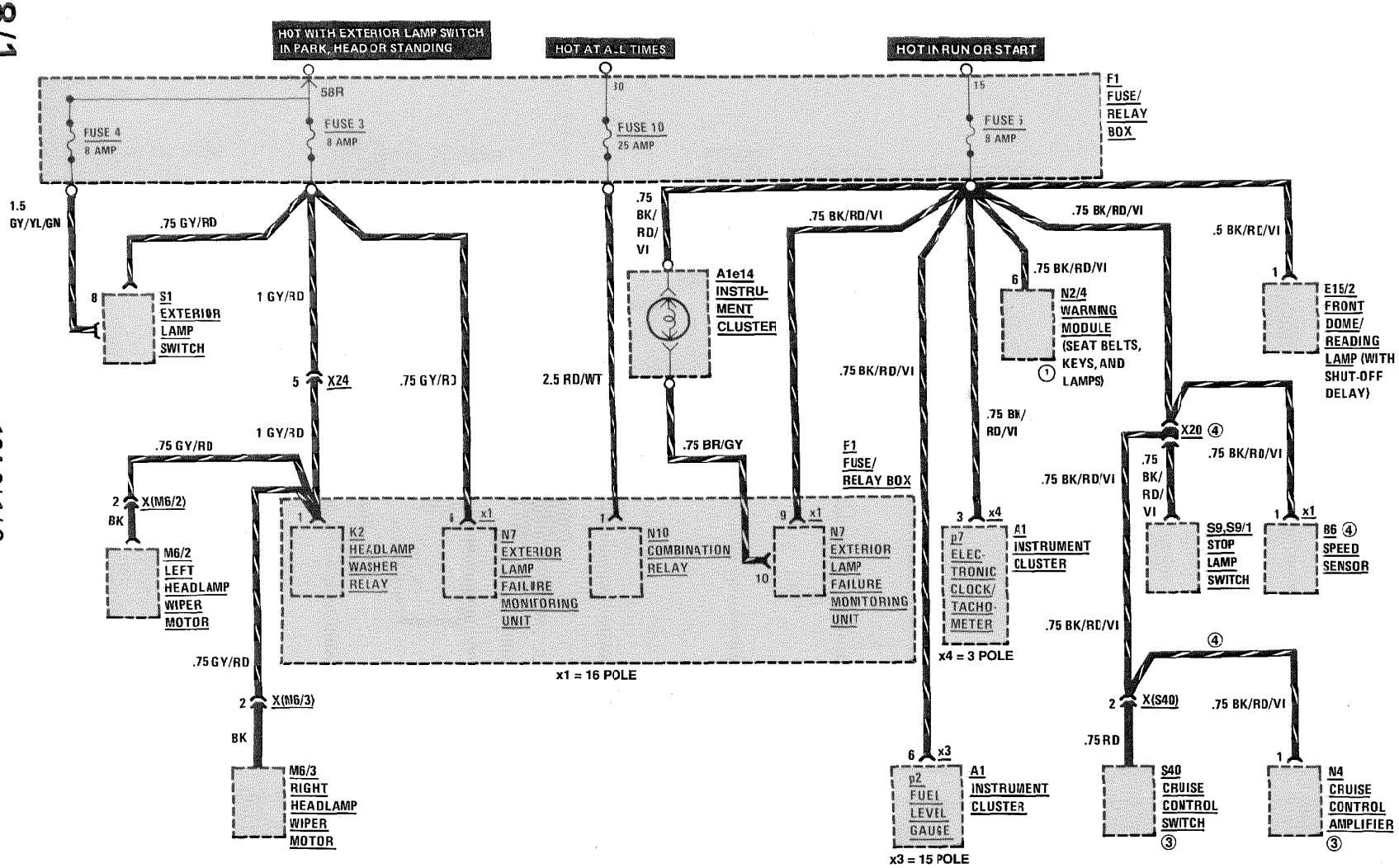

REVISIONS: ① AS OF MODEL YEAR 1987
② MODELS 400E/500E
③ DIRECTLY CONNECTED TO FUSES, MODELS 400E/500E
④ EXCEFT MODELS 400E/500E

FUSE BLOCK DETAILS

AS OF MY 1986

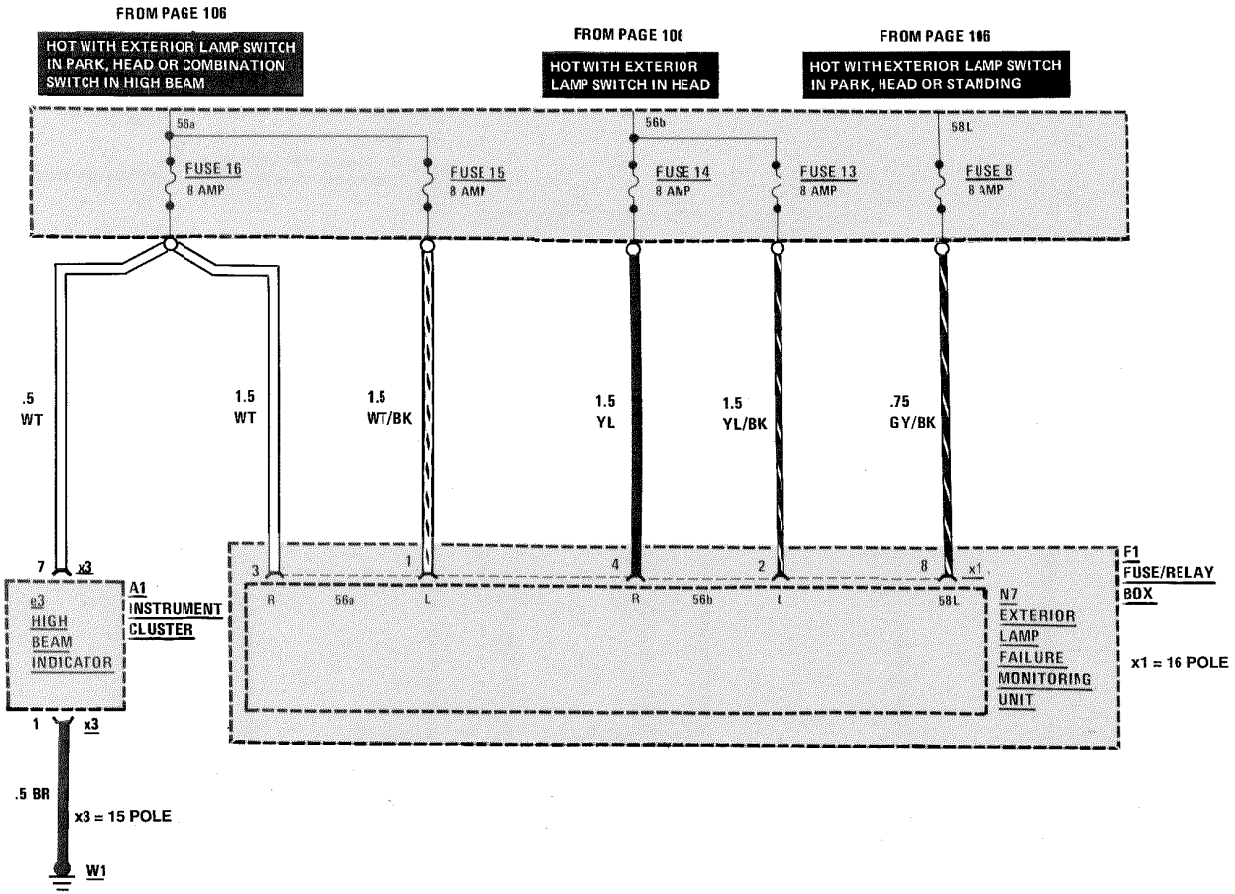

REVISIONS:

FUSE BLOCK DETAILS

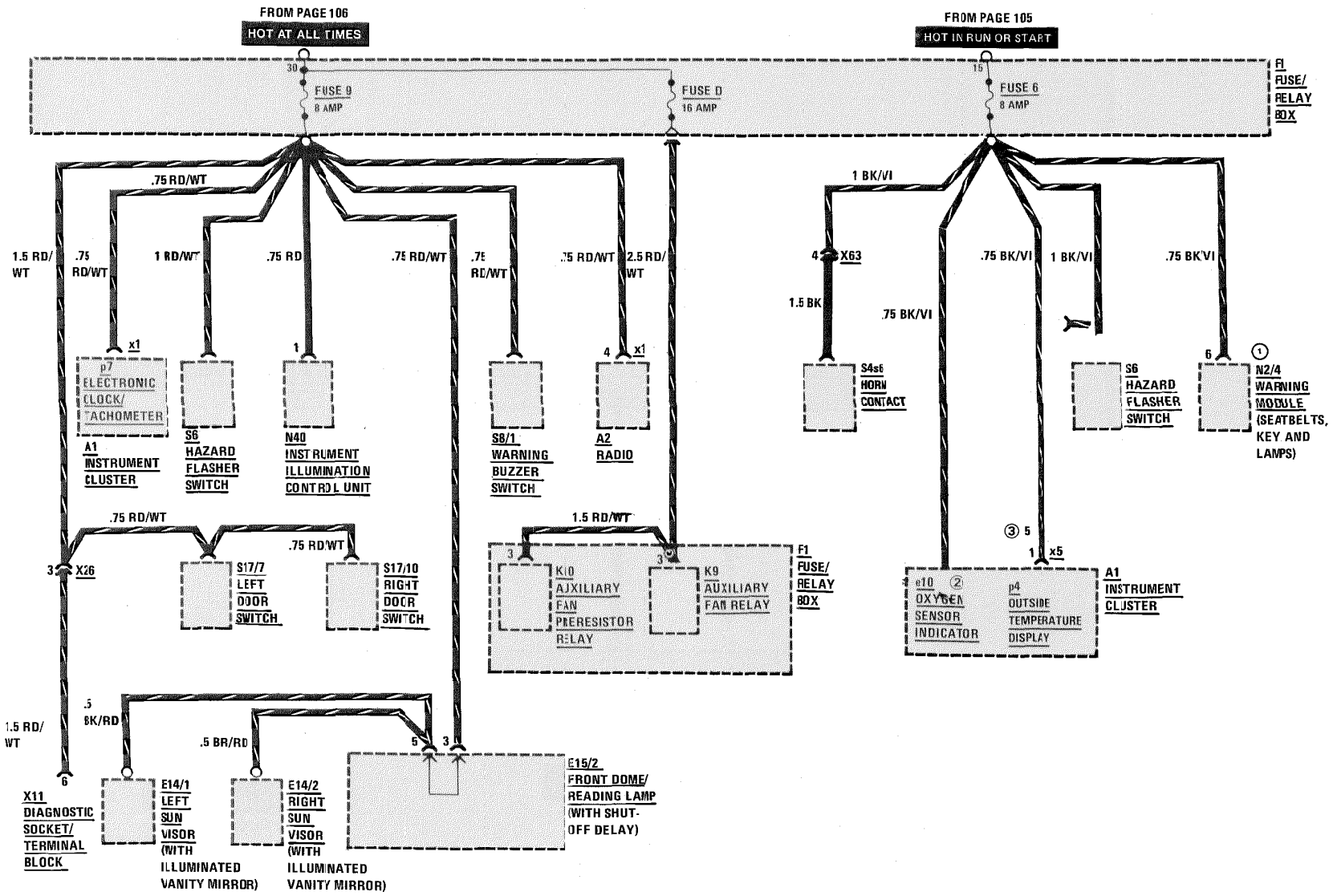

REVISIONS:
① MODEL YEAR 1986
② MODEL YEARS 1986 AND 1987 ONLY
③ AS OF MY 1989

FUSE BLOCK DETAILS

MY 1986-1989

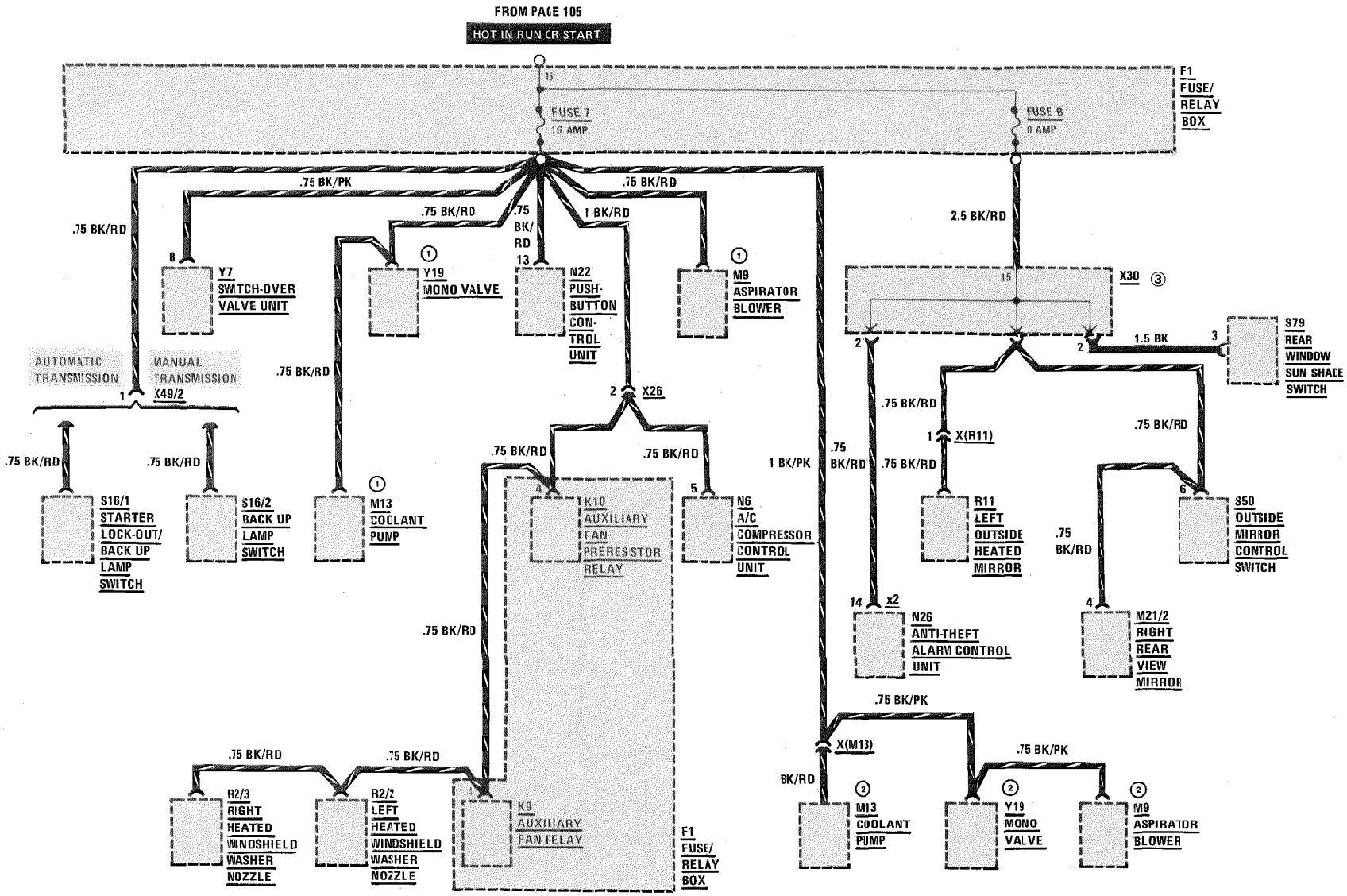

REVISIONS: ① MODEL YEAR 1986 ONLY
② AS OF MODEL YEAR 1987
③ SEE SEAT BELT EXTENDERS SECTION FOR CONNECTION ON MODEL 300CE

FUSE BLOCK DETAILS

MY 1986-1989

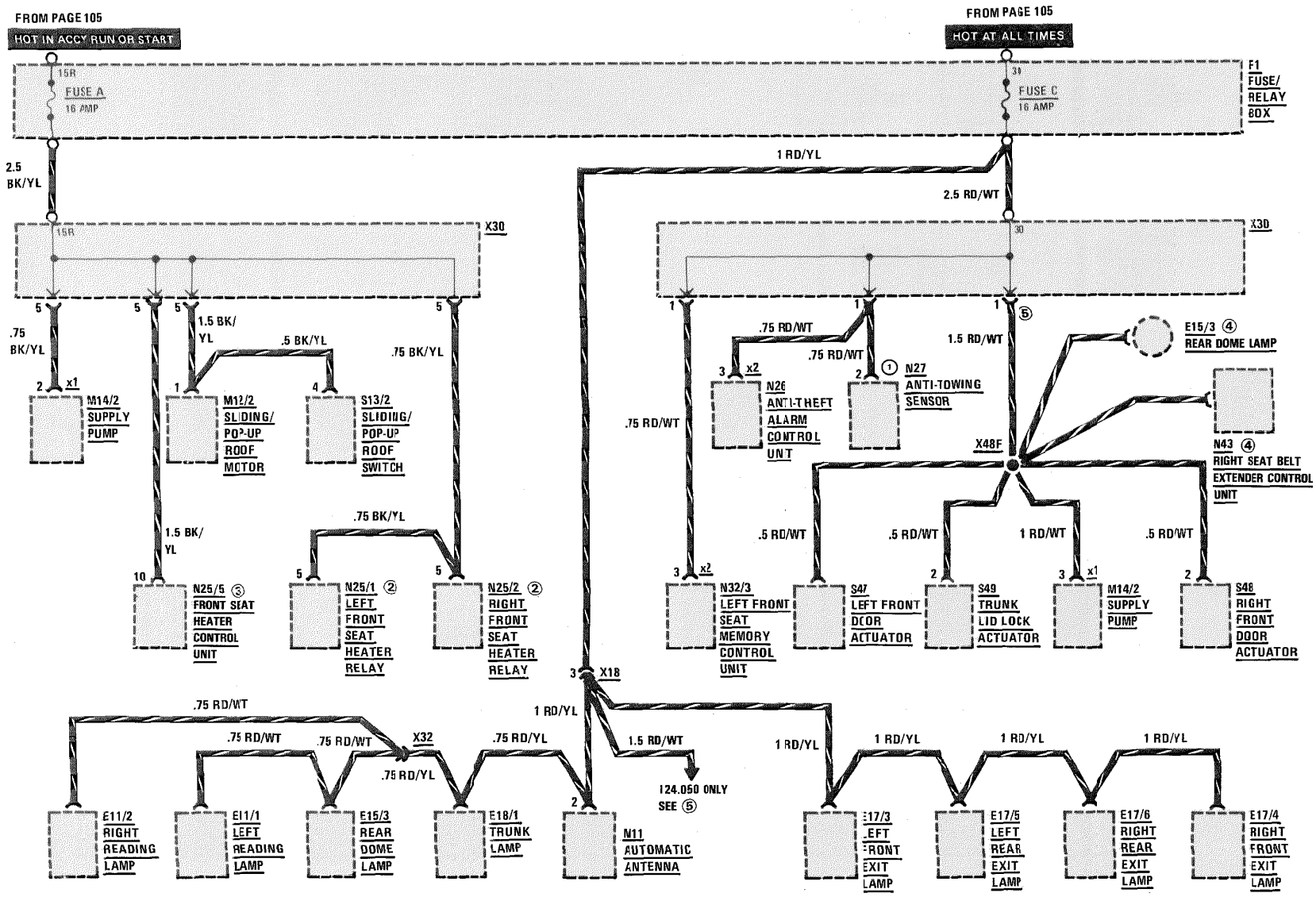

REVISIONS:
① ANTI-TOWING SENSOR NOT USED AS OF CHASSIS END NUMBER A298949, F017692
② UP TO APRIL 1987 PRODUCTION
③ AS OF APRIL 1987 PRODUCTION
④ 300CE ONLY
⑤ ON 300CE MODELS ONLY, POWER IS NOT TAKEN FROM X30 BUT RATHER FROM X18 PIN 3

FUSE BLOCK DETAILS

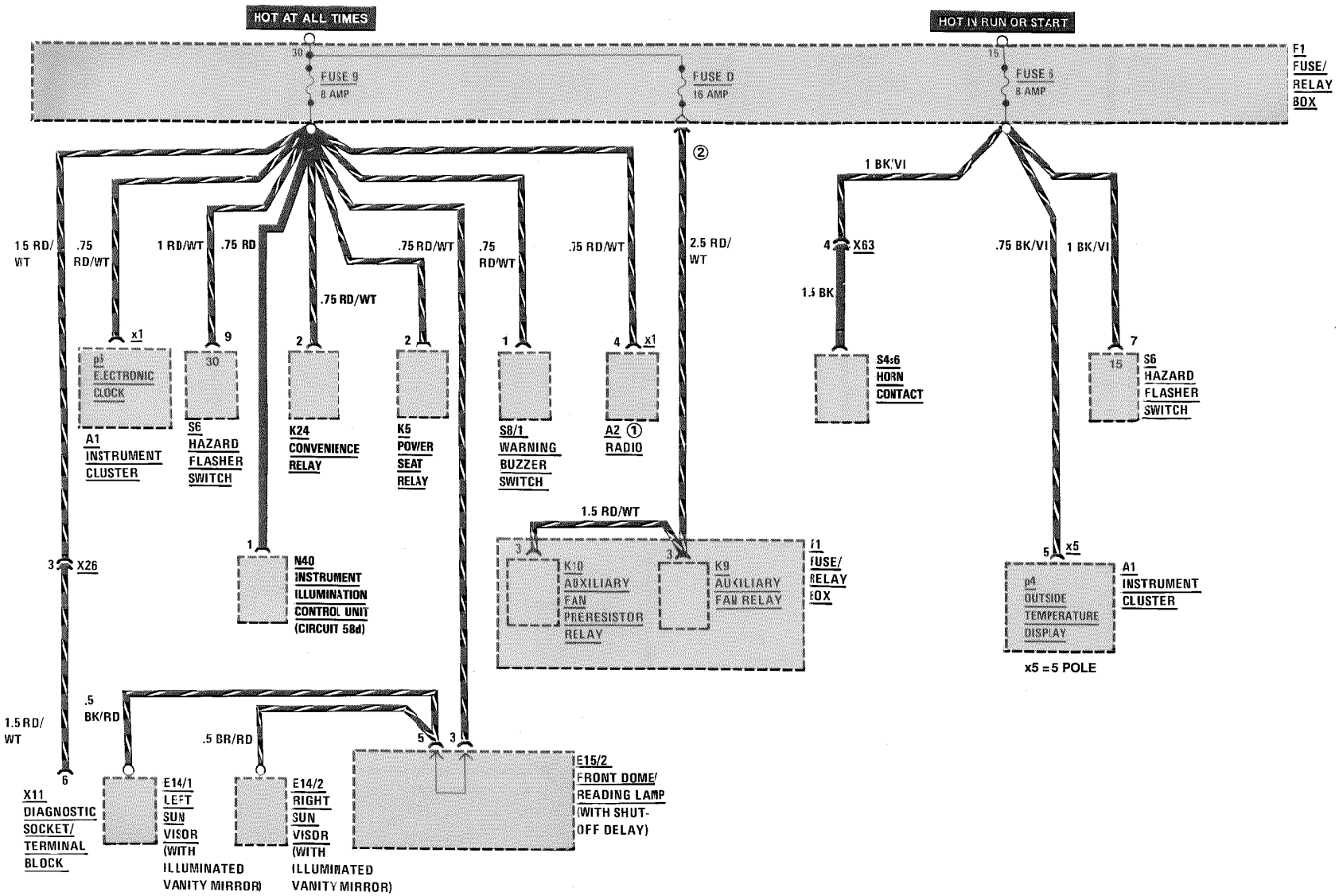

REVISIONS: ① A2/4 AS OF MY 1992

② EXCEPT MODELS 400E/500E

FUSE BLOCK DETAILS

AS OF MY 1990

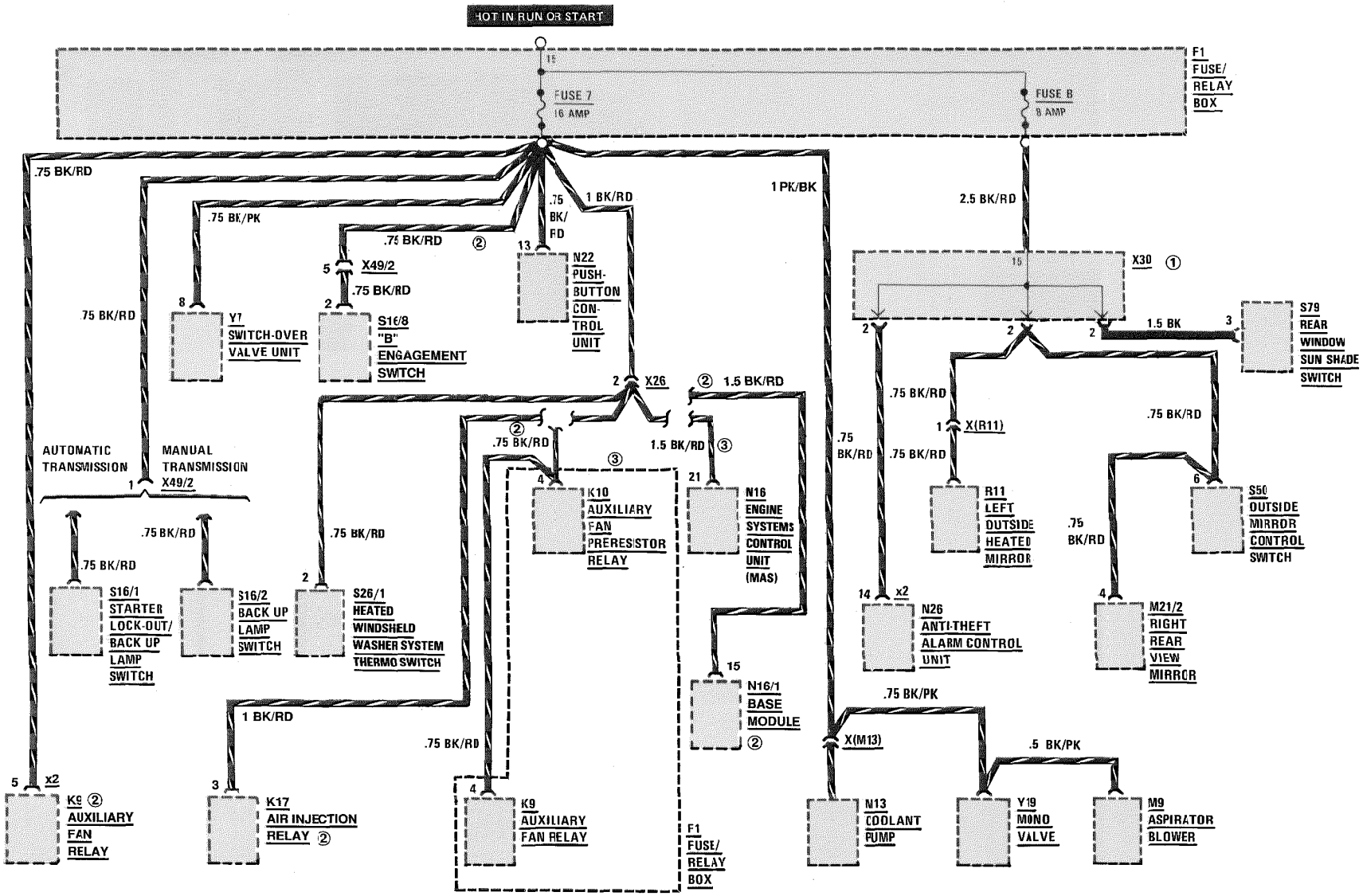

REVISIONS: ① SEE SEAT BELT EXTENDERS SECTION FOR CONNECTION ON MODEL 300CE
② MODELS 400E/500E
③ EXCEPT MODELS 400E/500E

FUSE BLOCK DETAILS

AS OF MY 1990

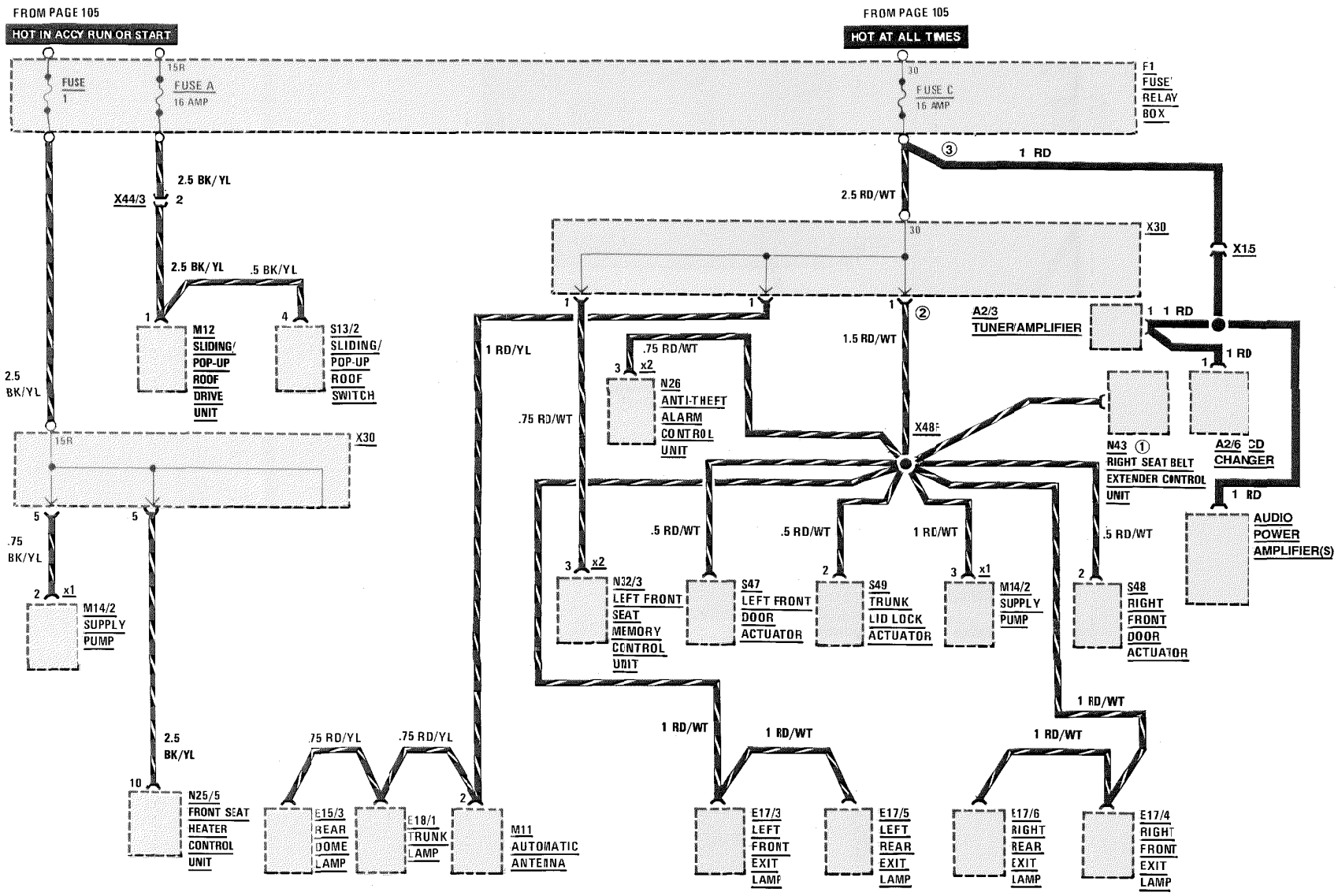

REVISIONS: ① 300 CE ONLY
② ON MODEL 300CE, POWER IS TAKEN FROM X18 PIN 3, NOT X30
③ AS OF MY 1992

START

MY 1986-1989

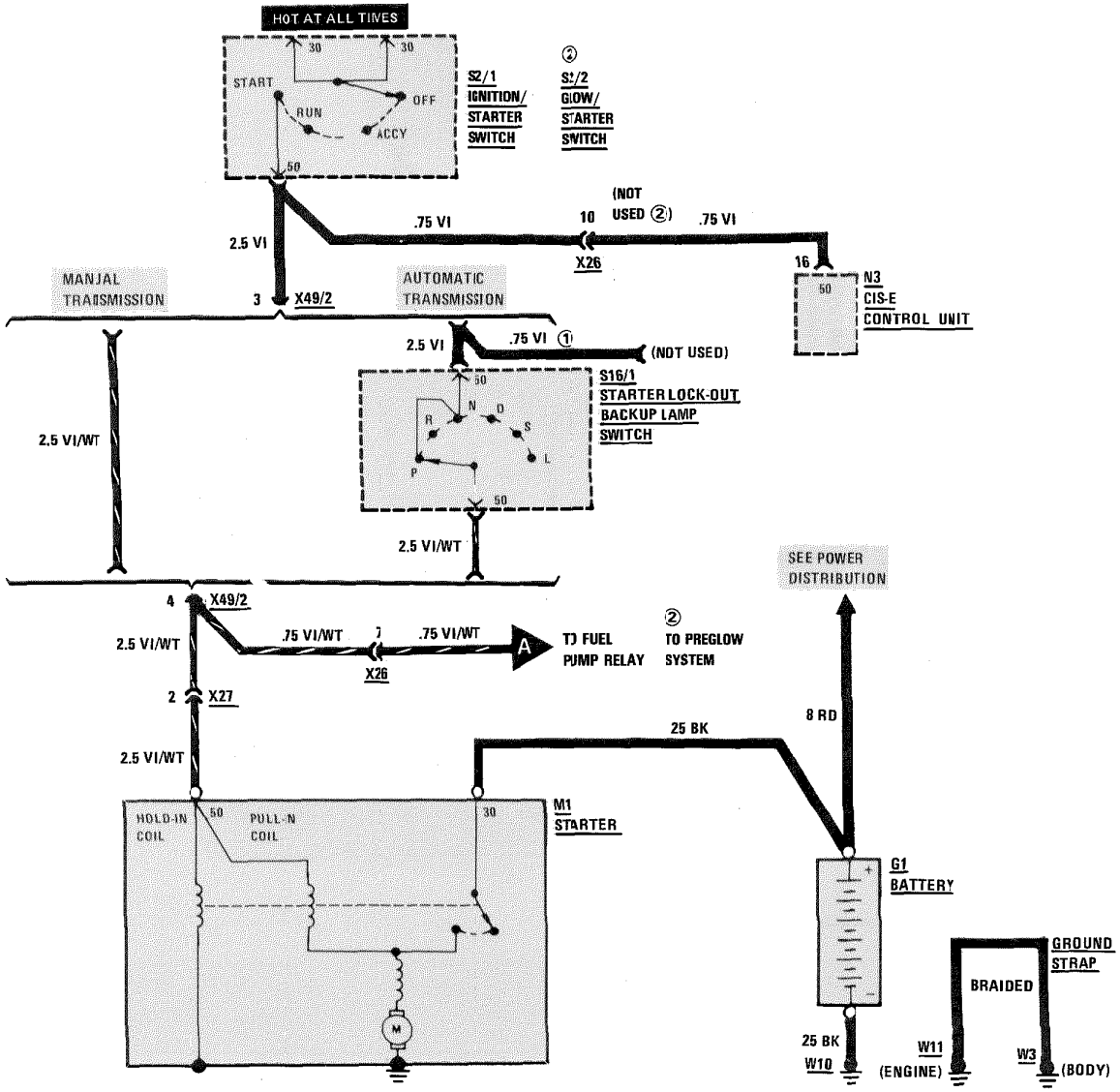

REVISIONS: ① MY 1986/MY 1987/MY 1988 ONLY

② DIESEL MODELS

START

AS OF MY 1990

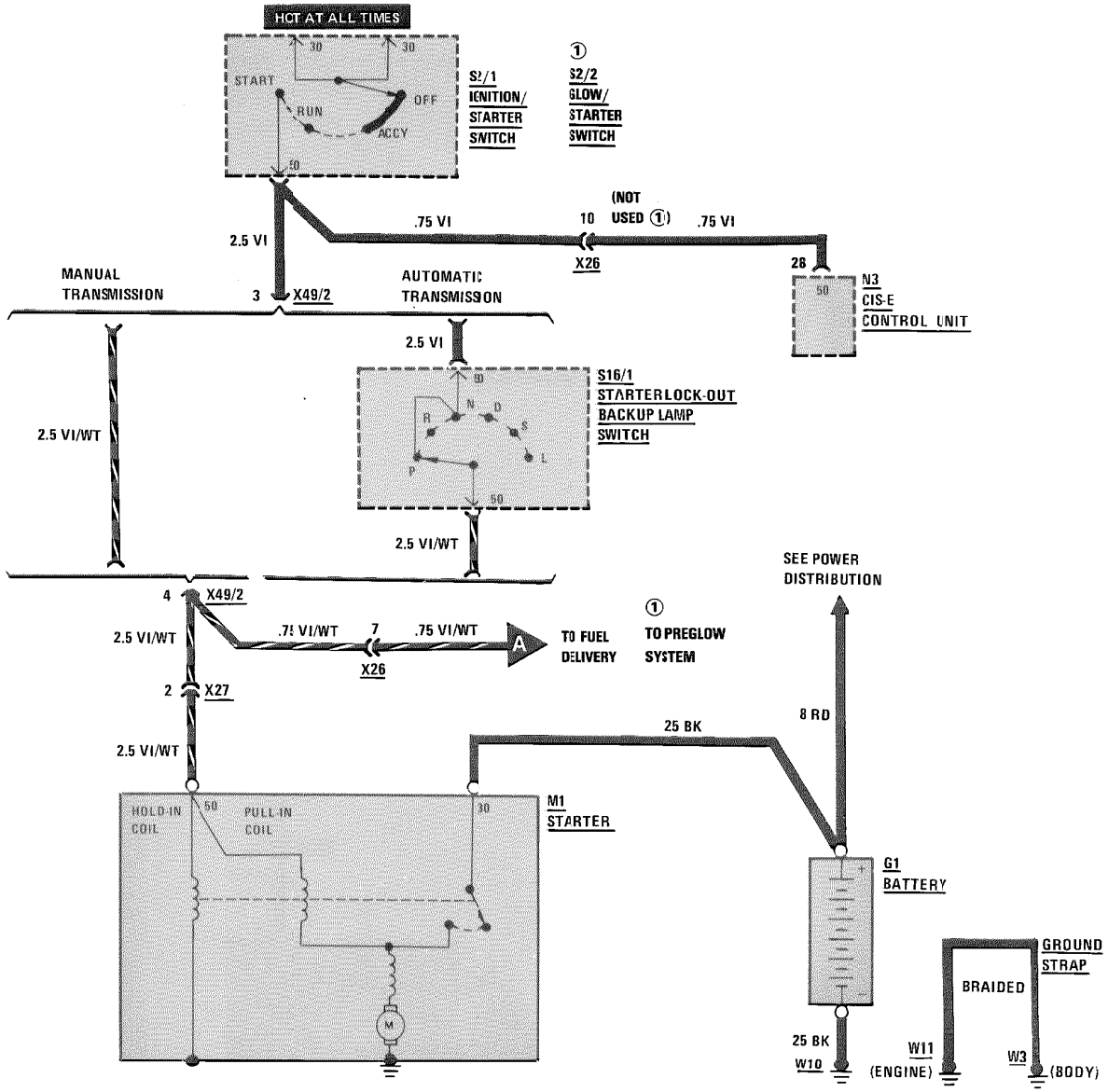

REVISIONS: ① DIESEL MODELS ONLY

START

AS OF MY 1992
400E/500E

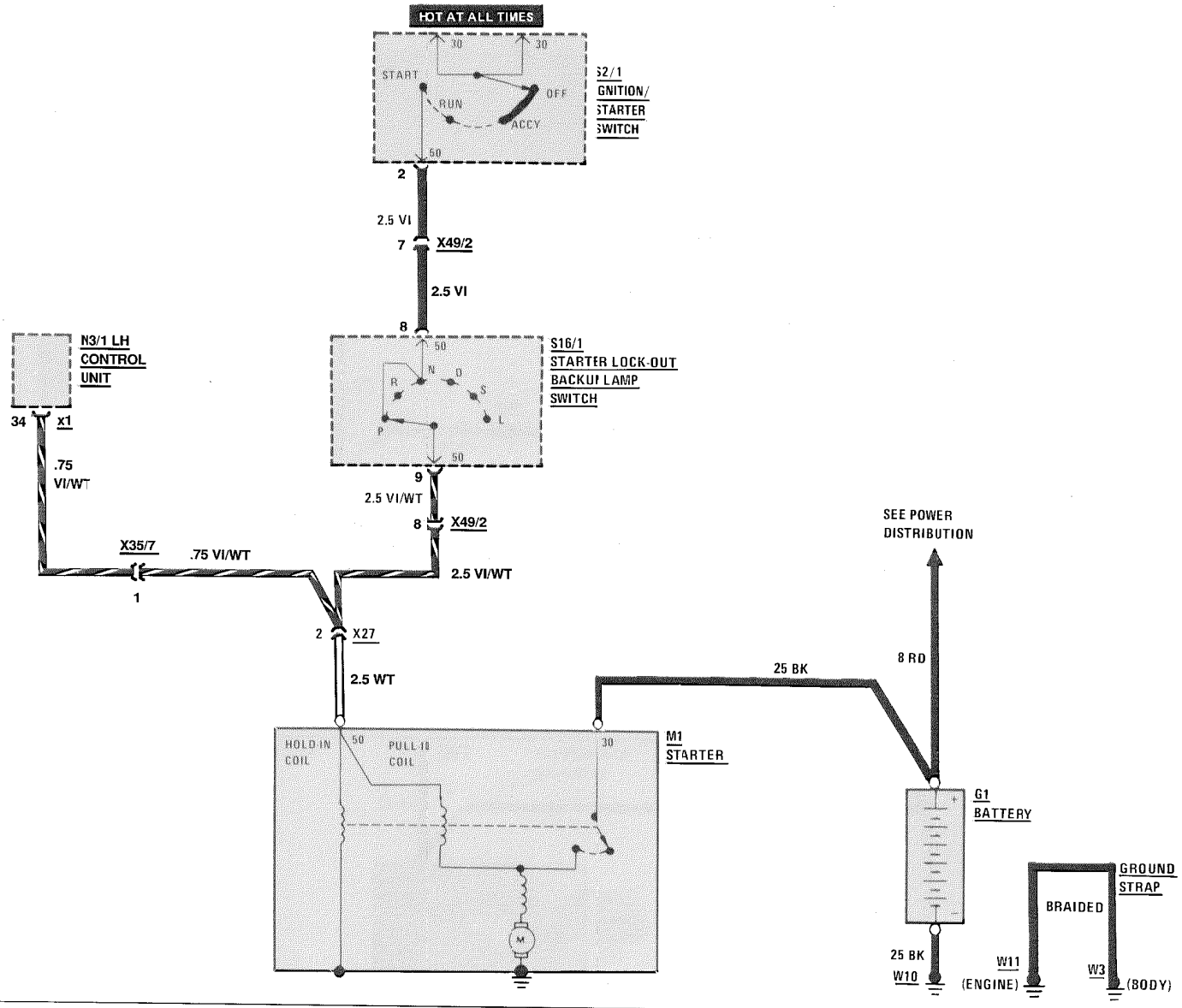

REVISIONS:

PREGLOW SYSTEM

MY 1987
DIESEL

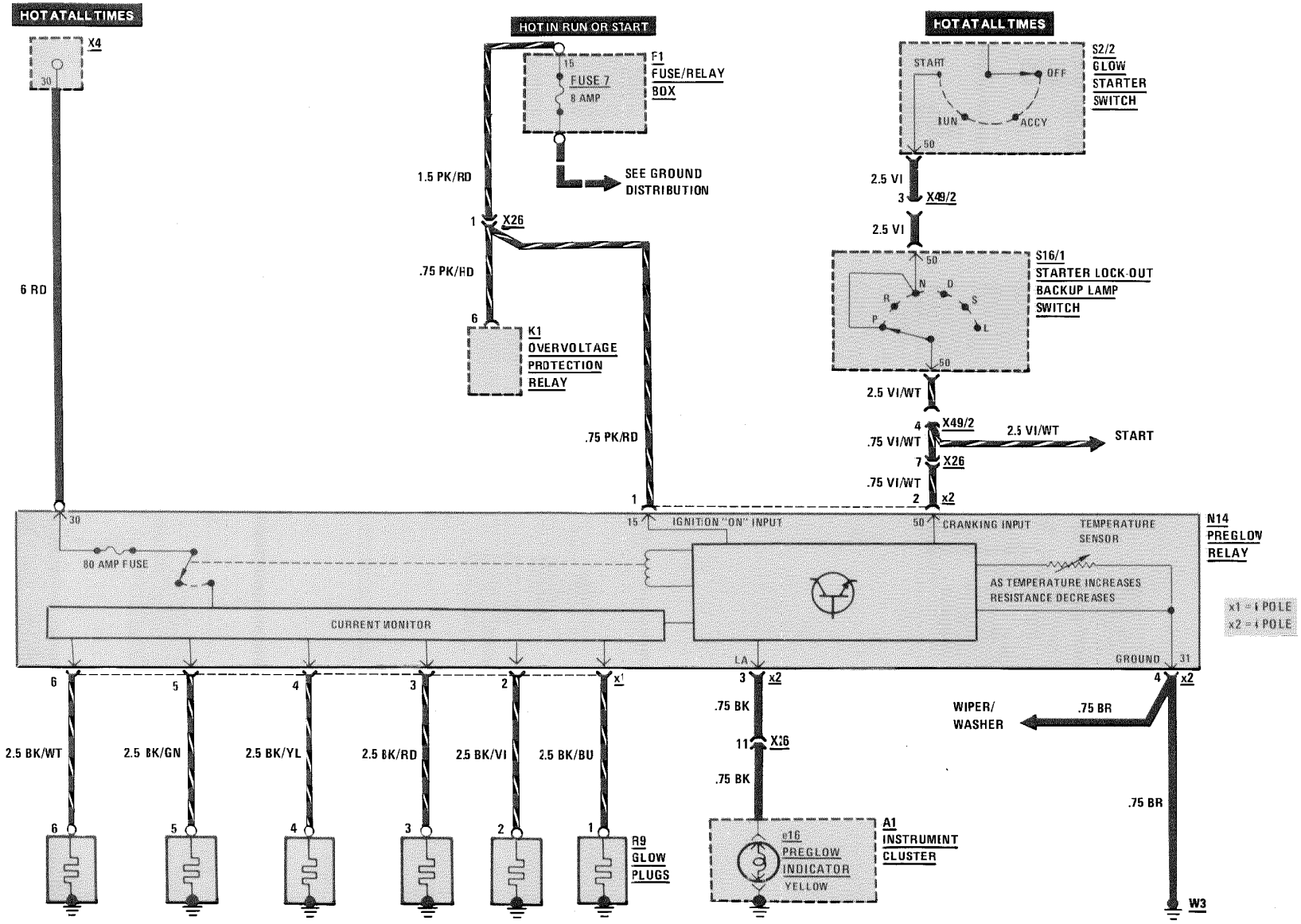

REVISIONS:

PREGLOW SYSTEM

AS OF MY 1990

DIESEL

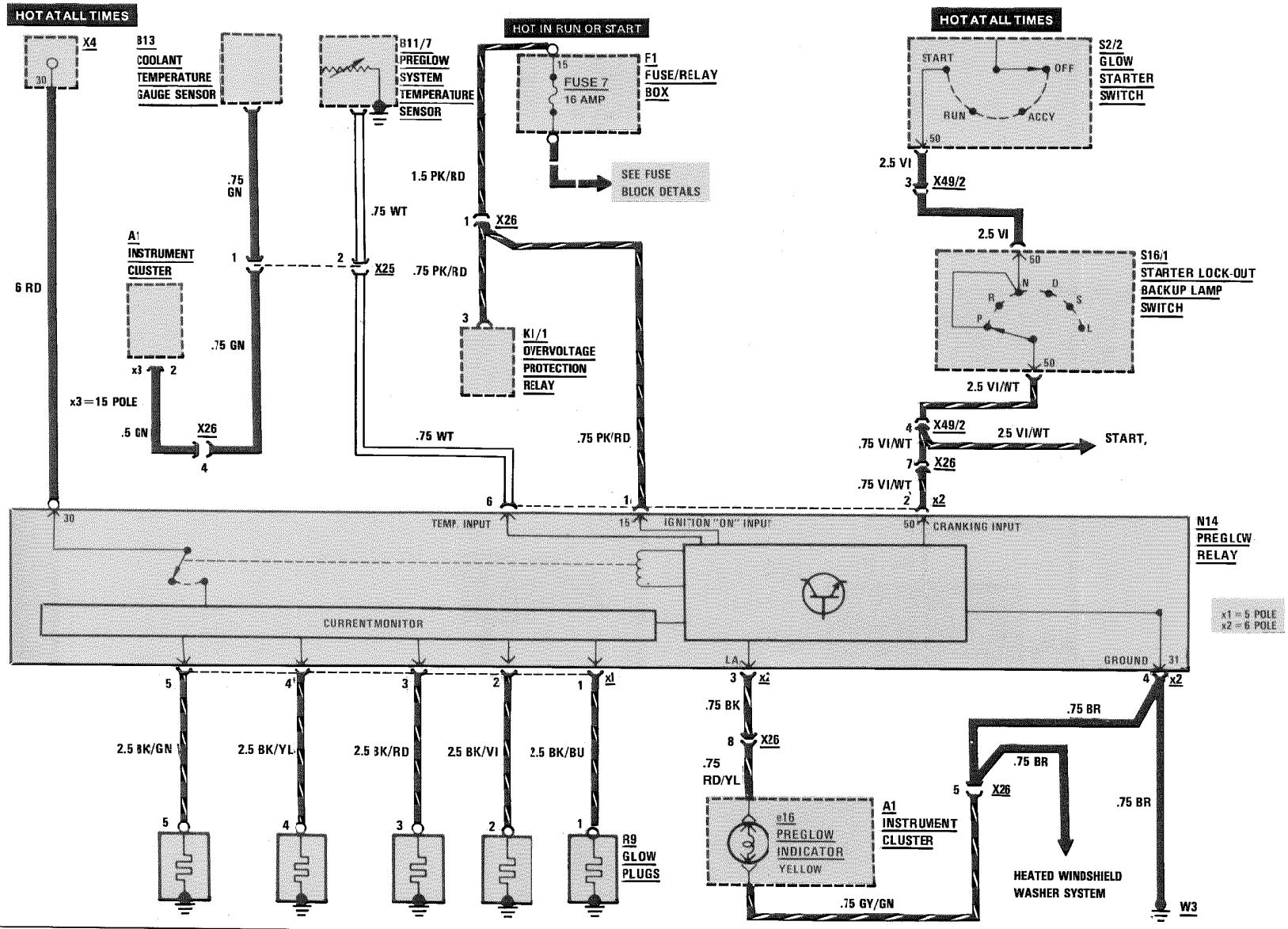

REVISIONS:

IGNITION/DIAGNOSTIC SOCKET/ KICK-DOWN

MY 1986-1989

GASOLINE

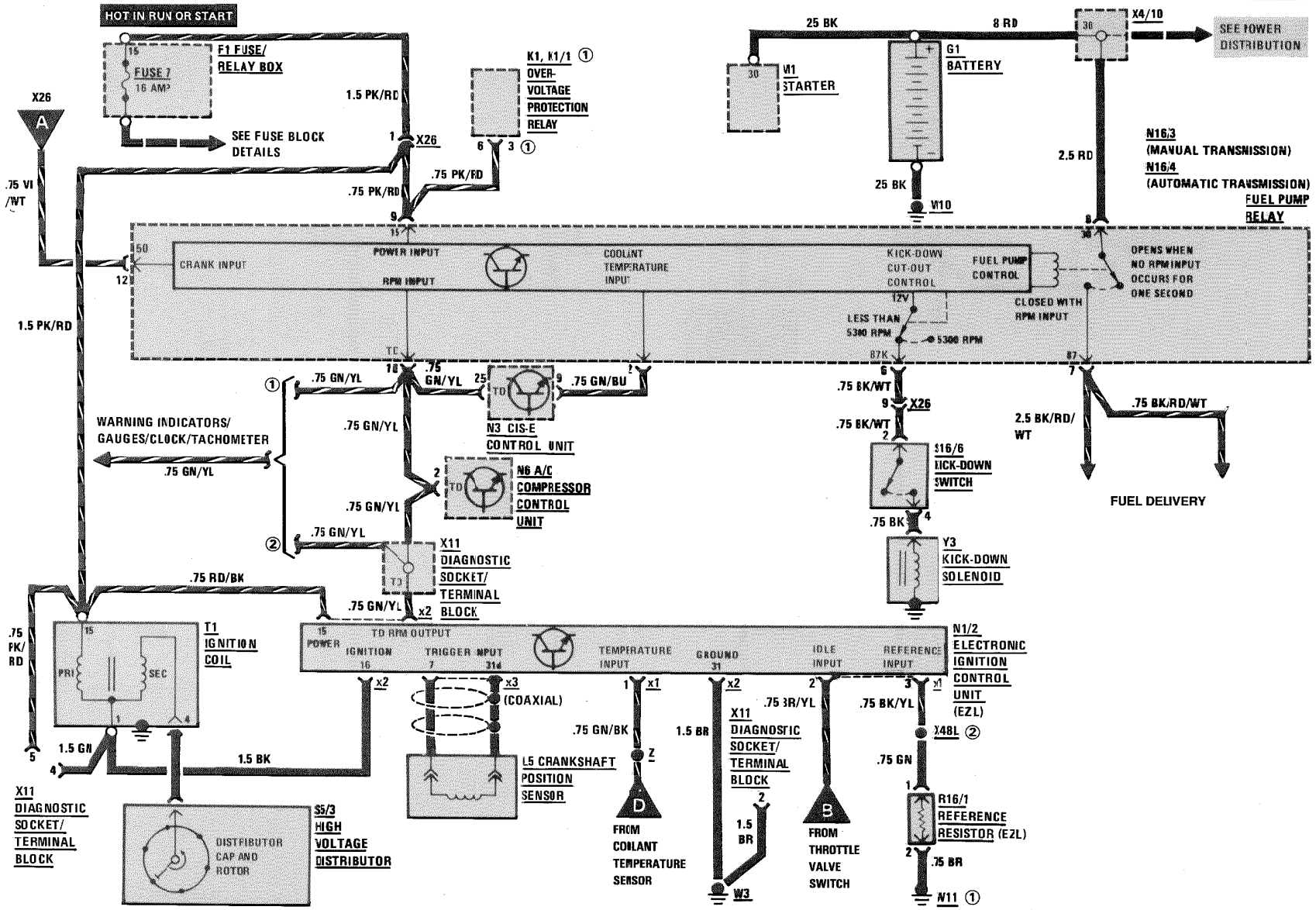

REVISIONS: ① AS OF MY 1988
② MY 1986-1988

KICKDOWN, AIR INJECTION, A/C COMPRESSOR

AS OF MY 1990

GASOLINE

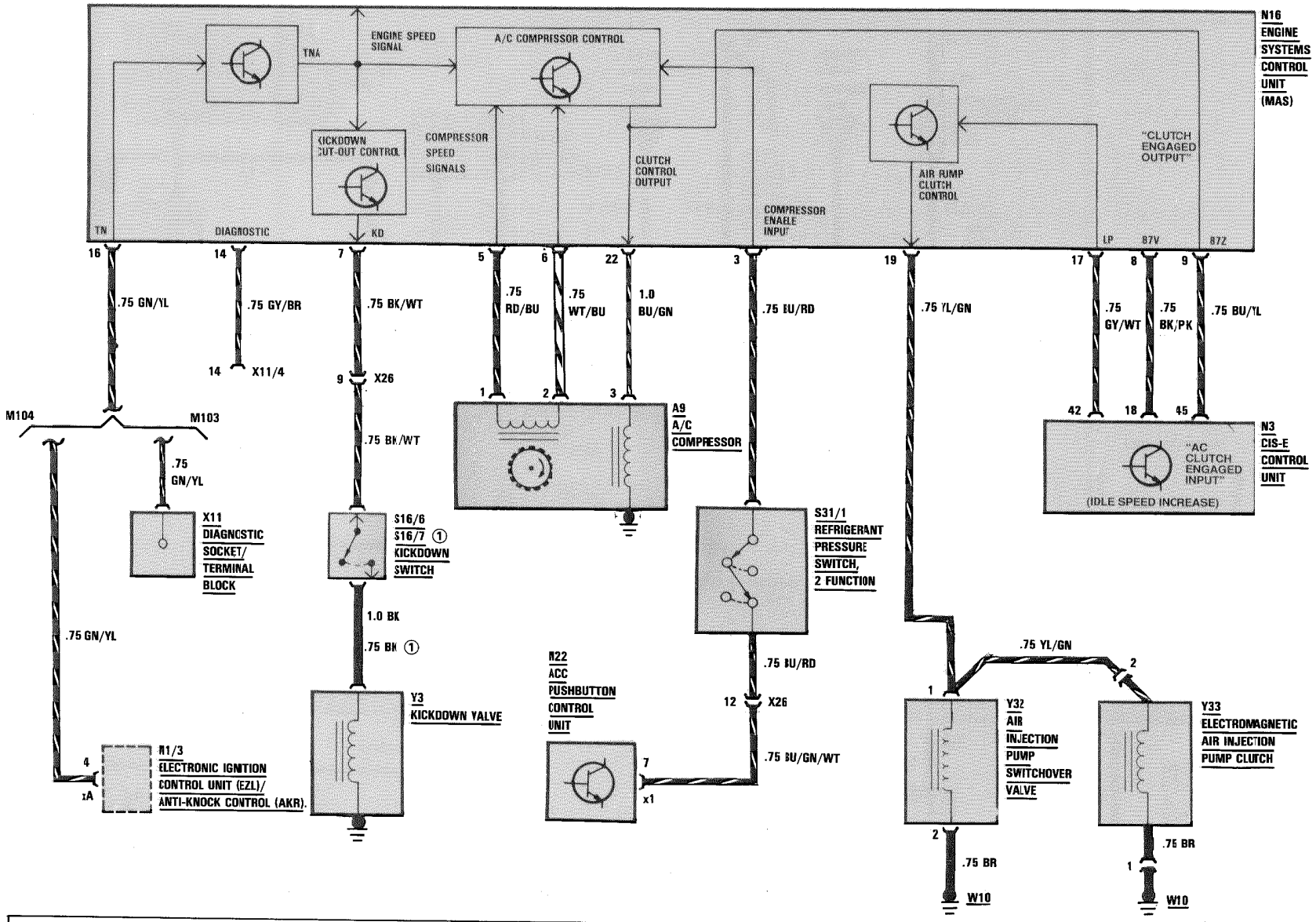

REVISIONS: ① COUPE

IGNITION/DIAGNOSTIC SOCKET

AS OF MY 1990

GASOLINE - M103

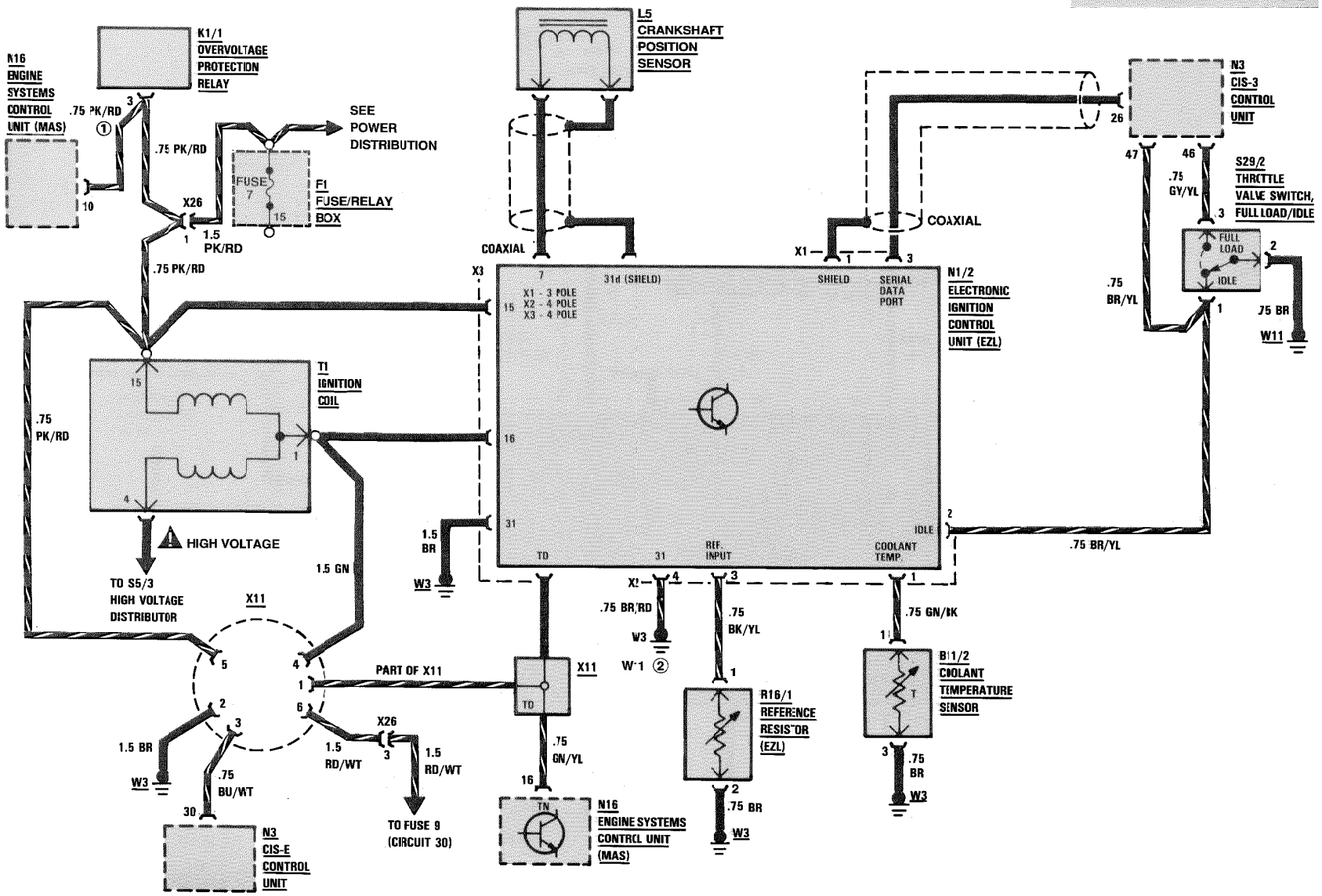

REVISIONS: ① NOT USED ON VEHICLES WITH ASR
② AS OF MY 1992

IGNITION/DIAGNOSTIC SOCKET

AS OF MY 1990

300CE

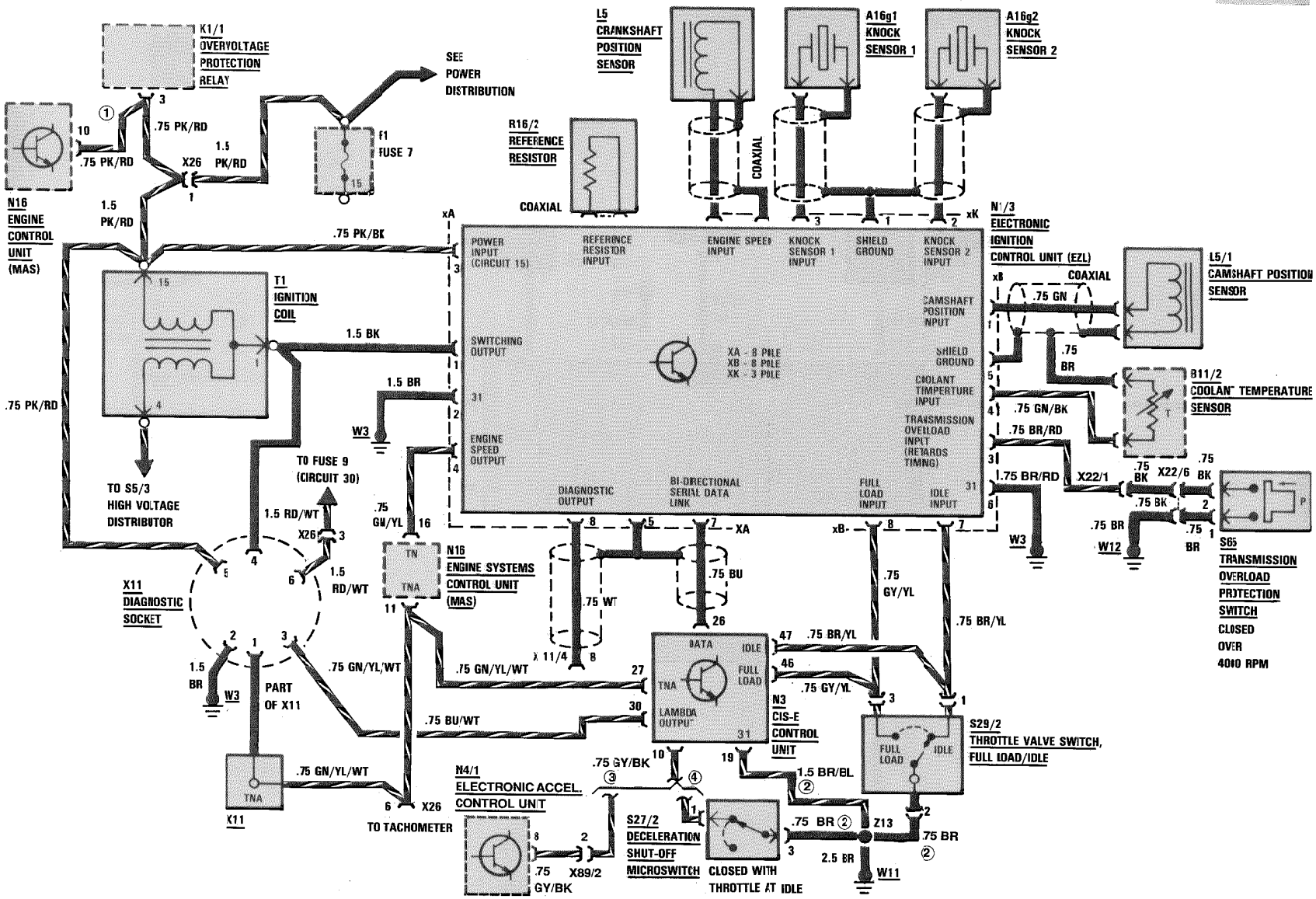

REVISIONS:
① NOT USED ON VEHICLES WITH ASR
② AS OF MY 1992, CONNECTED DIRECTLY TO W11
③ WITH ASR
④ WITHOUT ASR

IGNITION/DIAGNOSTIC SOCKET

AS OF MY 1992

400E/500E

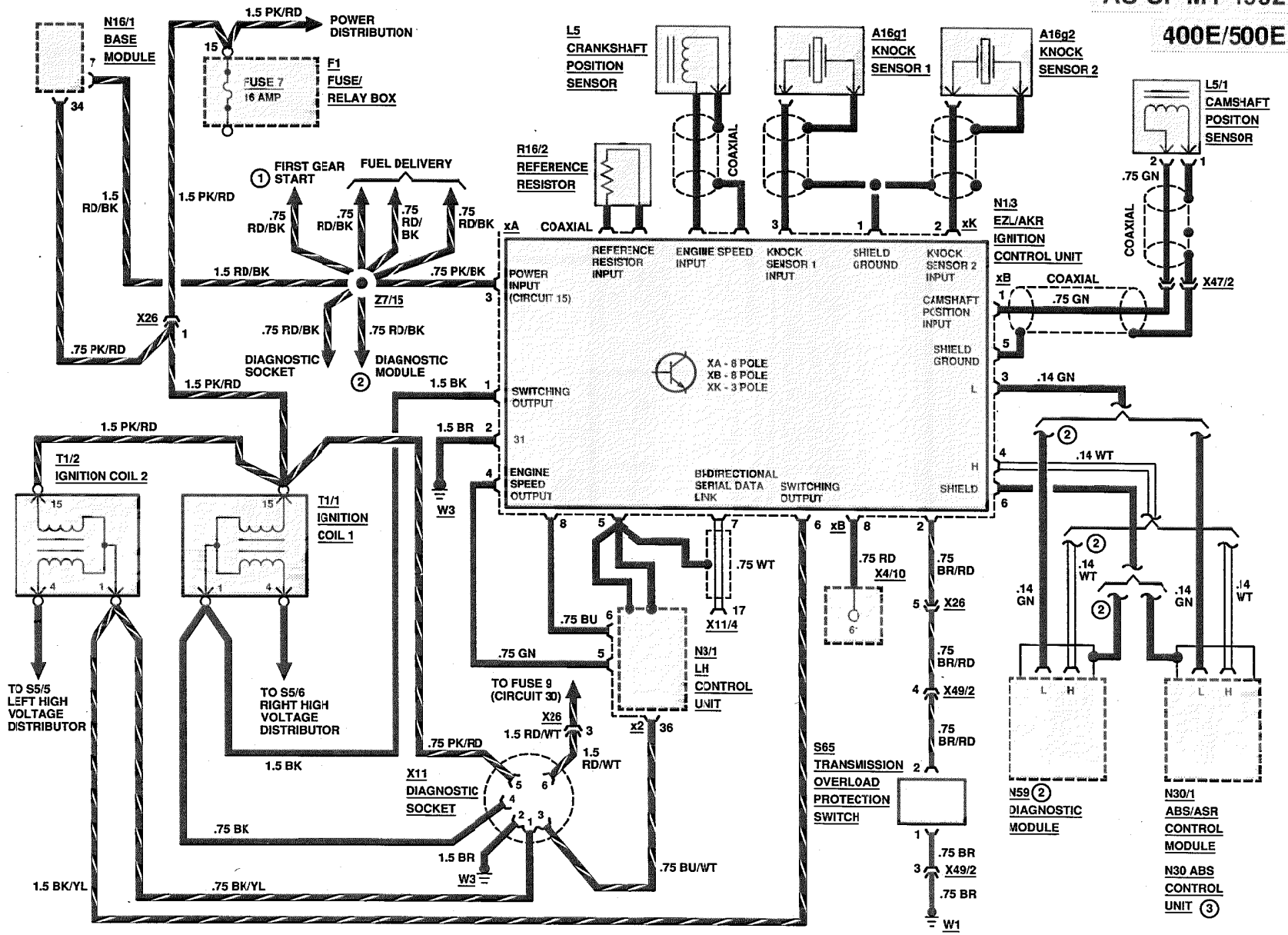

REVISIONS: (1) MODEL 400E
(2) CALIFORNIA VERSION
(3) W/O ASR

DIAGNOSTIC SOCKET

AS OF MY 1992

400E / 500E

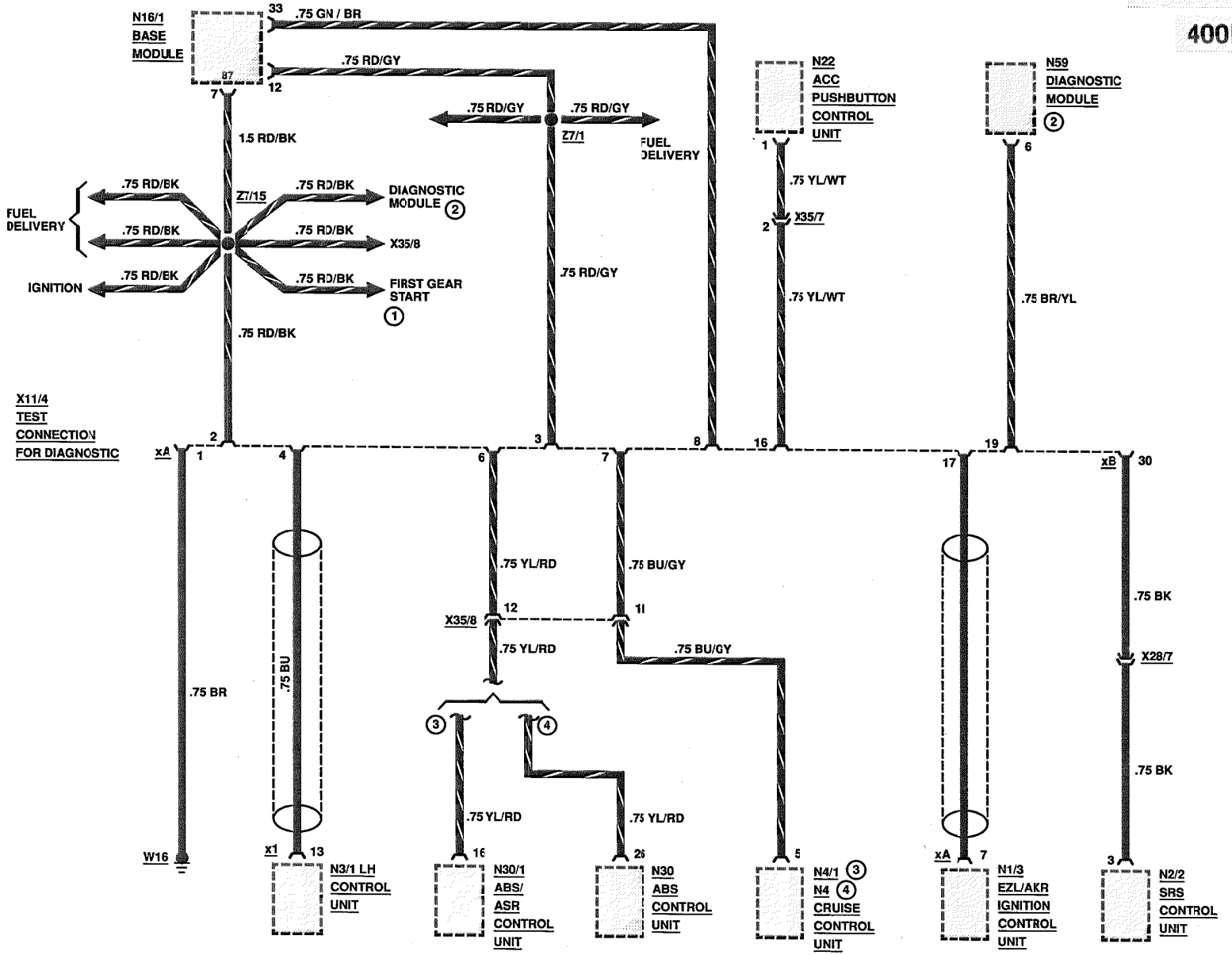

REVISIONS: 1 MODEL 400E
2 CALIFORNIA VERSION
3 WITH ASR
4 WITHOUT ASR

DIAGNOSTIC MODULE (CARB)

AS OF MY 1992
400E/500E
CALIFORNIA ONLY

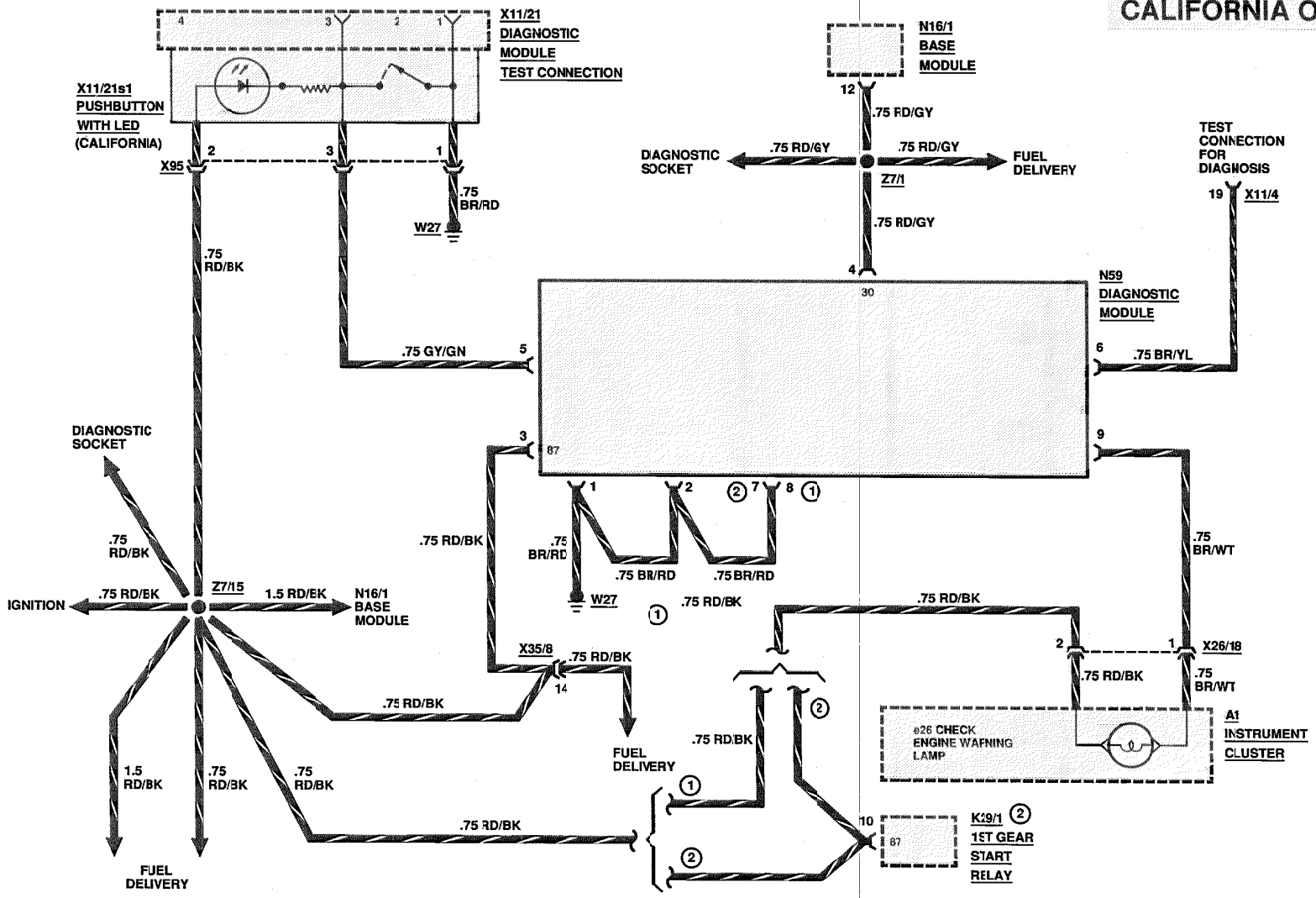

REVISIONS: (1) MODEL 500E
(2) MODEL 400E

FUEL DELIVERY

MY 1986-1989
GASOLINE

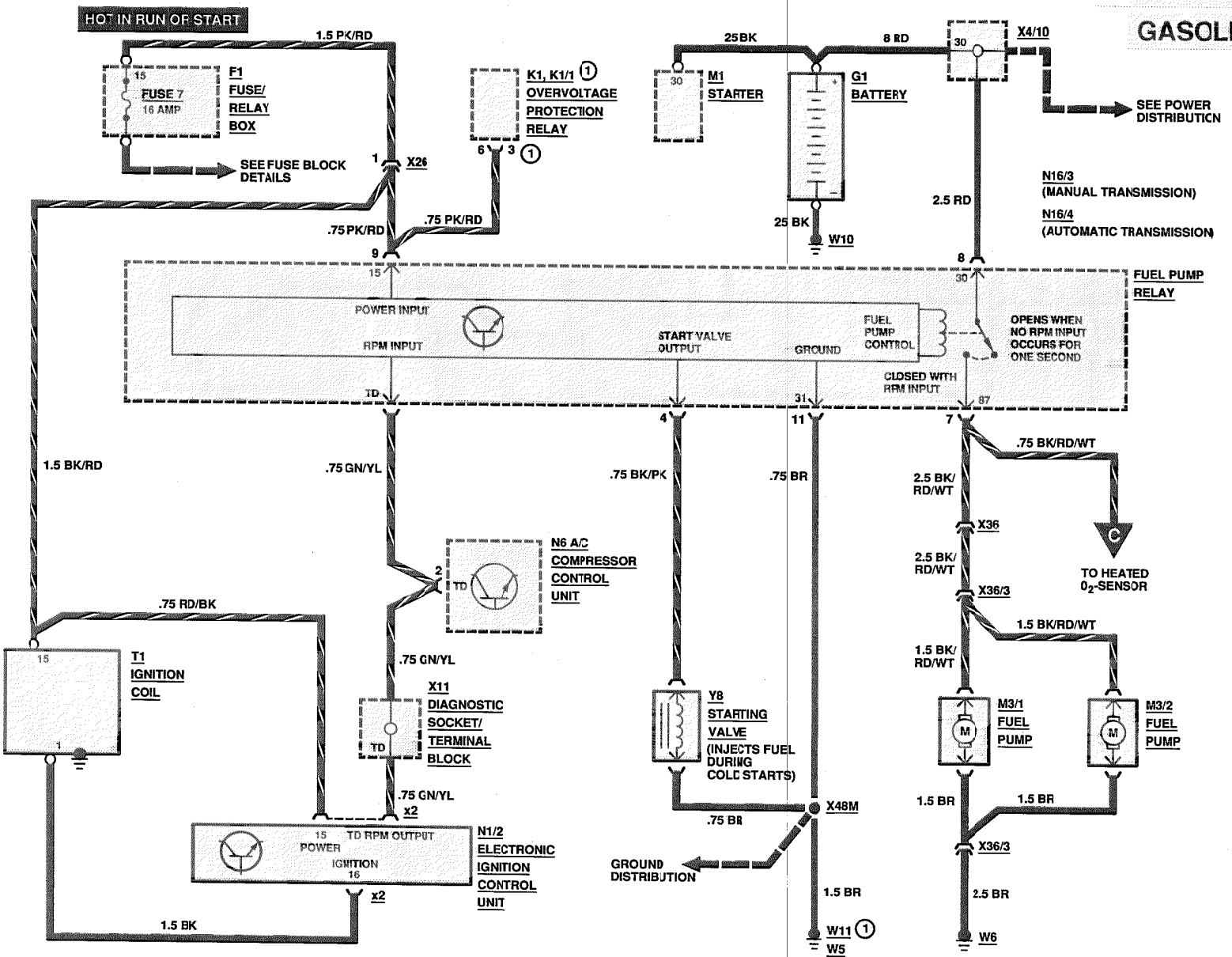

REVISIONS: (1) AS OF MY 1988

FUEL DELIVERY/O_2 SENSOR

AS OF MY 1990
GASOLINE

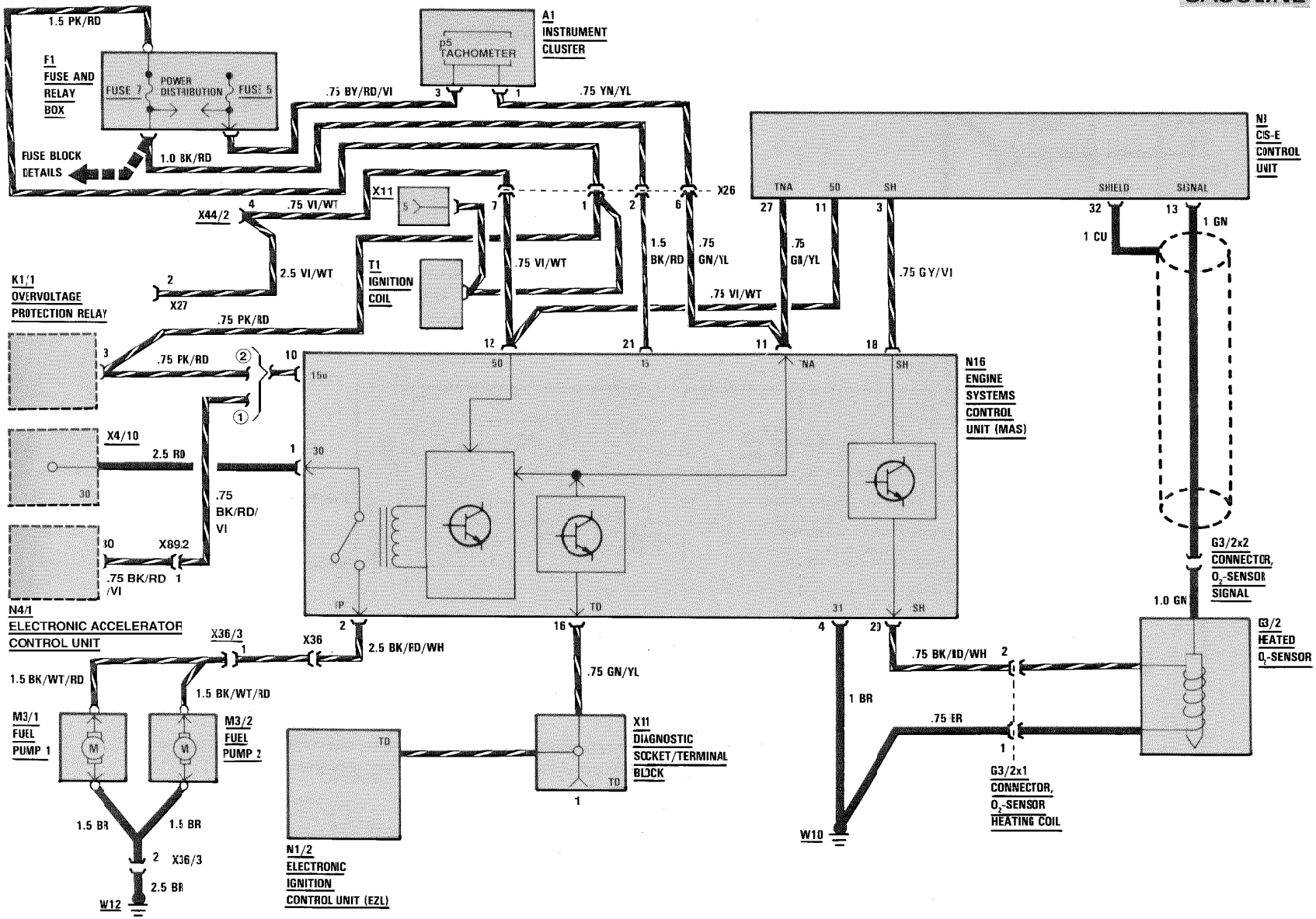

REVISIONS: ① VEHICLES WITH ASR
② VEHICLES W/O ASR

FUEL DELIVERY/O_2 SENSOR

AS OF MY 1990

300CE

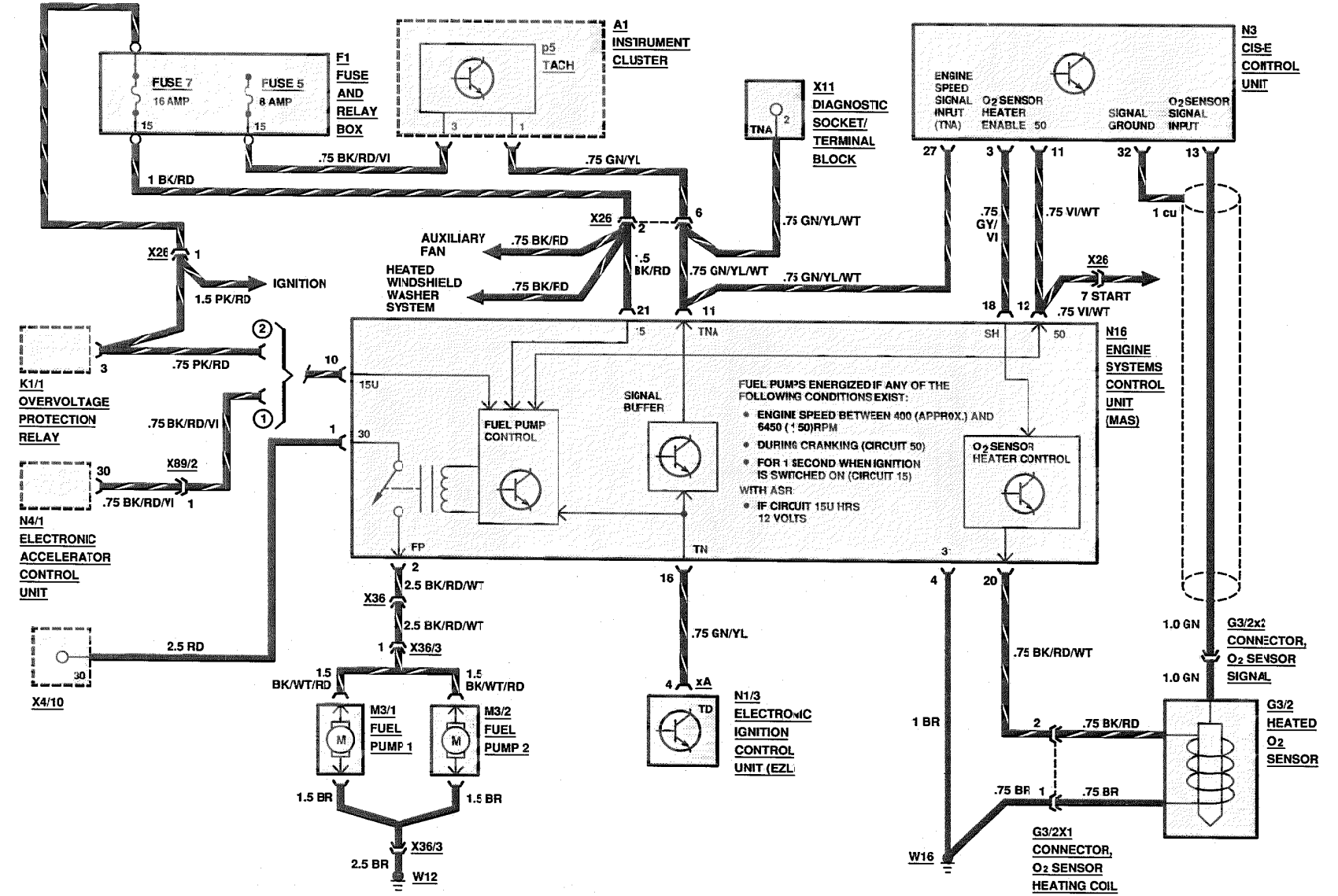

REVISIONS: (1) VEHICLES WITH ASR
(2) VEHICLES W/O ASR

FUEL DELIVERY

AS OF MY 1992

400E/500E

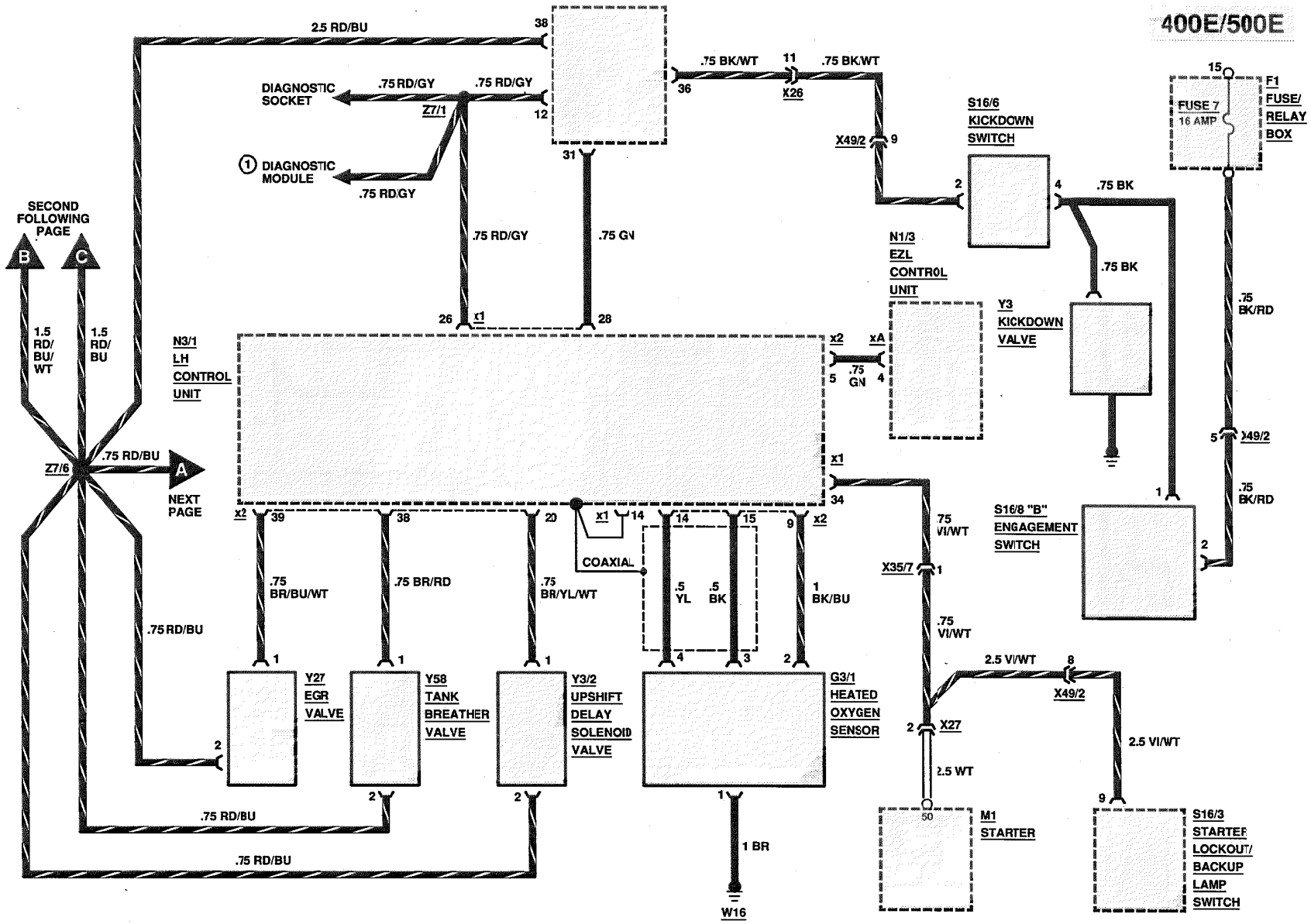

REVISIONS:

1 CALIFORNIA VERSION

FUEL DELIVERY

AS OF MY 1992
400E/500E

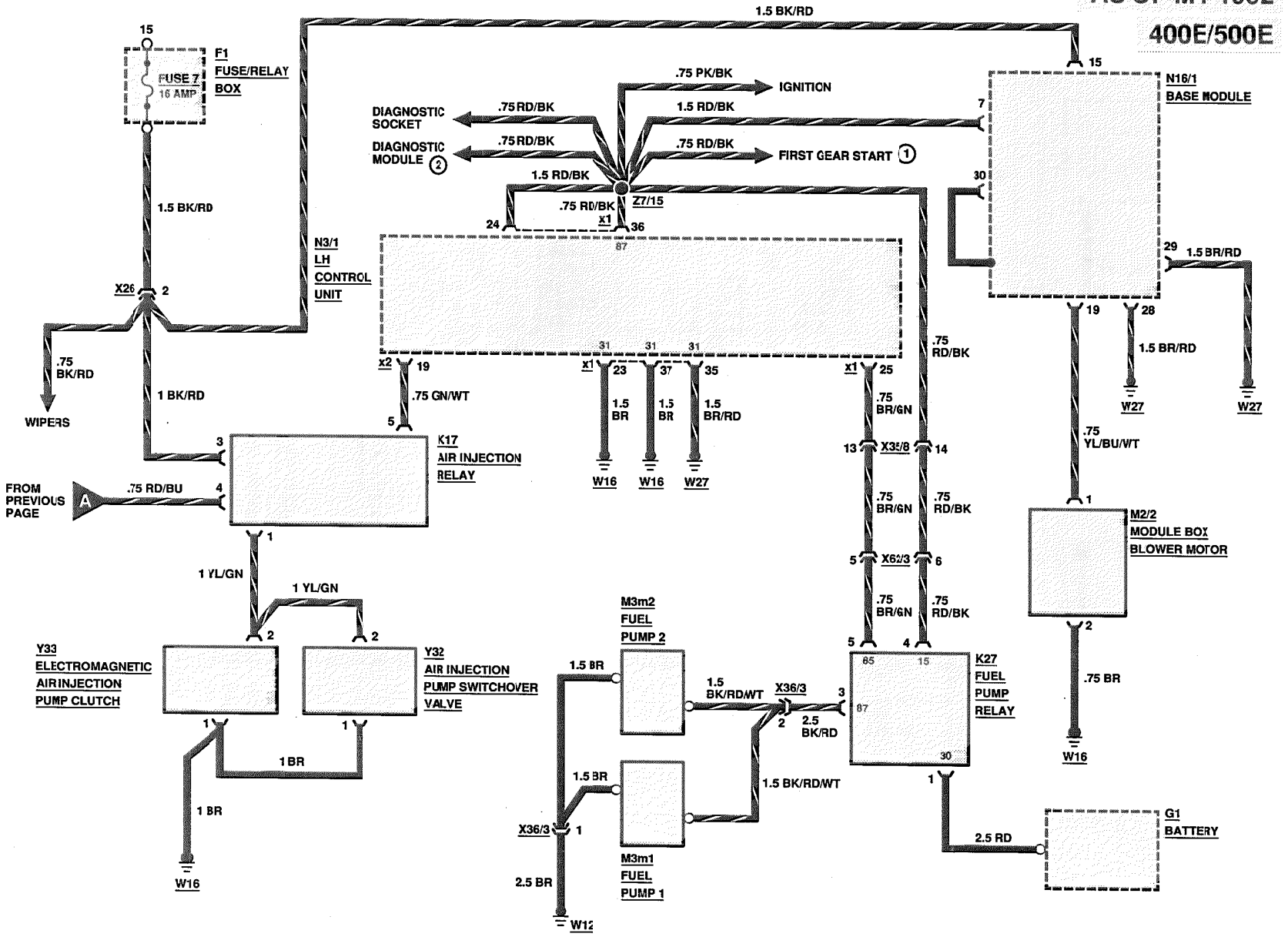

REVISIONS: (1) MODEL 400E
(2) CALIFORNIA VERSION

FUEL DELIVERY

AS OF MY 1992
400E/500E

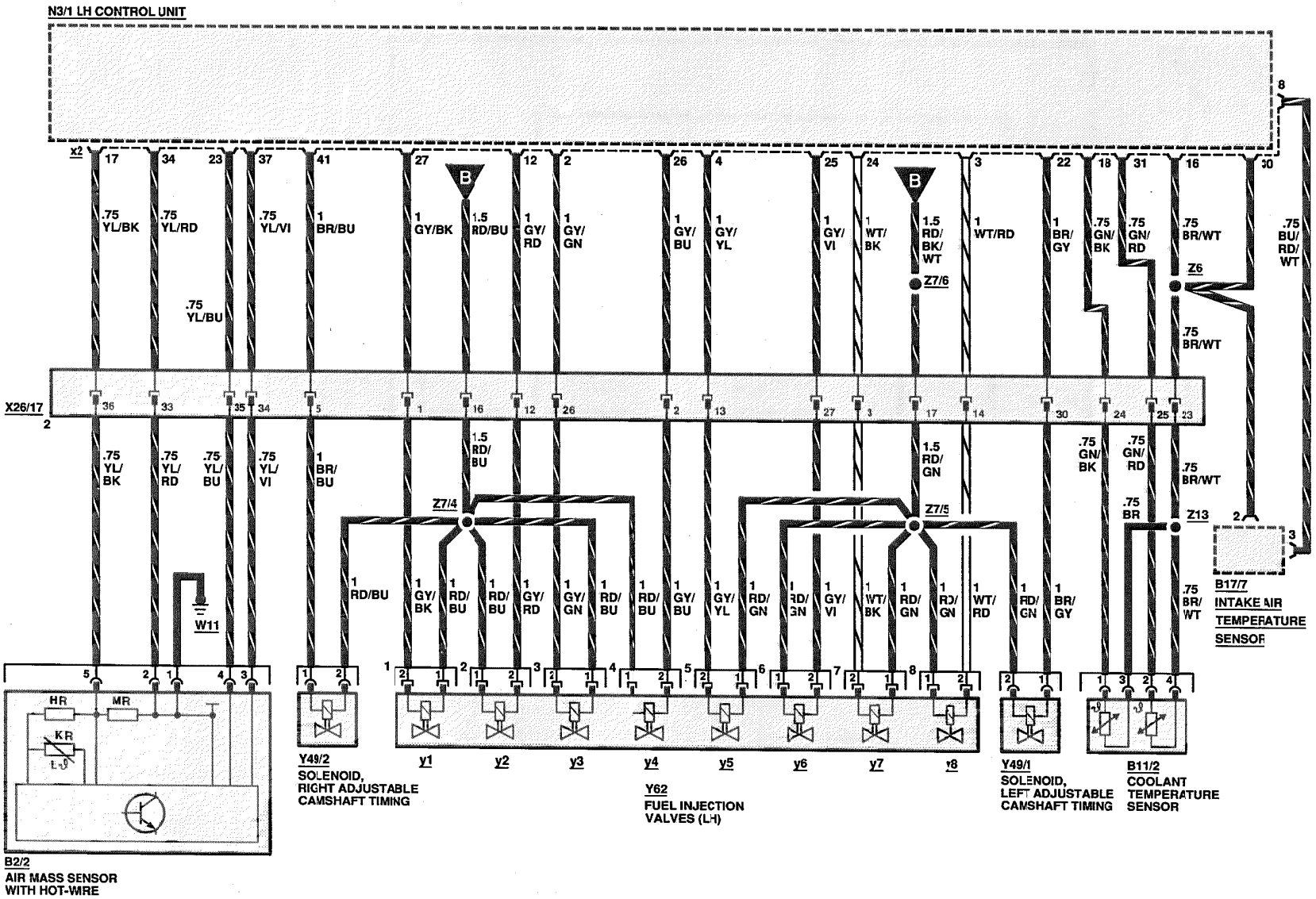

REVISIONS:

ELECTRONIC DIESEL SYSTEM

MY 1987
DIESEL

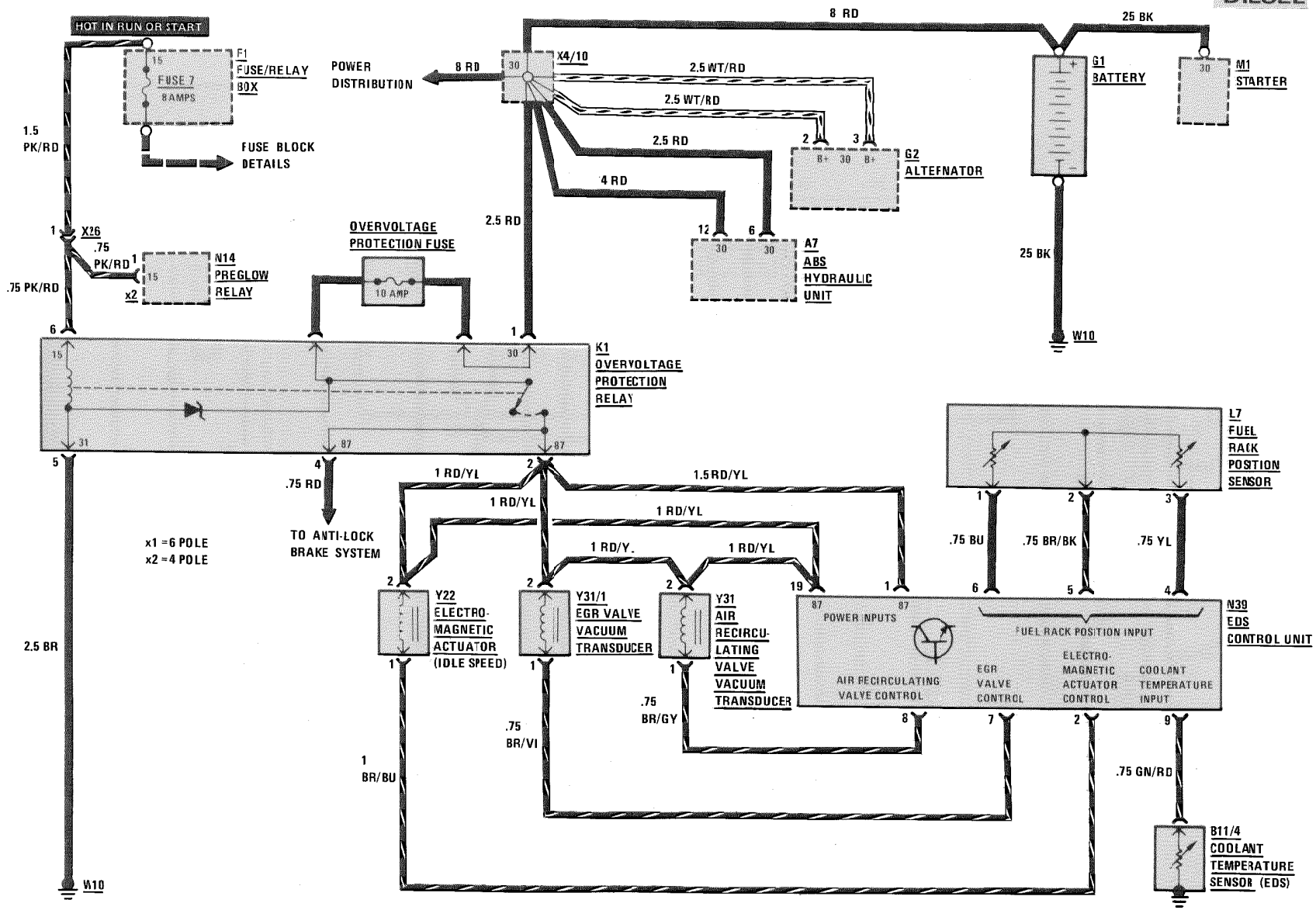

REVISIONS:

ELECTRONIC DIESEL SYSTEM

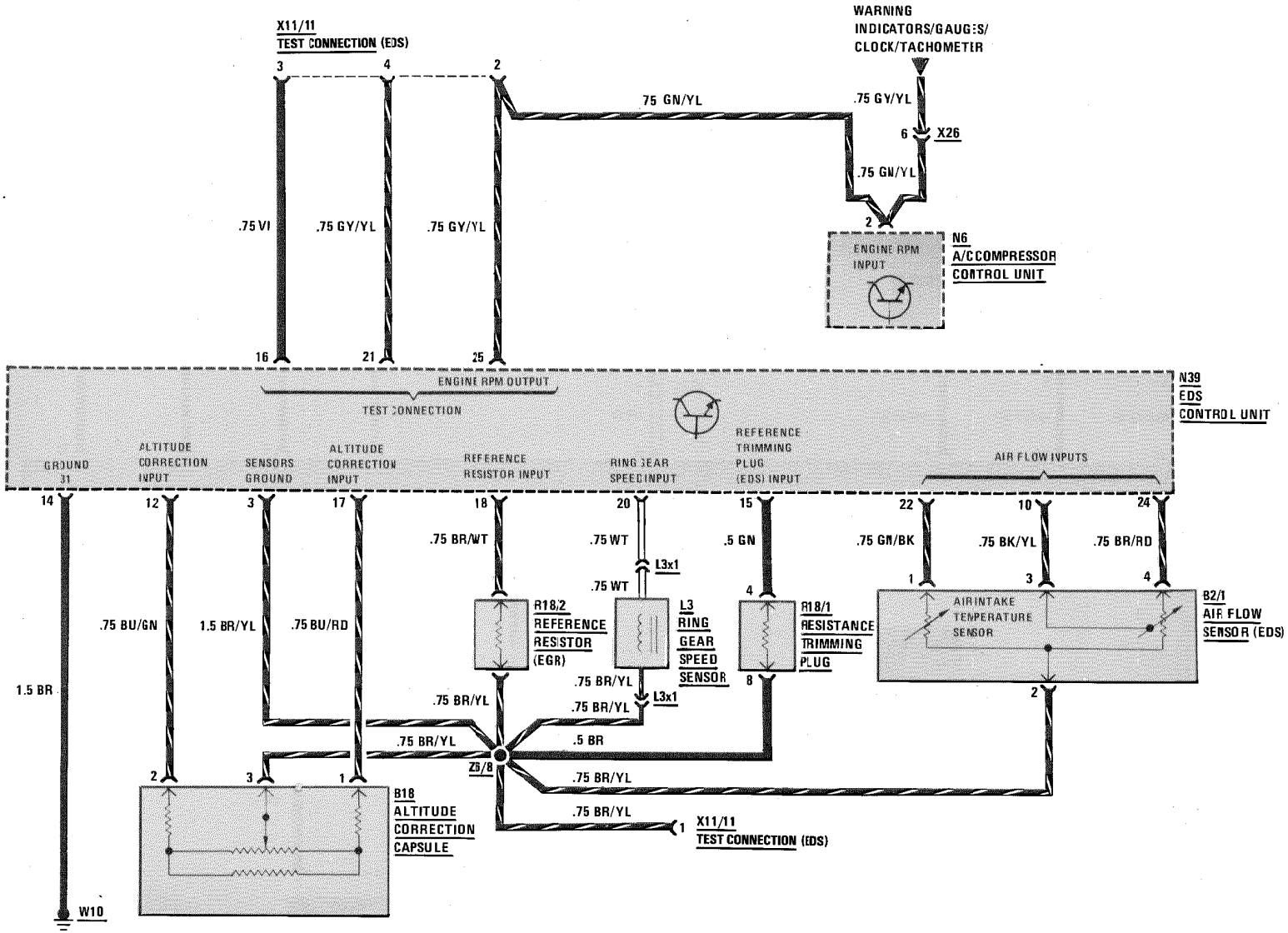

REVISIONS:

ELECTRONIC DIESEL SYSTEM

AS OF MY 1990

300D 2.5

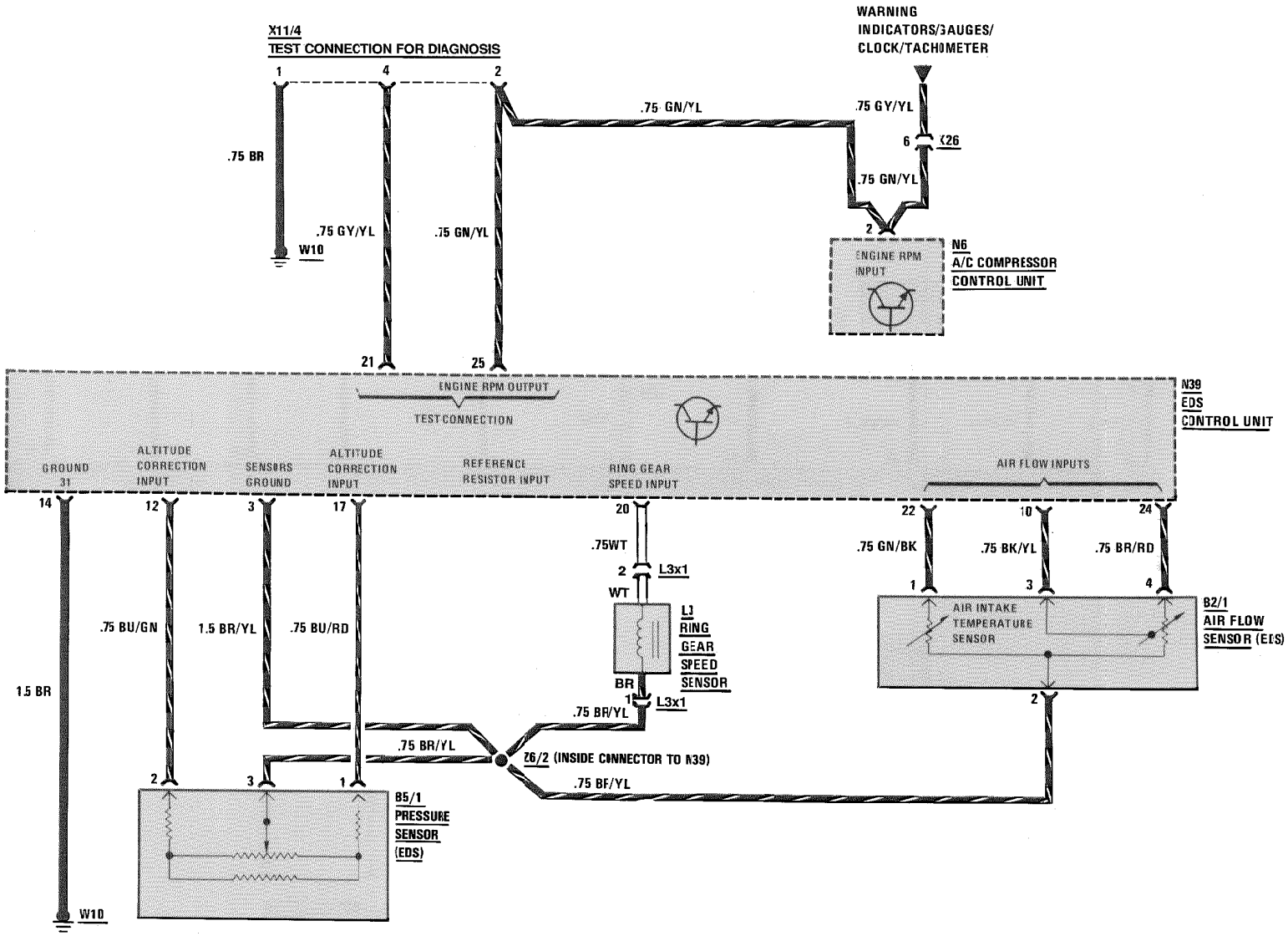

REVISIONS:

ELECTRONIC DIESEL SYSTEM

MY 1990-1991

300D 2.5

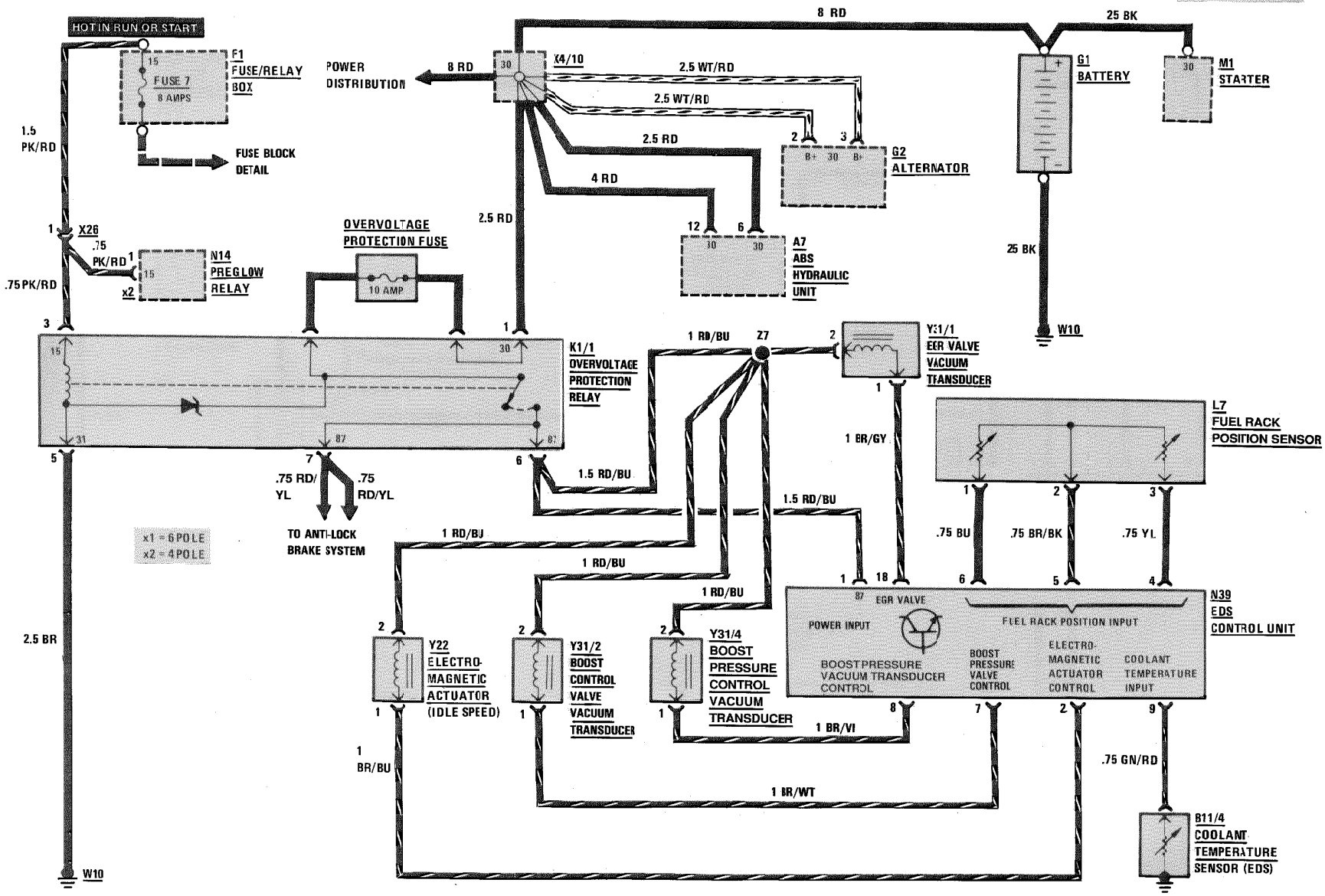

REVISIONS:

ELECTRONIC DIESEL SYSTEM

AS OF MY 1992

300D 2.5

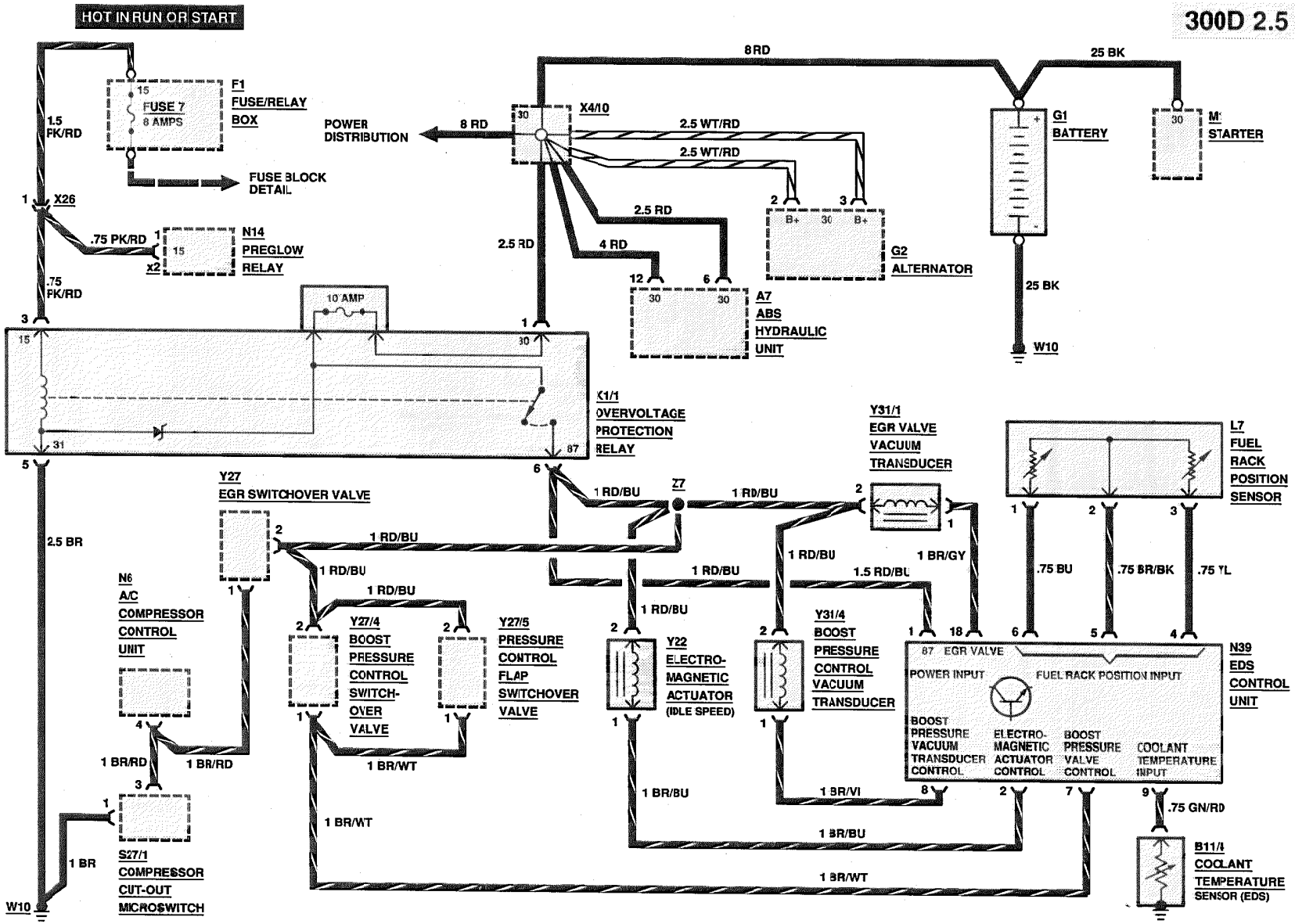

REVISIONS:

ELECTRONIC ENGINE CONTROLS/DIAGNOSTIC SOCKET

MY 1986/MY 1987
260 E/300 E

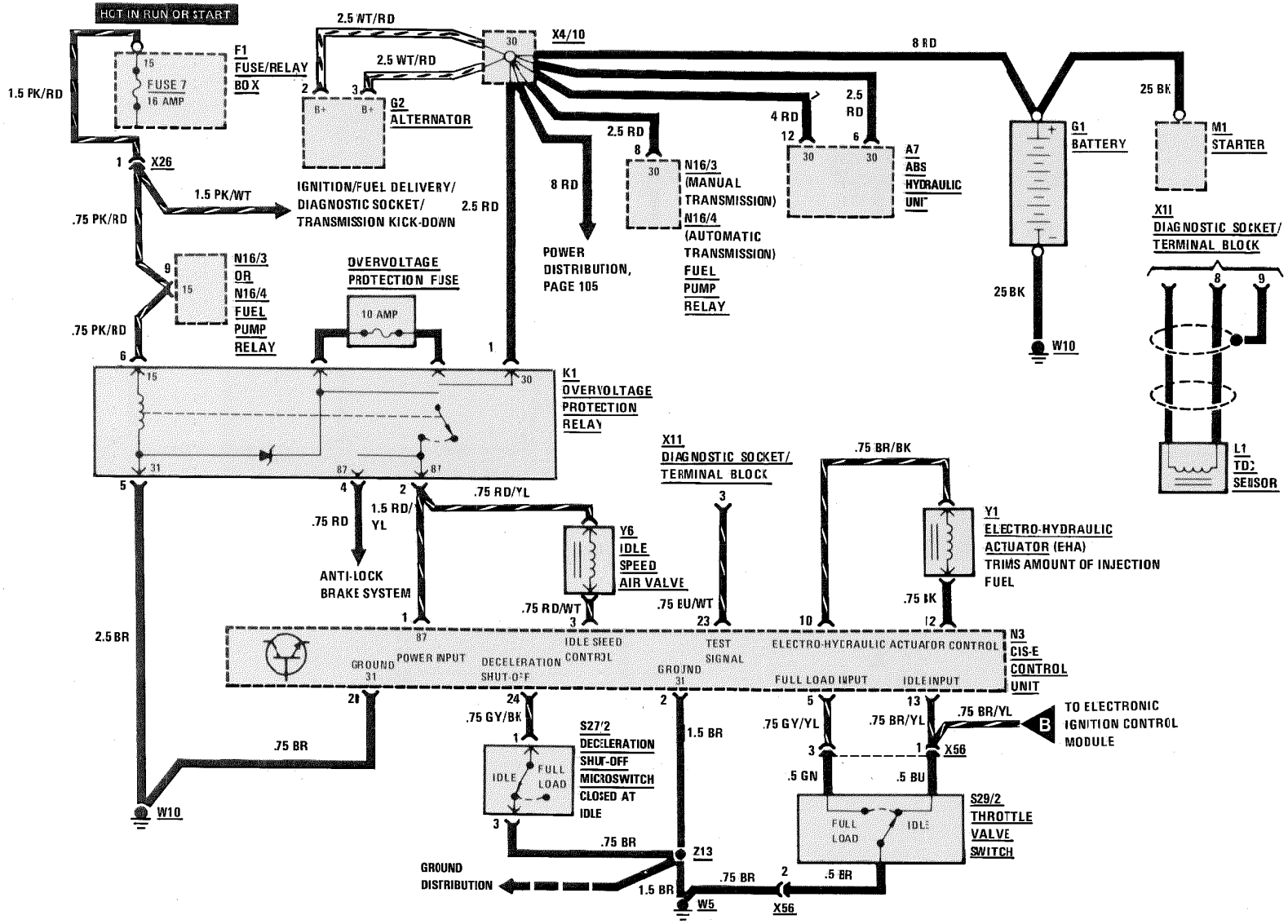

REVISIONS:

ELECTRONIC ENGINE CONTROLS

MY 1986/1987
260 E/300 E

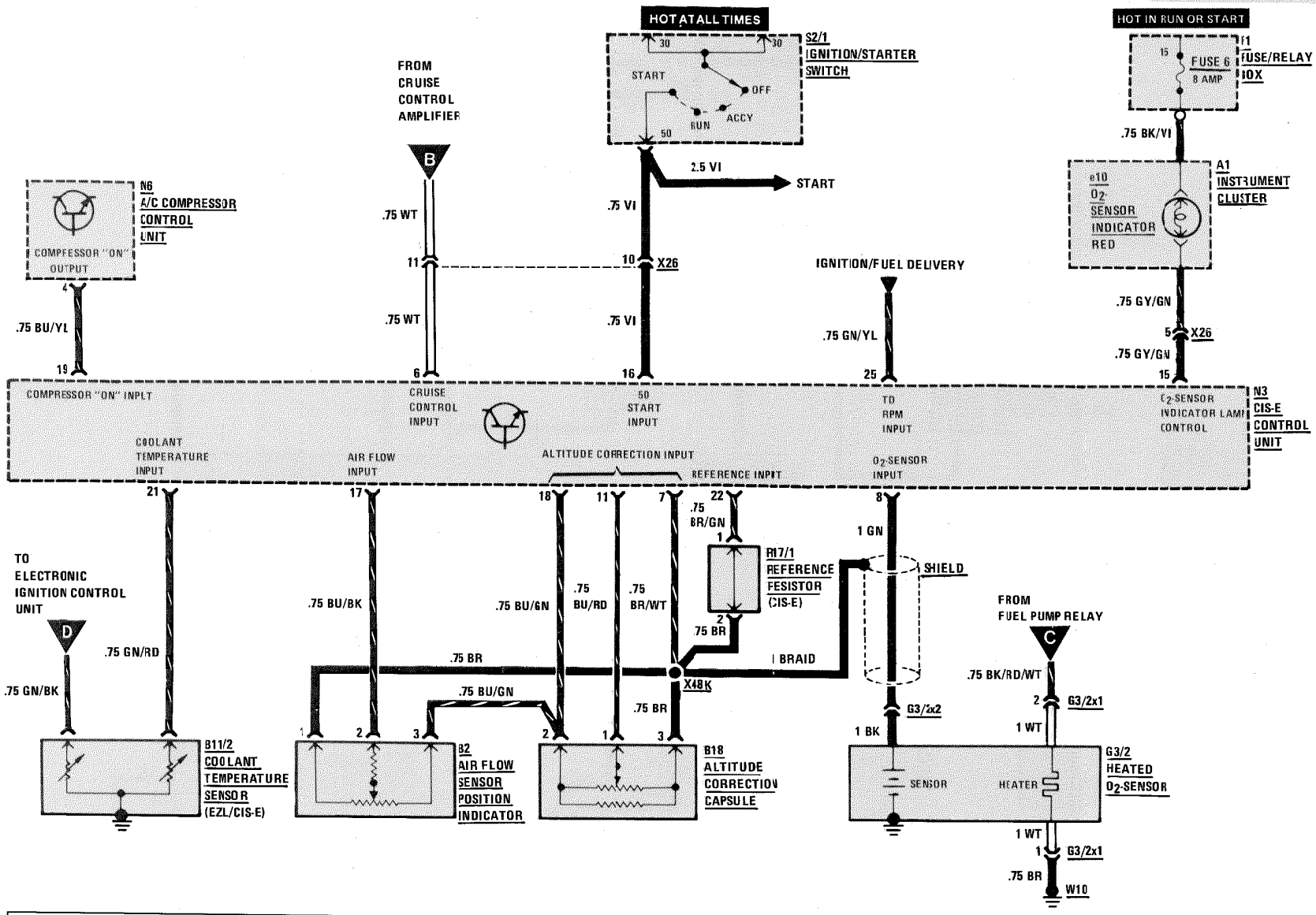

REVISIONS:

117/1

124.026/.030

12/87

ELECTRONIC ENGINE CONTROLS/DIAGNOSTIC SOCKET

MY 1988-1989
GASOLINE/FEDERAL

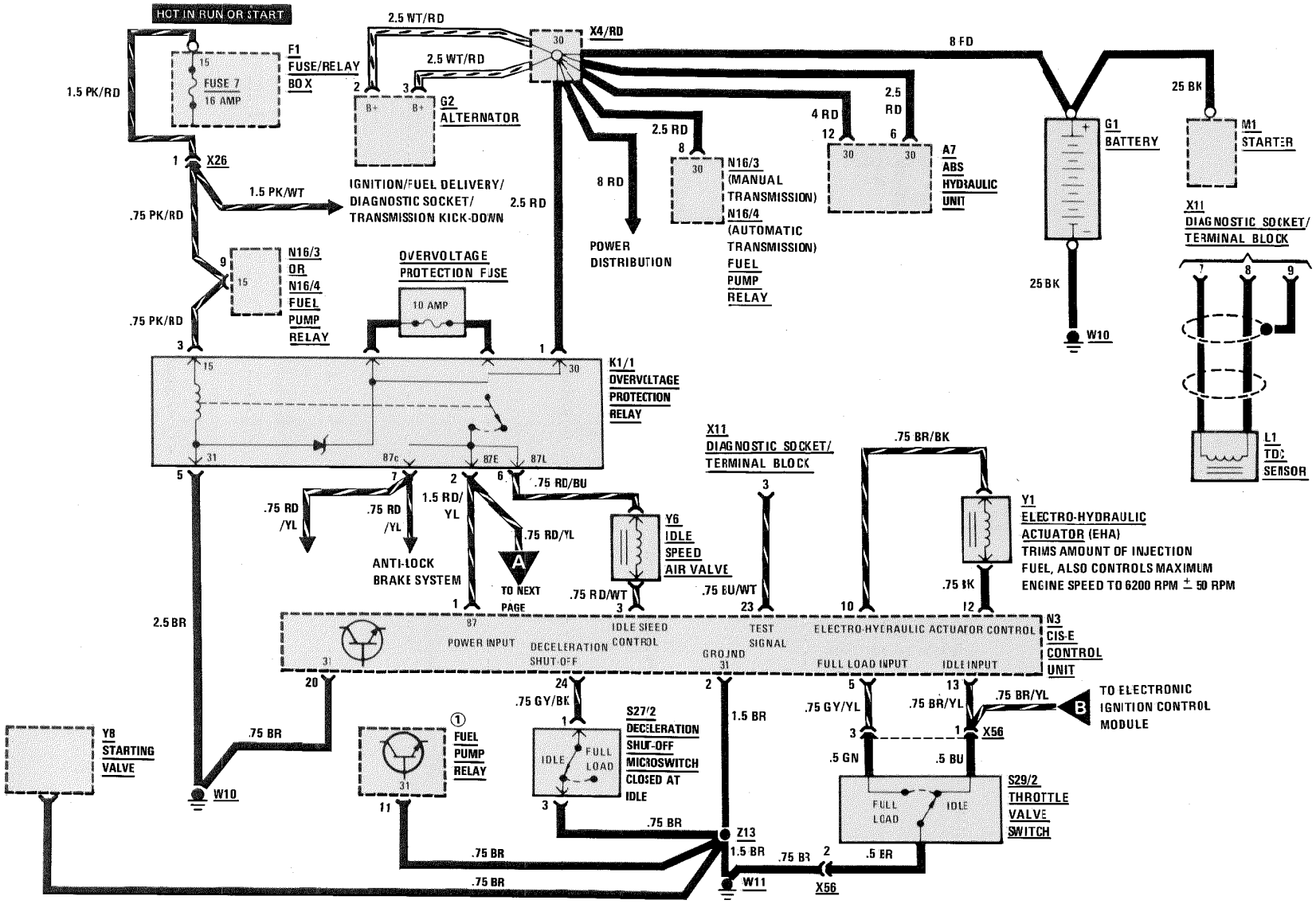

REVISIONS: ① N16/3 (MANUAL TRANSMISSION)
N16/4 (AUTOMATIC TRANSMISSION)

ELECTRONIC ENGINE CONTROLS

MY 1988-1989
GASOLINE/FEDERAL

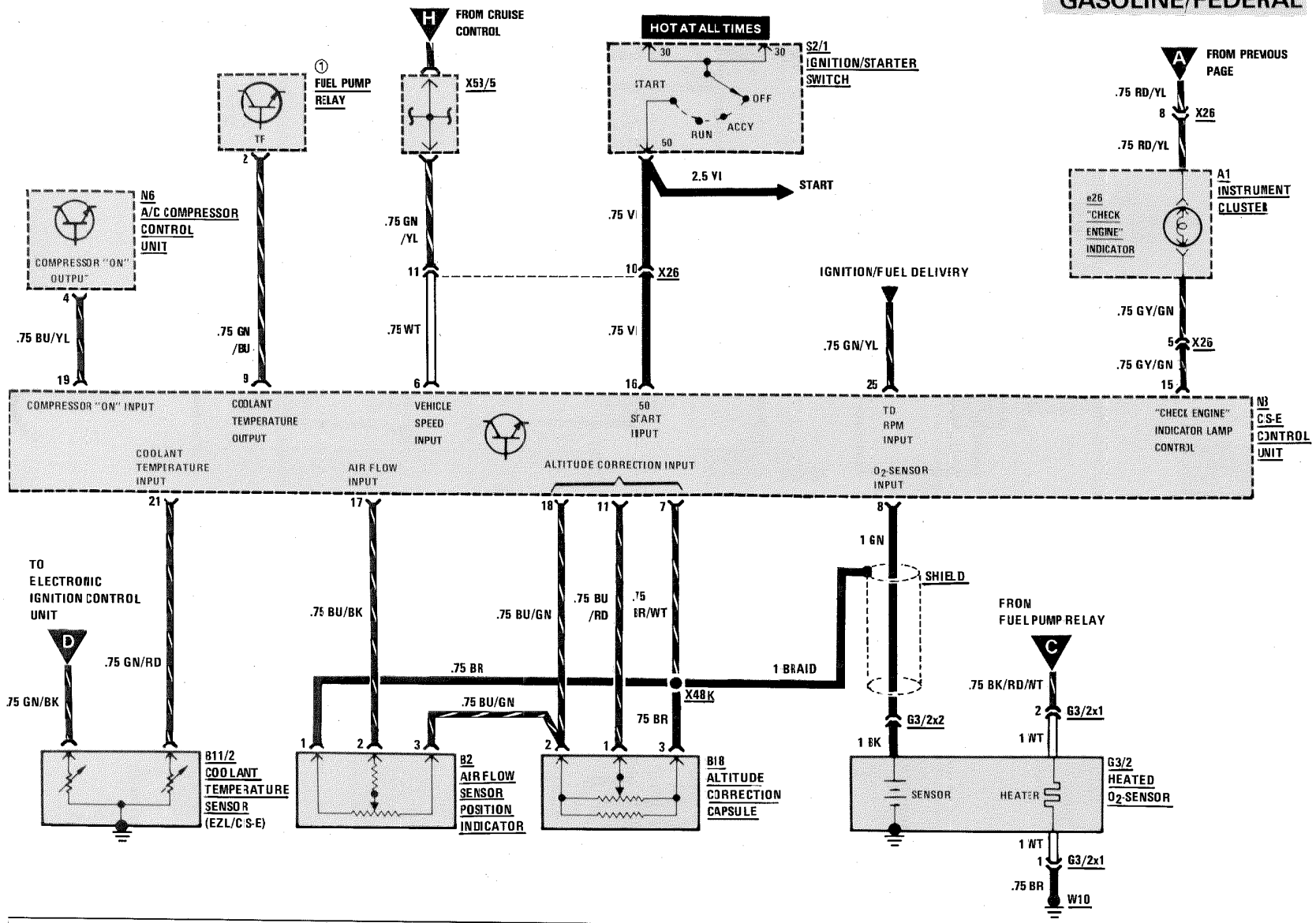

REVISIONS: ① N16/3 (MANUAL TRANSMISSION)
N16/4 (AUTOMATIC TRANSMISSION)

ELECTRONIC ENGINE CONTROLS/DIAGNOSTIC SOCKET

MY 1988-1989

GASOLINE/CALIFORNIA

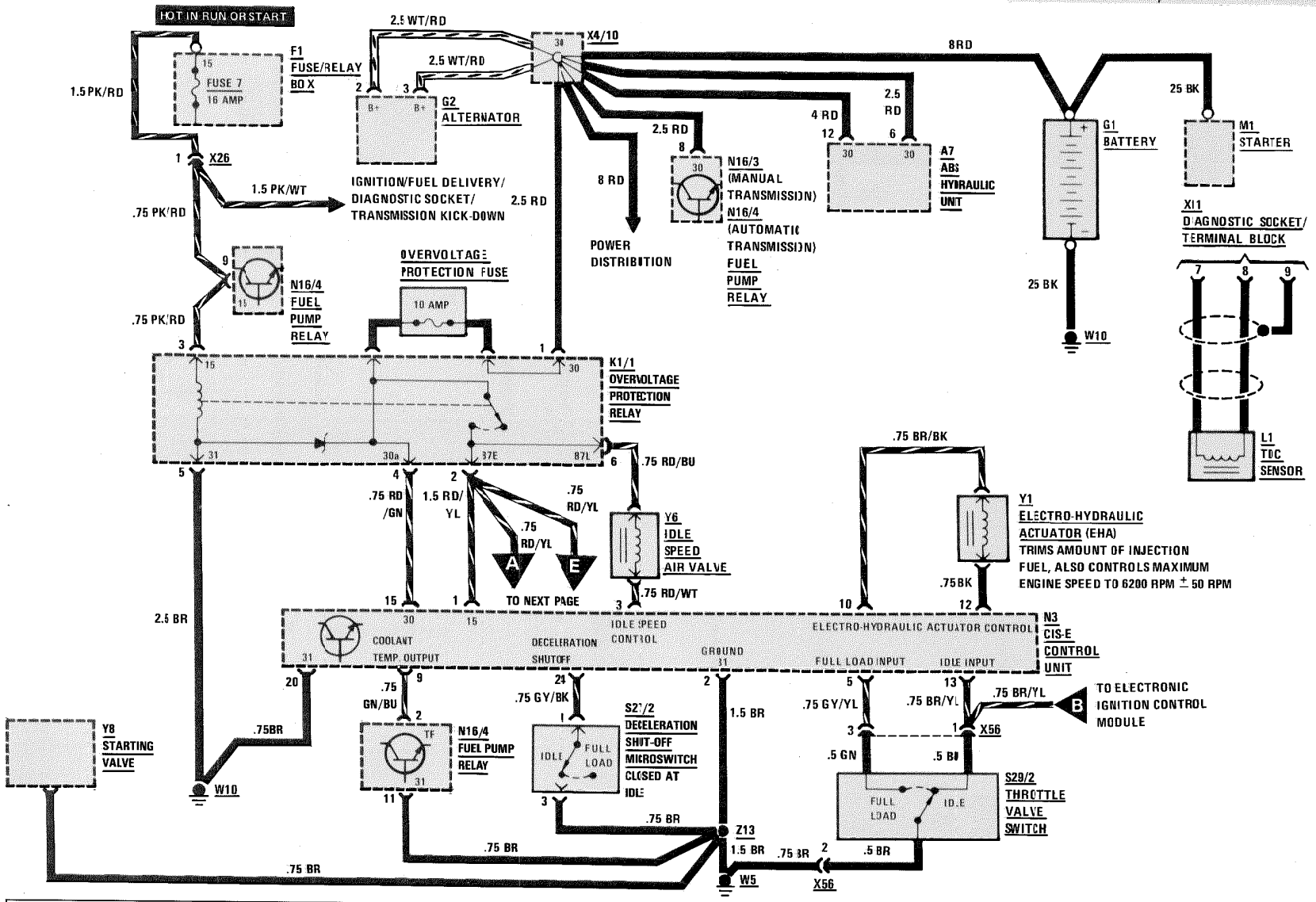

REVISIONS:

ELECTRONIC ENGINE CONTROLS

MY 1988-1989
GASOLINE/CALIFORNIA

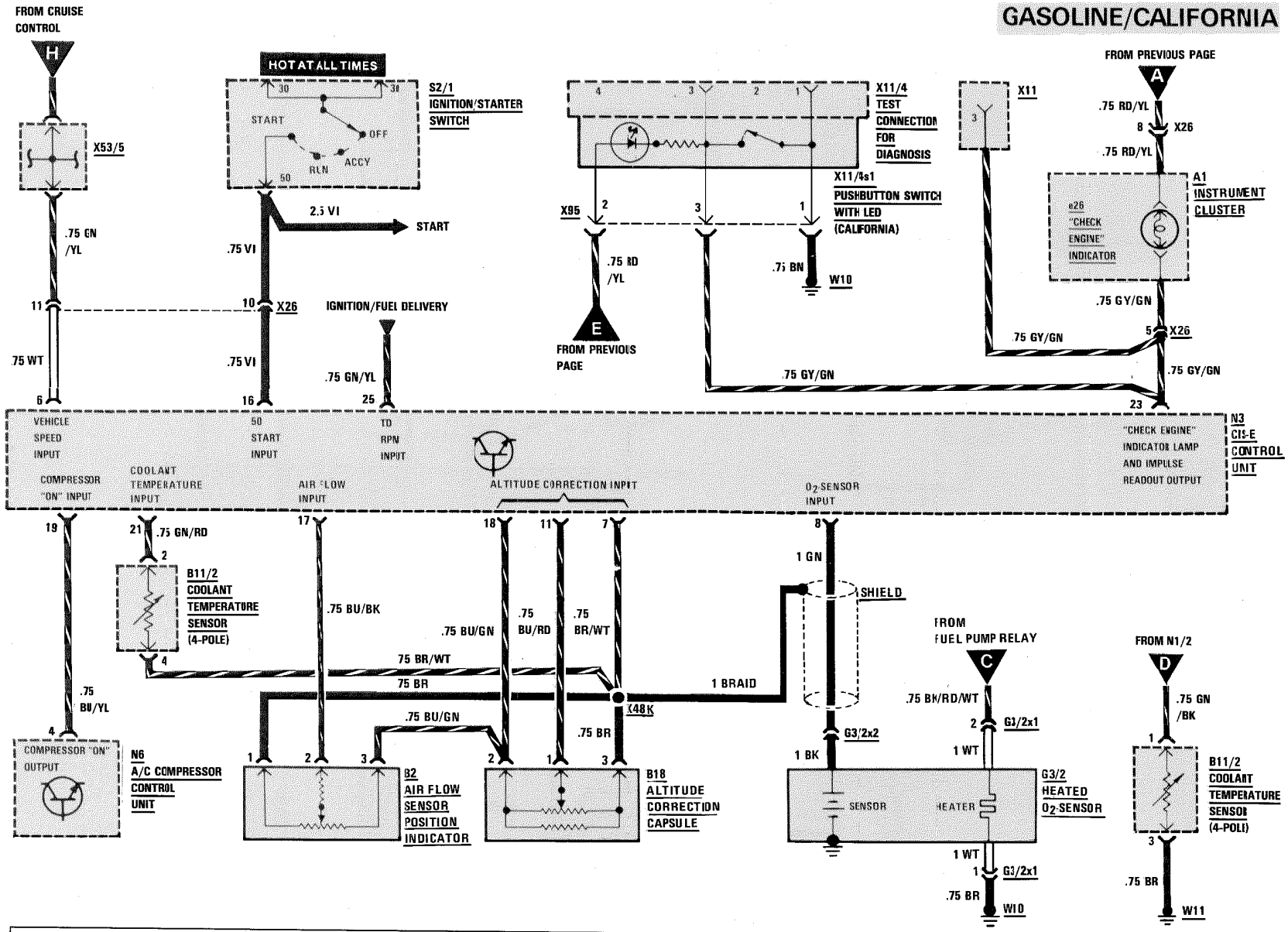

REVISIONS:

ELECTRONIC ENGINE CONTROLS

AS OF MY 1990
M103 GASOLINE

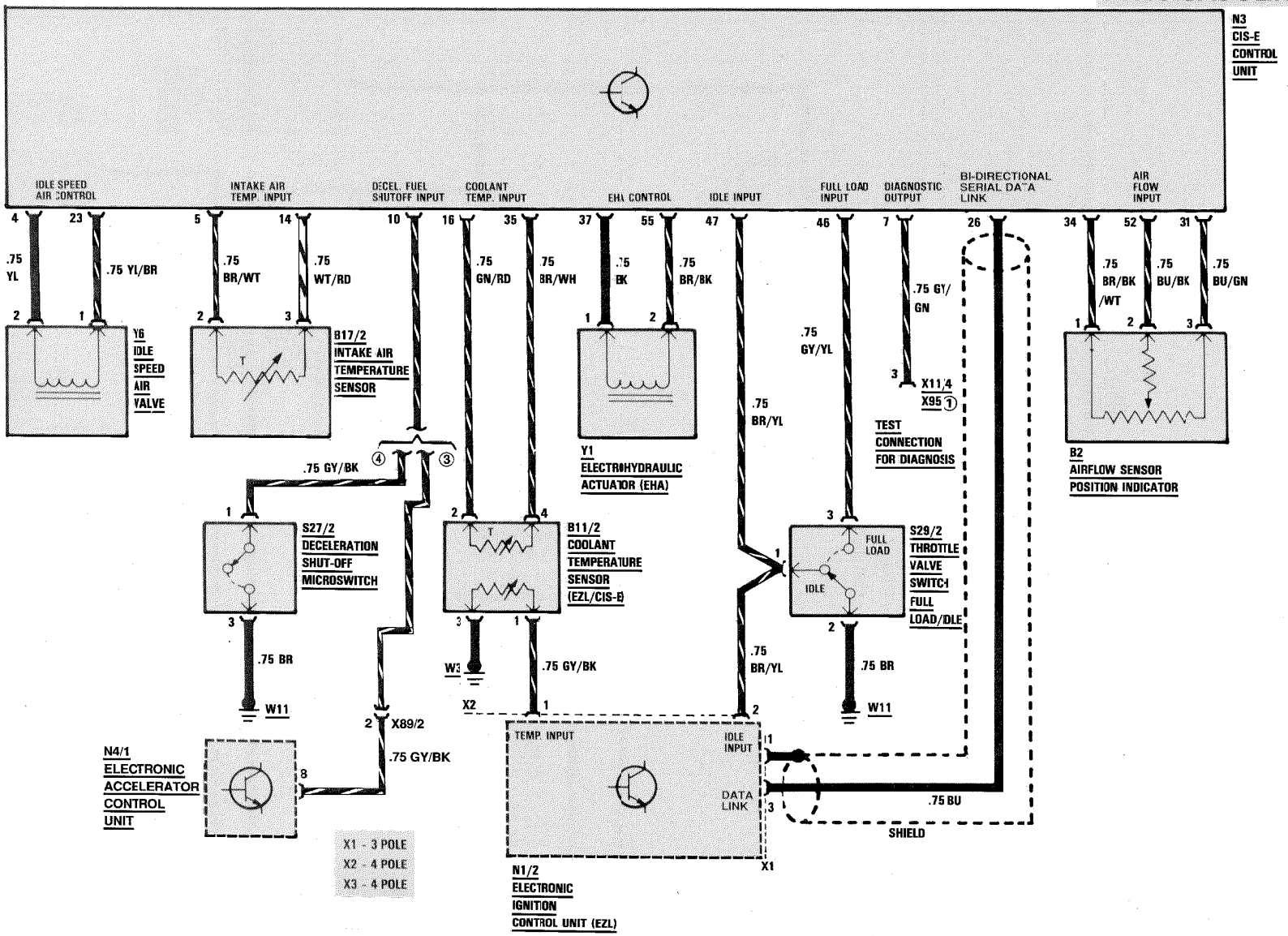

REVISIONS:
① CALIFORNIA ONLY
② NOT WITH MANUAL TRANSMISSION
③ WITH ASR
④ WITHOUT ASR

ELECTRONIC ENGINE CONTROLS

AS OF MY 1990

300 CE

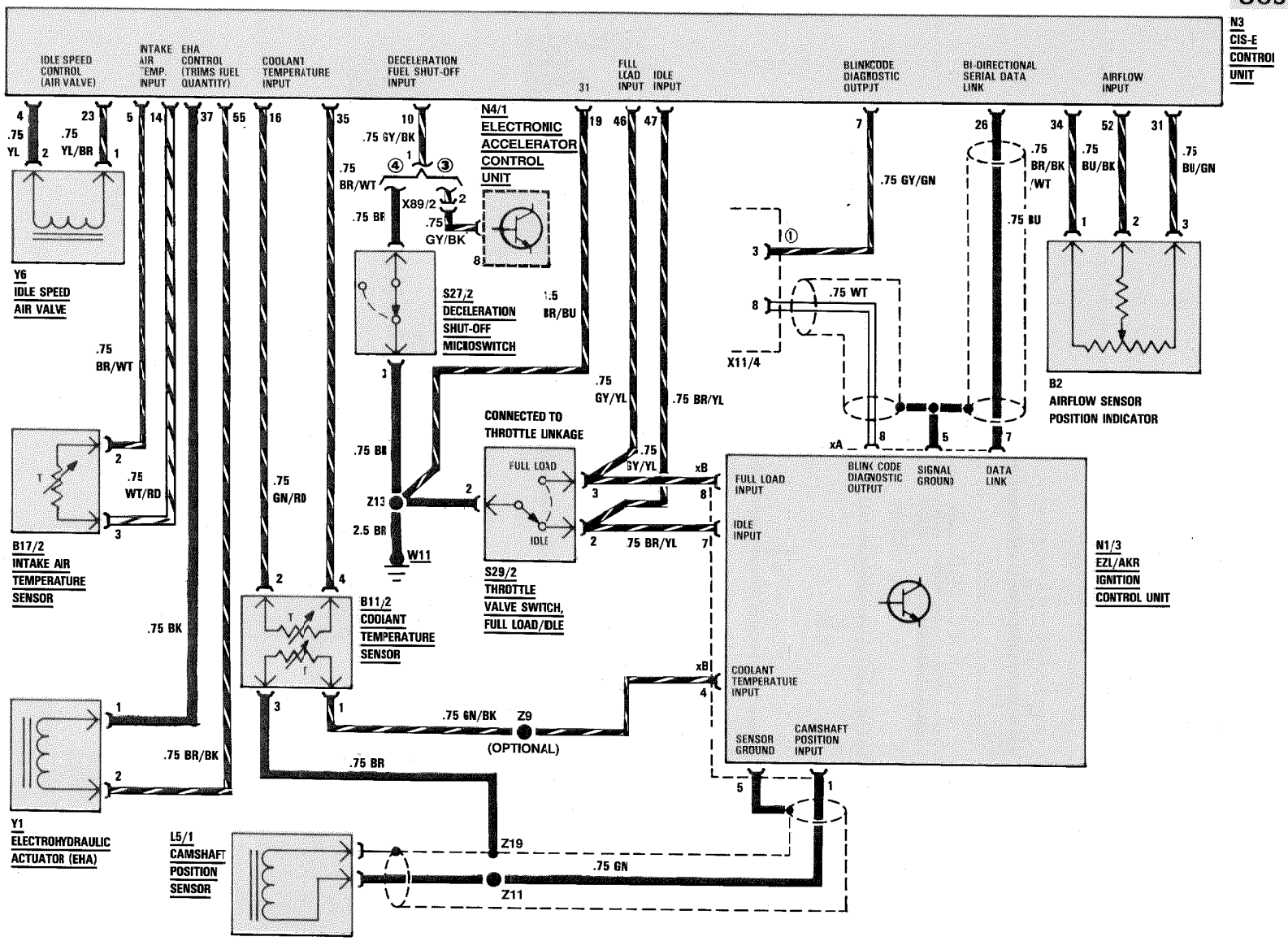

REVISIONS:
① IN CALIFORNIA, X95
② AS OF MY 1992, CONNECTED DIRECTLY TO W11
③ VEHICLES WITH ASR
④ VEHICLES W/O ASR

ELECTRONIC ENGINE CONTROLS/TRANSMISSION SHIFT POINT RELAY

MY 1990-1991

GASOLINE

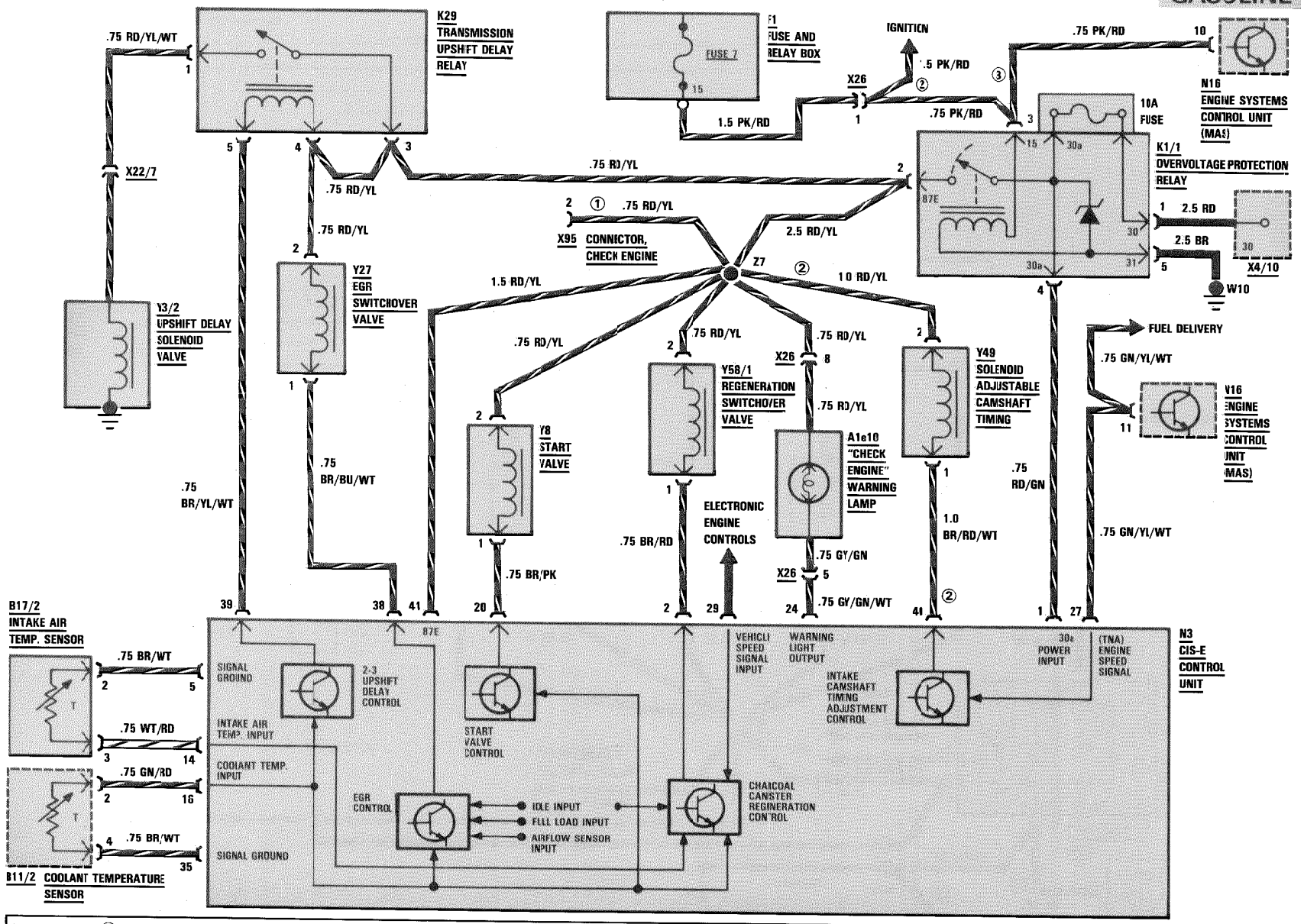

REVISIONS: ① ONLY IN CALIF. VEHICLES
② ONLY USED IN 300CE (M104)
③ NOT USED ON VEHICLES WITH ASR

ELECTRONIC ENGINE CONTROLS/TRANSMISSION SHIFT POINT DELAY

AS OF MY 1992

GASOLINE

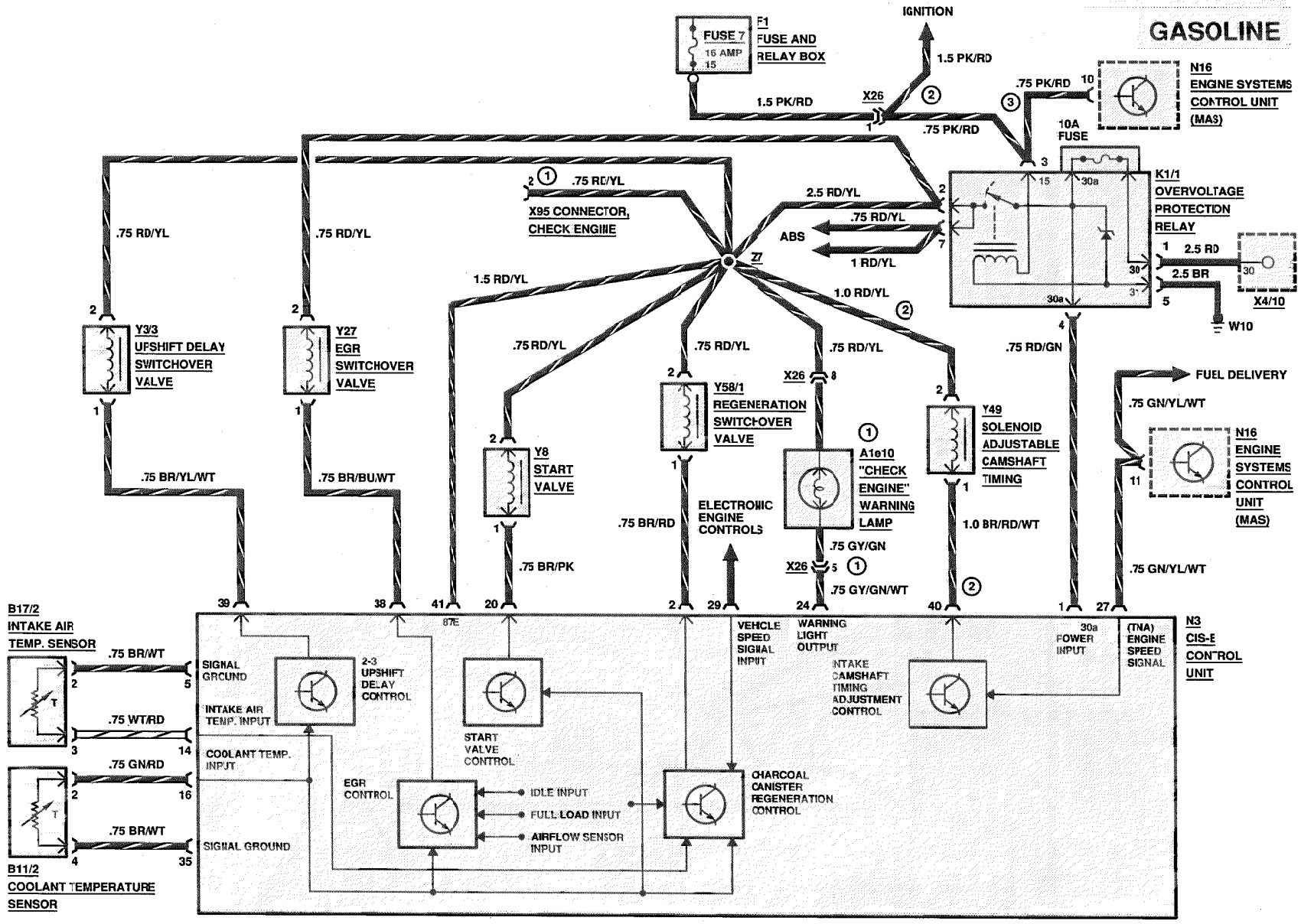

REVISIONS:

1. ONLY IN CALIF. VEHICLES
2. ONLY USED IN MODEL 300CE (M104)
3. NOT USED ON VEHICLES WITH ASR

ELECTRONIC ENGINE CONTROLS

AS OF MY 1990 GASOLINE

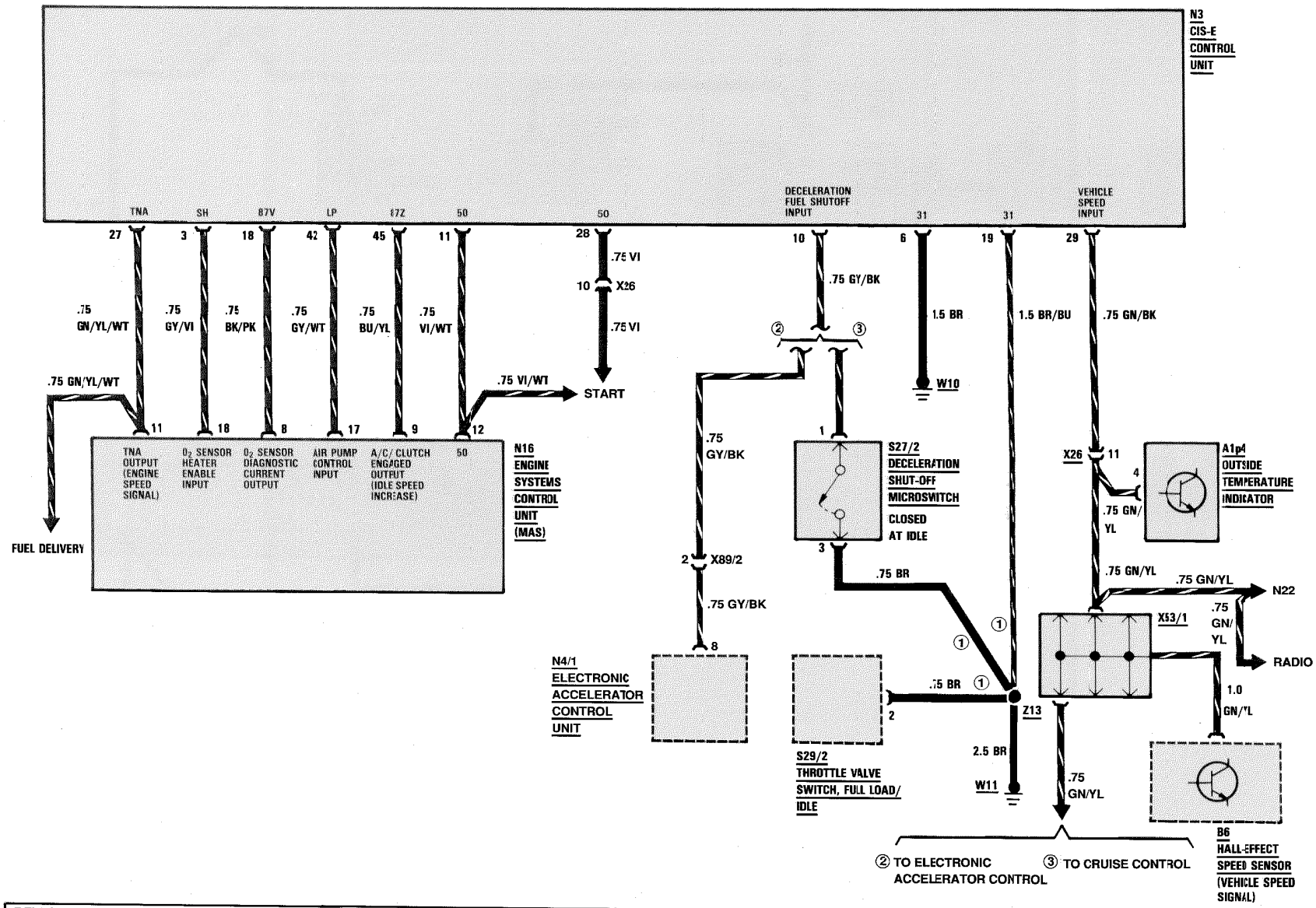

REVISIONS:
① AS OF MY 1992, CONNECTED DIRECTLY TO W11
② VEHICLES WITH ASR
③ VEHICLES W/O ASR

AUXILIARY FAN/ENGINE OVERLOAD PROTECTION

MY 1987 DIESEL

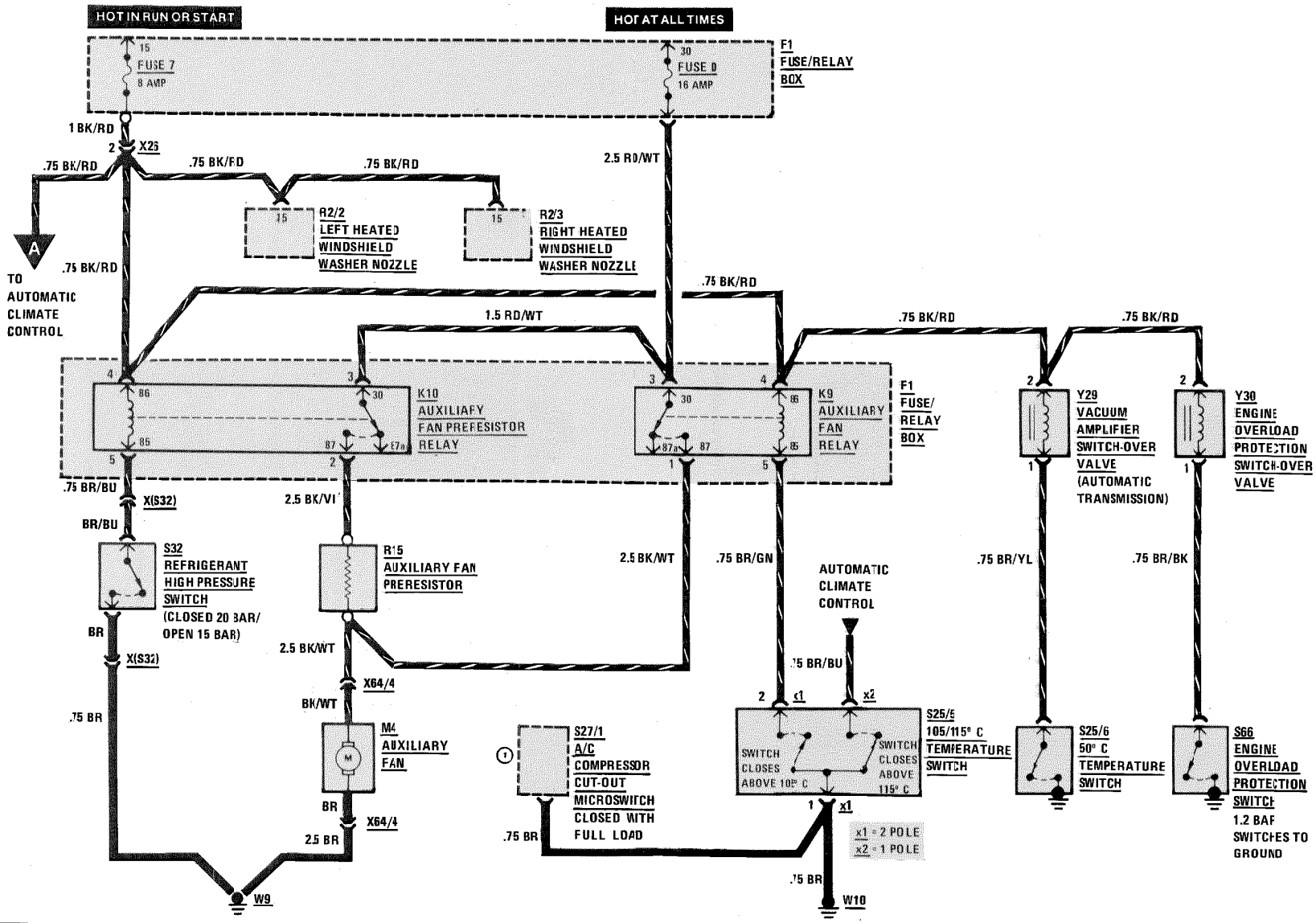

REVISIONS: ① MODEL YEAR 1986 ONLY

AUXILIARY FAN/ENGINE OVERLOAD PROTECTION

MY 1990-1991

DIESEL

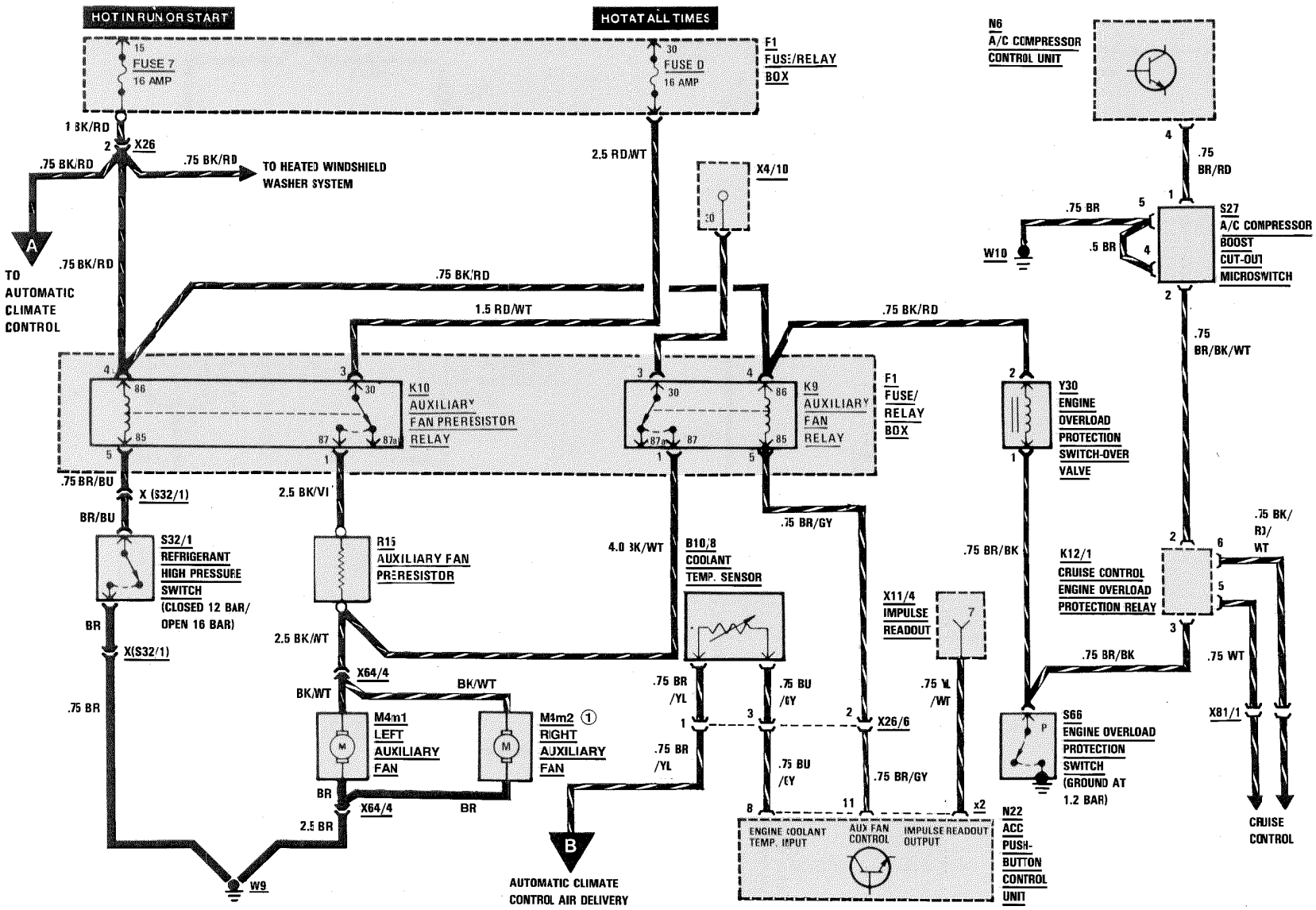

REVISIONS: ① AS OF MY 1991

AUXILIARY FAN/ENGINE OVERLOAD PROTECTION

AS OF MY 1992
DIESEL

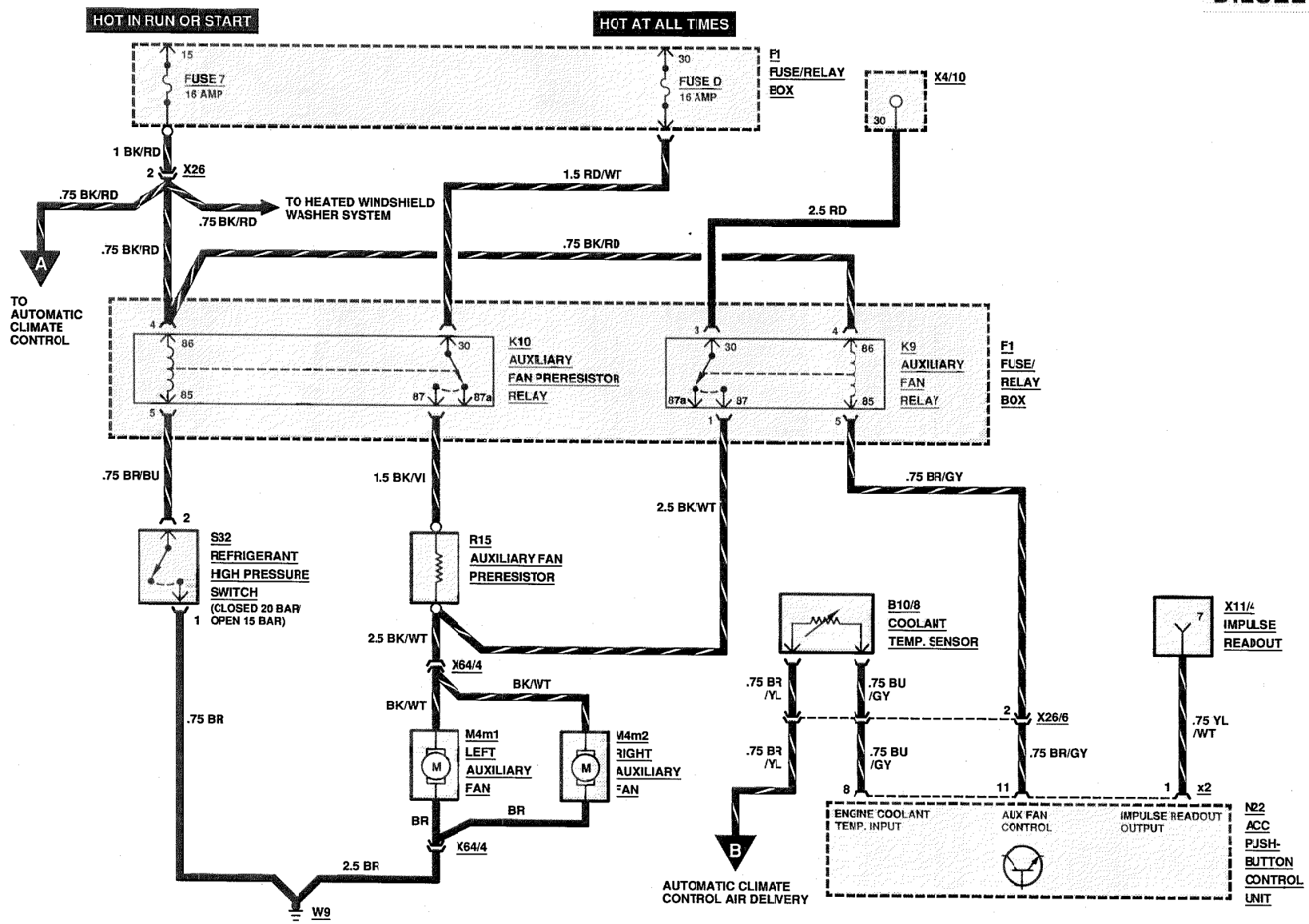

REVISIONS:

AUXILIARY FAN

MY 1986-1989
GASOLINE

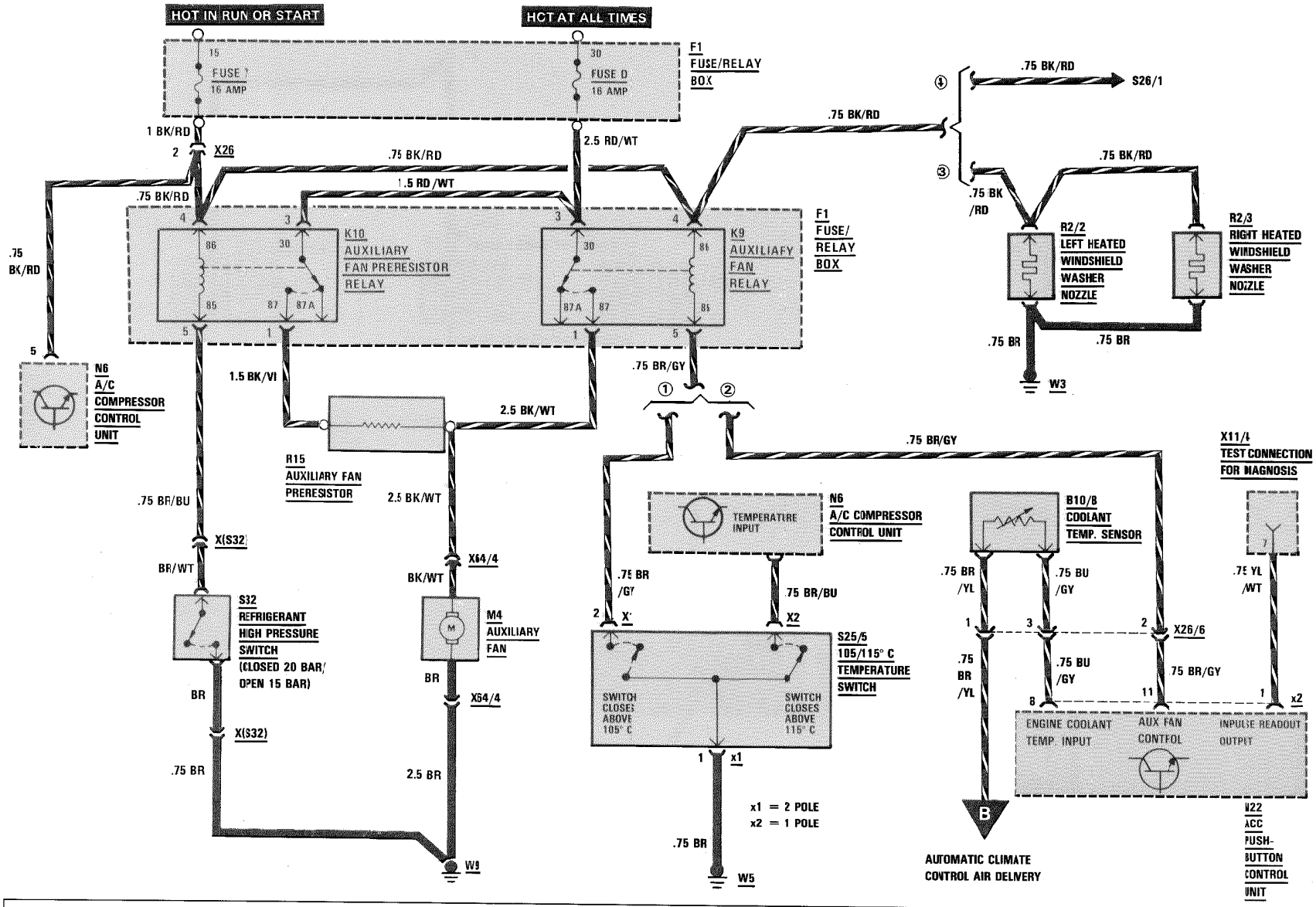

REVISIONS:
① MY 1986 AND MY 1987 ONLY
② AS OF MY 1988
③ MY 1986-1988
④ AS OF MY 1989

AUXILIARY FAN

AS OF MY 1990
GASOLINE

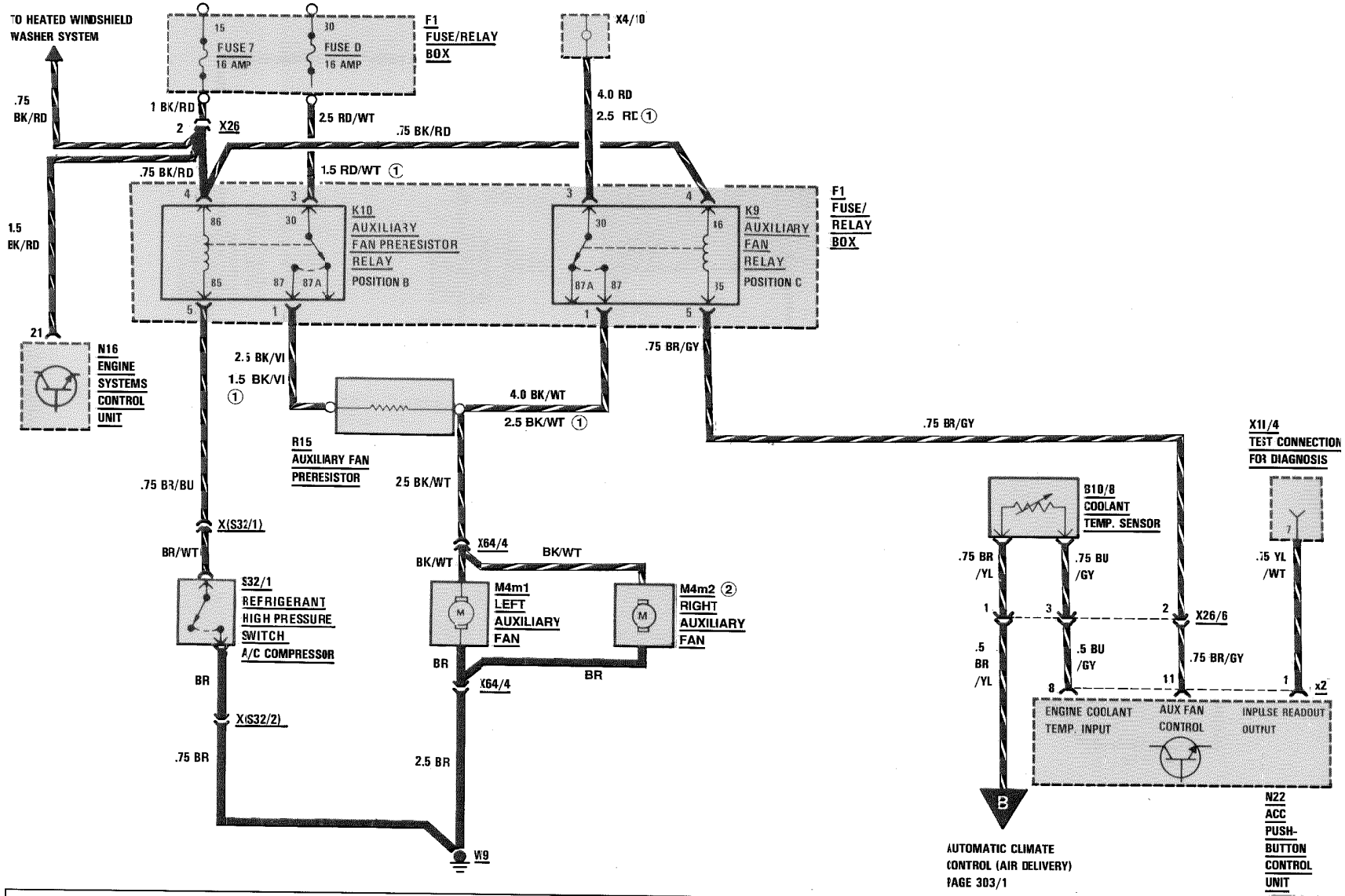

REVISIONS: ① ONLY ON VEHICLES WITH ASR
② AS OF MY 1991

AUXILIARY FAN

AS OF MY 1992
400E/500E

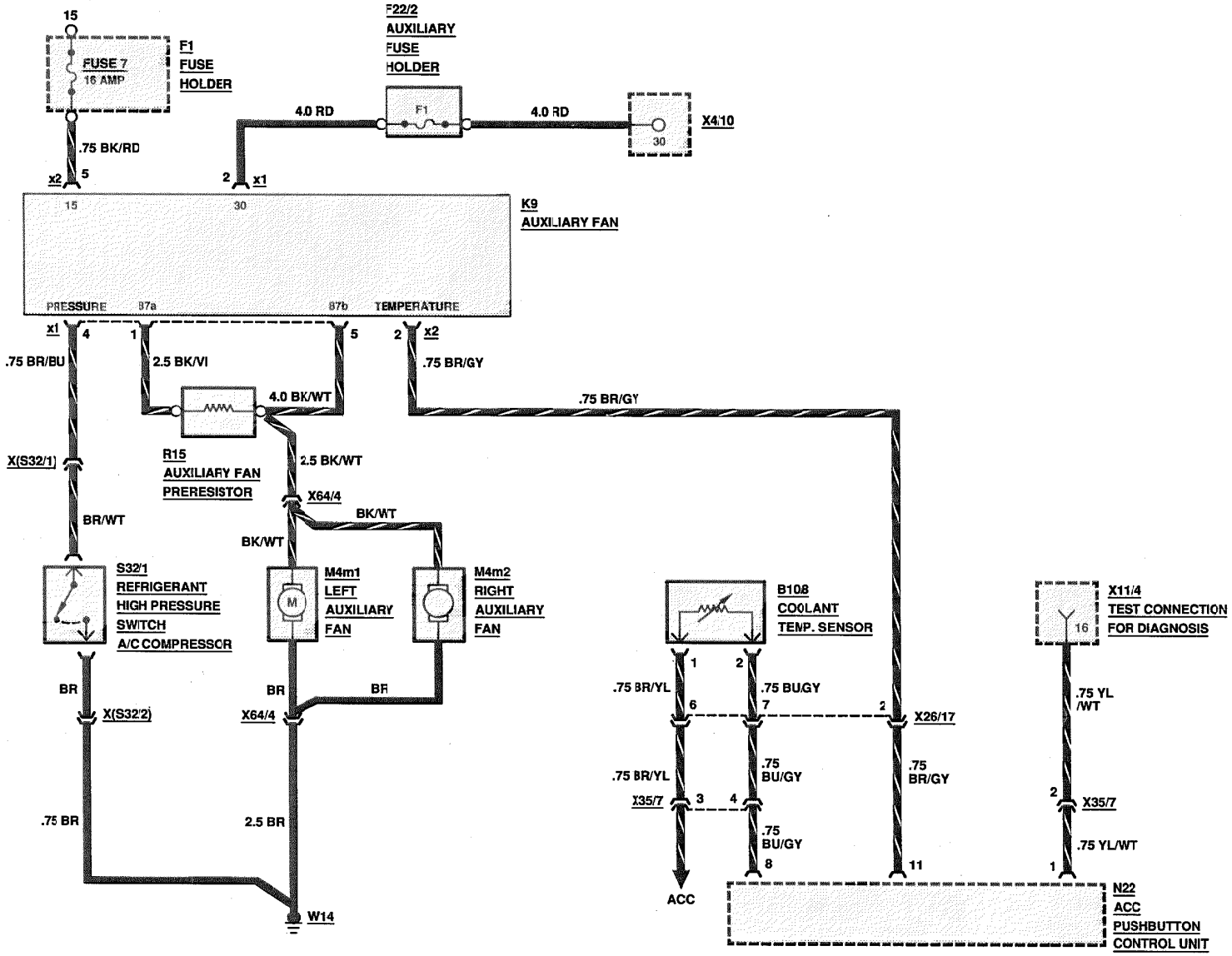

REVISIONS:

CONTROLLER AREA NETWORK (CAN) DATA BUS

AS OF MY 1992
400E/500E

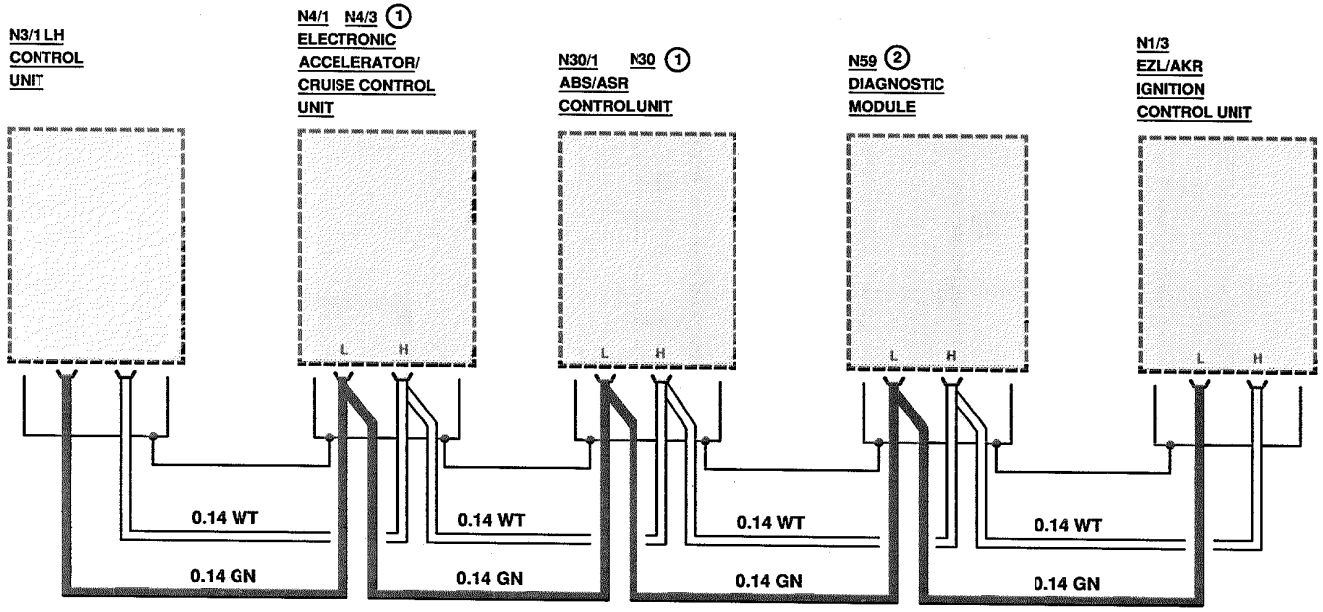

REVISIONS: (1) W/C ASR
(2) CALIFORNIA VERSION

CHARGING SYSTEM

MY 1986-1989

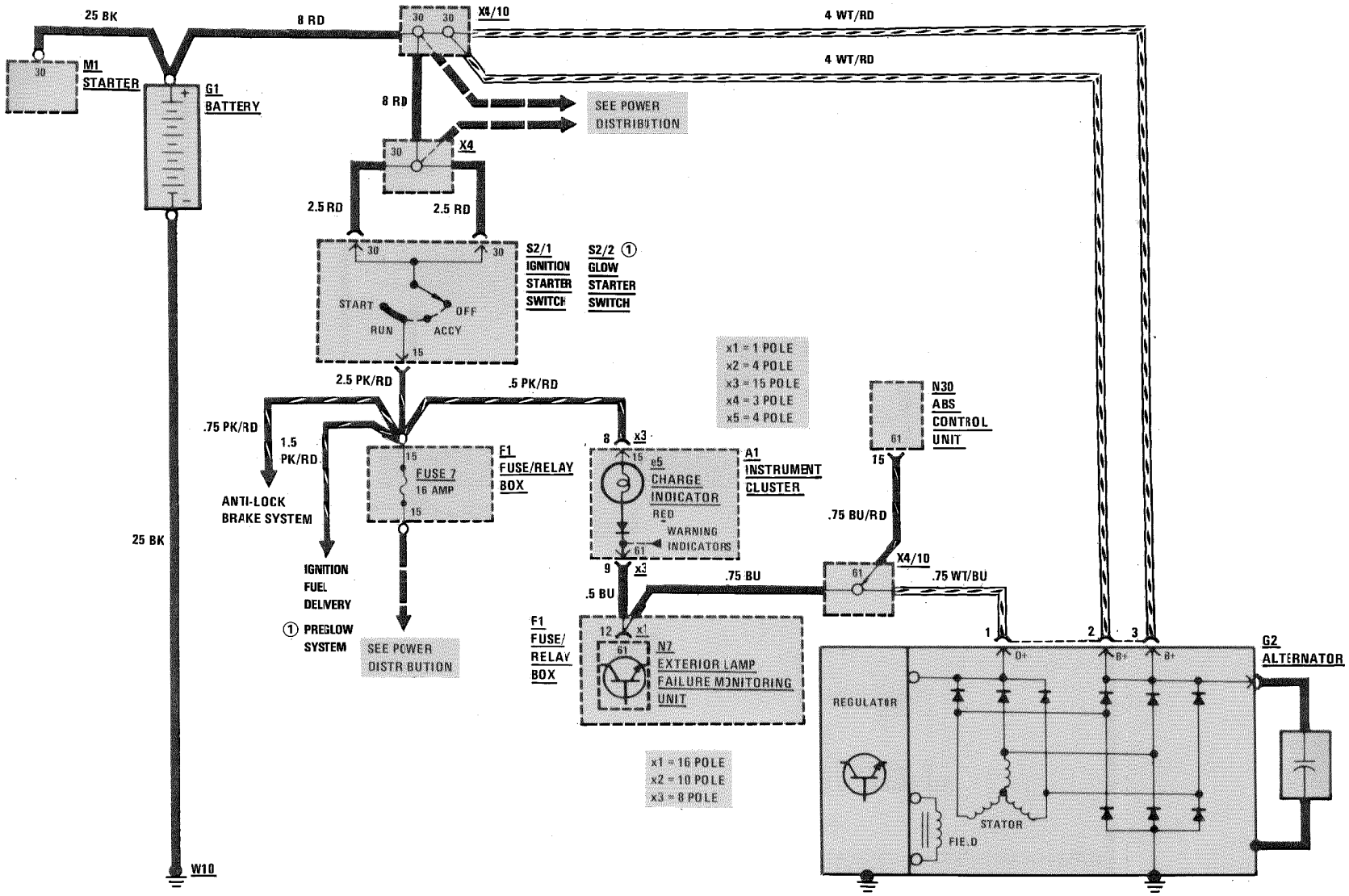

REVISIONS: ① DIESEL MODELS

CHARGING SYSTEM

AS OF MY 1990

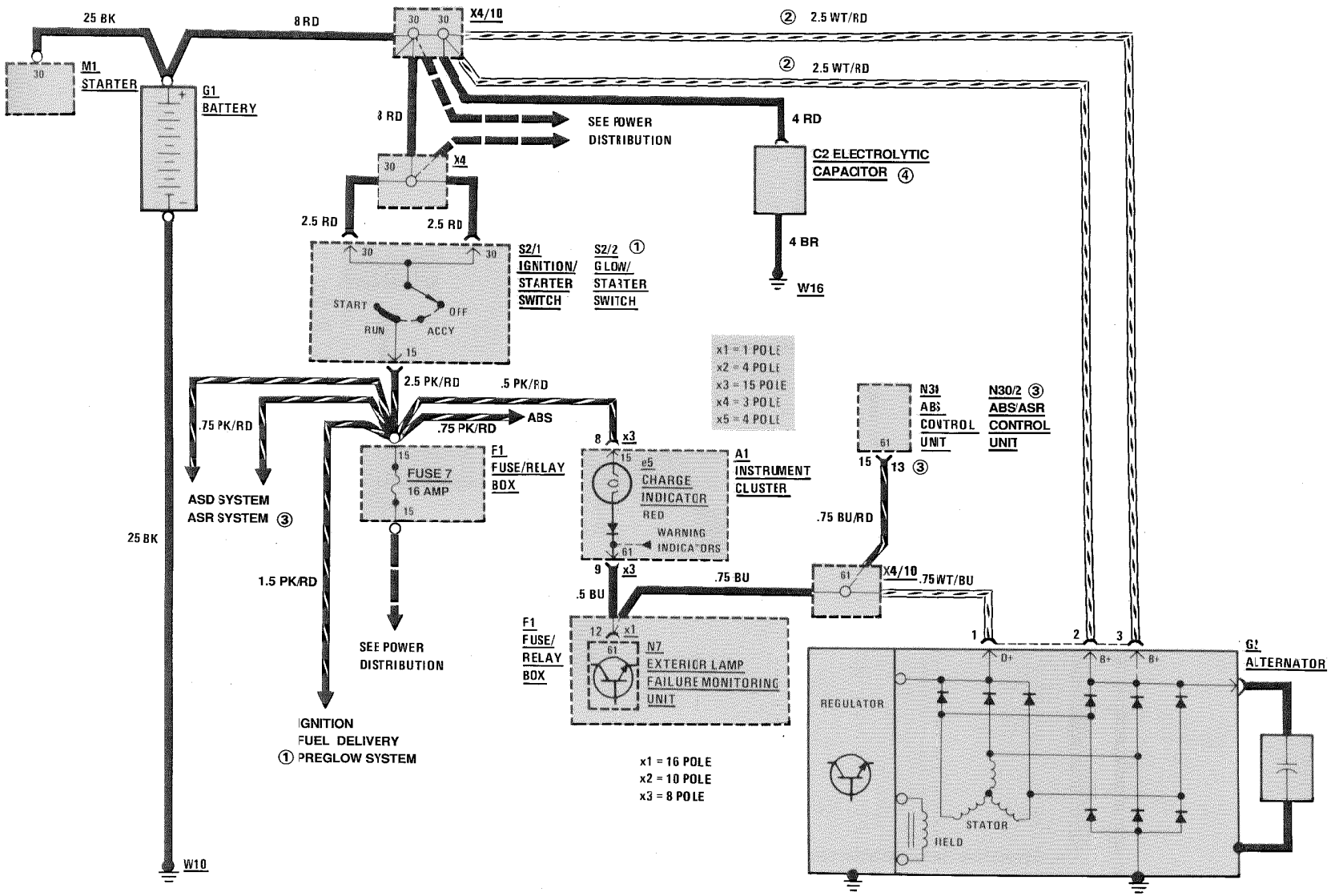

REVISIONS: ① DIESEL MODELS
② ON GASOLINE MODELS, A SINGLE 8 WT/RD WIRE GOES TO G2
③ VEHICLES WITH ASR
④ MODELS 400E/500E

HEADLAMPS/FOG LAMPS

AS OF MY 1986

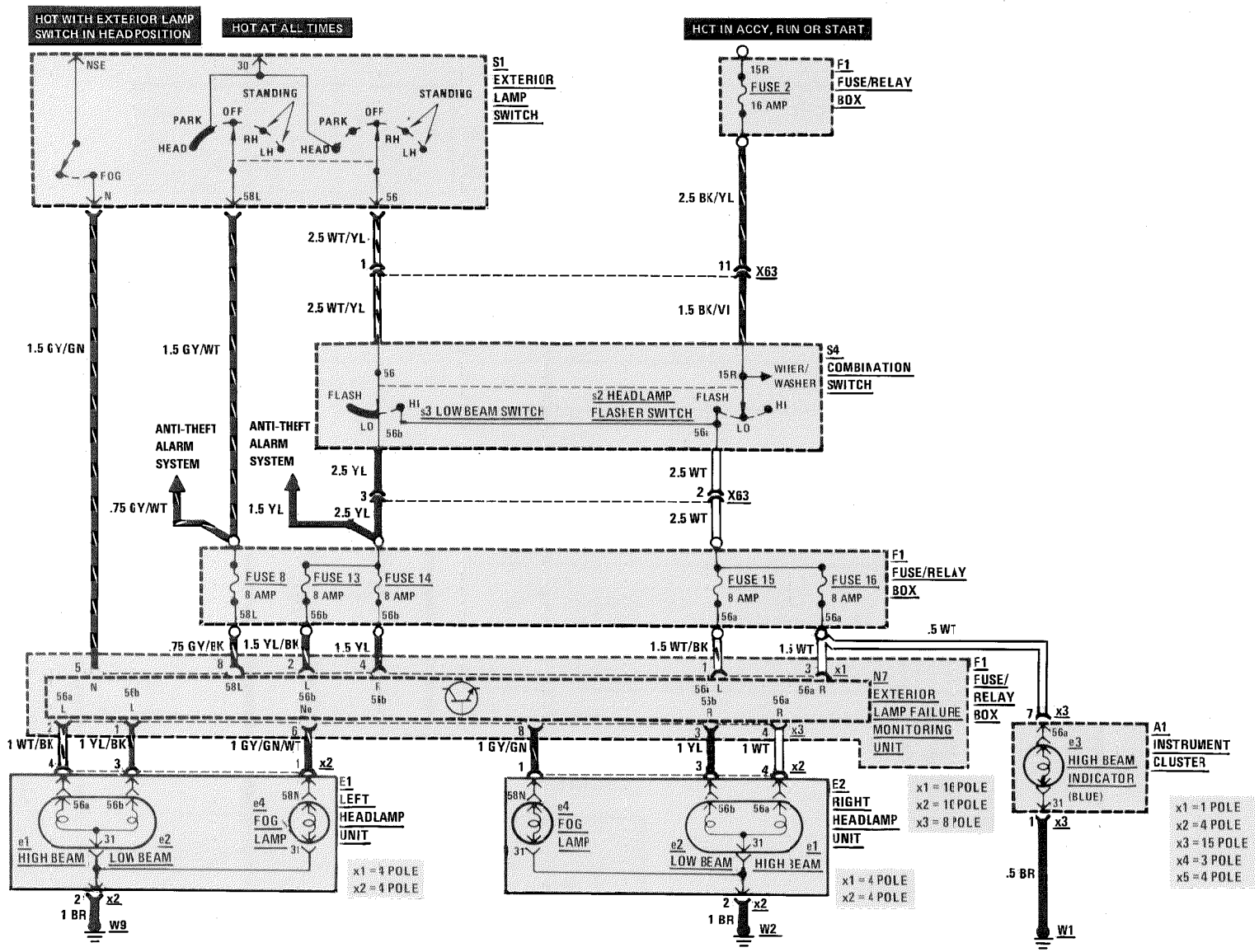

REVISIONS:

HEADLAMPS/FOG LAMPS

AS OF MY 1991

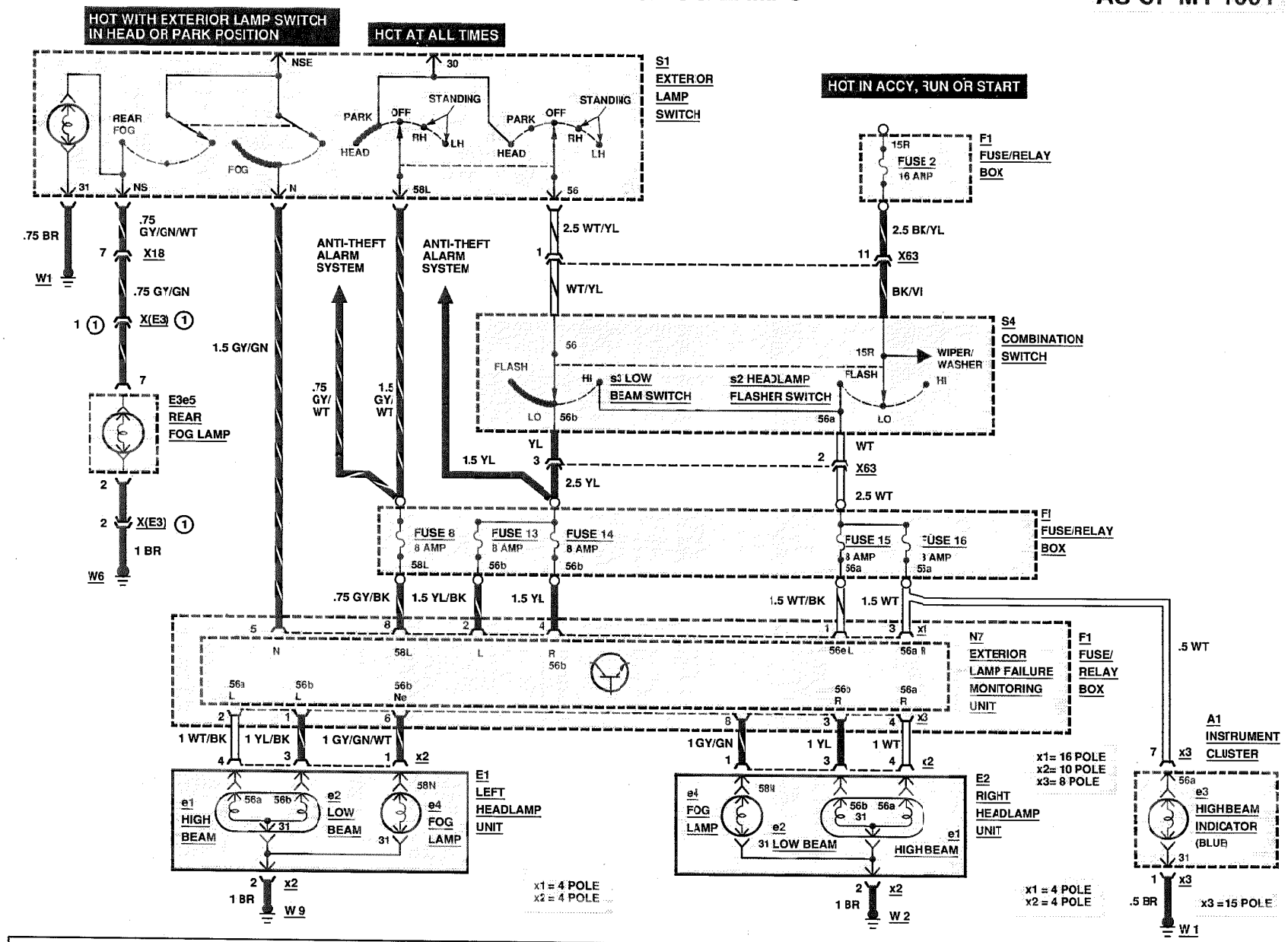

REVISIONS: (1) STATION WAGON ONLY

STOP LAMPS/BACKUP LAMPS

AS OF MY 1986

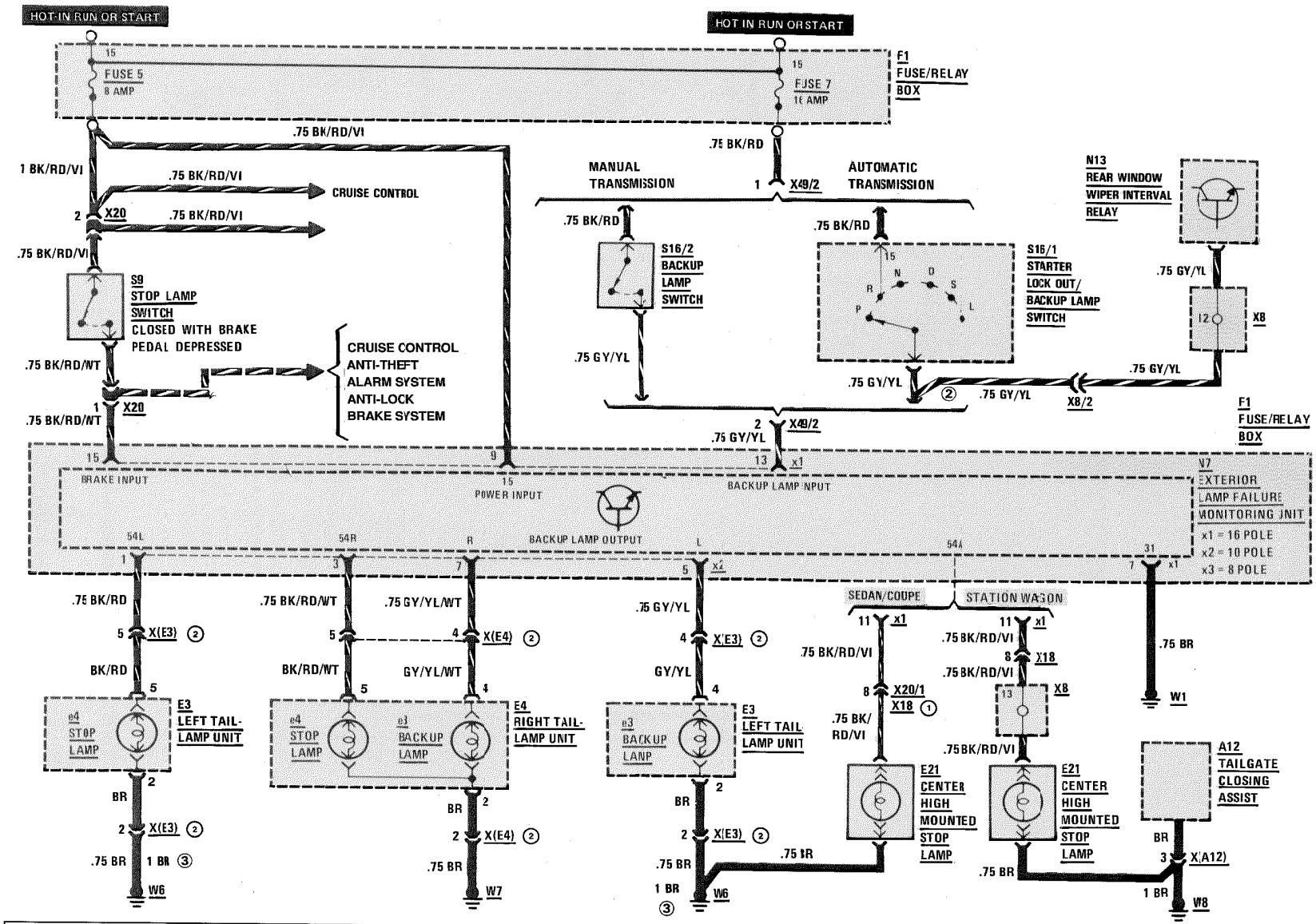

REVISIONS: ① AS OF MODEL YEAR 1987
② STATION WAGON ONLY
③ AS OF MODEL YEAR 1990

LAMPS: PARK/TAIL/SIDE MARKER/LICENSE

AS OF MY 1986 (EXCEPT STATION WAGON)

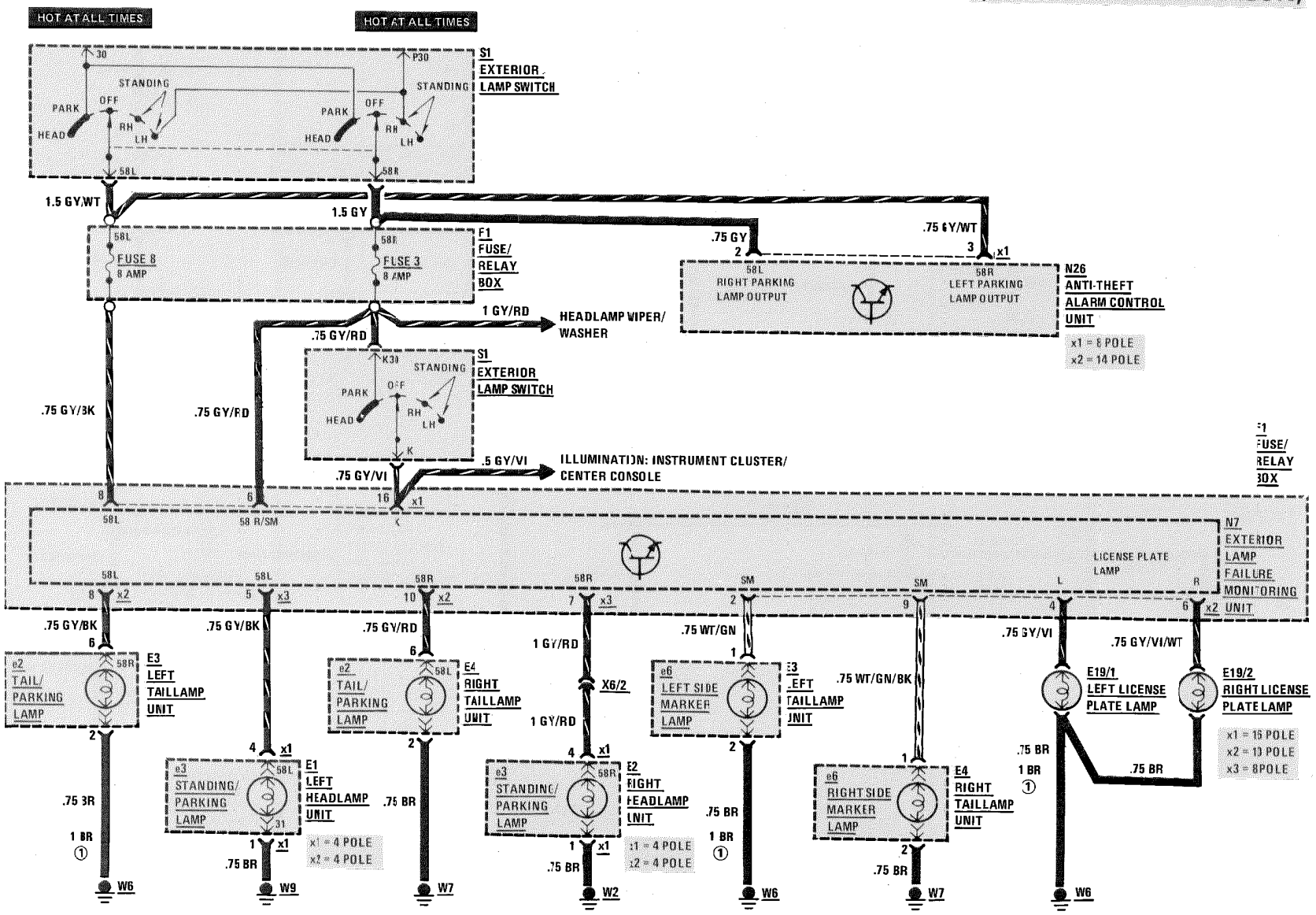

REVISIONS: ① AS OF MODEL YEAR 1990

LAMPS: PARK/TAIL/SIDE MARKER/LICENSE

AS OF MY 1987
300TD/300TE

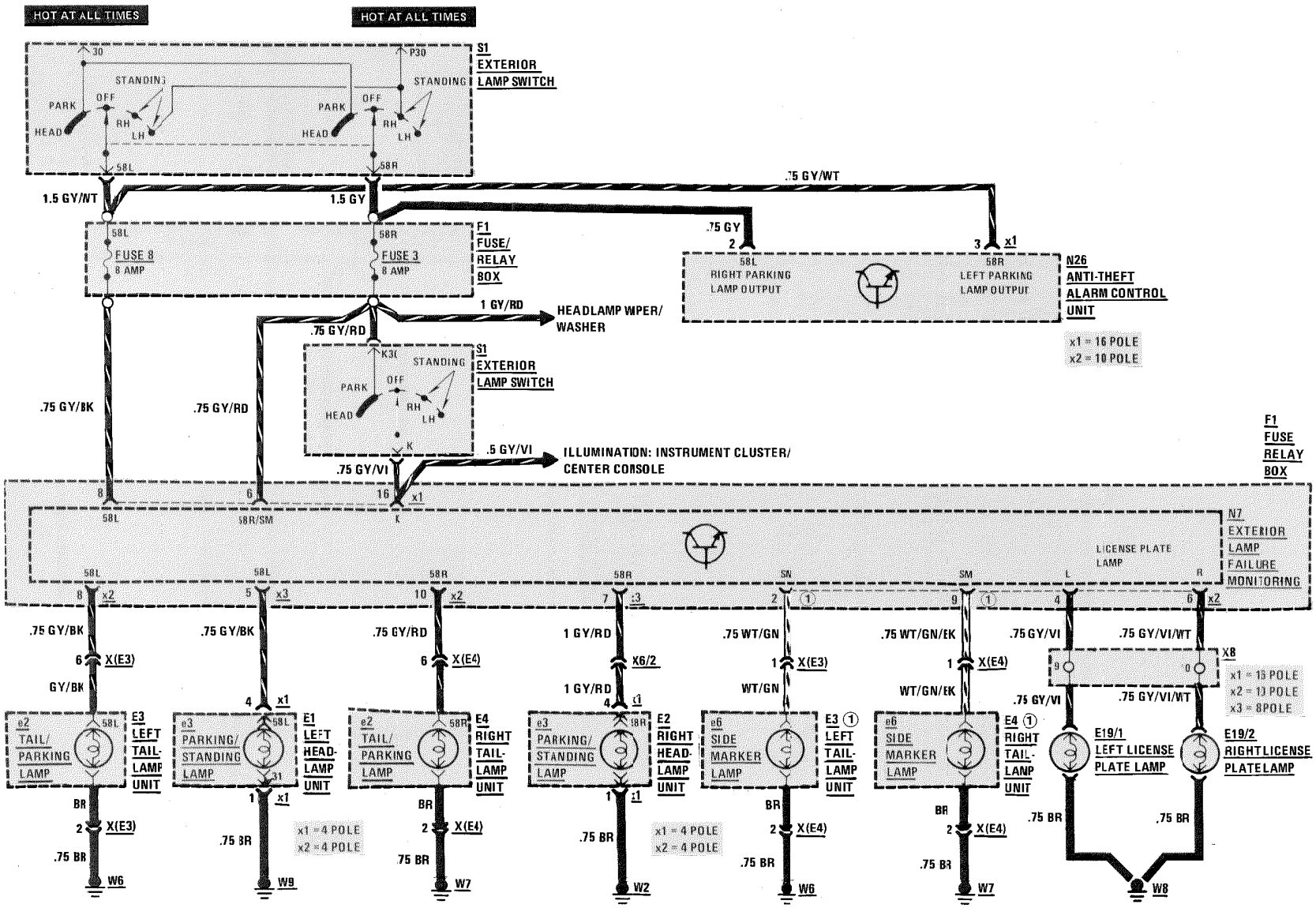

REVISIONS: ① NOT USED AS OF MY 1991

TURN SIGNAL/HAZARD LAMPS

AS OF MY 1986

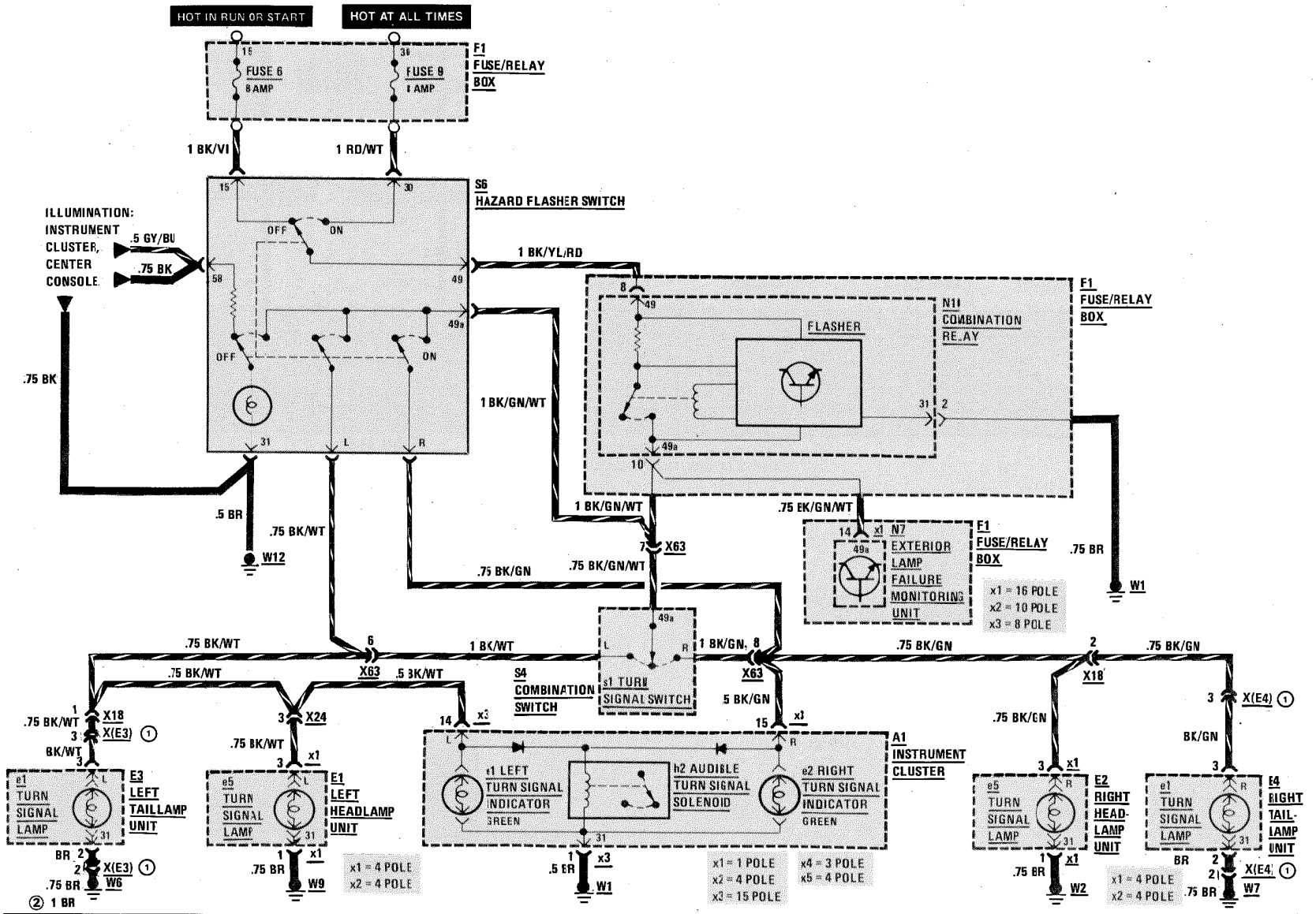

REVISIONS: ① MODEL 124.090 ONLY
② AS OF MY 90, EXCEPT STATION WAGON

COURTESY LAMPS AND TRUNK LAMP

MY 1986
300 D/300 E

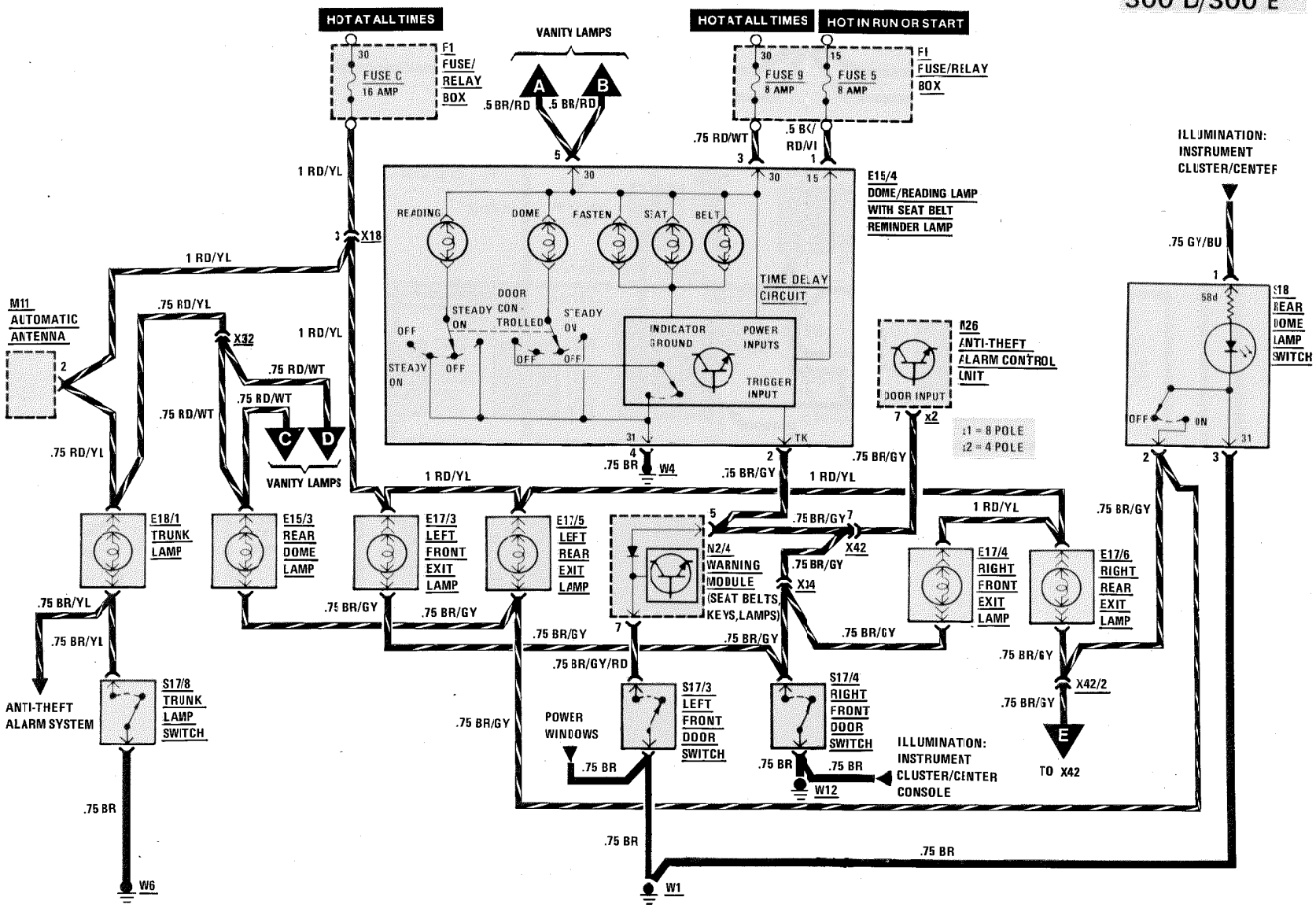

REVISIONS:

COURTESY LAMPS AND TRUNK LAMP (WITHOUT ANTI-THEFT)

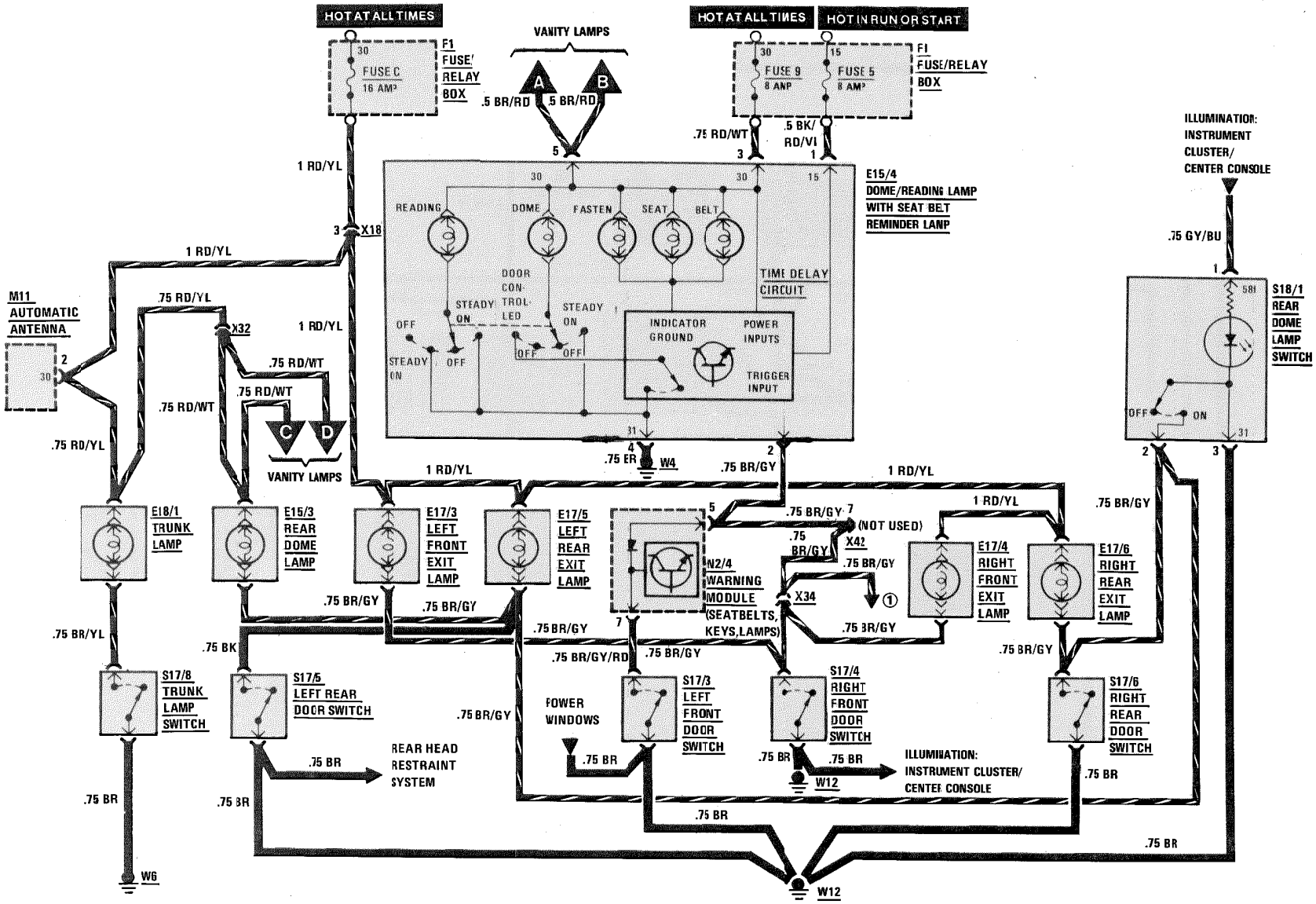

REVISIONS: ① AS OF MY 1989, SEE POWER SEATS PAGE 143

COURTESY LAMPS AND TRUNK LAMP (WITH ANTI-THEFT)

MY 1987-1988
300D/300E

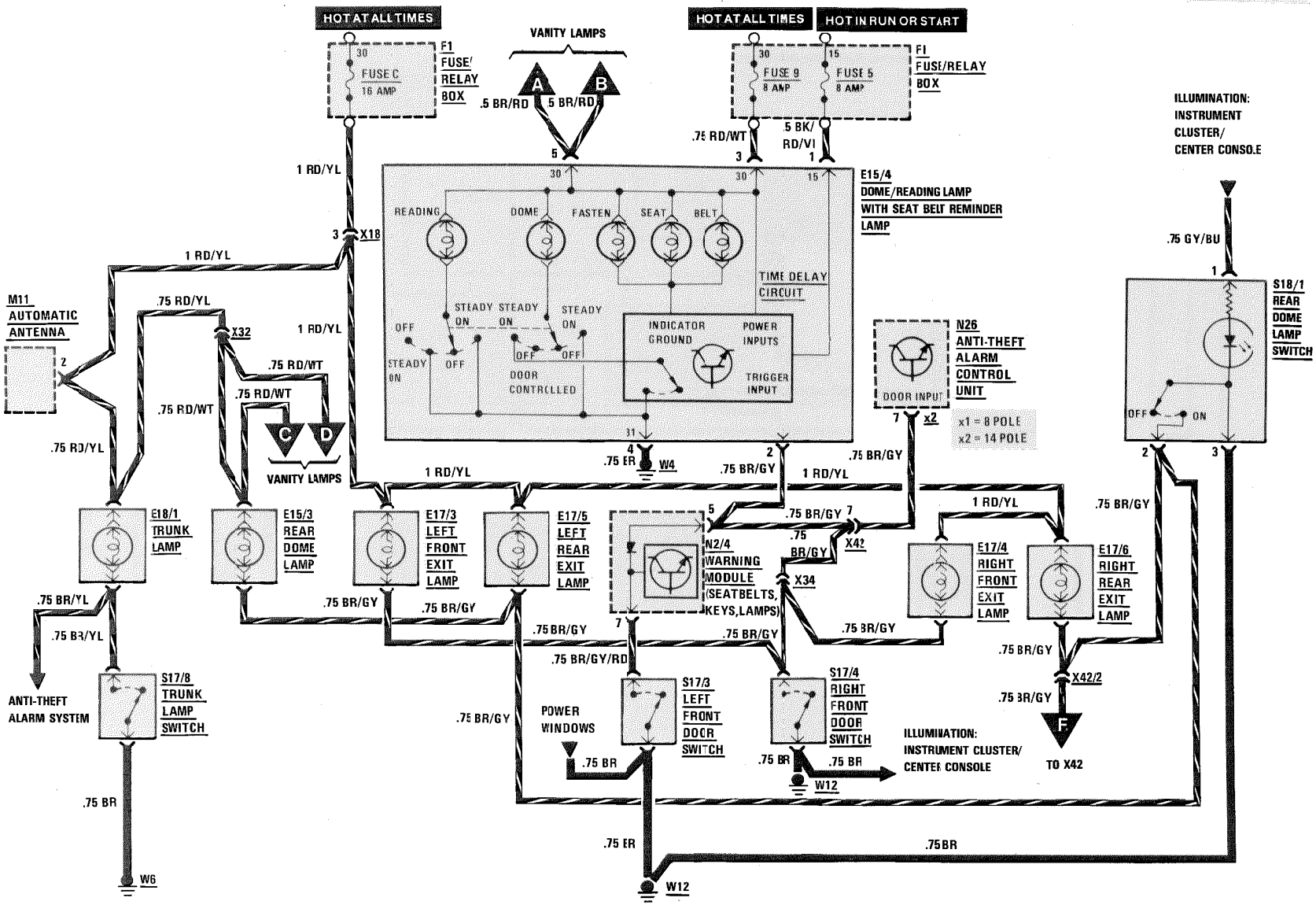

REVISIONS:

COURTESY LAMPS AND TRUNK LAMP (WITH ANTI-THEFT)

MY 1989
300 E

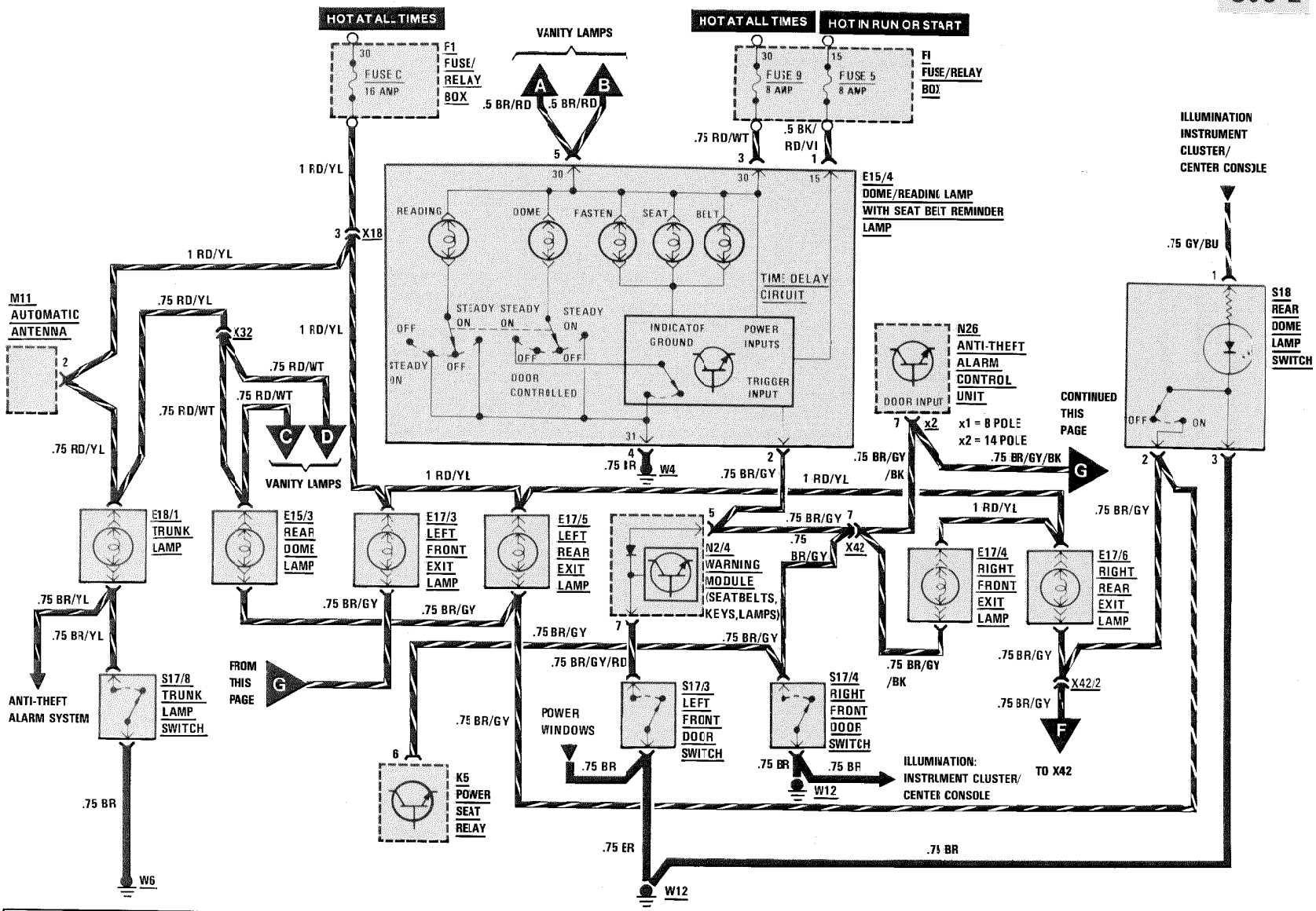

REVISIONS:

COURTESY LAMPS AND TRUNK LAMP

MY 1988-1989

300CE

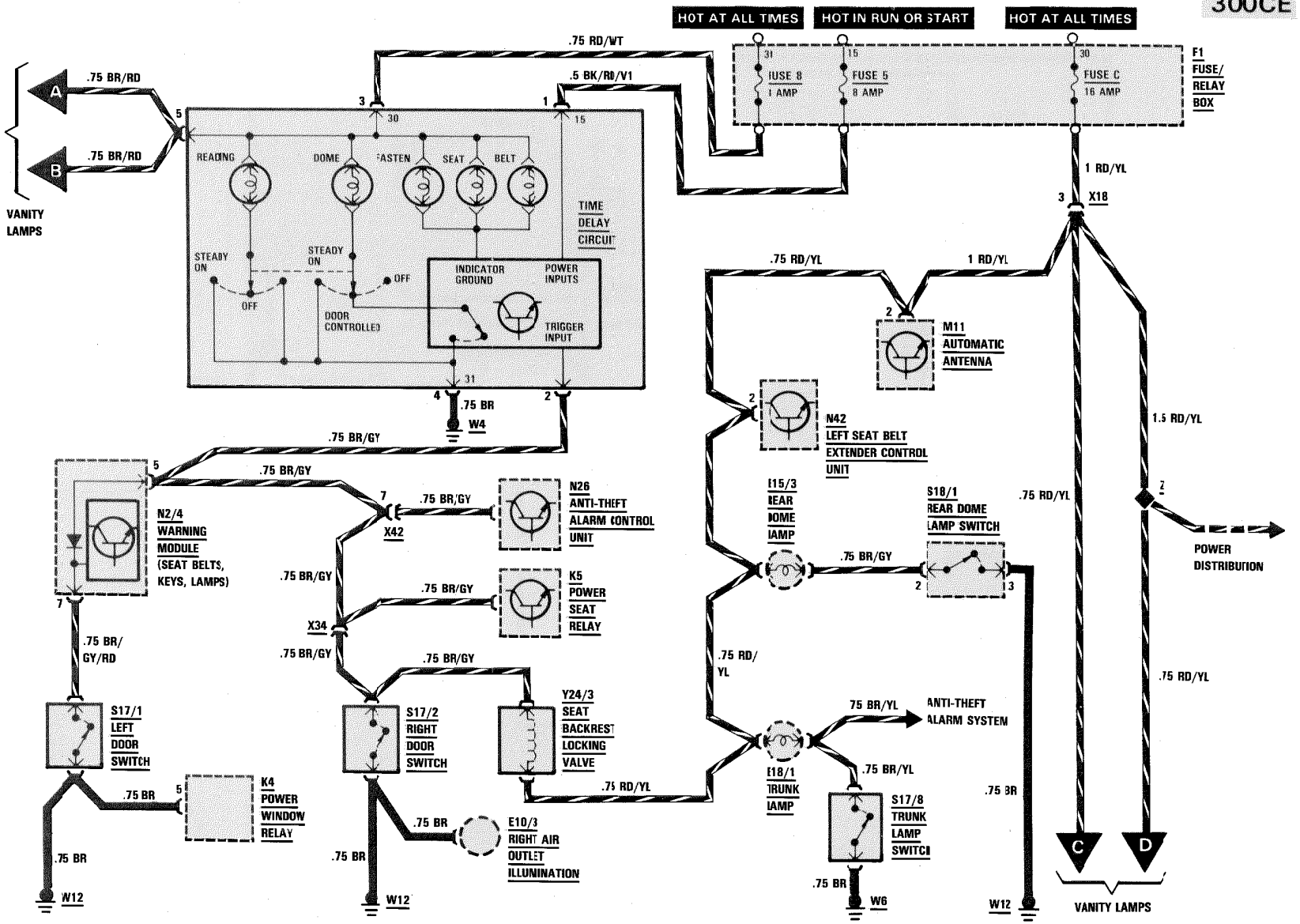

REVISIONS:

COURTESY LAMPS

MY 1987-1989
300TD/300 TE

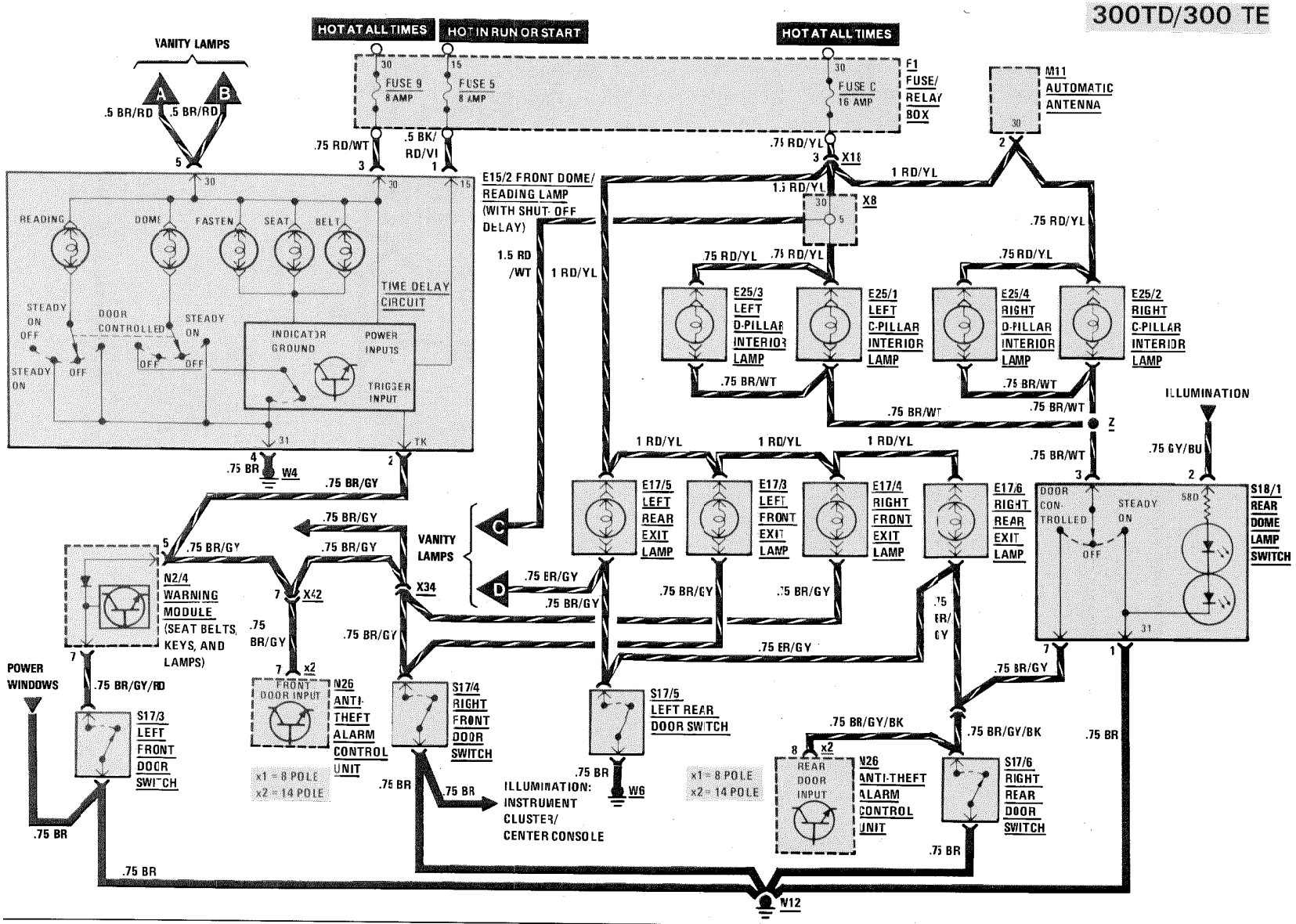

REVISIONS: ① AS OF MY 1989 SEE POWER SEATS PAGE 143

COURTESY LAMPS AND TRUNK LAMP

AS OF MY 1990
300D2.5
300E2.6

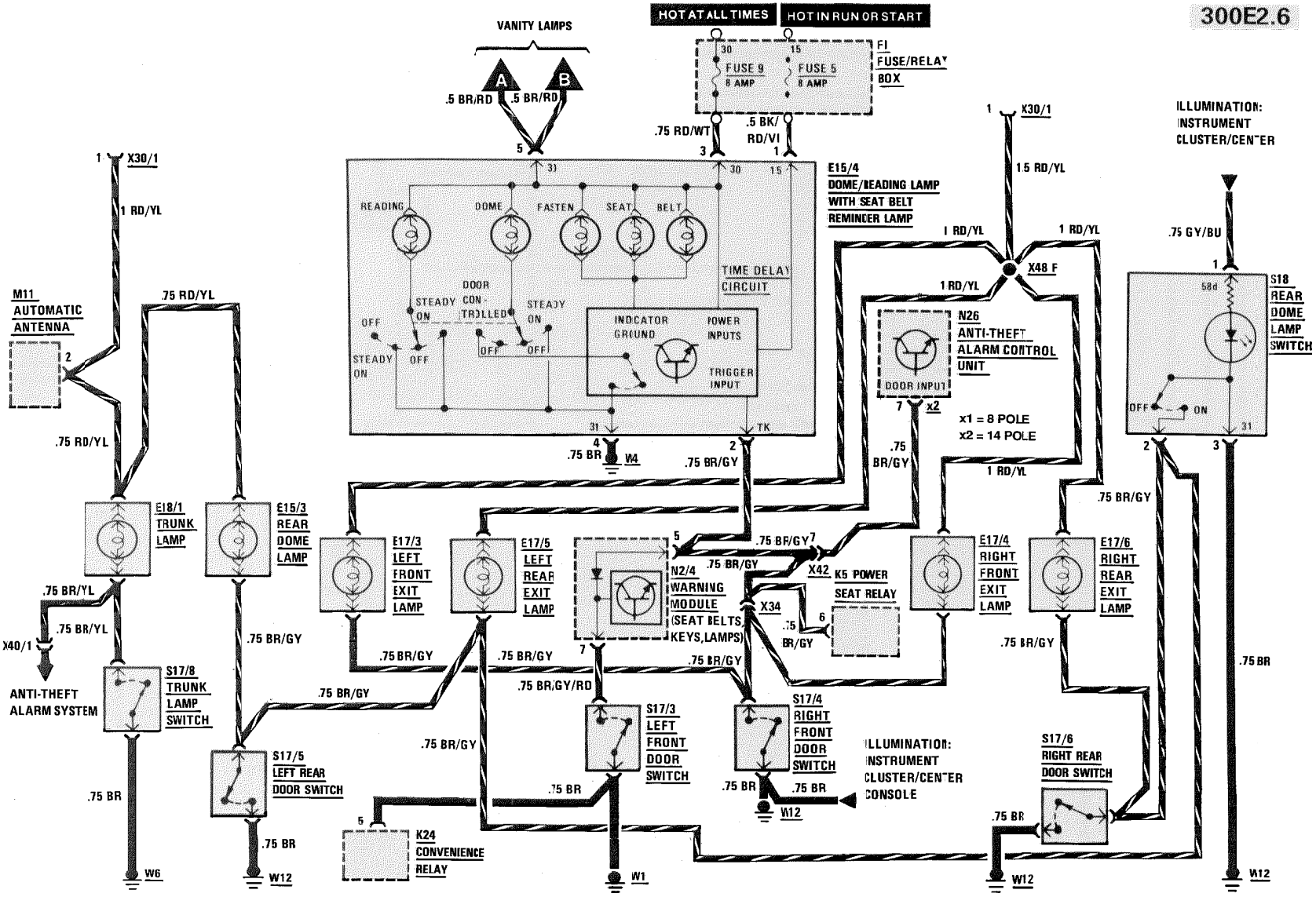

REVISIONS:

COURTESY LAMPS AND TRUNK LAMP (WITH ANTI-THEFT)

AS OF MY 1990

300 E

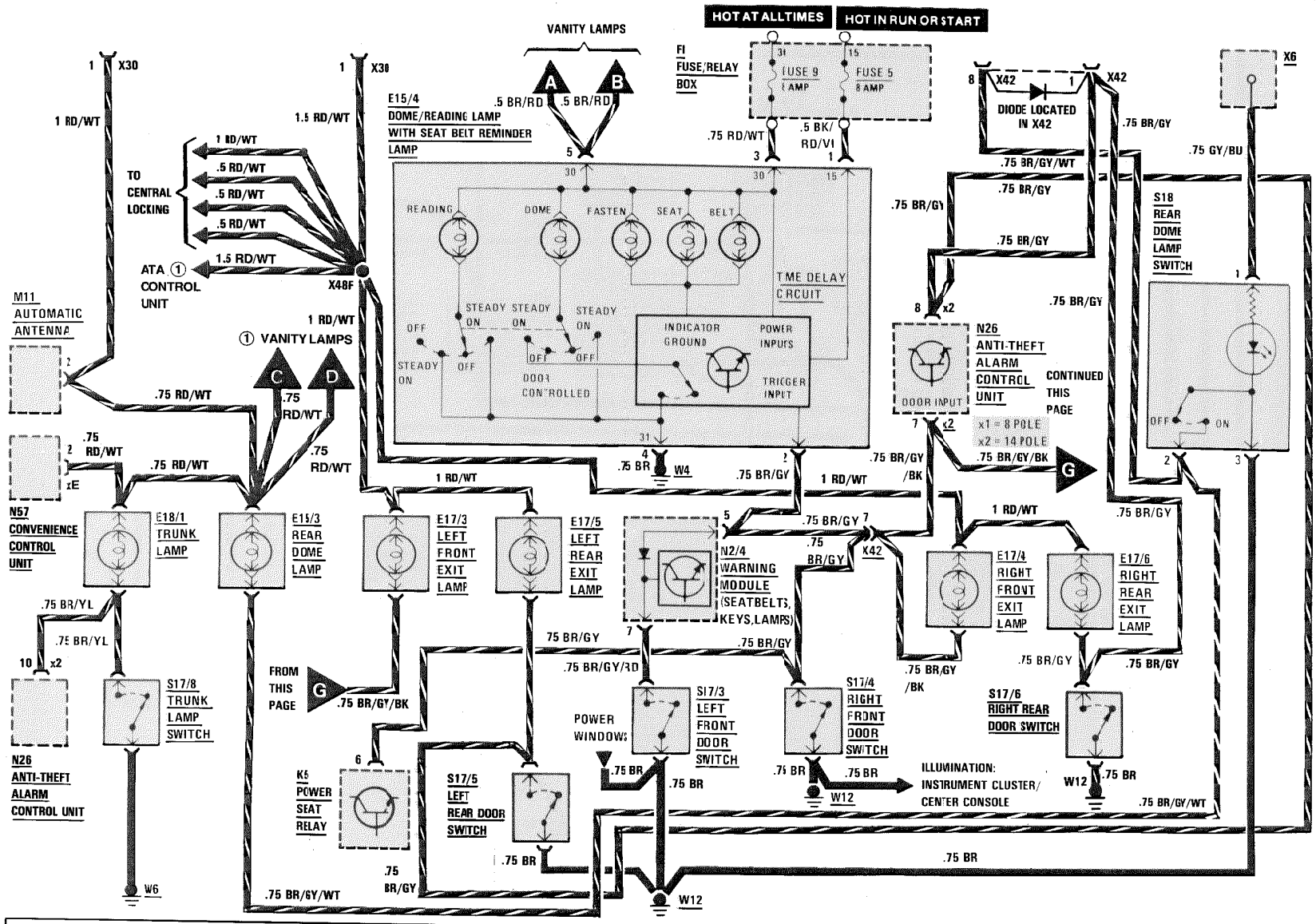

REVISIONS: ① AS OF MY 1991

COURTESY LAMPS AND TRUNK LAMP

AS OF MY 1990

300CE

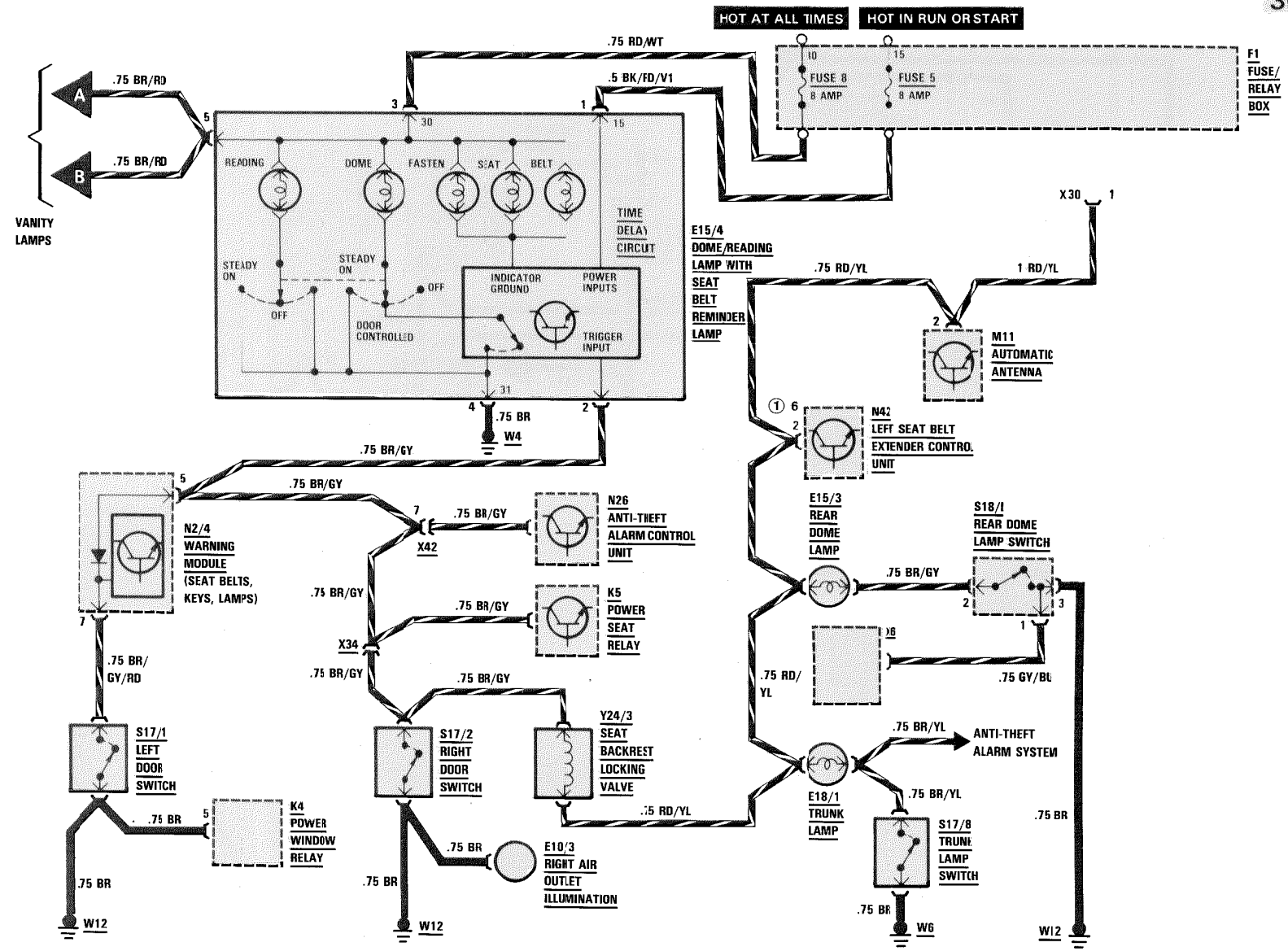

REVISIONS: ① AS OF MY 1991

COURTESY LAMPS

AS OF MY 1990

300 TE

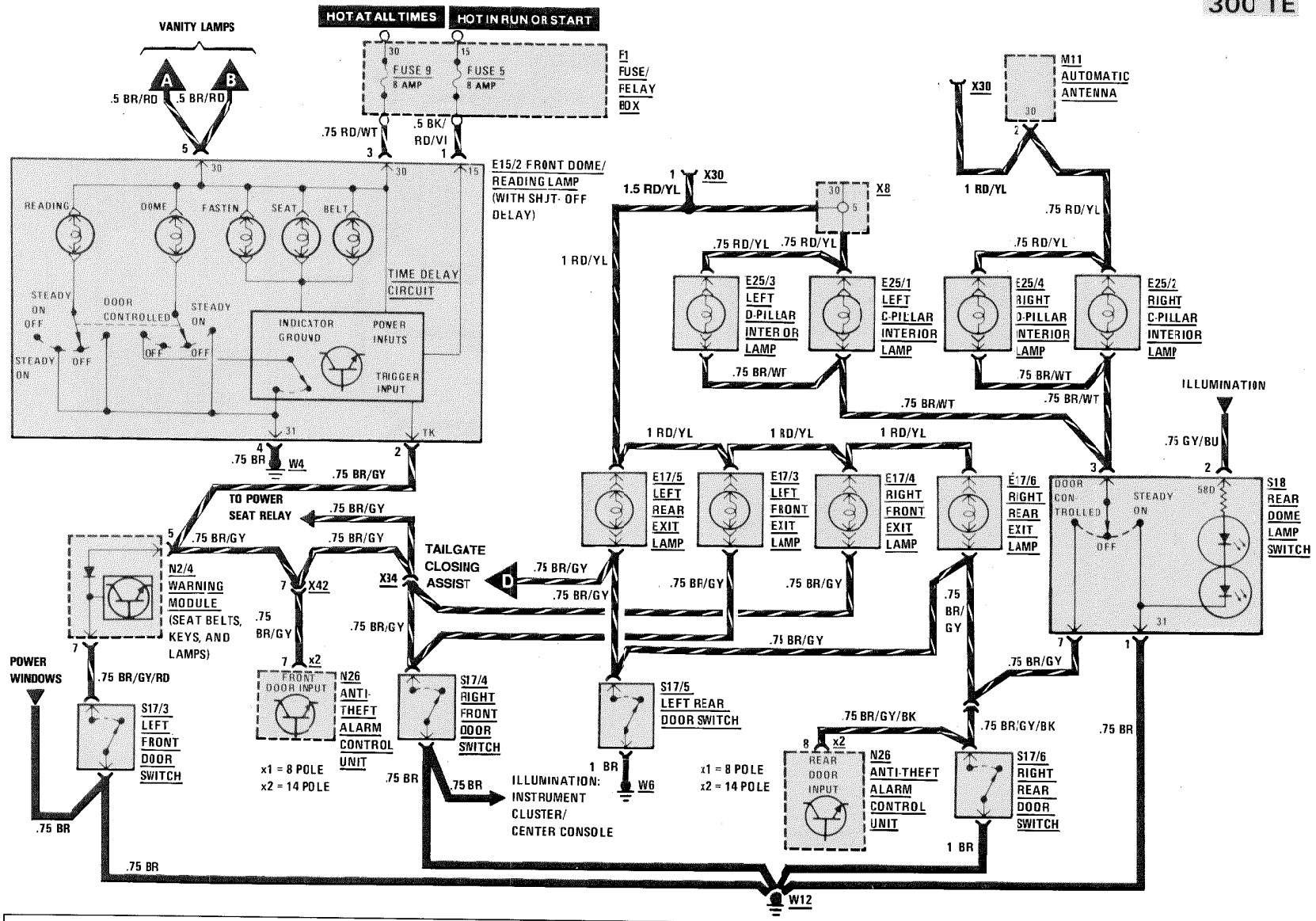

REVISIONS: ① AS OF MY 1989 SEE POWER SEATS PAGE 143

VANITY LAMPS AND READING LAMPS

AS OF MY 1986
SEDAN ONLY

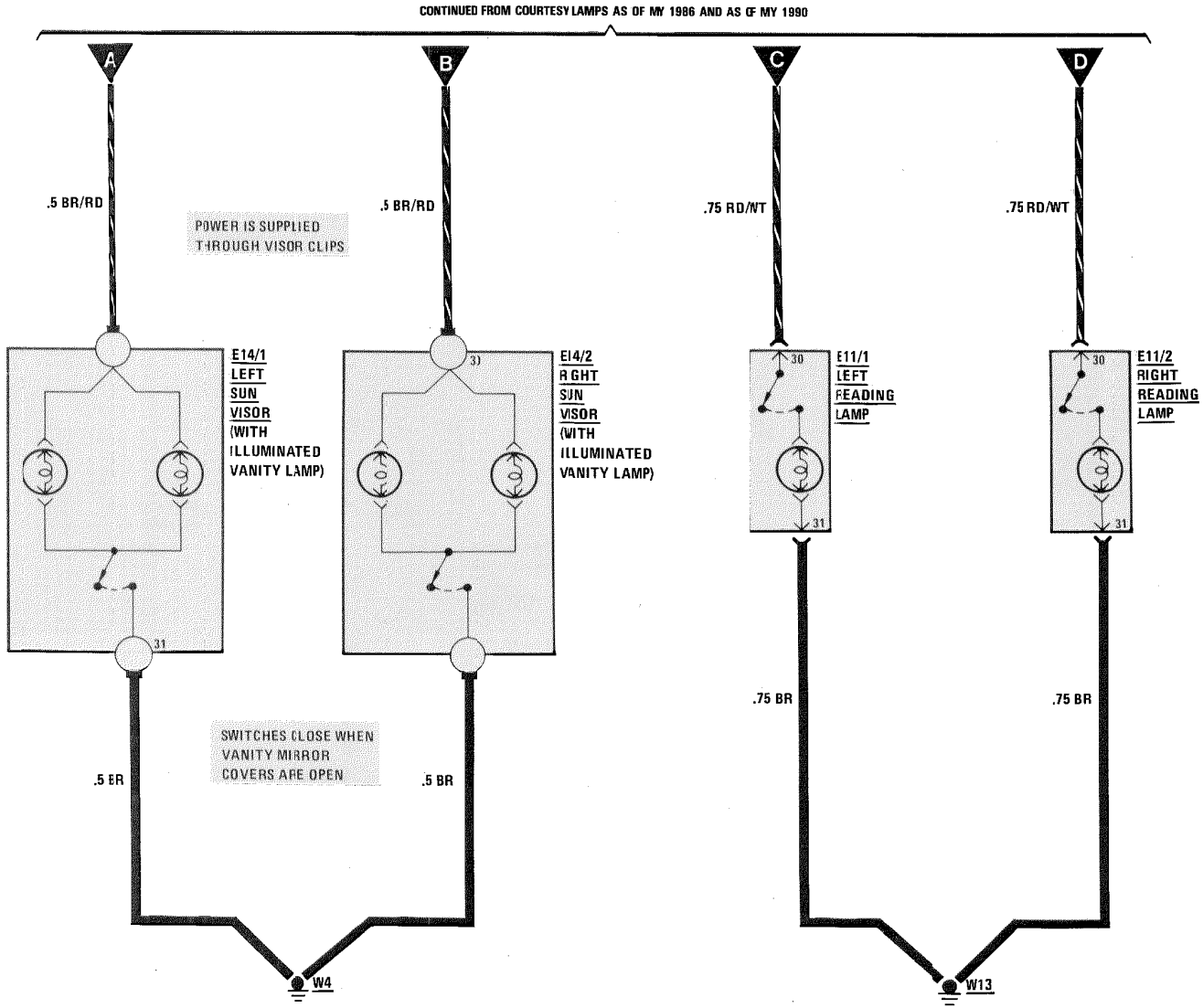

REVISIONS:

VANITY LAMPS AND EXIT LAMPS

MY 1988-1989
300CE

CONTINUED FROM COURTESY LAMPS MY 1988-1989

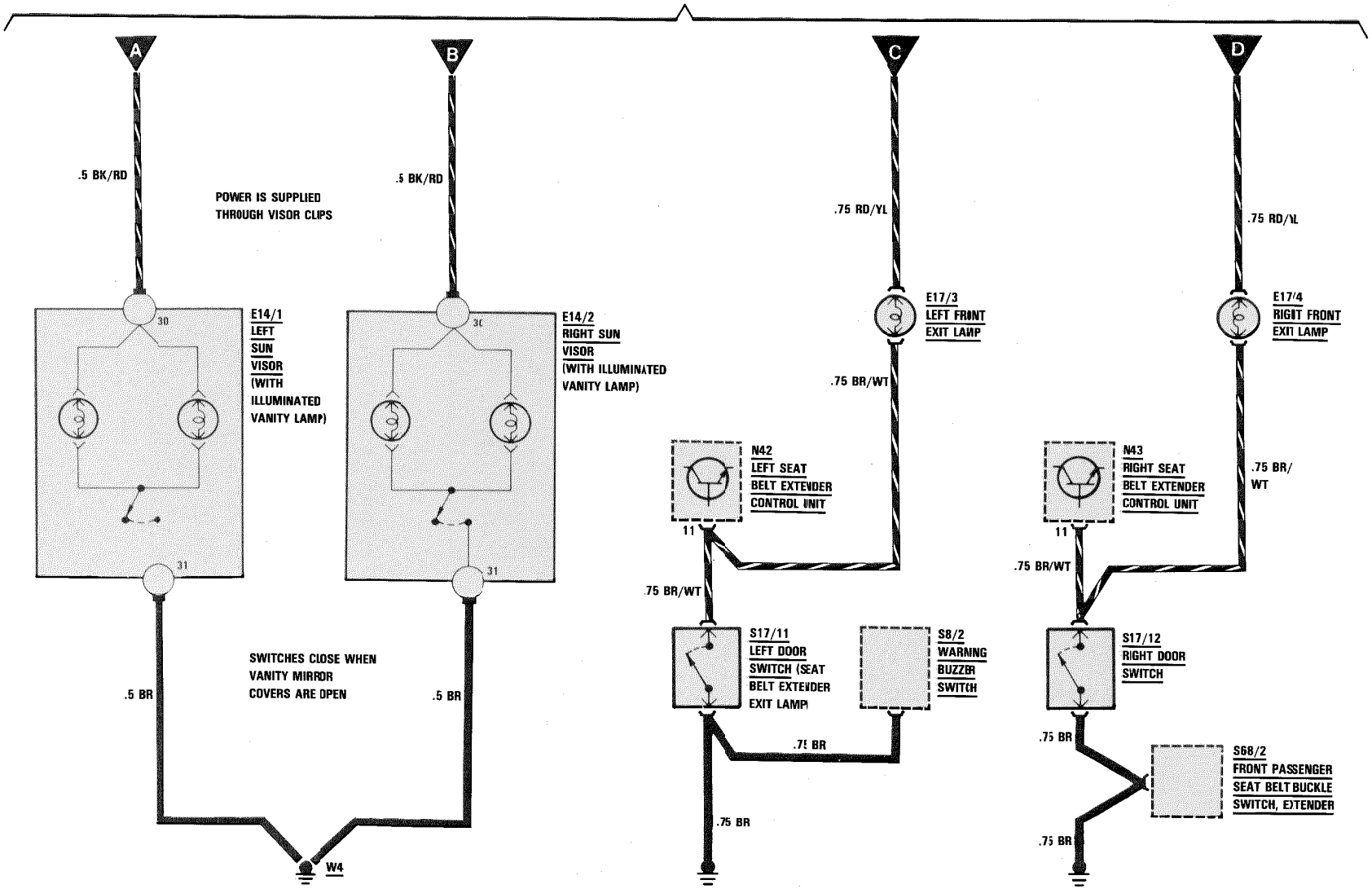

REVISIONS:

VANITY LAMPS AND TAILGATE CLOSING ASSIST

MY 1987-1989
300TD/300 TE

CONTINUED COURTESY LAMPS MY 1987-1989

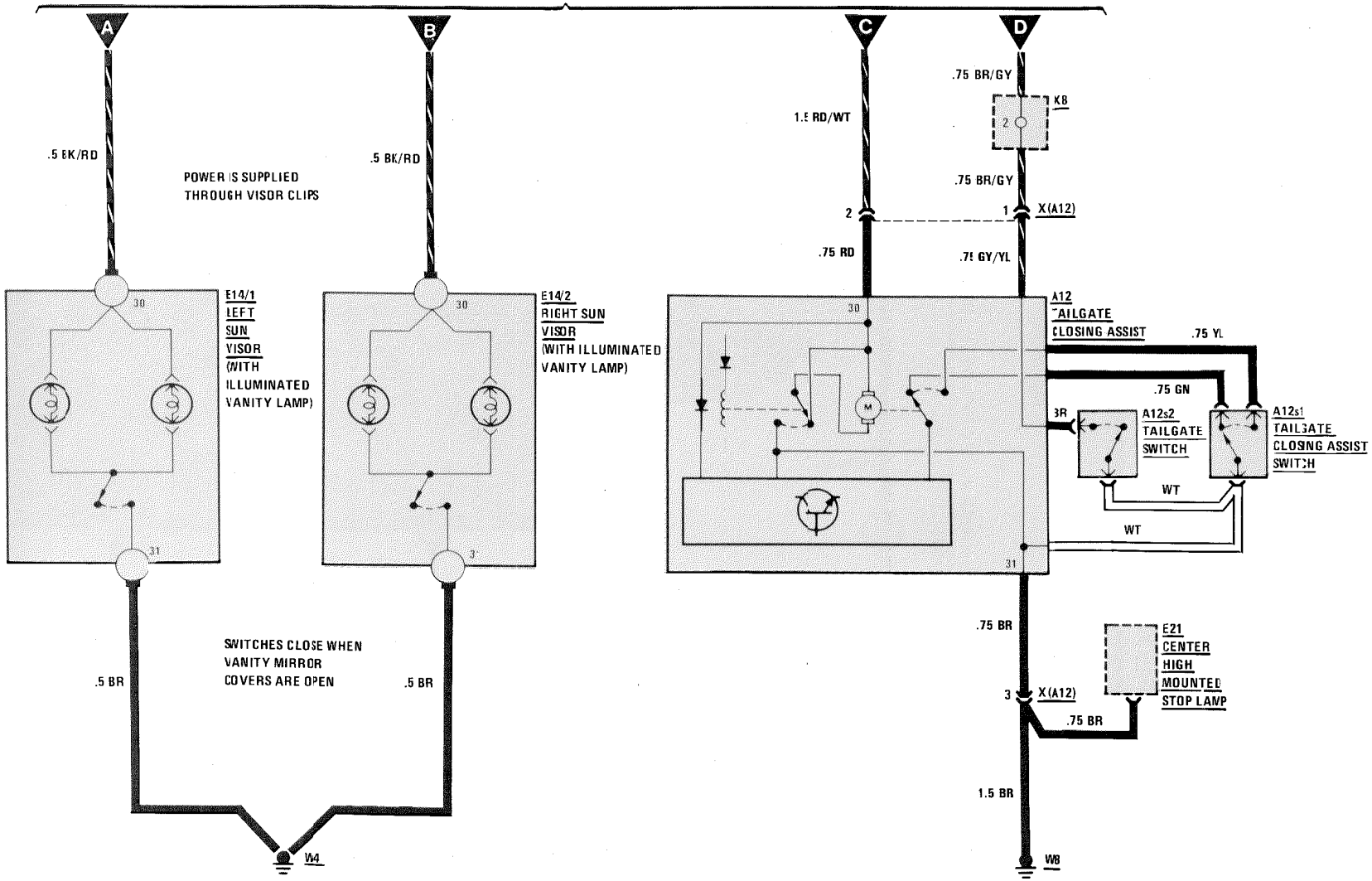

REVISIONS:

VANITY LAMPS AND EXIT LAMPS

AS OF MY 1990
300CE

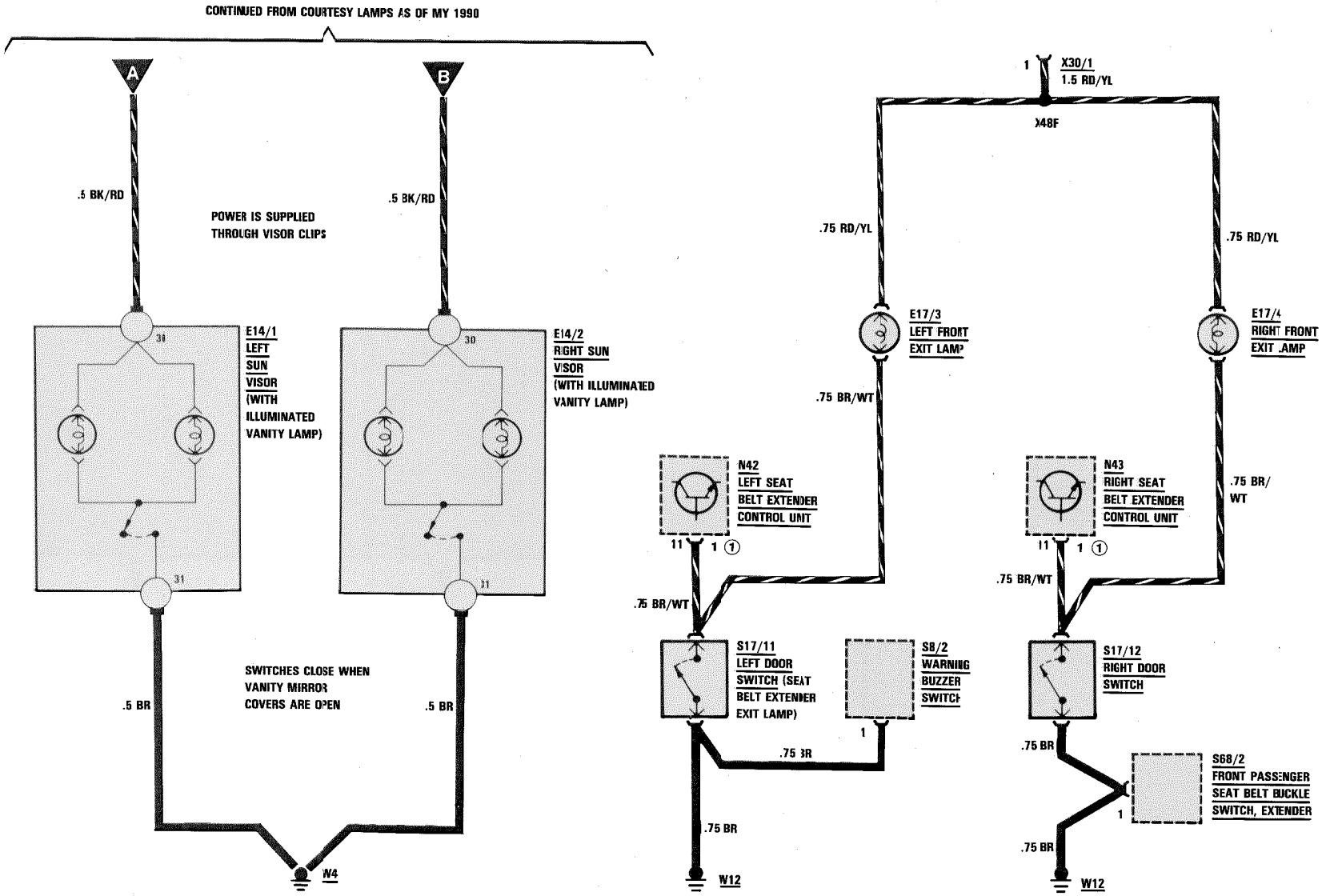

REVISIONS: ① AS OF MY 1991

VANITY LAMPS AND TAILGATE CLOSING ASSIST

AS OF MY 1990
300 TE

CONTINUED FROM COURTESY LAMPS AS OF MY 1990

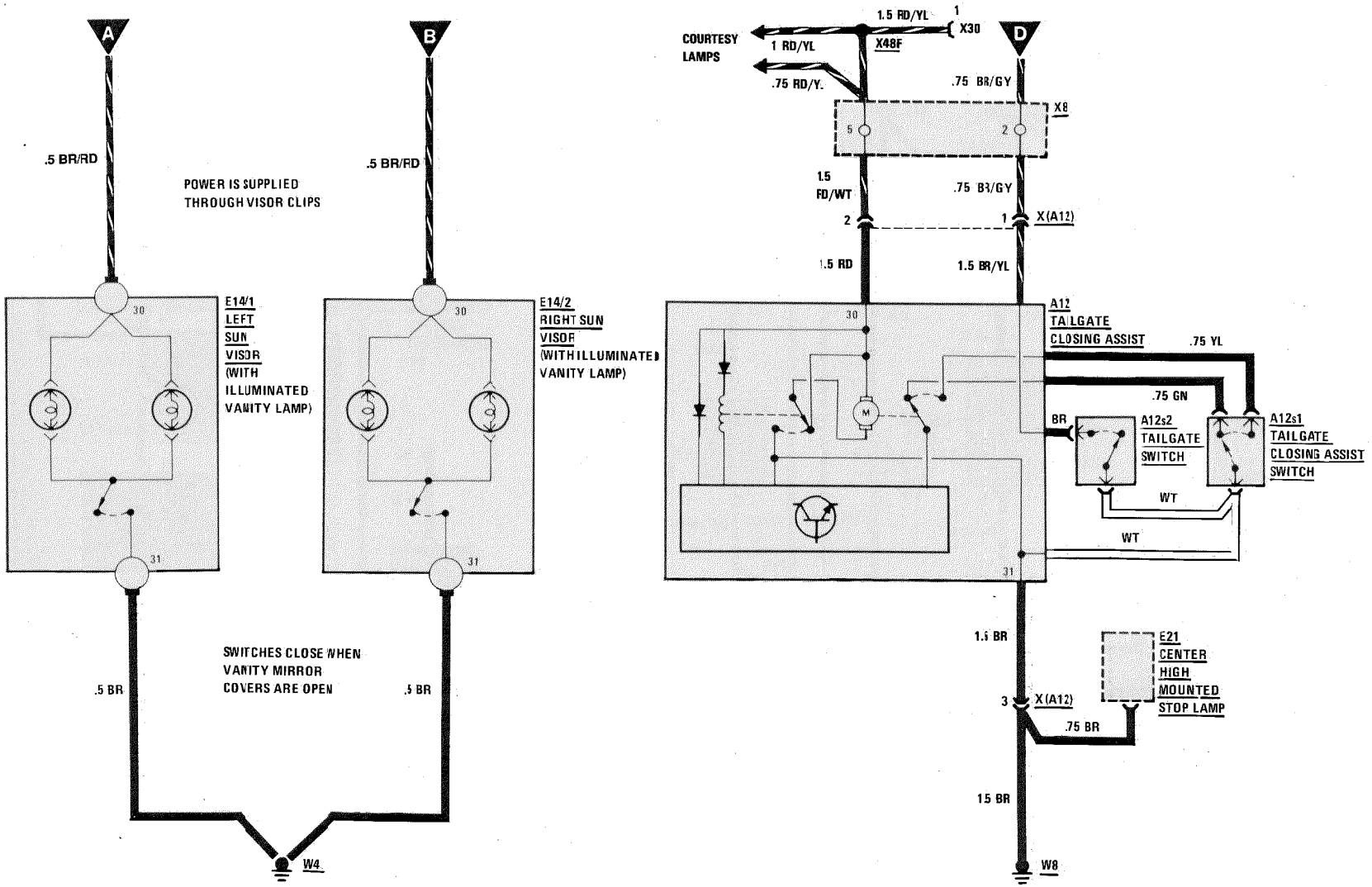

REVISIONS:

ILLUMINATION: INSTRUMENT CLUSTER/CENTER CONSOLE

MY 1986
BEFORE 1/1986 PRODUCTION
300E

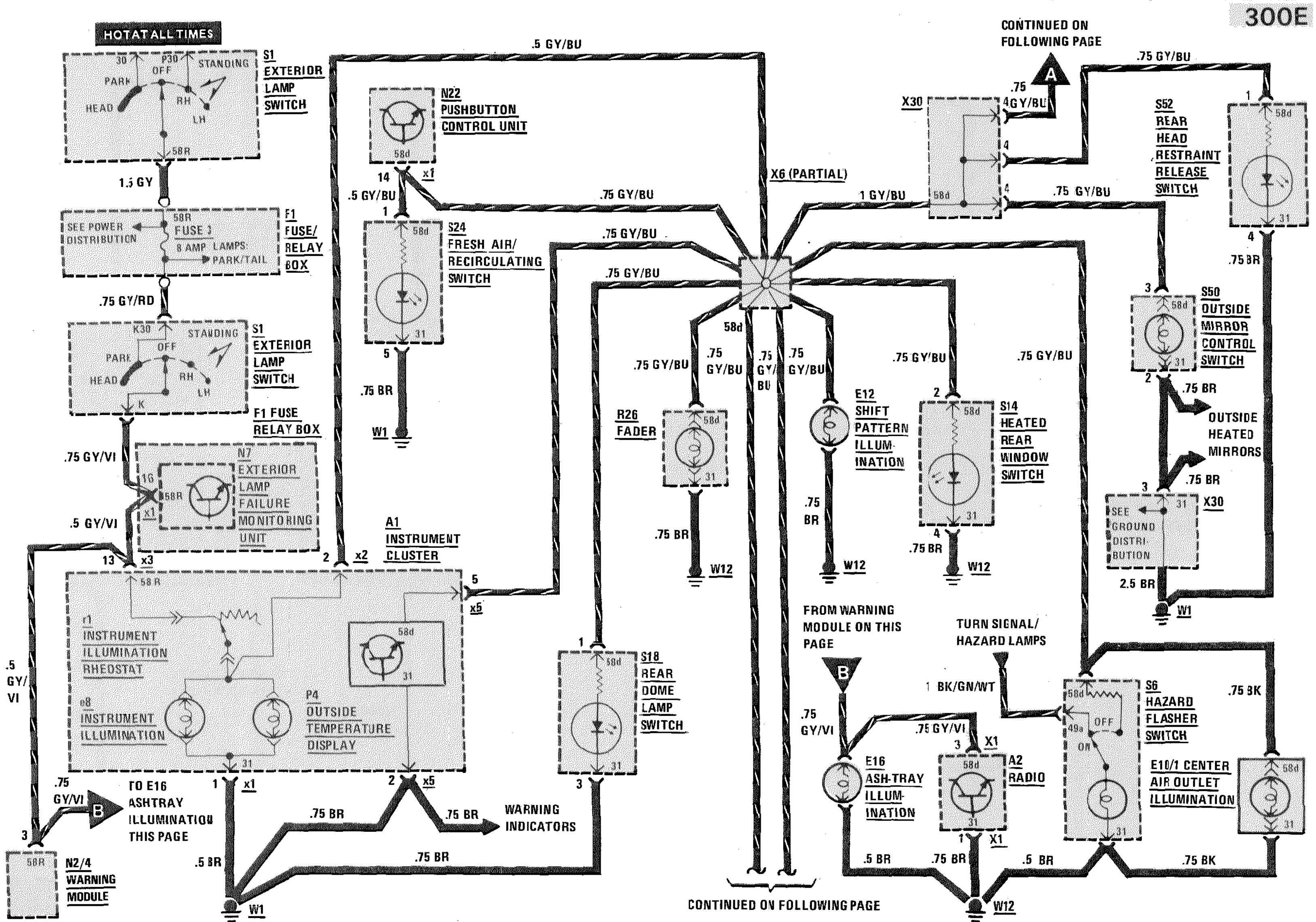

REVISIONS:

ILLUMINATION: INSTRUMENT CLUSTER/CENTER CONSOLE

MY 1986

BEFORE 1/1986 PRODUCTION

300 E

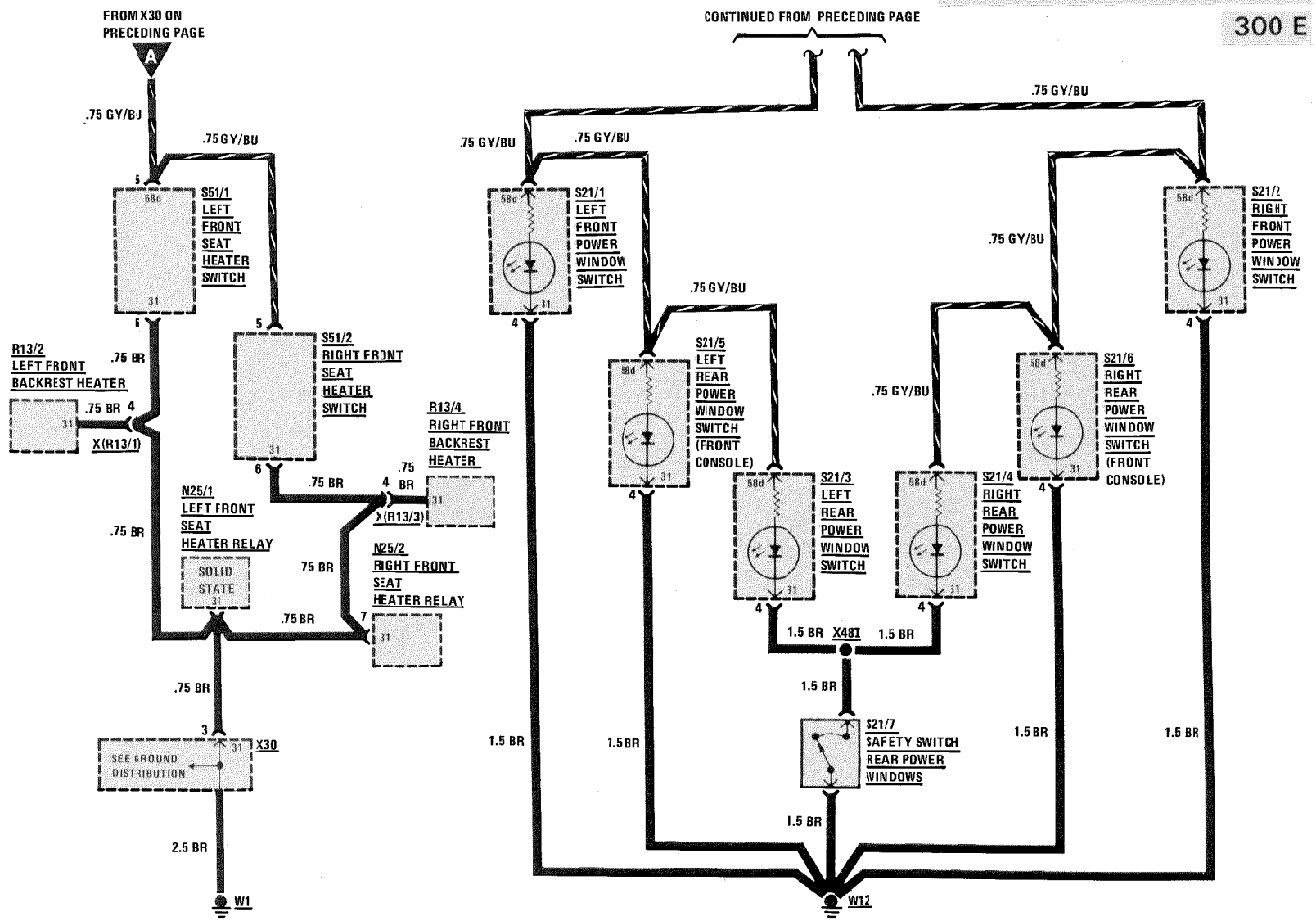

REVISIONS:

ILLUMINATION: INSTRUMENT CLUSTER/CENTER CONSOLE

MY 1986
BEFORE 1/1986 PRODUCTION
300 E

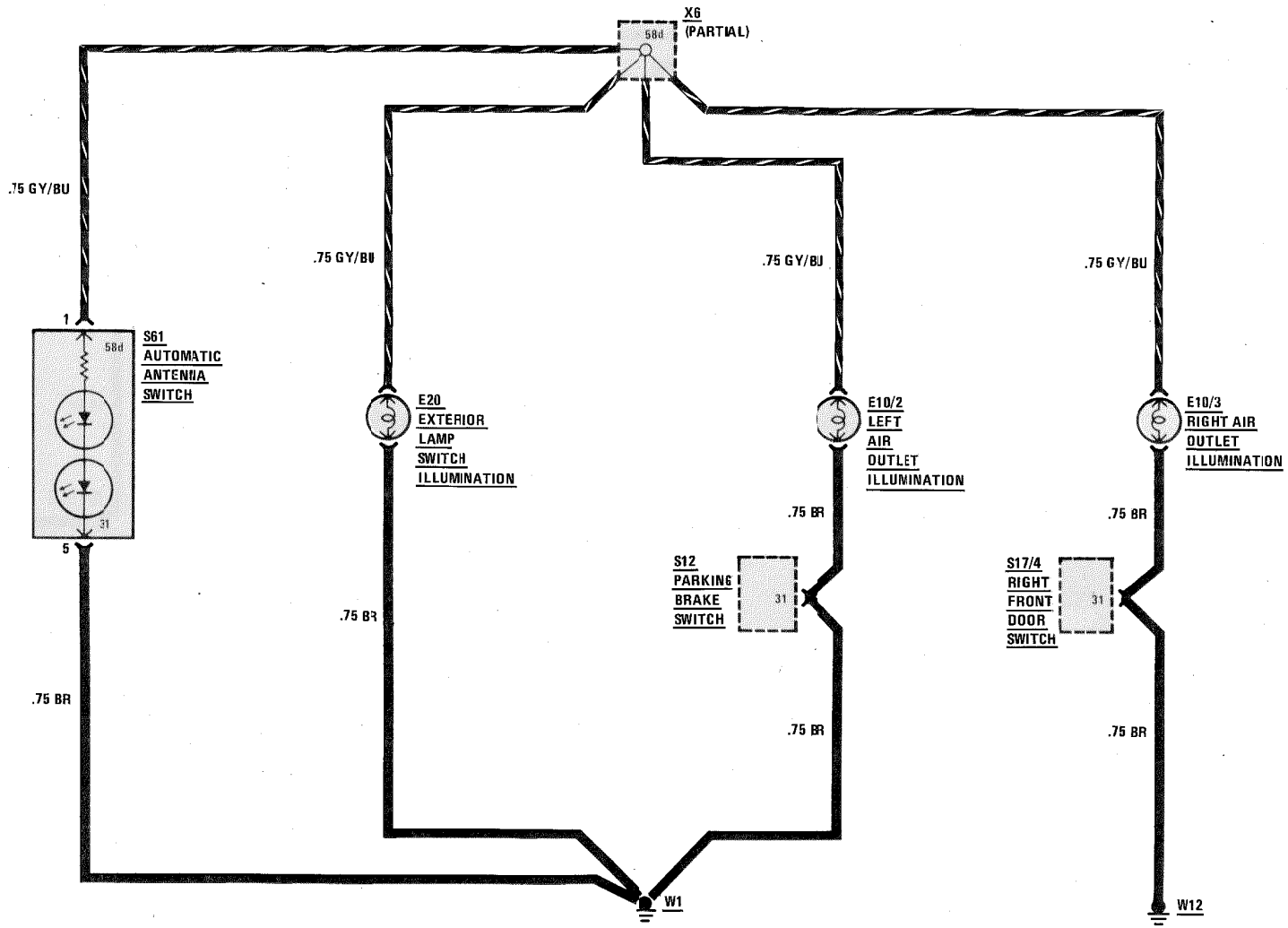

REVISIONS:

ILLUMINATION: INSTRUMENT CLUSTER/CENTER CONSOLE

AS OF MY 1986

AFTER 1/1986 PRODUCTION

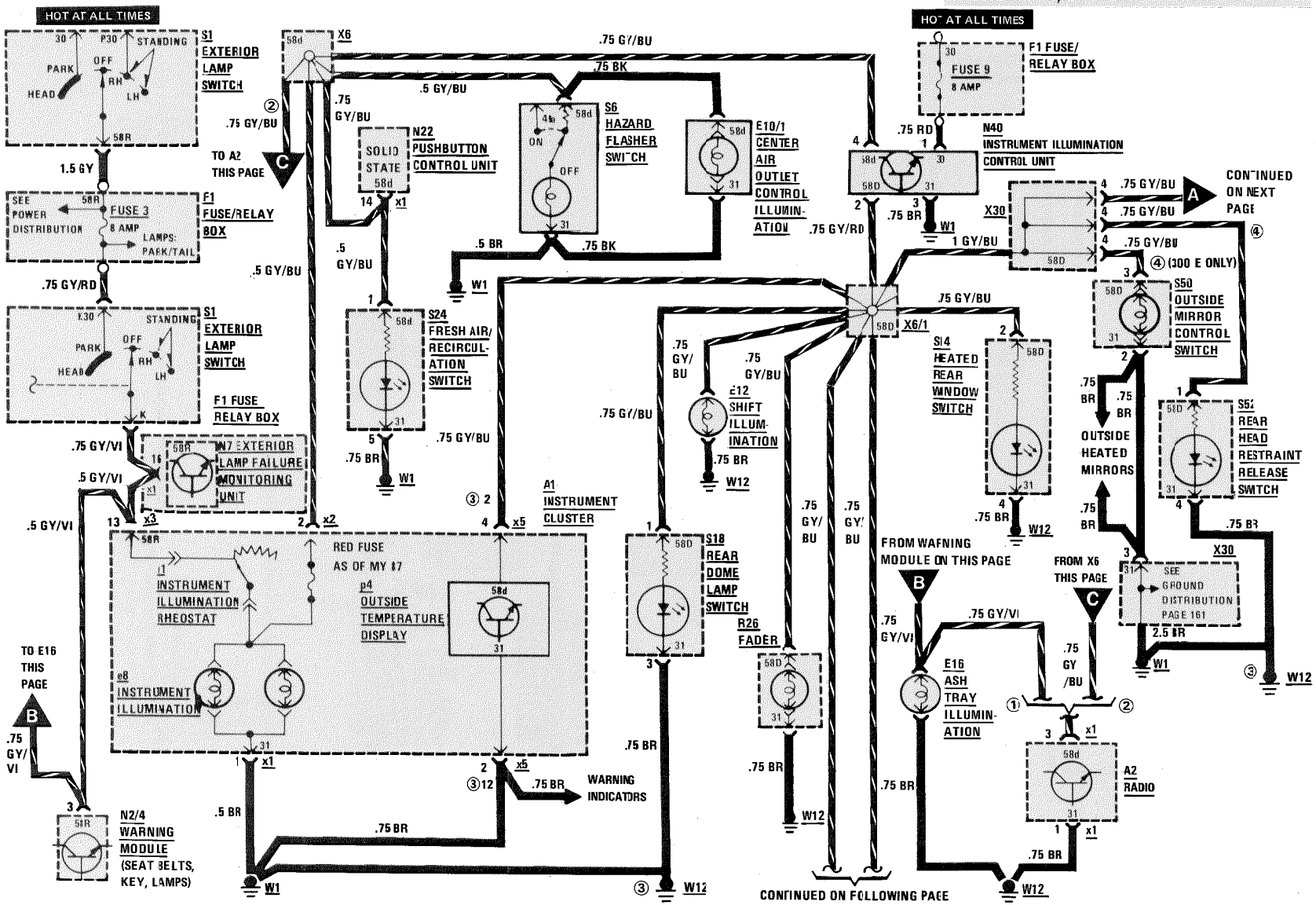

REVISIONS:
① MY 1986 AND MY 1987
② AS OF MY 1988
③ AS OF MY 1990
④ AS OF MY 1990, CONNECTED DIRECTLY TO X6/1

ILLUMINATION: INSTRUMENT CLUSTER/CENTER CONSOLE

(For Component Locations See Page 209)

AS OF MY 1986

AFTER 1/1986 PRODUCTION

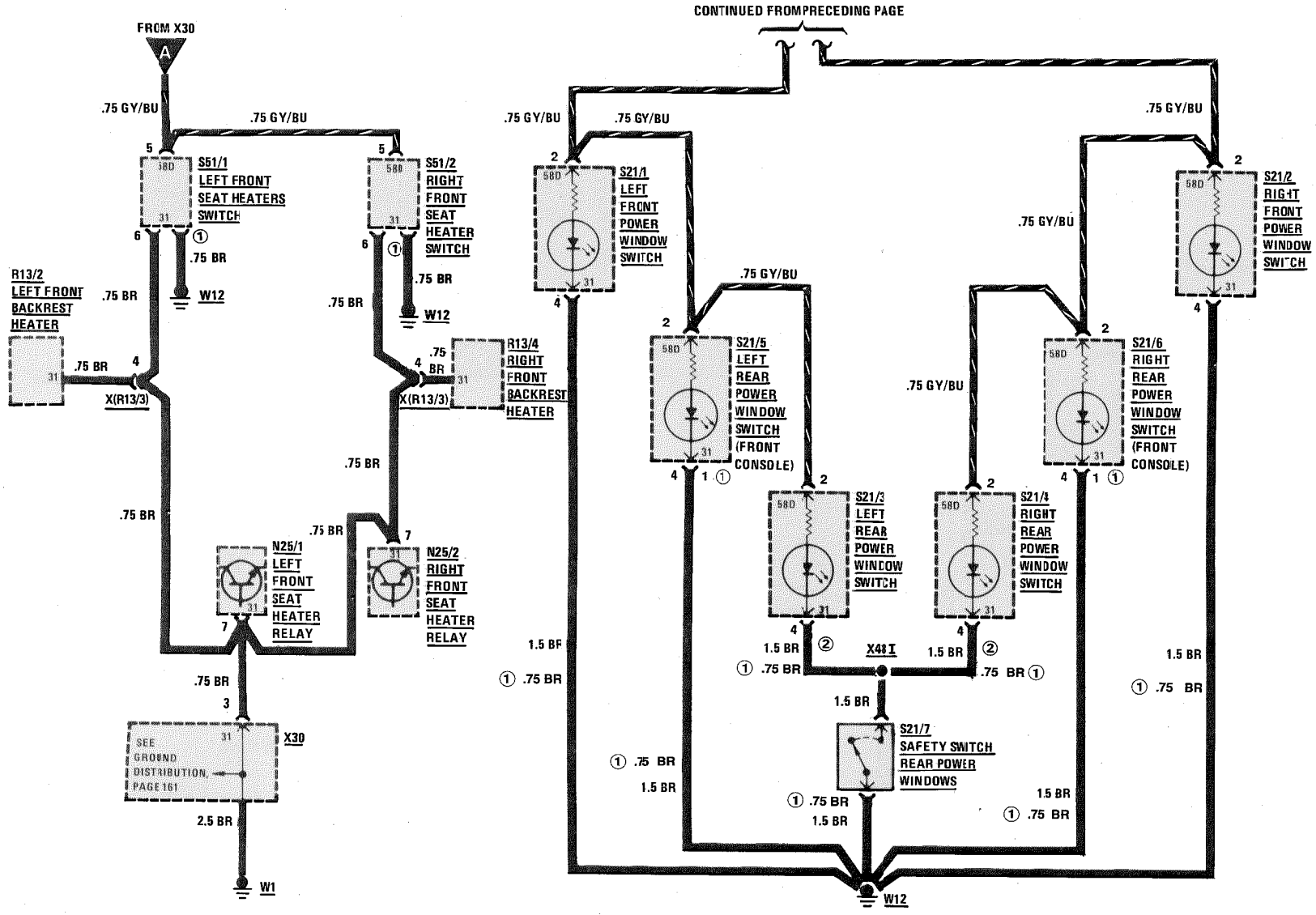

REVISIONS: ① AS OF MY 1990
② AS OF MY 1990, CONNECTED DIRECTLY TO S21/7

ILLUMINATION: INSTRUMENT CLUSTER/CENTER CONSOLE

MY 1986-1989

AFTER 1/1986 PRODUCTION

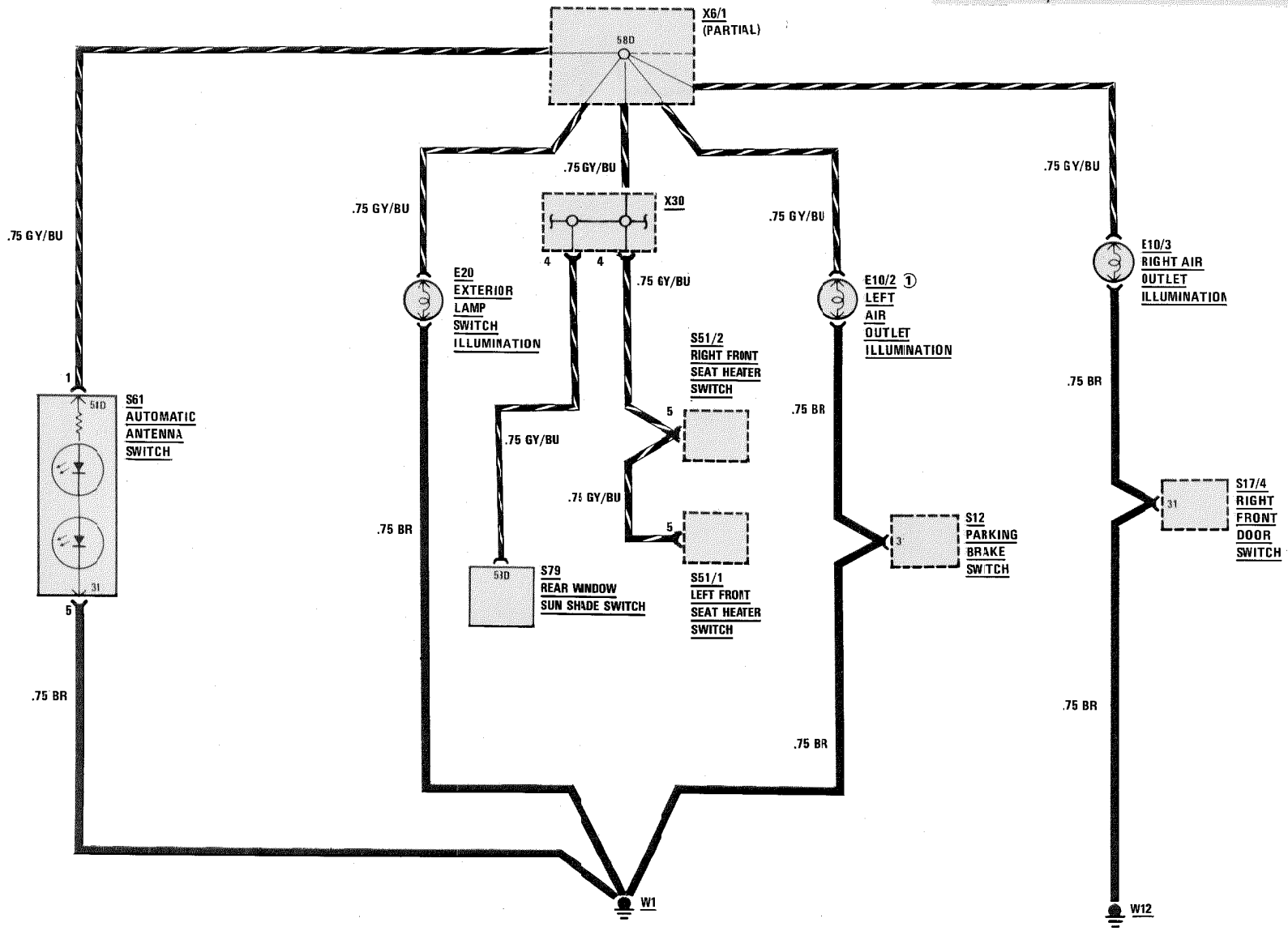

REVISIONS: ① AS OF MY 1989 E10/2 IS CONNECTED DIRECTLY TO GROUND

ILLUMINATION: INSTRUMENT CLUSTER/CENTER CONSOLE

AS OF MY 1990

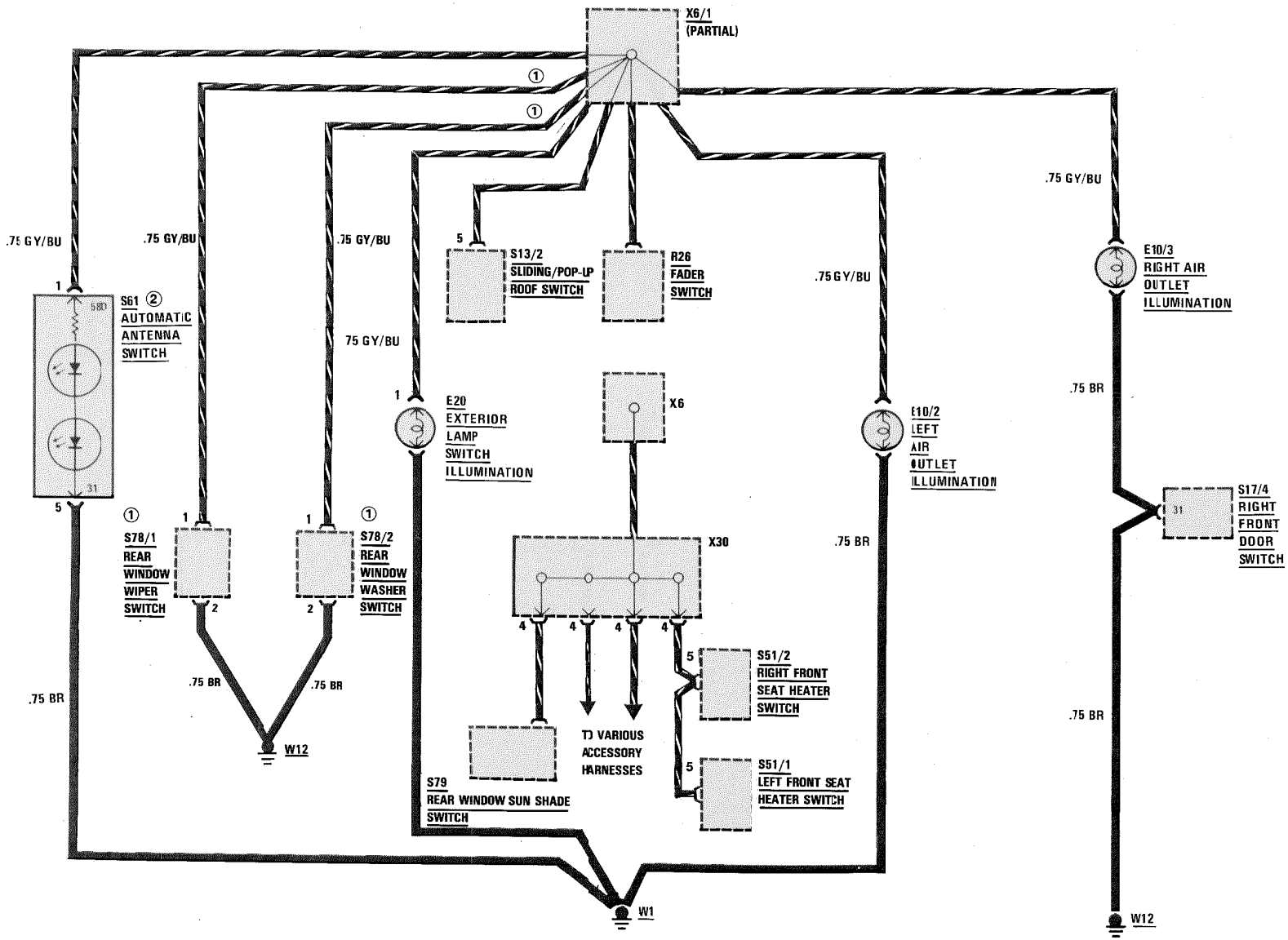

REVISIONS: ① 300 TE ONLY
② NOT USED AS OF MY 1991

GLOVE BOX LAMP/CIGAR LIGHTER/RADIO/AUTOMATIC ANTENNA

MY 1986-1989

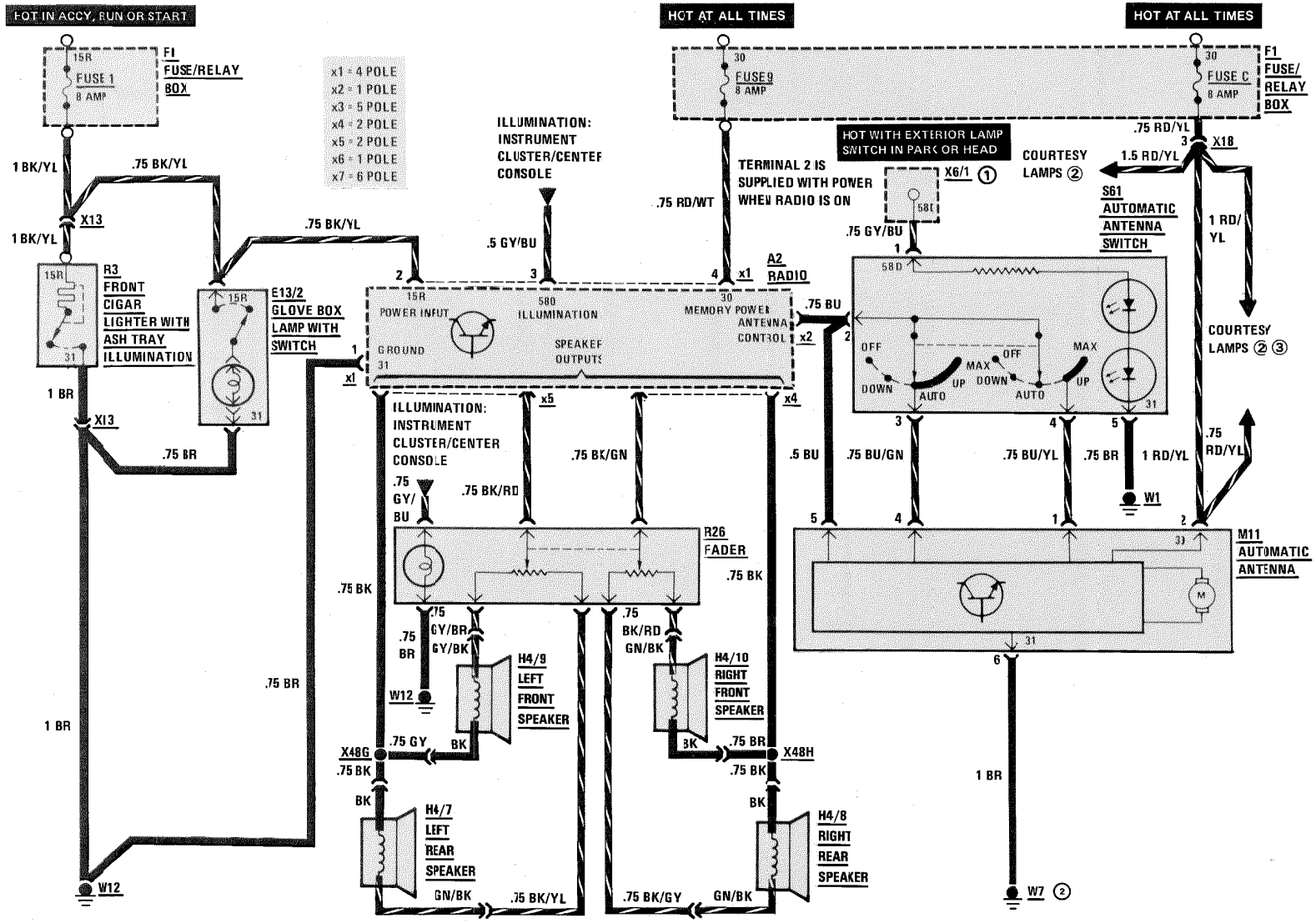

REVISIONS: ① X6 BEFORE JANUARY 1986, SEE PAGE 125
② MODEL 124.193 ONLY
③ MODEL 124.133 ONLY

GLOVE BOX LAMP/CIGAR LIGHTER/RADIO/AUTOMATIC ANTENNA

MY 1990

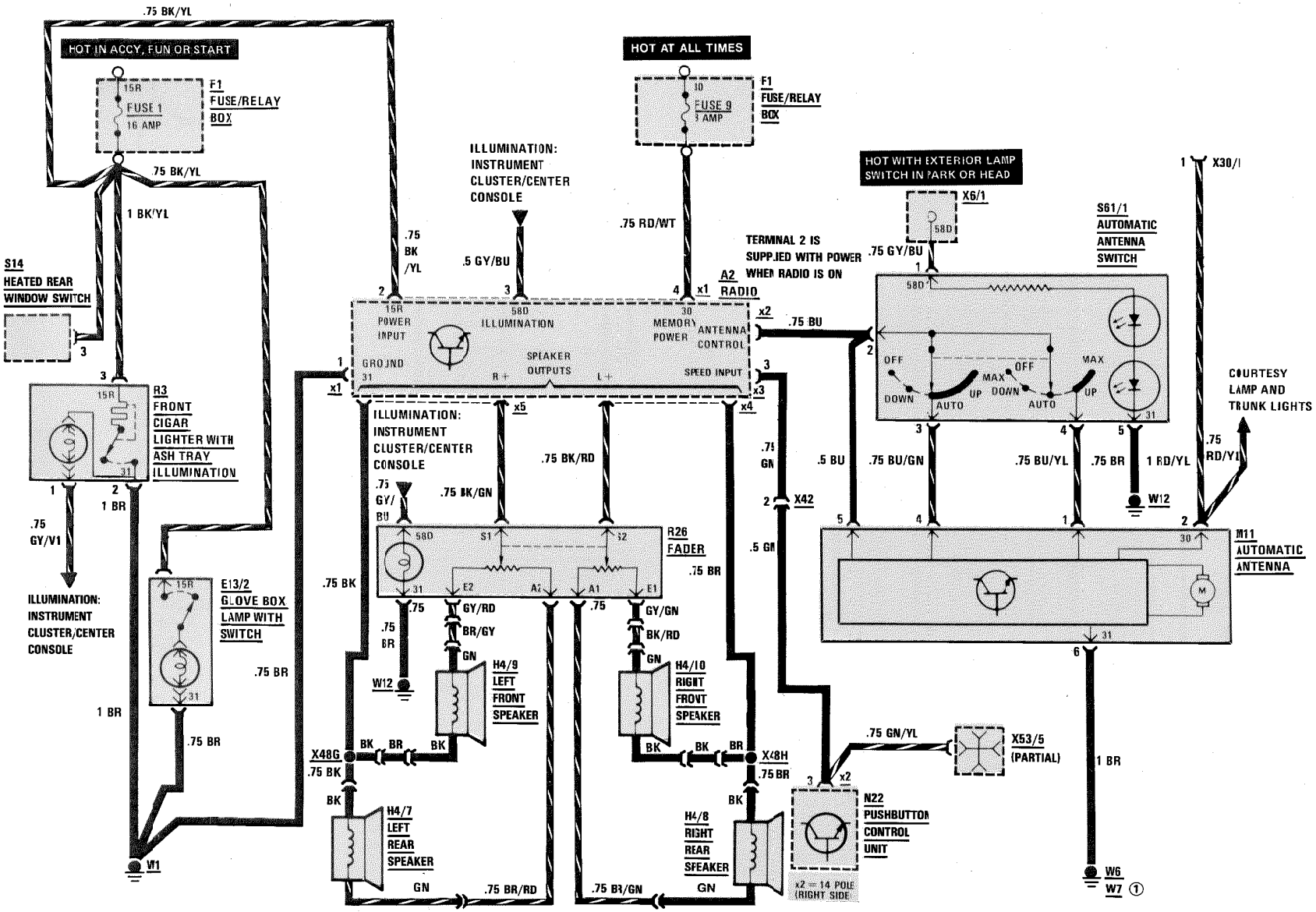

REVISIONS: ① STATION WAGON ONLY

RADIO WITH ACTIVE BASS SYSTEM/ AUTOMATIC ANTENNA

MY 1990

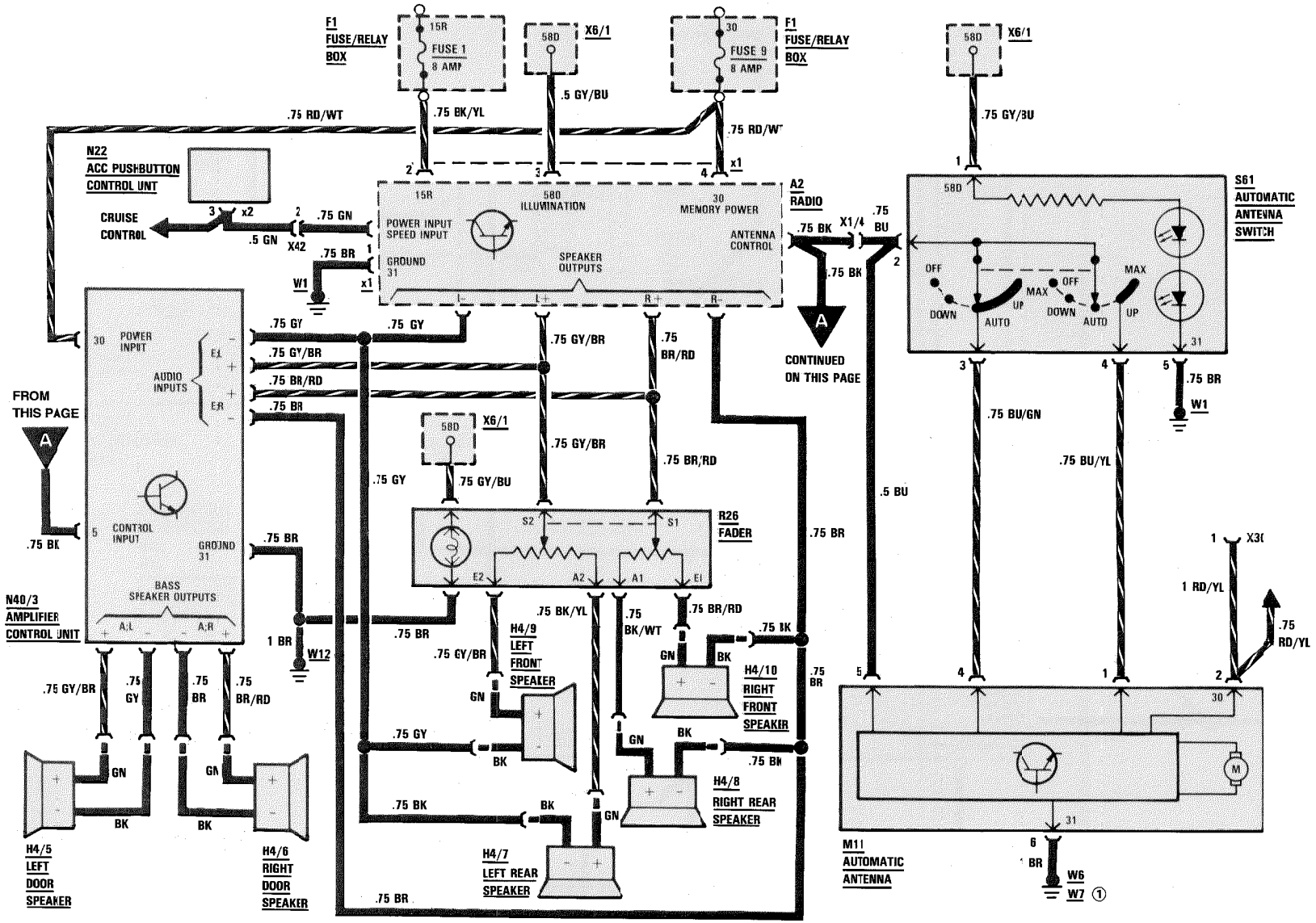

REVISIONS: ① STATION WAGON

RADIO WITH ACTIVE BASS/AUTOMATIC ANTENNA

AS OF MY 1990 (LATE PRODUCTION)

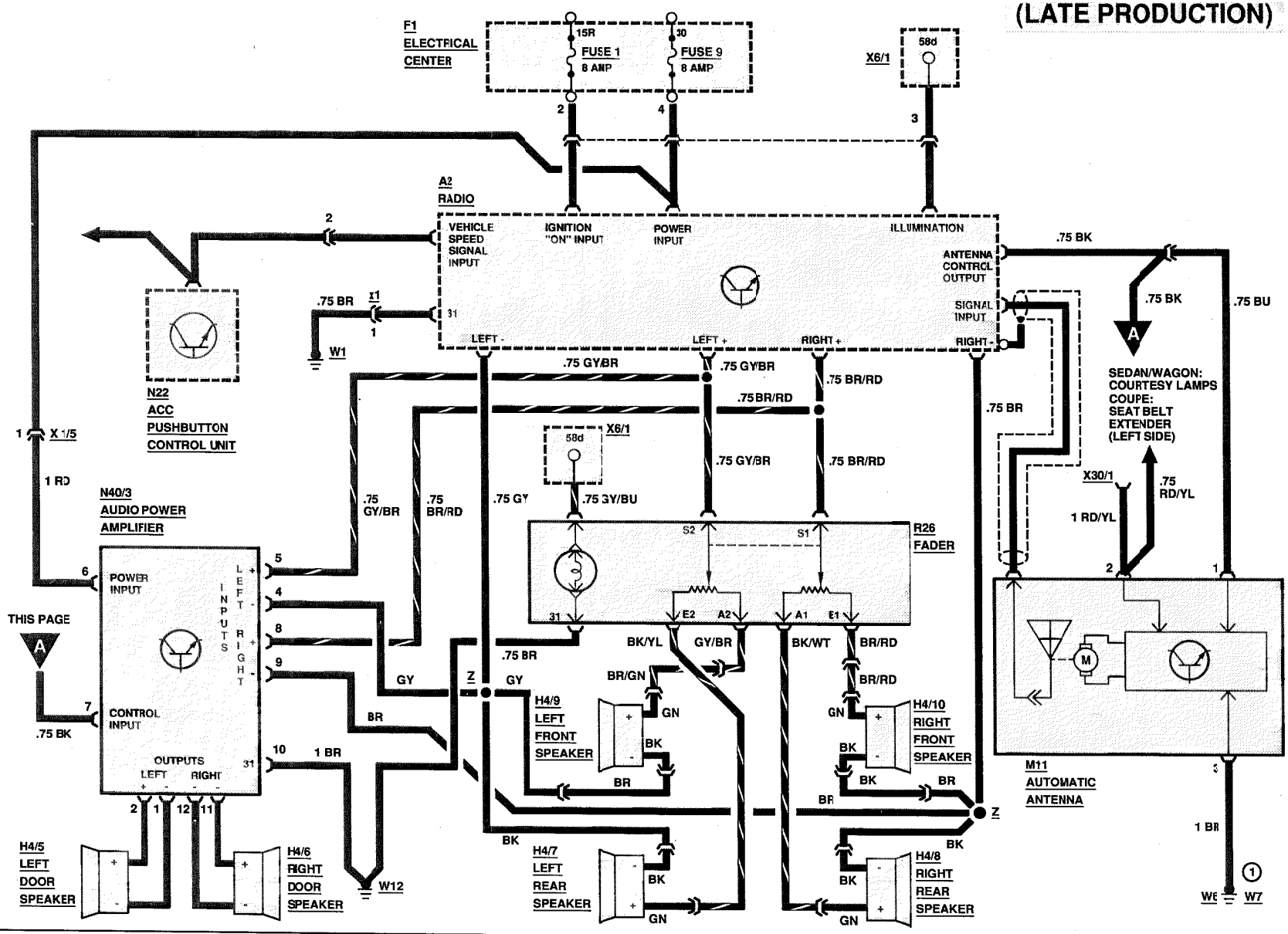

REVISIONS: (1) STATION WAGON ONLY

RADIO WITH SOUND SYSTEM / AUTOMATIC ANTENNA

AS OF MY 1990 (LATE PRODUCTION)

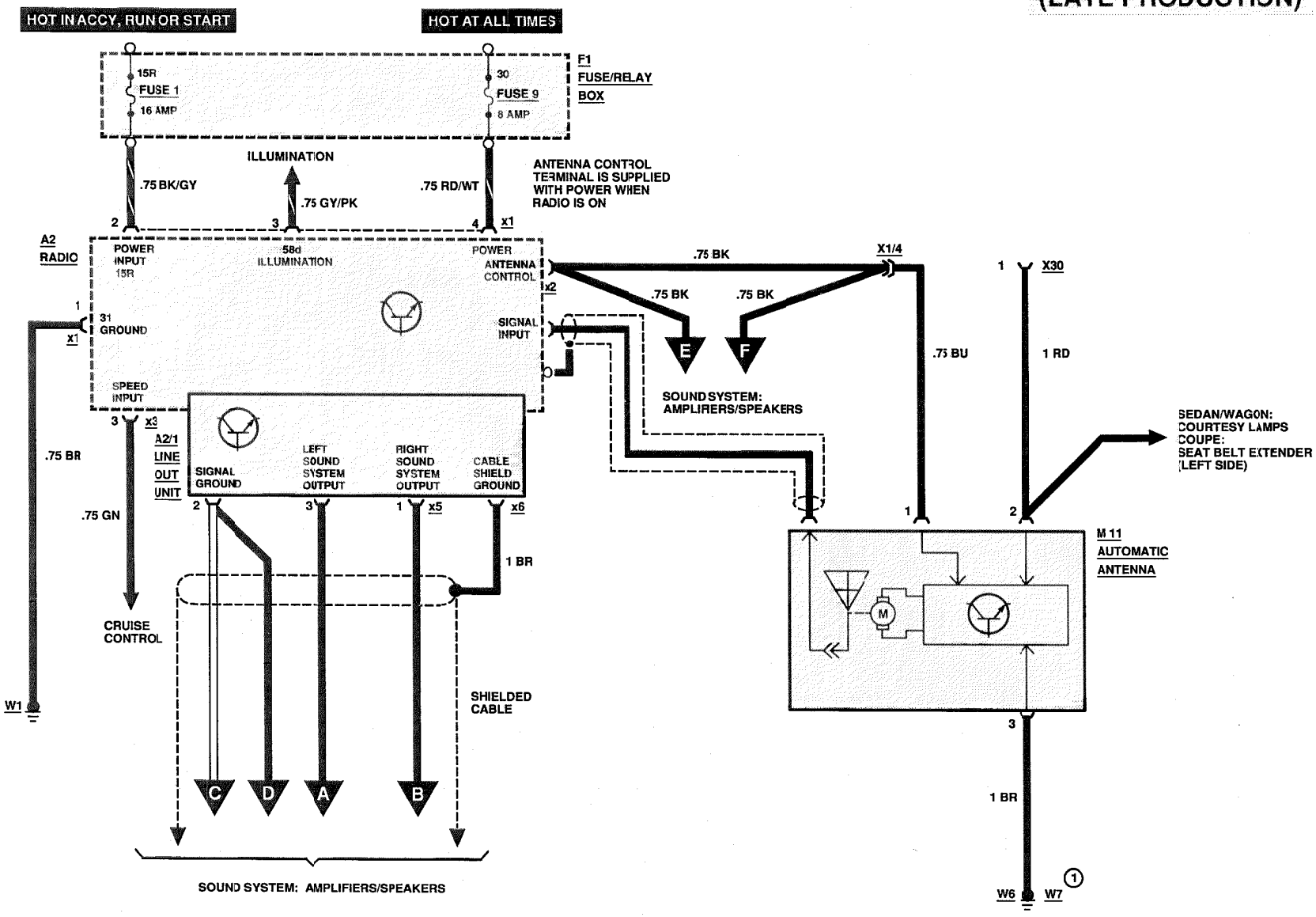

REVISIONS: (1) STATION WAGON

TWO PIECE RADIO WITH SOUND SYSTEM/ACTIVE BASS

MY 1990 (LATE PRODUCTION) TO MY 1991

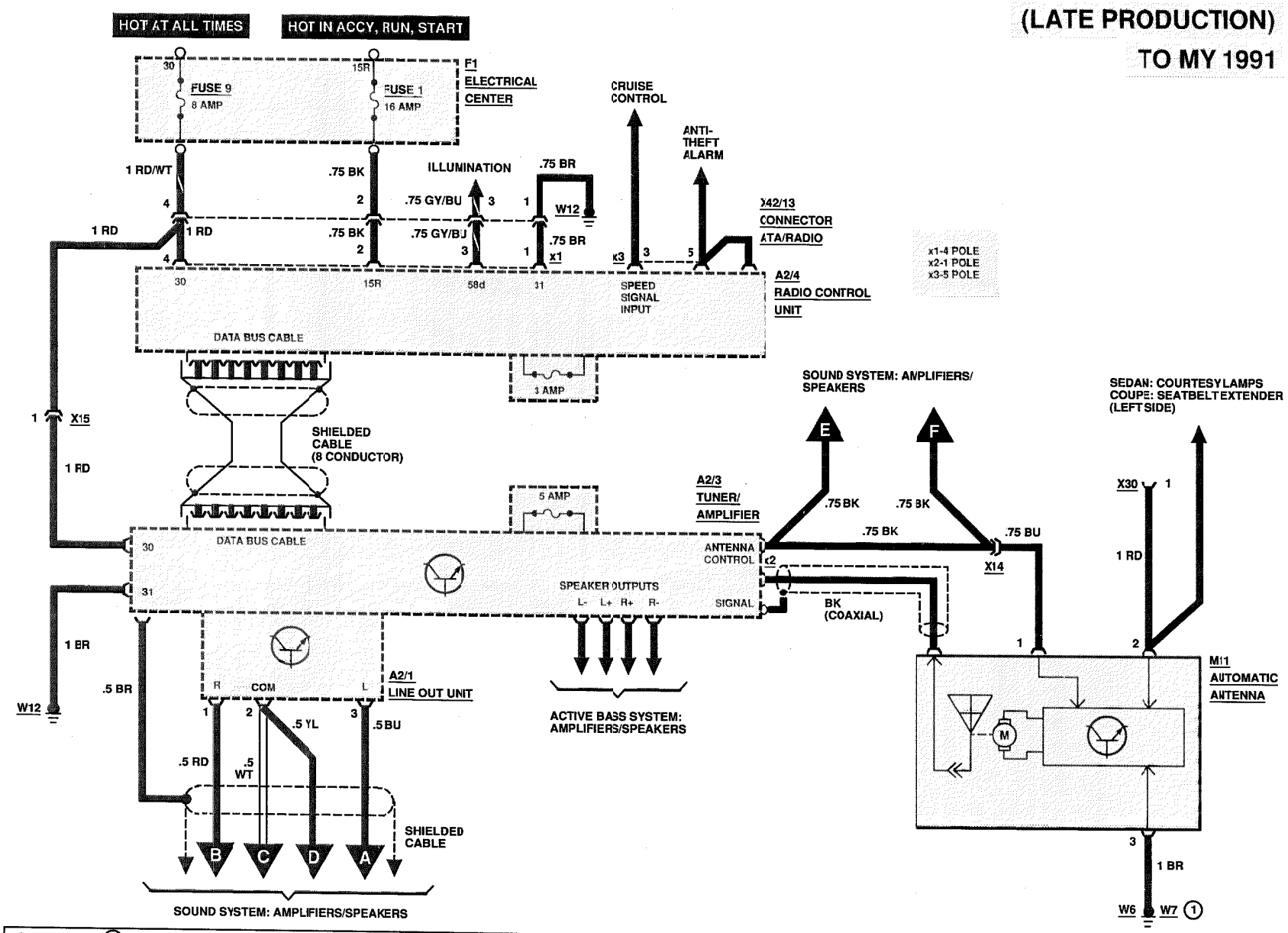

REVISIONS: (1) STATION WAGON

TWO PIECE RADIO WITH SOUND SYSTEM/ACTIVE BASS

AS OF MY 1992

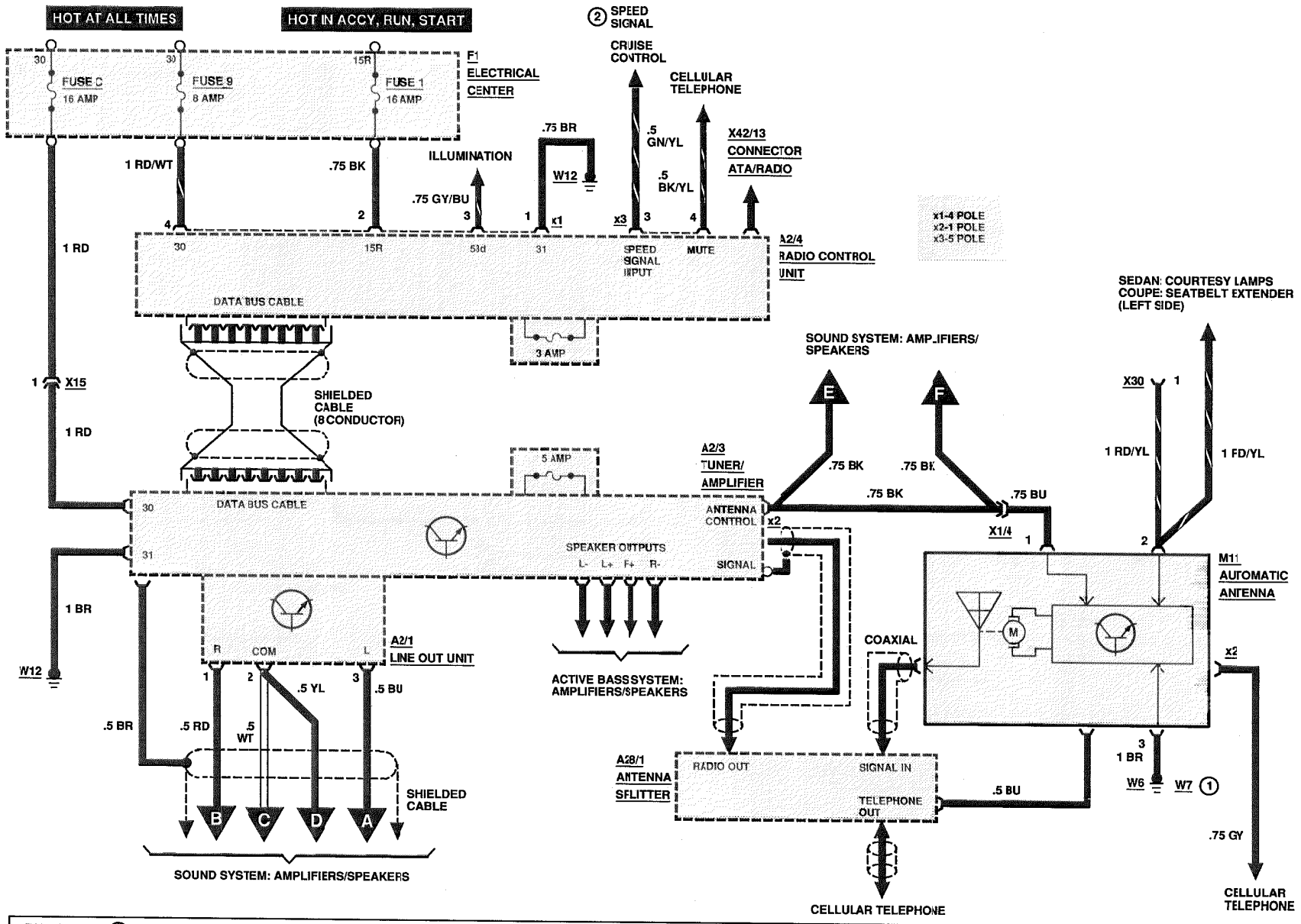

REVISIONS: ① STATION WAGON
② MODELS 400E/500E

TWO PIECE RADIO WITH CD PLAYER

MY 1990 (LATE PRODUCTION) TO MY 1991

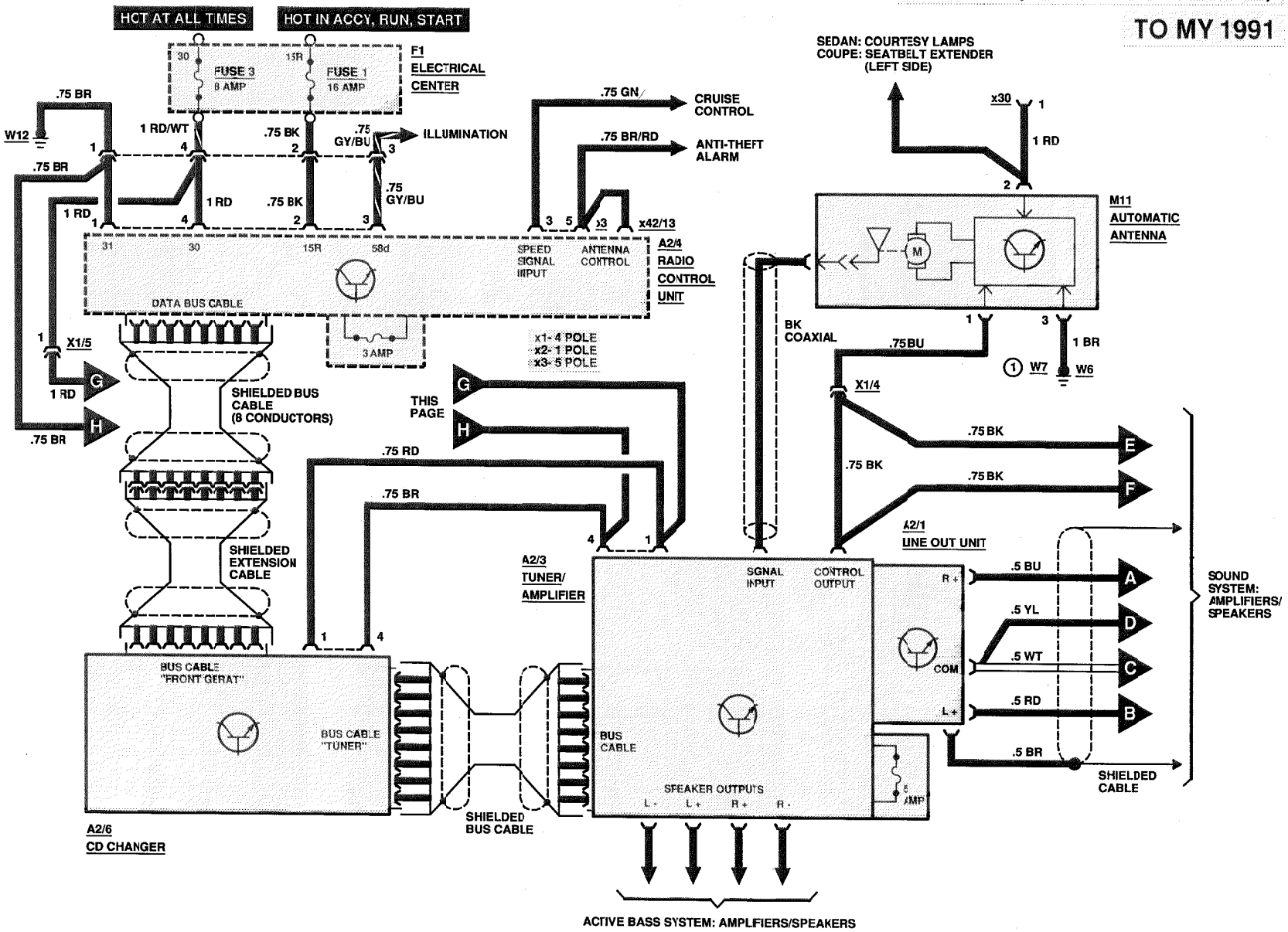

REVISIONS: (1) STATION WAGON

TWO PIECE RADIO WITH CD PLAYER

AS OF MY 1992

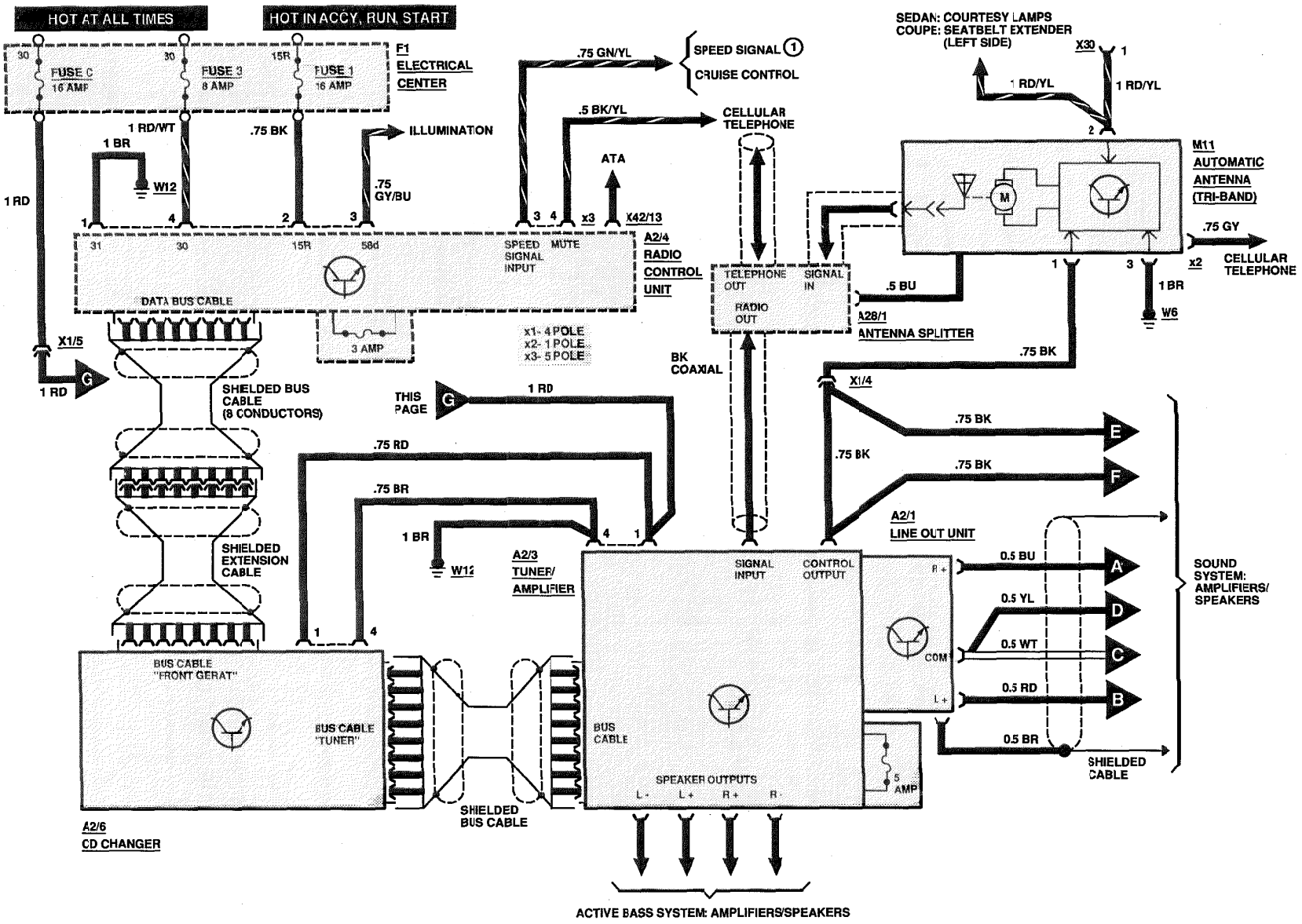

REVISIONS: 1 MODELS 400E/500E

ACTIVE BASS SYSTEM: AMPLIFIERS/SPEAKERS

MY 1990 (LATE PRODUCTION) TO MY 1991

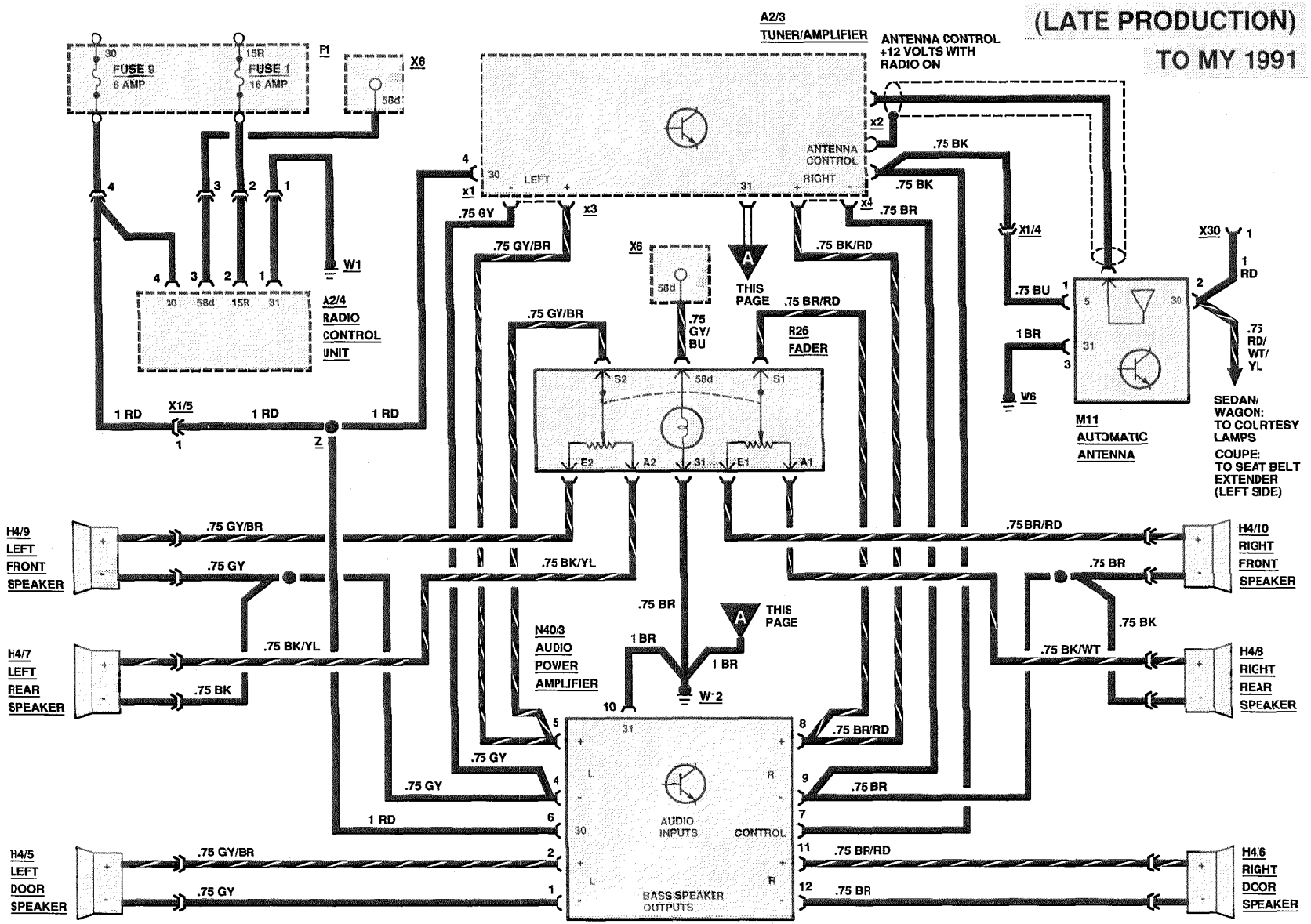

REVISIONS:

ACTIVE BASS SYSTEM: AMPLIFIERS/SPEAKERS

AS OF MY 1992

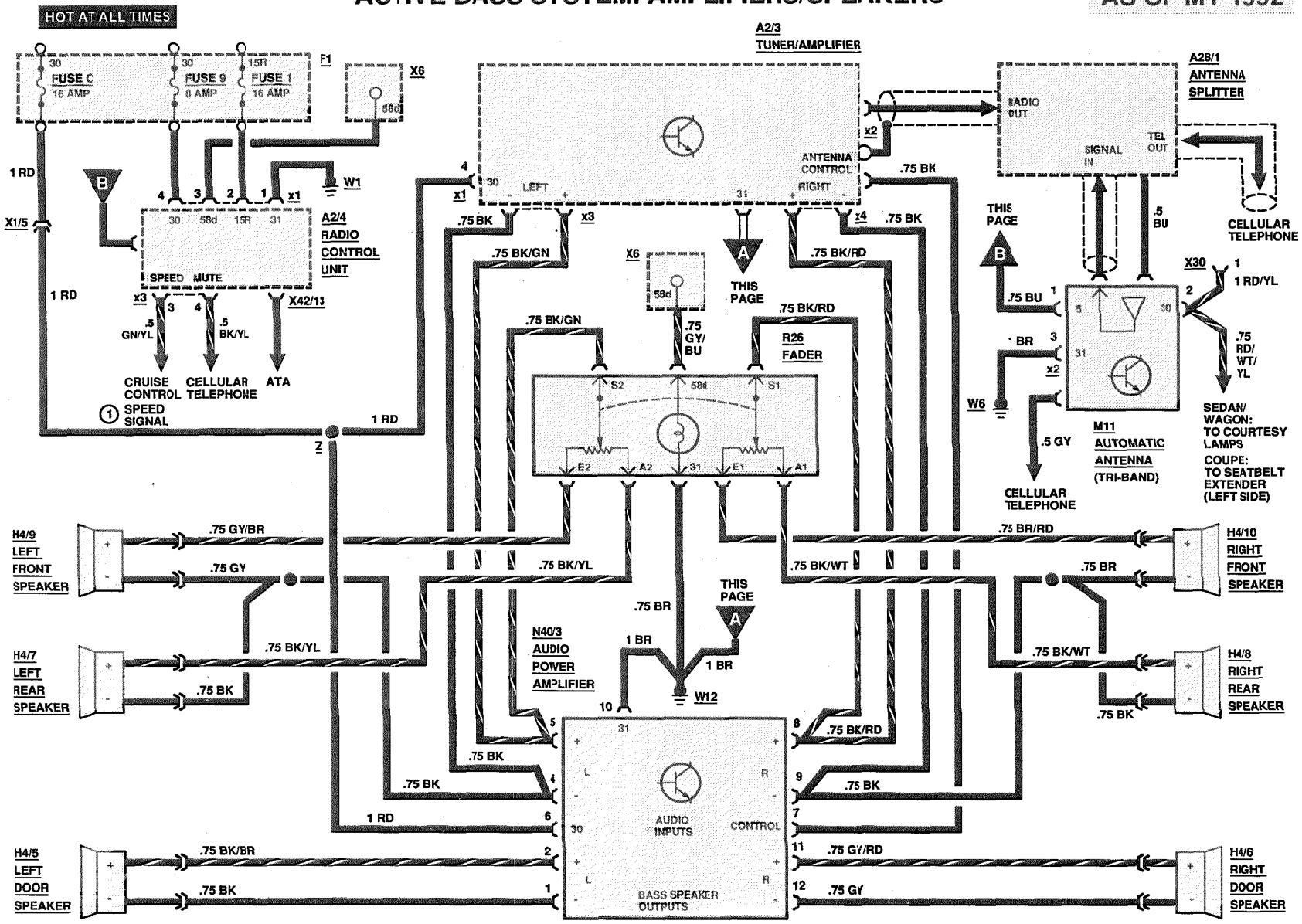

REVISIONS: 1 MODELS 400E/500E

SOUND SYSTEM: AMPLIFIERS/SPEAKERS

MY 1990 (LATE PRODUCTION) TO MY 1991

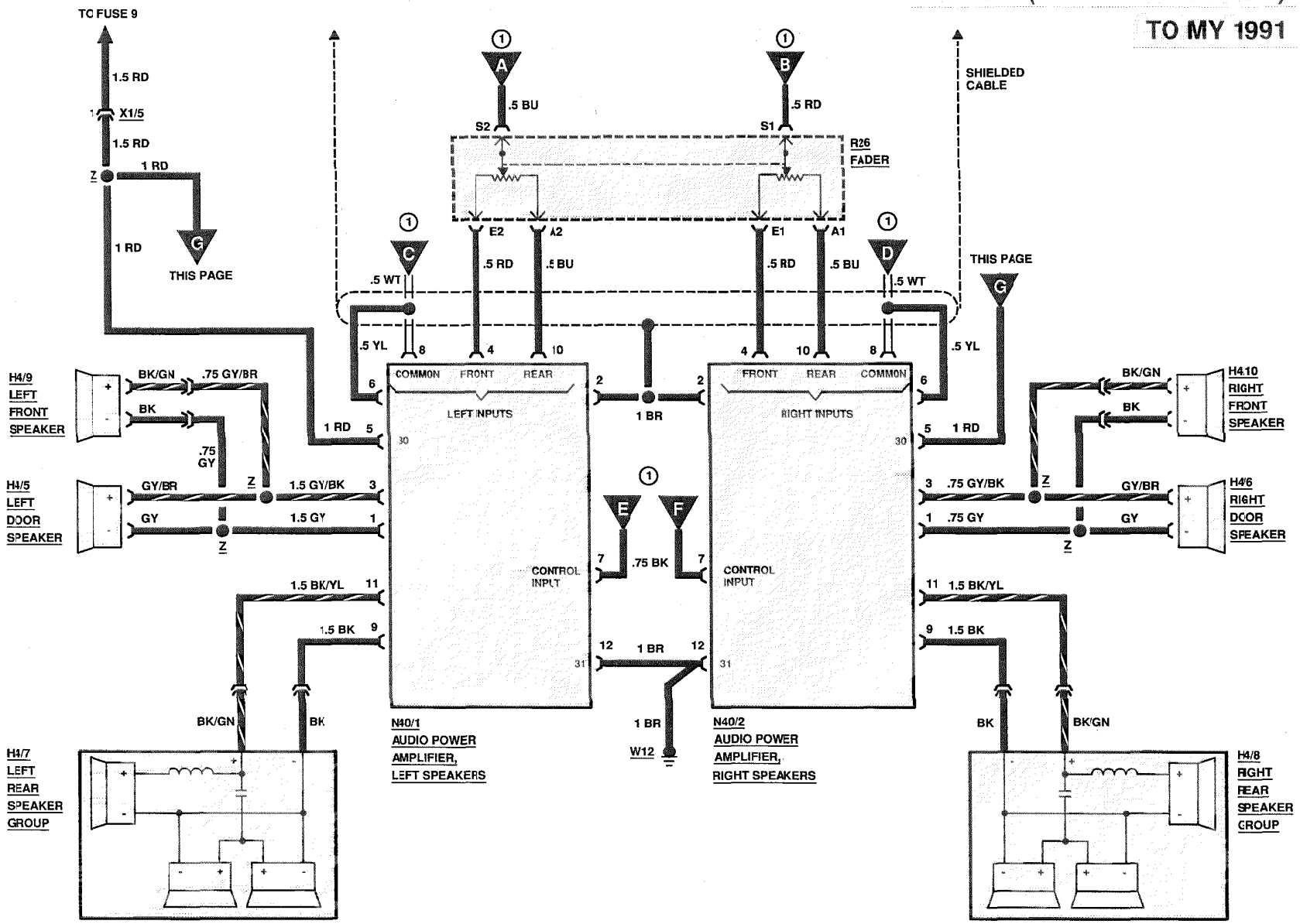

REVISIONS: (1) FROM LINE-OUT UNIT (A2/1)

SOUND SYSTEM: AMPLIFIERS/SPEAKERS

AS OF MY 1992

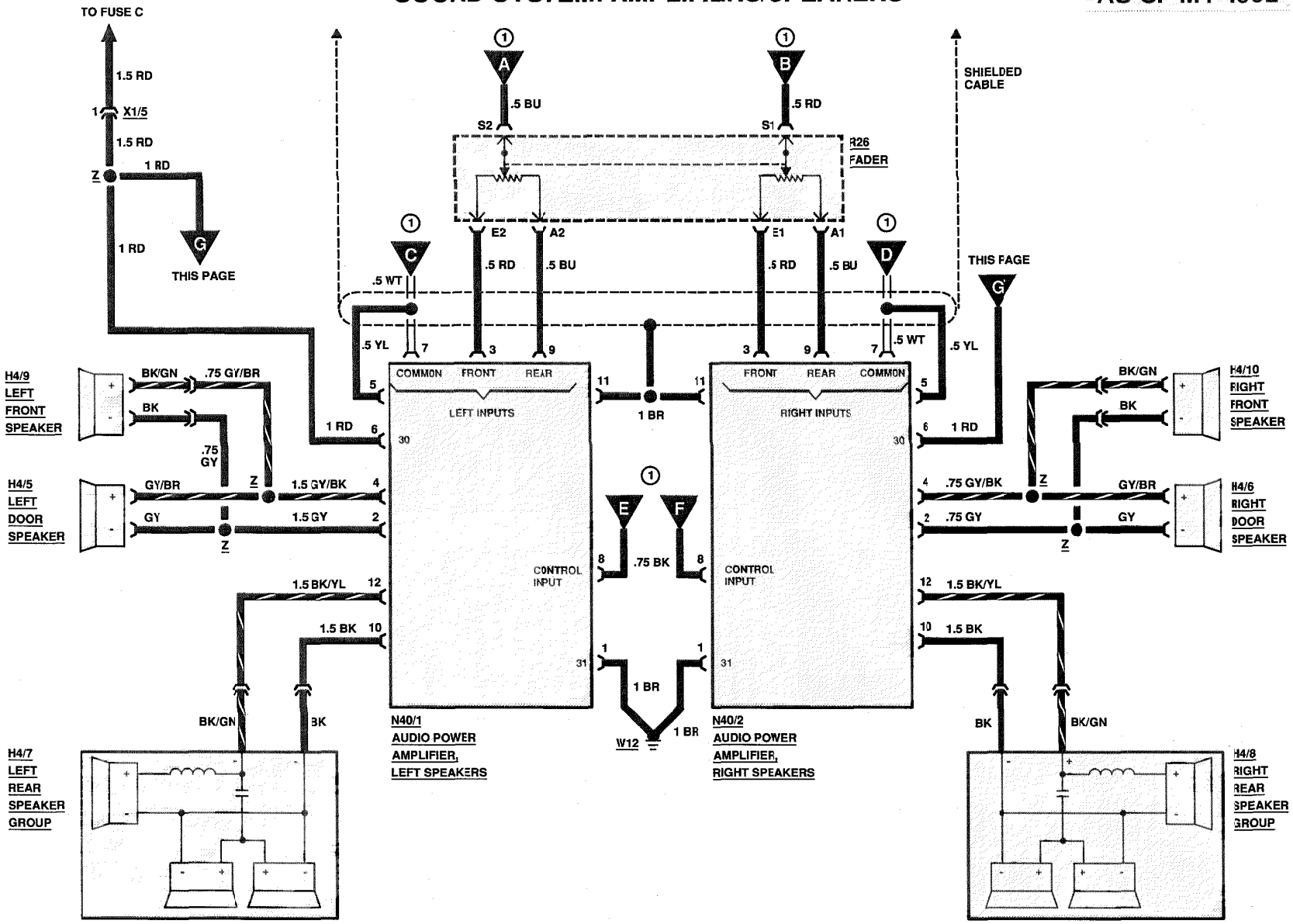

REVISIONS: (1) FROM LINE-OUT UNIT (A2/1)

CELLULAR TELEPHONE

AS OF MY 1992

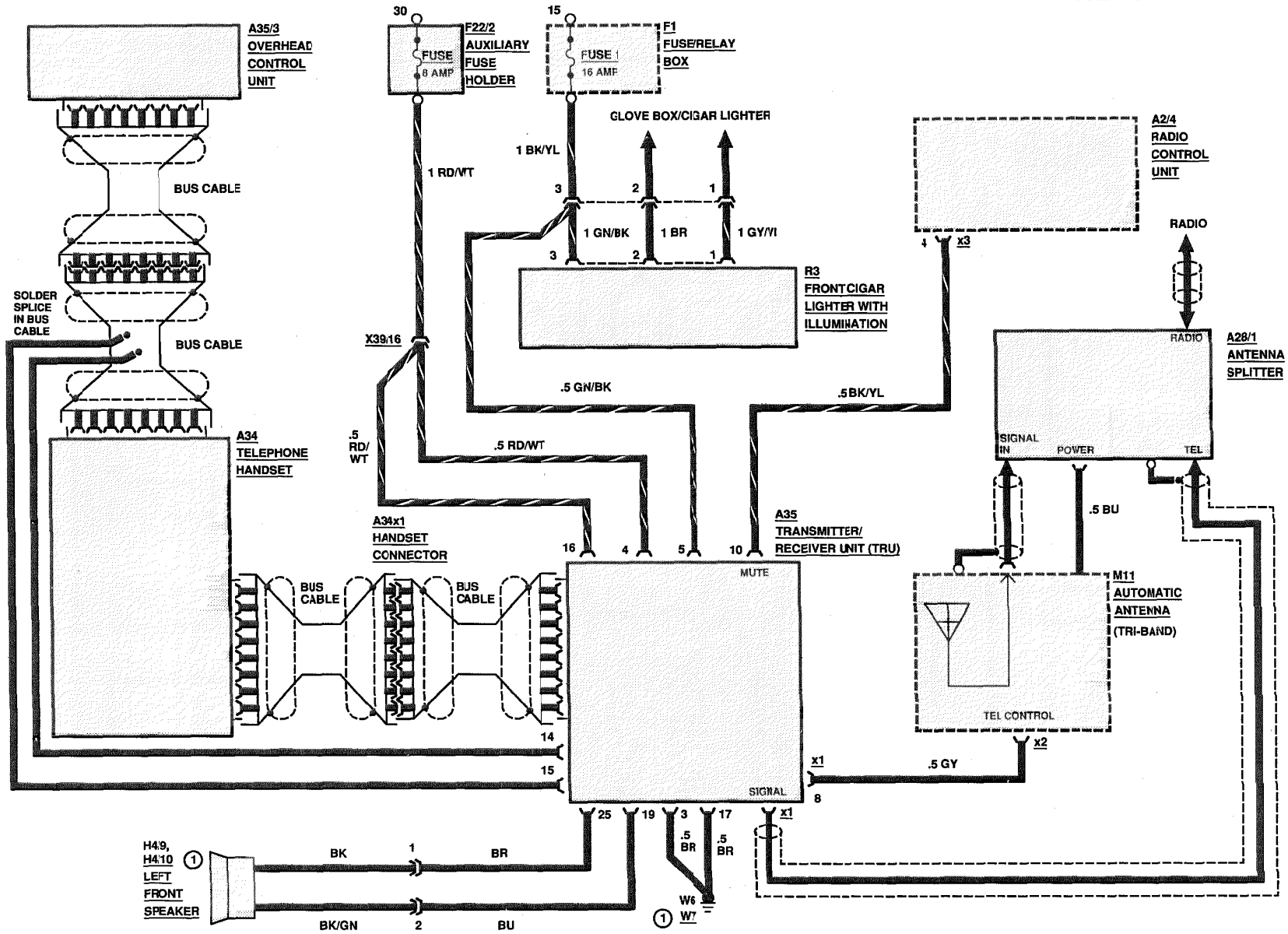

REVISIONS: (1) MODELS 124.090/290

WARNING SYSTEM

MY 1986
300 E

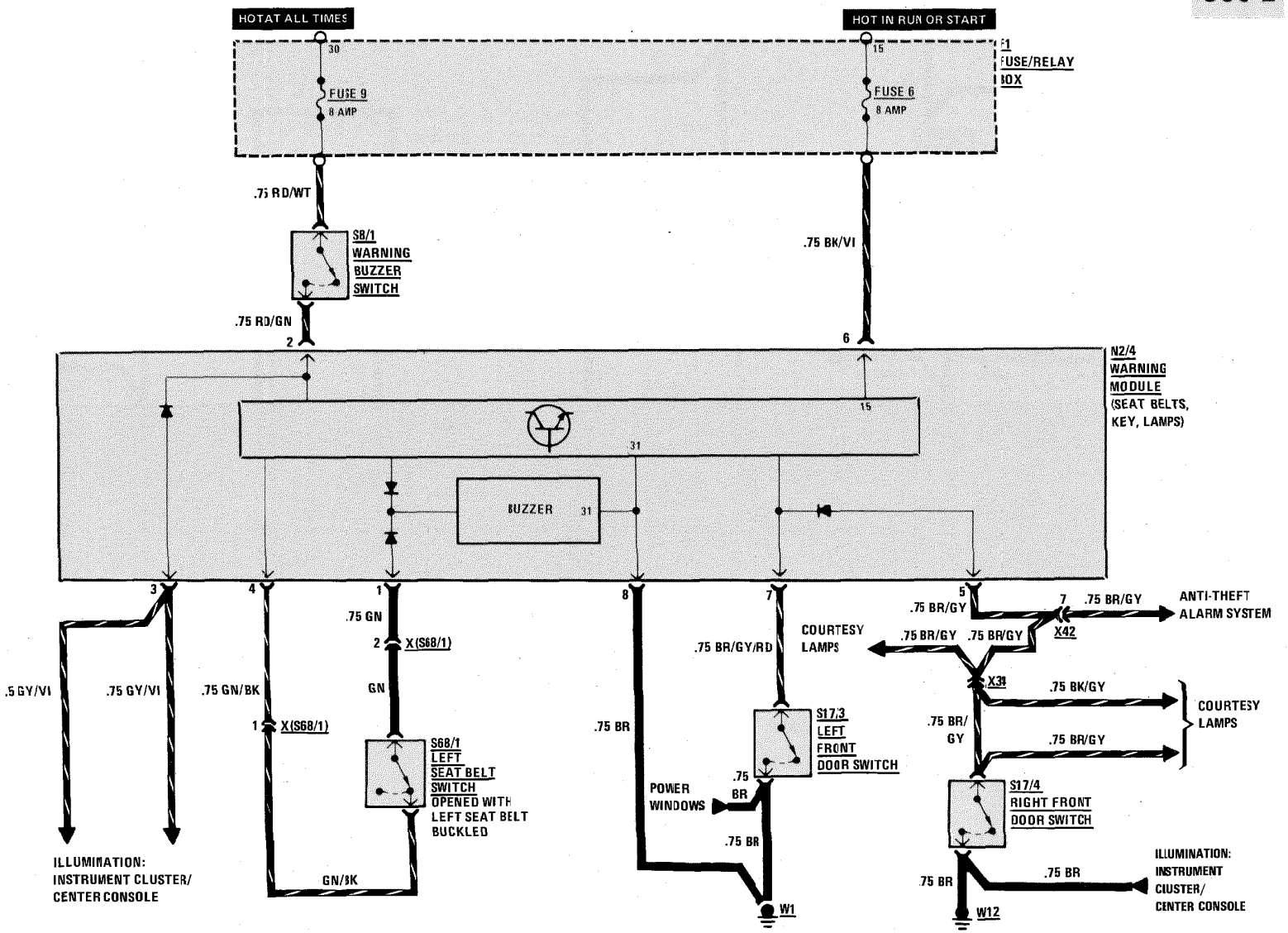

REVISIONS:

WARNING SYSTEM

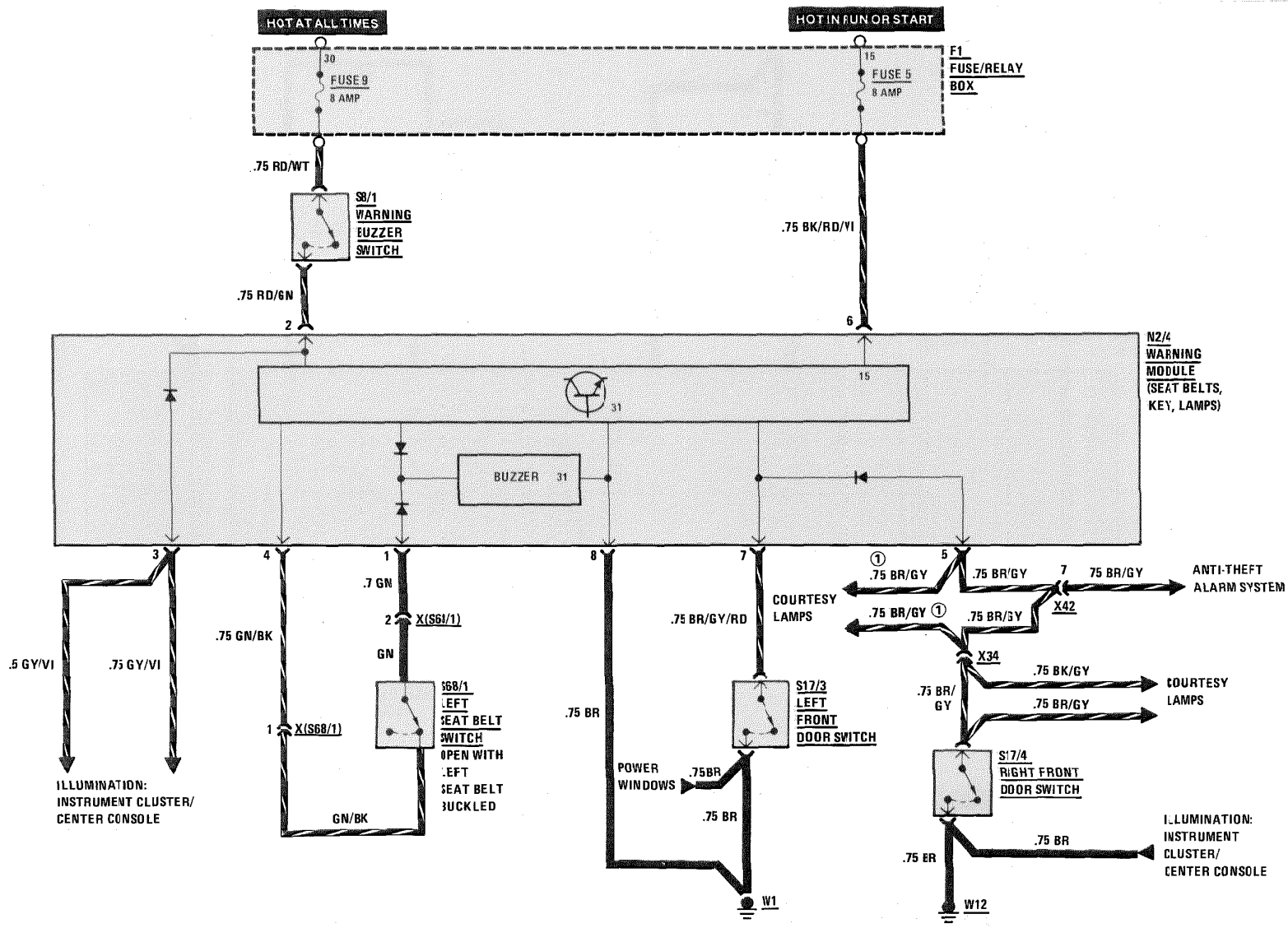

REVISIONS: ① STATION WAGON: CONNECTED TO X34
SEDAN: CONNECTED TO N2/4 PIN 5

WARNING SYSTEM

MY 1988-1989
300 CE

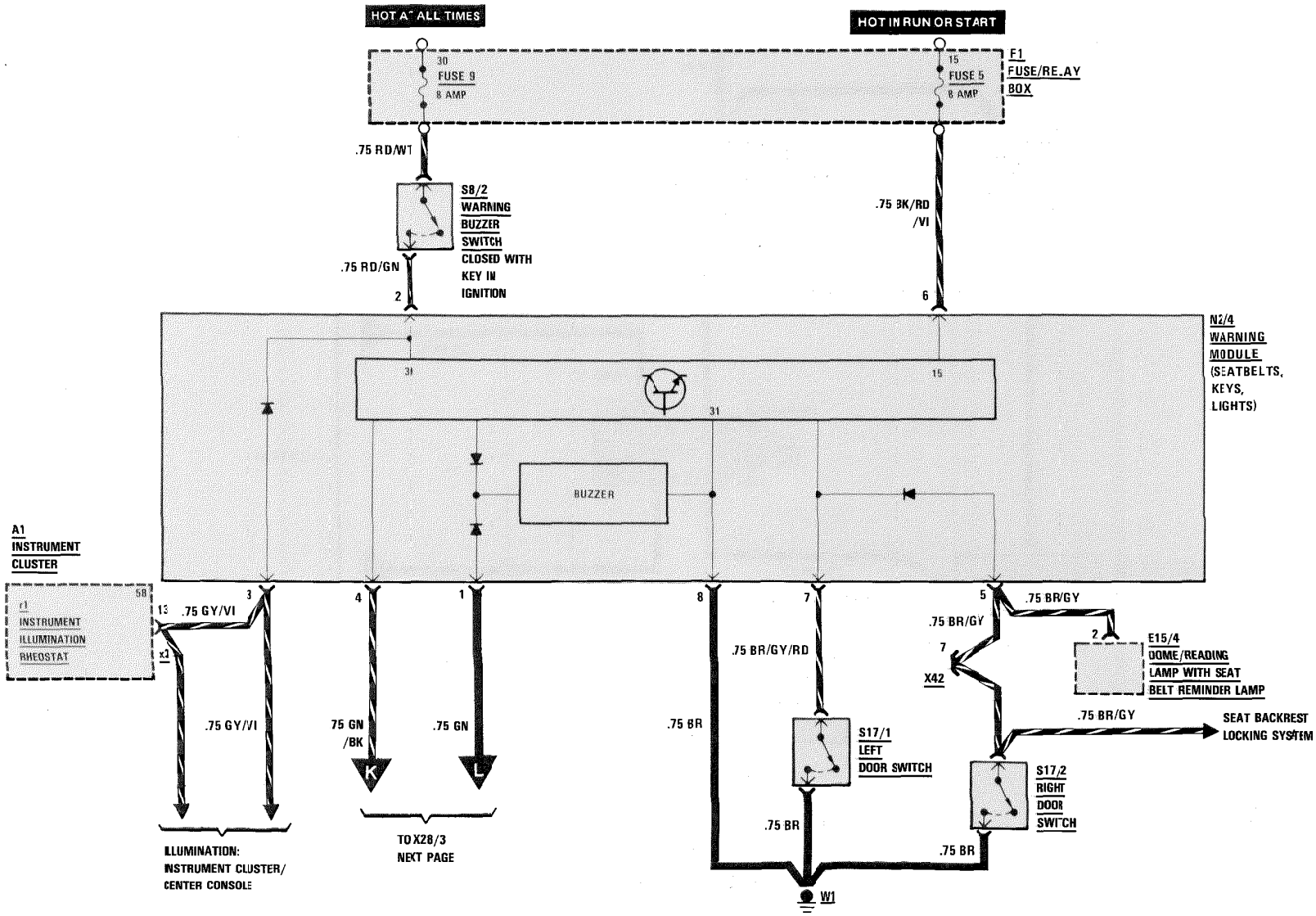

REVISIONS:

WARNING SYSTEM

AS OF MY 1988
300 CE

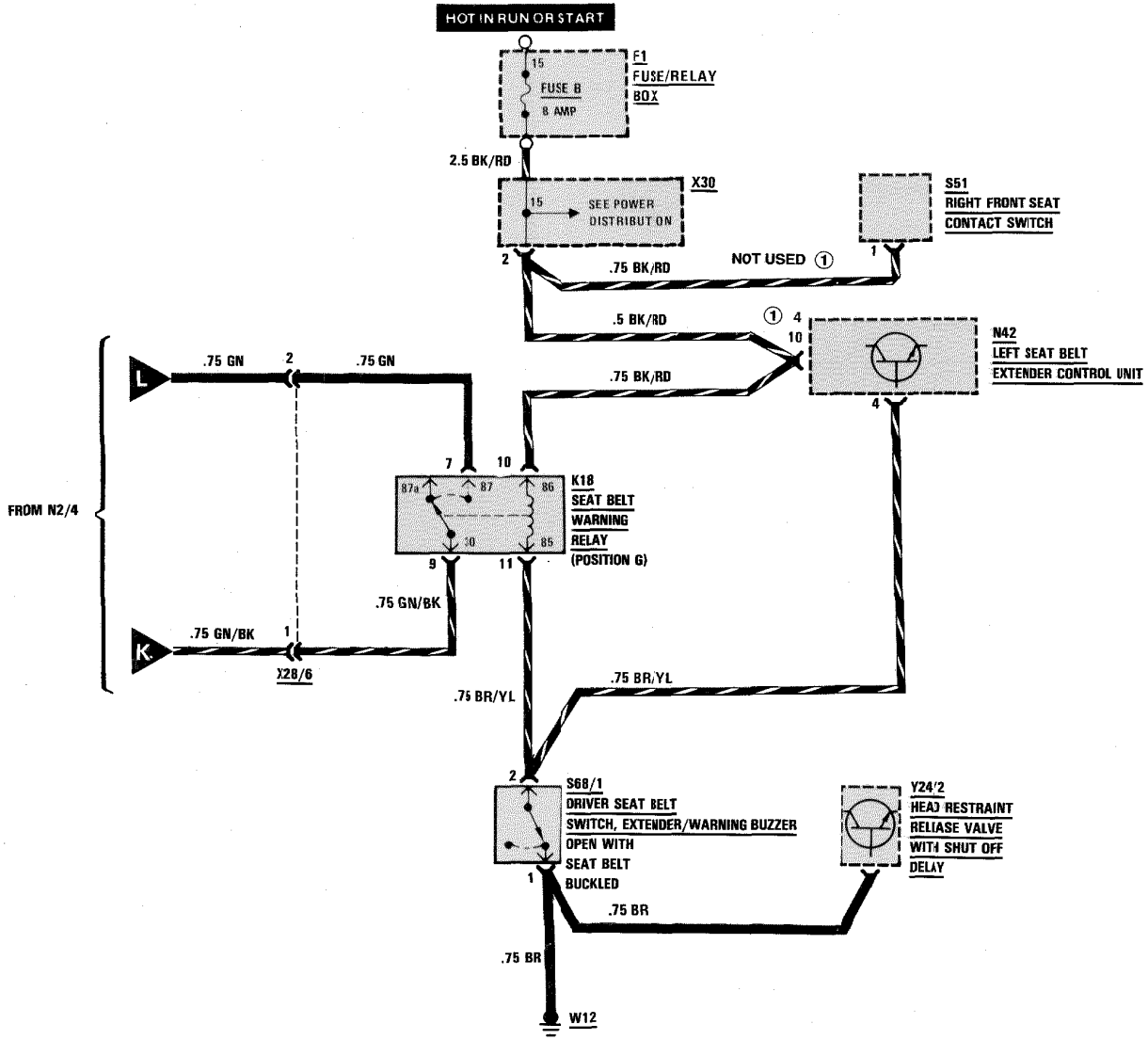

REVISIONS: ① AS OF MY 1991

WARNING SYSTEM

AS OF MY 1990

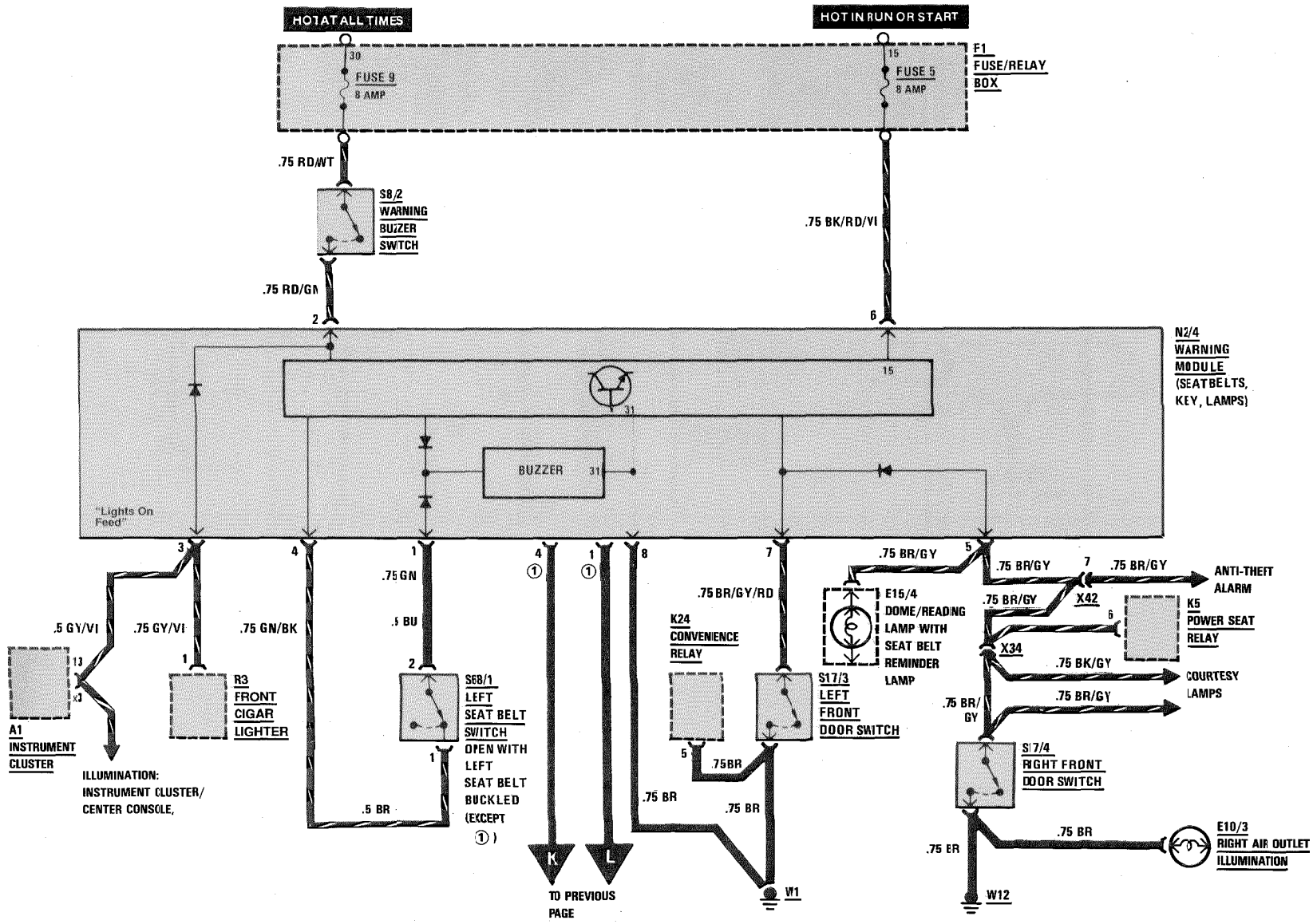

REVISIONS: ① 300 CE

WARNING INDICATORS/GAUGES/CLOCK/TACHOMETER

AS OF MY 1986

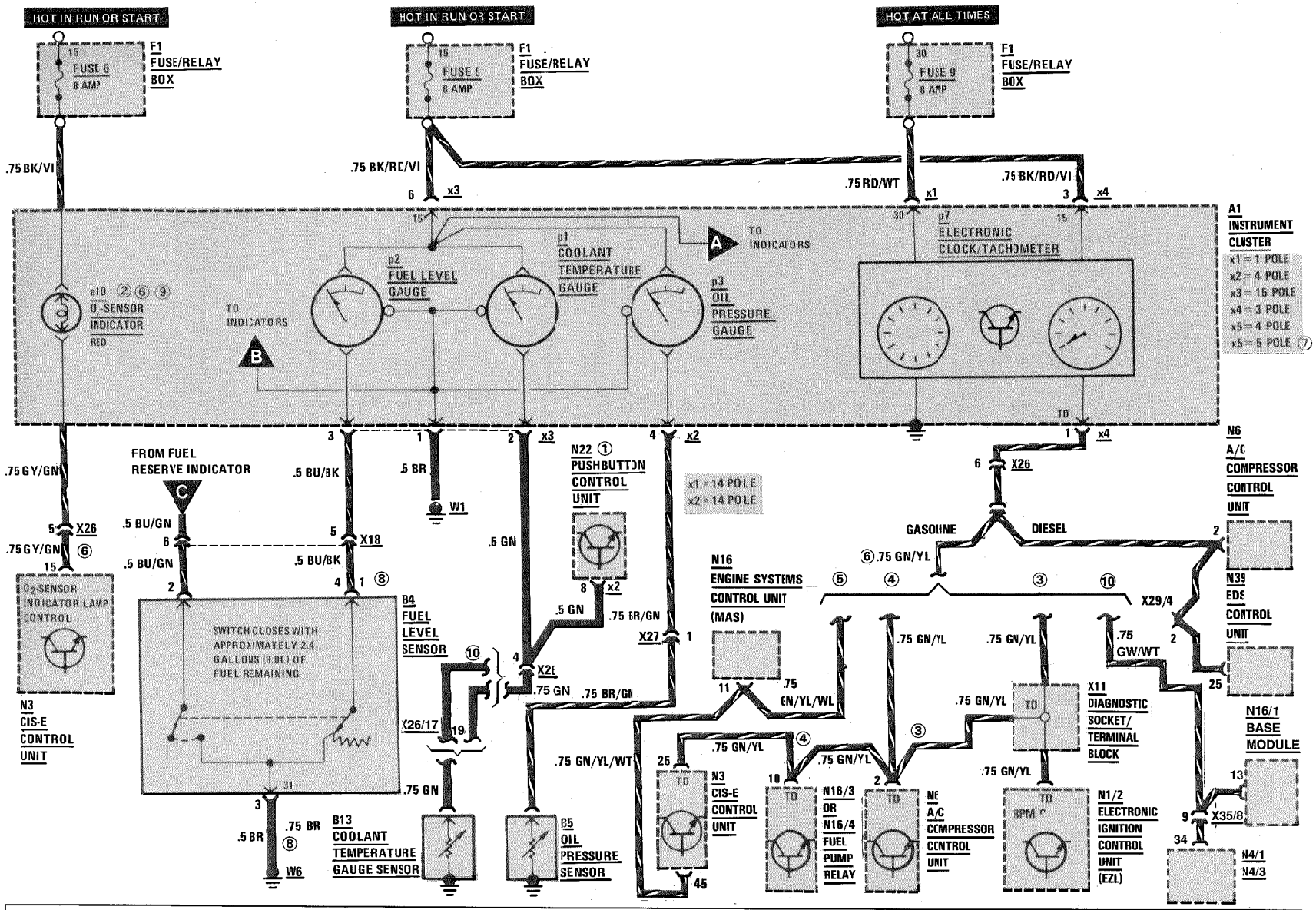

REVISIONS:
① MY 1986 AND MY 1987 ONLY
② AS OF MY 1988 "CHECK ENGINE" INDICATOR
③ MY 1986-1988
④ MY 1989
⑤ AS OF MY 1990
⑥ NOT USED IN DIESELS
⑦ AS OF MY 1988
⑧ STATION WAGON ONLY, AS OF MY 1990
⑨ AS OF MY 1992, CALIFORNIA ONLY (CHECK ENGINE)
⑩ MODELS 400E/500E

WARNING INDICATORS/GAUGES

AS OF MY 1986

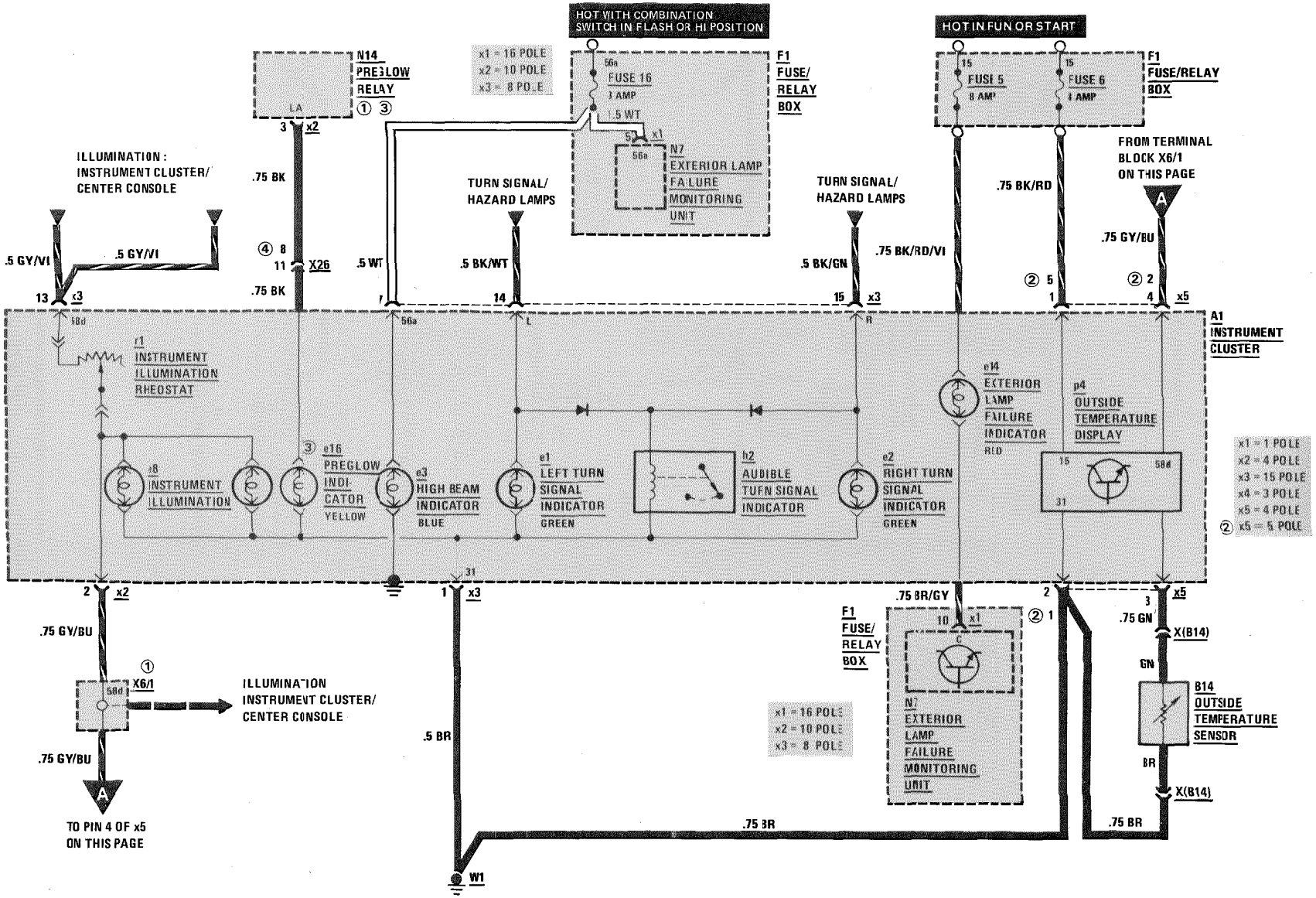

REVISIONS:
① X6 BEFORE JANUARY 1986
② AS OF MY MODEL YEAR 1988
③ DIESEL MODELS ONLY
④ AS OF MY 1990

WARNING INDICATORS

AS OF MY 1986

GASOLINE

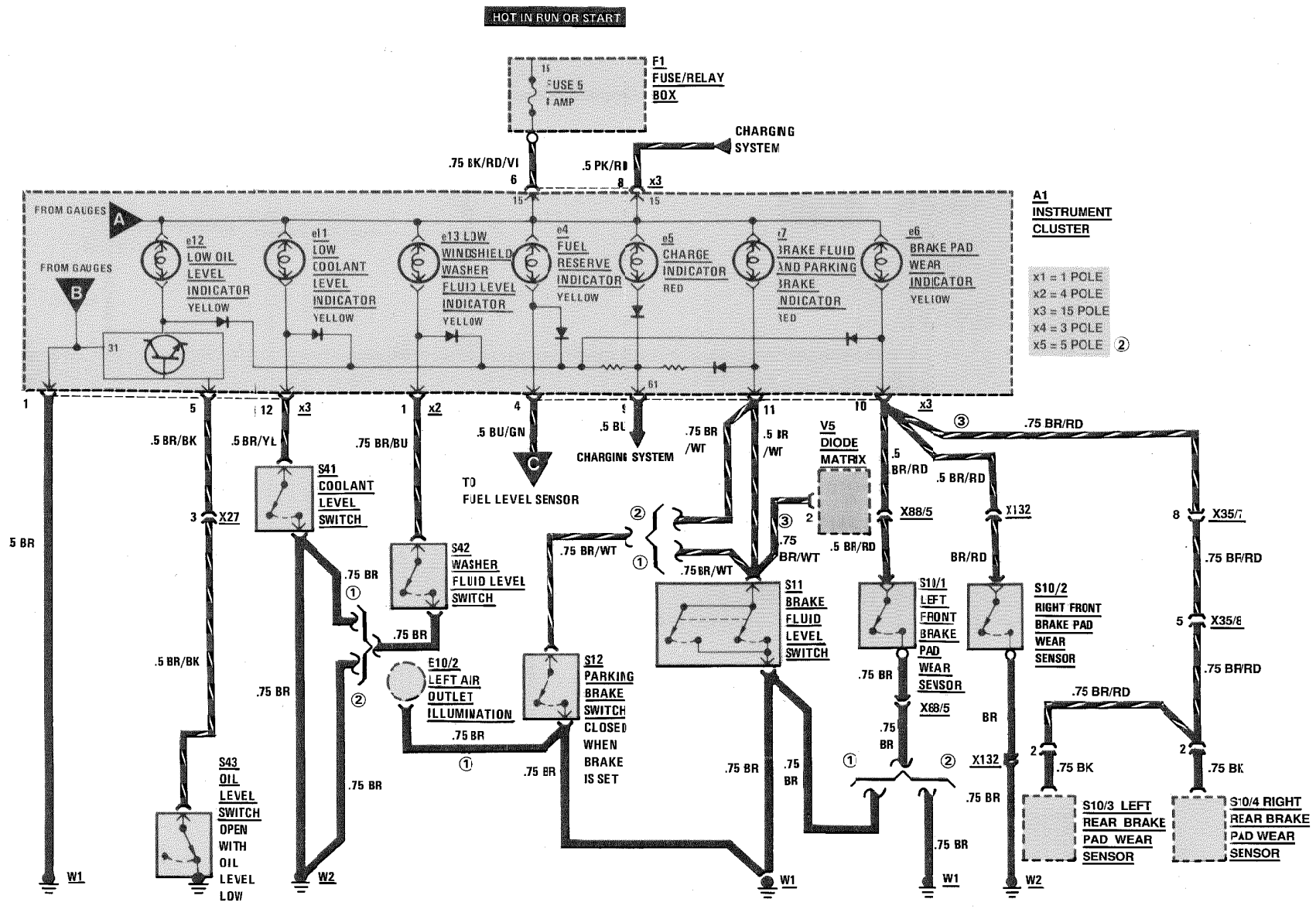

REVISIONS:
① MY 1986 AND MY 1987
② AS OF MY 1988
③ MODEL 500E

WARNING INDICATORS

MY 1986
DIESEL

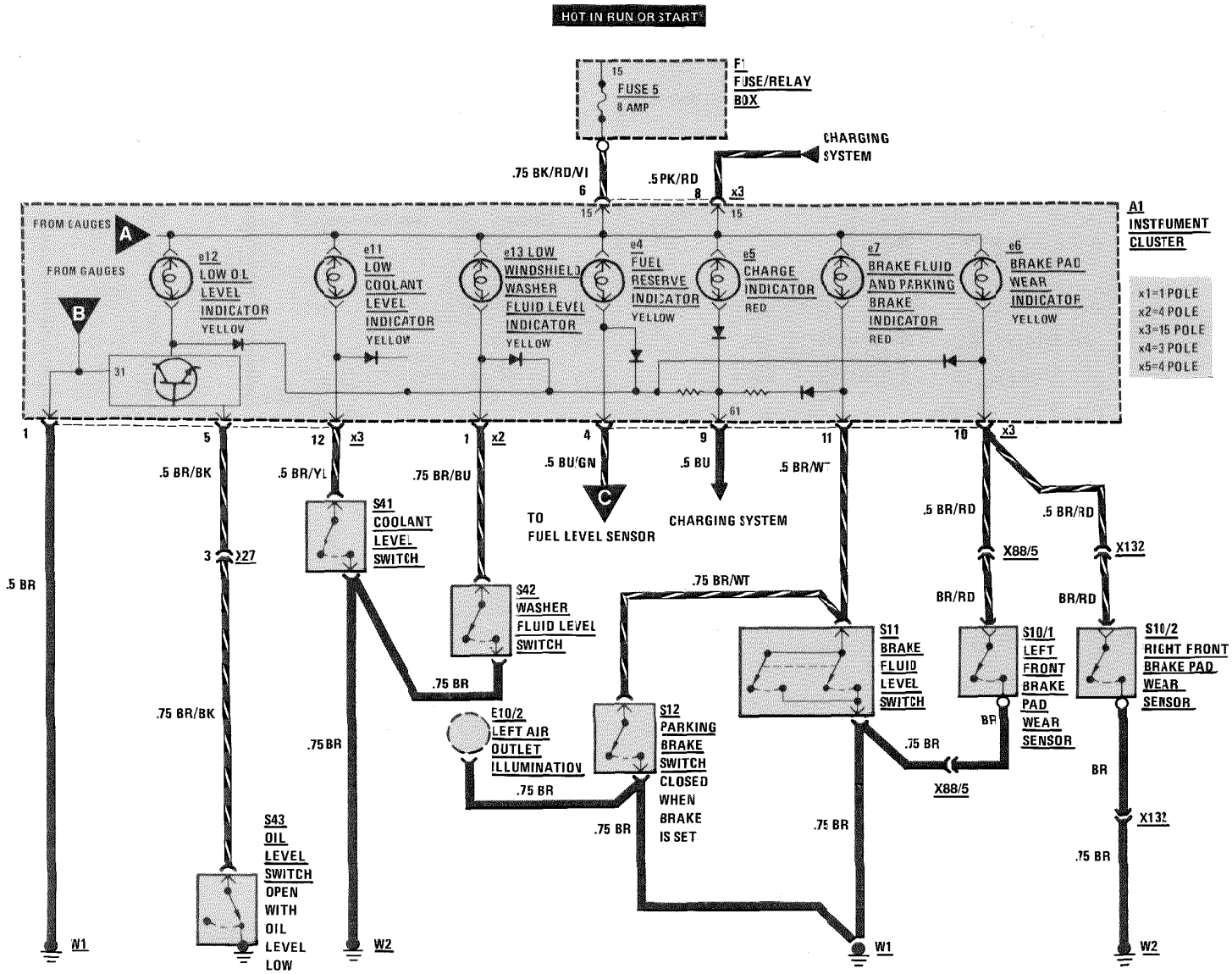

REVISIONS:

WARNING INDICATORS

MY 1987
DIESEL

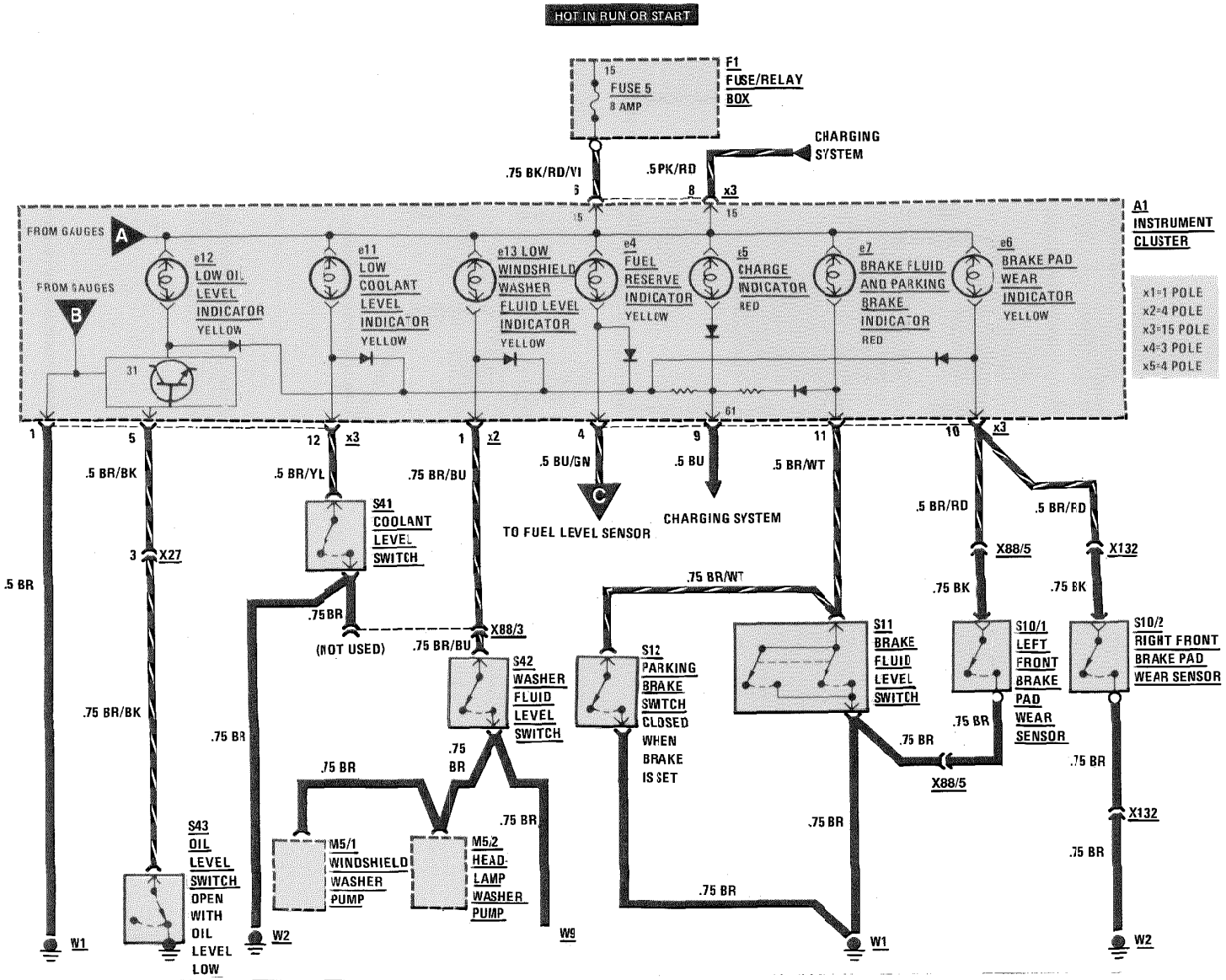

REVISIONS:

WARNING INDICATORS

AS OF MY 1990

DIESEL

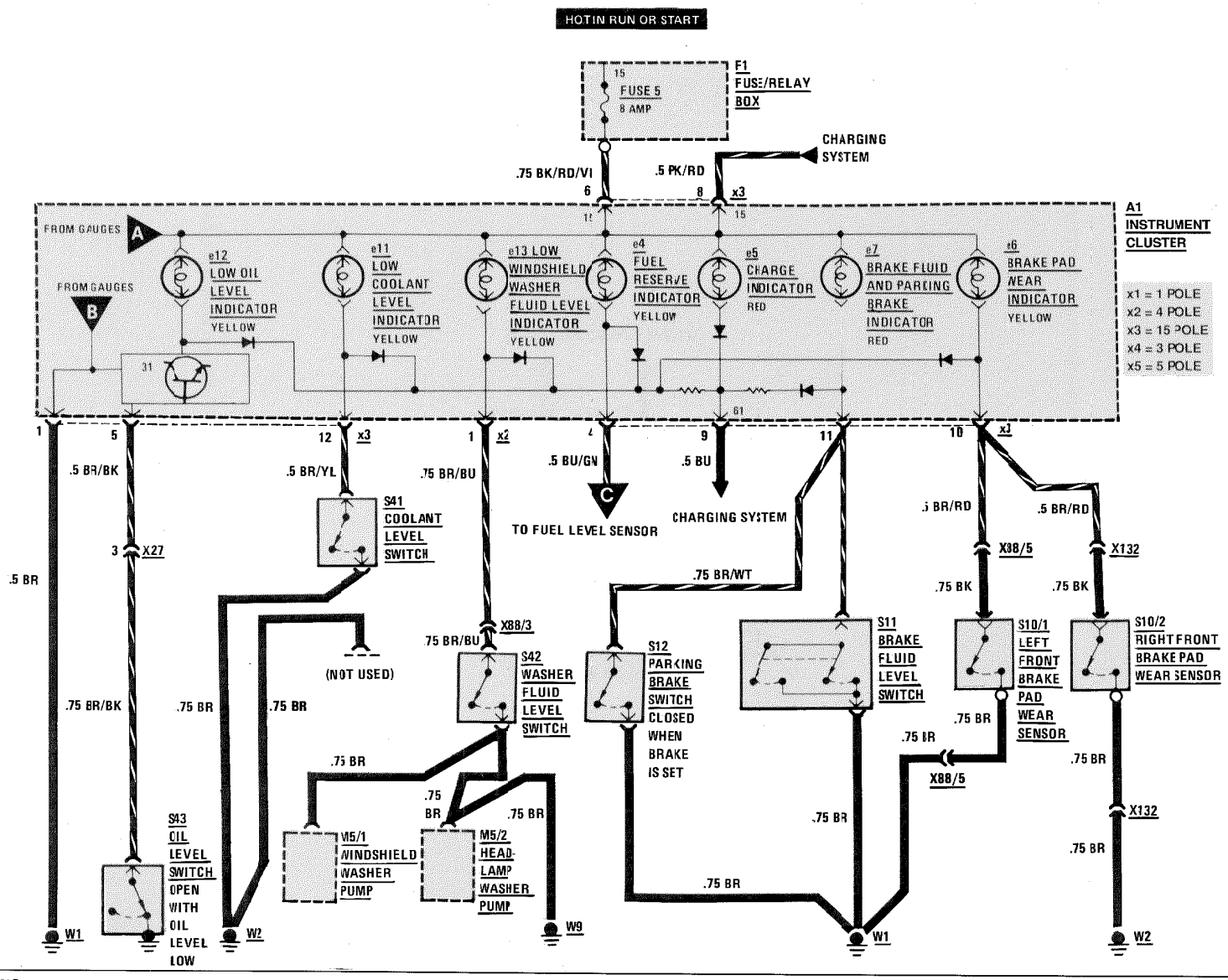

REVISIONS:

WARNING INDICATORS

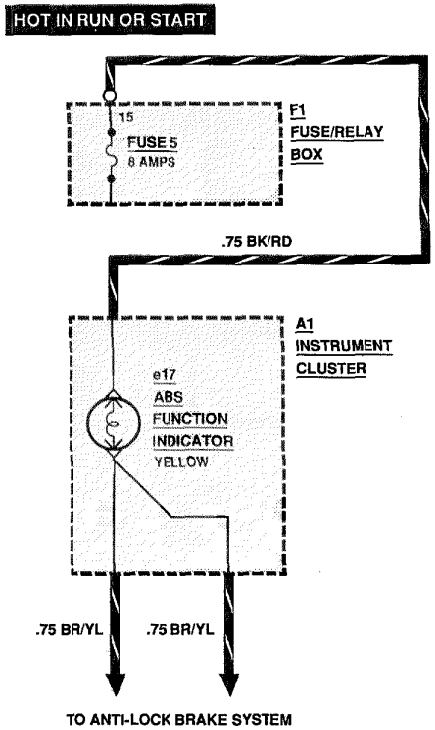

REVISIONS:

WARNING INDICATORS

AS OF MY 1991

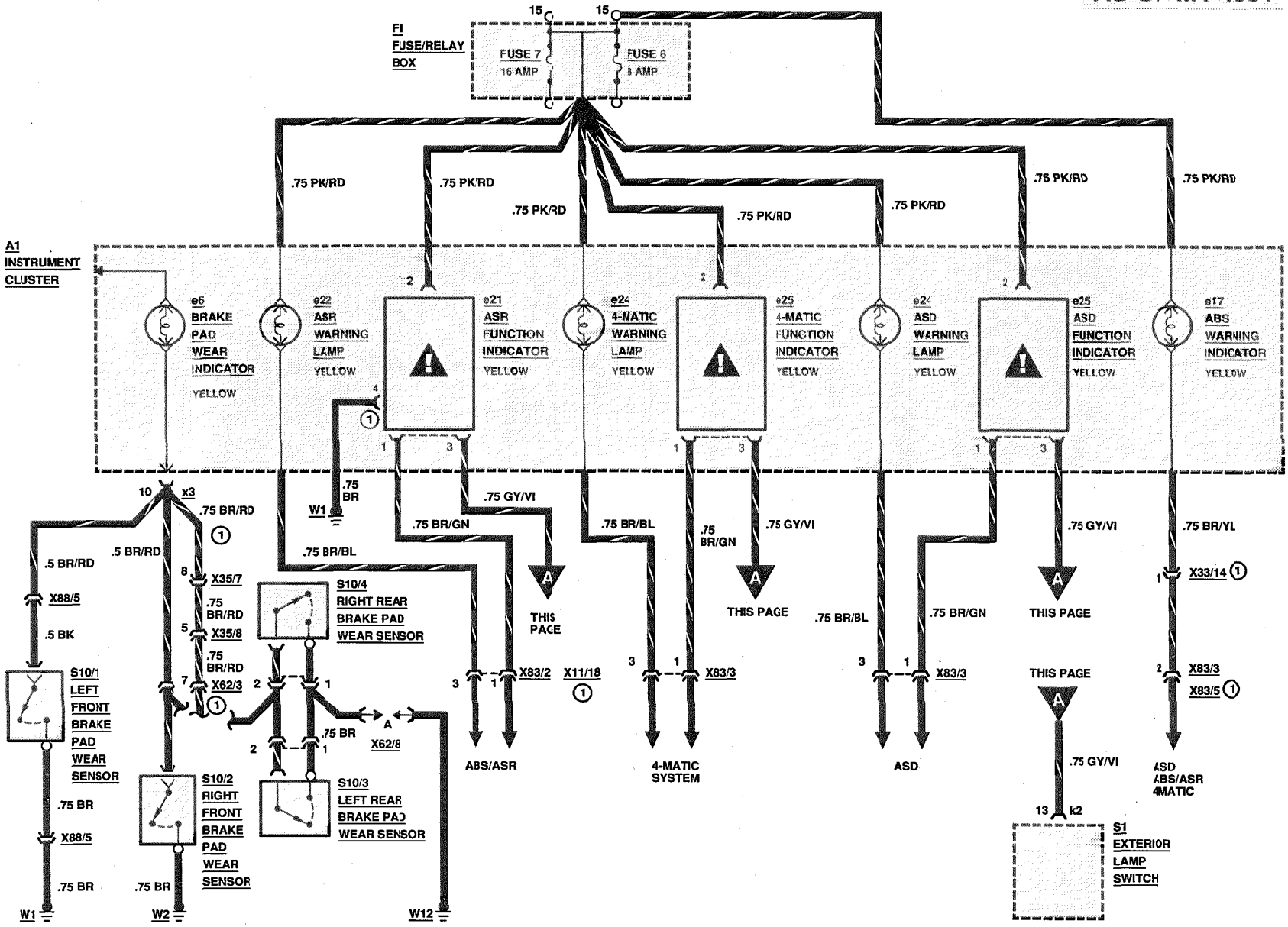

REVISIONS: (1) MODELS 400E/500E

GAUGES/SPEED SIGNAL

AS OF MY 1992
400E/500E

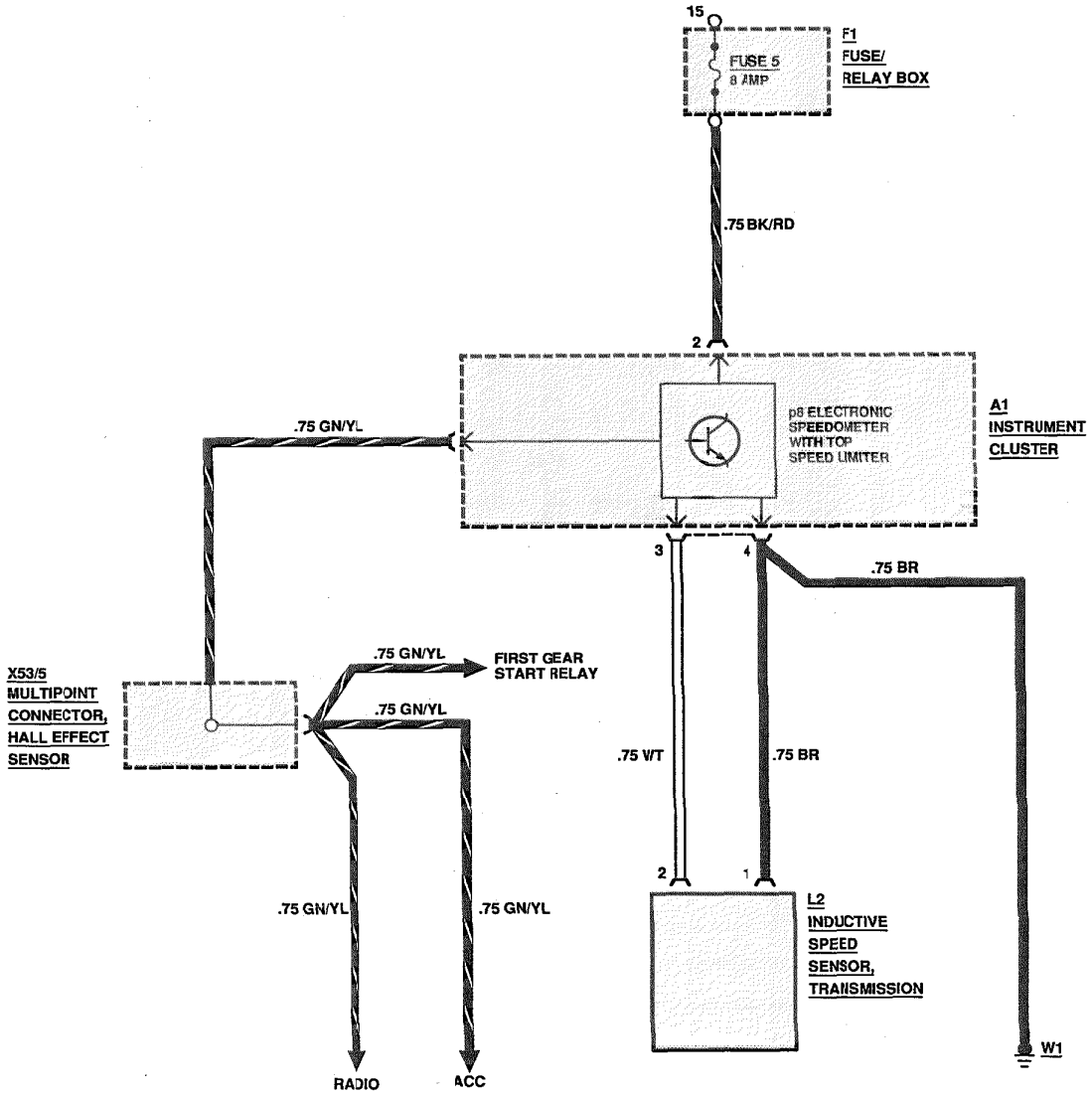

REVISIONS: (1) MODEL 400E

CRUISE CONTROL (WITH AUTOMATIC TRANSMISSION) ③

AS OF MY 1986
GASOLINE

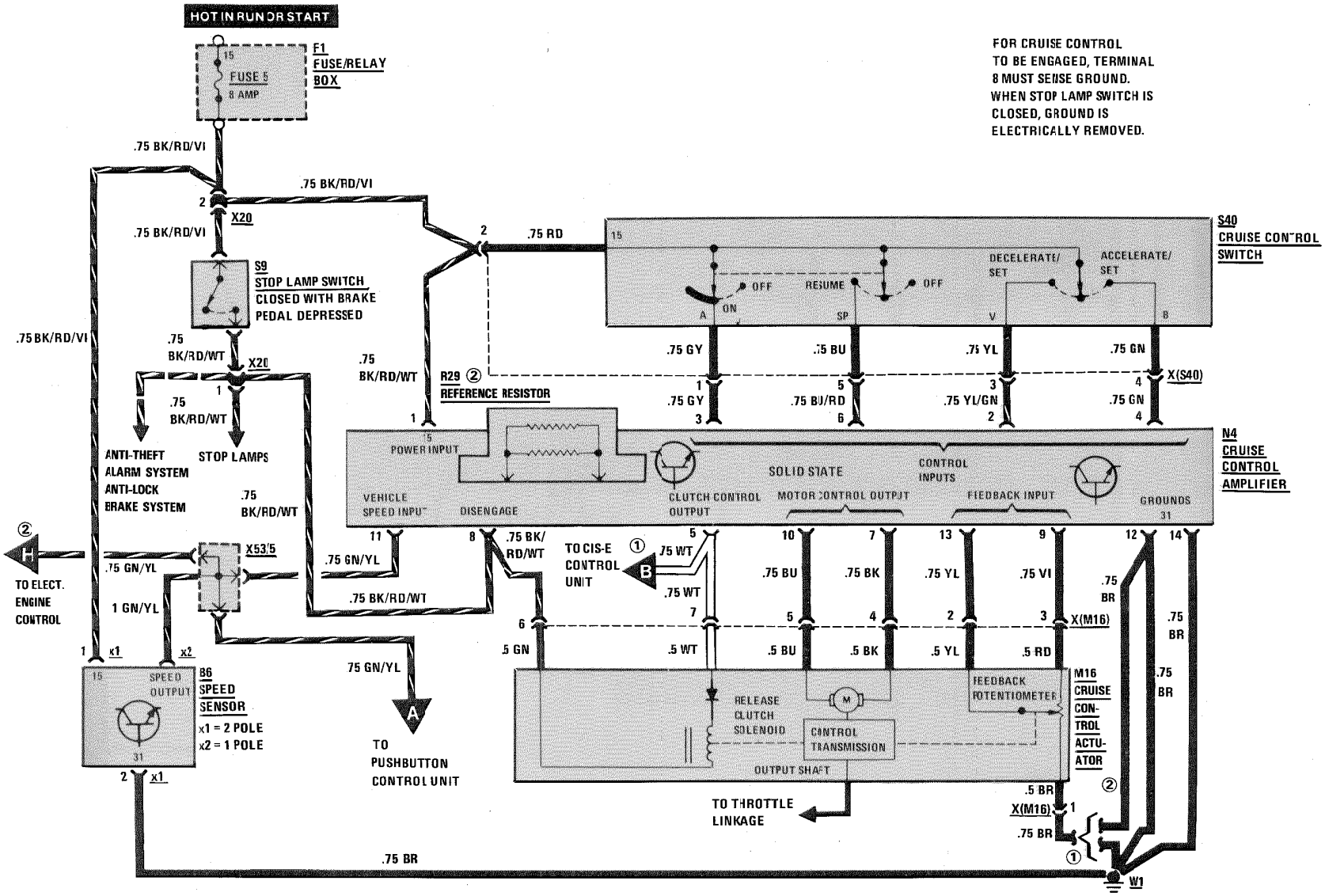

REVISIONS: ① MY 1986 AND MY 1987
② AS OF MY 1988
③ VEHICLES WITH ASR, SEE ELECTRONIC ACCELERATOR SYSTEM/CRUISE CONTROL

CRUISE CONTROL (WITH AUTOMATIC TRANSMISSION)

AS OF MY 1986
DIESEL

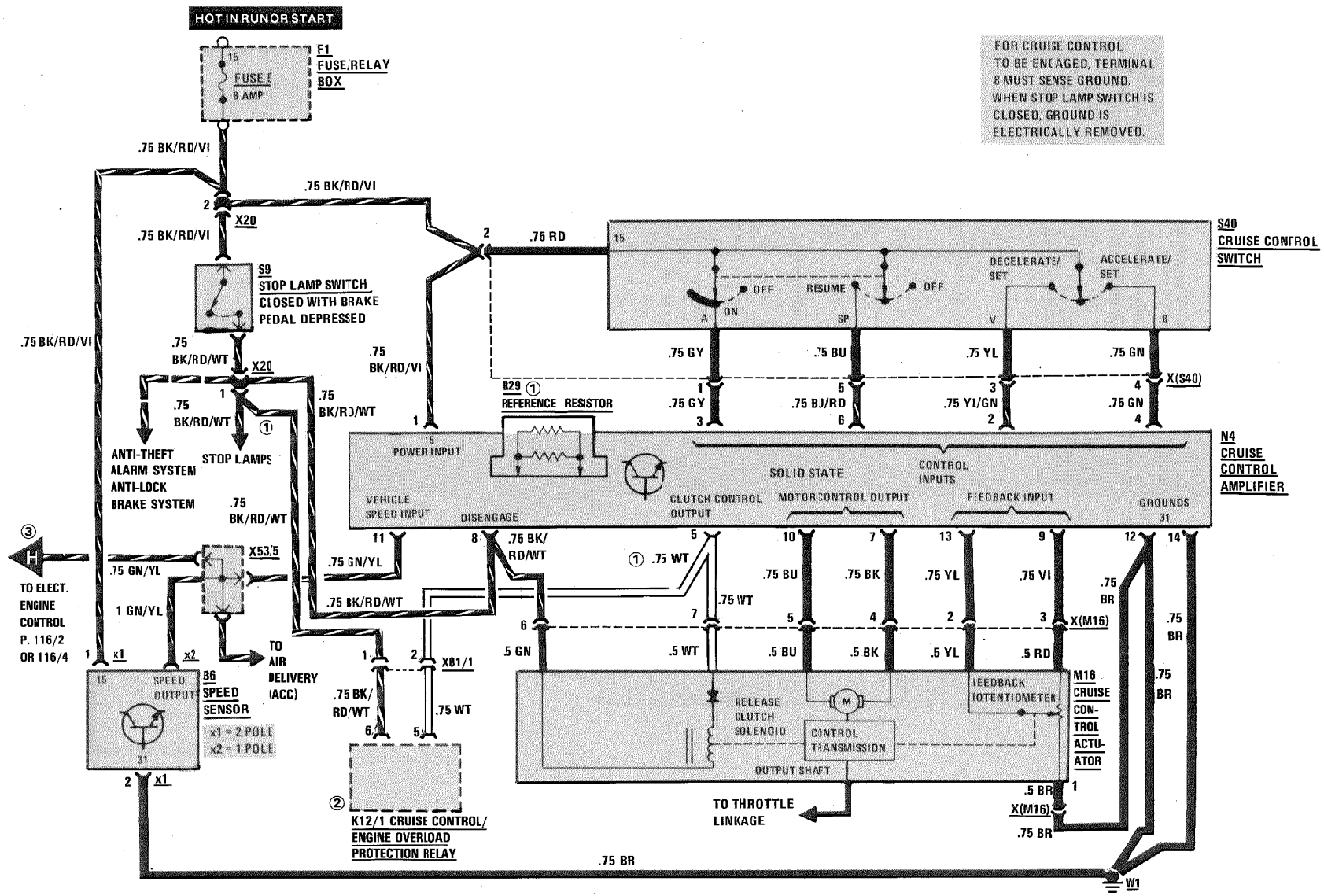

FOR CRUISE CONTROL TO BE ENGAGED, TERMINAL 8 MUST SENSE GROUND. WHEN STOP LAMP SWITCH IS CLOSED, GROUND IS ELECTRICALLY REMOVED.

REVISIONS: ① AS OF MY 1988
② AS OF MY 1990

CRUISE CONTROL (WITH MANUAL TRANSMISSION)

MY 1986-1989

260/300E

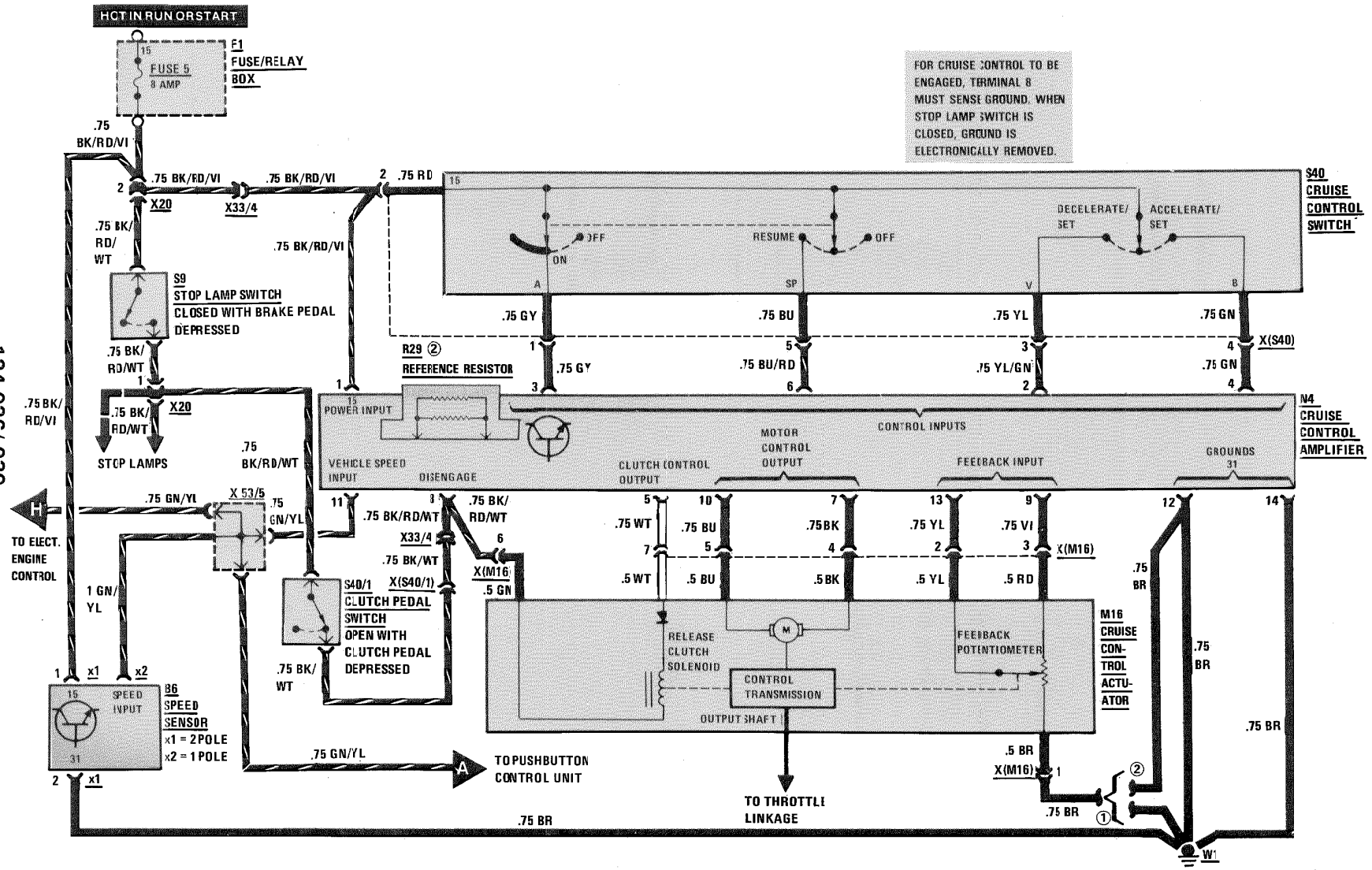

REVISIONS: ① MODEL YEARS 1986 AND 1987
② MODEL YEAR 1988 - 1989

CRUISE CONTROL

AS OF MY 1992

400E/500E

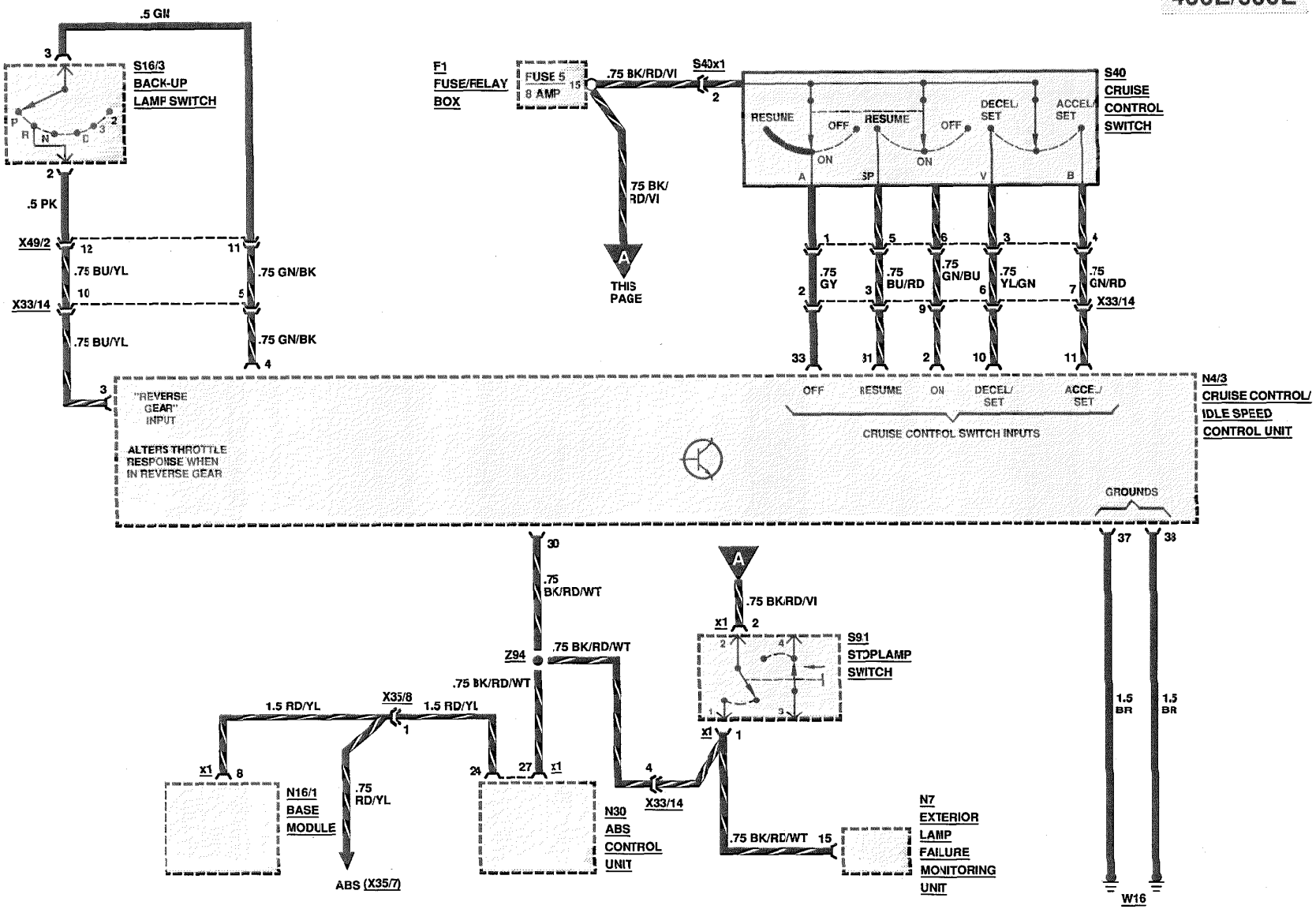

REVISIONS:

CRUISE CONTROL

AS OF MY 1992

400E/500E

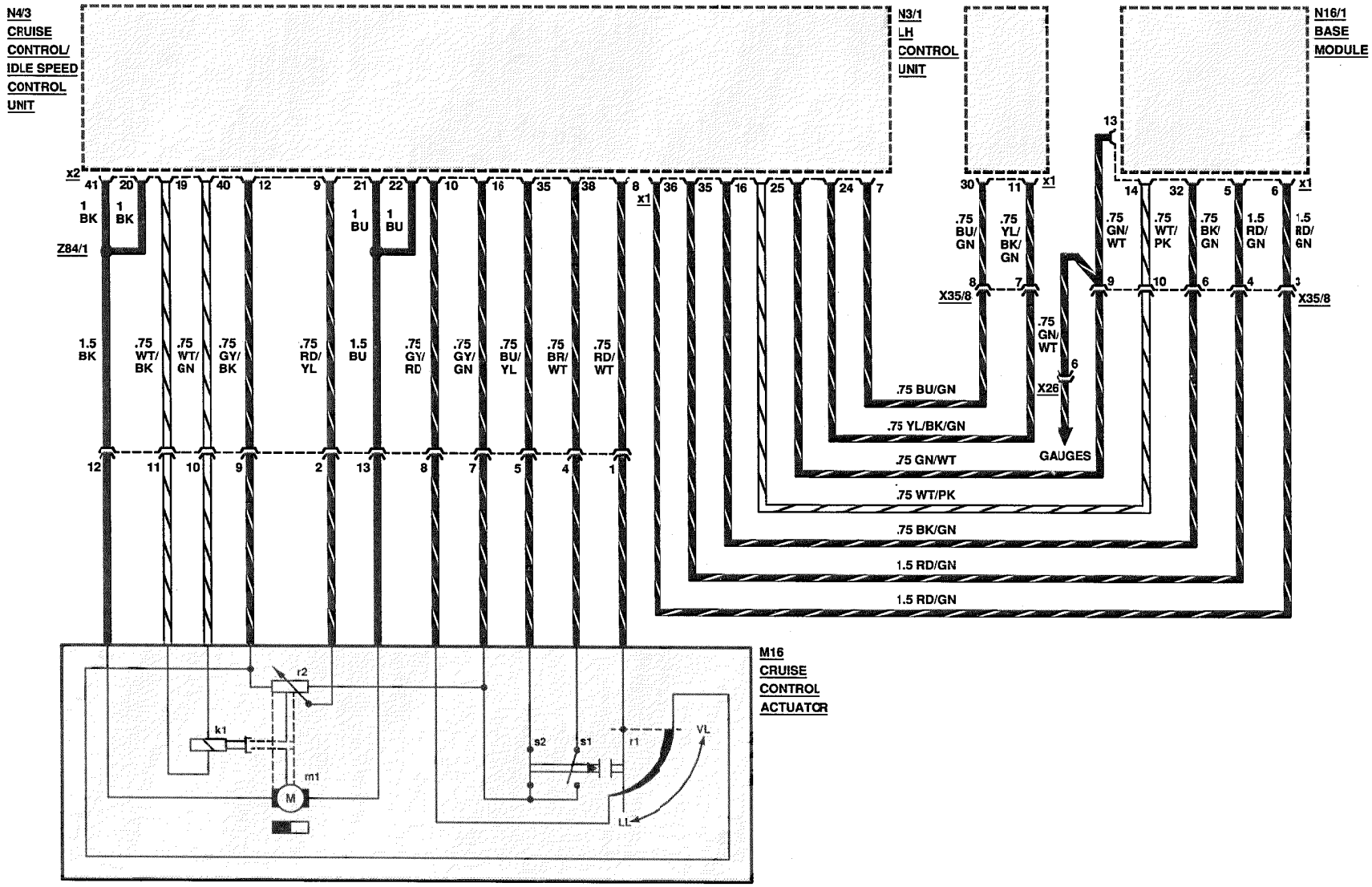

REVISIONS:

137/5

THIS PAGE INTENTIONALLY LEFT BLANK

REVISIONS:

ELECTRONIC ACCELERATOR SYSTEM

AS OF MY 1991

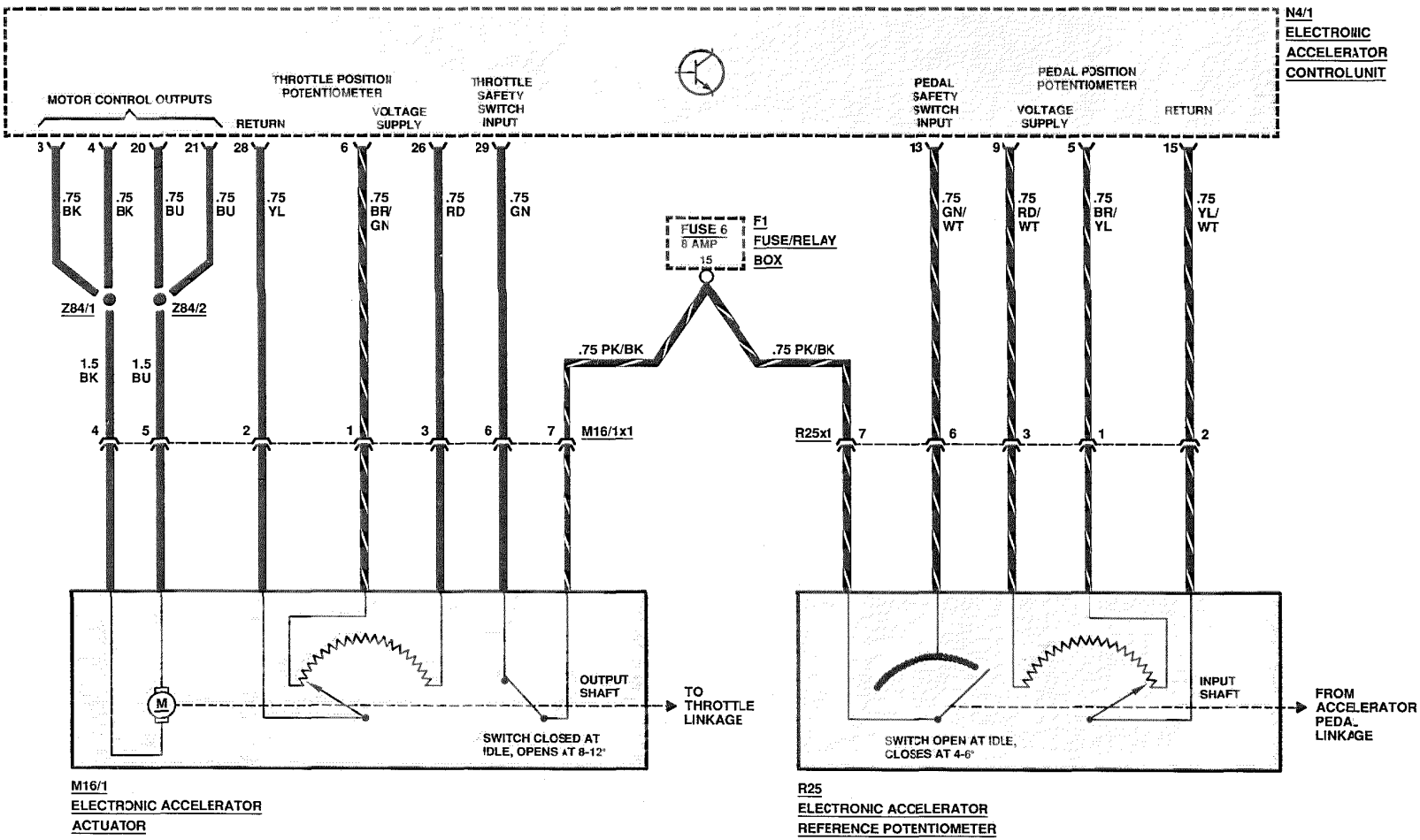

REVISIONS:

ELECTRONIC ACCELERATOR SYSTEM/CRUISE CONTROL

AS OF MY 1991

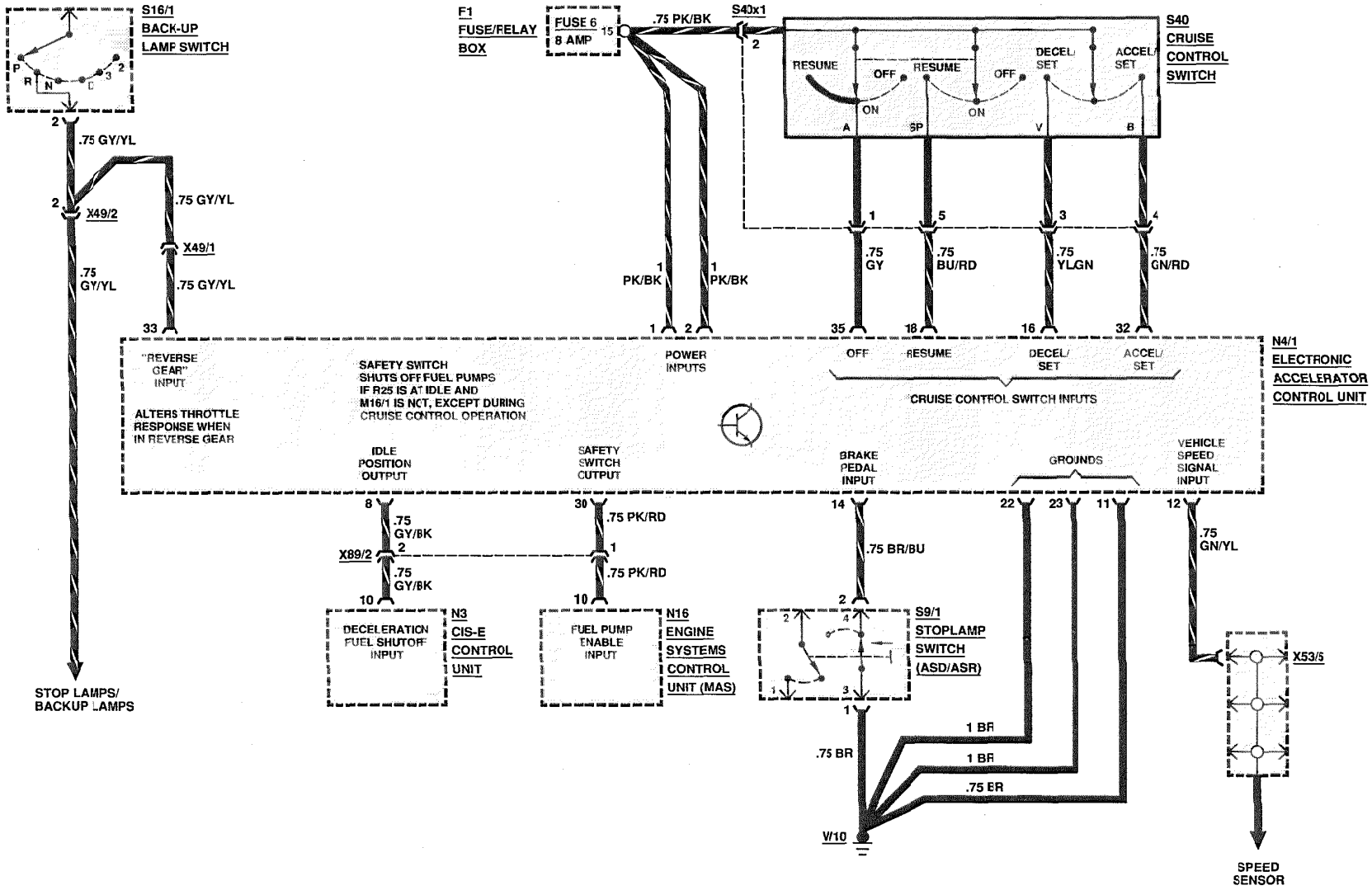

REVISIONS:

ELECTRONIC ACCELERATOR SYSTEM/CRUISE CONTROL

AS OF MY 1992

400E/500E

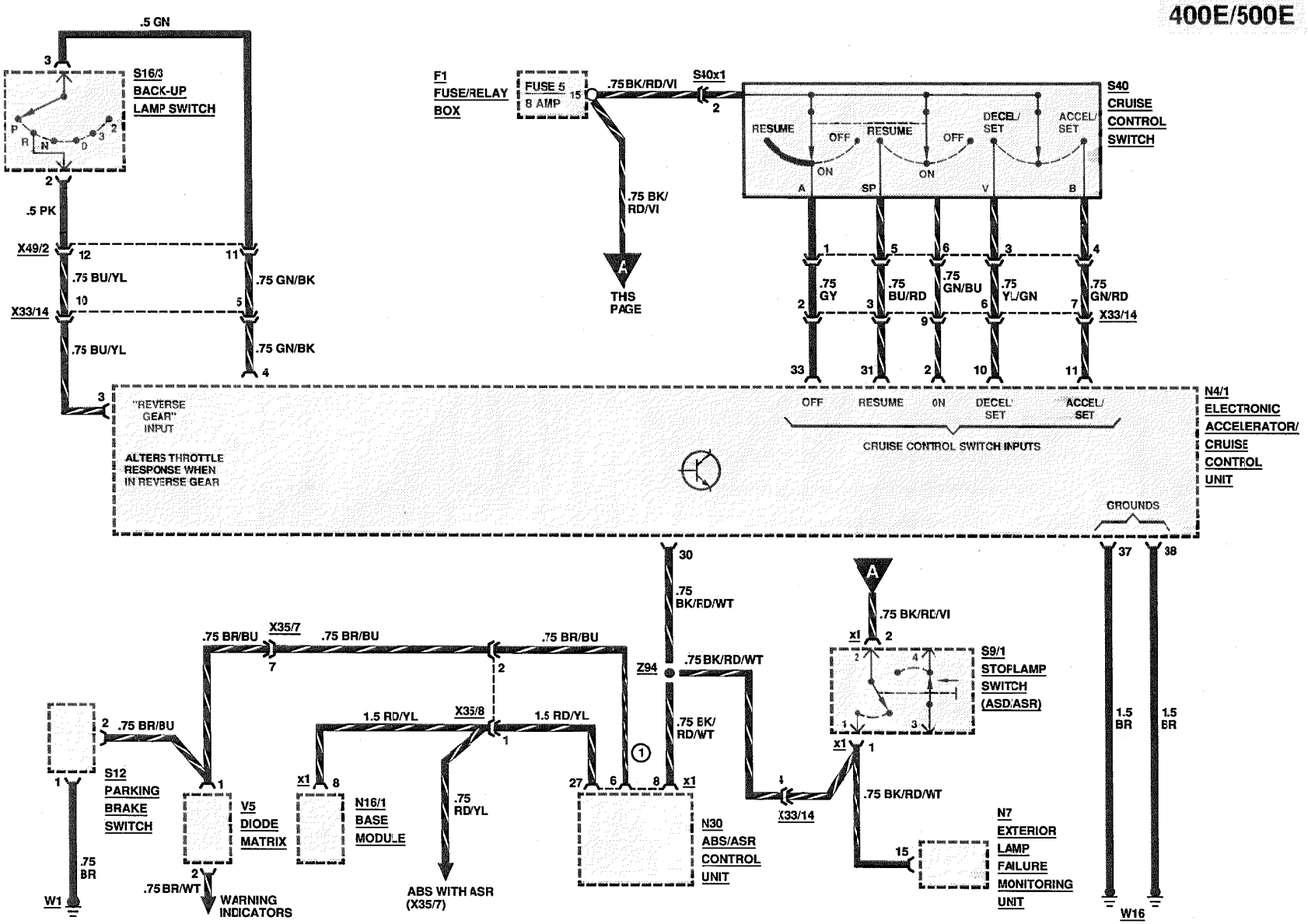

REVISIONS: (1) MODEL 500E

ELECTRONIC ACCELERATOR SYSTEM

AS OF MY 1992

400E/500E

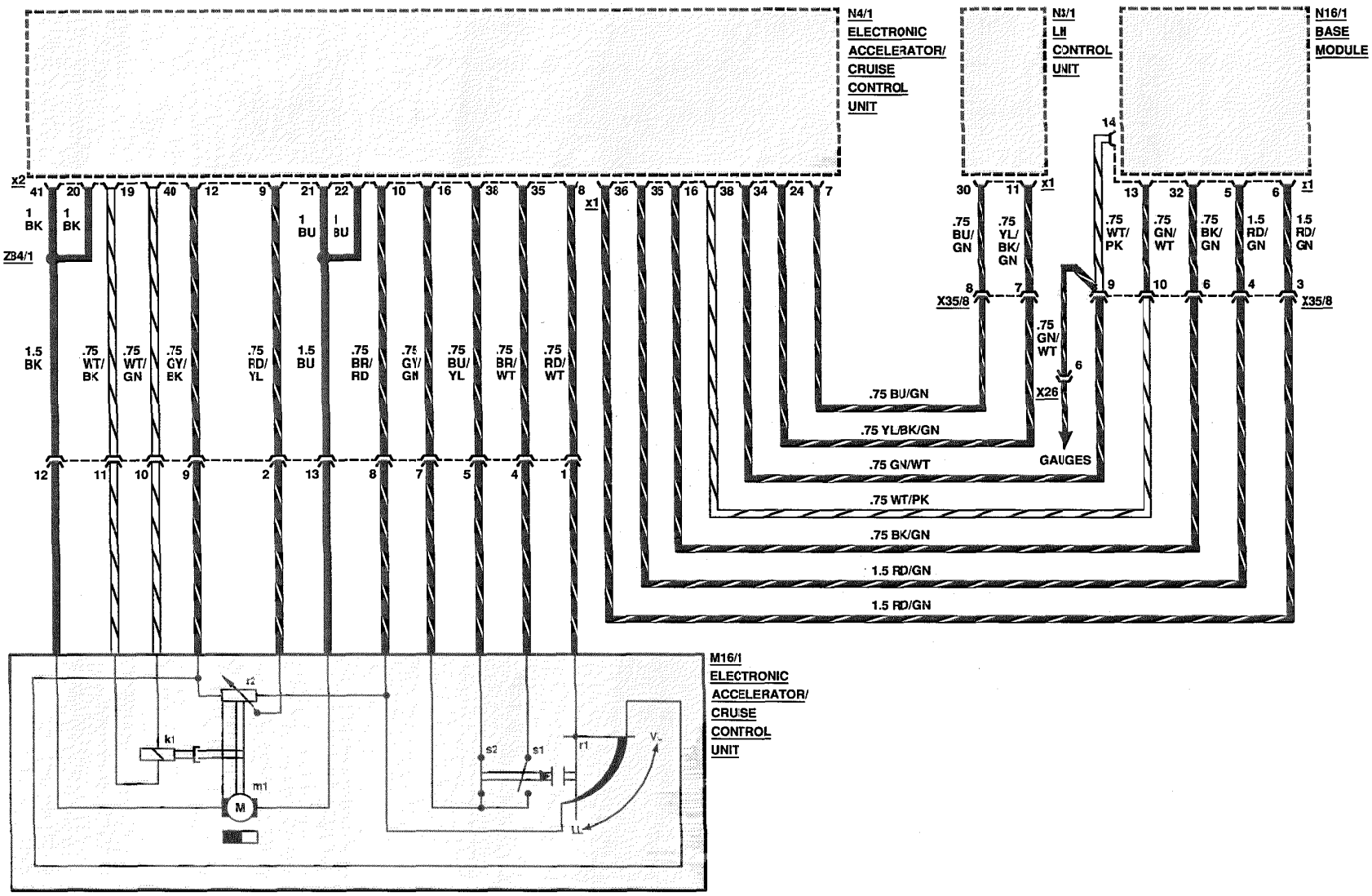

REVISIONS:

REAR HEAD RESTRAINT SYSTEM

AS OF MY 1986

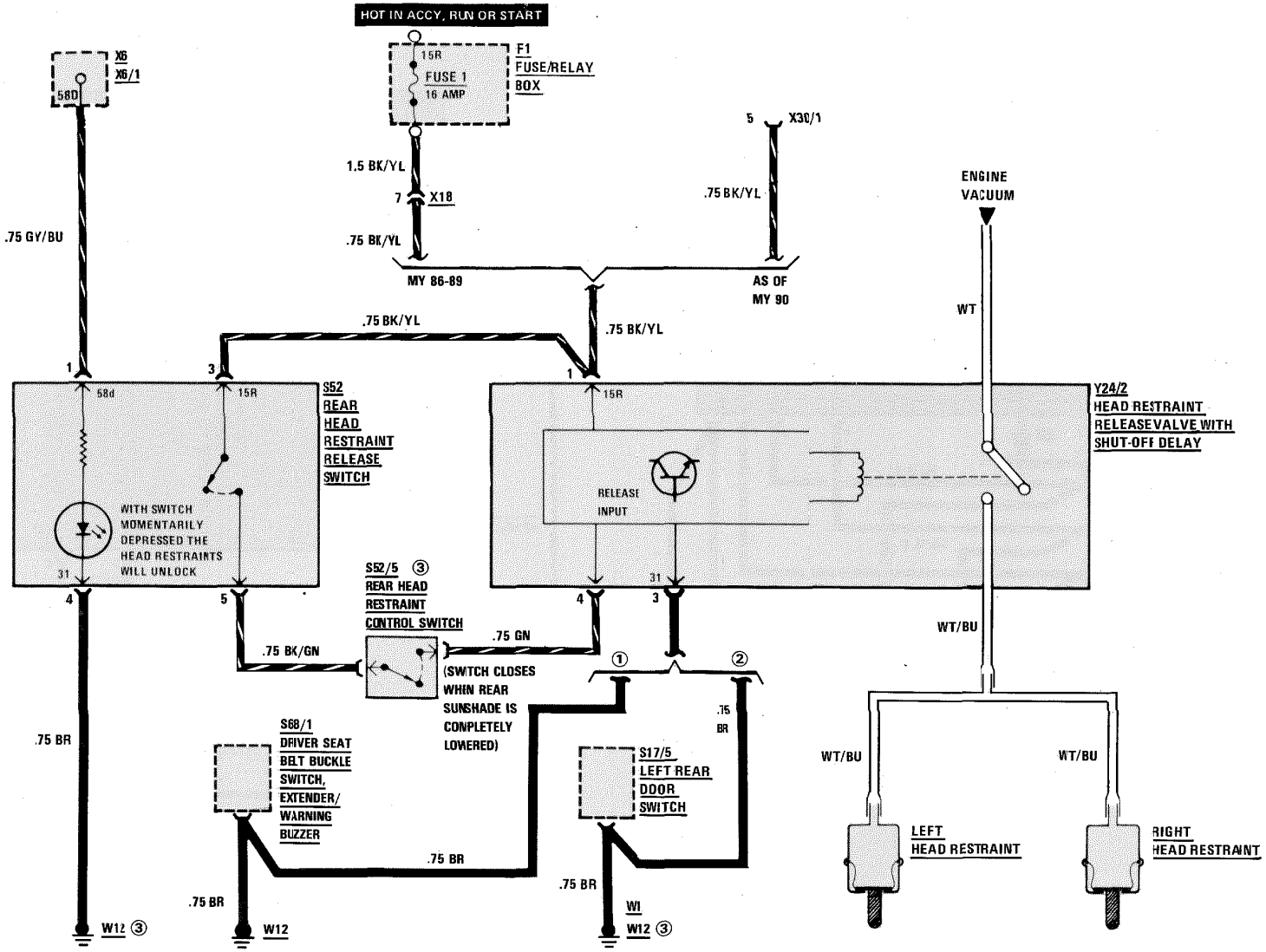

REVISIONS: ① 300 CE (124.050)
② 260 E/300 E (124.026/.030)
③ AS OF 10/1989 PRODUCTION WITH SUNSHADE

SLIDING ROOF

MODEL YEARS 1986-1989

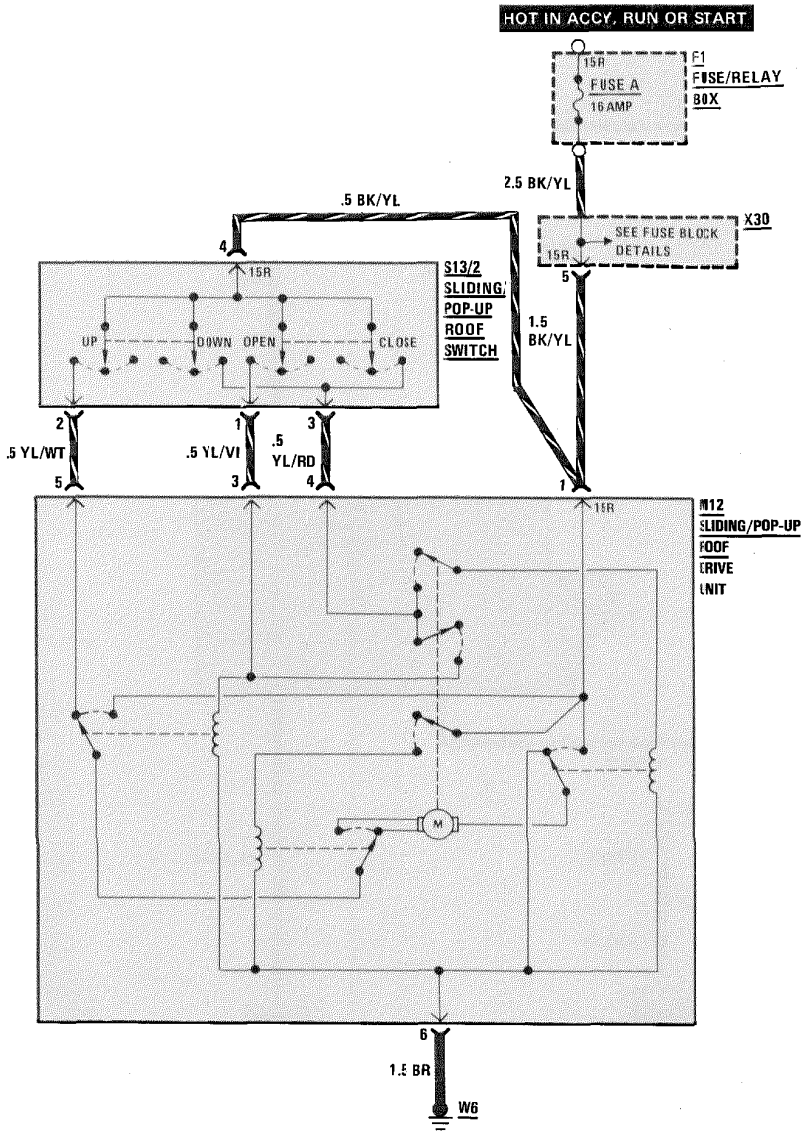

AS OF MODEL YEAR 1990

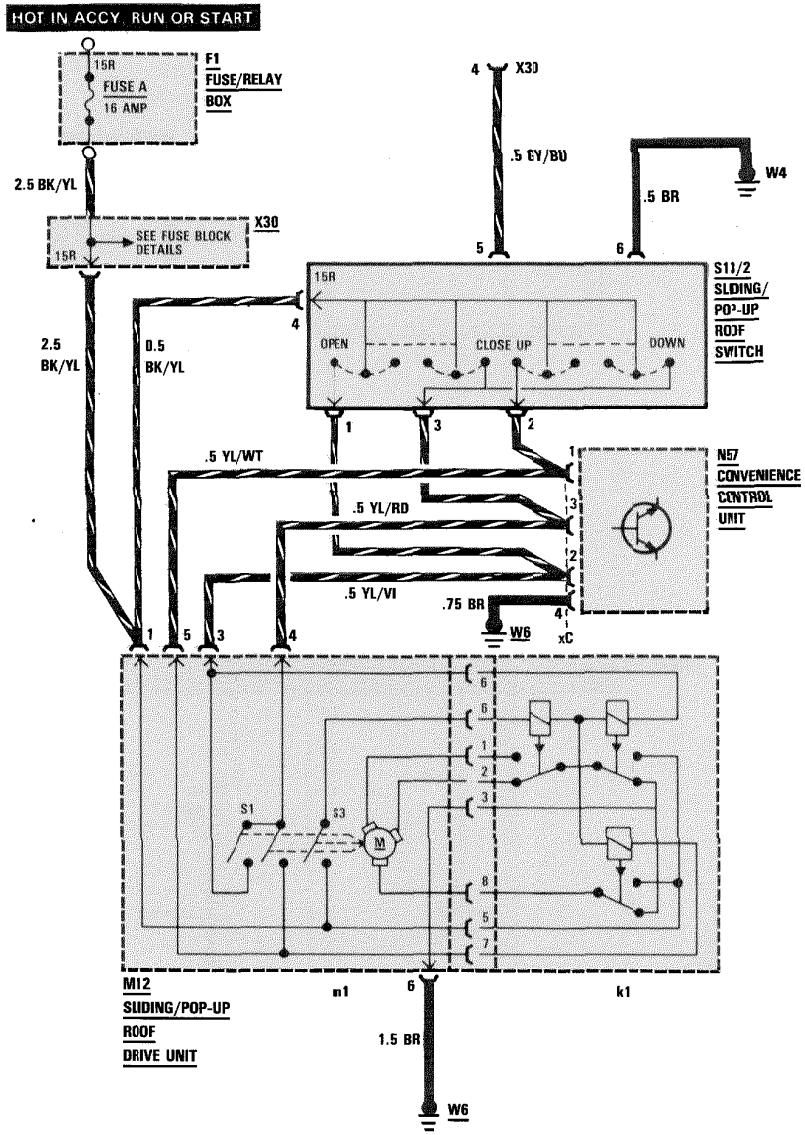

REVISIONS:

REAR DEFOGGER

AS OF MY 1986

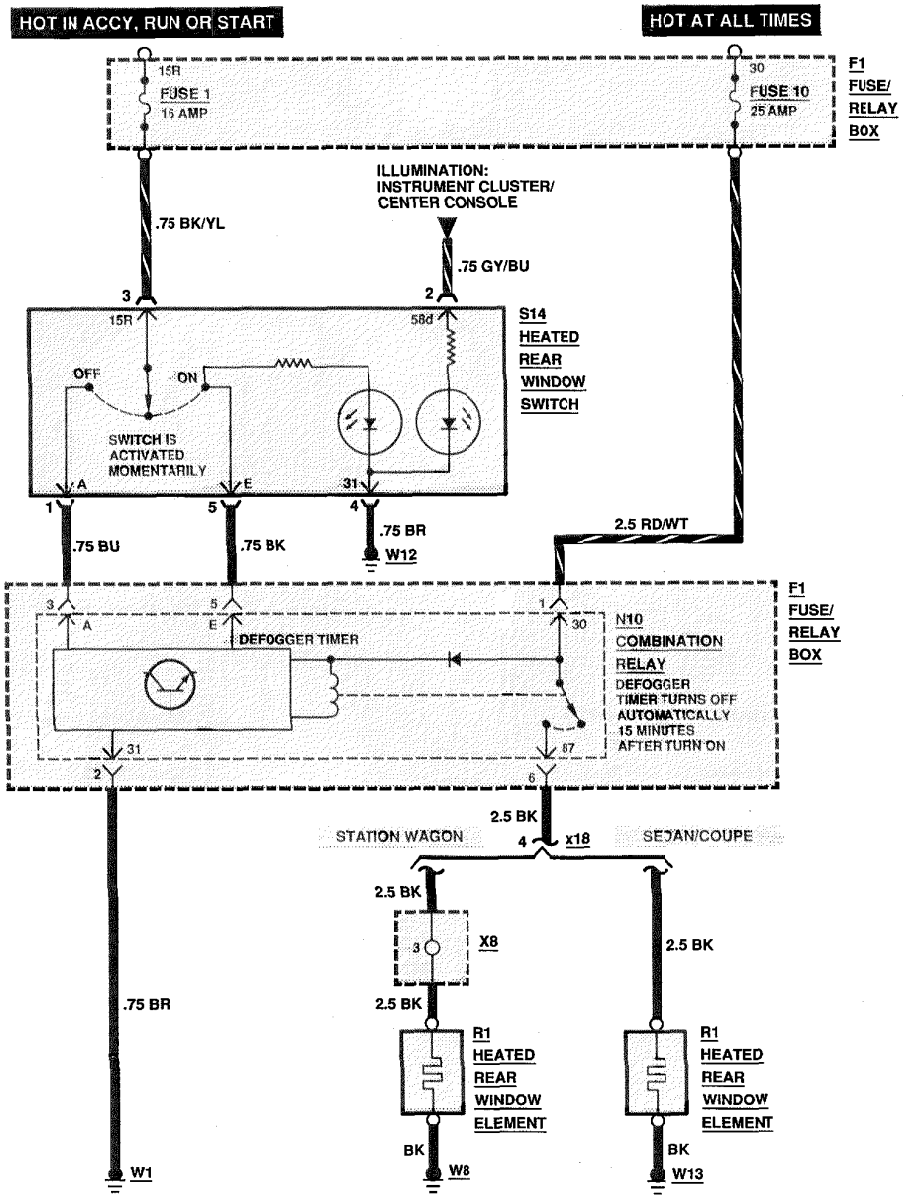

REVISIONS:

HEATED SEATS

UP TO APRIL 1987 PRODUCTION

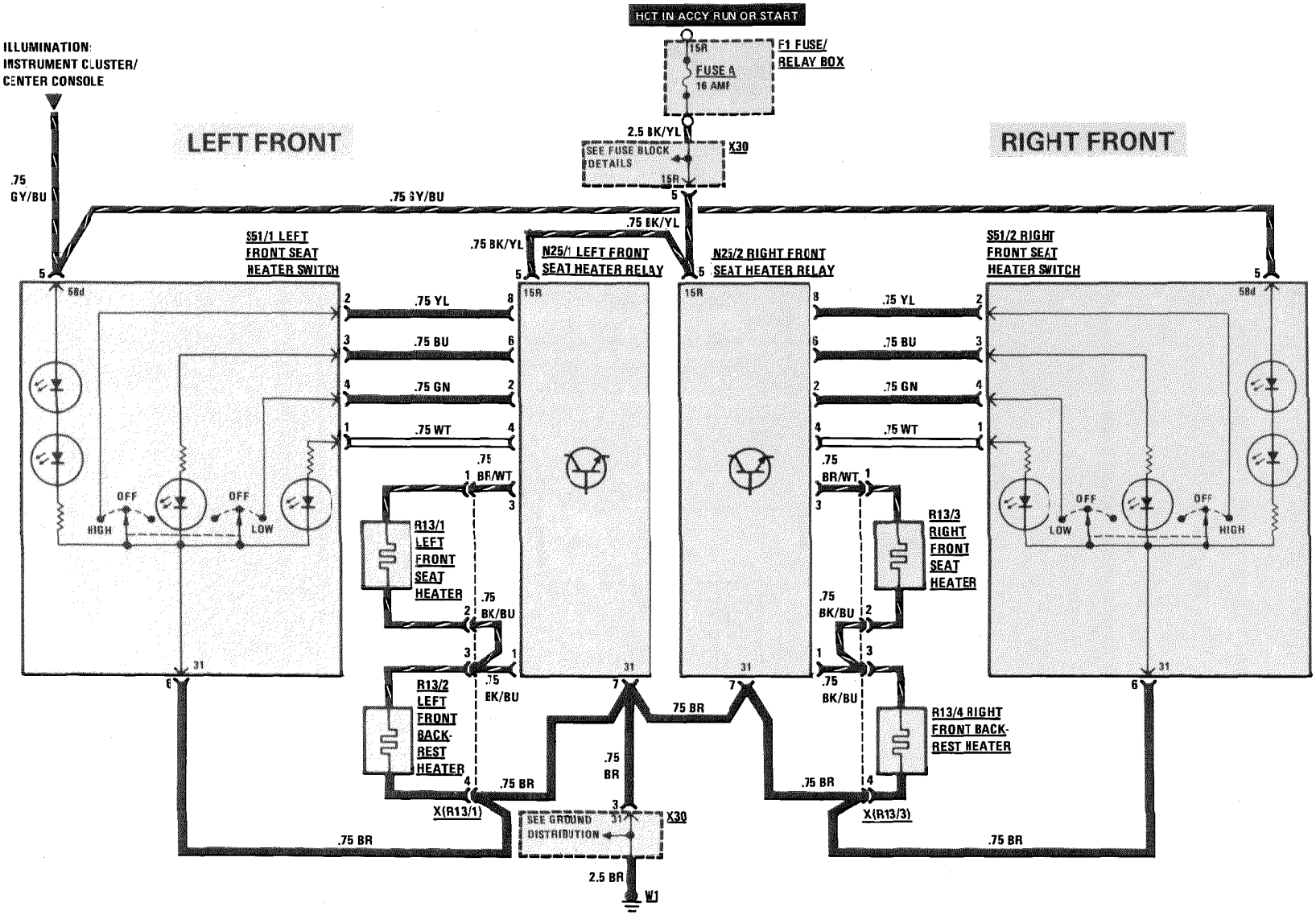

REVISIONS:

HEATED SEATS

4/1987 PRODUCTION TO MY 1990

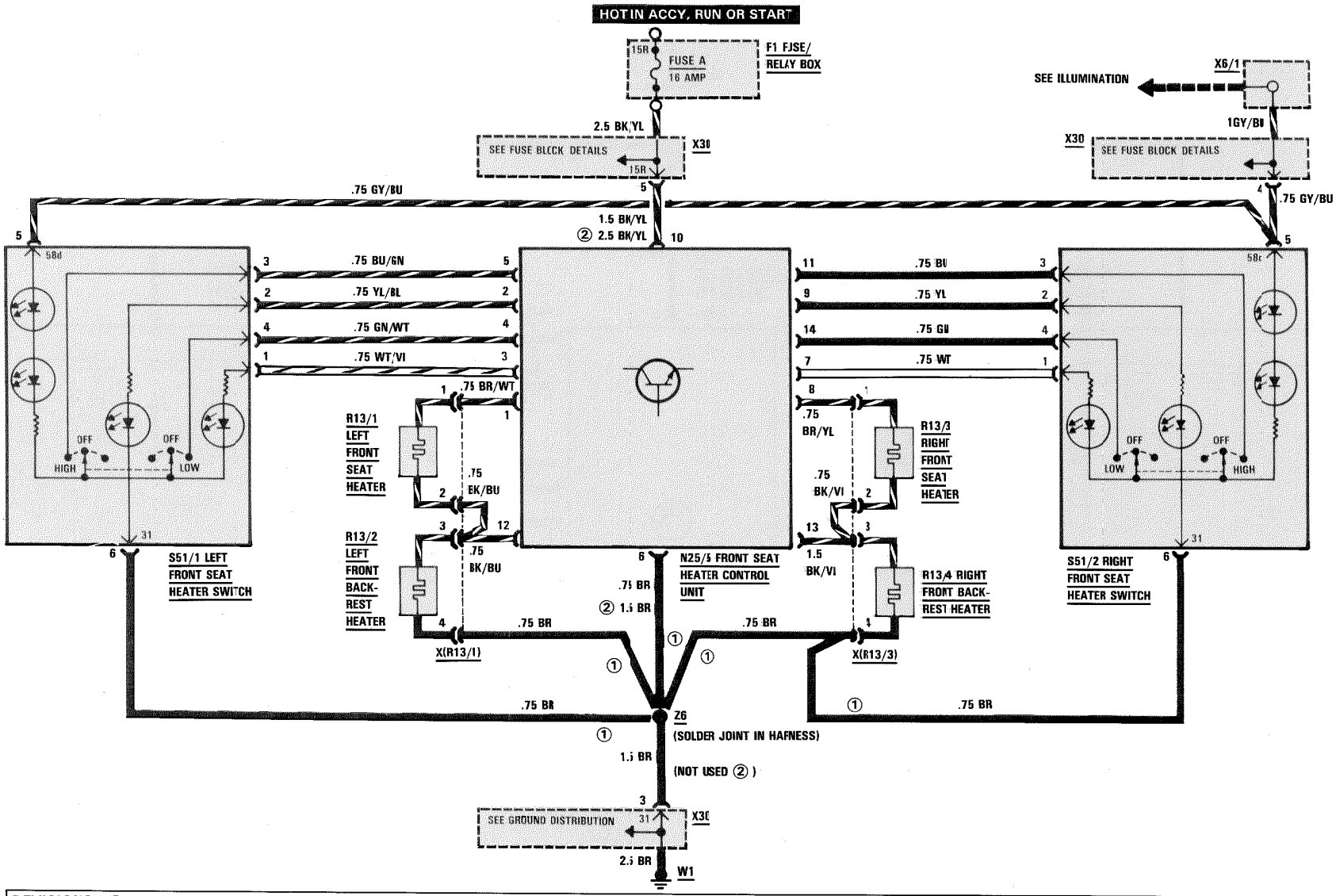

REVISIONS: ① AS OF MY 1989, GROUNDED DIRECTLY TO W12
② AS OF MY 1989

HEATED SEATS

AS OF MY 1991

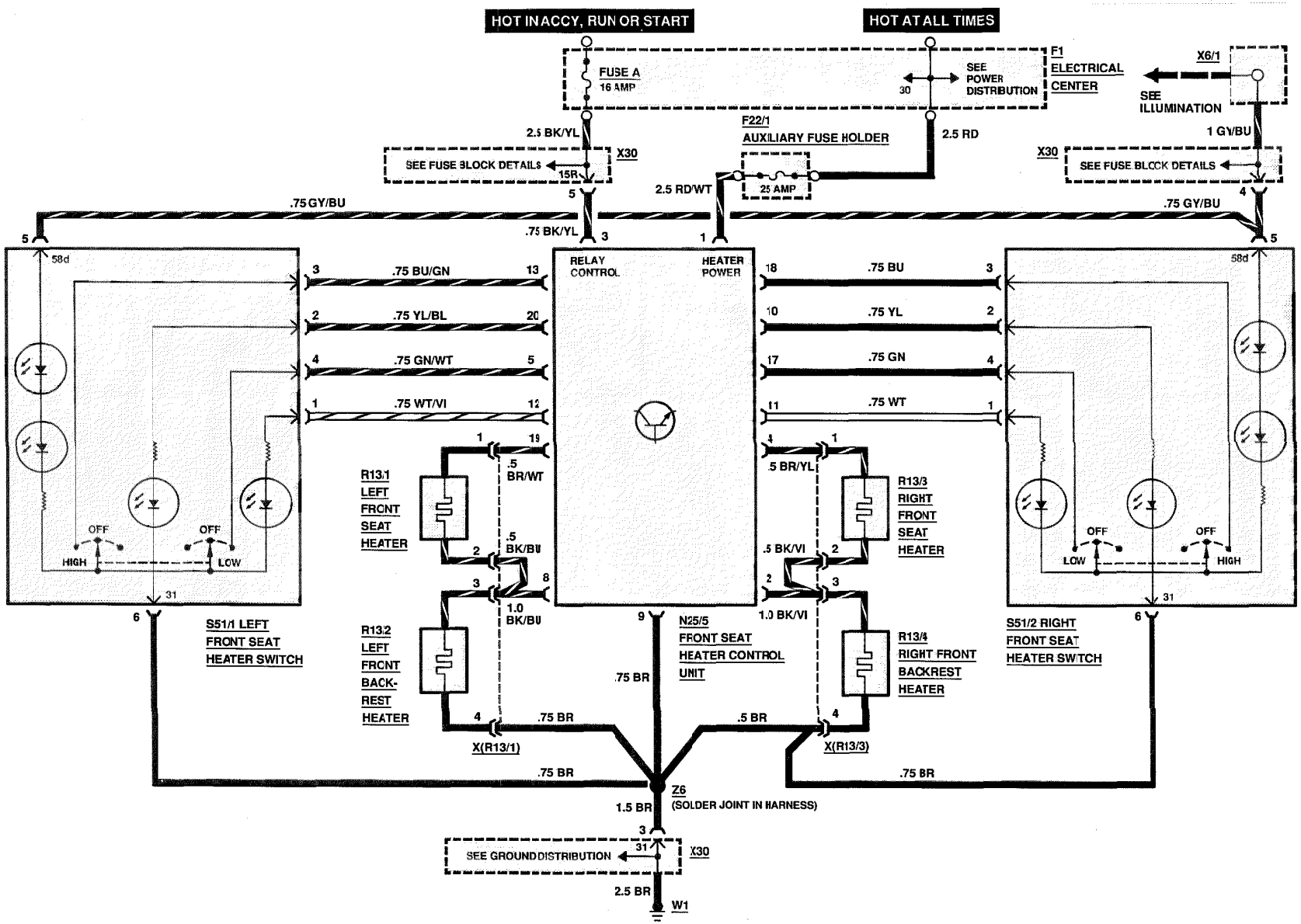

REVISIONS:

REAR WINDOW SUNSHADE

AS OF MY 1988

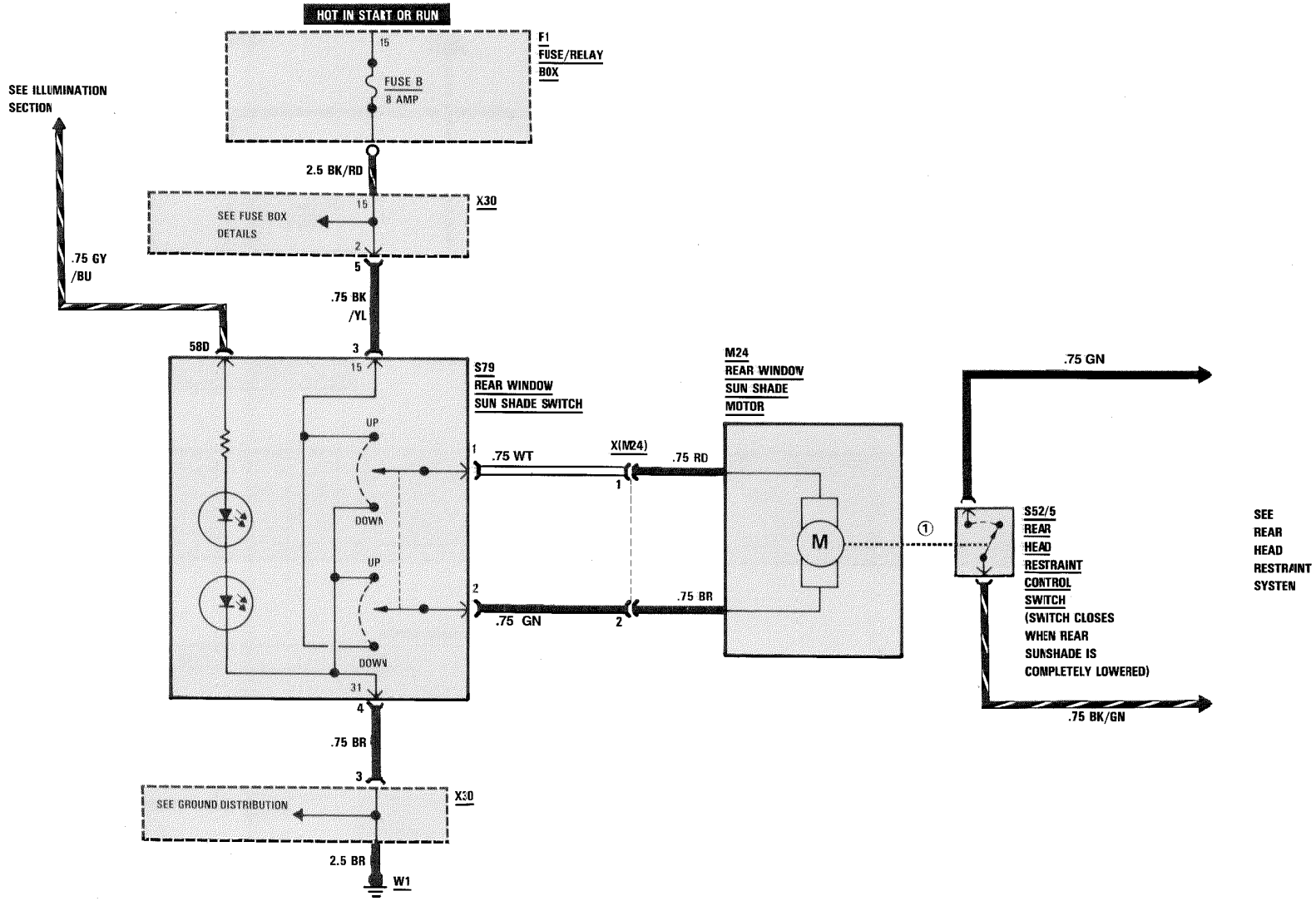

REVISIONS: ① AS OF 10/1989 PRODUCTION

POWER WINDOWS

MY 1986-1989

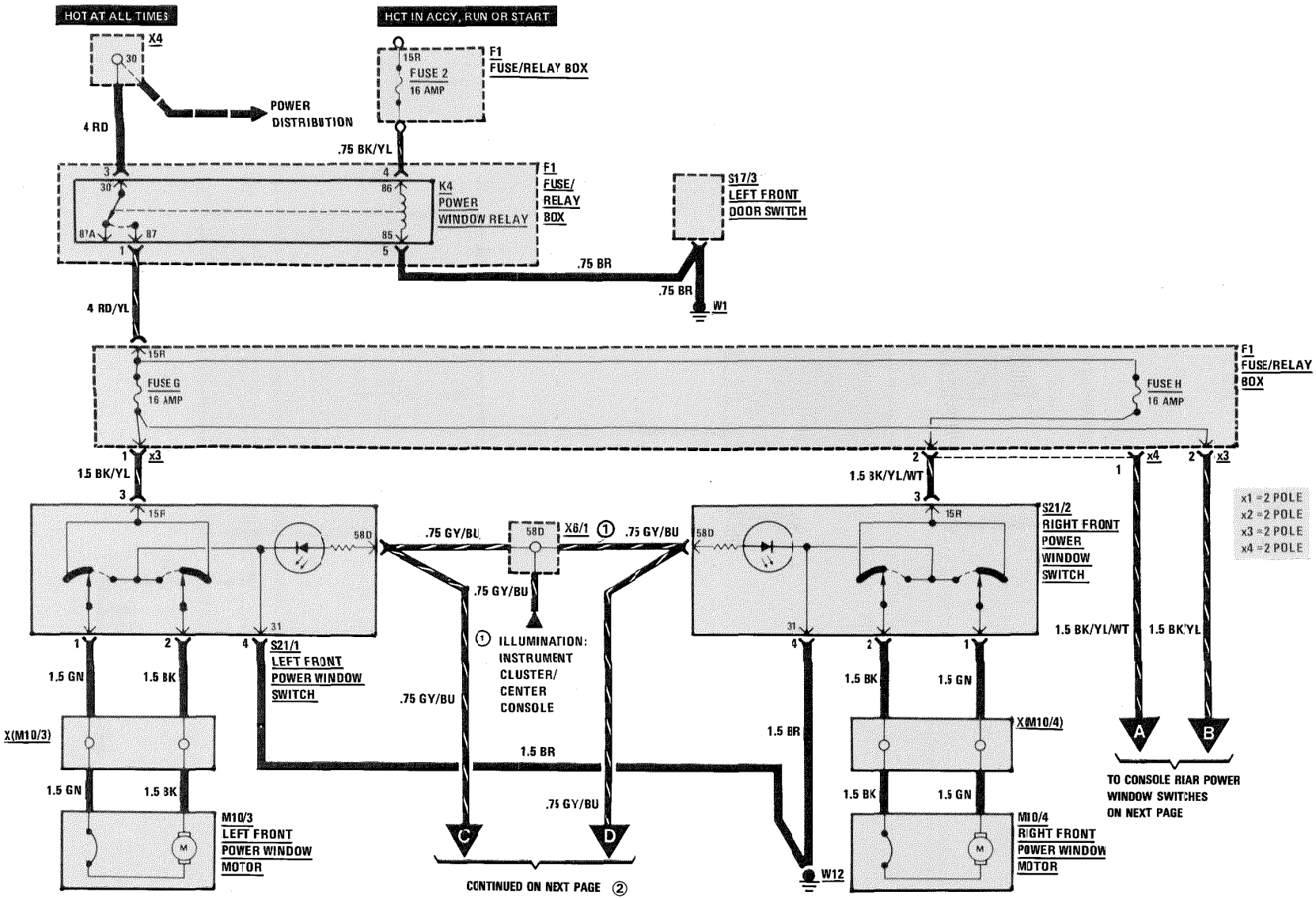

REVISIONS: 1 X6 BEFORE JANUARY 1986, SEE PAGE 126
2 260 E/300 E/300 TE ONLY

POWER WINDOWS

MY 1986-1989

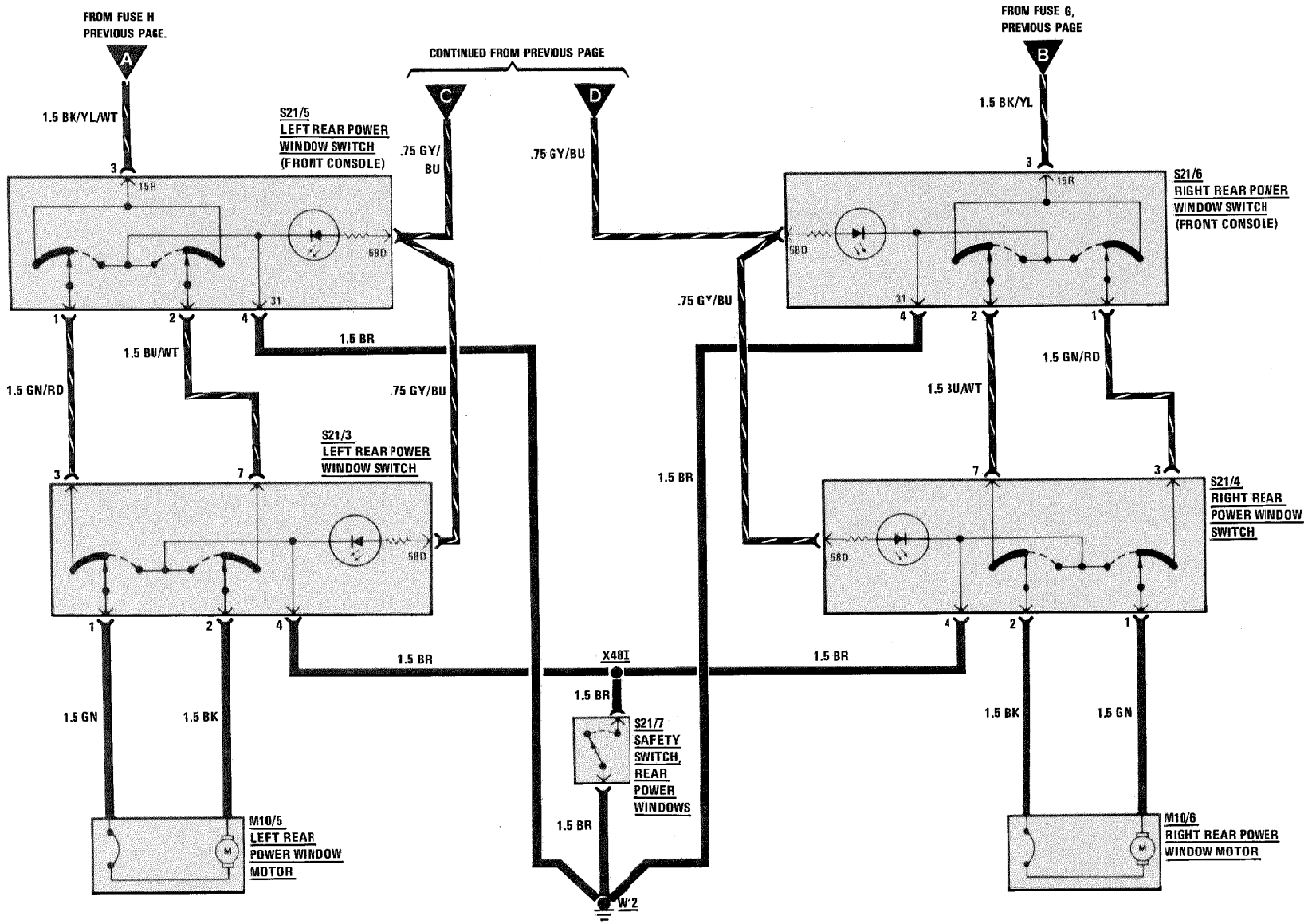

REVISIONS:

POWER WINDOWS (COMFORT SYSTEM)

AS OF MY 1990

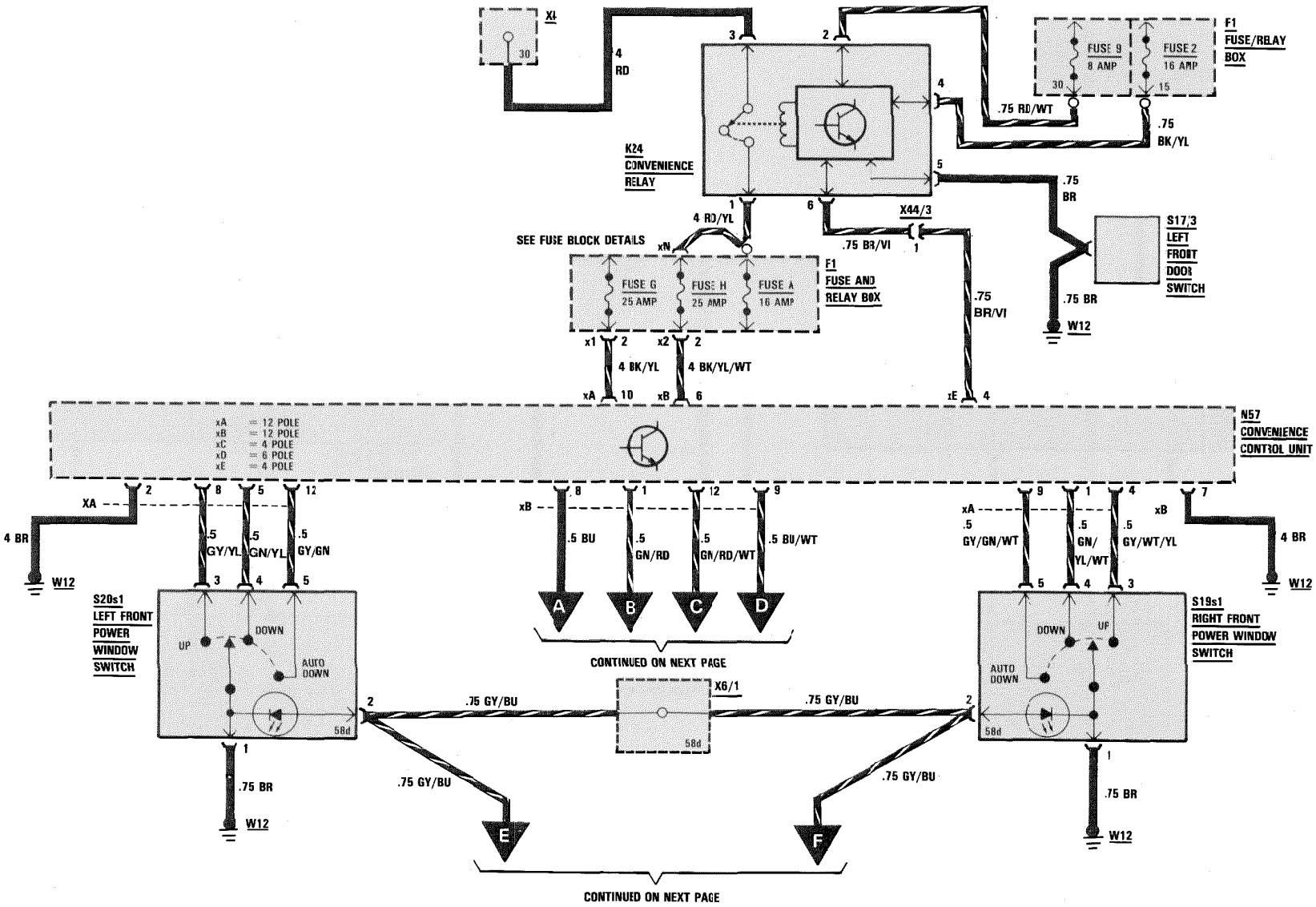

REVISIONS:

POWER WINDOWS (COMFORT SYSTEM)

AS OF MY 1990

CONTINUED FROM PREVIOUS PAGE

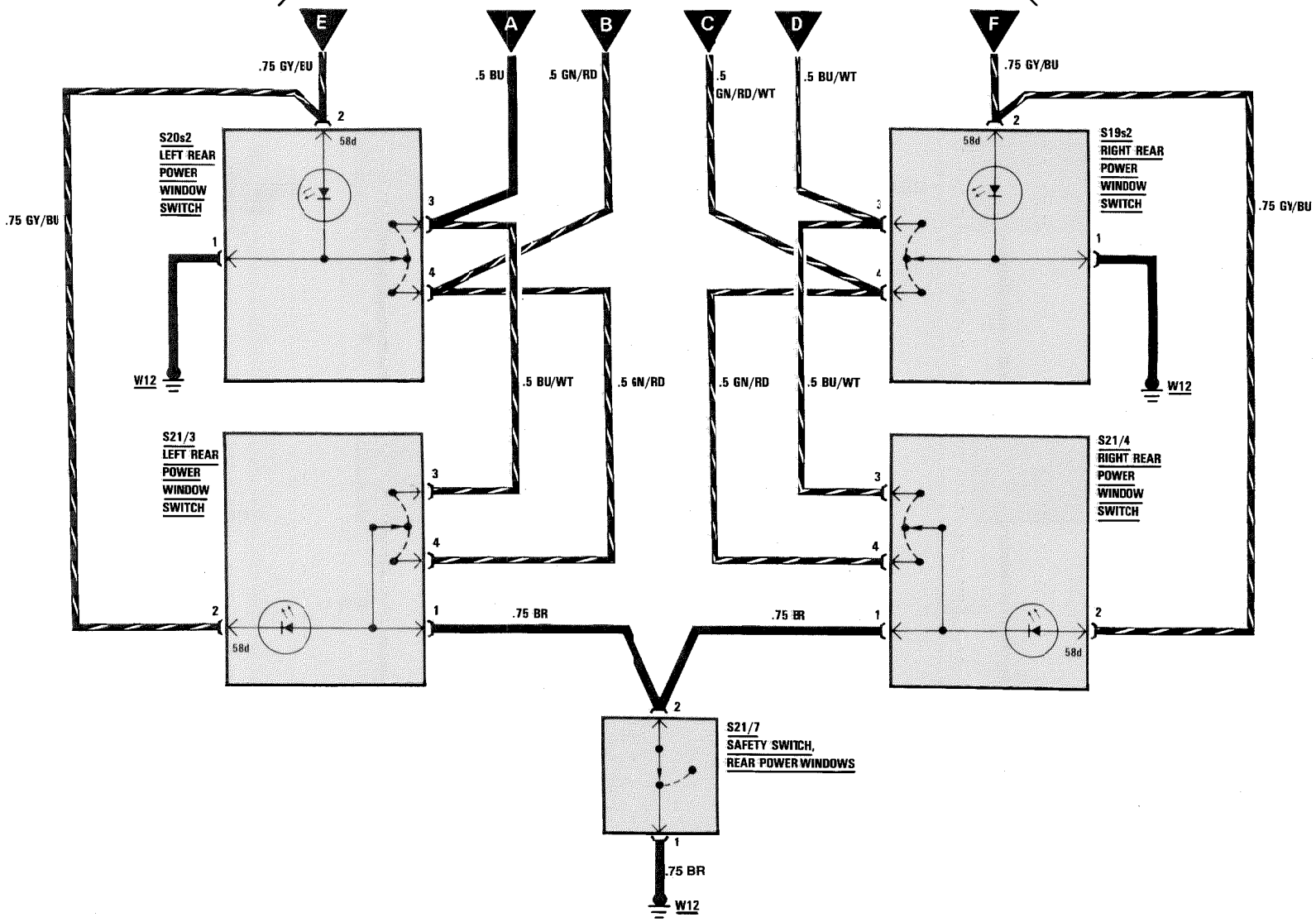

REVISIONS:

POWER WINDOWS

AS OF MY 1990

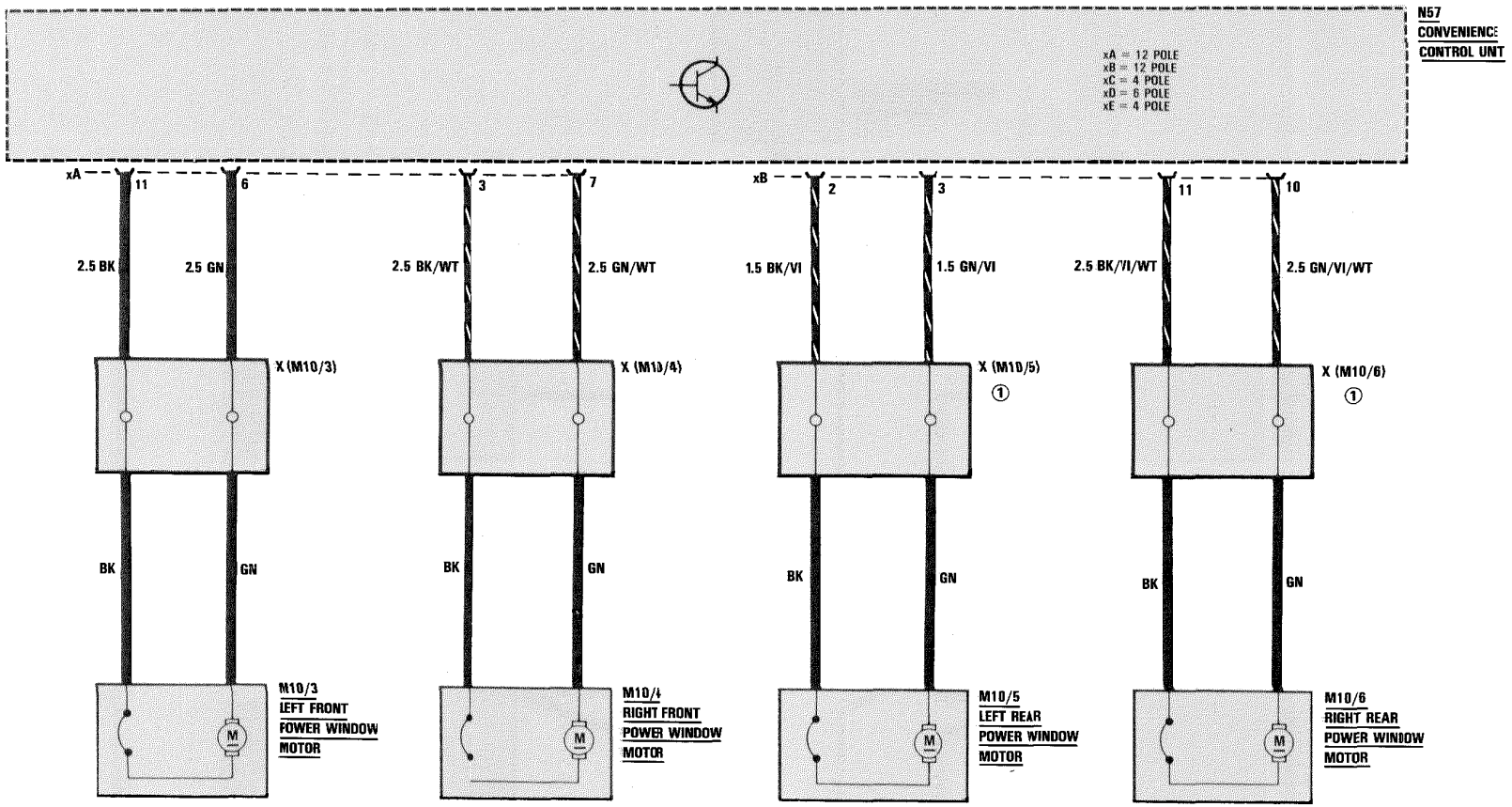

REVISIONS: ① MODEL 124.051 USES A 2-POLE CONNECTOR INSTEAD OF SCREW TERMINALS

POWER WINDOWS (COMFORT SYSTEM)

AS OF MY 1990

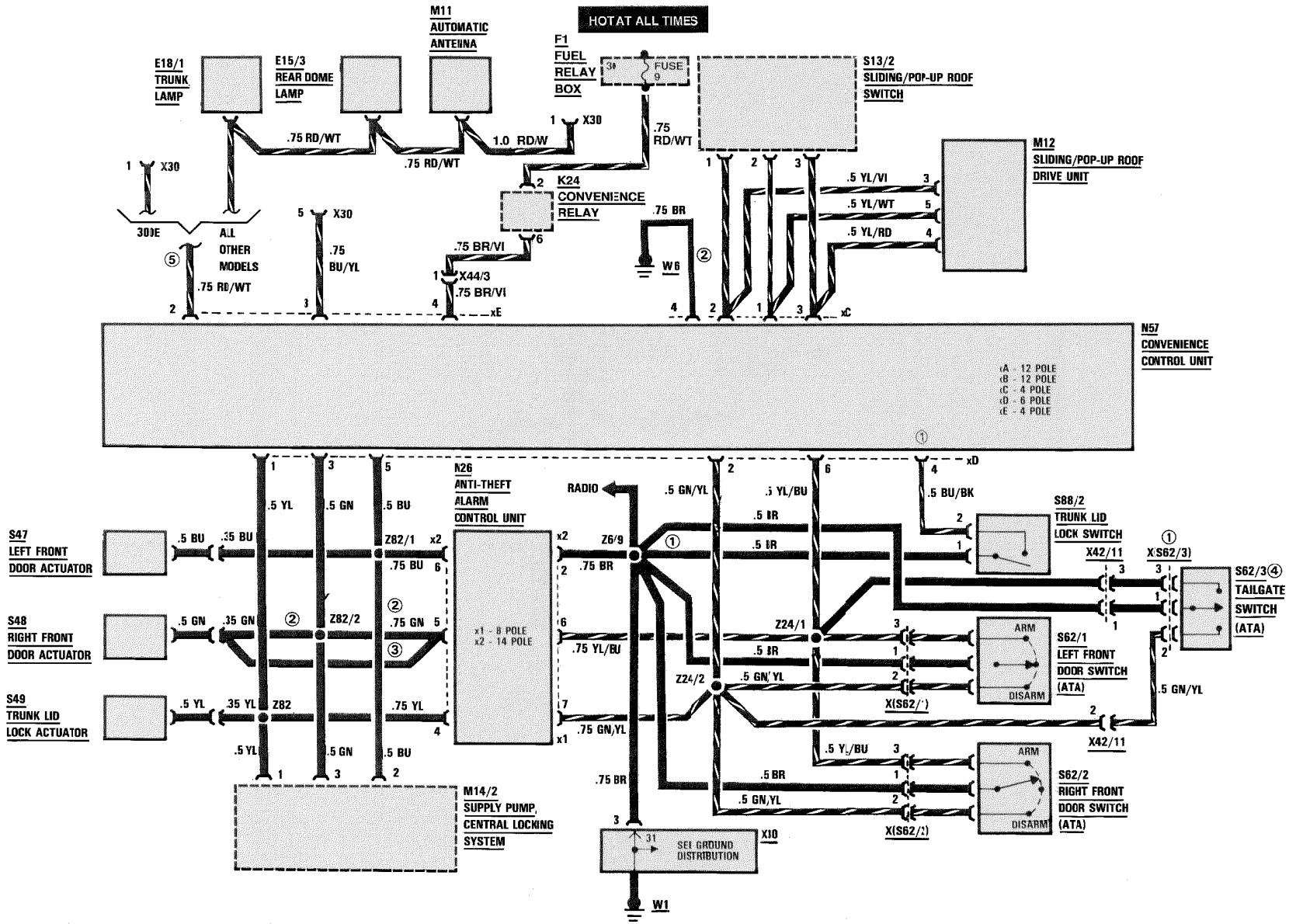

REVISIONS:
① NOT IN T-MODEL, INSTEAD SEE X62/3
② NOT IN 300E
③ 300E ONLY
④ STATION WAGON ONLY
⑤ AS OF MY 1991, ALL MODELS CONNECT TO X30

HORNS

AS OF MY 1986

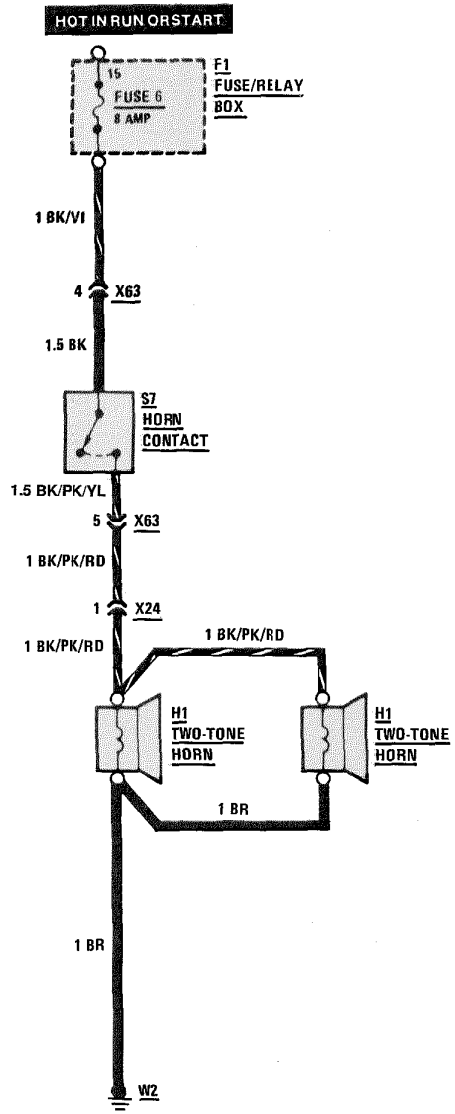

REVISIONS:

CENTRAL LOCKING SYSTEM

AS OF MY 1986
300 E/ 300 D

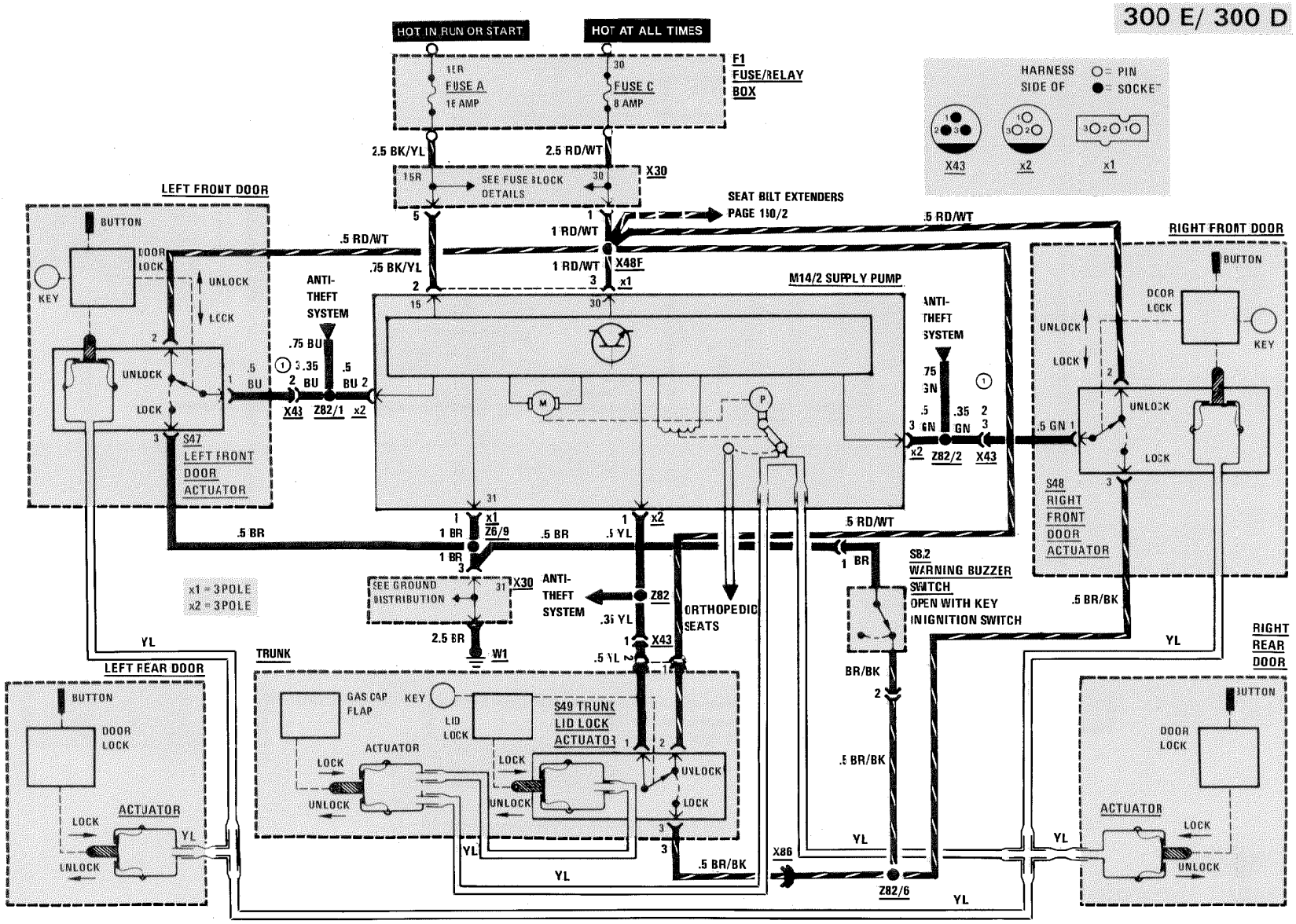

REVISIONS: ① AS OF MODEL YEAR 87

CENTRAL LOCKING SYSTEM

AS OF MY 1987
260E/300D2.5/
300TE/300TD/
300CE ③

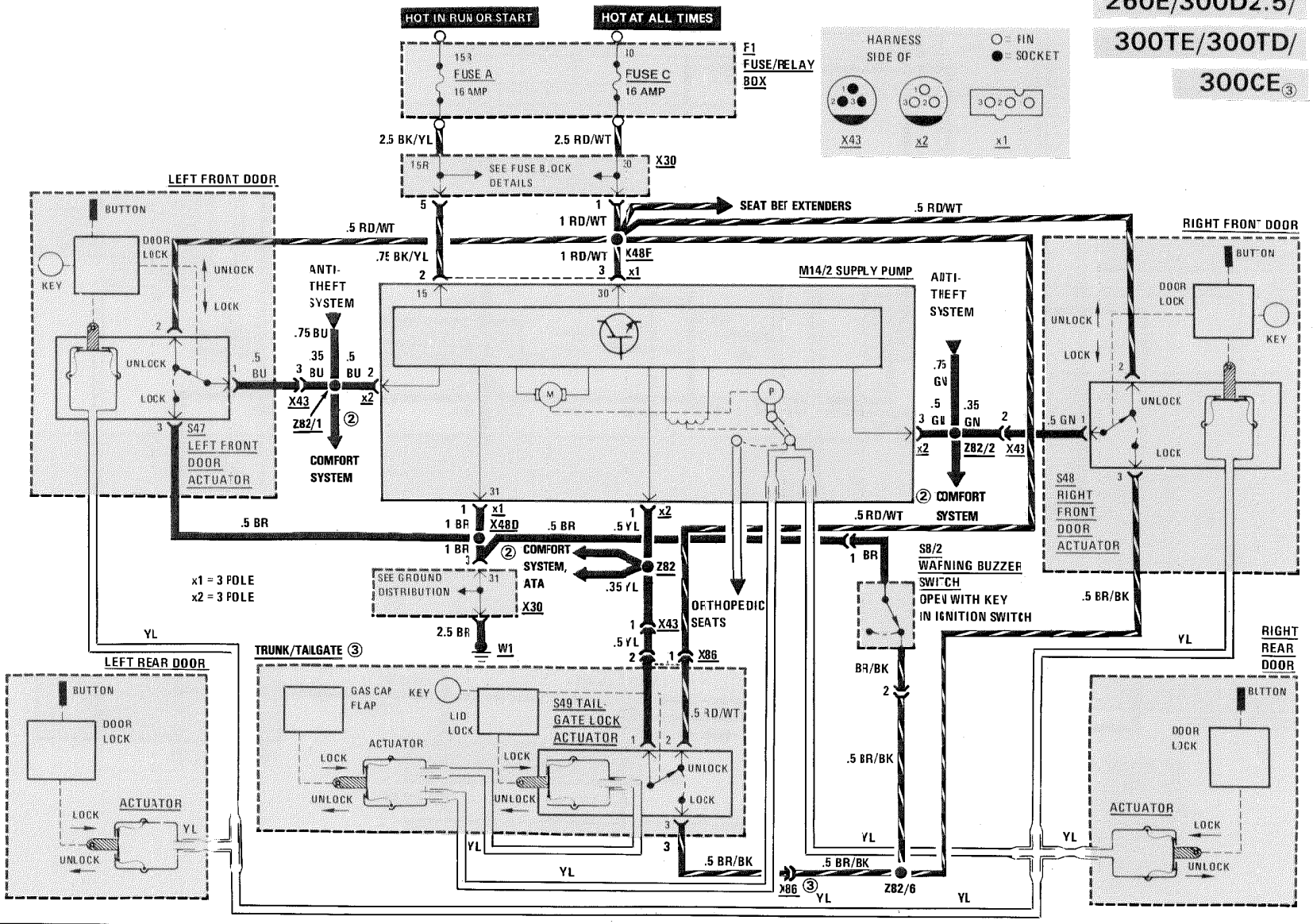

REVISIONS: ① STATION WAGON ONLY
② AS OF MY 1990
③ MODEL YEARS 1988, 1989 ONLY

CENTRAL LOCKING SYSTEM

AS OF MY 1990

EXCEPT 300CE

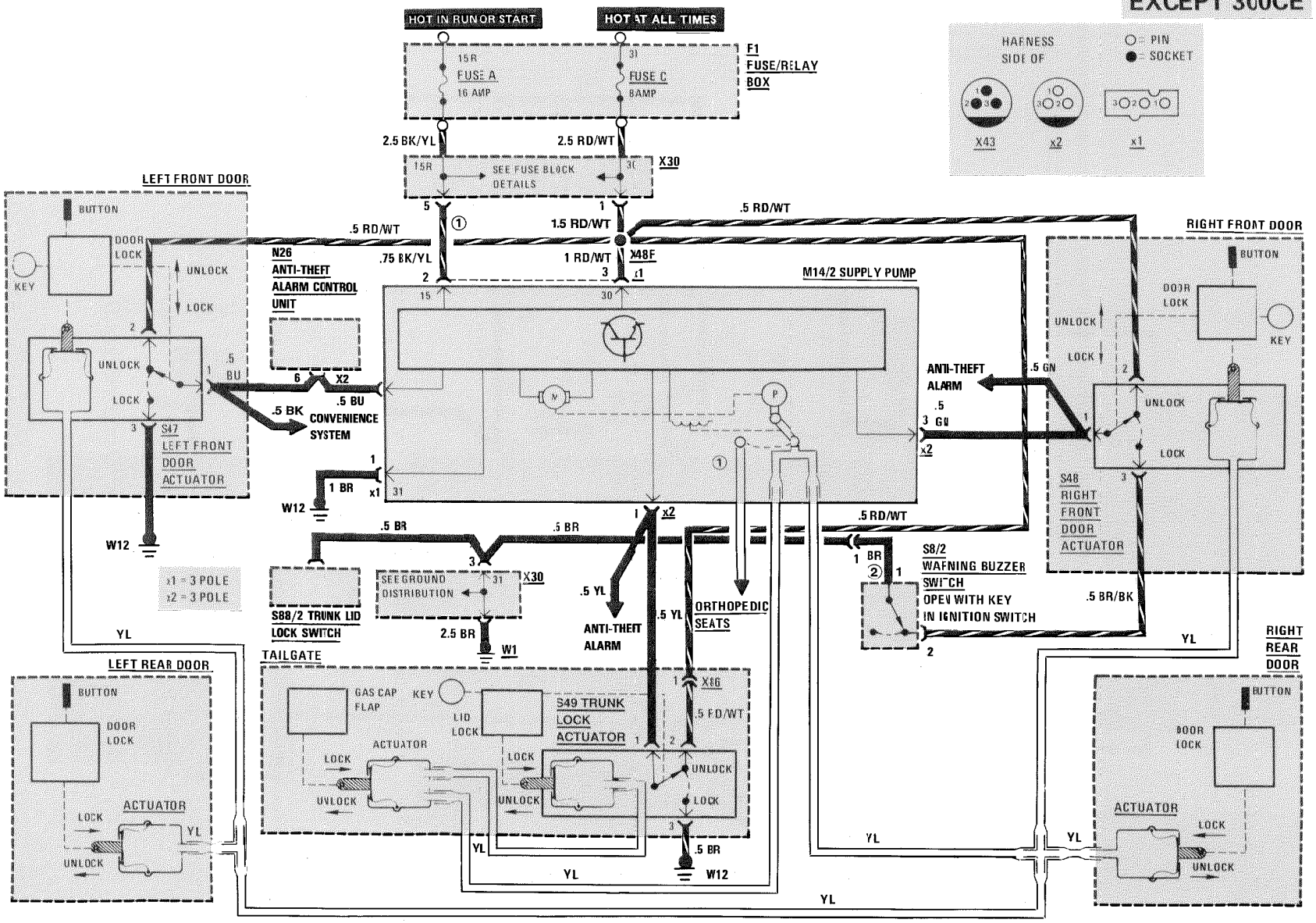

REVISIONS: ① ONLY WITH ORTHOPEDIC SEATS
② AS OF MY 1991 GROUNDED DIRECTLY TO W1

CENTRAL LOCKING SYSTEM

MY 1990

300CE

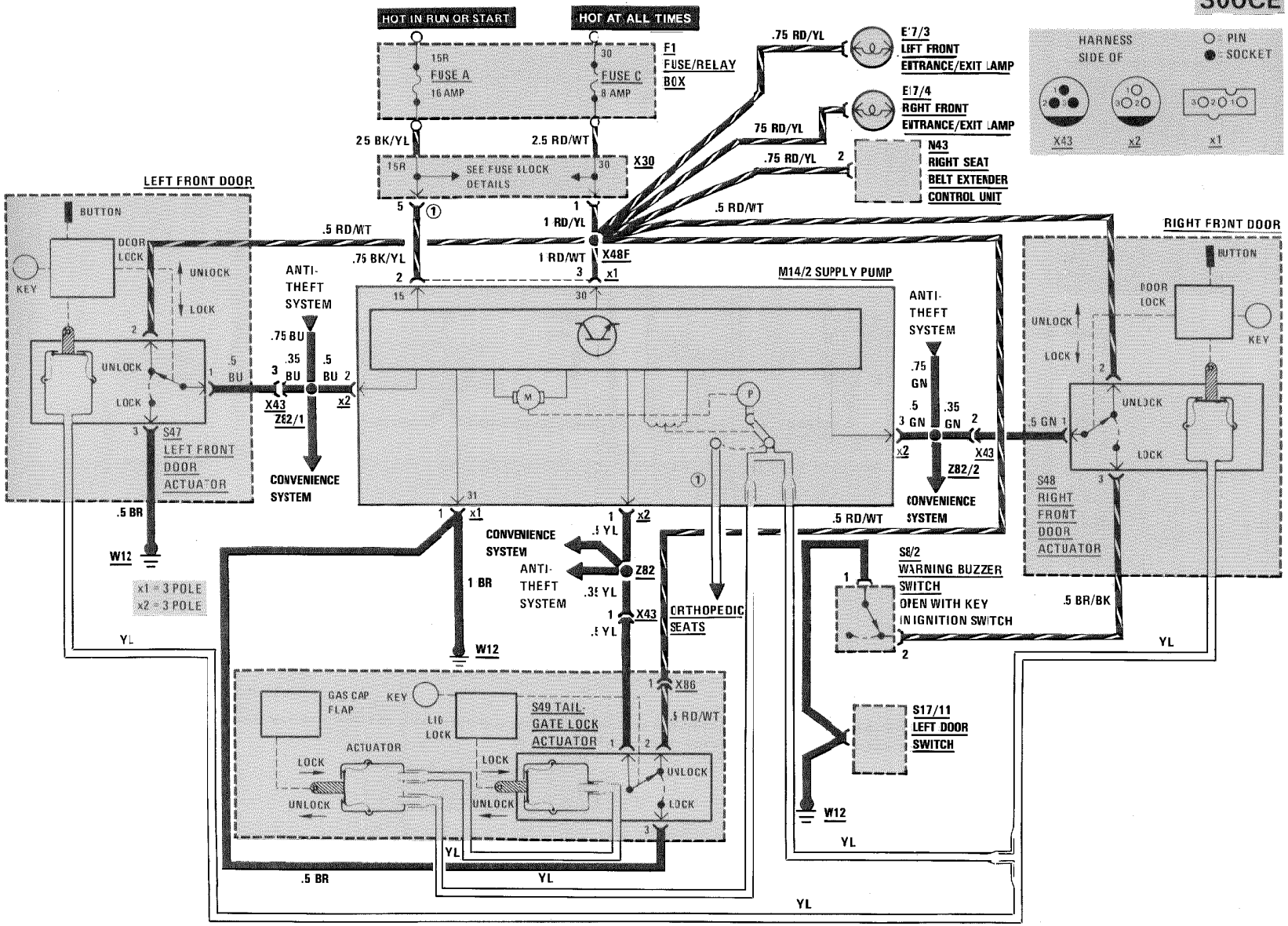

REVISIONS: ① ONLY WITH ORTHOPEDIC SEATS

CENTRAL LOCKING SYSTEM

AS OF MY 1991

300CE

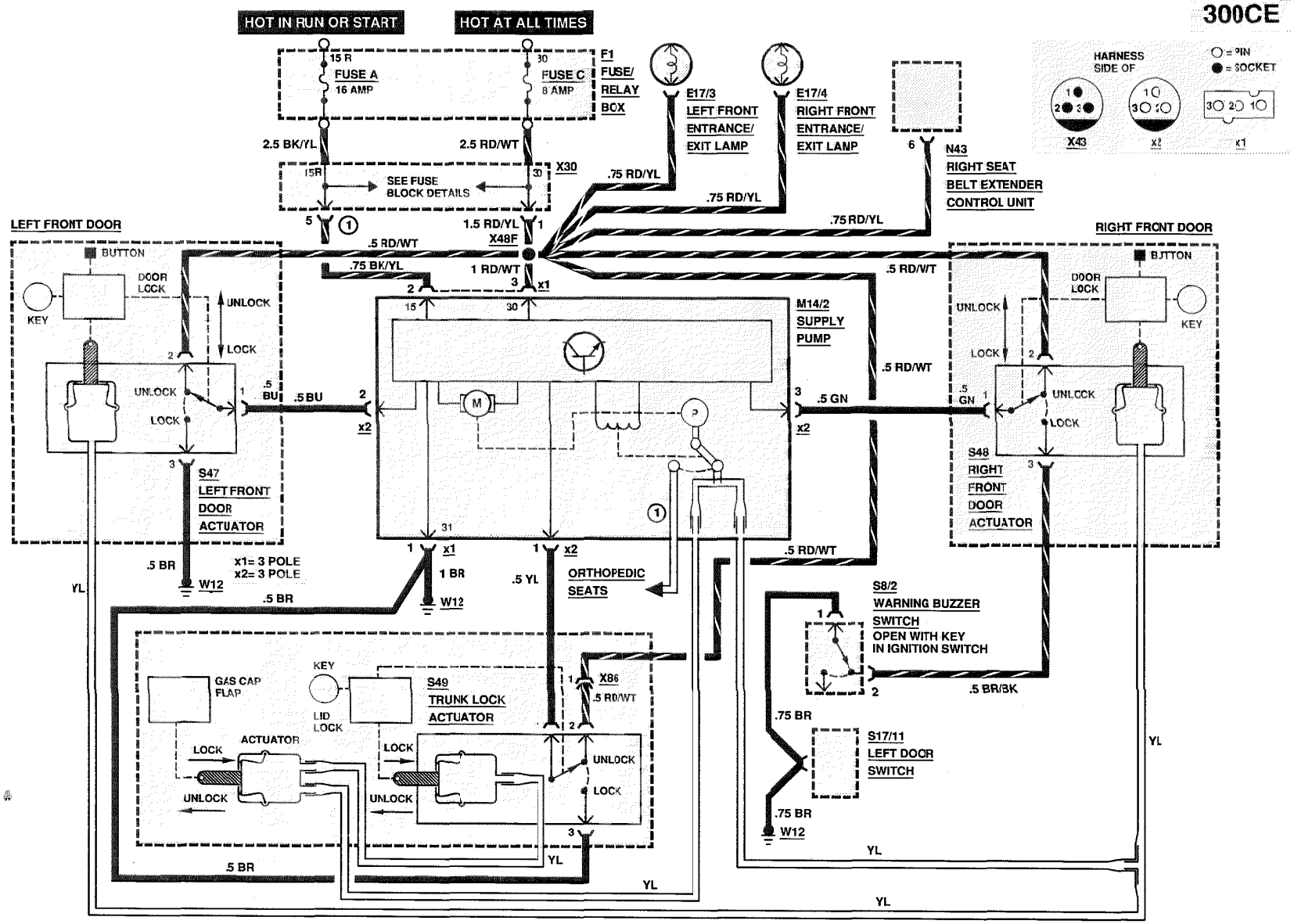

REVISIONS: (1) ONLY WITH ORTHOPEDIC SEATS

TELESCOPIC STEERING COLUMN (WITH MEMORY SEAT)

MY 1986-1990 ①

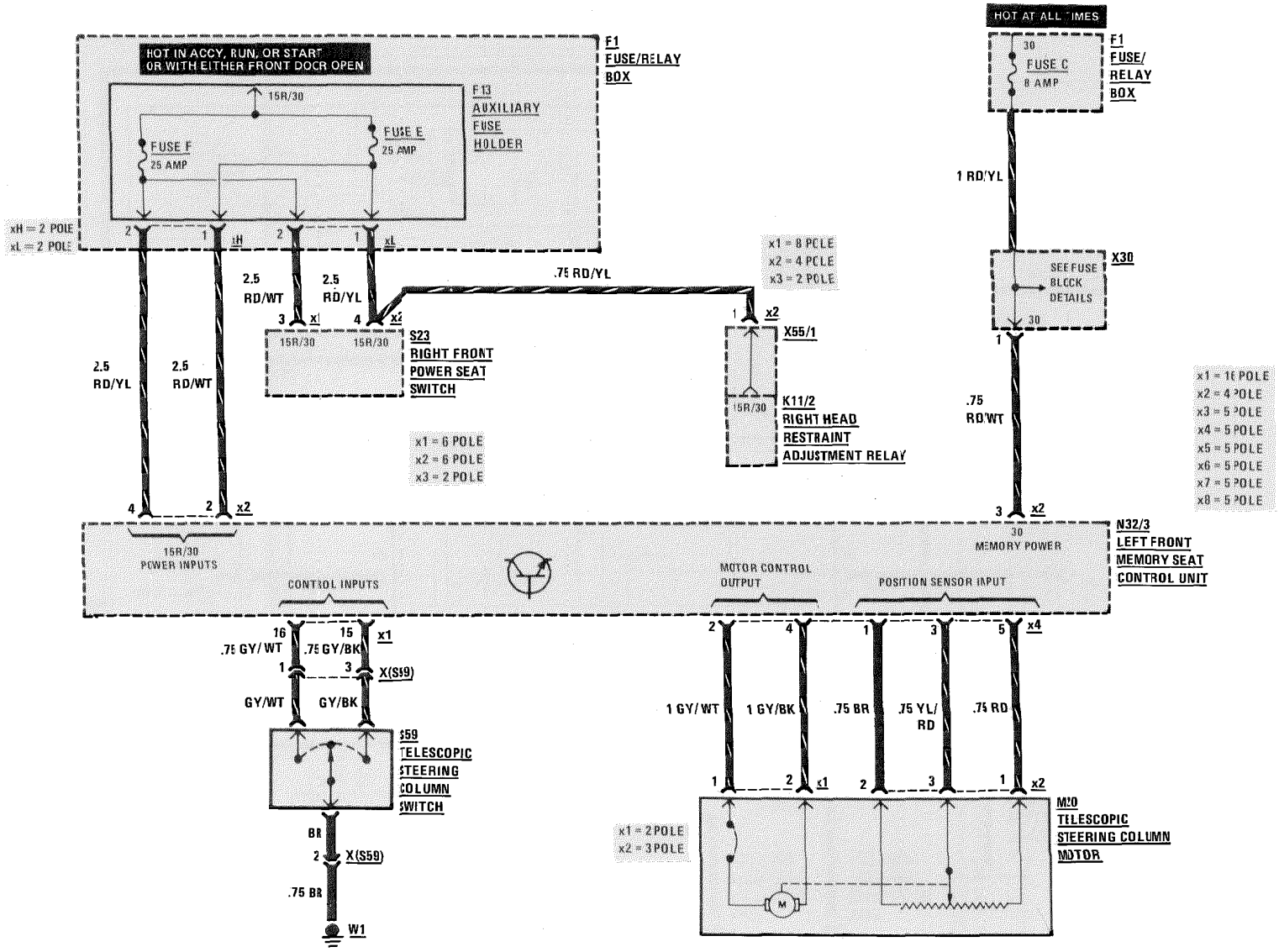

REVISIONS: ① AS OF MY 1991, SEE LEFT POWER SEAT (WITH MEMORY)

TELESCOPIC STEERING COLUMN WITHOUT MEMORY SEAT

AS OF MY 1987
260 E/300D 2.5

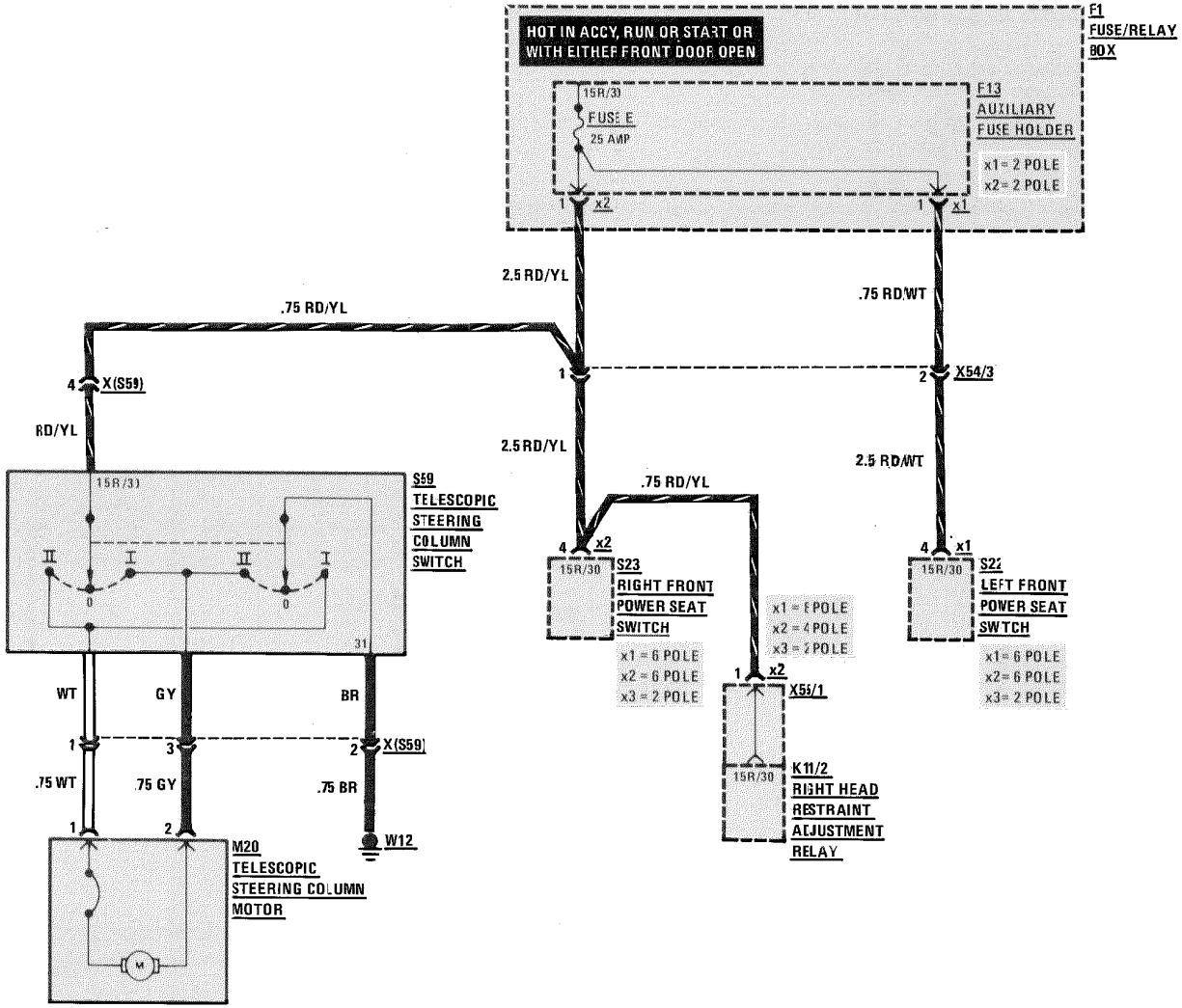

REVISIONS:

POWER SEATS (WITH MEMORY)

MY 1986-1988

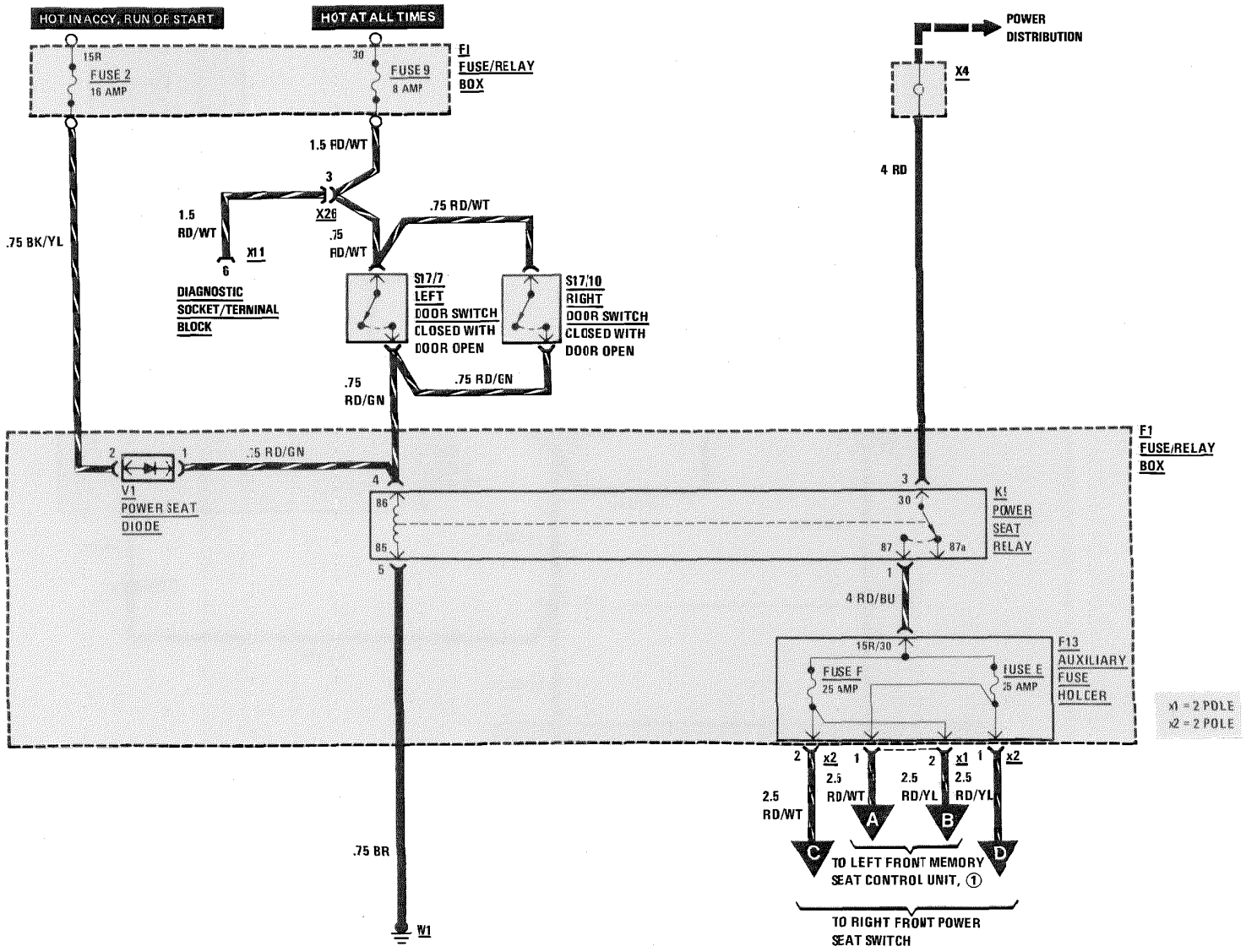

REVISIONS: ① TO LEFT FRONT POWER SEAT SWITCH IN MODELS 124.026/.128

POWER SEAT

MY 1989

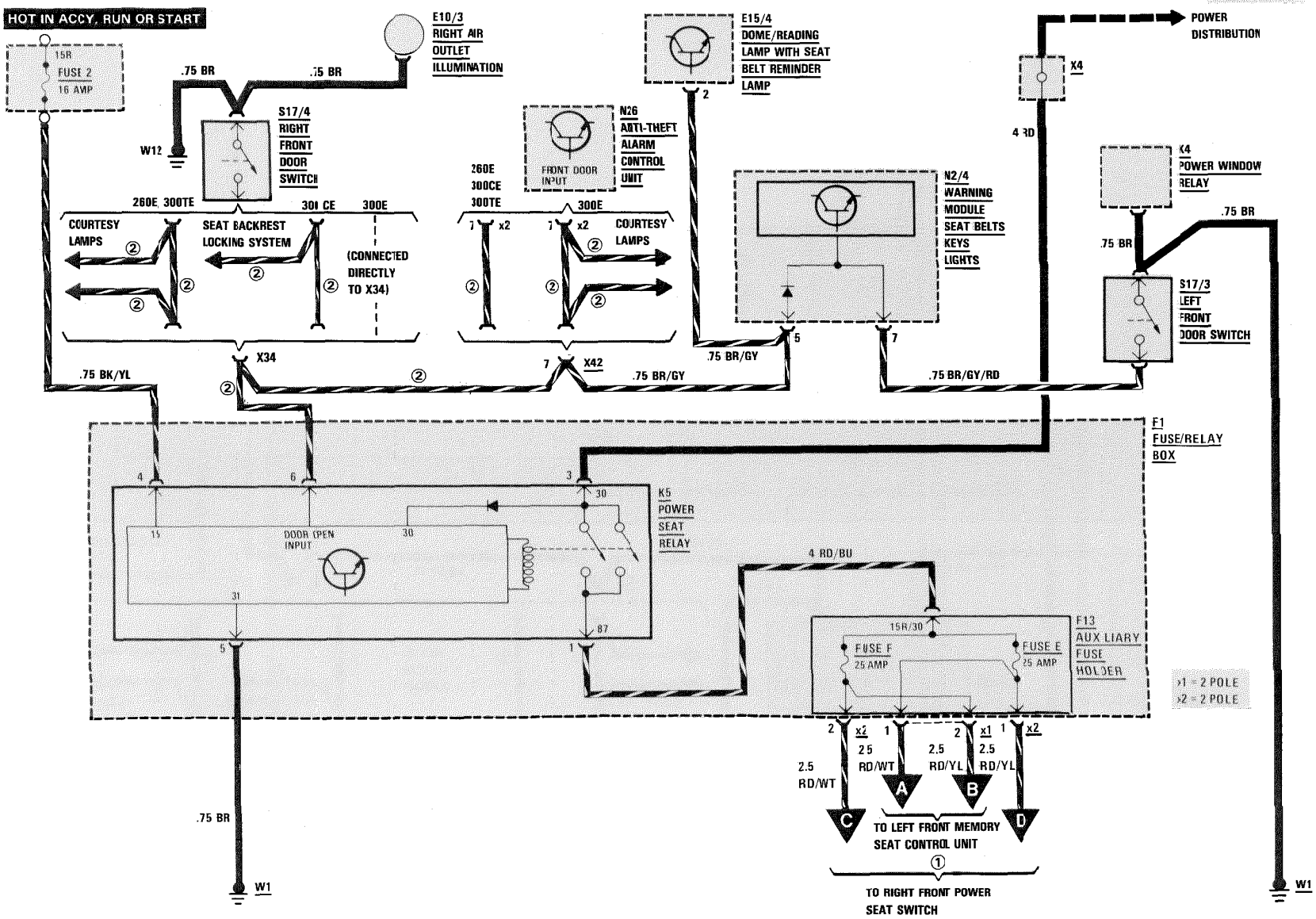

REVISIONS: ① IN 124.026, TO LEFT FRONT POWER SEAT SWITCH
② .75 BR/GY

POWER SEAT

AS OF MY 1990

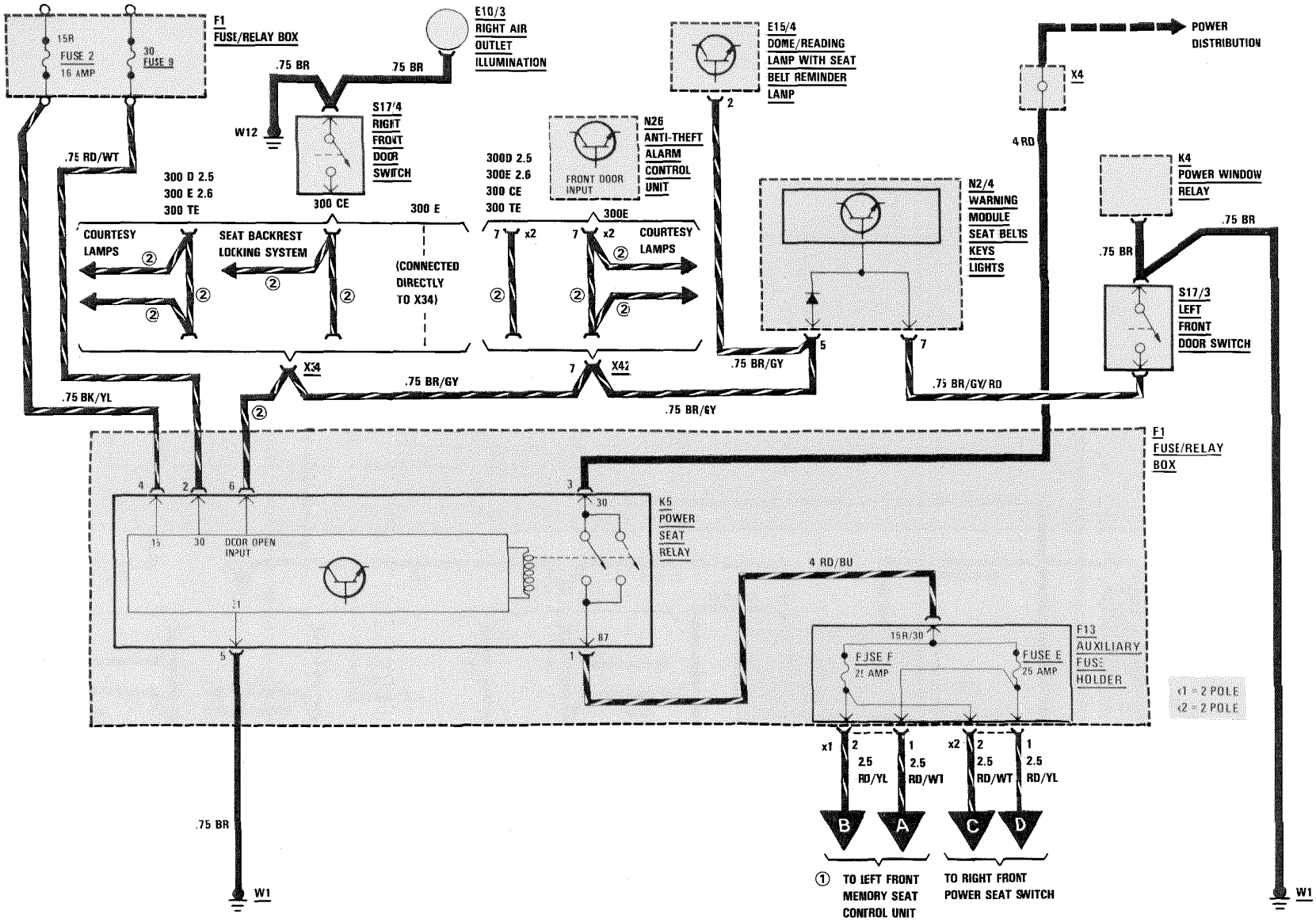

REVISIONS: ① IN 124.026/.128, TO LEFT FRONT POWER SEAT SWITCH
② .75 BR/GY

RIGHT POWER SEAT

MY 1986-1990

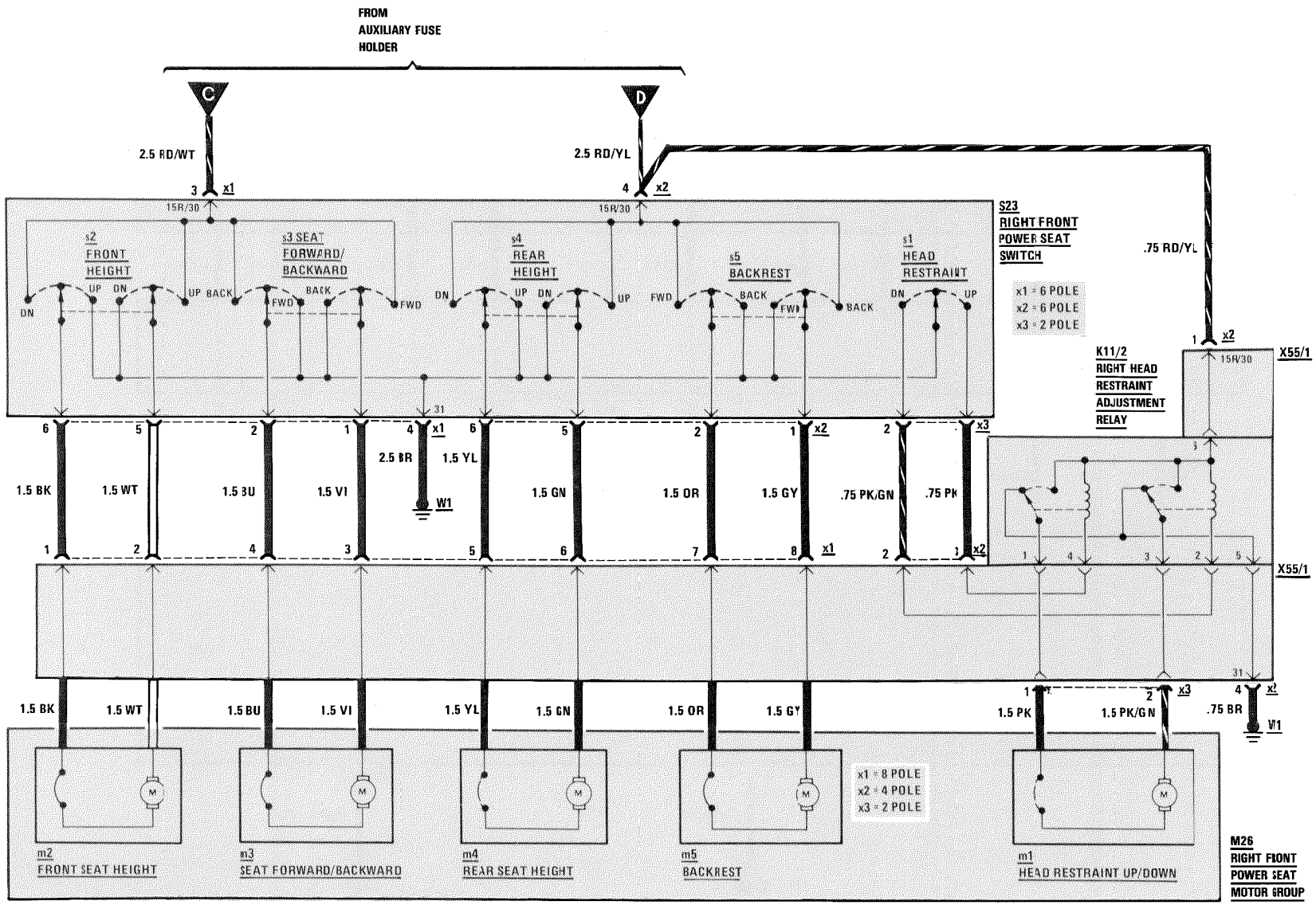

REVISIONS:

RIGHT POWER SEAT

AS OF MY 1991

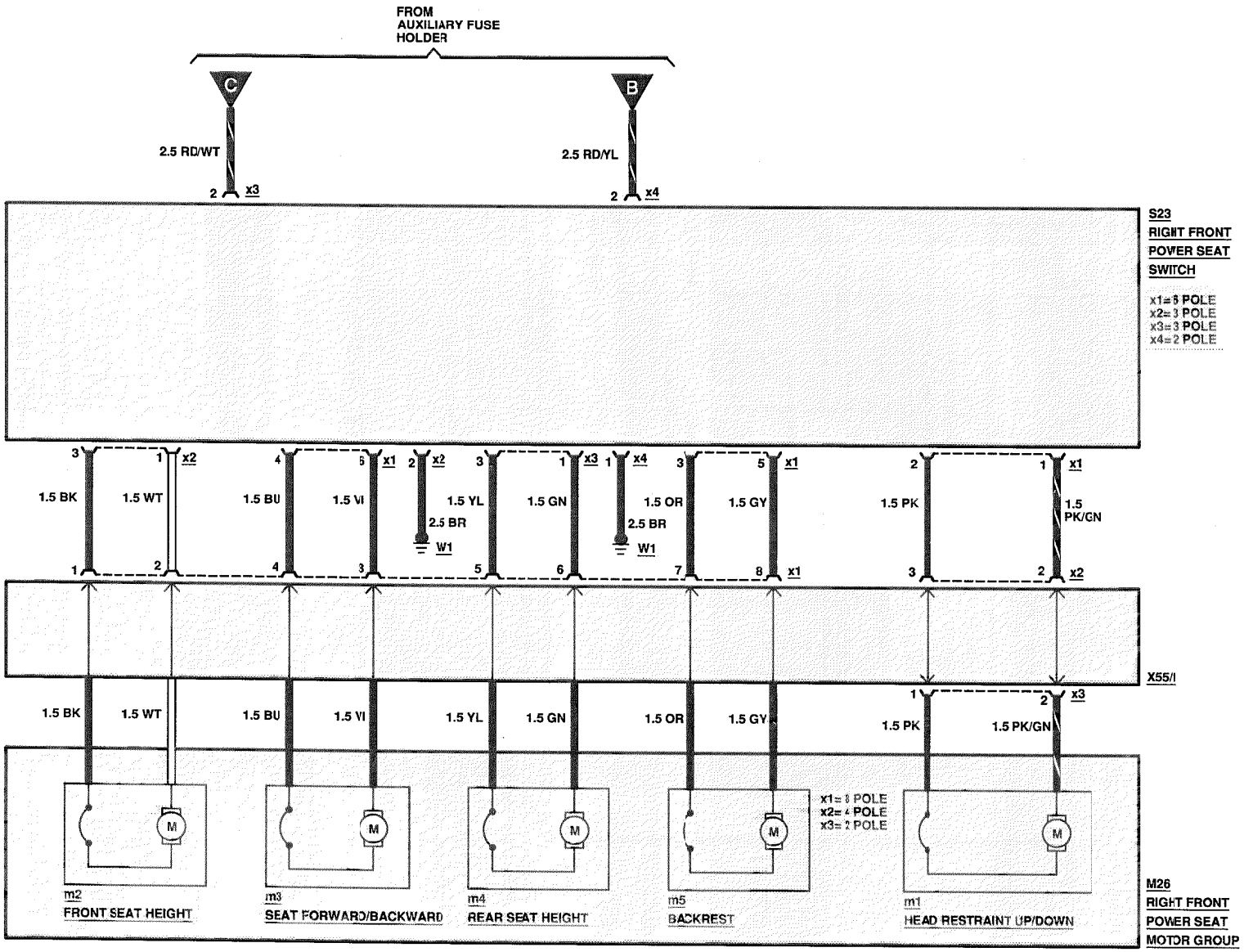

REVISIONS:

LEFT POWER SEAT

MY 1987 - 1990
260E/300D 2.5

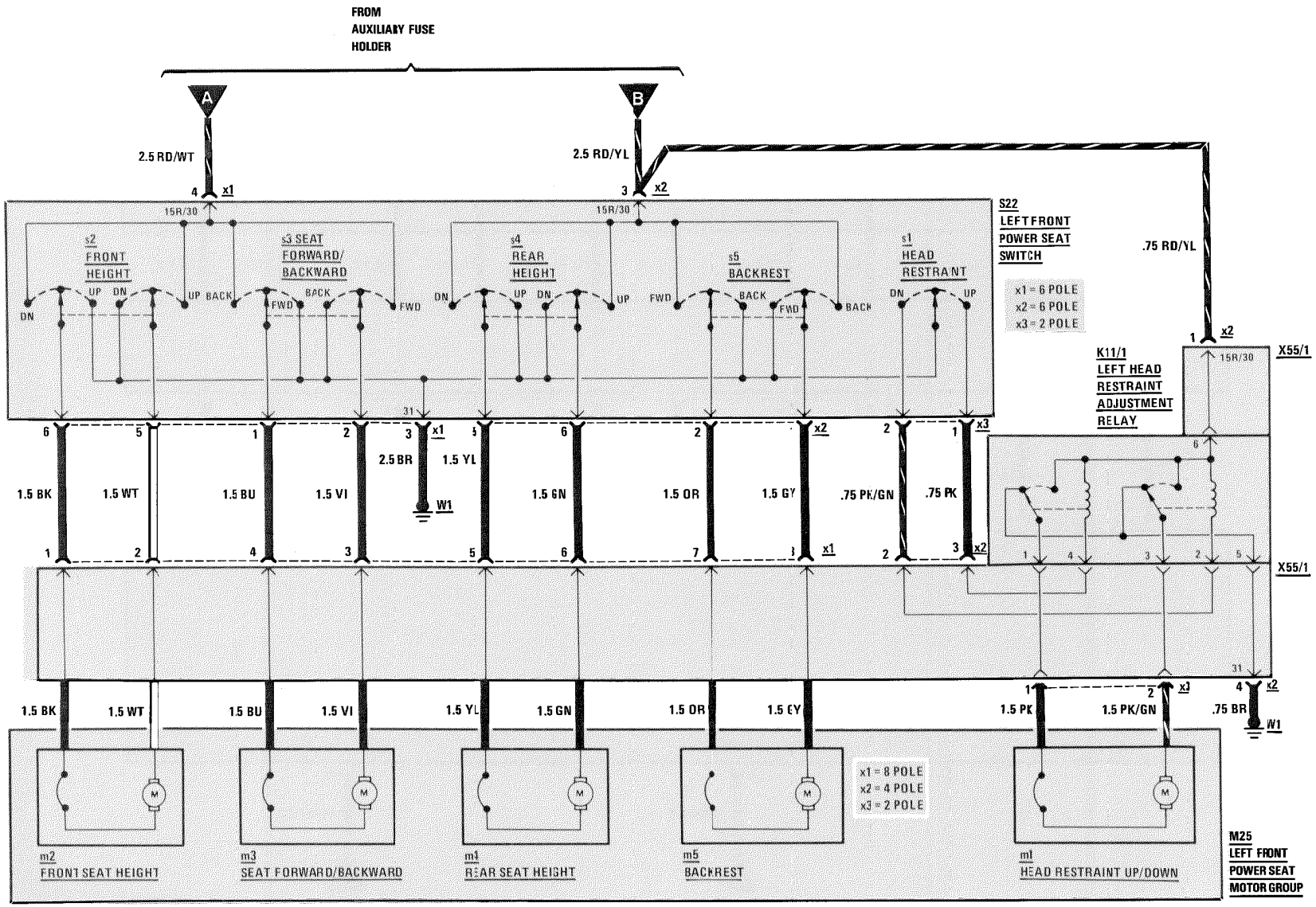

REVISIONS:

LEFT POWER SEAT

AS OF MY 1991

300E 2.6/300D 2.5

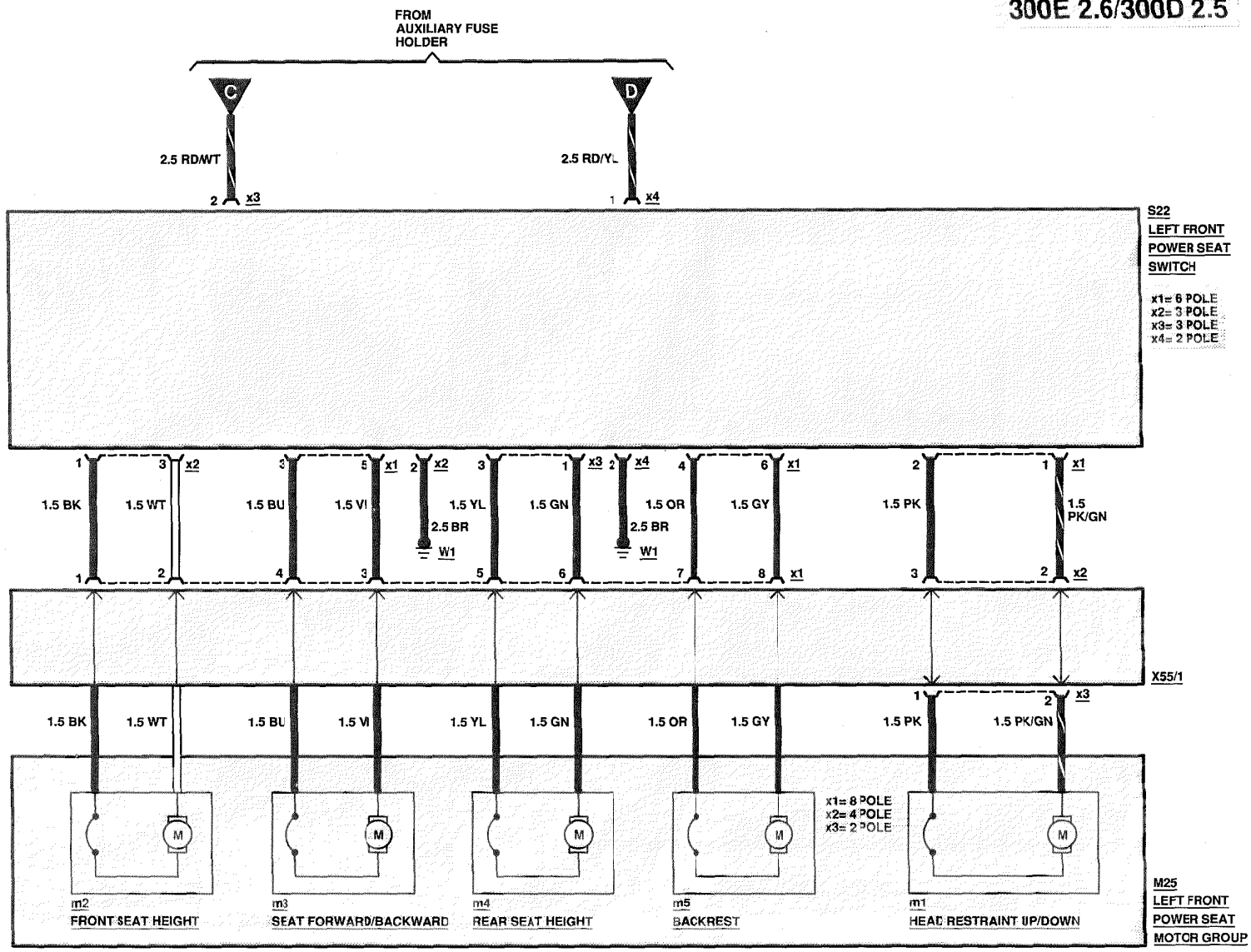

REVISIONS:

LEFT POWER SEAT (WITH MEMORY)

AS OF MY 1986

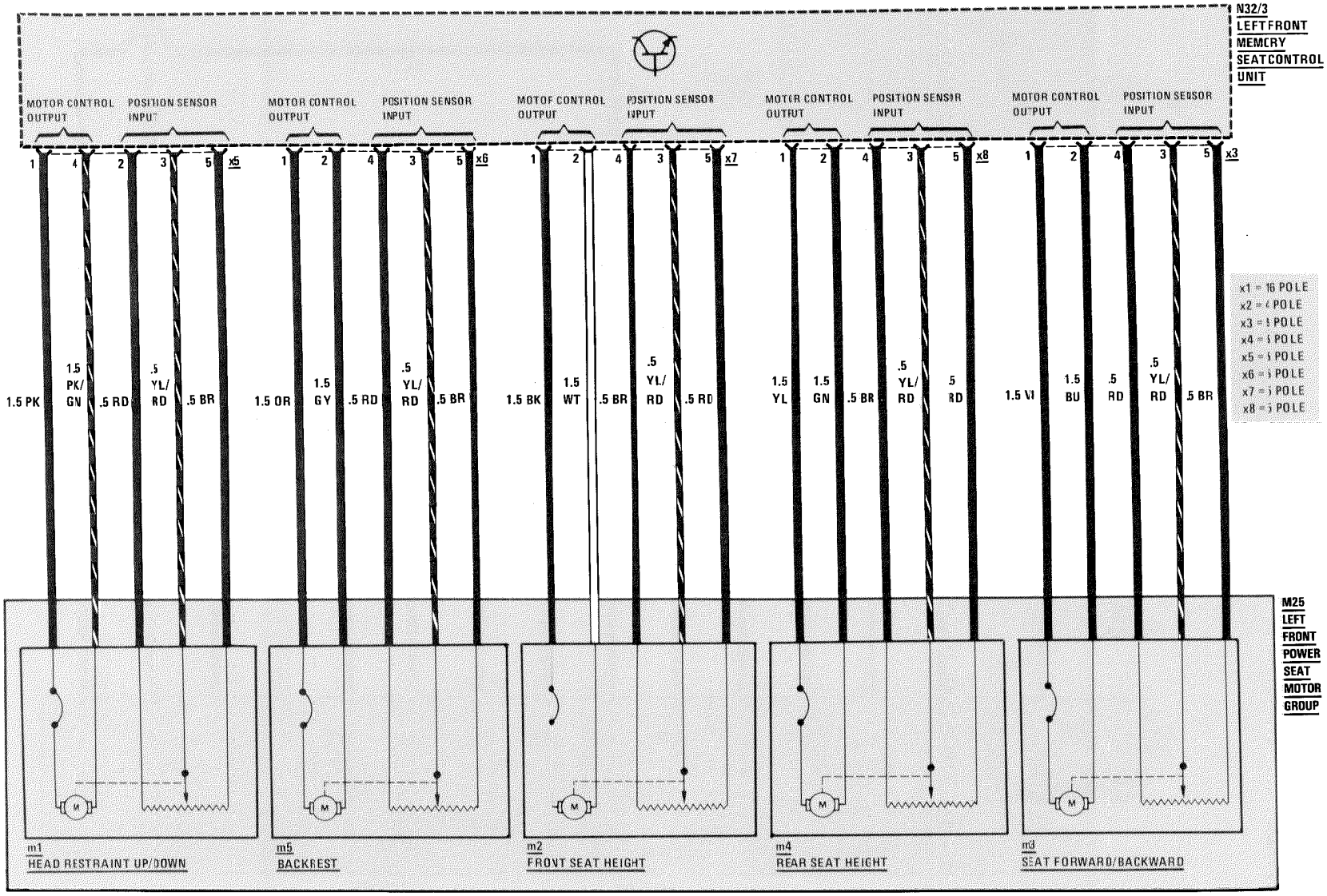

REVISIONS:

LEFT POWER SEAT (WITH MEMORY)

MY 1986-1990

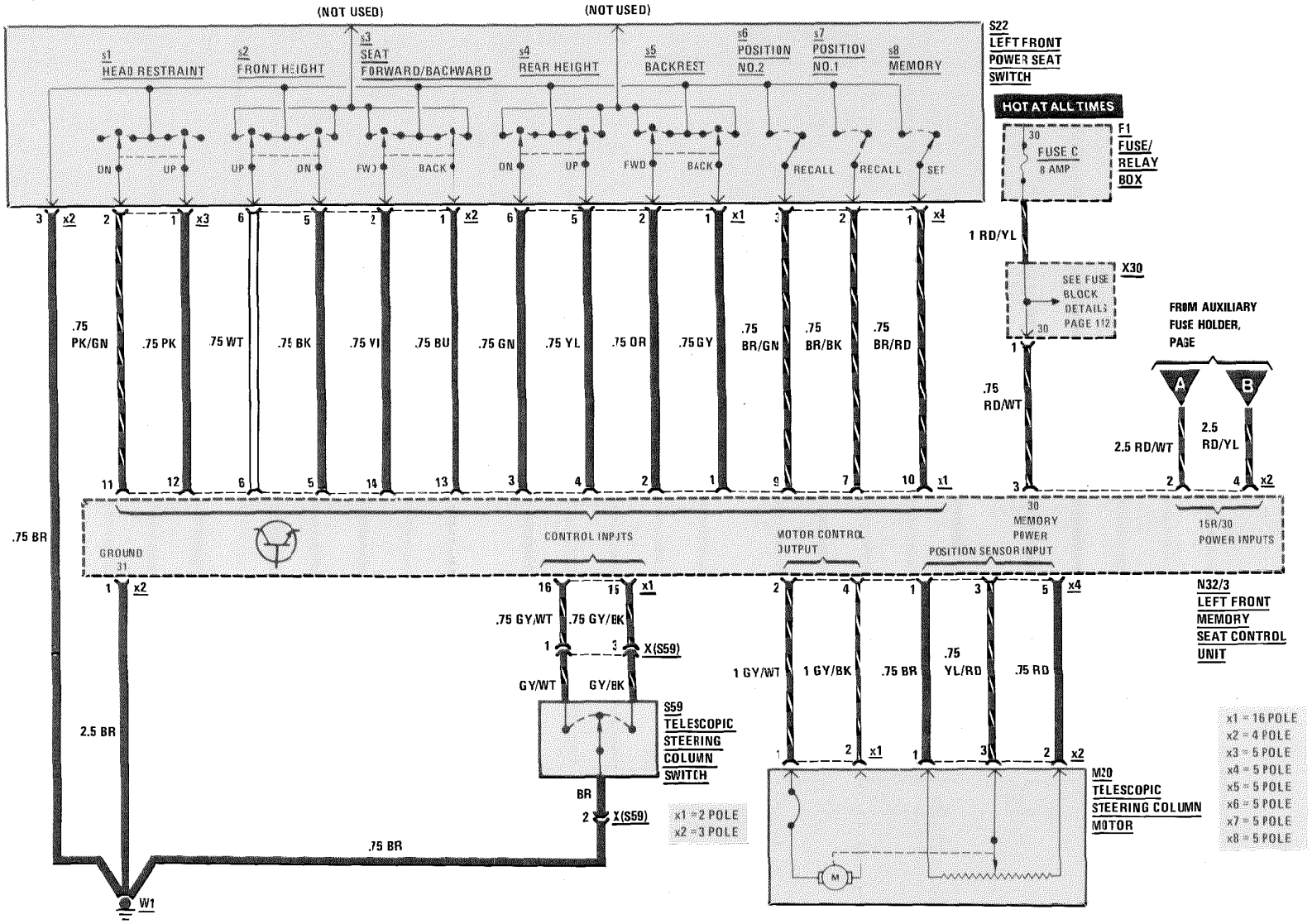

REVISIONS:

LEFT POWER SEAT (WITH MEMORY)

AS OF MY 1991

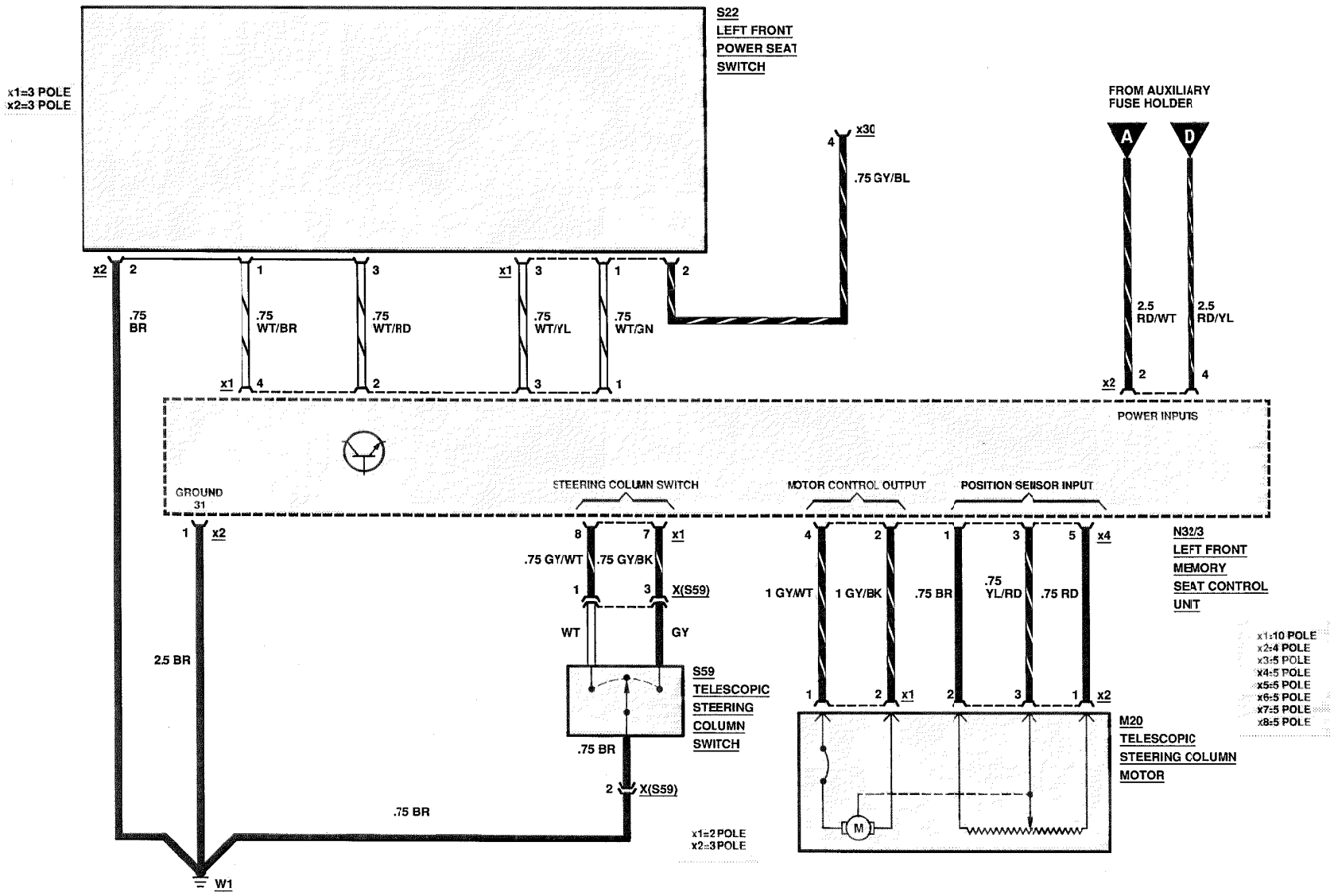

REVISIONS:

OUTSIDE HEATED MIRRORS

AS OF MY 1986

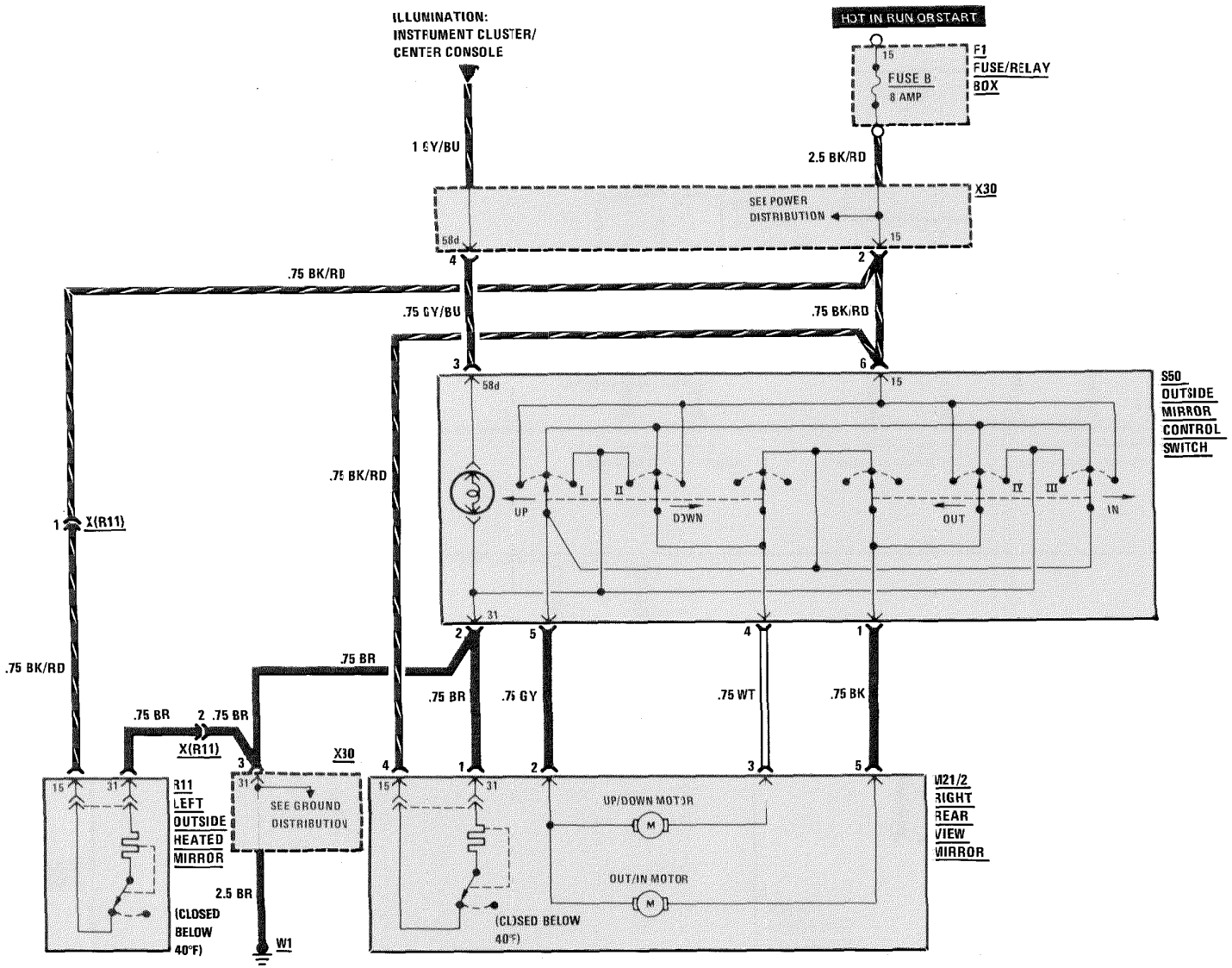

REVISIONS:

ANTI-LOCK BRAKE SYSTEM (ABS)

AS OF MY 1986

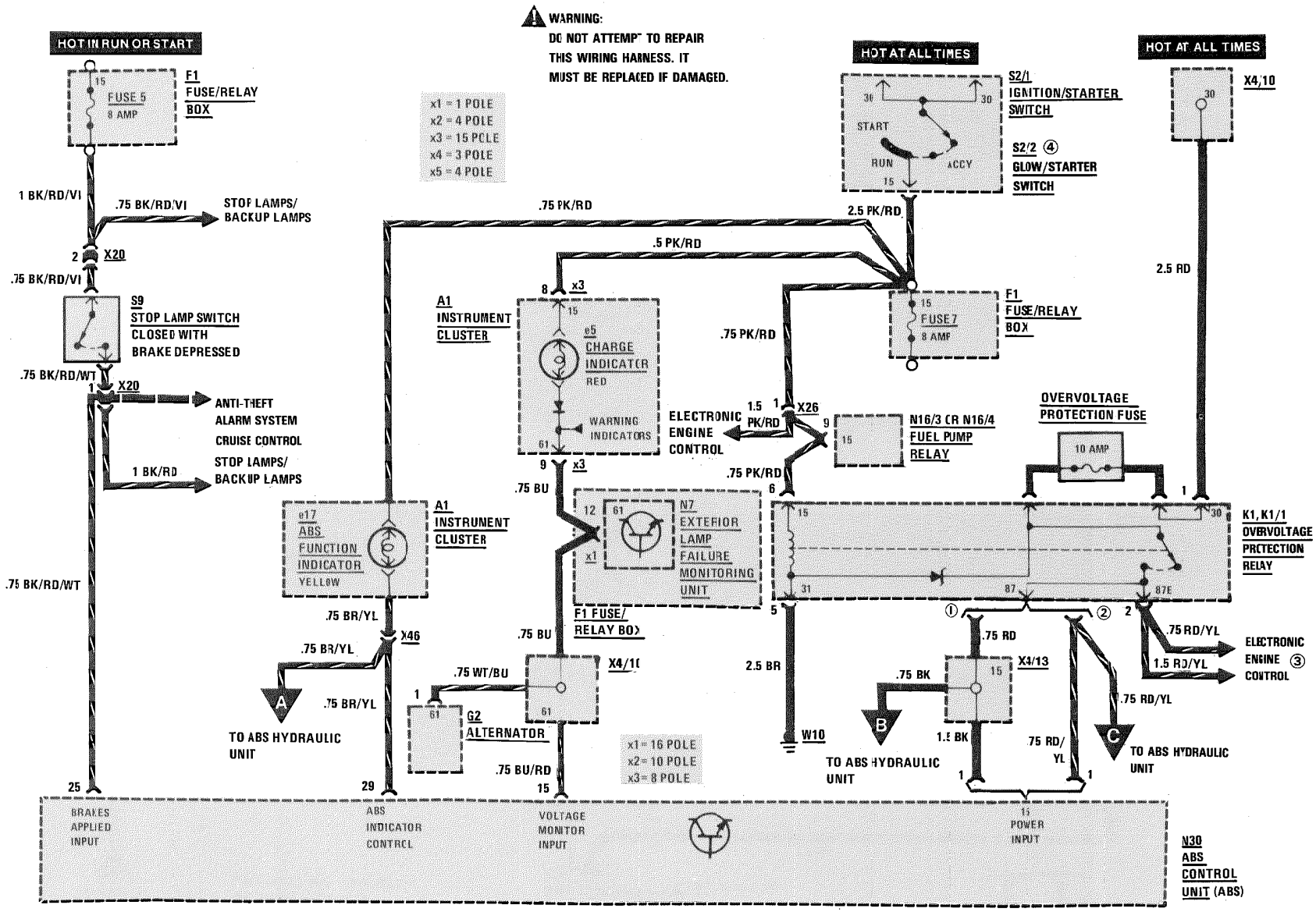

REVISIONS: ① MY 1986 AND 1987, CONNECTED TO PIN 4; AS OF MY 1988 CALIF., CONNECTED TO PIN 7

② AS OF MY 1988 FEDERAL, CONNECTED TO PIN 7

③ ELECTRONIC DIESEL SYSTEM IN DIESEL MODELS

④ DIESEL MODELS

ANTI-LOCK BRAKE SYSTEM

AS OF MY 1986

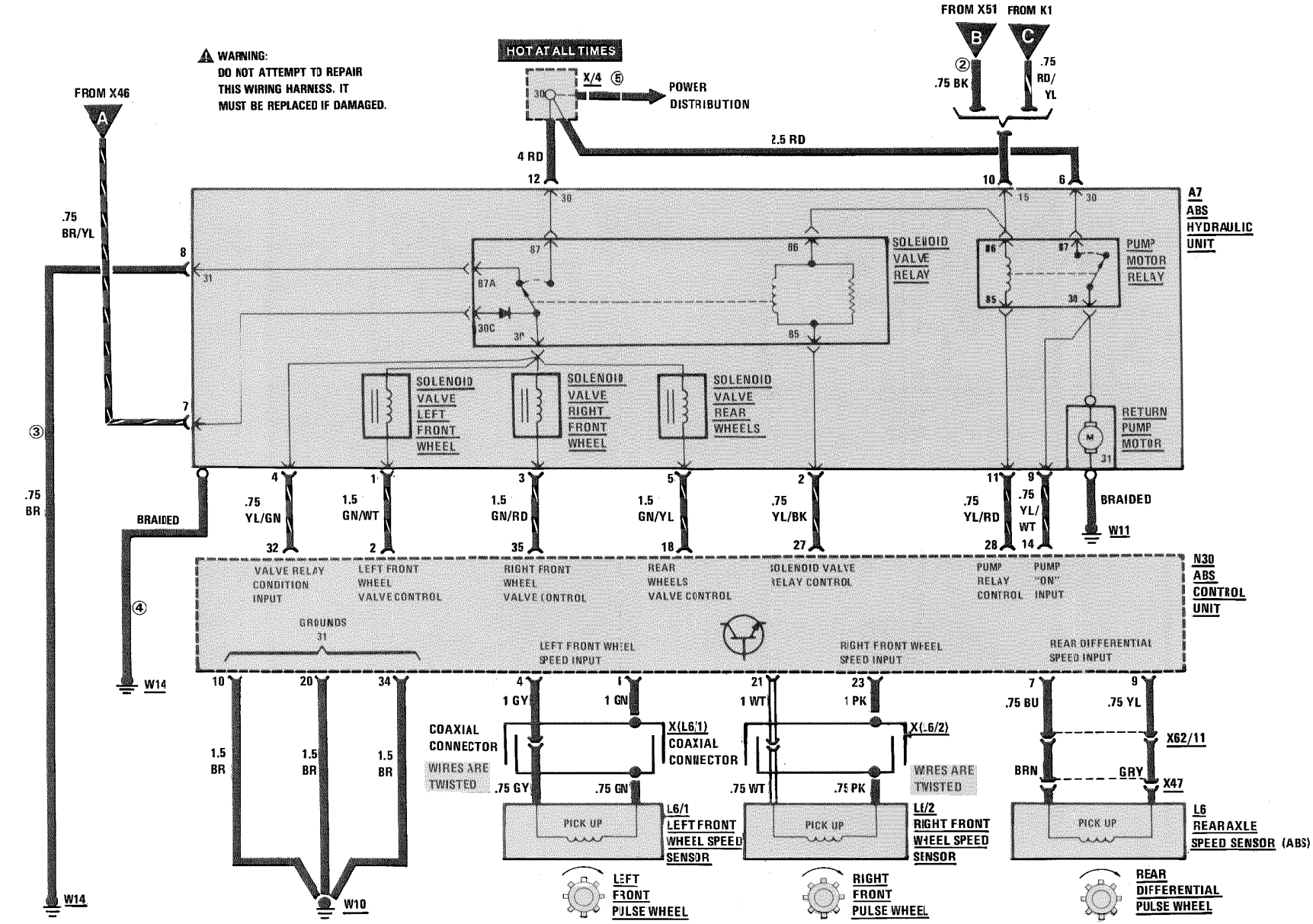

REVISIONS:
① AS OF MY 1988 FEDERAL VERSION
② AS OF MY 1986 CALIFORNIA VERSION
③ MY 1986 ONLY
④ AS OF MY 1987
⑤ AS OF MY 1990

ANTI-LOCK BRAKE SYSTEM (ABS)

AS OF MY 1992
400E/500E

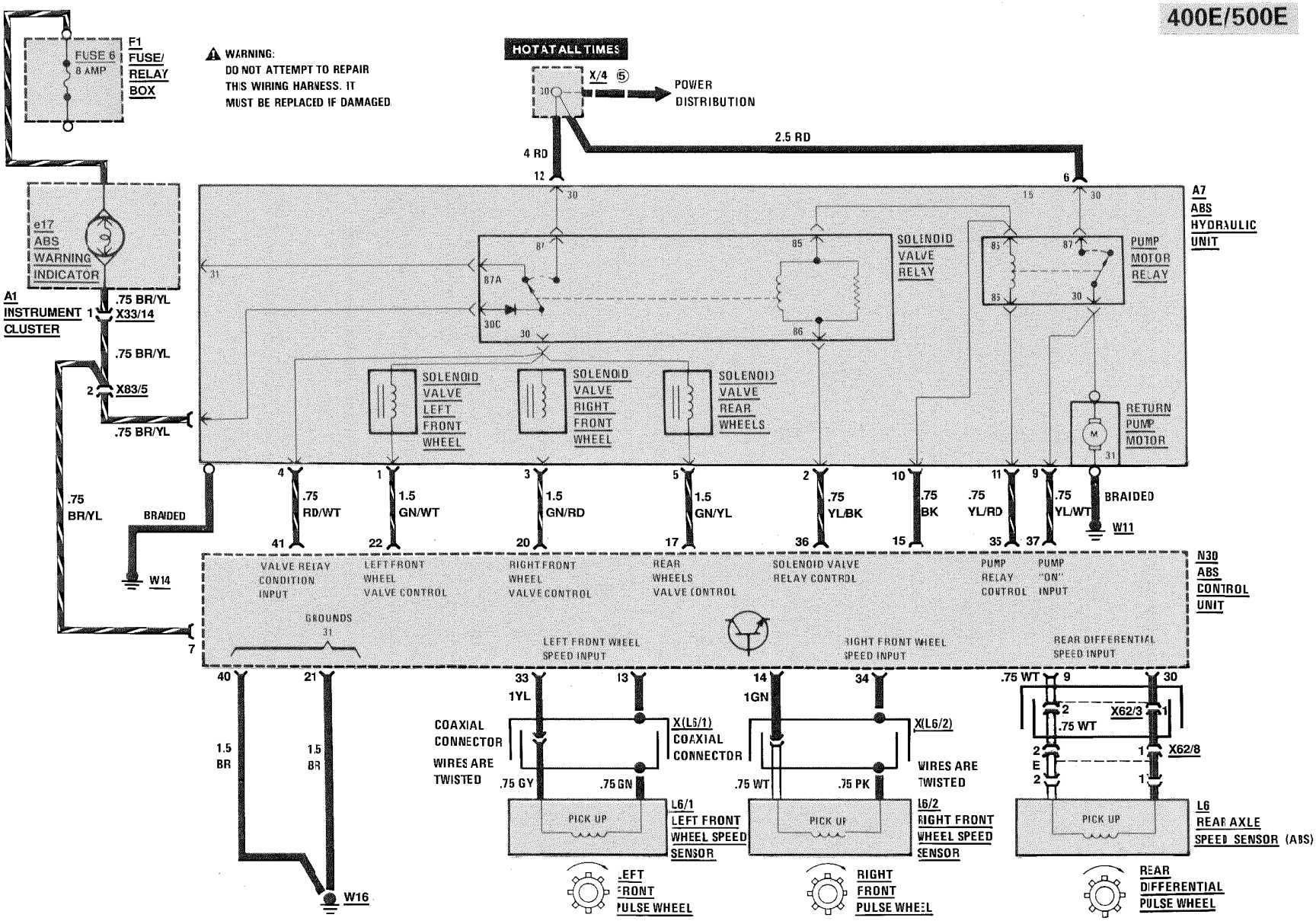

REVISIONS: ① AS OF MY 1988 FEDERAL VERSION
② AS OF MY 1986 CALIFORNIA VERSION
③ MY 1986 ONLY
④ AS OF MY 1987
⑤ AS OF MY 1990

ANTI-LOCK BRAKE SYSTEM (ABS)

AS OF MY 1992
400E/500E

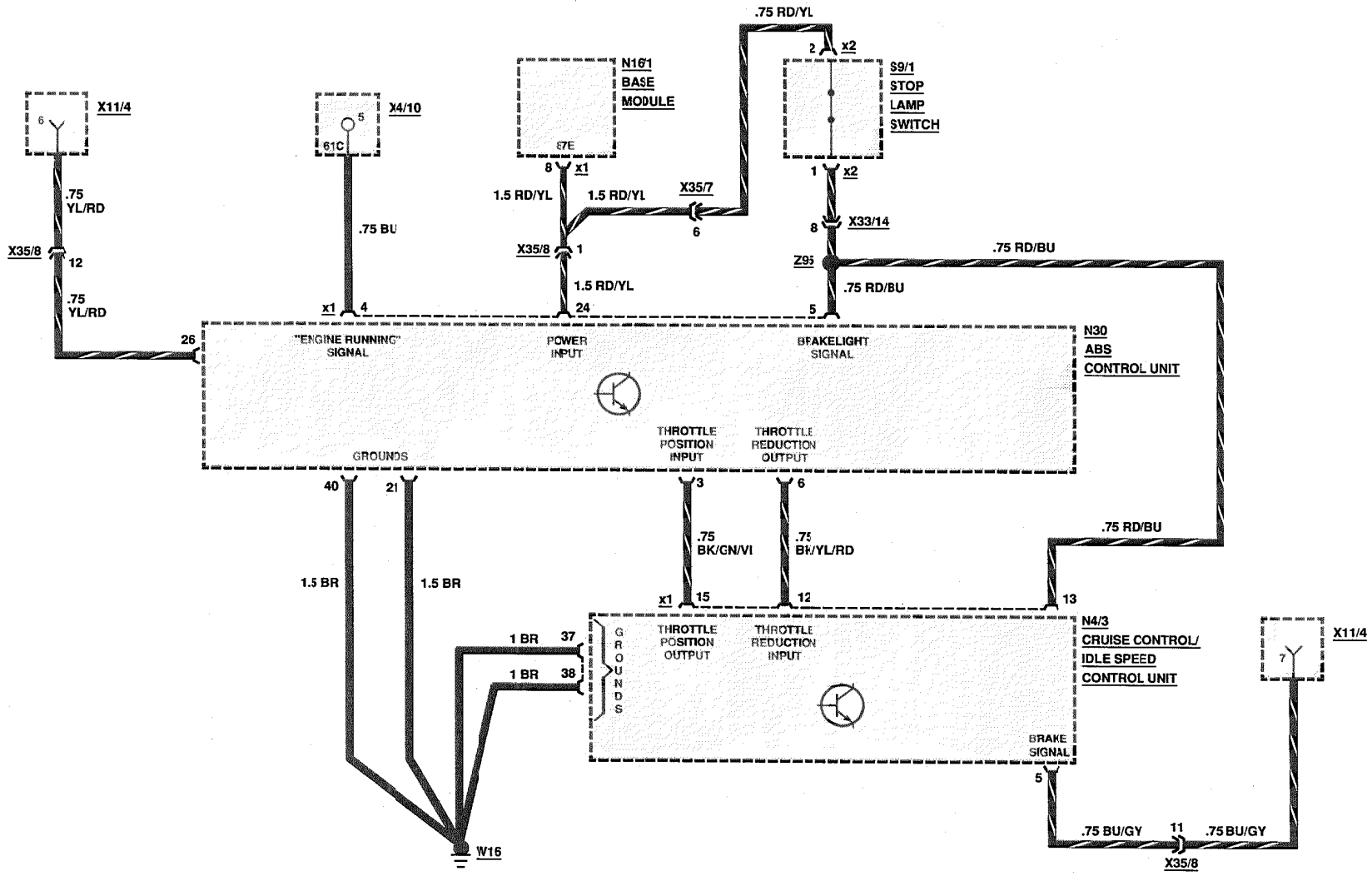

REVISIONS:

ANTI-LOCK BRAKE SYSTEM (ABS) (WITH ASD/4MATIC)

AS OF MY 1990

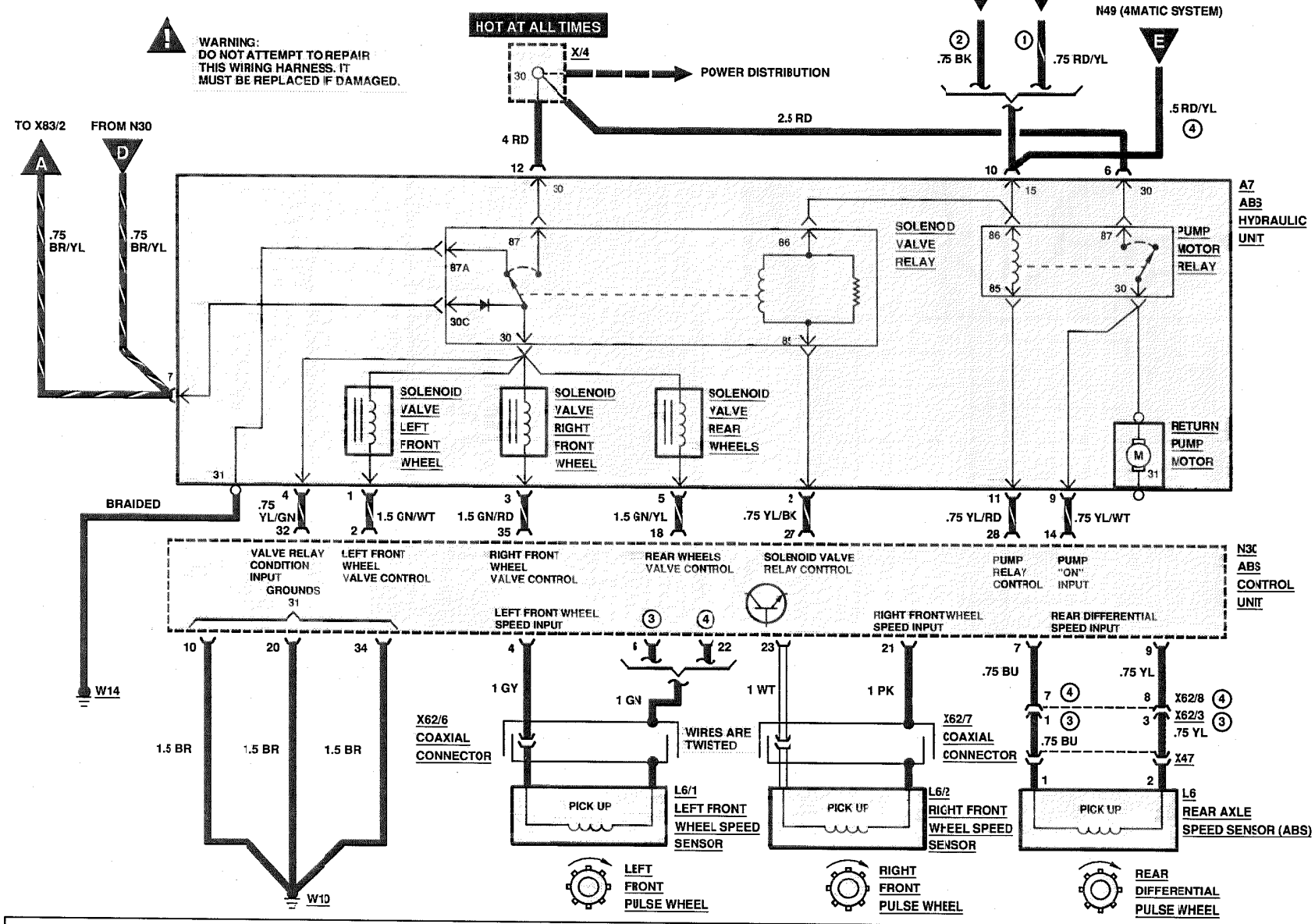

REVISIONS:

ANTI-LOCK BRAKE SYSTEM (ABS) (WITH ASD/4MATIC)

AS OF MY 1990

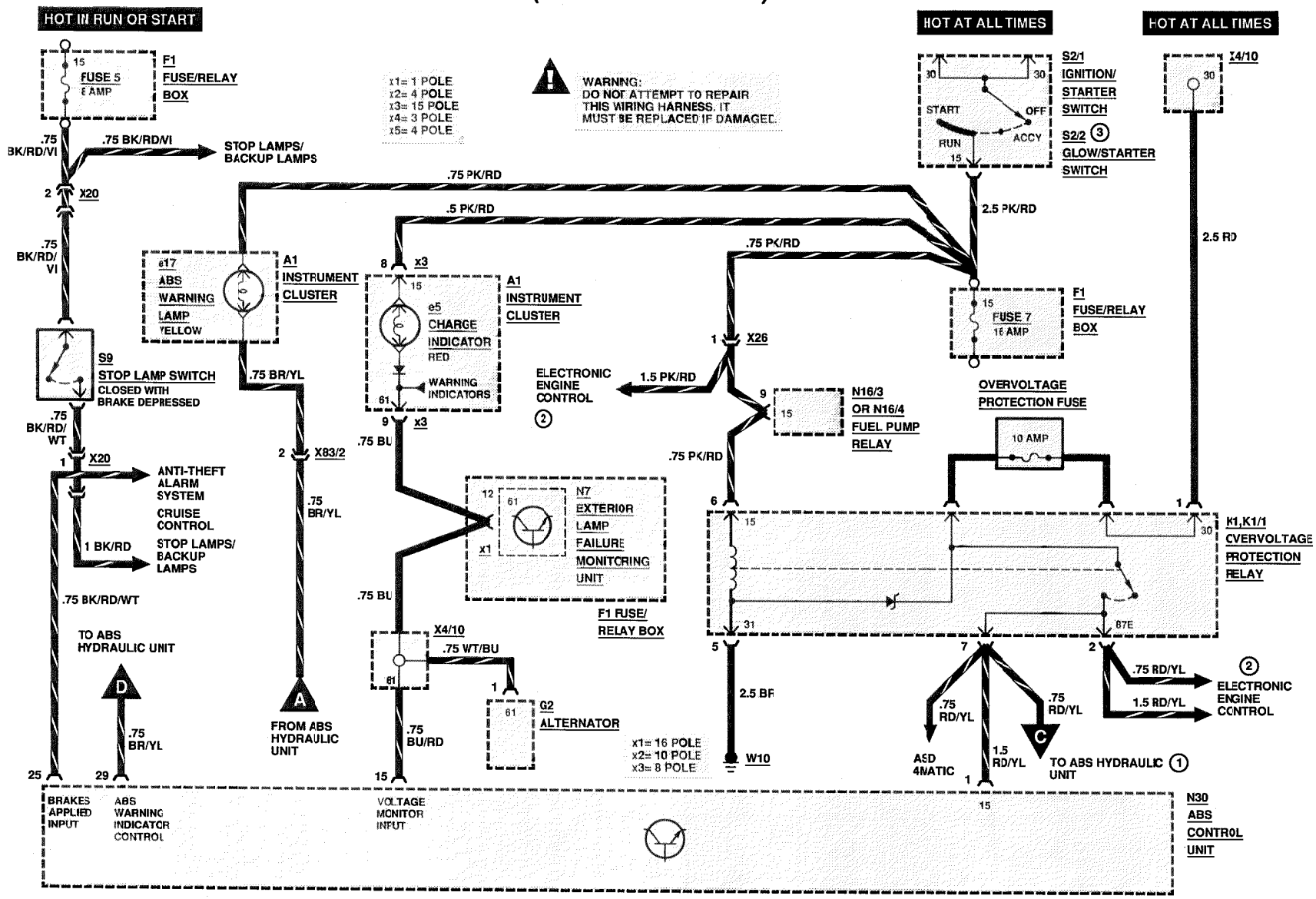

REVISIONS:
1. FEDERAL VERSION
2. ELECTRONIC DIESEL SYSTEM, DIESEL MODELS
3. DIESEL MODELS

ANTI-LOCK BRAKE SYSTEM (ABS) (WITH ASR)

AS OF MY 1991

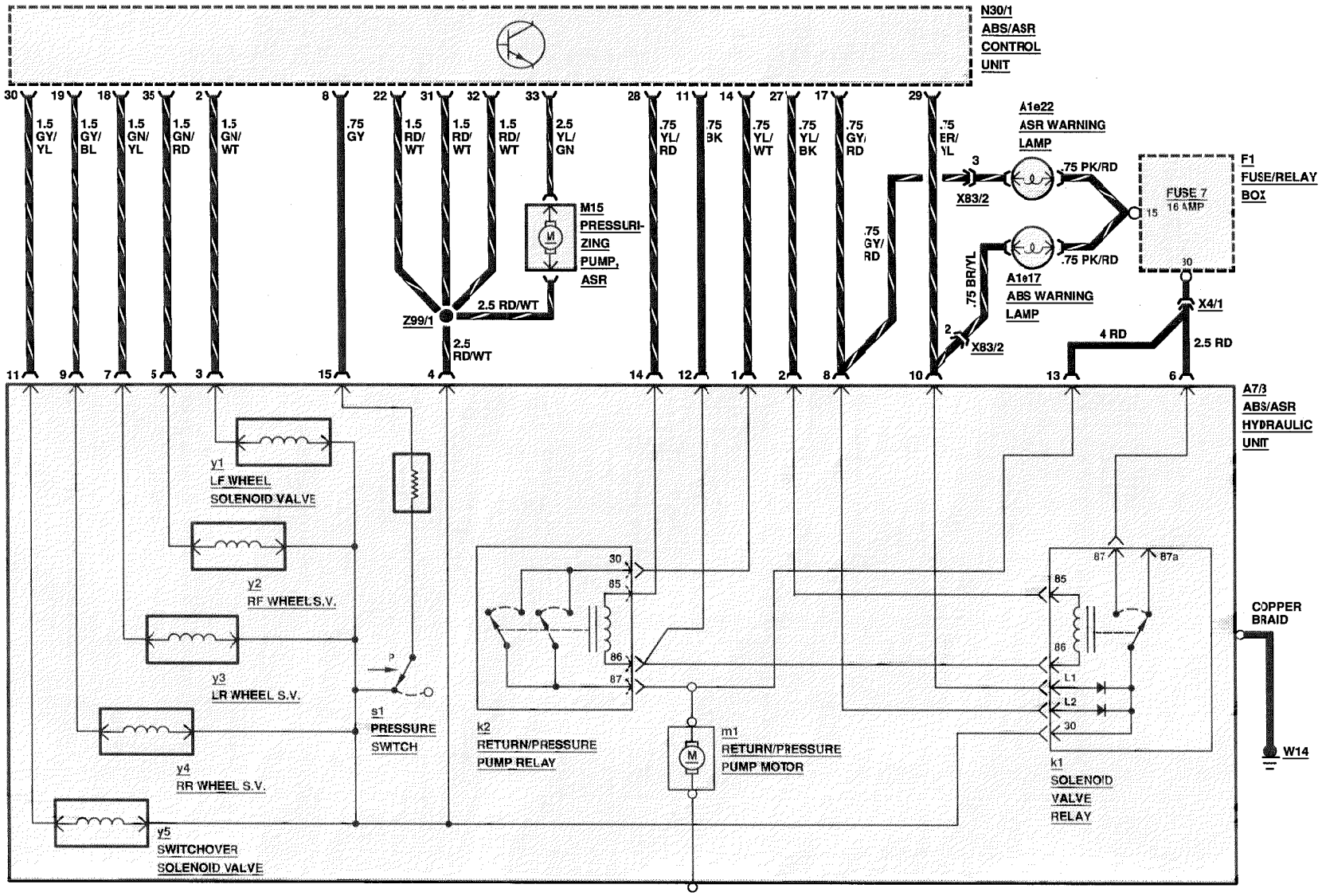

REVISIONS:

ANTI-LOCK BRAKE SYSTEM (ABS) (WITH ASR)

AS OF MY 1991

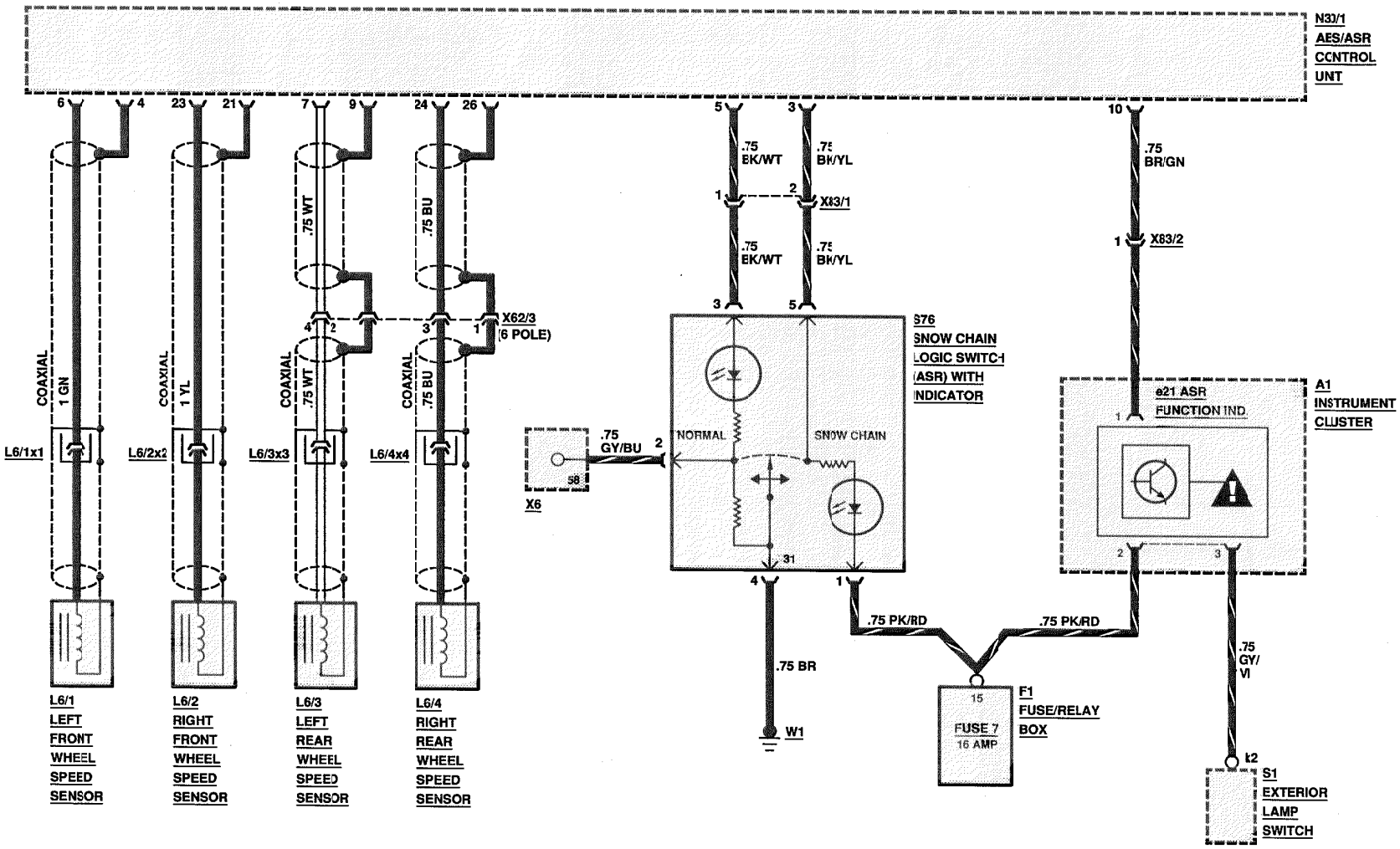

REVISIONS:

ANTI-LOCK BRAKE SYSTEM (ABS) (WITH ASR)

AS OF MY 1992

400E/500E

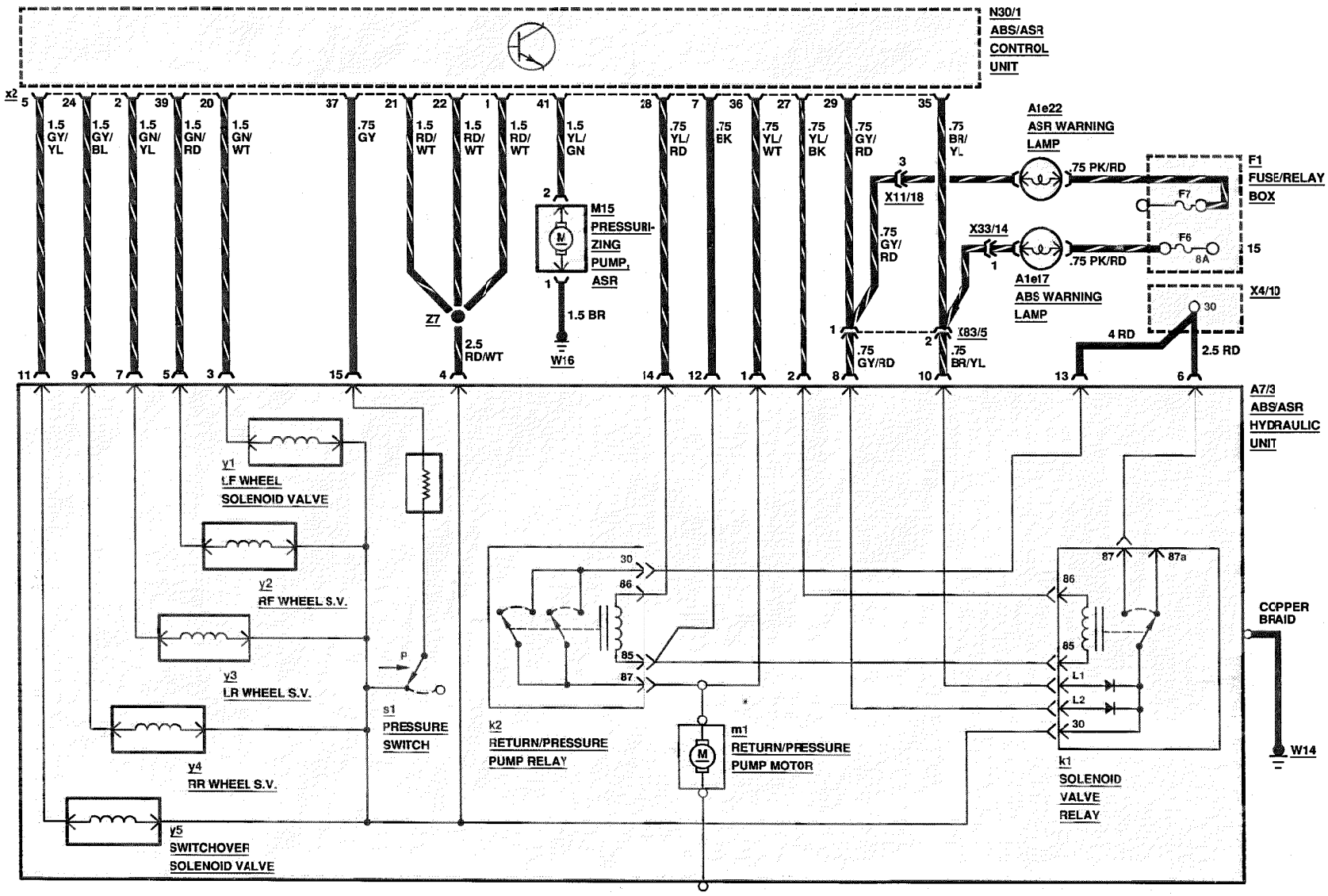

REVISIONS:

ANTI-LOCK BRAKE SYSTEM (ABS) (WITH ASR)

AS OF MY 1992

400E/500E

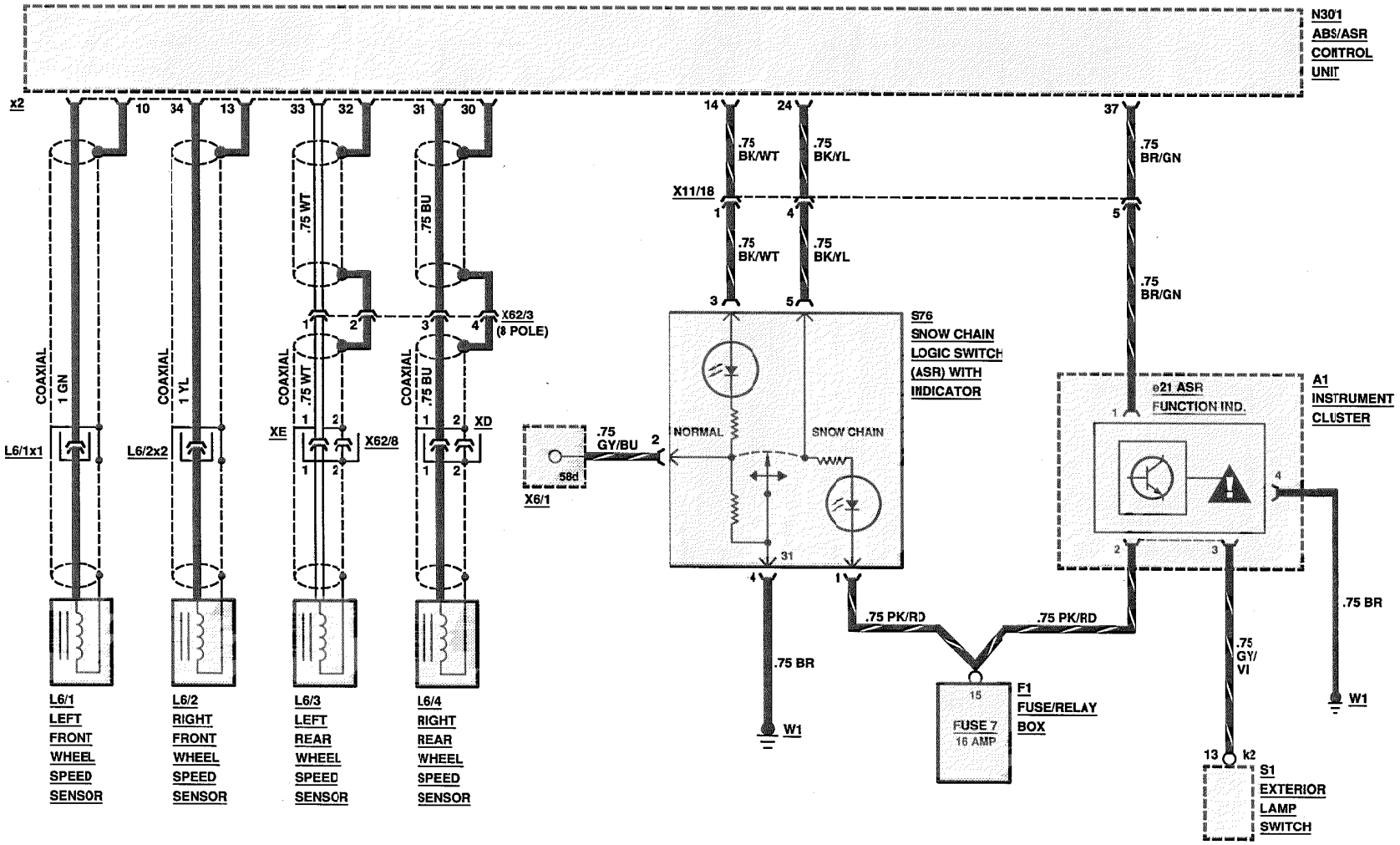

REVISIONS:

ANTI-LOCK BRAKE SYSTEM (ABS)
(WITH ASR/ELECTRONIC ACCELERATION SYSTEM)

AS OF MY 1991

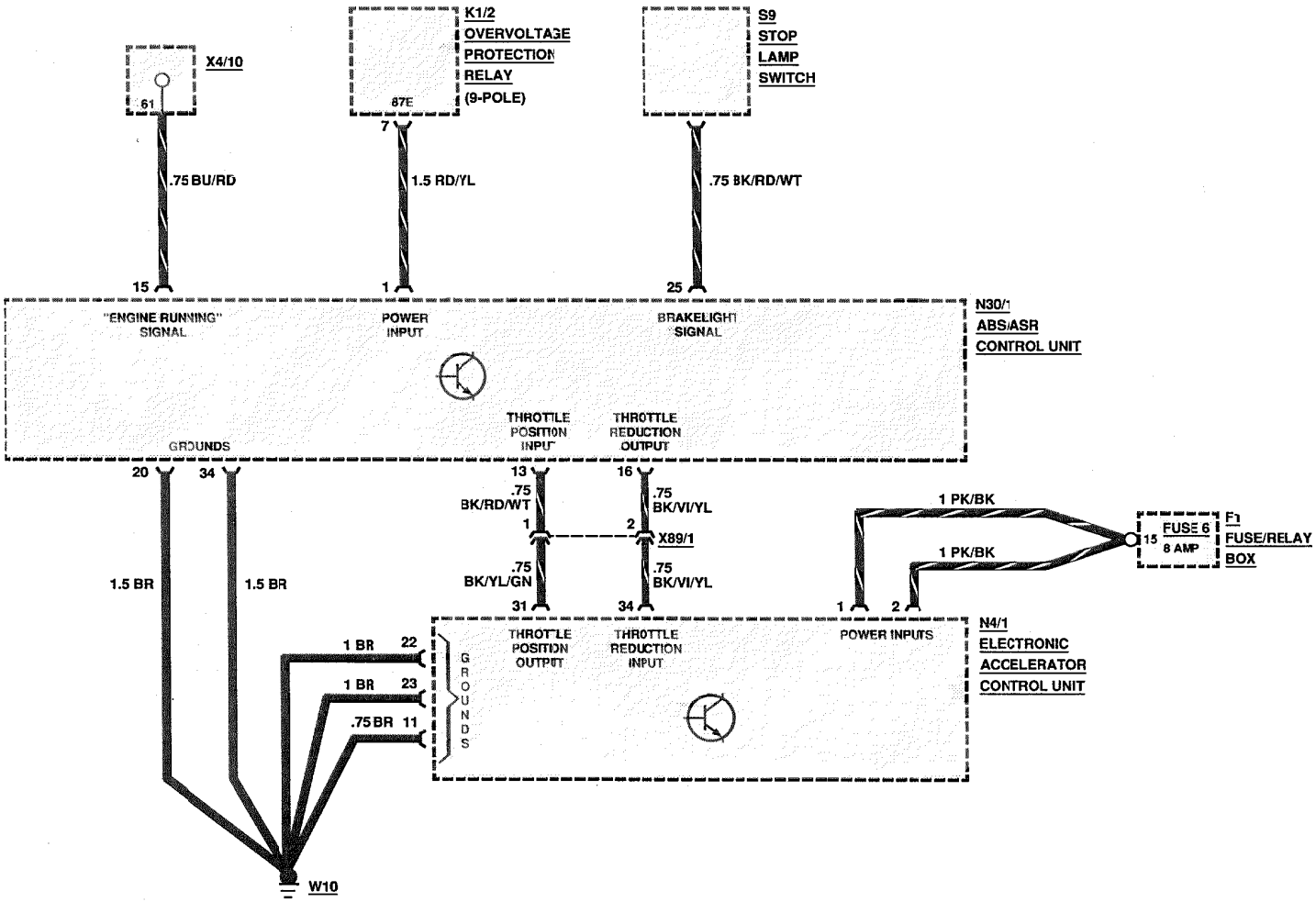

REVISIONS:

ANTI-LOCK BRAKE SYSTEM (ABS)
(WITH ASR/ELECTRONIC ACCELERATOR SYSTEM)

AS OF MY 1992
400E/500E

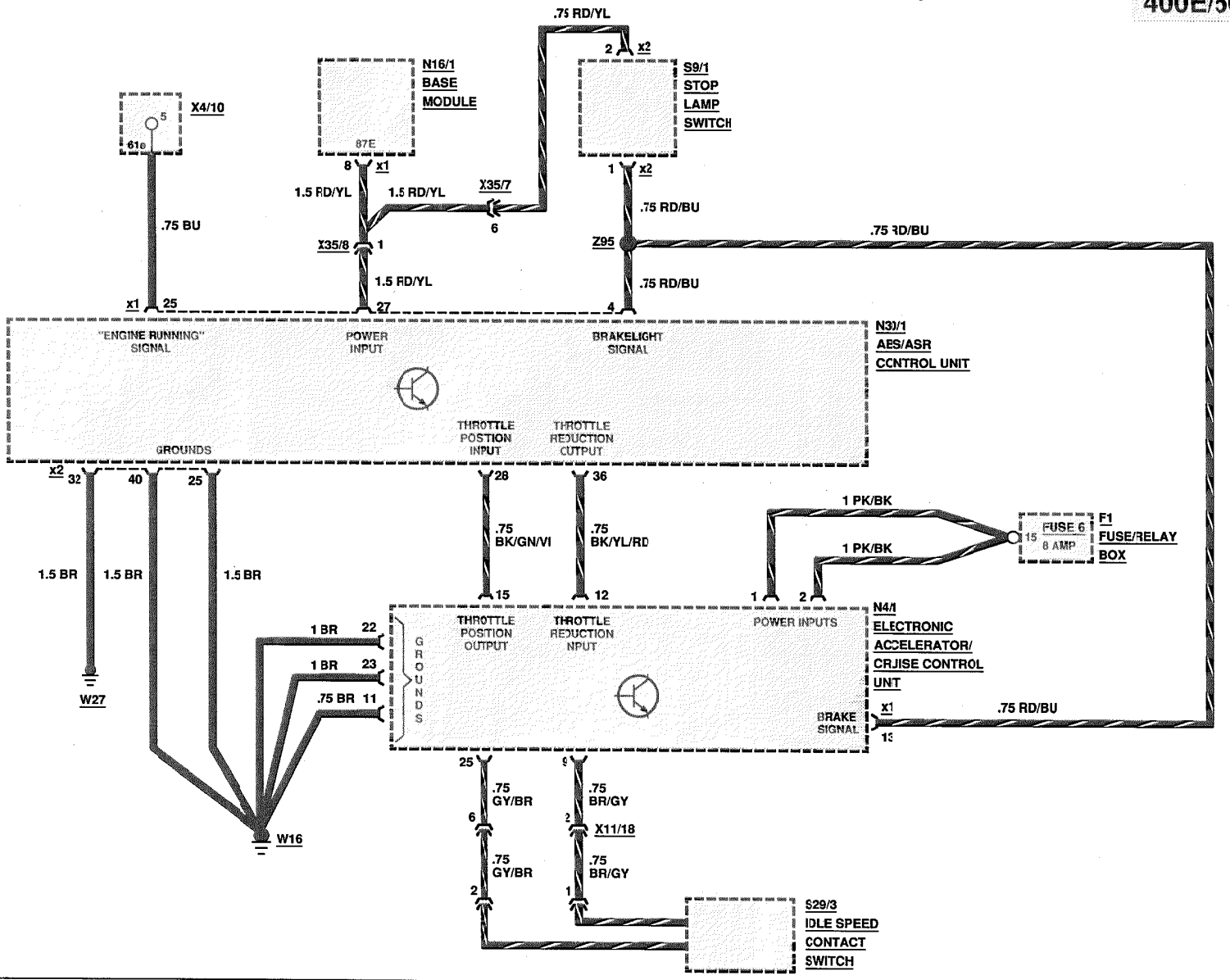

REVISIONS:

AUTOMATIC LOCKING DIFFERENTIAL (ASD)

AS OF MY 1991

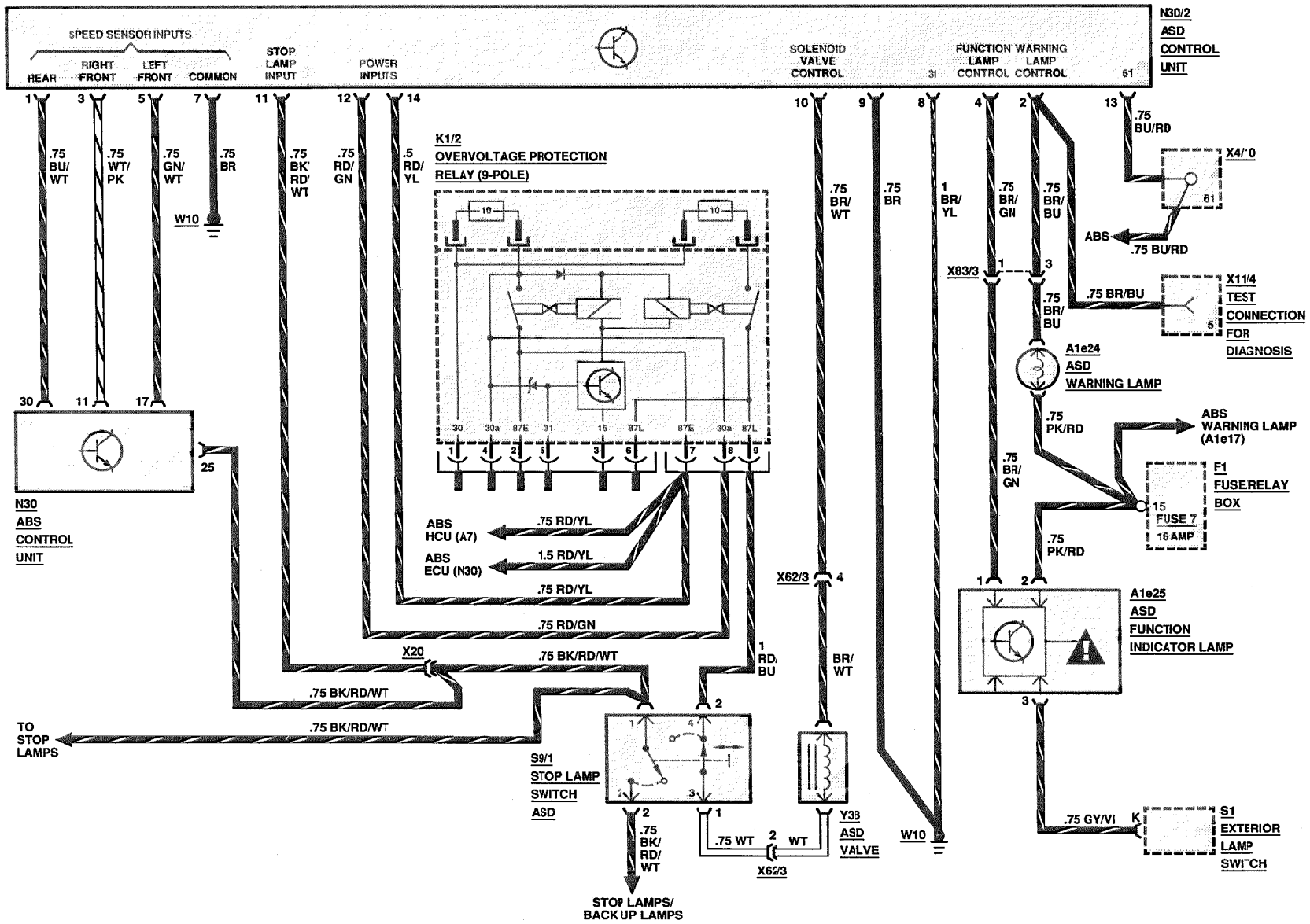

REVISIONS:

153/1

THIS PAGE INTENTIONALLY LEFT BLANK

REVISIONS:

4MATIC SYSTEM

MY 1990 TO MY 1991

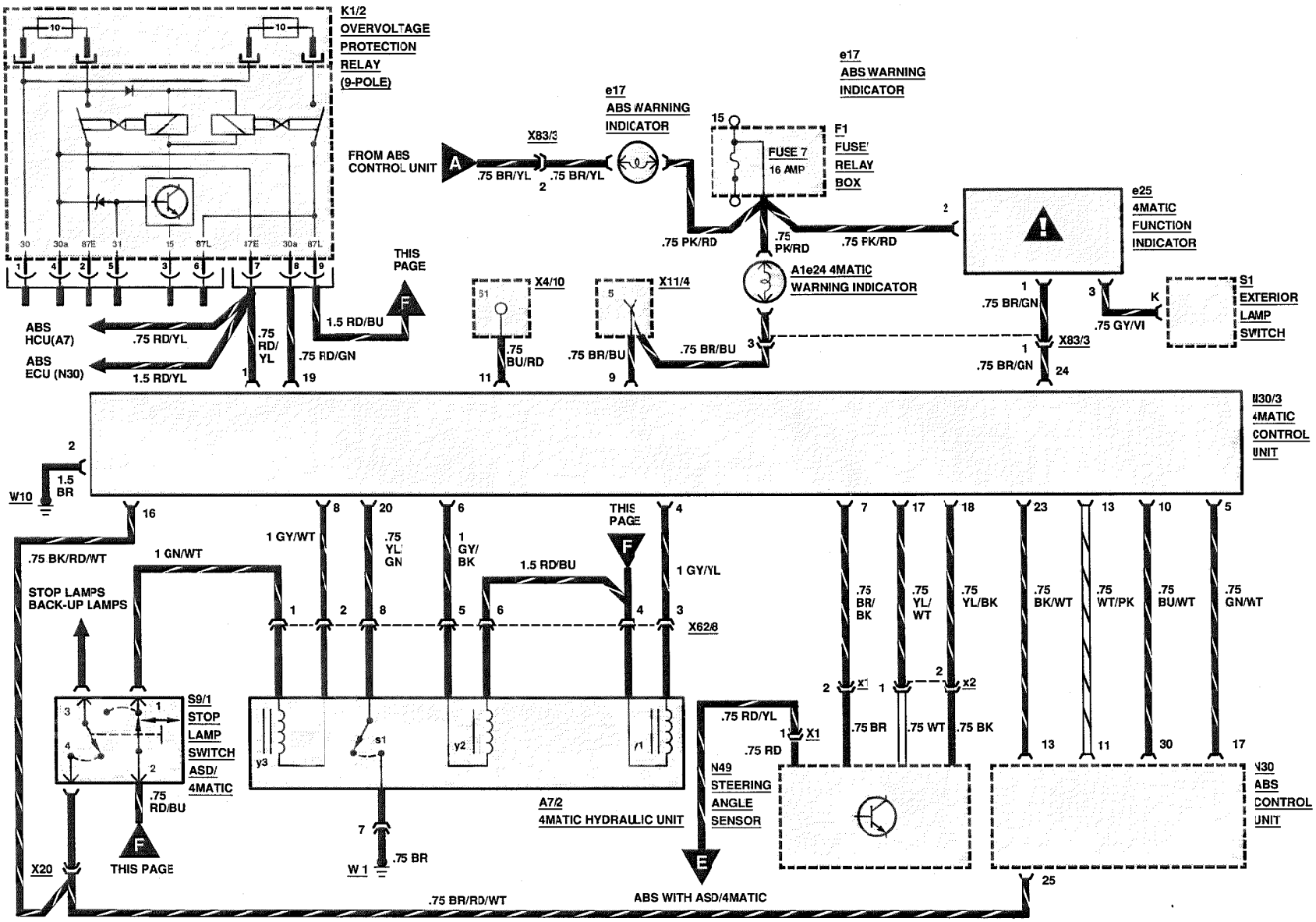

REVISIONS:

4MATIC SYSTEM

AS OF MY 1992

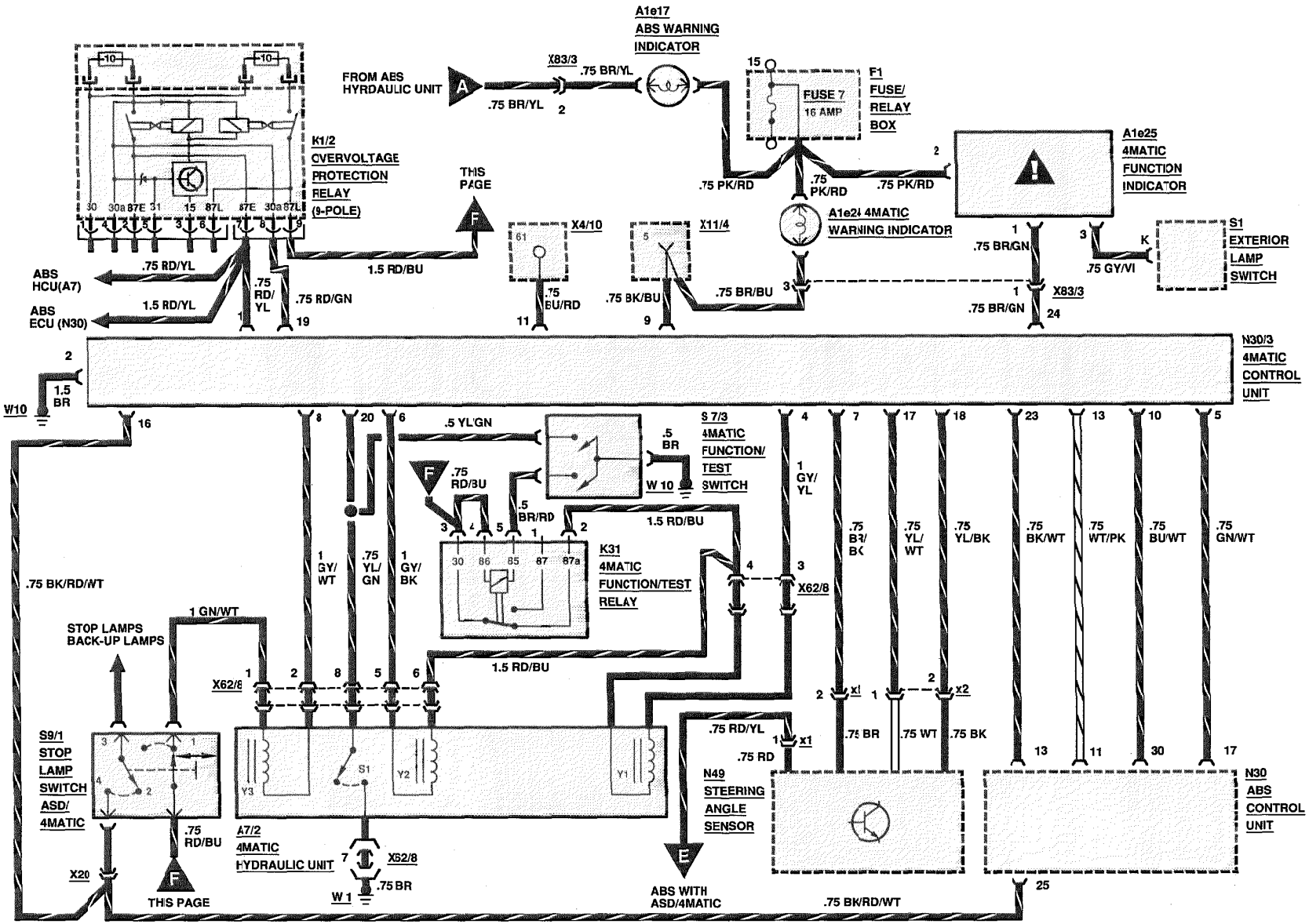

REVISIONS:

ORTHOPEDIC SEATS

AS OF MY 1986

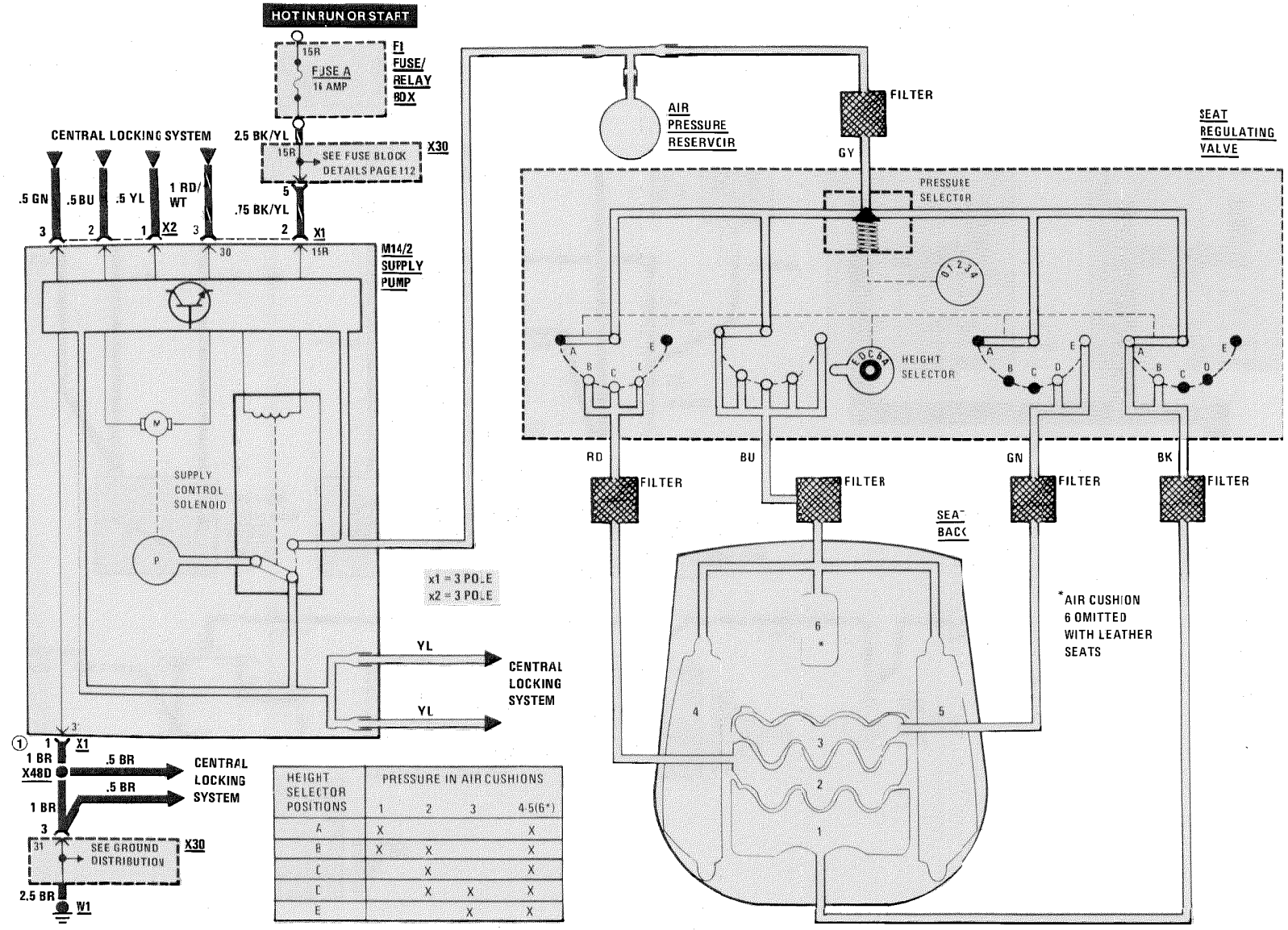

HEIGHT SELECTOR POSITIONS	PRESSURE IN AIR CUSHIONS			
	1	2	3	4-5(6*)
A	X			X
B	X	X		X
C		X		X
D		X	X	X
E			X	X

REVISIONS: ① AS OF MY 1991, GROUNDED DIRECTLY TO W12

SEAT BACKREST LOCKING SYSTEM

AS OF MY 1988

300 CE

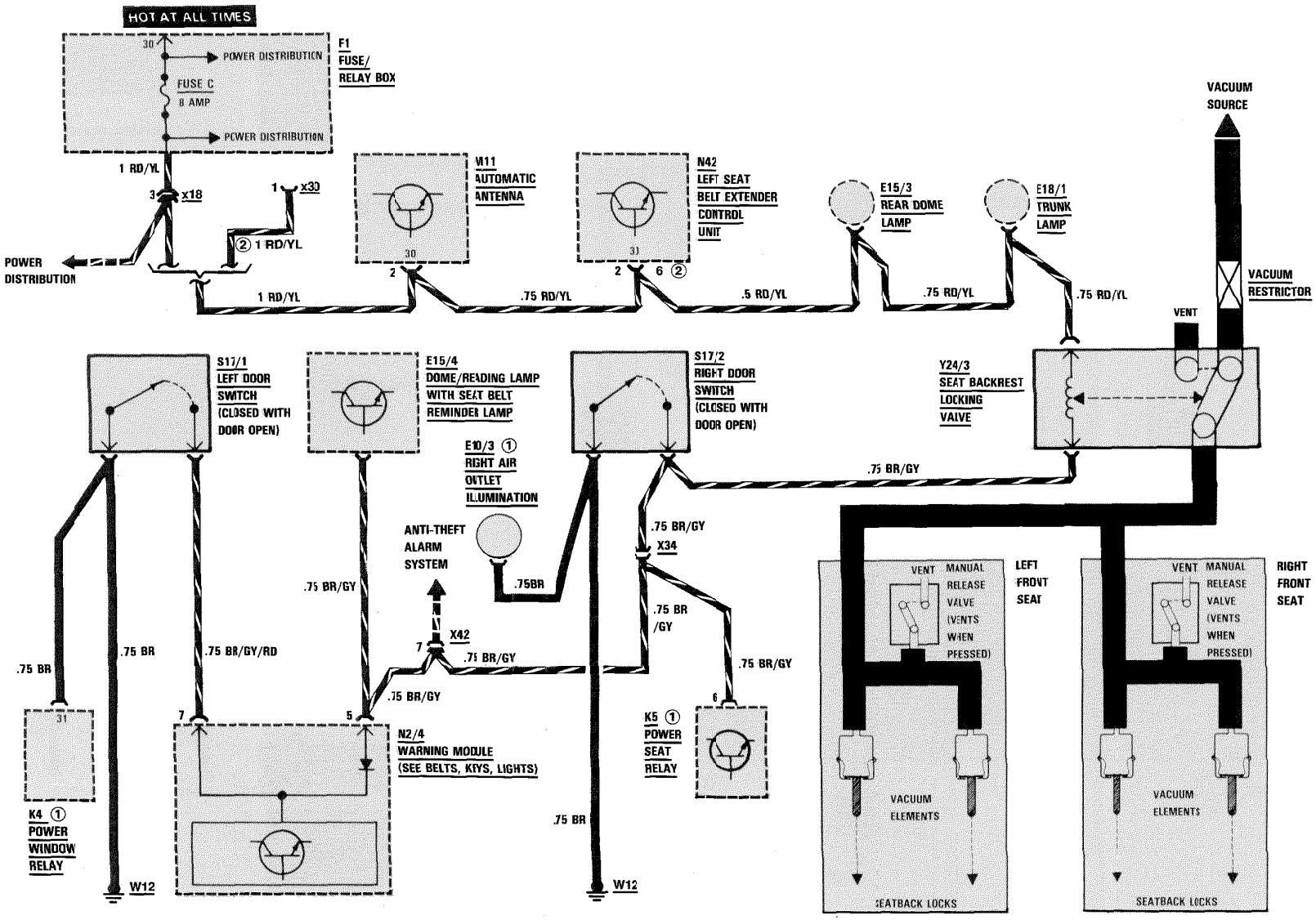

REVISIONS: ① AS OF MY 1989
② AS OF MY 1991

SEAT BELT EXTENDERS (LEFT SIDE)

MY 1988-1990

300 CE

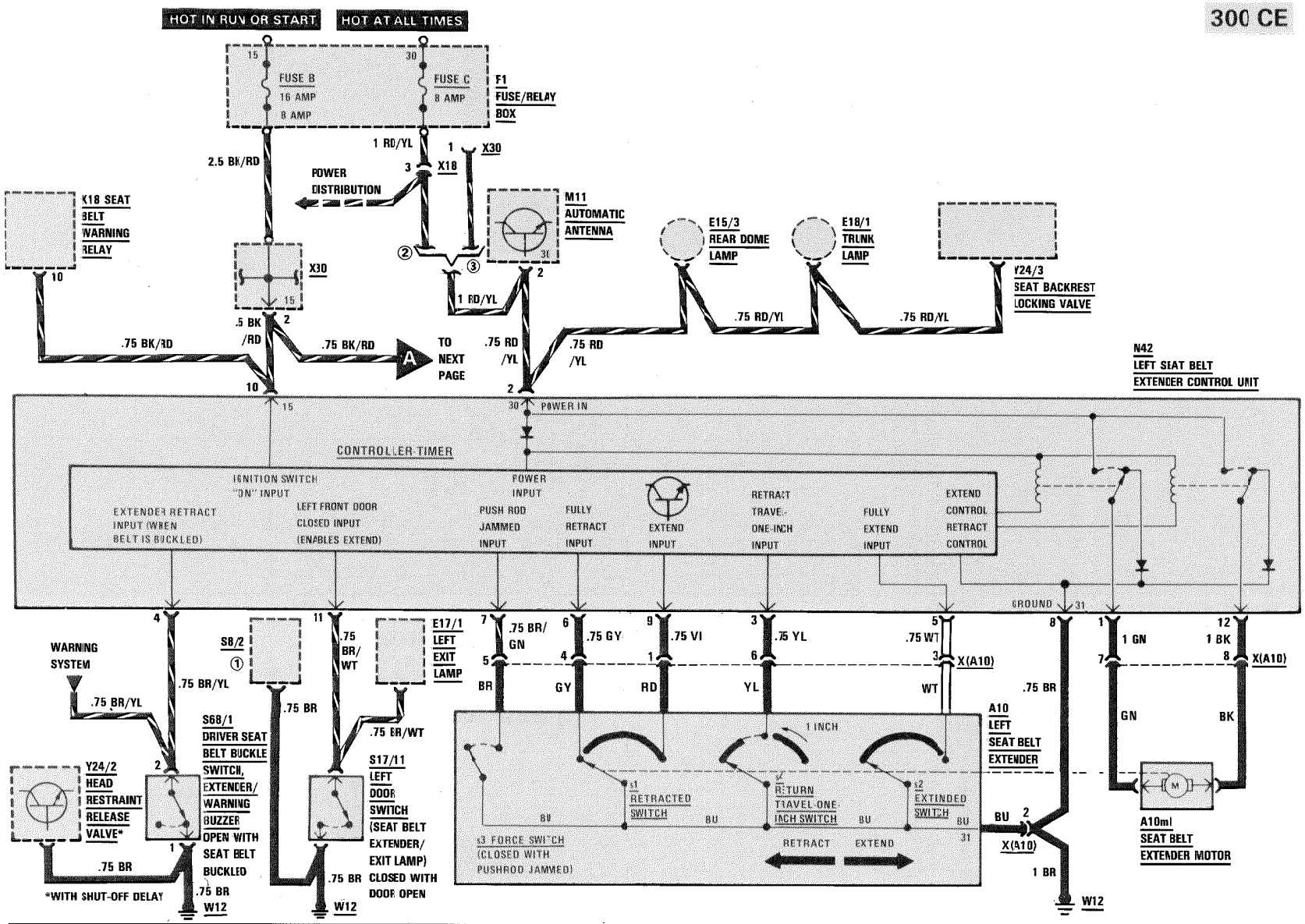

REVISIONS: ① WARNING BUZZER SWITCH, EXTERIOR LAMPS/CENTRAL LOCKING SYSTEM
② MY 1988/MY 1989
③ AS OF MY 1990

SEAT BELT EXTENDERS (RIGHT SIDE)

MY 1988-1990
300 CE

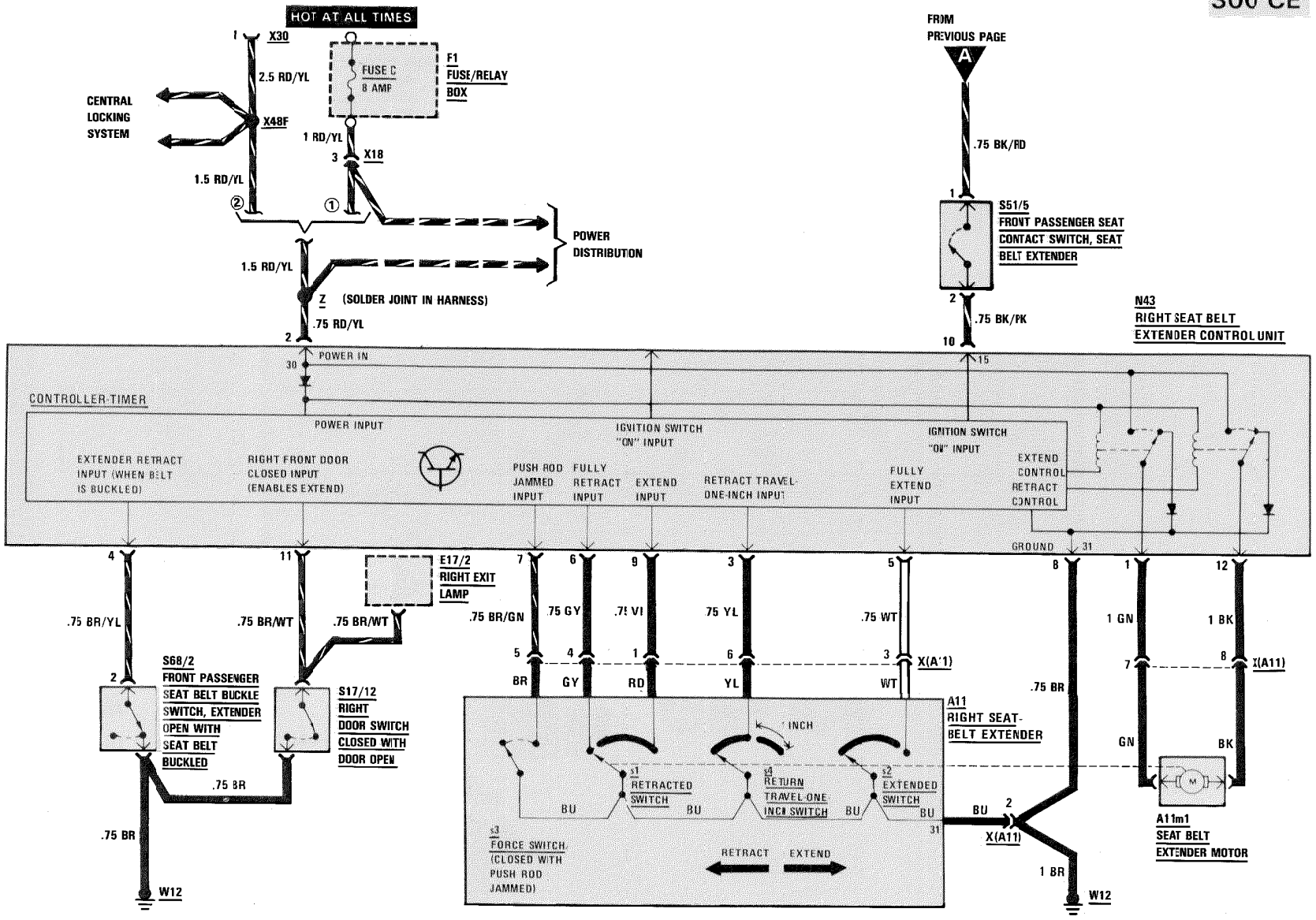

REVISIONS: ① MY 1988/1989
② AS OF MY 1990

SEAT BELT EXTENDERS (LEFT SIDE)

AS OF MY 1991

300 CE

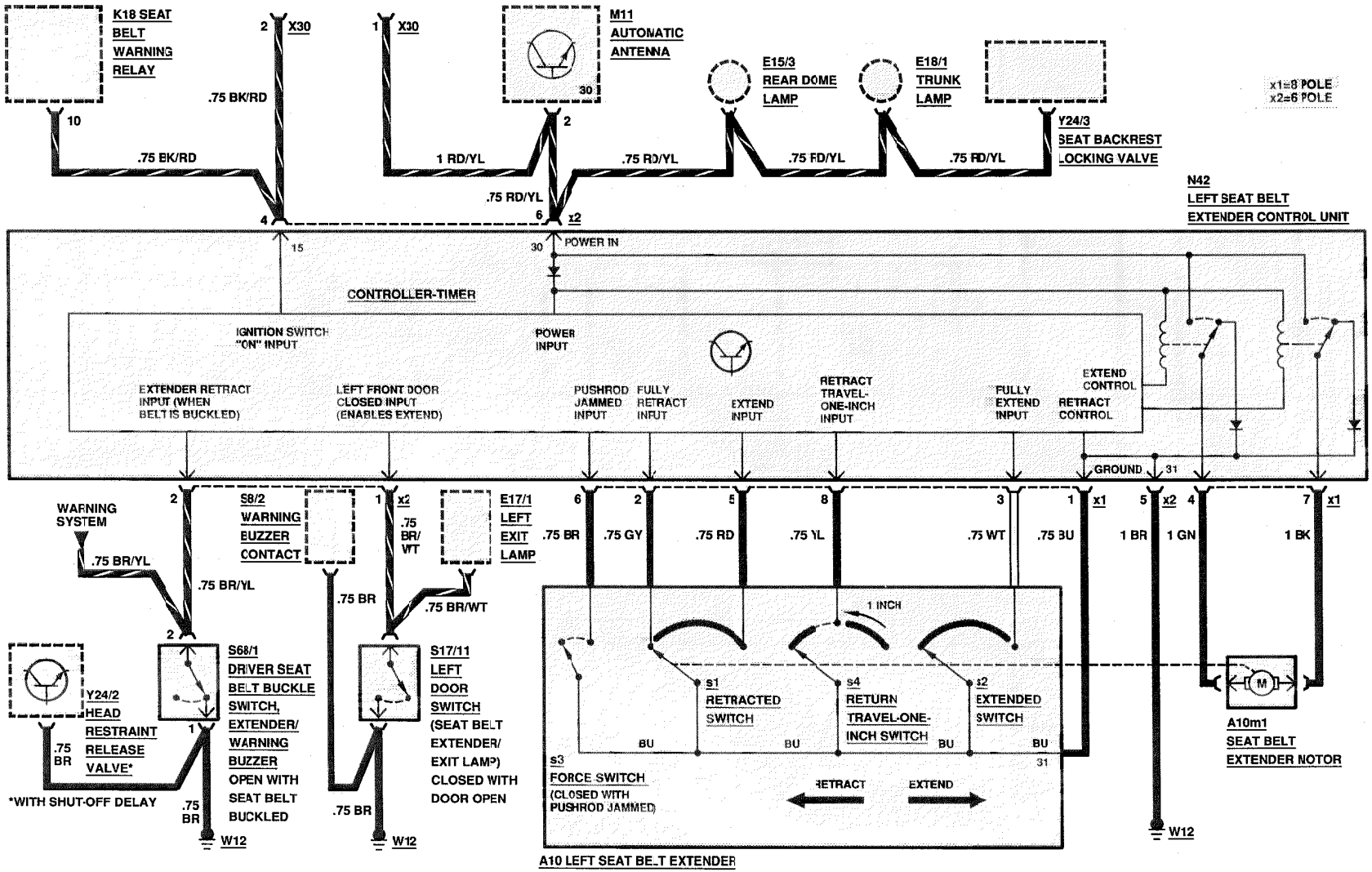

REVISIONS:

SEAT BELT EXTENDERS (RIGHT SIDE)

AS OF MY 1991

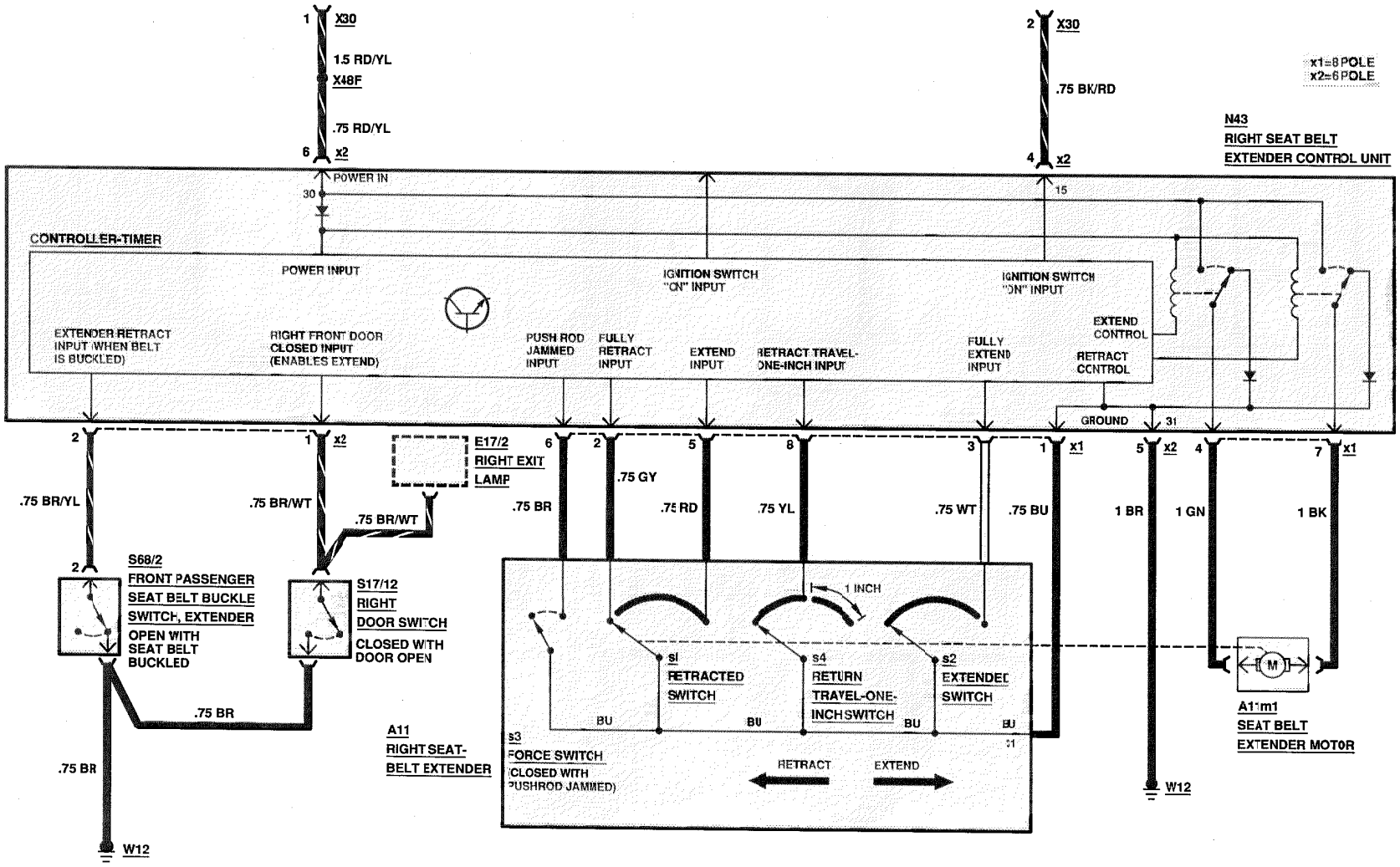

REVISIONS:

SUPPLEMENTAL RESTRAINT SYSTEM (SRS) (WITH DRIVER AIR BAG)

WARNING:

GAS GENERATORS ARE T1 PYROTECHNIC DEVICES, WHICH CAN CAUSE SEVERE INJURY IF MISHANDLED. BEFORE TESTING, REPAIRING OR HANDLING ANY PART OF THIS SYSTEM, DISCONNECT AND COVER THE NEGATIVE BATTERY TERMINAL AND DISCONNECT THE RED, 10-PIN CONNECTOR LOCATED UNDER THE FRONT PASSENGER FOOTREST. REFER TO GROUP 91 OF THE SERVICE MICROFICHE SYSTEM FOR PROCEDURES REGARDING TESTING, REMOVING, REPLACING, STORING AND DISPOSING OF SYSTEM COMPONENTS. OBSERVE ALL CAUTIONS FOUND IN THIS INFORMATION.

WARNING:
DO NOT ATTEMPT TO REPAIR THIS WIRING HARNESS. IT MUST BE REPLACED IF DAMAGED.

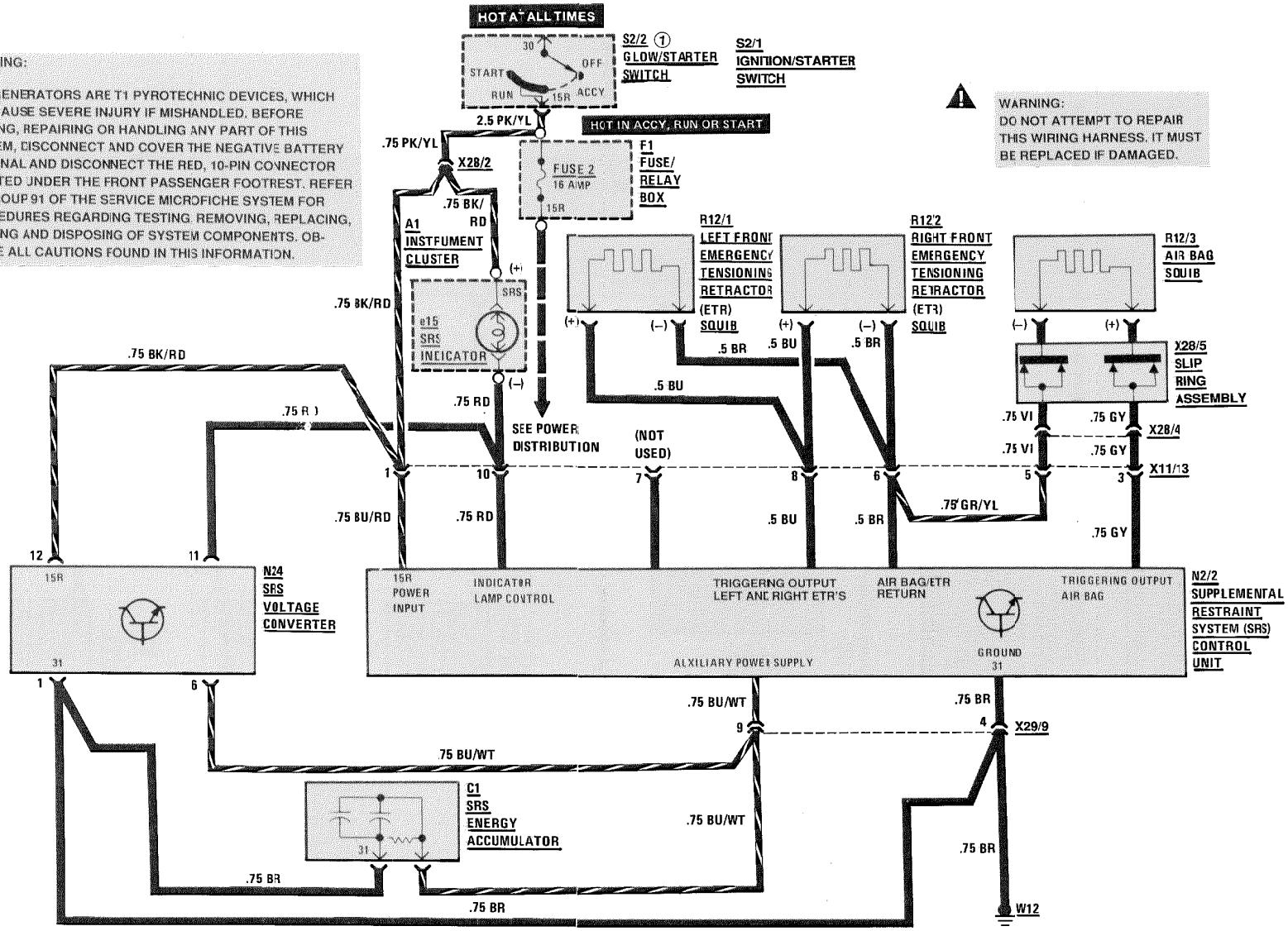

REVISIONS:

SUPPLEMENTAL RESTRAINT SYSTEM (SRS) (WITH DRIVER AIR BAG)

MY 1988

WARNING:
DO NOT ATTEMPT TO REPAIR THIS HARNESS. IT MUST BE REPLACED IF DAMAGED.

WARNING:
GAS GENERATORS ARE T1 PYROTECHNIC DEVICES, WHICH CAN CAUSE SEVERE INJURY IF MISHANDLED BEFORE TESTING, REPAIRING OR HANDLING ANY PART OF THIS SYSTEM, DISCONNECT AND COVER THE NEGATIVE BATTERY TERMINAL AND DISCONNECT THE RED, 10-PIN CONNECTOR LOCATED UNDER THE FRONT PASSENGER FOOTREST. REFER TO GROUP 91 OF THE SERVICE MICROFICHE SYSTEM FOR PROCEDURES REGARDING TESTING, REMOVING, REPLACING, STORING AND DISPOSING OF SYSTEM COMPONENTS. OBSERVE ALL CAUTIONS FOUND IN THIS INFORMATION.

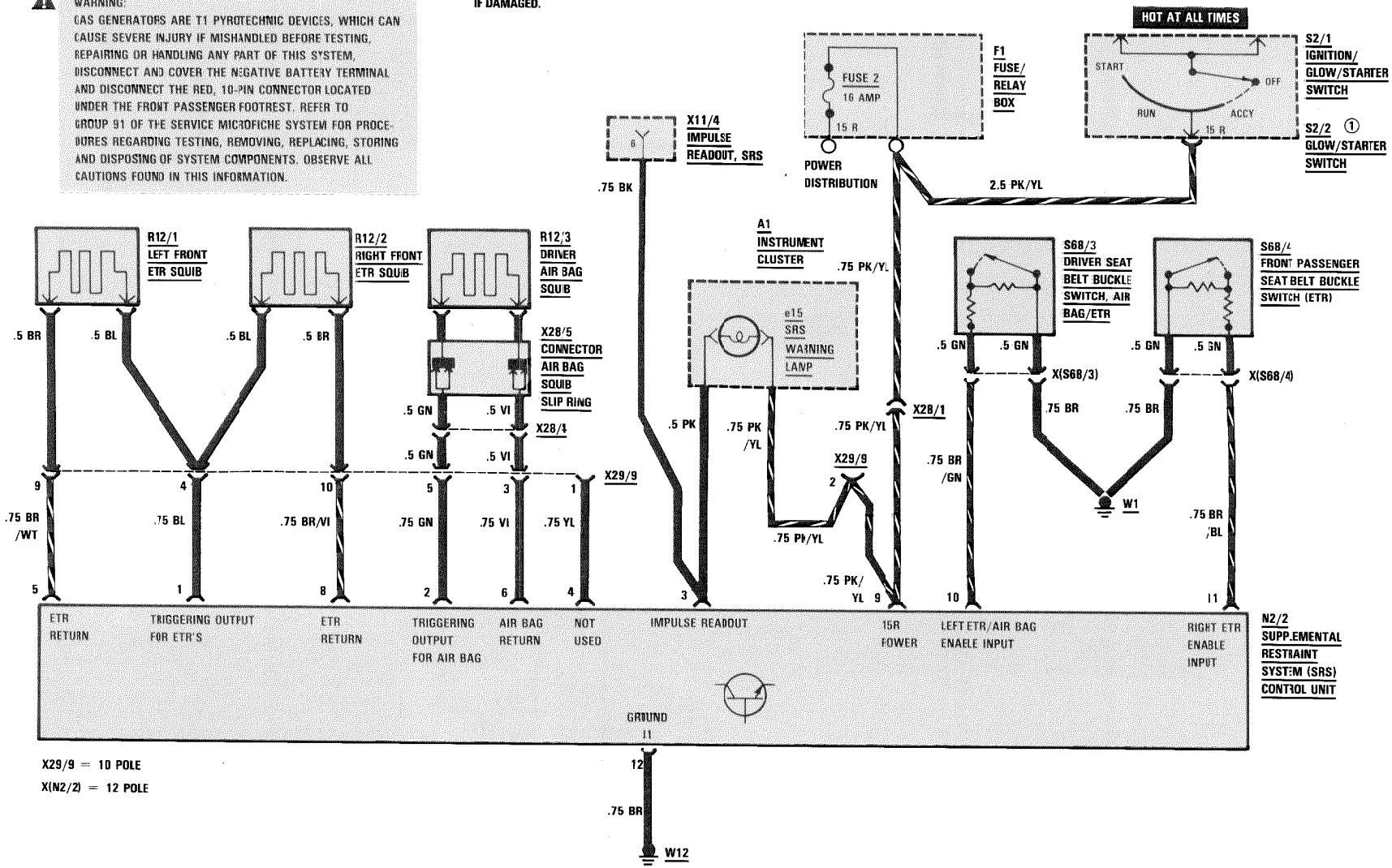

REVISIONS: ① DIESEL MODELS

SUPPLEMENTAL RESTRAINT SYSTEM (SRS) (WITH DRIVER AND FRONT PASSENGER AIR BAGS)

AS OF MY 1989

WARNING:
GAS GENERATORS ARE T1 PYROTECHNIC DEVICES, WHICH CAN CAUSE SEVERE INJURY IF MISHANDLED BEFORE TESTING, REPAIRING OR HANDLING ANY PART OF THIS SYSTEM, DISCONNECT AND COVER THE NEGATIVE BATTERY TERMINAL AND DISCONNECT THE RED, 10-PIN CONNECTOR LOCATED UNDER THE FRONT PASSENGER FOOTREST. REFER TO GROUP 91 OF THE SERVICE MICROFICHE SYSTEM FOR PROCEDURES REGARDING TESTING, REMOVING, REPLACING, STORING AND DISPOSING OF SYSTEM COMPONENTS. OBSERVE ALL CAUTIONS FOUND IN THIS INFORMATION.

WARNING:
DO NOT ATTEMPT TO REPAIR THIS HARNESS. IT MUST BE REPLACED IF DAMAGED.

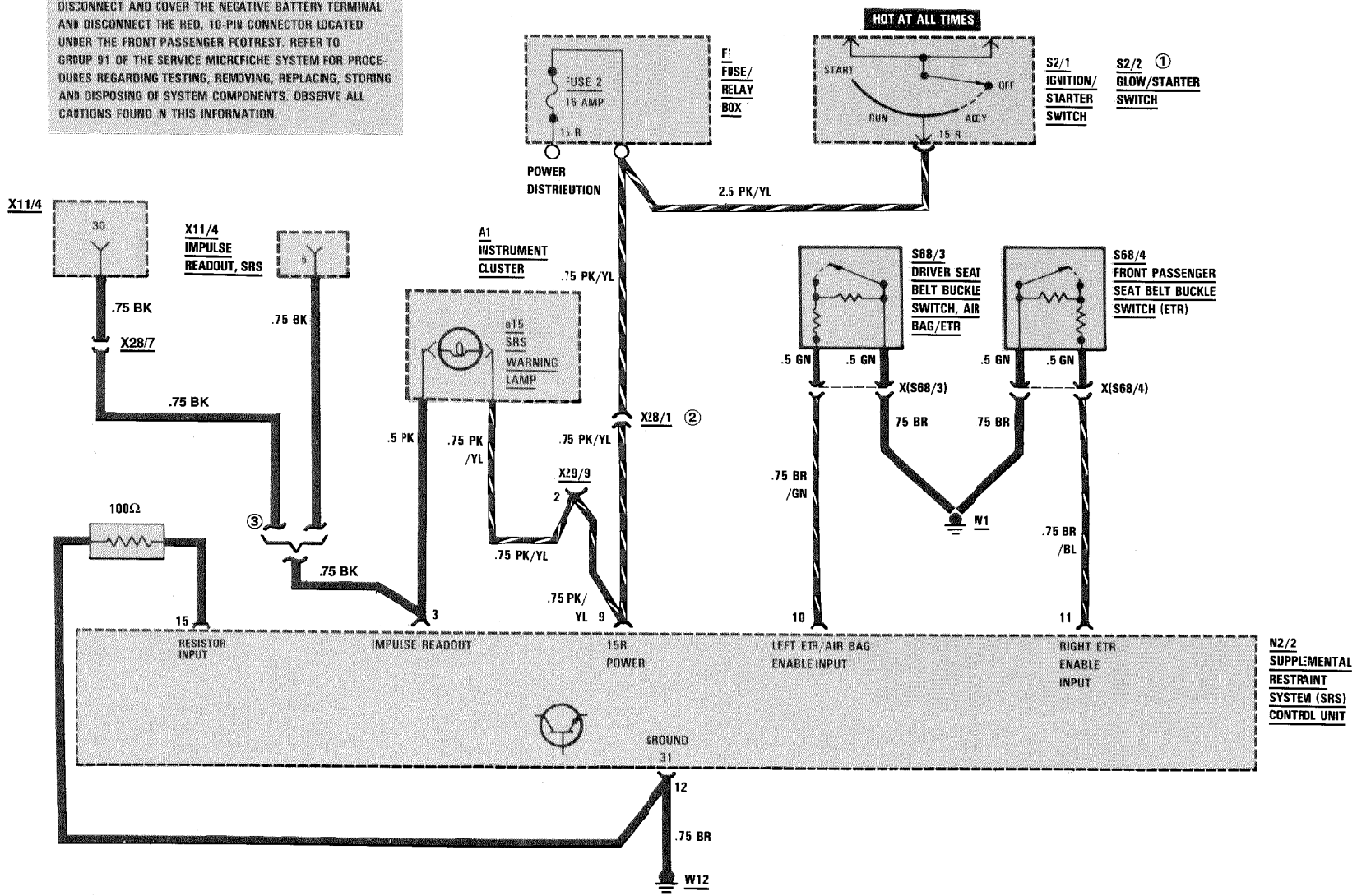

REVISIONS: ① DIESEL MODELS
② NOT USED AS OF MY 1991
③ MODELS 400E/500E

SUPPLEMENTAL RESTRAINT SYSTEM (SRS) (WITH DRIVER AND FRONT PASSENGER AIR BAGS)

AS OF MY 1989

WARNING:

GAS GENERATORS ARE T1 PYROTECHNIC DEVICES, WHICH CAN CAUSE SEVERE INJURY IF MISHANDLED. BEFORE TESTING, REPAIRING OR HANDLING ANY PART OF THIS SYSTEM, DISCONNECT AND COVER THE NEGATIVE BATTERY TERMINAL AND DISCONNECT THE RED, 10-PIN CONNECTOR LOCATED UNDER THE FRONT PASSENGER FOOTREST. REFER TO GROUP 91 OF THE SERVICE MICROFICHE SYSTEM FOR PROCEDURES REGARDING TESTING, REMOVING, REPLACING, STORING AND DISPOSING OF SYSTEM COMPONENTS. OBSERVE ALL CAUTIONS FOUND IN THIS INFORMATION.

WARNING:
DO NOT ATTEMPT TO REPAIR THIS HARNESS. IT MUST BE REPLACED IF DAMAGED.

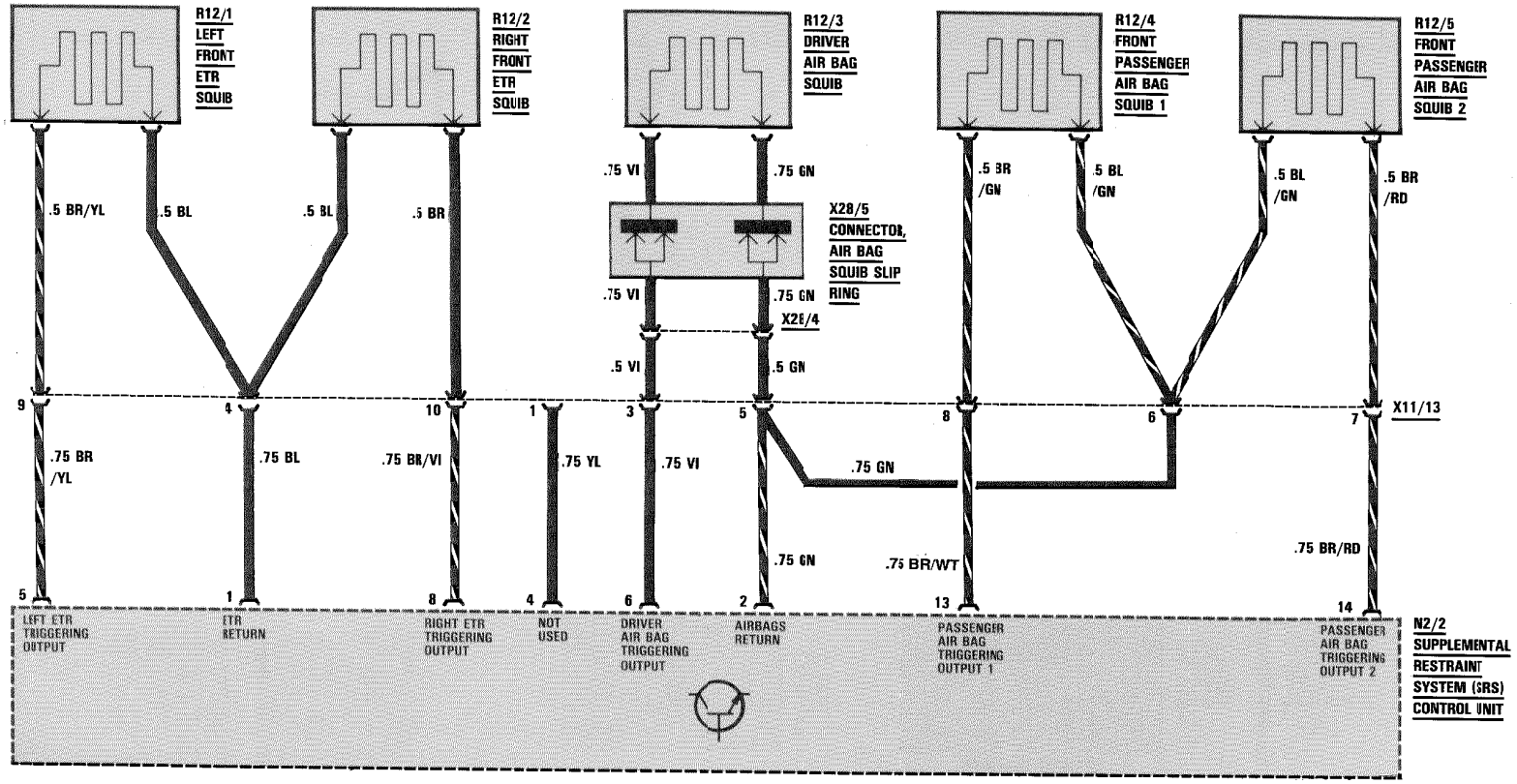

REVISIONS:

WIPER/WASHER

AS OF MY 1986

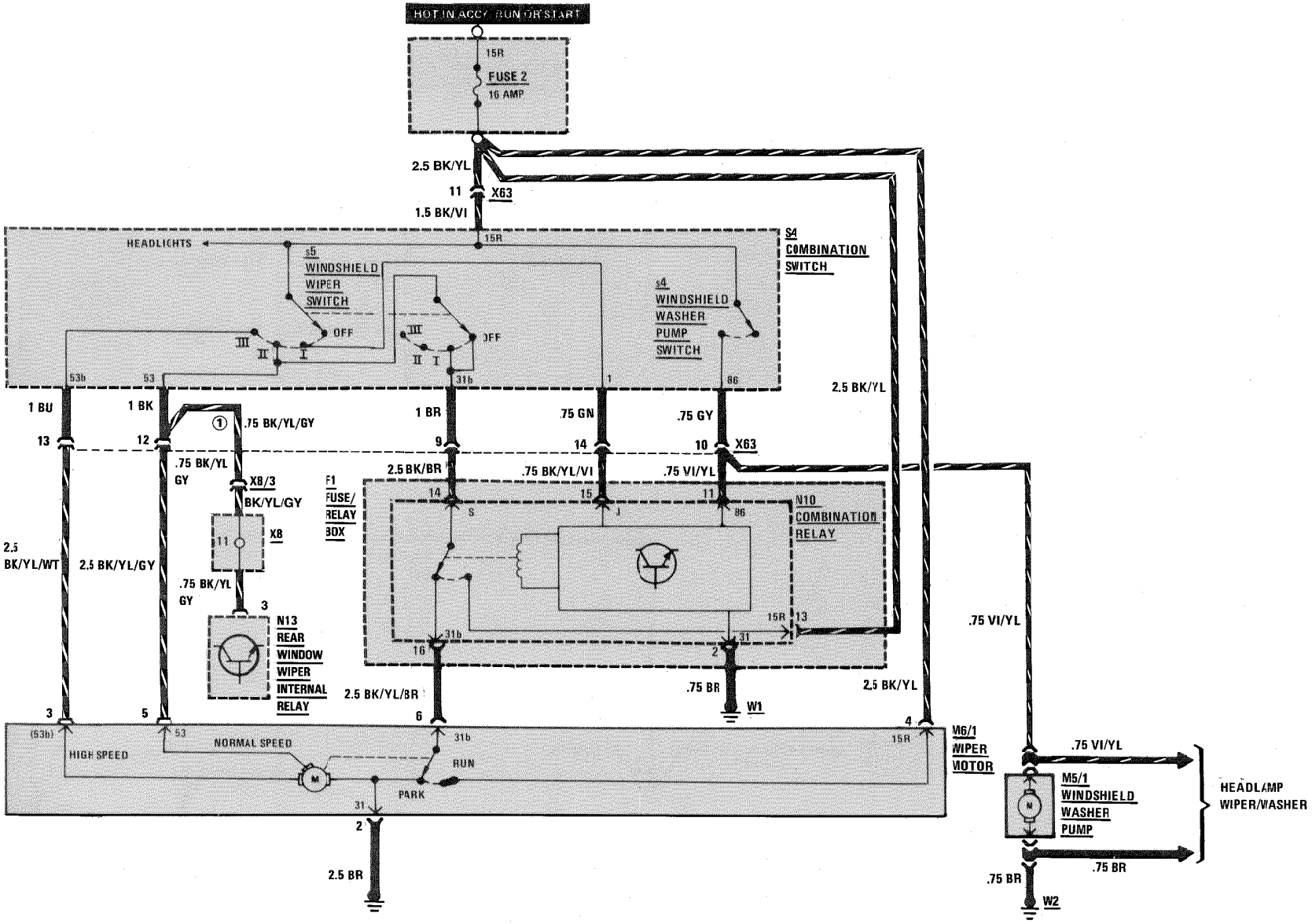

REVISIONS: ① STATION WAGON

AS OF MY 1989

HEATED WINDSHIELD WASHER SYSTEM

MY 1986-1988

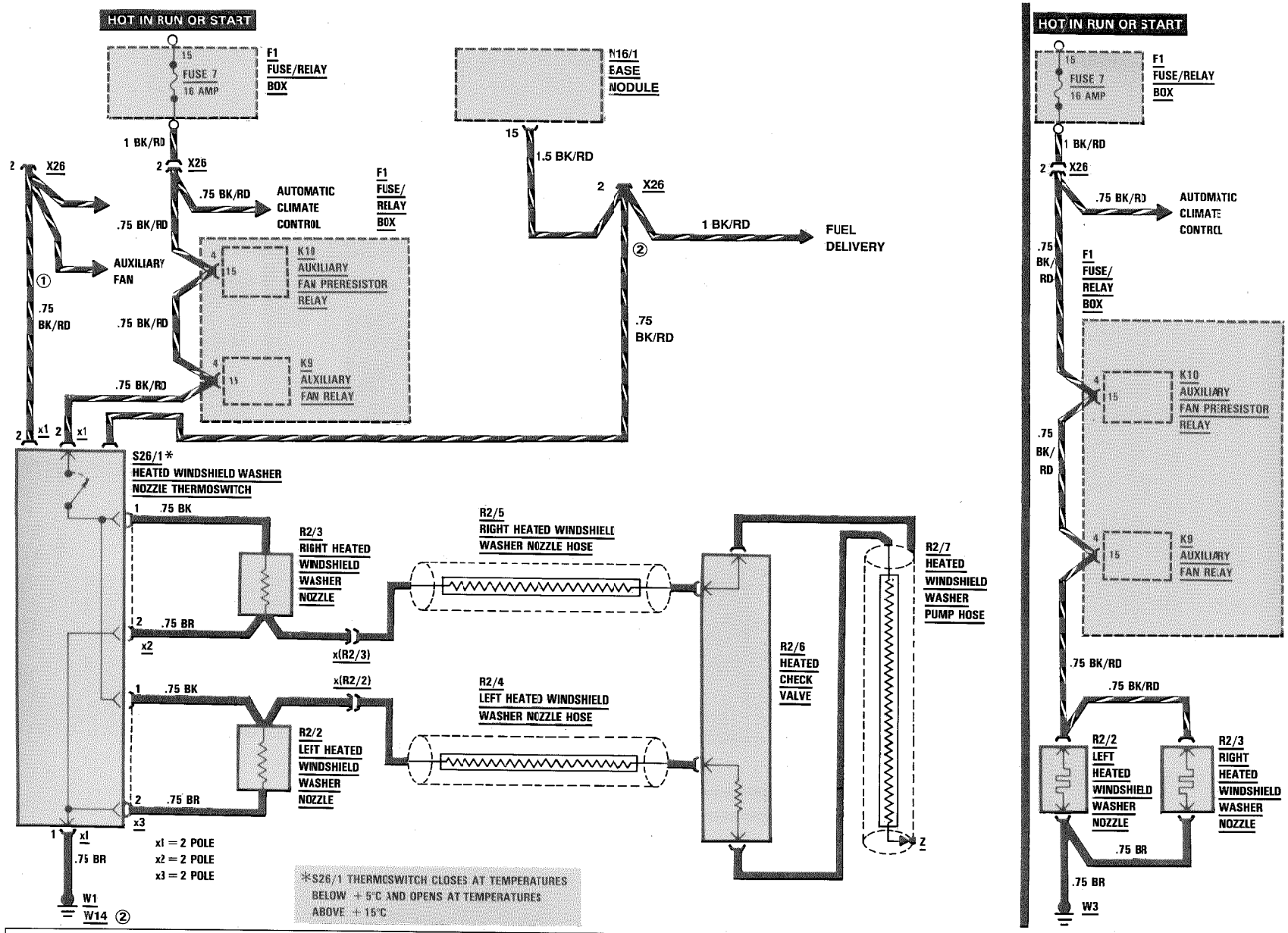

REVISIONS: ① AS OF MY 1990
② MODELS 400E/500E

REAR WIPER/WASHER

AS OF MY 1987
300 TE/TD

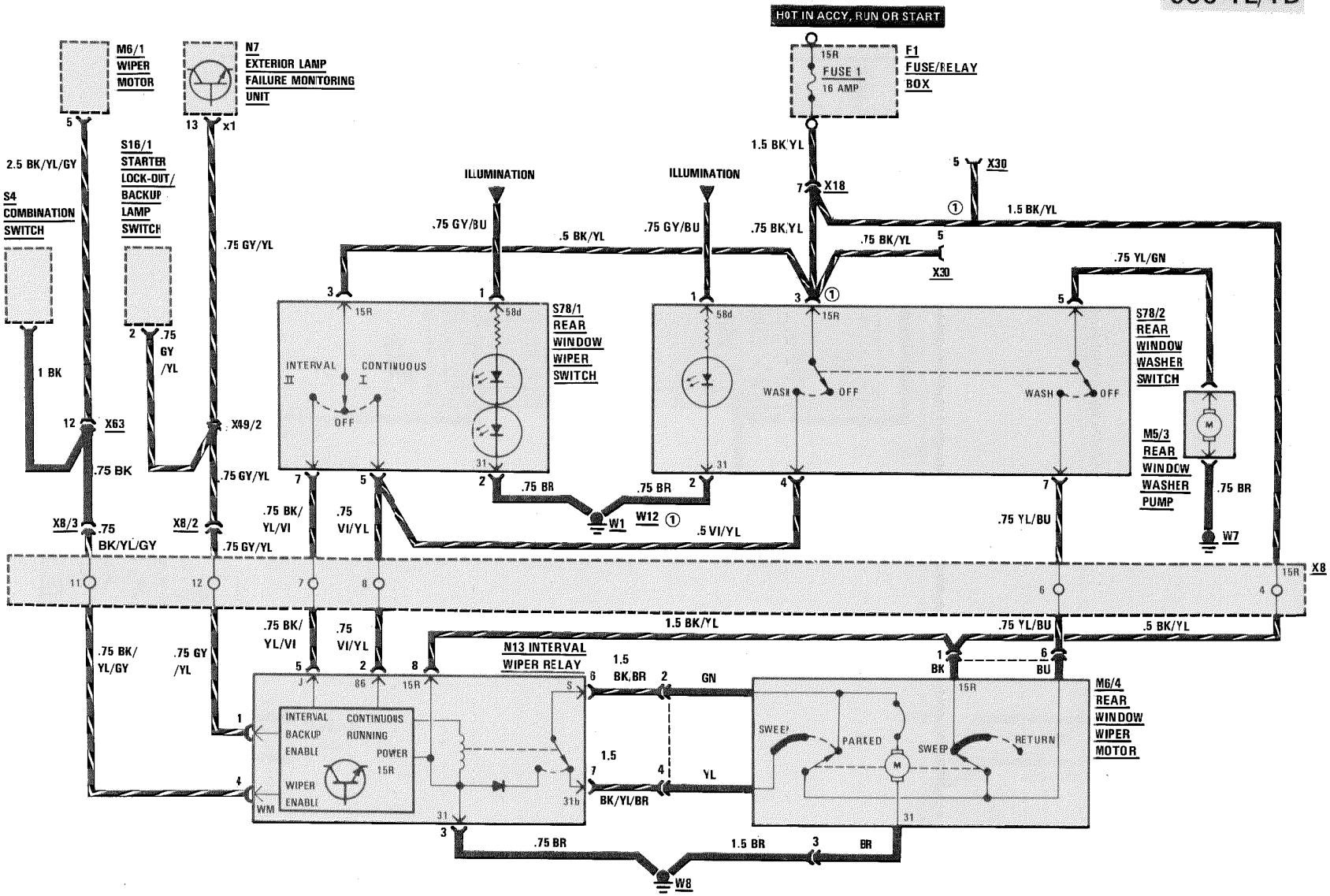

REVISIONS: ① AS OF MY 1990

HEADLAMP WIPER/WASHER

AS OF MY 1986

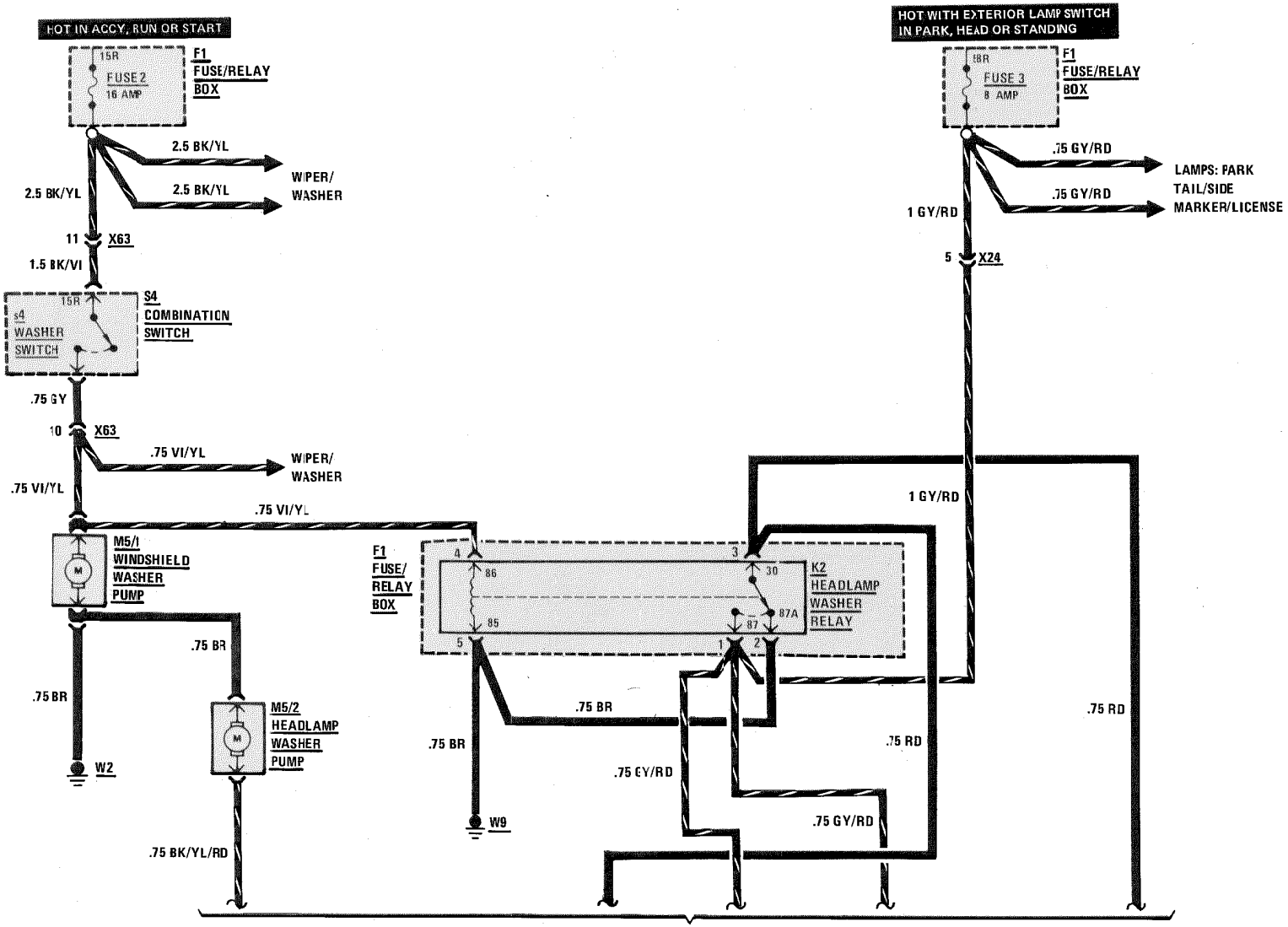

CONTINUED ON FOLLOWING PAGE

REVISIONS:

FIRST GEAR START RELAY

AS OF MY 1992

400E

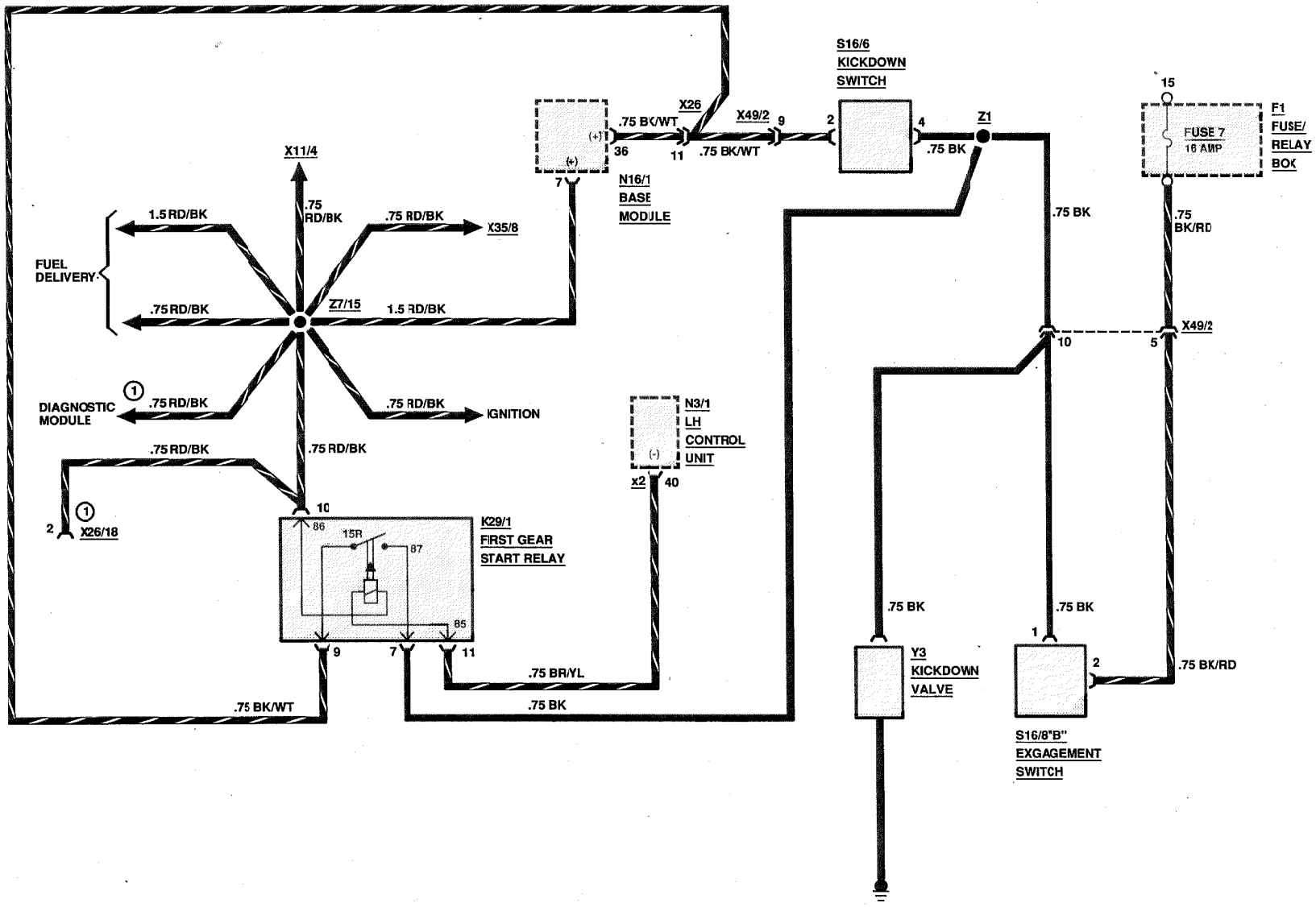

REVISIONS: 1 CALIFORNIA VERSION

GROUND DISTRIBUTION (W1)

MY 1986-1989

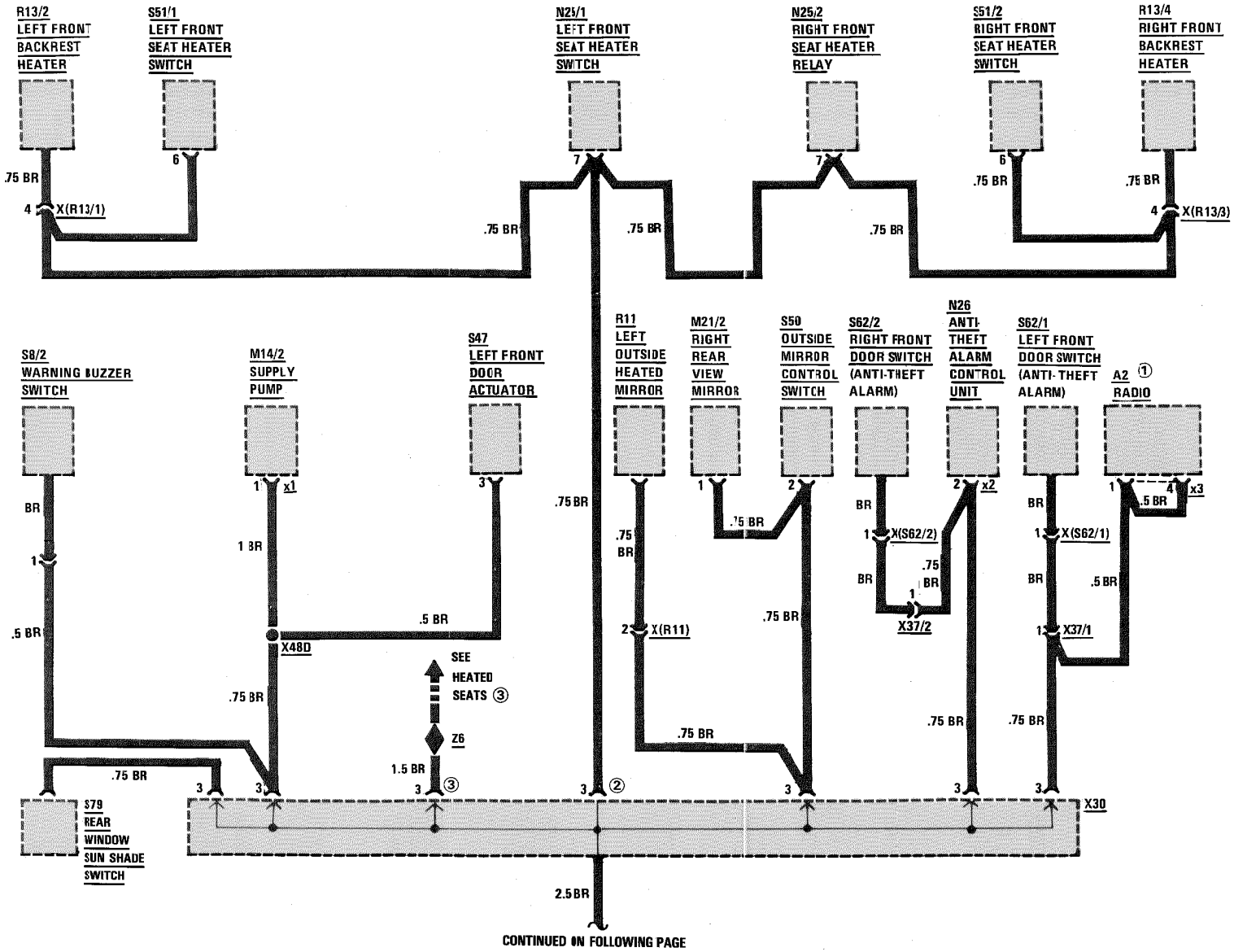

CONTINUED ON FOLLOWING PAGE

REVISIONS: ① AS OF MODEL YEAR 1987
② UP TO APRIL 1987 PRODUCTION
③ AS OF APRIL 1987 PRODUCTION

GROUND DISTRIBUTION (W1)

MY 1986-1989

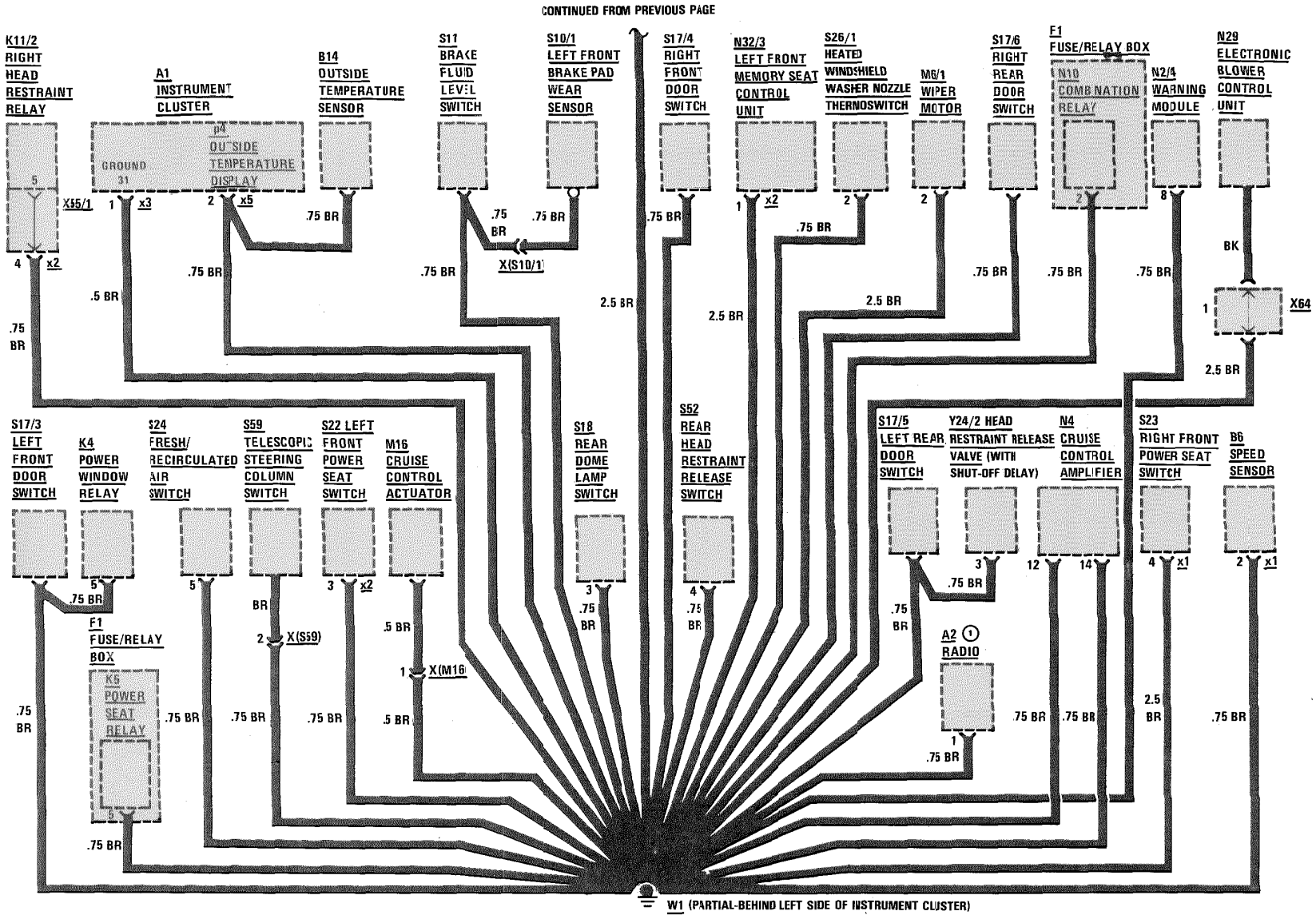

REVISIONS: ① MODEL YEAR 1986 ONLY

GROUND DISTRIBUTION (W1, W2, W3, W11, AND W14)

MY 1986-1989

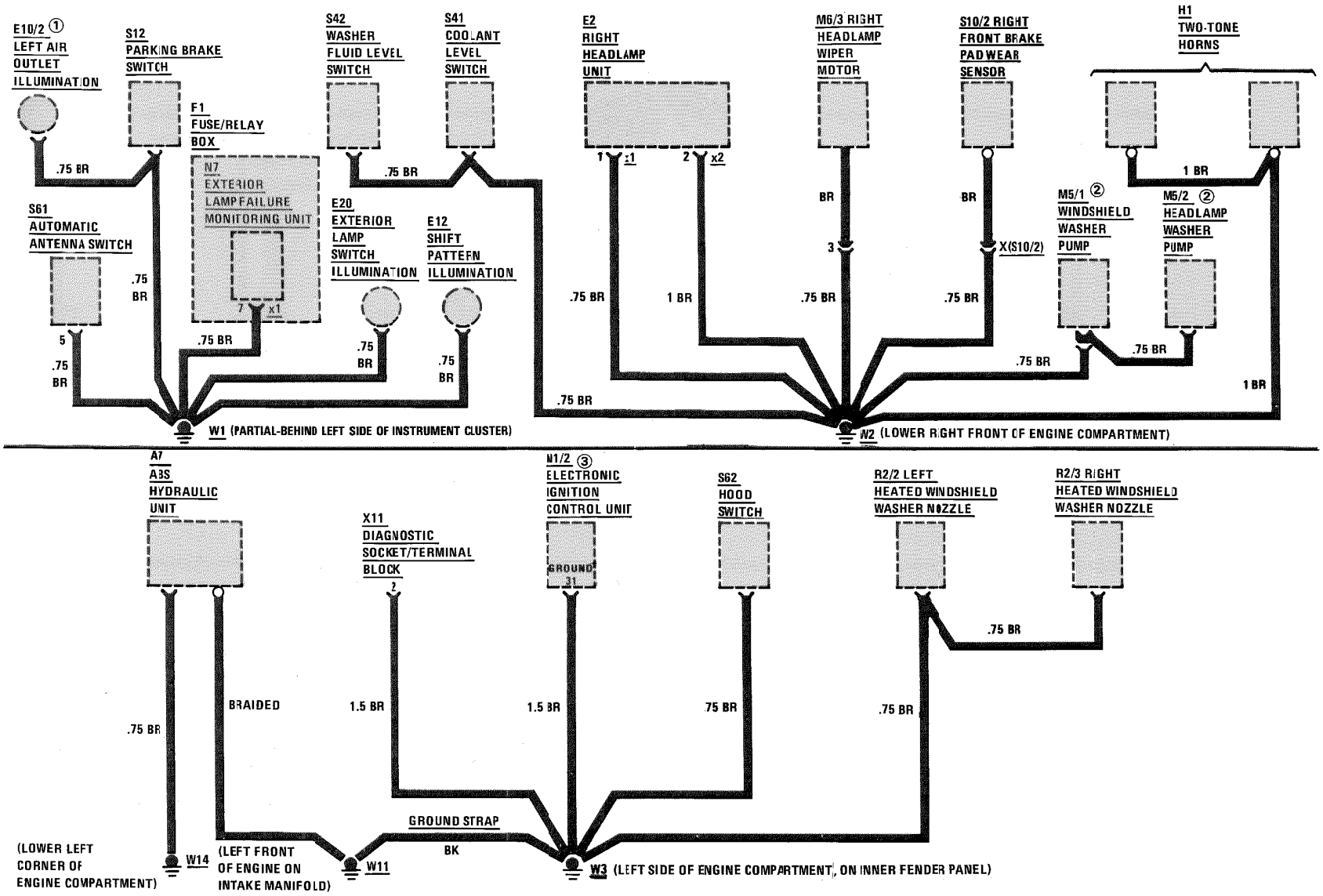

REVISIONS:
① AS OF MY 1989 E10/2 IS CONNECTED DIRECTLY TO GROUND (W1)
② MY 1986 TO 1988
③ NOT IN DIESELS

GROUND DISTRIBUTION (W5, W11, W6)

AS OF MY 1986

260 E/300 E/ 300 CE

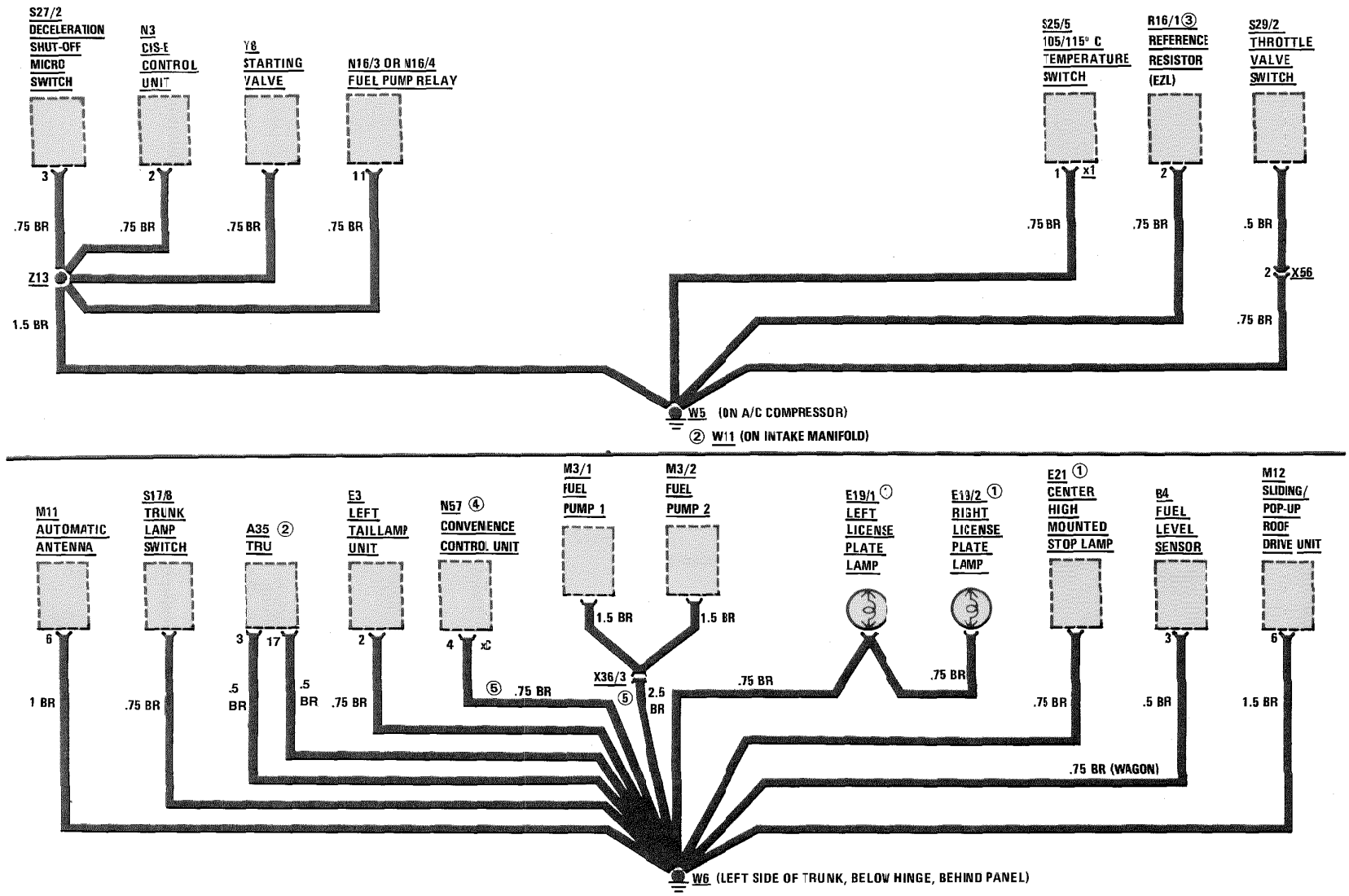

REVISIONS:
① SEDAN/COUPE ONLY (STATION WAGON, SEE W8)
② MY 1988-1989
③ AS OF MY 1990, GROUNDED TO W3
④ NOT IN 300 E
⑤ AS OF MY 1990
⑥ AS OF MY 1992

GROUND DISTRIBUTION (W4, W7, W9, W10, AND W13)

MY 1986-1989

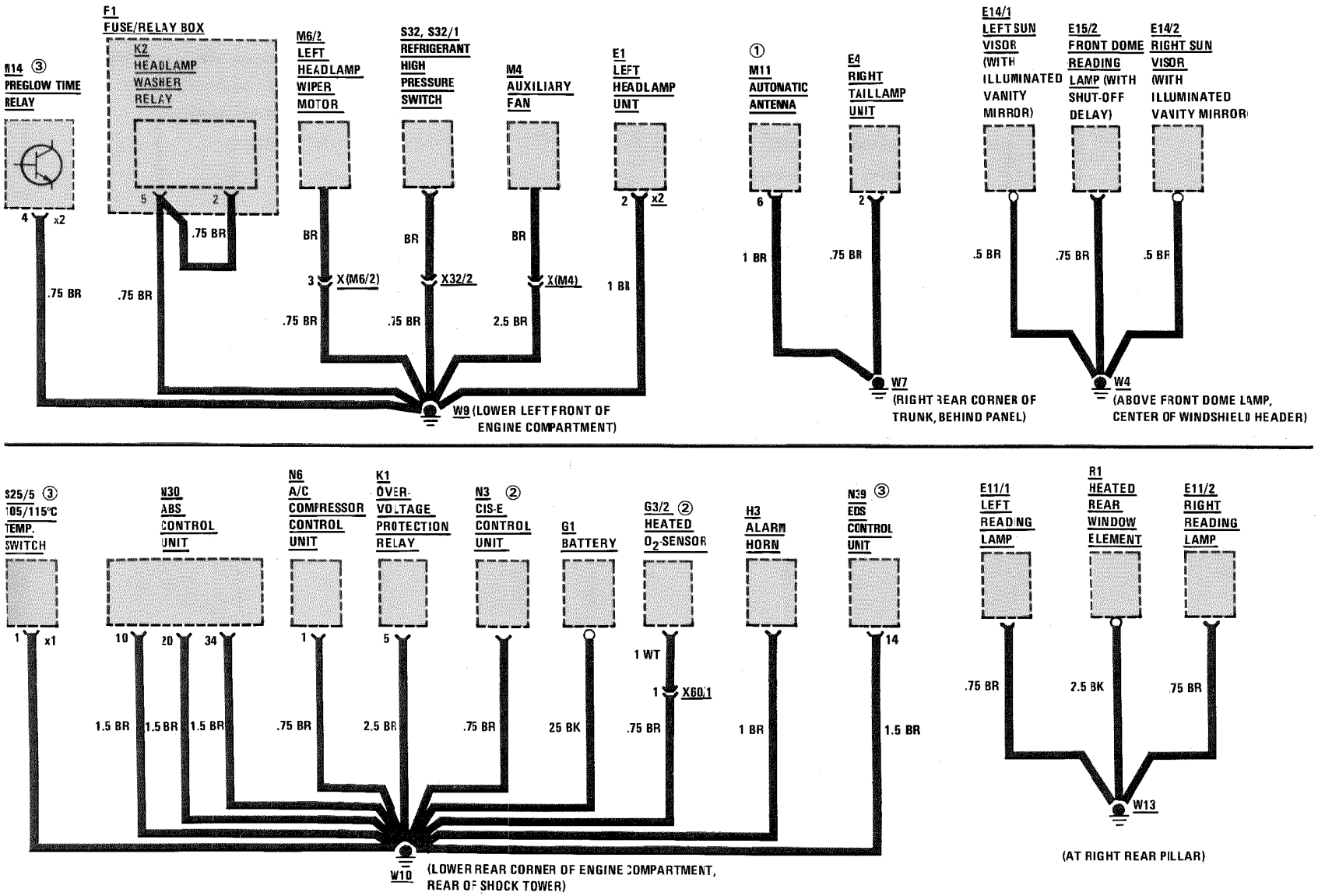

REVISIONS: ① STATION WAGON ONLY
② NOT IN DIESELS
③ DIESEL ONLY

GROUND DISTRIBUTION (W12)

MY 1986-1989

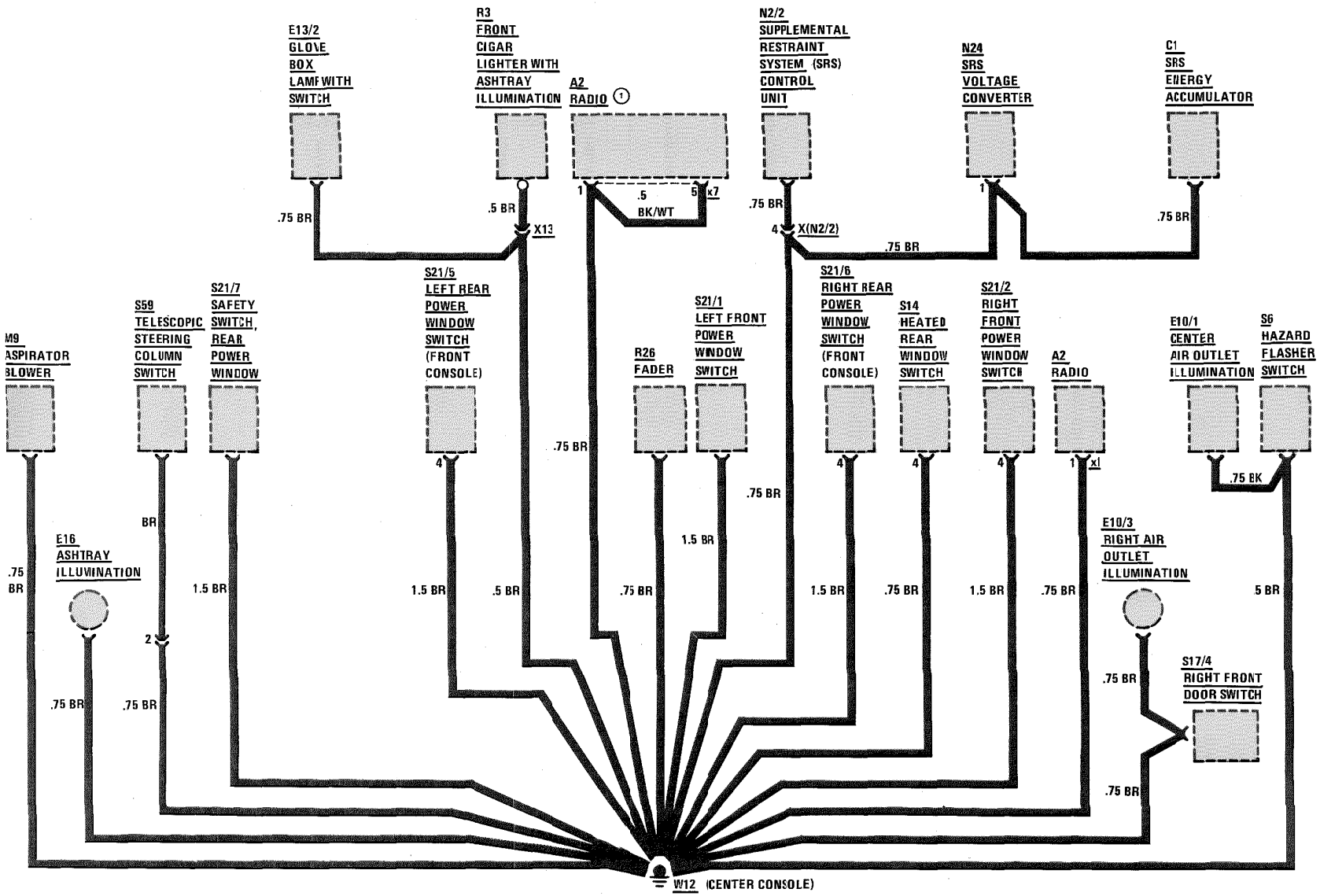

REVISIONS: (1) AS OF MODEL YEAR 1987

GROUND DISTRIBUTION (W6, W8)

AS OF MY 1987
300 TE/300 TD

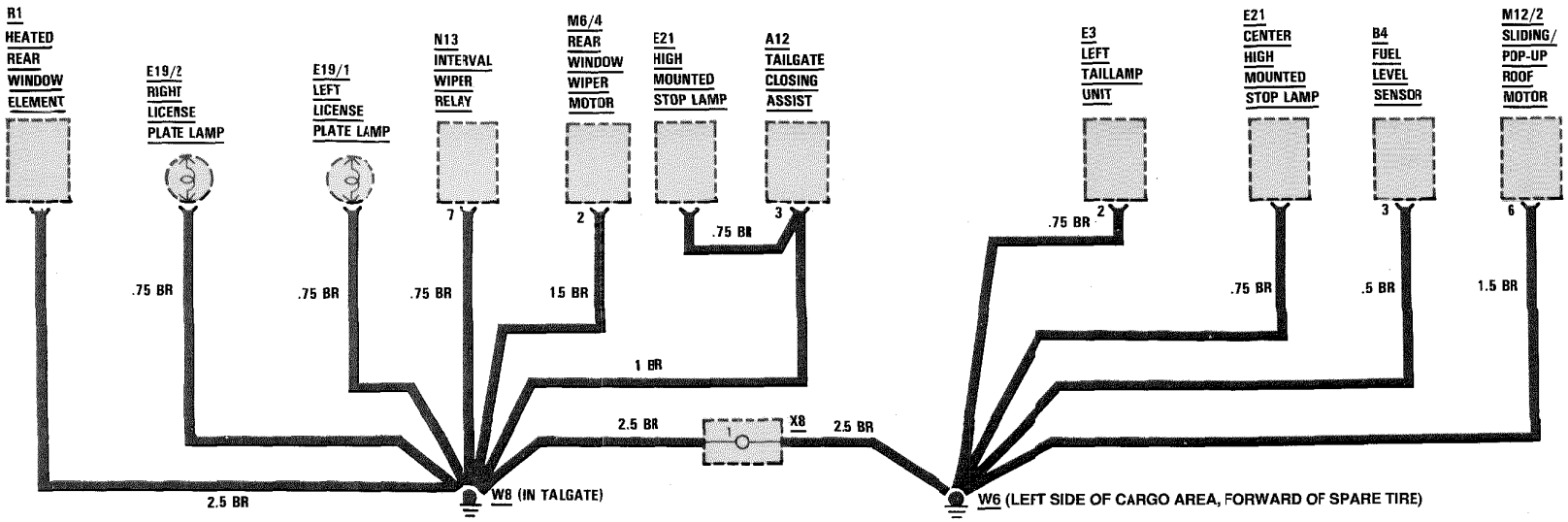

REVISIONS:

GROUND DISTRIBUTION (W1)

AS OF MY 1990

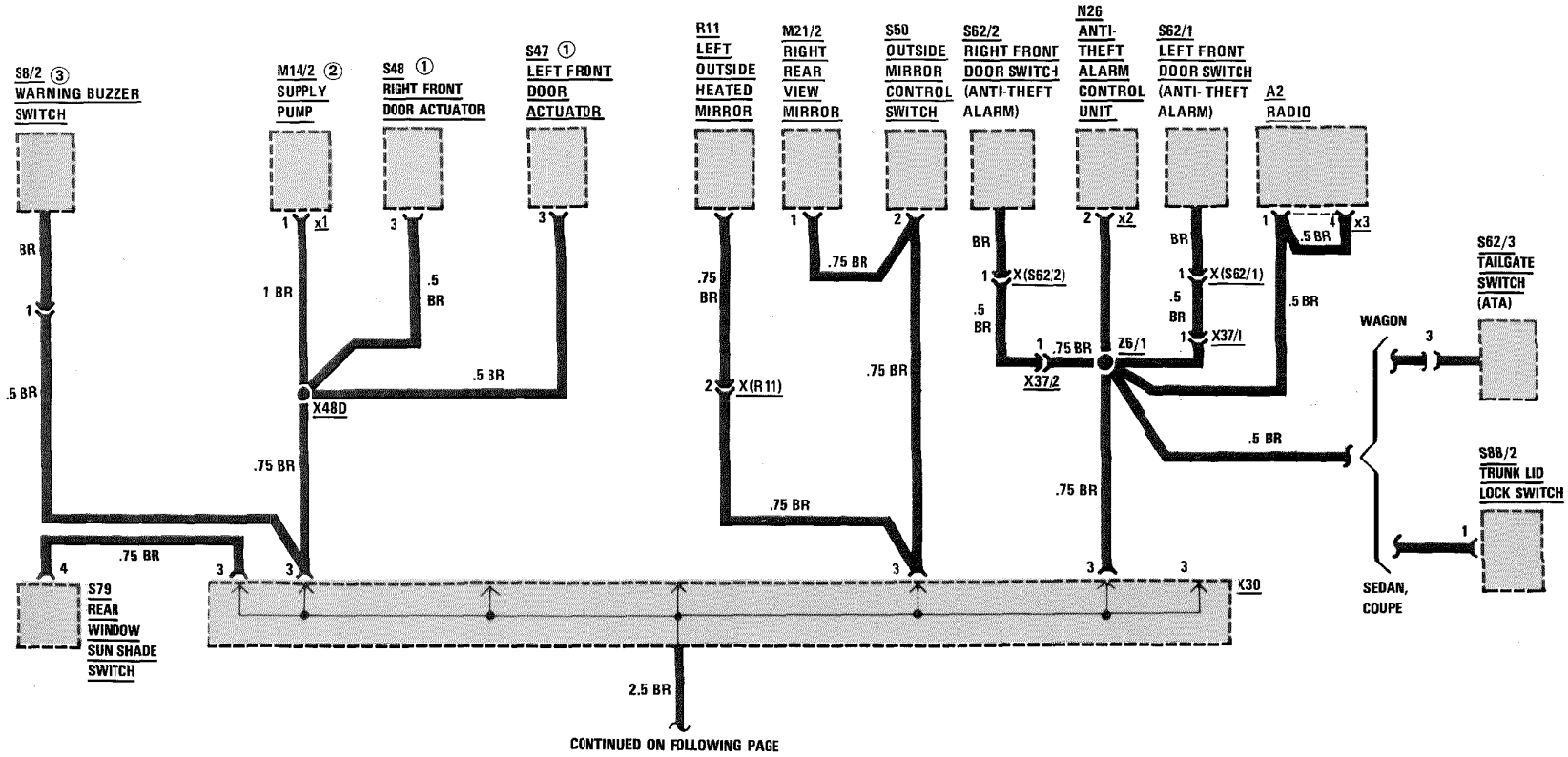

CONTINUED ON FOLLOWING PAGE

REVISIONS: ① EXCEPT 124.030/.051/.230
② AS OF MY 1991, 124.030 CONNECTS DIRECTLY TO W12
③ AS OF MY 1991, 124.030 CONNECTS DIRECTLY TO W1

GROUND DISTRIBUTION (W1)

AS OF MY 1990

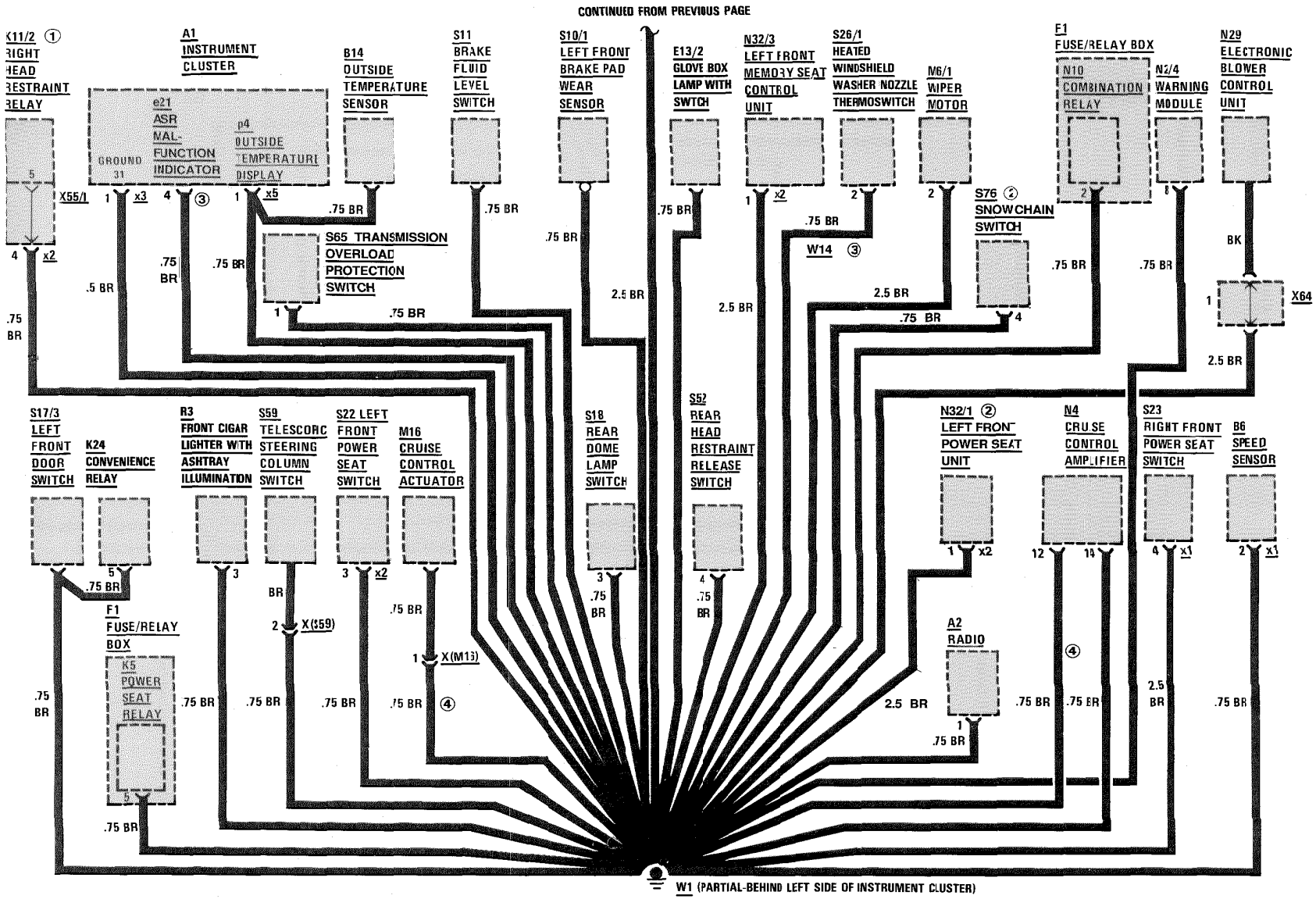

REVISIONS:
① MY 1990 ONLY
② AS OF MY 1991
③ MODELS 400E/500E
④ EXCEPT MODELS 400E/500E

GROUND DISTRIBUTION (W1, W2, W3, W11, AND W14)

AS OF MY 1990

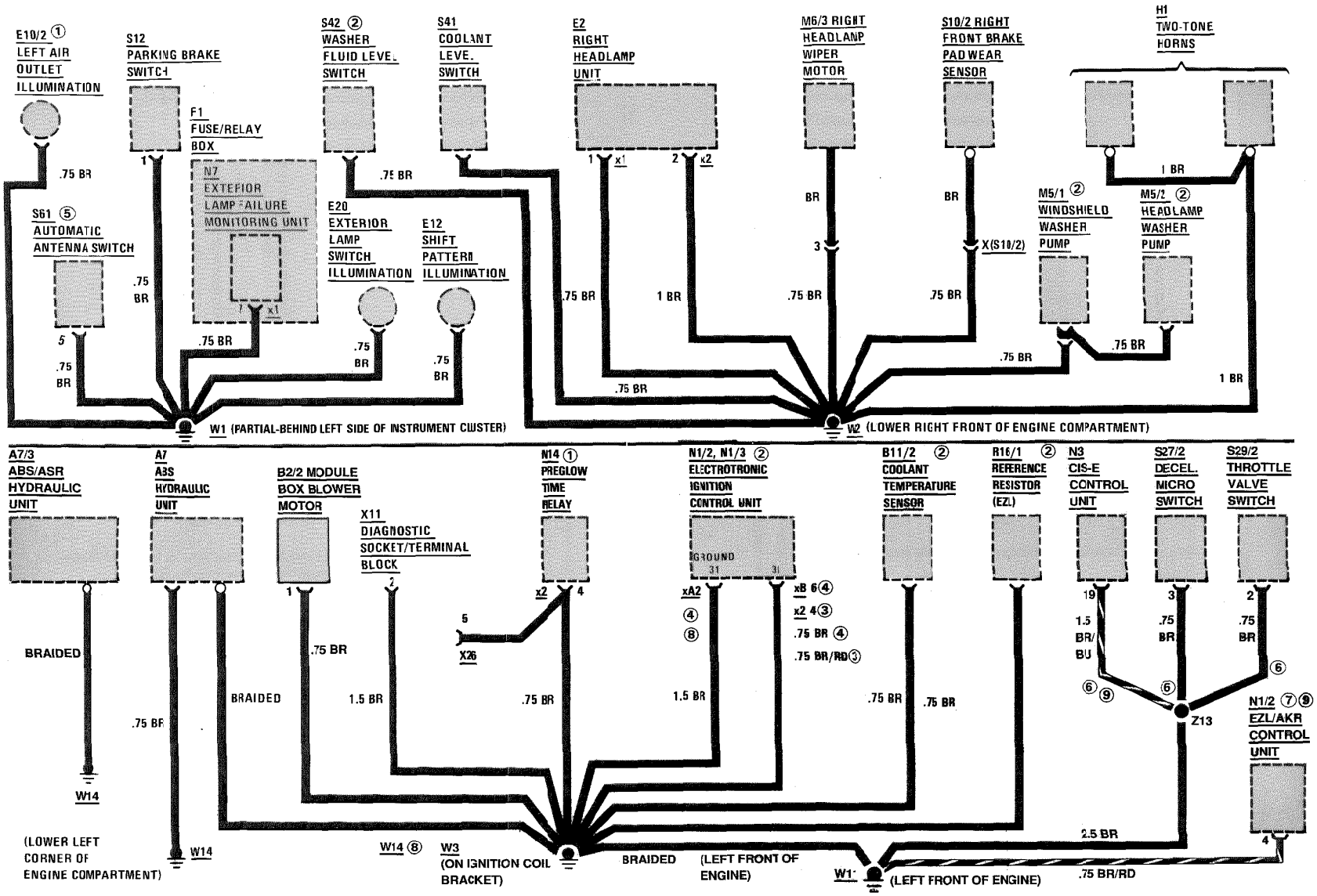

REVISIONS:
① DIESEL ONLY
② GASOLINE ONLY
③ M103
④ M104
⑤ MY 1990 ONLY
⑥ AS OF MY 1992, CONNECTED DIRECTLY TO W11
⑦ AS OF MY 1992
⑧ MODELS 400E/500E
⑨ EXCEPT MODELS 400E/500E

GROUND DISTRIBUTION (W4, W7, W9, AND W13)

AS OF MY 1990

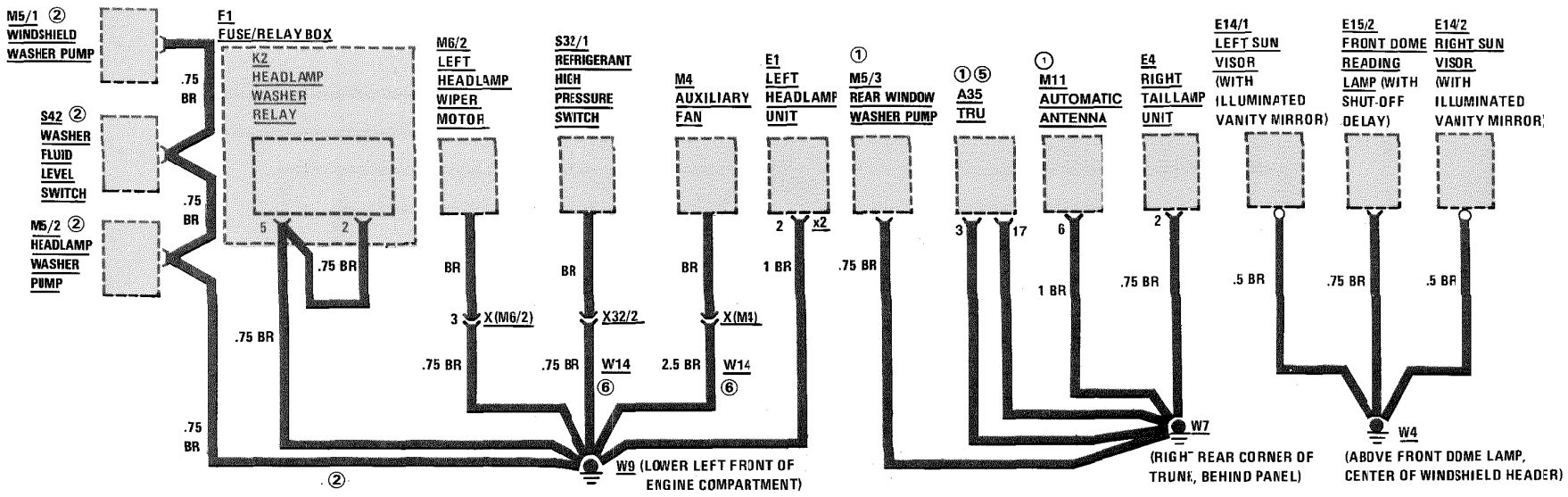

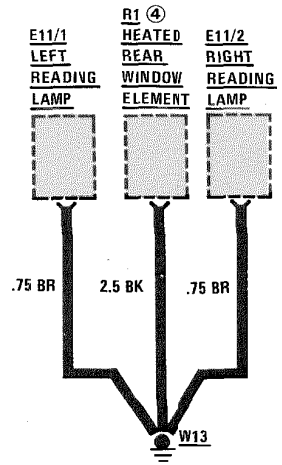

REVISIONS:
① STATION WAGON ONLY
② DIESEL ONLY
③ GASOLINE ONLY
④ EXCEPT STATION WAGON
⑤ AS OF MY 1992
⑥ MODELS 400E/500E

GROUND DISTRIBUTION (W10)

AS OF MY 1990

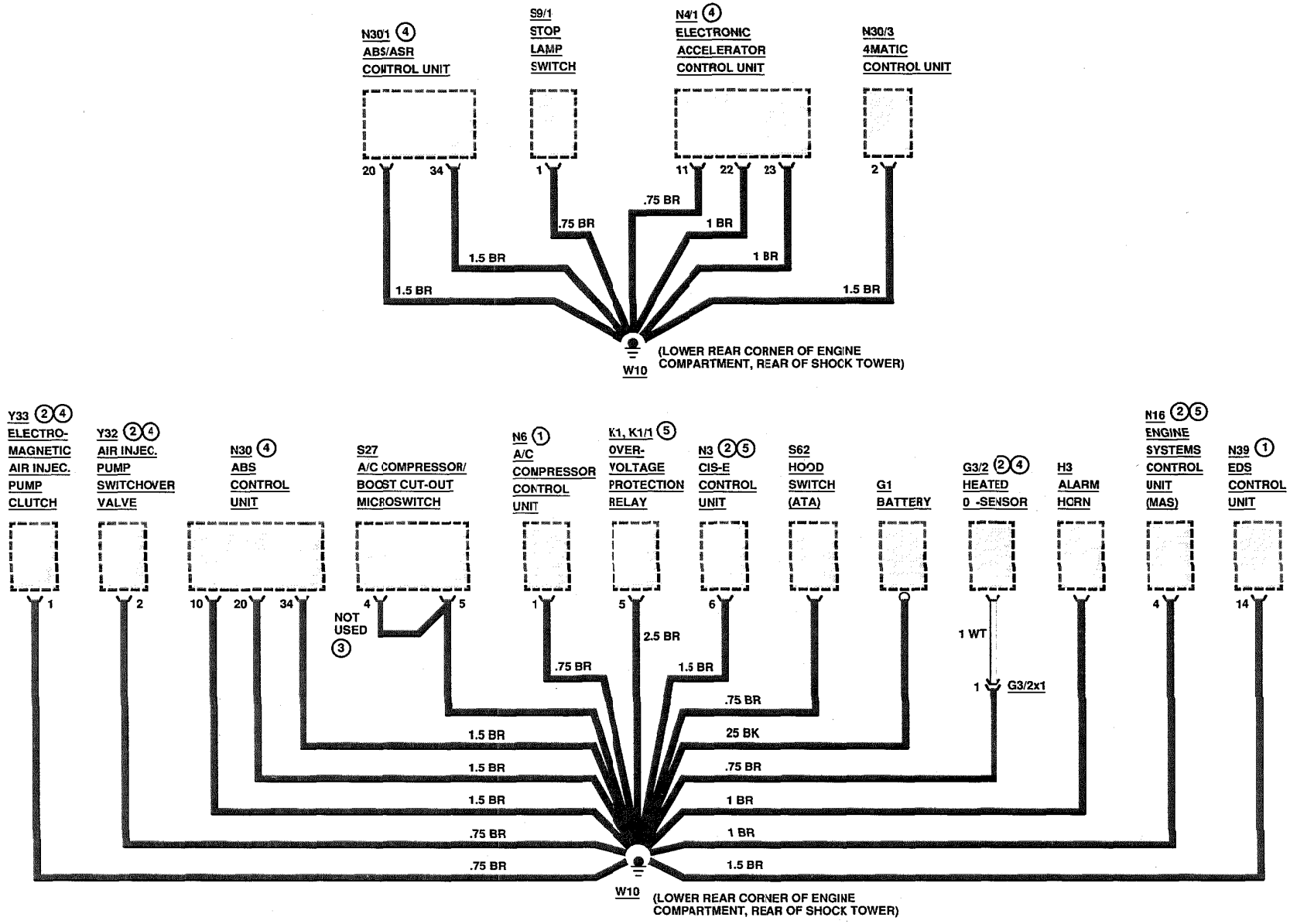

REVISIONS:
(1) DIESEL ONLY
(2) GASOLINE ONLY
(3) AS OF MY 1992
(4) MODELS 400E/500E, SEE GROUND DISTRIBUTION W16
(5) EXCEPT MODELS 400E/500E

GROUND DISTRIBUTION (W12)

AS OF 1990

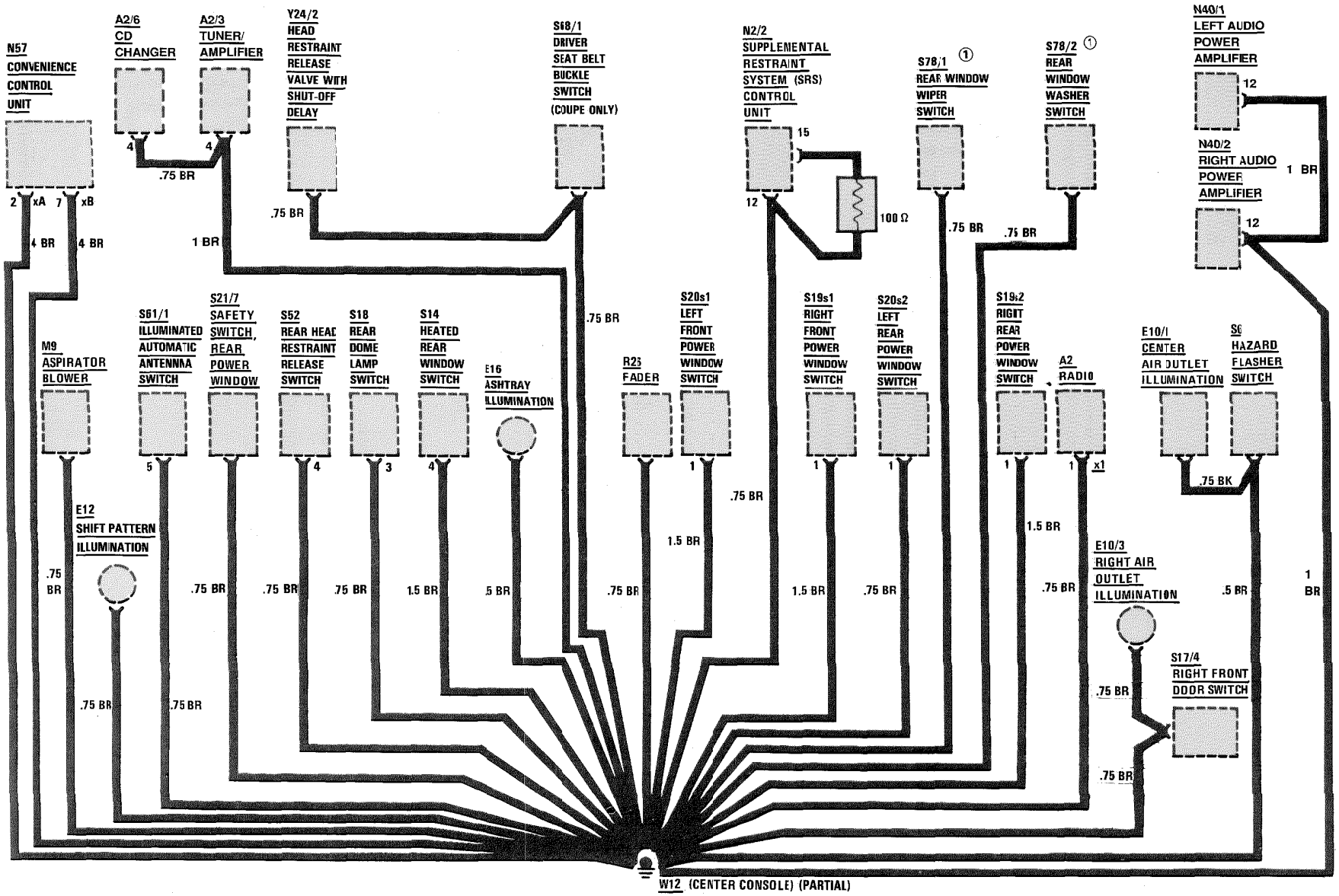

REVISIONS: ① STATION WAGON ONLY

GROUND DISTRIBUTION (W12)

AS OF MY 1990

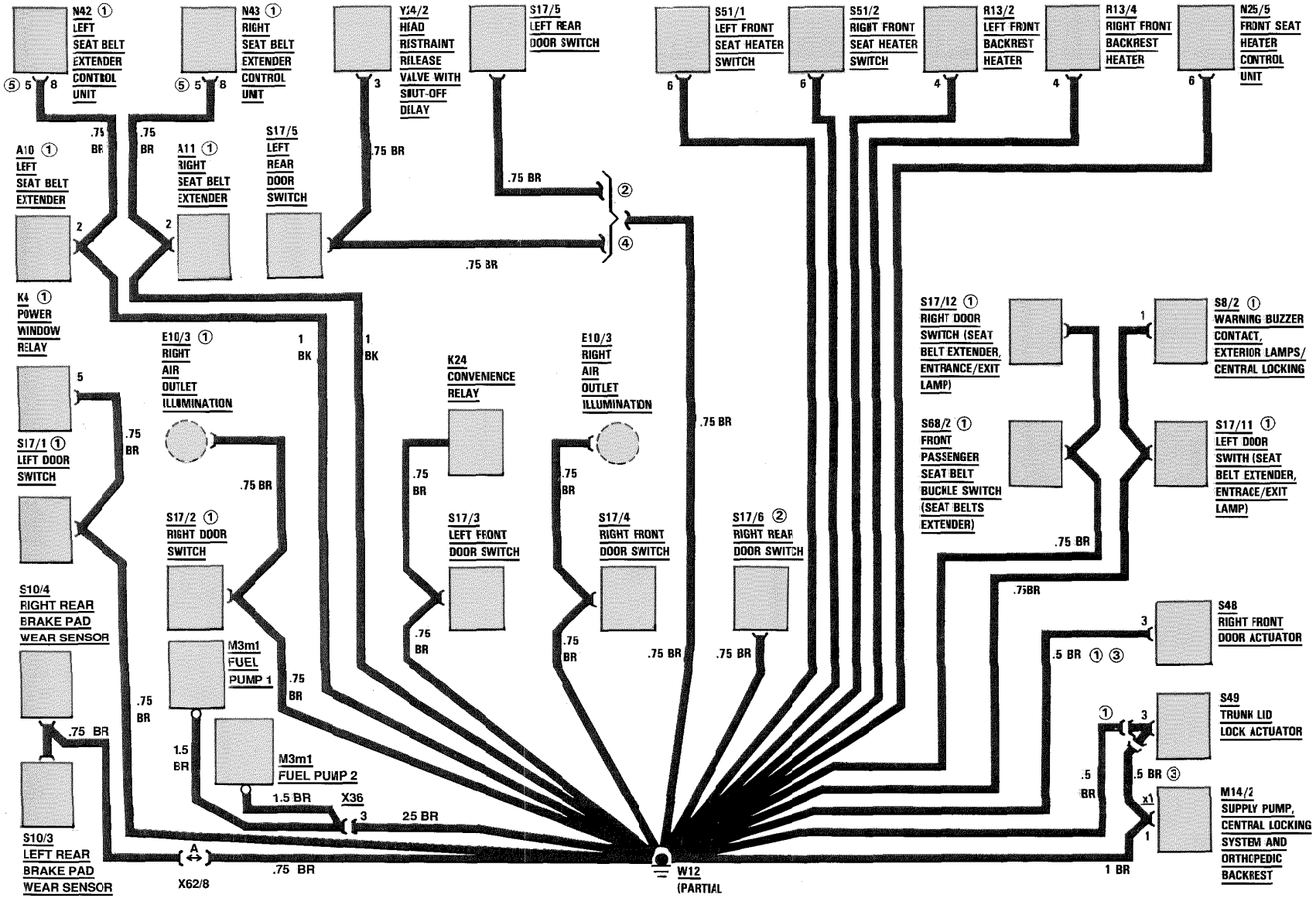

REVISIONS:
① 124.051
② 124.030/.090/.230/.290
③ 124.030/.230
④ 124.026/.128
⑤ AS OF MY 1991

GROUND DISTRIBUTION
(W16 AND W27)

AS OF MY 1992

400E/500E

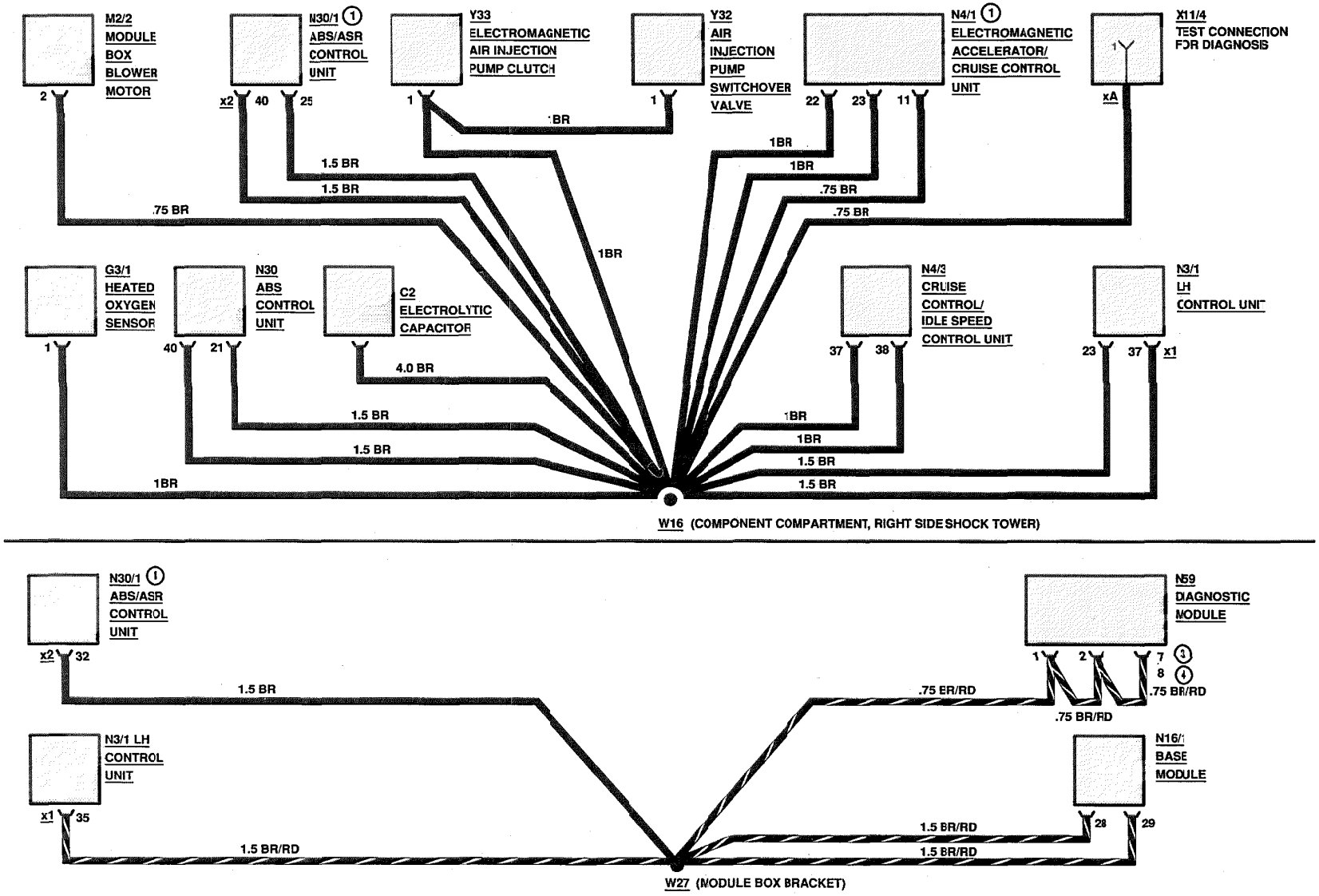

REVISIONS: ① W/ASR ② CALIFORNIA VERSION ③ MODEL 400E ④ MODEL 500E

THIS PAGE LEFT BLANK INTENTIONALLY

REVISIONS:

COMPONENT LOCATION

Component	Component Designation	Location	Page - Figure
A1	Instrument cluster	Left side of dashboard, forward of steering wheel	
A2	Radio	Center console	
A2/1	Line-out unit (Sound System)	MY 1990 with Sound System: back of radio chassis As of MY 1991: on top of Tuner/amplifier (A2/3)	
A2/3	Tuner and amplifier (trunk)	Right side of trunk	
A2/4	Radio control unit	Center console	
A2/6	CD changer (in trunk)	Right wheel well (6 cylinder) Under hatshelf (8 cylinder)	
A7	ABS hydraulic unit	Left front corner of engine compartment	231-2
A7/2	4MATIC hydraulic unit	Left front corner of engine compartment	
A7/3	ABS/ASR hydraulic unit	Left front corner of engine compartment	252-4
A9	A/C compressor	Lower left front of engine	
A9k1	Electromagnetic clutch	part of A9	230-4
A9l1	RPM sensor	part of A9	230-4
A10	Left seat belt extender	Behind left B-pillar	246-5
A11	Right seat belt extender	Behind right B-pillar	
A12	Tailgate closing assist	Center of tailgate, behind panel	243-5
A12s1	Tailgate closing assist switch	part of A12	
A12s2	Tailgate lock switch	part of A12	
A16	Knock sensors	On left side of engine block	250-4

COMPONENT LOCATION

Component	Component Designation	Location	Page - Figure
A16g1	Knock sensor 1 (left side of engine)	On engine block beneath intake manifold near cylinder #2	
A16g2	Knock sensor 2 (right side of engine)	On engine block beneath intake manifold near cylinder #5	
A28/1	Antenna splitter	On antenna mast	255-1
A34	Telephone handset	Center console	
A35	Transmit/receive unit (TRU)	Sedan/Coupe: Left trunk well Wagon: Right cargo area	254-5
A35/3	In-dash control unit	Front of Dome lamp (E15)	254-4
B2	Air flow sensor position indicator	part of B2/1, front of airflow sensor housing	232-1
B2/1	Air flow sensor with intake air temperature sensor (EDS)	Top of engine, behind right headlamp	249-1
B2/2	Air mass sensor with hot-wire	Top of engine, on intake manifold	249-2
B4	Fuel level sensor	Top of fuel tank	238-6
B5	Oil pressure sensor	At base of oil filter housing	237-6
B5/1	Pressure sensor (EDS)	On component compartment wall, forward of battery	247-3
B6	Hall-effect speed sensor	Rear of instrument cluster, behind speedometer	233-1
B10/1	Heater core temperature sensor	Center of dashboard, below radio	240-3
B10/4	In-car temperature sensor	Center of windshield header, part of dome lamp	235-1
B10/5	Outside temperature sensor	Right side of component compartment	232-3
B10/6	Evaporator temperature sensor	Right side of steering column	233-6

COMPONENT LOCATION

Component	Component Designation	Location	Page - Figure
B10/8	Coolant temperature sensor (climate control)	On cylinder head	245-4
B11/2	Coolant temperature sensor (EZL/CIS-E, LH)(4-pole)	Top rear of cylinder head (6 cylinder) Top front of engine (8 cylinder)	230-3 249-2
B11/4	Coolant temperature sensor (EDS)	Top left side of engine, on coolant elbow	248-2
B11/7	Preglow system temperature sensor	Top center of engine (MY 1987) Right front of engine, near thermostat housing in coolant pump outlet (As of MY 1990)	– – 247-6
B13	Coolant temperature gauge sensor	Left side of engine, above intake manifold	230-3
B14	Outside temperature sensor (outside temperature indicator)	Left front corner of front bumper	238-4
B17/2	Intake air temperature sensor (CIS-E)	On air filter housing	
B17/7	Intake air temperature sensor	Front of engine, behind radiator	248-3
B18	Altitude correction capsule	Right side of component compartment	229-4
C1	SRS energy accumulator	Front passenger footwell, behind right kick panel	244-3
C2	Electrolytic capacitor	Right side of component compartment	253-6
E1	Left headlamp unit	Left front of vehicle	
E2	Right headlamp unit	Right front of vehicle	
E3	Left taillamp unit	Left rear of vehicle	
E4	Right taillamp unit	Right rear of vehicle	
E10/1	Center air outlet illumination	Center dashboard	

COMPONENT LOCATION

Component	Component Designation	Location	Page - Figure
E10/2	Left air outlet illumination	Left side of dashboard	
E10/3	Right air outlet illumination	Right side of dashboard	
E11/1	Left rear reading lamp	Left C-pillar	
E11/2	Right rear reading lamp	Right C-pillar	
E12	Shift pattern illumination	Center console, below shift lever	
E13/2	Glove box lamp with switch	Top left of inside of glove box	
E14/1	Left sun visor with illuminated vanity mirror	part of sun visor	
E14/2	Right sun visor with illuminated vanity mirror	part of sun visor	
E15/2	Front dome lamp with shut-off delay and reading lamp	Center of windshield header	
E15/3	Rear dome lamp	Center of rear windshield header	
E15/4	Dome/reading lamp with seat belt reminder lamp	Center of windshield header	
E17/3	Left front entrance/exit lamp	Lower rear of left front door	
E17/4	Right front entrance/exit lamp	Lower rear of right front door	
E17/5	Left rear entrance/exit lamp	Lower rear of left rear door	
E17/6	Right rear entrance/exit lamp	Lower rear of right rear door	
E18/1	Trunk lamp	Inside of trunk	
E19/1	Left license plate lamp	Below left side of trunk lid lift handle	
E19/2	Right license plate lamp	Below right side of trunk lid lift handle	
E20	Exterior lamp switch illumination	Beneath exterior lamp switch	
E21	Center high mounted stop lamp	Center of rear hatshelf (sedan) Attached to tailgate (wagon)	
E25/1	Left C-pillar interior lamp	In left C-pillar	
E25/2	Right C-pillar interior lamp	In right C-pillar	

COMPONENT LOCATION

Component	Component Designation	Location	Page - Figure
E25/3	Left D-pillar interior lamp	In left D-pillar	
E25/4	Right D-pillar interior lamp	In right D-pillar	
F1	Fuse and relay box	Left side of component compartment	231-4
F2	Maxi-fuse box	In F1	
F13	Auxiliary fuse holder, power seats	Part of F1 (fuses E, F, G and H)	
F14	Auxiliary fuse holder, anti-theft alarm	Rear of fuse box, position E	
F15	Auxiliary fuse holder, blower motor/ACC/Tempmatic	Left side of component compartment	245-5
F22/1	Auxiliary fuse holder, heated seats	Left rear of engine compartment	
F22/2	Auxiliary fuse holder, telephone, terminal 30	In engine compartment, next to Fuse/Relay box (F1)	254-6
F23	Module box	Right side of component compartment	253-5
G1	Battery	Right side of component compartment	
G2	Alternator	Lower right front of engine	229-6
G3/2	Heated O_2-sensor	In exhaust pipe, rear of transmission	237-5
G3/2x1	Connector, O_2-sensor heater coil (2-pole)	Left side of front passenger footwell	233-4
G3/2x2	Connector, O_2-sensor signal (1-pole)	Left side of front passenger footwell	233-4
H1	Two-tone horn	Front of radiator	232-2
H3	Alarm horn	Left side of engine compartment	231-1
H4/5	Left door speaker	Driver's door panel	
H4/6	Right door speaker	Front passenger door panel	

COMPONENT LOCATION

Component	Component Designation	Location	Page - Figure
H4/7	Left rear speaker	Left rear of hatshelf	
H4/8	Right rear speaker	Right rear of hatshelf	
H4/9	Left front speaker	Left top corner of dahboard	
H4/10	Right front speaker	Right top corner of dashboard	
K1	Overvoltage protection relay (5-pole)	Right side of component compartment, behind battery	239-3
K1/1	Overvoltage protection relay, 87E (7-pole)	Right side of component compartment, behind battery	239-3
K1/2	Overvoltage protection relay, 87E/87L/30a (9-pole)	Right side of component compartment, behind battery	
		Gasoline	252-5
		Diesel	252-1
K2	Headlamp washer relay	Rear of fuse box, location D	
K4	Power window relay	Rear of fuse box, location F	231-5
K5	Power seat relay	Rear of fuse box, location A	
K9	Auxiliary fan relay	Rear of fuse box, location C	231-5
K10	Auxiliary fan preresistor relay	Rear of fuse box, location B	
K11/1	Left head restraint adjustment relay	Under left front seat	
K11/2	Right head restraint adjustment relay	Under right front seat	236-5
K12/1	Cruise control/engine overload protection relay	Right side of component compatment, near K1/1	251-5
K17	Air injection relay	Fuse/Relay box, position E	
K18	Seat belt warning relay	Left side of driver's footwell	
K24	Convenience relay	Rear of fuse box, location F	

COMPONENT LOCATION

Component	Component Designation	Location	Page - Figure
K27	Fuel pumps relay	Beneath right side of rear seat	248-4
K29	Transmission upshift delay relay	Right side of component compartment, near K1/1	249-6
K29/1	First gear start relay	Fuse/Relay box, position G	
K31	4MATIC funtion/test relay	Passenger footwell, behind kick panel	
L1	TDC sensor	Front left of engine	239-5
L2	Inductive speed sensor, transmission	Left side of transmission	253-4
L3	Starter ring gear speed sensor	Lower left side of bell housing	
L5	Crankshaft position sensor	Top of bell housing, behind oil filter	249-3
L5/1	Camshaft position sensor	On intake camshaft front cover Top left front of engine (8 cylinder)	250-6 249-2
L6	Rear axle speed sensor	Front of rear differential	237-3
L6/1	Left front wheel speed sensor	Left front steering knuckle	238-3
L6/2	Right front wheel speed sensor	Right front steering knuckle	
L7	Fuel rack position sensor	Lower left side of engine	247-2
M1	Starter	Lower left rear of engine, below oil filter	
M2	Blower motor	Center front of cowl, behind panel	232-3
M2/2	Module box blower motor	Right side of component compartment, behind Module box	253-5
M3/1	Fuel pump 1	Forwarxd of rear axle	238-5
M3/2	Fuel pump 2	Forward of rear axle	238-5

COMPONENT LOCATION

Component	Component Designation	Location	Page - Figure
M4	Auxiliary fan	Front of radiator	232-2
M4m1	Left auxiliary fan	Front of radiator	255-3
M4m2	Right auxiliary fan	Front of radiator	255-3
M5/1	Windshield washer pump	Front of windshield washer fluid reservoir	230-2
M5/2	Headlamp washer pump	Front of windshield washer fluid reservoir	230-2
M5/3	Rear window washer pump	Behind right rear quarter panel (wagon)	242-4
M6/1	Wiper motor	Center front of cowl, behind panel	232-3
M6/2	Left headlamp wiper motor	Left front of engine compartment	230-5
M6/3	Right headlamp wiper motor	Right front of engine compartment	230-1
M6/4	Rear window wiper motor	Center of tailgate, behind panel (wagon)	243-5
M9	Aspirator blower, in-car temperature sensor	Top of passenger footwell, behind dashboard	
M10/3	Left front power window motor	Left front door	240-6
M10/4	Right front power window motor	Right front door	
M10/5	Left rear power window motor	Left rear door	
M10/6	Right rear power window motor	Right rear door	
M11	Automatic antenna	Left side of trunk (sedan) Right rear quarter panel (wagon)	232-5 242-3
M12	Sliding/pop-up roof drive unit	Left front corner of trunk (sedan) Left rear quarter panel (wagon)	232-5 242-1
M13	Coolant pump	Right side of engine compartment	
M14/1, M14/2	Supply pump, central locking system	Below right side of rear seat	233-3

COMPONENT LOCATION

Component	Component Designation	Location	Page - Figure
M15	ASR charging pump	On brake booster, below master cylinder	253-1
M16	Cruise control actuator	Lower left side of engine	238-2
M16/1	Electronic accelerator/cruise control/idle speed control actuator	Lower left side of engine	
M20	Adjustable steering column motor	Left side of steering column	233-6
M21/2	Electrically adjustable and heated front passenger rearview mirror	In right side rearview mirror	
M24	Rear window sun shade motor	Under rear hatshelf, in trunk	245-6
M25	Left front power seat motor group	Under left front seat	232-6
M26	Right front power seat motor group	Under right front seat	236-5
N1/2	Electronic ignition control unit (EZL)	Left side of engine compartment, on fender	251-1
N1/3	EZL/AKR ignition control unit	Left side of engine compartment, on fender	251-1
N2/2	SRS control unit	Top of transmission tunnel, behind front console	240-2
N2/4	Warning module (seat belts, keys, lights)	Behind right side of instrument cluster	240-4
N3	CIS-E control unit	Right side of component compartment, behind battery	229-3
N3/1	LH control unit	Right side of component compartment, in Module box	250-1
N4	Cruise control amplifier	Behind lower left side of dashboard	234-3

COMPONENT LOCATION

Component	Component Designation	Location	Page - Figure
N4/1	Electronic accelerator/cruise control/idle speed control unit	Right side of component compartment, behind battery (6 cylinder)	252-5
		Right side of component compartment, in Module box (8 cylinder)	250-1
N4/3	Cruise control/idle speed control unit	Right side of component compartment, in Module box	
N6	A/C compressor control unit	Right side of component compartment, behind battery	239-3
N7	Exterior lamp failure monitoring unit	Rear of fuse box, position K	
N10	Combination relay (turn/hazard signal, heated rear window, wiper motor)	Rear of fuse box, position H	
N13	Rear window intermittent wiper timer	Left corner of tailgate, behind panel (wagon)	241-5
N14	Preglow time-limit relay	Left side of engine compartment. on inner fender	
N16	Engine systems control unit (MAS)	Right side of component compartment, behind battery	255-2
N16/1	Base module	Right side of component compartment, in Module box	250-1
N16/3	Fuel pump relay	Right side of component compartment, behind battery	229-3
N16/4	Fuel pump relay with kickdown cut-out	Right side of component compartment, behind battery	229-3
N22	ACC pushbutton control unit	Center console, above radio	
N24	SRS voltage converter	Front passenger footwell, behind right kickpanel	240-1
N25/1	Left front seat heater relay	Beneath carpeting, forwward of left front seat	239-2

COMPONENT LOCATION

Component	Component Designation	Location	Page - Figure
N25/2	Right front seat heater relay	Beneath carpeting, forwward of right front seat	
N25/5	Front seat heater control unit	Under left side of rear seat	246-1
N26	Anti-theft alarm control unit	Behind front passenger footrest	240-1
N27	Anti-towing sensor	Below left side of rear seat (M.Y. 1986 only)	233-2
N30	ABS control unit	Right side of component compartment: behind battery (6 cylinder) in Module box (8 cylinder)	 239-3
N30/1	ABS/ASR control unit	Right side of component compartment: behind battery(6 cylinder) in Module box (8 cylinder)	 252-5 250-1
N30/2	ASD control unit	Right side of component compartment, behind battery	252-1
N30/3	4MATIC control unit	Right side of component compartment, forward of ABS control unit (N3)	
N32/1	Left front power seat control unit (with memory)	Under left front seat	
N32/3	Left front power seat control unit (with memory and steering column adjustment)	Under left front seat	232-6
N35	Daytime running lamp control unit	Behind front passenger footrest	254-1
N39	EDS control unit	Right side of component compartment, behind battery	247-5
N40	Audio power amplifier (circuit 58D)	Behind instrument cluster, on steering column	240-4
N40/1	Audio power amplifier, left speakers	Right side of trunk Sedan: Coupe:	 254-1 247-5

COMPONENT LOCATION

Component	Component Designation	Location	Page - Figure
N40/2	Audio power amplifier, right speakers	Right side of trunk Sedan: Coupe:	 254-2 254-3
N40/3	Audio power amplifier, left/right speakers	Right side of trunk	
N42	Left seat belt extender control unit	Behind left rear interior panel	246-6
N43	Right seat belt extender control unit	Behind right rear interior panel	
N49	Steering angle sensor	Plastic slip ring on steering column, behind steering wheel	
N57	Convenience control unit: ATA, central locking system, power windows, sliding/pop-up roof	Beneath left side of rear seat	
N59	Diagnostic module, California version (engines 104/119 and engine 120 Federal/California)	Right front footwell, next to N26	
R1	Heated rear window element	Part of rear windshield	
R2/2	Left heated windshield washer nozzle	Part of left windshield washer nozzle	232-4
R2/3	Right heated windshield washer nozzle	Part of right windshield washer nozzle	
R2/4	Left heated washer nozzle hose	Under left side of engine hood	246-4
R2/5	Right heated washer nozzle hose	Under right side of engine hood	246-4
R2/6	Heated check valve	Under left side of engine hood	246-4
R2/7	Heated windshield washer pump hose	Clipped to right engine hood hinge	246-4
R3	Illuminated cigar lighter	Center console, in ashtray	
R9	Glow plugs	Top of engine, at each cylinder intake	
R11	Driver-side heated mirror	part of driver's mirror	235-2
R12/1	Left front emergency tensioning retractor (ETR) squib	In base of left B–pillar, part of ETR	

COMPONENT LOCATION

Component	Component Designation	Location	Page - Figure
R12/2	Right front emergency tensioning retractor (ETR) squib	In base of right B–pillar, part of ETR	236-2
R12/3	Driver airbag squib	Center of steering wheel, beneath airbag	236-1
R12/4	Front passenger airbag squib 1	Right side of dashboard, behind airbag	247-1
R12/5	Front passenger airbag squib 2	Right side of dashboard, behind airbag	247-1
R13/1	Left front seat cushion heater element	In left front seat	
R13/2	Left front backrest heater element	In left front seat backrest	
R13/3	Right front seat cushion heater element	In right front seat	
R13/4	Right front backrest heater element	In right front seat backrest	
R15	Auxiliary fan preresistor	Lower left front corner of engine compartment	231-2
R16/1	Reference resistor (EZL)	Left sice of component compartment	231-3
R16/2	Reference resistor (EZL/AKR)	Round plug on N1/3	
R17/1	Reference resistor (CIS-E)	Right side of component compartment, in front of cowl	229-4
R18/1	Resistance trimming plug, electronic idle speed control (ELR)	Left side of component compartment, in front of brake fluid reservoir	243-3
R18/2	Reference resistor (EGR)	Right side of component compartment, behind battery	
R25	Accelerator pedal position sensor	Top left side of engine, beneath accelerator linkage	251-6
R26	Fader switch	Center console, rear of transmission shift lever	

COMPONENT LOCATION

Component	Component Designation	Location	Page - Figure
S1	Exterior lamp switch	Left side of dashboard, left of steering column	234-3
S2/1	Ignition/starter switch	Left side of dashboard, right of steering column	234-1
S2/2	Glow/starter switch	Left side of dashboard, right of steering column	234-1
S4	Combination switch	Left side of steering column	
S4s6	Horn contact	Center of steering wheel, beneath airbag	
S5/3	High-voltage distributor	Top front of engine	229-6
S5/5	Left high-voltage distributor	Top left front of engine	250-5
S5/6	Right high-voltage distributor	Top right front of engine	250-5
S6	Hazard flasher switch	Center console, above radio	
S7/3	4MATIC function/test selection switch	Right side of component compartment	251-3
S8/1	Warning buzzer contact, exterior lamps	Part of S2/1, S2/2	234-1
S8/2	Warning buzzer contact, exterior lamps/central locking system	Part of S2/1, S2/2	234-1
S9	Stop lamp switch	Top of brake pedal, on bracket	240-5
S9/1	Stop lamp switch (4MATIC/ASD)	Top of brake pedal, on bracket	
S10/1	Left front brake pad wear sensor	In left front brake pad	
S10/2	Right front brake pad wear sensor	In right front brake pad	
S10/3	Left rear brake pad wear sensor	In left rear brake pad	
S10/4	Right rear brake pad wear sensor	In right rear brake pad	
S11	Brake fluid level switch	Left side of component compartment, top of brake fluid reservoir	231-3

COMPONENT LOCATION

Component	Component Designation	Location	Page - Figure
S12	Parking brake switch	Driver's footwell, at left kickpanel	234-4
S13/2	Sliding/pop-up roof switch	Center of windshield header, part of E15/2	
S14	Heated rear window switch	Center console, above radio	
S16/1	Starter lock-out/backup lamp switch	Left side of transmission	238-1
S16/2	Backup lamp switch	Left side of transmission	244-2
S16/3	Starter lock-out/backup lamp switch, selector lever position recognition		
S16/6	Kickdown switch	Under top of accelerator pedal	239-1
S16/7	Kickdown switch/transmission mode	Under top of accelerator pedal	
S16/8	"B" engagement switch		
S17/1	Left door switch	In left front door jamb	235-4
S17/2	Right door switch	In right front door jamb	
S17/3	Left front door switch	In left front door jamb	235-4
S17/4	Right front door switch	In right front door jamb	
S17/5	Left rear door switch	In left rear door jamb	
S17/6	Right rear door switch	In right rear door jamb	
S17/7	Left door switch (power seat relay)	In left front door jamb	235-4
S17/8	Trunk lamp switch	Left underside of trunk lid	236-6
S17/10	Right door switch (power seat relay)	In right front door jamb	
S17/11	Left door switch (seat belt extender, entrance/exit lamp)	In left door jamb (coupé)	
S17/12	Right door switch (seat belt extender, entrance/exit lamp)	In right door jamb (coupé)	
S18	Rear dome lamp switch	Center console, above radio	

COMPONENT LOCATION

Component	Component Designation	Location	Page - Figure
S18/1	Rear dome lamp switch with illumination	Center console, above radio	
S19s1	Right front power window switch	Center console	
S19s2	Right rear power window switch	Center console	
S20s1	Left front power window switch	Center console	
S20s2	Left rear power window switch	Center console	
S21/1	Left front power window switch	Center console	
S21/2	Right front power window switch	Center console	
S21/3	Left rear power window switch	Left rear door	
S21/4	Right rear power window switch	Right rear door	
S21/5	Left rear power window switch (front console)	Center console	
S21/6	Right rear power window switch (front console)	Center console	
S21/7	Center console safety switch, rear power windows	Center console	
S22	Left front power seat switch	Left front door	
S23	Right front power seat switch	Right front door	
S24	Fresh/recirculated air switch	Center console, above radio	
S25/5	105/115 °C Temperature switch auxiliary fan high speed/emergency cut-out	Top left side of engine	230-3
S25/6	50 °C Temperature switch	Lower left rear of engine	
S26/1	Heated windshield washer system thermoswitch	Under left rear corner of engine hood	246-3
S27	A/C compressor/boost cut-out microswitch	Lower left side of engine	
S27/1	A/C compressor cut-out microswitch	Lower left side of engine	
S27/2	Deceleration shut-off microswitch	Top left rear of engine, on bracket above intake manifold	232-1

COMPONENT LOCATION

Component	Component Designation	Location	Page - Figure
S27/3	Microswitch (EGR)	Top rear of engine, on throttle linkage bracket	248-6
S29/2	Throttle valve switch, full load/idle	Left side of engine, lower left of airflow sensor housing	231-6
S29/3	Idle speed contact switch	Top of accelerator pedal	251-4
S31/1	Refrigerant pressure switch, 2 function (off 2.0/30.0 bar, on 2.6/22.0 bar)	Lower left front of engine compartment	230-6
S32	Refrigerant high pressure switch, auxiliary fan (off 15.0 bar/on 20.0 bar) (green)	Lower left front of engine compartment	230-6
S32/1	Refrigerant high pressure switch, A/C compressor (off 12.0 bar/on 16.0 bar)	Lower left front of engine compartment	
S40	Cruise control switch V Decelerate/set B Accelerate/set SP Resume A Off	Left side of steering column	
S40/1	Clutch pedal switch (cruise control)	Top of clutch pedal bracket	
S41	Coolant level switch	Right side of engine compartment, lower front of coolant reservoir	229-5
S42	Washer fluid level switch	Top of windshield washer fluid reservoir	229-5
S43	Oil level switch	Left side of oil pan	238-2
S47	Left front door actuator	In left front door	235-3
S48	Right front door actuator	In right front door	
S49	Trunk lid lock actuator	Center of rear trunk panel (sedan) In tailgate (wagon)	236-6 241-5
S50	Outside mirror control switch	Center console	
S51/1	Left front seat heater switch	Center console	

COMPONENT LOCATION

Component	Component Designation	Location	Page - Figure
S51/2	Right front seat heater switch	Center console	
S51/5	Driver seat contact switch, seat belt extender	In left front seat	
S52	Rear head restraint release switch	Center console, above radio	
S52/5	Rear head restraint release switch	Under rear hatshelf	
S59	Adjustable steering column switch	Lower left side of steering column	
S61	Automatic antenna switch	Center console, above radio	
S62	Hood switch (ATA)	Left side of component compartment	231-4
S62/1	Left front door switch (ATA)	Left door jamb	
S62/2	Right front door switch (ATA)	Right door jamb	
S62/3	Trunk lid switch (ATA)	Tailgate latch (wagon)	
S65	Transmission overload protection switch	Left front of transmission	251-2
S66	Engine overload protection switch	Top left side of engine	
S68/1	Driver seat belt buckle switch (seat belt warning buzzer)	Left front seat belt buckle (coupé)	
S68/2	Front passenger seat belt buckle switch (seat belt extender)	Right front seat belt buckle (coupé)	
S68/3	Driver seat belt buckle switch (airbag/ETR)	Left front seat belt buckle	
S68/4	Front passenger seat belt buckle switch (airbag/ETR)	Right front seat belt buckle	
S76	Snow chain switch (ASR) with indicator	Center console, above radio	
S78/1	Rear window wiper switch I Continuous wipe II Intermittent wipe	Center console, above radio (wagon)	
S78/2	Rear window washer switch	Center console, above radio (wagon)	
S79	Rear window sun shade switch (center console)	Center console, above radio	
S88/2	Trunk lid lock switch (convenience)	Part of trunk lock	

COMPONENT LOCATION

Component	Component Designation	Location	Page - Figure
T1	Ignition coil	Left side of engine compartment	231-1
T1/1	Ignition coil 1 (right cylinder bank)	Left side of engine compartment, behind headlamp	250-3
T1/2	Ignition coil 2 (left cylinder bank)	Left side of engine compartment, behind headlamp	250-3
V1	Convenience diode	Rear of fuse box, location I	233-5
V5	Disconnect diode	Fuse/Relay box, position I	
W1	Main ground (behind instrument cluster)	Behind left side of instrument cluster	235-5
W2	Ground, at right headlamp unit	Lower right front of engine compartment	230-1
W3	Ground, left front wheelhousing (at ignition coil)	Left side of engine compartment, on ignition coil bracket	234-5
W4	Ground, front dome lamp	Center of windshield header, above front dome lamp	235-1
W5	Ground, engine	Front of engine, on A/C compressor	230-4
W6	Ground, left rear wheelhousing in trunk	Left side of trunk, below hinge (sedan) Behind left rear quarter panel (wagon)	232-5 242-1
W7	Ground, right rear wheelhousing in trunk	Right rear side of trunk (sedan) Behind right rear quarter panel (wagon)	235-6 242-3
W8	Ground, tailgate (cable connector)	Left corner of tailgate, behind panel	241-5
W9	Ground, at left headlamp unit	Lower left front of engine compartment, near headlamp	230-5

COMPONENT LOCATION

Component	Component Designation	Location	Page - Figure
W10	Ground, battery	Right side of component compartment, rear of shock tower	229-1
W11	Ground, engine (connection point for ground wires)	Left front of engine, on intake manifold	232-1
W12	Ground, center console	Behind lower front of console	240-2
W13	Ground, heated rear window	At right C–pillar, near edge of glass	237-1
W14	Ground, ABS hydraulic unit bracket	Lower left front corner of engine compartment	231-2
W16	Ground, component compartment	Right side of component compartment	250-1
W27	Ground, module box bracket	Right side of component compartment	250-1
X1/4	Connector, automatic antenna	Center of dashboard, rear of radio	
X1/5	Connector, sound system feed (amplifier), terminal 30	Next to connector X30	
X4	Terminal block, terminal 30, fuse and relay box (2-pole)	Top of driver's footwwell, forward of parking brake lever	234-4
X4/10	Terminal block, terminal 30/terminal 61 (battery)	Right side of component compartment, below W10	229-2 249-6
X4/13	Terminal block, terminal 87	Right side of component compartment, on rear firewall	229-4
X6	Terminal block, terminal 58d (2-pole)	Center of dashboard, below radio	240-3
X6/1	Terminal block, terminal 58D (2-pole)	Center of dashboard, left of ashtray	241-1
X6/2	Connector, terminal 58R (1-pole)	Below rear of fuse box	
X8	Terminal block, tailgate	Top left rear of roof, above headliner	241-6
X8/2	Connector, backup lamp/rear window wiper (1-pole)	Top of driver's footwell	
X8/3	Connector, combination switch/rear window wiper (1-pole)	Top of driver's footwell	

COMPONENT LOCATION

Component	Component Designation	Location	Page - Figure
X11	Diagnostic socket/terminal block (circuit TD)	On left inner fender	234-5
X11/4	Test connection for diagnosis, (impulse readout, 16-pole)	Right side of component compartment, left of battery (6 cylinder)	245-2
X11/4s1	Pushbutton switch with LED (California)	part of X11/4	245-2
X11/4	Test connection for diagnosis, (impulse readout, 38-pole)	Top of Module box (8 cylinder)	249-5
X11/11	Test connection, TD (EDS, 1-pole)	Right side of component compartment, left of battery	
X11/13	Test connection, SRS plug connection (10-pole)	Beneath front passenger footrest	244-3
X11/18	Connector, ABS/ASR/electronic accelerator - chassis (6-pole)	Forward of passenger side airbag, on firewall	
X11/21	Diagnostic module test connection (3-pole) - California	Right side of component compartment, in front of Module box	249-5
X11/21s1	Pushbutton (with LED) - California	part of X11/21	249-5
X13	Connector, cigar lighter	Behind center of dashbcard, near ashtray	
X18	Connector, interior/taillamp harness (8-pole)	Lower part of fuse box	233-5
X20	Connector, stop lamp switch (2-pole)	Driver's footwell, on stop lamp switch	234-2
X20/1	Connector, center high-mounted stop lamp	Lower part of fuse box	2303-5
X21/2	Terminal block, stop lamp switch/electronic speedometer	Behind instrument cluster	
X22/1	Connector, transmission overload protection (2-pole)	Left side of component compartment, beneath Fuse/Relay box (F1)	
X22/6	Connector, transmission overload switch (starter lock-out/kickdown harness) (3-pole)	On transmission, near steering lock	
X24	Connector, headlamp harness (6-pole)	Lower part of fuse box	239-5
X25	Connector, preglow harness	On left inner fender	

COMPONENT LOCATION

Component	Component Designation	Location	Page - Figure
X26	Connector, interior/engine (12-pole)	Lower part of fuse box	239-5
X26/6	Connector, engine harness/Tempmatic (3-pole)	Lower part of fuse box	245-3
X26/17	Engine plug connection	Right side of component compartment, behind Module box	
X26/18	Connector, interior/transmission (8-pole)		
X27	Connector, starter harness	Left side of component compartment, near brake booster	231-3
X28/1	Connector, ETR voltage supply (2-pole)	Behind left side of dashboard, near steering column	
X28/4	Connector, driver airbag squib	Center of steering wheel, beneath slip ring	
X28/5	Airbag squib slip ring (2-pole)	Center of steering wheel, beneath air bag	
X28/6	Connector, seat belt warning unit/seat belt warning unit relay	Upper part of driver's footwell	
X28/7	Connector, airbag/test connection	In loom tie attached to harness, forward of passenger side airbag	
X30	Connector block for optional electrical equipment	Behind driver's left kickpanel	234-2
X30/1	Connector, multi-function block	Behind driver's left kickpanel	
X32	Connector, trunk/reading lamp	Pig-tail connection behind rear dome lamp	
X33/4	Connector, cruise control (manual transmission) (2-pole)	Upper part of driver's footwell	
X33/14	Connector, cruise control, cockpit/engine (10-pole)	Forward of passenger side airbag, on firewall	
X34	Connector, right front door contact switch	In right front door jamb	246-2
X35/7	Plug connection, cockpit/module box (12-pole)	Forward of passenger side airbag, on firewall	

COMPONENT LOCATION

Component	Component Designation	Location	Page - Figure
X35/8	Plug connection, cockpit/module box, electronic accelerator/cruise control/idle speed control (14-pole)	Forward of passenger side airbag, on firewall	
X36	Connector, fuel pump harness (1-pole)	Behind passengers right kickpanel (On early vehicles: in right component compartment)	229-3
X36/3	Connector, fuel pump harness (2-pole)	Beneath right side of rear seat	248-4
X39/16	Connector, telephone voltage supply (1-pole)	Behind driver's left kickpanel	
X42	Connector, anti-theft alarm, front/rear	Beneath passengers footrest	244-3
X42/2	Connector, right rear door contact switch/dome lamp(ATA) (1-pole)	In right B-pillar	
X42/9	Connector, left front door ATA harness	In driver's left kickpanel, near floor	
X42/10	Connector, right front door ATA harness	In passengers right kickpanel, near floor	240-1
X42/11	Connector, tailgate ATA harness (3-pole)	Top right rear of roof, above headliner	243-6
X42/13	Connector, ATA/radio (1-pole)	Rear of radio	244-6
X42/14	Connector, ATA/trunk lamp	In left front corner of trunk	
X42/15	Connector, ATA/switched ground	Left component compartment	239-5
X43	Connector, central locking system (ATA)	Beneath right side of rear seat	233-3
X44	Connector, central locking system (supply pump)	Beneath right side of rear seat	
X46	Connector, ABS warning lamp (1-pole)	Behind dashboard, forward of parking brake lever	234-4
X47	Connector, rear speed sensor harness (2-pole)	Beneath right side of rear seat	233-3
X47/2			
X48F		Right rear door sill area	
X48G		Behind radio	

COMPONENT LOCATION

Component	Component Designation	Location	Page - Figure
X48H		Behind radio	
X48I		Rear of center console	
X48K		Sensors ground, CIS-E	
X48L		EZL reference resistor	
X48M		Ground, start valve/fuel pump relay	
X49/1	Connector, backup lamp switch	Top of driver's footwell, right of steering column	
X49/2	Connector, backup lamp/starter lock-out switch	Top of driver's footwell, right of steering column	234-2
X53/1	Connector, Hall-effect sensor/automatic climate control	Connected to X53/5	
X53/2	Connector, Hall-effect sensor/Tempomat (cruise control)	Connected to X53/5	
X53/5	Multipoint connector, Hall-effect sensor	Behind right side of instrument cluster	240-4
X53/6	Connector, Hall-effect sensor/CIS-E (1-pole)	Connected to X53/5	
X55	Connection board, left front power seat	Beneath left front seat	245-1
X55/1	Connection board, right front power seat	Beneath right front seat	236-5
X56	Connector, throttle valve switch	On intake manifold, near airflow sensor	234-6
X62/3	Connector, rear axle speed sensor, ASR (6-pole)	Behind front passengers right kickpanel	252-2
X62/6	Connector, right front wheel speed sensor (component compartment)	Right side of component compartment	250-1
X62/7	Connector, left front wheel speed sensor (component compartment)	Component compartment	
X62/8	Connector, rear axle multiple circuit junction	Underside of car, forward of fuel pump package	252-6
X62/11	Terminal block, rear axle speed sensor (ABS) (2-pole)	Behind passengers right kickpanel	

COMPONENT LOCATION

Component	Component Designation	Location	Page - Figure
X63	Connector, serial data feed CIS-E/EZL (1-pole)	Top of driver's footwell, next to steering column	234-2
X63/1	Connector, CAN databus, EZL/LH (3-pole)	Right front footwell	
X64	Connector, blower speed control/interior harness	Above and rearward of brake booster	
X81/1	Connector, engine harness/cruise control (1-pole)	Near connector X30	
X83/2	Connector, ABS/ASD/ASR warning lamp, right footwell (3-pole)	Top of driver's footwell, forward of parking brake release lever	
X83/3	Connector, instrument cluster/4MATIC warning lamp (3-pole)	Top of driver's footwell, forward of parking brake release lever	
X83/5	Connector, instrument cluster/ABS/ASR warning lamp (3-pole)	Top of driver's footwell, forward of parking brake release lever	
X86	Connector, centra locking system rear (3 pin)	Right side of tailgate header, above headliner	243-6
X88/3	Connector, windshield washer fluid level control (2-pole)	Near coolant level switch, coolant reservoir	
X88/5	Connector, left front brake pad wear sensor	Below right side of fuse box, on left inner fender	237-2
X89/1	Connector, electronic accelerator control unit/ASR (2-pole)	Right side of component compartment, behind battery	253-3
X89/2	Connector, electronic accelerator control unit/engine harness (2-pole)	Right side of component compartment, behind battery	253-3
X95	Connector, CHECK ENGINE	On right inner firewall, near battery	
X132	Connector, right front brake pad sensor (2 pin)	On right inner firewall, forward of battery	229-1
Y1	Electrohydraulic actuator (EHA)	Top of engine, rear of fuel distributor	234-6
Y3	Kickdown valve (automatic transmission)	Right rear corner of transmission	237-4

COMPONENT LOCATION

Component	Component Designation	Location	Page - Figure
Y3/2	Upshift delay solenoid valve	On left side of transmission	251-2
Y3/3	Upshift delay switchover valve	Left side of component compartment	249-4
Y6	Idle speed air valve	Top left front of engine, left of engine oil dipstick	231-6
Y7	Switchover valve unit (7 connections)	Above passenger footwell area	
Y8	Start valve	Top center of engine, rear of fuel distributor	231-6
Y19	Mono valve (ACC)	Right side of component compartment, next to battery	229-1
Y22	Electromagnetic actuator, electronic idle speed control (ELR)	Lower left side of engine	
Y24/2	Head restraint release valve with shut-off delay	Below left side of rear seat	233-2
Y24/3	Seat backrest locking valve	Below left side of rear seat	
Y27	EGR switchover valve	Right front fender, behind air filter housing	248-1
Y27/4	Boost pressure control switchover valve	Right front engine compartment, next to fan shroud	248-5
Y27/5	Pressure control flap switchover valve	Right front fender, forward of air filter housing	248-5
Y29	Vacuum amplifier switchover valve (automatic transmission)	Left side of engine compartment, on inner fender	
Y30	Engine overload protection switchover valve	Left side of engine compartment, on component compartment wall	
Y31	Air recirculation valve vacuum transducer	Right side of engine compartment, rear of right headlamp	
Y31/1	EGR valve vacuum transducer	Right front fender, behind airfilter housing	247-4

COMPONENT LOCATION

Component	Component Designation	Location	Page - Figure
Y31/2	Pressure control flap vacuum transducer	Right side of engine compartment, rear of right headlamp	247-4
Y31/4	Boost pressure control vacuum transducer	Right side of engine compartment, rear of right headlamp	247-4
Y32	Air injection pump switchover valve	Right front fender, behind headlamp	248-1
Y33	Electromagnetic air injection pump clutch	Front of air injection pump, above alternator	250-2
Y38	ASD valve	Rear underside of car, next to fuel pump package	252-3
Y49	Solenoid, adjustable camshaft timing	Attached to intake camshaft front cover	250-6
Y49/1	Solenoid, left adjustable camshaft timing	Attached to left intake camshaft cover	249-2
Y49/2	Solenoid, right adjustable camshaft timing	Attached to left intake camshaft cover	249-2
Y58	Tank breather valve		
Y58/1	Purge switchover valve	On right side of component compartment wall, above N1/2, N1/3	253-2
Y62	Fuel injection valves (LH)	Top of engine	249-2
Z	Connector sleeve (solder joint in harness)		
Z6	Connector sleeve, ground (solder joint in harness)		
Z6/8	Connector sleeve, sensor ground (solder joint in harness)	Inside N39 plug	
Z6/9	Connector sleeve, ground W10 (solder joint in harness)	ATA/comfort system, right rear door sill area	
Z7	Connector sleeve, terminal 30 (solder joint in harness)	Cable tray above intake manifold, area of rear most bolt hole	

COMPONENT LOCATION

Component	Component Designation	Location	Page - Figure
Z7/1	Connector sleeve, terminal 30, central locking system (solder joint in harness)	80 mm from Z6	
Z7/4	Connector sleeve, terminal 87, engine (LH)		
Z7/5	Connector sleeve, terminal 87, engine (LH)		
Z7/6	Connector sleeve, terminal 87, chassis (LH)	240 mm from Z6	
Z7/15	Connector sleeve, terminal 87 (LH)	160 mm from Z6	
Z13	Connector sleeve 5 (solder joint in harness)	Ground, throttle switch/CIS-E (30cm towardsd N3 from end of cable tray)	
Z22	Cable protectively tied back to harness		
Z24/1	Connector sleeve, ATA arm		
Z24/2	Connector sleeve, ATA disarm		
Z82	Connector sleeve, ATA/central locking system, trunk	On floor, near right "B" pillar	
Z82/1	Connector sleeve, ATA/central locking system, left front door	On floor, near right "B" pillar	
Z82/2	Connector sleeve, ATA/central locking system, right front door	On floor, near right "B" pillar	
Z82/6	Connector sleeve, warning buzzer contact/illumination	Central locking, right rear door sill area	
Z94	Connector sleeve, brake lamp switch closer		
Z95	Connector sleeve, brake lamp switch opener		

COMPONENT LOCATION

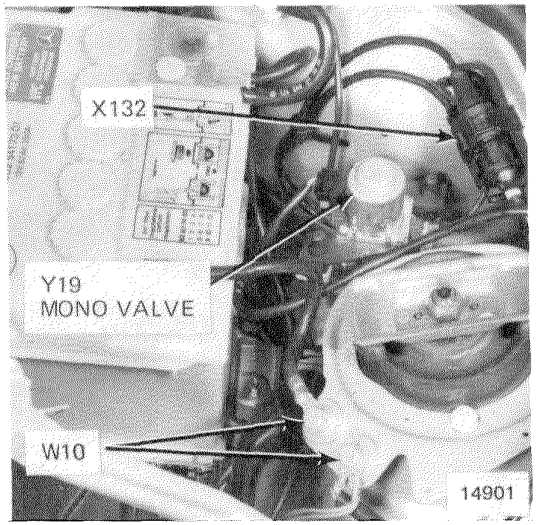

Figure 1

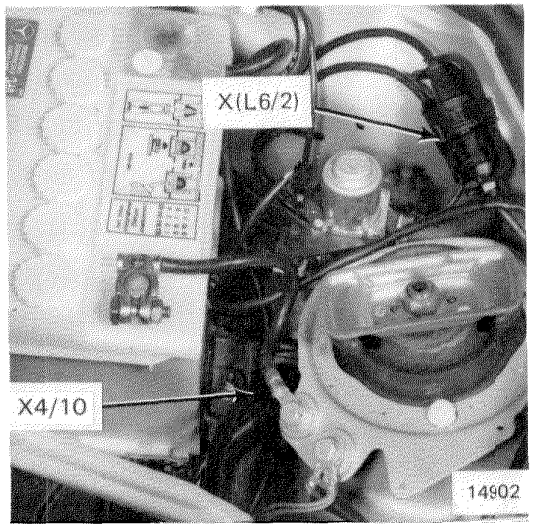

Figure 2

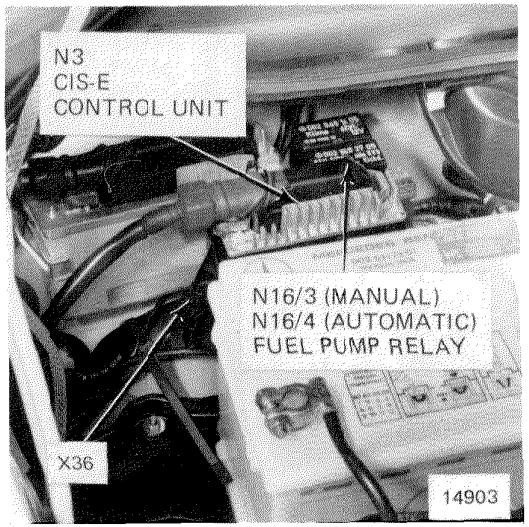

Figure 3

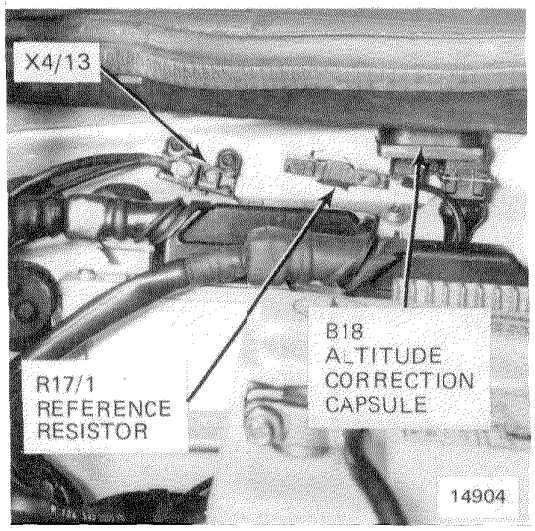

Figure 4

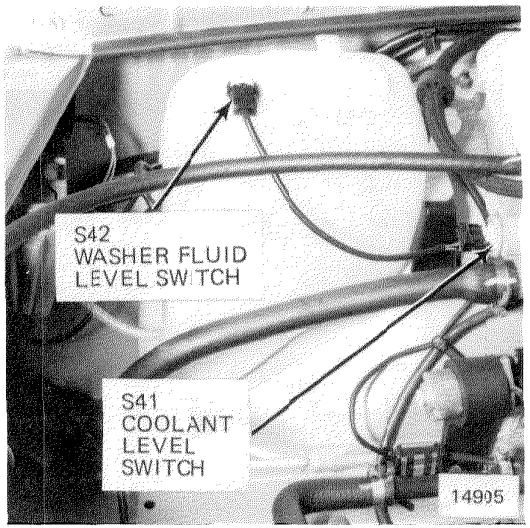

Figure 5

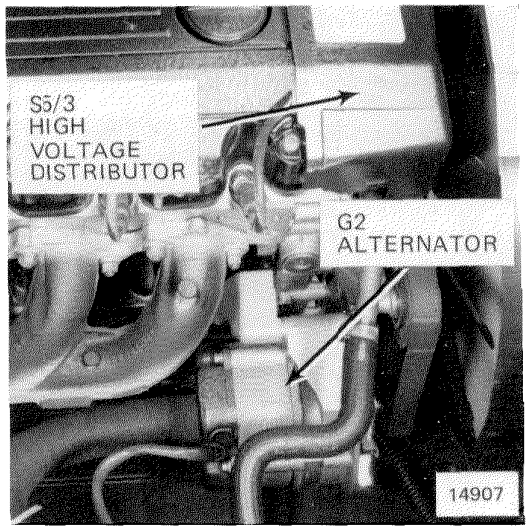

Figure 6

COMPONENT LOCATION

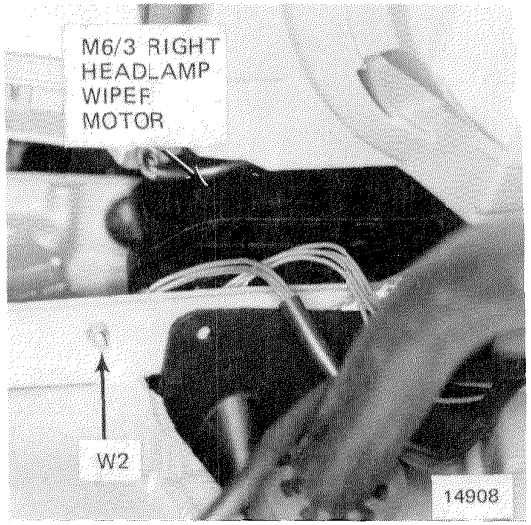

Figure 1

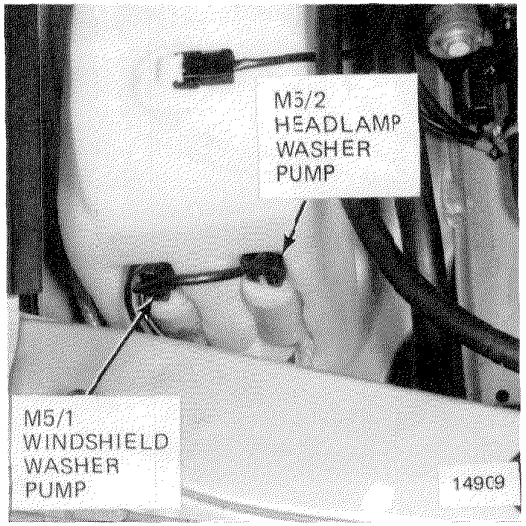

Figure 2

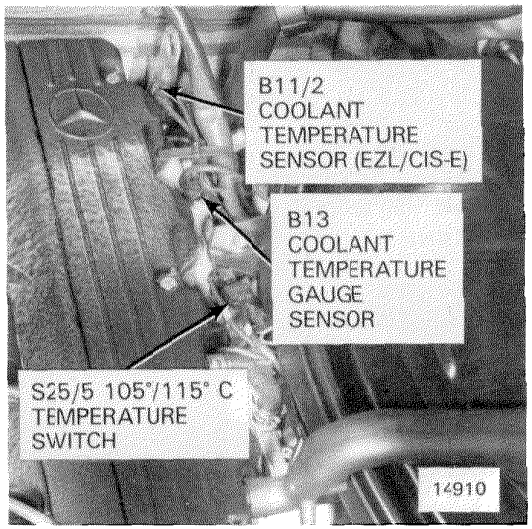

Figure 3

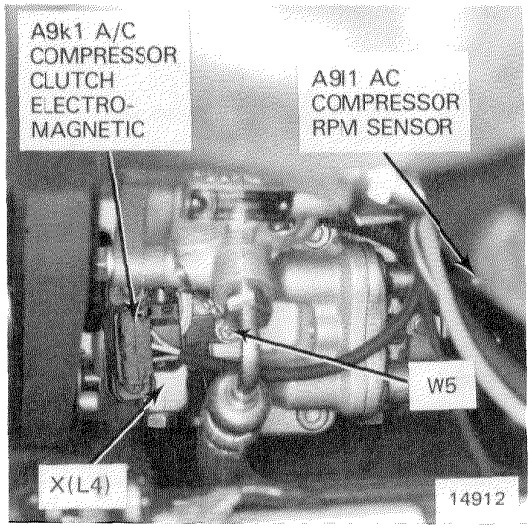

Figure 4

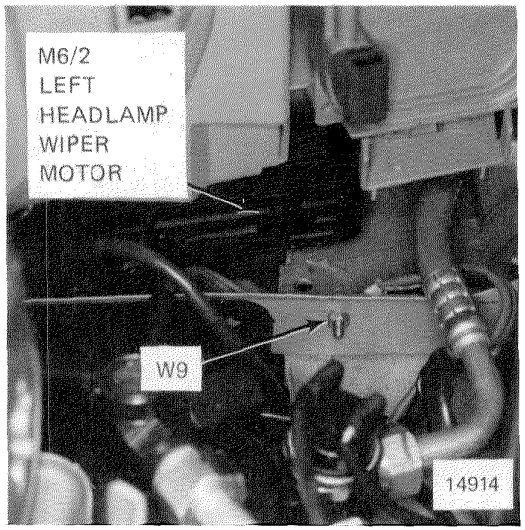

Figure 5

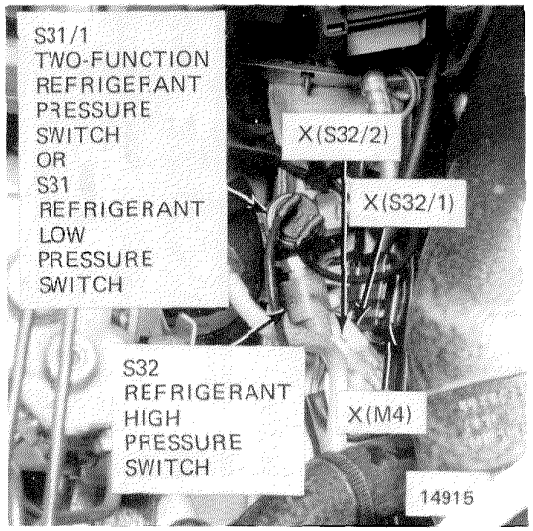

Figure 6

COMPONENT LOCATION

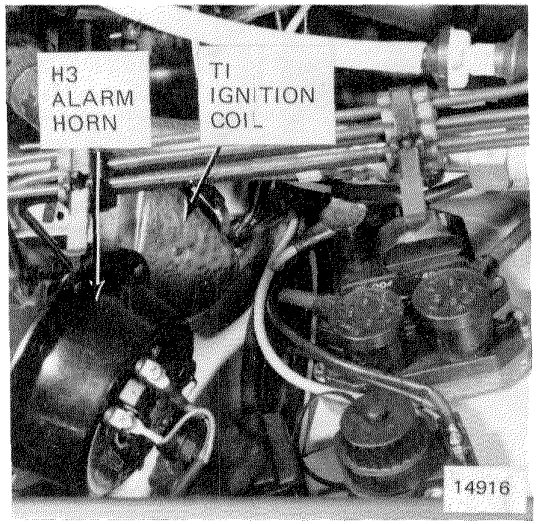

Figure 1

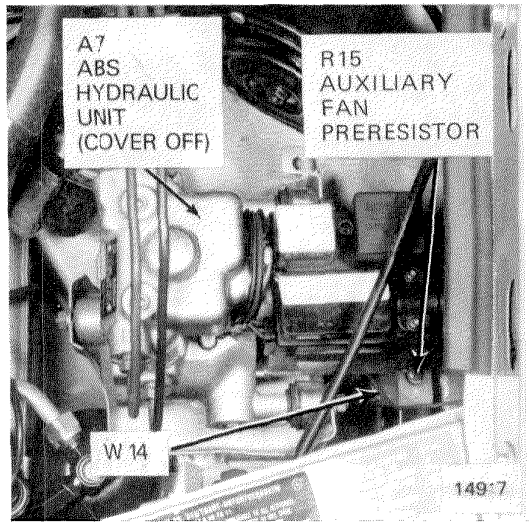

Figure 2

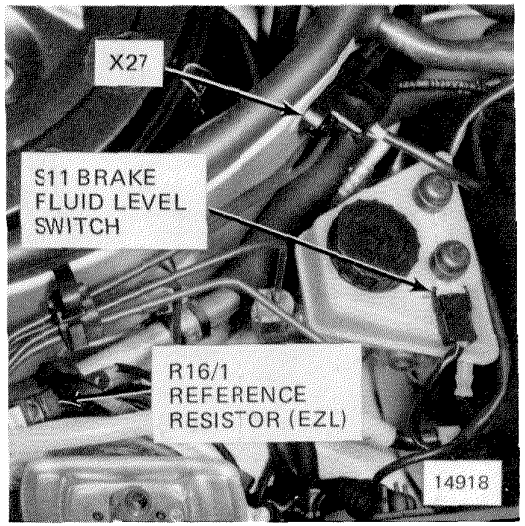

Figure 3

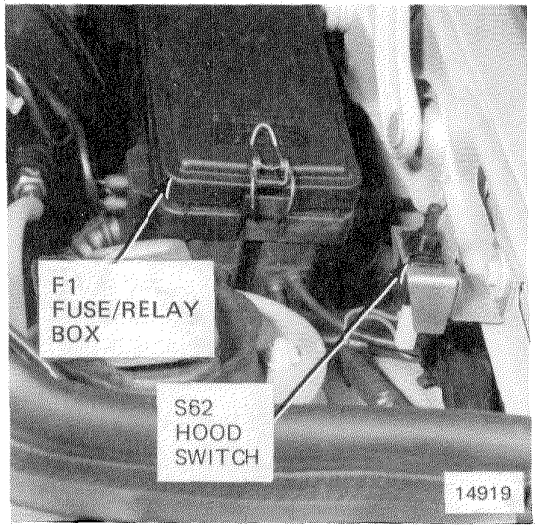

Figure 4

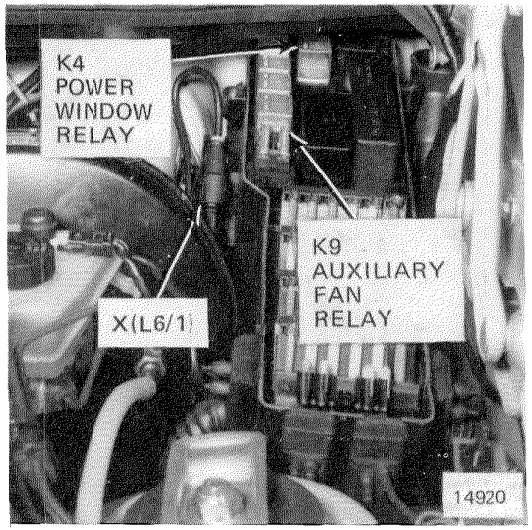

Figure 5

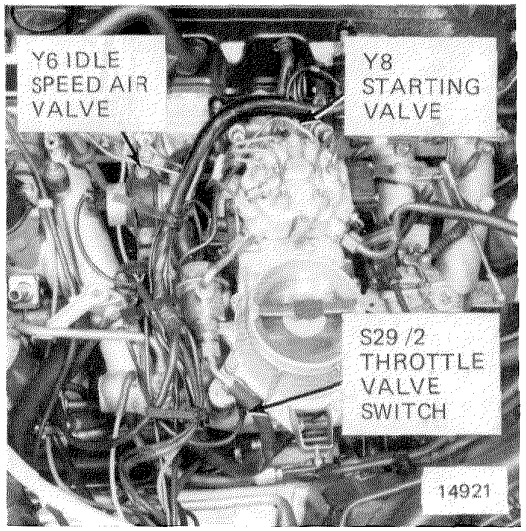

Figure 6

COMPONENT LOCATION

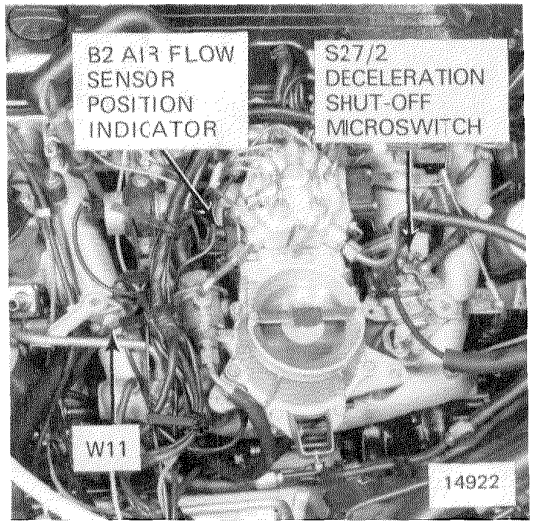

Figure 1

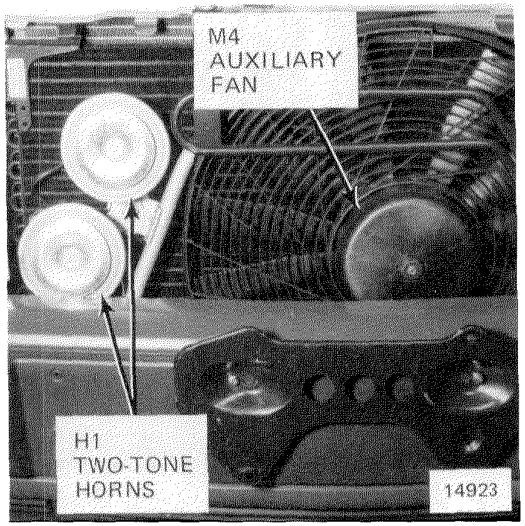

Figure 2

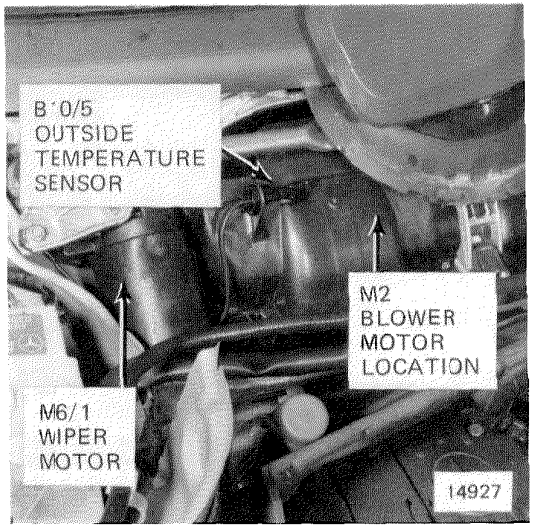

Figure 3

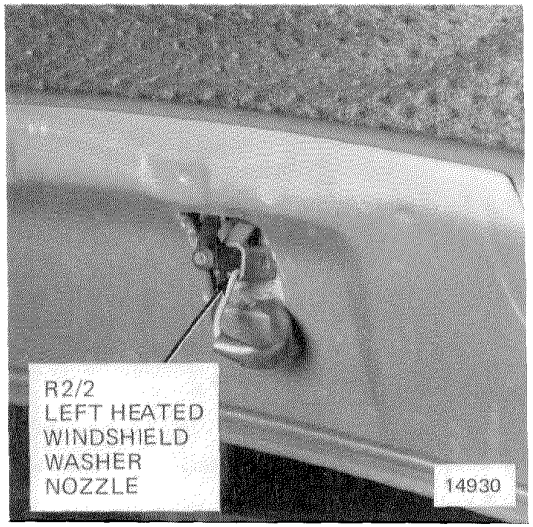

Figure 4

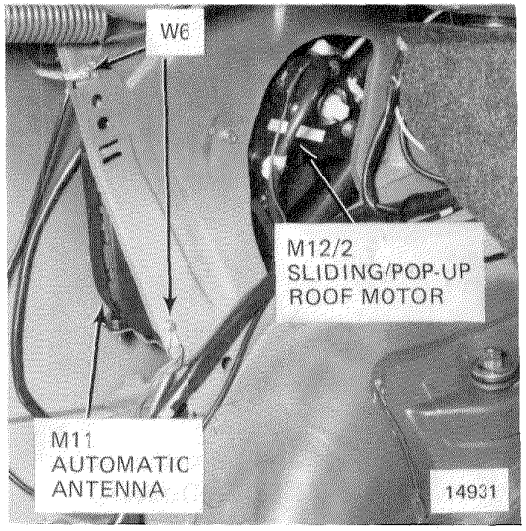

Figure 5

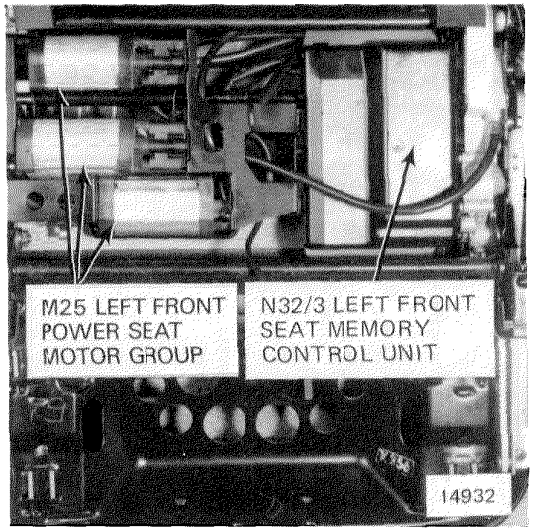

Figure 6

COMPONENT LOCATION

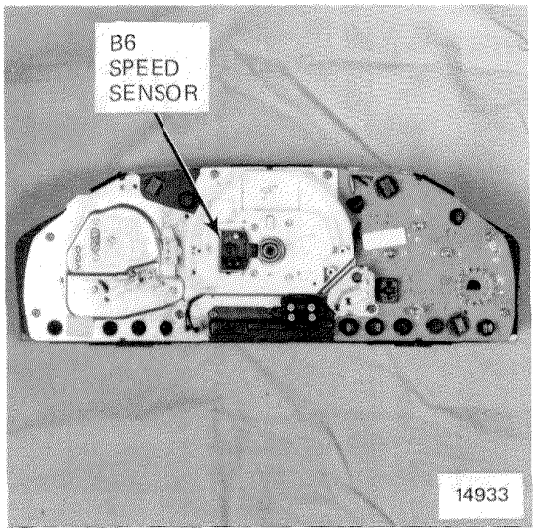

Figure 1

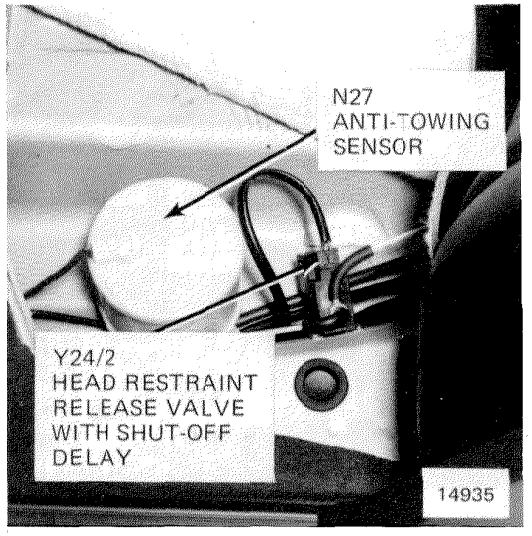

Figure 2

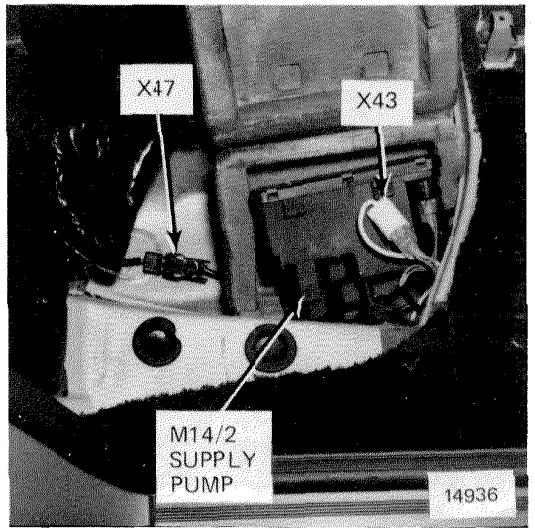

Figure 3

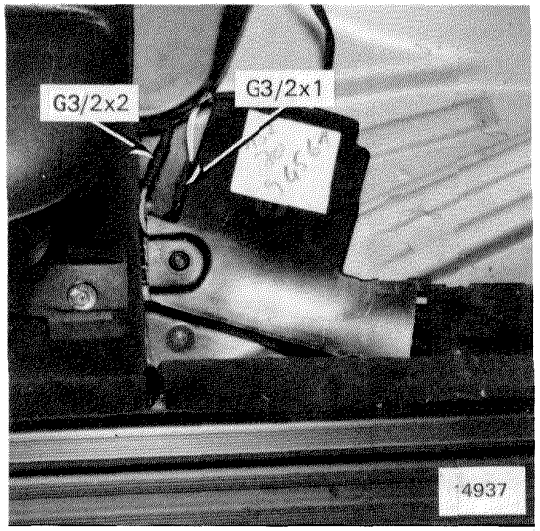

Figure 4

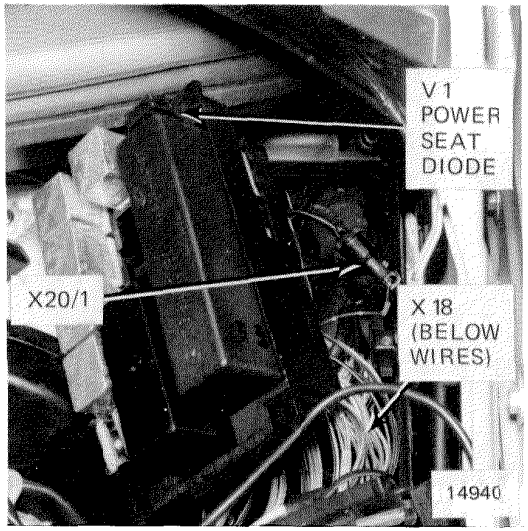

Figure 5

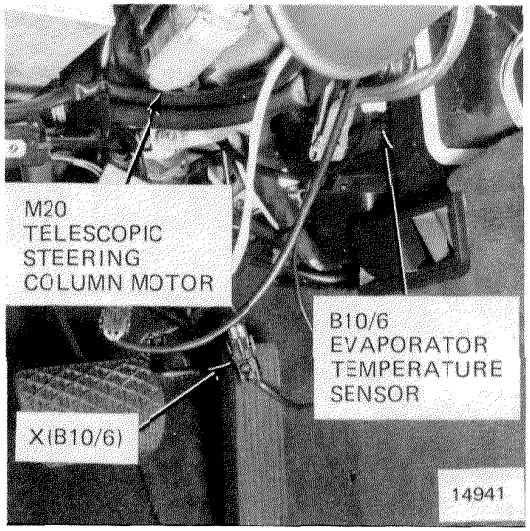

Figure 6

COMPONENT LOCATION

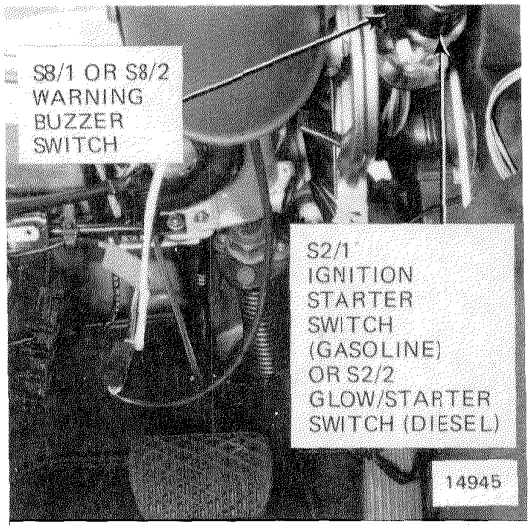

Figure 1

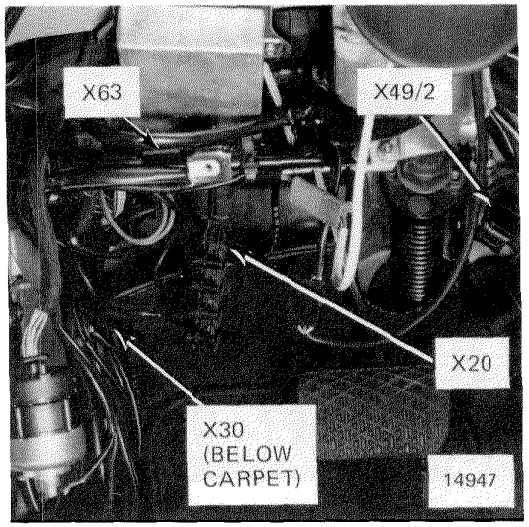

Figure 2

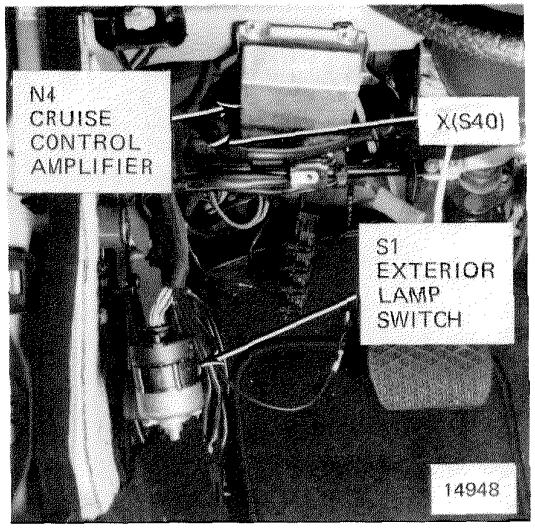

Figure 3

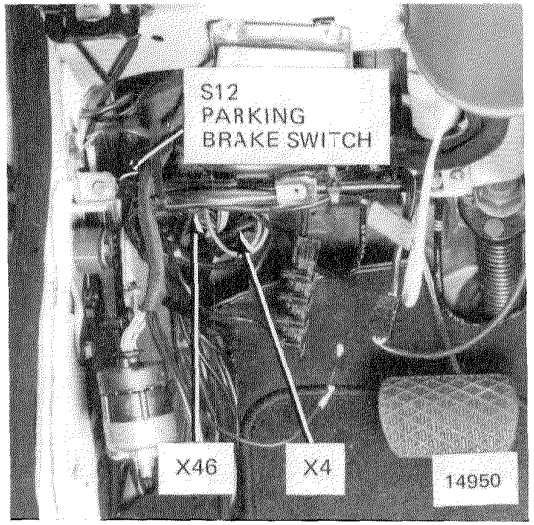

Figure 4

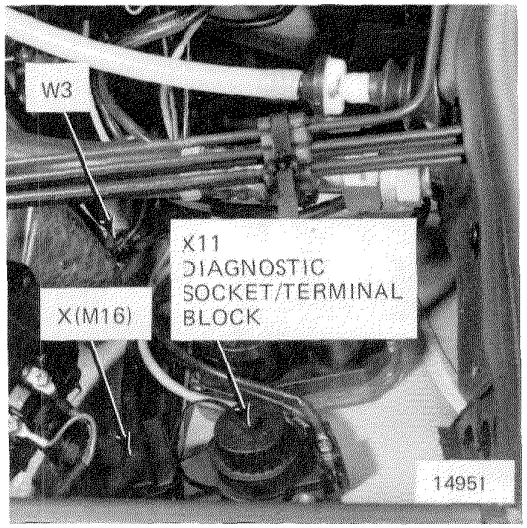

Figure 5

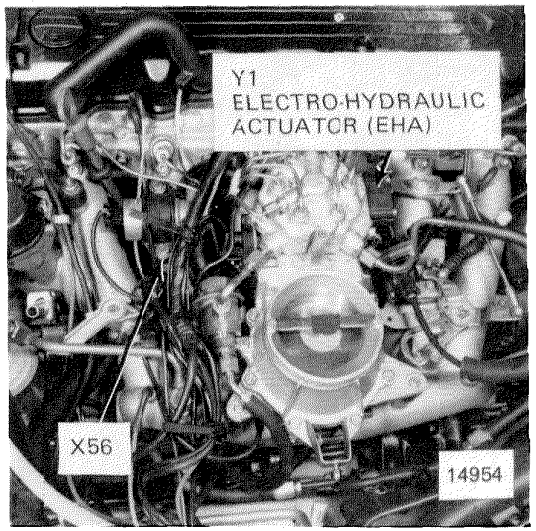

Figure 6

COMPONENT LOCATION

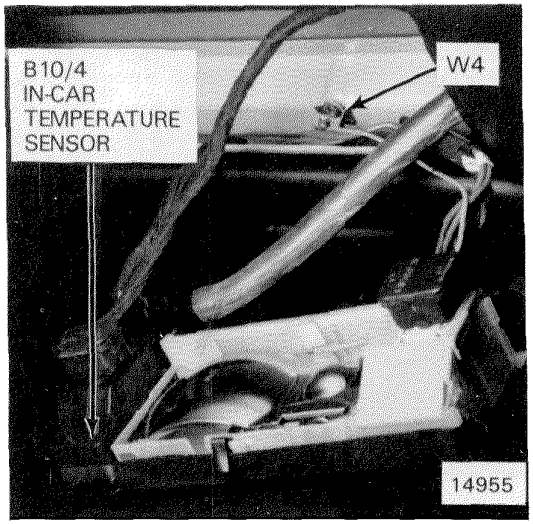

Figure 1

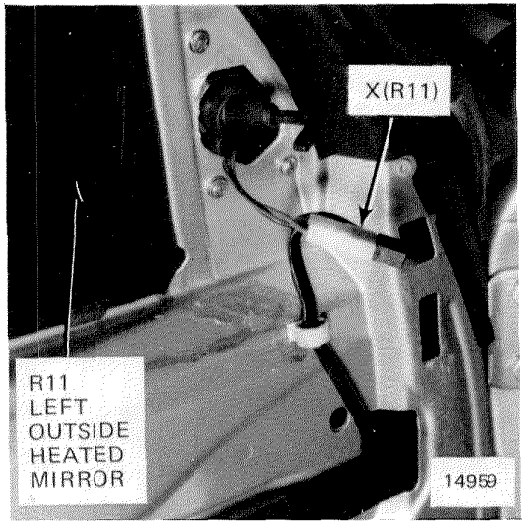

Figure 2

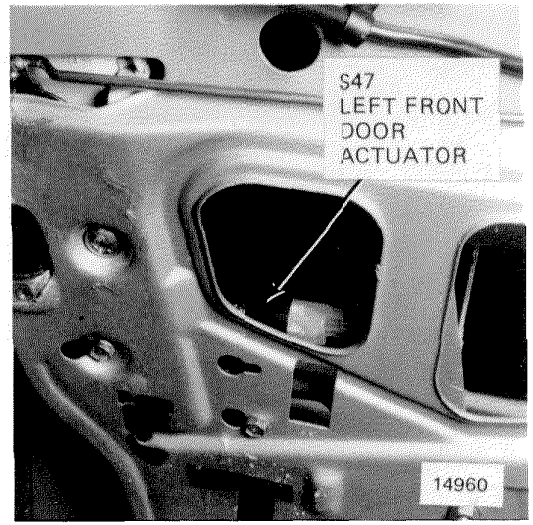

Figure 3

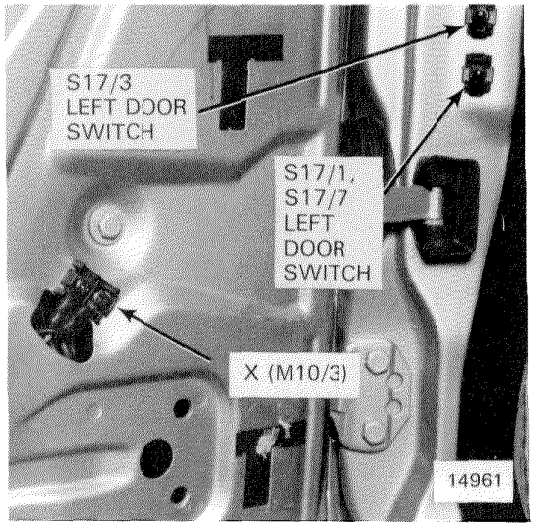

Figure 4

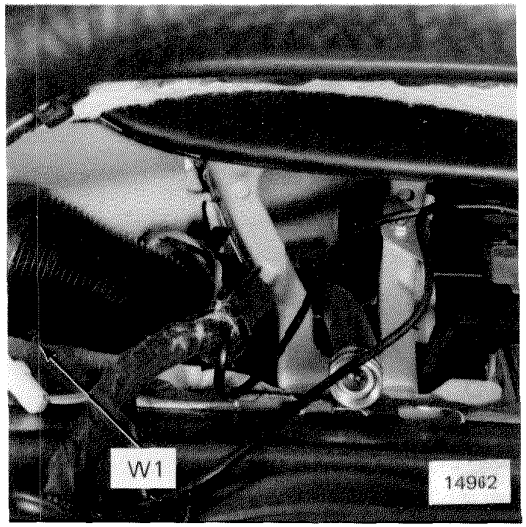

Figure 5

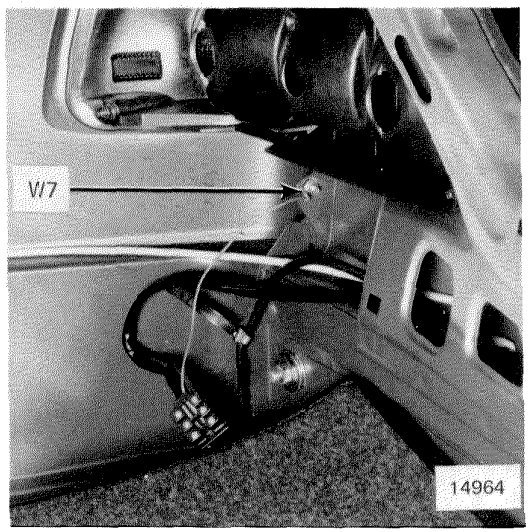

Figure 6

COMPONENT LOCATION

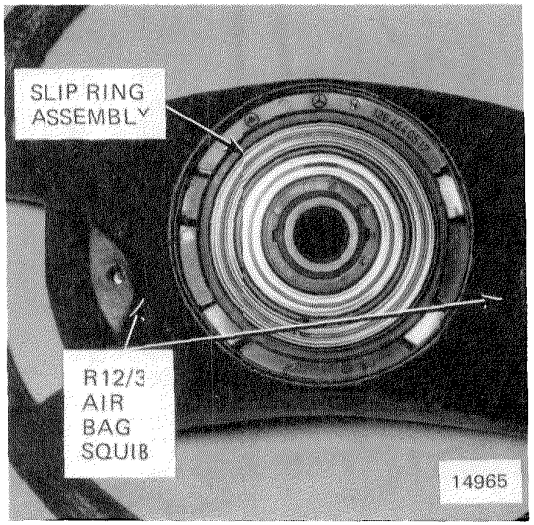

Figure 1

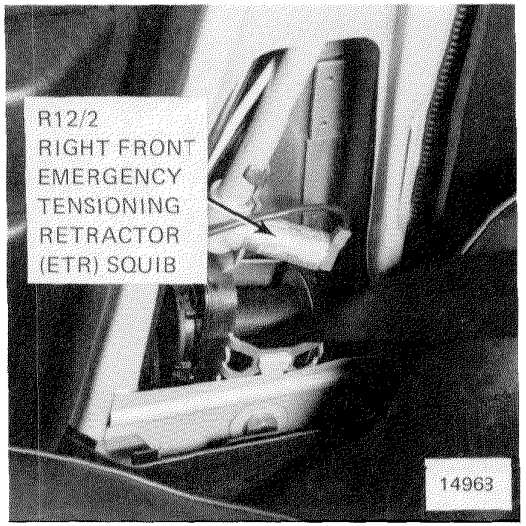

Figure 2

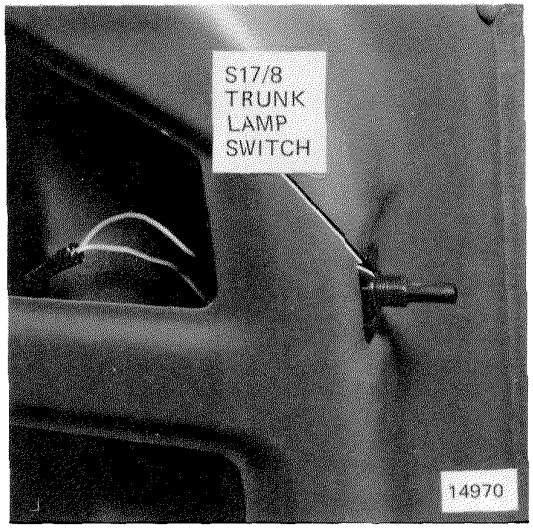

Figure 3

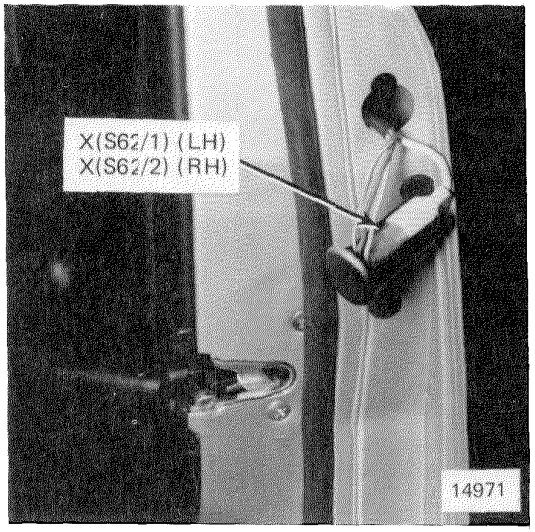

Figure 4

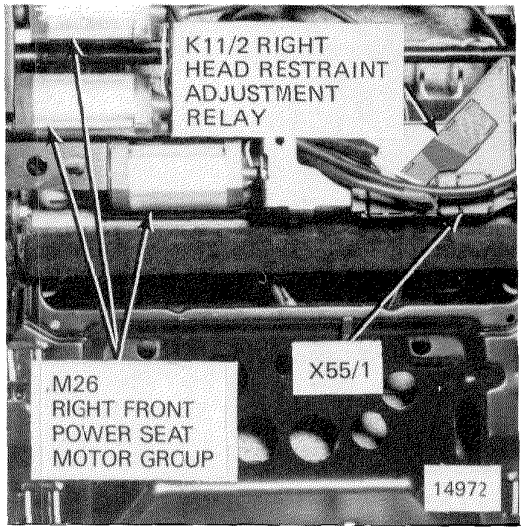

Figure 5

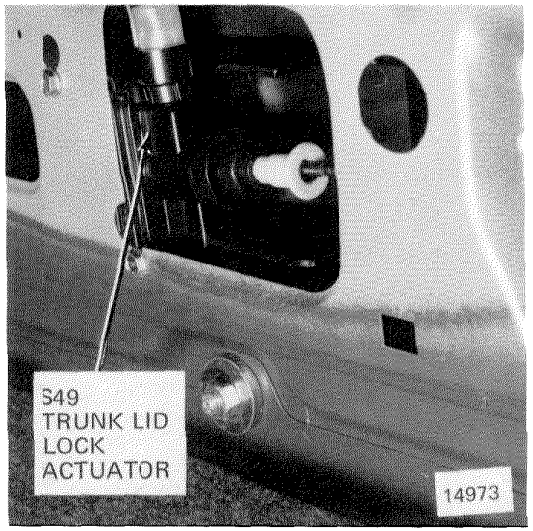

Figure 6

COMPONENT LOCATION

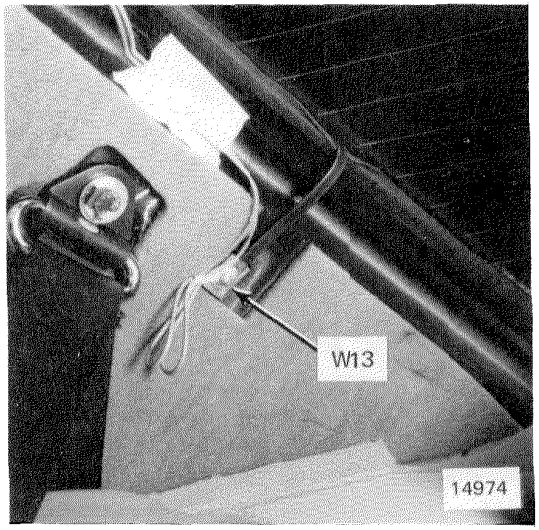

Figure 1

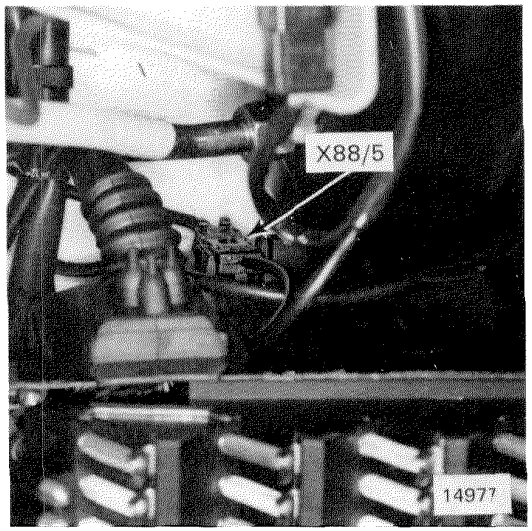

Figure 2

Figure 3

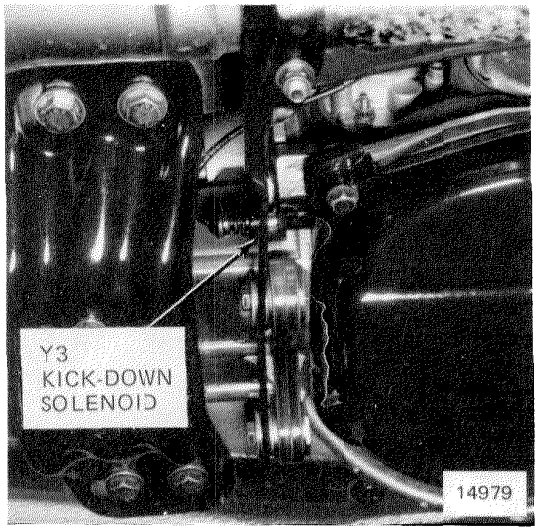

Figure 4

Figure 5

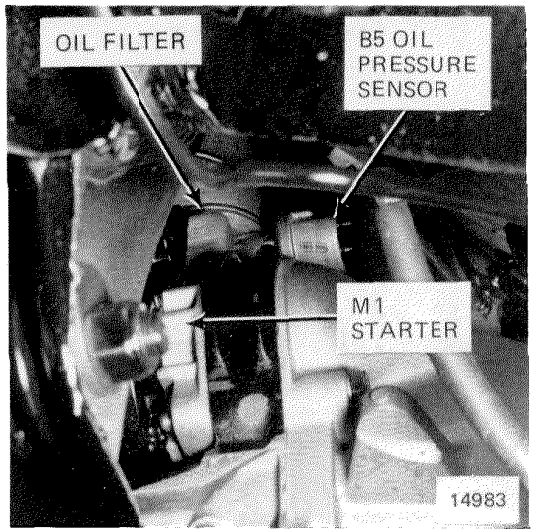

Figure 6

COMPONENT LOCATION

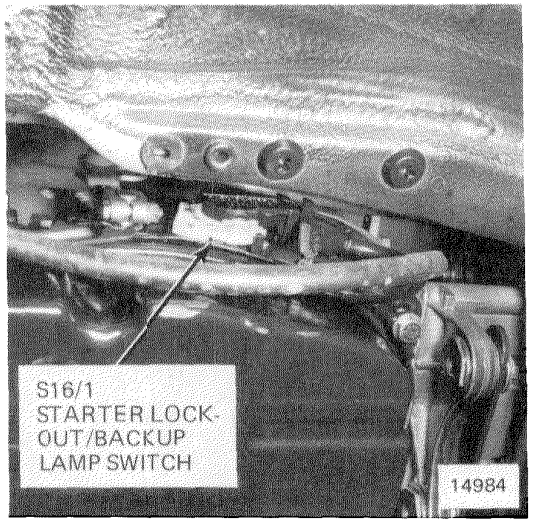

Figure 1

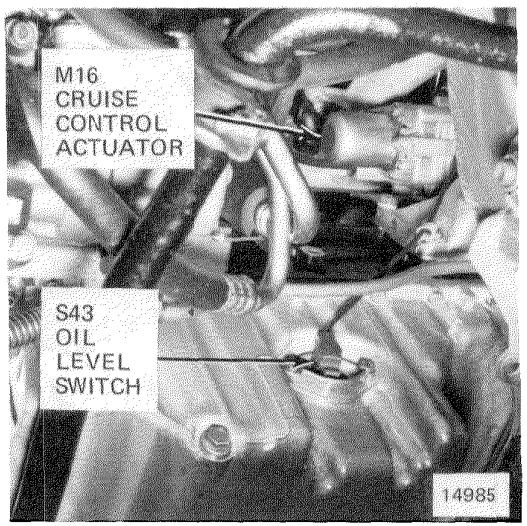

Figure 2

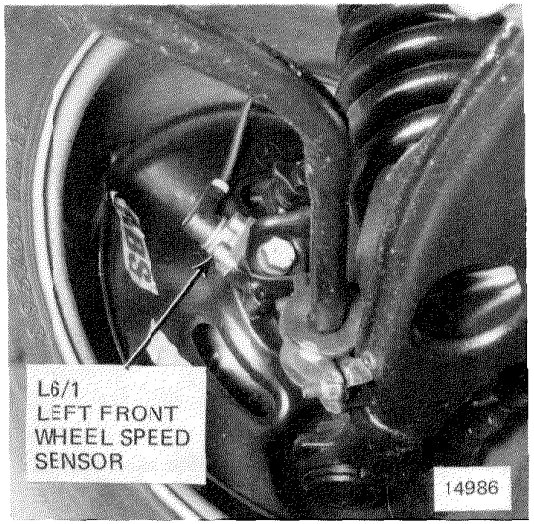

Figure 3

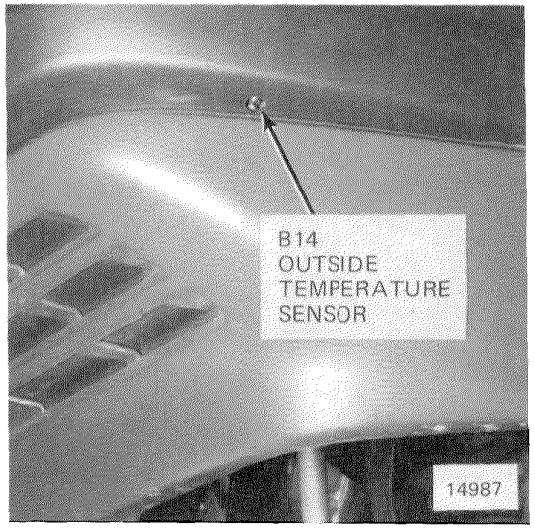

Figure 4

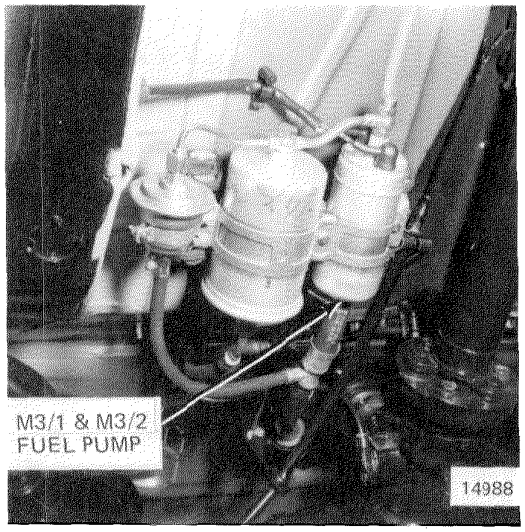

Figure 5

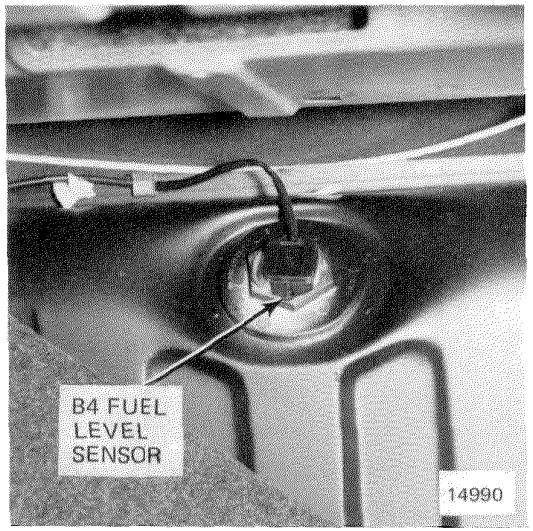

Figure 6

COMPONENT LOCATION

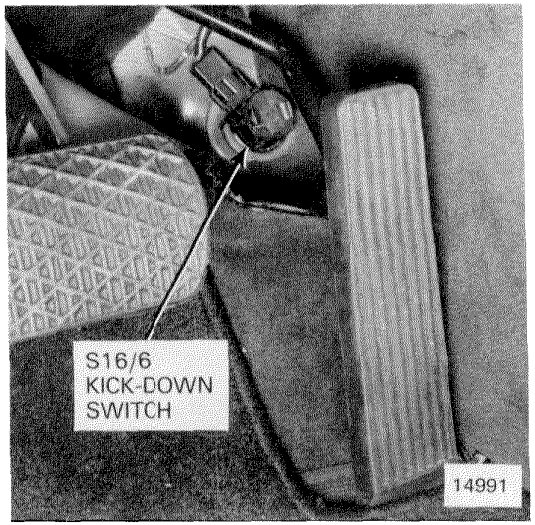

Figure 1

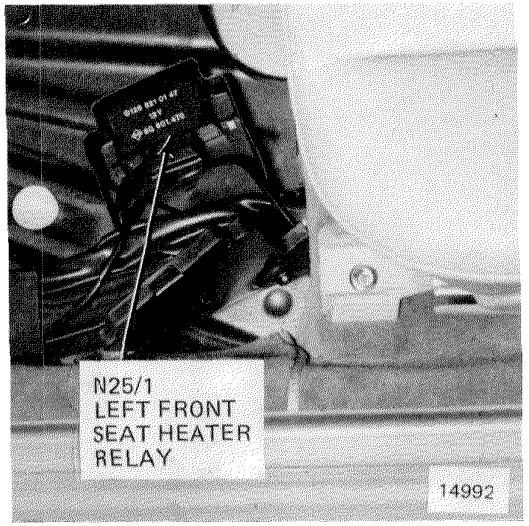

Figure 2

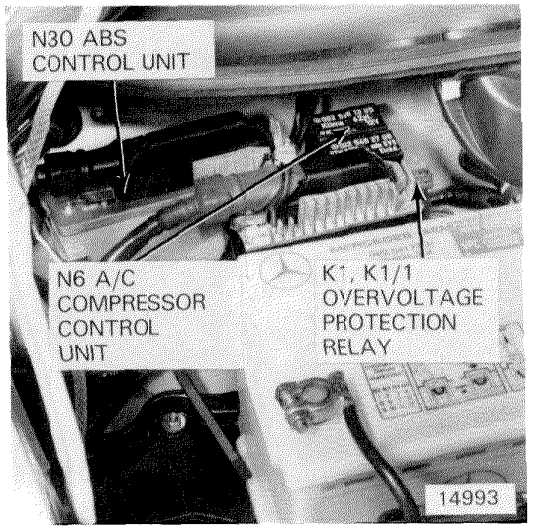

Figure 3

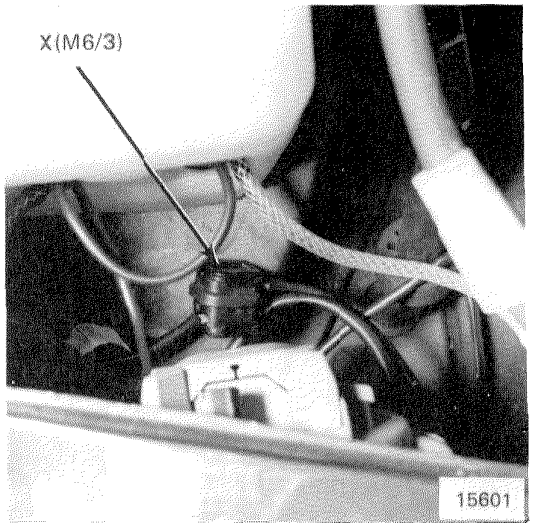

Figure 4

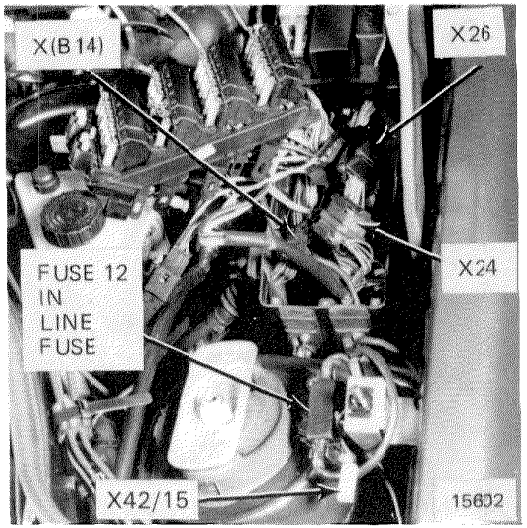

Figure 5

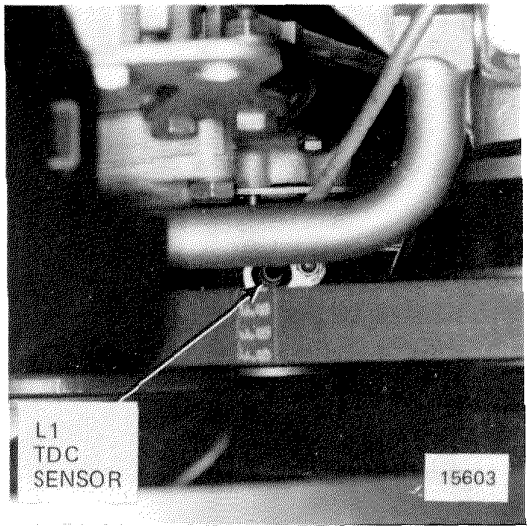

Figure 6

COMPONENT LOCATION

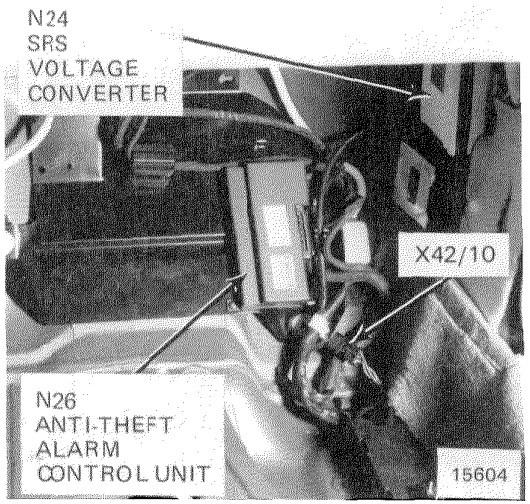

Figure 1

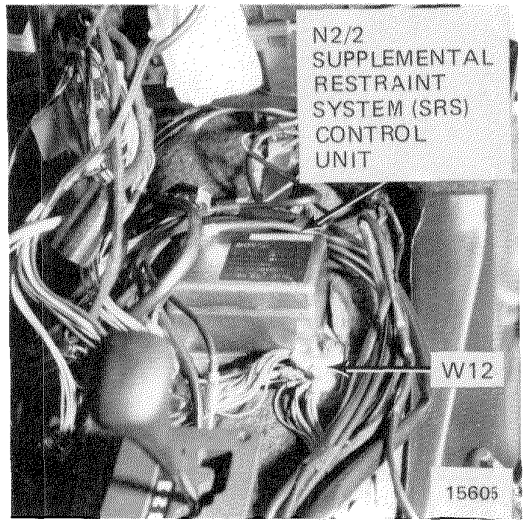

Figure 2

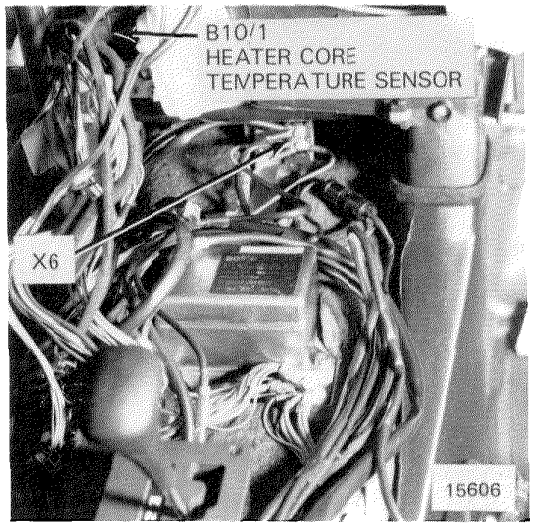

Figure 3

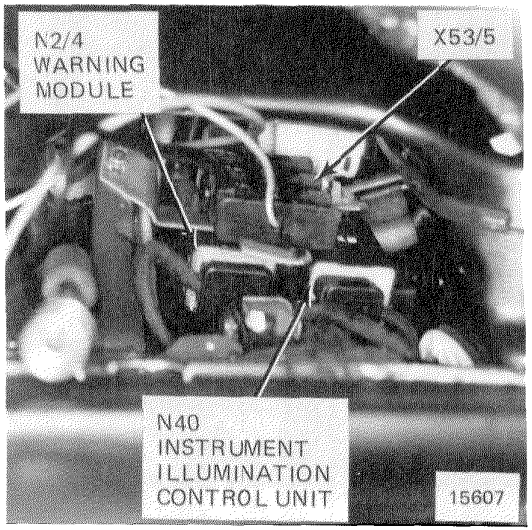

Figure 4

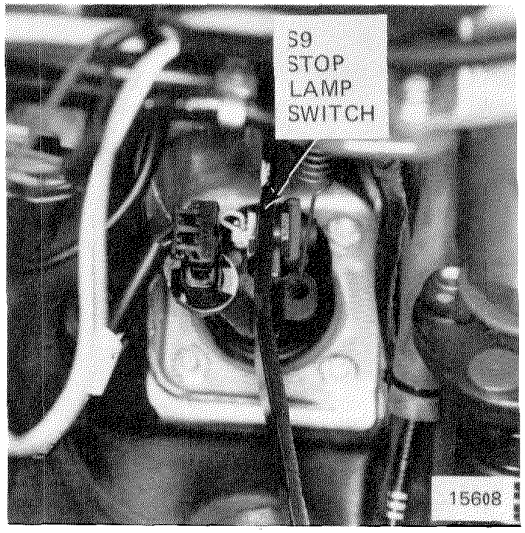

Figure 5

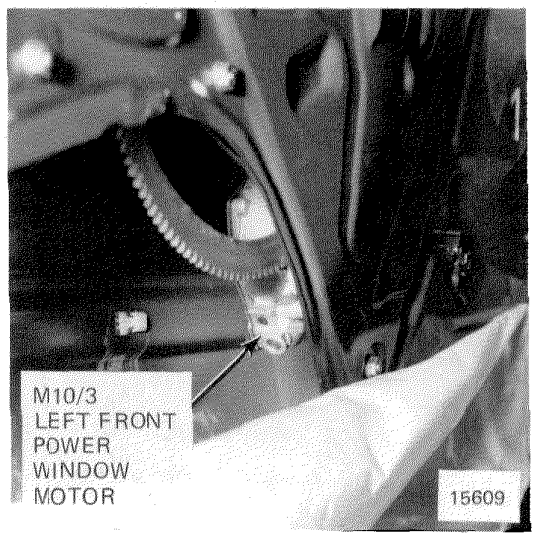

Figure 6

COMPONENT LOCATION

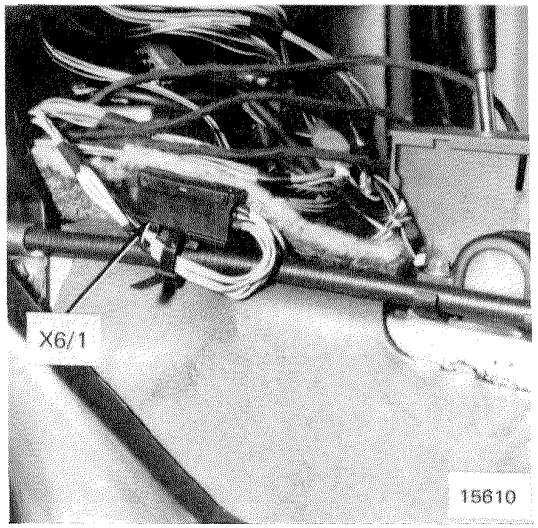

Figure 1

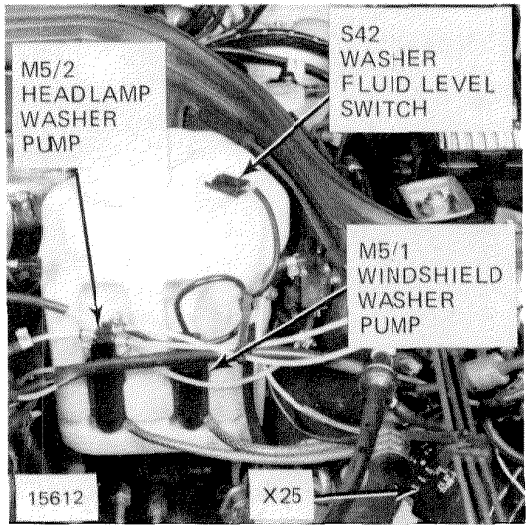

Figure 2

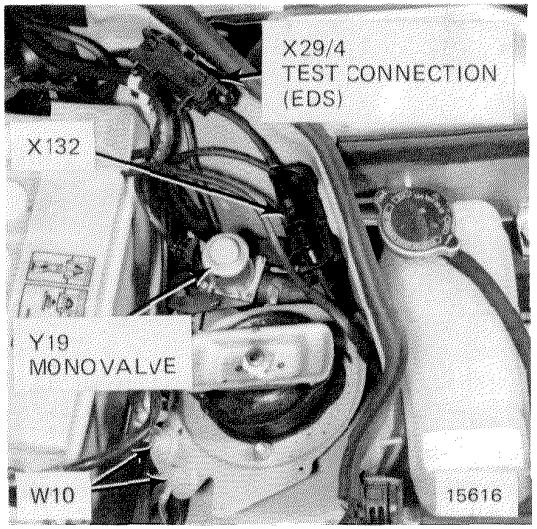

Figure 3

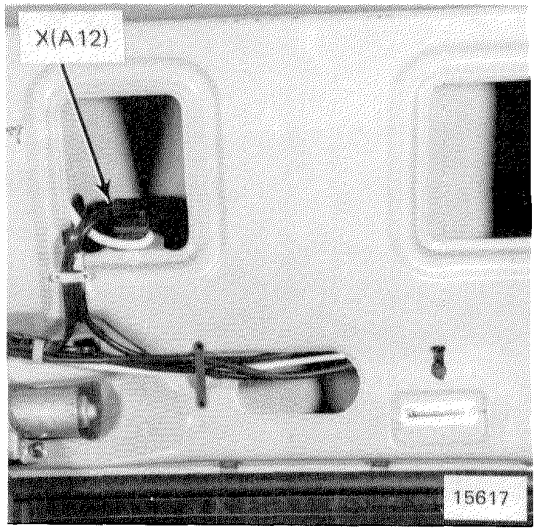

Figure 4

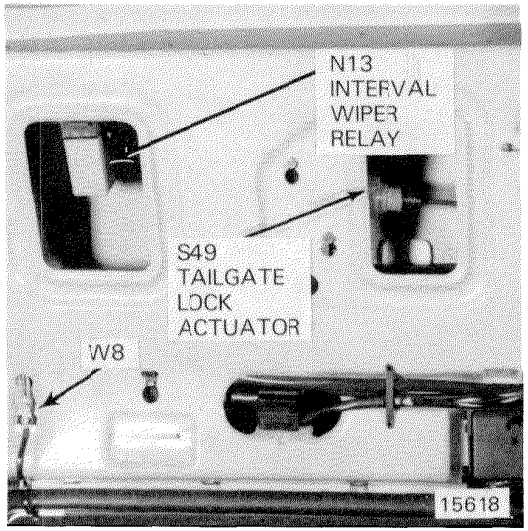

Figure 5

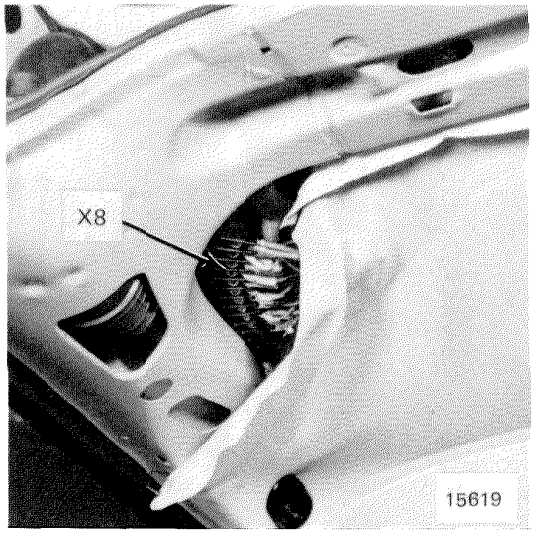

Figure 6

COMPONENT LOCATION

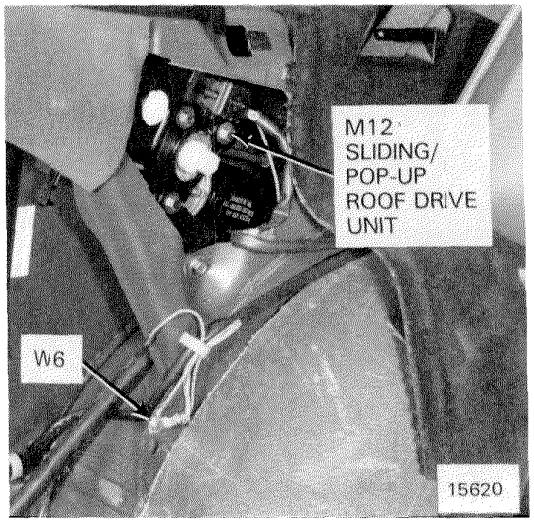

Figure 1

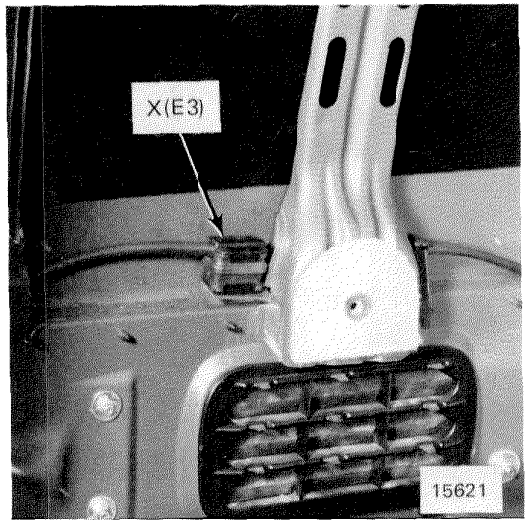

Figure 2

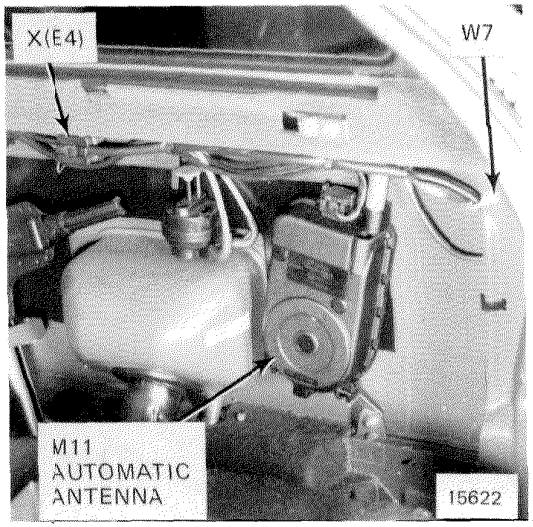

Figure 3

Figure 4

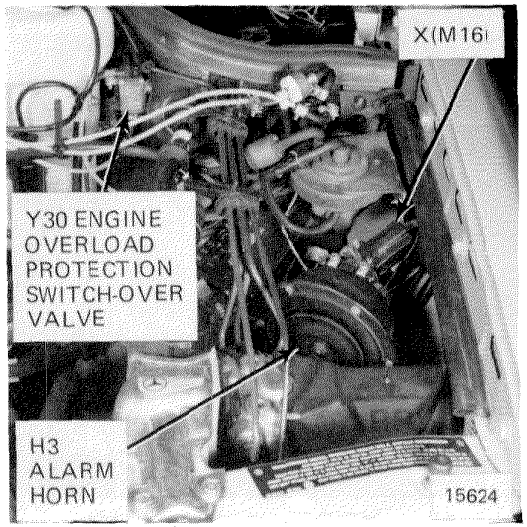

Figure 5

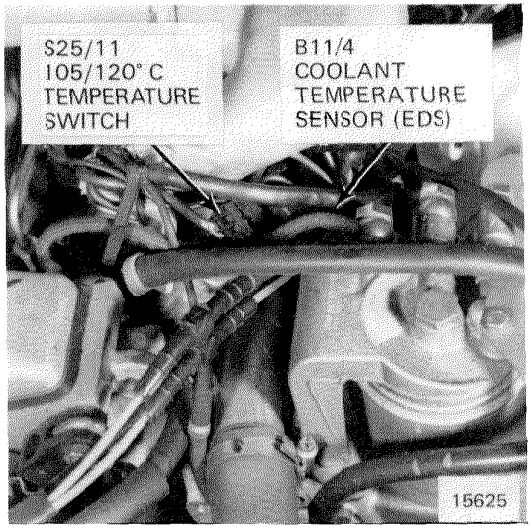

Figure 6

COMPONENT LOCATION

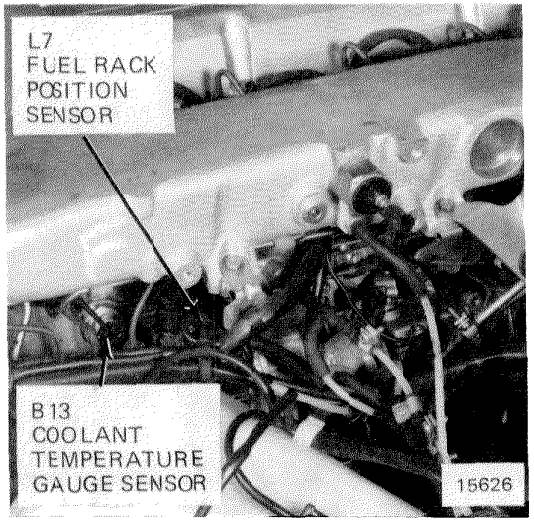

Figure 1

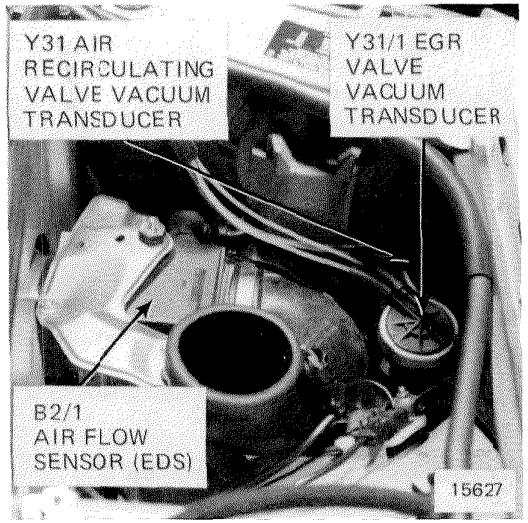

Figure 2

Figure 3

Figure 4

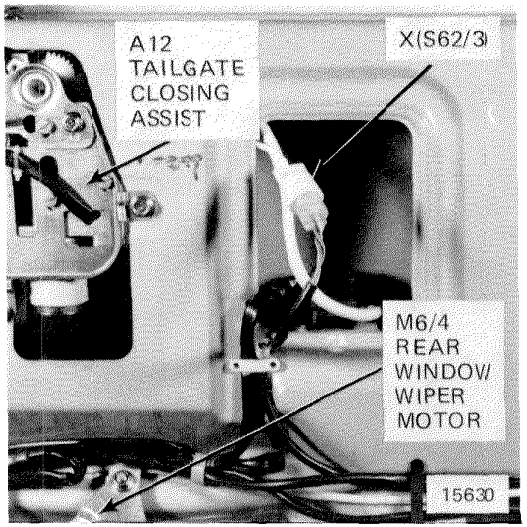

Figure 5

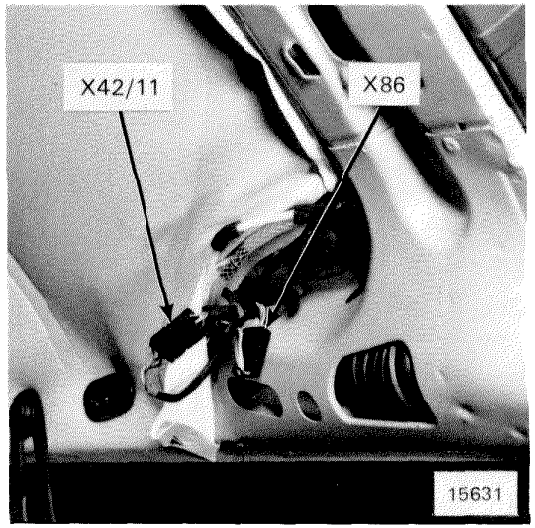

Figure 6

COMPONENT LOCATION

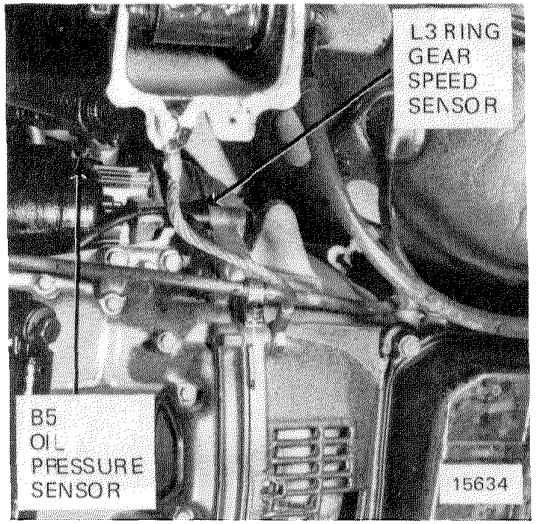

Figure 1

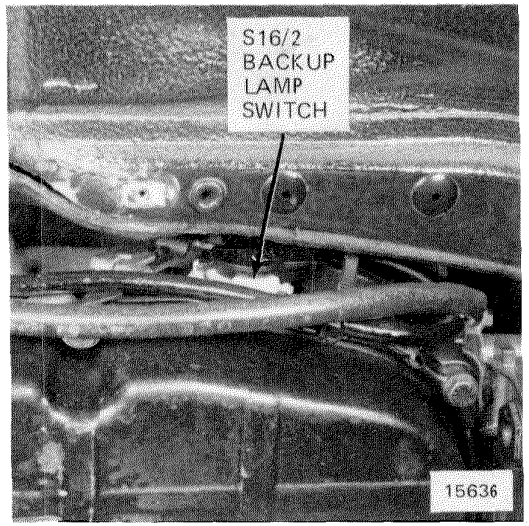

Figure 2

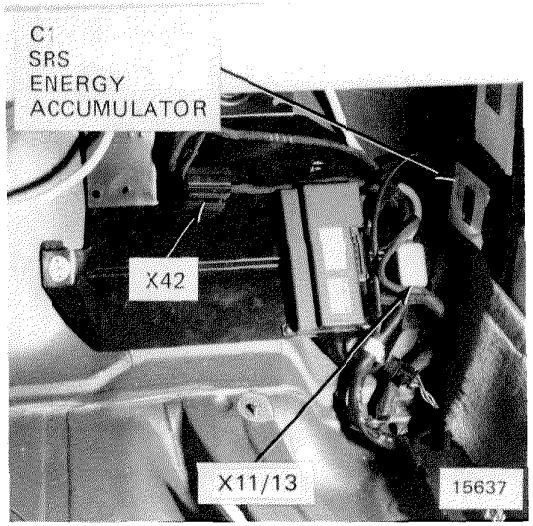

Figure 3

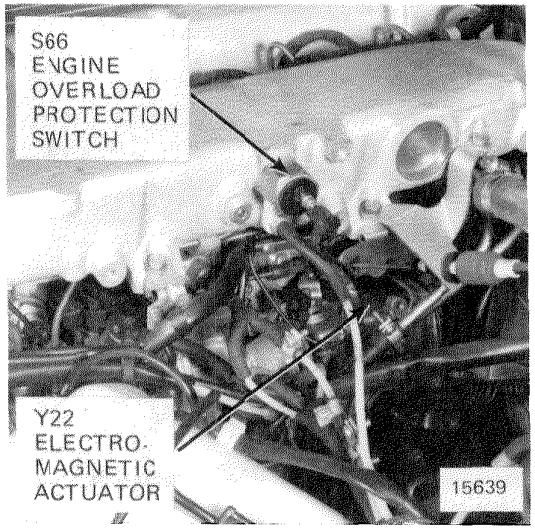

Figure 4

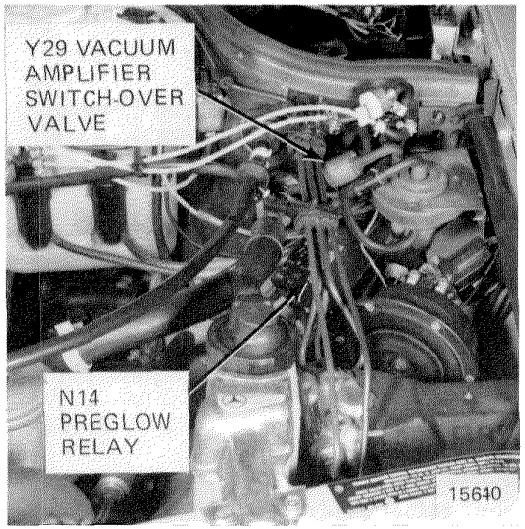

Figure 5

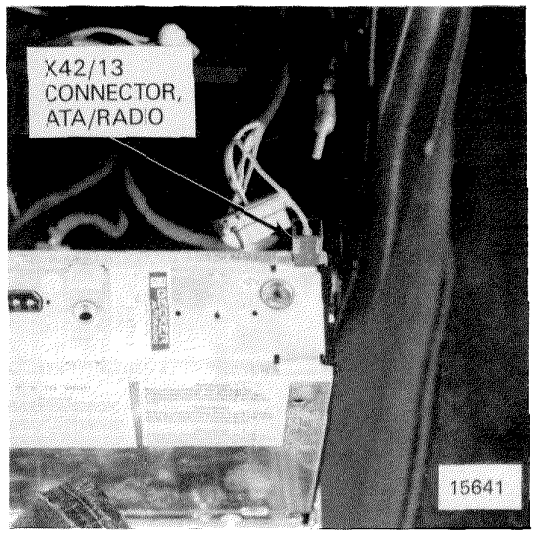

Figure 6

COMPONENT LOCATION

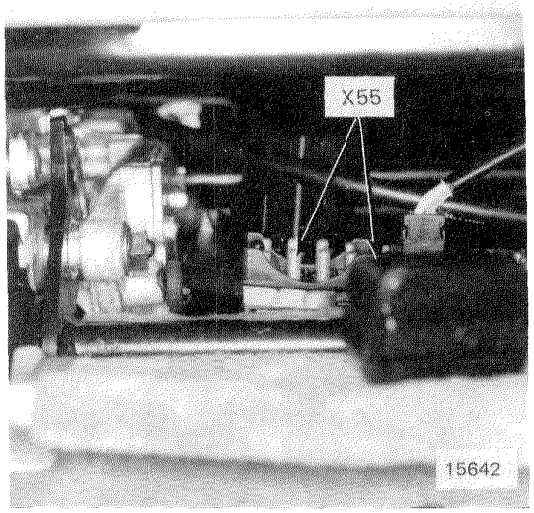

Figure 1

Figure 2

Figure 3

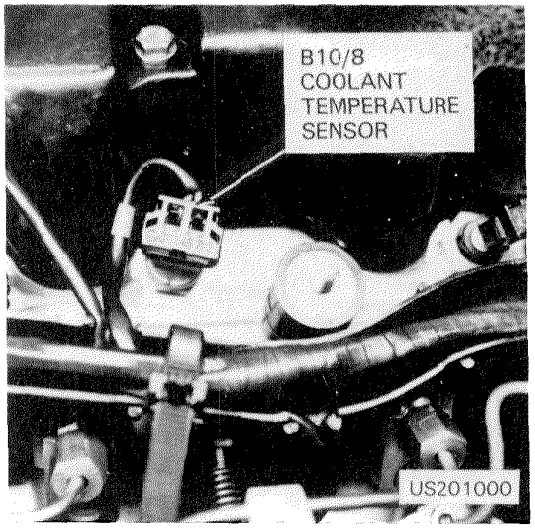

Figure 4

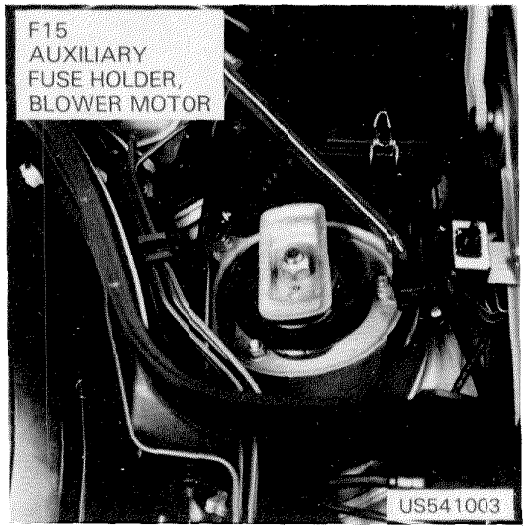

Figure 5

Figure 6

COMPONENT LOCATION

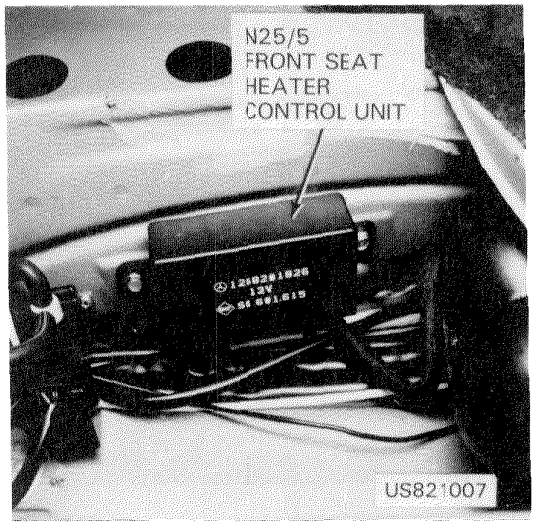

Figure 1

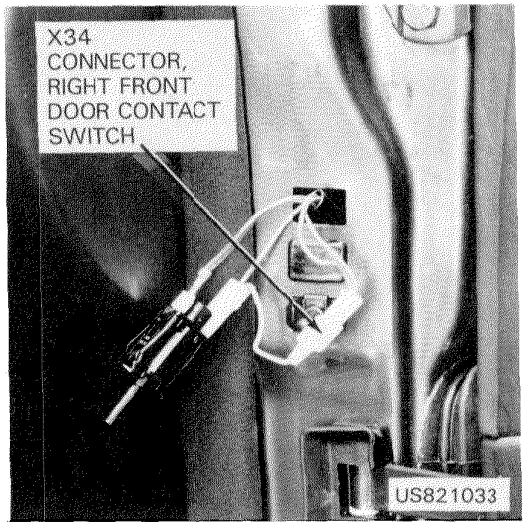

Figure 2

Figure 3

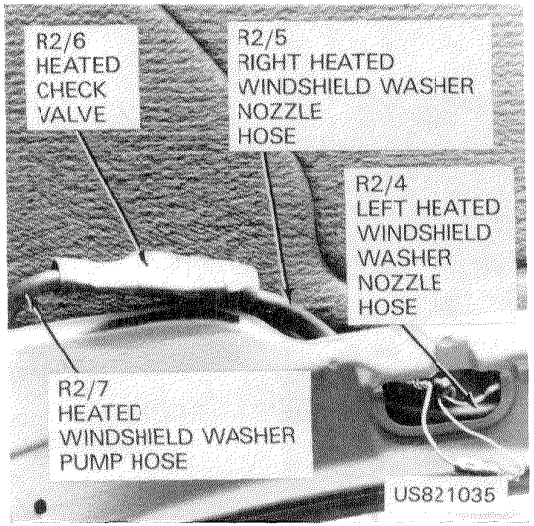

Figure 4

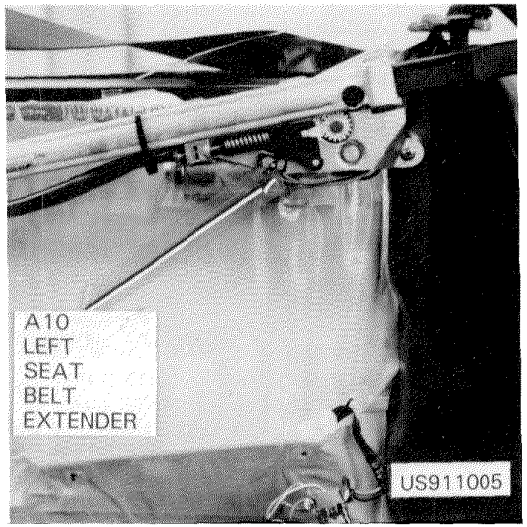

Figure 5

Figure 6

COMPONENT LOCATION

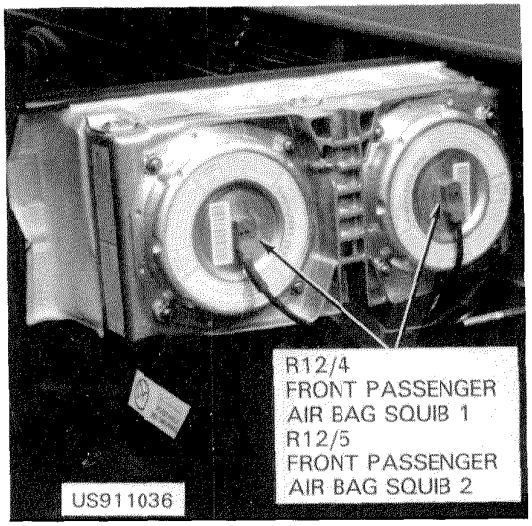

Figure 1

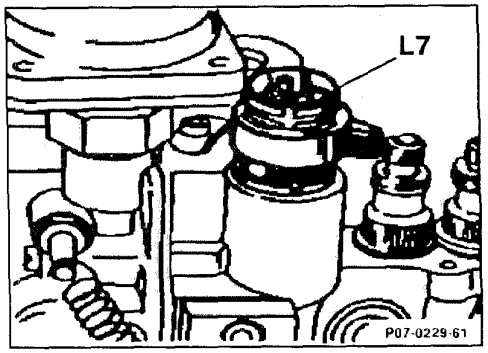

Figure 2

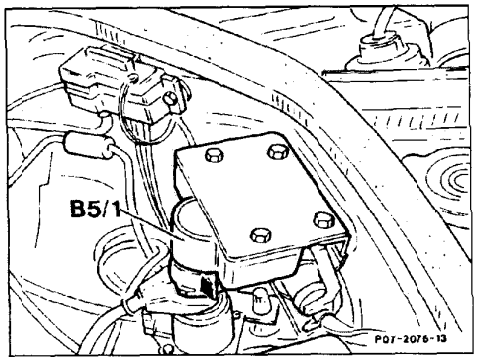

Figure 3

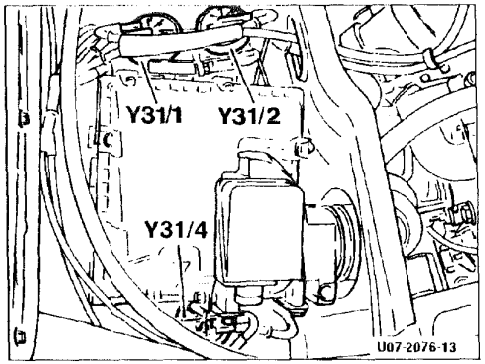

Figure 4

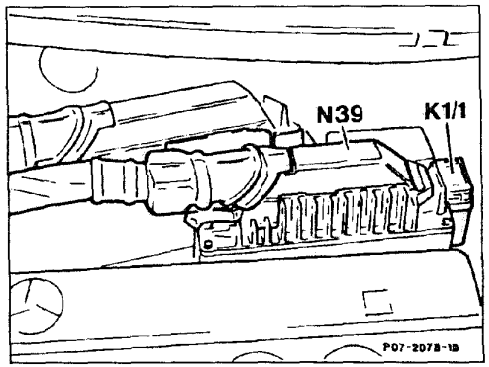

Figure 5

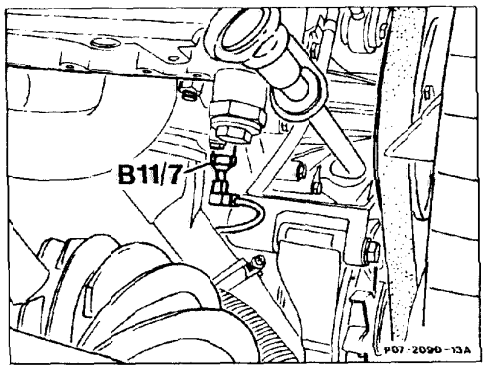

Figure 6

COMPONENT LOCATION

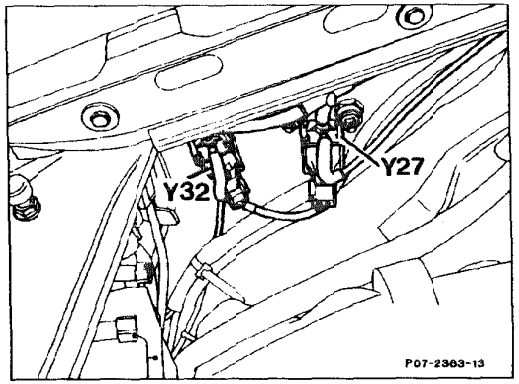

Figure 1

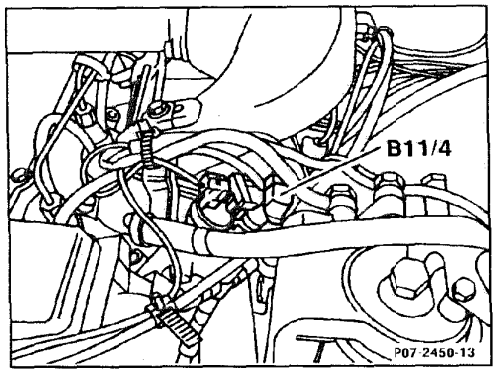

Figure 2

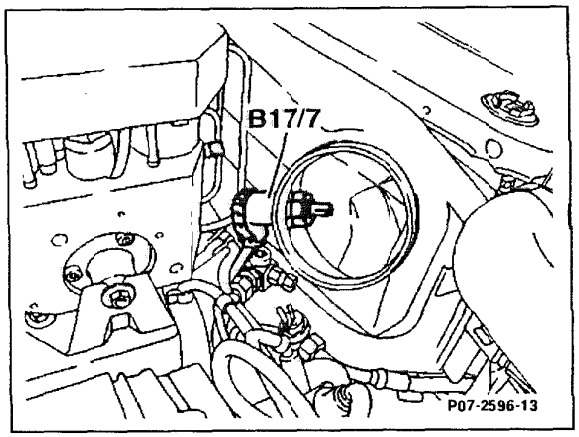

Figure 3

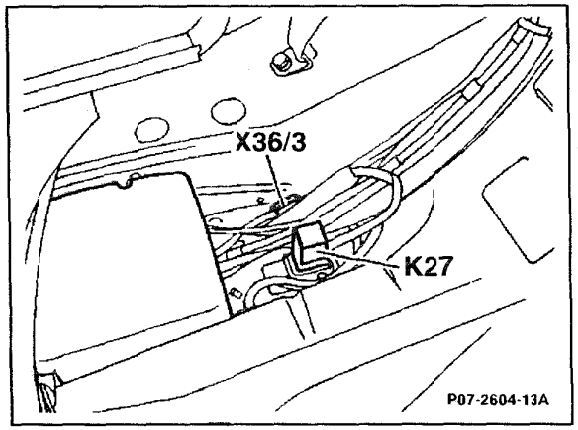

Figure 4

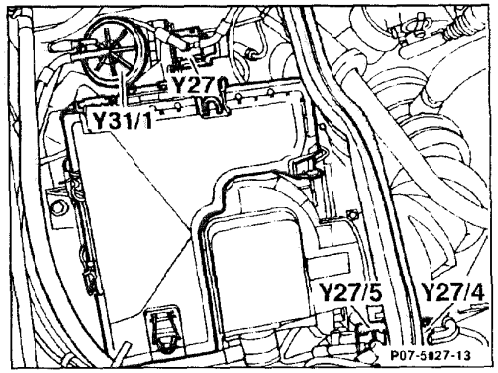

Figure 5

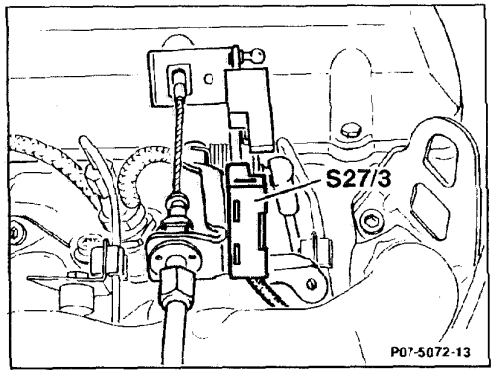

Figure 6

COMPONENT LOCATION

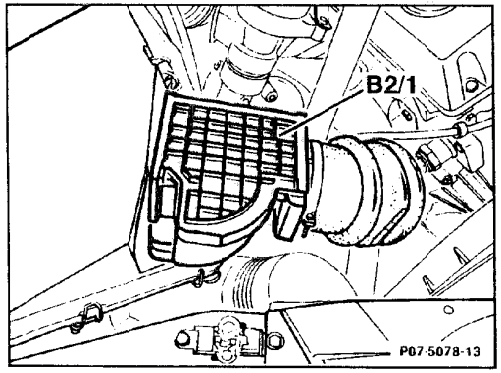

Figure 1

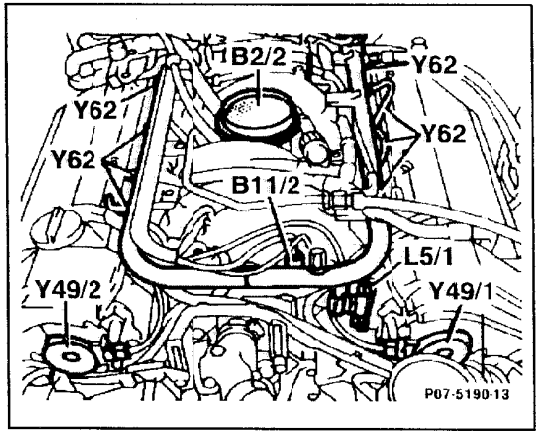

Figure 2

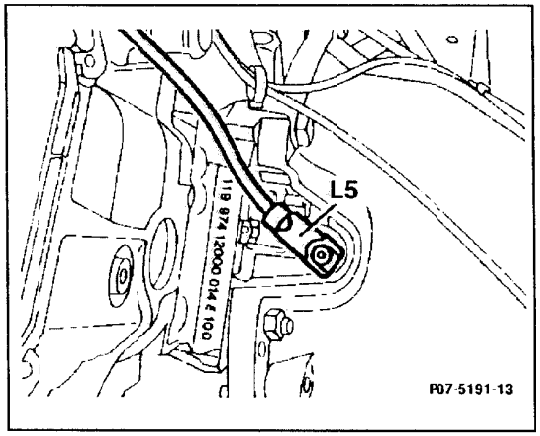

Figure 3

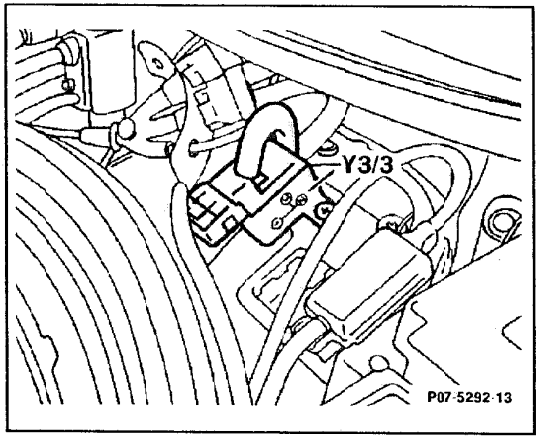

Figure 4

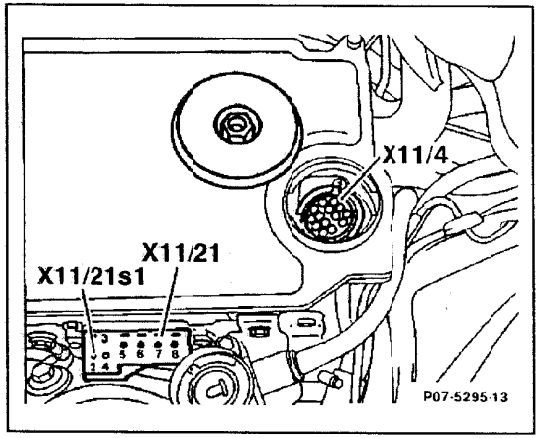

Figure 5

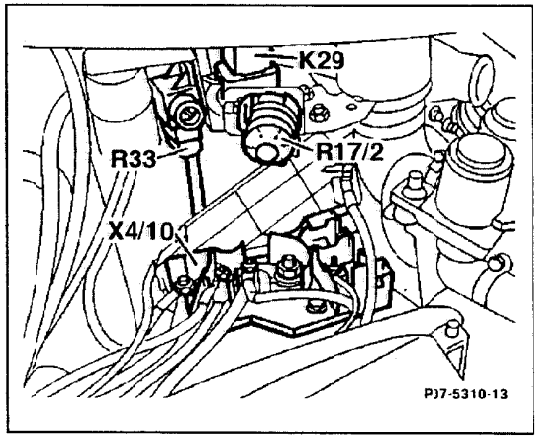

Figure 6

COMPONENT LOCATION

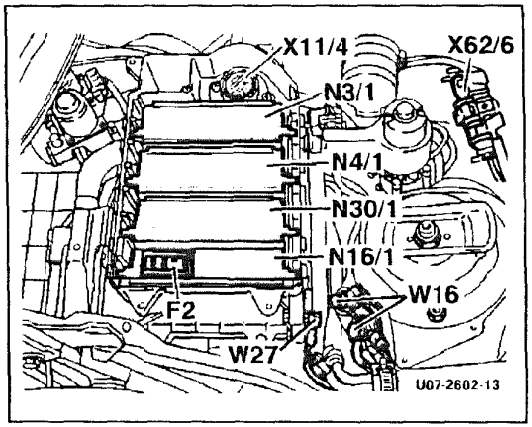

Figure 1

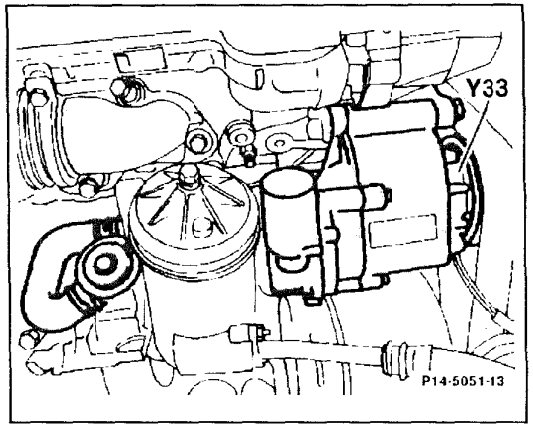

Figure 2

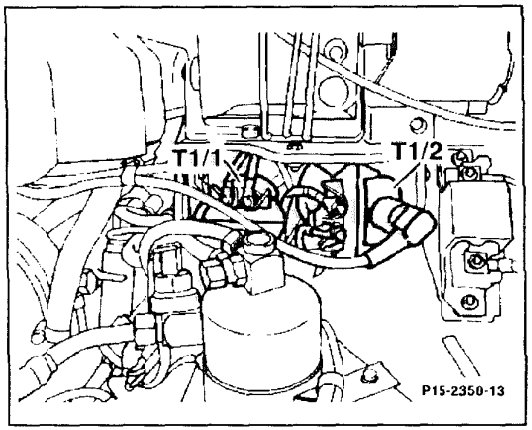

Figure 3

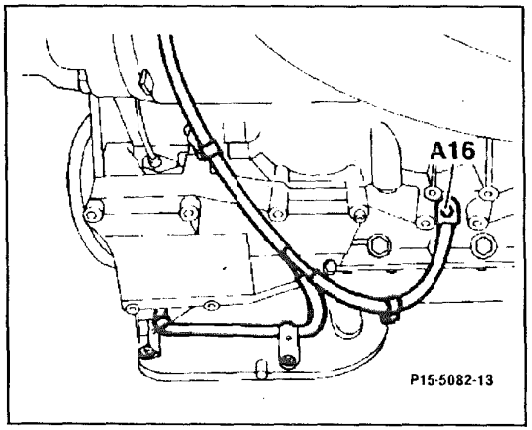

Figure 4

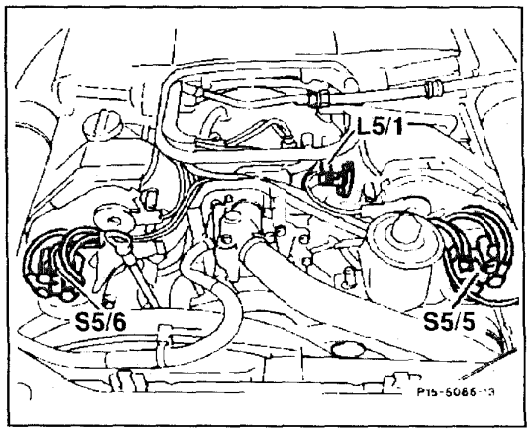

Figure 5

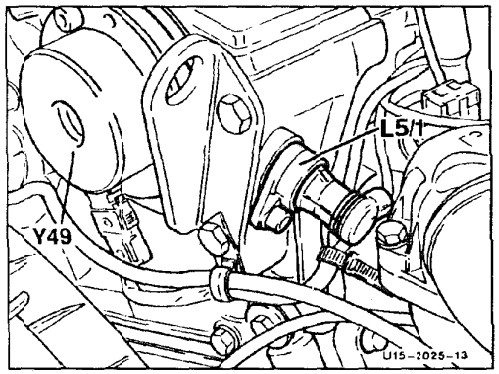

Figure 6

COMPONENT LOCATION

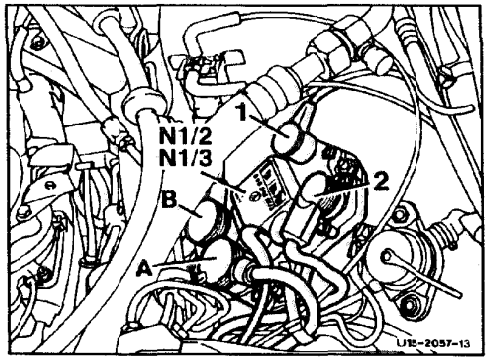

Figure 1

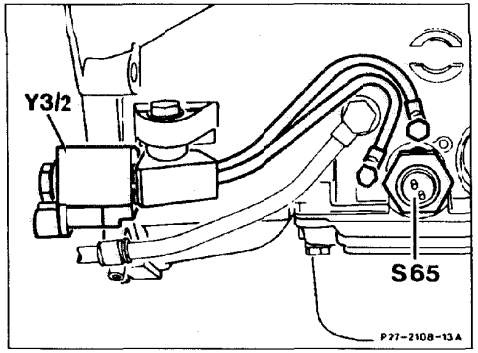

Figure 2

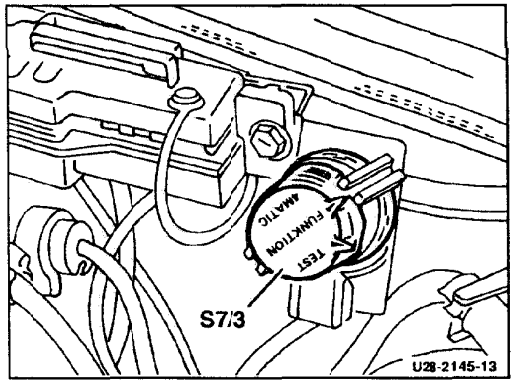

Figure 3

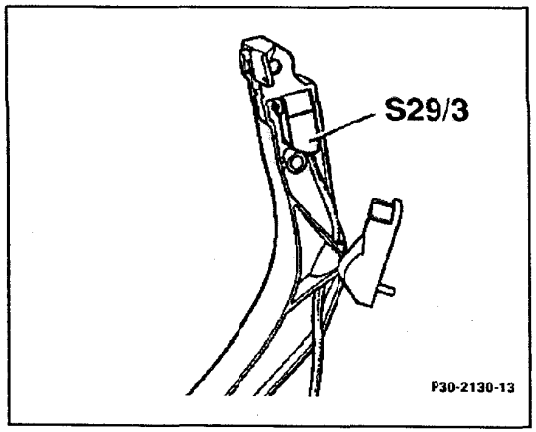

Figure 4

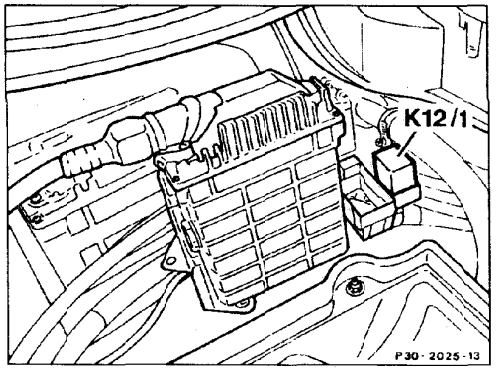

Figure 5

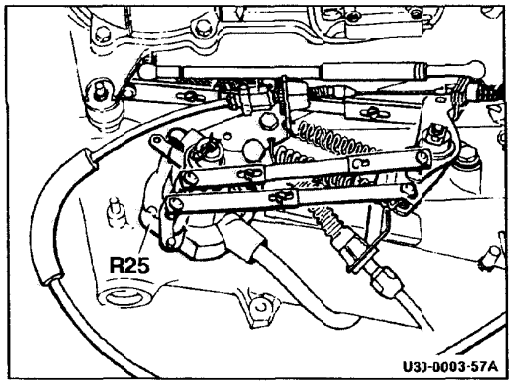

Figure 6

COMPONENT LOCATION

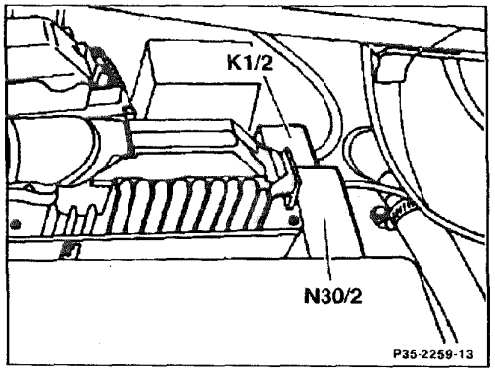

Figure 1

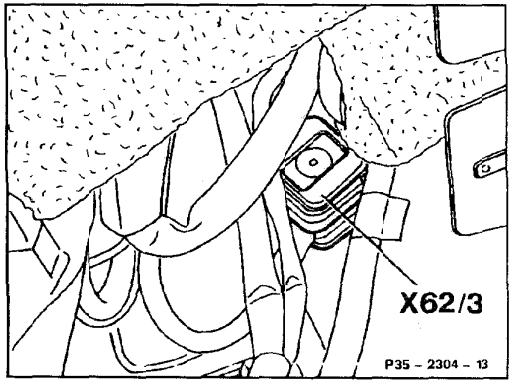

Figure 2

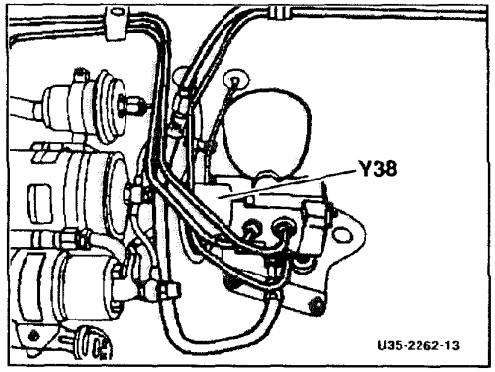

Figure 3

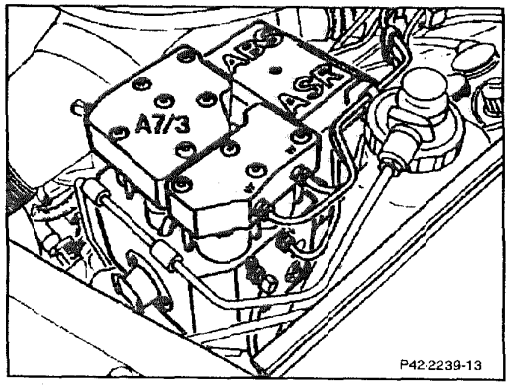

Figure 4

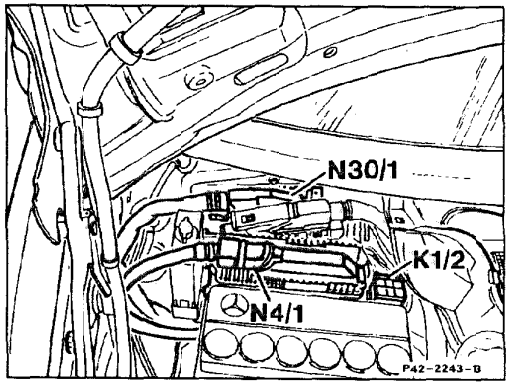

Figure 5

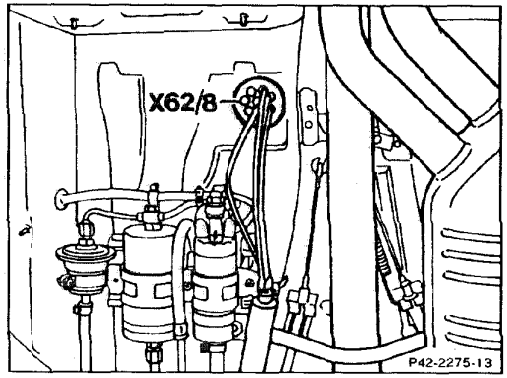

Figure 6

COMPONENT LOCATION

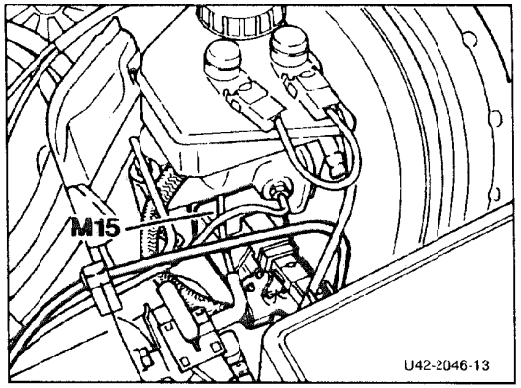

Figure 1

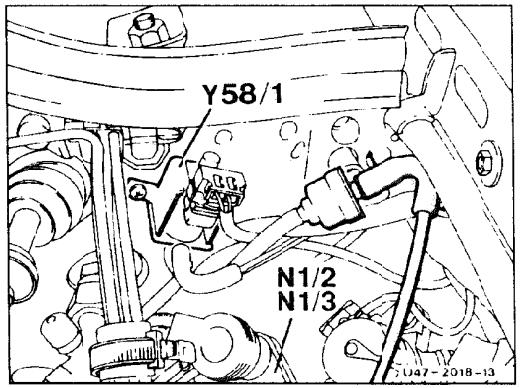

Figure 2

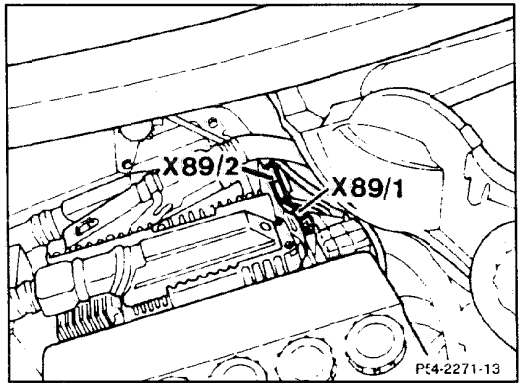

Figure 3

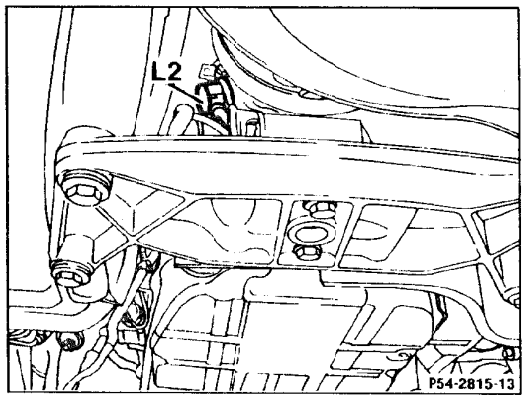

Figure 4

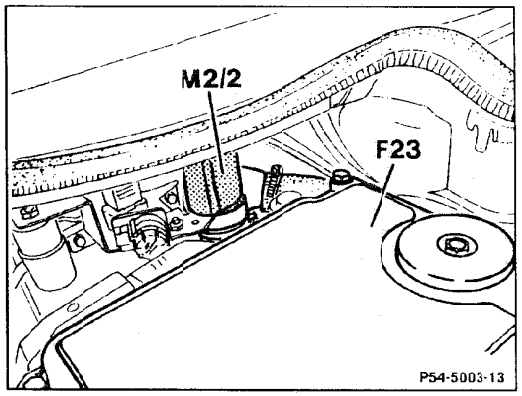

Figure 5

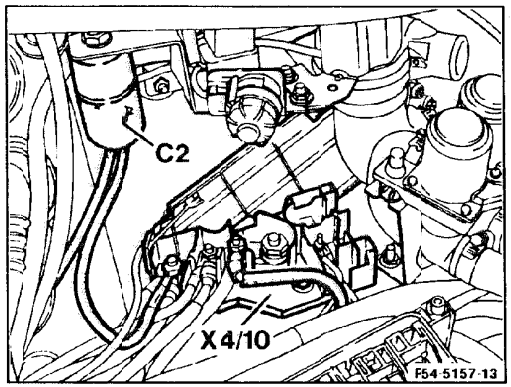

Figure 6

COMPONENT LOCATION

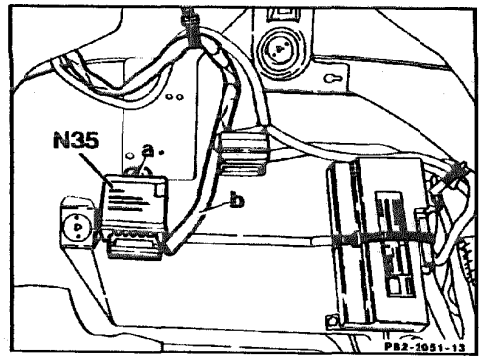

Figure 1

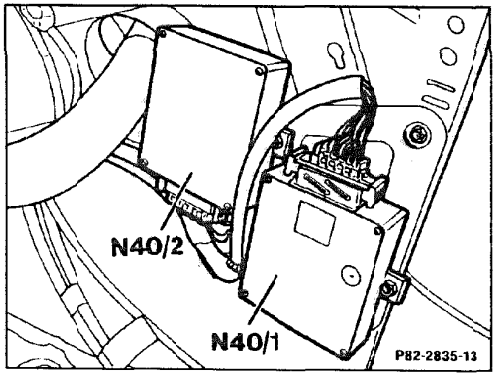

Figure 2

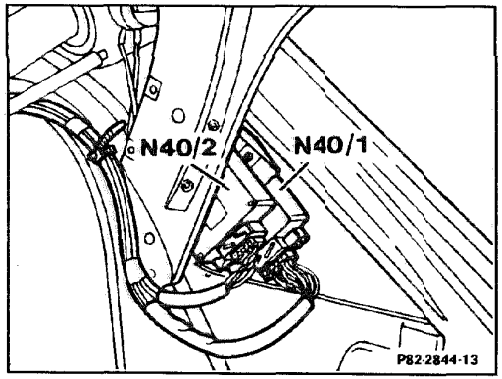

Figure 3

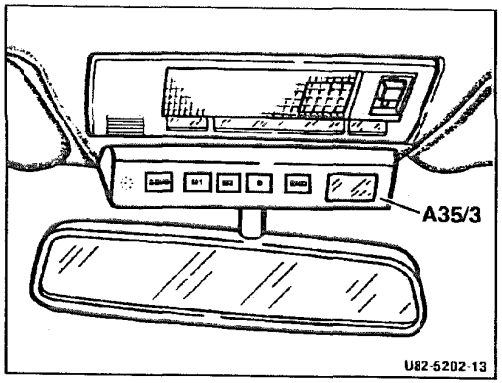

Figure 4

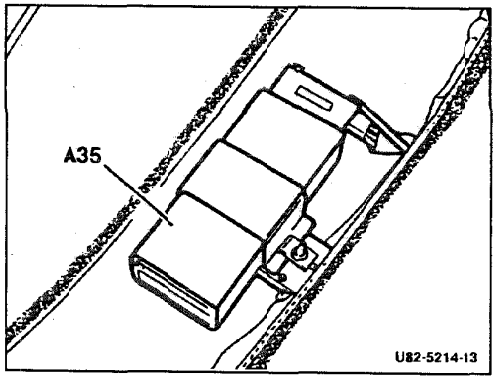

Figure 5

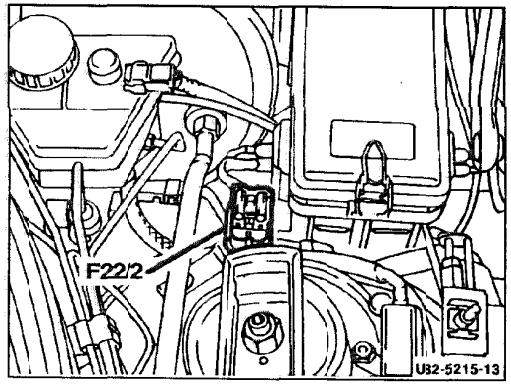

Figure 6

COMPONENT LOCATION

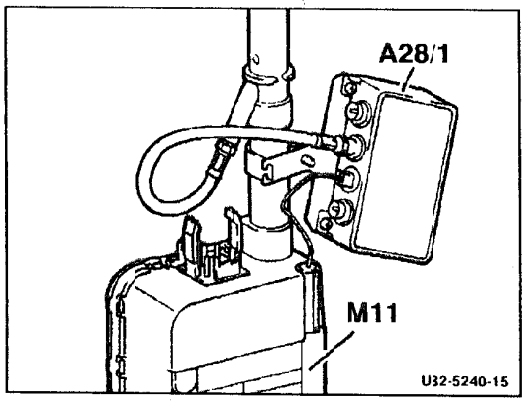

Figure 1

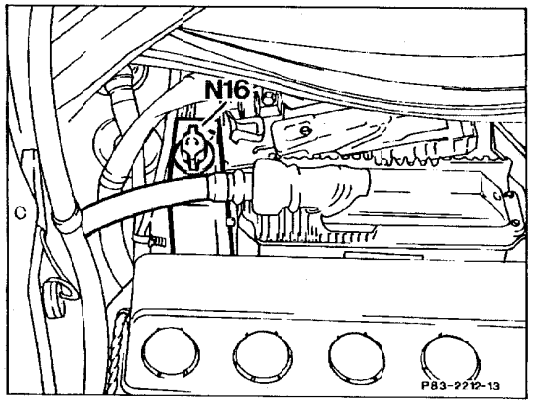

Figure 2

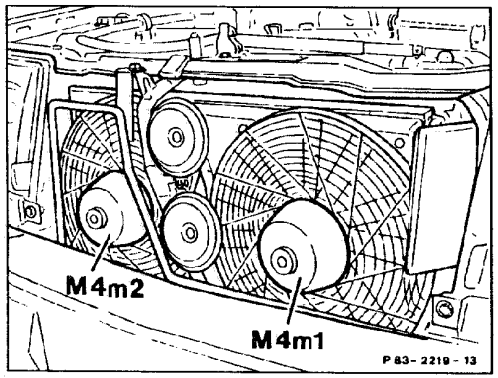

Figure 3

THIS PAGE LEFT BLANK INTENTIONALLY

REVISIONS:

AUTOMATIC CLIMATE CONTROL

INDEX

ACC Grounds Distribution 312
ACC Power Distribution 312
Air Delivery 303
Blower Control 302
Component Location Table 401
Compressor Clutch Control 305
Pushbutton Control Assembly . . . 301

PUSHBUTTON CONTROL ASSEMBLY

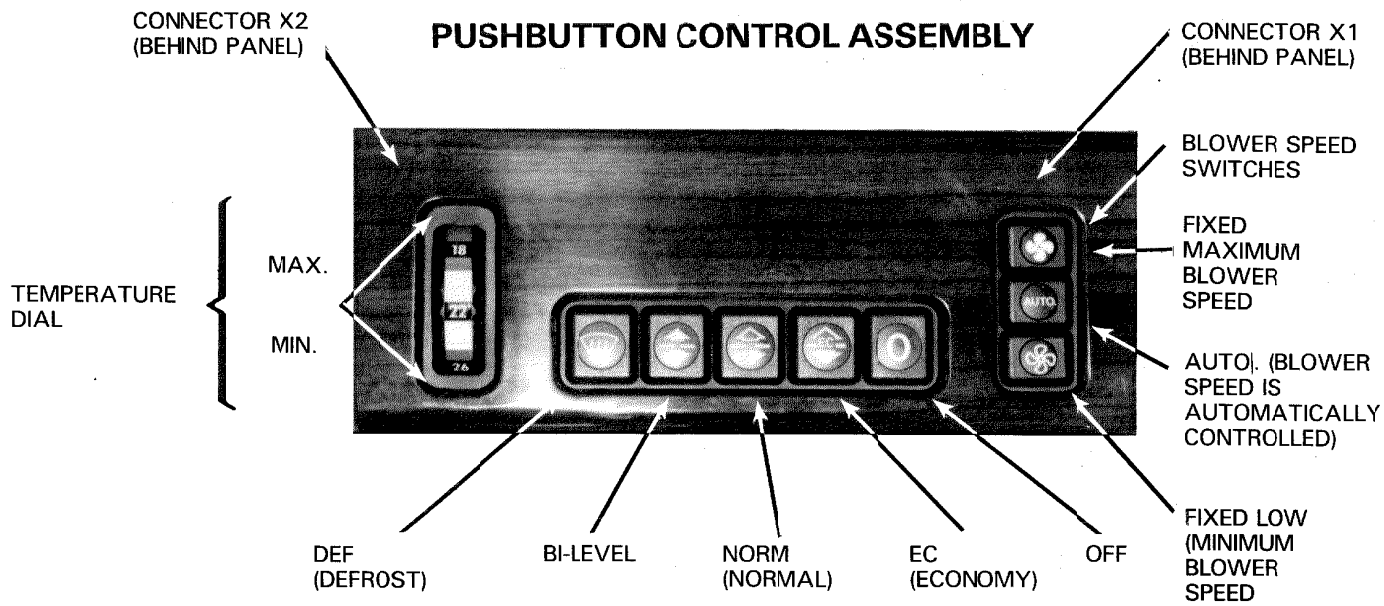

NOTE: ONLY ONE FUNCTION S TO BE SELECTED AT ANY ONE TIME

REVISIONS:

AUTOMATIC CLIMATE CONTROL BLOWER CONTROL

AS OF MY 1986

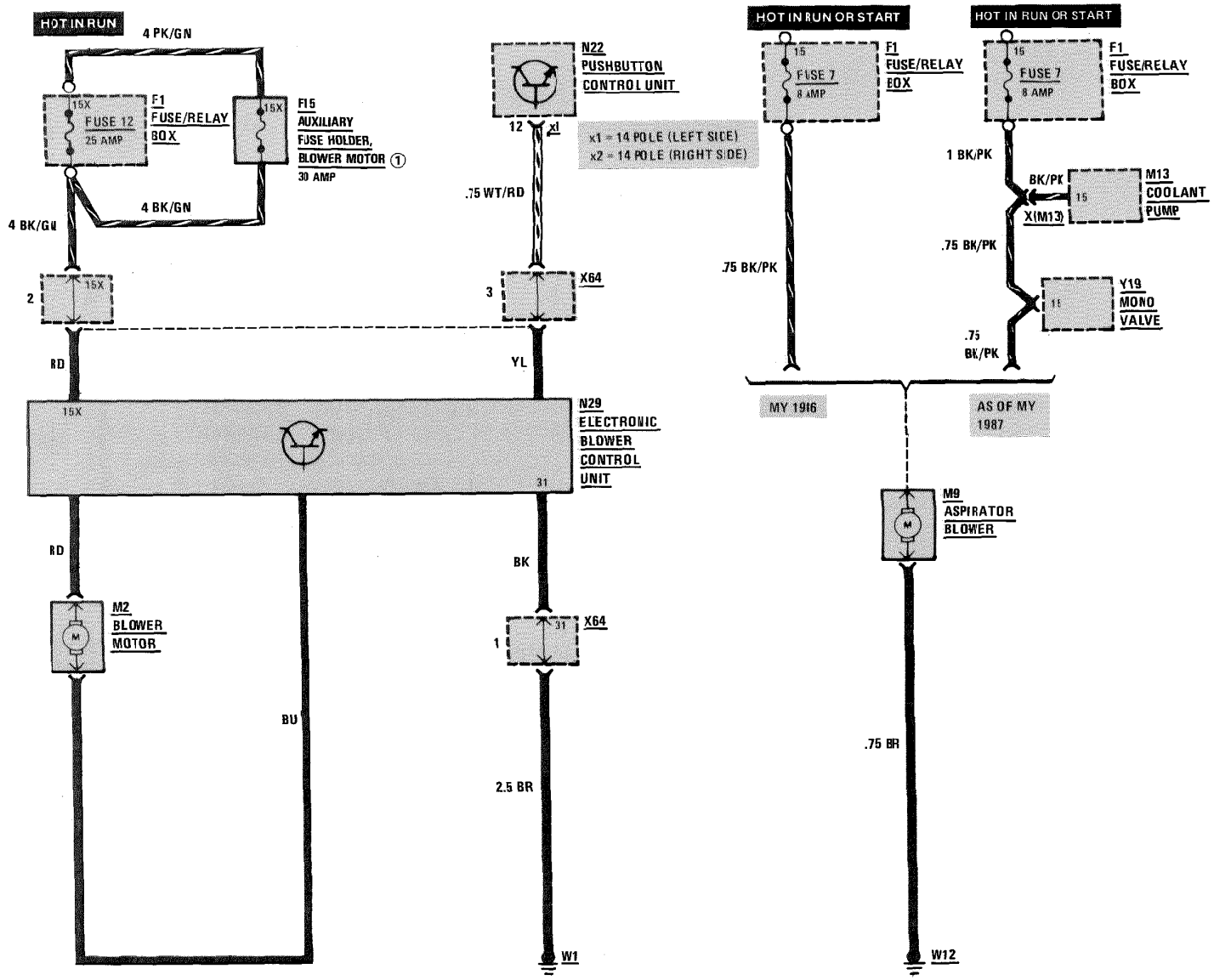

REVISIONS: ① AS OF CHASSIS END NUMBER A292112/F023505

AUTOMATIC CLIMATE CONTROL AIR DELIVERY

MY 1986
300 E

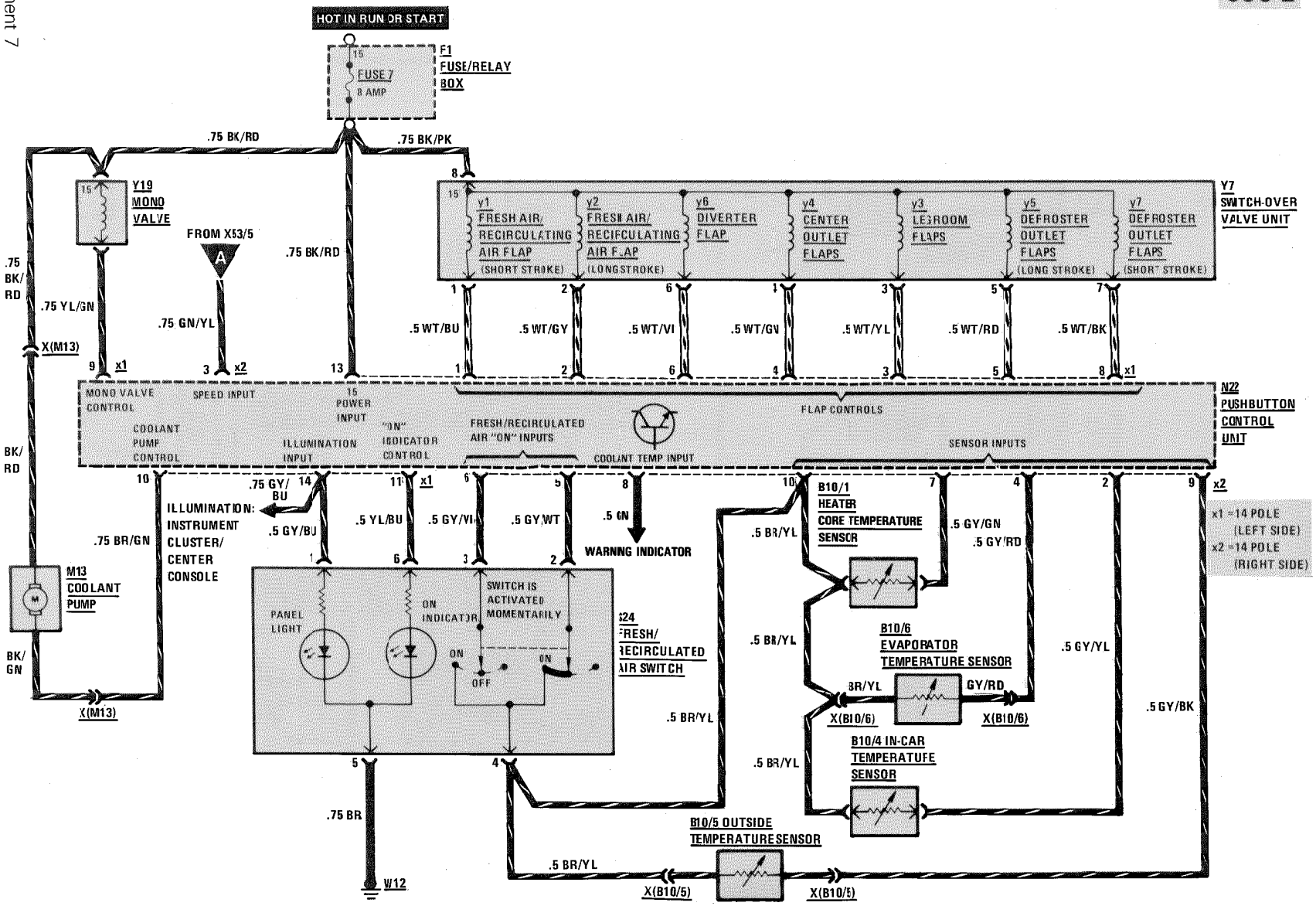

REVISIONS:

AUTOMATIC CLIMATE CONTROL AIR DELIVERY

AS OF MY 1987

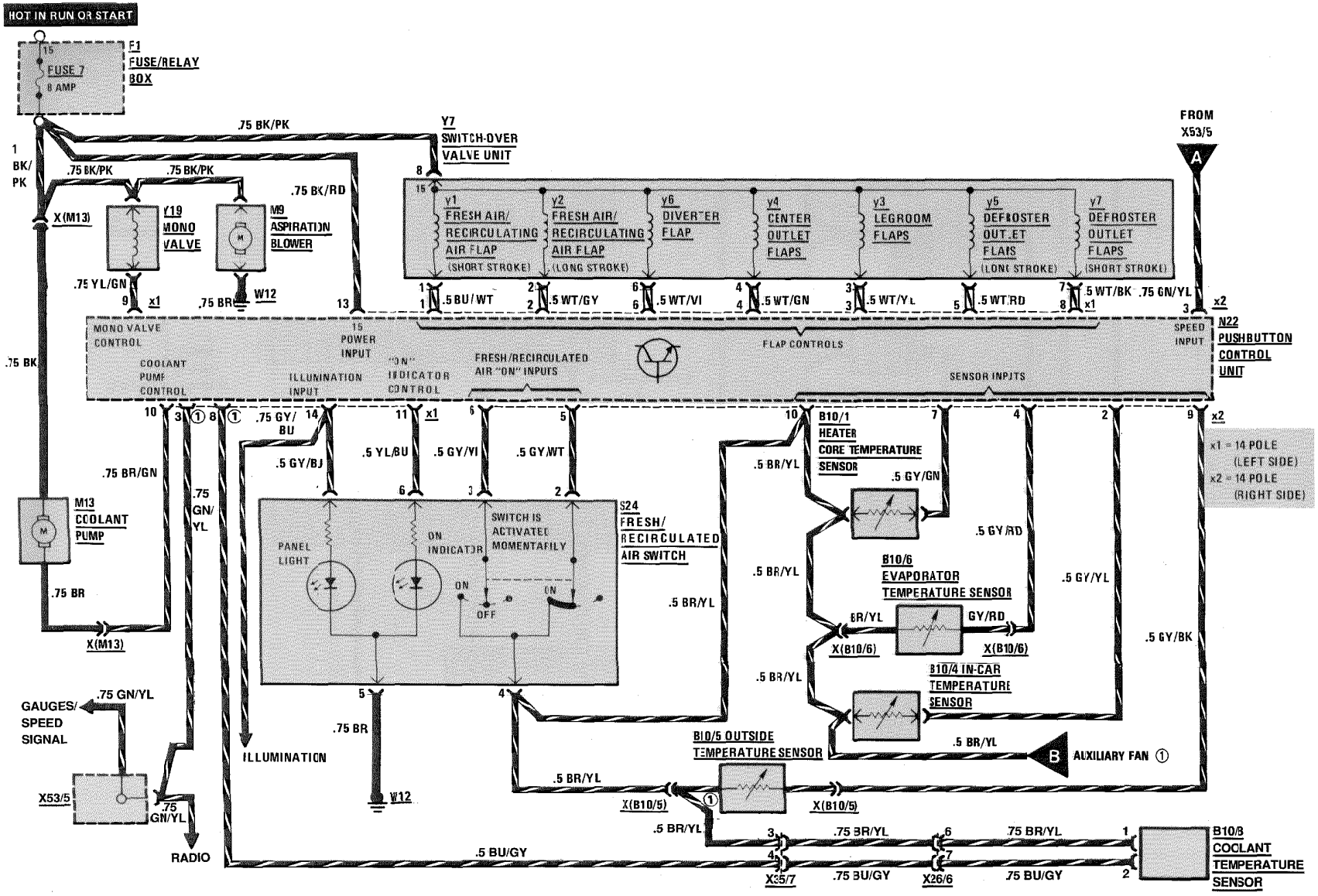

REVISIONS: ① MODELS 400E/500E

AUTOMATIC CLIMATE CONTROL
COMPRESSOR CLUTCH CONTROL

MY 1986

300 E

NOTE: COMPRESSOR IS ACTIVATED 10 SECONDS AFTER THE ENGINE HAS REACHED A SPEED OF 600 RPM.
COMPRESSOR IS DEACTIVATED WHEN THE ENGINE COOLANT TEMPERATURE REACHES 110° C (230° F). AT APPROXIMATELY 103° C (217° F), THE COMPRESSOR IS ACTIVATED AGAIN.

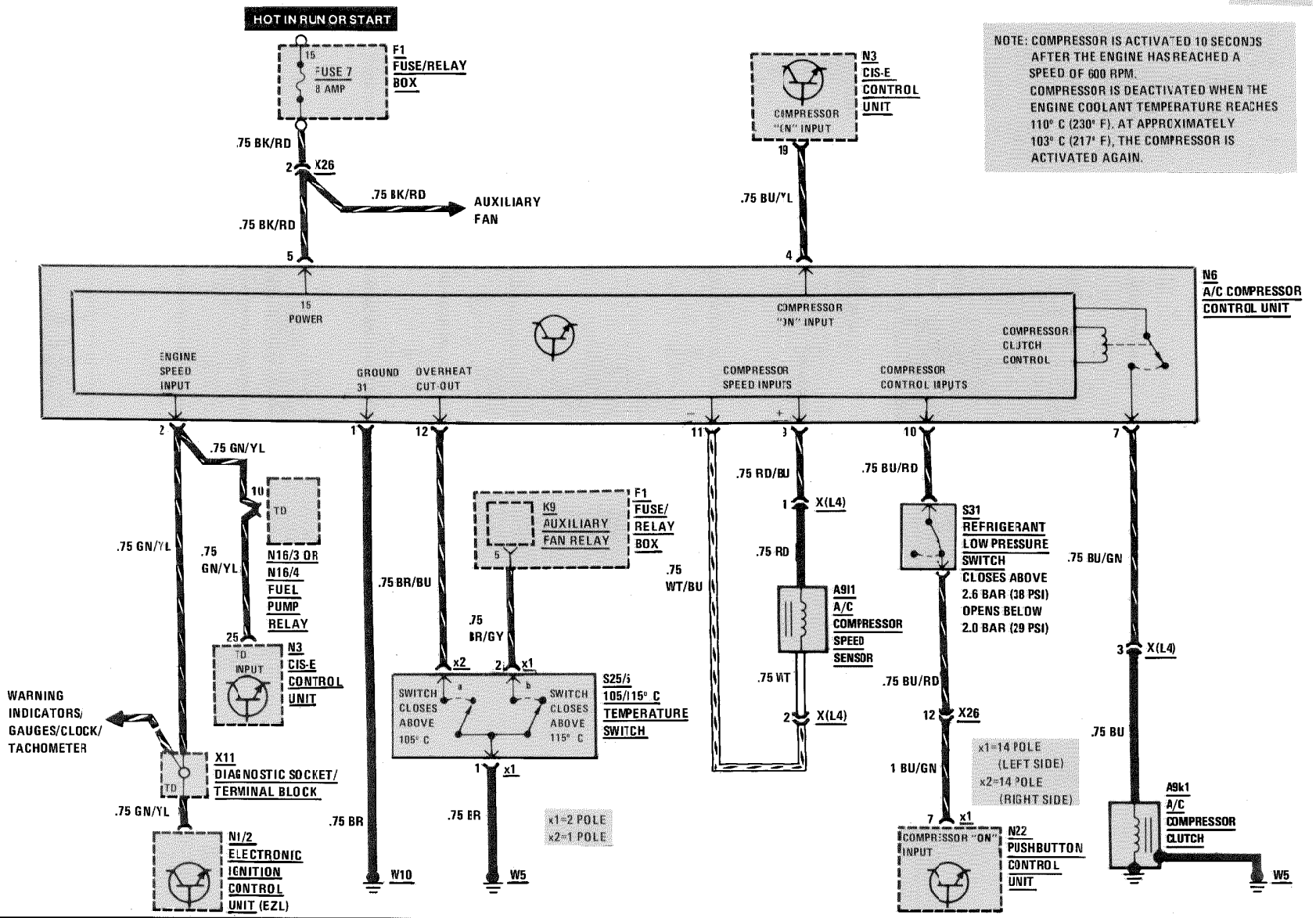

REVISIONS:

AUTOMATIC CLIMATE CONTROL
COMPRESSOR CLUTCH CONTROL

MY 1987-1989

GASOLINE

NOTE: COMPRESSOR IS ACTIVATED 10 SECONDS AFTER THE ENGINE HAS REACHED A SPEED OF 600 RPM.
COMPRESSOR IS DEACTIVATED WHEN THE ENGINE COOLANT TEMPERATURE REACHES 110° C (230° F). AT APPROXIMATELY 103° C (217° F), THE COMPRESSOR IS ACTIVATED AGAIN.

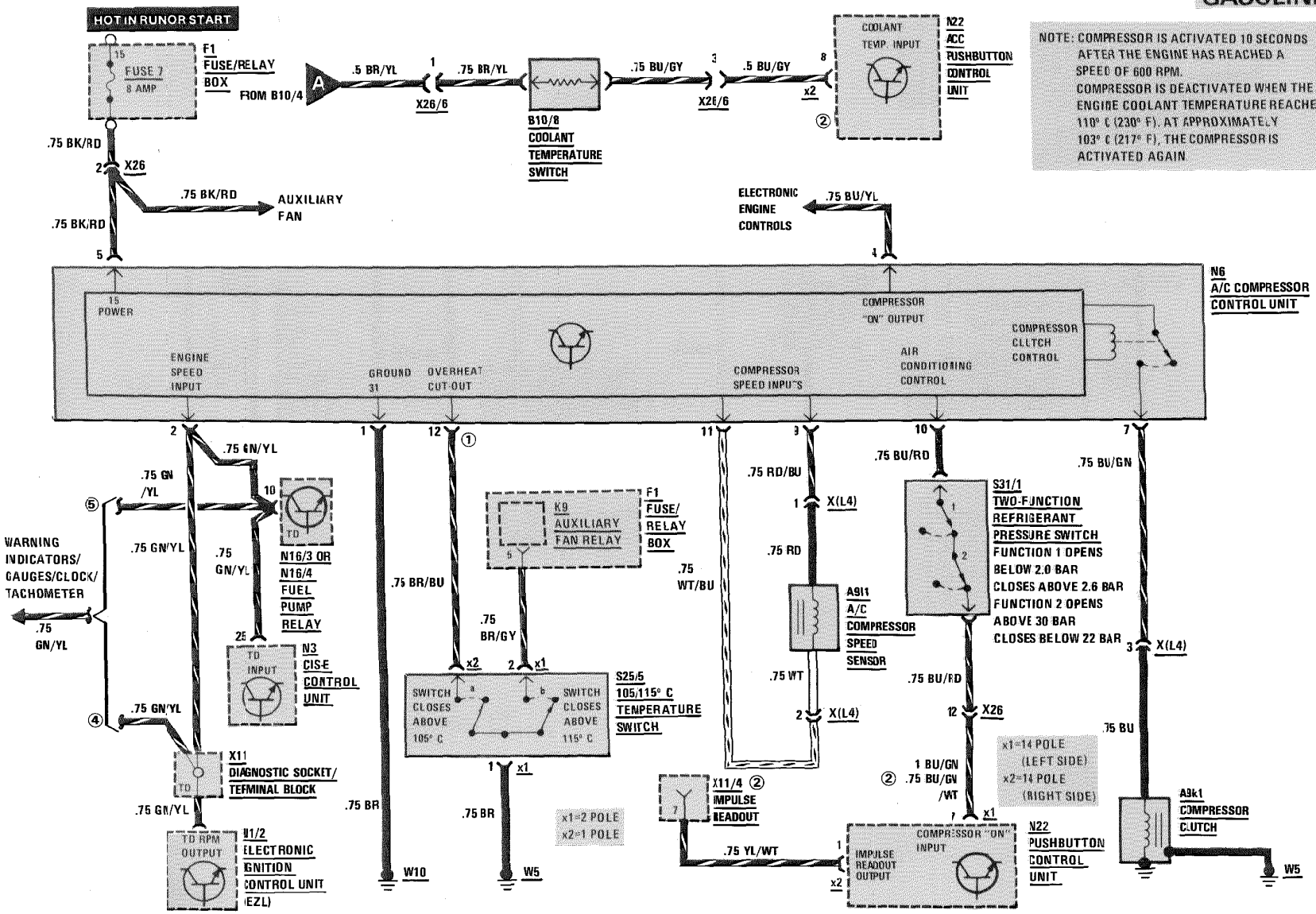

REVISIONS:
① MY 1987 ONLY
② AS OF MY 1988
③ MODEL YEAR 1988 PRODUCTION PHASE-IN
④ MY 1987/MY 1988
⑤ AS OF MY 1989

AUTOMATIC CLIMATE CONTROL
COMPRESSOR CLUTCH CONTROL

AS OF MY 1990
GASOLINE

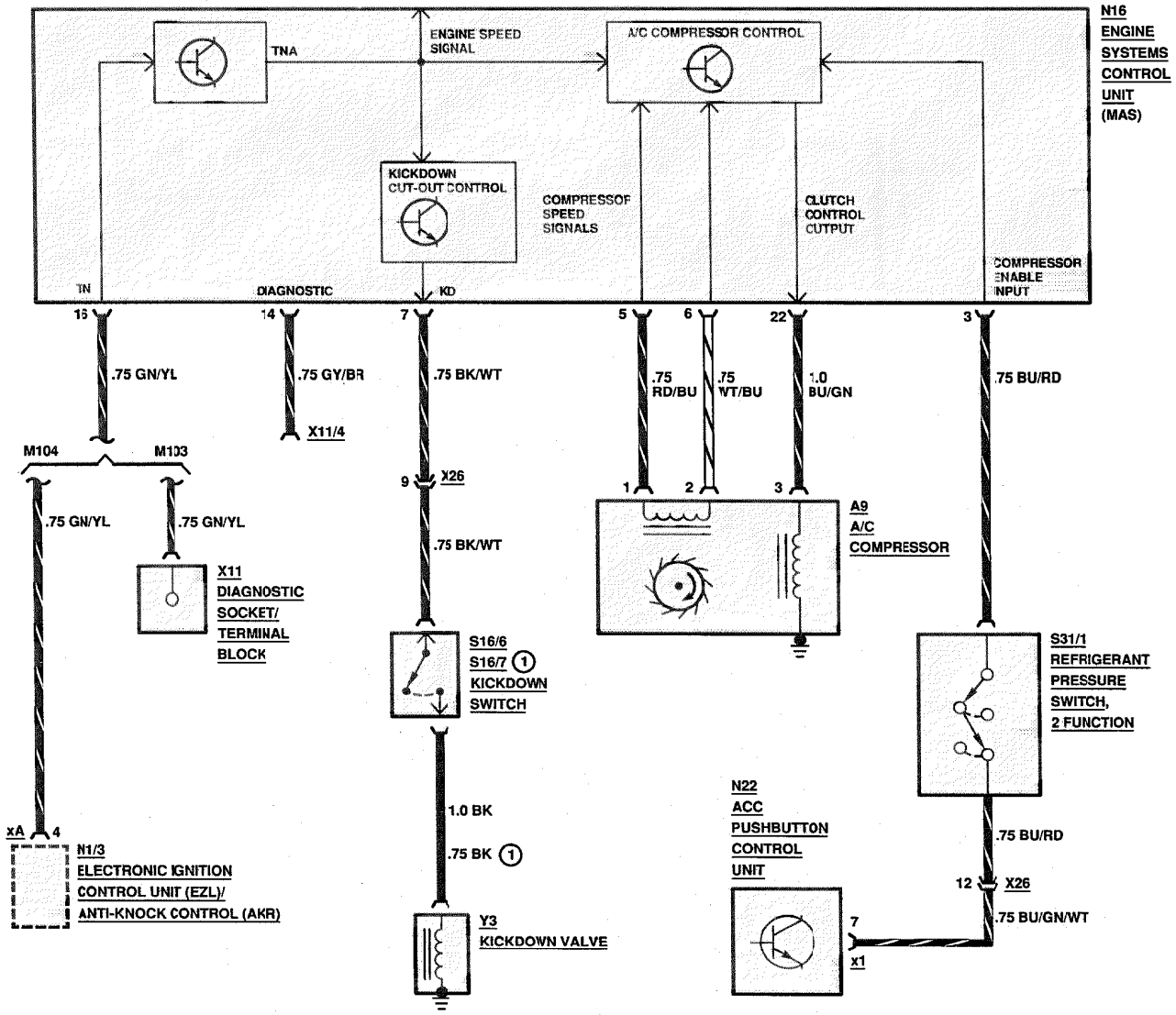

REVISIONS:

AUTOMATIC CLIMATE CONTROL
COMPRESSOR CLUTCH CONTROL

AS OF MY 1992

400E/500E

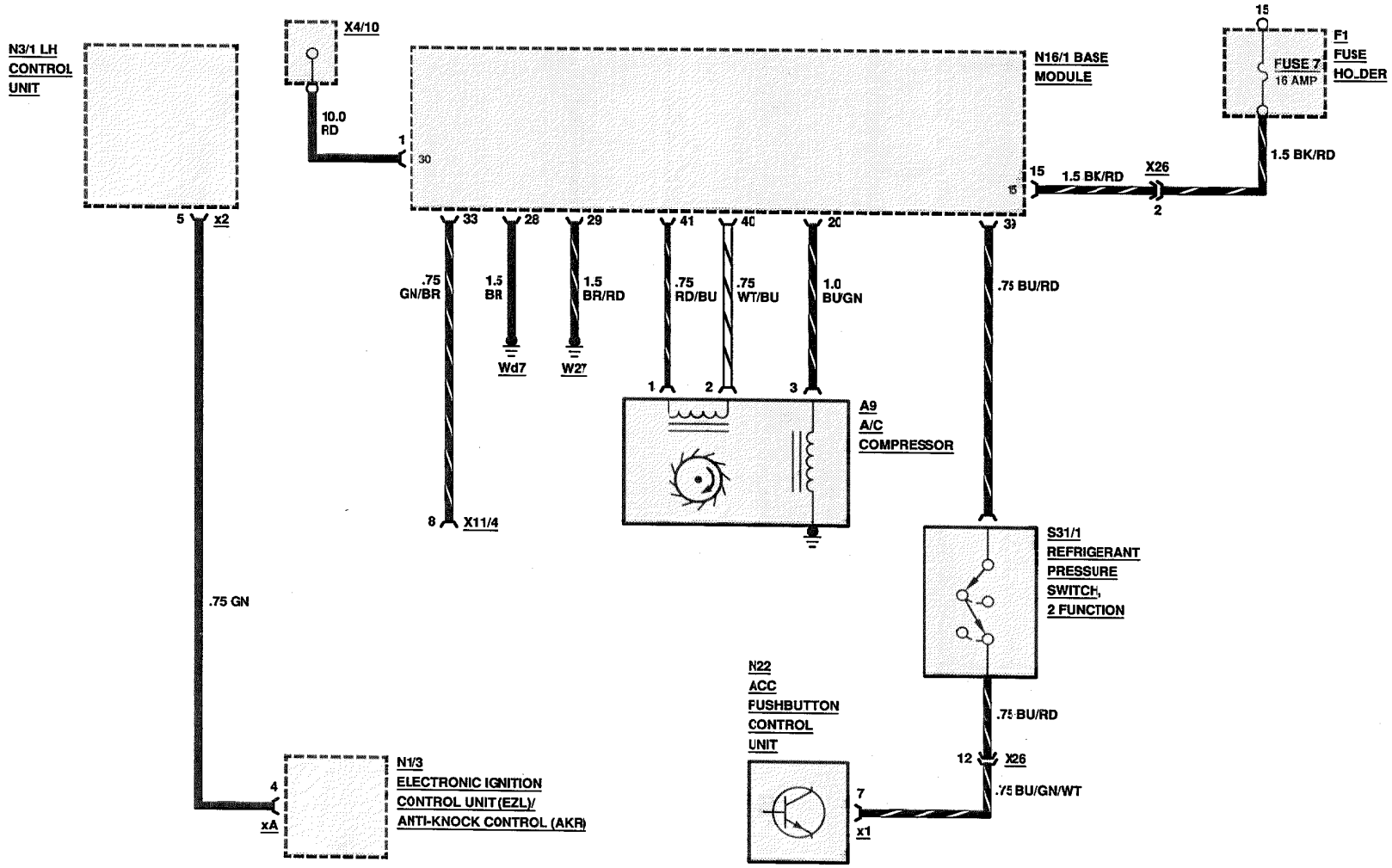

REVISIONS:

AUTOMATIC CLIMATE CONTROL
COMPRESSOR CLUTCH CONTROL

MY 1987

DIESEL

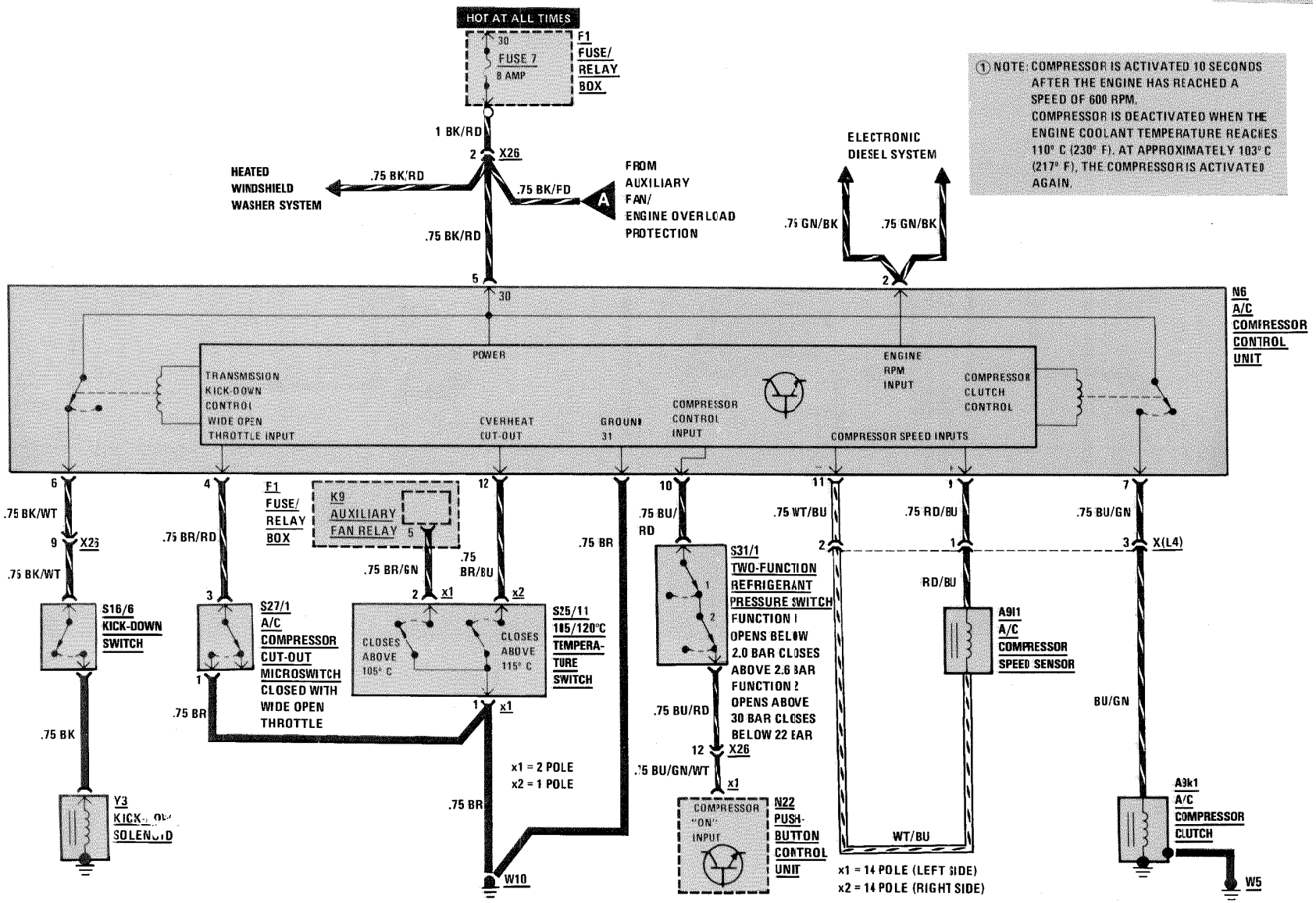

① NOTE: COMPRESSOR IS ACTIVATED 10 SECONDS AFTER THE ENGINE HAS REACHED A SPEED OF 600 RPM.
COMPRESSOR IS DEACTIVATED WHEN THE ENGINE COOLANT TEMPERATURE REACHES 110° C (230° F). AT APPROXIMATELY 103° C (217° F), THE COMPRESSOR IS ACTIVATED AGAIN.

REVISIONS: ① MODEL YEAR 1988 PRODUCTION PHASE-IN

AUTOMATIC CLIMATE CONTROL
COMPRESSOR CLUTCH CONTROL

MY 1990-1991

DIESEL

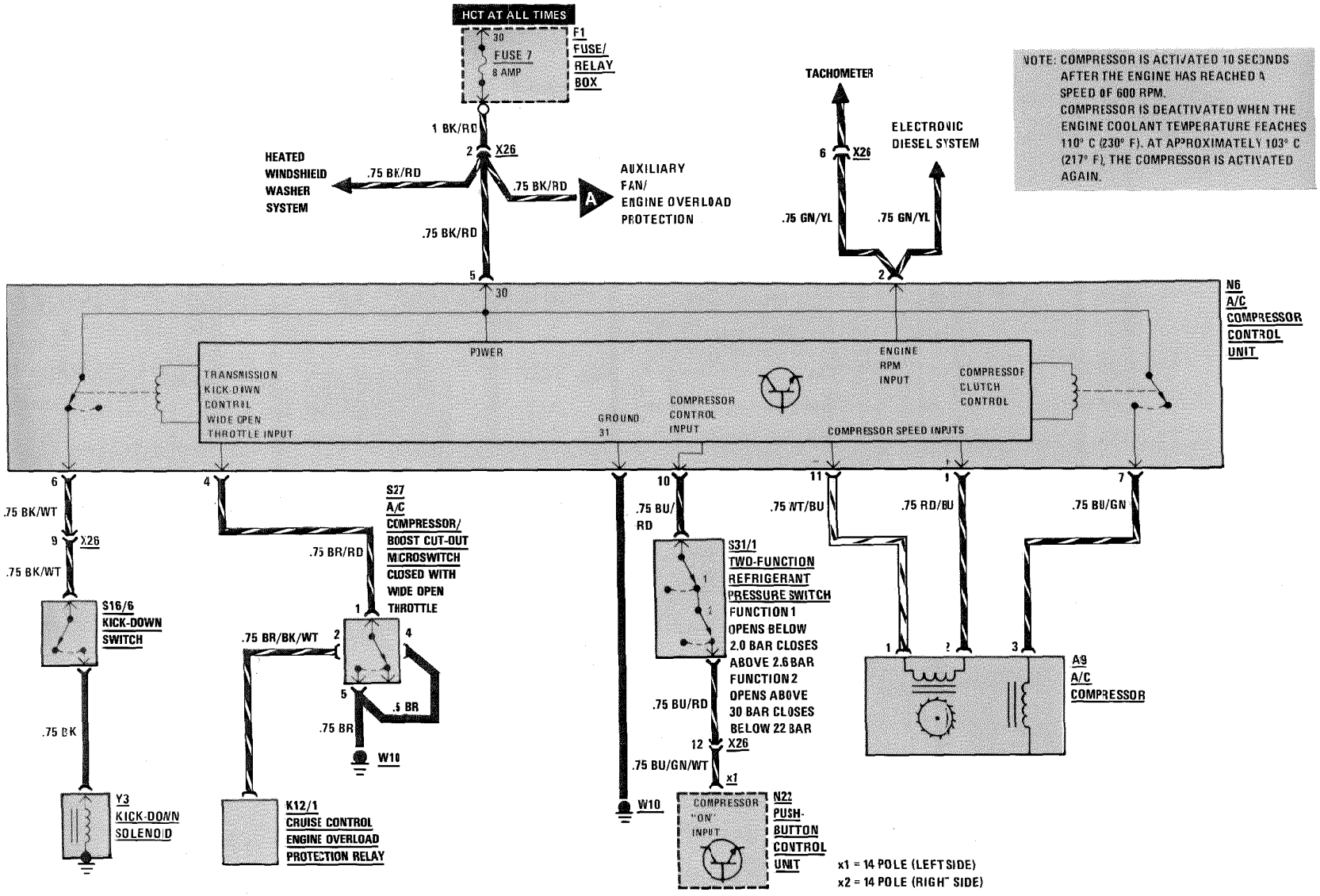

NOTE: COMPRESSOR IS ACTIVATED 10 SECONDS AFTER THE ENGINE HAS REACHED A SPEED OF 600 RPM.
COMPRESSOR IS DEACTIVATED WHEN THE ENGINE COOLANT TEMPERATURE REACHES 110° C (230° F). AT APPROXIMATELY 103° C (217° F), THE COMPRESSOR IS ACTIVATED AGAIN.

REVISIONS:

AUTOMATIC CLIMATE CONTROL (BLOWER CONTROL)

AS OF MY 1986

(For Component Locations See Page 315)

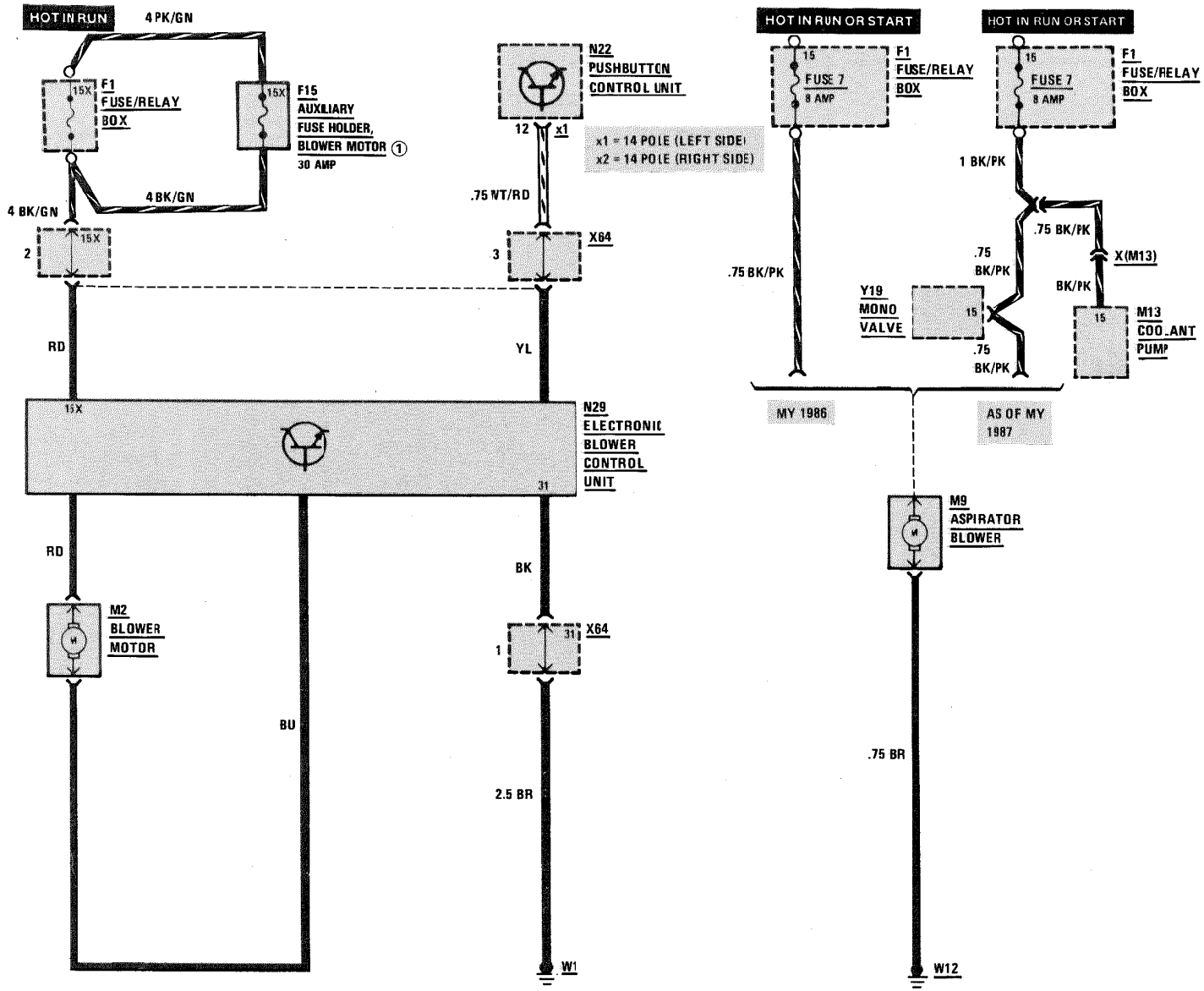

REVISIONS: ① 124.133 AS OF CHASSIS END NUMBER A292112
124.193 AS OF CHASSIS END NUMBER F023505

AUTOMATIC CLIMATE CONTROL POWER AND GROUND DISTRIBUTION

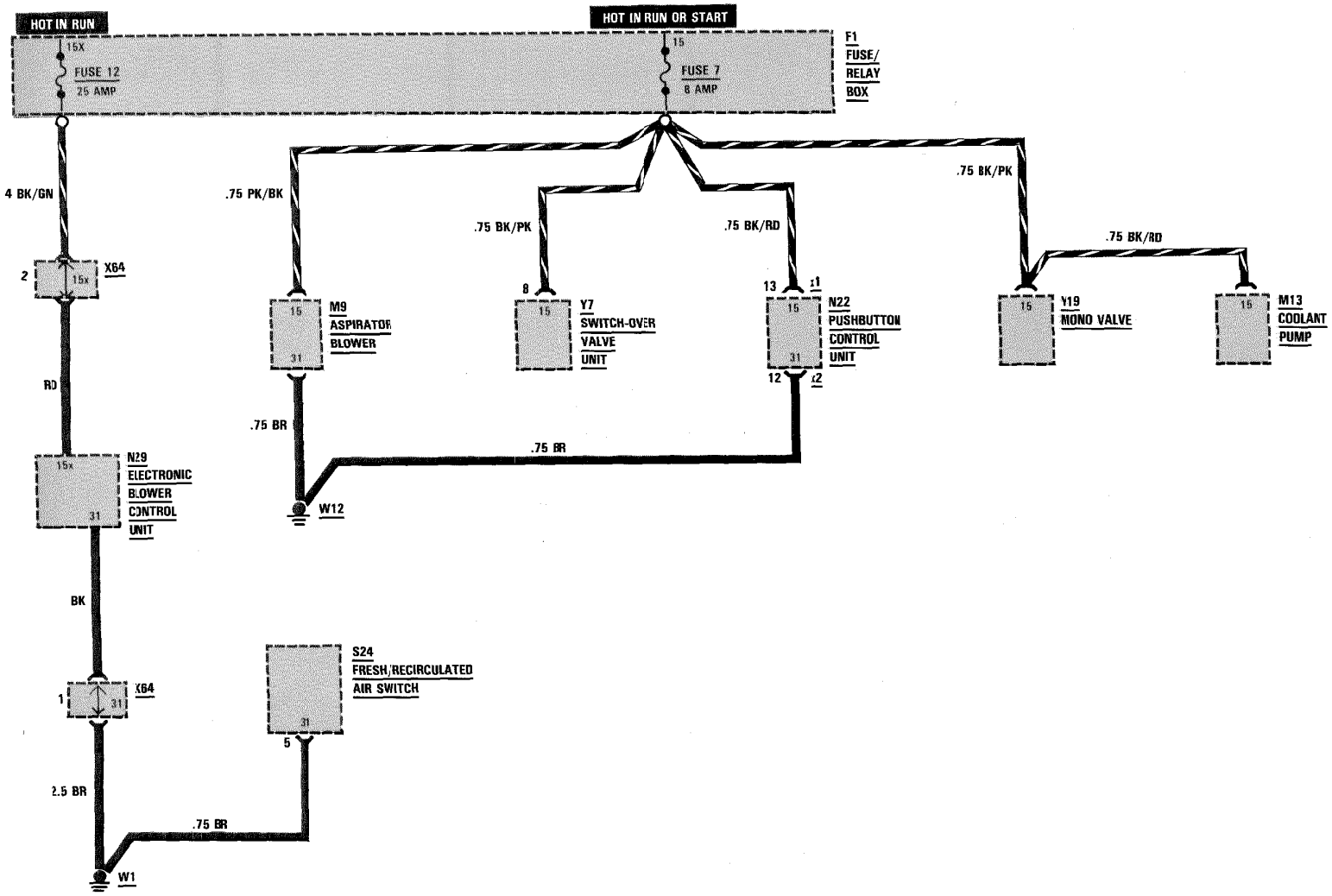

REVISIONS:

AUTOMATIC CLIMATE CONTROL POWER AND GROUND DISTRIBUTION

AS OF MY 1987

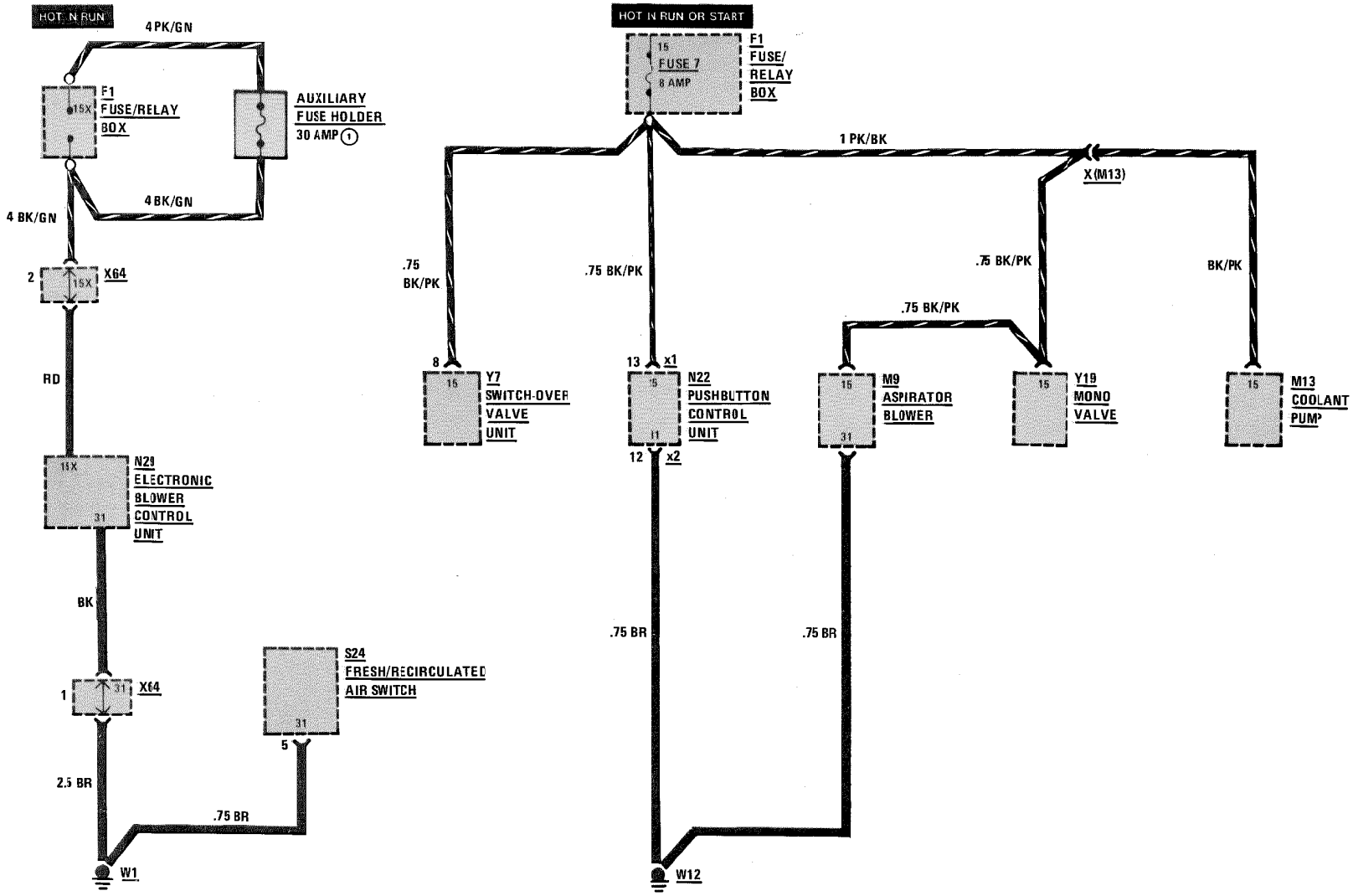

REVISIONS: ① AS OF CHASSIS END NUMBER A292112/F023505

THIS PAGE LEFT BLANK INTENTIONALLY

REVISIONS: