2001-02 AUTOMATIC TRANSMISSIONS

MGHA Overhaul

APPLICATION

CAUTION: Flush oil cooler and oil cooler lines prior to transmission installation. Oil cooling system contamination may cause premature transmission failure. For additional information, see SERVICING - ACURA (EXCEPT NSX & NSX-T) article.

TRANSAXLE APPLICATION

Application	Transaxle Model
MDX	MGHA

IDENTIFICATION

TRANSAXLE

Transaxle model and serial number are stamped on the transaxle. See **Fig. 1** . Model and serial number may be required when ordering replacement components.

cardiagn.com

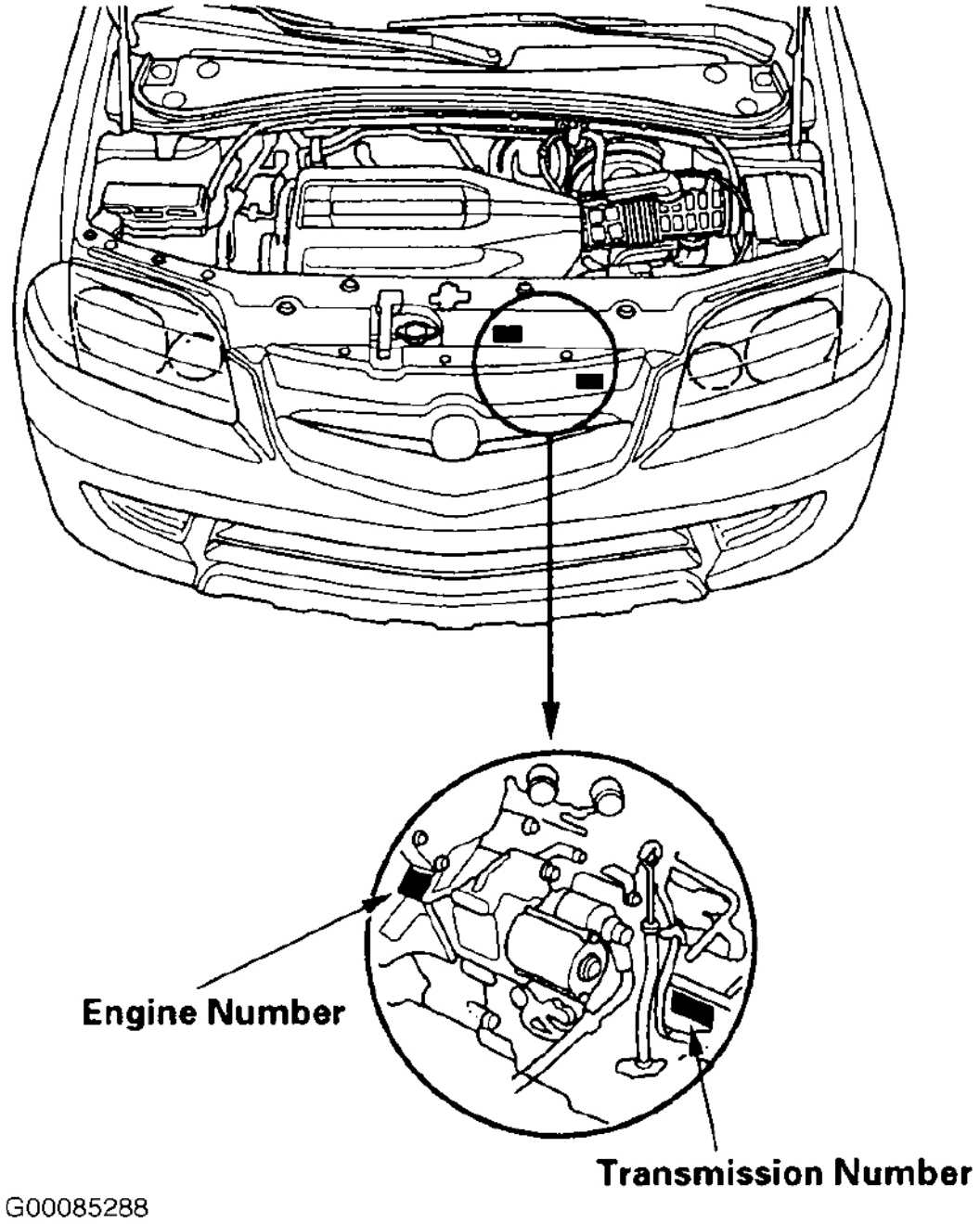

Fig. 1: Identifying Transaxle Model & Serial Number Location
Courtesy of AMERICAN HONDA MOTOR CO., INC.

GEAR RATIOS

cardiagn.com

TRANSAXLE GEAR RATIOS

Gear Range	Gear Ratio
1st	2.563:1
2nd	1.552:1
3rd	1.021:1
4th	0.727:1
5th	0.520:1
Reverse	1.846:1
Final Drive	4.428:1

DESCRIPTION & OPERATION

INTRODUCTION

Automatic transaxle is an electronically controlled transaxle with 5 forward speeds and one reverse speed. Transaxle consists of clutches, mainshaft, countershaft, secondary shaft, shift control solenoid valves, lock-up control solenoid valves and lock-up torque converter.

Valve body assemblies consists of main valve body, regulator valve body, servo body and accumulator body. Transaxle shifting and torque converter lock-up are controlled by the Powertrain Control Module (PCM).

When certain transaxle gear combinations are engaged by clutches, power is transmitted from mainshaft to countershaft via secondary shaft to final drive gear, providing different gears.

Torque converter lock-up engages and transaxle mainshaft rotates at same speed as engine crankshaft when transaxle is in "D5" position (3rd, 4th and 5th gears), "D4" position (3rd and 4th gears) or "D3" position (3rd gear). Under certain conditions, torque converter lock-up clutch is applied during deceleration when in 3rd, 4th and 5th gears. Torque converter lock-up is controlled by the PCM. The PCM receives various input signals and operates lock-up control solenoid valves. Operating lock-up control solenoid valves controls modulator pressure.

The PCM contains a self-diagnostic system, which will store a fault code if a failure or problem exists in the transaxle electronic control system. Fault code can be retrieved to identify transaxle problem area. For information on electronic transaxle components, see **MGHA DIAGNOSIS** article.

Transaxle is equipped with shift and key interlock systems. Shift interlock system prevents shift lever from being moved from "P" position unless brake pedal is depressed and accelerator is in idle position. In case of a malfunction, shift lever can be released by placing ignition key in release slot near shift lever. Key interlock system prevents ignition key from being removed from ignition switch unless shift lever is in "P" position. For additional information on shift and key interlock systems, see **SHIFT INTERLOCK SYSTEMS - MDX** article.

LUBRICATION

NOTE: See SERVICING - ACURA (EXCEPT NSX & NSX-T) article.

cardiagn.com

TROUBLE SHOOTING

NOTE: **Transmission malfunctions may be caused by poor engine performance, improper adjustments, fluid condition or failure of hydraulic, mechanical or electronic components. Ensure all concerns have been properly checked prior to transmission overhaul. See MGHA DIAGNOSIS article.**

TRANSAXLE DISASSEMBLY

END COVER, 3RD GEARS, IDLER GEAR & 3RD CLUTCH

NOTE: **The following tools are required for disassembly procedure:**

- **Mainshaft holder (07GAB-PF50101 or 07GAB-PF50100).**
- **Adjustable bearing puller (25-40 mm) (07736-A0100013 or 07736-A01000A).**

NOTE: **To assist in disassembly of transaxle, refer to illustration. See Fig. 2 . Letter references in parenthesis are identified in the following illustrations.**

1. Remove the ATF temperature sensor connector from the connector bracket, then disconnect the connector.
2. Remove the ATF temperature sensor harness clamp bolts and the ATF temperature sensor, then remove the switch cover.
3. Remove the A/T wire harness ground terminal from the connector bracket, and disconnect the 3rd clutch pressure switch connector, then remove the connector bracket.
4. Remove the mainshaft speed sensor. See **Fig. 2** .
5. Remove the transmission range switch cover.
6. Remove the transmission range switch harness clamp bolts and harness clamp, then remove the transmission range switch.
7. Remove the harness clamp bracket, ATF cooler line bolts (2), and lines.
8. Remove the line bolt, the ATF hose, and the ATF filter line.
9. Remove the ATF filter line bracket and ATF filter. Remove the ATF passage body if necessary.
10. Remove the A/T clutch pressure control solenoid valve "C".
11. Remove the remaining 11 bolts on the end cover, then remove the end cover.
12. Slip the holder onto the mainshaft. See **Fig. 3** .
13. Engage the park pawl with the park gear.

NOTE: **Countershaft and secondary shaft lock nuts have left-hand threads.**

14. Cut the lock tabs (A) of each shaft lock nut (B) using a chisel (C). See **Fig. 4** . Then remove the lock nuts and conical spring washers from each shaft.

cardiagn.com

15. Remove the holder from the mainshaft.
16. Remove the 3rd clutch assembly using 2-jaw puller and a appropriate slide hammer (A). See **Fig. 5** .
17. Remove the splined washer, thrust needle bearing, countershaft 3rd gear, needle bearing, and thrust needle bearing from the countershaft.
18. Remove the mainshaft 3rd gear (A), secondary shaft idler gear (B), and park gear (C) with a puller (D). See **Fig. 6** .
19. Remove the park pawl, park pawl spring, park pawl shaft, and stop shaft.
20. Remove the park lever from the control shaft.
21. Remove A/T clutch pressure control solenoid valves "A" and "B".

cardiagn.com

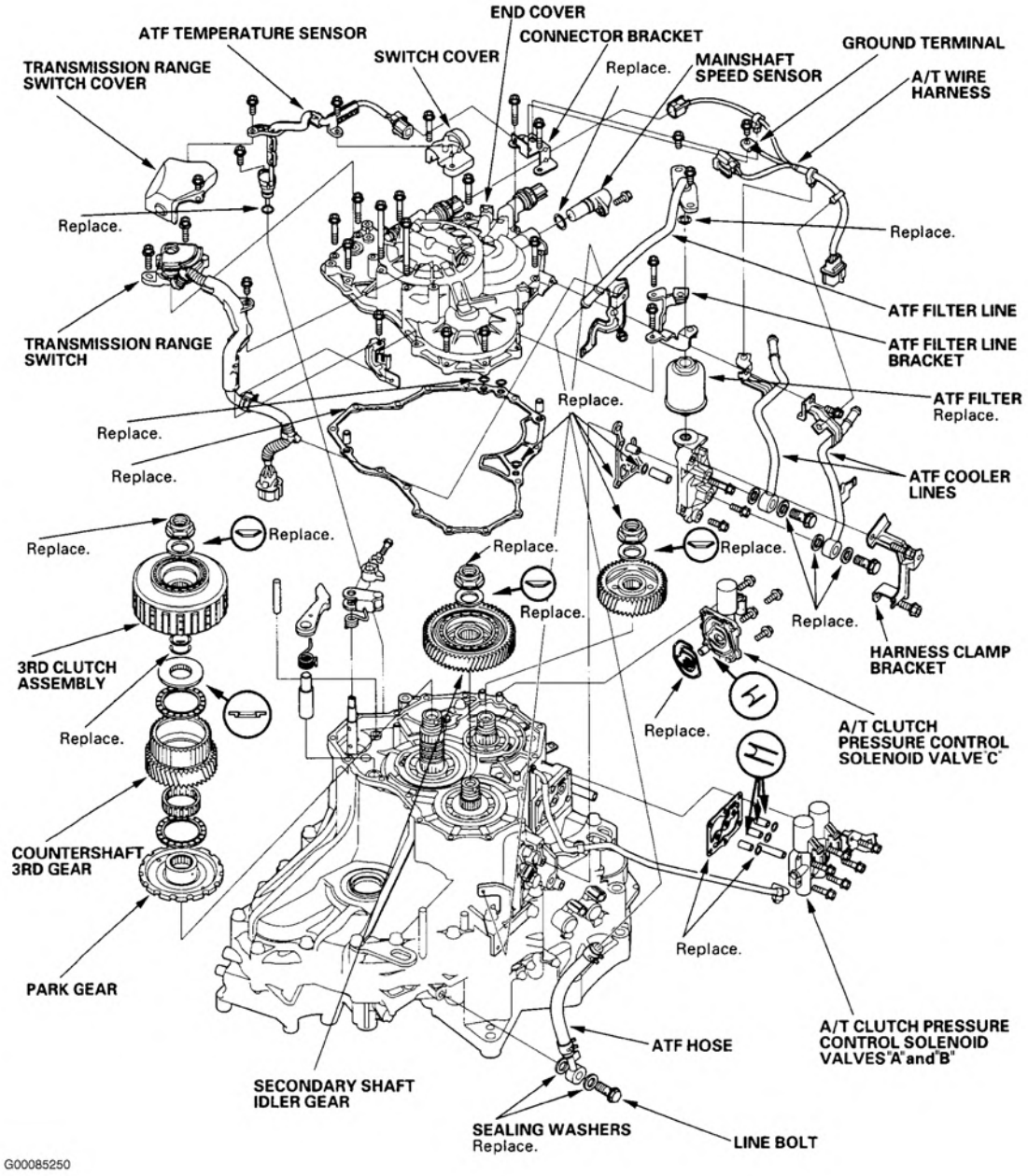

Fig. 2: Exploded View Of End Cover, Idler Gear & 3rd Clutch
Courtesy of AMERICAN HONDA MOTOR CO., INC.

cardiagn.com

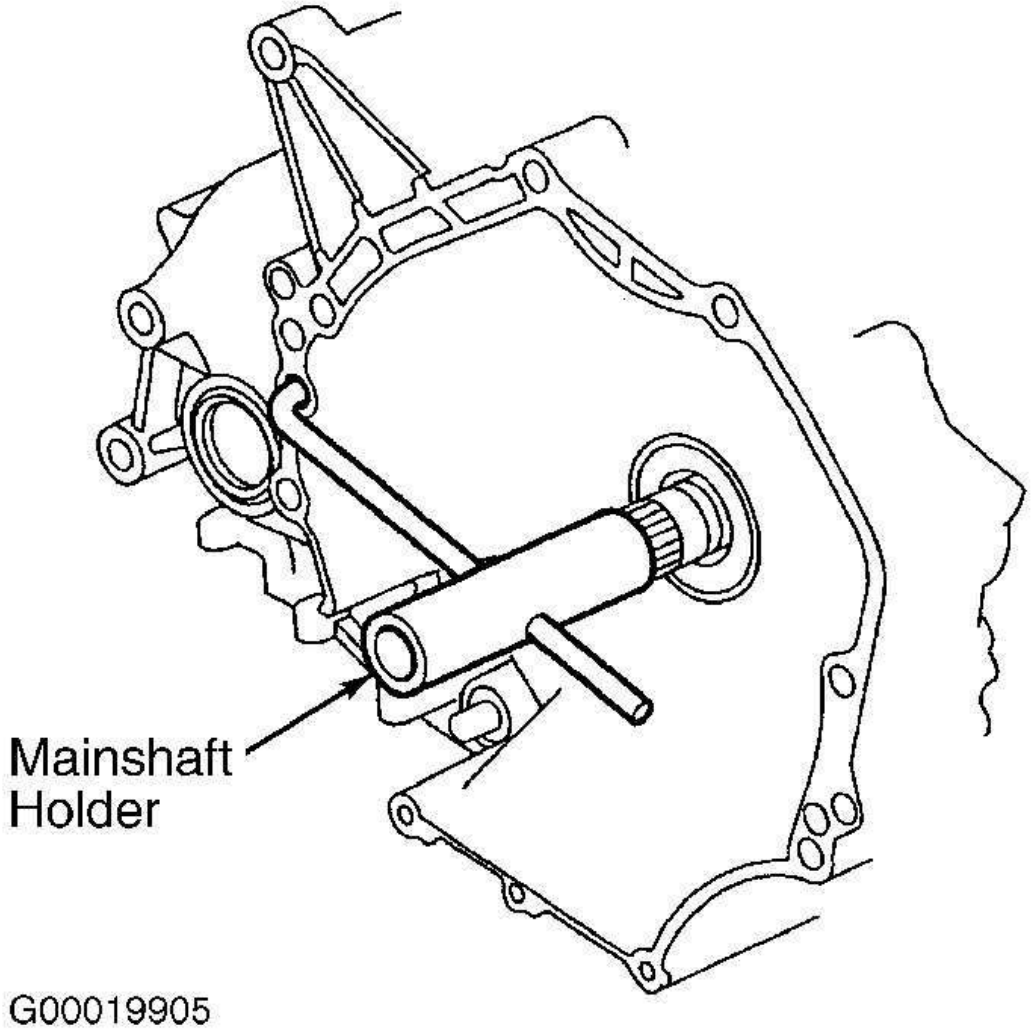

Fig. 3: Securing Mainshaft With Holder
Courtesy of AMERICAN HONDA MOTOR CO., INC.

cardiagn.com

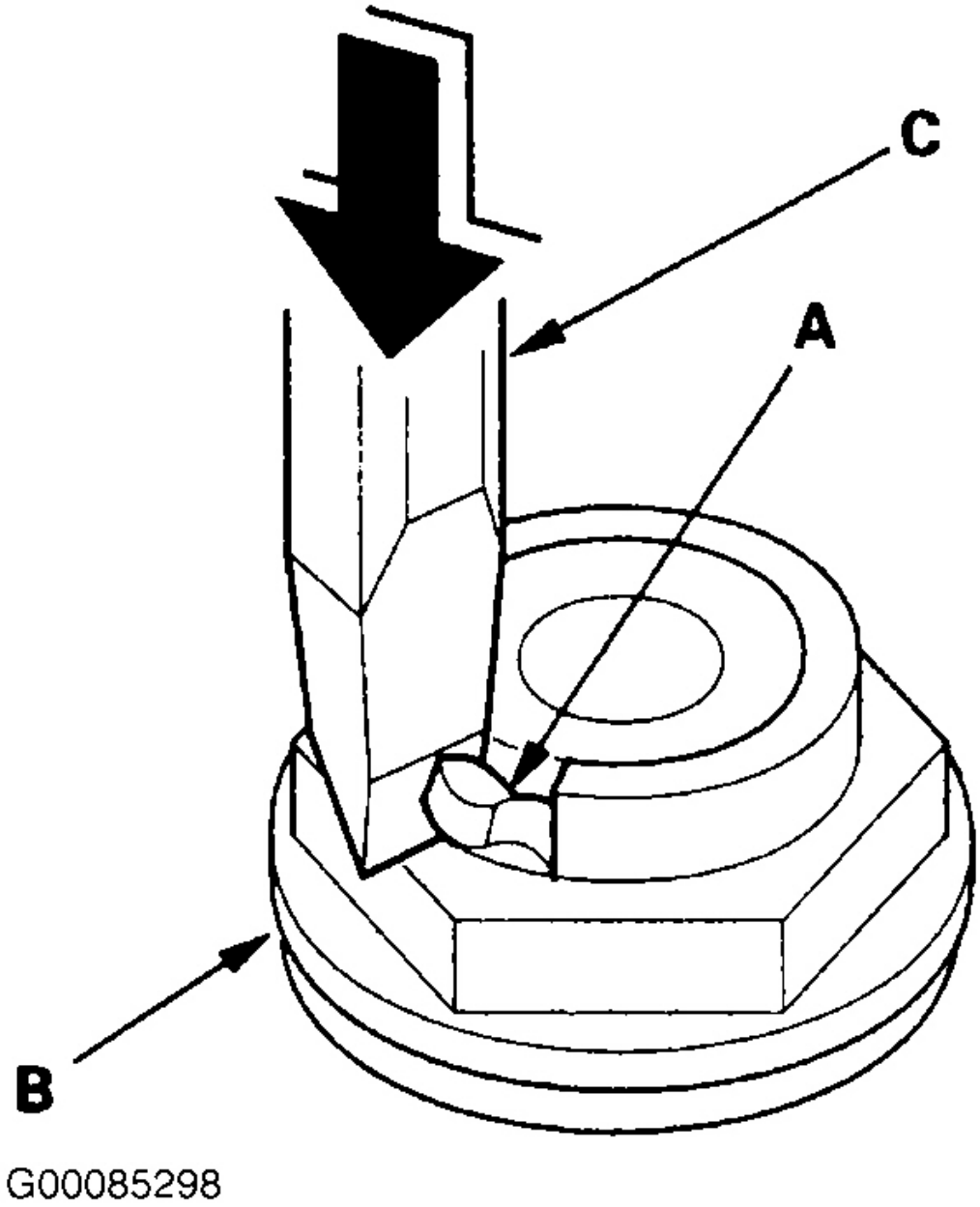

Fig. 4: Cutting Lock Nut Lock Tabs
Courtesy of AMERICAN HONDA MOTOR CO., INC.

cardiagn.com

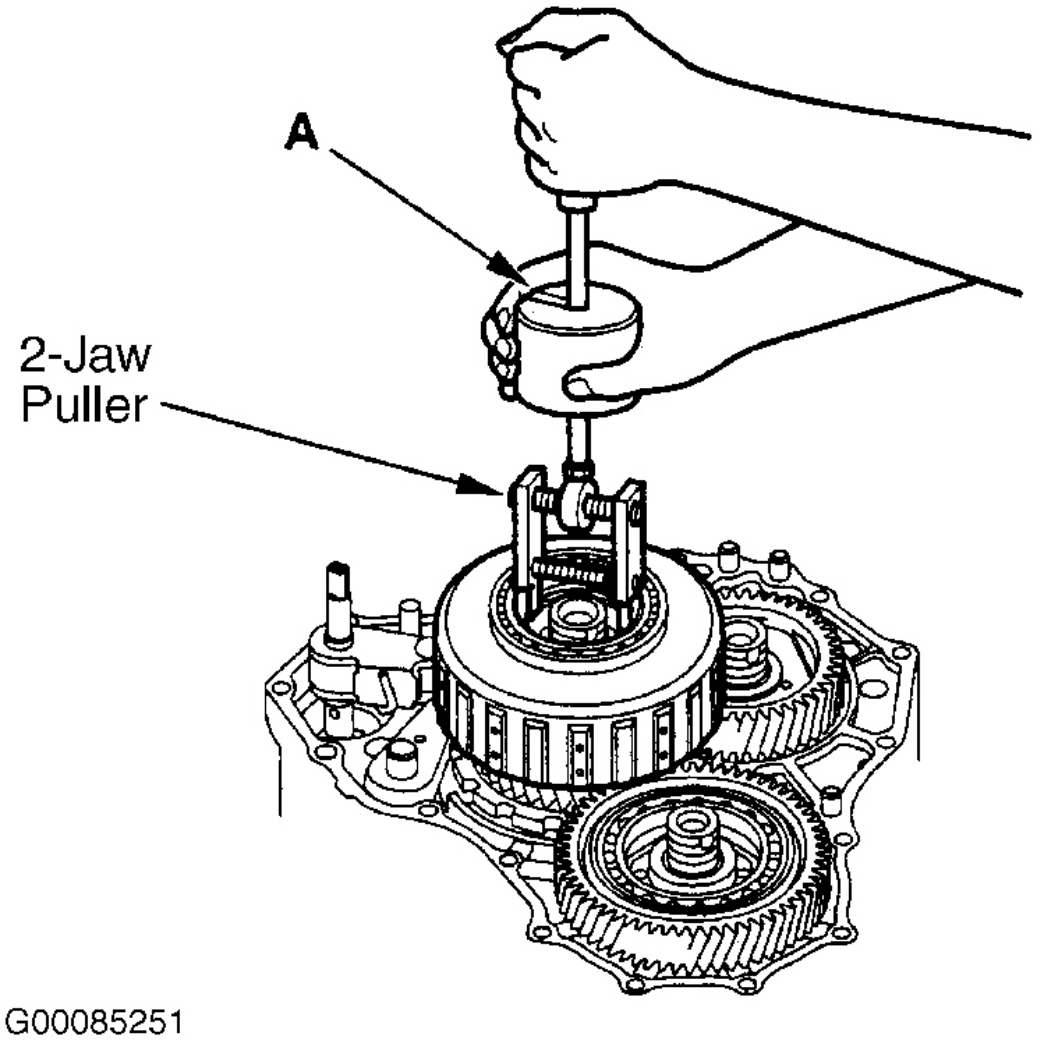

Fig. 5: Removing 3rd Clutch Assembly
Courtesy of AMERICAN HONDA MOTOR CO., INC.

cardiagn.com

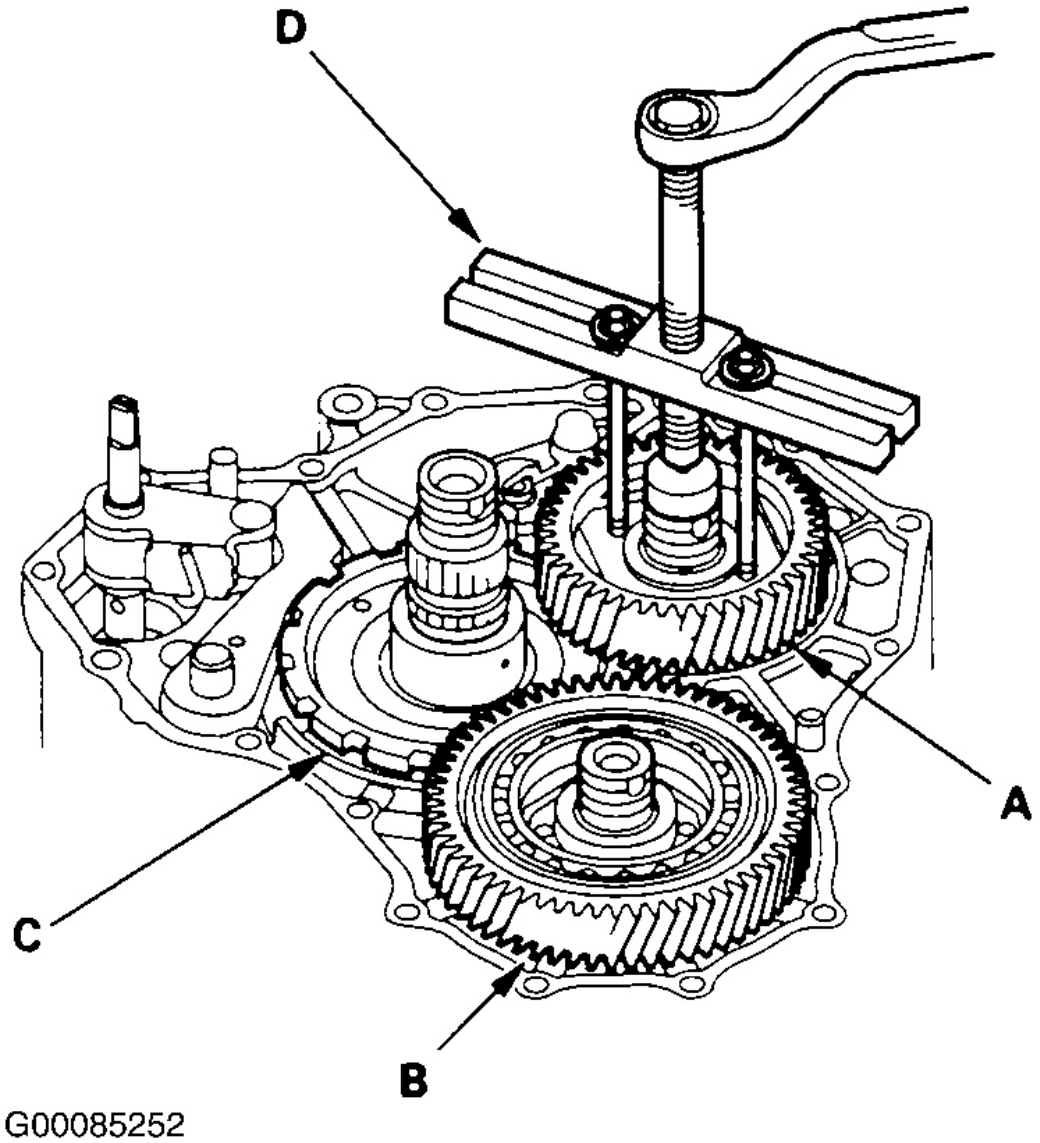

Fig. 6: Removing 3rd, Secondary & Park Gears
Courtesy of AMERICAN HONDA MOTOR CO., INC.

HOUSING & SHAFT ASSEMBLIES

NOTE: To assist in disassembly of components, refer to illustration. See Fig. 7 .

1. Remove the ATF dipstick guide pipe.
2. Remove the 2 bolts securing the reverse idler gear shaft holder, then remove the reverse idler gear shaft

cardiagn.com

holder, shaft, and washer. See **Fig. 8** .

3. Remove the transmission housing mounting bolts, transmission hangers, and harness clamp bracket.

NOTE: The transmission housing will not separate from the torque converter housing if the reverse idler gear is not moved.

4. Move the reverse idler gear to disengage it from the mainshaft and countershaft reverse gears. See **Fig. 9** .
5. Align the spring pin on the control shaft with the transmission housing groove by turning the control shaft. See **Fig. 10** .
6. Install puller over the mainshaft, then remove the transmission housing.
7. Remove the reverse idler gear, needle bearings, and thrust washer from the transmission housing.
8. Remove the countershaft 2nd gear, then remove the countershaft reverse gear and the needle bearing.
9. Remove the lock bolt securing the shift fork, then remove the shift fork with the reverse selector. If the reverse selector hub is not press-fitted, remove the reverse selector hub, countershaft 5th gear, and needle bearing from the countershaft.
10. Remove the secondary shaft sub-assembly. If the reverse selector hub is press-fitted, remove the secondary shaft sub-assembly, countershaft sub-assembly and mainshaft sub-assembly together.
11. Remove the countershaft sub-assembly.
12. Remove the mainshaft sub-assembly.
13. Remove the differential assembly.
14. Remove the transfer driven gear shaft.
15. Remove the countershaft speed sensor.

cardiagn.com

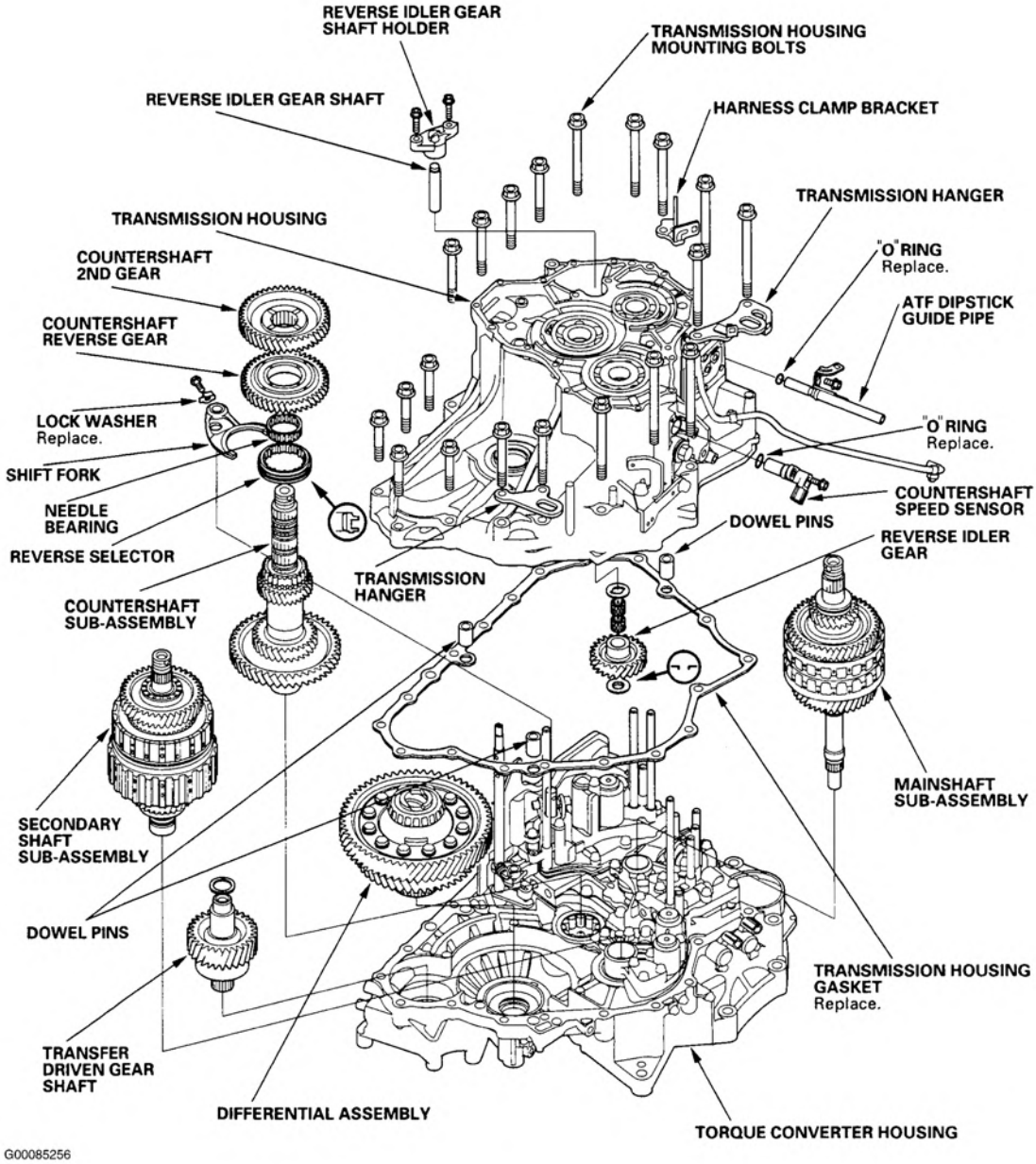

Fig. 7: Exploded View Of Housing & Shaft Assemblies
Courtesy of AMERICAN HONDA MOTOR CO., INC.

cardiagn.com

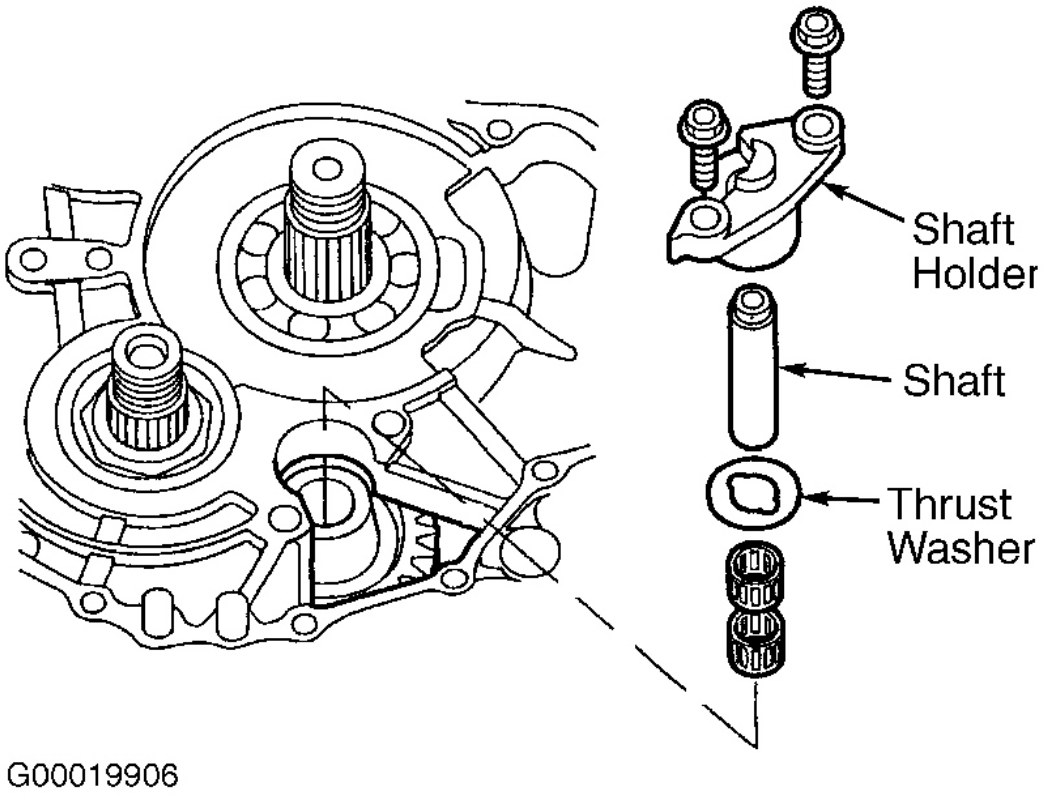

Fig. 8: Removing Reverse Idler Gear Shaft & Components
Courtesy of AMERICAN HONDA MOTOR CO., INC.

cardiagn.com

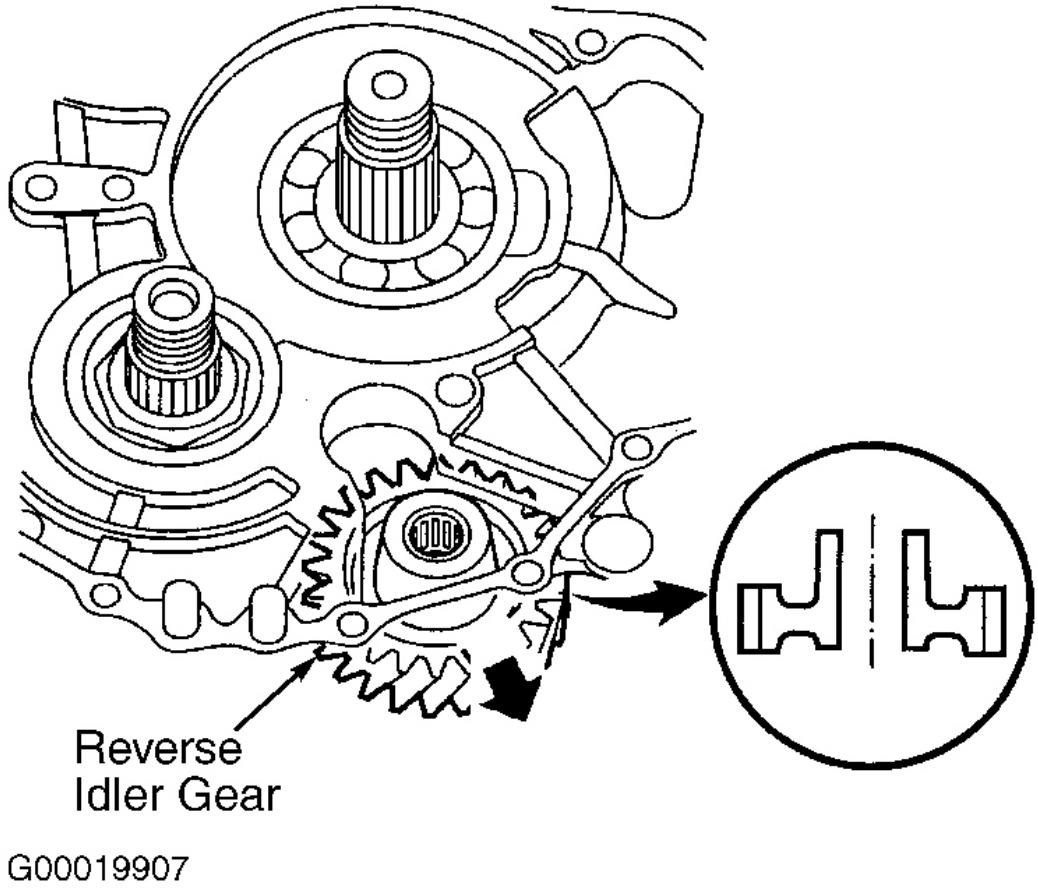

Fig. 9: Positioning Reverse Idler Gear For Transaxle Housing Removal
Courtesy of AMERICAN HONDA MOTOR CO., INC.

cardiagn.com

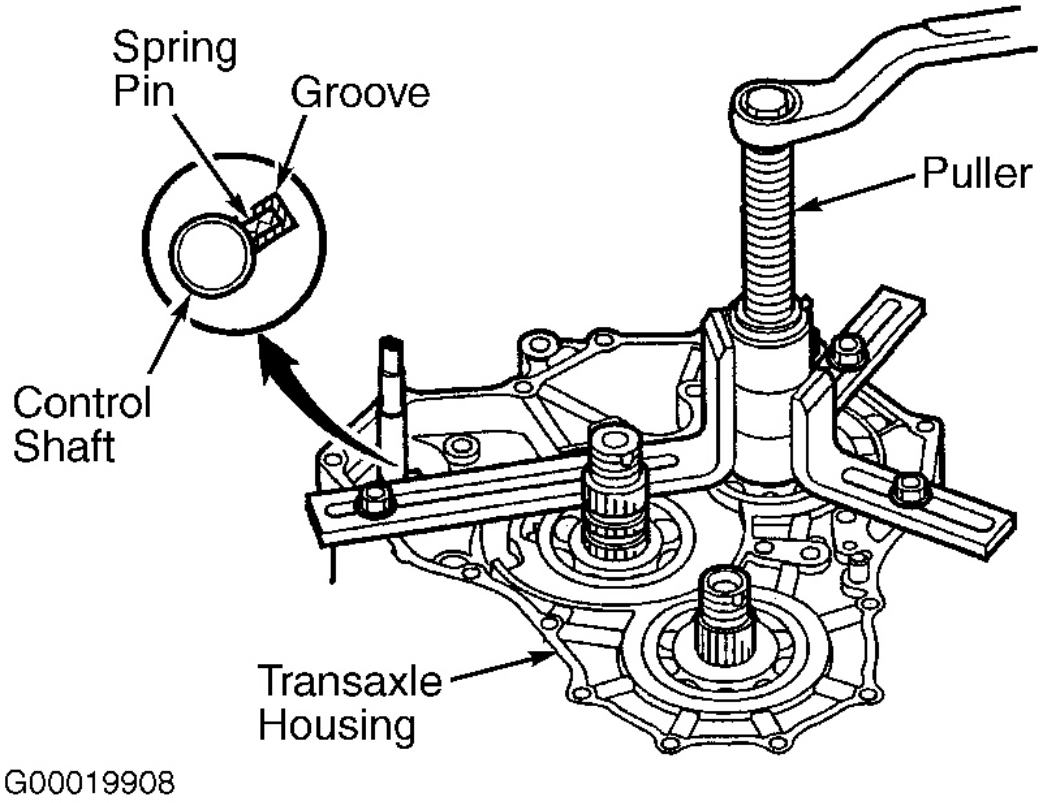

Fig. 10: Aligning Spring Pin & Removing Transaxle Housing
Courtesy of AMERICAN HONDA MOTOR CO., INC.

VALVE BODIES & ATF STRAINER

NOTE: To assist in disassembly of components, refer to illustration. See Fig. 11 .

1. Remove the ATF feed pipes from the regulator valve body, servo body, top accumulator body, and accumulator body.
2. Remove the servo detent base (2 bolts).
3. Remove the ATF strainer (2 bolts).
4. Remove the top accumulator body (7 bolts), then remove the accumulator body separator plate and dowel pins (2).
5. Remove the servo body (5 bolts), then remove servo separator plate and dowel pins (2).
6. Remove the regulator valve body (8 bolts).
7. Remove the stator shaft and stator shaft stop.
8. Remove the regulator separator plate and dowel pins (2).

cardiagn.com

9. Remove the accumulator body (7 bolts).
10. Unhook the detent spring from the detent arm, then remove the detent arm shaft, detent arm, and control shaft.
11. Remove the cooler check valve spring and cooler check valve (ball).
12. Remove the main valve body (4 bolts).
13. Remove the torque converter check valve and spring.
14. Remove the ATF pump driven gear shaft, then remove the ATF pump gears.
15. Remove the main separator plate and dowel pins (3).
16. Clean the inlet opening of the ATF strainer thoroughly with compressed air, then check that it is in good condition, and the inlet opening is not clogged.
17. Test the ATF strainer by pouring clean ATF through the inlet opening, and replace it if it is clogged or damaged.

cardiagn.com

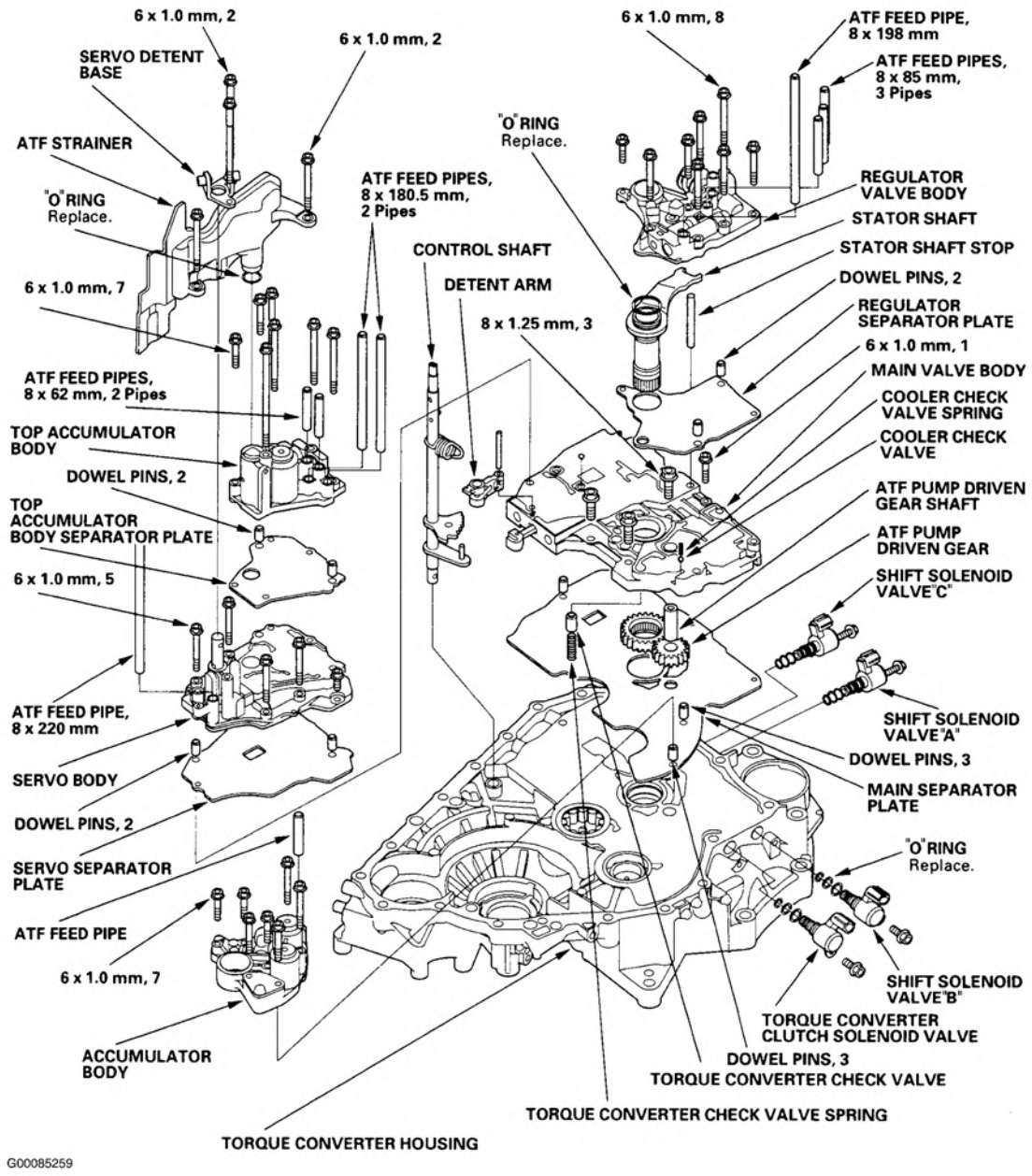

Fig. 11: Exploded View Of Valve Bodies & ATF Strainer
Courtesy of AMERICAN HONDA MOTOR CO., INC.

COMPONENT DISASSEMBLY & REASSEMBLY

ATF FEED PIPES

Removal & Installation

1. Remove the snap rings (A), ATF feed pipes (B), and feed pipe flanges (C) from the end cover (D). See

cardiagn.com

Fig. 12 .

2. Install the new "O" ring (E) over the ATF feed pipe.
3. Install ATF feed pipe in the end cover with aligning the feed pipe tabs with the indentations in the end cover.
4. Install the new "O" ring (F) in the end cover, then install the feed pipe flange over the ATF feed pipe and "O" rings.
5. Secure the ATF feed pipe and feed pipe flange with the snap ring.

cardiagn.com

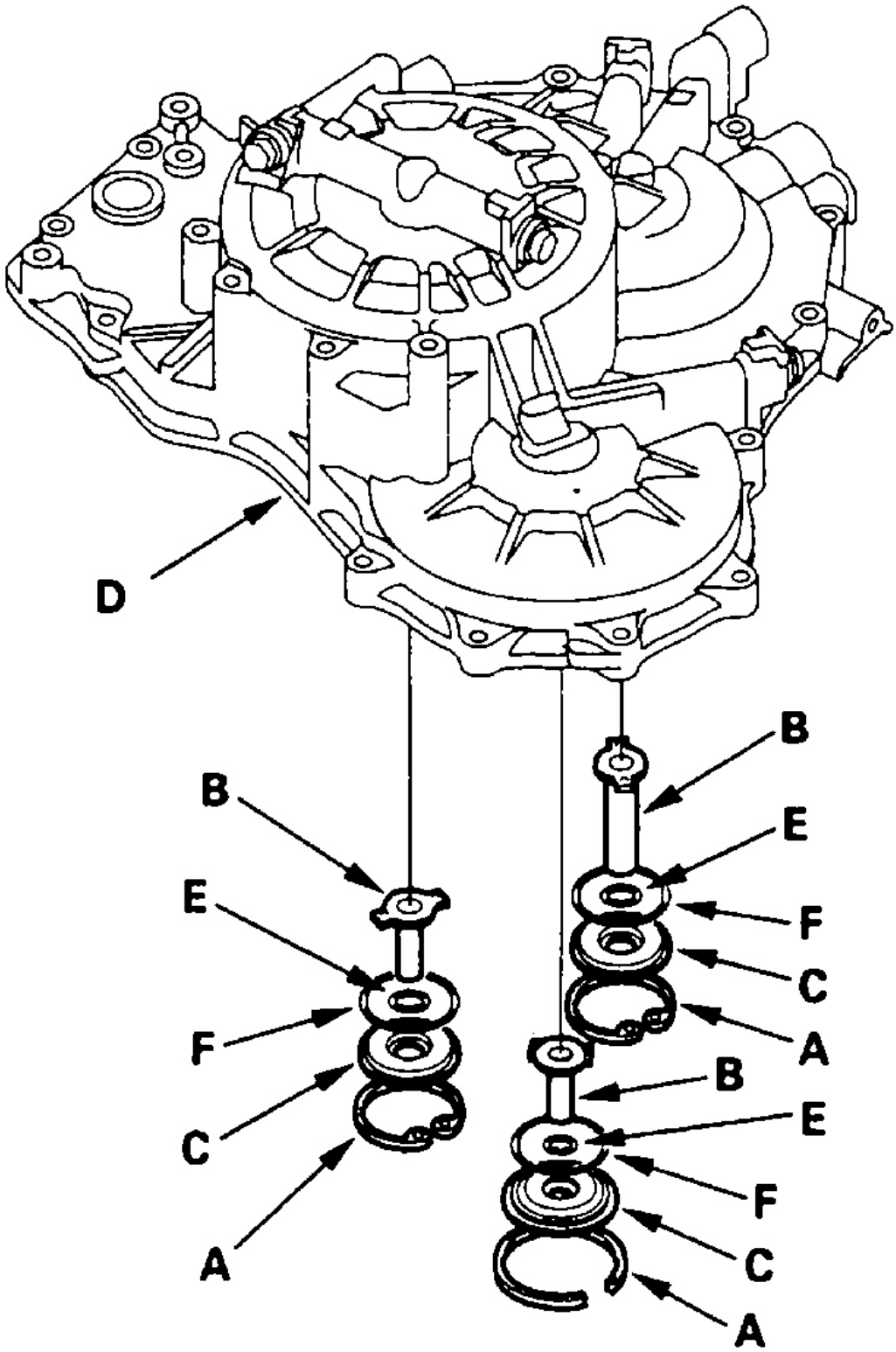

G00085255

cardiagn.com

Fig. 12: Exploded View Of ATF Feed Pipes
Courtesy of AMERICAN HONDA MOTOR CO., INC.

SHAFT BEARINGS

Removal & Installation

NOTE: Coat all parts with ATF before assembly.

1. To remove the mainshaft bearing (A), countershaft bearing (B), and secondary shaft bearing (C) from the transmission housing, expand each snap ring with the snap ring pliers, then push the bearing out. See **Fig. 13** .

   NOTE: Do not remove the snap rings unless it's necessary to clean the grooves in the housing.

2. Install the bearings in the direction shown.
3. Expand each snap ring with the snap ring pliers, and insert the bearing part-way into the housing.
4. Release the pliers, then push the bearing down into the housing until the snap ring snaps in place around it.
5. After installing the bearings verify the following:
   - The snap rings (A) are seated in the bearing and housing grooves.
   - The ring end gaps (B) are correct. See **Fig. 14** .

cardiagn.com

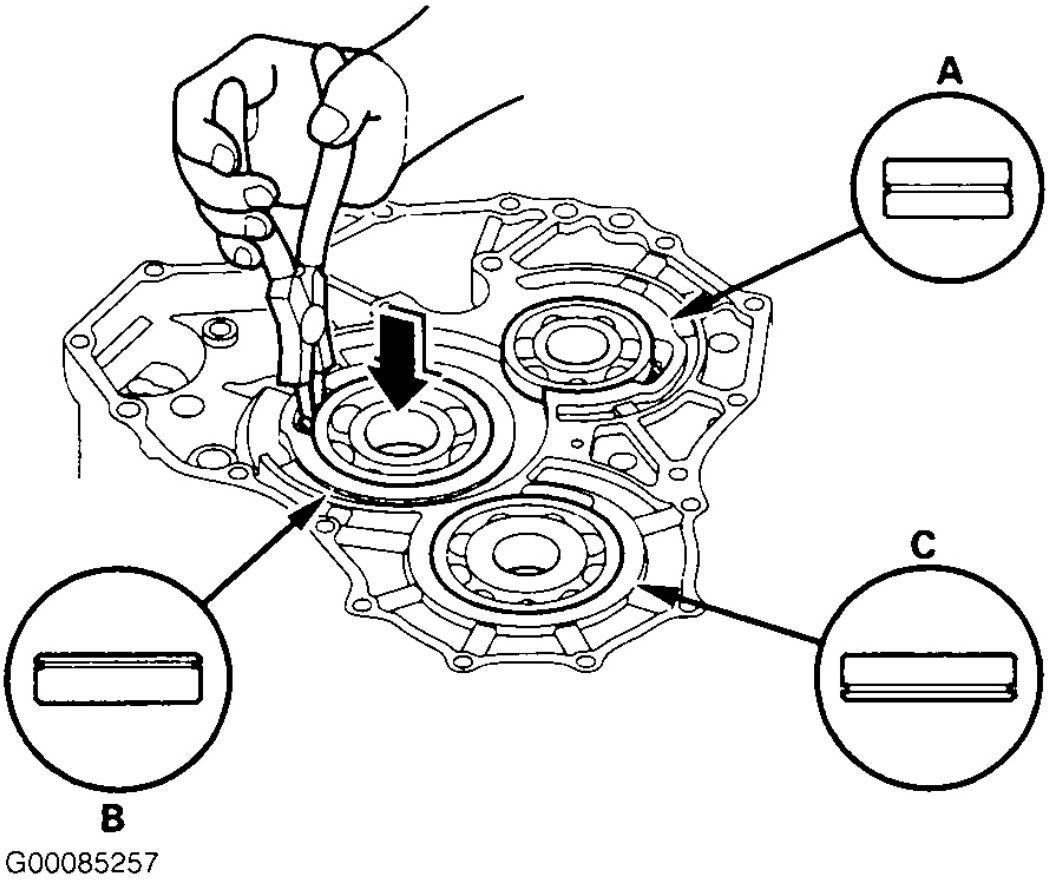

Fig. 13: Installing/Removing Shaft Bearings
Courtesy of AMERICAN HONDA MOTOR CO., INC.

cardiagn.com

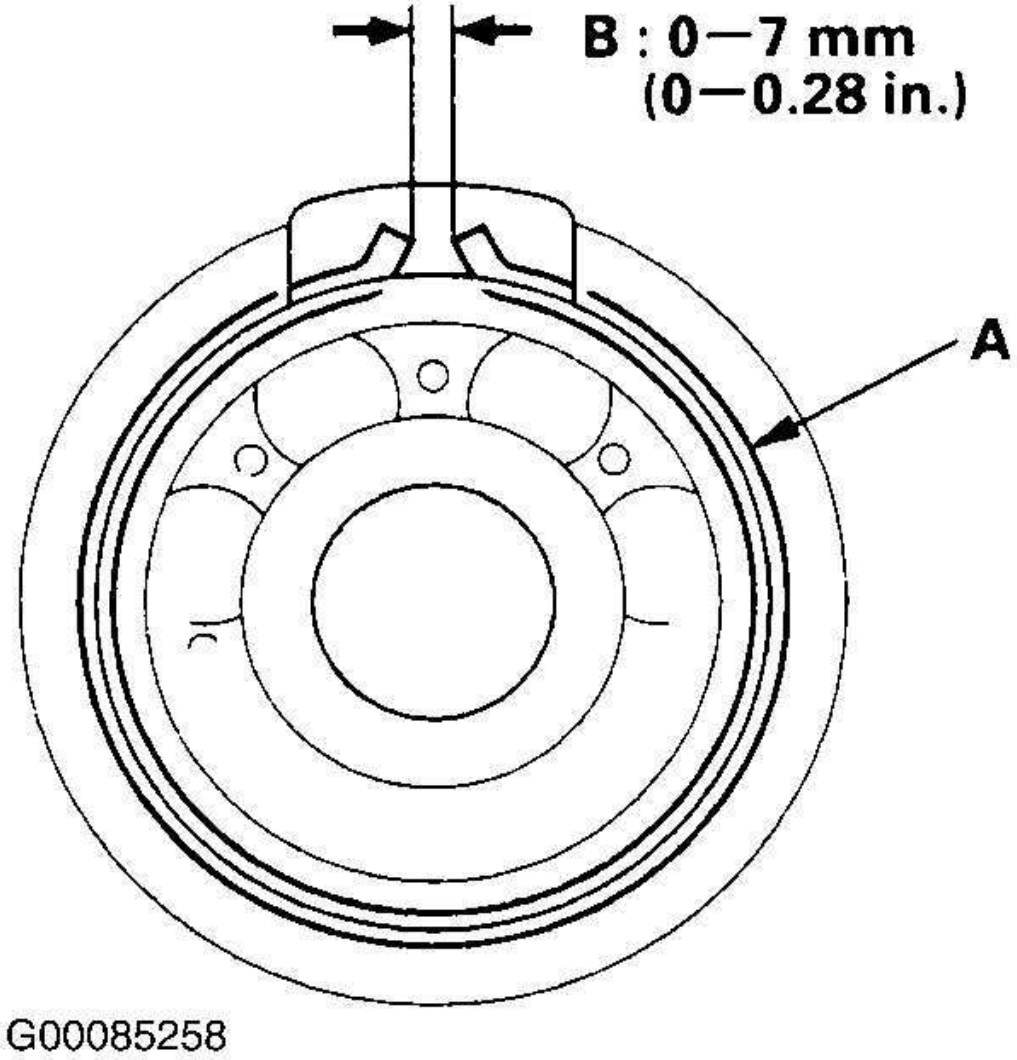

Fig. 14: Measuring Snap Ring Gap
Courtesy of AMERICAN HONDA MOTOR CO., INC.

PARK LEVER STOP

Inspection & Adjustment

1. Set the park lever in the "P" position.
2. Measure the distance "B" between the park pawl shaft and the park lever roller pin. See **Fig. 15** . Standard is 3.33-3.37" (84.6-85.6 mm).

cardiagn.com

3. If the measurement is out of tolerance, select and install the appropriate park lever stop from the table. See **Fig. 16** .
4. After replacing the park lever stop, make sure the distance is within tolerance.

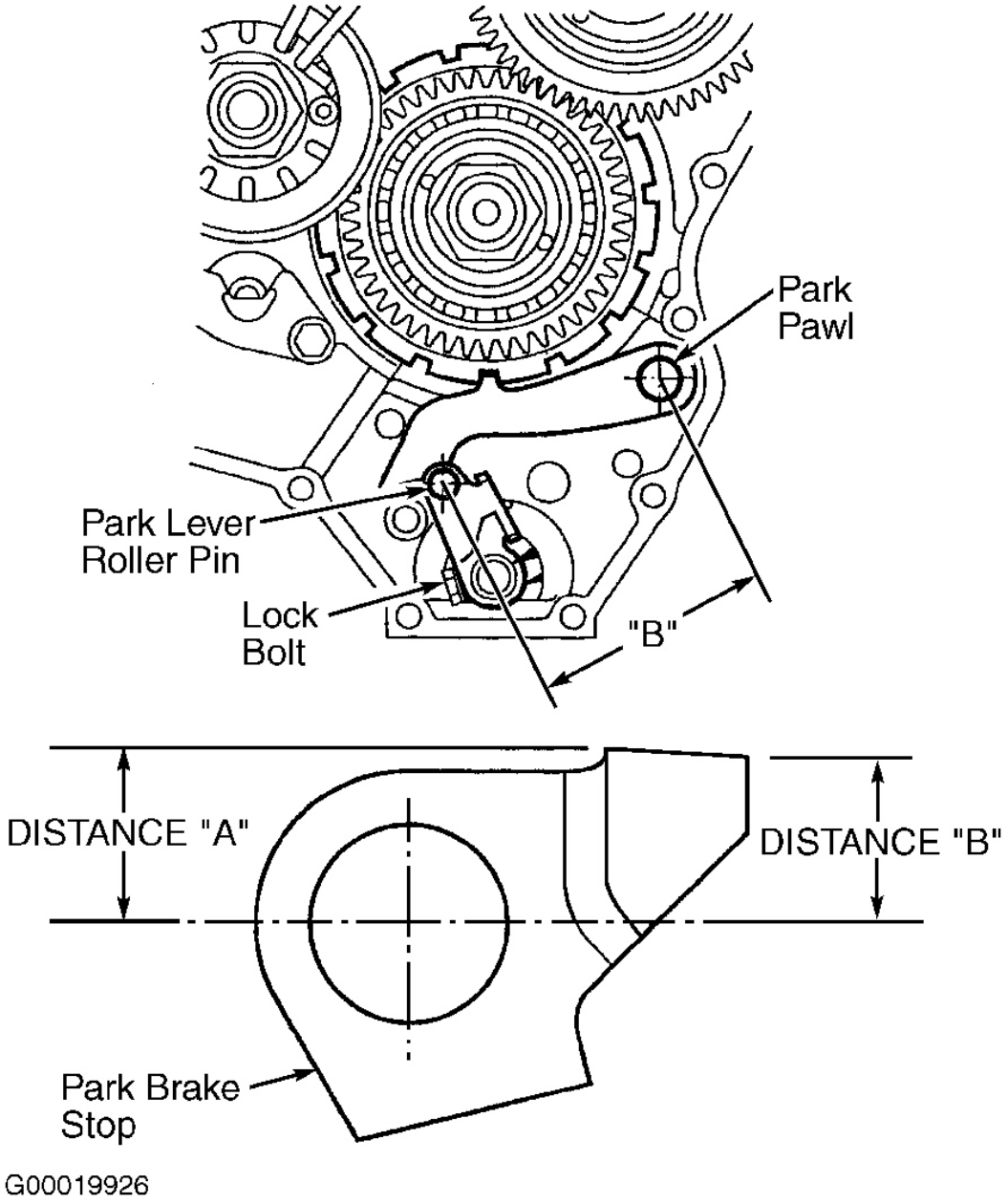

Fig. 15: Measuring Park Brake Stop Distance & Park Brake Stop
Courtesy of AMERICAN HONDA MOTOR CO., INC.

cardiagn.com

Mark	Part Number	"A"	"B"
1	24537-PA9-003	11.00 mm (0.433 in.)	11.00 mm (0.433 in.)
2	24538-PA9-003	10.80 mm (0.425 in.)	10.65 mm (0.419 in.)
3	24539-PA9-003	10.60 mm (0.417 in.)	10.30 mm (0.406 in.)

G00085254

Fig. 16: Park Lever Stop Selection Chart
Courtesy of AMERICAN HONDA MOTOR CO., INC.

MAIN VALVE BODY

CAUTION: When disassembling main valve body, place main valve body components in order and mark spring locations for reassembly reference. Note direction of valve cap installation before removing from main valve body.

NOTE: To assist in disassembly of component, see Fig. 20 .

Disassembly

1. Clean all parts thoroughly in solvent or carburetor cleaner and dry them with compressed air. Blow out all passages.
2. Do not use a magnet to remove the check ball, it may magnetize the ball.
3. Check all valves for free movement. If any fail to slide freely, see **VALVE BODY REPAIR PROCEDURES** .
4. Replace the valve body as an assembly if any parts are worn or damaged. For valve spring specifications, see **Fig. 17** .

cardiagn.com

Spring	Standard (New)-Unit: mm (in.)			
	Wire Dia.	O.D.	Free Length	No. of Coils
Shift valve D spring	0.7 (0.028)	6.6 (0.260)	33.7 (1.327)	11.6
Shift valve C spring	0.8 (0.031)	6.6 (0.260)	49.1 (1.933)	21.7
Kick-down valve spring	0.8 (0.031)	6.6 (0.260)	49.1 (1.933)	21.7
Modulator valve spring	1.6 (0.063)	10.4 (0.409)	33.5 (1.319)	9.8
Relief valve spring	1.2 (0.047)	11.1 (0.437)	39.0 (1.535)	9.9
Lock-up shift valve spring	0.9 (0.035)	7.6 (0.299)	63.0 (2.480)	22.4
Cooler check valve spring	0.6 (0.024)	5.8 (0.228)	14.5 (0.571)	6.8
Torque converter check valve spring	1.2 (0.047)	8.6 (0.339)	35.1 (1.382)	14.3
Servo control valve spring	0.9 (0.035)	6.4 (0.252)	32.5 (1.280)	17.5
Reverse CPC valve spring	0.7 (0.028)	6.1 (0.240)	17.8 (0.701)	7.9

G00085263

Fig. 17: Main Valve Body Valve Spring Specification Table
Courtesy of AMERICAN HONDA MOTOR CO., INC.

Valve Body Repair Procedures

NOTE: This repair is only necessary if one or more of the valves in a valve body do not slide smoothly in their bores. Use this procedure to free the valves.

1. Soak a sheet of No. 600 abrasive paper in ATF for about 30 minutes.
2. Carefully tap the valve body so the sticking valve drops out of its bore. It may be necessary to use a small screwdriver to pry the valve free. Be careful not to scratch the bore with the screwdriver.
3. Inspect the valve for any scuff marks. Use the ATF-soaked No. 600 paper to polish off any burrs that are on the valve, then wash the valve in solvent and dry it with compressed air.
4. Roll up half a sheet of ATF-soaked No. 600 paper and insert it in the valve bore of the sticking valve. See **Fig. 18** . Twist the paper slightly, so that it unrolls and fits the bore tightly, then polish the bore by twisting the paper as you push it in and out.

   NOTE: The valve body is aluminum and doesn't require much polishing to remove any burrs.

5. Remove the No. 600 paper. Thoroughly wash the entire valve body in solvent, then dry it with compressed air.
6. Coat the valve with ATF, then drop it into its bore. See **Fig. 19** . It should drop to the bottom of the bore under its own weight. If not, repeat steps 4 and 5 , then retest. If the valve still sticks, replace the valve body.
7. Remove the valve, and thoroughly clean it and the valve body with solvent. Dry all parts with compressed air, then reassemble using ATF as a lubricant.

cardiagn.com

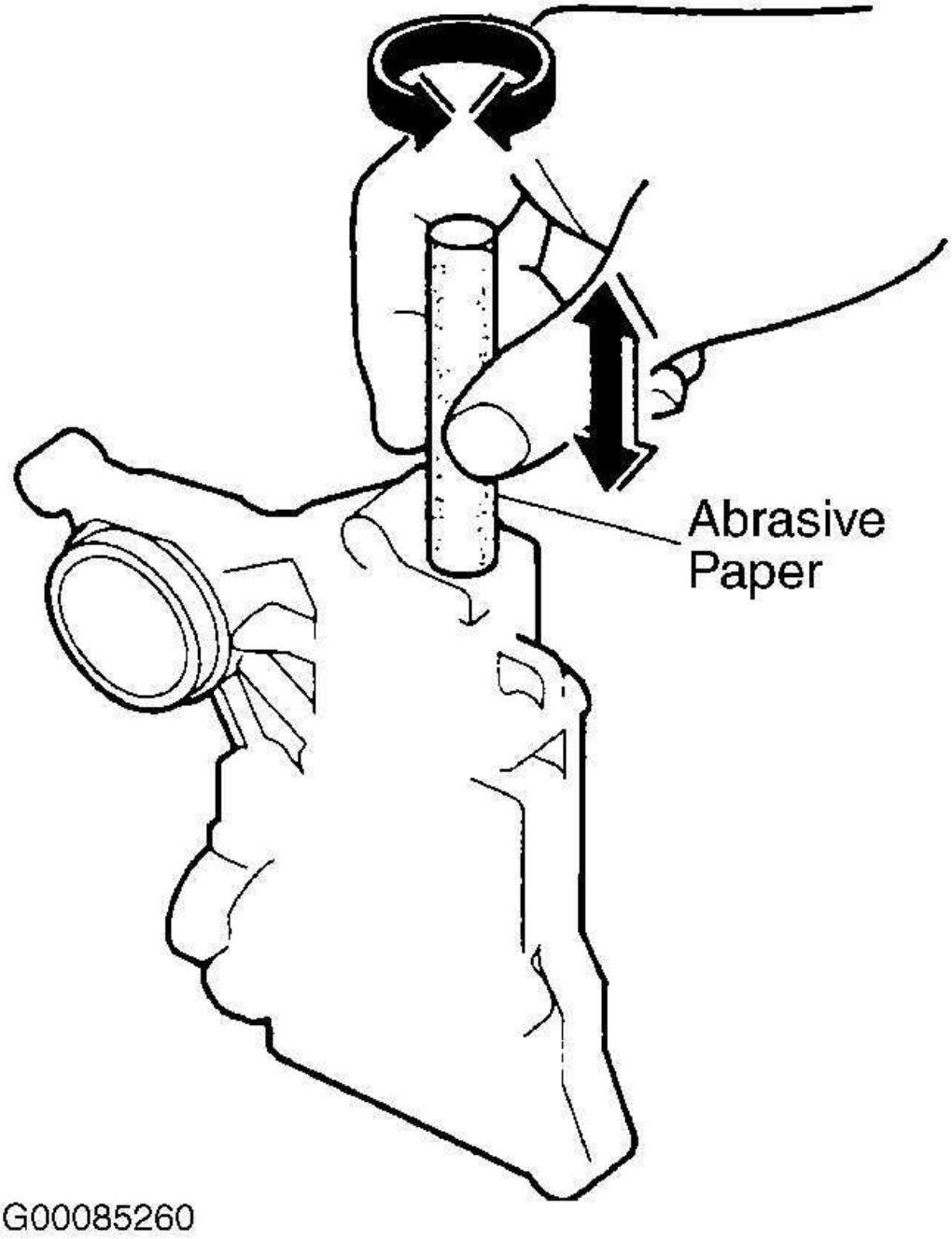

Fig. 18: Polishing Valve Body Bore
Courtesy of AMERICAN HONDA MOTOR CO., INC.

cardiagn.com

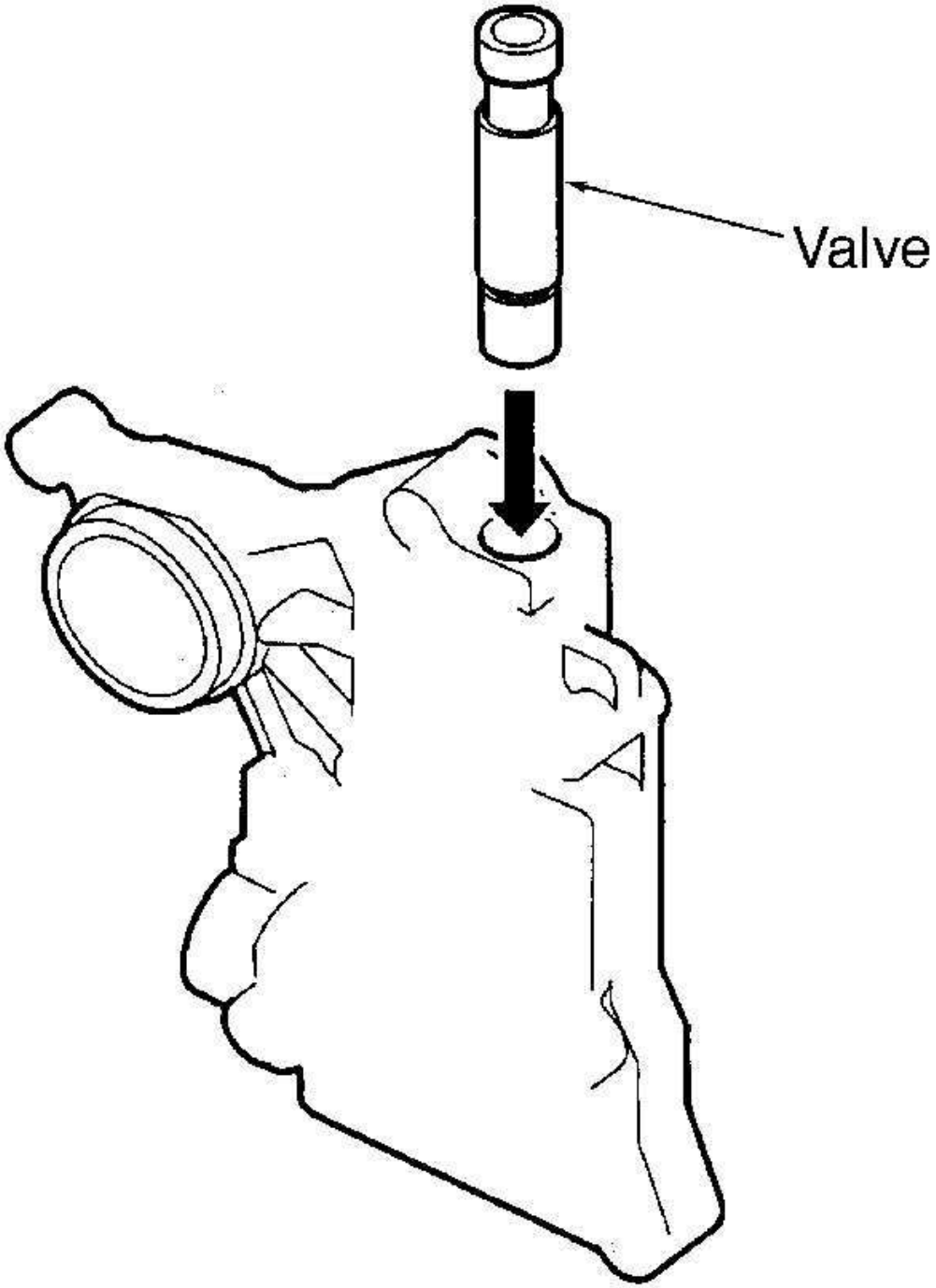

G00085261

cardiagn.com

Fig. 19: Installing Valve In Bore
Courtesy of AMERICAN HONDA MOTOR CO., INC.

Reassembly

1. Coat all parts with ATF before assembly.
2. Install the valves and springs in reverse order of disassembly.
3. Install the filter in the direction shown. See **Fig. 20** .
4. Install all the springs and seats. Insert the spring in the valve, then install the valve in the valve body. Push the spring in with a screwdriver, then install the spring seat.

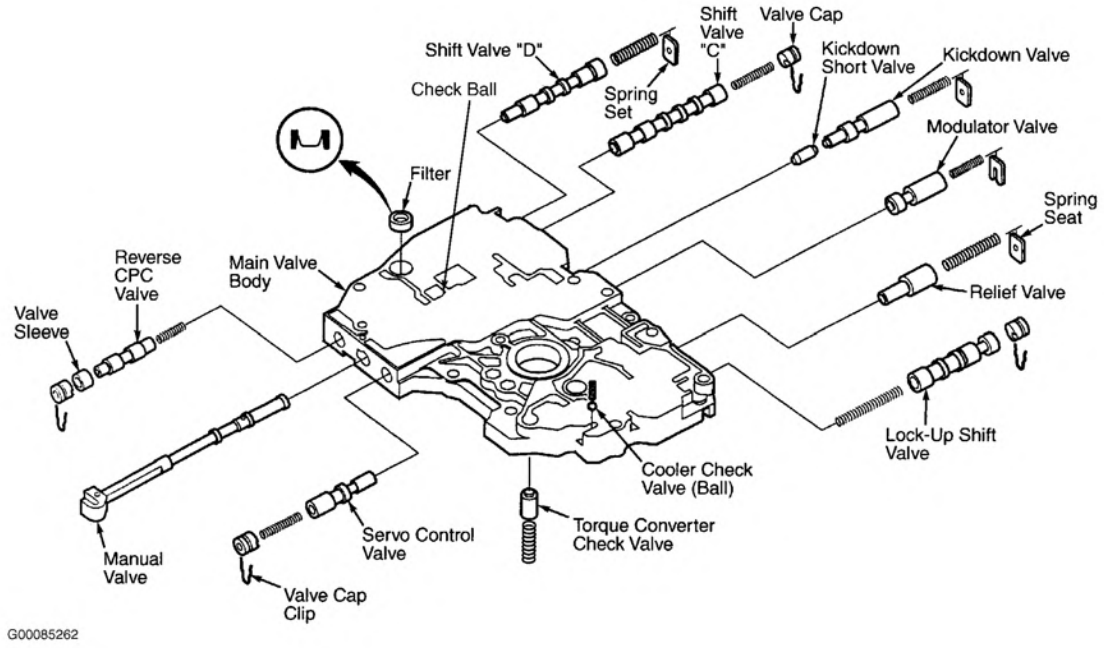

Fig. 20: Exploded View Of Main Valve Body
Courtesy of AMERICAN HONDA MOTOR CO., INC.

REGULATOR VALVE BODY

CAUTION: When disassembling valve body, place components in order and mark spring locations for reassembly reference. Note direction of valve cap installation before removing from valve body.

NOTE: To assist in disassembly of component, see Fig. 21 .

Disassembly

1. Clean all parts thoroughly in solvent or carburetor cleaner and dry them with compressed air. Blow out all

cardiagn.com

passages.

2. Check all valves for free movement. If any fail to slide freely, see **VALVE BODY REPAIR PROCEDURES** under MAIN VALVE BODY.
3. Replace the valve body as an assembly if any parts are worn or damaged. For valve spring specifications, see **Fig. 22** .
4. Hold the regulator spring cap in place while removing the stop bolt. The regulator spring cap is spring loaded. Once the stop bolt is removed, release the spring cap slowly so it does not pop out. See **Fig. 21** .

Reassembly

1. Reassemble in the reverse of the disassembly. Install the filter in the direction shown. See **Fig. 21** .
2. Coat all parts with ATF during assembly.
3. Align the hole in the regulator spring cap with the hole in the valve body, then press the spring cap into the valve body, and tighten the stop bolt.

cardiagn.com

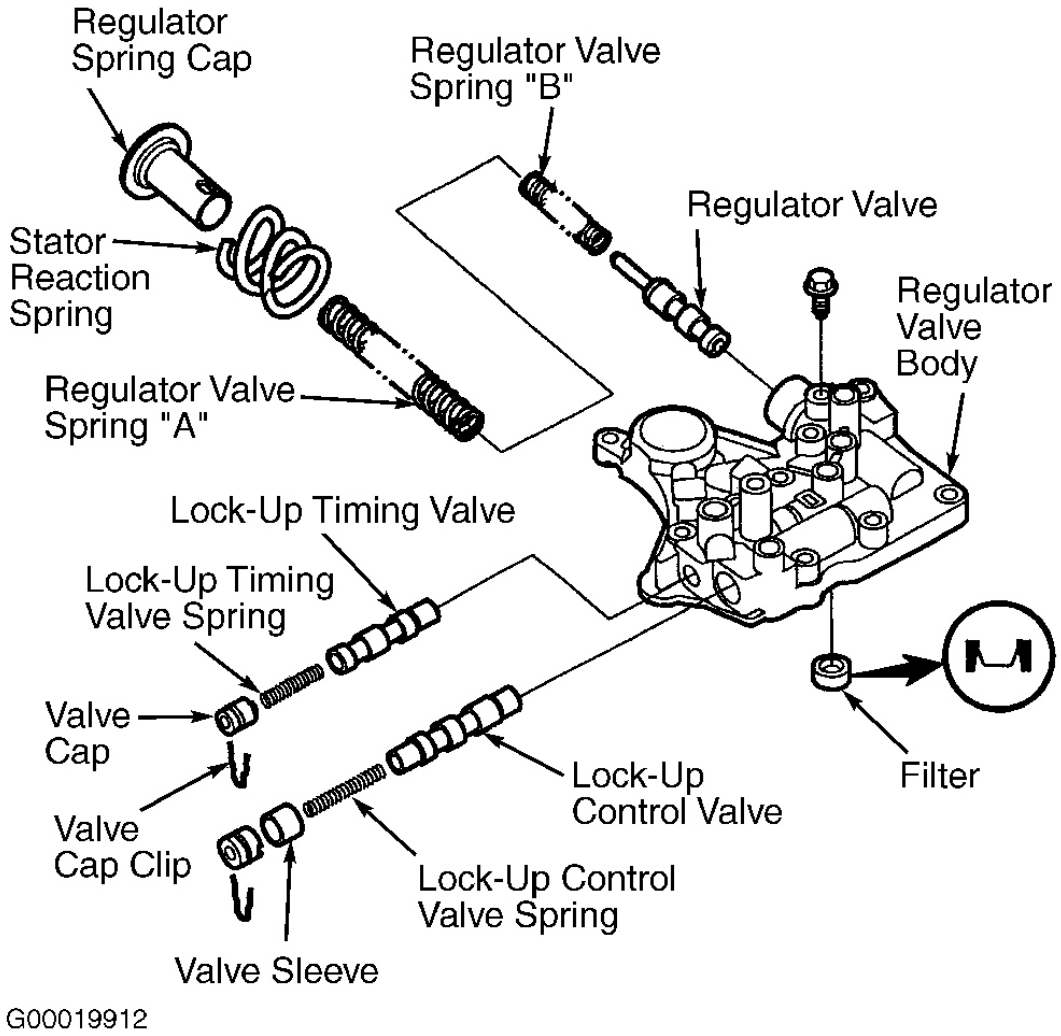

Fig. 21: Exploded View Of Regulator Valve Body
Courtesy of AMERICAN HONDA MOTOR CO., INC.

Spring	Standard (New)-Unit: mm (in.)			
	Wire Dia.	O.D.	Free Length	No. of Coils
Stator reaction spring	5.5 (0.217)	37.4 (1.472)	30.3 (1.193)	2.1
Regulator valve spring A	1.9 (0.075)	14.7 (0.579)	80.6 (3.173)	16.1
Regulator valve spring B	1.4 (0.055)	8.8 (0.346)	44.0 (1.732)	12.0
Lock-up control valve spring	0.7 (0.028)	6.6 (0.260)	42.9 (1.689)	14.2
Lock-up timing valve spring	0.65 (0.026)	6.6 (0.260)	34.8 (1.370)	15.6

G00085264

Fig. 22: Regulator Valve Body Valve Spring Specification Table
Courtesy of AMERICAN HONDA MOTOR CO., INC.

cardiagn.com

SERVO BODY

CAUTION: When disassembling valve body, place components in order and mark spring locations for reassembly reference. Note direction of valve cap installation before removing from valve body.

NOTE: To assist in disassembly of component, see Fig. 23 .

Disassembly

1. Clean all parts thoroughly in solvent or carburetor cleaner; and dry them with compressed air. Blow out all passages.
2. Check all valves for free movement. If any fail to slide freely, see **VALVE BODY REPAIR PROCEDURES** under MAIN VALVE BODY.
3. Replace the valve body as an assembly if any parts are worn or damaged. For valve spring specifications, see **Fig. 24** .

Reassembly

1. Reassemble in the reverse of the disassembly.
2. Coat all parts with ATF during assembly.

cardiagn.com

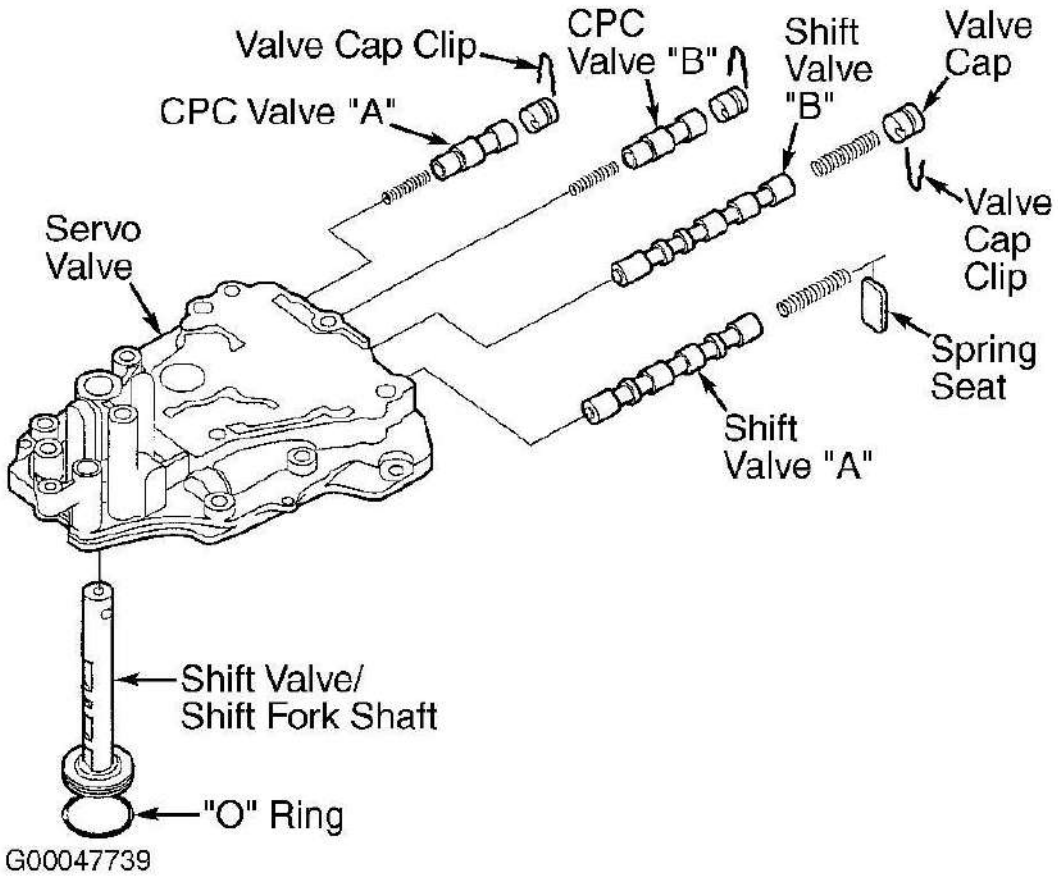

Fig. 23: Exploded View Of Servo Body
Courtesy of AMERICAN HONDA MOTOR CO., INC.

Spring	Standard (New)-Unit: mm (in.)			
	Wire Dia.	O.D.	Free Length	No. of Coils
CPC valve A spring	0.7 (0.028)	6.1 (0.240)	17.8 (0.701)	7.9
CPC valve B spring	0.7 (0.028)	6.1 (0.240)	17.8 (0.701)	7.9
Shift valve B spring	0.8 (0.031)	6.6 (0.260)	49.1 (1.933)	21.7
Shift valve A spring	0.8 (0.031)	6.6 (0.260)	49.1 (1.933)	21.7

G00085265

Fig. 24: Servo Body Valve Spring Specification Table
Courtesy of AMERICAN HONDA MOTOR CO., INC.

TOP ACCUMULATOR BODY

CAUTION: When disassembling valve body, place components in order and mark spring locations for reassembly reference. Note direction of valve cap

cardiagn.com

installation before removing from main body.

NOTE: To assist in disassembly of component, see Fig. 25 .

Disassembly

1. Clean all parts thoroughly in solvent or carburetor cleaner and dry them with compressed air. Blow out all passages.
2. Check all valves for free movement. If any fail to slide freely, see **VALVE BODY REPAIR PROCEDURES** under MAIN VALVE BODY.
3. Replace the valve body as an assembly if any parts are worn or damaged. For valve spring specifications, see **Fig. 26** .
4. Coat all parts with ATF during assembly.

Reassembly

1. Reassembly in the reverse of the disassembly.
2. Coat all parts with ATF during assembly.

cardiagn.com

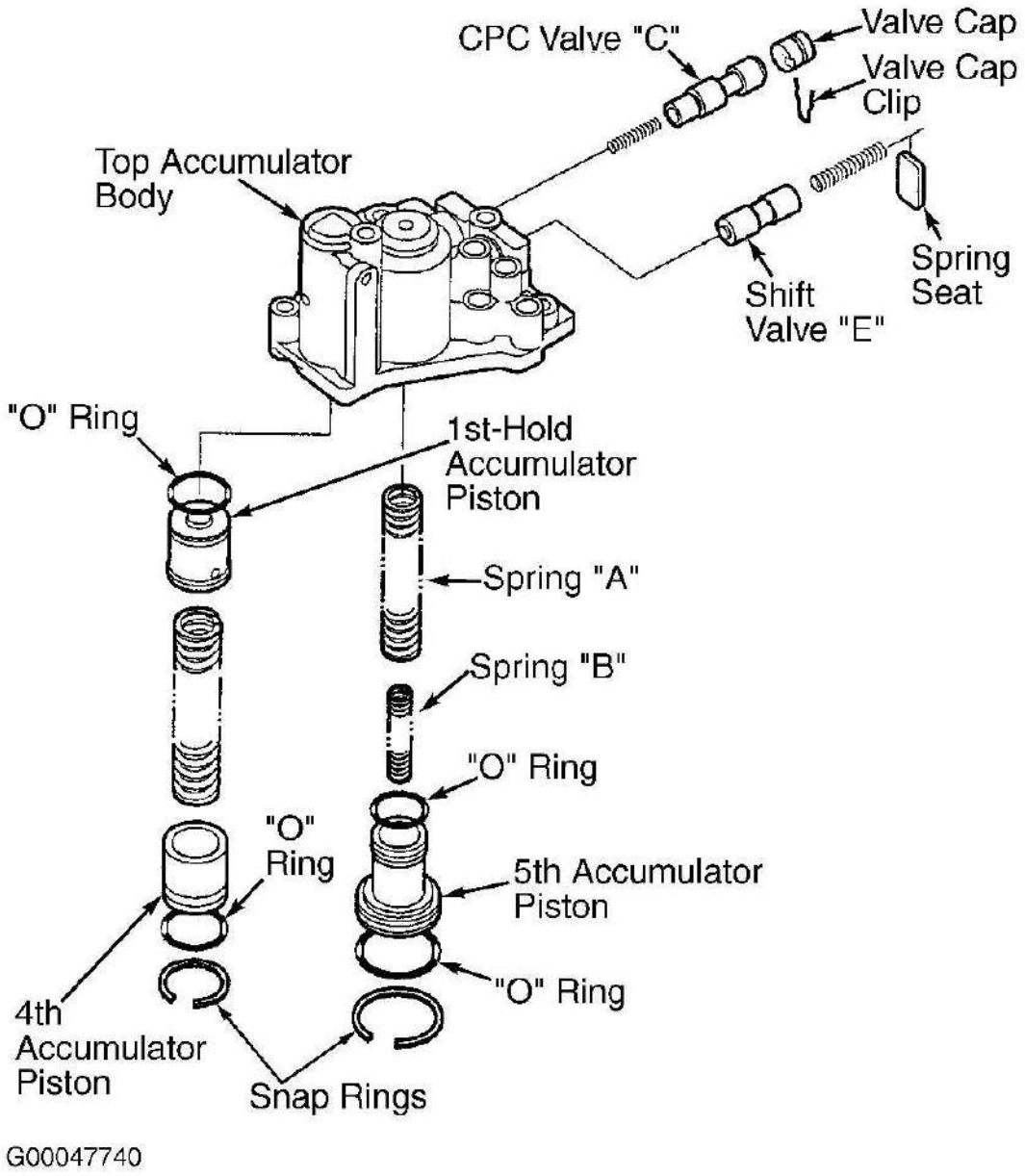

Fig. 25: Exploded View Of Top Accumulator Body
Courtesy of AMERICAN HONDA MOTOR CO., INC.

cardiagn.com

Springs	Standard (New)-Unit: mm (in.)			
	Wire Dia.	O.D.	Free Length	No. of Coils
CPC valve C spring	0.7 (0.028)	6.1 (0.240)	17.8 (0.701)	7.9
Shift valve E spring	0.8 (0.031)	7.1 (0.280)	49.0 (1.929)	17.2
5th accumulator spring A	2.2 (0.087)	16.4 (0.646)	75.7 (2.980)	14.2
5th accumulator spring B	2.0 (0.079)	10.0 (0.394)	45.5 (1.791)	11.6
4th/1st-hold accumulator spring	3.4 (0.134)	19.6 (0.772)	57.4 (2.260)	8.4

G00085266

Fig. 26: Top Accumulator Body Accumulator Spring Specification Table
Courtesy of AMERICAN HONDA MOTOR CO., INC.

ACCUMULATOR BODY

CAUTION: When disassembling valve body, place components in order and mark spring locations for reassembly reference. Note direction of valve cap installation before removing from valve body.

NOTE: To assist in disassembly of component, see Fig. 27 .

Disassembly

1. Do not use a magnet to remove the check balls, it may magnetize the balls.
2. Clean all parts thoroughly in solvent or carburetor cleaner and dry them with compressed air. Blow out all passages.
3. Check all valves for free movement. If any fail to slide freely, see **VALVE BODY REPAIR PROCEDURES** under MAIN VALVE BODY.
4. Replace the valve body as an assembly if any parts are worn or damaged. For valve spring specifications, see **Fig. 28** .

Reassembly

1. Reassemble in the reverse of the disassembly.
2. Coat all parts with ATF during assembly.

cardiagn.com

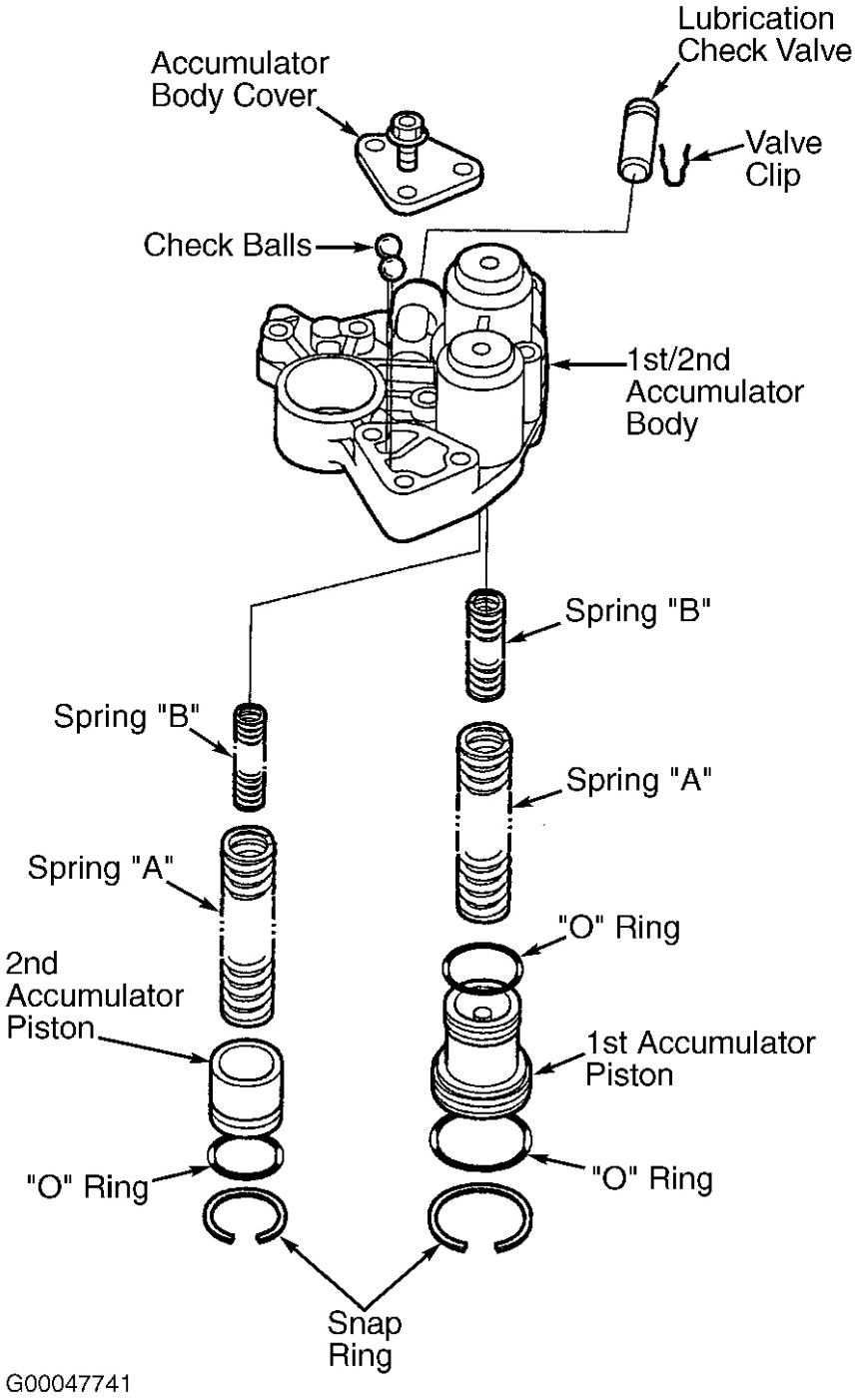

Fig. 27: Exploded View Of Accumulator Body
Courtesy of AMERICAN HONDA MOTOR CO., INC.

cardiagn.com

Springs	Standard (New)-Unit: mm (in.)			
	Wire Dia.	O.D.	Free Length	No. of Coils
1st accumulator spring B	2.3 (0.091)	12.6 (0.496)	42.0 (1.654)	9.9
1st accumulator spring A	2.4 (0.094)	19.5 (0.768)	67.7 (2.665)	10.2
2nd accumulator spring B	2.6 (0.102)	13.0 (0.512)	44.0 (1.732)	9.0
2nd accumulator spring A	2.5 (0.098)	19.6 (0.772)	57.7 (2.272)	9.5

G00085267

Fig. 28: Accumulator Body Spring Specification Table
Courtesy of AMERICAN HONDA MOTOR CO., INC.

3RD ACCUMULATOR & END COVER

CAUTION: When disassembling valve body, place components in order and mark spring locations for reassembly reference. Note direction of valve cap installation before removing from valve body.

NOTE: To assist in disassembly of component, see Fig. 29 .

Disassembly

Clean all parts thoroughly in solvent or carburetor cleaner and dry them with compressed air. Blow out all passages. Coat all parts with ATF during assembly. Replace the cover as an assembly if any parts are worn or damaged. For valve spring specifications, see **Fig. 30** .

Reassembly

1. Reassemble in the reverse of the disassembly.
2. Coat all parts with ATF during assembly.

cardiagn.com

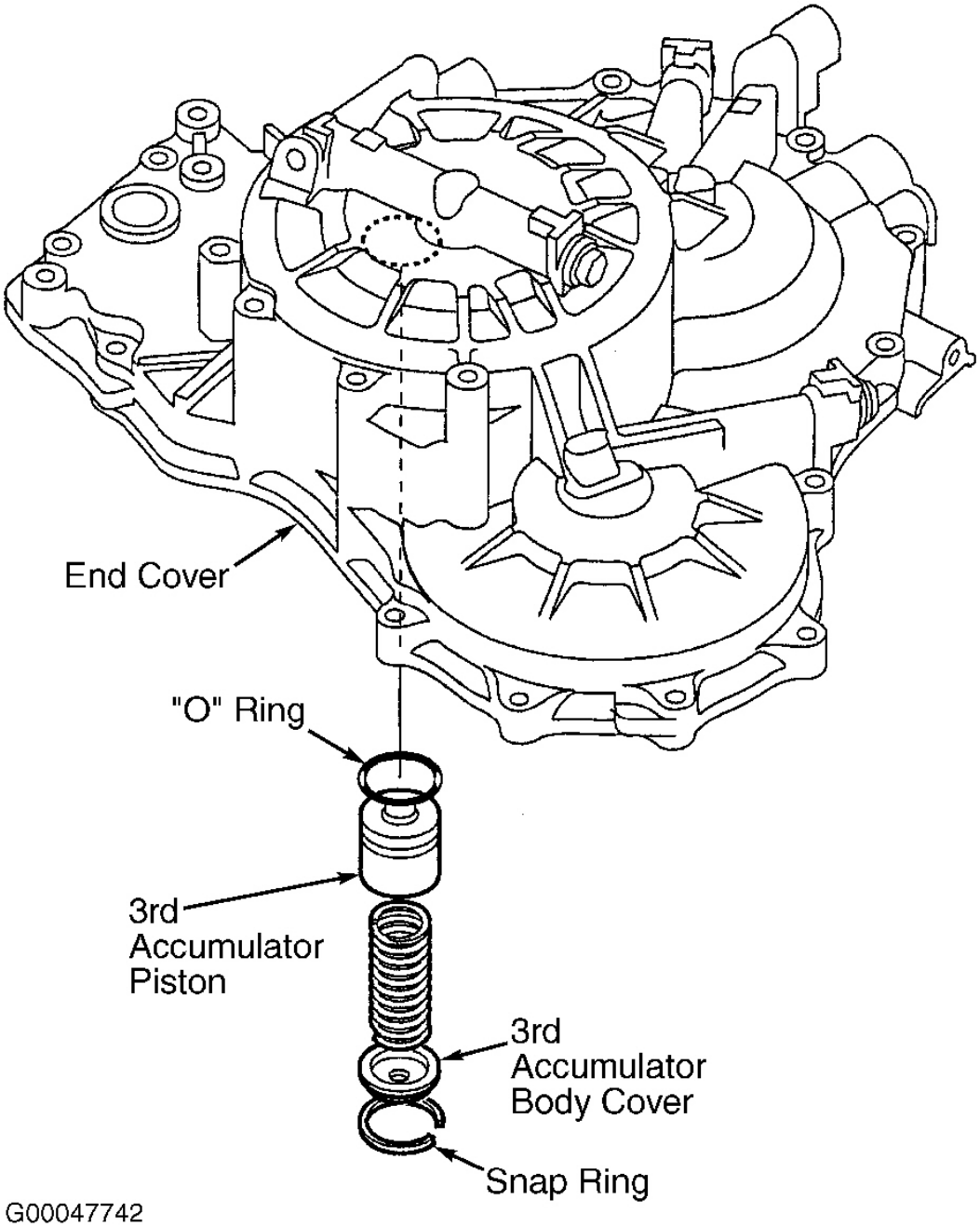

Fig. 29: Exploded View Of 3rd Accumulator & End Cover
Courtesy of AMERICAN HONDA MOTOR CO., INC.

cardiagn.com

Springs	Standard (New)-Unit: mm (in.)			
	Wire Dia.	O.D.	Free Length	No. of Coils
3rd accumulator spring	3.1 (0.122)	19.6 (0.772)	39.4 (1.551)	5.5

G00085268

Fig. 30: 3rd Accumulator Body Spring Specification Table
Courtesy of AMERICAN HONDA MOTOR CO., INC.

OIL PUMP

Disassembly

Note direction of oil pump gear installation in main valve body. Remove oil pump driven gear shaft and oil pump gears from main valve body (if not previously removed). See **Fig. 11** .

Cleaning & Inspection

1. Install the ATF pump drive gear, driven gear, and ATF pump driven gear shaft in the main valve body. Lubricate all parts with ATF, and install the ATF, pump driven gear with its grooved and chamfered side facing up.
2. Measure the side clearance of the ATF pump drive gear and driven gear. See **Fig. 31** . See **OIL PUMP SPECIFICATIONS** table.
3. Remove the ATF pump driven gear shaft. Measure the thrust clearance between the ATF pump driven gear and the valve body with a straight edge and a feeler gauge.

OIL PUMP SPECIFICATIONS

Application	In. (mm)
Side Clearance	
Oil Pump Drive Gear	.0083-.0104 (.210-.265)
Oil Pump Driven Gear	.0028-.0049 (.070-.125)
Thrust Clearance	
Standard	.0010-.0020 (.030-.050)
Wear Limit	.0028 (.070)

Reassembly

Coat components with ATF. To reassemble, reverse disassembly procedure. Ensure chamfered and grooved side of oil pump driven gear is facing upward (toward separator plate side of main valve body).

cardiagn.com

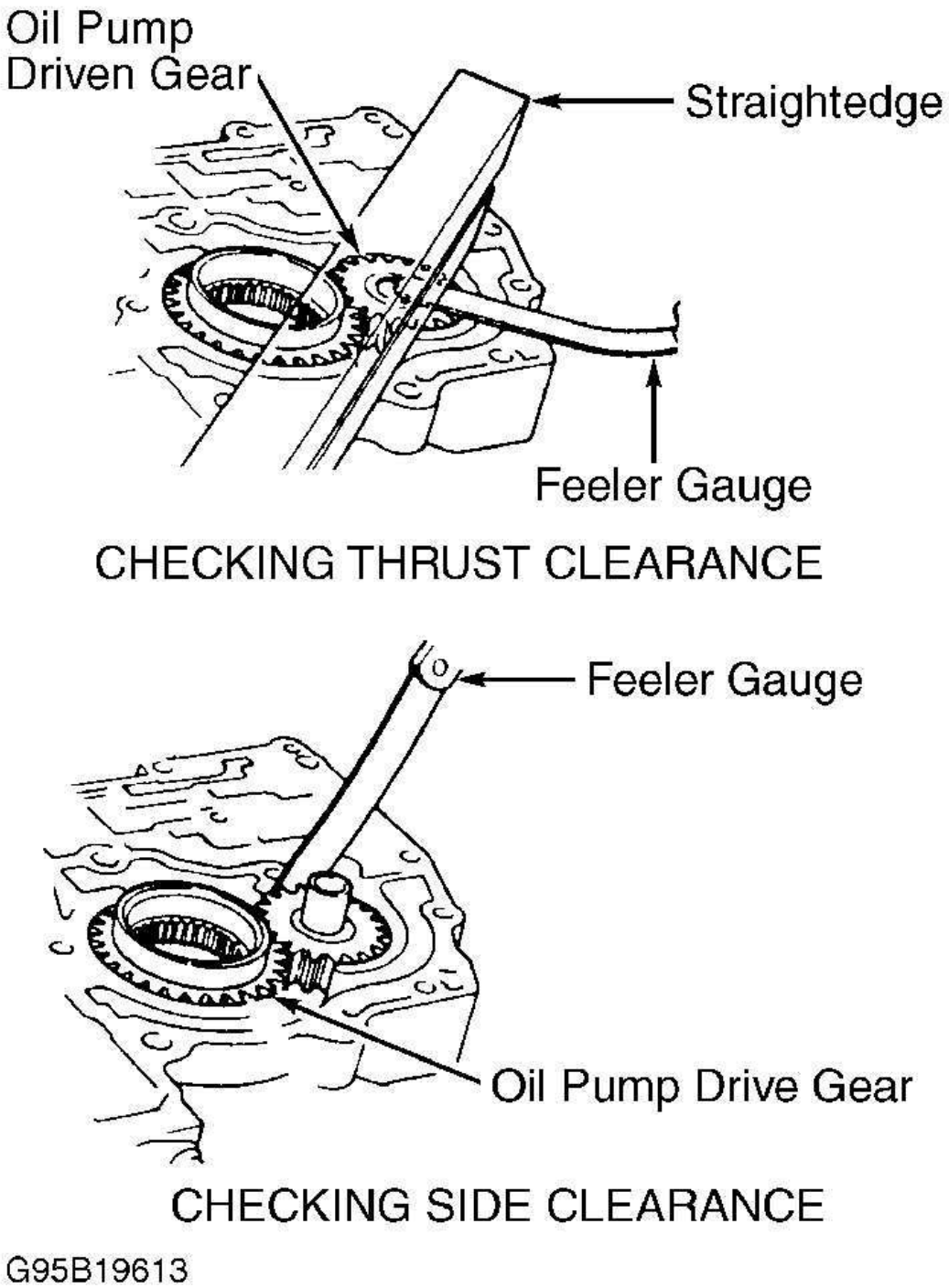

Fig. 31: Measuring Oil Pump Clearances
Courtesy of AMERICAN HONDA MOTOR CO., INC.

cardiagn.com

MAINSHAFT

Disassembly

Note location of mainshaft components. See **Fig. 32** . Remove mainshaft components.

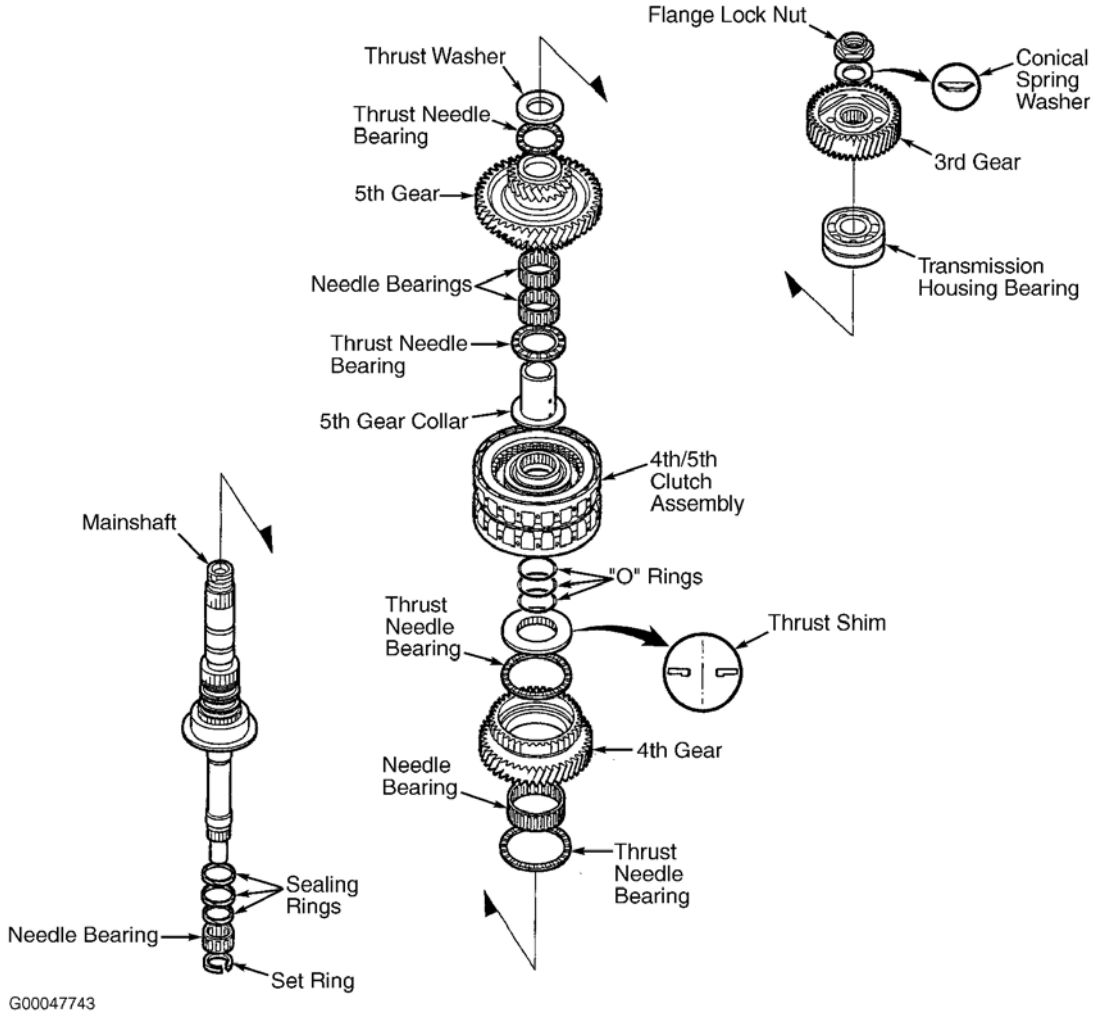

Fig. 32: Exploded View Of Mainshaft
Courtesy of AMERICAN HONDA MOTOR CO., INC.

Inspection

1. Lubricate all parts with ATF during assembly.
2. Check the clearance of the 4th/5th clutch assembly. See **4TH/5TH CLUTCH CLEARANCE INSPECTION** .
3. Inspect the thrust needle bearing and the needle bearing for galling and rough movement.

cardiagn.com

4. Inspect the splines for excessive wear and damage.
5. Check shaft bearing surfaces for scoring and excessive wear.
6. Before installing the "O" rings, wrap the shaft splines with tape to prevent "O" ring damage.
7. Install the conical spring washer in the direction shown. See **Fig. 32** .
8. Inspect the condition of the sealing rings. If the sealing rings are worn, distorted, or damaged, replace them. See **MAINSHAFT SEALING RING REPLACEMENT** .

4th/5th Clutch Clearance Inspection

1. Remove the "O" rings from the mainshaft.
2. Assemble the 41 x 73 mm thrust shim, 4th/5th clutch assembly, and 5th gear collar on the mainshaft. See **Fig. 32** .
3. Hold the 5th gear collar against the clutch assembly, then measure the clearance between the clutch guide and the 5th gear collar with a feeler gauge in at least 3 places. See **Fig. 33** . Use the average as the actual clearance.
4. If the clearance is out of standard, remove the thrust shim and measure its thickness.
5. Clearance should be .001-.004" (.03-.11 mm). Select and install a new shim, then recheck. See **Fig. 34** .
6. After replacing the thrust shim, make sure the clearance is within standard.

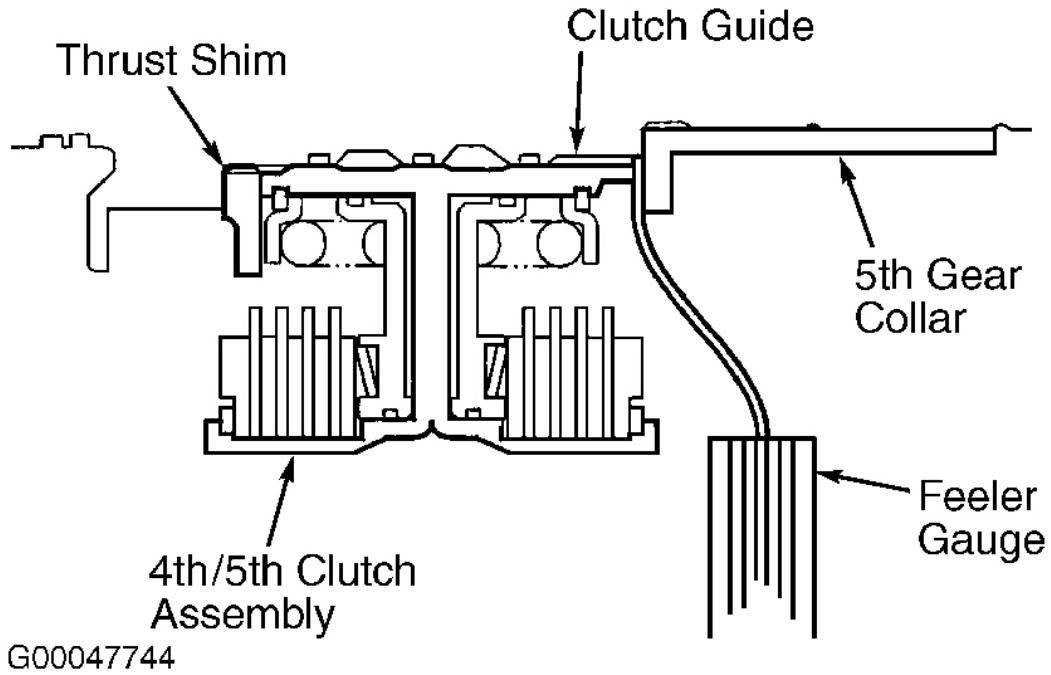

Fig. 33: Measuring 4th-5th Clutch Assembly Clearance
Courtesy of AMERICAN HONDA MOTOR CO., INC.

cardiagn.com

No.	Part Number	Thickness
1	90414-P7W-000	7.85 mm (0.309 in.)
2	90415-P7W-000	7.90 mm (0.311 in.)
3	90416-P7W-000	7.95 mm (0.313 in.)
4	90417-P7W-000	8.00 mm (0.315 in.)
5	90418-P7W-000	8.05 mm (0.317 in.)
6	90419-P7W-000	8.10 mm (0.319 in.)

G00085269

Fig. 34: Mainshaft Thrust Shim Selection Chart
Courtesy of AMERICAN HONDA MOTOR CO., INC.

Mainshaft Sealing Ring Replacement

NOTE: The sealing rings are synthetic resin with chamfered ends. Check the condition of the sealing rings, and replace them only if they are worn, distorted, or damaged.

1. For a better fit, squeeze sealing rings together slightly before installing them.
2. Apply ATF to the new sealing rings then install them on the mainshaft.
3. After installing the sealing rings, verify the following:
   - The rings are fully seated in the groove.
   - The rings are not twisted.
   - The chamfered ends of the rings are properly joined. See **Fig. 35** .

cardiagn.com

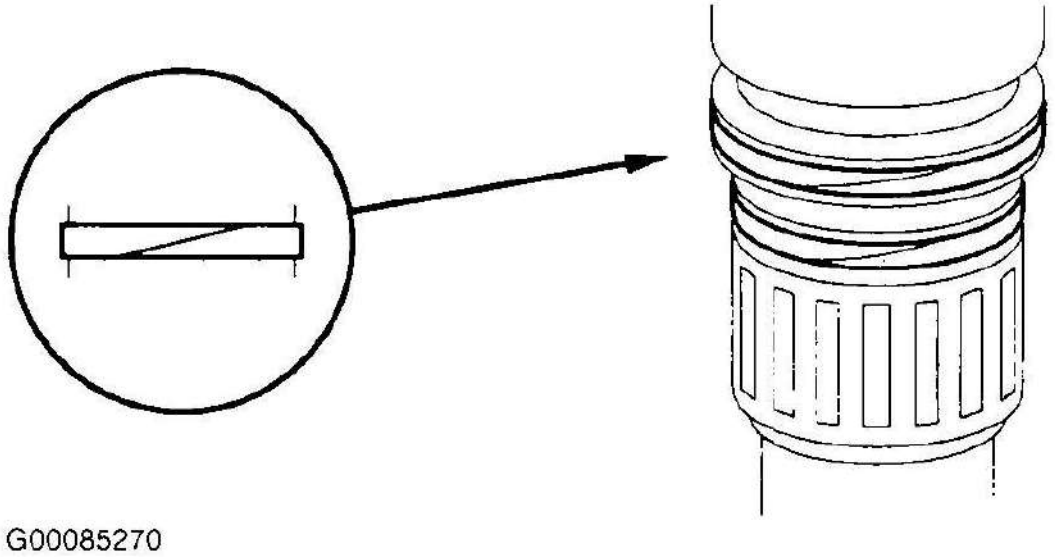

Fig. 35: Identifying Sealing Ring Installation
Courtesy of AMERICAN HONDA MOTOR CO., INC.

Reassembly

1. Before installing the "O" rings, wrap the shaft splines with tape to prevent "O" ring damage.
2. Install the conical spring washer in the direction shown. See **Fig. 32** .

COUNTERSHAFT

NOTE: Lock nut has left-hand threads.

NOTE: Letter references in parenthesis are identified in following illustrations.

Disassembly

1. Remove the lock nut, and takeoff components down to the reverse selector hub. See **Fig. 36** .
2. Remove the reverse selector hub, 4th gear, and 1st gear.
3. Remove the reverse selector hub (A) and the 5th gear (B) from the countershaft with a press. Place a shaft protector (C) between the countershaft and press to prevent damaging the countershaft. See **Fig. 37** .

NOTE: Some reverse selector hubs are not press-fitted and can be removed without using a press.

4. Remove the needle bearing, snap ring, 35 x 47 x 7.8 mm distance collar, 31 mm cotters, 35 x 47 x 45.6

cardiagn.com

mm distance collar, and 31 mm cotters from the countershaft.

5. Remove the 1st gear (A) and 4th gear (B) from the countershaft with a press. See **Fig. 38** . Place a shaft protector (C) between the countershaft and press to prevent damaging the countershaft.

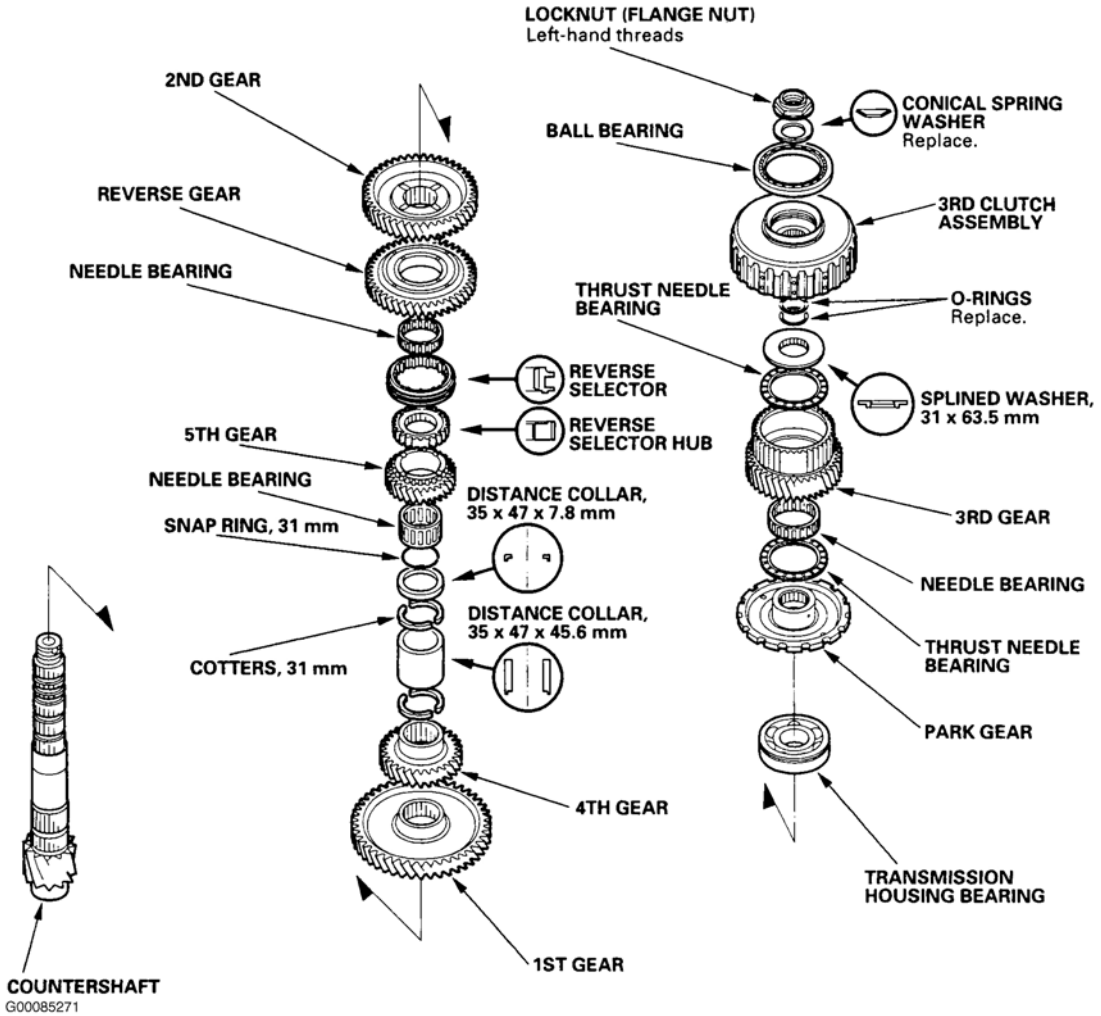

Fig. 36: Exploded View Of Countershaft Assembly
Courtesy of AMERICAN HONDA MOTOR CO., INC.

cardiagn.com

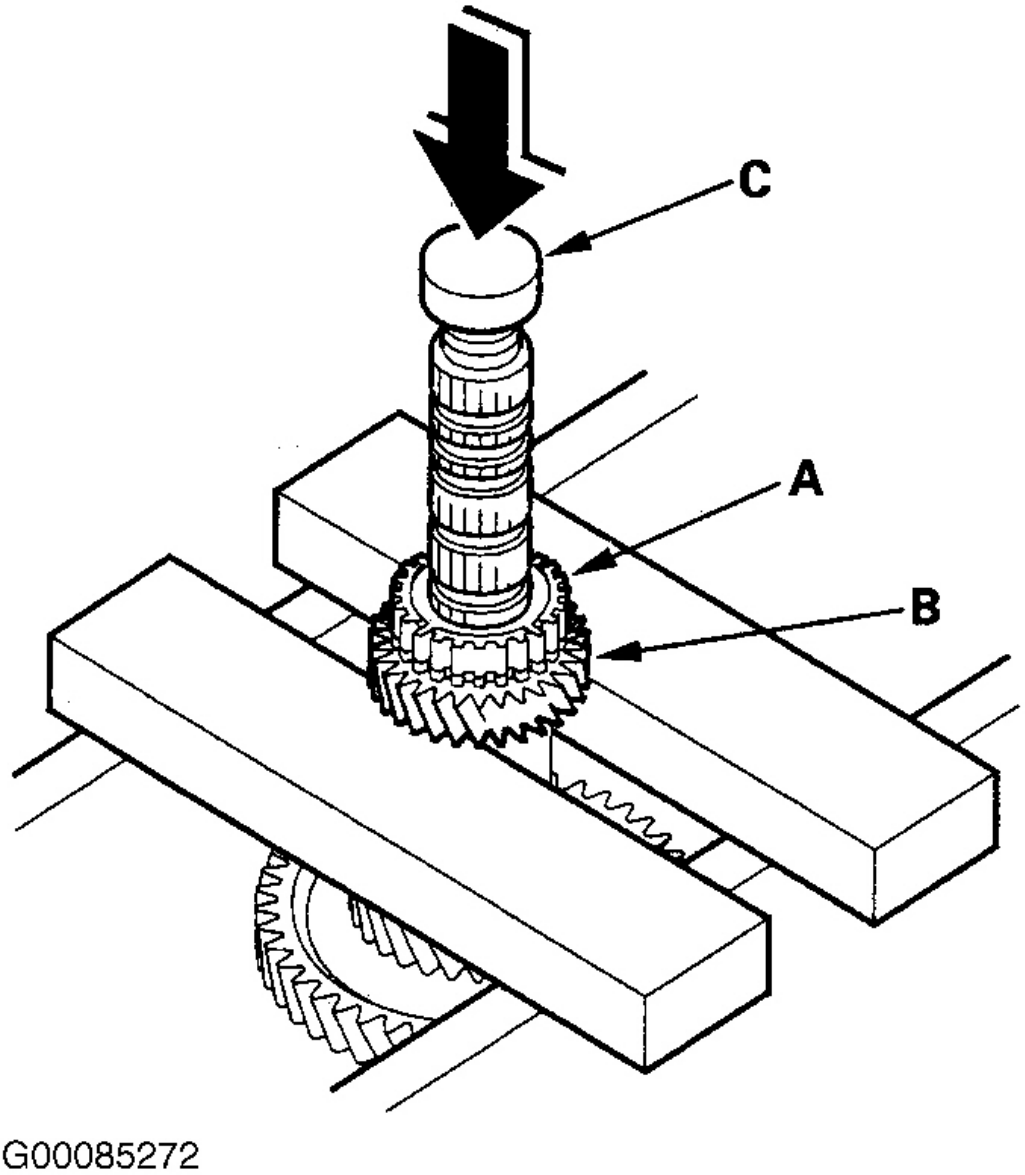

Fig. 37: Removing Reverse Selector Hub
Courtesy of AMERICAN HONDA MOTOR CO., INC.

cardiagn.com

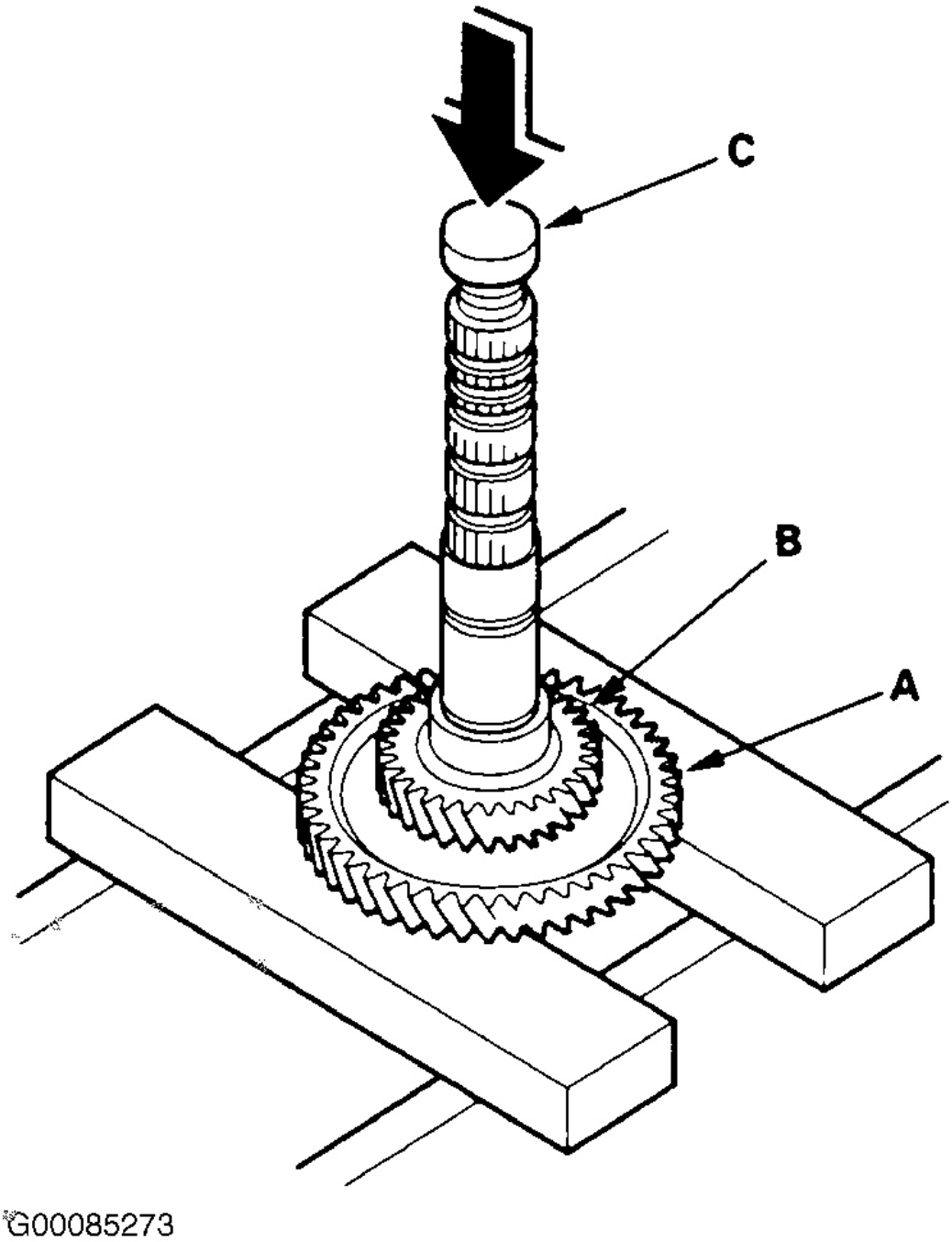

Fig. 38: Removing 4th Gear
Courtesy of AMERICAN HONDA MOTOR CO., INC.

Cleaning & Inspection

cardiagn.com

1. Check the bearing on the 3rd clutch for wear and rough movement. If the bearing is worn or damaged, replace it.
2. Inspect the thrust needle bearing and the needle bearing for galling and rough movement.
3. Check the splines for excessive wear and damage.
4. Check the shaft bearing surfaces for scoring and excessive wear.

Reassembly

1. Apply ATF to the parts.
2. Install the 1st gear on the countershaft by hand.
3. Align the shaft splines with those on 4th gear, then press the countershaft (A) into the 4th gear with a press. See **Fig. 39** . Place a shaft protector (B) between the countershaft and press to prevent damaging the countershaft.
4. Stop pressing the countershaft when the 4th gear contacts the 1st gear (C).
5. Install the 31 mm cotters, 35 x 47 x 45.6 mm distance collar, 31 mm cotters, 35 x 47 x 7.8 mm distance collar, snap ring, needle bearing, and 5th gear (A) on the countershaft.

NOTE: Some reverse selector hubs are not press fitted, and can be installed without using the driver and a press.

6. Slide the reverse selector hub (B) over the countershaft (C), then press it into place with appropriate driver and a press. See **Fig. 40** .
7. Install the distance collars, reverse selector hub, reverse selector, splined washer, and conical spring washer in the direction shown. See **Fig. 36** .

cardiagn.com

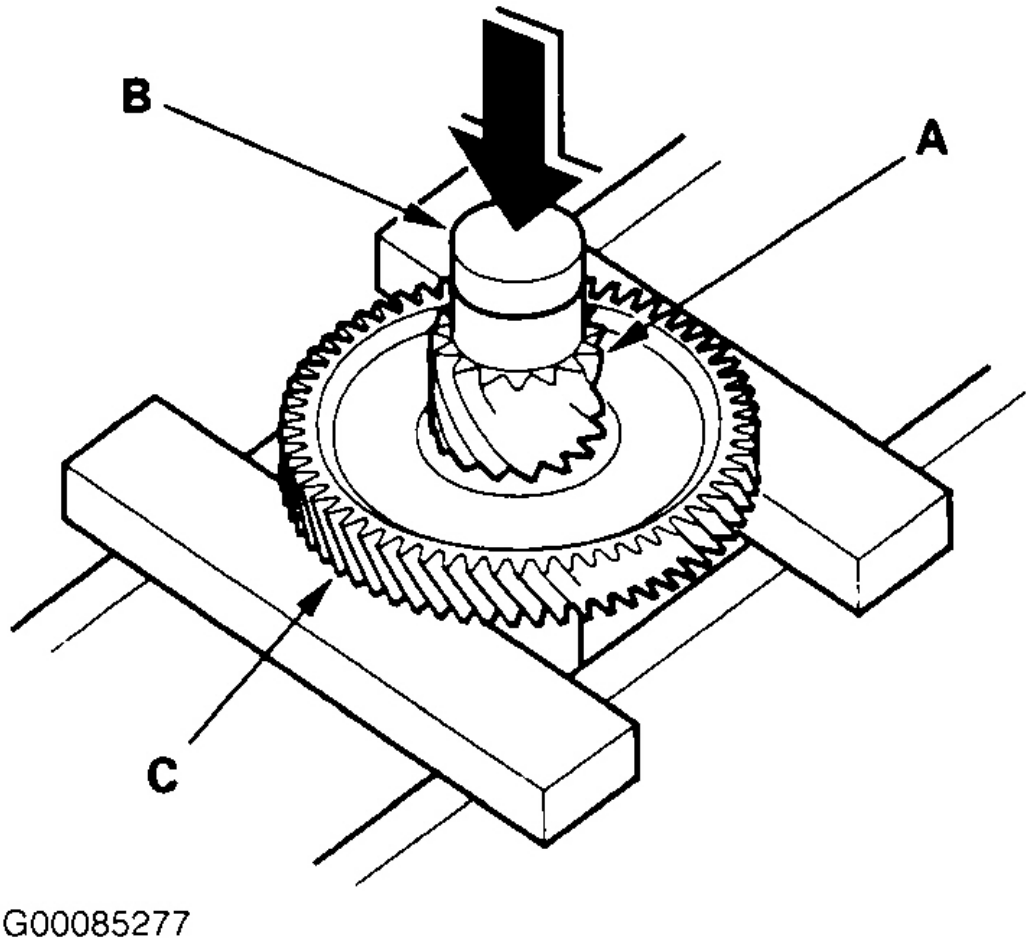

Fig. 39: Pressing Countershaft Into 4th Gear
Courtesy of AMERICAN HONDA MOTOR CO., INC.

cardiagn.com

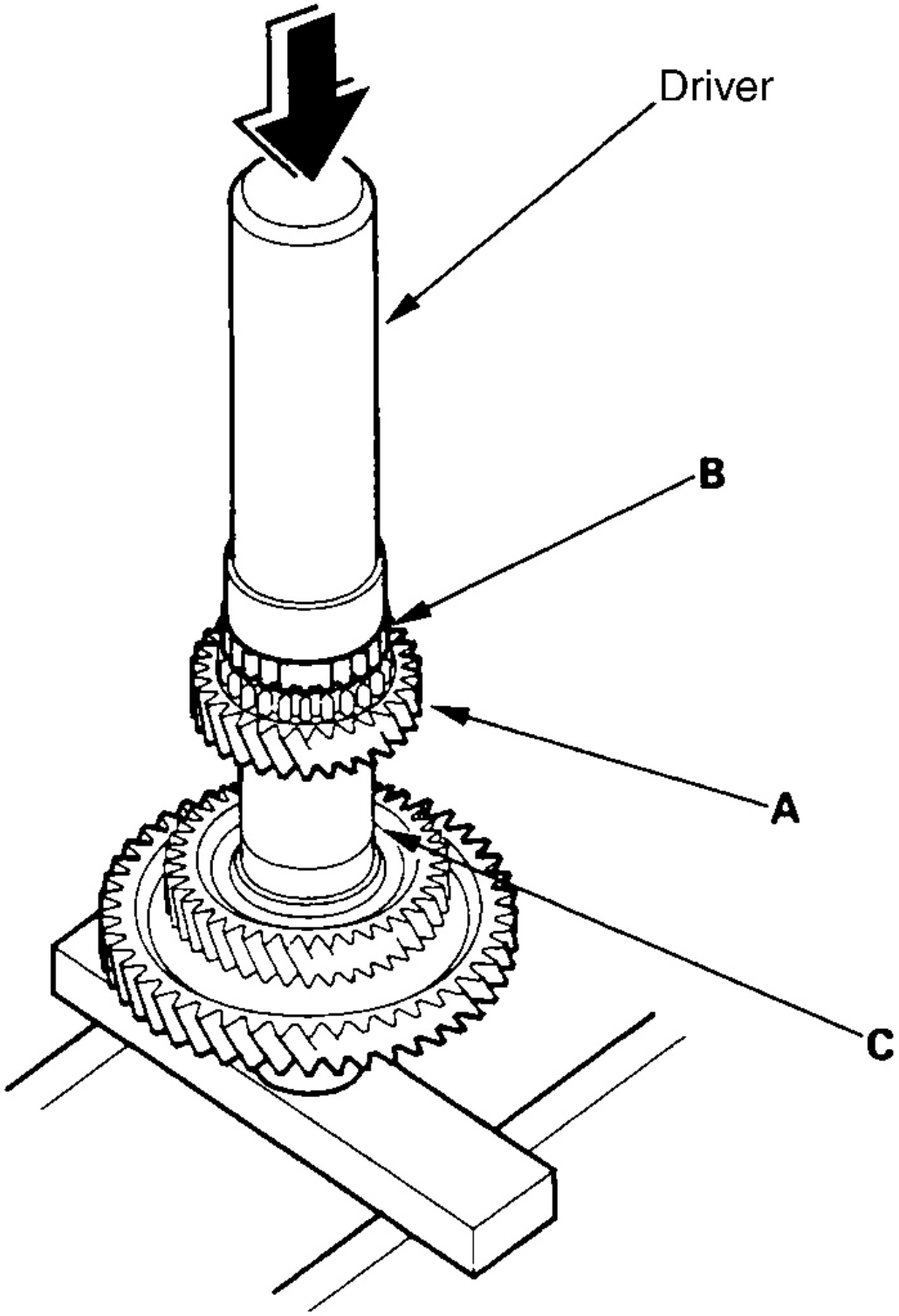

G00085278

cardiagn.com

Fig. 40: Pressing Reverse Selector Hub On Countershaft
Courtesy of AMERICAN HONDA MOTOR CO., INC.

SECONDARY SHAFT

NOTE: Lock nut has left-hand threads.

Disassembly

1. Remove the lock nut, and disassemble the shaft and gears. See **Fig. 41** .
2. Inspect the thrust needle bearing and needle bearing for galling and rough movement.
3. Check the clearance of the secondary shaft assembly.
4. Check the splines for excessive wear and damage.
5. Check the shaft bearing surfaces for scoring and excessive wear.
6. Check the idler gear bearing for wear and rough movement. If the bearing is worn or damaged, replace it.

cardiagn.com

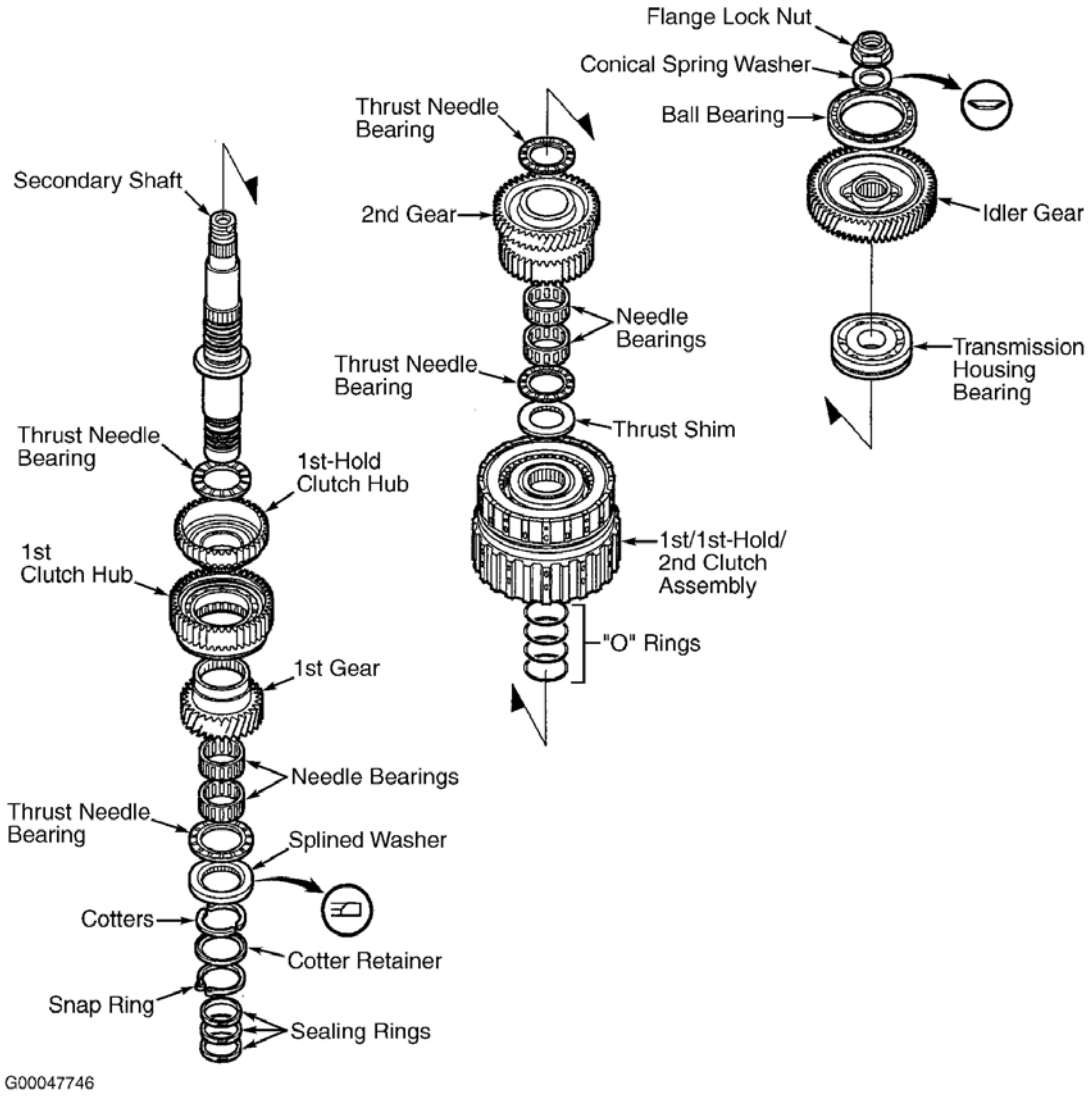

Fig. 41: Exploded View Of Secondary Shaft
Courtesy of AMERICAN HONDA MOTOR CO., INC.

Clearance Inspection

1. Remove the "O" rings from the secondary shaft.
2. Assemble the thrust needle bearing, 1st gear assembly, needle bearings, thrust needle bearing, 38 x 56.5 mm splined washer, 32 mm cotters, cotter retainer, and snap ring on the secondary shaft.
3. Measure the clearance between the 38 x 56.5 mm splined washer and cotters with a feeler gauge in at least 3 places. See **Fig. 42** . Use the average as the actual clearance. Standard is .003-.006" (.07-.15 mm).
4. If the measurement is out of standard, remove the splined washer, and measure its thickness.
5. Select and install a new splined washer, then recheck the clearance. Splined washers range in thickness from .270" (6.85 mm) to .280" (7.10 mm) in .002" (.05 mm) increments.

cardiagn.com

6. Remove the 27 x 47 x 5 mm thrust washer from the mainshaft.
7. Assemble the 1st/1st-hold/2nd clutch assembly, 37 x 55 mm thrust washer, thrust needle bearing, needle bearings, 2nd gear, thrust needle bearing, and 27 x 47 x 5 mm thrust washer (removed from mainshaft) on the secondary shaft sub-assembly. See **Fig. 41** .
8. Set the dial indicator on the 2nd gear.
9. Hold the 27 x 47 x 5 mm thrust washer against the clutch assembly, and measure the 2nd gear axial clearance in at least three places while moving the 2nd gear. Use the average as the actual clearance. Standard is .002-.005" (.04-.12 mm).
10. If the measurement is out of standard, remove the 37 x 55 mm thrust washer and measure it's thickness.
11. Select and install a new thrust washer, then recheck the clearance. Thrust washers range in thickness from .193" (4.90 mm) to .205" (5.20 mm) in .002" (.05 mm) increments.
12. Disassemble the shaft and gears.
13. Reinstall the 27 x 47 x 5 mm thrust washer on the mainshaft.

cardiagn.com

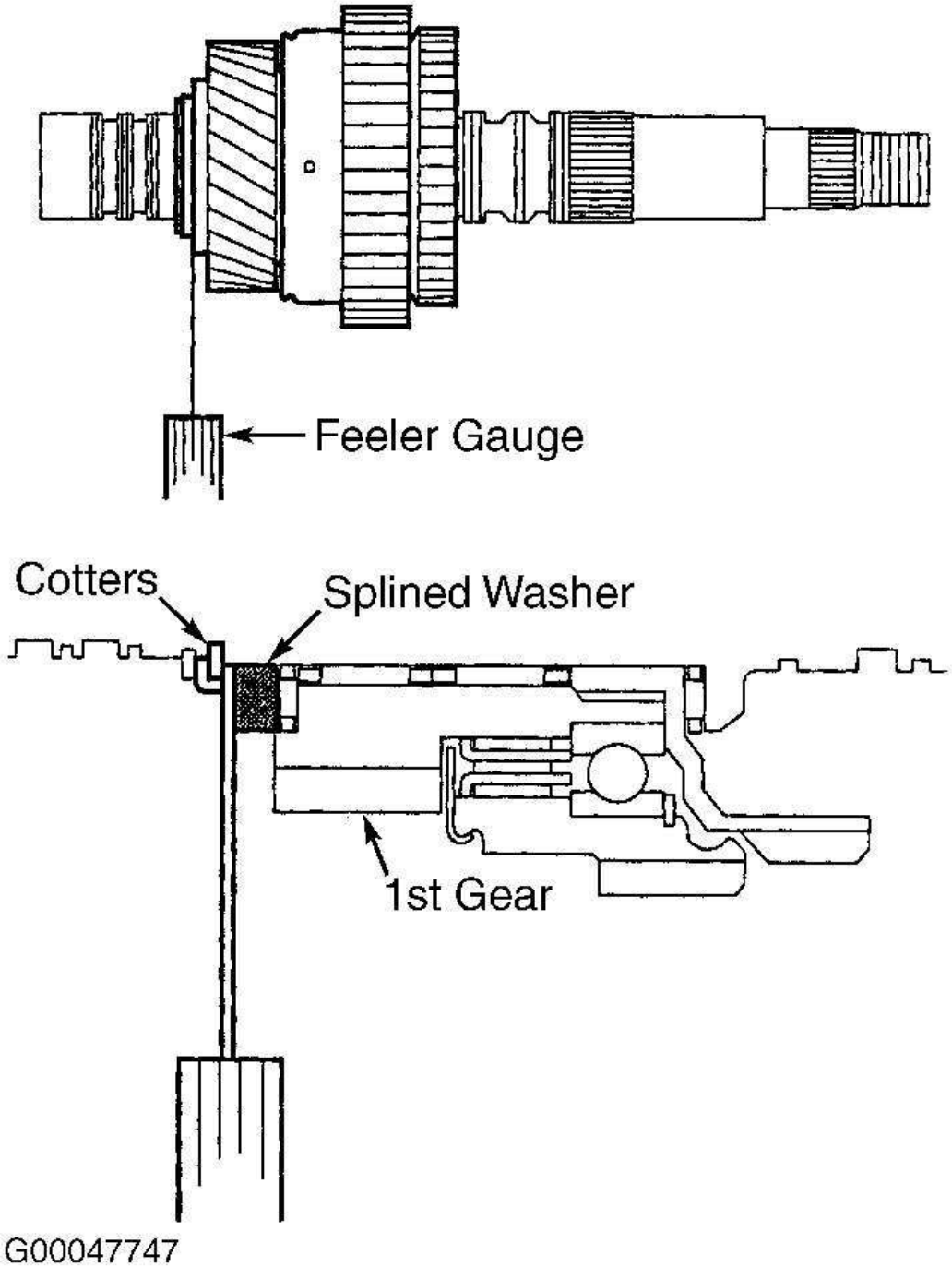

Fig. 42: Measuring 1st Gear Clearance
Courtesy of AMERICAN HONDA MOTOR CO., INC.

cardiagn.com

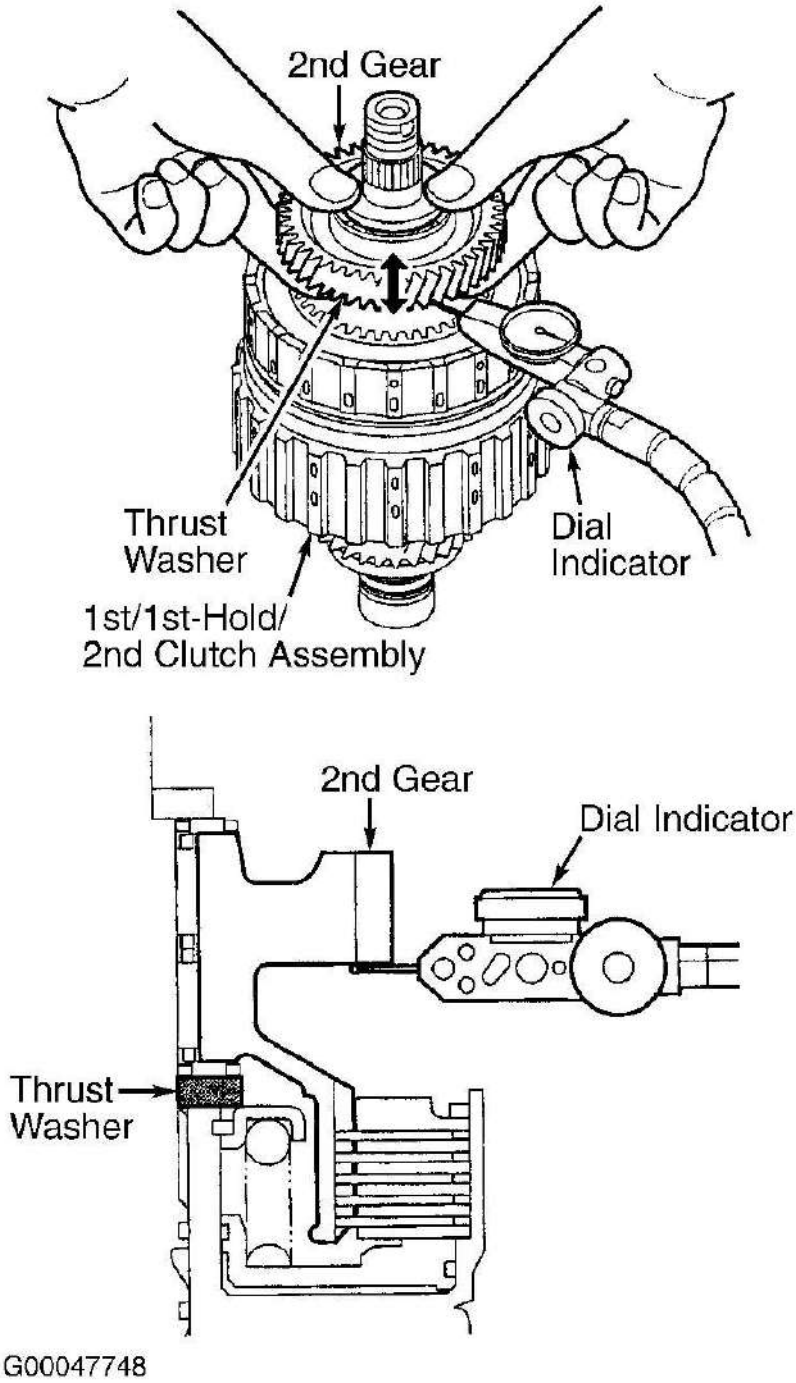

Fig. 43: Measuring Secondary Shaft 2nd Gear Clearance
Courtesy of AMERICAN HONDA MOTOR CO., INC.

Reassembly

cardiagn.com

NOTE: Before installing the "O" rings, wrap the shaft splines with tape to prevent damage to the "O" rings.

1. Lubricate all parts with ATF during reassembly.
2. Install the conical spring washer and splined washer in the direction shown. See **Fig. 41** .

1ST GEAR ONE-WAY CLUTCH

Inspection

NOTE: 1st gear one-way clutch is not available from manufacturer separately from 1st clutch hub.

1. Hold the 1st-hold clutch hub, and turn the 1st gear in clockwise direction to be sure it turns freely. Also make sure the 1st gear does not turn in the opposite direction.
2. If any problem occurs on the 1st gear one-way clutch, replace the 1st clutch hub.

cardiagn.com

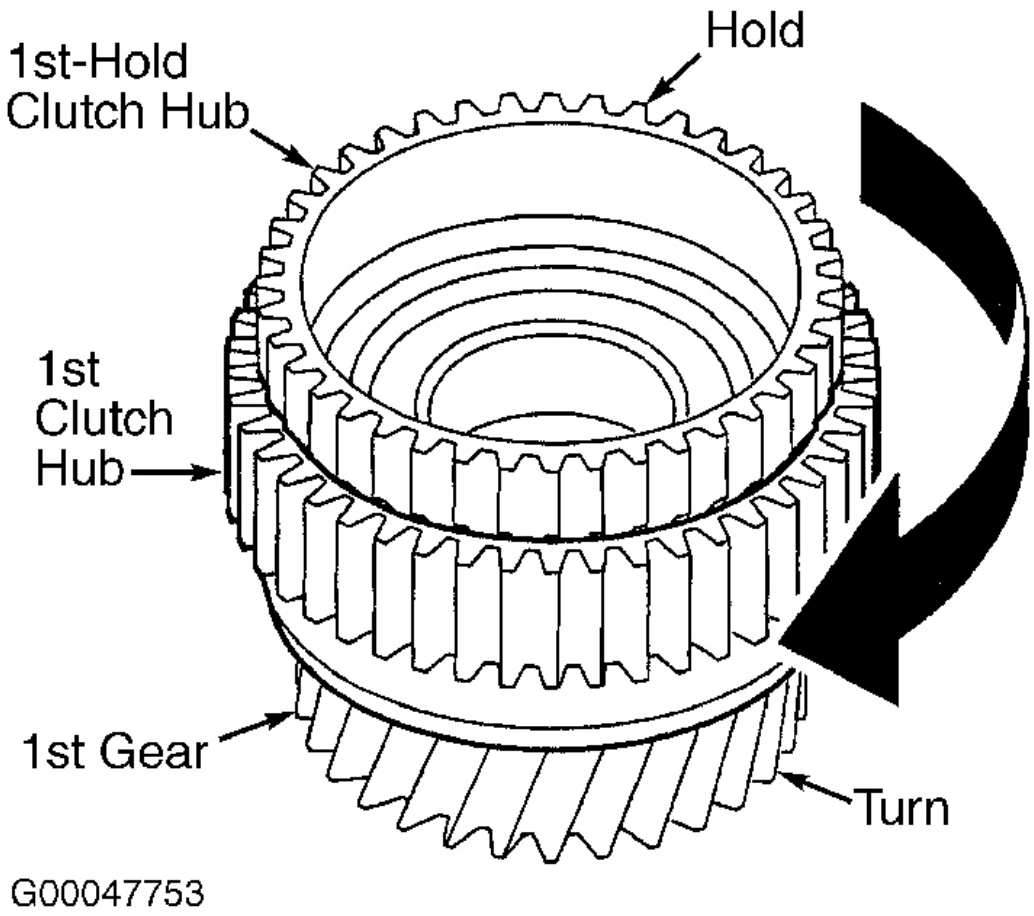

Fig. 44: Checking 1st Gear One-Way Clutch Operation
Courtesy of AMERICAN HONDA MOTOR CO., INC.

Disassembly & Reassembly

1. Remove the 1st-hold clutch hub from the 1st gear with driver and a press. See **Fig. 45** .
2. Remove the 1st clutch hub from the 1st gear, then install the new 1st clutch hub in the 1st gear.
3. Install the 1st-hold clutch hub in the 1st gear with driver and a press. See **Fig. 46** .

cardiagn.com

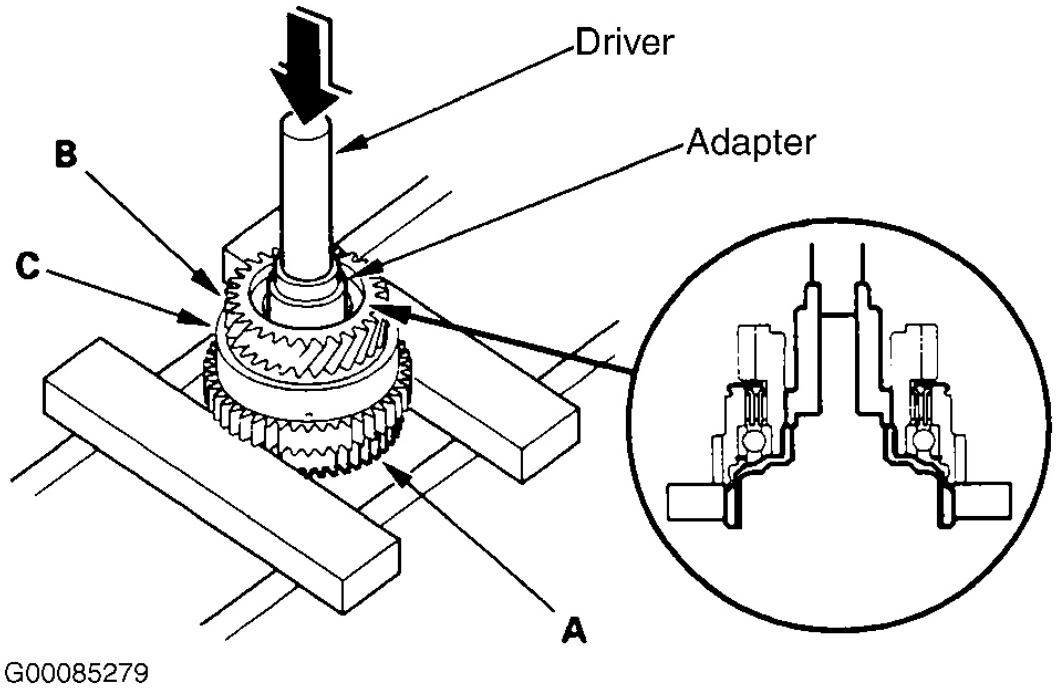

Fig. 45: Removing 1st-Hold Clutch
Courtesy of AMERICAN HONDA MOTOR CO., INC.

cardiagn.com

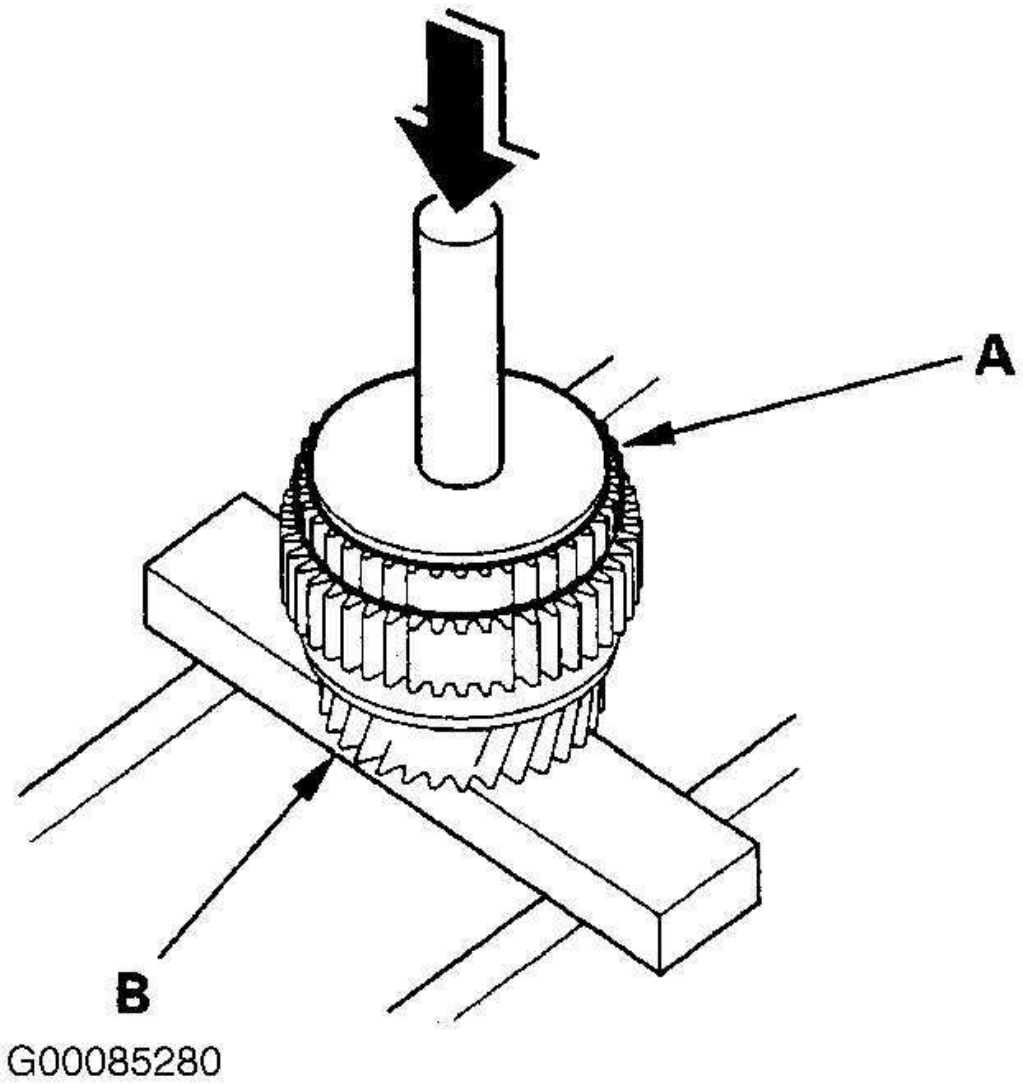

Fig. 46: Installing 1st-Hold Clutch
Courtesy of AMERICAN HONDA MOTOR CO., INC.

CLUTCH ASSEMBLIES

Disassembly

1. Remove the snap ring, then remove the clutch end plate, the clutch discs, and the plates with a screwdriver. See **Fig. 47** -**Fig. 49** .

cardiagn.com

NOTE: The 2nd clutch and 1st-hold clutch do not have a disc spring.

2. Remove the disc spring from the 1st, 3rd, 4th, and 5th clutches.
3. Install the appropriate spring compressor on the clutch assembly.
4. Be sure the spring compressor is adjusted to have full contact with the spring retainer on the 1st, 4th, and 5th clutches.
5. Set the spring compressor on the spring retainer of the 2nd and 3rd clutches so the tool works on the clutch return spring.
6. If either end of the spring compressor is set over an area of the spring retainer which is unsupported by the return spring, the retainer may be damaged.
7. Compress the spring until the snap ring can be removed.
8. Remove the snap ring. Then remove the spring compressor, spring retainer, and the return spring.
9. Wrap a shop rag around the clutch drum, and apply air pressure to the fluid passage to remove the piston. Place a fingertip on the other end while applying air pressure.

cardiagn.com

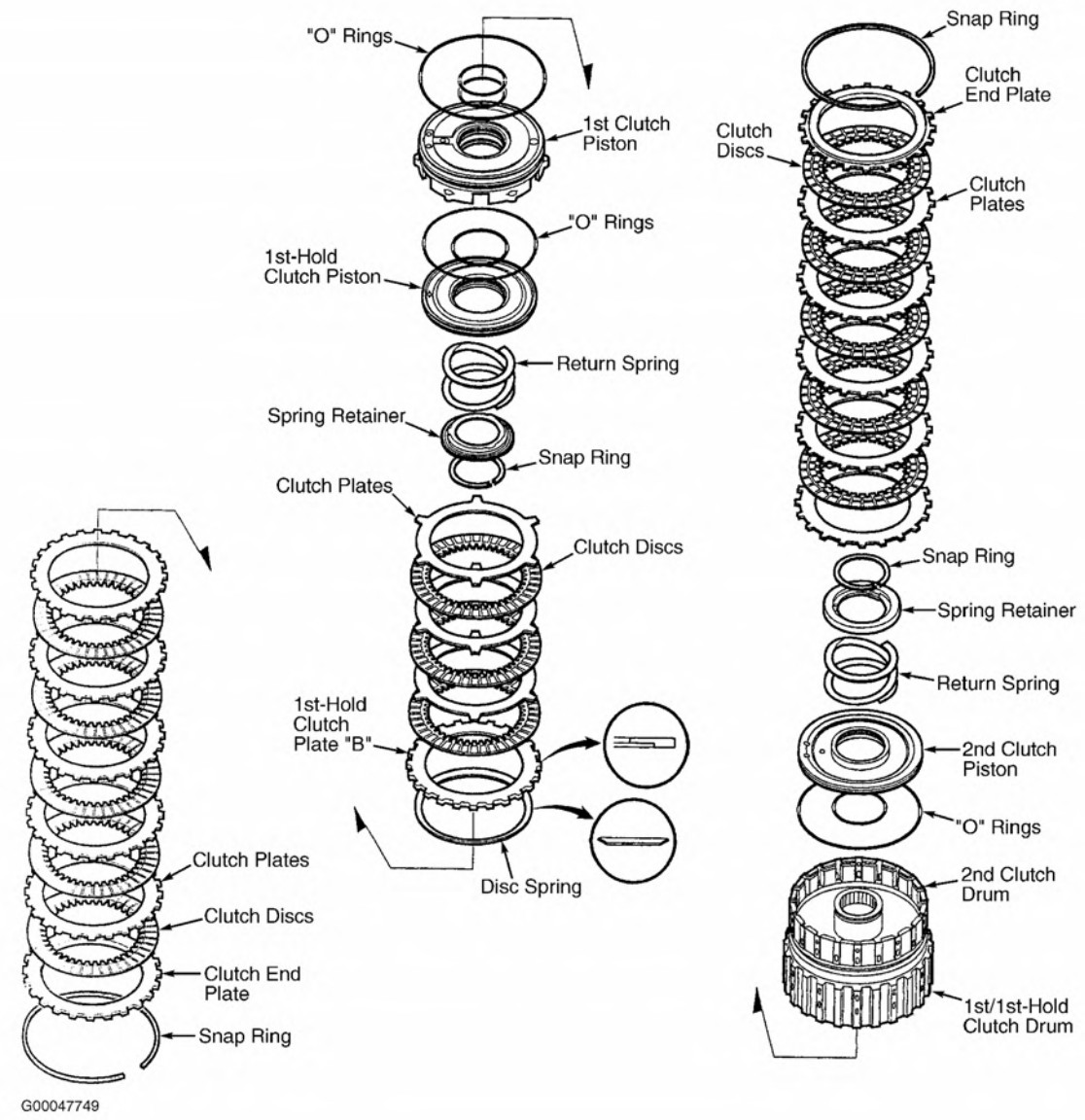

Fig. 47: Exploded View Of 1st, 1st-Hold & 2nd Clutch Assembly
Courtesy of AMERICAN HONDA MOTOR CO., INC.

cardiagn.com

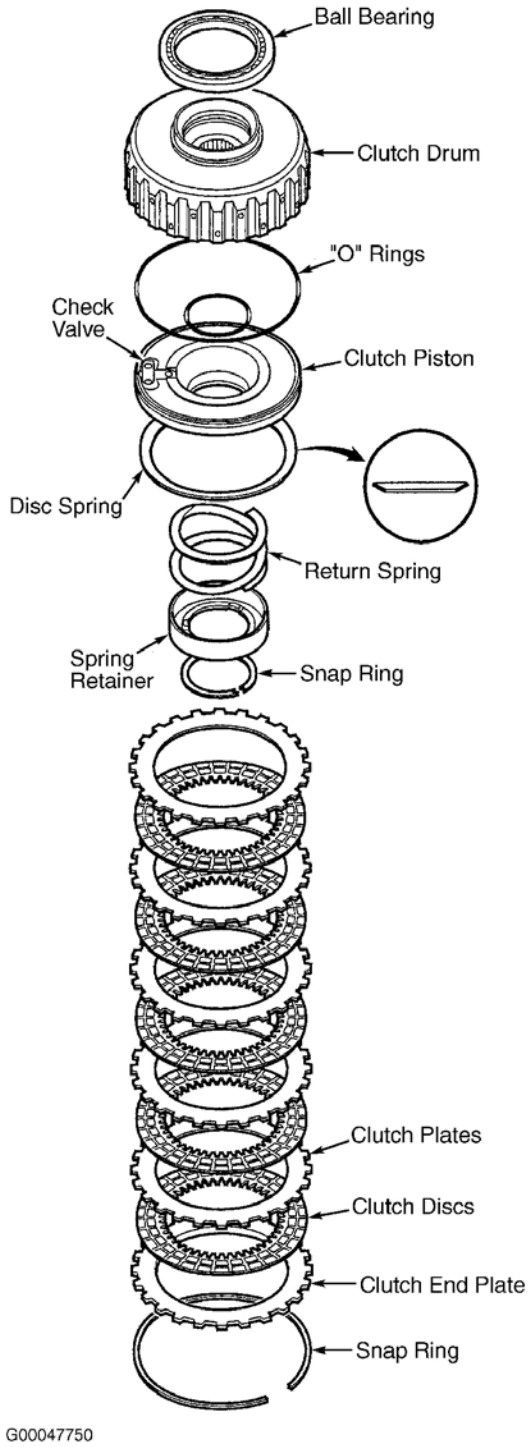

Fig. 48: Exploded View Of 3rd Clutch Assembly
Courtesy of AMERICAN HONDA MOTOR CO., INC.

cardiagn.com

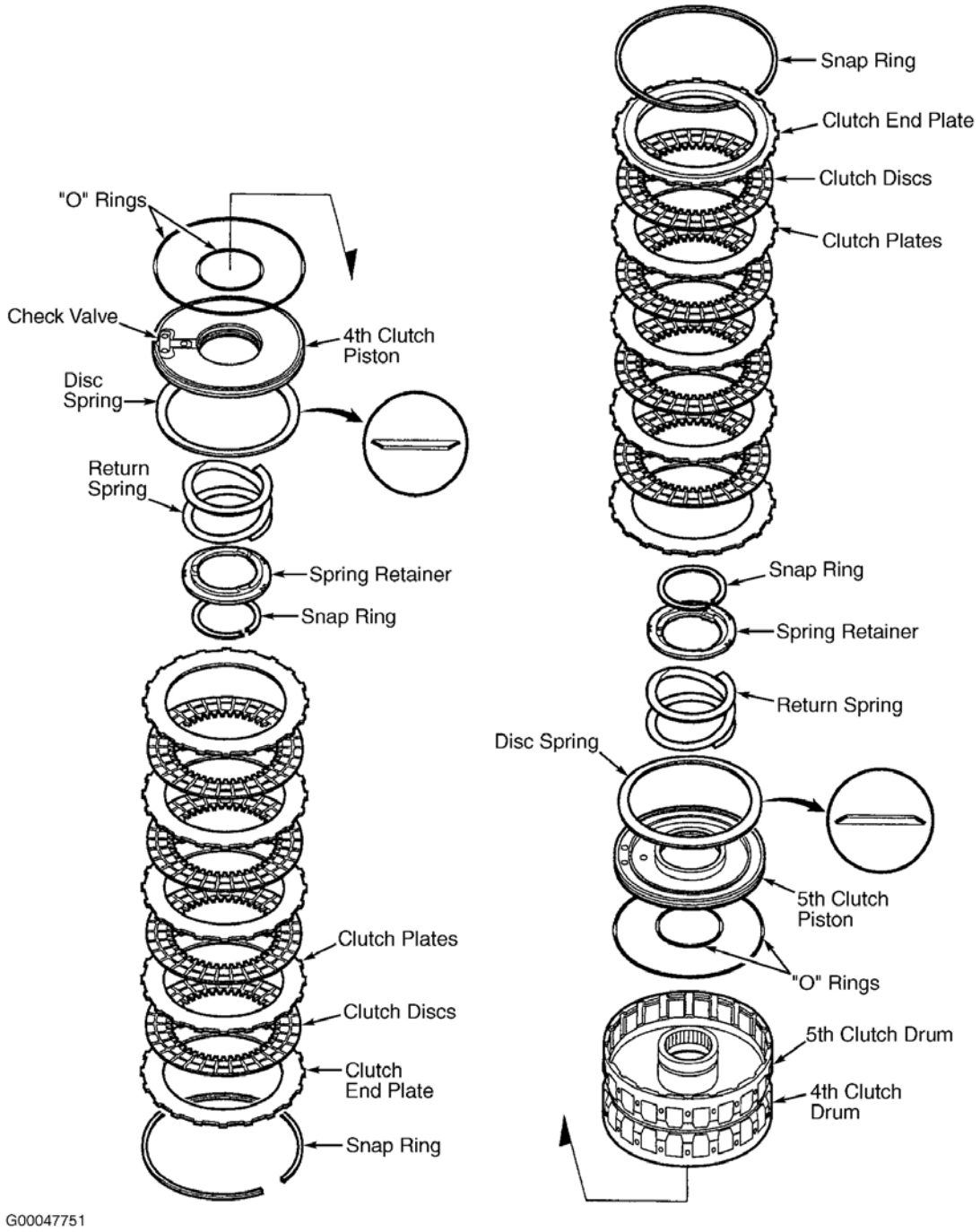

Fig. 49: Exploded View Of 4th-5th Clutch Assembly
Courtesy of AMERICAN HONDA MOTOR CO., INC.

Cleaning & Inspection

1. Clutch disc standard thickness for 1st/1st-hold/2nd clutches are .076" (1.94 mm). Clutch plate standard

cardiagn.com

thickness is .063" (1.6 mm) for 1st clutch, .063" (1.6 mm) for 2nd clutch and .071" (1.8 mm) for 1st-hold clutch.

2. Clutch disc standard thickness for 3rd clutch is .076" (1.94 mm). Clutch plate standard thickness is .091" (2.3 mm).
3. Clutch disc standard thickness for 4th/5th clutch is .076" (1.94 mm). Clutch plate standard thickness is .091" (2.3 mm) for 4th clutch and .079" (2.0 mm) for 5th clutch.
4. Clean all parts thoroughly in solvent or carburetor cleaner and dry them with compressed air.
5. Blow air through all passages.
6. Apply ATF to all parts before reassembly.

Reassembly

1. Soak the clutch discs thoroughly in ATF for a minimum of 30 minutes.
2. Inspect the check valve on the 3rd and 4th clutch pistons. If the check valve is loose, replace the piston.
3. Install new "O" rings on clutch pistons.

NOTE: Do not pinch the "O" ring by installing the piston with too much force.

4. Install the piston in the clutch drum. Apply pressure and rotate to ensure proper seating. Lubricate the piston "O" ring with ATF before installing.
5. Check the 1st-hold clutch plate-to-top-disc clearance; starting with a clutch plate, alternately install the clutch plate and discs in the 1st-hold clutch drum, then install the 1st-hold clutch plate. See **Fig. 47** .
6. Measure the 1st-hold clutch clearance between the 1st-hold clutch plate and the top disc with a feeler gauge while pressing the 1st-hold clutch plate down. See **Fig. 50** . Take measurements in at least 3 places, and use the average as the actual clearance.
7. If the clearance is out of standard, replace the 1st-hold clutch plates and discs as a set, and recheck.
8. Install the return spring and spring retainer, and position the snap ring on the retainer.
9. Install the appropriate spring compressor on the clutch assembly.
10. Be sure the spring compressor is adjusted to have full contact with the spring retainer on the 4th, 5th, and 1st clutches.
11. Set the spring compressor on the spring retainer of the 2nd and 3rd clutches so the tool works on the clutch return spring.
12. If either end of the spring compressor is set over an area of the spring retainer which is unsupported by the return spring, the retainer may be damaged.
13. Compress the return spring.
14. Install the snap ring.
15. Remove the spring compressor.

NOTE: The 2nd clutch and 1st-hold clutch do not have a disc spring.

16. Install the disc spring in the 1st, 3rd, 4th, and 5th clutches in the direction shown. See **Fig. 47** -**Fig. 49** .

cardiagn.com

17. Make sure the inside of the clutch drum is free of dirt and other foreign particles.
18. Starting with a clutch plate, alternately install the clutch plates and discs. Install the clutch end plate with the flat side toward the disc.
19. Install the snap ring with a screwdriver.
20. Set a dial indicator on the clutch end plate. See **Fig. 51** .
21. Zero the indicator with the clutch end plate lifted up to the snap ring.
22. Release the clutch end plate to lower it, then push on the end plate.
23. Press down and read the dial indicator clearance between the clutch end plate and top disc. Take measurements at least three places, and use the average as the actual clearance. See **CLUTCH CLEARANCE SPECIFICATIONS** table.

NOTE: **If the thickest clutch end plate is installed, but the clearance is still over the service limit, replace the clutch discs and plates.**

24. If the clearance is out of service limit, select a new clutch end plate. Clutch end plate thicknesses available for 1st and 3rd clutches are .122-.154" (3.1-3.9 mm) in .04" (.1 mm) increments. Clutch end plate thicknesses available for 2nd and 4th clutches are .083-.114" (2.1-2.9 mm) in .04" (.1 mm) increments. Install the new clutch end plate, then recheck the clearance.

CLUTCH CLEARANCE SPECIFICATIONS

Application	In. (mm)
1st Clutch	.043-.051 (1.10-1.30)
2nd Clutch	.033.-041 (.85-1.05)
3rd Clutch	.028.-035 (.70-.90)
4th Clutch	.022-.030 (.55-.75)
5th Clutch	.022-.030 (.55-.75)
1st-Hold Clutch	.020-.035 (.50-.90)

cardiagn.com

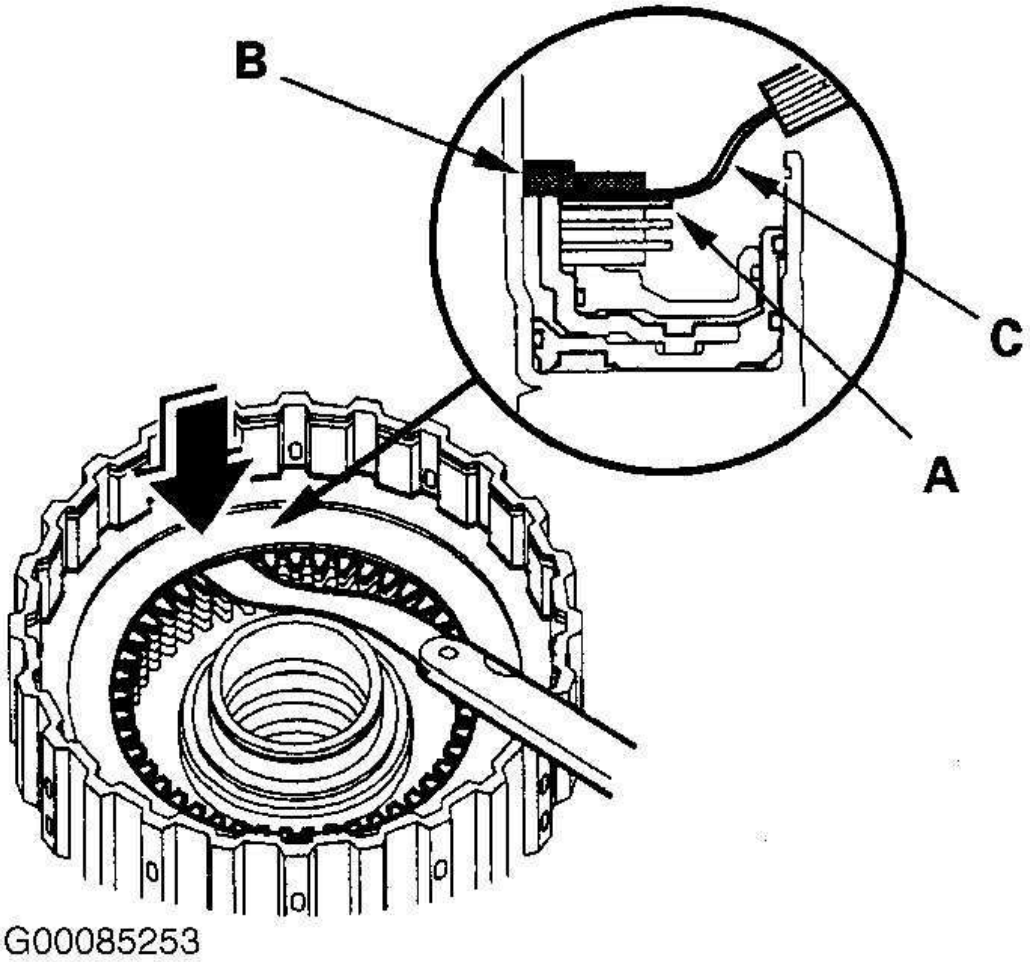

Fig. 50: Measuring 1st-Hold Clutch Clearance
Courtesy of AMERICAN HONDA MOTOR CO., INC.

cardiagn.com

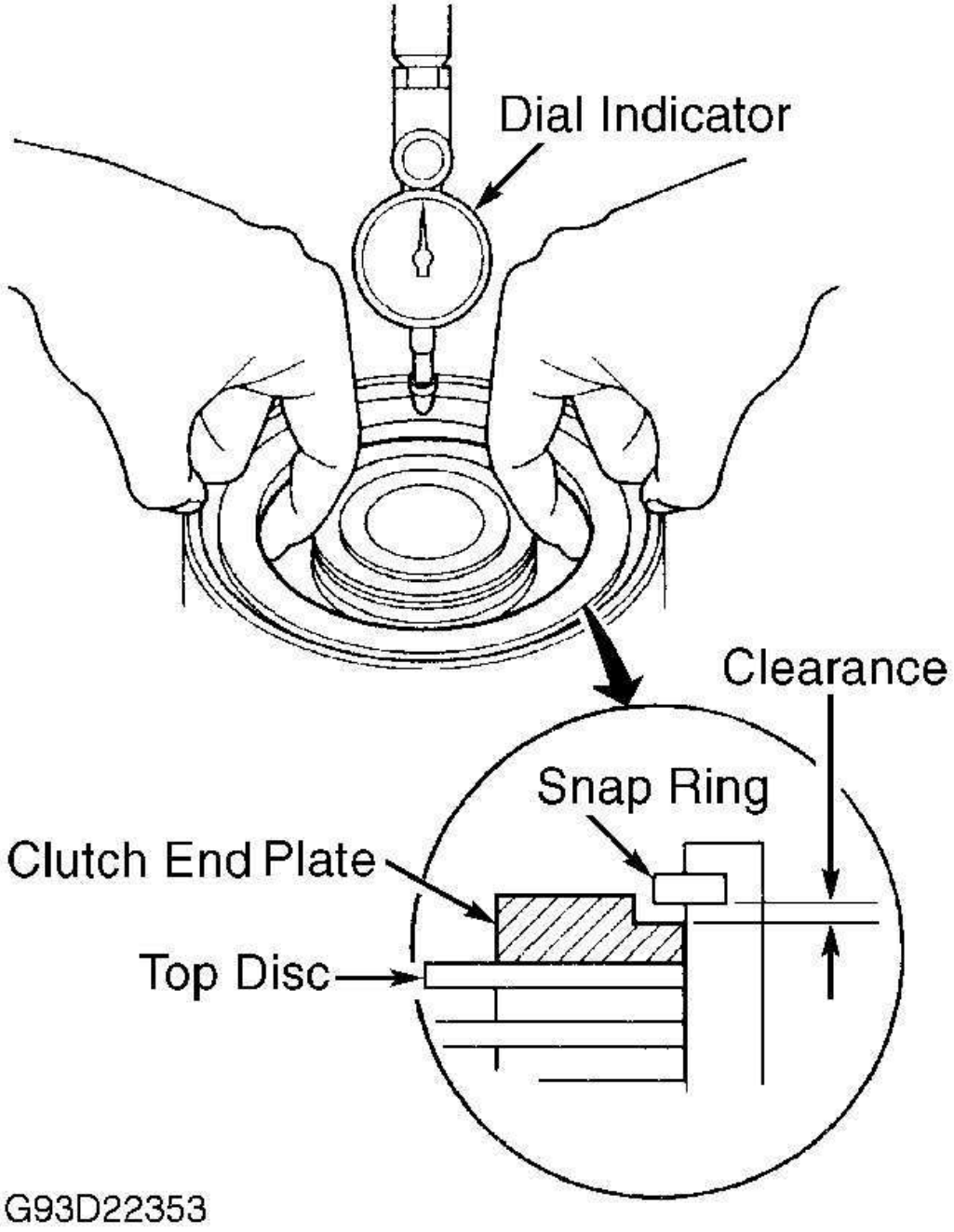

Fig. 51: Measuring End Plate Clearance
Courtesy of AMERICAN HONDA MOTOR CO., INC.

COUNTERSHAFT BEARING

cardiagn.com

Removal & Installation

1. Remove the countershaft bearing with the appropriate puller and slide hammer.
2. Install the ATF guide plate.
3. Install the new bearing into the housing with the appropriate driver.

MAINSHAFT BEARING & SEAL

Removal & Installation

1. Remove the mainshaft bearing and oil seal with the appropriate puller and slide hammer.
2. Install the new mainshaft bearing until it bottoms in the housing with appropriate driver.
3. Install the new oil seal flush to the housing with appropriate driver.

SECONDARY SHAFT BEARING

Removal & Installation

1. Remove the secondary shaft bearing with the appropriate puller and slide hammer.
2. Install the ATF guide plate.
3. Install the new bearing into the housing with the appropriate driver.

DIFFERENTIAL ASSEMBLY

Disassembly

1. Before disassembling differential assembly, check side gear backlash. Place differential assembly on "V" blocks with both axle shafts installed.
2. Install dial indicator with stem resting against pinion gear. See **Fig. 52** . Check side gear backlash. Side gear backlash should be .002-.006" (.05-.15 mm). If side gear backlash is not within specification, replace differential carrier.

NOTE: Ring gear bolts have left-hand threads.

3. If replacing bearings, use bearing puller to remove bearings from differential carrier. Remove bolts and ring gear.

Cleaning & Inspection

Clean components with solvent and dry with compressed air. Inspect components for wear and damage. Replace components as necessary.

Reassembly

CAUTION: Ring gear must be installed with chamfered side of ring gear toward

cardiagn.com

differential carrier. See Fig. 53 . Ring gear bolts are left-hand thread.

Install ring gear. Install and tighten ring gear bolts to specification. See **TORQUE SPECIFICATIONS** . Using press, install NEW bearings on differential carrier (if removed). Ensure bearings are fully seated on differential carrier.

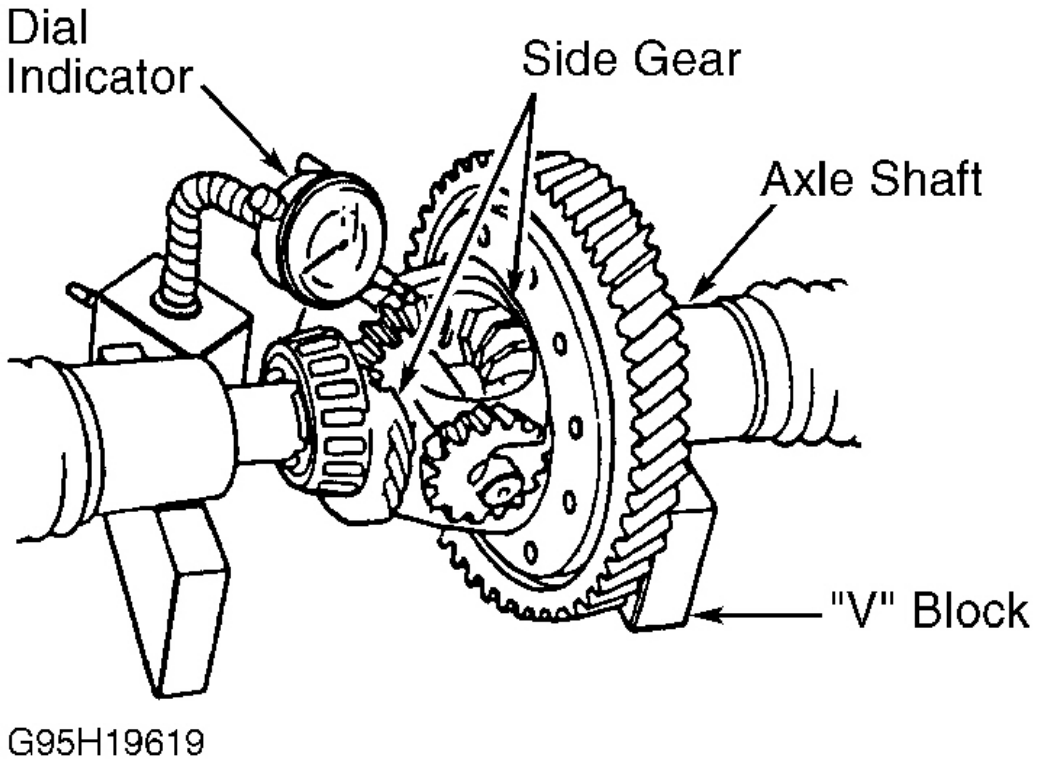

Fig. 52: Checking Side Gear Backlash
Courtesy of AMERICAN HONDA MOTOR CO., INC.

cardiagn.com

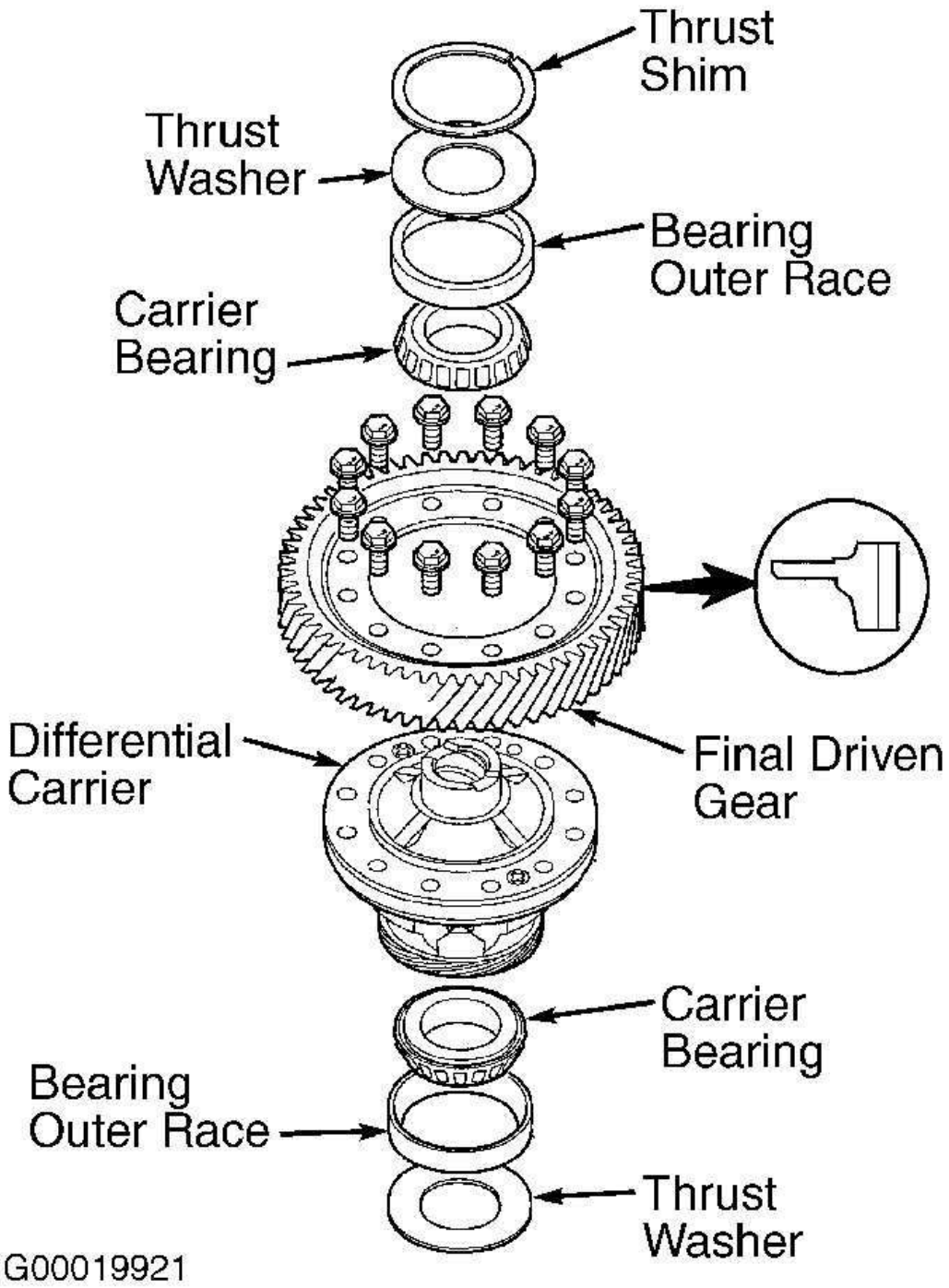

Fig. 53: Exploded View Of Differential Assembly
Courtesy of AMERICAN HONDA MOTOR CO., INC.

cardiagn.com

Differential Assembly Bearing Preload

NOTE: If transaxle housing, torque converter housing, differential carrier, bearings, thrust shim, spacer or differential bearing outer races are replaced, differential assembly bearing preload must be checked.

CAUTION: DO NOT heat transaxle housing to more than 212°F (100°C), or housing may be damaged.

1. Using heat gun, heat transaxle housing around differential bearing outer race and thrust shim to 212°F (100°C). Tap differential bearing outer race from transaxle housing. Remove thrust shim located below differential bearing outer race, from transaxle housing.
2. Allow transaxle housing to cool to room temperature. Install a .102" (2.60 mm) thrust shim in transaxle housing. Using hammer and bearing race installer, install differential bearing outer race in transaxle housing. Ensure differential bearing outer race is fully seated in transaxle housing.

CAUTION: Ensure gasket is installed when checking differential assembly bearing preload.

3. Install gasket on torque converter housing. DO NOT apply sealer at this time. Install differential assembly in torque converter housing. Install transaxle housing on torque converter housing without mainshaft, countershaft and secondary shaft installed.
4. Install and tighten transaxle housing-to-torque converter housing bolts to 33 ft. lbs. (44 N.m) in sequence. See **Fig. 58** . Rotate differential assembly several turns to seat bearings.
5. Install Preload Adapter (07HAJ-PK40201) into differential assembly. See **Fig. 54** . Install INCH-lb. torque wrench on preload adapter. Measure differential assembly bearing preload by checking starting torque required to rotate differential assembly in both directions at room temperature.
6. Differential assembly bearing preload should be within specification. See **DIFFERENTIAL ASSEMBLY BEARING PRELOAD SPECIFICATIONS** table.

DIFFERENTIAL ASSEMBLY BEARING PRELOAD SPECIFICATIONS (1)

Application	INCH Lbs. (N.m)
New Bearings	24-35 (2.7-3.9)
Used Bearings	22-32 (2.5-3.6)
(1) Starting torque required to rotate differential assembly.	

7. If differential assembly bearing preload is not within specification, select proper thickness thrust shim to obtain correct reading. See **Fig. 55** .
8. Changing thrust shim to the next size will increase or decrease bearing preload about 2.7-3.5 INCH lbs. (.3-.4 N.m). Increase thrust shim thickness to increase differential assembly bearing preload. Decrease thrust shim thickness to decrease bearing preload.
9. If adjusting differential assembly bearing preload, remove transaxle housing from torque converter

cardiagn.com

housing. Remove differential bearing outer race from transaxle housing. Install correct thrust shim. Using hammer and bearing race installer, install differential bearing outer race in transaxle housing.

10. Reinstall transaxle housing and recheck differential assembly bearing preload. Once correct differential assembly bearing preload is obtained, remove transaxle housing, gasket and differential assembly from torque converter housing.

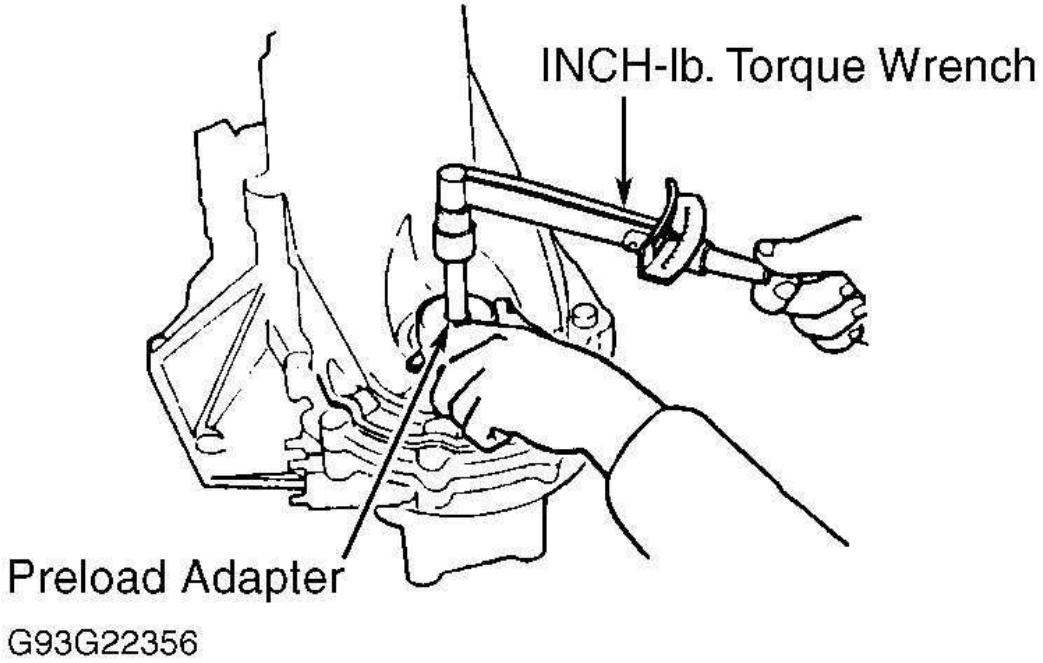

Fig. 54: Checking Differential Bearing Preload
Courtesy of AMERICAN HONDA MOTOR CO., INC.

cardiagn.com

No.	Part Number	Thickness
A	41438-P7T-700	2.05 mm (0.081 in.)
AA	41438-PGH-000	2.075 mm (0.082 in.)
B	41439-P7T-700	2.01 mm (0.083 in.)
BB	41439-PGH-000	2.125 mm (0.084 in.)
C	41440-P7T-700	2.15 mm (0.085 in.)
CC	41440-PGH-000	2.175 mm (0.086 in.)
D	41441-P7T-000	2.20 mm (0.087 in.)
DD	41441-PGH-000	2.225 mm (0.088 in.)
E	41442-P7T-000	2.25 mm (0.089 in.)
EE	41442-PGH-000	2.275 mm (0.090 in.)
F	41443-P7T-000	2.30 mm (0.091 in.)
FF	41443-PGH-000	2.325 mm (0.092 in.)
G	41444-P7T-000	2.375 mm (0.094 in.)
GG	41444-PGH-000	2.35 mm (0.093 in.)
H	41445-P7T-000	2.40 mm (0.094 in.)
HH	41445-PGH-000	2.425 mm (0.095 in.)
I	41446-P7T-000	2.45 mm (0.096 in.)
II	41446-PGH-000	2.475 mm (0.097 in.)
J	41447-P7T-000	2.50 mm (0.098 in.)
JJ	41447-PGH-000	2.525 mm (0.099 in.)
K	41448-P7T-000	2.55 mm (0.100 in.)
KK	41448-PGH-000	2.575 mm (0.101 in.)
L	41449-P7T-000	2.60 mm (0.102 in.)
LL	41449-PGH-000	2.625 mm (0.103 in.)
M	41450-P7T-000	2.65 mm (0.104 in.)
MM	41450-PGH-000	2.625 mm (0.105 in.)
N	41451-P7T-000	2.70 mm (0.106 in.)
NN	41451-PGH-000	2.725 mm (0.107 in.)
O	41452-P7T-000	2.75 mm (0.108 in.)
OO	41452-PGH-000	2.775 mm (0.109 in.)
P	41453-P7T-000	2.80 mm (0.110 in.)
PP	41453-PGH-000	2.825 mm (0.111 in.)
Q	41454-P7T-000	2.85 mm (0.112 in.)
QQ	41454-PGH-000	2.875 mm (0.113 in.)
R	41455-P7T-000	2.90 mm (0.114 in.)
RR	41455-PGH-000	2.925 mm (0.115in.)
S	41456-P7T-000	2.95 mm (0.116 in.)
SS	41456-PGH-000	2.975 mm (0.117 in.)
T	41457-P7T-000	3.00 mm (0.118 in.)
TT	41457-PGH-000	3.25 mm (0.119 in.)
U	41458-P7T-000	3.05 mm (0.120 in.)

G00085287

Fig. 55: Differential Thrust Shim Selection Chart
Courtesy of AMERICAN HONDA MOTOR CO., INC.

TRANSAXLE REASSEMBLY

cardiagn.com

NOTE: **If transaxle housing, torque converter housing, differential carrier, bearings, thrust shim, spacer or differential bearing outer races are replaced, differential assembly bearing preload must be checked. See DIFFERENTIAL ASSEMBLY under COMPONENT DISASSEMBLY & REASSEMBLY.**

NOTE: **Coat all components with ATF before reassembly.**

VALVE BODIES & ATF STRAINER

NOTE: **To assist in reassembly of components, refer to illustration. See Fig. 11 .**

NOTE: **Letter references are identified in following illustration. See Fig. 56 .**

1. Install the main separator plate and 3 dowel pins on the torque converter housing. Then install the ATF pump drive gear, driven gear, and ATF pump driven gear shaft. Install the ATF pump driven gear with its grooved and chamfered side facing down.
2. Install the main valve body (one 6 mm bolt and three 8 mm bolts). Make sure the ATF pump drive gear rotates smoothly in the normal operating direction, and the ATF pump driven gear shaft moves smoothly in the axial and normal operating direction.

CAUTION: Failure to align the ATF pump driven gear shaft correctly will result in a seized ATF pump drive gear or ATF pump driven gear shaft.

3. If the ATF pump drive gear and ATF pump driven gear shaft do not move smoothly, loosen the main valve body bolts. Realign the ATF pump driven gear shaft, and retighten the bolts to the specified torque, then recheck.
4. Install the torque converter check valve and spring, and the cooler check valve and spring on the main valve body, then install the two dowel pins and the regulator separator plate.
5. Install the stator shaft and stator shaft stop.
6. Install the regulator valve body (8 bolts).
7. Install the 2 dowel pins and the servo separator plate on the main valve body.
8. Install the control shaft (A) in the torque converter housing along with the manual valve (B). See **Fig. 56** .
9. Install the detent arm (C) and arm shaft (D) in the main valve body (E), then hook the detent arm spring (F) to the detent arm.
10. Install the servo body (G) (5 bolts).
11. Install the top accumulator body separator plate with two dowel pins on the servo body, then install the top accumulator body (7 bolts).
12. Install the ATF strainer (2 bolts).
13. Install the servo detent base (2 bolts).
14. Install the accumulator body (7 bolts).
15. Install the one ATF feed pipe in the servo body, 4 pipes in the regulator valve body, 4 pipes in the top

cardiagn.com

accumulator body, and one pipe in the accumulator body.

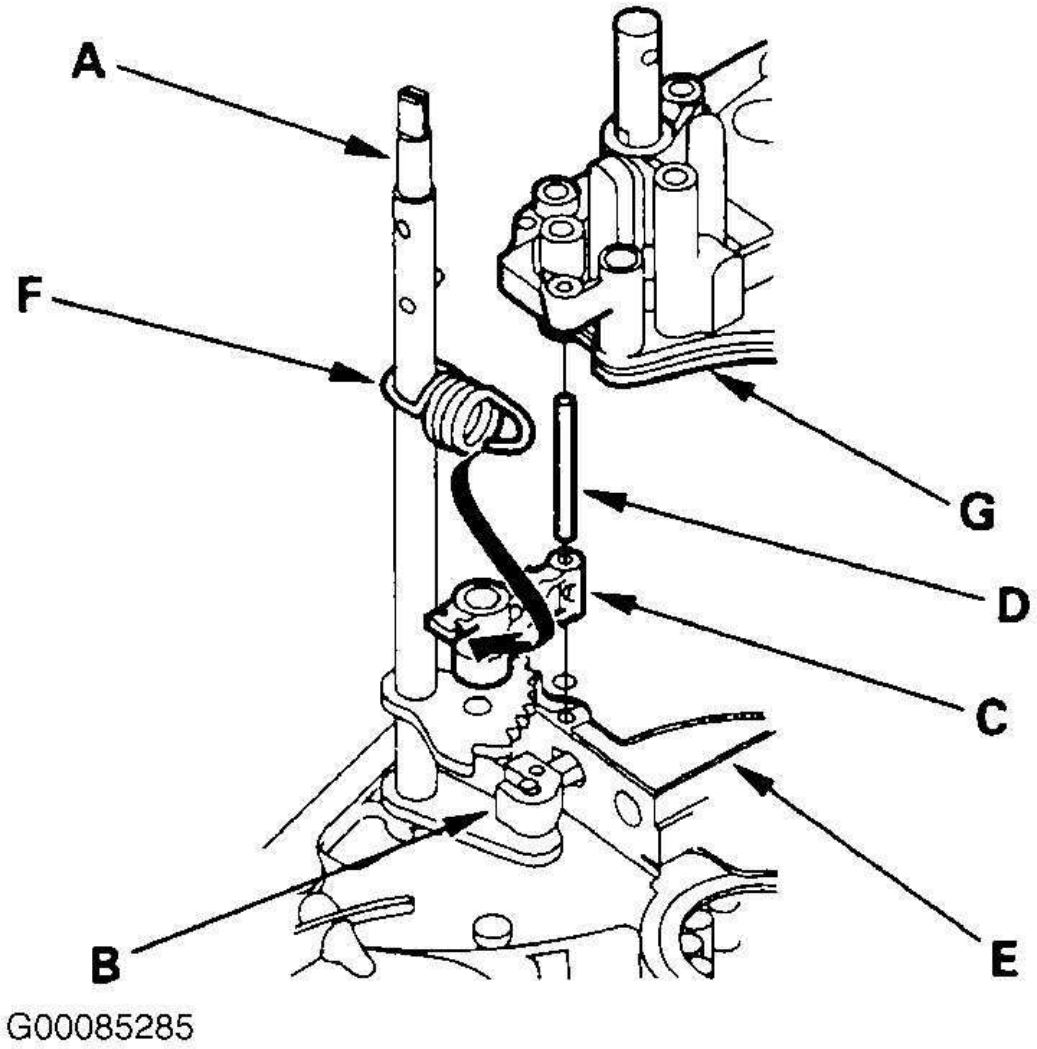

Fig. 56: Installing Control Shaft & Manual Valve
Courtesy of AMERICAN HONDA MOTOR CO., INC.

HOUSING & SHAFT ASSEMBLIES

NOTE: To assist in reassembly of components, refer to illustration. See Fig. 7 .

1. Install the 24 mm thrust shim on the transfer driven gear shaft, then install the shaft in the torque converter housing.

cardiagn.com

2. Install the differential assembly, countershaft sub-assembly, mainshaft sub-assembly, and secondary shaft sub-assembly in the torque converter housing.
3. Install the countershaft 5th gear and reverse selector hub on the countershaft. If the reverse selector hub is a press-fitted type, refer to the installation. See **COUNTERSHAFT** under COMPONENT DISASSEMBLY & REASSEMBLY.
4. Turn the shift fork shaft so the large chamfered hole is facing the fork bolt hole. Then install the shift fork and reverse selector together on the shift fork shaft and countershaft. Secure the shift fork to the shift fork shaft with the lock bolt and a new lock washer, then bend the lock washer against the bolt head.
5. Install the needle bearing, countershaft reverse gear, and countershaft 2nd gear on the countershaft.
6. Place the thrust washer in the transmission housing. See **Fig. 57** .
7. Place the reverse idler gear in the transmission housing, then slide it in the direction shown.
8. Align the spring pin on the control shaft with the transmission housing groove by turning the control shaft.
9. Install three dowel pins and a new gasket on the torque converter housing.
10. Place the transmission housing on the torque converter housing, then install the transmission housing mounting bolts along with the harness clamp bracket and transmission hangers. Tighten the bolts in 2 or more steps. See **Fig. 58** .
11. Engage the reverse idler gear with the countershaft reverse gear and the mainshaft reverse gear. Install the needle bearings, reverse idler gear shaft, and thrust washer in the reverse idler gear. Install the reverse idler gear shaft holder on the transmission housing.

cardiagn.com

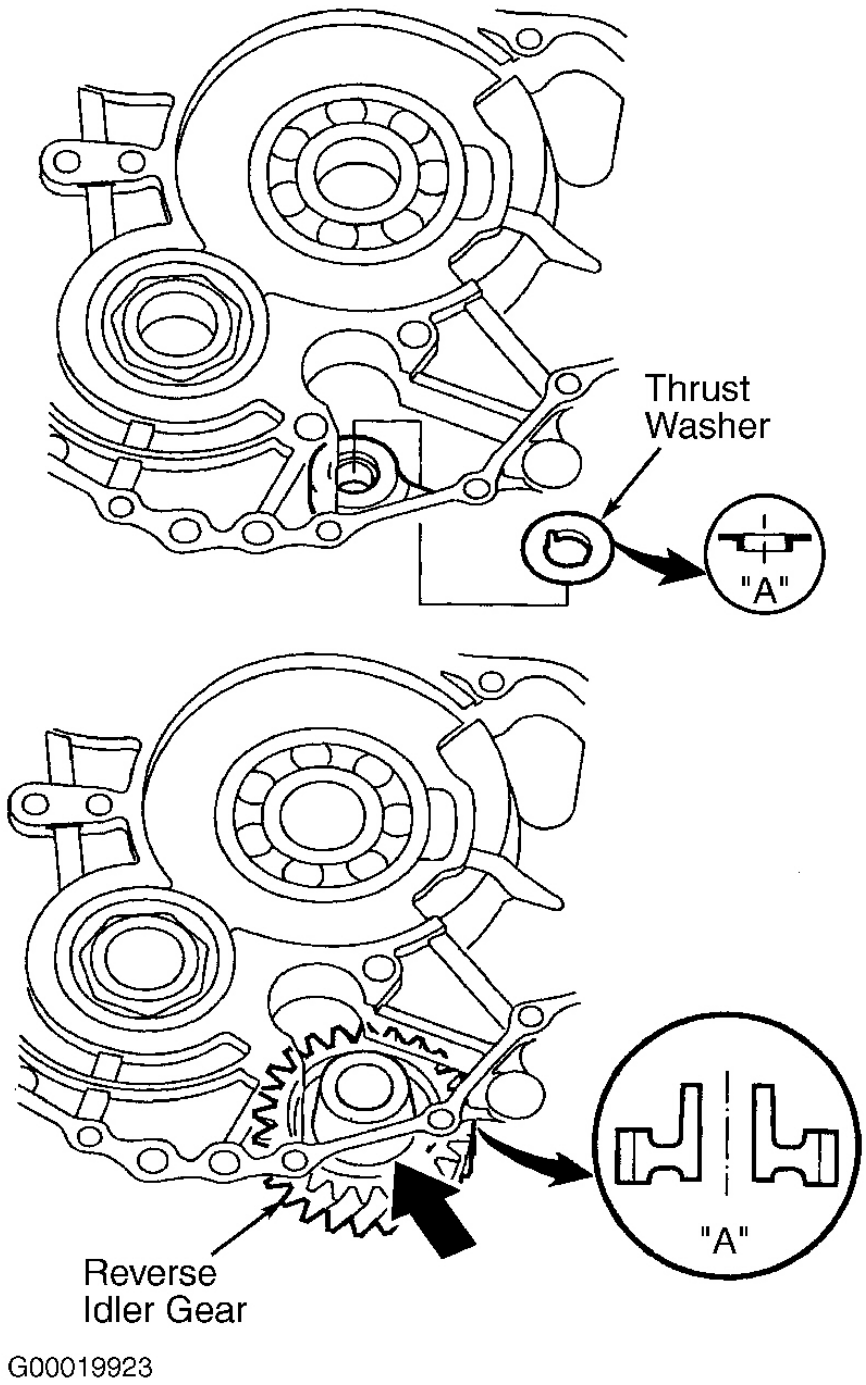

Fig. 57: Installing Reverse Idler Gear
Courtesy of AMERICAN HONDA MOTOR CO., INC.

cardiagn.com

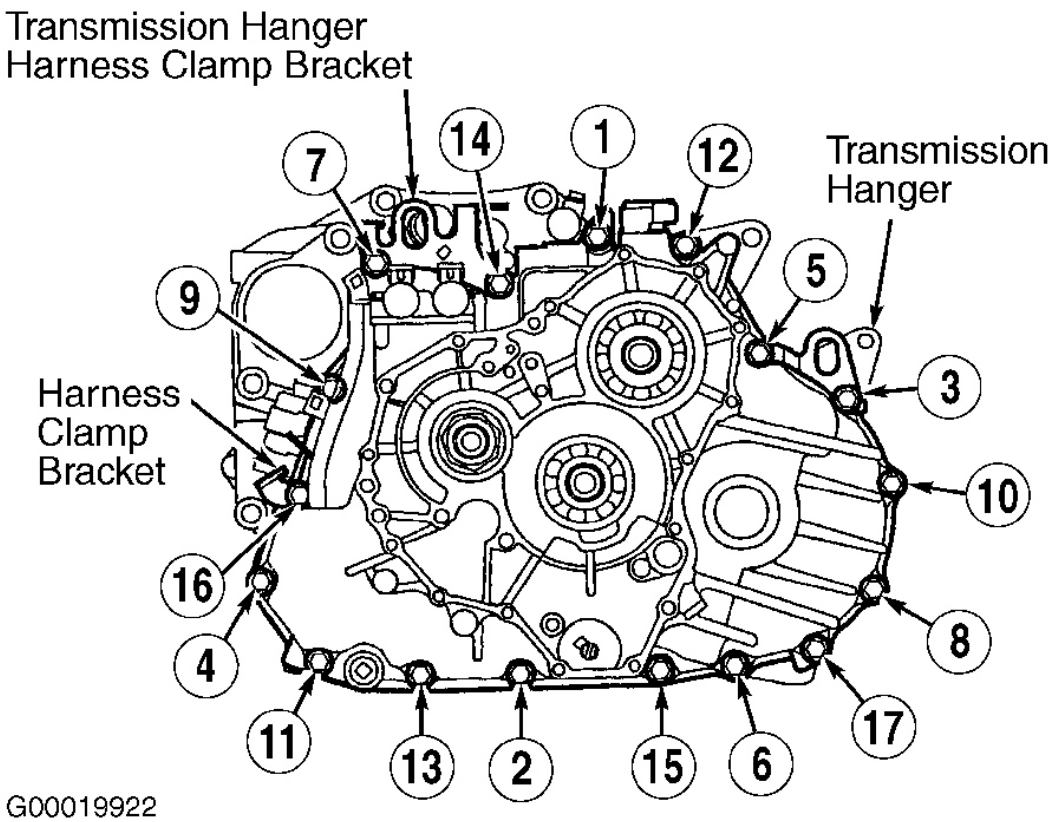

Fig. 58: Transmission Housing Bolt Tightening Sequence
Courtesy of AMERICAN HONDA MOTOR CO., INC.

END COVER, 3RD GEARS, IDLER GEAR & 3RD CLUTCH

NOTE: **To assist in reassembly of transaxle, refer to illustration. See Fig. 2 . Letter references in parenthesis are identified in the following illustrations.**

1. Install the park lever and park stop on the control shaft, then install the lock bolt with a new lock washer. See **Fig. 59** . Do not bend the lock tab of the lock washer until step 28 .
2. Lubricate the following parts with ATF:
   - Splines of the countershaft, the park gear, and the old lock nut.
   - Threads of the countershaft and the old lock nut.
   - Old conical spring washer.
3. Install the park gear using the old lock nut and a collar. Hold the park pawl against the park gear, then tighten the old lock nut until the shaft splines come out over the park gear splines.

cardiagn.com

NOTE: Countershaft lock nut has left-hand threads. Do not use an impact wrench.

4. Remove the lock nut and collar.

NOTE: Use a torque wrench to tighten the lock nut. Do not use an impact wrench.

5. Install the thrust needle bearing, needle bearing, 3rd gear, thrust needle bearing, 31 x 63.5 mm splined washer, 3rd clutch assembly, and old conical spring washer on the countershaft. Tighten the old lock nut to 166 ft. lbs. (226 N.m).
6. Set the dial indicator to the countershaft 3rd gear. See **Fig. 60** .
7. Measure the countershaft 3rd gear axial clearance in at least three places, while moving the countershaft 3rd gear. Use the average as the actual clearance. If the clearance is out of standard, select the appropriate 31 x 63.5 mm splined washer in step 16 .
8. Remove the lock nut and conical spring washer.
9. Remove the 3rd clutch assembly with the appropriate 2-jaw puller and a slide hammer.
10. Remove the parts that were installed in step 5 .
11. Install the holder onto the mainshaft. See **Fig. 3** .
12. Lubricate the following parts with ATF:
    - Splines of the mainshaft 3rd gear and secondary shaft idler gear.
    - Threads of the mainshaft and secondary shaft.
    - Threads of the old mainshaft and secondary shaft lock nuts.
    - Old conical spring washer.

NOTE: Use a torque wrench to tighten the lock nut. Do not use an impact wrench.

13. Install the mainshaft 3rd gear and the old conical spring washer on the mainshaft. Tighten the old lock nut to seat the 3rd gear to 166 ft. lbs. (226 N.m).

NOTE: Use a torque wrench to tighten the lock nut. Do not use an impact wrench. Secondary shaft lock nut has left-hand threads.

14. Install the secondary shaft idler gear and the old conical spring washer on the secondary shaft. Tighten the old lock nut to seat the secondary shaft idler gear to 166 ft. lbs. (226 N.m).
15. Remove the old lock nuts and old conical spring washers from the mainshaft and secondary shaft.
16. If the 3rd gear axial clearance is out of standard (measured in step 7), measure the difference of the 31 x 63.5 mm splined washer, and select the appropriate splined washer. See **Fig. 61** .
17. Install the thrust needle bearing, needle bearing, 3rd gear, thrust needle bearing, and 31 x 63.5 mm splined washer on the countershaft.
18. Wrap the shaft splines with tape to prevent "O" ring damage, then install new "O" ring.

NOTE: Use a torque wrench to tighten the lock nut. Do not use an impact wrench.

cardiagn.com

19. Remove the tape, then install the 3rd clutch assembly, and old conical spring washer. Tighten the old lock nut to 166 ft. lbs. (226 N.m).
20. Remove the old lock nut and old conical spring washer from the countershaft.
21. Lubricate the threads of each shaft, the new lock nuts, and new conical spring washers with ATF.
22. Install the new conical spring washers in the correct direction, and install the new lock nuts. See **Fig. 2** .

NOTE: Use a torque wrench to tighten the lock nuts. Do not use an impact wrench. Countershaft and secondary shaft lock nuts have left-hand threads.

23. Tighten the lock nuts to 123 ft. lbs. (167 N.m).
24. Remove the holder from the mainshaft.
25. Stake each lock nut into shaft using a 3.5 mm punch.
26. Set the park lever in the "P" position, then verify that the park pawl engages the park gear.
27. If the park pawl does not engage fully, check the distance between the pawl shaft and the park lever roller pin. See **PARK LEVER STOP** under COMPONENT DISASSEMBLY & REASSEMBLY.
28. Tighten the lock bolt, and bend the lock tab of the lock washer against the lock bolt head.
29. Install the end cover with the two dowel pins, new "O" rings, new gasket, harness clamp bracket, and connector bracket. Tighten the 13 bolts. See **TORQUE SPECIFICATIONS** .
30. Install the 8 x 12 mm ATF feed pipe with its filter side into the transmission housing.
31. Install the new gasket in the mounting groove of the A/T clutch pressure control solenoid valve "C" body, then install on the transmission housing. Do not pinch the gasket.
32. Install the ATF dipstick guide pipe with the new "O" ring.
33. Place the new gasket on the transmission housing, then install the 8 x 18 mm ATF feed pipes with their filter side into the transmission housing.
34. Install the new "O" rings over the feed pipes, and install the 8 x 40 mm ATF feed pipe.
35. Install the A/T clutch pressure control solenoid valves "A" and "B" and the harness clamp bracket.
36. Place the new ATF passage body gasket on the transmission housing, then install the 8 x 14 mm dowel pin and the 10 x 25.5 mm ATF feed pipe with the new "O" ring. Install the ATF passage body on the transmission housing, if it was removed.
37. Install the new ATF filter on the transmission housing.
38. Install the filter line bracket on the ATF filter, and loosely install the bolts.
39. Install the new "O" ring to the filter line, then install the filter line on the ATF filter.
40. Secure the end of the filter line on the bracket with the bolt.
41. Secure the filter line on the filter line bracket with the bolts.
42. Tighten the bolts on the filter line bracket.
43. Install the ATF hose and line bolt with the new sealing washers.
44. Connect the hose to the filter line, and secure it with the clip.
45. Install the ATF cooler lines with the new sealing washers and the line bolts, then install the harness clamp bracket.

cardiagn.com

NOTE: The transmission range switch clicks in the ON position.

46. Set the transmission range switch to the ON position.

NOTE: Be careful not to squeeze the end of the control shaft tips together when turning into position. If the tips are squeezed together it will cause a faulty signal or position due to the play between the control shaft and the switch.

47. Turn the control shaft to the "N" position by turning it.
48. Install the transmission range switch gently on the control shaft. Do not move the transmission range switch when tightening its bolts.
49. Install the transmission range switch cover, secure the harness with the bolt on the end cover. Install the harness clips on the brackets.
50. Connect the 3rd clutch pressure switch connector and A/T wire harness ground terminal on the connector bracket, then install the clips on the bracket.
51. Install the switch cover.
52. Install the ATF temperature sensor with the new "O" ring, then secure the harness with the bolts. Connect the sensor connector to the A/T wire harness connector, then install it on the connector bracket.
53. Install the new "O" ring on the mainshaft speed sensor, then install the mainshaft speed sensor.
54. Install the dipstick.

cardiagn.com

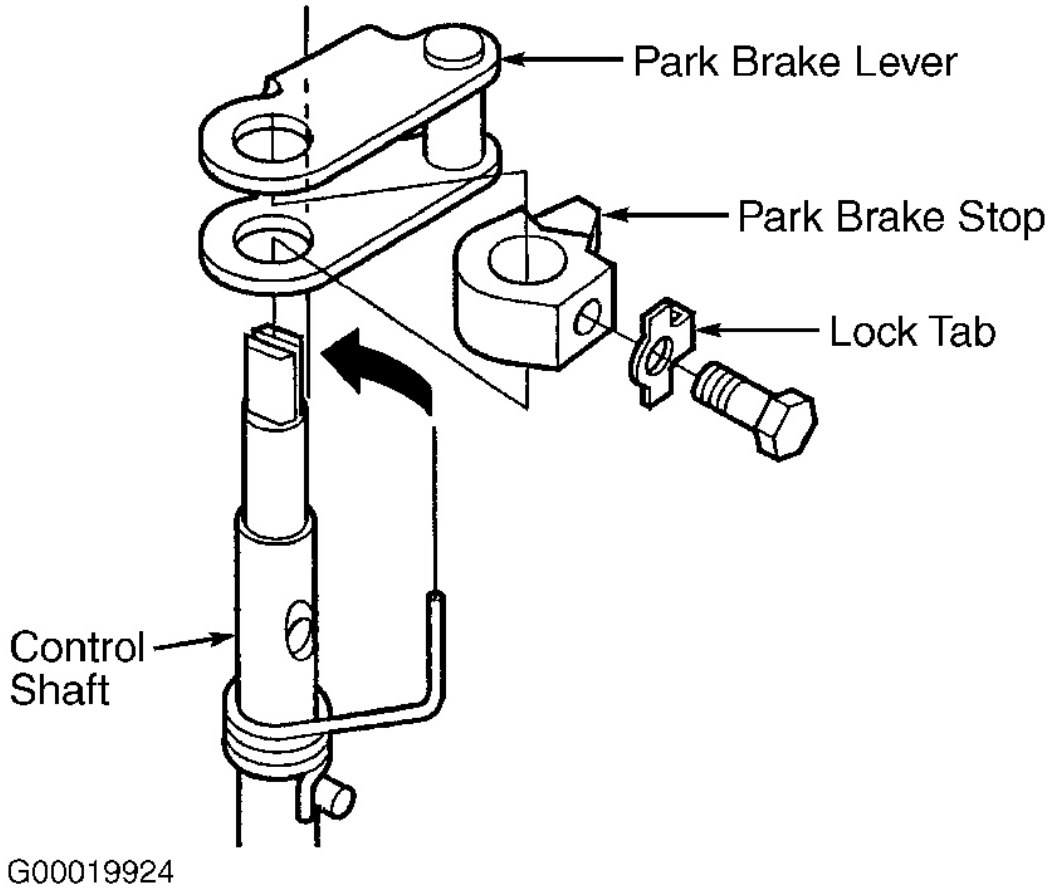

Fig. 59: Assembling Park Brake Lever
Courtesy of AMERICAN HONDA MOTOR CO., INC.

cardiagn.com

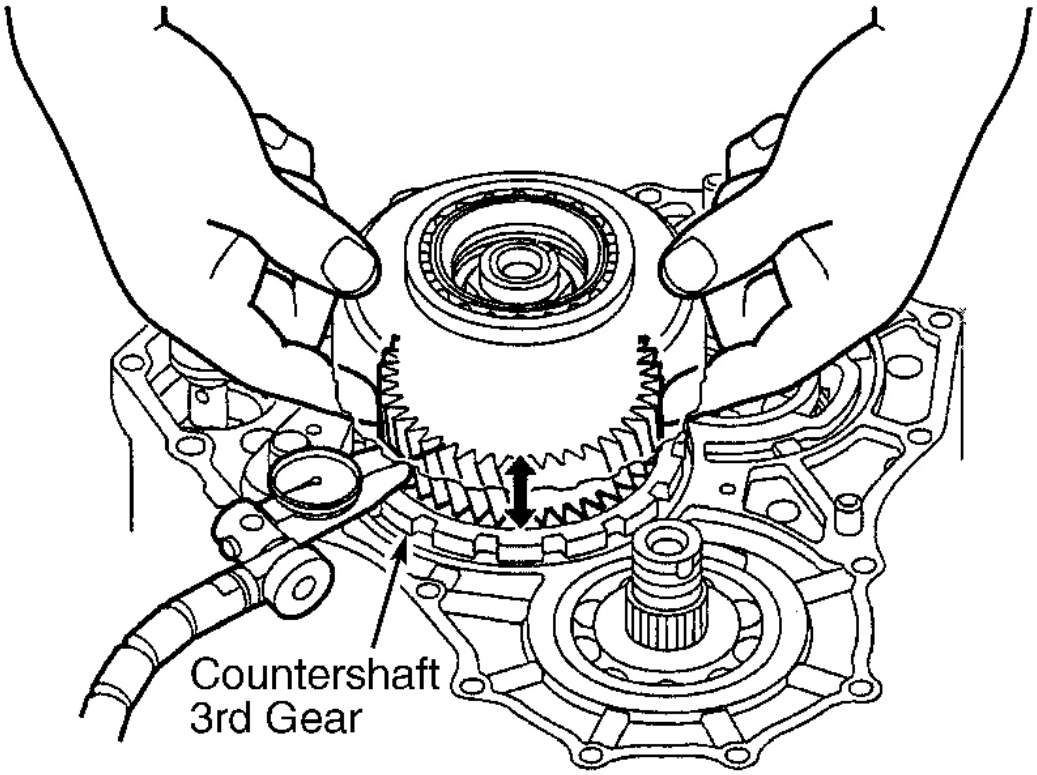

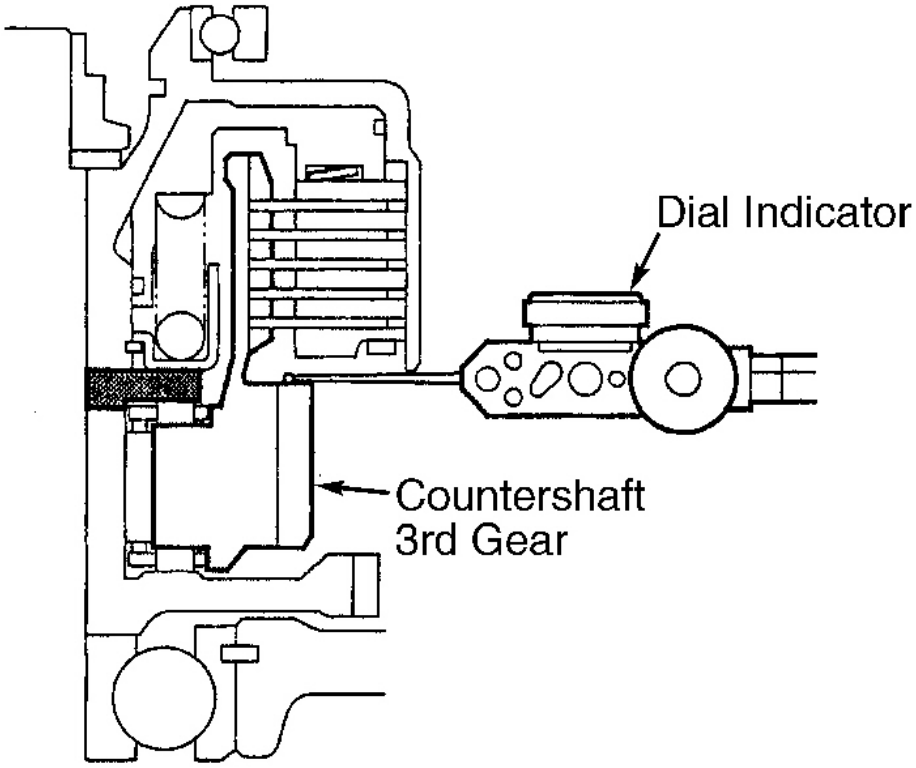

G00047752

cardiagn.com

Fig. 60: Measuring Countershaft 3rd Gear Axial Clearance
Courtesy of AMERICAN HONDA MOTOR CO., INC.

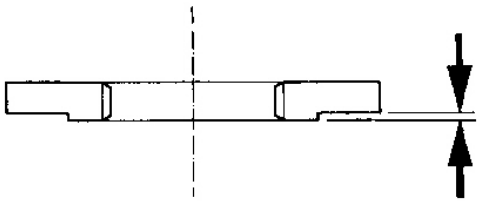

Mark	Part Number	Difference
A	90520-P7W-000	3.503 mm (0.1379 in.)
B	90521-P7W-000	3.490 mm (0.1374 in.)
C	90522-P7W-000	3.477 mm (0.1369 in.)
D	90523-P7W-000	3.464 mm (0.1364 in.)

G00085286

Fig. 61: Identifying Splined Washer Step
Courtesy of AMERICAN HONDA MOTOR CO., INC.

TORQUE SPECIFICATIONS

TORQUE SPECIFICATIONS

Application	Ft. Lbs. (N.m)
Countershaft Lock Nut	123 (167)
Drain Plug	36 (49)
Joint Bolt	21 (28)
Main Valve Body Bolt	
6-mm Bolt	(1)
8-mm Bolt	13 (18)
Mainshaft Lock Nut	123 (167)
Pressure Tap Plug	13 (18)
Reverse Idler Gear Shaft Holder Bolt	20 (26)
Ring Gear Bolt	74.5 (101)
Secondary Shaft Lock Nut	123 (167)
Speed Sensor Assembly Bolt	13 (18)
Transaxle Housing Bolt (2)	33 (44)

cardiagn.com

	INCH Lbs. (N.m)
A/T Clutch Pressure Control Solenoid Valve A/B Assembly	106 (12.0)
A/T Gear Position Switch	106 (12.0)
Accumulator Body Cover Bolt	106 (12.0)
Accumulator Cover Bolt	106 (12.0)
Countershaft Speed Sensor Bolt	106 (12.0)
End Cover Bolt	106 (12.0)
Fluid Strainer Bolt	106 (12.0)
Lock-Up Control Solenoid Valve Assembly Bolt	106 (12.0)
Mainshaft Speed Sensor Bolt	106 (12.0)
Park Brake Stop Bolt	124 (14.0)
Regulator Valve Body Bolt	106 (12.0)
Reverse Shift Fork Bolt	124 (14.0)
Servo Body Bolt	106 (12.0)
Shift Control Solenoid Valve Assembly Bolt	106 (12.0)

(1) Tighten bolt to 106 INCH lbs. (12.0 N.m).

(2) Tighten bolts to specification in sequence. See **Fig. 58** .

TRANSAXLE SPECIFICATIONS

TRANSAXLE SPECIFICATIONS

Application	Specification - In. (mm)
Clutch Clearance	
1st Clutch	.043-.051 (1.10-1.30)
2nd Clutch	.033-.041 (.85-1.05)
3rd Clutch	.028-.035 (.70-.90)
4th & 5th Clutch	.022-.030 (.55-.75)
1st-Hold Clutch	.020-.035 (.50-.90)
Clutch Disc Thickness	.076 (1.94)
Clutch Plate Thickness	
1st & 2nd Clutch	.063 (1.60)
3rd & 4th Clutch	.091 (2.30)
5th Clutch	.079 (2.00)
1st-Hold Clutch	.071 (1.80)
Oil Pump Side Clearance	
Oil Pump Drive Gear	.0083-.0104 (.210-.265)
Oil Pump Driven Gear	.0028-.0049 (.070-.125)
Oil Pump Thrust Clearance	
Standard	.0010-.0020 (.030-.050)
Wear Limit	.0028 (.070)

cardiagn.com

Mainshaft Clearance	.001-.004 (.03-.11)
Secondary Shaft 1st Gear Clearance	.003-.006 (.07-.15)
Secondary Shaft 2nd Gear Clearance	.002-.005 (.04-.12)
Side Gear Backlash	.002-.006 (.05-.15)
Parking Brake Stopper Distance	3.33-3.37 (84.6-85.6)

DIFFERENTIAL BEARING PRELOAD (1)

Application	**INCH Lbs. (N.m)**
New Bearings	24-35 (2.7-3.9)
Used Bearings	22-32 (2.5-3.6)
(1) Starting torque required to rotate differential assembly.	

cardiagn.com