2013 Chevrolet Spark Owner Manual

In Brief 1-1
Instrument Panel 1-2
Initial Drive Information 1-3
Vehicle Features 1-11
Performance and Maintenance 1-14

Keys, Doors, and Windows 2-1
Keys and Locks 2-1
Doors 2-7
Vehicle Security 2-8
Exterior Mirrors 2-10
Interior Mirrors 2-11
Windows 2-12

Seats and Restraints 3-1
Head Restraints 3-2
Front Seats 3-3
Rear Seats 3-6
Safety Belts 3-9
Airbag System 3-17
Child Restraints 3-30

Storage 4-1
Storage Compartments 4-1
Additional Storage Features ... 4-1
Roof Rack System 4-3

Instruments and Controls 5-1
Controls 5-2
Warning Lights, Gauges, and Indicators 5-6
Information Displays 5-21
Vehicle Messages 5-24
Vehicle Personalization 5-25

Lighting 6-1
Exterior Lighting 6-1
Interior Lighting 6-4
Lighting Features 6-5

Infotainment System 7-1
Introduction 7-1
Radio 7-9
Audio Players 7-16
Navigation 7-19
Phone 7-21
Downloadable Applications ... 7-31
Bluetooth Phone/Devices 7-36
Trademarks and License Agreements 7-44

Climate Controls 8-1
Climate Control Systems 8-1
Air Vents 8-3
Maintenance 8-4

Driving and Operating 9-1
Driving Information 9-2
Starting and Operating 9-13
Engine Exhaust 9-20
Automatic Transmission 9-21
Manual Transmission 9-23
Brakes 9-25
Ride Control Systems 9-27
Cruise Control 9-30
Fuel 9-32
Towing 9-36
Conversions and Add-Ons ... 9-37

2013 Chevrolet Spark Owner Manual

Vehicle Care 10-1
General Information 10-2
Vehicle Checks 10-3
Headlamp Aiming 10-23
Bulb Replacement 10-24
Electrical System 10-27
Wheels and Tires 10-34
Jump Starting 10-62
Towing 10-65
Appearance Care 10-68

Service and Maintenance ... 11-1
General Information 11-1
Maintenance Schedule 11-3
Special Application Services 11-8
Additional Maintenance and Care 11-9
Recommended Fluids, Lubricants, and Parts 11-12
Maintenance Records 11-15

Technical Data 12-1
Vehicle Identification 12-1
Vehicle Data 12-2

Customer Information 13-1
Customer Information 13-1
Reporting Safety Defects 13-12
Vehicle Data Recording and Privacy 13-13

OnStar 14-1
OnStar Overview 14-1
OnStar Services 14-2
OnStar Additional Information 14-5

Index i-1

The names, logos, emblems, slogans, vehicle model names, and vehicle body designs appearing in this manual including, but not limited to, GM, the GM logo, CHEVROLET, the CHEVROLET Emblem, and SPARK are trademarks and/or service marks of General Motors LLC, its subsidiaries, affiliates, or licensors.

This manual describes features that may or may not be on your specific vehicle either because they are options that you did not purchase or due to changes subsequent to the printing of this owner manual. Please refer to the purchase documentation relating to your specific vehicle to confirm each of the features found on your vehicle. For vehicles first sold in Canada, substitute the name “General Motors of Canada Limited” for Chevrolet Motor Division wherever it appears in this manual.

Keep this manual in the vehicle for quick reference.

Canadian Vehicle Owners

Propriétaires Canadiens

A French language manual can be obtained from your dealer, at www.helminc.com, or from:

On peut obtenir un exemplaire de ce guide en français auprès du concessionnaire ou à l'adresse savant:

Helm, Incorporated
Attention: Customer Service
47911 Halyard Drive
Plymouth, MI 48170

Litho in U.S.A.
Part No. 20944900 B Second Printing

©2012 General Motors LLC. All Rights Reserved.

Using this Manual

To quickly locate information about the vehicle, use the Index in the back of the manual. It is an alphabetical list of what is in the manual and the page number where it can be found.

Danger, Warnings, and Cautions

Warning messages found on vehicle labels and in this manual describe hazards and what to do to avoid or reduce them.

Danger indicates a hazard with a high level of risk which will result in serious injury or death.

Warning or **Caution** indicates a hazard that could result in injury or death.

⚠ WARNING

These mean there is something that could hurt you or other people.

Notice: **This means there is something that could result in property or vehicle damage. This would not be covered by the vehicle's warranty.**

A circle with a slash through it is a safety symbol which means “Do Not,” “Do not do this,” or “Do not let this happen.”

Symbols

The vehicle has components and labels that use symbols instead of text. Symbols are shown along with the text describing the operation or information relating to a specific component, control, message, gauge, or indicator.

: This symbol is shown when you need to see your owner manual for additional instructions or information.

: This symbol is shown when you need to see a service manual for additional instructions or information.

Vehicle Symbol Chart

Here are some additional symbols that may be found on the vehicle and what they mean. For more information on the symbol, refer to the Index.

: Airbag Readiness Light

: Antilock Brake System (ABS)

: Audio Steering Wheel Controls or OnStar®

: Brake System Warning Light

: Charging System

: Cruise Control

: Engine Coolant Temperature

: Exterior Lamps

: Fog Lamps

: Fuel Gauge

: Fuses

: Headlamp High/Low-Beam Changer

: LATCH System Child Restraints

: Malfunction Indicator Lamp

: Oil Pressure

: Power

: Safety Belt Reminders

: Tire Pressure Monitor

: Traction Control/StabiliTrak®

: StabiliTrak® Off

: Traction Control Off

: Windshield Washer Fluid

✍ NOTES

In Brief

Instrument Panel

Instrument Panel 1-2

Initial Drive Information

Initial Drive Information 1-3
Remote Keyless Entry (RKE) System 1-3
Door Locks 1-4
Liftgate 1-5
Windows 1-6
Seat Adjustment 1-6
Second Row Seats 1-7
Head Restraint Adjustment 1-7
Safety Belts 1-7
Passenger Sensing System . . . 1-8
Mirror Adjustment 1-8
Steering Wheel Adjustment . . . 1-9
Interior Lighting 1-9
Exterior Lighting 1-10
Windshield Wiper/Washer 1-10
Climate Controls 1-11

Vehicle Features

Radio(s) 1-11
Satellite Radio 1-11
Portable Audio Devices 1-12
Bluetooth® 1-12
Steering Wheel Controls 1-12
Cruise Control 1-13
Driver Information Center (DIC) 1-13
Power Outlets 1-14

Performance and Maintenance

Traction Control System (TCS) 1-14
StabiliTrak® System 1-14
Tire Pressure Monitor 1-14
Tire Sealant and Compressor Kit 1-15
Engine Oil Life System 1-15
Driving for Better Fuel Economy 1-15
Roadside Assistance Program 1-16
OnStar® 1-16

Instrument Panel

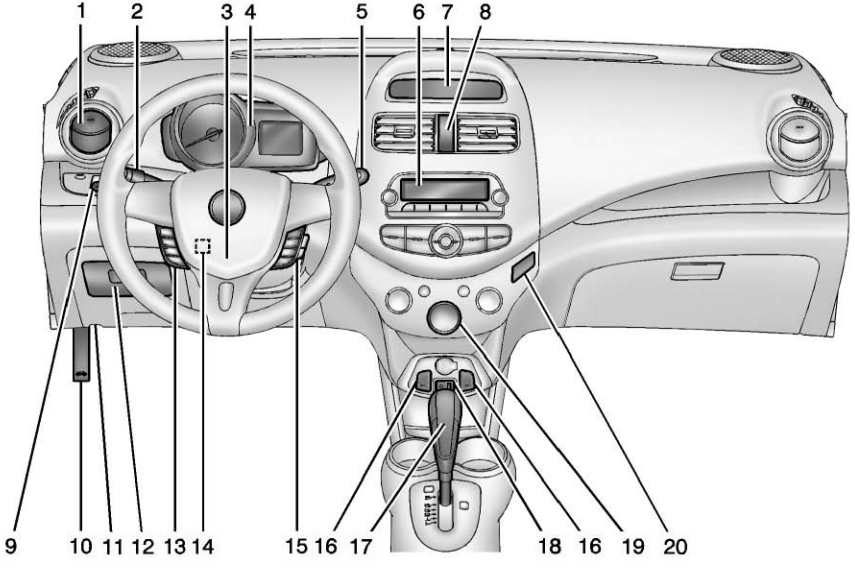

1. *Air Vents on page 8-3*.
2. *Exterior Lamp Controls on page 6-1*.
3. *Horn on page 5-2*.
4. *Instrument Cluster on page 5-7*.
5. *Windshield Wiper/Washer on page 5-2*.
6. *Infotainment on page 7-1*.
7. Information Display.
8. *Hazard Warning Flashers on page 6-2*.
9. *Instrument Panel Illumination Control on page 6-4*.

   Power Mirrors on page 2-11 (If Equipped).
10. Hood Release. See *Hood on page 10-4*.
11. Data Link Connector (DLC) (Out of View). See *Malfunction Indicator Lamp on page 5-11*.
12. *Instrument Panel Fuse Block on page 10-32*.
13. *Cruise Control on page 9-30* (If Equipped).
14. *Steering Wheel Adjustment on page 5-2*.
15. *Steering Wheel Controls on page 5-2* (If Equipped).
16. *Heated Front Seats on page 3-6* (If Equipped).
17. Shift Lever. See *Automatic Transmission on page 9-21* (If Equipped) or *Manual Transmission on page 9-23* (If Equipped).
18. USB Port. See *Auxiliary Devices on page 7-17*.
19. *Climate Control Systems on page 8-1*.
20. *Traction Control System (TCS) on page 9-27*/*StabiliTrak® System on page 9-28*.

Initial Drive Information

This section provides a brief overview about some of the important features that may or may not be on your specific vehicle.

For more detailed information, refer to each of the features which can be found later in this owner manual.

Remote Keyless Entry (RKE) System

For vehicles with the RKE transmitter, it may work up to 60 m (195 ft) away from the vehicle.

Press the key release button to extend the key blade. The key can be used for the ignition and all locks.

Press to unlock the driver door or all doors and the lifgate.

Press to lock all doors and the liftgate.

Lock and unlock feedback can be personalized. See *Vehicle Personalization on page 5-25*.

Press and release to initiate vehicle locator.

Press and hold for at least three seconds to sound the panic alarm.

Press again to cancel the panic alarm.

See *Keys on page 2-1* and *Remote Keyless Entry (RKE) System Operation on page 2-3*.

Door Locks

To lock or unlock the doors from outside the vehicle:

- Use the key in the driver door to lock and unlock the door.
- Press or on the Remote Keyless Entry (RKE) transmitter, if equipped, to lock and unlock the doors. See *Remote Keyless Entry (RKE) System Operation on page 2-3*.

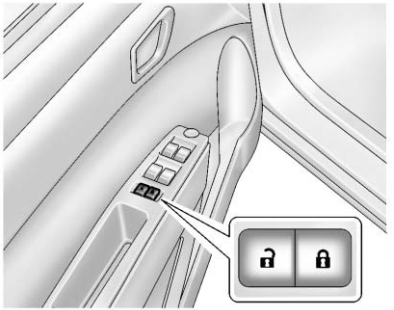

To lock or unlock the doors from inside the vehicle:

- Press or , if equipped.
- Use the lock knob on the top of the door panel.

See *Door Locks on page 2-4* and *Central Locking System on page 2-5*.

Liftgate

To lock or unlock the liftgate from the outside, use the key in the liftgate lock or press 🔒 or 🔓 on the RKE transmitter, if equipped. See *Remote Keyless Entry (RKE) System Operation on page 2-3*.

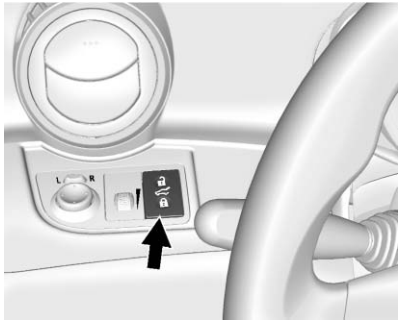

Without RKE

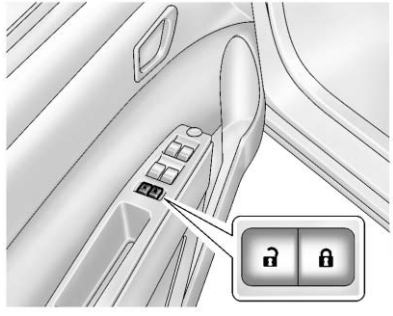

With RKE

To lock or unlock the liftgate from the inside, press 🔒 or 🔓.

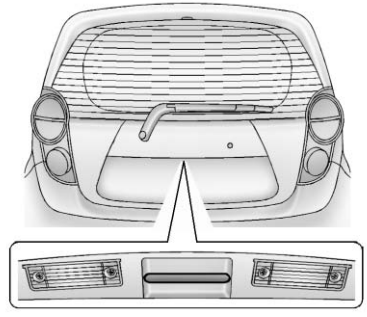

To open the liftgate, pull the handle and lift up.

When closing the liftgate, use the pull cup.

See *Liftgate on page 2-7* or *Central Locking System on page 2-5*.

Windows

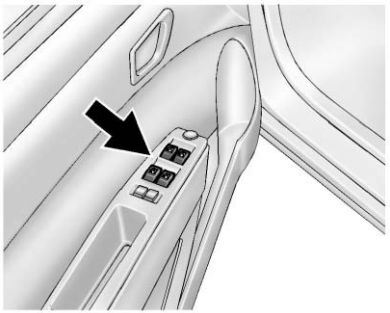

Press the switch down to open the window. Pull the front of the switch up to close it.

The switches work when the vehicle is in ON/RUN, ACC/ACCESSORY, or when Retained Accessory Power (RAP) is active.

See *Retained Accessory Power (RAP) on page 9-17* and *Power Windows on page 2-12*.

Seat Adjustment

Manual Seats

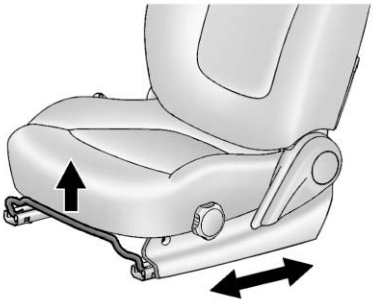

To adjust the seat:

1. Lift the bar under the front edge of the seat cushion to unlock the seat.
2. Slide the seat to the desired position and release the bar.
3. Try to move the seat back and forth to be sure it is locked in place.

See *Seat Adjustment on page 3-3*.

Seat Height Adjuster

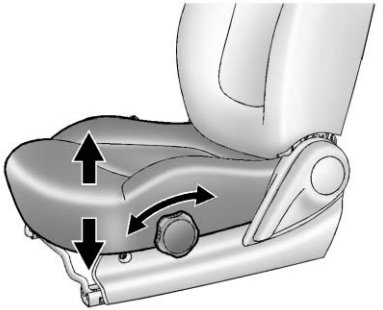

If available, turn the knob to raise or lower the seat.

See *Seat Adjustment on page 3-3*.

Reclining Seatbacks

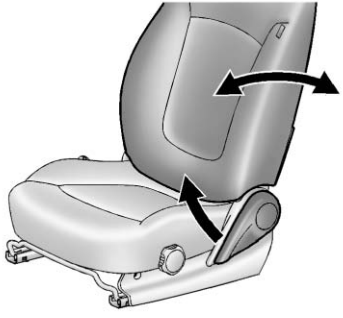

To recline the seatback:

1. Lift the lever.
2. Move the seatback to the desired position, and then release the lever to lock the seatback in place.
3. Push and pull on the seatback to make sure it is locked in place.

To return the seatback to the upright position:

1. Lift the lever fully without applying pressure to the seatback, and the seatback will return to the upright position.
2. Push and pull on the seatback to make sure it is locked.

See *Reclining Seatbacks on page 3-4*.

Second Row Seats

The rear seatbacks can be folded down to increase cargo space.

See *Rear Seats on page 3-6*.

Head Restraint Adjustment

Do not drive until the head restraints for all occupants are installed and adjusted properly.

To achieve a comfortable seating position, change the seatback recline angle as little as necessary while keeping the seat and the head restraint height in the proper position.

See *Head Restraints on page 3-2* and *Seat Adjustment on page 3-3*.

Safety Belts

Refer to the following sections for important information on how to use safety belts properly.

- *Safety Belts on page 3-9*.
- *How to Wear Safety Belts Properly on page 3-10*.

- *Lap-Shoulder Belt on page 3-11*.
- *Lower Anchors and Tethers for Children (LATCH System) on page 3-37*.

Passenger Sensing System

United States

Canada

The passenger sensing system turns off the front outboard passenger frontal airbag and knee airbag under certain conditions. No other airbag is affected by the passenger sensing system. See *Passenger Sensing System on page 3-24* for important information.

The passenger airbag status indicator will be visible on the center display when the vehicle is started. See *Passenger Airbag Status Indicator on page 5-10*.

Mirror Adjustment

Exterior Mirrors

Manual Outside Mirrors

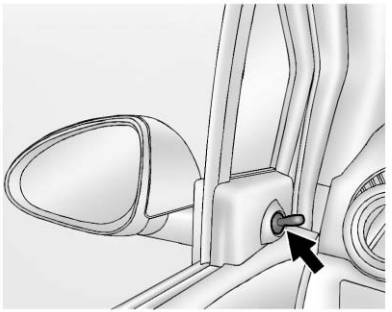

If equipped, move the control up, down, or side to side to adjust the mirror.

See *Manual Mirrors on page 2-10*.

Power Outside Mirrors

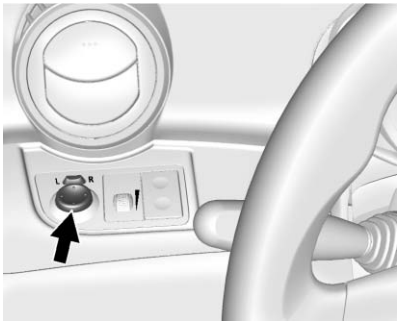

1. If equipped, move the selector switch to L (Left) or R (Right) to choose the driver or passenger mirror.
2. Move the control up, down, or side to side to adjust the mirror.

3. Return the selector switch to the center with done.

See *Power Mirrors on page 2-11*.

Folding Mirrors

The vehicle has manual folding mirrors. These mirrors can be folded inward to prevent damage when going through an automatic car wash. To fold, pull the mirror toward the vehicle. Push the mirror outward to return it to the original position.

See *Folding Mirrors on page 2-11*.

Interior Mirror

Adjustment

Push the tab forward to the daytime position, then adjust the rearview mirror for a clear view of the area behind the vehicle.

Manual Rearview Mirror

To avoid glare of the headlamps from behind, pull the tab backward for nighttime use. Push the tab forward for daytime use.

Steering Wheel Adjustment

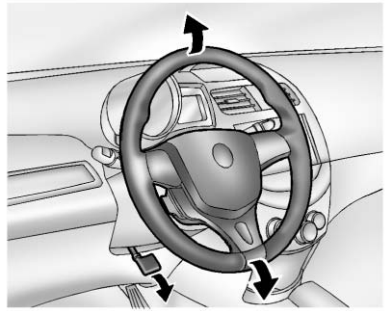

To adjust the steering wheel:

1. Pull the lever down.
2. Move the steering wheel up or down.
3. Pull the lever up to lock the steering wheel in place.

Do not adjust the steering wheel while driving.

Interior Lighting

Dome Lamps

The dome lamp controls are in the overhead console.

Move the control to change the lamp setting.

OFF: Turns the lamps off, even when a door is open.

DOOR: Turns the lamps on automatically when a door is opened.

ON: Turns on the dome lamps.

For more information about interior lighting, see *Instrument Panel Illumination Control on page 6-4* or *Courtesy Lamps on page 6-4*.

Exterior Lighting

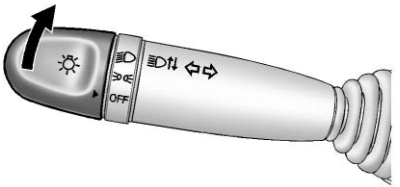

The exterior lamp control is on the turn signal lever on the left side of the steering column.

There are three positions:

: Turns on the headlamps, together with the following:

- Taillamps
- License Plate Lamp
- Instrument Panel Lights
- Parking Lamps

: Turns on the parking lamps, together with the taillamps, license plate lamp, and instrument panel lights.

OFF: Turns all the lamps off, except the Daytime Running Lamp (DRL).

The DRL automatically turn off when the ignition key is turned off.

See *Exterior Lamp Controls on page 6-1* and *Daytime Running Lamps (DRL) on page 6-2*.

Windshield Wiper/Washer

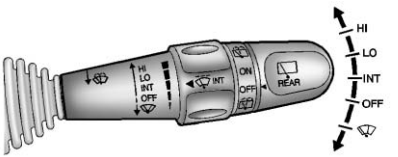

The windshield wiper/washer lever is on the right side of the steering column.

Move the lever to one of the following positions:

HI: Use for fast wipes.

LO: Use for slow wipes.

INT: Move the lever up to INT for intermittent wipes, then turn the INT band up for more frequent wipes or down for less frequent wipes.

OFF: Use to turn the wipers off.

: For a single wipe, briefly move the wiper lever down. For several wipes, hold the wiper lever down.

Windshield Washer

Pull the windshield wiper lever toward you to spray windshield washer fluid and activate the wipers.

See *Windshield Wiper/Washer on page 5-2*. For vehicles with a rear window wiper/washer, see *Rear Window Wiper/Washer on page 5-3*.

Climate Controls

The heating, cooling, and ventilation for the vehicle can be controlled with this system.

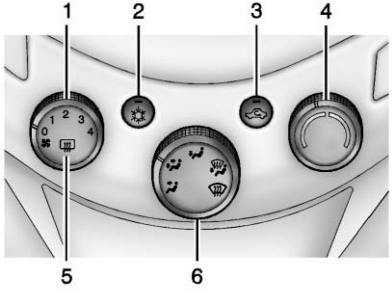

1. Fan Control
2. Air Conditioning
3. Recirculation
4. Temperature Control
5. Rear Window Defogger
6. Air Delivery Mode Control

See *Climate Control Systems on page 8-1*.

Vehicle Features

Radio(s)

⏻ /VOL: Press to turn the system on and off. Turn to increase or decrease the volume.

RADIO/BAND: Press to select AM or FM.

⏮ SEEK or SEEK ⏭ (Seek): Press to seek the previous or next station.

Buttons 1−6: Press to save and select favorite stations.

INFO: Press to view current radio information.

For more information about these and other radio features, see *Operation on page 7-6*.

Storing a Favorite Station

Stations from all bands can be stored in the favorite lists in any order. Up to six stations can be stored in each favorite page and the number of available favorite pages can be set.

To store the station to a position in the list, press the corresponding button 1−6 until a beep is heard.

For more information, see “Storing a Station as a Favorite” in *AM-FM Radio on page 7-9*.

Setting the Clock

See *Clock on page 5-4*.

Satellite Radio

Vehicles with a SiriusXM® satellite radio tuner and a valid SiriusXM satellite radio subscription can receive SiriusXM programming.

SiriusXM Satellite Radio Service

SiriusXM is a satellite radio service based in the 48 contiguous United States and 10 Canadian provinces. SiriusXM satellite radio has a wide variety of programming and commercial-free music, coast to coast, and in digital-quality sound. A fee is required to receive the SiriusXM service.

Refer to:

- www.siriusxm.com or call 1-866-635-2349 (U.S.).
- www.xmradio.ca or call 1-877-209-0079 (Canada).

See *Satellite Radio on page 7-13*.

Portable Audio Devices

Some vehicles may have a 3.5 mm (1/8 in) auxiliary input and a USB port in the center stack. External devices such as iPods®, laptop computers, MP3 players, CD changers, and USB drives may be connected, depending on the audio system.

See *Auxiliary Devices on page 7-17*.

Bluetooth®

The Bluetooth® system allows users with a Bluetooth-enabled cell phone to make and receive hands-free calls using the vehicle audio system and controls.

The Bluetooth-enabled cell phone must be paired with the in-vehicle Bluetooth system before it can be used in the vehicle. Not all phones will support all functions.

See *Bluetooth (Overview) on page 7-21* or *Bluetooth (Infotainment Controls) on page 7-23*.

Steering Wheel Controls

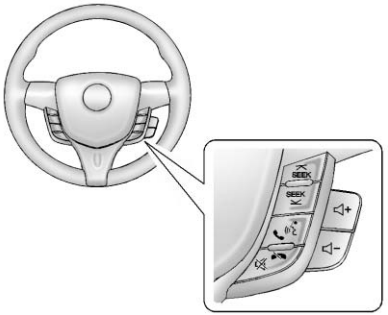

For vehicles with audio steering wheel controls, some audio controls can be adjusted at the steering wheel.

SEEK or SEEK : Press to go to the next or previous radio station, song on an iPod® or file on a USB device (if equipped).

/ : For vehicles with a Bluetooth or OnStar, press to interact with those systems. See *Bluetooth (Overview) on page 7-21* or *Bluetooth (Infotainment Controls) on page 7-23* or *OnStar Overview on page 14-1*.

/ : Press to silence the vehicle speakers only. Press again to turn the sound on. For vehicles with OnStar or Bluetooth systems, press to reject an incoming call, or end a current call.

+ or − : Press + or − to increase or decrease the volume.

Cruise Control

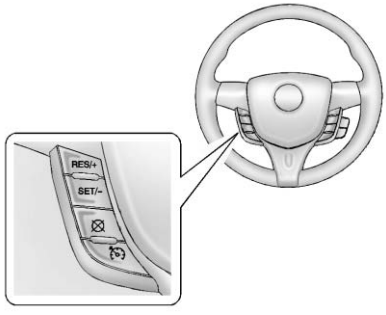

: Press to turn the cruise control system on and off. A white cruise control indicator light turns on when in use.

RES/–: Press briefly to make the vehicle resume to a previously set speed, or press and hold to accelerate.

SET/–: Press to set the speed and activate cruise control or make the vehicle decelerate.

: Press to disengage cruise control without erasing the set speed from memory.

See *Cruise Control on page 9-30*.

Driver Information Center (DIC)

The DIC has different displays, which can be accessed by using the DIC buttons on the right side of the instrument cluster. The DIC displays trip, fuel, and warning messages if a system problem is detected.

DIC Buttons

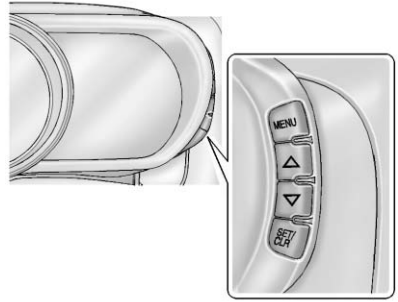

MENU: Press to display the DIC menus.

or : Use to scroll through the menus.

SET/CLR: Press to set or clear the menu item displayed.

See *Driver Information Center (DIC) on page 5-21*.

Power Outlets

The accessory power outlets can be used to plug in electrical equipment, such as a cell phone or MP3 player.

The vehicle has an accessory power outlet in front of the cupholders on the center stack.

See *Power Outlets on page 5-5*.

Performance and Maintenance

Traction Control System (TCS)

The TCS limits wheel spin. The system is on when the vehicle is started.

- To turn off traction control, press and release the TCS/StabiliTrak button OFF on the center stack. TC illuminates in the instrument cluster.
- Press and release the TCS/StabiliTrak button OFF again to turn traction control back on. TC goes off in the instrument cluster.

See *Traction Control System (TCS) on page 9-27*.

StabiliTrak® System

The StabiliTrak system assists with directional control of the vehicle in difficult driving conditions. The system is on when the vehicle is started.

- To turn off both traction control and StabiliTrak, press and hold the TCS/StabiliTrak button OFF on the center stack, until TC and OFF illuminate in the instrument cluster.
- Press the TCS/StabiliTrak button OFF again to turn on both systems. TC and OFF go off in instrument cluster.

See *StabiliTrak® System on page 9-28*.

Tire Pressure Monitor

This vehicle may have a Tire Pressure Monitor System (TPMS).

The low tire pressure warning light alerts to a significant loss in pressure of one of the vehicle's tires. If the warning light comes on, stop as soon as possible and inflate the tires to the recommended pressure shown on the Tire and Loading Information label. See *Vehicle Load Limits on page 9-9*. The warning light will remain on until the tire pressure is corrected.

The low tire pressure warning light may come on in cool weather when the vehicle is first started, and then turn off as the vehicle is driven. This may be an early indicator that the tire pressures are getting low and the tires need to be inflated to the proper pressure.

The TPMS does not replace normal monthly tire maintenance. Maintain the correct tire pressures.

See *Tire Pressure Monitor System on page 10-42*.

Tire Sealant and Compressor Kit

This vehicle has a tire sealant and compressor kit that can be used to seal small punctures in the tread area of the tire. Significant sidewall damage will require the tire to be replaced.

See *Tire Sealant and Compressor Kit on page 10-55* for complete operating information.

Engine Oil Life System

The engine oil life system calculates engine oil life based on vehicle use and displays a DIC message when it is necessary to change the engine oil and filter. The oil life system should be reset to 100% only following an oil change.

Resetting the Oil Life System

1. Display Remaining Oil Life on the DIC.
2. Press and hold the SET/CLR button on the DIC for more than five seconds. The oil life will change to 100%.

See *Engine Oil Life System on page 10-9*.

Driving for Better Fuel Economy

Driving habits can affect fuel mileage. Here are some driving tips to get the best fuel economy possible.

- Avoid fast starts and accelerate smoothly.
- Brake gradually and avoid abrupt stops.
- Avoid idling the engine for long periods of time.
- When road and weather conditions are appropriate, use cruise control.

- Always follow posted speed limits or drive more slowly when conditions require.
- Keep vehicle tires properly inflated.
- Combine several trips into a single trip.
- Replace the vehicle's tires with the same TPC Spec number molded into the tire's sidewall near the size.
- Follow recommended scheduled maintenance.

Roadside Assistance Program

U.S.: 1-800-243-8872

TTY Users (U.S. Only): 1-888-889-2438

Canada: 1-800-268-6800

As the owner of a new Chevrolet, you are automatically enrolled in the Roadside Assistance program.

See *Roadside Assistance Program on page 13-5*.

OnStar®

If equipped, this vehicle has a comprehensive, in-vehicle system that can connect to a live Advisor for Emergency, Security, Navigation, Connection, and Diagnostic Services. See *OnStar Overview on page 14-1*.

Keys, Doors, and Windows

Keys and Locks
Keys 2-1
Remote Keyless Entry (RKE) System 2-2
Remote Keyless Entry (RKE) System Operation 2-3
Door Locks 2-4
Central Locking System 2-5
Door Ajar Reminder 2-5
Automatic Door Locks 2-5
Safety Locks 2-6

Doors
Liftgate 2-7

Vehicle Security
Vehicle Security 2-8
Vehicle Alarm System 2-8
Immobilizer 2-9
Immobilizer Operation 2-9

Exterior Mirrors
Convex Mirrors 2-10
Manual Mirrors 2-10
Power Mirrors 2-11
Folding Mirrors 2-11

Interior Mirrors
Manual Rearview Mirror 2-11

Windows
Windows 2-12
Power Windows 2-12
Sun Visors 2-13

Keys and Locks

Keys

⚠ WARNING

Leaving children in a vehicle with the ignition key is dangerous and children or others could be seriously injured or killed. They could operate the power windows or other controls or make the vehicle move. The windows will function with the keys in the ignition, and children or others could be caught in the path of a closing window. Do not leave children in a vehicle with the ignition key.

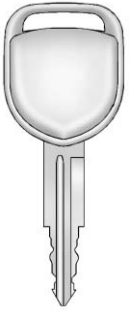

Base Level Key

Uplevel Key

The key that is part of the Remote Keyless Entry (RKE) transmitter can be used for the ignition and all locks.

Press the key release button on the RKE transmitter to extend the key. Press the button and the key blade to retract the key.

See your dealer if a new key is needed.

If it becomes difficult to turn the key, inspect the key blade for debris. Periodically clean with a brush or pick.

If you are locked out of the vehicle, see *Roadside Assistance Program on page 13-5*.

With an active OnStar subscription, an OnStar Advisor may remotely unlock the vehicle. See *OnStar Overview on page 14-1*.

Remote Keyless Entry (RKE) System

See *Radio Frequency Statement on page 13-15* for information regarding Part 15 of the Federal Communications Commission (FCC) rules and Industry Canada Standards RSS-GEN/210/220/310.

If there is a decrease in the RKE operating range:

- Check the distance. The transmitter may be too far from the vehicle.

- Check the location. Other vehicles or objects may be blocking the signal.
- Check the transmitter's battery. See “Battery Replacement” later in this section.
- If the transmitter is still not working correctly, see your dealer or a qualified technician for service.

Remote Keyless Entry (RKE) System Operation

The RKE transmitter may work up to 60 m (195 ft) away from the vehicle.

Other conditions can affect the performance of the transmitter. See *Remote Keyless Entry (RKE) System on page 2-2*.

The following buttons are on the transmitter:

(Lock): Press once to lock all doors and the liftgate. The turn signal indicators may flash and/or the horn may sound to indicate locking.

If any door is open when is pressed, all doors and the liftgate will lock, if Unlocked Door Anti Lock Out is disabled through vehicle personalization. If Unlocked Door Anti Lock Out is enabled, only the driver door unlocks.

See “Remote Door Unlock” under *Vehicle Personalization on page 5-25*.

Pressing may also arm the theft-deterrent system. See *Vehicle Alarm System on page 2-8*.

(Unlock): Press to unlock the driver door. Press again to unlock all doors and the liftgate. The turn signal indicators flash to indicate unlocking has occurred.

See “Remote Door Unlock” under *Vehicle Personalization on page 5-25*.

Pressing may also disarm the theft-deterrent system. See *Vehicle Alarm System on page 2-8*.

(Vehicle Locator/Panic Alarm): Press and release one time to initiate vehicle locator. The exterior lamps flash and the horn chirps three times. Press and hold for at least three seconds to sound the panic alarm. The horn sounds and the turn signals flash for

30 second or until is pressed again, or the key is placed in the ignition and turned to ON/RUN.

Programming Transmitters to the Vehicle

Only RKE transmitters programmed to this vehicle will work. If a transmitter is lost or stolen, a replacement can be purchased and programmed through your dealer. When the replacement transmitter is programmed to this vehicle, all remaining transmitters must also be reprogrammed. Any lost or stolen transmitters will no longer work once the new transmitter is programmed. See your dealer to have new transmitters programmed.

Battery Replacement

The battery is not rechargeable. To replace the battery:

1. Push the button on the transmitter to extend the key.
2. Remove the battery cover by prying it with a finger.
3. Remove the battery by pushing on the battery and sliding it toward the key blade.
4. Insert the new battery, positive side facing up. Push the battery down until it is held in place. Replace with a CR2032 or equivalent battery.
5. Snap the battery cover back on to the transmitter.

Door Locks

⚠ WARNING

Unlocked doors can be dangerous.

- Passengers, especially children, can easily open the doors and fall out of a moving vehicle. When a door is locked, the handle will not open it. The chance of being thrown out of the vehicle in a crash is increased if the

(Continued)

WARNING (Continued)

doors are not locked. So, all passengers should wear safety belts properly and the doors should be locked whenever the vehicle is driven.

- Young children who get into unlocked vehicles may be unable to get out. A child can be overcome by extreme heat and can suffer permanent injuries or even death from heat stroke. Always lock the vehicle whenever leaving it.
- Outsiders can easily enter through an unlocked door when you slow down or stop the vehicle. Locking the doors can help prevent this from happening.

To lock or unlock the doors from outside the vehicle:

- Use the key in the driver door to lock and unlock the door.
- Press 🔒 or 🔓 on the Remote Keyless Entry (RKE) transmitter, if equipped, to lock and unlock the doors. See *Remote Keyless Entry (RKE) System Operation on page 2-3*.

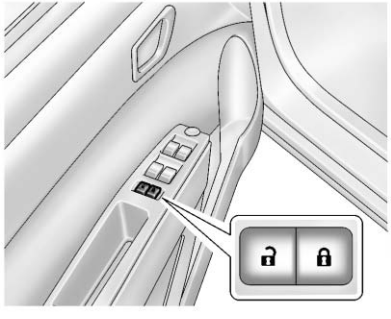

To lock or unlock the doors from inside the vehicle:

- Press 🔒 or 🔓, if equipped.
- Use the lock knob on the top of the door panel.

Central Locking System

This system allows the doors and liftgate to be locked and unlocked by using the Remote Keyless Entry (RKE) transmitter or by using the key in the driver door.

See *Door Locks on page 2-4* and *Liftgate on page 2-7*.

Door Ajar Reminder

If one of the doors or the liftgate is not closed properly while the ignition is on, the door ajar light on the instrument cluster comes on and stays on until the doors are closed. See *Door Ajar Light on page 5-20*.

Automatic Door Locks

If equipped, the vehicle is programmed so that when the doors are closed, the ignition is on, and the shift lever is moved out of P (Park) for automatic transmissions, or the vehicle speed is above 13 km/h (8 mph) for manual transmissions, the doors and the liftgate will lock.

To unlock the doors and the liftgate:

- Press 🔓 on the door.
- For vehicles with an automatic transmission, shift the transmission into P (Park).
- For vehicle with a manual transmission, remove the key from the ignition.

Safety Locks

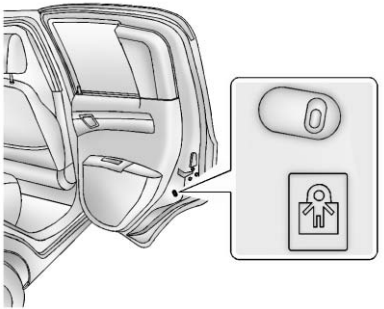

The vehicle has rear door safety locks on each rear door that prevent passengers from opening the rear doors from the inside.

Using the Rear Door Safety Lock

1. Move the lever up to lock.
2. Close the door.
3. Repeat Steps 1 and 2 for the other rear door lock.

Notice: **Pulling the inside door handle while the rear door safety locks are engaged could damage your vehicle. Do not pull the inside door handle while the rear door safety locks are engaged.**

The rear doors on the vehicle cannot be opened from the inside while this feature is in use.

Opening a Rear Door When the Safety Lock is On

1. Unlock the door from the inside.
2. Open the door from the outside.

For the rear doors to open from the inside, the safety locks have to be moved back to the unlock position.

Canceling a Rear Door Safety Lock

1. Unlock the door from the inside and open the door from the outside.
2. Move the lever down to unlock.
3. Repeat Steps 1 and 2 for the other rear door lock.

The rear door locks can now be locked and unlocked normally.

Doors

Liftgate

⚠ WARNING

Exhaust gases can enter the vehicle if it is driven with the liftgate, trunk/hatch open, or with any objects that pass through the seal between the body and the trunk/hatch or liftgate. Engine exhaust contains carbon monoxide (CO) which cannot be seen or smelled. It can cause unconsciousness and even death.

If the vehicle must be driven with the liftgate or trunk/hatch open:

- Close all of the windows.
- Fully open the air outlets on or under the instrument panel.

(Continued)

WARNING (Continued)

- Adjust the climate control system to a setting that brings in only outside air and set the fan speed to the highest setting. See “Climate Control Systems” in the Index.
- If the vehicle is equipped with a power liftgate, disable the power liftgate function.

For more information about carbon monoxide, see *Engine Exhaust on page 9-20*.

Notice: **To avoid damage to the liftgate or liftgate glass, make sure the area above and behind the liftgate is clear before opening it.**

To lock or unlock the liftgate from the outside, use the key in the liftgate lock or press 🔒 or 🔓 on the RKE transmitter, if equipped. See *Remote Keyless Entry (RKE) System Operation on page 2-3*.

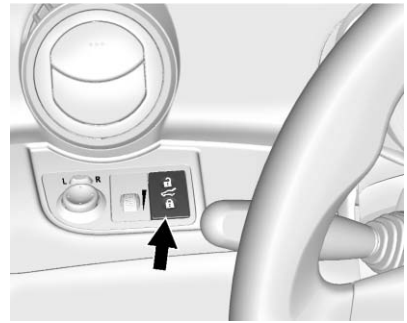

Without RKE

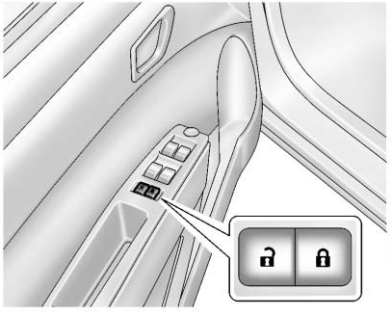

With RKE

To lock or unlock the liftgate from the inside, press 🔒 or 🔓.

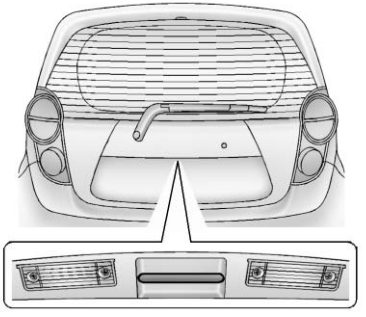

To open the liftgate, pull the handle and lift up.

When closing the liftgate, use the pull cup.

See *Central Locking System on page 2-5*.

Vehicle Security

This vehicle has theft-deterrent features; however, they do not make the vehicle impossible to steal.

Vehicle Alarm System

This vehicle has an anti-theft alarm system.

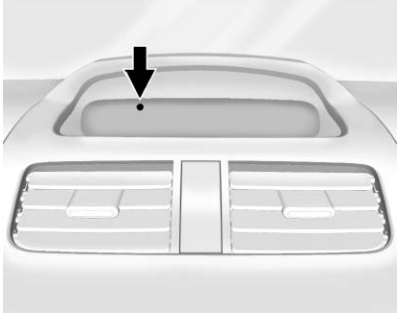

The indicator light on the center stack, indicates the status of the system.

Arming the System

1. Press 🔒 once on the Remote Keyless Entry (RKE). The anti-theft alarm system is active automatically after 30 seconds.
2. Press 🔒 twice and the anti-theft alarm system is immediately active.

The security indicator will flash to indicate the anti-theft system is working. It goes out when the doors are unlocked using the RKE transmitter. The indicator comes on when the doors are locked using the RKE transmitter.

Disarming the System

To disarm the system, either unlock the doors using the RKE transmitter, or start the vehicle .

To avoid setting off the alarm by accident:

Lock the vehicle with the transmitter after all occupants have left the vehicle and all doors are closed.

If you set off the alarm by accident, turn off the alarm by pressing 🔒 or 🔓 on the RKE transmitter or start the vehicle with a recognized transmitter in the vehicle. The alarm will stop after 30 seconds and reset to the activated anti-theft mode.

If the system does not operate as described above, have it checked by your dealer.

Immobilizer

See *Radio Frequency Statement on page 13-15* for information regarding Part 15 of the Federal Communications Commission (FCC) rules and Industry Canada Standards RSS-GEN/210/220/310.

Immobilizer Operation

This vehicle has a passive theft-deterrent system.

The system does not have to be manually armed or disarmed.

The vehicle is automatically immobilized when the key is removed from the ignition.

The system is automatically disarmed when the vehicle is started with the correct key. The key uses a transponder that matches an immobilizer control unit in the vehicle and automatically disarms the system. Only an authorized key starts the vehicle. The vehicle may not start if the key is damaged.

The security light, in the instrument cluster, comes on if there is a problem with arming or disarming the theft-deterrent system.

When trying to start the vehicle, the security light comes on briefly when the ignition is turned on.

If the engine does not start and the security light stays on, there is a problem with the system. Turn the ignition off and try again.

If the engine still does not start, and the key appears to be undamaged or the light continues to stay on, try another ignition key. If the engine does not start with the other key, the vehicle needs service. If the vehicle does start, the first key may be damaged. See your dealer who can service the theft-deterrent system and have a new key made.

Do not leave the key or device that disarms or deactivates the theft-deterrent system in the vehicle.

Exterior Mirrors

Convex Mirrors

⚠ WARNING

A convex mirror can make things, like other vehicles, look farther away than they really are. If you cut too sharply into the right lane, you could hit a vehicle on the right. Check the inside mirror or glance over your shoulder before changing lanes.

The passenger side mirror is convex shaped. A convex mirror's surface is curved so more can be seen from the driver seat.

Manual Mirrors

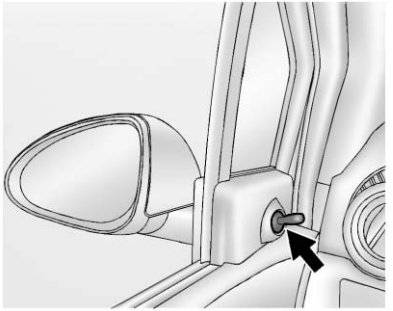

If equipped, move the control up, down, or side to side to adjust the mirror.

Adjust the mirrors so the side and the area behind the vehicle can be seen.

Power Mirrors

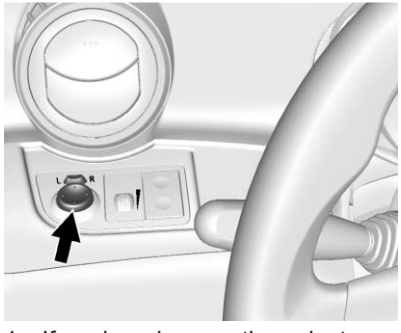

1. If equipped, move the selector switch to L (Left) or R (Right) to choose the driver or passenger mirror.
2. Move the control up, down, or side to side to adjust the mirror. Adjust the mirrors so the side and the area behind the vehicle can be seen.
3. Return the selector switch to the center when done.

Folding Mirrors

Manual Folding Mirrors

The vehicle has manual folding mirrors. These mirrors can be folded inward to prevent damage when going through an automatic car wash. To fold, pull the mirror toward the vehicle. Push the mirror outward to return it to the original position.

Interior Mirrors

Manual Rearview Mirror

Push the tab forward to the daytime position, then adjust the rearview mirror for a clear view of the area behind the vehicle.

To avoid glare of the headlamps from behind, pull the tab backward for nighttime use. Push the tab forward for daytime use.

Windows

⚠ WARNING

Never leave a child, a helpless adult, or a pet alone in a vehicle, especially with the windows closed in warm or hot weather. They can be overcome by the extreme heat and suffer permanent injuries or even death from heat stroke.

The vehicle aerodynamics are designed to improve fuel economy performance. This may result in a pulsing sound when either rear window is down and the front windows are up. To reduce the sound, open a front window.

Power Windows

⚠ WARNING

Children could be seriously injured or killed if caught in the path of a closing window. Never leave keys in a vehicle with children. When there are children in the rear seat, use the window lockout button to prevent operation of the windows. See *Keys on page 2-1*.

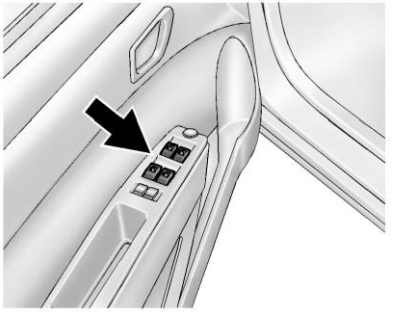

The switches on the driver door control all windows. In addition, each passenger door has a switch for its own window.

Press the switch down to open the window. Pull the front of the switch up to close it.

The power windows only operate with the ignition in ACC/ACCESSORY or ON/RUN, or when Retained Accessory Power (RAP) is active. See *Retained Accessory Power (RAP) on page 9-17*.

Window Lockout

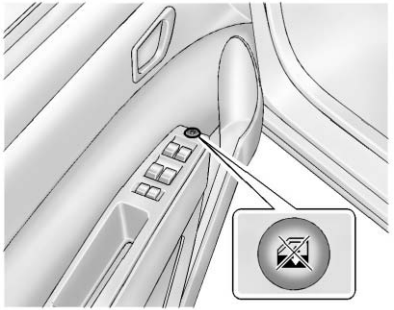

This feature prevents the rear passenger windows from operating, except from the driver position.

- Press to activate the window lockout.
- Press again to deactivate the window lockout.

Sun Visors

Pull the sun visor down to block out glare. Detach the sun visor from the center mount and swing it to the side.

Visor Vanity Mirror

The vehicle may have vanity mirrors and card holders on the back of the sun visors. Swing down the sun visor to expose the vanity mirror.

✍ NOTES

Seats and Restraints

Head Restraints
Head Restraints 3-2

Front Seats
Seat Adjustment 3-3
Reclining Seatbacks 3-4
Front Seat Armrest 3-5
Heated Front Seats 3-6

Rear Seats
Rear Seats 3-6

Safety Belts
Safety Belts 3-9
How to Wear Safety Belts Properly 3-10
Lap-Shoulder Belt 3-11
Safety Belt Use During Pregnancy 3-15
Safety Belt Extender 3-16
Safety System Check 3-16
Safety Belt Care 3-16
Replacing Safety Belt System Parts after a Crash 3-16

Airbag System
Airbag System 3-17
Where Are the Airbags? 3-19
When Should an Airbag Inflate? 3-21
What Makes an Airbag Inflate? 3-22
How Does an Airbag Restrain? 3-22
What Will You See after an Airbag Inflates? 3-22
Passenger Sensing System 3-24
Servicing the Airbag-Equipped Vehicle 3-28
Adding Equipment to the Airbag-Equipped Vehicle . . . 3-28
Airbag System Check 3-29
Replacing Airbag System Parts after a Crash 3-29

Child Restraints
Older Children 3-30
Infants and Young Children 3-32
Child Restraint Systems 3-34
Where to Put the Restraint . . . 3-36
Lower Anchors and Tethers for Children (LATCH System) 3-37
Replacing LATCH System Parts After a Crash 3-44
Securing Child Restraints (Right Front Passenger Seat) 3-44
Securing Child Restraints (Rear Seat) 3-47

Head Restraints

⚠ WARNING

With head restraints that are not installed and adjusted properly, there is a greater chance that occupants will suffer a neck/spinal injury in a crash. Do not drive until the head restraints for all occupants are installed and adjusted properly.

Front Seats

The front seats have adjustable head restraints in the outboard seating positions.

Adjust the head restraint so that the top of the restraint is at the same height as the top of the occupant's head. This position reduces the chances of a neck injury in a crash.

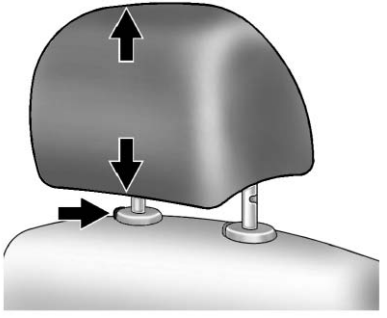

The height of the head restraint can be adjusted. Pull the head restraint up to raise it. Try to move the head restraint to make sure that it is locked in place.

To lower the head restraint, press the button, located on the top of the seatback, and push the head restraint down. Try to move the head restraint after the button is released to make sure that it is locked in place.

The front seat outboard head restraints are not designed to be removed.

Rear Seats

The vehicle's rear seats have adjustable head restraints in the outboard seating positions.

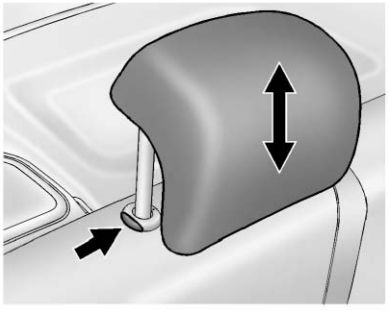

The height of the head restraint can be adjusted. Pull the head restraint up to raise it. Try to move the head restraint to make sure that it is locked in place.

To lower the head restraint, press the button, located on the top of the seatback, and push the head restraint down. Try to move the head restraint after the button is released to make sure that it is locked in place.

If you are installing a child restraint in the rear seat, see “Securing a Child Restraint Designed for the LATCH System” under *Lower Anchors and Tethers for Children (LATCH System) on page 3-37*.

Front Seats

Seat Adjustment

Manual Seats

⚠ WARNING

You can lose control of the vehicle if you try to adjust a driver seat while the vehicle is moving. Adjust the driver seat only when the vehicle is not moving.

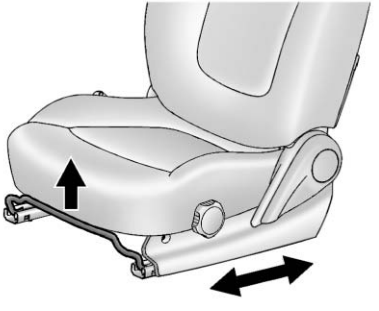

To adjust the seat:

1. Lift the bar under the front edge of the seat cushion to unlock the seat.
2. Slide the seat to the desired position and release the bar.
3. Try to move the seat back and forth to be sure it is locked in place.

Seat Height Adjuster

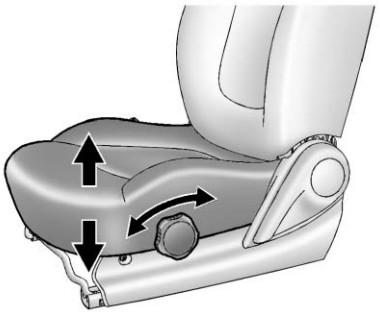

If available, turn the knob to raise or lower the seat.

Reclining Seatbacks

⚠ WARNING

If either seatback is not locked, it could move forward in a sudden stop or crash. That could cause injury to the person sitting there. Always push and pull on the seatbacks to be sure they are locked.

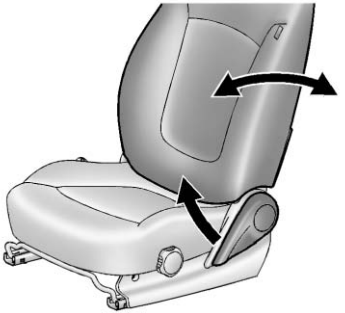

To recline the seatback:

1. Lift the lever.
2. Move the seatback to the desired position, and then release the lever to lock the seatback in place.
3. Push and pull on the seatback to make sure it is locked in place.

To return the seatback to the upright position:

1. Lift the lever fully without applying pressure to the seatback, and the seatback will return to the upright position.

2. Push and pull on the seatback to make sure it is locked.

⚠ WARNING

Sitting in a reclined position when the vehicle is in motion can be dangerous. Even when buckled up, the safety belts cannot do their job.

The shoulder belt will not be against your body. Instead, it will be in front of you. In a crash, you could go into it, receiving neck or other injuries.

The lap belt could go up over your abdomen. The belt forces would be there, not at your pelvic bones. This could cause serious internal injuries.

For proper protection when the vehicle is in motion, have the seatback upright. Then sit well back in the seat and wear the safety belt properly.

Do not have a seatback reclined if the vehicle is moving.

Front Seat Armrest

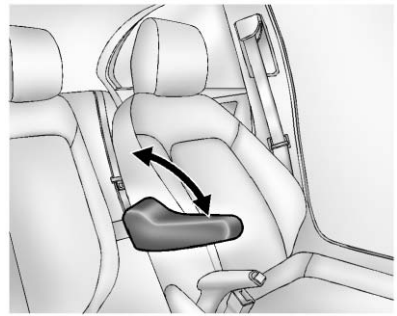

There is an armrest on the inboard side of the driver seat. To raise or lower the armrest, push up or pull down on the armrest.

Heated Front Seats

⚠ WARNING

If you cannot feel temperature change or pain to the skin, the seat heater may cause burns. To reduce the risk of burns, people with such a condition should use care when using the seat heater, especially for long periods of time. Do not place anything on the seat that insulates against heat, such as a blanket, cushion, cover, or similar item. This may cause the seat heater to overheat. An overheated seat heater may cause a burn or may damage the seat.

If available, the buttons are below the climate control system. To operate, the engine must be running.

Press ⊞ or ⊞ to heat the driver or passenger seat. The indicator light on the control turns on when this feature is on. Press the control again to turn this feature off.

The passenger seat may take longer to heat up.

Rear Seats

Folding the Seatback

Either side of the seatback can be folded down for more cargo space. Fold a seatback only when the vehicle is not moving.

Notice: **Folding a rear seat with the safety belts still fastened may cause damage to the seat or the safety belts. Always unbuckle the safety belts and return them to their normal stowed position before folding a rear seat.**

To fold a seatback down:

1. Remove the rear head restraints. See “Head Restraint Removal and Reinstallation” under *Lower Anchors and Tethers for Children (LATCH System) on page 3-37*.

2. Slide the front seats forward and place the front seatbacks in the upright position. See *Seat Adjustment on page 3-3* and *Reclining Seatbacks on page 3-4*.
3. Pull up on the front edge of the rear seat cushion to release it. Tilt the seat cushion forward toward the front of the vehicle.

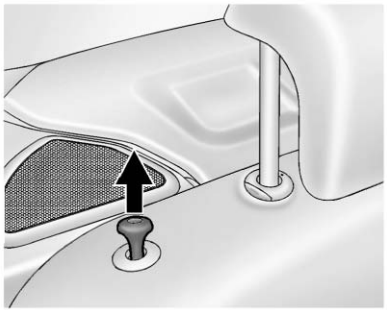

4. Pull up the release knob on the top of the seatback.

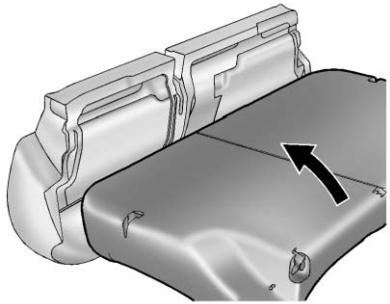

5. Fold the seatback forward and down.
6. Repeat Steps 1–5 for the other seatback and seat cushion, if desired.

Raising the Seatback

⚠ WARNING

If either seatback is not locked, it could move forward in a sudden stop or crash. That could cause injury to the person sitting there.

(Continued)

WARNING (Continued)

Always push and pull on the seatbacks to be sure they are locked.

⚠ WARNING

A safety belt that is improperly routed, not properly attached, or twisted will not provide the protection needed in a crash. The person wearing the belt could be seriously injured. After raising the rear seatback, always check to be sure that the safety belts are properly routed and attached, and are not twisted.

⚠ WARNING

With head restraints that are not installed and adjusted properly, there is a greater chance that occupants will suffer a neck/spinal injury in a crash. Do not drive until the head restraints for all occupants are installed and adjusted properly.

To return the rear seats to the normal seating position:

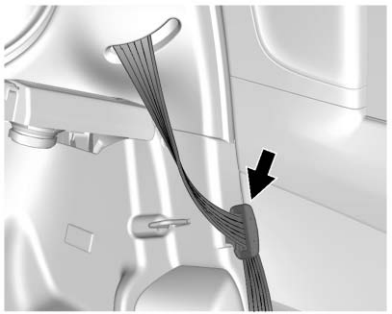

1. Insert the safety belt latch plate into the hole on the side trim before raising the seatback.

   The safety belt should not cross the seatback locking mechanism when raising the seatback.
2. Lift the seatback up slightly and reinstall the head restraint. See “Head Restraint Removal and Reinstallation” under *Lower Anchors and Tethers for Children (LATCH System) on page 3-37*.
3. Push the seatback rearward all the way to lock it in place.
4. Push and pull the top of the seatback to be sure it is locked into position.
5. Return the seat cushion to its original position and push down on the front part of the seat cushion until it latches.
6. Remove the safety belt from the hole on the side trim.
7. Repeat Steps 1–6 for the other seatback and seat cushion, if necessary.

If added cargo space is not needed, the seatbacks should be kept in the upright, locked position.

Safety Belts

This section of the manual describes how to use safety belts properly. It also describes some things not to do with safety belts.

⚠ WARNING

Do not let anyone ride where a safety belt cannot be worn properly. In a crash, if you or your passenger(s) are not wearing safety belts, injuries can be much worse than if you are wearing safety belts. You can be seriously injured or killed by hitting things inside the vehicle harder or by being ejected from the vehicle. In addition, anyone who is not buckled up can strike other passengers in the vehicle.

(Continued)

WARNING (Continued)

It is extremely dangerous to ride in a cargo area, inside or outside of a vehicle. In a collision, passengers riding in these areas are more likely to be seriously injured or killed. Do not allow passengers to ride in any area of the vehicle that is not equipped with seats and safety belts.

Always wear a safety belt, and check that all passenger(s) are restrained properly too.

This vehicle has indicators as a reminder to buckle the safety belts. See *Safety Belt Reminders on page 5-9*.

Why Safety Belts Work

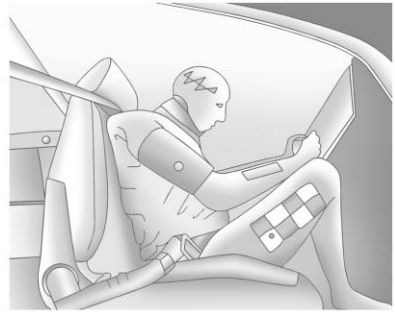

When riding in a vehicle, you travel as fast as the vehicle does. If the vehicle stops suddenly, you keep going until something stops you. It could be the windshield, the instrument panel, or the safety belts!

When you wear a safety belt, you and the vehicle slow down together. There is more time to stop because you stop over a longer distance and, when worn properly, your strongest bones take the forces from the

safety belts. That is why wearing safety belts makes such good sense.

Questions and Answers About Safety Belts

Q: Will I be trapped in the vehicle after a crash if I am wearing a safety belt?

A: You *could* be — whether you are wearing a safety belt or not. Your chance of being conscious during and after a crash, so you *can* unbuckle and get out, is *much* greater if you are belted.

Q: If my vehicle has airbags, why should I have to wear safety belts?

A: Airbags are supplemental systems only; so they work *with* safety belts — not instead of them. Whether or not an airbag is provided, all occupants still have to buckle up to get the most protection.

Also, in nearly all states and in all Canadian provinces, the law requires wearing safety belts.

How to Wear Safety Belts Properly

This section is only for people of adult size.

There are special things to know about safety belts and children. And there are different rules for smaller children and infants. If a child will be riding in the vehicle, see *Older Children on page 3-30* or *Infants and Young Children on page 3-32*. Follow those rules for everyone's protection.

It is very important for all occupants to buckle up. Statistics show that unbelted people are hurt more often in crashes than those who are wearing safety belts.

There are important things to know about wearing a safety belt properly.

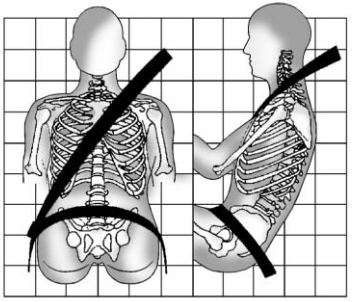

- Sit up straight and always keep your feet on the floor in front of you.
- Always use the correct buckle for your seating position.
- Wear the lap part of the belt low and snug on the hips, just touching the thighs. In a crash, this applies force to the strong pelvic bones and you would be less likely to slide under the lap belt. If you slid under it, the belt would apply force on your abdomen. This could cause serious or even fatal injuries.

- Wear the shoulder belt over the shoulder and across the chest. These parts of the body are best able to take belt restraining forces. The shoulder belt locks if there is a sudden stop or crash.

⚠ WARNING

You can be seriously injured, or even killed, by not wearing your safety belt properly.

- Never allow the lap or shoulder belt to become loose or twisted.
- Never wear the shoulder belt under both arms or behind your back.
- Never route the lap or shoulder belt over an armrest.

Lap-Shoulder Belt

All seating positions in the vehicle have a lap-shoulder belt.

The following instructions explain how to wear a lap-shoulder belt properly.

1. Adjust the seat, if the seat is adjustable, so you can sit up straight. To see how, see “Seats” in the Index.

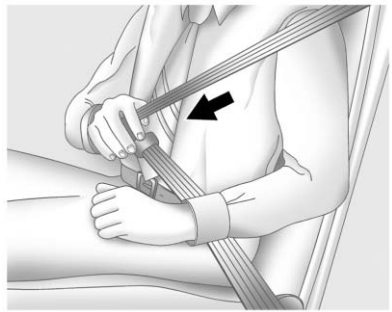

2. Pick up the latch plate and pull the belt across you. Do not let it get twisted.

   The lap-shoulder belt may lock if you pull the belt across you very quickly. If this happens, let the belt go back slightly to unlock it. Then pull the belt across you more slowly.

   If the shoulder portion of a passenger belt is pulled out all the way, the child restraint locking feature may be engaged. If this happens, let the belt go back all the way and start again.

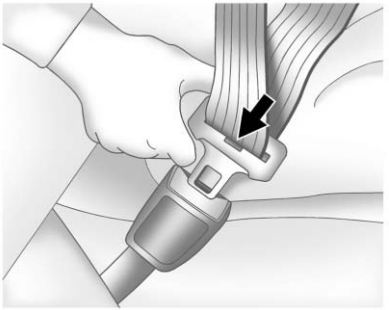

3. Push the latch plate into the buckle until it clicks.

   If the latch plate will not go fully into the buckle, check if the correct buckle is being used.

   Pull up on the latch plate to make sure it is secure. If the belt is not long enough, see *Safety Belt Extender on page 3-16*.

   Position the release button on the buckle so that the safety belt could be quickly unbuckled if necessary.

4. If equipped with a shoulder belt height adjuster, move it to the height that is right for you. See “Shoulder Belt Height Adjuster” in this section for instructions on use and important safety information.

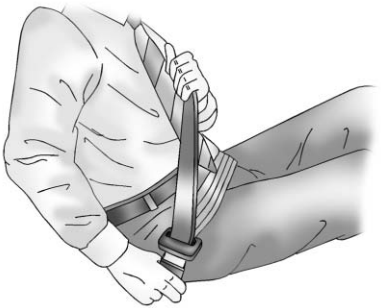

5. To make the lap part tight, pull up on the shoulder belt.

   It may be necessary to pull stitching on the safety belt through the latch plate to fully tighten the lap belt on smaller occupants.

To unlatch the belt, push the button on the buckle. The belt should return to its stowed position.

Before a door is closed, be sure the belt is out of the way. If a door is slammed against a safety belt, damage can occur to both the safety belt and the vehicle.

Shoulder Belt Height Adjuster

The vehicle has a shoulder belt height adjuster for the driver and right front passenger seating positions.

Adjust the height so the shoulder portion of the belt is on the shoulder and not falling off of it. The belt should be close to, but not contacting, the neck. Improper shoulder belt height adjustment could reduce the effectiveness of the safety belt in a crash. See *How to Wear Safety Belts Properly on page 3-10*.

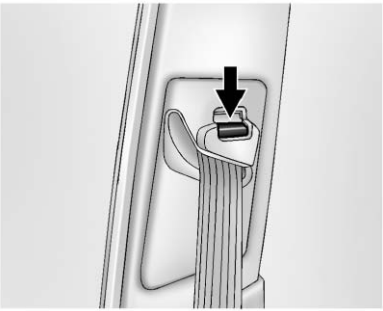

To move it down, press the release button and move the height adjuster to the desired position.

After the adjuster is set to the desired position, try to move it down without pressing the release button to make sure it has locked into position.

Safety Belt Pretensioners

This vehicle has safety belt pretensioners for front outboard occupants. Although the safety belt pretensioners cannot be seen, they are part of the safety belt assembly. They can help tighten the safety belts during the early stages of a moderate to severe frontal, near frontal, side, or rear crash if the threshold conditions for pretensioner activation are met. And, for vehicles with roof-rail airbags, safety belt pretensioners can help tighten the safety belts in a rollover event.

Pretensioners work only once. If the pretensioners activate in a crash, the pretensioners and probably other new parts of the vehicle's safety belt system will need to be replaced. See *Replacing Safety Belt System Parts after a Crash on page 3-16*.

Rear Safety Belt Comfort Guides

Rear safety belt comfort guides may provide added safety belt comfort for older children who have outgrown booster seats and for some adults. When installed on a shoulder belt, the comfort guide positions the shoulder belt away from the neck and head.

Safety belt comfort guides are available through your dealer.

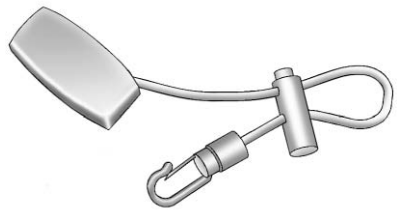

To install the adjustable comfort guide to the seatback and the safety belt:

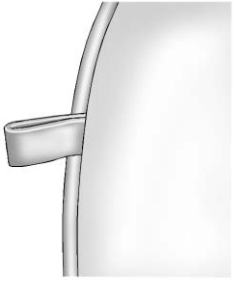

1. Locate the anchor loop on the rear outboard seatback, near the top.
2. Attach the adjustable comfort guide to the anchor loop by threading the hook through the loop.

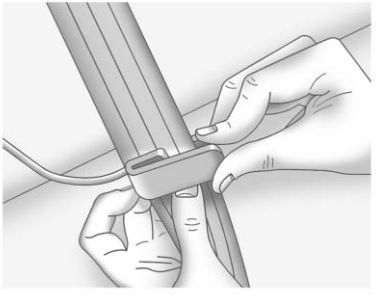

3. Place the guide over the belt, and insert the two edges of the belt into the slots of the guide.

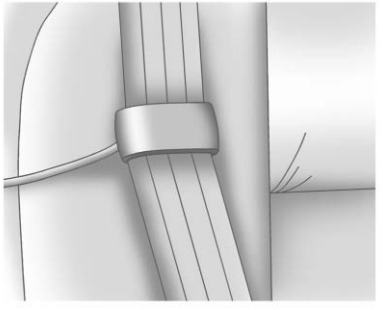

4. Be sure that the belt is not twisted and it lies flat. The elastic cord must be under the belt and the guide on top.
5. The elastic cord on the comfort guide is adjustable. You can make it longer or shorter by squeezing both ends of the plastic adjuster and pulling on the elastic cord or the guide.

6. Adjust the guide so the shoulder portion of the belt is on the shoulder and not falling off of it. The belt should be close to, but not contacting, the neck. Improper comfort guide adjustment could reduce the effectiveness of the safety belt in a crash.

⚠ WARNING

A safety belt that is not properly worn may not provide the protection needed in a crash. The person wearing the belt could be seriously injured. The shoulder belt should go over the shoulder and across the chest. These parts of the body are best able to take belt restraining forces.

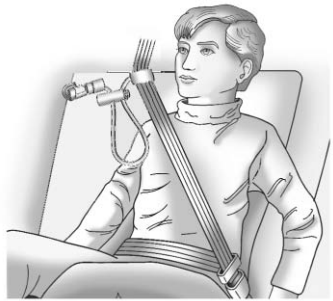

7. Buckle and position the safety belt as described previously in this section. Make sure that the shoulder belt crosses the shoulder.

To remove and store the comfort guide, squeeze the belt edges together so that the safety belt can be removed from the guide.
Un-hook the guide from the loop on the seat. Store the guide in a convenient place like the glove box for the next time it is needed.

Safety Belt Use During Pregnancy

Safety belts work for everyone, including pregnant women. Like all occupants, they are more likely to be seriously injured if they do not wear safety belts.

A pregnant woman should wear a lap-shoulder belt, and the lap portion should be worn as low as possible, below the rounding, throughout the pregnancy.

The best way to protect the fetus is to protect the mother. When a safety belt is worn properly, it is more likely that the fetus will not be hurt in a crash. For pregnant women, as for anyone, the key to making safety belts effective is wearing them properly.

Safety Belt Extender

If the vehicle's safety belt will fasten around you, you should use it.

But if a safety belt is not long enough, your dealer will order you an extender. When you go in to order it, take the heaviest coat you will wear, so the extender will be long enough for you. To help avoid personal injury, do not let someone else use it, and use it only for the seat it is made to fit. The extender has been designed for adults. Never use it for securing child seats. To wear it, attach it to the regular safety belt. For more information, see the instruction sheet that comes with the extender.

Safety System Check

Now and then, check that the safety belt reminder light, safety belts, buckles, latch plates, retractors, and anchorages are all working properly. Look for any other loose or damaged safety belt system parts that might keep a safety belt system from doing its job. See your dealer to have it repaired. Torn or frayed safety belts may not protect you in a crash. They can rip apart under impact forces. If a belt is torn or frayed, get a new one right away.

Make sure the safety belt reminder light is working. See *Safety Belt Reminders on page 5-9*.

Keep safety belts clean and dry. See *Safety Belt Care on page 3-16*.

Safety Belt Care

Keep belts clean and dry.

⚠ WARNING

Do not bleach or dye safety belts. It may severely weaken them. In a crash, they might not be able to provide adequate protection. Clean safety belts only with mild soap and lukewarm water.

Replacing Safety Belt System Parts after a Crash

⚠ WARNING

A crash can damage the safety belt system in the vehicle. A damaged safety belt system may not properly protect the person using it, resulting in serious injury or even death in a crash. To help make sure the safety belt systems are working properly after a crash, have them

(Continued)

WARNING (Continued)

inspected and any necessary replacements made as soon as possible.

After a minor crash, replacement of safety belts may not be necessary. But the safety belt assemblies that were used during any crash may have been stressed or damaged. See your dealer to have the safety belt assemblies inspected or replaced.

New parts and repairs may be necessary even if the safety belt system was not being used at the time of the crash.

Have the safety belt pretensioners, if equipped, checked if the vehicle has been in a crash, or if the airbag readiness light stays on after you start the vehicle or while you are driving. See *Airbag Readiness Light on page 5-9*.

Airbag System

The vehicle has the following airbags:

- A frontal airbag for the driver.
- A frontal airbag for the front outboard passenger.
- A knee airbag for the driver.
- A knee airbag for the front outboard passenger.
- A seat-mounted side impact airbag for the driver.
- A seat-mounted side impact airbag for the front outboard passenger.
- Seat-mounted side impact airbags for the second row outboard passengers.
- A roof-rail airbag for the driver and the passenger seated directly behind the driver.
- A roof-rail airbag for the front outboard passenger and the passenger seated directly behind the front outboard passenger.

All vehicle airbags have the word AIRBAG on the trim or on a label near the deployment opening.

For frontal airbags, the word AIRBAG is on the center of the steering wheel for the driver and on the instrument panel for the front outboard passenger.

For knee airbags, the word AIRBAG is on the lower part of the instrument panel.

For seat-mounted side impact airbags, the word AIRBAG is on the side of the seatback closest to the door.

For roof-rail airbags, the word AIRBAG is on the ceiling or trim.

Airbags are designed to supplement the protection provided by safety belts. Even though today's airbags are also designed to help reduce the risk of injury from the force of an inflating bag, all airbags must inflate very quickly to do their job.

Here are the most important things to know about the airbag system:

⚠ WARNING

You can be severely injured or killed in a crash if you are not wearing your safety belt, even with airbags. Airbags are designed to work with safety belts, not replace them. Also, airbags are not designed to inflate in every crash. In some crashes safety belts are the only restraint. See *When Should an Airbag Inflate? on page 3-21*.

(Continued)

WARNING (Continued)

Wearing your safety belt during a crash helps reduce the chance of hitting things inside the vehicle or being ejected from it. Airbags are “supplemental restraints” to the safety belts. Everyone in the vehicle should wear a safety belt properly, whether or not there is an airbag for that person.

⚠ WARNING

Because airbags inflate with great force and faster than the blink of an eye, anyone who is up against, or very close to any airbag when it inflates can be seriously injured or killed. Do not sit unnecessarily close to any airbag, as you would be if sitting on the edge of the seat or leaning forward. Safety belts help keep

(Continued)

WARNING (Continued)

you in position before and during a crash. Always wear a safety belt, even with airbags. The driver should sit as far back as possible while still maintaining control of the vehicle.

Occupants should not lean on or sleep against the door or side windows in seating positions with seat-mounted side impact airbags and/or roof-rail airbags.

⚠ WARNING

Children who are up against, or very close to, any airbag when it inflates can be seriously injured or killed. Airbags plus lap-shoulder belts offer protection for adults and older children, but not for young children and infants.

(Continued)

WARNING (Continued)

Neither the vehicle's safety belt system nor its airbag system is designed for them. Young children and infants need the protection that a child restraint system can provide. Always secure children properly in the vehicle. To read how, see *Older Children on page 3-30* or *Infants and Young Children on page 3-32*.

There is an airbag readiness light on the instrument cluster, which shows the airbag symbol. The system checks the airbag electrical system for malfunctions. The light tells you if there is an electrical problem. See *Airbag Readiness Light on page 5-9*.

Where Are the Airbags?

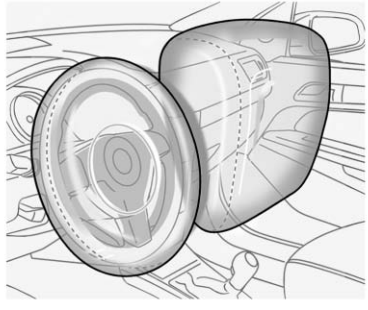

The driver frontal airbag is in the center of the steering wheel.

The front outboard passenger frontal airbag is in the passenger side instrument panel.

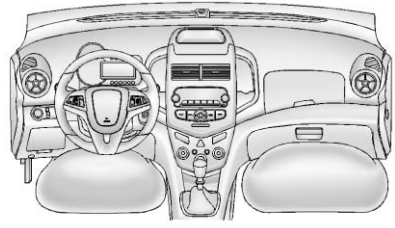

The driver knee airbag is below the steering column. The front outboard passenger knee airbag is below the glove box.

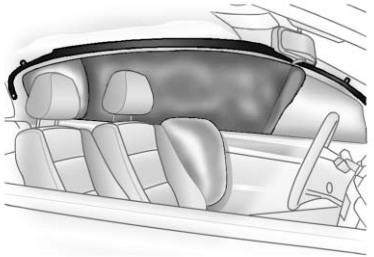

Driver Side Shown, Passenger Side Similar

The seat-mounted side impact airbags for the driver and front outboard passenger are in the side of the seatbacks closest to the door.

The roof-rail airbags for the driver, right front passenger, and second row outboard passengers are in the ceiling above the side windows.

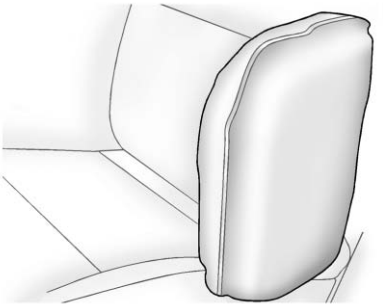

Rear Seat Driver Side Shown, Passenger Side Similar

The second row seat-mounted side impact airbags are in the sides of the rear seatback closest to the door.

⚠ WARNING

If something is between an occupant and an airbag, the airbag might not inflate properly or it might force the object into that person causing severe injury

(Continued)

WARNING (Continued)

or even death. The path of an inflating airbag must be kept clear. Do not put anything between an occupant and an airbag, and do not attach or put anything on the steering wheel hub or on or near any other airbag covering.

Do not use seat accessories that block the inflation path of a seat-mounted side impact airbag.

Never secure anything to the roof of a vehicle with roof-rail airbags by routing a rope or tie-down through any door or window opening. If you do, the path of an inflating roof-rail airbag will be blocked.

When Should an Airbag Inflate?

Frontal airbags are designed to inflate in moderate to severe frontal or near frontal crashes to help reduce the potential for severe injuries, mainly to the driver's or front outboard passenger's head and chest. However, they are only designed to inflate if the impact exceeds a predetermined deployment threshold. Deployment thresholds are used to predict how severe a crash is likely to be in time for the airbags to inflate and help restrain the occupants.

Whether the frontal airbags will or should inflate is not based primarily on how fast the vehicle is traveling. It depends on what is hit, the direction of the impact, and how quickly the vehicle slows down.

Frontal airbags may inflate at different crash speeds depending on whether the vehicle hits an object straight on or at an angle, and whether the object is fixed or moving, rigid or deformable, narrow or wide.

Thresholds can also vary with specific vehicle design.

Frontal airbags are not intended to inflate during vehicle rollovers, rear impacts, or in many side impacts.

In addition, the vehicle has dual-stage frontal airbags. Dual-stage airbags adjust the restraint according to crash severity.

Frontal knee airbags are designed to inflate in moderate to severe frontal or near frontal impacts that exceed a predetermined deployment threshold.

The vehicle has electronic frontal sensors, which help the sensing system distinguish between a moderate frontal impact and a more severe frontal impact. For moderate frontal impacts, dual-stage airbags inflate at a level less than full deployment. For more severe frontal impacts, full deployment occurs.

The vehicle has seat-mounted side impact airbags for the driver, front passenger and for the second row outboard passengers. The vehicle has roof-rail airbags. See *Airbag System on page 3-17*.
Seat-mounted side impact airbags and roof-rail airbags are intended to inflate in moderate to severe side crashes depending on the location of the impact. In addition, these roof-rail airbags are intended to inflate during a rollover or in a severe frontal impact. Seat-mounted side impact airbags and roof-rail airbags will inflate if the crash severity is above the system's designed threshold level. The threshold level can vary with specific vehicle design.

Roof-rail airbags are not intended to inflate in rear impacts.
A seat-mounted side impact airbag is intended to inflate on the side of the vehicle that is struck. Both roof-rail airbags will inflate when either side of the vehicle is struck or if the sensing system predicts that

the vehicle is about to roll over on its side, or in a severe frontal impact.

In any particular crash, no one can say whether an airbag should have inflated simply because of the vehicle damage or repair costs.

What Makes an Airbag Inflate?

In a deployment event, the sensing system sends an electrical signal triggering a release of gas from the inflator. Gas from the inflator fills the airbag causing the bag to break out of the cover. The inflator, the airbag, and related hardware are all part of the airbag module.

For airbag location, see *Where Are the Airbags? on page 3-19*.

How Does an Airbag Restrain?

In moderate to severe frontal or near frontal collisions, even belted occupants can contact the steering wheel or the instrument panel. In moderate to severe side collisions, even belted occupants can contact the inside of the vehicle.

Airbags supplement the protection provided by safety belts by distributing the force of the impact more evenly over the occupant's body.

Rollover capable roof-rail airbags are designed to help contain the head and chest of occupants in the outboard seating positions in the first and second rows. The rollover capable roof-rail airbags are designed to help reduce the risk of full or partial ejection in rollover events, although no system can prevent all such ejections.

But airbags would not help in many types of collisions, primarily because the occupant's motion is not toward those airbags. See *When Should an Airbag Inflate? on page 3-21*.

Airbags should never be regarded as anything more than a supplement to safety belts.

What Will You See after an Airbag Inflates?

After the frontal airbags and seat-mounted side impact airbags inflate, they quickly deflate, so quickly that some people may not even realize an airbag inflated. Roof-rail airbags may still be at least partially inflated for some time after they inflate. Some components of the airbag module may be hot for several minutes. For location of the airbags, see *Where Are the Airbags? on page 3-19*.

The parts of the airbag that come into contact with you may be warm, but not too hot to touch. There may be some smoke and dust coming from the vents in the deflated airbags. Airbag inflation does not prevent the driver from seeing out of

the windshield or being able to steer the vehicle, nor does it prevent people from leaving the vehicle.

⚠ WARNING

When an airbag inflates, there may be dust in the air. This dust could cause breathing problems for people with a history of asthma or other breathing trouble. To avoid this, everyone in the vehicle should get out as soon as it is safe to do so. If you have breathing problems but cannot get out of the vehicle after an airbag inflates, then get fresh air by opening a window or a door. If you experience breathing problems following an airbag deployment, you should seek medical attention.

The vehicle has a feature that may automatically unlock the doors, turn on the interior lamps, turn on the hazard warning flashers, and shut off the fuel system after the airbags inflate. You can lock the doors, turn off the interior lamps, and turn off the hazard warning flashers by using the controls for those features.

⚠ WARNING

A crash severe enough to inflate the airbags may have also damaged important functions in the vehicle, such as the fuel system, brake and steering systems, etc. Even if the vehicle appears to be drivable after a moderate crash, there may be concealed damage that could make it difficult to safely operate the vehicle.

Use caution if you should attempt to restart the engine after a crash has occurred.

In many crashes severe enough to inflate the airbag, windshields are broken by vehicle deformation. Additional windshield breakage may also occur from the front outboard passenger airbag.

- Airbags are designed to inflate only once. After an airbag inflates, you will need some new parts for the airbag system. If you do not get them, the airbag system will not be there to help protect you in another crash. A new system will include airbag modules and possibly other parts. The service manual for the vehicle covers the need to replace other parts.
- The vehicle has a crash sensing and diagnostic module which records information after a crash. See *Vehicle Data Recording and Privacy on page 13-13* and *Event Data Recorders on page 13-14*.

- Let only qualified technicians work on the airbag systems. Improper service can mean that an airbag system will not work properly. See your dealer for service.

Passenger Sensing System

The vehicle has a passenger sensing system for the front outboard passenger position. The passenger airbag status indicator will light on the center display when the vehicle is started.

United States

Canada

The words ON and OFF, or the symbol for on and off, will be visible during the system check. If you use remote start, if equipped, to start the vehicle, you may not see the system check. When the system check is complete, either the word ON or OFF, or the symbol for on or off, will be visible. See *Passenger Airbag Status Indicator on page 5-10*.

The passenger sensing system turns off the front outboard passenger frontal airbag and knee airbag under certain conditions. No other airbag is affected by the passenger sensing system.

The passenger sensing system works with sensors that are part of the front outboard passenger seat. The sensors are designed to detect the presence of a properly seated occupant and determine if the front outboard passenger frontal airbag and knee airbag should be allowed to inflate or not.

According to accident statistics, children are safer when properly secured in a rear seat in the correct child restraint for their weight and size.

We recommend that children be secured in a rear seat, including: an infant or a child riding in a rear-facing child restraint; a child riding in a forward-facing child seat; an older child riding in a booster seat; and children, who are large enough, using safety belts.

Never put a rear-facing child seat in the front. This is because the risk to the rear-facing child is so great, if the airbag inflates.

⚠ WARNING

A child in a rear-facing child restraint can be seriously injured or killed if the passenger frontal airbag inflates. This is because the back of the rear-facing child restraint would be very close to the inflating airbag. A child in a forward-facing child restraint can be seriously injured or killed if the passenger frontal airbag inflates and the passenger seat is in a forward position.

Even if the passenger sensing system has turned off the front outboard passenger airbag(s), no system is fail-safe. No one can guarantee that an airbag will not inflate under some unusual circumstance, even though the airbag(s) are off.

(Continued)

WARNING (Continued)

Secure rear-facing child restraints in a rear seat, even if the airbag(s) are off. If you secure a forward-facing child restraint in the front outboard passenger seat, always move the seat as far back as it will go. It is better to secure the child restraint in a rear seat.

The passenger sensing system is designed to turn off the front outboard passenger frontal airbag and knee airbag if:

- The front outboard passenger seat is unoccupied.
- The system determines that an infant is present in rear-facing infant seat.
- The system determines that a small child is present in a child restraint.
- The system determines that a small child is present in a booster seat.
- A front outboard passenger takes his/her weight off of the seat for a period of time.
- The front outboard passenger seat is occupied by a smaller person, such as a child who has outgrown child restraints.
- There is a critical problem with the airbag system or the passenger sensing system.

When the passenger sensing system has turned off the front outboard passenger frontal airbag and knee airbag, the off indicator will light and stay lit as a reminder that the airbags are off. See *Passenger Airbag Status Indicator on page 5-10*.

The passenger sensing system is designed to turn on the front outboard passenger frontal airbag and knee airbag anytime the system senses that a person of adult size is sitting properly in the front outboard

passenger seat. When the passenger sensing system has allowed the airbags to be enabled, the on indicator will light and stay lit as a reminder that the airbags are active.

For some children, including children in child restraints, and for very small adults, the passenger sensing system may or may not turn off the front outboard passenger frontal airbag and knee airbag, depending upon the person's seating posture and body build. Everyone in the vehicle who has outgrown child restraints should wear a safety belt properly — whether or not there is an airbag for that person.

⚠ WARNING

If the airbag readiness light ever comes on and stays on, it means that something may be wrong with the airbag system. To help

(Continued)

WARNING (Continued)

avoid injury to yourself or others, have the vehicle serviced right away. See *Airbag Readiness Light on page 5-9* for more information, including important safety information.

If the On Indicator Is Lit for a Child Restraint

If a child restraint has been installed and the on indicator is lit:

1. Turn the vehicle off.
2. Remove the child restraint from the vehicle.
3. Remove any additional items from the seat such as blankets, cushions, seat covers, seat heaters, or seat massagers.
4. Reinstall the child restraint following the directions provided by the child restraint manufacturer and refer to *Securing Child Restraints (Right Front Passenger Seat) on page 3-44* or *Securing Child Restraints (Rear Seat) on page 3-47*.
5. If, after reinstalling the child restraint and restarting the vehicle, the on indicator is still lit, turn the vehicle off. Then slightly recline the vehicle seatback and adjust the seat cushion, if adjustable, to make sure that the vehicle seatback is not pushing the child restraint into the seat cushion. Also make sure the child restraint is not trapped under the vehicle head restraint. If this happens, adjust the head restraint. See *Head Restraints on page 3-2*.
6. Restart the vehicle.

If the on indicator is still lit, secure the child in the child restraint in a rear seat position in the vehicle, and check with your dealer.

If the Off Indicator Is Lit for an Adult-Size Occupant

If a person of adult size is sitting in the front outboard passenger seat, but the off indicator is lit, it could be because that person is not sitting properly in the seat. Use the following steps to allow the system to detect that person and enable the front outboard passenger frontal airbag and knee airbag:

1. Turn the vehicle off.
2. Remove any additional material from the seat, such as blankets, cushions, seat covers, seat heaters, or seat massagers.
3. Place the seatback in the fully upright position.
4. Have the person sit upright in the seat, centered on the seat cushion, with legs comfortably extended.
5. Restart the vehicle and have the person remain in this position for two to three minutes after the on indicator is lit.

Additional Factors Affecting System Operation

Safety belts help keep the passenger in position on the seat during vehicle maneuvers and braking, which helps the passenger sensing system maintain the passenger airbag status. See “Safety Belts” and “Child Restraints” in the Index for additional information about the importance of proper restraint use.

A thick layer of additional material, such as a blanket or cushion, or aftermarket equipment such as seat covers, seat heaters, and seat massagers can affect how well the passenger sensing system operates. We recommend that you not use seat covers or other aftermarket equipment except when approved by GM for your specific vehicle. See *Adding Equipment to the Airbag-Equipped Vehicle on page 3-28* for more information about modifications that can affect how the system operates.

⚠ WARNING

Stowing of articles under the passenger seat or between the passenger seat cushion and seatback may interfere with the proper operation of the passenger sensing system.

Servicing the Airbag-Equipped Vehicle

Airbags affect how the vehicle should be serviced. There are parts of the airbag system in several places around the vehicle. Your dealer and the service manual have information about servicing the vehicle and the airbag system. To purchase a service manual, see *Service Publications Ordering Information on page 13-11*.

⚠ WARNING

For up to 10 seconds after the vehicle is turned off and the battery is disconnected, an airbag can still inflate during improper service. You can be injured if you are close to an airbag when it inflates. Avoid yellow connectors.

(Continued)

WARNING (Continued)

They are probably part of the airbag system. Be sure to follow proper service procedures, and make sure the person performing work for you is qualified to do so.

Adding Equipment to the Airbag-Equipped Vehicle

Adding accessories that change the vehicle's frame, bumper system, height, front end or side sheet metal, may keep the airbag system from working properly. The operation of the airbag system can also be affected by changing or moving any parts of the front seats, safety belts, the airbag sensing and diagnostic module, steering wheel, instrument panel, roof-rail airbag modules, ceiling headliner or pillar garnish trim, front sensors, side impact sensors, or airbag wiring. Your dealer and the service manual have information about the location of the airbag sensors, sensing and diagnostic module, and airbag wiring.

In addition, the vehicle has a passenger sensing system for the front outboard passenger position, which includes sensors that are part of the passenger seat. The passenger sensing system may not operate properly if the original seat trim is replaced with non-GM covers, upholstery, or trim; or with GM covers, upholstery, or trim designed for a different vehicle. Any object, such as an aftermarket seat heater or a comfort-enhancing pad or device, installed under or on top of the seat fabric, could also interfere with the operation of the passenger sensing system. This could either prevent proper deployment of the passenger airbag(s) or prevent the passenger sensing system from properly

turning off the passenger airbag(s). See *Passenger Sensing System on page 3-24*.

The vehicle has rollover roof-rail airbags, see *Different Size Tires and Wheels on page 10-50* for additional important information.

If you have to modify your vehicle because you have a disability and have questions about whether the modifications will affect the vehicle's airbag system, or if you have questions about whether the airbag system will be affected if the vehicle is modified for any other reason, call Customer Assistance. See *Customer Assistance Offices on page 13-3*.

Airbag System Check

The airbag system does not need regularly scheduled maintenance or replacement. Make sure the airbag readiness light is working. See *Airbag Readiness Light on page 5-9*.

Notice: **If an airbag covering is damaged, opened, or broken, the airbag may not work properly. Do not open or break the airbag coverings. If there are any opened or broken airbag covers, have the airbag covering and/or airbag module replaced. For the location of the airbags, see *Where Are the Airbags? on page 3-19*. See your dealer for service.**

Replacing Airbag System Parts after a Crash

⚠ WARNING

A crash can damage the airbag systems in the vehicle.
A damaged airbag system may not work properly and may not protect you and your passenger(s) in a crash, resulting in serious injury or even death.

(Continued)

WARNING (Continued)

To help make sure the airbag systems are working properly after a crash, have them inspected and any necessary replacements made as soon as possible.

If an airbag inflates, you will need to replace airbag system parts. See your dealer for service.

If the airbag readiness light stays on after the vehicle is started or comes on when you are driving, the airbag system may not work properly. Have the vehicle serviced right away. See *Airbag Readiness Light on page 5-9*.

Child Restraints

Older Children

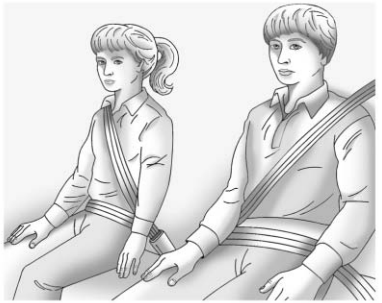

Older children who have outgrown booster seats should wear the vehicle's safety belts.

The manufacturer's instructions that come with the booster seat, state the weight and height limitations for that booster. Use a booster seat with a lap-shoulder belt until the child passes the below fit test:

- Sit all the way back on the seat. Do the knees bend at the seat edge? If yes, continue. If no, return to the booster seat.
- Buckle the lap-shoulder belt. Does the shoulder belt rest on the shoulder? If yes, continue. If no, then return to the booster seat.
- Does the lap belt fit low and snug on the hips, touching the thighs? If yes, continue. If no, return to the booster seat.
- Can proper safety belt fit be maintained for the length of the trip? If yes, continue. If no, return to the booster seat.

Q: What is the proper way to wear safety belts?

A: An older child should wear a lap-shoulder belt and get the additional restraint a shoulder belt can provide. The shoulder belt should not cross the face or neck. The lap belt should fit snugly below the hips, just touching the top of the thighs. This applies belt force to the child's pelvic bones in a crash. It should never be worn over the abdomen, which could cause severe or even fatal internal injuries in a crash.

According to accident statistics, children and infants are safer when properly restrained in a child restraint system or infant restraint system secured in a rear seating position.

In a crash, children who are not buckled up can strike other people who are buckled up, or can be thrown out of the vehicle. Older children need to use safety belts properly.

⚠ WARNING

Never allow more than one child to wear the same safety belt. The safety belt cannot properly spread the impact forces. In a crash, they can be crushed together and seriously injured. A safety belt must be used by only one person at a time.

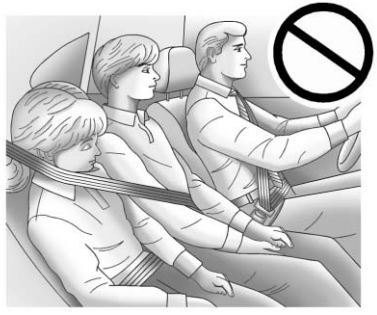

⚠ WARNING

Never allow a child to wear the safety belt with the shoulder belt behind their back. A child can be seriously injured by not wearing the lap-shoulder belt properly. In a crash, the child would not be restrained by the shoulder belt.

(Continued)

WARNING (Continued)

The child could move too far forward increasing the chance of head and neck injury. The child might also slide under the lap belt. The belt force would then be applied right on the abdomen. That could cause serious or fatal injuries. The shoulder belt should go over the shoulder and across the chest.

Infants and Young Children

Everyone in a vehicle needs protection! This includes infants and all other children. Neither the distance traveled nor the age and size of the traveler changes the need, for everyone, to use safety restraints. In fact, the law in every state in the United States and in every Canadian province says children up to some age must be restrained while in a vehicle.

⚠ WARNING

Children can be seriously injured or strangled if a shoulder belt is wrapped around their neck and the safety belt continues to tighten. Never leave children unattended in a vehicle and never allow children to play with the safety belts.

Airbags plus lap-shoulder belts offer protection for adults and older children, but not for young children and infants. Neither the vehicle's safety belt system nor its airbag system is designed for them. Every time infants and young children ride in vehicles, they should have the protection provided by appropriate child restraints.

Children who are not restrained properly can strike other people, or can be thrown out of the vehicle.

⚠ WARNING

Never hold an infant or a child while riding in a vehicle. Due to crash forces, an infant or a child will become so heavy it is not possible to hold it during a crash.

(Continued)

WARNING (Continued)

For example, in a crash at only 40 km/h (25 mph), a 5.5 kg (12 lb) infant will suddenly become a 110 kg (240 lb) force on a person's arms. An infant should be secured in an appropriate restraint.

⚠ WARNING

Children who are up against, or very close to, any airbag when it inflates can be seriously injured or killed. Never put a rear-facing child restraint in the right front seat. Secure a rear-facing child restraint in a rear seat. It is also better to secure a forward-facing child restraint in a rear seat. If you must secure a forward-facing child restraint in the right front seat, always move the front passenger seat as far back as it will go.

Q: What are the different types of add-on child restraints?

A: Add-on child restraints, which are purchased by the vehicle owner, are available in four basic types. Selection of a particular restraint should take into consideration not only the child's weight, height, and age but also whether or not the restraint will be compatible with the motor vehicle in which it will be used.

For most basic types of child restraints, there are many different models available. When purchasing a child restraint, be sure it is designed to be used in a motor vehicle. If it is, the restraint will have a label saying that it meets federal motor vehicle safety standards.

The restraint manufacturer instructions that come with the restraint state the weight and height limitations for a particular child restraint. In addition, there are many kinds of restraints available for children with special needs.

⚠ WARNING

To reduce the risk of neck and head injury during a crash, infants need complete support. In a crash, if an infant is in a rear-facing child restraint, the crash forces can be distributed across the strongest part of an infant's body, the back and shoulders. Infants should always be secured in rear-facing child restraints.

⚠ WARNING

A young child's hip bones are still so small that the vehicle's regular safety belt may not remain low on the hip bones, as it should. Instead, it may settle up around the child's abdomen. In a crash, the belt would apply force on a body area that is unprotected by any bony structure. This alone could cause serious or fatal injuries. To reduce the risk of serious or fatal injuries during a crash, young children should always be secured in appropriate child restraints.

Child Restraint Systems

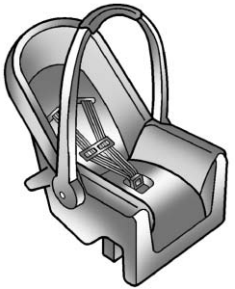

Rear-Facing Infant Seat

A rear-facing infant seat provides restraint with the seating surface against the back of the infant.

The harness system holds the infant in place and, in a crash, acts to keep the infant positioned in the restraint.

Forward-Facing Child Seat

A forward-facing child seat provides restraint for the child's body with the harness.

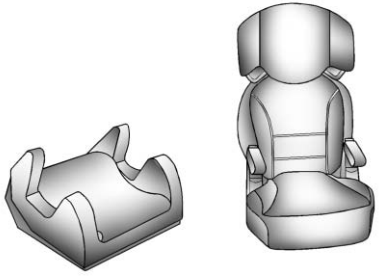

Booster Seats

A booster seat is a child restraint designed to improve the fit of the vehicle's safety belt system.
A booster seat can also help a child to see out the window.

Securing an Add-On Child Restraint in the Vehicle

⚠ WARNING

A child can be seriously injured or killed in a crash if the child restraint is not properly secured in the vehicle. Secure the child restraint properly in the vehicle using the vehicle safety belt or LATCH system, following the instructions that came with that child restraint and the instructions in this manual.

To help reduce the chance of injury, the child restraint must be secured in the vehicle. Child restraint systems must be secured in vehicle seats by lap belts or the lap belt portion of a lap-shoulder belt, or by the LATCH system. See *Lower Anchors and Tethers for Children (LATCH System) on page 3-37*.

Children can be endangered in a crash if the child restraint is not properly secured in the vehicle.

When securing an add-on child restraint, refer to the instructions that come with the restraint which may be on the restraint itself or in a booklet, or both, and to this manual. The child restraint instructions are important, so if they are not available, obtain a replacement copy from the manufacturer.

Keep in mind that an unsecured child restraint can move around in a collision or sudden stop and injure people in the vehicle. Be sure to properly secure any child restraint in the vehicle — even when no child is in it.

In some areas, Certified Child Passenger Safety Technicians (CPSTs) are available to inspect and demonstrate how to correctly use and install child restraints. In the U.S., refer to the National Highway Traffic Safety Administration (NHTSA) website to

locate the nearest child safety seat inspection station. For CPST availability in Canada, check with Transport Canada or the Provincial Ministry of Transportation office.

Securing the Child within the Child Restraint

⚠ WARNING

A child can be seriously injured or killed in a crash if the child is not properly secured in the child restraint. Secure the child properly following the instructions that came with that child restraint.

Where to Put the Restraint

According to accident statistics, children and infants are safer when properly restrained in a child restraint system or infant restraint system secured in a rear seating position.

We recommend that children and child restraints be secured in a rear seat, including: an infant or a child riding in a rear-facing child restraint; a child riding in a forward-facing child seat; an older child riding in a booster seat; and children, who are large enough, using safety belts.

Never put a rear-facing child seat in the front. This is because the risk to the rear-facing child is so great, if the airbag deploys.

⚠ WARNING

A child in a rear-facing child restraint can be seriously injured or killed if the right front passenger airbag inflates. This is because the back of the rear-facing child restraint would be very close to the inflating airbag. A child in a forward-facing child restraint can be seriously injured or killed if the right front

(Continued)

WARNING (Continued)

passenger airbag inflates and the passenger seat is in a forward position.

Even if the passenger sensing system has turned off the right front passenger frontal airbag, no system is fail-safe. No one can guarantee that an airbag will not deploy under some unusual circumstance, even though it is turned off.

Secure rear-facing child restraints in a rear seat, even if the airbag is off. If you secure a forward-facing child restraint in the right front seat, always move the front passenger seat as far back as it will go. It is better to secure the child restraint in a rear seat.

See *Passenger Sensing System on page 3-24* for additional information.

When securing a child restraint in a rear seating position, study the instructions that came with your child restraint to make sure it is compatible with this vehicle.

Child restraints and booster seats vary considerably in size, and some may fit in certain seating positions better than others. Always make sure the child restraint is properly secured.

Depending on where you place the child restraint and the size of the child restraint, you may not be able to access adjacent safety belt assemblies or LATCH anchors for additional passengers or child restraints. Adjacent seating positions should not be used if the child restraint prevents access to or interferes with the routing of the safety belt.

Wherever you install a child restraint, be sure to secure the child restraint properly.

Keep in mind that an unsecured child restraint can move around in a collision or sudden stop and injure people in the vehicle. Be sure to properly secure any child restraint in your vehicle — even when no child is in it.

Lower Anchors and Tethers for Children (LATCH System)

The LATCH system secures a child restraint during driving or in a crash. LATCH attachments on the child restraint are used to attach the child restraint to the anchors in the vehicle. This system is designed to make installation of a child restraint easier.

Make sure that a LATCH-compatible child restraint is properly installed using the anchors, or use the vehicle's safety belts to secure the restraint, following the instructions that came with that restraint, and also the instructions in this manual.

When installing a child restraint with a top tether, you must also use either the lower anchors or the safety belts to properly secure the child restraint. A child restraint must never be installed using only the top tether and anchor.

In order to use the LATCH system in your vehicle, you need a child restraint that has LATCH attachments. The child restraint manufacturer will provide you with instructions on how to use the child restraint and its attachments. The following explains how to attach a child restraint with these attachments in your vehicle.

Not all vehicle seating positions or child restraints have lower anchors and attachments or top tether anchors and attachments.

Lower Anchors

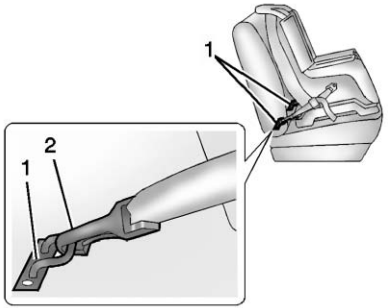

Lower anchors (1) are metal bars built into the vehicle. There are two lower anchors for each LATCH seating position that will accommodate a child restraint with lower attachments (2).

Top Tether Anchor

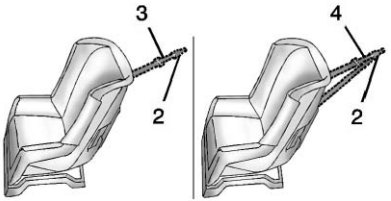

A top tether (3, 4) anchors the top of the child restraint to the vehicle. A top tether anchor is built into the vehicle. The top tether attachment (2) on the child restraint connects to the top tether anchor in the vehicle in order to reduce the forward movement and rotation of the child restraint during driving or in a crash.

The child restraint may have a single tether (3) or a dual tether (4). Either will have a single attachment (2) to secure the top tether to the anchor.

Some child restraints that have a top tether are designed for use with or without the top tether being attached. Others require the top tether always to be attached. In Canada, the law requires that forward-facing child restraints have a top tether, and that the tether be attached. Be sure to read and follow the instructions for your child restraint.

Lower Anchor and Top Tether Anchor Locations

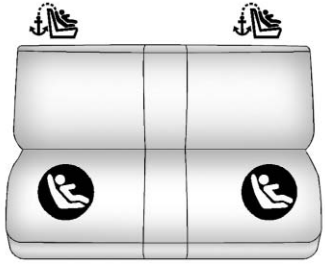

(Top Tether Anchor): Seating positions with top tether anchors.

(Lower Anchor): Seating positions with two lower anchors.

To assist in locating the lower anchors, each seating position with lower anchors has two labels, near the crease between the seatback and the seat cushion.

To assist in locating the top tether anchors, the top tether anchor symbol is on the trim near the anchor.

The top tether anchors are on the rear wall of the cargo area. Be sure to use an anchor on the same side of the vehicle as the seating position where the child restraint will be placed.

Do not secure a child restraint in a position without a top tether anchor if a national or local law requires that the top tether be attached, or if the instructions that come with the child restraint say that the top tether must be attached.

According to accident statistics, children and infants are safer when properly restrained in a child restraint system or infant restraint system secured in a rear seating position. See *Where to Put the Restraint on page 3-36* for additional information.

Securing a Child Restraint Designed for the LATCH System

⚠ WARNING

If a LATCH-type child restraint is not attached to anchors, the child restraint will not be able to protect the child correctly. In a crash, the child could be seriously injured or killed. Install a LATCH-type child restraint properly using the anchors, or use the vehicle safety belts to secure the restraint, following the instructions that came with the child restraint and the instructions in this manual.

⚠ WARNING

Do not attach more than one child restraint to a single anchor. Attaching more than one child restraint to a single anchor could cause the anchor or attachment to come loose or even break during a crash. A child or others could be injured. To reduce the risk of serious or fatal injuries during a crash, attach only one child restraint per anchor.

⚠ WARNING

Children can be seriously injured or strangled if a shoulder belt is wrapped around their neck and the safety belt continues to tighten. Buckle any unused safety belts behind the child restraint so children cannot reach them. Pull the shoulder belt all the way out

(Continued)

WARNING (Continued)

of the retractor to set the lock, if the vehicle has one, after the child restraint has been installed.

Notice: **Do not let the LATCH attachments rub against the vehicle's safety belts. This may damage these parts. If necessary, move buckled safety belts to avoid rubbing the LATCH attachments.**

Do not fold the empty rear seat with a safety belt buckled. This could damage the safety belt or the seat. Unbuckle and return the safety belt to its stowed position, before folding the seat.

If you need to secure more than one child restraint in the rear seat, see *Where to Put the Restraint on page 3-36*.

This system is designed to make installation of child restraints easier. When using lower anchors, do not use the vehicle's safety belts. Instead use the vehicle's anchors and child restraint attachments to secure the restraints. Some restraints also use another vehicle anchor to secure a top tether.

1. Attach and tighten the lower attachments to the lower anchors. If the child restraint does not have lower attachments or the desired seating position does not have lower anchors, secure the child restraint with the top tether and the safety belts. Refer to your child restraint manufacturer instructions and the instructions in this manual.

   1.1. Find the lower anchors for the desired seating position.

   1.2. Put the child restraint on the seat.

   For outboard rear seating positions, if the head restraint interferes with the proper installation of the child restraint, the head restraint may be removed. See “Head Restraint Removal and Reinstallation” at the end of this section.

   When installing a rear-facing child restraint, it may be necessary to move the front seat forward to properly install the child restraint per the child restraint manufacturer instructions. See *Seat Adjustment on page 3-3*.

   1.3. Attach and tighten the lower attachments on the child restraint to the lower anchors.

2. If the child restraint manufacturer recommends that the top tether be attached, attach and tighten the top tether to the top tether anchor, if equipped. Refer to the child restraint instructions and the following steps:

   2.1. Find the top tether anchor.

   2.2. Remove the cargo cover before installing the top tether. Place the cargo cover on the floor of the cargo area. The cargo cover should remain off while the top tether is in use.

2.3. Route, attach, and tighten the top tether according to your child restraint instructions and the following instructions:

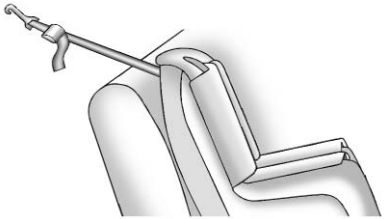

If you are using a single tether in an outboard seating position and the head restraint has been removed, route the tether over the seatback.

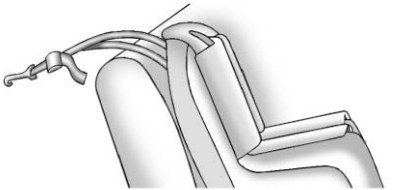

If you are using a dual tether in an outboard seating position and the head restraint has been removed, route the tether over the seatback and over the inboard edge of the rear speaker.

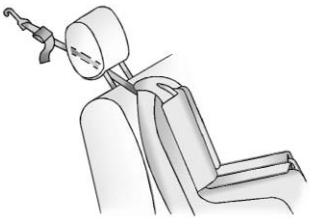

If the rear outboard seating position you are using has an adjustable head restraint and you are using a single tether, raise the head restraint and route the tether under the head restraint and in between the head restraint posts.

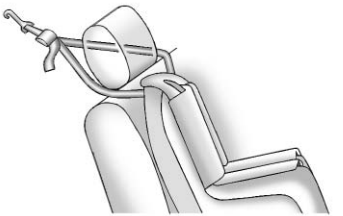

If the rear outboard seating position you are using has an adjustable head restraint and you are using a dual tether, raise the head restraint and route the tether under the head restraint and around the head restraint posts.

3. Before placing a child in the child restraint, make sure it is securely held in place. To check, grasp the child restraint at the LATCH path and attempt to move it side to side and back and forth. There should be no more than 2.5 cm (1 in) of movement for proper installation.

Head Restraint Removal and Reinstallation

The rear outboard head restraints can be removed if they interfere with the proper installation of the child restraint.

To remove the head restraint:

1. Partially fold the seatback forward. See *Rear Seats on page 3-6* for additional information.

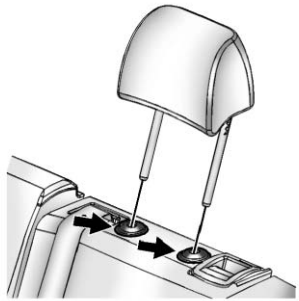

2. Press both buttons on the head restraint posts at the same time, and pull up on the head restraint.
3. Store the head restraint in the cargo area of the vehicle inside the cargo net.
4. When the child restraint is removed, reinstall the head restraint before the seating position is used.

⚠ WARNING

With head restraints that are not installed and adjusted properly, there is a greater chance that occupants will suffer a neck/spinal injury in a crash. Do not drive until the head restraints for all occupants are installed and adjusted properly.

To reinstall the head restraint:

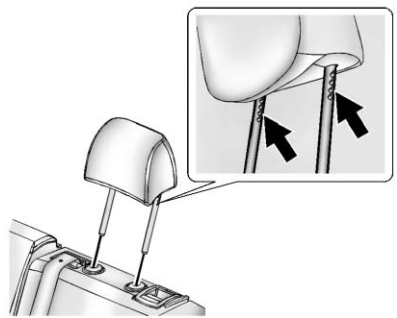

1. Insert the head restraint posts into the holes in the top of the seatback. The notches on the posts must face the driver side of the vehicle.
2. Push the head restraint down.

   If necessary, press the height adjustment release button to further lower the head restraint. See *Head Restraints on page 3-2*.
3. Try to move the head restraint to make sure that it is locked in place.

Replacing LATCH System Parts After a Crash

⚠ WARNING

A crash can damage the LATCH system in the vehicle. A damaged LATCH system may not properly secure the child restraint, resulting in serious injury or even

(Continued)

WARNING (Continued)

death in a crash. To help make sure the LATCH system is working properly after a crash, see your dealer to have the system inspected and any necessary replacements made as soon as possible.

If the vehicle has the LATCH system and it was being used during a crash, new LATCH system parts may be needed.

New parts and repairs may be necessary even if the LATCH system was not being used at the time of the crash.

Securing Child Restraints (Right Front Passenger Seat)

This vehicle has airbags. A rear seat is a safer place to secure a forward-facing child restraint. See *Where to Put the Restraint on page 3-36*.

In addition, the vehicle has a passenger sensing system which is designed to turn off the front outboard passenger frontal airbag and knee airbag under certain conditions. See *Passenger Sensing System on page 3-24* and *Passenger Airbag Status Indicator on page 5-10* for more information on this, including important safety information.

Never put a rear-facing child seat in the front. This is because the risk to the rear-facing child is so great, if the airbag deploys.

⚠ WARNING

A child in a rear-facing child restraint can be seriously injured or killed if the passenger frontal airbag inflates. This is because the back of the rear-facing child restraint would be very close to the inflating airbag. A child in a forward-facing child restraint can be seriously injured or killed if the passenger frontal airbag inflates and the passenger seat is in a forward position.

Even if the passenger sensing system has turned off the front outboard passenger airbag(s), no system is fail-safe. No one can guarantee that an airbag will not inflate under some unusual circumstance, even though the airbag(s) are off.

(Continued)

WARNING (Continued)

Secure rear-facing child restraints in a rear seat, even if the airbag(s) are off. If you secure a forward-facing child restraint in the front outboard passenger seat, always move the seat as far back as it will go. It is better to secure the child restraint in a rear seat.

If the child restraint has the LATCH system, see *Lower Anchors and Tethers for Children (LATCH System) on page 3-37* for how to install your child restraint using LATCH. If a child restraint is secured using a safety belt and it uses a top tether, see *Lower Anchors and Tethers for Children (LATCH System) on page 3-37* for top tether anchor locations.

Do not secure a child seat in a position without a top tether anchor if a national or local law requires that the top tether be anchored, or if the instructions that come with the child restraint say that the top strap must be anchored.

In Canada, the law requires that forward-facing child restraints have a top tether, and that the tether be attached.

You will be using the lap-shoulder belt to secure the child restraint in this position. Follow the instructions that came with the child restraint.

1. Move the seat as far back as it will go before securing the forward-facing child restraint.

   When the passenger sensing system has turned off the front outboard passenger frontal airbag and knee airbag, the off indicator on the passenger airbag status indicator should light and stay lit when you start the vehicle. See *Passenger Airbag Status Indicator on page 5-10*.

2. Put the child restraint on the seat.

3. Pick up the latch plate, and run the lap and shoulder portions of the vehicle's safety belt through or around the restraint. The child restraint instructions will show you how.

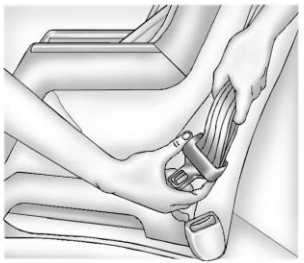

Tilt the latch plate to adjust the belt if needed.

4. Push the latch plate into the buckle until it clicks.

   Position the release button on the buckle so that the safety belt could be quickly unbuckled if necessary.

5. Pull the shoulder belt all the way out of the retractor to set the lock. When the retractor lock is set, the belt can be tightened but not pulled out of the retractor.

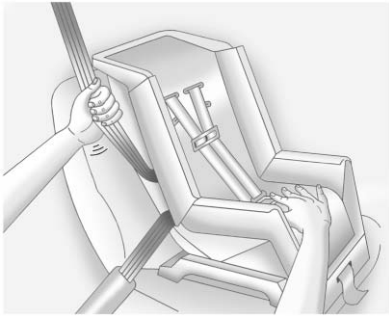

6. To tighten the belt, push down on the child restraint, pull the shoulder portion of the belt to tighten the lap portion of the belt, and feed the shoulder belt back into the retractor. When installing a forward-facing child restraint, it may be helpful to use your knee to push down on the child restraint as you tighten the belt.

   Try to pull the belt out of the retractor to make sure the retractor is locked. If the retractor is not locked, repeat Steps 5 and 6.

7. Before placing a child in the child restraint, make sure it is securely held in place. To check, grasp the child restraint at the safety belt path and attempt to move it side to side and back and forth. When the child restraint is properly installed, there should be no more than 2.5 cm (1 in) of movement.

If the airbags are off, the off indicator in the passenger airbag status indicator will come on and stay on when the vehicle is started.

If a child restraint has been installed and the off symbol is not lit, see “If the On Indicator Is Lit for a Child Restraint” under *Passenger Sensing System on page 3-24*.

To remove the child restraint, unbuckle the vehicle's safety belt and let it go back all the way.

Securing Child Restraints (Rear Seat)

When securing a child restraint in a rear seating position, study the instructions that came with the child restraint to make sure it is compatible with this vehicle.

If the child restraint has the LATCH system, see *Lower Anchors and Tethers for Children (LATCH System) on page 3-37* for how and where to install the child restraint using LATCH. If a child restraint is secured in the vehicle using a safety belt and it uses a top tether, see *Lower Anchors and Tethers for Children (LATCH System) on page 3-37* for top tether anchor locations.

Do not secure a child seat in a position without a top tether anchor if a national or local law requires that the top tether be anchored, or if the instructions that come with the child restraint say that the top strap must be anchored.

In Canada, the law requires that forward-facing child restraints have a top tether, and that the tether be attached.

If the child restraint does not have the LATCH system, you will be using the safety belt to secure the child restraint in this position. Be sure to follow the instructions that came with the child restraint. Secure the child in the child restraint when and as the instructions say.

If more than one child restraint needs to be installed in the rear seat, be sure to read *Where to Put the Restraint on page 3-36*.

1. Put the child restraint on the seat.

   If the head restraint interferes with the proper installation of the child restraint, the head restraint may be removed. See “Head Restraint Removal and Reinstallation” under *Lower Anchors and Tethers for Children (LATCH System) on page 3-37*.

   When installing a rear-facing child restraint, it may be necessary to move the front seat forward to properly install the child restraint per the child restraint manufacturer instructions. See *Seat Adjustment on page 3-3*.

2. Pick up the latch plate, and run the lap and shoulder portions of the vehicle safety belt through or around the restraint. The child restraint instructions will show you how.

3. Push the latch plate into the buckle until it clicks.

   Position the release button on the buckle so that the safety belt could be quickly unbuckled if necessary.

4. Pull the shoulder belt all the way out of the retractor to set the lock. When the retractor lock is set, the belt can be tightened but not pulled out of the retractor.

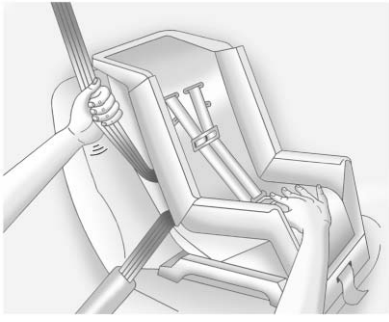

5. To tighten the belt, push down on the child restraint, pull the shoulder portion of the belt to tighten the lap portion of the belt, and feed the shoulder belt back into the retractor. When installing a forward-facing child restraint, it may be helpful to use your knee to push down on the child restraint as you tighten the belt.

   Try to pull the belt out of the retractor to make sure the retractor is locked. If the retractor is not locked, repeat Steps 4 and 5.

6. If the child restraint has a top tether, follow the child restraint manufacturer's instructions regarding the use of the top tether. See *Lower Anchors and Tethers for Children (LATCH System) on page 3-37* for more information.

7. Before placing a child in the child restraint, make sure it is securely held in place. To check, grasp the child restraint at the safety belt path and attempt to move it side to side and back and forth. When the child restraint is properly installed, there should be no more than 2.5 cm (1 in) of movement.

To remove the child restraint, unbuckle the vehicle safety belt and let it return to the stowed position. If the top tether is attached to a top tether anchor, disconnect it. If the head restraint was removed, reinstall it before the seating position is used. See “Head Restraint Removal and Reinstallation” under *Lower Anchors and Tethers for Children (LATCH System) on page 3-37*.

✍ NOTES

Storage

Storage Compartments
Glove Box 4-1

Additional Storage Features
Cargo Cover 4-1
Shopping Bag Hooks 4-2
Cargo Net 4-2

Roof Rack System
Roof Rack System 4-3

Storage Compartments

Glove Box

Lift up on the glove box lever to open it.

Additional Storage Features

Cargo Cover

⚠ WARNING

An unsecured cargo cover could strike people in a sudden stop or turn, or in a crash. Store the cargo cover securely or remove it from the vehicle.

The cargo cover can be used to cover items in the rear of the vehicle.

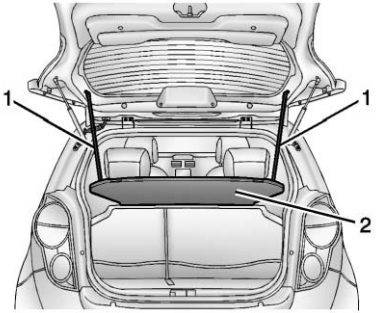

To remove the cargo cover:

1. Remove both of the cords (1) from the hooks at the top of the liftgate.
2. Pull the cargo cover (2) rearward to release the cargo cover.

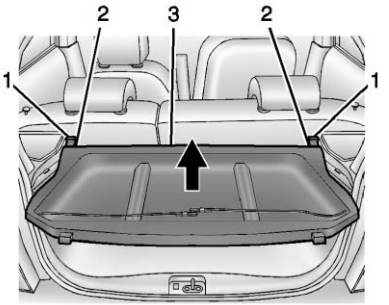

To install the cargo cover:

1. Align the cargo cover (3) on the trim panel edge (2) on both sides and push it forward, locking the cargo cover into the hooks (1).
2. Reconnect both of the cords to the hooks at the top of the liftgate.

Shopping Bag Hooks

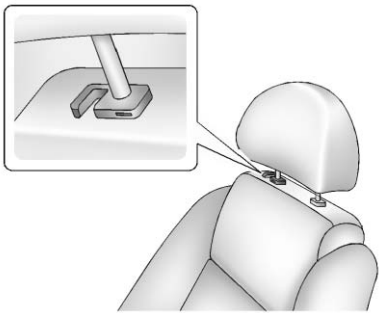

The vehicle has a shopping bag hook under the front seat head restraints. Lift the head restraints to access the hook.

Cargo Net

The cargo net is in the trunk and used to store small loads. The net should not be used to store heavy loads.

Roof Rack System

⚠ WARNING

If something is carried on top of the vehicle that is longer or wider than the roof rack — like paneling, plywood, or a mattress — the wind can catch it while the vehicle is being driven. The item being carried could be violently torn off, and this could cause a collision and damage the vehicle. Never carry something longer or wider than the roof rack on top of the vehicle unless using a GM certified accessory carrier.

For vehicles with a roof rack, the rack can be used to load items. For roof racks that do not have crossrails included, GM Certified crossrails can be purchased as an accessory. See your dealer for additional information.

Notice: **Loading cargo on the roof rack that weighs more than 75 kg (165 lbs) or hangs over the rear or sides of the vehicle may damage the vehicle. Load cargo so that it rests evenly between the crossrails, making sure to fasten cargo securely.**

To prevent damage or loss of cargo when driving, check to make sure crossrails and cargo are securely fastened. Loading cargo on the roof rack will make the vehicle's center of gravity higher. Avoid high speeds, sudden starts, sharp turns, sudden braking, or abrupt maneuvers; otherwise it may result in loss of control. If driving for a long distance, on rough roads, or at high speeds, occasionally stop the vehicle to make sure the cargo remains in its place.

Do not exceed the maximum vehicle capacity when loading the vehicle. For more information on vehicle capacity and loading, see *Vehicle Load Limits on page 9-9*.

Check that all cargo is securely fastened to prevent damage or loss while driving.

✍ NOTES

Instruments and Controls

Controls

Steering Wheel Adjustment . . . 5-2
Steering Wheel Controls 5-2
Horn 5-2
Windshield Wiper/Washer 5-2
Rear Window Wiper/
Washer 5-3
Clock 5-4
Power Outlets 5-5

Warning Lights, Gauges, and Indicators

Warning Lights, Gauges, and
Indicators 5-6
Instrument Cluster 5-7
Speedometer 5-8
Odometer 5-8
Trip Odometer 5-8
Tachometer 5-8
Fuel Gauge 5-8
Safety Belt Reminders 5-9
Airbag Readiness Light 5-9
Passenger Airbag Status
Indicator 5-10
Charging System Light 5-11
Malfunction
Indicator Lamp 5-11
Service Vehicle Soon
Light 5-14
Owner Manual Indicator 5-14
Brake System Warning
Light 5-14
Antilock Brake System (ABS)
Warning Light 5-15
Up-Shift Light 5-15
Power Steering Warning
Light 5-15
Traction Off Light 5-16
StabiliTrak® OFF Light 5-16
Traction Control System
(TCS)/StabiliTrak® Light 5-16
Engine Coolant Temperature
Warning Light 5-17
Tire Pressure Light 5-17
Engine Oil Pressure Light 5-18
Low Fuel Warning Light 5-18
Immobilizer Light 5-18
Reduced Engine Power
Light 5-19
High-Beam On Light 5-19
Daytime Running Lamps
(DRL) Indicator Light 5-19
Front Fog Lamp Light 5-20
Lamps On Reminder 5-20
Cruise Control Light 5-20
Door Ajar Light 5-20

Information Displays

Driver Information
Center (DIC) 5-21

Vehicle Messages

Vehicle Messages 5-24

Vehicle Personalization

Vehicle Personalization 5-25

Controls

Steering Wheel Adjustment

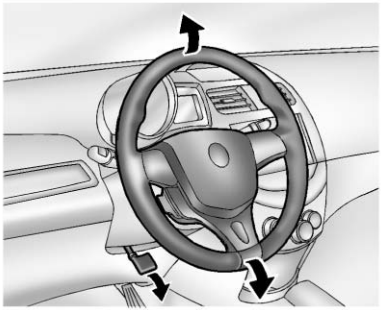

To adjust the steering wheel:

1. Pull the lever down.
2. Move the steering wheel up or down.
3. Pull the lever up to lock the steering wheel in place.

Do not adjust the steering wheel while driving.

Steering Wheel Controls

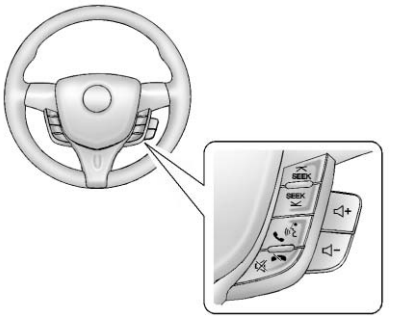

For vehicles with audio steering wheel controls, some audio controls can be adjusted at the steering wheel.

SEEK or SEEK (Next/ Previous): Press to go to the next or previous radio station, song on an iPod® or file on a USB device (if equipped).

/ (Push to Talk): Vehicles with a Bluetooth or OnStar, press to interact with those systems. See *Bluetooth (Overview) on page 7-21* or *Bluetooth (Infotainment Controls) on page 7-23* or *OnStar Overview on page 14-1*.

/ (Mute/End Call): Press to silence the vehicle speakers only. Press again to turn the sound on. For vehicles with OnStar or Bluetooth systems, press to reject an incoming call, or end a current call.

+ or − (Volume): Press + or − to increase or decrease the volume.

Horn

Press on the steering wheel pad to sound the horn.

Windshield Wiper/Washer

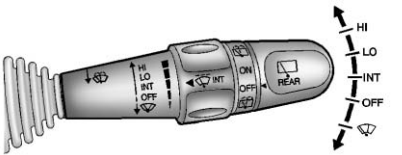

The windshield wiper/washer lever is on the right side of the steering column.

Move the lever to one of the following positions:

HI: Use for fast wipes.

LO: Use for slow wipes.

INT: (Intermittent Wipes): Move the lever up to INT for intermittent wipes, then turn the INT band up for more frequent wipes or down for less frequent wipes.

OFF: Use to turn the wipers off.

(Mist): For a single wipe, briefly move the wiper lever down. For several wipes, hold the wiper lever down.

Clear snow and ice from the wiper blades before using them. If frozen to the windshield, carefully loosen or thaw them. Damaged wiper blades should be replaced. See *Wiper Blade Replacement on page 10-22*.

Heavy snow or ice can overload the wiper motor. A circuit breaker will stop the motor until it cools down.

Windshield Washer

Pull the windshield wiper lever toward you to spray windshield washer fluid and activate the wipers.

The wipers will continue until the lever is released or the maximum wash time is reached.

When the windshield wiper lever is released, additional wipes may occur depending on how long the windshield washer had been activated. See *Washer Fluid on page 10-17* for information on filling the windshield washer fluid reservoir.

⚠ WARNING

In freezing weather, do not use the washer until the windshield is warmed. Otherwise the washer fluid can form ice on the windshield, blocking your vision.

Rear Window Wiper/ Washer

For vehicles with the rear wiper/ washer, the controls are on the end of the windshield wiper lever.

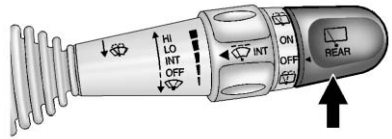

Turn the rear wiper/washer band to operate the rear window wiper/ washer.

ON: Turns the rear wiper on for continuous wipes.

OFF: Turns the rear wiper off.

(Rear Washer): Sprays washer fluid on the rear window. The control returns to its starting position when released.

The rear window wiper will stop when the transmission is in N (Neutral) or the liftgate is open.

It also stops for 10 seconds when the transmission is shifted from N (Neutral) to other gears.

The windshield washer reservoir is used for the windshield and the rear window. Check the fluid level in the reservoir if either washer is not working. See *Washer Fluid on page 10-17*.

Clock

Radio without Touchscreen

The infotainment system controls are used to access the time and date settings through the menu system. See *Operation on page 7-6* for information about how to use the menu system.

Setting the Time and Date

1. Press ◷ or CONFIG button and select Time and Data Settings.
2. Select Set Time or Set Date.
3. Turn the Menu/Tune knob to the desired value.
4. Press the Menu/Tune knob to select the value.
5. Turn the Menu/Tune knob to change the desired value.
6. To save and return to the Time Settings menu, press ⇦ BACK button at any time.

Setting the 12/24 Hour Format

1. Press the ◷ or CONFIG button and select Time and Date Settings.
2. Select Set Time Format.
3. Press the Menu/Tune knob to select the 12 hour or 24 hour display format.

Setting the Month and Day Format

1. Press the ◷ or CONFIG button and select Time and Date Settings.
2. Select Set Date Format.
3. Turn the Menu/Tune knob to the desired setting.
4. Press the Menu/Tune knob to select the DD/MM/YYYY (day/month/year), MM/DD/YYYY (month/day/year), or YYYY/MM/DD (year/month/day) display format.

Radio with Touchscreen

The infotainment system controls are used to access the time and date settings through the menu system. See *Operation on page 7-6* for information about how to use the menu system.

Setting the Time and Date

1. Press ⌂, and then press settings.
2. Press time and date settings, and then set time and date.
3. Press ∧ or ∨ to adjust the value.
4. Press OK.

Setting the 12/24 Hour Format

1. Press ⌂ , and then press settings.
2. Press time and date settings, and then set time format.
3. Select 12/24 HR Format.

Setting the Month and Day Format

1. Press ⌂ , and then press settings.
2. Press time and date settings, and then set date format.
3. Set the date display to DD/MM/YYYY (day/month/year), MM/DD/YYYY (month/day/year), or YYYY/MM/DD (year/month/day) display format.

Power Outlets

The accessory power outlets can be used to plug in electrical equipment, such as a cell phone or MP3 player.

The vehicle has an accessory power outlet in front of the cupholders on the center stack.

Open the cover to access and replace when not in use.

⚠ WARNING

Power is always supplied to the outlets. Do not leave electrical equipment plugged in when the vehicle is not in use because the vehicle could catch fire and cause injury or death.

⚠ CAUTION

Leaving electrical equipment plugged in for an extended period of time while the vehicle is off will drain the battery. Always unplug electrical equipment when not in use and do not plug in equipment that exceeds the maximum 20 ampere rating.

Certain accessory power plugs may not be compatible with the accessory power outlet and could overload vehicle or adapter fuses. If a problem is experienced, see your dealer.

When adding electrical equipment, be sure to follow the proper installation instructions included with the equipment. See *Add-On Electrical Equipment on page 9-37*.

⚠ CAUTION

Hanging heavy equipment from the power outlet can cause damage not covered by the vehicle warranty. The power outlets are designed for accessory power plugs only, such as cell phone charge cords.

Warning Lights, Gauges, and Indicators

Warning lights and gauges can signal that something is wrong before it becomes serious enough to cause an expensive repair or replacement. Paying attention to the warning lights and gauges could prevent injury.

Warning lights come on when there could be a problem with a vehicle function. Some warning lights come on briefly when the engine is started to indicate they are working.

Gauges can indicate when there could be a problem with a vehicle function. Often gauges and warning lights work together to indicate a problem with the vehicle.

When one of the warning lights comes on and stays on while driving, or when one of the gauges shows there may be a problem, check the section that explains what to do. Follow this manual's advice. Waiting to do repairs can be costly and even dangerous.

Instrument Cluster

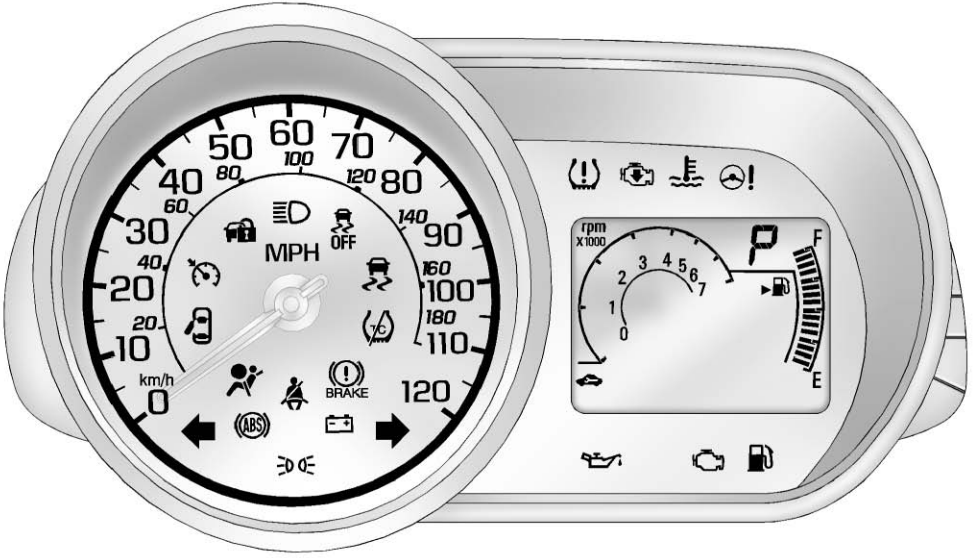

English Automatic Transmission Shown, Metric and Manual Transmission Similar

Speedometer

The speedometer shows the vehicle's speed in either kilometers per hour (km/h) or miles per hour (mph).

Odometer

ODO

The odometer shows how far the vehicle has been driven, in either kilometers or miles.

Trip Odometer

TRIP

The trip odometer measures the distance the vehicle has been driven since the function was last reset.

To reset the trip odometer to zero, see *Driver Information Center (DIC) on page 5-21*.

Tachometer

The tachometer displays the engine speed in revolutions per minute (rpm).

Fuel Gauge

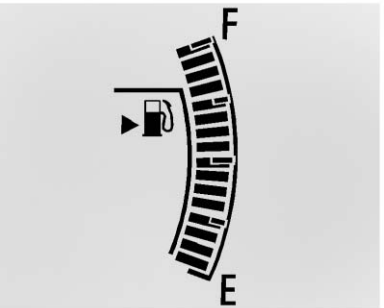

The fuel gauge indicates about how much fuel is left when the ignition is turned to ON/RUN.

When the tank nears empty, the low fuel warning light will come on. There is still a little fuel left, but the vehicle's fuel tank should be filled soon. See *Low Fuel Warning Light on page 5-18* for more information.

An arrow on the fuel gauge indicates on which side of the vehicle the fuel door is located.

Here are four things that some owners ask about. None of these show a problem with the fuel gauge:

- At the service station, the gas pump shuts off before the gauge reads full.
- It takes a little more or less fuel to fill up than the gauge indicated. For example, the gauge may have indicated the tank was half full, but it actually took a little more or less than half the tank's capacity to fill the tank.

- The indicator moves a little when turning a corner or speeding up.
- The gauge goes back to empty when the ignition is turned off.

Safety Belt Reminders

Driver Safety Belt Reminder Light

There is a driver safety belt reminder light on the instrument cluster.

When the vehicle is started, this light flashes and a chime may come on to remind the driver to fasten their safety belt. Then the light stays on solid until the belt is buckled. This cycle may continue several times if the driver remains or becomes unbuckled while the vehicle is moving.

If the driver safety belt is buckled, neither the chime nor the light comes on.

Passenger Safety Belt Reminder Light

There is a passenger safety belt reminder light near the passenger airbag status indicator. See *Passenger Sensing System on page 3-24*.

When the vehicle is started, this light flashes and a chime may come on to remind passengers to fasten their safety belt. Then the light stays on solid until the belt is buckled. This cycle continues several times if the passenger remains or becomes unbuckled while the vehicle is moving.

If the passenger safety belt is buckled, neither the chime nor the light comes on.

The front passenger safety belt warning light and chime may turn on if an object is put on the seat such as a briefcase, handbag, grocery bag, laptop, or other electronic device. To turn off the warning light and/or chime, remove the object from the seat or buckle the safety belt.

Airbag Readiness Light

This light shows if there is an electrical problem with the airbag system. The system check includes the airbag sensor(s), passenger sensing system, the pretensioners (if equipped), the airbag modules, the wiring, and the crash sensing and diagnostic module. For more information on the airbag system, see *Airbag System on page 3-17*.

The airbag readiness light comes on for several seconds when the vehicle is started. If the light does not come on then, have it fixed immediately.

⚠ WARNING

If the airbag readiness light stays on after the vehicle is started or comes on while driving, it means the airbag system might not be working properly. The airbags in the vehicle might not inflate in a crash, or they could even inflate without a crash. To help avoid injury, have the vehicle serviced right away.

If there is a problem with the airbag system, a Driver Information Center (DIC) message may also come on. See *Vehicle Messages on page 5-24*.

Passenger Airbag Status Indicator

The vehicle has a passenger sensing system. See *Passenger Sensing System on page 3-24* for important safety information. The center display has a passenger airbag status indicator.

United States

Canada

When the vehicle is started, the passenger airbag status indicator will light ON and OFF, or the symbol for on and off, for several seconds as a system check. If you use remote start, if equipped, to start the vehicle, you may not see the system check. Then, after several seconds, the status indicator will light either ON or OFF, or the on or off symbol to let you know the status of the front outboard passenger frontal airbag and knee airbag.

If the word ON or the on symbol is lit on the passenger airbag status indicator, it means that the front outboard passenger frontal airbag and knee airbag are allowed to inflate.

If the word OFF or the off symbol is lit on the passenger airbag status indicator, it means that the passenger sensing system has turned off the front outboard passenger frontal airbag and knee airbag.

If, after several seconds, both status indicator lights remain on, or if there are no lights at all, there may be a problem with the lights or the passenger sensing system. See your dealer for service.

⚠ WARNING

If the airbag readiness light ever comes on and stays on, it means that something may be wrong with the airbag system. To help avoid injury to yourself or others, have the vehicle serviced right away. See *Airbag Readiness Light on page 5-9* for more information, including important safety information.

Charging System Light

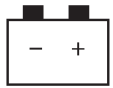

This light will come on briefly when the ignition is turned on, and the engine is not running, as a check to show it is working.

It should go out when the engine is started. If it stays on, or comes on while driving, there may be a problem with the electrical charging system. Have it checked by your dealer. Driving while this light is on could drain the battery. If a short distance must be driven with the light on, turn off all accessories, such as the radio and air conditioner, to help reduce the drain on the battery.

Malfunction Indicator Lamp

A computer system called OBD II (On-Board Diagnostics-Second Generation) monitors the operation of the vehicle to ensure emissions are at acceptable levels, helping to maintain a clean environment. The malfunction indicator lamp comes on when the vehicle is placed in ON/RUN, as a check to show it is working. If it does not, have the vehicle serviced by your dealer. See *Ignition Positions on page 9-14* for more information.

If the malfunction indicator lamp comes on while the engine is running, this indicates that the

OBD II system has detected a problem and diagnosis and service might be required.

Malfunctions often are indicated by the system before any problem is apparent. Being aware of the light can prevent more serious damage to the vehicle. This system also assists the service technician in correctly diagnosing any malfunction.

Notice: **If the vehicle is continually driven with this light on, the emission controls might not work as well, the vehicle fuel economy might not be as good, and the engine might not run as smoothly. This could lead to costly repairs that might not be covered by the vehicle warranty.**

Notice: **Modifications made to the engine, transmission, exhaust, intake, or fuel system of the vehicle or the replacement of the original tires with other than those of the same Tire Performance Criteria (TPC) can affect the vehicle's emission controls and can cause this light to come on. Modifications to these systems could lead to costly repairs not covered by the vehicle warranty. This could also result in a failure to pass a required Emission Inspection/ Maintenance test. See *Accessories and Modifications on page 10-2*.**

This light comes on during a malfunction in one of two ways:

Light Flashing: A misfire condition has been detected. A misfire increases vehicle emissions and could damage the emission control system on the vehicle. Diagnosis and service might be required.

To prevent more serious damage to the vehicle:

- Reduce vehicle speed.
- Avoid hard accelerations.
- Avoid steep uphill grades.

If the light continues to flash, find a safe place to stop and park the vehicle. Turn the vehicle off, wait at least 10 seconds, and restart the engine. If the light is still flashing, follow the previous steps and see your dealer for service as soon as possible.

Light On Steady: An emission control system malfunction has been detected on the vehicle. Diagnosis and service might be required.

The following may correct an emission control system malfunction:

- Check that the fuel cap is fully installed. See *Filling the Tank on page 9-34*. The diagnostic system can determine if the fuel cap has been left off or improperly installed. A loose or missing fuel cap allows fuel to evaporate into the atmosphere. A few driving trips with the cap properly installed should turn the light off.

- Check that good quality fuel is used. Poor fuel quality causes the engine not to run as efficiently as designed and may cause stalling after start-up, stalling when the vehicle is changed into gear, misfiring, hesitation on acceleration, or stumbling on acceleration. These conditions might go away once the engine is warmed up.

If one or more of these conditions occurs, change the fuel brand used. It may require at least one full tank of the proper fuel to turn the light off.

See *Recommended Fuel on page 9-32*.

If none of the above have made the light turn off, your dealer can check the vehicle. The dealer has the proper test equipment and diagnostic tools to fix any mechanical or electrical problems that might have developed.

Emissions Inspection and Maintenance Programs

Depending on where you live, your vehicle may be required to participate in an emission control system inspection and maintenance program. For the inspection, the emission system test equipment will likely connect to the vehicle's Data Link Connector (DLC).

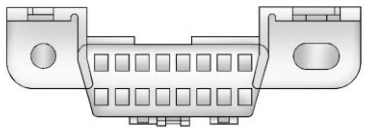

The DLC is under the instrument panel to the left of the steering wheel. See your dealer if assistance is needed.

The vehicle may not pass inspection if:

- The malfunction indicator lamp is on with the engine running, or if the light does not come on when the ignition is turned to ON/RUN while the engine is off. See your dealer for assistance in verifying proper operation of the malfunction indicator lamp.
- The OBD II (On-Board Diagnostics) system determines that critical emission control systems have not been completely diagnosed. The vehicle would be considered not ready for inspection. This can happen if the 12-volt battery has recently been replaced or run down. The diagnostic system is designed to evaluate critical emission control systems during normal driving. This can take several days of routine driving. If this has been done and the vehicle still does not pass the inspection for lack of OBD II system readiness, your dealer can prepare the vehicle for inspection.

Service Vehicle Soon Light

For vehicles with this light, it comes on if a condition exists that may require the vehicle to be taken in for service.

If the light comes on, take the vehicle to your dealer for service as soon as possible.

Owner Manual Indicator

This symbol is shown when you need to see the owner manual for additional instructions or information.

Brake System Warning Light

The vehicle brake system consists of two hydraulic circuits. If one circuit is not working, the remaining circuit can still work to stop the vehicle. For normal braking performance, both circuits need to be working

If the warning light comes on, there is a brake problem. Have the brake system inspected right away.

⚠ WARNING

The brake system might not be working properly if the brake system warning light is on. Driving with the brake system warning light on can lead to a

(Continued)

WARNING (Continued)

crash. If the light is still on after the vehicle has been pulled off the road and carefully stopped, have the vehicle towed for service.

Metric

English

This light should come on briefly when the ignition is turned to ON. If it does not come on then, have it fixed so it will be ready to warn if there is a problem.

When the ignition is on, the brake system warning light will also come on when the parking brake is set. The light will stay on if the parking brake does not fully release. If it

stays on after the parking brake is fully released, it means there is a brake problem.

If the light comes on while driving, carefully pull off the road and stop. The pedal may be harder to push or may go closer to the floor. It may take longer to stop. If the light is still on, have the vehicle towed for service. See *Towing the Vehicle on page 10-65*.

Antilock Brake System (ABS) Warning Light

This light comes on briefly when the engine is started.

If the light stays on, turn the ignition to LOCK/OFF or if the light comes on, stop as soon as possible and turn the ignition off. Then start the engine again to reset the system. If the light still stays on, or comes on again while driving, the vehicle needs service. See your dealer.
If the regular brake system warning light is not on, the brakes will still work, but the antilock brakes will not work. If the regular brake system warning light is also on, the antilock brakes will not work and there is a problem with the regular brakes. See *Brake System Warning Light on page 5-14*.

The ABS warning light will come on briefly when the ignition is turned to ON/RUN. This is normal. If the light does not come on then, have it fixed so it will be ready to warn if there is a problem.

Up-Shift Light

For manual transmission vehicles, there is an up-shift light that comes on in the lower DIC area. It shows when to shift to the next higher gear for best fuel economy.

See *Manual Transmission on page 9-23*.

Power Steering Warning Light

This light comes on briefly when the ignition is turned to ON/RUN as a check to show it is working.

If it does not come on have the vehicle serviced by your dealer.

If this light stays on, or comes on while driving, the system may not be working. If this happens, see your dealer for service.

Traction Off Light

This light comes on briefly while starting the engine. If it does not, have the vehicle serviced by your dealer. If the system is working normally, the indicator light then turns off.

The traction off light comes on when the Traction Control System (TCS) has been turned off by pressing and releasing the TCS/StabiliTrak button.

This light and the StabiliTrak OFF light come on when StabiliTrak is turned off.

If the TCS is off, wheel spin is not limited. Adjust driving accordingly.

See *Traction Control System (TCS) on page 9-27* and *StabiliTrak® System on page 9-28*.

StabiliTrak® OFF Light

This light comes on briefly while starting the engine. If it does not, have the vehicle serviced by your dealer.

This light comes on when the StabiliTrak system is turned off. If StabiliTrak is off, the Traction Control System (TCS) is also off.

If the TCS is off, the system does not assist in controlling the vehicle. Turn on the TCS and the StabiliTrak systems and the warning light turns off.

See *Traction Control System (TCS) on page 9-27* and *StabiliTrak® System on page 9-28*.

Traction Control System (TCS)/StabiliTrak® Light

The StabiliTrak or Traction Control System (TCS) indicator/warning light comes on briefly when the engine is started.

If the light does not come on, have the vehicle serviced by your dealer. If the system is working normally, the indicator light turns off.

If the light is on and not flashing, the TCS, and potentially the StabiliTrak system have been disabled.

If the indicator/warning light is on and flashing, the TCS and/or the StabiliTrak system is actively working.

See *StabiliTrak® System on page 9-28* and *Traction Control System (TCS) on page 9-27*.

Engine Coolant Temperature Warning Light

This light comes on briefly while starting the vehicle.

If it does not, have the vehicle serviced by the dealer. If the system is working normally the indicator light goes off.

Notice: **The engine coolant temperature warning light indicates that the vehicle has overheated. Driving with this light on can damage the engine and it may not be covered by the vehicle warranty. See *Engine Overheating on page 10-16*.**

The engine coolant temperature warning light comes on when the engine has overheated.

If this happens, pull over and turn off the engine as soon as possible. See *Engine Overheating on page 10-16*.

Tire Pressure Light

For vehicles with the Tire Pressure Monitor System (TPMS), this light comes on briefly when the engine is started. It provides information about tire pressures and the TPMS.

When the Light Is On Steady

This indicates that one or more of the tires are significantly underinflated.

Stop as soon as possible, and inflate the tires to the pressure value shown on the Tire and Loading Information label. See *Tire Pressure on page 10-41*.

When the Light Flashes First and Then Is On Steady

If the light flashes for about a minute and then stays on, there may be a problem with the TPMS. If the problem is not corrected, the light will come on at every ignition cycle. See *Tire Pressure Monitor Operation on page 10-43*.

Engine Oil Pressure Light

The oil pressure light should come on briefly as the engine is started. If it does not come on, have the vehicle serviced by your dealer.

Notice: **Lack of proper engine oil maintenance can damage the engine. Driving with the engine oil low can also damage the engine. The repairs would not be covered by the vehicle warranty. Check the oil level as soon as possible. Add oil if required, but if the oil level is within the operating range and the oil pressure is still low, have the vehicle serviced. Always follow the maintenance schedule for changing engine oil.**

If the vehicle has low engine oil pressure, this light will stay on after the engine is started, or come on while driving.

This indicates that the engine is not receiving enough oil. The engine could be low on oil, or could have some other oil problem. Have it fixed immediately by your dealer.

The oil pressure light could also come on in other situations:

- When the ignition is on but the engine is not running, the light will come on as a test to show it is working. The light will go out when the ignition is turned on. If it does not come on with the ignition on, there may be a problem with the fuse or bulb. Have it fixed right away.
- If the vehicle comes to a hard stop, the light may come on for a moment. This is normal.

Low Fuel Warning Light

The low fuel warning light comes on briefly when the vehicle is started.

This light also comes on when the fuel level is low. When fuel is added, the light should go off. If it does not, have the vehicle serviced.

Immobilizer Light

The immobilizer light should come on briefly as the engine is started. If it does not come on, have the

vehicle serviced by your dealer. If the system is working normally, the indicator light turns off.

If the light stays on and the engine does not start, there could be a problem with the immobilizer system. See *Immobilizer Operation on page 2-9*.

Reduced Engine Power Light

The reduced engine power light should come on briefly as the engine is started. If it does not come on, have the vehicle serviced by your dealer.

This light, along with the malfunction indicator lamp, displays when a noticeable reduction in the vehicle's performance occurs. Stop the vehicle and turn off the ignition. Wait 10 seconds and restart the vehicle. This might correct the condition.

The vehicle can be driven at a reduced speed when the reduced engine power light is on but acceleration and speed might be reduced. The performance could be reduced until the next time the vehicle is driven. If this light stays on, see your dealer as soon as possible for diagnosis and repair.

High-Beam On Light

This light comes on when the high-beam headlamps are in use.

See *Headlamp High/Low-Beam Changer on page 6-1* for more information.

Daytime Running Lamps (DRL) Indicator Light

This light, in the display on the top of the center stack, turns on whenever the Daytime Running Lamps are in use.

See *Daytime Running Lamps (DRL) on page 6-2*.

Front Fog Lamp Light

For vehicles with front fog lamps, this light, in the display on the top of the center stack, comes on when the front fog lamps are in use.

The light goes out when the front fog lamps are turned off. See *Fog Lamps on page 6-3*.

Lamps On Reminder

This light comes on when the exterior lamps are in use. See *Exterior Lamp Controls on page 6-1*.

Cruise Control Light

For vehicles with cruise control, the cruise control light is white when the cruise control is on and ready, and turns green when the cruise control is set and active.

The light turns off when the cruise control is turned off. See *Cruise Control on page 9-30*.

Door Ajar Light

This light comes on when a door is open or not securely latched. Before driving, check that all doors are properly closed.

Information Displays

Driver Information Center (DIC)

The DIC displays information about the vehicle. It also displays warning messages if a system problem is detected. See *Vehicle Messages on page 5-24*. All messages appear in the DIC display in the instrument cluster.

DIC Operation and Displays

The DIC has different displays, which can be accessed by using the DIC buttons on the right side of the instrument cluster.

DIC Buttons

MENU: Press to display the DIC menus. Some items display in the upper display area, some in the lower display area, and others use both the upper and lower display areas.

△ or ▽ : Use to scroll through the menus.

SET/CLR: Press to set or clear the menu item displayed.

Odo/Trip Menu Items

Press MENU until the upper display area flashes. Use △ or ▽ to scroll through the menu items. Not all items are available on every vehicle. The following is a list of all possible menu items:

- Odometer
- Trip A
- Trip B

Odometer

This displays the current distance traveled, in either kilometers (km) or miles (mi). This display cannot be reset.

Trip A or B

This displays the current distance traveled, in either kilometers (km) or miles (mi), from the last reset for the trip odometer. To reset the trip odometer, press and hold SET/CLR while the trip odometer is being displayed.

Menu 1

Press MENU until the lower display area flashes. Use △ or ▽ to scroll through the menu items. Not all items are available on every vehicle. The following is a list of all possible menu items:

- Average Fuel Economy
- Fuel Range
- Instantaneous Fuel Economy
- Average Speed
- Timer

Average Fuel Economy

English Shown, Metric Similar

This display shows the approximate average liters per 100 kilometers (L/100 km) or miles per gallon (mpg). This number is calculated based on the number of L/100 km (mpg) recorded since the last time this menu item was reset. To reset the average fuel economy, press and hold the SET/CLR button while the average fuel economy is displayed.

Fuel Range

Metric Shown, English Similar

This displays the approximate distance the vehicle can be driven without refueling. The fuel range estimate is based on an average of the vehicle's fuel economy over recent driving history and the amount of fuel remaining in the fuel tank. When the range is low, FILL FUEL will be displayed.

Instantaneous Fuel Economy

This display shows the current fuel economy in liters per 100 kilometers (L/100 km) or miles per gallon (mpg). This number reflects only the fuel economy that the vehicle has right now and changes frequently as driving conditions change. Unlike average economy, this display cannot be reset.

Average Speed

English Shown, Metric Similar

This display shows the average speed. To reset the average speed to zero, press and hold the SET/CLR button while the average speed is displayed.

Timer

This display can be used as a timer. To start the timer, press SET/CLR while the timer is displayed. The display will show the amount of time that has passed since the timer was last reset, not including time the ignition is off. The timer will record up to 99:59 hours, after which the display will return to 0:00. To reset the timer to 0:00, press and hold SET/CLR.

Menu 2

Press MENU until one of the following items is displayed on the upper and lower display areas.

Use △ or ▽ to scroll through the menu items. Not all items are available on every vehicle. The following is a list of all possible menu items:

- Remaining Oil Life
- Units
- Tire Learn

Remaining Oil Life

This display shows an estimate of the oil's remaining useful life.

If 99 % is displayed, that means 99% of the current oil life remains.

When the remaining oil life is low, the Code 82 message will appear on the display. The oil should be changed as soon as possible. See *Engine Oil on page 10-7*. In addition to the engine oil life system monitoring the oil life, additional maintenance is recommended in the Maintenance Schedule. See *Maintenance Schedule on page 11-3*.

Remember, the oil life display must be reset after each oil change. It will not reset itself. Also, be careful not to reset the oil life display accidentally at any time other than when the oil has just been changed. It cannot be reset accurately until the next oil change. To reset the engine oil life system, see *Engine Oil Life System on page 10-9*.

Units

Press SET/CLR and move △ or ▽ to change units when UNIT is displayed. Select 1, 2, or 3 for the unit display. 1 is Imperial units, 2 is US units, and 3 is metric units. Press and hold SET/CLR to confirm the setting. The number will flash. This will change the displays on the cluster and DIC to the type of measurements selected.

Tire Learn

This display allows for matching of the TPMS sensors. See *Tire Pressure Monitor System on page 10-42* and *Tire Pressure Monitor Operation on page 10-43*.

Vehicle Messages

DIC messages display when the status of the vehicle has changed and action may be needed to correct the condition. Multiple messages appear one after another. All messages should be taken seriously.

Vehicle messages appear as code numbers. The owner manual indicator and service vehicle soon light may also be displayed.

The following is a list of all possible messages. Depending on the vehicle, some of these messages may not be available.

10: Brakes Overheated

15: Check High Mounted Brake Lamp

16: Check Brake Lamps

17: Headlamp Leveling Malfunction — Contact Service

18: Left Low Beam Failure

20: Right Low Beam Failure

21: Check Left Position Lamp

22: Check Right Position Lamp

23: Reversing Lamp Failure

24: License Plate Lamp Failure

25: Left Front Turn Indicator Failure

26: Left Rear Turn Indicator Failure

27: Right Front Turn Indicator Failure

28: Right Rear Turn Indicator Failure

58: Winter Tire Recognition

65: Theft Attempted

75: Service AC System

81: Service Transmission

82: Change Engine Oil Soon

89: Service Vehicle Soon

95: Service Airbag

Vehicle Personalization

Personalization Menu (Radio without Touchscreen)

The audio system controls and touchscreen are used to access the personalization menus for customizing vehicle features.

The following are all possible personalization features. Depending on the vehicle, some may not be available.

CONFIG (Configuration): Press to access the Configuration Settings Menu.

MENU/TUNE: Turn to scroll through the menus or setup items. Press to enter the menus and select the menu items.

⇦ **BACK :** Press to exit, or return to the previous screen or menu.

To access a menu:

1. Press the CONFIG button.
2. Turn the MENU/TUNE knob to select the desired menu.
3. Press the MENU/TUNE knob.

Settings menus and functions may vary depending on vehicle option.

Press the CONFIG button and the following list of menu items may be available:

- Languages
- Time and Data Settings
- Radio Settings
- Vehicle Settings
- Comfort & Convenience

Language

Select the Language menu and the following may be displayed:

- English
- French
- Spanish

1. Turn MENU/TUNE to the desired language.

2. Press the MENU/TUNE knob to select.

Press ⇦ BACK to go back to the last menu.

Time and Date Settings

Select the Time and Data Settings menu and the following may be displayed:

- Set Time
- Set Data
- Set Time Format
- Set Date Format
- Auto Time Adjust

Set Time

Select to manually set the time.

1. Turn the MENU/TUNE knob to the desired value.
2. Press the MENU/TUNE knob to select the value.
3. Turn the MENU/TUNE knob to change the desired value.
4. To save and return to the Time Settings menu, press ⇦ BACK button at any time.

Set Date

Select to manually set the date.

1. Turn the MENU/TUNE knob to the desired value.
2. Press the MENU/TUNE knob to select the value.
3. Turn the MENU/TUNE knob to change the desired value.
4. To save and return to the Time Settings menu, press ⇦ BACK button at any time.

Set Time Format

Select to set the 12/24 hour format.

1. Press the MENU/TUNE knob to select the 12 hour or 24 hour display format.

Set Date Format

Select to set the month and day format.

1. Turn the MENU/TUNE knob to the desired setting.
2. Press the MENU/TUNE knob to select the DD/MM/YYYY (day/month/year), MM/DD/YYYY (month/day/year), or YYYY/MM/DD (year/month/day) display format.

Auto Time Adjust

Select to turn the auto time adjust on or off.

1. Press the MENU/TUNE knob to turn On or Off.

Radio Settings

Select the Radio Settings menu and the following may be displayed:

- Auto Volume
- Maximum Startup Volume
- Radio Favorites

Auto Volume

The auto volume feature automatically adjusts the radio volume to compensate for road and

wind noise as the vehicle speeds up or slows down, so that the volume level is consistent.

1. Turn the MENU/TUNE knob to the desired value.
2. Press the MENU/TUNE knob to select the value.

Maximum Startup Volume

Select to manually set the startup volume of the radio.

1. Turn the MENU/TUNE knob to increase or decrease the value.
2. To save press the MENU/TUNE or ⇦ BACK button.

Radio Favorites

Select to manually set the number of favorite pages.

1. Turn the MENU/TUNE knob to select 1-6.
2. Press the MENU/TUNE knob to select the value.

Vehicle Settings

Select the Radio Settings menu and the following may be displayed:

- Comfort and Convenience
- Lighting
- Power Door Locks
- Lock, Unlock, Settings
- Vehicle Factory Settings

Comfort and Convenience

Select the Comfort and Convenience menu and the following may be displayed:

- Chime Volume
- Auto Wipe in Reverse Gear

Chime Volume

Select to set the chime volume level to Normal or High.

1. Turn the MENU/TUNE knob to select Chime Volume.
2. Press the MENU/TUNE knob to select.
3. Turn the MENU/TUNE knob to the desired level.
4. Press the MENU/TUNE knob to select the level.

Auto Wipe in Reverse Gear

Select to set the Auto Wipe in Reverse Gear feature on or off. When on, and the front wipers are on, the rear window wiper will turn on automatically when the vehicle is shifted into R (Reverse).

1. Turn the MENU/TUNE knob to select Auto Wipe in Reverse Gear.
2. Press the MENU/TUNE knob to turn On or Off.

Lighting

Select the Lighting menu and the following may be displayed:

- Exit Lighting

Exit Lighting

Select to set how long the exterior lamps stay on when leaving the vehicle and it is dark outside.

1. Turn the MENU/TUNE knob to the desired time.
2. Press the MENU/TUNE knob to select.

Power Door Locks

Select Power Door Locks and the following may be displayed:

- Auto Door Unlock
- Unlocked Door Anti Lock Out
- Delayed Door Lock

Auto Door Unlock

Select to set which of the doors will automatically unlock when the vehicle is shifted into P (Park), select All Doors, Driver Door, or Off.

1. Turn the MENU/TUNE knob to the desired selection.
2. Press the MENU/TUNE knob to select.

Unlocked Door Anti Lock Out

When on, this feature will keep the driver door from locking when the door is open. If Off is selected, the Delayed Door Lock menu will be available and the door will lock as programmed through this menu.

1. Turn the MENU/TUNE knob to On or Off.
2. Press the MENU/TUNE knob to select.

Delayed Door Lock

When on, this feature will delay the locking of the doors after the last door is closed.

1. Turn the MENU/TUNE knob to On or Off.
2. Press the MENU/TUNE knob to select.

Lock, Unlock, Settings

Select Power Door Locks and the following may be displayed:

- Remote Unlock Light Feedback
- Remote Lock Light and Horn Feedback
- Remote Door Unlock

Remote Unlock Light Feedback

When on, the exterior lamps will flash when unlocking the vehicle with the Remote Keyless Entry (RKE) transmitter, select Flash Lights or Lights Off.

1. Turn the MENU/TUNE knob to the desired selection.
2. Press the MENU/TUNE knob to select.

Remote Lock Light and Horn Feedback

Select to set which type of feedback is given when pressing 🔓 on the RKE transmitter, select Lights and Horn, Lights only, Horn Only, or Off.

1. Turn the MENU/TUNE knob to the desired selection.
2. Press the MENU/TUNE knob to select.

Remote Door Unlock

Select to set which doors will unlock when pressing 🔓 on the RKE transmitter, select All Doors or Driver Door.

When set to Driver Door, the driver door will unlock the first time 🔓 is pressed and all doors will unlock when the button is pressed a second time. When set to All Doors, all of the doors will unlock at the first press of 🔓.

1. Turn the MENU/TUNE knob to the desired selection.
2. Press the MENU/TUNE knob to select.

Vehicle Factory Settings

Select Vehicle Factory Settings to return all of the vehicle personalization to the default settings. Press MENU/TUNE when Vehicle Factory Settings is selected and open the menu. Select Yes or No by turning and pressing the MENU/TUNE knob.

Personalization Menu (Radio with Touchscreen)

Settings can be made with the ignition ON and the vehicle not moving.

The following are all possible personalization features. Depending on the vehicle, some may not be available.

🏠 **(Home):** Press to access the Home Page Menu.

▲ **or** ▼ **(Up/Down):** Press to scroll through the menus or setup items.

↩ **(Back) :** Press to exit, or return to the previous screen or menu.

To access the menu:

1. Press 🏠.
2. Press Settings.

Press the menu item to select it. Each of the menus is detailed in the following information.

Settings menus and functions may vary depending on vehicle option.

The following list of menu items may be available:

- Time & Date Settings
- Radio Settings
- Connection Settings
- Vehicle Settings
- Language
- Text Scroll
- Touch Beep Sound
- Max Startup Volume
- About
- DivX® VOD

Time and Date Settings

Select the Time and Data Settings menu and the following may be displayed:

- Set Time Format
- Set Date Format
- Set Time and Date
- Automatic Clock Sync

Set Time Format

Select to set the 12/24 hour format.

Press 12h or 24h.

Set Date Format

Select to set the month and day format.

Press < or > to select the DD/MM/YYYY (day/month/year), MM/DD/YYYY (month/day/year), or YYYY/MM/DD (year/month/day) format.

Set Time and Date

Select to manually set the time and date.

1. Press ∧ or ∨ to adjust the value.
2. Press OK.

Automatic Clock Sync

Select to display the real or user time on the radio.

Select On to display the real time or Off to display the time set by the user.

Radio Settings

Select the Radio Settings menu and the following may be displayed:

- Auto Volume
- Radio Tune Bar
- Radio Text
- XM Categories
- Radio Factory Settings

Auto Volume

This feature adjusts the radio volume to compensate for road and wind noise as the vehicle speeds up or slows down, so that the volume level is consistent.

Press < or > to select Off, Low, Medium, or High.

Radio Tune Bar

Select to display the radio station tune bar.

Select On or Off.

Radio Text

Select to display the radio broadcast information.

Select On or Off.

XM Categories

Select to set the selection of XM categories.

Radio Factory Settings

Select to restore the radio to the factory settings.

Connection Settings

Select the Connection Settings menu and the following may be displayed:

- Bluetooth Settings
- Change Ringtone
- Ringtone Volume

Bluetooth Settings

Select this feature to:

- Connect, disconnect, or delete a device

- Change or set a Personal Identification Number (PIN)
- Turn on or off the Bluetooth connection
- Check the device information

Change Ringtone

Select to set different ringtones.

Ringtone Volume

Select to set the ringtone volume.

Press < or >.

Vehicle Settings

Select the Vehicle Settings menu and the following may be displayed:

- Comfort and Convenience
- Lighting
- Power Door Locks
- Lock, Unlock Settings
- Vehicle Factory Settings

Comfort and Convenience

Select the Comfort and Convenience menu and the following may be displayed:

- Chime Volume
- Auto Wipe in Reverse Gear

Chime Volume

Select to set the chime volume level.

Select Normal or High. Press ↩.

Auto Wipe in Reverse Gear

Select to set the Auto Wipe in Reverse Gear feature on or off. When on, and the front wipers are on, the rear window wiper will turn on automatically when the vehicle is shifted into R (Reverse).

Select On or Off. Press ↩.

Lighting

Select the Lighting menu and the following may be displayed:

- Exit Lighting

Exit Lighting

Select to set how long the exterior lamps stay on when leaving the vehicle and it is dark outside.

Select Off, 30 Sec, 60 Sec, or 120 Sec. Press ↩.

Power Door Locks

Select Power Door Locks and the following may be displayed:

- Auto Door Unlock
- Unlocked Door Anti Lock Out
- Delayed Door Lock

Auto Door Unlock

Select to set which of the doors will automatically unlock when the vehicle is shifted into P (Park).

Select All Doors, Driver Door, or Off. Press ↩.

Unlocked Door Anti Lock Out

When on, this feature will keep the driver door from locking when the door is open. If Off is selected, the

Delayed Door Lock menu will be available and the door will lock as programmed through this menu.

Select On or Off. Press ↩.

Delayed Door Lock

When on, this feature will delay the locking of the doors until five seconds after the last door is closed. Three chimes will signal that delayed locking is in use. Pressing either 🔒 or 🔓 on the RKE transmitter twice will override the delayed locking feature and immediately lock all of the doors.

Select On or Off. Press ↩.

Lock, Unlock Settings

Select Lock, Unlock Settings and the following may be displayed:

- Remote Unlock Light Feedback
- Remote Lock Light & Horn Feedback
- Remote Door Unlock

Remote Unlock Light Feedback

When on, the exterior lamps will flash when unlocking the vehicle with the RKE transmitter.

Select Flash Lights or Lights Off. Press ↩.

Remote Lock Light & Horn Feedback

Select to set what type of feedback is given when pressing 🔒 on the RKE transmitter.

Select Lights Only, Lights & Horn, Horn Only, or Off. Press ↩.

Remote Door Unlock

Select to set which doors will unlock when pressing 🔓 on the RKE transmitter.

Select All Doors or Driver Door. When set to Driver Door Only, the driver door will unlock the first time 🔓 is pressed and all doors will unlock when the button is pressed a second time. When set to All Doors, all of the doors will unlock at the first press of 🔓. Press ↩.

Vehicle Factory Settings

Select Vehicle Factory Settings to return all of the vehicle personalization to the default settings. Press Vehicle Factory Settings when highlighted. Select Yes or No. Press ↩.

Language

Select the Language menu and the following may be displayed:

- English
- French
- Spanish

Select the language desired. Press ↩.

Text Scroll

Select to set the Text Scroll feature on or off.

When on, if there is long text displayed on the audio screen, the text is scrolled. When off, the text is scrolled once and displayed in truncated form.

Select On or Off. Press ⮌.

Touch Beep Sound

Select to set the Touch Beep Sound feature on or off.

When on, a beep will be heard when pressing the screen. When off, the beep is canceled.

Select On or Off. Press ⮌.

Max Startup Volume

Select to set the startup volume of the infotainment system.

Press < or > select the desired volume between 9-21. Press ⮌.

About

Select the About menu and the following will be displayed:

- System Version
- Legal Information

System Version

Press System Version when highlighted to view the version of the infotainment system. Press ⮌.

Legal Information

Press Legal Information when highlighted to view the Open source information. Press ⮌.

DivX VOD

Press DivX VOD when highlighted.

- **DIVX VIDEO**: DivX is a digital video format created by DivX, LLC, a subsidiary of Rovi Corporation. This is an official DivX Certified® device that plays DivX video. See divx.com for more information and software tools on how to convert files into DivX videos.
- **DIVX VIDEO-ON DEMAND**: This DivX Certified device must be registered in order to play purchased DivX Video-on-Demand (VOD) movies. To obtain a registration code, locate the DivX VOD section in the device setup menu. See vod.divx.com for more information on how to complete the registration.

Press ⮌.

✍ NOTES

Lighting

Exterior Lighting
Exterior Lamp Controls 6-1
Exterior Lamps Off Reminder 6-1
Headlamp High/Low-Beam Changer 6-1
Flash-to-Pass 6-2
Daytime Running Lamps (DRL) 6-2
Hazard Warning Flashers 6-2
Turn and Lane-Change Signals 6-3
Fog Lamps 6-3

Interior Lighting
Instrument Panel Illumination Control 6-4
Courtesy Lamps 6-4
Dome Lamps 6-4

Lighting Features
Exit Lighting 6-5
Battery Power Protection 6-5

Exterior Lighting

Exterior Lamp Controls

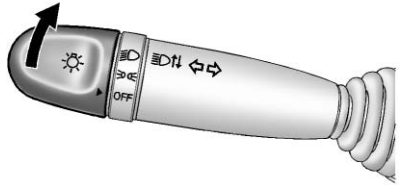

The exterior lamp control is on the turn signal lever on the left side of the steering column.

There are three positions:

: Turns on the headlamps, together with the following:

- Taillamps
- License Plate Lamp
- Instrument Panel Lights
- Parking Lamps

: Turns on the parking lamps, together with the taillamps, license plate lamp, and instrument panel lights.

OFF: Turns all the lamps off, except the Daytime Running Lamps (DRL).

The DRL automatically turn off when the ignition key is turned off.

Exterior Lamps Off Reminder

A reminder chime will sound when the headlamps or parking lamps are manually turned on and the ignition is off and a door is open. To disable the chime, turn the light off.

Headlamp High/ Low-Beam Changer

The headlamps must be on for this feature to work.

Push the turn signal lever away from you to turn the high beams on.

The light comes on in the instrument cluster while the high beams are on and the ignition is turned to ON/RUN.

Pull the lever toward you to return to low beams.

Flash-to-Pass

This feature is used to signal to the vehicle ahead that you want to pass.

Pull the turn signal lever toward you until the high-beam headlamps come on, then release the lever to turn them off.

Daytime Running Lamps (DRL)

Daytime Running Lamps (DRL) can make it easier for others to see the front of your vehicle during the day. Fully functional daytime running lamps are required on all vehicles first sold in Canada.

The DRL system makes the headlamps come on when the following conditions are met:

- The ignition is on.
- The exterior lamp control is in OFF or parking lamp position.
- The parking brake is released.

This indicator light in the center stack display comes on when the DRL system is on.

When the DRL system is on, the taillamps, sidemarker lamps, parking lamps, and instrument panel lights do not come on unless the exterior lamp control is turned to the parking lamp or headlamp position.

The DRL system turns off when one of the following conditions is met:

- The ignition is off.
- The parking brake is on.
- The high-beam headlamps are on.
- The low-beam headlamps are on.
- The flash-to-pass feature is used.

The regular headlamp system should be used when needed.

Hazard Warning Flashers

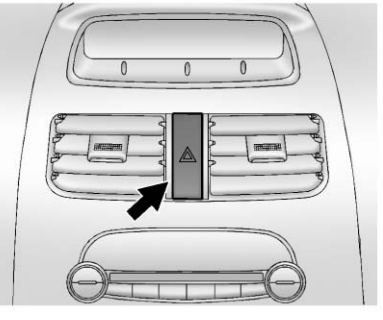

The hazard warning flasher button is on the center stack.

(Hazard Warning Flasher): Press to make the front and rear turn signal lamps flash on and off. This warns others that you are having trouble. Press the button again to turn the flashers off.

When the hazard warning flashers are on, the turn signals will not work.

Turn and Lane-Change Signals

Move the lever all the way up or down to signal a turn.

An arrow on the instrument cluster flashes in the direction of the turn or lane change.

Raise or lower the lever until the arrow starts to flash to signal a lane change. Hold it there until the lane change is completed.

The lever returns to its starting position whenever it is released.

If after signaling a turn or a lane change the arrow flashes rapidly or does not come on, a signal bulb may be burned out.

Replace any burned out bulbs. If a bulb is not burned out, check the fuse. See *Fuses and Circuit Breakers on page 10-27*.

Fog Lamps

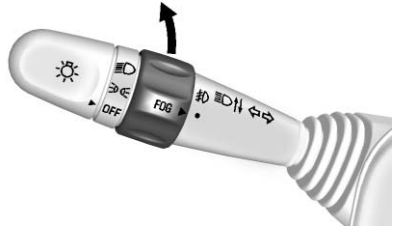

For vehicles with fog lamps, they are controlled by the band on the middle of the turn signal lever.

To use the fog lamps, the ignition must be turned on and the low-beam headlamps or parking lamps must be on.

Turn the band to to turn the fog lamps on. The band automatically returns to its starting position when released. The fog lamp indicator light comes on in the center of the instrument panel. See *Front Fog Lamp Light on page 5-20*.

To turn the fog lamps off, turn the band to again. The fog lamp indicator light will go off.

The fog lamps will also turn off when the high-beam headlamps are turned on. When the high-beam headlamps are turned off, the fog lamps will turn on again.

Some localities have laws that require the headlamps to be on along with the fog lamps.

Interior Lighting

Instrument Panel Illumination Control

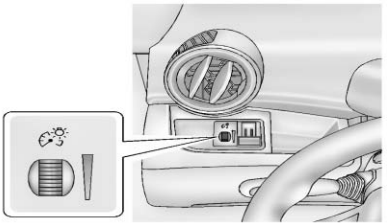

This feature controls the brightness of the instrument panel controls and infotainment display screen. The thumbwheel is to the left of the steering column on the instrument panel.

(Instrument Panel Brightness): Move the thumbwheel up or down to brighten or dim the instrument panel controls and infotainment display screen.

Courtesy Lamps

The courtesy lamps come on automatically when any door is opened and the dome lamp is in the DOOR position.

Dome Lamps

The dome lamp controls are in the overhead console.

Move the control to change the lamp setting.

OFF: Turns the lamps off, even when a door is open.

DOOR: Turns the lamps on automatically when a door is opened.

ON: Turns on the dome lamps.

Lighting Features

Exit Lighting

If the dome lamps are in the DOOR position, they come on automatically when the key is removed from the ignition. The exterior lamps and dome lamps remain on after the door is closed for a set amount of time, then automatically turn off.

To turn on the exterior lamps while the ignition is off:

1. Open the drivers door.
2. Pull and release the turn lever.

The headlamps, parking lamps, and back-up lamps will turn on for a set amount of time, then automatically turn off.

This feature can be changed. See *Vehicle Personalization on page 5-25*.

Battery Power Protection

The battery saver feature is designed to protect the vehicle's battery.

If some interior lamps and/or headlamps are left on and the ignition is turned off, the battery rundown protection system automatically turns the lamp off after some time.

✍ NOTES

Infotainment System

Introduction
Infotainment 7-1
Theft-Deterrent Feature 7-2
Overview 7-3
Home Page (Radio with Touchscreen) 7-5
Operation 7-6

Radio
AM-FM Radio 7-9
Satellite Radio 7-13
Radio Reception 7-15
Multi-Band Antenna 7-16

Audio Players
USB Port 7-16
Auxiliary Devices 7-17

Navigation
OnStar® System 7-19

Phone
Bluetooth (Overview) 7-21
Bluetooth (Infotainment Controls) 7-23
Hands-Free Phone 7-28

Downloadable Applications
Smartphone Link (Overview) 7-31
Smartphone Link (Pandora) 7-33
Smartphone Link (Stitcher) 7-34

Bluetooth Phone/Devices
Pictures and Movies (Audio System) 7-36
Pictures and Movies (Picture System) 7-41
Pictures and Movies (Movie System) 7-42

Trademarks and License Agreements
Trademarks and License Agreements 7-44

Introduction

Infotainment

Determine which radio the vehicle has and read the following pages to become familiar with its features.

⚠ WARNING

Taking your eyes off the road for extended periods could cause a crash resulting in injury or death to you or others. Do not give extended attention to infotainment tasks while driving.

This system provides access to many audio and non-audio listings.

To minimize taking your eyes off the road while driving, do the following while the vehicle is parked:

- Become familiar with the operation and controls of the audio system.
- Set up the tone, speaker adjustments, and preset radio stations.

See *Defensive Driving on page 9-2*.

Notice: **Contact your dealer before adding any equipment.**

Adding audio or communication equipment could interfere with the operation of the engine, radio, or other systems, and could damage them. Follow federal rules covering mobile radio and telephone equipment.

Customer Assistance

Assistance is available to help with Bluetooth pairing, application downloading and installation, other mobile device interface, and operation support of the infotainment system. Specialists are available when calling this Customer Assistance number: U.S. (855) 4 SUPPORT (478-7767).

Theft-Deterrent Feature

The infotainment system has an electronic security system installed to prevent theft.

The infotainment system only works in the vehicle in which it was first installed, and cannot be used in another vehicle.

Overview

Radio without Touchscreen

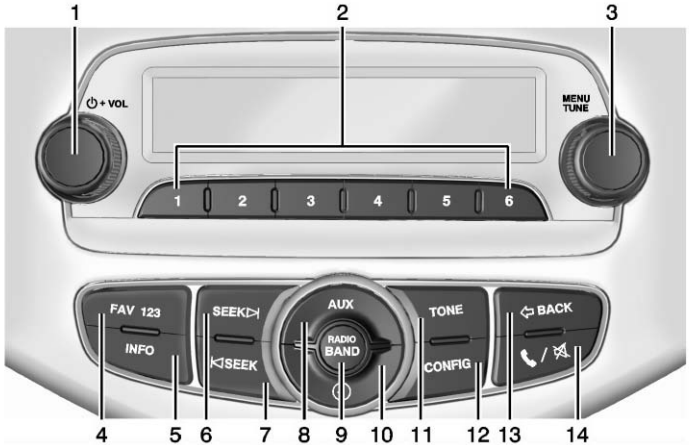

1. ⏻ /VOL (Power/Volume)
   - Press to turn the system on and off.
   - Turn to adjust the volume.
2. Preset Buttons 1−6
   - Press and hold to store a station.
   - Press to go to a preset favorite station.
3. MENU/TUNE
   - Press to open menus and select menu items.
   - Turn to highlight menu items or to set values while in a menu.
   - Turn to manually select radio stations.
4. FAV 123 (Favorites)
   - Press to go to a favorite page.
5. INFO (Information)
   - Press to view current radio station and current song information.
6. SEEK ⏭ (Next)
   - Press to seek the next station.
   - Press and hold to fast forward through the currently playing song on an external audio device.

7. ⏮ SEEK (Previous)
   - Press to seek the previous station.
   - Press and hold to reverse through the currently playing song on an external audio device.
8. AUX (Auxiliary)
   - Press to access the auxiliary input device.
9. RADIO/BAND
   - Press to select AM, FM, or band.
   - Press to select the radio when listening to a different audio source.
10. 🕘 (Clock)
    - Press to enter the time and date settings menu.
11. TONE
    - Press to open the Tone menu.
12. CONFIG (Configuration)
    - Press to open the System Configuration menu.
13. ⇦ BACK
    - Press to go to the previous screen.
    - Press to cancel entered content.
14. 📞/🔇 (Phone/Mute)
    - Press to open the Phone main menu.
    - Press to mute the audio system.

Radio with Touchscreen

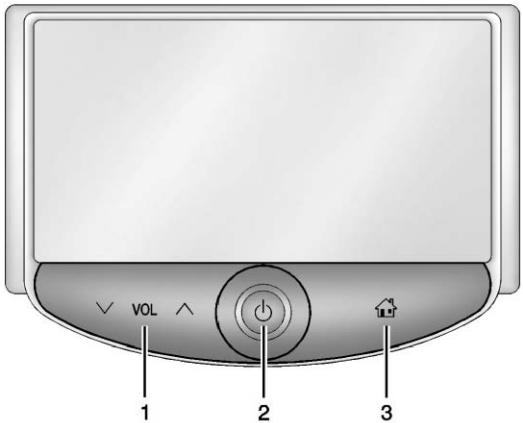

1. ∨ VOL ∧ (Volume)
   - Press to decrease or increase the volume.
2. ⏻ (Power)
   - Press and hold to turn the power on or off.
3. ⌂ (Home Page)
   - Press to go to the Home Page. See *Home Page (Radio with Touchscreen) on page 7-5*.

Home Page (Radio with Touchscreen)

Touchscreen Buttons

Touchscreen buttons show on the screen when available. When a function is unavailable, the button may gray out. When a function is selected, the button may highlight.

Home Page Features

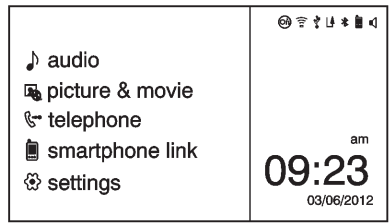

Press ⌂ to go to the Home Page.

audio: Press to select AM, FM, SiriusXM (if equipped), USB/iPod/ Bluetooth Audio, or AUX.

picture & movie: Press to view a picture, movie, or auxiliary video.

telephone: Press to activate the phone features (if equipped). See *Bluetooth (Overview) on page 7-21* or *Bluetooth (Infotainment Controls) on page 7-23*.

smartphone link: Press to listen to Pandora or Stitcher. See *Smartphone Link (Overview) on page 7-31* or *Smartphone Link (Pandora) on page 7-33* or *Smartphone Link (Stitcher) on page 7-34*.

settings: Press to access the Personalization menu. See *Vehicle Personalization on page 5-25*.

Operation

Radio Controls without Touchscreen

The infotainment system is operated by using the pushbuttons, multifunction knobs, and menus shown on the display.

Turning the System On or Off

/VOL (Power/Volume): Press to turn the radio on and off.

Automatic Switch-Off

If the infotainment system has been turned on after the ignition is turned off, the system will turn off automatically after 10 minutes.

Volume Control

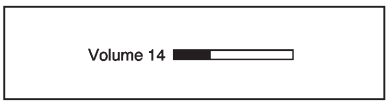

/VOL (Power/Volume): Turn to adjust the volume.

/ (Phone/Mute): Press to activate OnStar. See *OnStar® System on page 7-19*.

Press and hold to mute the infotainment system. Press again or turn the /VOL knob to cancel mute.

Menu System

Controls

The MENU/TUNE knob and BACK button are used to navigate the menu system.

MENU/TUNE Knob:

Turn to:

- Highlight a menu option.
- Select a value.

Press to:

- Enter the menu system.
- Select or activate the highlighted menu option.
- Confirm a set value.
- Turn a system setting on or off.

⇦ BACK:

Press to:

- Exit a menu.
- Go back to the previous menu screen.
- Delete the last character in a sequence.
- Press and hold to delete the entire character sequence.

Submenus

An arrow on the right-hand edge of the menu indicates that it has a submenu with other options.

Audio Settings

The audio settings can be set for each radio band and each audio player source.

Adjusting the Bass, Midrange, Treble, Fader, and Balance

1. Press the TONE button.
2. Turn the MENU/TUNE knob to the desired tone.
3. Press the MENU/TUNE knob to select the desired tone.
4. Turn the MENU/TUNE knob to adjust the desired tone.
5. Press the MENU/TUNE knob to save the setting.
6. Press the ⇦ BACK button to go back to the Tone Settings menu.

Adjusting the EQ (Equalizer)

1. Press the TONE button.
2. Turn the MENU/TUNE knob to EQ.
3. Press the MENU/TUNE knob.
4. Turn the MENU/TUNE knob to select one of the following, then press the MENU/TUNE knob to select it.
   - OFF
   - Pop
   - Rock
   - Classical
   - Talk
   - Country
5. Press the ⇦ BACK button to go back to the Tone Settings menu.

System Settings

Configuring the Number of Favorite Pages

Up to six favorite pages can be saved, and each page can store up to six radio stations.

To configure the number of available favorite pages:

1. Press the CONFIG button.
2. Select Radio Settings.
3. Select Radio Favorites.
4. Select the number of available favorite pages to display.
5. Press the ⇦ BACK button to go back to the System Configuration menu.

Auto Volume

This feature automatically adjusts the radio volume to compensate for road and wind noise.

The level of volume compensation can be selected, or the feature can be turned off.

1. Press the CONFIG button.
2. Select Radio Settings.
3. Select Auto Volume.
4. Select the setting.
5. Press the ⇦ BACK button to go back to the System Configuration menu.

Radio Controls with Touchscreen

The infotainment system is operated by using the pushbuttons, menus shown on the display, and steering wheel controls.

Turning the System On or Off

⏻ **(Power):** Press and hold to turn the radio on and off.

Automatic Switch-Off

If the infotainment system has been turned on after the ignition is turned off, the system will turn off automatically after 10 minutes.

Volume Control

∨ **VOL** ∧ **(Volume):** Press to increase or decrease the volume or press the volume bar.

🔇 **(Mute):** Press ∨ VOL ∧, then press 🔇 to mute and unmute the system.

System Settings

Auto Volume

This feature automatically adjusts the radio volume to compensate for road and wind noise.

The level of volume compensation can be selected, or the feature can be turned off.

1. Press 🏠.
2. Select Settings.
3. Select Radio Settings.
4. Select Auto Volume.
5. Select the setting by pressing < or >.
6. Press the ↩ button to go back to the System Configuration menu.

Audio Settings

The audio settings can be set for each radio band and each audio player source.

Tone Settings: Press menu, then tone settings from the AM or FM menu.

- EQ (Equalizer): Press < or > to select a sound style or turn off the sound style.
- Bass, Mid (Midrange), or Treble: Press − or + to change the desired sound style from −12 to +12.
- Fader or Balance: Adjust the front/rear or left/right speakers.
- Reset: Restore the settings back to default settings.

Press OK to exit Tone Settings.

Radio

AM-FM Radio

Playing the Radio without Touchscreen

Audio Source Menu

⏻ / VOL (Power/Volume): Press to turn the system on and off. Turn to increase or decrease the volume.

MENU/TUNE: Turn to change the radio station.

RADIO/BAND: Press to select AM and FM.

INFO: Press to display additional information that may be available for the current song.

FAV 123: Press to open the favorites list and select a favorite page.

Preset Buttons 1–6: Press to select preset stations.

Radio Broadcast Data System (RBDS)

RBDS is a service by FM stations that makes it easier to find radio stations with fault-free reception.

RBDS stations are indicated by the program name instead of the broadcasting frequency.

View RBDS Broadcast Information

MI RADIO	91.7	POP Stations
MI RADIO Radio is always your favorite		
Your favorite is always MI RADIO Radio.		

Press the INFO button to view the RBDS broadcasting information that is being received.

Selecting a Band

Press the RADIO/BAND button to choose AM or FM. The last station that was playing starts playing again.

Selecting an Auxiliary Device

Press the AUX button to select a connected auxiliary device.

Selecting a Station

Seek Tuning

If the radio station is not known:

Press SEEK ⏭ or ⏮ SEEK to automatically search for available radio stations.

Press and hold ⏭ or ⏮ to change the radio stations as desired, then release to stop at the current station. Press and hold to fast forward or reverse through the currently playing song on an external audio device.

Favorites List

There are two ways to select a station from the Favorites List:

- Continue pressing the FAV 123 button to select the desired favorite preset page.
- From AM or FM, turn the MENU/TUNE knob to select the Favorites List, then press to select. The Favorites List information will be displayed. Turn the MENU/TUNE knob to move to the desired station from the Favorites List, then press to receive the station.

Stations List

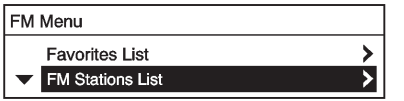

1. From AM or FM, turn the MENU/TUNE knob to select the Stations List, then press to select.
2. Turn the MENU/TUNE knob to move to the desired station from the Stations List, then press to receive the station.

Category List

Most stations that broadcast an RDS program type code specify the type of programming transmitted.

Some stations change the program type code depending on the content. The system stores the RDS stations sorted by program type in the FM category list.

To search for a programming type determined by station:

1. From FM, turn the MENU/TUNE knob to select FM Category List, then press the MENU/TUNE knob.
2. Turn the MENU/TUNE knob to move to the desired station, then press the MENU/TUNE knob to receive the selected broadcasting channel.

Update Stations List

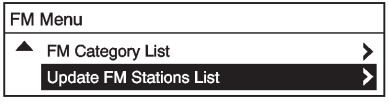

From AM or FM, turn the MENU/TUNE knob to select the Update AM or FM Stations List, then press the MENU/TUNE knob.

During the AM or FM broadcasting list update, press the MENU/TUNE knob or ⇦ BACK button to stop the updates.

Storing a Station as a Favorite

Stations from all bands can be stored in any order in the favorite pages.

Up to six stations can be stored in each favorite page.

Storing Stations

Press the FAV 123 button to select the desired page of saved favorites.

To store the station to a position in the list, press the corresponding preset button 1−6 until a beep is heard.

Playing the Radio with Touchscreen

Audio Source Menu

∨ VOL ∧ (Volume): Press to increase or decrease the volume.

⏻ (Power): Press and hold to turn the system on and off.

⌂ (Home Page): Press to enter the Home Page.

RDS (Radio Data System)

The radio may have RDS. The RDS feature is available for use only on FM stations that broadcast RDS information. This feature only works when the information from the radio station is available. In rare cases, a radio station could broadcast incorrect information that causes the radio features to work improperly. If this happens, contact the radio station.

While the radio is tuned to an FM-RDS station, the station name or call letters display.

Selecting a Band

Press ⌂, audio, then Source ▼ to choose AM, FM, or SiriusXM®, if equipped. The last station that was playing starts playing again.

Selecting an Auxiliary Device

Connect the auxiliary device to the AUX input terminal. Play will begin when the system has finished reading the information on the device.

If the storage device is already connected, press ⌂, audio, and Source ▼, then select AUX from the drop-down menu.

Selecting a Station

Seek Tuning

If the radio station is not known:

Press ⏮ SEEK ⏭ to automatically search for available radio stations.

Hold and drag to the left or right of the radio station to automatically search for available radio stations.

Manual Tuning

Continue pressing ◀ TUNE ▶ to manually change the radio station.

Favorite List

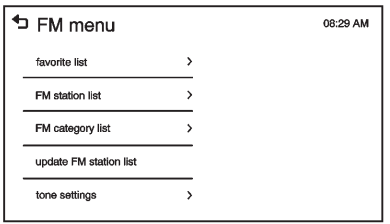

- From the AM or FM menu, press favorite list on the screen.
- Press ▲ or ▼ to scroll through the list. Press on the station to select it.

Station List

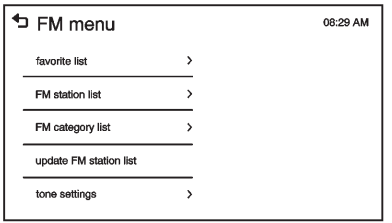

- From the AM or FM menu, press AM or FM station list on the screen.
- Press ▲ or ▼ to scroll through the list. Press on the station to select it.

Category List

- From the FM menu, press FM category list on the screen.
- Press ▲ or ▼ to scroll through the list. Press on the station to select it.

Update Station List

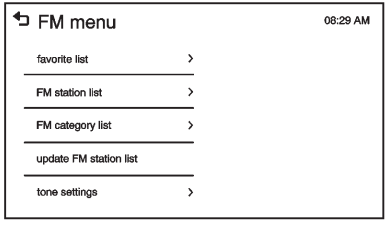

- From the AM or FM menu, press update AM or FM station list on the screen. The broadcasting list updating will begin.
- During the AM or FM broadcasting list update, press Cancel to stop the updates.

Storing a Station as a Favorite

Stations from all bands can be stored in any order in the favorite pages.

Up to five stations can be stored in each of the seven favorites pages.

Storing Stations

To store the station to a position in the list, press the corresponding button 1−5 until a beep is heard.

1. Select the desired station.
2. Press < or > to select the desired page of saved favorites.

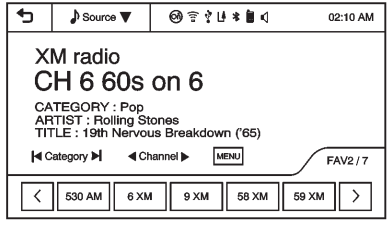

3. Hold down any of the preset buttons to save the current radio station to that button of the selected favorites page.

To change a preset button, tune to the new desired radio station and hold the button.

Satellite Radio

Vehicles with a SiriusXM® Satellite Radio tuner and a valid SiriusXM Satellite subscription can receive SiriusXM programming.

SiriusXM Satellite Radio Service

SiriusXM is a satellite radio service based in the 48 contiguous United States and 10 Canadian provinces. SiriusXM Satellite Radio has a wide variety of programming and commercial-free music, coast to coast, and in digital-quality sound. A service fee is required to receive the SiriusXM service. For more information, contact SiriusXM at www.siriusxm.com or 1-866-635-2349 (U.S.), and www.xmradio.ca or 1-877-209-0079 (Canada).

Listening to SiriusXM Radio

1. Press ⌂.
2. Press ♪ audio.

3. Press Source ▼.
4. From the drop-down menu, press XM and the most recent listened to SiriusXM channel will display.

Press ⮌ to return to the HOME menu.

Selecting a Category

Continue pressing ◀ Category ▶ and the previous or next category will be selected.

Selecting a Channel

Press ◀ Channel ▶ and the previous or next channel will be selected within the same category.

Press and hold ◀ Channel ▶ to jump four channels backward or forward in the same category, then release the button at the desired channel.

Using the Preset Buttons

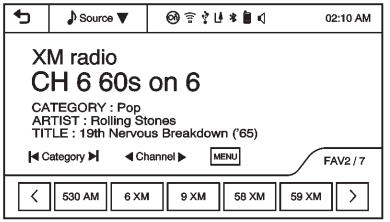

Up to seven favorites pages can be saved, and each page can store up to five channels.

To change a preset button, tune to the new desired channel and hold the button.

Listening to Preset Channels

1. Continue pressing < or > to select the desired favorites page.
2. Press the preset button to listen to the channel saved to that button.

Using the SiriusXM Menu

Operation

1. Press MENU on the XM radio screen.

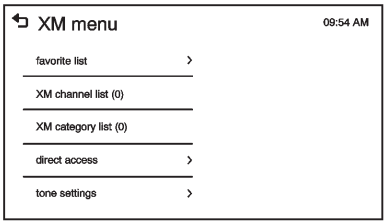

2. Press the menu to select the desired item or to display the detail menu item.
3. Press ⮌ to return to the previous menu.

Favorite List

1. Press favorite list from the XM menu. The favorite list information is displayed.
2. Press ▲ or ▼ to find the desired station. Tune to the station by selecting it.

Channel List

1. Press XM channel list from the XM menu. The channel list is displayed.
2. Press ▲ or ▼ to find the desired channel. Tune to the channel by selecting it.

Category List

1. Press XM category list from the XM menu. The category list is displayed.
2. Press ▲ or ▼ to find the desired category. Tune to the category by selecting it.

Direct Access

1. Press direct access from the XM menu. The direct access screen is displayed.
2. Press the channel number to tune to the desired channel.
3. Press OK.

Tone Settings

From the tone settings menu, the sound features can be set up for SiriusXM audio and each audio player's functions.

1. Press the tone settings from the XM menu. The tone settings screen is displayed. See "Tone Settings" under *Operation on page 7-6*.
2. Press OK.

Radio Reception

Frequency interference and static can occur during normal radio reception if items such as mobile phone chargers, vehicle convenience accessories, and external electronic devices are plugged into the accessory power outlet. If there is interference or static, unplug the item from the accessory power outlet.

FM

FM signals only reach about 16 to 65 km (10 to 40 mi). Although the radio has a built-in electronic circuit that automatically works to reduce interference, some static can occur, especially around tall buildings or hills, causing the sound to fade in and out.

AM

The range for most AM stations is greater than for FM, especially at night. The longer range can cause station frequencies to interfere with each other. Static can occur when things like storms and power lines interfere with radio reception. When this happens, try reducing the treble on the radio.

SiriusXM® Satellite Radio Service

SiriusXM Satellite Radio Service gives digital radio reception from coast to coast in the 48 contiguous United States, and in Canada. Just as with FM, tall buildings or hills can interfere with satellite radio signals, causing the sound to fade in and out. In addition, traveling or standing under heavy foliage, bridges, garages, or tunnels may cause loss of the SiriusXM signal for a period of time.

Cellular Phone Usage

Cellular phone usage can cause interference with the vehicle's radio.

Multi-Band Antenna

The multi-band antenna is on the roof of the vehicle. The antenna is used for the AM-FM radio, OnStar, the SiriusXM Satellite Radio Service System, and GPS (Global Positioning System), if the vehicle has these features. Keep the antenna clear of obstructions for clear reception.

Audio Players

USB Port

Using the USB Port

The infotainment system can play music or movies by connecting an auxiliary device to the USB port, if equipped.

USB Support

The USB connector is in the center stack, and uses the USB 2.0 standard.

USB Supported Devices

- USB Flash Drives
- Portable USB Hard Drives
- 2G–5G iPod nano®
- 1G–3G iPod touch®
- 120GB/160GB iPod classic®
- 3G/3GS/4/4S iPhone®

Not all iPods and USB drives are compatible with the USB port.

Make sure the iPod has the latest firmware from Apple® for proper operation. iPod firmware can be updated using the latest iTunes® application. See www.apple.com/itunes.

For help with identifying your iPod, go to www.apple.com/support.

The USB port can play both lower and upper case .mp3, .wma, .ogg, and .wav files stored on a USB storage device.

USB Supported File and Folder Structure

The Infotainment system supports:

- Up to 2,500 folders.
- Up to 10 folders in depth.
- Up to 2,500 music files.
- Up to 2,500 photo files.
- Up to 250 movie files.
- ID3 Tag (versions 1.0/1.1/2.2/2.3/2.4).
- FAT16.
- FAT32.
- exFAT.

Connecting a USB Storage Device or iPod/iPhone

To connect a USB storage device, connect the device to the USB port.

To connect an iPod/iPhone, connect one end of the device's cable to the iPod/iPhone and the other end to the USB port.

The iPod/iPhone charges while it is connected to the vehicle if the vehicle is in the ACC/ACCESSORY or ON/RUN position. When the vehicle is turned off, the iPod/iPhone automatically powers off and will not charge or draw power from the vehicle's battery.

For more information on USB usage, see "Audio System Information" under *Pictures and Movies (Audio System) on page 7-36* or *Pictures and Movies (Picture System) on page 7-41* or *Pictures and Movies (Movie System) on page 7-42*.

Auxiliary Devices

Using the Auxiliary Input Jack

Settings menus and functions may vary depending on vehicle options.

The auxiliary input jack in the center stack can be used to connect external audio devices such as an iPod®, iPhone®, MP3 player, CD player, and other supported devices for use as another source for audio listening. This input jack is not an audio output; do not plug headphones into the front auxiliary input jack.

Radio without Touchscreen

To use a portable device, connect the device with a 3.5 mm (1/8 in) cable to the auxiliary input jack. The radio will automatically switch to the device if the radio is on.

When a device is already connected, press the AUX button to begin playing the device.

Use the ⏻ /VOL knob to adjust the volume.

Radio with Touchscreen

The infotainment system can play music or movies connected by the auxiliary device.

Play will begin when the system has finished reading the information on the device.

Playing Music

To play the music from the device, if the device is already connected:

1. Press ⌂.
2. Press audio.
3. Press Source ▼.
4. Press AUX/USB.

To adjust the tone settings, see “Tone Settings” under “Radio Controls with Touchscreen” in *Operation on page 7-6*.

Playing Movies

Movies are not available while driving.

If the USB storage device is already connected:

1. Press ⌂.
2. Press picture and movie.
3. Press Source ▼.
4. Press USB (Movie).

For iPod/iPhone, connect the iPod/iPhone to the AUX input terminal by using the AUX cable for iPod/iPhone to play movie files.

Using the AUX Movie Menu

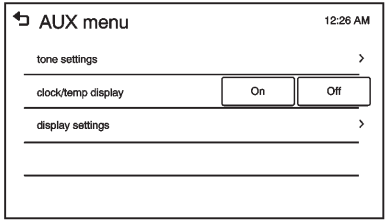

1. Press MENU from the AUX movie screen. The AUX menu is displayed.
2. Press the desired menu.
   - tone settings: Adjust the sound setup. See “Tone Settings” under “Radio Controls with Touchscreen” in *Operation on page 7-6*.
   - clock/temp display: To display the clock and temperature on the full screen, select On or Off.
   - display settings: Adjust the brightness and contrast of the screen.
3. Press ⮌.

Navigation

OnStar® System

If equipped, this vehicle has a comprehensive, in-vehicle system that can connect to a live Advisor for Emergency, Security, Navigation, Connection, and Diagnostic Services.

For safety, some features are disabled while the vehicle is in motion.

Control Panel Overview

OnStar Light

The OnStar system status light is next to the OnStar buttons. If the status light is:

- Solid Green: System is ready.
- Flashing Green: On a call.
- Red: Indicates a problem.

OnStar Buttons

: Press to speak to an Advisor.

- Make a call, end a call, or answer an incoming call.
- Give OnStar Hands-Free Calling voice commands.
- Give OnStar Turn-by-Turn Navigation voice commands. Requires the available Directions and Connections service plan.

: Press to connect to an Advisor.

- Verify account information or update contact information.
- Get driving directions. Requires the available Directions and Connections service plan.
- Receive On-Demand Diagnostics for a check on the vehicle's key operating systems.
- Receive Roadside Assistance.

: Press to connect to an Emergency Advisor.

Hands-Free Calling

Press to make a call, end a call, and answer an incoming call.

Press to give OnStar Hands-Free Calling voice commands.

Press to give OnStar Turn-by-Turn Navigation voice commands for automated directions.

- Press X to hide the Turn-by-Turn Navigation screen. When the route is changed, the Turn-by-Turn Navigation screen is displayed. The Turn-by-Turn Navigation screen is only displayed on the AM/FM/XM radio mode and AUX/USB/ iPod mode.
- Press to mute the Turn-by-Turn Navigation voice guidance.
- Press ★ to move to the navigation settings menu.
  - Press update route to update the route, then press Yes. Press Cancel route to cancel it or No to not update the route.
  - Press cancel route to cancel the route, then press Yes. The navigation settings menu disappears and the Turn-by-Turn Navigation voice guidance is shut down.
  - Press my destination to check the destination. The destination name and remaining distance to destination are displayed on the screen for about five seconds. Then the current Turn-by-Turn Navigation information is displayed.

- Press route preview to preview the route. The distance information among turns from current position to destination can be checked. Check the distance information by pressing ▲ or ▼. If there is no operation for about five seconds, the current Turn-by-Turn Navigation information is displayed.
- Press repeat to repeat the Turn-by-Turn Navigation voice guidance.
- While the route is calculating, the Cancel route menu is only activated.

Blue OnStar

Press to be connected to a specially trained OnStar Advisor who can verify account information and answer questions about the system.

Emergency

With Automatic Crash Response, the built-in system can automatically connect to help in a crash even if you cannot ask for it.

Press to connect to an Emergency Advisor. GPS technology is used to identify the vehicle location and can provide critical information to emergency personnel. The Advisor is also trained to offer critical assistance in emergency situations.

OnStar SMS

When the Short Message Service (SMS) is received by the vehicle, a pop-up screen with the message is displayed.

OnStar Welcome

When the user joins and operates the OnStar service for the first time, the pop-up screen “Get OnStar started now please push the blue button” is displayed.

Phone

Bluetooth (Overview)

For vehicles equipped with Bluetooth® capability, the system can interact with many Bluetooth phones, PDAs, or other devices to:

- Place and receive hands-free calls.
- Transmit hands-free data.
- Play audio streaming files.

The device most be paired first. See “Pairing” under Bluetooth (Infotainment Controls) *Bluetooth (Overview) on page 7-21* or *Bluetooth (Infotainment Controls) on page 7-23*.

To minimize driver distraction, before driving, and with the vehicle parked:

- Become familiar with the features of the cell phone. Organize the phone book and contact lists clearly and delete

duplicate or rarely used entries. If possible, program speed dial or other shortcuts.

- Review the controls and operation of the infotainment system.
- Pair cell phone(s) to the vehicle. The system may not work with all cell phones. See “Pairing” in this section.
- See “Storing and Deleting Phone Numbers” in this section.

⚠ WARNING

When using a cell phone, it can be distracting to look too long or too often at the screen of the phone or the infotainment (navigation) system. Taking your eyes off the road too long or too often could cause a crash resulting in injury or death. Focus your attention on driving.

Vehicles with a Bluetooth system can use a Bluetooth-capable cell phone with a Hands-Free Profile to make and receive phone calls. The infotainment system is used to control the system. The system can be used while in ON/RUN or ACC/ACCESSORY. Not all phones support all functions and not all phones work with the Bluetooth system. See www.gm.com/bluetooth for more information about compatible phones.

There may be restrictions on using Bluetooth wireless technology in some locations.

Due to the variety of Bluetooth devices and their firmware versions, the device may respond differently when performing over Bluetooth.

Refer to the cell phone manufacturer’s user guide for questions about the phone's Bluetooth functionality.

Bluetooth Controls

For vehicles equipped with Bluetooth capability, use the buttons on the infotainment system and the steering wheel to operate the system.

Steering Wheel Controls

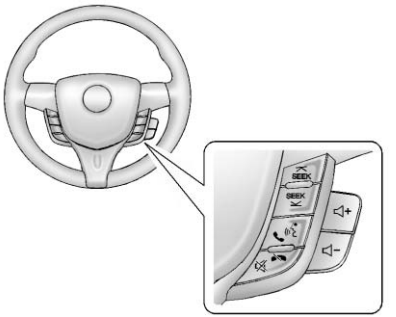

⌅ SEEK or SEEK ⌄ (Next/Previous): Press to go to the next or previous radio station, song on an iPod, or file on a USB device (if equipped).

(Push to Talk): Press to interact with Bluetooth or OnStar, if equipped. See *Bluetooth (Overview) on page 7-21* or *Bluetooth (Infotainment Controls) on page 7-23* or *OnStar® System on page 7-19*.

(Mute/End Call): Press to silence the vehicle speakers only. Press again to turn the sound on. For vehicles with OnStar or Bluetooth systems, press to reject an incoming call, or end a current call.

+ or − (Volume): Press to increase or decrease the volume.

Audio System

When using the Bluetooth system, sound comes through the vehicle's front audio system speakers and overrides the audio system. Use the volume bar during a call to change the volume level. The adjusted volume level remains in memory for later calls. The system maintains a minimum volume level.

Bluetooth (Infotainment Controls)

To use infotainment controls to access the menu system, see *Overview on page 7-3*.

Pairing

A Bluetooth-enabled cell phone must be paired to the Bluetooth system and then connected to the vehicle before it can be used. See your cell phone manufacturer's user guide for Bluetooth functions before pairing the cell phone. If a Bluetooth phone is not connected, calls will be made using OnStar Hands-Free Calling, if available. See *OnStar® System on page 7-19*.

Pairing Information

- A Bluetooth phone with MP3 capability cannot be paired to the vehicle as a phone and an MP3 player at the same time.
- Up to five cell phones can be paired to the Bluetooth system.
- The pairing process is disabled when the vehicle is moving.
- Pairing only needs to be completed once, unless the pairing information on the cell phone changes or the cell phone is deleted from the system.
- Only one paired cell phone can be connected to the Bluetooth system at a time.
- If multiple paired cell phones are within range of the system, the system connects to the first available paired cell phone in the order that they were first paired to the system. To link to a different paired phone, see “Linking to a Different Phone” later in this section.

When the Bluetooth device and infotainment system are successfully paired, the phone book is downloaded automatically. However, the phone book may not be downloaded automatically

according to the type of the phone. In this case, proceed with the phone book download on the phone.

Pairing a Phone

When there is no paired device on the infotainment system and the Simple Secure Pairing (SSP) is supported:

1. Press .

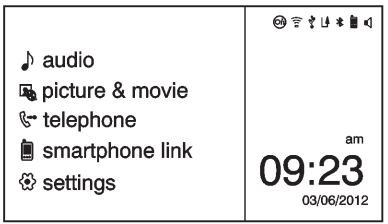

2. Press telephone, then press Yes.
3. Press Search Bluetooth Device.
4. Press the desired device to pair on the searched list screen.
5. Press Yes on the pop-up screen of the Bluetooth device and infotainment system.
6. When the Bluetooth device and infotainment system are successfully paired, the telephone screen is displayed on the infotainment system.

Pairing a Phone

When a paired device is on the infotainment system and the SSP is supported:

1. Press .

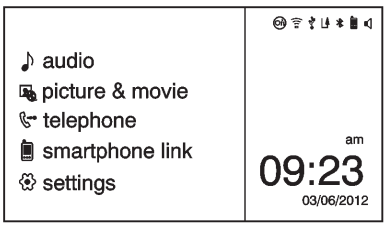

2. Press settings.
3. Press connection settings.
4. Press bluetooth settings.
5. Press pair device.
6. Press Search Bluetooth Device.
7. Press the desired device to pair on the searched list screen.
8. Press Yes on the pop-up screen of the Bluetooth device and infotainment system.
9. When the Bluetooth device and infotainment system are successfully paired, BT is displayed on the pair device screen.

- The connected phone is highlighted by .
- BT indicates the hands-free and phone music function are enabled.
- indicates only the hands-free function is enabled.
- BT indicates only Bluetooth music is enabled.

Pairing a Phone

When there is no paired device on the infotainment system and the SSP is not supported:

1. Press ⌂.

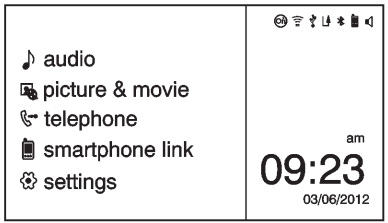

2. Press telephone, then press Yes.
3. Press Search Bluetooth Device.
4. Press the desired device to pair on the searched list screen.
5. Input the Personal Identification Number (PIN) code (default: 1234) to the Bluetooth device. When the Bluetooth device and infotainment system are successfully paired, the telephone screen is displayed on the infotainment system.

When the connection fails, a failure message is displayed on the infotainment system.

If a Bluetooth device was previously connected, the infotainment system executes the auto connection. However, if the Bluetooth setting on the Bluetooth device is turned off, a failure message is displayed on the infotainment system.

Pairing a Phone

When a paired device is on the infotainment system and the SSP is not supported:

1. Press ⌂.

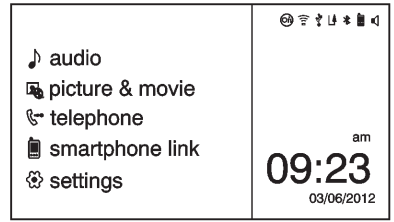

2. Press ⚙ settings.
3. Press connection settings.
4. Press bluetooth settings.
5. Press pair device.
6. Press Search Bluetooth Device.
7. Press the desired device to pair on the searched list screen.
8. Input the Personal Identification Number (PIN) code (default: 1234) to the Bluetooth device. When the Bluetooth device and infotainment system are successfully paired, BT is displayed on the pair device screen.

- The connected phone is highlighted by .
- indicates the hands-free and phone music function are enabled.
- indicates only the hands-free function is enabled.
- indicates only Bluetooth music is enabled.

Connecting a Bluetooth Device

1. Press .
2. Select settings.
3. Press connection settings.
4. Press bluetooth settings.
5. Press pair device.
6. Press the device to be paired.
7. Press OK.

Checking the Bluetooth Connection

1. Press .
2. Select settings.
3. Press connection settings.
4. Press bluetooth settings.
5. Press pair device.
6. The paired device will show with when connected.

Disconnecting the Bluetooth Device

1. Press .
2. Select settings.
3. Press connection settings.
4. Press bluetooth settings.
5. Press pair device.
6. Press the name of the device to be disconnected.
7. Press OK.

Deleting a Paired Phone

1. Press .
2. Select settings.
3. Press connection settings.
4. Press bluetooth settings.
5. Press pair device.
6. Press Delete.
7. Press Yes.

Bluetooth Music

Before playing Bluetooth music, read the following information.

- A cell phone or Bluetooth device that supports Advanced Audio Distribution Profile (A2DP) versions over 1.2 must be registered and connected to the product.
- From the cell phone or Bluetooth device, find the Bluetooth device type to set/connect the item as a stereo headset.
- will appear on the screen if the stereo headset is successfully connected.
- The sound played by the Bluetooth device is delivered through the infotainment system.

- Bluetooth music can be played only when a Bluetooth device has been connected. To play Bluetooth music, connect the Bluetooth phone to the infotainment system.
- If the Bluetooth device is disconnected while playing phone music, the music is discontinued. The audio streaming function may not be supported in some Bluetooth phones. Only one function can be used at a time between the Bluetooth hands-free or Phone music function. For example, if you convert to Bluetooth hands-free while playing Phone music, the music is discontinued. Playing music from the car is not possible when there are no music files stored in the cell phone.
- For Bluetooth music to play, the music must be played at least once from the music player mode of the cell phone or Bluetooth device after connecting as a stereo headset. After being played at least once, the music player will automatically play upon entering play mode, and it will automatically stop when the music player mode ends. If the cell phone or Bluetooth device is not in the waiting screen mode, some devices may not automatically play in Bluetooth music play mode.

Playing Bluetooth Music

1. Press ⌂.

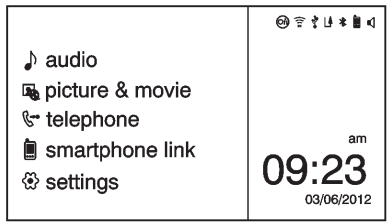

2. Press BT♪ audio.
3. Press Source ▼.
4. Press Bluetooth, then select the connected Bluetooth music play mode.

Pause

Press ▶II to pause.

Press ▶II again to resume.

Skipping the Previous or Next File

Press ⏮ or ⏭ to select the previous or next file.

Search

Press and hold ⏮ or ⏭ to fast rewind forward.

Playing a File Repeatedly

Press ⟲ during playback.

- 1: Plays the current file repeatedly.
- ALL: Plays all files repeatedly.
- OFF: Returns to normal playback.

This function may not be supported depending on the cell phone.

Playing a File Randomly

Press during playback.

- NO: Plays all files repeatedly.
- OFF: Returns to normal playback.

This function may not be supported depending on the cell phone.

Do not change the track too quickly when playing Bluetooth music.

Conditions that may occur when playing Bluetooth music:

- It takes some time to transmit data from the cell phone to the infotainment system.
- If the cell phone or Bluetooth device is not in the waiting screen mode, it may not automatically play despite being carried out from the Bluetooth music play mode.
- The infotainment system transmits the order to play from the cell phone in the Bluetooth music play mode. If this is done in a different mode, then the device transmits the order to stop. Depending on the cell phone's options, this order to play/stop may take time to activate.
- If the Bluetooth music playback is not functioning, then check to see if the cell phone is in the waiting screen mode.
- Sounds may be cut off during the Bluetooth music playback.
- The infotainment system outputs the audio from the cell phone or Bluetooth device as it is transmitted.

Hands-Free Phone

General Information without Touchscreen

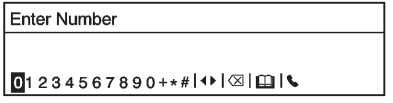

To use the hands-free phone on vehicles without a touchscreen radio, press /, select Onstar Hands-Free Calling, then enter the desired number.

General Information with Touchscreen

Vehicles with a Hands-Free Phone system can use a Bluetooth-capable cell phone with a hands-free profile to make and receive phone calls. The infotainment system and voice control are used to operate the

system. Not all phones support all functions and not all phones work with the Hands-Free Phone system.

Hands-Free Phone Controls

Use the buttons on the infotainment system and the steering wheel to operate the Hands-Free Phone system.

Steering Wheel Controls

Steering wheel controls can be used to:

- Answer incoming calls.
- Confirm system information.
- End a call.
- Decline a call.
- Cancel an operation.
- Make outgoing calls using the call list.

(Push to Talk): Press to answer incoming calls and to confirm system information. Press and hold for two to three seconds to access the call list.

(Mute/End Call): Press to end a call, decline a call, or cancel an operation.

Making a Call by Entering a Phone Number

1. Enter the phone number using the keypad on the telephone screen.
2. Press on the screen or on the steering wheel controls.

If a wrong number is entered, press to delete the number one digit at a time, or press and hold to delete all digits of the number.

Switching a Call to the Cell Phone (Private Mode)

To switch the call from the cell phone to hands-free:

1. Press .
2. Press again to switch back to hands-free.

Turning the Microphone On and Off

Press to turn the microphone on or off.

Calling by Redial

To call by using redial:

- Press on the steering wheel controls to display the redial guidance screen.
- Press and hold on the telephone screen.

Redialing is not possible when there is no call history.

Taking calls

When a phone call comes through the connected Bluetooth cell phone, the playing track will be cut off and the phone will ring with the relevant information displayed.

Press / on the steering wheel controls or press Accept on the screen.

To decline the call, press / on the steering wheel controls or press Reject on the screen.

Using the Phone Book Menu

1. Press Phone Book on the telephone screen.
2. Press ▲ or ▼ to scroll through the list.
3. Select the phone book entry to call.
4. Press the number to dial.

Searching for Phone Book Entries

1. Press Phone Book on the telephone screen.
2. Press on the phone book screen.
3. Use the keypad to input the name to search. For details, refer to the “Searching for a Name” later in this section.
4. Select the phone book entry to call.
5. Press the number to dial.

When the Bluetooth device and infotainment system are successfully paired, the phone book will download. Some phones may not download automatically. If this happens, connect it again or proceed with the phone book download on the phone.

Searching for a Name

Select characters by using the keypad on the phone book screen. As characters are selected, the names that include those characters will display on the phone book screen. As more characters of the name are entered, the list of possible names is shortened.

To search for the name Alex:

1. Press (abc) to select the first character.
2. Press (jkl) to select the second character.
3. Press (def) to select the third character.
4. Press (wxy) to select the fourth character.

Making a Call from Call History

1. Press Call History on the telephone screen.
2. Press one of the following for:
   - Dialed calls.
   - Missed calls.
   - Received calls.
3. Select the phone book entry to call.

Making a Call with Speed Dial Numbers

Press and hold the speed dial number using the keypad on the telephone screen.

Only speed dial numbers already stored on the cell phone can be used for speed dial calls. Up to two-digit speed dial numbers are supported.

For two-digit speed dial numbers, press and hold the second digit to make a call to the speed dial number.

Downloadable Applications

Smartphone Link (Overview)

Before Using Smartphone Link

If equipped, the vehicle can connect to Pandora® and Stitcher SmartRadio™ through the infotainment system. The applications must be downloaded to the device first.

Pandora is a free Internet radio service that streams personalized radio stations based on artists, songs, genres, and comedians. Create stations using the Pandora website or smartphone application, then use (thumbs up) or (thumbs down) to personalize stations. To set up an account, or for more information, go to www.pandora.com. Pandora may not be available in Canada or Mexico.

Stitcher SmartRadio is an Internet radio service that streams news, sports, and entertainment shows through the audio system. Create personalized, on-demand stations or discover new shows through Stitcher's preset stations. To set up an account, download the application from the Android Market or iTunes Store, or go to www.stitcher.com.

A phone or tablet with Internet connection and the Pandora and/or Stitcher application installed is required. Personal cell phone data plans are used. Make sure the latest version is installed on the device and the volume is turned up.

Supported Smartphone Applications

Pandora

- iPod®/iPhone®, through the USB connection.
- Android™ phone, through Bluetooth® wireless.

- BlackBerry® phone, through Bluetooth wireless.

Stitcher

- iPod/iPhone, through the USB connection.
- Android phone, through Bluetooth wireless.

iPod/iPhone Error Messages and Solution

If the infotainment system fails to activate the application on your iPod/iPhone connected through the USB port, the error message is displayed as, **"Unable to start application, possible reasons."**

- Your iPhone is locked. To resolve, unlock the iPhone.
- You have another active application open. To resolve, close the other active application.
- You have not installed the application on your iPhone. To resolve, install the application on the iPhone.

iOS Version Error

If the iOS version of the iPhone is less than 4.0, the error message is displayed as, **"Your iPhone does not allow this application to be opened on a USB connection. Please refer to owner's manual."**

- Activate the application on your iPhone, then press the desired application menu on the infotainment system.

Connecting Application Error

If the infotainment system fails to activate the application on the smartphone connected through Bluetooth wireless technology, the error message is displayed as, **"Connecting application error."**

- Reset all settings related to the phone, then press the desired application menu on the infotainment system.
- Reconnect the smartphone and Infotainment system through Bluetooth wireless technology, then press the desired application menu on the Infotainment system.
- When the application is stopped on the smartphone, it usually takes time to return to normal operation. Try to activate the application after 10–20 seconds.

To switch between Stitcher or Pandora while playing the other on the iPod/iPhone connected through the USB port, press the ⌂ button on the iPod/iPhone, then press Stitcher or Pandora on the smartphone link menu of the infotainment system.

Switching Between a USB Connected Device and a Bluetooth Device

When the iPhone is connected to the infotainment system through the USB port, and the infotainment system is connected to another phone through Bluetooth wireless technology, it is possible to switch between the two applications, using the smartphone list menu.

- Press iPhone or bluetooth phone on the smartphone list menu to switch to the desired device.

Displaying or Hiding Application Icons

To display or hide application icons on the smartphone link menu:

1. Press ⌂.
2. Press smartphone link.

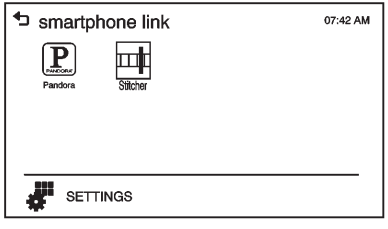

3. Press SETTINGS.
4. Press the desired application icon to hide or display it on the smartphone link screen.
5. Press OK.

If the activated application is on the smartphone link menu, the ▯ is activated in the upper position of the HOME menu or playing screen.

Smartphone Link (Pandora)

Some images and explanations may vary by phone operating systems, versions, and/or application (App) versions.

Using Pandora

1. Install the Pandora application on the smartphone.
2. Connect the smartphone to the infotainment system through the USB port or Bluetooth wireless technology.
   - iPhone: USB connection.
   - Android phone/BlackBerry phone: Bluetooth wireless technology.
3. Activate the Pandora application.
4. Press ⌂.
5. Press ▯ smartphone link.

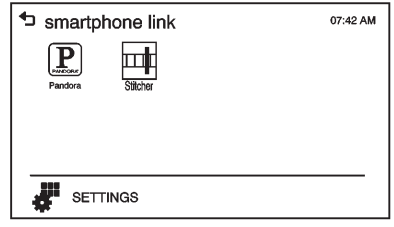

6. Press Pandora.

If the smartphone is not connected to the infotainment system or the application is not installed on the smartphone, the Pandora menu is not activated.

Thumbs Up and Thumbs Down

Rate tracks by using 👍 (thumbs up) or 👎 (thumbs down).

Pause

- Press ❚❚ to pause.
- Press ▶ to resume.

Changing Tracks

Press ⏭ to change to the next track.

Bookmark

To bookmark a favorite artist or track:

1. Press ＋ on the screen.
2. Press Artist or Track.

Pandora Menus

Creating Stations from Currently Playing Music

1. Press MENU. The Pandora menu is displayed.
2. Press create station.
3. Press from currently playing.
4. Press Artist or Track.
5. Press the desired station. The station is added into the Pandora menu automatically.

Creating Stations by Searching by Artist or Track

1. Press MENU. The Pandora menu is displayed.
2. Press create station.
3. Press enter artist/track. The keypad is displayed.
4. Enter the artist or track name using the keypad, then press Create.
5. Press the desired station. The station is added into the Pandora menu automatically.

Listening to Stations

1. Press MENU. The Pandora menu is displayed.
2. Press ▲ or ▼ to scroll through the list. Select the desired station.

QuickMix

1. Press MENU. The Pandora menu is displayed.
2. Press QuickMix ⤮ to listen to a selection of tracks from your stations.

Tone Settings

1. Press MENU. The Pandora menu is displayed.
2. Press tone settings. The tone settings menu is displayed. See “Tone Settings” under “Radio Controls with Touchscreen” in *Operation on page 7-6*.

Smartphone Link (Stitcher)

Some images and explanations may vary by phone operating systems, versions, and/or application (App) versions.

Using Stitcher™

1. Install the Stitcher application on the smartphone.

2. Connect the smartphone to the infotainment system through the USB port or Bluetooth wireless technology.
   - iPhone: USB connection.
   - Android phone/BlackBerry phone: Bluetooth wireless technology.
3. Activate the Stitcher application.
4. Press ⌂.
5. Press smartphone link.

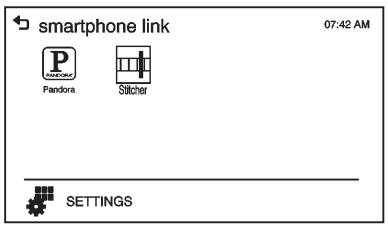

6. Press Stitcher.

If the smartphone is not connected to the infotainment system or the application is not installed on the smartphone, the Stitcher menu is not activated.

Thumbs Up and Thumbs Down

Rate tracks by using (thumbs up) or (thumbs down).

Pause

- Press ❚❚ to pause.
- Press ▶ to resume.

Changing Stations

Press ▶▶❚ to change to the next station.

Saving Favorites

To save a station as a favorite, press ★ on the stitcher screen.

Stitcher Menus

The Stitcher Station menu displays available station data from the Stitcher server.

1. Press MENU. The Stitcher Station menu is displayed.
2. Press ▲ or ▼ to scroll through the list. Select the desired station.

Tone Settings

1. Press MENU. The Stitcher menu is displayed.
2. Press tone settings. The tone settings menu is displayed. See “Tone Settings” under “Radio Controls with Touchscreen” in *Operation on page 7-6*.

Bluetooth Phone/ Devices

Pictures and Movies (Audio System)

The infotainment system can play the music files contained in the USB storage device or iPod/iPhone products.

Audio System Information

Using MP3/WMA/OGG/WAV Files

- Music files with .mp3, .wma, .ogg, and .wav file name extensions can be played.
- MP3 files that can be played are: Bit rate: 8 kbps ~ 320 kbps - Sampling frequency: 48 kHz, 44.1 kHz, 32 kHz, 24 kHz, 22.05 kHz, and 16 kHz.
- Files with a bit rate above 128 kbps will result in higher quality sound.
- ID3 Tag information for MP3 files, such as the album name and the artist, can be played.
- To display album title, track title, and artist information, the file should be compatible with the ID3 Tag V1 and V2 formats.

Using USB Storage Devices and iPod/iPhone

- Use a USB or flash memory type storage device. Do not connect using a USB adaptor.
- Do not connect and reconnect the USB device repeatedly in a short time, as this may cause static electricity and problems using the device.
- Use a USB device with a metal connecting terminal.
- Connection with i-Stick Type USB storage devices may be faulty due to vehicle vibration.
- Do not to touch the USB connecting terminal.
- Only USB storage devices formatted in FAT16/32, exFAT file system are recognized. NTFS and other file systems are not recognized.
- The time it takes to process files will depend on the USB storage device type and capacity, and the type of files stored.
- Some USB storage device files may not be compatible.
- Up to two USB devices and one iPod can be played through a USB hub. All devices may not be supported, depending on the performance of the USB hub. If there is not enough power supply, it may not operate normally.
- Do not disconnect the USB storage device while it is playing. This may cause damage to the product or affect the performance of the USB device.

- Disconnect the USB storage device when the ignition is turned off. If the ignition is turned on while the USB device is connected, the USB device may be damaged or may not operate normally.
- USB storage devices can only be connected for playing music/ movies, viewing photo files, or upgrading.
- Do not use the USB terminal to charge USB accessory equipment. The heat generated may cause performance issues or damage.
- Store files in the top-level drive of the USB storage device. When the logical drive is separated from the device, only the USB music files from the top-level logical drive can be played. Music files stored on USB storage devices may not play normally if an application is loaded by partitioning a separate drive.
- Music files to which Digital Right Management (DRM) is applied cannot be played.
- USB storage device capacity limit is 2,500 music files, 2,500 photo files, 250 movie files, 2,500 folders, and 10 stages of folder structure. The iPod/iPhone can play all music files supported, but will only display up to 2,500 files on the screen in alphabetical order.
- The following iPod/iPhone product models are supported:
  - iPod 2G nano®/iPod 3G nano/ iPod 4G and 5G nano
  - iPod 120GB and 160GB classic®
  - iPod 1G, 2G, and 3G touch®
  - iPhone 3G and 3GS
  - iPhone 4/4S
- Only connect the iPod/iPhone with connection cables supported by iPod/iPhone products. Other connection cables cannot be used.
- The iPod/iPhone may be damaged if the ignition is turned off when it is connected to the vehicle. When not in use, disconnect the iPod/iPhone.
- When the iPod/iPhone is connected to the USB port by using the iPod/iPhone cable, the Bluetooth music is not supported.
- Connect the iPod/iPhone to the USB port by using the iPod/ iPhone cable to play the music files. When the iPod/iPhone is connected to the AUX input terminal, the music file will not play.
- The iPod/iPhone playback functions and the information displayed may be different when played on the infotainment system.

	Step 1	Step 2	Step 3	Step 4
Playlists	Playlists	Songs		
Artists	Artists	Albums	Songs	
Albums	Albums	Songs		
Songs	Songs			
Genres	Genres	Artists	Albums	Songs
Composer	Composer	Albums	Songs	
Audiobooks	Songs			

- Refer to the table for the classification items related to the search function provided by the iPod/iPhone.

USB Player

Playing Music from a USB Device

- Connect the USB device to the USB port.
- Play will start automatically after the system has finished reading the USB device.
- If a non-readable USB device is connected, an error message displays and the system will switch to the previous audio function.

If the USB device is already connected:

- Press ⌂.
- Press audio.
- Press Source▼.
- Press USB.

To stop the USB device and select another media source, press Source▼, then select the other source.

To remove the USB device, select another function, then remove the USB device.

Pause

- Press ❚❚ to pause.
- Press ▶ to resume.

Changing to Next/Previous Files

- Press ⏭ to change to the next file.
- Press ⏮ within five seconds of the playback time to play the previous file.

Returning to the Beginning of the Current File

Press ⏮ after five seconds of the playback time.

Scanning Forward or Backward

Press and hold ⏮ or ⏭ during playback to rewind or fast forward. Release the button to resume playback at normal speed.

Playing a File Repeatedly

Press ALL during playback.

- 1: Plays the current file repeatedly.
- ALL: Plays all files repeatedly.

- OFF: Returns to normal playback.

Playing a File Randomly

Press during playback.

- NO: Plays all files randomly.
- OFF: Returns to normal playback.

Viewing Information on the Currently Playing File

Press the title during playback to display information about the current file playing.

- The information displayed includes the title, file name, folder name, and artist/album saved with the song.
- Incorrect information cannot be modified or corrected on the infotainment system.
- The information for songs expressed in special symbols or in unavailable languages may be displayed as "□."

Using the USB Music Menu

- Press MENU during playback.

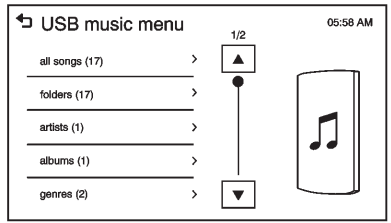

- Press the play mode.

Tone Settings

1. Press ▼.
2. Press tone settings. The Tone Settings menu is displayed. See "Tone Settings" under "Radio Controls with Touchscreen" in *Operation on page 7-6*.

iPod/iPhone Player

This feature is limited to models supporting the iPod/iPhone connection.

Playing Music Files

- Connect the iPod/iPhone to the USB port.
- Play will start from the previously played point after the system has finished reading the USB device.
- If a non-readable USB device is connected, an error message displays and the system will switch to the previous audio function.

If the iPod/iPhone is already connected:

1. Press .
2. Press audio.
3. Press Source▼.
4. Press iPod.

To stop the device and select another media source, press Source▼, then select the other source.

To remove the device, select another function, then remove the device.

Pause

- Press ❚❚ to pause.
- Press ▶ to resume.

Changing to Next/Previous Song

- Press ⏭ to change to the next song.
- Press ⏮ within two seconds of the playback time to play the previous file.

Returning to the Beginning of the Current File

Press ⏮ after two seconds of the playback time.

Scanning Forward or Backward

Press and hold ⏮ or ⏭ during playback to rewind or fast forward. Release the button to resume playback at normal speed.

Playing a File Repeatedly

Press during playback.

- 1: Plays the current file repeatedly.
- ALL: Plays all files repeatedly.
- OFF: Returns to normal playback.

Playing a File Randomly

Press during playback.

- NO: Plays all files randomly.
- OFF: Returns to normal playback.

Viewing Information on the Currently Playing Song

Press the title during playback to display information about the current song playing.

- The information displayed includes the title, file name, folder name, and artist/album saved with the song.
- Incorrect information cannot be modified or corrected on the infotainment system.
- The information for songs expressed in special symbols or in unavailable languages may be displayed as "□."

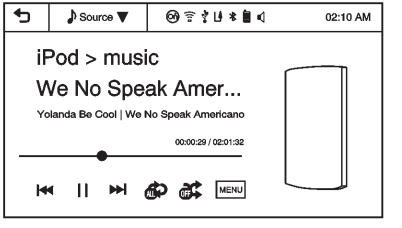

Using the iPod Menu

- Press MENU during playback.
- Press the appropriate play mode.

Tone Settings

1. Press ▼ on the iPod menu.

2. Press tone settings. The tone settings menu is displayed. See “Tone Settings” under “Radio Controls with Touchscreen” in *Operation on page 7-6*.

Pictures and Movies (Picture System)

The Infotainment system can view picture files stored on a USB device.

Picture System Information

Caution for Using Picture Files

- File size:
  - JPG: Within 64 to 5,000 pixels (Width) and 64 to 5,000 pixels (Height).
  - BMP, PNG, GIF: Within 64 to 1,024 pixels (Width) and 64 to 1,024 pixels (Height).
- File extensions: .jpg, .bmp, .png, .gif. Animated .gif files are not supported.
- Some files may not operate due to a different recording format or the condition of the file.

Viewing Pictures

1. Connect the USB device to the USB port.

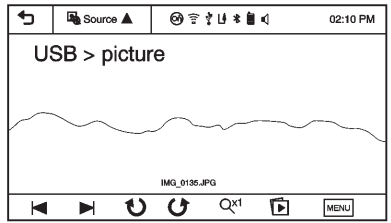

2. Press the screen to open to full screen. Press the screen again to return to the previous screen.

If the USB device is already connected:

1. Press ⌂.
2. Press picture & movie.
3. Press Source▼.
4. Press USB picture.

Some features are disabled while the vehicle is in motion.

Viewing a Slide Show

From the picture screen, press ▶.

- The slide show will start to play.
- Press the screen to cancel the slide show during the slide show playback.

Viewing a Previous or Next Picture

Press |◀ or ▶| from the picture screen.

Rotating a Picture

Press ↻ or ↺ from the picture screen.

Enlarging a Picture

Press Q x1 from the picture screen.

Using the USB Picture Menu

1. Press MENU from the picture screen.

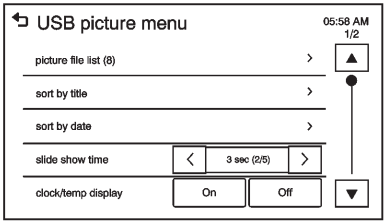

2. Press the appropriate menu:
   - picture file list: lists all picture files.
   - sort by title: shows pictures in title order.
   - sort by date: shows pictures in date order.
   - slide show time: allows selection of the slide show interval.
   - clock/temp display: allows selection of On or Off to show the clock and temperature on the full screen.
   - display setting: adjusts for Brightness and Contrast.
3. Press ↩ to exit.

Pictures and Movies (Movie System)

The infotainment system can play movie files stored on a USB device.

Movie System Information

Caution for Using Movie Files

- Available resolution: Within 720 x 576 (W x H) pixels.
- Frame rate: Less than 30 fps.
- Playable movie file: .avi, .mpg, .mp4, .divx, .xvid, .wmv. The playable movie file may not be played according to the codec format.
- Playable codec format: divx, xvid, mpeg-1, mpeg-4 (mpg4, mp42, mp43), wmv9 (wmv3).
- Playable Audio format: MP3, AC3, AAC, WMA.
- Max video bitrate:
  - mpeg-1: 8Mbps
  - mpeg-4 (mpg4, mp42, mp43): 4Mbps
  - wmv9: 3 Mbps
  - divx 3: 3 Mbps
  - divx 4/5/6: 4.8 Mbps
  - xvid: 4.5 Mbps
- Max audio bitrate:
  - mp3: 320 Kbps
  - wma: 320 Kbps
  - ac-3: 640 Kbps
  - aac: 449 Kbps
- Movie files to which Digital Right Management (DRM) is applied may not be played.

Playing a Movie File

1. Connect the USB device to the USB port.
2. Press the screen to open to full screen. Press the screen again to return to the previous screen.

If the USB device is already connected:

1. Press ⌂.
2. Press picture & movie.
3. Press Source▼.
4. Press USB movie.

Movie is not available while driving.

Viewing a Slide Show

From the picture screen, press ▶.

- The slide show will start to play.
- Press the screen to cancel the slide show during the slide show playback.
- The last played audio source will play as background music during the slide show playback.

Pause

- Press ❚❚ to pause.
- Press ▶ to resume.

Changing to Next/Previous Movie

- Press ▶| to change to the next file.
- Press |◀ within five seconds of the playback time to play the previous file.

Returning to the Beginning of the Current Movie

Press |◀ after five seconds of the playback time.

Scanning Forward or Backward

Press and hold |◀ or ▶| during playback to rewind or fast forward. Release the button to resume playback at normal speed.

Viewing Full Screen

Press ⊞ from the movie screen. Press ⊞ again to return to the previous screen.

Using the USB Movie Menu

1. Press MENU from the movie screen.

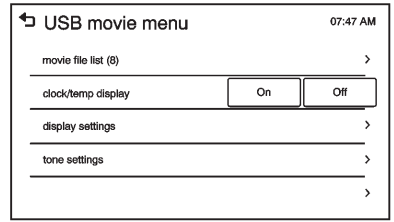

2. Press the appropriate menu:
   - movie file list: lists all movie files.
   - clock/temp display: allows selection of On or Off to show the clock and temperature on the full screen.
   - display settings: adjusts for Brightness and Contrast.
   - tone settings: shows the sound setup. See “Tone Settings” under “Radio Controls with Touchscreen” in *Operation on page 7-6*.
3. Press ↩ to exit.

Subtitle Language

If the movie file has a subtitle language, it can be viewed.

- Press ◀ from the movie screen.
- Press < or > on the pop-up screen.
- Press ▶ to close the pop-up screen.

If there is only one subtitle language, it can be set to On/Off.

Audio Language

If the movie file has an audio language, it can be used.

- Press ◀ from the movie screen.
- Press (🔊) < or > on the pop-up screen.
- Press ▶ to close the pop-up screen.

If there is only one audio language, it cannot be set. Audio language can be set only when the movie file is the Divx File.

Trademarks and License Agreements

FCC Information

See *Radio Frequency Statement on page 13-15* regarding Part 15 of the Federal Communications Commission (FCC) rules and with Industry Canada Standards RSS-GEN/210/220/310.

Bluetooth®

The Bluetooth word mark and logos are owned by the Bluetooth® SIG, Inc. and any use of such marks by General Motors is under license. Other trademarks and trade names are those of their respective owners.

DIVX

DivX Certified® to play DivX® video, including premium content.

Covered by one or more of the following U.S. patents: 7,295,673; 7,460,668; 7,515,710; 7,519,274.

DivX®, DivX Certified® and associated logos are trademarks of Rovi Corporation or its subsidiaries and are used under license.

Made for iPod iPhone

"Made for iPod" and "Made for iPhone" mean that an electronic accessory has been designed to connect specifically to iPod or iPhone and has been certified by the developer to meet Apple performance standards.

iPod and iPhone are trademarks of Apple Computer, Inc., registered in the U.S. and other countries.

Fees and Taxes: Subscription fee, taxes, one time activation fee, and other fees may apply. Subscription fee is consumer only. All fees and programming subject to change. Subscriptions subject to Customer Agreement available at www.siriusxm.com. SiriusXM® service only available in the 48 contiguous United States and Canada.

In Canada: Some deterioration of service may occur in extreme northern latitudes. This is beyond the control of SiriusXM® Satellite Radio.

Explicit Language Notice: Channels with frequent explicit language are indicated with an “XL” preceding the channel name. Channel blocking is available for SiriusXM Satellite Radio receivers by notifying SiriusXM:

- USA: 866-635-2349 or see www.siriusxm.com.
- Canada: 877-209-0079 or see www.xmradio.ca.

It is prohibited to copy, decompile, disassemble, reverse engineer, hack, manipulate, or otherwise make available any technology or software incorporated in receivers compatible with the SiriusXM Satellite Radio System or that support the SiriusXM website, the Online Service or any of its content. Furthermore, the AMBER voice compression software included in this product is protected by intellectual property rights including patent rights, copyrights, and trade secrets of Digital Voice Systems, Inc.

General Requirements:

1. A License Agreement from SiriusXM is required for any product that incorporates SiriusXM Technology and/or for use of any of the SiriusXM marks to be manufactured, distributed, or marketed in the SiriusXM Service Area.
2. For products to be distributed, marketed, and/or sold in Canada, a separate agreement is required with Canadian Satellite Radio Inc. (operating as XM Canada).

FreeType 2

Portions of this software are copyright ® 2007-2012 The FreeType Project (www.freetype.org). All rights reserved.

Libjpeg

The navigation software is based in part on the work of the independent JPEG Group.

✍ NOTES

Climate Controls

Climate Control Systems
Climate Control Systems 8-1

Air Vents
Air Vents 8-3

Maintenance
Air Intake 8-4
Passenger Compartment Air Filter 8-4

Climate Control Systems

The heating, cooling, and ventilation for the vehicle can be controlled with this system.

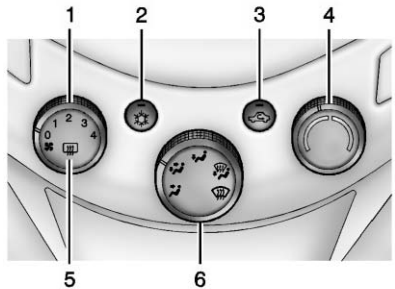

1. Fan Control
2. Air Conditioning
3. Recirculation
4. Temperature Control
5. Rear Window Defogger
6. Air Delivery Mode Control

(Fan Control): Turn clockwise or counterclockwise to increase or decrease the fan speed. Turning the fan control to 0 turns the fan off. The fan must be turned on to run the air conditioning compressor.

Air Delivery Mode Control: Turn clockwise or counterclockwise to change the current airflow mode.

Temperature Control: Turn clockwise or counterclockwise to increase or decrease the temperature.

Select from the following air delivery modes:

(Vent): Air is directed to the instrument panel outlets.

(Bi-Level): Air is divided between the instrument panel and floor outlets.

(Floor): Air is directed to the floor outlets.

(Defog): This mode clears the windows of fog or moisture. Air is directed to the floor, windshield, and side window outlets.

(Defrost): This mode clears the windshield of fog or frost more quickly. Air is directed to the windshield and side window outlets.

Do not drive the vehicle until all windows are clear.

(Air Conditioning): Turn to the desired speed. The air conditioning does not operate when the fan control knob is at 0.

Press to turn the air conditioning on and off. When is pressed, an indicator light comes on to show that the air conditioning is on.

Using air conditioning and recirculation together for long periods of time may cause the air inside the vehicle to become too dry. To prevent this from happening, after the air in the vehicle has cooled, turn the recirculation mode off.

(Recirculation): This mode recirculates and helps to quickly cool the air inside the vehicle. It can be used to prevent outside air and odors from entering the vehicle.

Press the button to turn the recirculation mode on. An indicator light comes on to show that the recirculation is on. Press the button again to return to outside air mode.

Using the recirculation mode for extended periods may cause the windows to fog. If this happens, select the defrost mode.

Rear Window Defogger

(Rear Window Defogger): Press to turn the rear window defogger on or off. An indicator light comes on to show that the feature is on.

The rear window defogger turns off after about 10 minutes. It can also be turned off by pressing again or by turning the ignition to ACC/ACCESSORY or LOCK/OFF.
If turned on again it runs for about five minutes before turning off.

Notice: **Do not use anything sharp on the inside of the rear window. If you do, you could cut or damage the warming grid, and the repairs would not be covered by the vehicle warranty. Do not attach a temporary vehicle license, tape, a decal, or anything similar to the defogger grid.**

Air Vents

Adjustable air vents are in the center and on the side of the instrument panel.

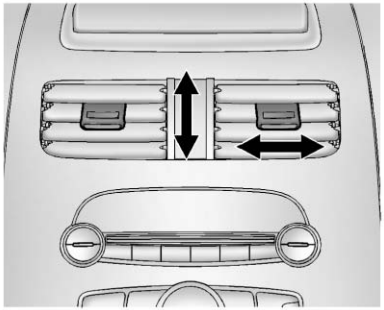

Move the slats to change the direction of the airflow. The center air vent does not close completely.

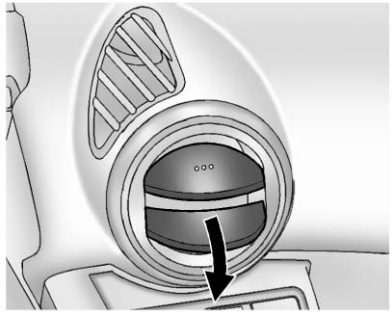

Press the cover of the side air vents to open. Turn open slats clockwise or counterclockwise to direct airflow as needed. Close the cover to stop the airflow.

Additional air vents are located beneath the windshield and the driver and passenger side door windows, and in the footwells. These are fixed and cannot be adjusted.

Operation Tips

- Clear away any ice, snow, or leaves from air inlets at the base of the windshield that could block the flow of air into the vehicle.
- Keep the path under the front seats clear of objects to help circulate the air inside of the vehicle more effectively.
- Use of non-GM approved hood deflectors can adversely affect the performance of the system. Check with your dealer before adding equipment to the outside of the vehicle.

Maintenance

Air Intake

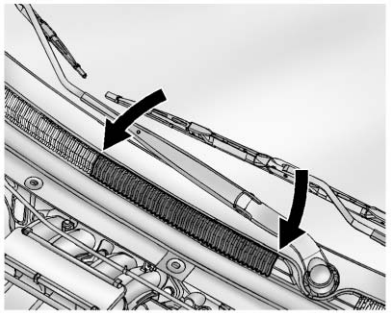

The air intake at the base of the windshield inside the engine compartment must be kept clear to allow the flow of air into the vehicle. Clear away any ice, snow, or leaves.

Passenger Compartment Air Filter

The filter removes dust, pollen, and other airborne irritants from outside air that is pulled into the vehicle.

The filter should be replaced as part of routine scheduled maintenance. See *Maintenance Schedule on page 11-3*. To find out what type of filter to use, see *Maintenance Replacement Parts on page 11-14*.

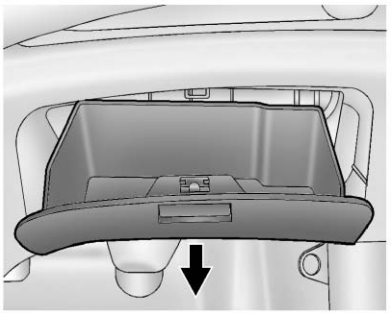

1. Open the glove box completely and pull it up by each side to remove.

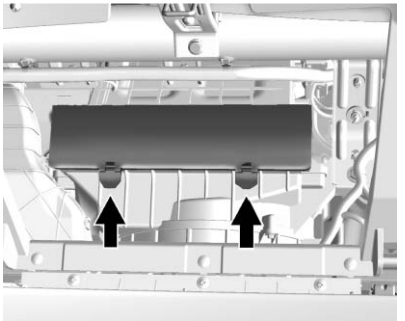

2. Push the two tabs upward and release the latches holding the service door. Lift the service door.
3. Remove the old air filter.
4. Install the new air filter.
5. Close the service door and latches.
6. Reinstall the glove box.

See your dealer if additional assistance is needed.

Driving and Operating

Driving Information
Distracted Driving 9-2
Defensive Driving 9-2
Drunk Driving 9-3
Control of a Vehicle 9-3
Braking 9-3
Steering 9-3
Off-Road Recovery 9-4
Loss of Control 9-4
Driving on Wet Roads 9-5
Highway Hypnosis 9-6
Hill and Mountain Roads 9-6
Winter Driving 9-7
If the Vehicle Is Stuck 9-8
Vehicle Load Limits 9-9

Starting and Operating
New Vehicle Break-In 9-13
Ignition Positions 9-14
Starting the Engine 9-15
Engine Heater 9-16
Retained Accessory Power (RAP) 9-17
Shifting Into Park 9-17
Shifting out of Park 9-19
Parking 9-20
Parking over Things That Burn 9-20

Engine Exhaust
Engine Exhaust 9-20
Running the Vehicle While Parked 9-21

Automatic Transmission
Automatic Transmission 9-21

Manual Transmission
Manual Transmission 9-23

Brakes
Antilock Brake System (ABS) 9-25
Parking Brake 9-26
Brake Assist 9-26
Hill Start Assist (HSA) 9-27

Ride Control Systems
Traction Control System (TCS) 9-27
StabiliTrak® System 9-28

Cruise Control
Cruise Control 9-30

Fuel
Fuel 9-32
Recommended Fuel 9-32
Gasoline Specifications 9-33
California Fuel Requirements 9-33
Fuels in Foreign Countries . . . 9-33
Fuel Additives 9-33
Filling the Tank 9-34
Filling a Portable Fuel Container 9-36

Towing
General Towing Information 9-36

Conversions and Add-Ons
Add-On Electrical Equipment 9-37

Driving Information

Distracted Driving

Distraction comes in many forms and can take your focus from the task of driving. Exercise good judgment and do not let other activities divert your attention away from the road. Many local governments have enacted laws regarding driver distraction. Become familiar with the local laws in your area.

To avoid distracted driving, always keep your eyes on the road, hands on the wheel, and mind on the drive.

- Do not use a phone in demanding driving situations. Use a hands-free method to place or receive necessary phone calls.
- Watch the road. Do not read, take notes, or look up information on phones or other electronic devices.
- Designate a front seat passenger to handle potential distractions.
- Become familiar with vehicle features before driving, such as programming favorite radio stations and adjusting climate control and seat settings. Program all trip information into any navigation device prior to driving.
- Wait until the vehicle is parked to retrieve items that have fallen to the floor.
- Stop or park the vehicle to tend to children.
- Keep pets in an appropriate carrier or restraint.
- Avoid stressful conversations while driving, whether with a passenger or on a cell phone.

⚠ WARNING

Taking your eyes off the road too long or too often could cause a crash resulting in injury or death. Focus your attention on driving.

Refer to the Infotainment section for more information on using that system, including pairing and using a cell phone.

Defensive Driving

Defensive driving means “always expect the unexpected.” The first step in driving defensively is to wear the safety belt. See *Safety Belts on page 3-9*.

- Assume that other road users (pedestrians, bicyclists, and other drivers) are going to be careless and make mistakes. Anticipate what they might do and be ready.

- Allow enough following distance between you and the driver in front of you.
- Focus on the task of driving.

Drunk Driving

Death and injury associated with drinking and driving is a global tragedy.

⚠ WARNING

Drinking and then driving is very dangerous. Your reflexes, perceptions, attentiveness, and judgment can be affected by even a small amount of alcohol. You can have a serious — or even fatal — collision if you drive after drinking.

Do not drink and drive or ride with a driver who has been drinking. Ride home in a cab; or if you are with a group, designate a driver who will not drink.

Control of a Vehicle

Braking, steering, and accelerating are important factors in helping to control a vehicle while driving.

Braking

Braking action involves perception time and reaction time. Deciding to push the brake pedal is perception time. Actually doing it is reaction time.

Average driver reaction time is about three-quarters of a second. In that time, a vehicle moving at 100 km/h (60 mph) travels 20 m (66 ft), which could be a lot of distance in an emergency.

Helpful braking tips to keep in mind include:

- Keep enough distance between you and the vehicle in front of you.
- Avoid needless heavy braking.
- Keep pace with traffic.

If the engine ever stops while the vehicle is being driven, brake normally but do not pump the brakes. Doing so could make the pedal harder to push down. If the engine stops, there will be some power brake assist but it will be used when the brake is applied. Once the power assist is used up, it can take longer to stop and the brake pedal will be harder to push.

Steering

Electric Power Steering

The vehicle has electric power steering. It does not have power steering fluid. Regular maintenance is not required.

If power steering assist is lost due to a system malfunction, the vehicle can be steered, but may require increased effort. See your dealer if there is a problem.

If the steering wheel is turned until it reaches the end of its travel and is held against that position for an extended period of time, power steering assist may be reduced.

Normal use of the power steering assist should return when the system cools down.

See your dealer if there is a problem.

Curve Tips

- Take curves at a reasonable speed.
- Reduce speed before entering a curve.
- Maintain a reasonable steady speed through the curve
- Wait until the vehicle is out of the curve before accelerating gently into the straightaway.

Steering in Emergencies

- There are some situations when steering around a problem may be more effective than braking.
- Holding both sides of the steering wheel allows you to turn 180 degrees without removing a hand.
- The Antilock Brake System (ABS) allows steering while braking.

Off-Road Recovery

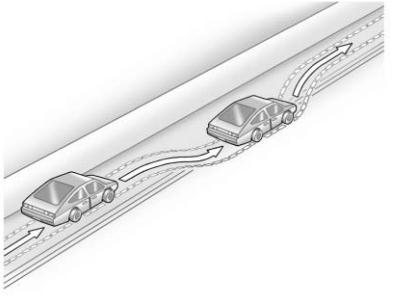

The vehicle's right wheels can drop off the edge of a road onto the shoulder while driving. Follow these tips:

1. Ease off the accelerator and then, if there is nothing in the way, steer the vehicle so that it straddles the edge of the pavement.
2. Turn the steering wheel about one-eighth of a turn, until the right front tire contacts the pavement edge.
3. Turn the steering wheel to go straight down the roadway.

Loss of Control

Skidding

There are three types of skids that correspond to the vehicle's three control systems:

- Braking Skid — wheels are not rolling.

- Steering or Cornering Skid — too much speed or steering in a curve causes tires to slip and lose cornering force.
- Acceleration Skid — too much throttle causes the driving wheels to spin.

Defensive drivers avoid most skids by taking reasonable care suited to existing conditions, and by not overdriving those conditions. But skids are always possible.

If the vehicle starts to slide, follow these suggestions:

- Ease your foot off the accelerator pedal and steer the way you want the vehicle to go. The vehicle may straighten out. Be ready for a second skid if it occurs.
- Slow down and adjust your driving according to weather conditions. Stopping distance can be longer and vehicle control can be affected when traction is reduced by water, snow, ice, gravel, or other material on the road. Learn to recognize warning clues — such as enough water, ice, or packed snow on the road to make a mirrored surface — and slow down when you have any doubt.
- Try to avoid sudden steering, acceleration, or braking, including reducing vehicle speed by shifting to a lower gear. Any sudden changes could cause the tires to slide.

Remember: Antilock brakes help avoid only the braking skid.

Driving on Wet Roads

Rain and wet roads can reduce vehicle traction and affect your ability to stop and accelerate. Always drive slower in these types of driving conditions and avoid driving through large puddles and deep-standing or flowing water.

⚠ WARNING

Wet brakes can cause crashes. They might not work as well in a quick stop and could cause pulling to one side. You could lose control of the vehicle.

After driving through a large puddle of water or a car/vehicle wash, lightly apply the brake pedal until the brakes work normally.

Flowing or rushing water creates strong forces. Driving through flowing water could cause the vehicle to be carried away. If this happens, you and other vehicle occupants could drown. Do not ignore police warnings and be very cautious about trying to drive through flowing water.

Hydroplaning

Hydroplaning is dangerous. Water can build up under the vehicle's tires so they actually ride on the water. This can happen if the road is wet enough and you are going fast enough. When the vehicle is hydroplaning, it has little or no contact with the road.

There is no hard and fast rule about hydroplaning. The best advice is to slow down when the road is wet.

Other Rainy Weather Tips

Besides slowing down, other wet weather driving tips include:

- Allow extra following distance.
- Pass with caution.
- Keep windshield wiping equipment in good shape.
- Keep the windshield washer fluid reservoir filled.
- Have good tires with proper tread depth. See *Tires on page 10-34*.
- Turn off cruise control.

Highway Hypnosis

Always be alert and pay attention to your surroundings while driving. If you become tired or sleepy, find a safe place to park the vehicle and rest.

Other driving tips include:

- Keep the vehicle well ventilated.
- Keep the interior temperature cool.
- Keep your eyes moving — scan the road ahead and to the sides.
- Check the rearview mirror and vehicle instruments often.

Hill and Mountain Roads

Driving on steep hills or through mountains is different than driving on flat or rolling terrain. Tips for driving in these conditions include:

- Keep the vehicle serviced and in good shape.
- Check all fluid levels and brakes, tires, cooling system, and transmission.
- Shift to a lower gear when going down steep or long hills.

⚠ WARNING

If you do not shift down, the brakes could get so hot that they would not work well. You would then have poor braking or even none going down a hill. You could crash. Shift down to let the engine assist the brakes on a steep downhill slope.

⚠ WARNING

Coasting downhill in N (Neutral) or with the ignition off is dangerous. The brakes will have to do all the work of slowing down and they could get so hot that

(Continued)

WARNING (Continued)

they would not work well. You would then have poor braking or even none going down a hill. Steering may also be affected when ignition is off. You could crash. Always have the engine running and the vehicle in gear when going downhill.

- Stay in your own lane. Do not swing wide or cut across the center of the road. Drive at speeds that let you stay in your own lane.
- Be alert on top of hills; something could be in your lane (stalled car, accident).
- Pay attention to special road signs (falling rocks area, winding roads, long grades, passing or no-passing zones) and take appropriate action.

Winter Driving

Driving on Snow or Ice

Drive carefully when there is snow or ice between the tires and the road, creating less traction or grip. Wet ice can occur at about 0°C (32°F) when freezing rain begins to fall, resulting in even less traction. Avoid driving on wet ice or in freezing rain until roads can be treated with salt or sand.

Drive with caution, whatever the condition. Accelerate gently so traction is not lost. Accelerating too quickly causes the wheels to spin and makes the surface under the tires slick, so there is even less traction.

Try not to break the fragile traction. If you accelerate too fast, the drive wheels will spin and polish the surface under the tires even more.

The Antilock Brake System (ABS) improves vehicle stability during hard stops on slippery roads, but apply the brakes sooner than when on dry pavement. See *Antilock Brake System (ABS) on page 9-25*.

Allow greater following distance on any slippery road and watch for slippery spots. Icy patches can occur on otherwise clear roads in shaded areas. The surface of a curve or an overpass can remain icy when the surrounding roads are clear. Avoid sudden steering maneuvers and braking while on ice.

Turn off cruise control on slippery surfaces.

Blizzard Conditions

Being stuck in snow can be a serious situation. Stay with the vehicle unless there is help nearby. If possible, use Roadside Assistance. See *Roadside Assistance Program on page 13-5*. To get help and keep everyone in the vehicle safe:

- Turn on the hazard warning flashers.

- Tie a red cloth to an outside mirror.

⚠ WARNING

Snow can trap engine exhaust under the vehicle. This may cause exhaust gases to get inside. Engine exhaust contains carbon monoxide (CO) which cannot be seen or smelled. It can cause unconsciousness and even death.

If the vehicle is stuck in the snow:

- Clear away snow from around the base of your vehicle, especially any that is blocking the exhaust pipe.
- Check again from time to time to be sure snow does not collect there.
- Open a window about 5 cm (2 in) on the side of the vehicle that is away from the wind to bring in fresh air.

(Continued)

WARNING (Continued)

- Fully open the air outlets on or under the instrument panel.
- Adjust the climate control system to a setting that circulates the air inside the vehicle and set the fan speed to the highest setting. See “Climate Control Systems” in the Index.

For more information about carbon monoxide, see *Engine Exhaust on page 9-20.*

To save fuel, run the engine for only short periods as needed to warm the vehicle and then shut the engine off and close the window most of the way to save heat. Repeat this until help arrives but only when you feel really uncomfortable from the cold. Moving about to keep warm also helps.

If it takes some time for help to arrive, now and then when you run the engine, push the accelerator pedal slightly so the engine runs faster than the idle speed. This keeps the battery charged to restart the vehicle and to signal for help with the headlamps. Do this as little as possible to save fuel.

If the Vehicle Is Stuck

Slowly and cautiously spin the wheels to free the vehicle when stuck in sand, mud, ice, or snow.

If stuck too severely for the traction system to free the vehicle, turn the traction system off and use the rocking method. See *Traction Control System (TCS) on page 9-27*.

⚠ WARNING

If the vehicle's tires spin at high speed, they can explode, and you or others could be injured. The vehicle can overheat, causing an engine compartment fire or other damage. Spin the wheels as little as possible and avoid going above 56 km/h (35 mph).

Rocking the Vehicle to Get it Out

Turn the steering wheel left and right to clear the area around the front wheels. Turn off any traction system. Shift back and forth between R (Reverse) and a low forward gear, spinning the wheels as little as possible. To prevent transmission wear, wait until the wheels stop spinning before shifting gears. Release the accelerator pedal while shifting, and press lightly on the accelerator pedal when the transmission is in gear.

Slowly spinning the wheels in the forward and reverse directions causes a rocking motion that could free the vehicle. If that does not get the vehicle out after a few tries, it might need to be towed out. If the vehicle does need to be towed out, see *Towing the Vehicle on page 10-65*.

Vehicle Load Limits

It is very important to know how much weight the vehicle can carry. This weight is called the vehicle capacity weight and includes the weight of all occupants, cargo, and all nonfactory-installed options. Two labels on the vehicle show how much weight it may properly carry: the Tire and Loading Information label and the Certification label.

⚠ WARNING

Do not load the vehicle any heavier than the Gross Vehicle Weight Rating (GVWR), or either the maximum front or rear Gross Axle Weight Rating (GAWR). This can cause systems to break and change the way the vehicle handles. This could cause loss of control and a crash. Overloading can also shorten the life of the vehicle.

Tire and Loading Information Label

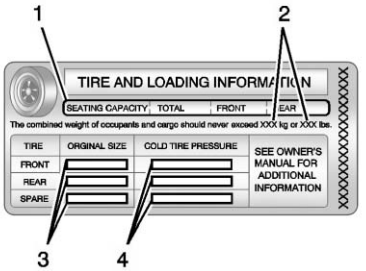

Label Example

A vehicle-specific Tire and Loading Information label is attached to the vehicle's center pillar (B-pillar). The Tire and Loading Information label shows the number of occupant seating positions (1), and the maximum vehicle capacity weight (2) in kilograms and pounds.

The Tire and Loading Information label also shows the tire size of the original equipment tires (3) and the recommended cold tire inflation pressures (4). For more information on tires and inflation see *Tires on page 10-34* and *Tire Pressure on page 10-41*.

There is also important loading information on the Certification label. It tells you the Gross Vehicle Weight Rating (GVWR) and the Gross Axle Weight Rating (GAWR) for the front and rear axle. See “Certification Label” later in this section.

Steps for Determining Correct Load Limit

1. Locate the statement “The combined weight of occupants and cargo should never exceed XXX kg or XXX lbs” on your vehicle's placard.
2. Determine the combined weight of the driver and passengers that will be riding in your vehicle.
3. Subtract the combined weight of the driver and passengers from XXX kg or XXX lbs.
4. The resulting figure equals the available amount of cargo and luggage load capacity.

For example, if the “XXX” amount equals 1400 lbs and there will be five 150 lb passengers in your vehicle, the amount of available cargo and luggage load capacity is 650 lbs (1400 − 750 (5 x 150) = 650 lbs).

5. Determine the combined weight of luggage and cargo being loaded on the vehicle. That weight may not safely exceed the available cargo and luggage load capacity calculated in Step 4.
6. If your vehicle will be towing a trailer, the load from your trailer will be transferred to your vehicle. Consult this manual to determine how this reduces the available cargo and luggage load capacity of your vehicle.

This vehicle is neither designed nor intended to tow a trailer.

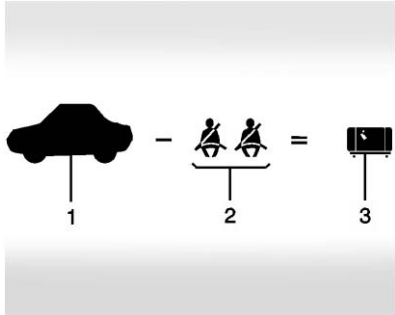

Example 1

1. Vehicle Capacity Weight for Example 1 = 453 kg (1,000 lbs).
2. Subtract Occupant Weight @ 68 kg (150 lbs) × 2 = 136 kg (300 lbs).
3. Available Occupant and Cargo Weight = 317 kg (700 lbs).

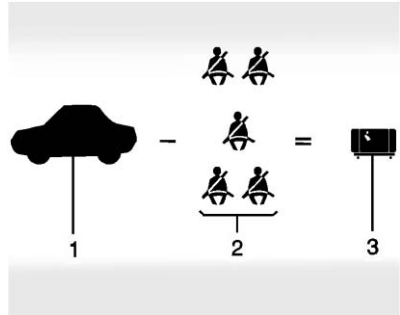

Example 2

1. Vehicle Capacity Weight for Example 2 = 453 kg (1,000 lbs).
2. Subtract Occupant Weight @ 68 kg (150 lbs) × 5 = 340 kg (750 lbs).
3. Available Cargo Weight = 113 kg (250 lbs).

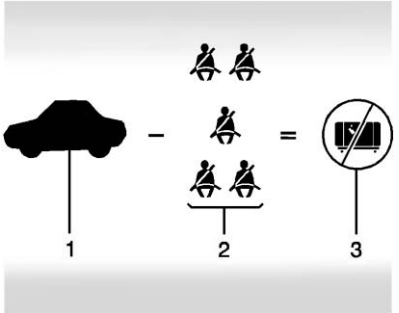

Example 3

1. Vehicle Capacity Weight for Example 3 = 453 kg (1,000 lbs).
2. Subtract Occupant Weight @ 91 kg (200 lbs) × 5 = 453 kg (1,000 lbs).
3. Available Cargo Weight = 0 kg (0 lbs).

Refer to the vehicle's Tire and Loading Information label for specific information about the vehicle's capacity weight and seating positions. The combined weight of the driver, passengers, and cargo should never exceed the vehicle's capacity weight.

Certification Label

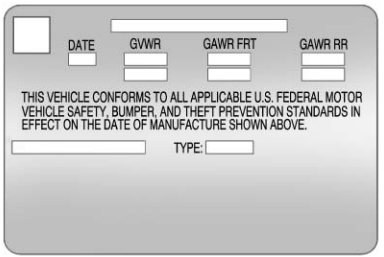

Label Example

A vehicle-specific Certification label is attached to the vehicle's center pillar (B-pillar). The label tells the gross weight capacity of the vehicle, called the Gross Vehicle Weight Rating (GVWR). The GVWR includes the weight of the vehicle, all occupants, fuel, and cargo. Never exceed the GVWR for the vehicle, or the Gross Axle Weight Rating (GAWR) for either the front or rear axle.

And, if there is a heavy load, it should be spread out. See “Steps for Determining Correct Load Limit” earlier in this section.

⚠ WARNING

Do not load the vehicle any heavier than the Gross Vehicle Weight Rating (GVWR), or either the maximum front or rear Gross Axle Weight Rating (GAWR). This can cause systems to break and change the way the vehicle handles. This could cause loss of control and a crash. Overloading can also shorten the life of the vehicle.

If you put things inside the vehicle — like suitcases, tools, packages, or anything else — they will go as fast as the vehicle goes. If you have to stop or turn quickly, or if there is a crash, they will keep going.

⚠ WARNING

Things inside the vehicle can strike and injure people in a sudden stop or turn, or in a crash.

- Put things in the cargo area of the vehicle. In the cargo area, put them as far forward as possible. Try to spread the weight evenly.

(Continued)

WARNING (Continued)

- Never stack heavier things, like suitcases, inside the vehicle so that some of them are above the tops of the seats.
- Do not leave an unsecured child restraint in the vehicle.
- Secure loose items in the vehicle.
- Do not leave a seat folded down unless needed.

Starting and Operating

New Vehicle Break-In

Notice: **The vehicle does not need an elaborate break-in. But it will perform better in the long run if you follow these guidelines:**

- **Do not drive at any one constant speed, fast or slow, for the first 805 km (500 mi). Do not make full-throttle starts. Avoid downshifting to brake or slow the vehicle.**
- **Avoid making hard stops for the first 322 km (200 mi) or so. During this time the new brake linings are not yet broken in. Hard stops with new linings can mean premature wear and earlier replacement. Follow this breaking-in guideline every time you get new brake linings.**

Following break-in, engine speed and load can be gradually increased.

Ignition Positions

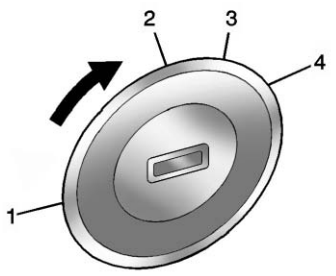

The ignition switch has four different positions.

The uplevel key must be fully extended to start the vehicle.

To shift out of P (Park), the ignition must be in ON/RUN and the regular brake pedal applied.

1 (STOPPING THE ENGINE/LOCK/OFF): When the vehicle is stopped, turn the ignition switch to LOCK/OFF to turn the engine off.

This position locks the steering wheel, ignition, and transmission.

The ignition switch can bind in the LOCK/OFF position with the wheels turned off center. If this happens, move the steering wheel from right to left while turning the key to ACC/ACCESSORY. If this does not work, then the vehicle needs service.

Do not turn the engine off when the vehicle is moving. This will cause a loss of power assist in the brake and steering systems and disable the airbags.

If the vehicle must be shut off in an emergency:

1. Brake using a firm and steady pressure. Do not pump the brakes repeatedly. This may deplete power assist, requiring increased brake pedal force.
2. Shift the vehicle to N (Neutral). This can be done while the vehicle is moving. After shifting to N (Neutral), firmly apply the brakes and steer the vehicle to a safe location.
3. Come to a complete stop. Shift to P (Park) with an automatic transmission, or Neutral with a manual transmission. Turn the ignition to LOCK/OFF.
4. Set the parking brake. See *Parking Brake on page 9-26*.

⚠ WARNING

Turning off the vehicle while moving may cause loss of power assist in the brake and steering systems and disable the airbags. While driving, only shut the vehicle off in an emergency.

If the vehicle cannot be pulled over, and must be shut off while driving, turn the ignition to ACC/ACCESSORY.

Notice: **Using a tool to force the key to turn in the ignition could cause damage to the switch or break the key. Use the correct key, make sure it is all the way in, and turn it only with your hand. If the key cannot be turned by hand, see your dealer.**

2 (ACC/ACCESSORY): This is the position in which you can operate things like the radio and the windshield wipers when the engine is off.

3 (ON/RUN): This position can be used to operate the electrical accessories and to display some instrument cluster warning and indicator lights. This position can also be used for service and diagnostics, and to verify the proper operation of the malfunction indicator lamp as may be required for emission inspection purposes. The switch stays in this position when the engine is running.

If you leave the key in the ACC/ACCESSORY or ON/RUN position with the engine off, the battery could be drained. You may not be able to start the vehicle if the battery is allowed to drain for an extended period of time.

4 (START): This is the position that starts the engine. When the engine starts, release the key. The ignition switch returns to ON/RUN for driving.

A warning tone will sound when the driver door is opened, the ignition is in ACC/ACCESSORY or LOCK/OFF, and the key is in the ignition. If the ignition becomes difficult to turn with the uplevel key, see *Keys on page 2-1*.

Starting the Engine

Automatic Transmission

Move the shift lever to P (Park) or N (Neutral). The engine will not start in any other position. To restart the engine when the vehicle is already moving, use N (Neutral) only.

Notice: **Do not try to shift to P (Park) if the vehicle is moving. If you do, you could damage the transmission. Shift to P (Park) only when the vehicle is stopped.**

Manual Transmission

The shift lever should be in Neutral and the parking brake engaged. Hold the clutch pedal to the floor and start the engine. The vehicle will not start if the clutch pedal is not all the way down.

Starting Procedure

1. With your foot off the accelerator pedal, turn the ignition to START. When the engine cranks, let go of the key. The idle speed will go down as the engine gets warm.

   The vehicle has a Computer-Controlled Cranking System. It assists in starting the engine and protects components. If the ignition key is turned to START and then released when the engine begins cranking, the engine will continue cranking for a few seconds or until the engine starts. If the engine does not start and the key is held in START, cranking will be stopped after 15 seconds to prevent damage. To prevent gear damage, cranking is not allowed if the engine is running. Engine cranking can be stopped by turning the ignition key to ACC/ACCESSORY or LOCK/OFF.

   Notice: **Holding the key in START for longer than 15 seconds at a time will cause the battery to be drained much sooner. And the excessive heat can damage the starter motor. Wait about 15 seconds between each try to help avoid draining the battery or damaging the starter.**

2. If the engine does not start, wait about 15 seconds and try again. Wait about 15 seconds between each try.

   When the engine has run about 10 seconds to warm up, the vehicle is ready to be driven. Do not run the engine at high speed when it is cold.

   If the weather is below freezing (0°C or 32°F), let the engine run for a few minutes to warm up.

3. If the engine still will not start, or starts but then stops, it could be flooded with too much gasoline. Try pushing the accelerator pedal all the way to the floor and holding it there as you hold the key in START for about three seconds. If the vehicle starts briefly but then stops again, do the same thing, but this time keep the pedal down for five or six seconds. This clears the extra gasoline from the engine.

Notice: **If you add electrical parts or accessories, you could change the way the engine operates. Any resulting damage would not be covered by the vehicle warranty. See *Add-On Electrical Equipment on page 9-37*.**

Engine Heater

The engine heater can provide easier starting and better fuel economy during engine warm-up in cold weather conditions at or below −18°C (0°F). Vehicles with an engine heater should be plugged in at least four hours before starting.

1. Turn off the engine.

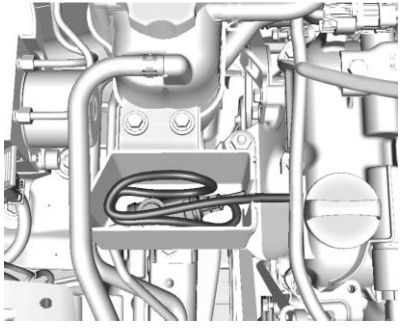

2. Open the hood and unwrap the electrical cord. The cord is located in the passenger side of the engine compartment, near the engine coolant container. It is shipped from the factory with a tie holding it in place. Use care in removing the tie so that the cord is not damaged.
3. Plug it into a normal, grounded 110-volt AC outlet.

⚠ WARNING

Plugging the cord into an ungrounded outlet could cause an electrical shock. Also, the wrong kind of extension cord could overheat and cause a fire. You could be seriously injured. Plug the cord into a properly grounded three-prong 110-volt AC outlet. If the cord will not reach, use a heavy-duty three-prong extension cord rated for at least 15 amps.

4. Before starting the engine, be sure to unplug and store the cord as it was before to keep it away from moving engine parts. If you do not it could be damaged.

The length of time the heater should remain plugged in depends on several factors. Ask a dealer in the area where you will be parking the vehicle for the best advice on this.

Retained Accessory Power (RAP)

These vehicle accessories may be used for up to 10 minutes after the engine is turned off:

- Audio System
- Power Windows

The power windows will continue to work for up to 10 minutes or until any door is opened. The radio will work when the key is in ON/RUN or ACC/ACCESSORY. Once the key is turned from ON/RUN to LOCK/OFF, the radio will continue to work for 10 minutes, or until the driver door is opened or the key is removed from the ignition.

Shifting Into Park

1. Hold the brake pedal down and set the parking brake. See *Parking Brake on page 9-26*.

2. Move the shift lever into P (Park) by pressing the button on the shift lever and pushing the lever all the way toward the front of the vehicle.
3. Turn the ignition key to LOCK/OFF.
4. Remove the key and take it with you. If you can leave the vehicle with the ignition key in your hand, the vehicle is in P (Park).

Leaving the Vehicle with the Engine Running (Automatic Transmission)

⚠ WARNING

It can be dangerous to leave the vehicle with the engine running. It could overheat and catch fire.

It is dangerous to get out of the vehicle if the shift lever is not fully in P (Park) with the parking brake firmly set. The vehicle can roll.

(Continued)

WARNING (Continued)

Do not leave the vehicle when the engine is running. If you have left the engine running, the vehicle can move suddenly. You or others could be injured. To be sure the vehicle will not move, even when you are on fairly level ground, always set the parking brake and move the shift lever to P (Park). See *Shifting Into Park on page 9-17*.

If you have to leave the vehicle with the engine running, be sure the vehicle is in P (Park) and the parking brake is firmly set before you leave it. After you have moved the shift lever into P (Park), hold the brake pedal down. Then see if you can move the shift lever away from P (Park) without first pushing the button on the shift lever. If you can, it means that the shift lever was not fully locked into P (Park).

Torque Lock (Automatic Transmission)

If you are parking on a hill and you do not shift your transmission into P (Park) properly, the weight of the vehicle may put too much force on the parking pawl in the transmission. You may find it difficult to pull the shift lever out of P (Park). This is called “torque lock.”
To prevent torque lock, set the parking brake and then shift into P (Park) properly before you leave the driver seat. To find out how, see “Shifting Into Park (Automatic Transmission)” in this section.

When you are ready to drive, move the shift lever out of P (Park) before you release the parking brake.

If torque lock does occur, you may need to have another vehicle push yours a little uphill to take some of the pressure from the parking pawl in the transmission, so you can pull the shift lever out of P (Park).

Shifting out of Park

This vehicle is equipped with a shift lock control. The shift lock control is designed to:

- Prevent ignition key removal unless the shift lever is in P (Park) with the shift lever button fully released.
- Prevent movement of the shift lever out of P (Park) unless the ignition is in ON/RUN and the brake pedal is applied.

The shift lock control is always functional except in the case of an uncharged or low voltage (less than 9-volt) battery.

If the vehicle has an uncharged battery or a battery with low voltage, try charging or jump starting the battery. See *Jump Starting on page 10-62*.

To shift out of P (Park):

1. Apply the brake pedal.
2. Turn the ignition to ON/RUN.
3. Press the shift lever button.
4. Move the shift lever to the desired position.

If still unable to shift out of P (Park):

1. Fully release the shift lever button.
2. Hold the brake pedal down and press the shift lever button again.
3. Move the shift lever to the desired position.

If the shift lever still cannot be moved from P (Park), see “Shift Lock Manual Release.”

The doors may lock when shifting from P (Park). See *Automatic Door Locks on page 2-5*.

Shift Lock Manual Release

The automatic transmission has an electric park lock. The key must be in the ON/RUN position, and the brake pedal pressed so the shift lever can be moved from the P (Park) position. If the battery has lost power, the shift lever cannot be moved from P (Park) unless the shift lock manual release is disengaged manually.

To access the shift lock manual release:

1. Apply the parking brake.

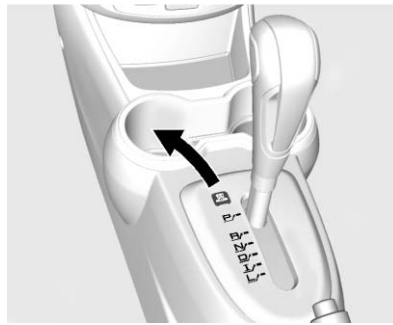

2. Open the cover to the left of the shift lever.

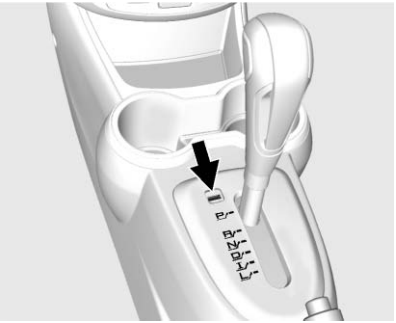

3. Insert a tool into the opening as far as it will go and move the shift lever out of P (Park).
   If P (Park) is selected again, the shift lever will be locked again. Have the cause of the problem fixed by your dealer.
4. Close the cover.

Parking

If the vehicle has a manual transmission, before getting out of the vehicle, move the shift lever into R (Reverse) if parking on a downhill slope. On a level surface or an uphill slope, use 1 (First) gear. Firmly apply the parking brake. Turn the wheels toward the curb for a downhill slope, or away from the curb for an uphill slope. Once the shift lever has been placed into gear with the clutch pedal pressed in, turn the ignition key to LOCK/OFF, remove the key, and release the clutch.

Parking over Things That Burn

⚠ WARNING

Things that can burn could touch hot exhaust parts under the vehicle and ignite. Do not park over papers, leaves, dry grass, or other things that can burn.

Engine Exhaust

⚠ WARNING

Engine exhaust contains carbon monoxide (CO) which cannot be seen or smelled. Exposure to CO can cause unconsciousness and even death.

Exhaust may enter the vehicle if:

- The vehicle idles in areas with poor ventilation (parking garages, tunnels, deep snow that may block underbody airflow or tail pipes).
- The exhaust smells or sounds strange or different.
- The exhaust system leaks due to corrosion or damage.
- The vehicle exhaust system has been modified, damaged, or improperly repaired.

(Continued)

WARNING (Continued)

- There are holes or openings in the vehicle body from damage or aftermarket modifications that are not completely sealed.

If unusual fumes are detected or if it is suspected that exhaust is coming into the vehicle:

- Drive it only with the windows completely down.
- Have the vehicle repaired immediately.

Never park the vehicle with the engine running in an enclosed area such as a garage or a building that has no fresh air ventilation.

Running the Vehicle While Parked

It is better not to park with the engine running.

If the vehicle is left with the engine running, follow the proper steps to be sure the vehicle will not move. See *Shifting Into Park on page 9-17* and *Engine Exhaust on page 9-20*. If the vehicle has a manual transmission, see *Parking on page 9-20*.

Automatic Transmission

The automatic transmission is an electronically controlled four-speed transmission. Fourth gear is overdrive. A display in the instrument cluster indicates the selected gear.

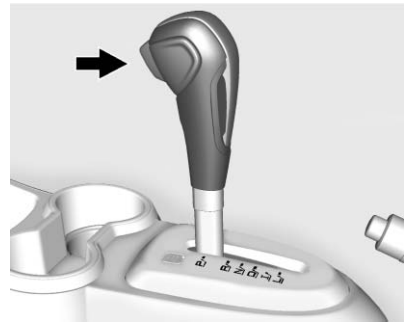

P (Park): This position locks the front wheels. It is the best position to use when you start the engine because the vehicle cannot move easily.

⚠ WARNING

It is dangerous to get out of the vehicle if the shift lever is not fully in P (Park) with the parking brake firmly set. The vehicle can roll.

Do not leave the vehicle when the engine is running. If you have left the engine running, the vehicle can move suddenly. You or others could be injured. To be sure the vehicle will not move, even when you are on fairly level ground, always set the parking brake and move the shift lever to P (Park). See *Shifting Into Park on page 9-17*.

Make sure the shift lever is fully in P (Park) before starting the engine. The vehicle has a shift lock control. You must fully apply the brake pedal then press the shift lever button before you can shift from P (Park) while the ignition key is in ON/RUN. If you cannot shift out of P (Park), ease pressure on the shift lever and push the shift lever all the way into P (Park) as you maintain brake application. Then move the shift lever into another gear. See *Shifting out of Park on page 9-19*.

R (Reverse): Use this gear to back up.

Notice: **Shifting to R (Reverse) while the vehicle is moving forward could damage the transmission. The repairs would not be covered by the vehicle warranty. Shift to R (Reverse) only after the vehicle is stopped.**

To rock the vehicle back and forth to get out of snow, ice, or sand without damaging the transmission, see *If the Vehicle Is Stuck on page 9-8*.

N (Neutral): In this position, the engine does not connect with the wheels. To restart the engine when the vehicle is already moving, use N (Neutral) only. Also, use N (Neutral) when the vehicle is being towed.

⚠ WARNING

Shifting into a drive gear while the engine is running at high speed is dangerous. Unless your foot is firmly on the brake pedal, the vehicle could move very rapidly. You could lose control and hit people or objects. Do not shift into a drive gear while the engine is running at high speed.

Notice: **Shifting out of P (Park) or N (Neutral) with the engine running at high speed may damage the transmission. The repairs would not be covered by the vehicle warranty. Be sure the engine is not running at high speed when shifting the vehicle.**

D (Drive): This position is for normal driving. It allows the transmission to shift into all four forward gears. Fourth gear is overdrive which reduces engine speed and noise while increasing fuel economy. If you need more power for passing, and you are:

- Going less than 56 km/h (35 mph), push the accelerator pedal about halfway down.
- Going about 56 km/h (35 mph) or more, push the accelerator all the way down.

I (Intermediate): This position allows the transmission to shift from 1 (First) gear to 2 (Second) gear, and prevents automatic shifting into 3 (Third) gear and 4 (Fourth) gear. This position can be used for more power when climbing hills, and for engine braking when driving down steep hills.

L (Low): This position locks the transmission in 1 (First) gear. Select 1 (First) for maximum engine braking when driving down severe grades.

In the event of a fault, the malfunction indicator lamp illuminates. The transmission no longer shifts automatically nor manually because it is locked in a predetermined gear. See your dealer for repairs.

Manual Transmission

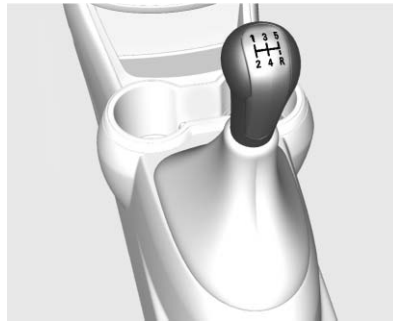

Notice: **Shifting the vehicle initially into any gear other than 1 (First) or R (Reverse) can damage the clutch. Shift the manual transmission in the proper sequence, and time the gear shifting with the accelerator to avoid revving the engine and damaging the clutch.**

1 (First): Press the clutch pedal and shift into 1 (First). Then, slowly let up on the clutch pedal as you press the accelerator pedal.

If you have come to a complete stop and it is hard to shift into 1 (First), put the shift lever in Neutral and let up on the clutch. Press the clutch pedal back down. Then shift into 1 (First).

2 (Second): Press the clutch pedal as you let up on the accelerator pedal and shift into 2 (Second). Then, slowly let up on the clutch pedal as you press the accelerator pedal.

3 (Third), 4 (Fourth), and 5 (Fifth): Shift into 3 (Third), 4 (Fourth), and 5 (Fifth) the same way as for 2 (Second). Slowly let up on the clutch pedal as you press the accelerator pedal.

To stop, let up on the accelerator pedal and press the brake pedal. Just before the vehicle stops, press the clutch pedal and the brake pedal, and shift to Neutral.

Neutral: Use this position when you start or idle the engine.

R (Reverse): To back up, press down the clutch pedal and shift into R (Reverse). Let up on the clutch pedal slowly while pressing the accelerator pedal.

Notice: **Shifting to R (Reverse) while the vehicle is moving forward could damage the transmission. The repairs would not be covered by the vehicle warranty. Shift to R (Reverse) only after the vehicle is stopped.**

Shift Speeds

⚠ WARNING

If you skip a gear when you downshift, you could lose control of the vehicle. You could injure yourself or others. Do not shift down more than one gear at a time when you downshift.

Up-Shift Light

Vehicles equipped with a manual transmission may have an up-shift light. This light indicates when to shift to the next higher gear for better fuel economy.

For the best fuel economy, accelerate slowly and shift when the light comes on, and if the weather, road, and traffic conditions allow.

It is normal for the light to go on and off if the accelerator position changes quickly. Ignore the light during downshifts.

Brakes

Antilock Brake System (ABS)

This vehicle has the Antilock Brake System (ABS), an advanced electronic braking system that helps prevent a braking skid.

When the engine is started and the vehicle begins to drive away, ABS checks itself. A momentary motor or clicking noise might be heard while this test is going on, and it might even be noticed that the brake pedal moves a little. This is normal.

If there is a problem with ABS, this warning light stays on. See *Antilock Brake System (ABS) Warning Light on page 5-15*.

If driving safely on a wet road and it becomes necessary to slam on the brakes and continue braking to avoid a sudden obstacle, a computer senses that the wheels are slowing down. If one of the wheels is about to stop rolling, the computer will separately work the brakes at each wheel.

ABS can change the brake pressure to each wheel, as required, faster than any driver could. This can help the driver steer around the obstacle while braking hard.

As the brakes are applied, the computer keeps receiving updates on wheel speed and controls braking pressure accordingly.

Remember: ABS does not change the time needed to get a foot up to the brake pedal or always decrease stopping distance. If you get too close to the vehicle in front of you, there will not be enough time to apply the brakes if that vehicle suddenly slows or stops. Always leave enough room up ahead to stop, even with ABS.

Using ABS

Do not pump the brakes. Just hold the brake pedal down firmly and let ABS work. You might hear the ABS pump or motor operating and feel the brake pedal pulsate, but this is normal.

Braking in Emergencies

ABS allows the driver to steer and brake at the same time. In many emergencies, steering can help more than even the very best braking.

Parking Brake

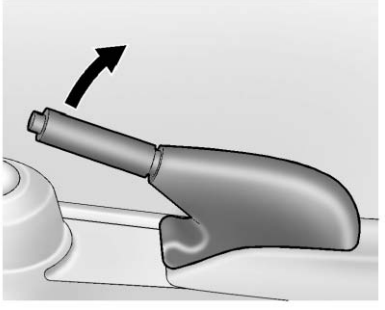

To set the parking brake, hold the brake pedal down and pull up on the parking brake lever. If the ignition is on, the brake system warning light will come on. See *Brake System Warning Light on page 5-14*.

To release the parking brake, hold the brake pedal down. Pull the parking brake lever up until you can press the release button. Hold the release button in as you move the brake lever all the way down.

Notice: **Driving with the parking brake on can overheat the brake system and cause premature wear or damage to brake system parts. Make sure that the parking brake is fully released and the brake warning light is off before driving.**

Brake Assist

This vehicle has a brake assist feature designed to assist the driver in stopping or decreasing vehicle speed in emergency driving conditions. This feature uses the stability system hydraulic brake control module to supplement the power brake system under conditions where the driver has quickly and forcefully applied the brake pedal in an attempt to quickly stop or slow down the vehicle. The stability system hydraulic brake control module increases brake pressure at each corner of the vehicle until the ABS activates. Minor brake pedal pulsation or pedal movement during this time is normal and the driver should continue to apply the brake pedal as the driving situation dictates. The brake assist feature will automatically disengage when the brake pedal is released or brake pedal pressure is quickly decreased.

Hill Start Assist (HSA)

This vehicle has a Hill Start Assist (HSA) feature, which may be useful when the vehicle is stopped on a grade. This feature is designed to prevent the vehicle from rolling, either forward or rearward, during vehicle drive off. After the driver completely stops and holds the vehicle in a complete standstill on a grade, HSA will be automatically activated. During the transition period between when the driver releases the brake pedal and starts to accelerate to drive off on a grade, HSA holds the braking pressure to ensure that there is no rolling. The brakes will automatically release when the accelerator pedal is applied within the two-second window. It will not activate if the vehicle is in a drive gear and facing downhill, or if the vehicle is facing uphill and in R (Reverse).

Ride Control Systems

Traction Control System (TCS)

The vehicle has a TCS that limits wheel spin. On a front-wheel-drive vehicle, the system operates if it senses that one or both of the front wheels are spinning or beginning to lose traction. When this happens, the system brakes the spinning wheel(s), and/or reduces engine power to limit wheel spin.

The system may be heard or felt while it is working, but this is normal.

TCS is on whenever the vehicle is started. To limit wheel spin, especially in slippery road conditions, the system should always be left on. But, TCS can be turned off if needed.

TCS/StabiliTrak Light

flashes to indicate that the traction control system is active.

If there is a problem detected with TCS, comes on in the instrument cluster and stays on. The vehicle is safe to drive but the system is not operational. Driving should be adjusted accordingly.

If comes on and stays on, reset the system:

1. Stop the vehicle.
2. Turn the engine off and wait 15 seconds.
3. Start the engine.

If still comes on and stays on at a speed above 20 km/h (13 mph), see your dealer for service.

Notice: **Do not repeatedly brake or accelerate heavily when TCS is off. The vehicle's driveline could be damaged.**

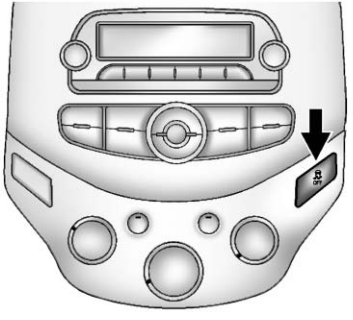

TCS/StabiliTrak Button

To turn TCS off, press the TCS/ StabiliTrak button on the center stack.

Traction Off Light

The Traction Off Light comes on to indicate that TCS has been turned off.

When TCS is turned off, the system will not limit wheel spin. Driving should be adjusted accordingly. Press and release the TCS/ StabiliTrak button again to turn the system back on. The Traction Off Light will go off.

It may be necessary to turn the system off if the vehicle gets stuck in sand, mud, or snow and rocking the vehicle is required. See *If the Vehicle Is Stuck on page 9-8*. See also *Winter Driving on page 9-7* for information on using TCS when driving in snowy or icy conditions.

If cruise control is being used when TCS activates, cruise control will automatically disengage. Press the appropriate cruise control button to reengage when road conditions allow. See *Cruise Control on page 9-30*.

Adding accessories can affect the vehicle performance. See *Accessories and Modifications on page 10-2*.

StabiliTrak® System

The vehicle has a vehicle stability enhancement system called StabiliTrak. It is an advanced computer controlled system that assists with directional control of the vehicle in difficult driving conditions.

StabiliTrak activates when the computer senses a difference between the intended path, and the direction the vehicle is actually traveling. StabiliTrak selectively applies braking pressure at any one of the vehicle's brakes to help steer the vehicle in the intended direction.

StabiliTrak is on automatically whenever the vehicle is started. To assist with directional control of the vehicle, the system should always be left on.

TCS/StabiliTrak Light

When the stability control system activates, flashes on the instrument cluster. This also occurs when traction control is activated. A noise may be heard or vibration may be felt in the brake pedal. This is normal. Continue to steer the vehicle in the intended direction.

If there is a problem detected with StabiliTrak, comes on in the instrument cluster and stays on. The vehicle is safe to drive but the system is not operational. Driving should be adjusted accordingly.

If comes on and stays on, reset the system:

1. Stop the vehicle.
2. Turn the engine off and wait 15 seconds.
3. Start the engine.

If still comes on and stays on, see your dealer for service.

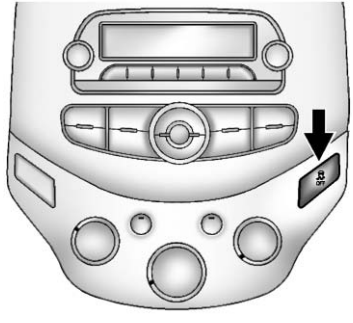

TCS/StabiliTrak Button

The TCS/StabiliTrak button is on the center stack.

StabiliTrak Off Light

StabiliTrak can be turned off if needed by pressing and holding the button until and come on in the instrument cluster. When StabiliTrak is turned off, the system will not assist with directional control of the vehicle or limit wheel spin. TCS will also be turned off. Driving should be adjusted accordingly.

Press and release the button again to turn both systems back on.

If cruise control is being used when StabiliTrak activates, cruise control will automatically disengage. Press the appropriate cruise control button to reengage when road conditions allow. See *Cruise Control on page 9-30*.

Cruise Control

For vehicles with cruise control, the vehicle can maintain a speed of about 40 km/h (25 mph) or more without keeping your foot on the accelerator. Cruise control does not work at speeds below 40 km/h (25 mph).

If the brakes are applied, the cruise control disengages.

If the vehicle's Traction Control System (TCS) or StabiliTrak system begins to limit wheel spin while using cruise control, the cruise control will automatically disengage. See *Traction Control System (TCS) on page 9-27* or *StabiliTrak® System on page 9-28*. When road conditions allow you to safely use it again, the cruise control can be turned back on.

⚠ WARNING

Cruise control can be dangerous where you cannot drive safely at a steady speed. So, do not use the cruise control on winding roads or in heavy traffic.

Cruise control can be dangerous on slippery roads. On such roads, fast changes in tire traction can cause excessive wheel slip, and you could lose control. Do not use cruise control on slippery roads.

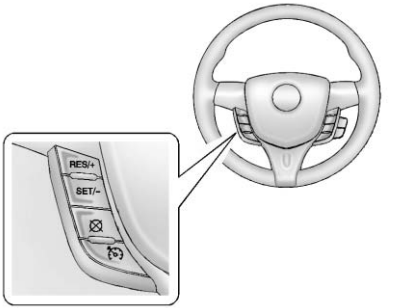

(On/Off): Press to turn the cruise control system on and off. A white cruise control indicator light turns on when in use.

RES/+ (Resume/Accelerate): Press briefly to make the vehicle resume to a previously set speed or to increase vehicle speed if the cruise control is already activated.

SET/− (Set/Coast): Press to set the speed and activate cruise control, or to decrease vehicle speed if the cruise control is already activated.

⊗ **(Cancel):** Press to disengage cruise control without erasing the set speed from memory.

Setting Cruise Control

If the cruise button is on when not in use, it could get bumped and go into cruise when not desired. Keep the cruise control button off when cruise is not being used.

The cruise control light on the instrument panel cluster turns green after the cruise control has been set to the desired speed.

1. Press .
2. Get up to the desired speed.
3. Press and release the SET/− button.
4. Remove foot from the accelerator.

Resuming a Set Speed

If the cruise control is set at a desired speed and then the brakes are applied, the cruise control is disengaged without erasing the set speed from memory.

To begin using cruise control again, press the RES/+ button briefly once the vehicle speed is 40 km/h (25 mph) or more. The vehicle returns to the previous set speed and stays there.

Increasing Speed While Using Cruise Control

If the cruise control system is already activated:

- Press and hold the RES/+ button on the steering wheel until the desired speed is reached, then release it.
- To increase vehicle speed in small amounts, press the RES/+ button briefly. Each time this is done, the vehicle goes about 1.6 km/h (1 mph) faster.

Reducing Speed While Using Cruise Control

If the cruise control system is already activated:

- Press and hold the SET/− button on the steering wheel until the desired speed is reached, then release it.
- To slow down in small amounts, press the SET/− button on the steering wheel briefly. Each time this is done, the vehicle goes about 1.6 km/h (1 mph) slower.

Passing Another Vehicle While Using Cruise Control

Use the accelerator pedal to increase the vehicle's speed. When you take your foot off the pedal, the vehicle will slow down to the previous set cruise speed.

Using Cruise Control on Hills

How well cruise control works on hills depends on the vehicle speed, load, and the steepness of the hills. When going up steep hills, you

might have to step on the accelerator pedal to maintain the vehicle speed. When going downhill, you might have to brake or shift to a lower gear to maintain the vehicle speed. When the brakes are applied, cruise control is disengaged.

Ending Cruise Control

There are four ways to end cruise control:

- Step lightly on the brake pedal (manual and automatic transmissions).
- Press the clutch pedal to the floor (manual transmissions).
- Press ⊗ on the steering wheel.
- To turn off the cruise control, press on the steering wheel.

Erasing Speed Memory

The cruise control set speed is erased from memory by pressing or if the ignition is turned off.

Fuel

Use of the recommended fuel is an important part of the proper maintenance of this vehicle. To help keep the engine clean and maintain optimum vehicle performance, we recommend the use of gasoline advertised as TOP TIER Detergent Gasoline.

Look for the TOP TIER label on the fuel pump to ensure gasoline meets enhanced detergency standards developed by auto companies. A list of marketers providing TOP TIER Detergent Gasoline can be found at www.toptiergas.com. TOP TIER gasoline is only available in the U.S. and Canada.

TOP TIER™
Detergent Gasoline

CATEGORIE SUPERIÉURE™
Essences Détergentes

Recommended Fuel

Use regular unleaded gasoline with a posted octane rating of 87 or higher. If the octane rating is less than 87, an audible knocking noise, commonly referred to as spark knock, might be heard when driving. If this occurs, use a gasoline rated at 87 octane or higher as soon as possible. If heavy knocking is heard when using gasoline rated at 87 octane or higher, the engine needs service.

Gasoline Specifications

At a minimum, gasoline should meet ASTM specification D 4814. Some gasolines contain an octane-enhancing additive called methylcyclopentadienyl manganese tricarbonyl (MMT). We recommend against the use of gasolines containing MMT. See *Fuel Additives on page 9-33*.

California Fuel Requirements

If the vehicle is certified to meet California Emissions Standards, it is designed to operate on fuels that meet California specifications. See the underhood emission control label. If this fuel is not available in states adopting California Emissions Standards, the vehicle will operate satisfactorily on fuels meeting federal specifications, but emission control system performance might be affected. The malfunction indicator lamp could turn on and the vehicle might fail a smog-check test. See *Malfunction Indicator Lamp on page 5-11*. If this occurs, return to your authorized dealer for diagnosis. If it is determined that the condition is caused by the type of fuel used, repairs might not be covered by the vehicle warranty.

Fuels in Foreign Countries

Never use leaded gasoline or any other fuel not recommended in the previous text on fuel. Costly repairs caused by use of improper fuel would not be covered by the vehicle warranty.

To check the fuel availability, ask an auto club, or contact a major oil company that does business in the country where you will be driving.

Fuel Additives

To provide cleaner air, all gasolines in the United States are now required to contain additives that help prevent engine and fuel system deposits from forming, allowing the emission control system to work properly. In most cases, nothing should have to be added to the fuel. However, some gasolines contain only the minimum amount of additive required to meet U.S. Environmental Protection Agency regulations. To help keep fuel injectors and intake valves clean and avoid problems due to dirty injectors or valves, look for gasoline that is advertised as TOP TIER Detergent Gasoline. Look for the TOP TIER label on the fuel pump to ensure gasoline meets enhanced detergency standards developed by the auto companies. A list of marketers providing TOP TIER Detergent Gasoline can be found at www.toptiergas.com.

For customers who do not use TOP TIER Detergent Gasoline regularly, one bottle of GM Fuel System Treatment PLUS, added to the fuel tank at every engine oil change, can help clean deposits from fuel injectors and intake valves. GM Fuel System Treatment PLUS is the only

gasoline additive recommended by General Motors. It is available at your dealer.

Gasolines containing oxygenates, such as ethers and ethanol, and reformulated gasolines might be available in your area. We recommend that you use these gasolines, if they comply with the specifications described earlier. However, E85 (85% ethanol) and other fuels containing more than 15% ethanol must not be used in vehicles that were not designed for those fuels.

Notice: **This vehicle was not designed for fuel that contains methanol. Do not use fuel containing methanol. It can corrode metal parts in the fuel system and also damage plastic and rubber parts. That damage would not be covered under the vehicle warranty.**

Some gasolines that are not reformulated for low emissions can contain an octane-enhancing additive called methylcyclopentadienyl manganese tricarbonyl (MMT); ask the attendant where you buy gasoline whether the fuel contains MMT. We recommend against the use of such gasolines. Fuels containing MMT can reduce spark plug life and affect emission control system performance. The malfunction indicator lamp might turn on. If this occurs, return to your dealer for service.

Filling the Tank

⚠ WARNING

Fuel vapors and fuel fires burn violently and can cause injury or death.

- To help avoid injuries to you and others, read and follow all the instructions on the fuel pump island.
- Turn off the engine when refueling.

(Continued)

WARNING (Continued)

- Keep sparks, flames, and smoking materials away from fuel.
- Do not leave the fuel pump unattended.
- Do not reenter the vehicle while pumping fuel.
- Keep children away from the fuel pump and never let children pump fuel.
- Fuel can spray out if the fuel cap is opened too quickly. This spray can happen if the tank is nearly full, and is more likely in hot weather. Open the fuel cap slowly and wait for any hiss noise to stop then unscrew the cap all the way

The tethered fuel cap is behind a hinged fuel door on the passenger side of the vehicle. To open the fuel filler door, lift the fuel door release lever on the floor, left front side of the driver seat. The fuel door is unlocked when the vehicle is unlocked. Locking the vehicle locks the fuel door.

To remove the fuel cap, turn it slowly counterclockwise.

Be careful not to spill fuel. Do not top off or overfill the tank and wait a few seconds after you have finished pumping before removing the nozzle. Clean fuel from painted surfaces as soon as possible. See *Exterior Care on page 10-68*.

When replacing the fuel cap, turn it clockwise until it clicks. Make sure the cap is fully installed. The diagnostic system can determine if the fuel cap has been left off or improperly installed. This would allow fuel to evaporate into the atmosphere. See *Malfunction Indicator Lamp on page 5-11*.

Push the fuel door closed until it latches.

⚠ WARNING

If a fire starts while you are refueling, do not remove the nozzle. Shut off the flow of fuel by shutting off the pump or by notifying the station attendant. Leave the area immediately.

Notice: **If a new fuel cap is needed, be sure to get the right type of cap from your dealer. The wrong type of fuel cap might not fit properly, might cause the malfunction indicator lamp to light, and could damage the fuel tank and emissions system. See *Malfunction Indicator Lamp on page 5-11*.**

Filling a Portable Fuel Container

⚠ WARNING

Filling a portable fuel container while it is in the vehicle can cause fuel vapors that can ignite either by static electricity or other means. You or others could be badly burned and the vehicle could be damaged. Always:

- Use approved fuel containers.

(Continued)

WARNING (Continued)

- Remove container from vehicle, trunk, or pickup bed before filling.
- Place container on the ground.
- Place the nozzle inside the fill opening of the container before dispensing fuel, and keep it in contact with the fill opening until filling is complete.
- Do not smoke while pumping fuel.

Towing

General Towing Information

The vehicle is neither designed nor intended to tow a trailer.

Conversions and Add-Ons

Add-On Electrical Equipment

Notice: **Some electrical equipment can damage the vehicle or cause components to not work and would not be covered by the warranty. Always check with your dealer before adding electrical equipment.**

Add-on equipment can drain the vehicle's 12-volt battery, even if the vehicle is not operating.

The vehicle has an airbag system. Before attempting to add anything electrical to the vehicle, see *Servicing the Airbag-Equipped Vehicle on page 3-28* and *Adding Equipment to the Airbag-Equipped Vehicle on page 3-28*.

✍ NOTES

Vehicle Care

General Information
General Information 10-2
California Proposition 65 Warning 10-2
California Perchlorate Materials Requirements 10-2
Accessories and Modifications 10-2

Vehicle Checks
Doing Your Own Service Work 10-3
Hood 10-4
Engine Compartment Overview 10-6
Engine Oil 10-7
Engine Oil Life System 10-9
Automatic Transmission Fluid 10-10
Manual Transmission Fluid 10-10
Hydraulic Clutch 10-10
Engine Air Cleaner/Filter 10-11
Cooling System 10-12
Engine Coolant 10-13
Engine Overheating 10-16
Washer Fluid 10-17
Brakes 10-18
Brake Fluid 10-19
Battery 10-20
Starter Switch Check 10-21
Automatic Transmission Shift Lock Control Function Check 10-21
Ignition Transmission Lock Check 10-21
Park Brake and P (Park) Mechanism Check 10-22
Wiper Blade Replacement 10-22

Headlamp Aiming
Headlamp Aiming 10-23

Bulb Replacement
Bulb Replacement 10-24
Halogen Bulbs 10-24
Headlamps, Front Turn Signal and Parking Lamps 10-24
Taillamps, Turn Signal, Stoplamps, and Back-Up Lamps 10-25
License Plate Lamp 10-26
Replacement Bulbs 10-26

Electrical System
Electrical System Overload 10-27
Fuses and Circuit Breakers 10-27
Engine Compartment Fuse Block 10-28
Instrument Panel Fuse Block 10-32

Wheels and Tires
Tires 10-34
All-Season Tires 10-35
Winter Tires 10-36
Summer Tires 10-36
Tire Sidewall Labeling 10-36
Tire Designations 10-38
Tire Terminology and Definitions 10-38
Tire Pressure 10-41
Tire Pressure Monitor System 10-42
Tire Pressure Monitor Operation 10-43
Tire Inspection 10-46
Tire Rotation 10-46
When It Is Time for New Tires 10-48
Buying New Tires 10-48

Different Size Tires and Wheels 10-50
Uniform Tire Quality Grading 10-51
Wheel Alignment and Tire Balance 10-52
Wheel Replacement 10-52
Tire Chains 10-53
If a Tire Goes Flat 10-53
Tire Sealant and Compressor Kit 10-55
Storing the Tire Sealant and Compressor Kit 10-62

Jump Starting
Jump Starting 10-62

Towing
Towing the Vehicle 10-65
Recreational Vehicle Towing 10-65

Appearance Care
Exterior Care 10-68
Interior Care 10-71
Floor Mats 10-74

General Information

For service and parts needs, visit your dealer. You will receive genuine GM parts and GM-trained and supported service people.

Genuine GM parts have one of these marks:

California Proposition 65 Warning

Most motor vehicles, including this one, contain and/or emit chemicals known to the State of California to cause cancer and birth defects or other reproductive harm. Engine exhaust, many parts and systems, many fluids, and some component wear by-products contain and/or emit these chemicals.

California Perchlorate Materials Requirements

Certain types of automotive applications, such as airbag initiators, safety belt pretensioners, and lithium batteries contained in Remote Keyless Entry transmitters, may contain perchlorate materials. Special handling may be necessary. For additional information, see www.dtsc.ca.gov/hazardouswaste/perchlorate.

Accessories and Modifications

Adding non-dealer accessories or making modifications to the vehicle can affect vehicle performance and safety, including such things as airbags, braking, stability, ride and

handling, emissions systems, aerodynamics, durability, and electronic systems like antilock brakes, traction control, and stability control. These accessories or modifications could even cause malfunction or damage not covered by the vehicle warranty.

Damage to vehicle components resulting from modifications or the installation or use of non-GM certified parts, including control module or software modifications, is not covered under the terms of the vehicle warranty and may affect remaining warranty coverage for affected parts.

GM Accessories are designed to complement and function with other systems on the vehicle. See your dealer to accessorize the vehicle using genuine GM Accessories installed by a dealer technician.

Also, see *Adding Equipment to the Airbag-Equipped Vehicle on page 3-28*.

Vehicle Checks

Doing Your Own Service Work

⚠ WARNING

It can be dangerous to work on your vehicle if you do not have the proper knowledge, service manual, tools, or parts. Always follow owner manual procedures and consult the service manual for your vehicle before doing any service work.

If doing some of your own service work, use the proper service manual. It tells you much more about how to service the vehicle than this manual can.

This vehicle has an airbag system. Before attempting to do your own service work, see *Airbag System Check on page 3-29*.

Keep a record with all parts receipts and list the mileage and the date of any service work performed.

Notice: **Even small amounts of contamination can cause damage to vehicle systems. Do not allow contaminants to contact the fluids, reservoir caps, or dipsticks.**

Hood

To open the hood:

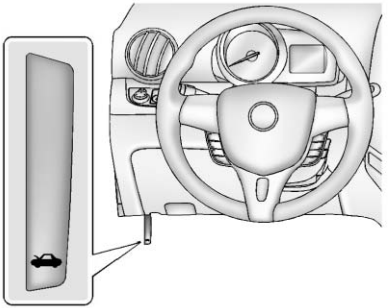

1. Pull the hood release handle inside the vehicle. It is on the lower left side of the instrument panel.

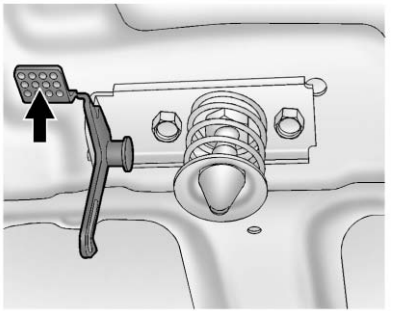

2. Go to the front of the vehicle and push the secondary hood release lever up.

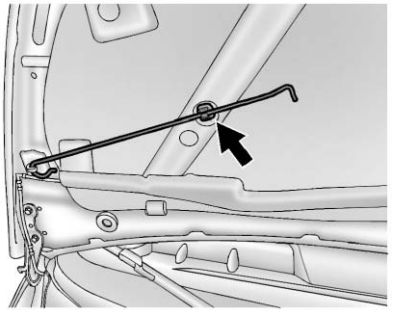

3. Lift the hood and release the hood prop from the prop retainer, which is under the hood.

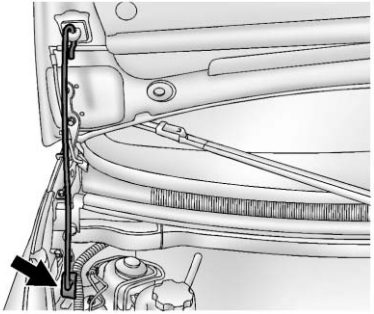

4. Securely place the hood prop into the hood prop holder, at the rear passenger side of the engine compartment.

To close the hood:

1. Before closing the hood, be sure all filler caps are on properly. Then, lift the hood to relieve pressure on the hood prop. Remove the hood prop from the prop holder in the rear passenger side of the engine compartment and secure it to the retainer on the underside of the hood. The prop rod must click into place when returning it to the retainer to prevent hood damage.
2. Lower the hood 30 cm (12 in) above the vehicle and release it so it fully latches. Check to make sure the hood is closed and repeat the process if necessary.

Engine Compartment Overview

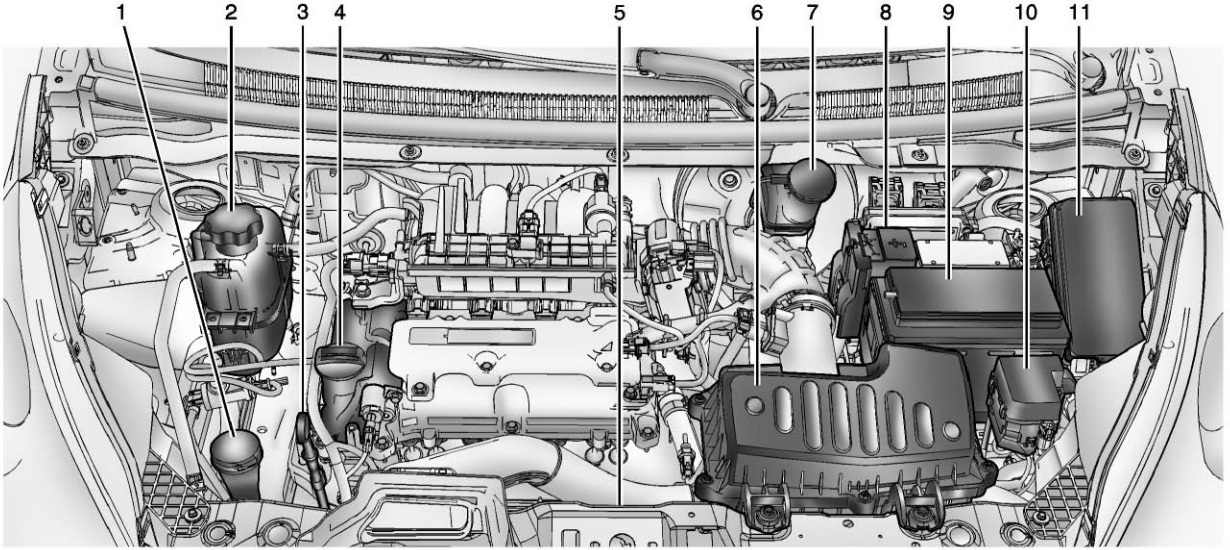

1. Windshield Washer Fluid Reservoir. See *Washer Fluid on page 10-17*.
2. Engine Coolant Surge Tank and Pressure Cap. See *Cooling System on page 10-12*.
3. Engine Oil Dipstick. See *Engine Oil on page 10-7*.
4. Engine Oil Fill Cap. See *Engine Oil on page 10-7*.
5. Engine Cooling Fan (Out of View). See *Cooling System on page 10-12*.
6. *Engine Air Cleaner/Filter on page 10-11*.
7. Brake/Clutch Fluid Reservoir. See *Brakes on page 10-18* and *Hydraulic Clutch on page 10-10*.
8. Positive (+) Battery Terminal. See *Battery on page 10-20*.
9. *Battery on page 10-20*.
10. Auxiliary Fuse Block. See *Engine Compartment Fuse Block on page 10-28*.
11. *Engine Compartment Fuse Block on page 10-28*.

Engine Oil

To ensure proper engine performance and long life, careful attention must be paid to engine oil. Following these simple, but important steps will help protect your investment:

- Always use engine oil approved to the proper specification and of the proper viscosity grade. See “Selecting the Right Engine Oil” in this section.
- Check the engine oil level regularly and maintain the proper oil level. See “Checking Engine Oil” and “When to Add Engine Oil” in this section.
- Change the engine oil at the appropriate time. See *Engine Oil Life System on page 10-9*.
- Always dispose of engine oil properly. See “What to Do with Used Oil” in this section.

Checking Engine Oil

It is a good idea to check the engine oil level at each fuel fill. In order to get an accurate reading, the vehicle must be on level ground. The engine oil dipstick handle is a loop. See *Engine Compartment Overview on page 10-6* for the location of the engine oil dipstick.

Obtaining an accurate oil level reading is essential:

1. If the engine has been running recently, turn off the engine and allow several minutes for the oil to drain back into the oil pan. Checking the oil level too soon after engine shutoff will not provide an accurate oil level reading.

⚠ WARNING

The engine oil dipstick handle may be hot; it could burn you. Use a towel or glove to touch the dipstick handle.

2. Pull out the dipstick and clean it with a paper towel or cloth, then push it back in all the way. Remove it again, keeping the tip down, and check the level.

When to Add Engine Oil

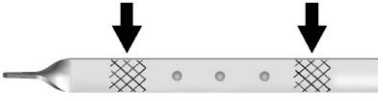

If the oil is below the cross-hatched area at the tip of the dipstick, add 1 L (1 qt) of the recommended oil and then recheck the level. See "Selecting the Right Engine Oil " in this section for an explanation of what kind of oil to use. For engine oil crankcase capacity, see *Capacities and Specifications on page 12-2*.

Notice: **Do not add too much oil. Oil levels above or below the acceptable operating range shown on the dipstick are harmful to the engine. If you find that you have an oil level above the operating range, i.e., the engine has so much oil that the oil level gets above the cross-hatched area that shows the proper operating range, the engine could be damaged. You should drain out the excess oil or limit driving of the vehicle and seek a service professional to remove the excess amount of oil.**

See *Engine Compartment Overview on page 10-6* for the location of the engine oil fill cap.

Add enough oil to put the level somewhere in the proper operating range, between the cross-hatched areas. Push the dipstick all the way back in when through.

Selecting the Right Engine Oil

Selecting the right engine oil depends on both the proper oil specification and viscosity grade. See *Recommended Fluids and Lubricants on page 11-12*.

Specification

Use and ask for licensed engine oils with the dexos1® approved certification mark. Engine oils meeting the requirements for the vehicle should have the dexos1 approved certification mark. This certification mark indicates that the oil has been approved to the dexos1 specification.

Notice: **Failure to use the recommended engine oil or equivalent can result in engine damage not covered by the vehicle warranty. Check with your dealer or service provider on whether the oil is approved to the dexos1 specification.**

Viscosity Grade

SAE 5W-20 is the best viscosity grade for the vehicle. Do not use other viscosity grade oils such as SAE 10W-30, 10W-40, or 20W-50.

Cold Temperature Operation: In an area of extreme cold, where the temperature falls below −29°C (−20°F), an SAE 0W-30 oil may be used. An oil of this viscosity grade will provide easier cold starting for the engine at extremely low temperatures. When selecting an oil of the appropriate viscosity grade, always select an oil of the correct specification. See “Specification” earlier in this section for more information.

Engine Oil Additives/Engine Oil Flushes

Do not add anything to the oil. The recommended oils with the dexos specification and displaying the dexos certification mark are all that is needed for good performance and engine protection.

Engine oil system flushes are not recommended and could cause engine damage not covered by the vehicle warranty.

What to Do with Used Oil

Used engine oil contains certain elements that can be unhealthy for your skin and could even cause cancer. Do not let used oil stay on your skin for very long. Clean your skin and nails with soap and water, or a good hand cleaner. Wash or properly dispose of clothing or rags containing used engine oil. See the manufacturer's warnings about the use and disposal of oil products.

Used oil can be a threat to the environment. If you change your own oil, be sure to drain all the oil from the filter before disposal. Never dispose of oil by putting it in the trash or pouring it on the ground, into sewers, or into streams or bodies of water. Recycle it by taking it to a place that collects used oil.

Engine Oil Life System

When to Change Engine Oil

This vehicle has a computer system that indicates when to change the engine oil and filter. This is based on a combination of factors which include engine revolutions, engine temperature, and miles driven. Based on driving conditions, the mileage at which an oil change is indicated can vary considerably. For the oil life system to work properly, the system must be reset every time the oil is changed.

When the system has calculated that oil life has been diminished, it indicates that an oil change is necessary. A Code 82 (change engine oil soon) DIC message comes on. Change the oil as soon as possible within the next 1 000 km (600 mi). It is possible that, if driving under the best conditions, the oil life system might indicate that an oil change is not necessary for up to a year. The engine oil and filter must be changed at least once a year

and, at this time, the system must be reset. Your dealer has trained service people who will perform this work and reset the system. It is also important to check the oil regularly over the course of an oil drain interval and keep it at the proper level.

If the system is ever reset accidentally, the oil must be changed at 5 000 km (3,000 mi) since the last oil change. Remember to reset the oil life system whenever the oil is changed.

How to Reset the Engine Oil Life System

Reset the system whenever the engine oil is changed so that the system can calculate the next engine oil change. Always reset the engine oil life to 100% after every oil change. It will not reset itself. To reset the system:

1. Display Remaining Oil Life on the DIC.
2. Press and hold the SET/CLR button on the DIC for more than five seconds. The oil life will change to 100%.

If the Code 82 DIC message comes back on when the vehicle is started, the engine oil life system has not reset. Repeat the procedure.

Automatic Transmission Fluid

How to Check Automatic Transmission Fluid

It is not necessary to check the transmission fluid level.
A transmission fluid leak is the only reason for fluid loss. If a leak occurs, take the vehicle to your dealer and have it repaired as soon as possible.

The vehicle is not equipped with a transmission fluid level dipstick. There is a special procedure for checking and changing the transmission fluid. Because this procedure is difficult, this should be done at the dealer. Contact the dealer for additional information.

Change the fluid and filter at the intervals listed in *Maintenance Schedule on page 11-3*, and be sure to use the fluid listed in *Recommended Fluids and Lubricants on page 11-12*.

Manual Transmission Fluid

How to Check Manual Transmission Fluid

It is not necessary to check the manual transmission fluid level.
A transmission fluid leak is the only reason for fluid loss. If a leak occurs, take the vehicle to your dealer and have it repaired as soon as possible.

Hydraulic Clutch

For vehicles with a manual transmission, it is not necessary to regularly check brake/clutch fluid

unless there is a leak suspected. Adding fluid will not correct a leak. A fluid loss in this system could indicate a problem. Have the system inspected and repaired.

When to Check and What to Use

The brake/hydraulic clutch fluid reservoir cap has this symbol on it. The common brake/clutch fluid reservoir is filled with DOT 4 brake fluid as indicated on the reservoir cap. See *Engine Compartment Overview on page 10-6* for reservoir location.

How to Check and Add Fluid

Visually check the brake/clutch fluid reservoir to make sure the fluid level is at the MIN (minimum) line on the side of the reservoir. The brake/hydraulic clutch fluid system should be closed and sealed.

Do not remove the cap to check the fluid level or to top off the fluid level. Remove the cap only when necessary to add the proper fluid until the level reaches the MIN line.

Engine Air Cleaner/Filter

The engine air cleaner/filter is in the engine compartment on the driver side of the vehicle. See *Engine Compartment Overview on page 10-6* for more information on location.

When to Inspect the Engine Air Cleaner/Filter

Inspect the air cleaner/filter at the scheduled maintenance intervals. See *Maintenance Schedule on page 11-3*. If you are driving in dusty/dirty conditions, inspect the filter at each engine oil change.

How to Inspect the Engine Air Cleaner/Filter

To inspect the engine air cleaner/filter, remove the filter from the vehicle and lightly shake the filter to release loose dust and dirt. If the filter remains covered with dirt, a new filter is required.

To inspect or replace the air cleaner/filter:

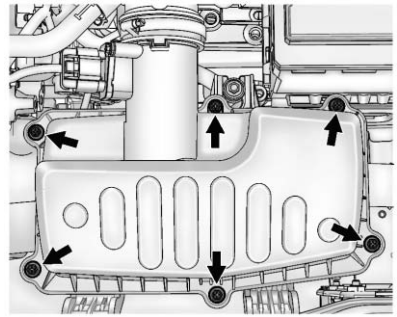

1. Remove the six screws and lift the cover out of the assembly.
2. Inspect or replace the engine air cleaner/filter.

3. Lower the cover and secure with the six screws.

See *Maintenance Schedule on page 11-3* for replacement intervals.

⚠ WARNING

Operating the engine with the air cleaner/filter off can cause you or others to be burned. The air cleaner not only cleans the air; it helps to stop flames if the engine backfires. Use caution when working on the engine and do not drive with the air cleaner/filter off.

Notice: **If the air cleaner/filter is off, dirt can easily get into the engine, which could damage it. Always have the air cleaner/filter in place when you are driving.**

Cooling System

The cooling system allows the engine to maintain the correct working temperature.

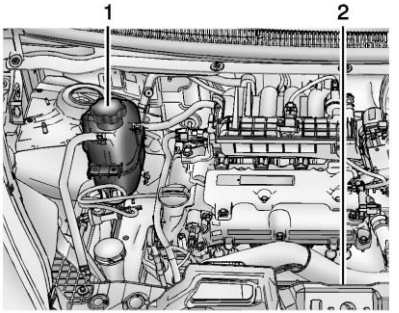

1. Engine Coolant Surge Tank and Pressure Cap
2. Engine Cooling Fan (Out of View)

⚠ WARNING

An electric engine cooling fan under the hood can start up even when the engine is not running and can cause injury. Keep hands, clothing, and tools away from any underhood electric fan.

⚠ WARNING

Heater and radiator hoses, and other engine parts, can be very hot. Do not touch them. If you do, you can be burned.

Do not run the engine if there is a leak. If you run the engine, it could lose all coolant. That could cause an engine fire, and you could be burned. Get any leak fixed before you drive the vehicle.

Notice: **Using coolant other than DEX-COOL® can cause premature engine, heater core, or radiator corrosion. In addition, the engine coolant may require changing sooner, at the first maintenance service after each 30,000 miles (50 000 km) or 24 months, whichever occurs first. Any repairs would not be covered by the vehicle warranty. Always use DEX-COOL® (silicate-free) coolant in the vehicle.**

Engine Coolant

The cooling system in the vehicle is filled with DEX-COOL engine coolant. This coolant is designed to remain in the vehicle for 5 years or 240 000 km (150,000 mi), whichever occurs first.

The following explains the cooling system and how to check and add coolant when it is low. If there is a problem with engine overheating, see *Engine Overheating on page 10-16*.

What to Use

⚠ WARNING

Adding only plain water or some other liquid to the cooling system can be dangerous. Plain water and other liquids, can boil before the proper coolant mixture will. The coolant warning system is set for the proper coolant mixture. With plain water or the wrong

(Continued)

WARNING (Continued)

mixture, the engine could get too hot but you would not get the overheat warning. The engine could catch fire and you or others could be burned. Use a 50/50 mixture of clean, drinkable water and DEX-COOL coolant.

Use a 50/50 mixture of clean drinkable water and DEX-COOL coolant. This mixture:

- Gives freezing protection down to −37°C (−34°F), outside temperature.
- Gives boiling protection up to 129°C (265°F), engine temperature.
- Protects against rust and corrosion.
- Will not damage aluminum parts.
- Helps keep the proper engine temperature.

Notice: **If improper coolant mixture, inhibitors, or additives are used in the vehicle cooling system, the engine could overheat and be damaged. Too much water in the mixture can freeze and crack engine cooling parts. The repairs would not be covered by the warranty. Use only the proper mixture of engine coolant for the cooling system. See *Recommended Fluids and Lubricants on page 11-12*.**

Never dispose of engine coolant by putting it in the trash, pouring it on the ground, or into sewers, streams, or bodies of water. Have the coolant changed by an authorized service center, familiar with legal requirements regarding used coolant disposal. This will help protect the environment and your health.

Checking Coolant

The vehicle must be on a level surface when checking the coolant level.

It is normal to see coolant moving in the upper coolant hose return line when the engine is running.

Check to see if coolant is visible in the coolant surge tank. If the coolant inside the coolant surge tank is boiling, do not do anything else until it cools down.

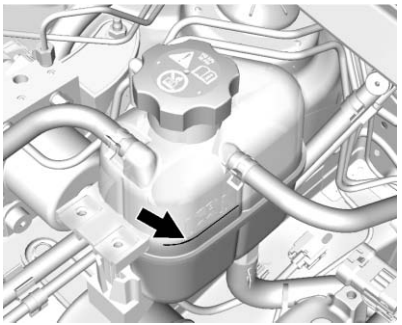

If coolant is visible but the coolant level is not at or above the mark pointed to, add a 50/50 mixture of clean drinkable water and DEX-COOL coolant.

Be sure the cooling system is cool before this is done.

If no coolant is visible in the coolant surge tank, add coolant as follows:

How to Add Coolant to the Coolant Surge Tank

Notice: **This vehicle has a specific coolant fill procedure. Failure to follow this procedure could cause the engine to overheat and be severely damaged.**

If no problem is found, check to see if coolant is visible in the coolant surge tank. If coolant is visible but the coolant level is not at the indicated level mark, add a 50/50 mixture of clean, drinkable water and DEX-COOL coolant at the coolant surge tank, but be sure the cooling system, including the coolant surge tank pressure cap, is cool before you do it.

⚠ WARNING

Steam and scalding liquids from a hot cooling system can blow out and burn you badly. Never turn the cap when the cooling system, including the surge tank pressure cap, is hot. Wait for the cooling system and surge tank pressure cap to cool.

⚠ WARNING

Adding only plain water or some other liquid to the cooling system can be dangerous. Plain water and other liquids, can boil before the proper coolant mixture will. The coolant warning system is set for the proper coolant mixture. With plain water or the wrong mixture, the engine could get too hot but you would not get the overheat warning. The engine

(Continued)

WARNING (Continued)

could catch fire and you or others could be burned. Use a 50/50 mixture of clean, drinkable water and DEX-COOL coolant.

Notice: **In cold weather, water can freeze and crack the engine, radiator, heater core and other parts. Use the recommended coolant and the proper coolant mixture.**

⚠ WARNING

You can be burned if you spill coolant on hot engine parts. Coolant contains ethylene glycol and it will burn if the engine parts are hot enough. Do not spill coolant on a hot engine.

1. Remove the coolant surge tank pressure cap when the cooling system, including the coolant surge tank pressure cap and upper radiator hose, is no longer hot.

   Turn the pressure cap slowly counterclockwise about one-quarter of a turn. If you hear a hiss, wait for that to stop. This will allow any pressure still left to be vented out the discharge hose.
2. Keep turning the pressure cap slowly and remove it.
3. Fill the coolant surge tank with the proper DEX-COOL coolant mixture to the indicated level mark.
4. With the coolant surge tank pressure cap off, start the engine and let it run until you can feel the upper radiator hose getting hot. Watch out for the engine cooling fan.

   By this time, the coolant level inside the coolant surge tank may be lower. If the level is lower, add more of the proper DEX-COOL coolant mixture to the coolant surge tank until the level reaches the indicated level mark.
5. Reinstall the pressure cap tightly.

Notice: **If the pressure cap is not tightly installed, coolant loss and possible engine damage may occur. Be sure the cap is properly and tightly secured.**

Check the level in the coolant surge tank when the cooling system has cooled down. If the coolant is not at the proper level, repeat Steps 1–3 and reinstall the pressure cap.

If the coolant still is not at the proper level when the system cools down again, see your dealer.

Engine Overheating

The vehicle has an indicator to warn of the engine overheating. See *Engine Coolant Temperature Warning Light on page 5-17*.

If the decision is made not to lift the hood when this warning appears, get service help right away. See *Roadside Assistance Program on page 13-5*.

If the decision is made to lift the hood, make sure the vehicle is parked on a level surface.

Then check to see if the engine cooling fan is running. If the engine is overheating, the fan should be running. If it is not, do not continue to run the engine. Have the vehicle serviced.

Notice: **Running the engine without coolant may cause damage or a fire. Vehicle damage would not be covered by the warranty.**

If Steam Is Coming from the Engine Compartment

⚠ WARNING

Steam from an overheated engine can burn you badly, even if you just open the hood. Stay away from the engine if you see or hear steam coming from it. Just turn it off and get everyone away from the vehicle until it cools down. Wait until there is no sign of steam or coolant before you open the hood.

If you keep driving when the engine is overheated, the liquids in it can catch fire. You or others could be badly burned. Stop the

(Continued)

WARNING (Continued)

engine if it overheats, and get out of the vehicle until the engine is cool.

If No Steam Is Coming from the Engine Compartment

If an engine overheat warning is displayed but no steam can be seen or heard, the problem may not be too serious. Sometimes the engine can get a little too hot when the vehicle:

- Climbs a long hill on a hot day.
- Stops after high-speed driving.
- Idles for long periods in traffic.

If the overheat warning is displayed with no sign of steam:

1. Turn the air conditioning off.
2. Turn the heater on to the highest temperature and to the highest fan speed. Open the windows as necessary.

3. In heavy traffic, let the engine idle in N (Neutral) for an automatic transmission or Neutral for a manual transmission while stopped. If it is safe to do so, pull off the road, shift to P (Park) or N (Neutral) for an automatic transmission or Neutral for a manual transmission, and let the engine idle.

If the overheat warning no longer displays, the vehicle can be driven. Continue to drive the vehicle slowly for about 10 minutes. Keep a safe vehicle distance from the vehicle in front. If the warning does not come back on, continue to drive normally.

If the warning continues, pull over, stop, and park the vehicle right away.

If there is no sign of steam, idle the engine for three minutes while parked. If the warning is still displayed, turn off the engine until it cools down.

Washer Fluid

What to Use

When windshield washer fluid is needed, be sure to read the manufacturer's instructions before use. If operating the vehicle in an area where the temperature may fall below freezing, use a fluid that has sufficient protection against freezing.

Adding Washer Fluid

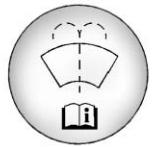

Open the cap with the washer symbol on it. Add washer fluid until the tank is full. See *Engine Compartment Overview on page 10-6* for reservoir location.

Notice

- **When using concentrated washer fluid, follow the manufacturer instructions for adding water.**
- **Do not mix water with ready-to-use washer fluid. Water can cause the solution to freeze and damage the washer fluid tank and other parts of the washer system.**
- **Fill the washer fluid tank only three-quarters full when it is very cold. This allows for fluid expansion if freezing occurs, which could damage the tank if it is completely full.**
- **Do not use engine coolant (antifreeze) in the windshield washer. It can damage the windshield washer system and paint.**

Brakes

This vehicle has disc brakes. Disc brake pads have built-in wear indicators that make a high-pitched warning sound when the brake pads are worn and new pads are needed. The sound can come and go or be heard all the time the vehicle is moving, except when applying the brake pedal firmly.

⚠ WARNING

The brake wear warning sound means that soon the brakes will not work well. That could lead to a crash. When the brake wear warning sound is heard, have the vehicle serviced.

Notice: **Continuing to drive with worn-out brake pads could result in costly brake repair.**

Some driving conditions or climates can cause a brake squeal when the brakes are first applied or lightly applied. This does not mean something is wrong with the brakes.

Properly torqued wheel nuts are necessary to help prevent brake pulsation. When tires are rotated, inspect brake pads for wear and evenly tighten wheel nuts in the proper sequence to torque specifications in *Capacities and Specifications on page 12-2*.

Brake linings should always be replaced as complete axle sets.

Brake Pedal Travel

See your dealer if the brake pedal does not return to normal height, or if there is a rapid increase in pedal travel. This could be a sign that brake service might be required.

Brake Adjustment

Every time the brakes are applied, with or without the vehicle moving, the brakes adjust for wear.

Replacing Brake System Parts

The braking system on a vehicle is complex. Its many parts have to be of top quality and work well together if the vehicle is to have really good braking. The vehicle was designed and tested with top-quality brake parts. When parts of the braking system are replaced, be sure to get new, approved replacement parts. If this is not done, the brakes might not work properly. For example, installing disc brake pads that are wrong for the vehicle, can change the balance between the front and rear brakes — for the worse. The braking performance expected can change in many other ways if the wrong replacement brake parts are installed.

Brake Fluid

The brake/clutch master cylinder reservoir is filled with DOT 4 brake fluid as indicated on the reservoir cap. See *Engine Compartment Overview on page 10-6* for the location of the reservoir.

There are only two reasons why the brake fluid level in the reservoir might go down:

- The brake fluid level goes down because of normal brake lining wear. When new linings are installed, the fluid level goes back up.
- A fluid leak in the brake/clutch hydraulic system can also cause a low fluid level. Have the brake/clutch hydraulic system fixed, since a leak means that sooner or later the brakes will not work well.

Do not top off the brake/clutch fluid. Adding fluid does not correct a leak. If fluid is added when the linings are worn, there will be too much fluid when new brake linings are installed. Add or remove fluid, as necessary, only when work is done on the brake/clutch hydraulic system.

⚠ WARNING

If too much brake fluid is added, it can spill on the engine and burn, if the engine is hot enough. You or others could be burned, and the vehicle could be damaged. Add brake fluid only when work is done on the brake/clutch hydraulic system.

Checking Brake Fluid

The brake/clutch fluid can be checked without taking off the cap by looking at the brake/clutch fluid reservoir.

The fluid level should be above MIN. If it is not, have the brake/clutch hydraulic system checked to see if there is a leak.

After work is done on the brake/clutch hydraulic system, make sure the level is above MIN but not over the MAX mark.

When the brake/clutch fluid falls to a low level, the brake warning light comes on. See *Brake System Warning Light on page 5-14*.

What to Add

Use only new DOT 4 brake fluid from a sealed container. It is recommended that the brake/clutch hydraulic system be flushed and refilled with new DOT 4 fluid at a

regular maintenance service every two years. See the Maintenance Schedule booklet and *Recommended Fluids and Lubricants on page 11-12*.

Always clean the brake/clutch fluid reservoir cap and the area around the cap before removing it. This helps keep dirt from entering the reservoir.

⚠ WARNING

With the wrong kind of fluid in the brake/clutch hydraulic system, the brakes might not work well. This could cause a crash. Always use the proper brake/clutch fluid.

Notice

- **Using the wrong fluid can badly damage brake/clutch hydraulic system parts. For example, just a few drops of mineral-based oil, such as engine oil, in the brake hydraulic system can damage brake hydraulic system parts so badly that they will have to be replaced. Do not let someone put in the wrong kind of fluid.**
- **If brake fluid is spilled on the vehicle's painted surfaces, the paint finish can be damaged. Be careful not to spill brake fluid on the vehicle. If you do, wash it off immediately.**

Battery

Refer to the replacement number shown on the original battery label when a new battery is needed. See *Engine Compartment Overview on page 10-6* for battery location.

⚠ WARNING

Battery posts, terminals, and related accessories contain lead and lead compounds, chemicals

(Continued)

WARNING (Continued)

known to the State of California to cause cancer and reproductive harm. Wash hands after handling.

Vehicle Storage

⚠ WARNING

Batteries have acid that can burn you and gas that can explode. You can be badly hurt if you are not careful. See *Jump Starting on page 10-62* for tips on working around a battery without getting hurt.

Infrequent Usage: Remove the black, negative (−) cable from the battery to keep the battery from running down.

Extended Storage: Remove the black, negative (−) cable from the battery or use a battery trickle charger.

Starter Switch Check

⚠ WARNING

When you are doing this inspection, the vehicle could move suddenly. If the vehicle moves, you or others could be injured.

1. Before starting this check, be sure there is enough room around the vehicle.
2. Firmly apply both the parking brake and the regular brake. See *Parking Brake on page 9-26*.

   Do not use the accelerator pedal, and be ready to turn off the engine immediately if it starts.
3. Try to start the engine in each gear. The vehicle should start only in P (Park) or N (Neutral).

   If the vehicle starts in any other position, contact your dealer for service.

Automatic Transmission Shift Lock Control Function Check

⚠ WARNING

When you are doing this inspection, the vehicle could move suddenly. If the vehicle moves, you or others could be injured.

1. Before starting this check, be sure there is enough room around the vehicle. It should be parked on a level surface.
2. Firmly apply the parking brake. See *Parking Brake on page 9-26*.

   Be ready to apply the regular brake immediately if the vehicle begins to move.
3. With the engine off, turn the ignition on, but do not start the engine. Without applying the regular brake, try to move the shift lever out of P (Park) with normal effort. If the shift lever moves out of P (Park), contact your dealer for service.

Ignition Transmission Lock Check

While parked, and with the parking brake set, try to turn the ignition to LOCK/OFF in each shift lever position.

- The ignition should turn to LOCK/OFF only when the shift lever is in P (Park).
- The ignition key should come out only in LOCK/OFF.

Contact your dealer if service is required.

Park Brake and P (Park) Mechanism Check

⚠ WARNING

When you are doing this check, the vehicle could begin to move. You or others could be injured and property could be damaged. Make sure there is room in front of the vehicle in case it begins to roll. Be ready to apply the regular brake at once should the vehicle begin to move.

Park on a fairly steep hill, with the vehicle facing downhill. Keeping your foot on the regular brake, set the parking brake.

- To check the parking brake's holding ability: With the engine running and the transmission in N (Neutral), slowly remove foot pressure from the regular brake pedal. Do this until the vehicle is held by the parking brake only.
- To check the P (Park) mechanism's holding ability: With the engine running, shift to P (Park). Then release the parking brake followed by the regular brake.

Contact your dealer if service is required.

Wiper Blade Replacement

Front Wiper Blade Replacement

Windshield wiper blades should be inspected for wear or cracking. See *Maintenance Schedule on page 11-3*.

Replacement blades come in different types and are removed in different ways. For proper windshield wiper blade length and type, see *Maintenance Replacement Parts on page 11-14*.

⚠ CAUTION

Allowing the wiper arm to touch the windshield when no wiper blade is installed could damage the windshield. Any damage that occurs would not be covered by your warranty. Do not allow the wiper arm to touch the windshield.

To replace the windshield wiper blade:

1. Pull the windshield wiper assembly away from the windshield.

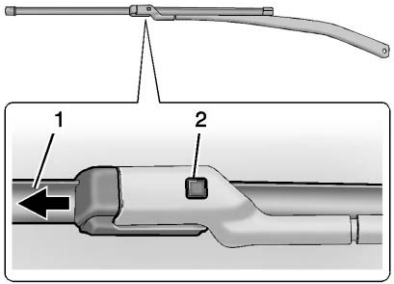

2. Press the button (2) in the middle of the wiper arm connector, and pull the wiper blade away from the arm connector (1).
3. Remove the wiper blade.
4. Reverse Steps 1–3 for wiper blade replacement.

Rear Wiper Blade Replacement

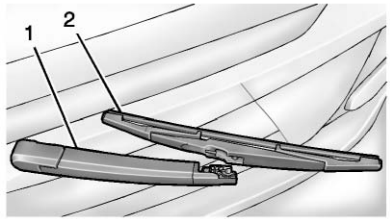

1. Pull the wiper arm (1) a short distance away from the glass.
2. Push the blade (2) away from the arm (1).
3. Once the blade pin disengages from the wiper arm, remove the wiper blade by sliding the blade off the arm.
4. Reverse the steps to install the new blade.

Headlamp Aiming

Headlamp aim has been preset and should need no further adjustment.

If the vehicle is damaged in a crash, the headlamp aim may be affected. If adjustment to the headlamps is necessary, see your dealer.

Bulb Replacement

For the proper type of replacement bulbs, see *Replacement Bulbs on page 10-26*.

For any bulb-changing procedure not listed in this section, contact your dealer.

Halogen Bulbs

⚠ WARNING

Halogen bulbs have pressurized gas inside and can burst if you drop or scratch the bulb. You or others could be injured. Be sure to read and follow the instructions on the bulb package.

Headlamps, Front Turn Signal and Parking Lamps

High/Low-Beam Headlamp

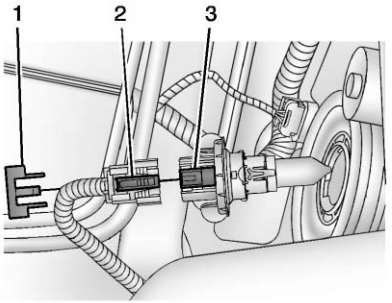

1. Connector Retaining Tab
2. Connector Release
3. Headlamp Bulb

To replace a headlamp bulb:

1. Open the hood. See *Hood on page 10-4*.
2. Remove the connector retaining tab (1).
3. Disconnect the wiring harness connector from the bulb (3) by pressing the connector release (2) and pulling straight back.
4. Remove the bulb (3) from the headlamp assembly by turning counterclockwise and pulling straight back.
5. Install the new bulb in the headlamp assembly by turning clockwise.
6. Install the wiring harness connector to the bulb. Be sure the connector release (2) locks into place.
7. Install the connector retaining tab (1).

Front Turn Signal/Parking Lamps

To replace a front turn signal bulb:

1. Open the hood. See *Hood on page 10-4*.

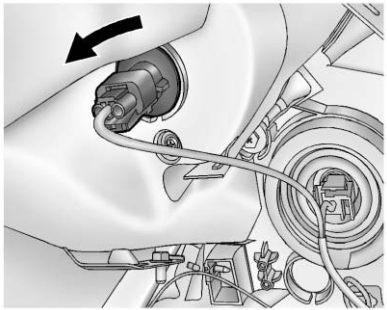

2. Turn the bulb socket counterclockwise and pull it out of the lamp housing.
3. Pull the bulb straight out of the bulb socket.
4. Install the new bulb into the socket by pressing it in.
5. Install the socket into the lamp housing by turning it clockwise.

Taillamps, Turn Signal, Stoplamps, and Back-Up Lamps

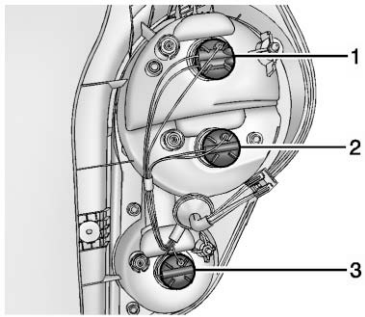

1. Stoplamp/Taillamp
2. Turn Signal Lamp
3. Back-up Lamp

To replace a taillamp, turn signal lamp, stoplamp, or back-up bulb:

1. Open the liftgate. See *Liftgate on page 2-7*.

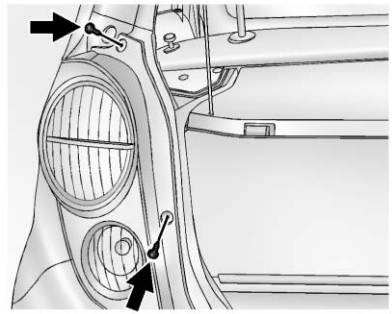

2. Remove the two screws and the lamp assembly.
3. Turn the bulb socket counterclockwise and remove the socket.
4. Press the bulb in and turn counterclockwise to remove it from the socket.

5. Press the new bulb in and turn clockwise to install the bulb into the socket.
6. Turn the bulb socket clockwise to reinstall.
7. Reinstall the lamp assembly and two screws.

License Plate Lamp

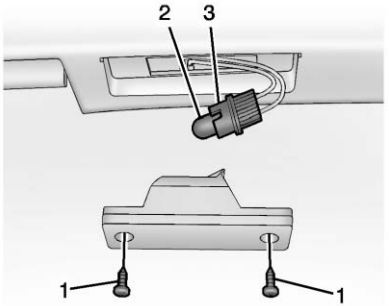

1. Attachment Screws
2. License Plate Bulb
3. Bulb Socket

To replace a license plate lamp bulb:

1. Remove the two screws (1) from the license plate lamp assembly.
2. Turn and pull the license plate lamp assembly down.
3. Turn the bulb socket (3) counterclockwise and pull it out of the lamp assembly.
4. Pull the bulb (2) straight out of the socket.
5. Push the new bulb into the socket.
6. Install the bulb socket (3) by turning clockwise into the license plate lamp assembly.
7. Replace the license plate lamp assembly by using the two screws to secure.

Replacement Bulbs

Exterior Lamp	Bulb Number
Back-Up Lamps	921
Front Turn Signal/ Parking Lamps	7444NA
High/Low-Beam Headlamp	H13
License Plate Lamp	W5W LL
Rear Turn Signal/ Taillamps	7443 LL
Stoplamp/ Taillamps	7443 LL

For replacement bulbs not listed here, contact your dealer.

Electrical System

Electrical System Overload

The vehicle has fuses and circuit breakers to protect against an electrical system overload.

When the current electrical load is too heavy, the circuit breaker opens and closes, protecting the circuit until the current load returns to normal or the problem is fixed. This greatly reduces the chance of circuit overload and fire caused by electrical problems.

Fuses and circuit breakers protect power devices in the vehicle.

Replace a bad fuse with a new one of the identical size and rating.

If there is a problem on the road and a fuse needs to be replaced, the same amperage fuse can be borrowed. Choose some feature of the vehicle that is not needed to use and replace it as soon as possible.

Headlamp Wiring

An electrical overload may cause the lamps to go on and off, or in some cases to remain off. Have the headlamp wiring checked right away if the lamps go on and off or remain off.

Windshield Wipers

If the wiper motor overheats due to heavy snow or ice, the windshield wipers will stop until the motor cools and will then restart.

Although the circuit is protected from electrical overload, overload due to heavy snow or ice may cause wiper linkage damage. Always clear ice and heavy snow from the windshield before using the windshield wipers.

If the overload is caused by an electrical problem and not snow or ice, be sure to get it fixed.

Fuses and Circuit Breakers

The wiring circuits in the vehicle are protected from short circuits by a combination of fuses, circuit breakers, and fusible thermal links. This greatly reduces the chance of fires caused by electrical problems.

Look at the silver-colored band inside the fuse. If the band is broken or melted, replace the fuse. Be sure you replace a bad fuse with a new one of the identical size and rating.

Fuses of the same amperage can be temporarily borrowed from another fuse location, if a fuse goes out. Replace the fuse as soon as you can.

Engine Compartment Fuse Block

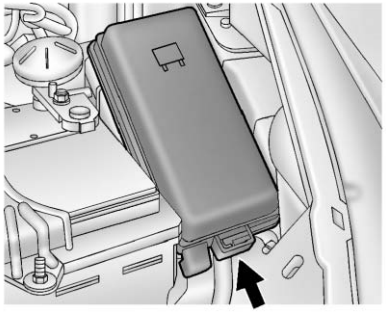

The engine compartment fuse block is on the driver side of the vehicle, near the battery.

Notice: **Spilling liquid on any electrical component on the vehicle may damage it. Always keep the covers on any electrical component.**

To access the fuses, press the tab at the front of the cover, and lift the cover.

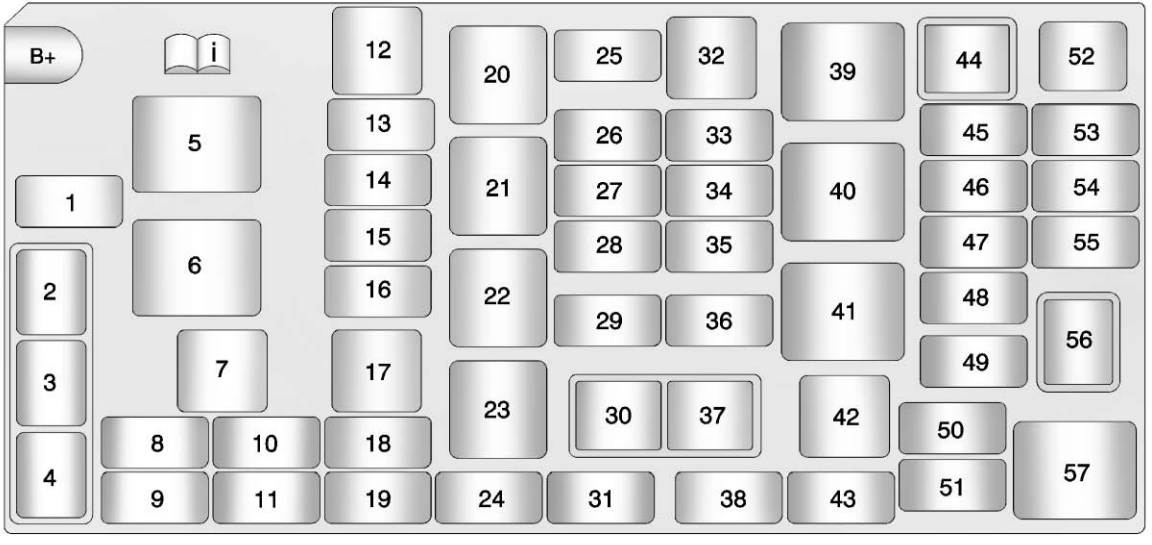
B+
i
1
2
3
4
5
6
7
8
9
10
11
12
13
14
15
16
17
18
19
20
21
22
23
24
25
26
27
28
29
30
31
32
33
34
35
36
37
38
39
40
41
42
43
44
45
46
47
48
49
50
51
52
53
54
55
56
57

The vehicle may not be equipped with all of the fuses, relays, and features shown.

Number	Usage
1	Windshield Washer
2	Rear Window Washer Relay
3	Windshield Washer Relay
4	Horn Relay
5	Fan High Relay
6	Fan Low Relay
7	Antilock Brake System 1
8	Horn
9	Not Used
10	Not Used
11	Spare Fuse
12	Fan High
13	Front Fog

Number	Usage
14	Headlamp High Left
15	Headlamp High Right
16	Fan Low
17	Antilock Brake System 2
18	Not Used
19	Spare Fuse
20	Front Fog Relay
21	Headlamp High Relay
22	Fuel Pump Relay
23	Not Used
24	Spare Fuse
25	Antilock Brake System 3
26	EMIS 2
27	Canister
28	Fuel Pump

Number	Usage
29	Front Wiper
30	Front Wiper Control Relay
31	Spare Fuse
32	Starter
33	Ignition
34	EMIS 1
35	Not Used
36	Not Used
37	Front Wiper Speed Relay
38	Not Used
39	Start Relay
40	Engine Relay
41	RUN/CRANK Relay
42	Interior Electrical Center
43	Not Used

Number	Usage
44	Air Conditioning Relay
45	Air Conditioning
46	ECM/TCM 1
47	ECM/TCM 2
48	Low Vacuum Switch
49	Automatic Occupant Sensing
50	Mirror Heater
51	Rear Defog
52	Fuse Puller
53	Not Used
54	Voltage Sensing
55	Rear Wiper
56	Rear Wiper Relay
57	Rear Defog Relay

Auxiliary Fuse Block

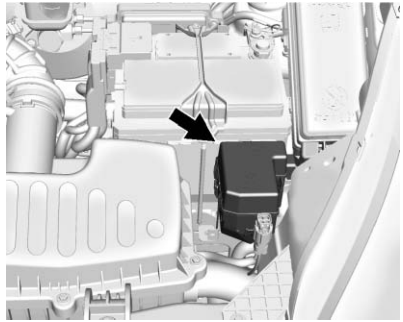

The auxiliary fuse block is located on the driver side of the vehicle, near the battery.

To access the fuses, press the tab at the side of the cover, and lift the cover.

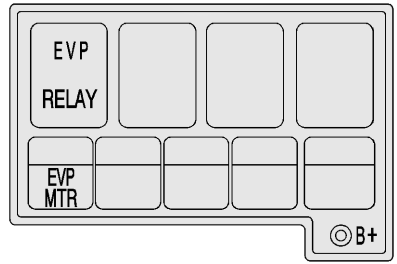

The vehicle may not be equipped with all of the fuses, relays, and features shown.

Number	Usage
EVP RELAY	EVP Relay
EVP MTR	EVP Motor

Instrument Panel Fuse Block

The instrument panel fuse block is on the underside of the driver side instrument panel.

Open the fuse panel door by pulling out at the top.

Remove the fuse panel door diagonally.

Notice: **Spilling liquid on any electrical component on the vehicle may damage it. Always keep the covers on any electrical component.**

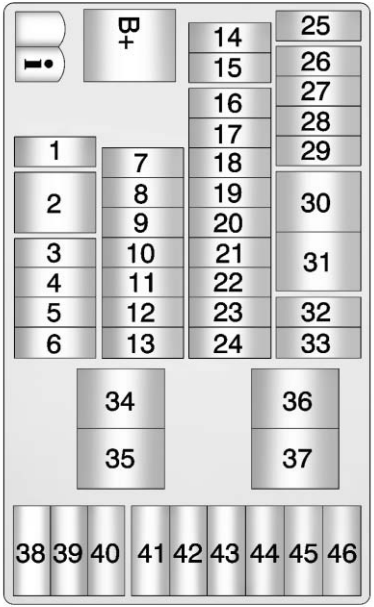

The vehicle may not be equipped with all of the fuses, relays, and features shown.

Number	Usage
1	Not Used
2	Not Used
3	Heater, Ventilation, and Air Conditioning Switch
4	Heated Seat
5	Not Used
6	Blower
7	Body Control Module 4
8	Body Control Module 5
9	Body Control Module 7
10	Instrument Cluster
11	Not Used
12	Air Bag Power

Number	Usage
13	Radio
14	Not Used
15	Rear Parking Assist
16	Body Control Module 1
17	Body Control Module 2
18	Body Control Module 3
19	Body Control Module 6
20	Body Control Module 8
21	Heater, Ventilation, and Air Conditioning
22	Data Link Connector

Number	Usage
23	Discrete Logic Ignition Sensor
24	Outside Rearview Mirror
25	Spare Fuse
26	Not Used
27	Not Used
28	Instrument Cluster
29	Air Bag Ignition
30	Rear Window
31	Front Window
32	Lighter/Auxiliary Power Outlet
33	Not Used
34	Run Relay
35	Logic Mode Relay

Number	Usage
36	Accessory/ Retained Accessory Power Relay
37	Not Used
38	Radio
39	Heater, Ventilation, and Air Conditioning
40	OnStar
41	Spare Fuse
42	Spare Fuse
43	Spare Fuse
44	Spare Fuse
45	Spare Fuse
46	Spare Fuse

Wheels and Tires

Tires

Every new GM vehicle has high-quality tires made by a leading tire manufacturer. See the warranty manual for information regarding the tire warranty and where to get service. For additional information refer to the tire manufacturer.

⚠ WARNING

- Poorly maintained and improperly used tires are dangerous.
- Overloading the tires can cause overheating as a result of too much flexing.

(Continued)

WARNING (Continued)

There could be a blowout and a serious crash. See *Vehicle Load Limits on page 9-9*.

- Underinflated tires pose the same danger as overloaded tires. The resulting crash could cause serious injury. Check all tires frequently to maintain the recommended pressure. Tire pressure should be checked when the tires are cold.
- Overinflated tires are more likely to be cut, punctured, or broken by a sudden impact— such as when hitting a pothole. Keep tires at the recommended pressure.

(Continued)

WARNING (Continued)

- Worn or old tires can cause a crash. If the tread is badly worn, replace them.
- Replace any tires that have been damaged by impacts with potholes, curbs, etc.
- Improperly repaired tires can cause a crash. Only the dealer or an authorized tire service center should repair, replace, dismount, and mount the tires.

(Continued)

WARNING (Continued)

- Do not spin the tires in excess of 56 km/h (35 mph) on slippery surfaces such as snow, mud, ice, etc. Excessive spinning may cause the tires to explode.

All-Season Tires

This vehicle may come with all-season tires. These tires are designed to provide good overall performance on most road surfaces and weather conditions. Original equipment tires designed to GM's specific tire performance criteria have a TPC specification code molded onto the sidewall. Original equipment all-season tires can be identified by the last two characters of this TPC code, which will be “MS.”

Consider installing winter tires on the vehicle if frequent driving on snow or ice-covered roads is expected. All-season tires provide adequate performance for most winter driving conditions, but they may not offer the same level of traction or performance as winter tires on snow or ice-covered roads. See *Winter Tires on page 10-36*.

Winter Tires

This vehicle was not, originally, equipped with winter tires. Winter tires are designed for increased traction on snow and ice-covered roads. Consider installing winter tires on the vehicle if frequent driving on snow or ice-covered roads is expected. See your dealer for details regarding winter tire availability and proper tire selection. Also, see *Buying New Tires on page 10-48*.

With winter tires, there may be decreased dry road traction, increased road noise, and shorter tread life. After changing to winter tires, be alert for changes in vehicle handling and braking.

If using winter tires:

- Use tires of the same brand and tread type on all four wheel positions.
- Use only radial ply tires of the same size, load range, and speed rating as the original equipment tires.

Winter tires with the same speed rating as the original equipment tires may not be available for H, V, W, Y, and ZR speed rated tires. If winter tires with a lower speed rating are chosen, never exceed the tire's maximum speed capability.

Summer Tires

This vehicle may come with high performance summer tires. These tires have a special tread and compound that are optimized for maximum dry and wet road performance. This special tread and compound will decrease performance in cold climates, and on ice and snow. We recommend installing winter tires on the vehicle if frequent driving in cold temperatures or on snow or ice covered roads is expected. See *Winter Tires on page 10-36*.

Tire Sidewall Labeling

Useful information about a tire is molded into its sidewall. The examples show a typical passenger tire sidewall.

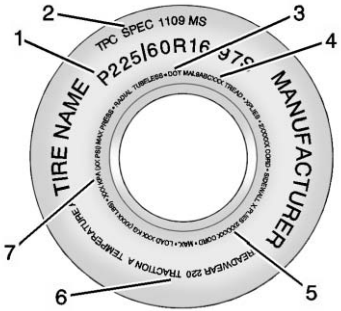

Passenger (P-Metric) Tire Example

(1) Tire Size: The tire size is a combination of letters and numbers used to define a particular tire's width, height, aspect ratio, construction type, and service description. See the “Tire Size” illustration later in this section for more detail.

(2) TPC Spec (Tire Performance Criteria Specification): Original equipment tires designed to GM's specific tire performance criteria have a TPC specification code molded onto the sidewall. GM's TPC specifications meet or exceed all federal safety guidelines.

(3) DOT (Department of Transportation): The Department of Transportation (DOT) code indicates that the tire is in compliance with the U.S. Department of Transportation Motor Vehicle Safety Standards.

DOT Tire Date of Manufacture: The last four digits of the TIN indicate the tire manufactured date. The first two digits represent the week (01-52) and the last two digits, the year. For example, the third week of the year 2010 would have a four-digit DOT date of 0310.

(4) Tire Identification Number (TIN): The letters and numbers following the DOT code are the Tire Identification Number (TIN). The TIN shows the manufacturer and plant code, tire size, and date the tire was manufactured. The TIN is molded onto both sides of the tire, although only one side may have the date of manufacture.

(5) Tire Ply Material: The type of cord and number of plies in the sidewall and under the tread.

(6) Uniform Tire Quality Grading (UTQG): Tire manufacturers are required to grade tires based on three performance factors: treadwear, traction, and temperature resistance. For more information see *Uniform Tire Quality Grading on page 10-51*.

(7) Maximum Cold Inflation Load Limit: Maximum load that can be carried and the maximum pressure needed to support that load.

Tire Designations

Tire Size

The following is an example of a typical passenger vehicle tire size.

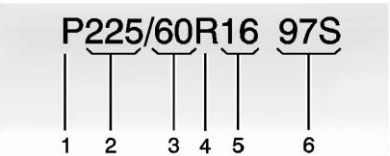

(1) Passenger (P-Metric) Tire: The United States version of a metric tire sizing system. The letter P as the first character in the tire size means a passenger vehicle tire engineered to standards set by the U.S. Tire and Rim Association.

(2) Tire Width: The three-digit number indicates the tire section width in millimeters from sidewall to sidewall.

(3) Aspect Ratio: A two-digit number that indicates the tire height-to-width measurements. For example, if the tire size aspect ratio is 60, as shown in item 3 of the illustration, it would mean that the tire's sidewall is 60 percent as high as it is wide.

(4) Construction Code: A letter code is used to indicate the type of ply construction in the tire. The letter R means radial ply construction; the letter D means diagonal or bias ply construction; and the letter B means belted-bias ply construction.

(5) Rim Diameter: Diameter of the wheel in inches.

(6) Service Description: These characters represent the load index and speed rating of the tire. The load index represents the load carrying capacity a tire is certified to carry. The speed rating is the maximum speed a tire is certified to carry a load.

Tire Terminology and Definitions

Air Pressure: The amount of air inside the tire pressing outward on each square inch of the tire. Air pressure is expressed in kPa (kilopascal) or psi (pounds per square inch).

Accessory Weight: The combined weight of optional accessories. Some examples of optional accessories are automatic transmission, power

steering, power brakes, power windows, power seats, and air conditioning.

Aspect Ratio: The relationship of a tire's height to its width.

Belt: A rubber coated layer of cords between the plies and the tread. Cords may be made from steel or other reinforcing materials.

Bead: The tire bead contains steel wires wrapped by steel cords that hold the tire onto the rim.

Bias Ply Tire: A pneumatic tire in which the plies are laid at alternate angles less than 90 degrees to the centerline of the tread.

Cold Tire Pressure: The amount of air pressure in a tire, measured in kPa (kilopascal) or psi (pounds per square inch) before a tire has built up heat from driving. See *Tire Pressure on page 10-41*.

Curb Weight: The weight of a motor vehicle with standard and optional equipment including the maximum capacity of fuel, oil, and coolant, but without passengers and cargo.

DOT Markings: A code molded into the sidewall of a tire signifying that the tire is in compliance with the U.S. Department of Transportation (DOT) Motor Vehicle Safety Standards. The DOT code includes the Tire Identification Number (TIN), an alphanumeric designator which can also identify the tire manufacturer, production plant, brand, and date of production.

GVWR: Gross Vehicle Weight Rating. See *Vehicle Load Limits on page 9-9*.

GAWR FRT: Gross Axle Weight Rating for the front axle. See *Vehicle Load Limits on page 9-9*.

GAWR RR: Gross Axle Weight Rating for the rear axle. See *Vehicle Load Limits on page 9-9*.

Intended Outboard Sidewall: The side of an asymmetrical tire, that must always face outward when mounted on a vehicle.

Kilopascal (kPa): The metric unit for air pressure.

Light Truck (LT-Metric) Tire: A tire used on light duty trucks and some multipurpose passenger vehicles.

Load Index: An assigned number ranging from 1 to 279 that corresponds to the load carrying capacity of a tire.

Maximum Inflation Pressure: The maximum air pressure to which a cold tire can be inflated. The maximum air pressure is molded onto the sidewall.

Maximum Load Rating: The load rating for a tire at the maximum permissible inflation pressure for that tire.

Maximum Loaded Vehicle Weight: The sum of curb weight, accessory weight, vehicle capacity weight, and production options weight.

Normal Occupant Weight: The number of occupants a vehicle is designed to seat multiplied by 68 kg (150 lb). See *Vehicle Load Limits on page 9-9*.

Occupant Distribution: Designated seating positions.

Outward Facing Sidewall: The side of an asymmetrical tire that has a particular side that faces outward when mounted on a vehicle. The side of the tire that contains a whitewall, bears white lettering, or bears manufacturer, brand, and/or model name molding that is higher or deeper than the same moldings on the other sidewall of the tire.

Passenger (P-Metric) Tire: A tire used on passenger cars and some light duty trucks and multipurpose vehicles.

Recommended Inflation Pressure: Vehicle manufacturer's recommended tire inflation pressure as shown on the tire placard. See *Tire Pressure on page 10-41* and *Vehicle Load Limits on page 9-9*.

Radial Ply Tire: A pneumatic tire in which the ply cords that extend to the beads are laid at 90 degrees to the centerline of the tread.

Rim: A metal support for a tire and upon which the tire beads are seated.

Sidewall: The portion of a tire between the tread and the bead.

Speed Rating: An alphanumeric code assigned to a tire indicating the maximum speed at which a tire can operate.

Traction: The friction between the tire and the road surface. The amount of grip provided.

Tread: The portion of a tire that comes into contact with the road.

Treadwear Indicators: Narrow bands, sometimes called wear bars, that show across the tread of a tire when only 1.6 mm (1/16 in) of tread remains. See *When It Is Time for New Tires on page 10-48*.

UTQGS (Uniform Tire Quality Grading Standards): A tire information system that provides consumers with ratings for a tire's traction, temperature, and treadwear. Ratings are determined by tire manufacturers using government testing procedures. The ratings are molded into the sidewall of the tire. See *Uniform Tire Quality Grading on page 10-51*.

Vehicle Capacity Weight: The number of designated seating positions multiplied by 68 kg (150 lb) plus the rated cargo load. See *Vehicle Load Limits on page 9-9*.

Vehicle Maximum Load on the Tire: Load on an individual tire due to curb weight, accessory weight, occupant weight, and cargo weight.

Vehicle Placard: A label permanently attached to a vehicle showing the vehicle capacity weight and the original equipment tire size and recommended inflation pressure. See “Tire and Loading Information Label” under *Vehicle Load Limits on page 9-9*.

Tire Pressure

Tires need the correct amount of air pressure to operate effectively.

Notice: **Neither tire underinflation nor overinflation is good. Underinflated tires, or tires that do not have enough air, can result in:**

- **Tire overloading and overheating which could lead to a blowout.**
- **Premature or irregular wear.**
- **Poor handling.**
- **Reduced fuel economy.**

Overinflated tires, or tires that have too much air, can result in:

- **Unusual wear.**
- **Poor handling.**
- **Rough ride.**
- **Needless damage from road hazards.**

The Tire and Loading Information label on the vehicle indicates the original equipment tires and the correct cold tire inflation pressures. The recommended pressure is the minimum air pressure needed to support the vehicle's maximum load carrying capacity.

For additional information regarding how much weight the vehicle can carry, and an example of the Tire and Loading Information label, see *Vehicle Load Limits on page 9-9*. How the vehicle is loaded affects vehicle handling and ride comfort. Never load the vehicle with more weight than it was designed to carry.

When to Check

Check the tires once a month or more.

How to Check

Use a good quality pocket-type gauge to check the tire pressure. Proper tire inflation cannot be determined by looking at the tire. Check the tire inflation pressure when the tires are cold, meaning the vehicle has not been driven for at least three hours or no more than 1.6 km (1 mi).

Remove the valve cap from the tire valve stem. Press the tire gauge firmly onto the valve to get the pressure measurement. If the cold tire inflation pressure matches the recommended pressure on the Tire and Loading Information label, no further adjustment is necessary.

If the inflation pressure is low, add air until the recommended pressure is reached. If the inflation pressure in high, press on the metal stem in the center of the tire valve to release air. Re-check the tire pressure with the tire gauge.

Return the valve caps on the valve stems to keep out dirt and moisture and prevent leaks.

Tire Pressure Monitor System

The Tire Pressure Monitor System (TPMS) uses radio and sensor technology to check tire pressure levels. The TPMS sensors monitor the air pressure in your tires and transmit tire pressure readings to a receiver located in the vehicle.

Each tire, including the spare (if provided), should be checked monthly when cold and inflated to the inflation pressure recommended by the vehicle manufacturer on the vehicle placard or tire inflation pressure label. (If your vehicle has tires of a different size than the size indicated on the vehicle placard or tire inflation pressure label, you should determine the proper tire inflation pressure for those tires.)

As an added safety feature, your vehicle has been equipped with a tire pressure monitoring system (TPMS) that illuminates a low tire

pressure telltale when one or more of your tires is significantly under-inflated.

Accordingly, when the low tire pressure telltale illuminates, you should stop and check your tires as soon as possible, and inflate them to the proper pressure. Driving on a significantly under-inflated tire causes the tire to overheat and can lead to tire failure. Under-inflation also reduces fuel efficiency and tire tread life, and may affect the vehicle's handling and stopping ability.

Please note that the TPMS is not a substitute for proper tire maintenance, and it is the driver's responsibility to maintain correct tire pressure, even if under-inflation has not reached the level to trigger illumination of the TPMS low tire pressure telltale.

Your vehicle has also been equipped with a TPMS malfunction indicator to indicate when the system is not operating properly.

The TPMS malfunction indicator is combined with the low tire pressure telltale. When the system detects a malfunction, the telltale will flash for approximately one minute and then remain continuously illuminated. This sequence will continue upon subsequent vehicle start-ups as long as the malfunction exists.

When the malfunction indicator is illuminated, the system may not be able to detect or signal low tire pressure as intended. TPMS malfunctions may occur for a variety of reasons, including the installation of replacement or alternate tires or wheels on the vehicle that prevent the TPMS from functioning properly. Always check the TPMS malfunction telltale after replacing one or more tires or wheels on your vehicle to ensure that the replacement or alternate tires and wheels allow the TPMS to continue to function properly.

See *Tire Pressure Monitor Operation on page 10-43*.

Federal Communications Commission (FCC) Rules and with Industry Canada Standards

See *Radio Frequency Statement on page 13-15* for information regarding Part 15 of the Federal Communications Commission (FCC) Rules and with Industry Canada Standards RSS-GEN/210/220/310.

Tire Pressure Monitor Operation

This vehicle may have a Tire Pressure Monitor System (TPMS). The TPMS is designed to warn the driver when a low tire pressure condition exists. TPMS sensors are mounted onto each tire and wheel assembly, excluding the spare tire and wheel assembly. The TPMS sensors monitor the air pressure in the tires and transmit the tire pressure readings to a receiver located in the vehicle.

When a low tire pressure condition is detected, the TPMS illuminates the low tire pressure warning light located on the instrument cluster. If the warning light comes on, stop as soon as possible and inflate the tires to the recommended pressure shown on the Tire and Loading Information label. See *Vehicle Load Limits on page 9-9*.

The low tire pressure warning light comes on at each drive cycle until the tires are inflated to the correct inflation pressure.

The low tire pressure warning light may come on in cool weather when the vehicle is first started, and then turn off as the vehicle is driven. This could be an early indicator that the air pressure is getting low and must be inflated to the proper pressure.

A Tire and Loading Information label shows the size of the original equipment tires and the correct inflation pressure for the tires when they are cold. See *Vehicle Load Limits on page 9-9*, for an example of the Tire and Loading Information label and its location. Also see *Tire Pressure on page 10-41*.

The TPMS can warn about a low tire pressure condition but it does not replace normal tire maintenance. See *Tire Inspection on page 10-46*, *Tire Rotation on page 10-46* and *Tires on page 10-34*.

Notice: **Tire sealant materials are not all the same. A non-approved tire sealant could damage the TPMS sensors. TPMS sensor damage caused by using an incorrect tire sealant is not covered by the vehicle warranty. Always use only the GM-approved tire sealant available through your dealer or included in the vehicle.**

Factory-installed Tire Inflator Kits use a GM-approved liquid tire sealant. Using non-approved tire sealants could damage the TPMS sensors. See *Tire Sealant and Compressor Kit on page 10-55* for information regarding the inflator kit materials and instructions.

TPMS Malfunction Light

The TPMS will not function properly if one or more of the TPMS sensors are missing or inoperable. When the system detects a malfunction, the low tire warning light flashes for about one minute and then stays on for the remainder of the ignition cycle. The malfunction light comes on at each ignition cycle until the problem is corrected. Some of the conditions that can cause this to come on are:

- One of the road tires has been replaced with the spare tire, if the vehicle has one. The spare tire does not have a TPMS sensor. The malfunction light should go off after the road tire

is replaced and the sensor matching process is performed successfully. See "TPMS Sensor Matching Process" later in this section.

- The TPMS sensor matching process was not done or not completed successfully after rotating the tires. The malfunction light should go off after successfully completing the sensor matching process. See "TPMS Sensor Matching Process" later in this section.
- One or more TPMS sensors are missing or damaged. The malfunction light should go off when the TPMS sensors are installed and the sensor matching process is performed successfully. See your dealer for service.
- Replacement tires or wheels do not match the original equipment tires or wheels. Tires and wheels other than those recommended could prevent the TPMS from functioning properly. See *Buying New Tires on page 10-48*.
- Operating electronic devices or being near facilities using radio wave frequencies similar to the TPMS could cause the TPMS sensors to malfunction.

If the TPMS is not functioning properly, it cannot detect or signal a low tire condition. See your dealer for service if the TPMS malfunction light comes on and stays on.

TPMS Sensor Matching Process

Each TPMS sensor has a unique identification code. The identification code needs to be matched to a new tire/wheel position after rotating the tires or replacing one or more of the TPMS sensors. The TPMS sensor matching process should also be performed after replacing a spare tire with a road tire containing the TPMS sensor. The malfunction light should go off at the next ignition cycle. The sensors are matched to the tire/wheel positions, using a TPMS relearn tool, in the following order: driver side front tire, passenger side front tire, passenger side rear tire, and driver side rear. See your dealer for service or to purchase a relearn tool.

There are two minutes to match the first tire/wheel position, and five minutes overall to match all four tire/wheel positions. If it takes longer, the matching process stops and must be restarted.

The TPMS sensor matching process is:

1. Set the parking brake.
2. Turn the ignition to ON/RUN with the engine off.
3. Press the MENU button once on the Driver Information Center (DIC).
4. Press the up or down arrow button until the Tire Learn screen is displayed.

5. Press and hold the SET/CLR button to begin the sensor matching process.

   The horn sounds twice to signal the receiver is in relearn mode and the Tire Learn message displays on the DIC screen.

6. Start with the driver side front tire.
7. Place the relearn tool against the tire sidewall, near the valve stem. Then press the button to activate the TPMS sensor. A horn chirp confirms that the sensor identification code has been matched to this tire and wheel position.
8. Proceed to the passenger side front tire, and repeat the procedure in Step 7.
9. Proceed to the passenger side rear tire, and repeat the procedure in Step 7.
10. Proceed to the driver side rear tire, and repeat the procedure in Step 7. The horn sounds two times to indicate the sensor identification code has been matched to the driver side rear tire, and the TPMS sensor matching process is no longer active. The TIRE LEARN message on the DIC display screen goes off.
11. Turn the ignition to LOCK/OFF.
12. Set all four tires to the recommended air pressure level as indicated on the Tire and Loading Information label.

Tire Inspection

We recommend that the tires, including the spare tire, if the vehicle has one, be inspected for signs of wear or damage at least once a month.

Replace the tire if:

- The indicators at three or more places around the tire can be seen.
- There is cord or fabric showing through the tire's rubber.
- The tread or sidewall is cracked, cut, or snagged deep enough to show cord or fabric.
- The tire has a bump, bulge, or split.
- The tire has a puncture, cut, or other damage that cannot be repaired well because of the size or location of the damage.

Tire Rotation

Tires should be rotated every 12 000 km (7,500 mi). The first rotation is the most important. See *Maintenance Schedule on page 11-3*.

Tires are rotated to achieve a more uniform wear for all tires.

Anytime unusual wear is noticed, rotate the tires as soon as possible, check for proper tire inflation pressure, and check for damaged tires or wheels. If the unusual wear continues after the rotation, check the wheel alignment. See *When It Is Time for New Tires on page 10-48* and *Wheel Replacement on page 10-52*.

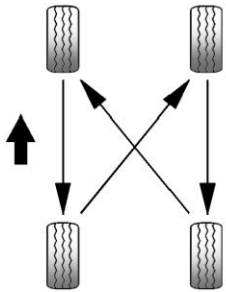

Use this rotation pattern when rotating the tires.

Adjust the front and rear tires to the recommended inflation pressure on the Tire and Loading Information label after the tires have been rotated. See *Tire Pressure on page 10-41* and *Vehicle Load Limits on page 9-9*.

Reset the Tire Pressure Monitor System. See *Tire Pressure Monitor Operation on page 10-43*.

Check that all wheel nuts are properly tightened. See “Wheel Nut Torque” under *Capacities and Specifications on page 12-2*.

⚠ WARNING

Rust or dirt on a wheel, or on the parts to which it is fastened, can make wheel nuts become loose after a

(Continued)

WARNING (Continued)

time. The wheel could come off and cause a crash. When changing a wheel, remove any rust or dirt from places where the wheel attaches to the vehicle. In an emergency, a cloth or a paper towel can be used, however, use a scraper or wire brush to remove all rust or dirt.

Lightly coat the center of the wheel hub with wheel bearing grease after a wheel change or tire rotation to prevent corrosion or rust build-up. Do not get grease on the flat wheel mounting surface or on the wheel nuts or bolts.

When It Is Time for New Tires

Factors such as maintenance, temperatures, driving speeds, vehicle loading, and road conditions affect the wear rate of the tires.

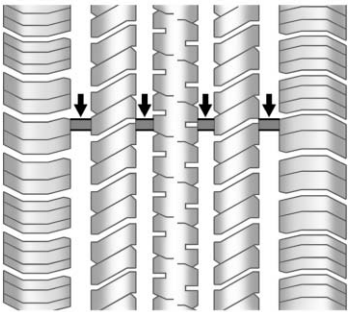

Treadwear indicators are one way to tell when it is time for new tires. Treadwear indicators appear when the tires have only 1.6 mm (1/16 in) or less of tread remaining. See *Tire Inspection on page 10-46* and *Tire Rotation on page 10-46*.

The rubber in tires ages over time. This also applies to the spare tire, if the vehicle has one, even if it is never used. Multiple factors including temperatures, loading conditions, and inflation pressure maintenance affect how fast aging takes place. GM recommends that tires, including the spare if equipped, be replaced after six years, regardless of tread wear. The tire manufacturer date is the last four digits of the DOT Tire Identification Number (TIN) which is molded into one side of the tire sidewall. The first two digits represent the week (01–52) and the last two digits, the year. For example, the third week of the year 2010 would have a four-digit DOT date of 0310.

Vehicle Storage

Tires age when stored normally mounted on a parked vehicle. Park a vehicle that will be stored for at least a month in a cool, dry, clean area away from direct sunlight to slow aging. This area should be free of grease, gasoline, or other substances that can deteriorate rubber.

Parking for an extended period can cause flat spots on the tires that may result in vibrations while driving. When storing a vehicle for at least a month, remove the tires or raise the vehicle to reduce the weight from the tires.

Buying New Tires

GM has developed and matched specific tires for the vehicle. The original equipment tires installed were designed to meet General Motors Tire Performance Criteria Specification (TPC Spec) system rating. When replacement tires are needed, GM strongly recommends buying tires with the same TPC Spec rating.

GM's exclusive TPC Spec system considers over a dozen critical specifications that impact the overall performance of the vehicle, including brake system performance, ride and handling, traction control, and tire pressure monitoring performance. GM's TPC Spec number is molded onto the tire's sidewall near the tire size. If the tires have an all-season tread design, the TPC spec number will be followed by MS, for mud and snow. See *Tire Sidewall Labeling on page 10-36*.

GM recommends replacing worn tires in complete sets of four. Uniform tread depth on all tires will help to maintain the performance of the vehicle. Braking and handling performance may be adversely affected if all the tires are not replaced at the same time.

If proper rotation and maintenance have been done, all four tires should wear out at about the same time. See *Tire Rotation on page 10-46* for information on proper tire rotation. However, if it is necessary to replace only one axle set of worn tires, place the new tires on the rear axle.

Winter tires with the same speed rating as the original equipment tires may not be available for H, V, W, Y, and ZR speed rated tires. Never exceed the winter tire's maximum speed capability when using winter tires with a lower speed rating.

⚠ WARNING

Tires could explode during improper service. Attempting to mount or dismount a tire

(Continued)

WARNING (Continued)

could cause injury or death. Only your dealer or authorized tire service center should mount or dismount the tires.

⚠ WARNING

Mixing tires of different sizes, brands, or types may cause loss of control of the vehicle, resulting in a crash or other vehicle damage. Use the correct size, brand, and type of tire on all wheels.

⚠ WARNING

Using bias-ply tires on the vehicle may cause the wheel rim flanges to develop cracks

(Continued)

WARNING (Continued)

after many miles of driving. A tire and/or wheel could fail suddenly and cause a crash. Use only radial-ply tires with the wheels on the vehicle.

If the vehicle tires must be replaced with a tire that does not have a TPC Spec number, make sure they are the same size, load range, speed rating, and construction (radial) as the original tires.

Vehicles that have a tire pressure monitoring system could give an inaccurate low-pressure warning if non-TPC Spec rated tires are installed. See *Tire Pressure Monitor System on page 10-42*.

The Tire and Loading Information Label indicates the original equipment tires on the vehicle. See *Vehicle Load Limits on page 9-9*, for the label location and more information about the Tire and Loading Information label.

Different Size Tires and Wheels

If wheels or tires are installed that are a different size than the original equipment wheels and tires, vehicle performance, including its braking, ride and handling characteristics, stability, and resistance to rollover may be affected. If the vehicle has electronic systems such as antilock brakes, rollover airbags, traction control, electronic stability control, or All-Wheel Drive, the performance of these systems can also be affected.

⚠ WARNING

If different sized wheels are used, there may not be an acceptable level of performance and safety if tires not recommended for those wheels are selected. This increases the chance of a crash and serious injury. Only use GM specific wheel and tire systems developed for the vehicle, and have them properly installed by a GM certified technician.

See *Buying New Tires on page 10-48* and *Accessories and Modifications on page 10-2*.

Uniform Tire Quality Grading

Quality grades can be found where applicable on the tire sidewall between tread shoulder and maximum section width. For example:

Treadwear 200 Traction AA Temperature A

The following information relates to the system developed by the United States National Highway Traffic Safety Administration (NHTSA), which grades tires by treadwear, traction, and temperature performance. This applies only to vehicles sold in the United States. The grades are molded on the sidewalls of most passenger car tires. The Uniform Tire Quality Grading (UTQG) system does not apply to deep tread, winter tires, compact spare tires, tires with nominal rim diameters of 10 to 12 inches (25 to 30 cm), or to some limited-production tires.

While the tires available on General Motors passenger cars and light trucks may vary with respect to these grades, they must also conform to federal safety requirements and additional General Motors Tire Performance Criteria (TPC) standards.

All Passenger Car Tires Must Conform to Federal Safety Requirements In Addition To These Grades.

Treadwear

The treadwear grade is a comparative rating based on the wear rate of the tire when tested under controlled conditions on a specified government test course. For example, a tire graded 150 would wear one and one-half (1½) times as well on the government course as a tire graded 100. The relative performance of tires depends upon the actual conditions of their use, however, and may depart significantly from the norm due to variations in driving habits, service practices and differences in road characteristics and climate.

Traction – AA, A, B, C

The traction grades, from highest to lowest, are AA, A, B, and C. Those grades represent the tire's ability to stop on wet pavement as measured under controlled conditions on specified government test surfaces of asphalt and concrete. A tire marked C may have poor traction performance. Warning: The traction grade assigned to this tire is based on

straight-ahead braking traction tests, and does not include acceleration, cornering, hydroplaning, or peak traction characteristics.

Temperature – A, B, C

The temperature grades are A (the highest), B, and C, representing the tire's resistance to the generation of heat and its ability to dissipate heat when tested under controlled conditions on a specified indoor laboratory test wheel. Sustained high temperature can cause the material of the tire to degenerate and reduce tire life, and excessive temperature can lead to sudden tire failure. The grade C corresponds to a level of performance which all passenger car tires must meet under the Federal Motor Safety Standard No. 109. Grades B and A represent higher levels of performance on the laboratory test wheel than the minimum required by law. Warning: The temperature grade for this tire is established for a tire that is properly inflated and not overloaded. Excessive speed, underinflation, or excessive loading, either separately or in combination, can cause heat buildup and possible tire failure.

Wheel Alignment and Tire Balance

The tires and wheels were aligned and balanced at the factory to provide the longest tire life and best overall performance. Adjustments to wheel alignment and tire balancing will not be necessary on a regular basis. However, check the alignment if there is unusual tire wear or if the vehicle is pulling to one side or the other. If the vehicle vibrates when driving on a smooth road, the tires and wheels might need to be rebalanced. See your dealer for proper diagnosis.

Wheel Replacement

Replace any wheel that is bent, cracked, or badly rusted or corroded. If wheel nuts keep coming loose, the wheel, wheel bolts, and wheel nuts should be replaced. If the wheel leaks air, replace it. Some aluminum wheels can be repaired. See your dealer if any of these conditions exist.

Your dealer will know the kind of wheel that is needed.

Each new wheel should have the same load-carrying capacity, diameter, width, offset, and be mounted the same way as the one it replaces.

Replace wheels, wheel bolts, wheel nuts, or Tire Pressure Monitor System (TPMS) sensors with new GM original equipment parts.

⚠ WARNING

Using the wrong replacement wheels, wheel bolts, or wheel nuts can be dangerous. It could affect the braking and handling of the vehicle. Tires can lose air, and cause loss of control, causing a crash. Always use the correct wheel, wheel bolts, and wheel nuts for replacement.

Notice: **The wrong wheel can also cause problems with bearing life, brake cooling, speedometer or odometer calibration, headlamp aim, bumper height, vehicle ground clearance, and tire or tire chain clearance to the body and chassis.**

Used Replacement Wheels

⚠ WARNING

Replacing a wheel with a used one is dangerous. How it has been used or how far it has been driven may be unknown. It could fail suddenly and cause a crash. When replacing wheels, use a new GM original equipment wheel.

Tire Chains

⚠ WARNING

Do not use tire chains. There is not enough clearance. Tire chains used on a vehicle without the proper amount of clearance can cause damage to the brakes, suspension, or other vehicle

(Continued)

WARNING (Continued)

parts. The area damaged by the tire chains could cause loss of control and a crash.

Use another type of traction device only if its manufacturer recommends it for the vehicle's tire size combination and road conditions. Follow that manufacturer's instructions. To avoid vehicle damage, drive slow and readjust or remove the traction device if it contacts the vehicle. Do not spin the wheels. If traction devices are used, install them on the front tires.

If a Tire Goes Flat

This vehicle has a tire sealant and compressor kit. See *Tire Sealant and Compressor Kit on page 10-55*. There is no spare tire, no tire changing equipment, and no place to store a tire.

It is unusual for a tire to blow out, especially if the tires are maintained properly. See *Tires on page 10-34*. air goes out of a tire, it is much more likely to leak out slowly. But if there is ever a blowout, here are a few tips about what to expect and what to do.

If a front tire fails, the flat tire will create a drag that pulls the vehicle toward that side. Take your foot off the accelerator pedal and grip the steering wheel firmly. Steer to maintain lane position, and then gently brake to a stop, well off the road, if possible.

A rear blowout, particularly on a curve, acts much like a skid and may require the same correction as used in a skid. Stop pressing the accelerator pedal and steer to straighten the vehicle. It may be very bumpy and noisy. Gently brake to a stop, well off the road, if possible.

⚠ WARNING

Driving on a flat tire will cause permanent damage to the tire. Re-inflating a tire after it has been driven on while severely underinflated or flat may cause a blowout and a serious crash. Never attempt to re-inflate a tire that has been driven on while severely underinflated or flat. Have your dealer or an authorized tire service center repair or replace the flat tire as soon as possible.

⚠ WARNING

Lifting a vehicle and getting under it to do maintenance or repairs is dangerous without the appropriate safety equipment and training. If a jack is provided with the vehicle, it is designed only for

(Continued)

WARNING (Continued)

changing a flat tire. If it is used for anything else, you or others could be badly injured or killed if the vehicle slips off the jack. If a jack is provided with the vehicle, only use it for changing a flat tire.

If a tire goes flat, avoid further tire and wheel damage by driving slowly to a level place, well off the road, if possible.

1. Turn on the hazard warning flashers. See *Hazard Warning Flashers on page 6-2*.
2. Park the vehicle. Set the parking brake firmly and put the shift lever in P (Park). See *Shifting Into Park on page 9-17*.
3. Turn off the engine.
4. Inspect the flat tire.

If the tire has been separated from the wheel, has damaged sidewalls, or has a puncture larger than a

6 mm (0.25 in), the tire is too severely damaged for the tire sealant and compressor kit to be effective.

If the tire has a puncture less than a 6 mm (0.25 in) in the tread area of the tire, see *Tire Sealant and Compressor Kit on page 10-55*.

Tire Sealant and Compressor Kit

⚠ WARNING

Idling a vehicle in an enclosed area with poor ventilation is dangerous. Engine exhaust may enter the vehicle. Engine exhaust contains carbon monoxide (CO) which cannot be seen or smelled. It can cause unconsciousness and even death. Never run the engine in an enclosed area that has no fresh air ventilation. For more information, see *Engine Exhaust on page 9-20*.

⚠ WARNING

Overinflating a tire could cause the tire to rupture and you or others could be injured. Be sure to read and follow the tire sealant and compressor kit instructions and inflate the tire to its recommended pressure. Do not exceed the recommended pressure.

⚠ WARNING

Storing the tire sealant and compressor kit or other equipment in the passenger compartment of the vehicle could cause injury. In a sudden stop or collision, loose equipment could strike someone. Store the tire sealant and compressor kit in its original location.

If this vehicle has a tire sealant and compressor kit, there may not be a spare tire or tire changing equipment, and on some vehicles there may not be a place to store a tire.

The tire sealant and compressor can be used to temporarily seal punctures up to 6 mm (0.25 in) in the tread area of the tire. It can also be used to inflate an underinflated tire.

If the tire has been separated from the wheel, has damaged sidewalls, or has a large puncture, the tire is too severely damaged for the tire sealant and compressor kit to be effective. See *Roadside Assistance Program on page 13-5*.

Read and follow all of the tire sealant and compressor kit instructions.

The kit includes:

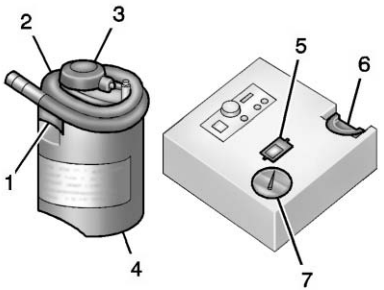

1. Sealant Canister Inlet Valve
2. Sealant/Air Hose
3. Base of Sealant Canister
4. Tire Sealant Canister
5. On/Off Button
6. Slot on Top of Compressor
7. Pressure Gauge

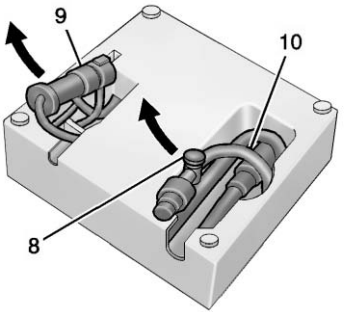

8. Pressure Deflation Button
9. Power Plug
10. Air Only Hose

Tire Sealant

Read and follow the safe handling instructions on the label adhered to the tire sealant canister (4).

Check the tire sealant expiration date on the tire sealant canister. The tire sealant canister (4) should be replaced before its expiration date. Replacement tire sealant canisters are available at your local dealer.

There is only enough sealant to seal one tire. After usage, the tire sealant canister must be replaced.

Using the Tire Sealant and Compressor Kit to Temporarily Seal and Inflate a Punctured Tire

When using the tire sealant and compressor kit during cold temperatures, warm the kit in a heated environment for five minutes. This will help to inflate the tire faster.

If a tire goes flat, avoid further tire and wheel damage by driving slowly to a level place. Turn on the hazard warning flashers. See *Hazard Warning Flashers on page 6-2*.

See *If a Tire Goes Flat on page 10-53* for other important safety warnings.

Do not remove any objects that have penetrated the tire.

1. Remove the tire sealant canister (4) and compressor from its storage location. See *Storing the Tire Sealant and Compressor Kit on page 10-62*.
2. Remove the air only hose (10) and the power plug (9) from the bottom of the compressor.
3. Place the compressor on the ground near the flat tire.

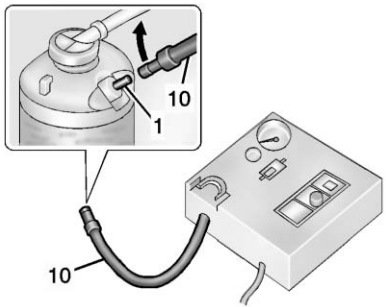

4. Attach the air only hose (10) to the sealant canister inlet valve (1) by turning it clockwise until tight.

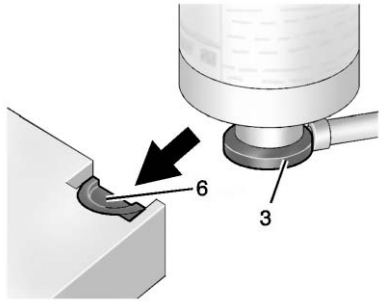

5. Slide the base of the tire sealant canister (3) into the slot on the top of the compressor (6) to hold it upright.

   Make sure the tire valve stem is positioned close to the ground so the hose will reach it.
6. Remove the valve stem cap from the flat tire by turning it counterclockwise.

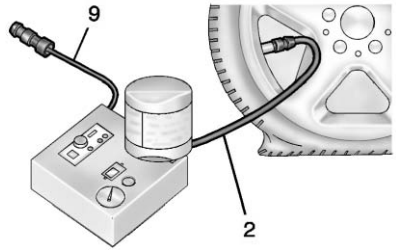

7. Attach the sealant/air hose (2) to the tire valve stem by turning it clockwise until tight.
8. Plug the power plug (9) into the accessory power outlet in the vehicle. Unplug all items from other accessory power outlets. See *Power Outlets on page 5-5*.

If the vehicle has an accessory power outlet, do not use the cigarette lighter.

If the vehicle only has a cigarette lighter, use the cigarette lighter.

Do not pinch the power plug cord in the door or window.

9. Start the vehicle. The vehicle must be running while using the air compressor.

10. Press the on/off button (5) to turn the tire sealant and compressor kit on.

    The compressor will inject sealant and air into the tire.

    The pressure gauge (7) will initially show a high pressure while the compressor pushes the sealant into the tire. Once the sealant is completely dispersed into the tire, the pressure will quickly drop and start to rise again as the tire inflates with air only.

11. Inflate the tire to the recommended inflation pressure using the pressure gauge (7). The recommended inflation pressure can be found on the Tire and Loading Information label. See *Tire Pressure on page 10-41*.

    The pressure gauge (7) may read higher than the actual tire pressure while the compressor is on. Turn the compressor off to get an accurate pressure reading. The compressor may be turned on/off until the correct pressure is reached.

Notice: **If the recommended pressure cannot be reached after approximately 25 minutes, the vehicle should not be driven farther. The tire is too severely damaged and the tire sealant and compressor kit cannot inflate the tire. Remove the power plug from the accessory power outlet and unscrew the inflating hose from the tire valve. See *Roadside Assistance Program on page 13-5*.**

12. Press the on/off button (5) to turn the tire sealant and compressor kit off.

    The tire is not sealed and will continue to leak air until the vehicle is driven and the sealant is distributed in the tire. Therefore, Steps 13–21 must be done immediately after Step 12.

    Be careful while handling the tire sealant and compressor kit as it could be warm after usage.

13. Unplug the power plug (9) from the accessory power outlet in the vehicle.

14. Turn the sealant/air hose (2) counterclockwise to remove it from the tire valve stem.

15. Replace the tire valve stem cap.
16. Remove the tire sealant canister (4) from the slot on top of the compressor (6).
17. Turn the air only hose (10) counterclockwise to remove it from the tire sealant canister inlet valve (1).
18. Turn the sealant/air hose (2) clockwise onto the sealant canister inlet valve (1) to prevent sealant leakage.
19. Return the air only hose (10) and power plug (9) back to their original storage location.

20. If the flat tire was able to inflate to the recommended inflation pressure, remove the maximum speed label from the sealant canister and place it in a highly visible location.

    Do not exceed the speed on this label until the damaged tire is repaired or replaced.
21. Return the equipment to its original storage location in the vehicle.
22. Immediately drive the vehicle 8 km (5 mi) to distribute the sealant in the tire.
23. Stop at a safe location and check the tire pressure. Refer to Steps 1–10 under “Using the Tire Sealant and Compressor Kit without Sealant to Inflate a Tire (Not Punctured).”

    If the tire pressure has fallen more than 68 kPa (10 psi) below the recommended inflation pressure, stop driving the vehicle. The tire is too severely damaged and the tire sealant cannot seal the tire. See *Roadside Assistance Program on page 13-5*.

    If the tire pressure has not dropped more than 68 kPa (10 psi) from the recommended inflation pressure, inflate the tire to the recommended inflation pressure.
24. Wipe off any sealant from the wheel, tire, or vehicle.
25. Dispose of the used tire sealant canister (4) at a local dealer or in accordance with local state codes and practices.
26. Replace it with a new canister available from your dealer.
27. After temporarily sealing a tire using the tire sealant and compressor kit, take the vehicle to an authorized dealer within 161 km (100 mi) of driving to have the tire repaired or replaced.

Using the Tire Sealant and Compressor Kit without Sealant to Inflate a Tire (Not Punctured)

The kit includes:

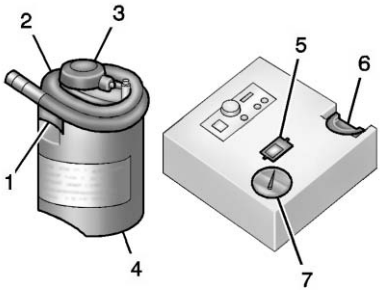

1. Sealant Canister Inlet Valve
2. Sealant/Air Hose
3. Base of Sealant Canister
4. Tire Sealant Canister
5. On/Off Button
6. Slot on Top of Compressor
7. Pressure Gauge

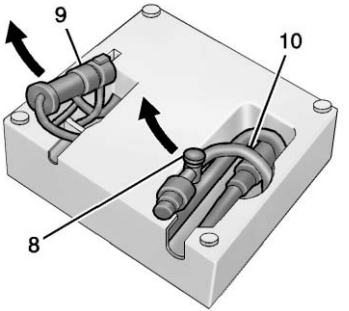

8. Pressure Deflation Button
9. Power Plug
10. Air Only Hose

If a tire goes flat, avoid further tire and wheel damage by driving slowly to a level place. Turn on the hazard warning flashers. See *Hazard Warning Flashers on page 6-2*.

See *If a Tire Goes Flat on page 10-53* for other important safety warnings.

1. Remove the compressor from its storage location. See *Storing the Tire Sealant and Compressor Kit on page 10-62*.
2. Remove the air only hose (10) and the power plug (9) from the bottom of the compressor.
3. Place the compressor on the ground near the flat tire.

   Make sure the tire valve stem is positioned close to the ground so the hose will reach it.
4. Remove the valve stem cap from the flat tire by turning it counterclockwise.
5. Attach the air only hose (10) to the tire valve stem by turning it clockwise until tight.

6. Plug the power plug (9) into the accessory power outlet in the vehicle. Unplug all items from other accessory power outlets. See *Power Outlets on page 5-5*.

   If the vehicle has an accessory power outlet, do not use the cigarette lighter.

   If the vehicle only has a cigarette lighter, use the cigarette lighter.

   Do not pinch the power plug cord in the door or window.

7. Start the vehicle. The vehicle must be running while using the air compressor.

8. Press the on/off button (5) to turn the tire sealant and compressor kit on.

   The compressor will inflate the tire with air only.

9. Inflate the tire to the recommended inflation pressure using the pressure gauge (7). The recommended inflation pressure can be found on the Tire and Loading Information label. See *Tire Pressure on page 10-41*.

   The pressure gauge (7) may read higher than the actual tire pressure while the compressor is on. Turn the compressor off to get an accurate pressure reading. The compressor may be turned on/off until the correct pressure is reached.

   If the tire is inflated higher than the recommended pressure, adjust the excess pressure by pressing the pressure deflation button (8) until the proper pressure reading is reached. This option is only functional when using the air only hose (10).

Notice: **If the recommended pressure cannot be reached after approximately 25 minutes, the vehicle should not be driven farther. The tire is too severely damaged and the tire sealant and compressor kit cannot inflate the tire. Remove the power plug from the accessory power outlet and unscrew the inflating hose from the tire valve. See *Roadside Assistance Program on page 13-5*.**

10. Press the on/off button (5) to turn the tire sealant and compressor kit off.

    Be careful while handling the compressor as it could be warm after usage.

11. Unplug the power plug (9) from the accessory power outlet in the vehicle.

12. Turn the air only hose (10) counterclockwise to remove it from the tire valve stem.

13. Replace the tire valve stem cap.
14. Return the air only hose (10) and power plug (9) back to their original storage location.
15. Return the equipment to its original storage location in the vehicle.

The tire sealant and compressor kit has accessory adapters located in a compartment on the bottom of its housing that can be used to inflate air mattresses, balls, etc.

Storing the Tire Sealant and Compressor Kit

The tire sealant and compressor kit is located in the rear storage area.

1. Lift the trim cover.

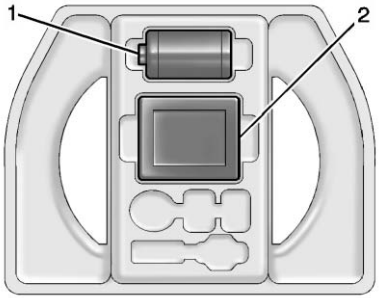

2. Remove the tire sealant canister (1) and the compressor (2).

To store the tire sealant and compressor kit, reverse the steps.

Jump Starting

For more information about the vehicle battery, see *Battery on page 10-20*.

If the battery has run down, try to use another vehicle and some jumper cables to start your vehicle. Be sure to use the following steps to do it safely.

⚠ WARNING

Batteries can hurt you. They can be dangerous because:

- They contain acid that can burn you.
- They contain gas that can explode or ignite.
- They contain enough electricity to burn you.

If you do not follow these steps exactly, some or all of these things can hurt you.

Notice: **Ignoring these steps could result in costly damage to the vehicle that would not be covered by the warranty.**

Trying to start the vehicle by pushing or pulling it will not work, and it could damage the vehicle.

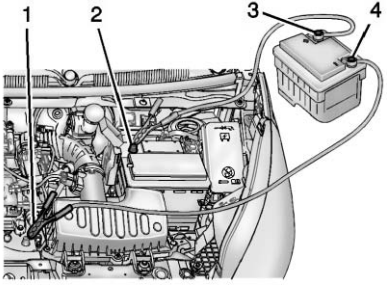

1. Discharged Battery Negative Grounding Point
2. Discharged Battery Positive Post
3. Good Battery Positive Post
4. Good Battery Negative Post

The jump start positive post is in the engine compartment on the driver side of the vehicle. See *Engine Compartment Overview on page 10-6*.

The jump start negative post is the engine block or an engine mounting bolt. Connect to a spot as far away from the discharged battery as possible.

The jump start positive post and negative post are on the battery of the vehicle providing the jump start.

The positive jump start connection for the discharged battery is under a trim cover. Open the cover to expose the post.

These locations are used instead of a direct connection to the battery.

1. Check the other vehicle. It must have a 12-volt battery with a negative ground system.

Notice: **Only use a vehicle that has a 12-volt system with a negative ground for jump starting. If the other vehicle does not have a 12-volt system with a negative ground, both vehicles can be damaged.**

2. Position the two vehicles so that they are not touching.
3. Set the parking brake firmly and put the shift lever in P (Park) with an automatic transmission, or Neutral with a manual transmission. See *Shifting Into Park on page 9-17* with an automatic transmission, or *Parking on page 9-20* with a manual transmission.

Notice: **If any accessories are left on or plugged in during the jump starting procedure, they could be damaged. The repairs would not be covered by the vehicle warranty. Whenever possible, turn off or unplug all accessories on either vehicle when jump starting the vehicle.**

4. Turn the ignition to LOCK/OFF. Turn off all lights and accessories in both vehicles, except the hazard warning flashers if needed.

⚠ WARNING

An electric fan can start up even when the engine is not running and can injure you. Keep hands, clothing and tools away from any underhood electric fan.

⚠ WARNING

Using a match near a battery can cause battery gas to explode. People have been hurt doing this, and some have been blinded. Use a flashlight if you need more light.

(Continued)

WARNING (Continued)

Be sure the battery has enough water. You do not need to add water to the battery installed in your new vehicle. But if a battery has filler caps, be sure the right amount of fluid is there. If it is low, add water to take care of that first. If you do not, explosive gas could be present.

Battery fluid contains acid that can burn you. Do not get it on you. If you accidentally get it in your eyes or on your skin, flush the place with water and get medical help immediately.

⚠ WARNING

Fans or other moving engine parts can injure you badly. Keep your hands away from moving parts once the engine is running.

5. Connect one end of the red positive (+) cable to the positive (+) post (2) on the discharged battery.
6. Connect the other end of the red positive (+) cable to the positive (+) post (3) of the good battery.
7. Connect one end of the black negative (–) cable to the negative (–) post (4) of the good battery.
8. Connect the other end of the black negative (–) cable to the negative (–) grounding point (1) for the discharged battery.

9. Start the engine in the vehicle with the good battery and run the engine at idle speed for at least four minutes.
10. Try to start the vehicle that had the dead battery. If it will not start after a few tries, it probably needs service.

Notice: **If the jumper cables are connected or removed in the wrong order, electrical shorting may occur and damage the vehicle. The repairs would not be covered by the vehicle warranty. Always connect and remove the jumper cables in the correct order, making sure that the cables do not touch each other or other metal.**

Jumper Cable Removal

Reverse the sequence exactly when removing the jumper cables.

Towing

Towing the Vehicle

Notice: **Incorrectly towing a disabled vehicle may cause damage. The damage would not be covered by the vehicle warranty.**

Have the vehicle towed on a flatbed car carrier or a wheel lift tow truck. If a wheel lift tow truck is used, the drive wheels cannot contact the road while the vehicle is being towed. A wheel dolly must be used to lift all drive wheels off the ground.

Consult your dealer or a professional towing service if the disabled vehicle must be towed.

To tow the vehicle behind another vehicle for recreational purposes, such as behind a motor home, see “Recreational Vehicle Towing” in this section.

Recreational Vehicle Towing

Recreational vehicle towing refers to towing the vehicle behind another vehicle – such as behind a motor home. The two most common types of recreational vehicle towing are known as dinghy towing and dolly towing. Dinghy towing is towing the vehicle with all four wheels on the ground. Dolly towing is towing the vehicle with two wheels on the ground and two wheels up on a device known as a dolly.

Here are some important things to consider before recreational vehicle towing:

- The towing capacity of the towing vehicle. Be sure to read the tow vehicle manufacturer's recommendations.
- How far the vehicle will be towed. Some vehicles have restrictions on how far and how long they can tow.

- The proper towing equipment. See your dealer or trailering professional for additional advice and equipment recommendations.
- If the vehicle is ready to be towed. Just as preparing the vehicle for a long trip, make sure the vehicle is prepared to be towed.

Dinghy Towing (With Automatic Transmission)

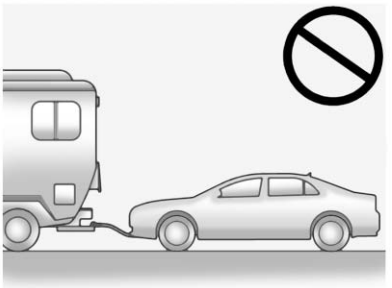

Notice: **If the vehicle is towed with all four wheels on the ground, the drivetrain components could be damaged. The repairs would not be covered by the vehicle warranty. Do not tow the vehicle with all four wheels on the ground.**

Vehicles with an automatic transmission should not be towed with all four wheels on the ground. If the vehicle must be towed, a dolly should be used. See "Dolly Towing" that follows for more information.

Dinghy Towing (With Manual Transmission)

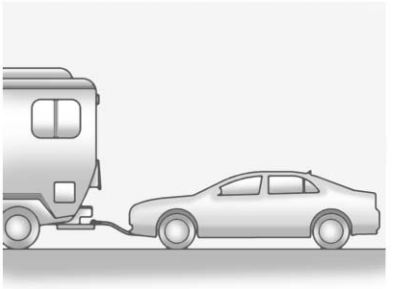

To dinghy tow the vehicle from the front with all four wheels on the ground:

1. Position the vehicle to tow and then secure it to the towing vehicle.
2. Shift the transmission to Neutral.
3. Turn the ignition to ACC/ ACCESSORY.

Notice: **If 113 km/h (70 mph) is exceeded while towing the vehicle, it could be damaged. Never exceed 113 km/h (70 mph) while towing the vehicle.**

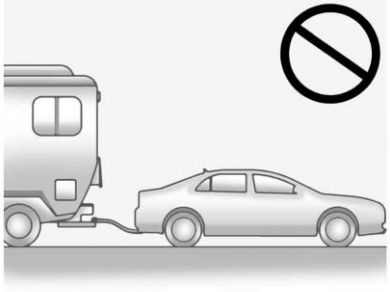

Notice: **Towing the vehicle from the rear could damage it. Also, repairs would not be covered by the vehicle warranty. Never have the vehicle towed from the rear.**

Dolly Towing

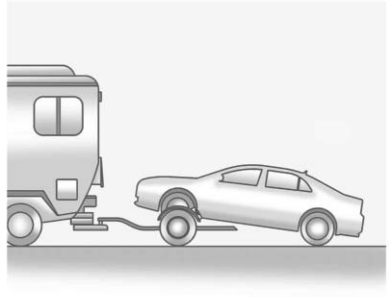

Tow the vehicle with the two rear wheels on the ground and the front wheels on a dolly:

To tow the vehicle with two wheels on the ground and a dolly:

1. Put the front wheels on a dolly.
2. Shift the automatic transmission into P (Park) or a manual transmission into 1 (First) gear.
3. Set the parking brake.
4. Clamp the steering wheel in a straight-ahead position with a clamping device designed for towing.
5. Remove the key from the ignition.
6. Secure the vehicle to the dolly.
7. Release the parking brake.

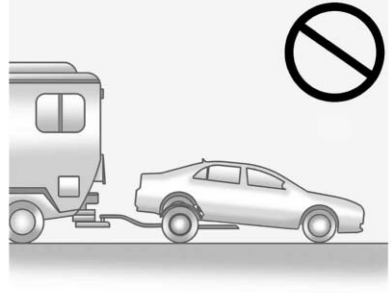

Notice: **Towing the vehicle from the rear could damage it. Also, repairs would not be covered by the vehicle warranty. Never have the vehicle towed from the rear.**

Appearance Care

Exterior Care

Washing the Vehicle

To preserve the vehicle's finish, wash it often and out of direct sunlight.

Notice: **Do not use petroleum-based, acidic, or abrasive cleaning agents as they can damage the vehicle's paint, metal, or plastic parts. If damage occurs, it would not be covered by the vehicle's warranty. Approved cleaning products can be obtained from your dealer. Follow all manufacturer directions regarding correct product usage, necessary safety precautions, and appropriate disposal of any vehicle care product.**

Notice: **Avoid using high-pressure washes closer than 30 cm (12 in) to the surface of the vehicle. Use of power washers exceeding 8,274 kPa (1,200 psi) can result in damage or removal of paint and decals.**

Rinse the vehicle well, before washing and after, to remove all cleaning agents completely. If they are allowed to dry on the surface, they could stain.

Dry the finish with a soft, clean chamois or an all-cotton towel to avoid surface scratches and water spotting.

Finish Care

Application of aftermarket clearcoat sealant/wax materials is not recommended. If painted surfaces are damaged, see your dealer to have the damage assessed and repaired. Foreign materials such as calcium chloride and other salts, ice melting agents, road oil and tar, tree sap, bird droppings, chemicals from industrial chimneys, etc., can damage the vehicle's finish if they remain on painted surfaces. Wash the vehicle as soon as possible. If necessary, use non-abrasive cleaners that are marked safe for painted surfaces to remove foreign matter.

Occasional hand waxing or mild polishing should be done to remove residue from the paint finish. See your dealer for approved cleaning products.

Do not apply waxes or polishes to uncoated plastic, vinyl, rubber, decals, simulated wood, or flat paint as damage can occur.

Notice: **Machine compounding or aggressive polishing on a basecoat/clearcoat paint finish may damage it. Use only non-abrasive waxes and polishes that are made for a basecoat/clearcoat paint finish on the vehicle.**

To keep the paint finish looking new, keep the vehicle garaged or covered whenever possible.

Protecting Exterior Bright Metal Parts

Regularly clean bright metal parts with water or chrome polish on chrome or stainless steel trim, if necessary.

For aluminum, never use auto or chrome polish, steam, or caustic soap to clean. A coating of wax, rubbed to a high polish, is recommended for all bright metal parts.

Cleaning Exterior Lamps/ Lenses and Emblems

Use only lukewarm or cold water, a soft cloth, and a car washing soap to clean exterior lamps, lenses and emblems. Follow instructions under "Washing the Vehicle" in this section.

Windshield and Wiper Blades

Clean the outside of the windshield with glass cleaner.

Clean rubber blades using a lint-free cloth or paper towel soaked with windshield washer fluid or a mild detergent. Wash the windshield thoroughly when cleaning the blades. Bugs, road grime, sap, and a buildup of vehicle wash/wax treatments may cause wiper streaking.

Replace the wiper blades if they are worn or damaged. Damage can be caused by extreme dusty conditions, sand, salt, heat, sun, snow, and ice.

Weatherstrips

Apply silicone grease on weatherstrips to make them last longer, seal better, and not stick or squeak. Lubricate weatherstrips once a year. Black marks from rubber material on painted surfaces can be removed by rubbing with a clean cloth. See *Recommended Fluids and Lubricants on page 11-12*.

Tires

Use a stiff brush with tire cleaner to clean the tires.

Notice: **Using petroleum-based tire dressing products on the vehicle may damage the paint finish and/or tires. When applying a tire dressing, always wipe off any overspray from all painted surfaces on the vehicle.**

Wheels and Trim — Aluminum or Chrome

Use a soft, clean cloth with mild soap and water to clean the wheels. After rinsing thoroughly with clean water, dry with a soft, clean towel. A wax may then be applied.

Notice: **Chrome wheels and other chrome trim may be damaged if the vehicle is not washed after driving on roads that have been sprayed with magnesium, calcium, or sodium chloride. These chlorides are used on roads for conditions such as ice**

and dust. Always wash the chrome with soap and water after exposure.

Notice: **To avoid surface damage, do not use strong soaps, chemicals, abrasive polishes, cleaners, brushes, or cleaners that contain acid on aluminum or chrome-plated wheels. Use only approved cleaners. Also, never drive a vehicle with aluminum or chrome-plated wheels through an automatic car wash that uses silicone carbide tire cleaning brushes. Damage could occur and the repairs would not be covered by the vehicle warranty.**

Steering, Suspension, and Chassis Components

Visually inspect the front and rear suspension and steering system for damaged, loose, or missing parts or signs of wear. Inspect the power steering for proper hook-up, binding, leaks, cracks, chafing, etc. Visually check constant velocity joints, rubber boots, and axle seals for leaks.

Body Component Lubrication

Lubricate all key lock cylinders, hood hinges, liftgate hinges, and the steel fuel door hinge unless the components are plastic. Applying silicone grease on weatherstrips with a clean cloth will make them last longer, seal better, and not stick or squeak.

Underbody Maintenance

Use plain water to flush dirt and debris from the vehicle's underbody. Your dealer or an underbody car washing system can do this. If not removed, rust and corrosion can develop.

Sheet Metal Damage

If the vehicle is damaged and requires sheet metal repair or replacement, make sure the body repair shop applies anti-corrosion material to parts repaired or replaced to restore corrosion protection.

Original manufacturer replacement parts will provide the corrosion protection while maintaining the vehicle warranty.

Finish Damage

Quickly repair minor chips and scratches with touch-up materials available from your dealer to avoid corrosion. Larger areas of finish damage can be corrected in your dealer's body and paint shop.

Chemical Paint Spotting

Airborne pollutants can fall upon and attack painted vehicle surfaces causing blotchy, ring-shaped discolorations, and small, irregular dark spots etched into the paint surface.

Interior Care

To prevent dirt particle abrasions, regularly clean the vehicle's interior. Immediately remove any soils. Note that newspapers or dark garments that can transfer color to home furnishings can also permanently transfer color to the vehicle's interior.

Use a soft bristle brush to remove dust from knobs and crevices on the instrument cluster. Using a mild soap solution, immediately remove hand lotions, sunscreen, and insect repellent from all interior surfaces or permanent damage may result.

Your dealer may have products for cleaning the interior. Use cleaners specifically designed for the surfaces being cleaned to prevent permanent damage. Apply all cleaners directly to the cleaning cloth. Do not spray cleaners directly on any switches or controls.

Cleaners should be removed quickly. Never allow cleaners to remain on the surface being cleaned for extended periods of time.

Cleaners may contain solvents that can become concentrated in the interior. Before using cleaners, read and adhere to all safety instructions on the label. While cleaning the interior, maintain adequate ventilation by opening the doors and windows.

To prevent damage, do not clean the interior using the following cleaners or techniques:

- Never use a razor or any other sharp object to remove a soil from any interior surface.
- Never use a brush with stiff bristles.
- Never rub any surface aggressively or with excessive pressure.
- Do not use laundry detergents or dishwashing soaps with degreasers. For liquid cleaners, use approximately 20 drops per 3.78 L (1 gal) of water.
  A concentrated soap solution will leave a residue that creates streaks and attracts dirt. Do not use solutions that contain strong or caustic soap.
- Do not heavily saturate the upholstery when cleaning.
- Do not use solvents or cleaners containing solvents.

Interior Glass

To clean, use a terry cloth fabric dampened with water. Wipe droplets left behind with a clean dry cloth. Commercial glass cleaners may be used, if necessary, after cleaning the interior glass with plain water.

Notice: **To prevent scratching, never use abrasive cleaners on automotive glass. Abrasive cleaners or aggressive cleaning may damage the rear window defogger.**

Notice: **Cleaning the windshield with water during the first three to six months of ownership will reduce tendency to fog.**

Speaker Covers

Vacuum around a speaker cover gently, so that the speaker will not be damaged. Clean spots with just water and mild soap.

Coated Moldings

Coated moldings should be cleaned.

- When lightly soiled, wipe with a sponge or soft lint-free cloth dampened with water.
- When heavily soiled, use warm soapy water.

Fabric/Carpet/Suede

Start by vacuuming the surface using a soft brush attachment. If a rotating brush attachment is being used during vacuuming, only use it on the floor carpet. Before cleaning, gently remove as much of the soil as possible using one of the following techniques:

- Gently blot liquids with a paper towel. Continue blotting until no more soil can be removed.
- For solid soils, remove as much as possible prior to vacuuming.

To clean:

1. Saturate a clean lint-free colorfast cloth with water or club soda. Microfiber cloth is recommended to prevent lint transfer to the fabric or carpet.
2. Remove excess moisture by gently wringing until water does not drip from the cleaning cloth.
3. Start on the outside edge of the soil and gently rub toward the center. Fold the cleaning cloth to a clean area frequently to prevent forcing the soil in to the fabric.
4. Continue gently rubbing the soiled area until there is no longer any color transfer from the soil to the cleaning cloth.
5. If the soil is not completely removed, use a mild soap solution followed only by club soda or plain water.

If the soil is not completely removed, it may be necessary to use a commercial upholstery cleaner or spot lifter. Test a small hidden area for colorfastness before using a commercial upholstery cleaner or spot lifter. If ring formation occurs, clean the entire fabric or carpet.

Following the cleaning process, a paper towel can be used to blot excess moisture.

Cleaning High Gloss Surfaces and Vehicle Information and Radio Displays

For vehicles with high gloss surfaces or vehicle displays, use a microfiber cloth to wipe surfaces. Before wiping the surface with the microfiber cloth, use a soft bristle brush to remove dirt that could scratch the surface. Then use the microfiber cloth by gently rubbing to clean. Never use window cleaners or solvents. Periodically hand wash the microfiber cloth separately, using mild soap. Do not use bleach or fabric softener. Rinse thoroughly and air dry before next use.

Notice: **Do not attach a device with a suction cup to the display. This may cause damage and would not be covered by the warranty.**

Instrument Panel, Leather, Vinyl, and Other Plastic Surfaces

Use a soft microfiber cloth dampened with water to remove dust and loose dirt. For a more thorough cleaning, use a soft microfiber cloth dampened with a mild soap solution.

Notice: **Soaking or saturating leather, especially perforated leather, as well as other interior surfaces, may cause permanent damage. Wipe excess moisture from these surfaces after cleaning and allow them to dry naturally. Never use heat, steam, spot lifters, or spot removers. Do not use cleaners that contain silicone or wax-based products. Cleaners containing these solvents can permanently change the appearance and feel of leather or soft trim and are not recommended.**

Do not use cleaners that increase gloss, especially on the instrument panel. Reflected glare can decrease visibility through the windshield under certain conditions.

Notice: **Use of air fresheners may cause permanent damage to plastics and painted surfaces. If an air freshener comes in contact with any plastic or painted surface in the vehicle, blot immediately and clean with a soft cloth dampened with a mild soap solution. Damage caused by air fresheners would not be covered by the vehicle warranty.**

Cargo Cover and Convenience Net

Wash with warm water and mild detergent. Do not use chlorine bleach. Rinse with cold water, and then dry completely.

Care of Safety Belts

Keep belts clean and dry.

⚠ WARNING

Do not bleach or dye safety belts. It may severely weaken them. In a crash, they might not be able to provide adequate protection. Clean safety belts only with mild soap and lukewarm water.

Floor Mats

⚠ WARNING

If a floor mat is the wrong size or is not properly installed, it can interfere with the pedals. Interference with the pedals can cause unintended acceleration and/or increased stopping distance which can cause a crash and injury. Make sure the floor mat does not interfere with the pedals.

Use the following guidelines for proper floor mat usage:

- The original equipment floor mats were designed for your vehicle. If the floor mats need replacing, it is recommended that GM certified floor mats be purchased. Non-GM floor mats may not fit properly and may interfere with the pedals. Always check that the floor mats do not interfere with the pedals.
- Use the floor mat with the correct side up. Do not turn it over.
- Do not place anything on top of the driver side floor mat.
- Use only a single floor mat on the driver side.
- Do not place one floor mat on top of another.

Removing and Replacing the Floor Mats

Pull up on the rear of the floor mat to unlock each retainer and remove.

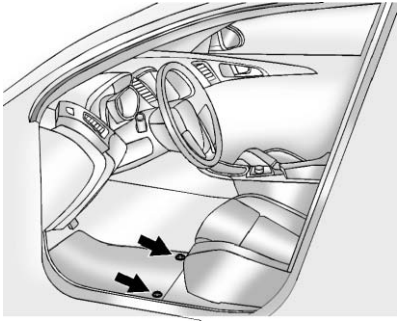

Reinstall by lining up the floor mat retainer openings over the carpet retainers and snap into position.

Make sure the floor mat is properly secured in place.

Verify the floor mat does not interfere with the pedals.

Service and Maintenance

General Information
General Information 11-1

Maintenance Schedule
Maintenance Schedule 11-3

Special Application Services
Special Application Services 11-8

Additional Maintenance and Care
Additional Maintenance and Care 11-9

Recommended Fluids, Lubricants, and Parts
Recommended Fluids and Lubricants 11-12
Maintenance Replacement Parts 11-14

Maintenance Records
Maintenance Records 11-15

General Information

Your vehicle is an important investment. This section describes the required maintenance for the vehicle. Follow this schedule to help protect against major repair expenses resulting from neglect or inadequate maintenance. It may also help to maintain the value of the vehicle if it is sold. It is the responsibility of the owner to have all required maintenance performed.

Your dealer has trained technicians who can perform required maintenance using genuine replacement parts. They have up-to-date tools and equipment for fast and accurate diagnostics. Many dealers have extended evening and Saturday hours, courtesy transportation, and online scheduling to assist with service needs.

Your dealer recognizes the importance of providing competitively priced maintenance and repair services. With trained technicians, the dealer is the place for routine maintenance such as oil changes and tire rotations and additional maintenance items like tires, brakes, batteries, and wiper blades.

Notice: **Damage caused by improper maintenance can lead to costly repairs and may not be covered by the vehicle warranty. Maintenance intervals, checks, inspections, recommended fluids, and lubricants are important to keep the vehicle in good working condition.**

The Tire Rotation and Required Services are the responsibility of the vehicle owner. It is recommended to have your dealer perform these services every 12 000 km/7,500 mi. Proper vehicle maintenance helps to keep the vehicle in good working condition, improves fuel economy, and reduces vehicle emissions.

Because of the way people use vehicles, maintenance needs vary. There may need to be more frequent checks and services. The Additional Required Services - Normal are for vehicles that:

- Carry passengers and cargo within recommended limits on the Tire and Loading Information label. See *Vehicle Load Limits on page 9-9*.
- Are driven on reasonable road surfaces within legal driving limits.
- Use the recommended fuel. See *Recommended Fuel on page 9-32*.

Refer to the information in the Maintenance Schedule Additional Required Services - Normal chart.

The Additional Required Services - Severe are for vehicles that are:

- Mainly driven in heavy city traffic in hot weather.
- Mainly driven in hilly or mountainous terrain.
- Frequently towing a trailer.
- Used for high speed or competitive driving.
- Used for taxi, police, or delivery service.

Refer to the information in the Maintenance Schedule Additional Required Services - Severe chart.

⚠ WARNING

Performing maintenance work can be dangerous and can cause serious injury. Perform maintenance work only if the required information, proper tools, and equipment are available.
If they are not, see your dealer to have a trained technician do the work. See *Doing Your Own Service Work on page 10-3*.

Maintenance Schedule

Owner Checks and Services

At Each Fuel Stop

- Check the engine oil level. See *Engine Oil on page 10-7*.

Once a Month

- Check the tire inflation pressures. See *Tire Pressure on page 10-41*.
- Inspect the tires for wear. See *Tire Inspection on page 10-46*.
- Check the windshield washer fluid level. See *Washer Fluid on page 10-17*.

Engine Oil Change

When the Code 82 DIC message displays, have the engine oil and filter changed within the next 1 000 km/600 mi. If driven under the best conditions, the engine oil life system might not indicate the need for vehicle service for more than a year. The engine oil and filter must be changed at least once a year and the oil life system must be reset. Your trained dealer technician can perform this work. If the engine oil life system is reset accidentally, service the vehicle within 5 000 km/ 3,000 mi since the last service. Reset the oil life system when the oil is changed. See *Engine Oil Life System on page 10-9*.

Tire Rotation and Required Services Every 12 000 km/ 7,500 mi

Rotate the tires, if recommended for the vehicle, and perform the following services. See *Tire Rotation on page 10-46*.

- Check engine oil level and oil life percentage. If needed, change engine oil and filter, and reset oil life system. See *Engine Oil on page 10-7* and *Engine Oil Life System on page 10-9*.
- Check engine coolant level. See *Engine Coolant on page 10-13*.
- Check windshield washer fluid level. See *Washer Fluid on page 10-17*.

- Visually inspect windshield wiper blades for wear, cracking, or contamination. See *Exterior Care on page 10-68*. Replace worn or damaged wiper blades. See *Wiper Blade Replacement on page 10-22*.
- Check tire inflation pressures. See *Tire Pressure on page 10-41*.
- Inspect tire wear. See *Tire Inspection on page 10-46*.
- Visually check for fluid leaks.
- Inspect engine air cleaner filter. See *Engine Air Cleaner/Filter on page 10-11*.
- Inspect brake system.
- Visually inspect steering, suspension, and chassis components for damaged, loose, or missing parts or signs of wear. See *Exterior Care on page 10-68*.
- Check restraint system components. See *Safety System Check on page 3-16*.
- Visually inspect fuel system for damage or leaks.
- Visually inspect exhaust system and nearby heat shields for loose or damaged parts.
- Lubricate body components. See *Exterior Care on page 10-68*.
- Check starter switch. See *Starter Switch Check on page 10-21*.
- Check automatic transmission shift lock control function. See *Automatic Transmission Shift Lock Control Function Check on page 10-21*.
- Check ignition transmission lock. See *Ignition Transmission Lock Check on page 10-21*.
- Check parking brake and automatic transmission park mechanism. See *Park Brake and P (Park) Mechanism Check on page 10-22*.
- Check accelerator pedal for damage, high effort, or binding. Replace if needed.
- Visually inspect gas strut for signs of wear, cracks, or other damage. Check the hold open ability of the strut. See your dealer if service is required.
- Check tire sealant expiration date. See *Tire Sealant and Compressor Kit on page 10-55*.

Additional Required Services

Maintenance Schedule Additional Required Services - Normal	12000km/7,500mi	24000km/15,000mi	36000km/22,500mi	48000km/30,000mi	60000km/37,500mi	72000km/45,000mi	84000km/52,500mi	96000km/60,000mi	108000km/67,500mi	120000km/75,000mi	132000km/82,500mi	144000km/90,000mi	156000km/97,500mi	168000km/105,000mi	180000km/112,500mi	192000km/120,000mi	204000km/127,500mi	216000km/135,000mi	228000km/142,500mi	240000km/150,000mi
Rotate tires and perform Required Services. Check engine oil level and oil life percentage. Change engine oil and filter, if needed.	✓	✓	✓	✓	✓	✓	✓	✓	✓	✓	✓	✓	✓	✓	✓	✓	✓	✓	✓	✓
Replace passenger compartment air filter. (1)			✓			✓			✓			✓			✓			✓		
Inspect evaporative control system. (2)						✓						✓						✓		
Replace engine air cleaner filter. (3)						✓						✓						✓		
Replace spark plugs. Inspect spark plug wires.													✓							
Change automatic transmission fluid. Change filter if serviceable.													✓							
Drain, flush, and fill engine cooling system. (4)																				✓
Check water pump/generator belt for proper tension and wear. (5)(6)		✓		✓		✓		✓		✓		✓		✓		✓		✓		✓
Check A/C compressor belt for wear. (5)																				✓
Replace brake/clutch fluid. (7)				✓				✓				✓				✓				✓

Footnotes — Maintenance Schedule Additional Required Services - Normal

(1) Or every two years, whichever comes first. More frequent replacement may be needed if the vehicle is driven in areas with heavy traffic, areas with poor air quality, or areas with high dust levels. Replacement may also be needed if there is a reduction in air flow, excessive window fogging, or odors.

(2) Check all fuel and vapor lines and hoses for proper hook-up, routing, and condition. Check that the purge valve, if the vehicle has one, works properly. Replace as needed.

(3) Or every four years, whichever comes first.

(4) Or every five years, whichever comes first. See *Cooling System on page 10-12*.

(5) Inspect for fraying, excessive cracking, or damage. Replace at mileage interval or every two years, whichever comes first.

(6) Inspect for fraying, excessive cracking, or damage. A belt tension check and possible adjustment must be performed at mileage interval. Replace belt if needed. See your dealer.

(7) Or every two years, whichever comes first.

Maintenance Schedule Additional Required Services - Severe	12000km/7,500mi	24000km/15,000mi	36000km/22,500mi	48000km/30,000mi	60000km/37,500mi	72000km/45,000mi	84000km/52,500mi	96000km/60,000mi	108000km/67,500mi	120000km/75,000mi	132000km/82,500mi	144000km/90,000mi	156000km/97,500mi	168000km/105,000mi	180000km/112,500mi	192000km/120,000mi	204000km/127,500mi	216000km/135,000mi	228000km/142,500mi	240000km/150,000mi
Rotate tires and perform Required Services. Check engine oil level and oil life percentage. Change engine oil and filter, if needed.	✓	✓	✓	✓	✓	✓	✓	✓	✓	✓	✓	✓	✓	✓	✓	✓	✓	✓	✓	✓
Replace passenger compartment air filter. (1)			✓			✓			✓			✓			✓			✓		
Inspect evaporative control system. (2)						✓						✓						✓		
Replace engine air cleaner filter. (3)						✓						✓						✓		
Replace spark plugs. Inspect spark plug wires.													✓							
Change automatic transmission fluid. Change filter if serviceable.						✓						✓						✓		
Drain, flush, and fill engine cooling system. (4)																				✓
Check water pump/generator belt for proper tension and wear. (5)(6)		✓		✓		✓		✓		✓		✓		✓		✓		✓		✓
Check A/C compressor belt for wear. (5)																				✓
Replace brake/clutch fluid. (7)				✓				✓				✓				✓				✓

Footnotes — Maintenance Schedule Additional Required Services - Severe

(1) Or every two years, whichever comes first. More frequent replacement may be needed if the vehicle is driven in areas with heavy traffic, areas with poor air quality, or areas with high dust levels. Replacement may also be needed if there is a reduction in air flow, excessive window fogging, or odors.

(2) Check all fuel and vapor lines and hoses for proper hook-up, routing, and condition. Check that the purge valve, if the vehicle has one, works properly. Replace as needed.

(3) Or every four years, whichever comes first.

(4) Or every five years, whichever comes first. See *Cooling System on page 10-12*.

(5) Inspect for fraying, excessive cracking, or damage. Replace at mileage interval or every two years, whichever comes first.

(6) Inspect for fraying, excessive cracking, or damage. A belt tension check and possible adjustment must be performed at mileage interval. Replace belt if needed. See your dealer.

(7) Or every two years, whichever comes first.

Special Application Services

- Severe Commercial Use Vehicles Only: Lubricate chassis components every 5 000 km/ 3,000 mi.
- Have underbody flushing service performed once a year.

Additional Maintenance and Care

Your vehicle is an important investment and caring for it properly may help to avoid future costly repairs. To maintain vehicle performance, additional maintenance services may be required. It is recommended that your dealer perform these services — their trained dealer technicians know your vehicle best. Your dealer can also perform a thorough assessment with a multi-point inspection to recommend when your vehicle may need attention. The following list is intended to explain the services and conditions to look for that may indicate services are required.

Battery

The battery supplies power to start the engine and operate any additional electrical accessories.

- To avoid break-down or failure to start the vehicle, maintain a battery with full cranking power.
- Trained dealer technicians have the diagnostic equipment to test the battery and ensure that the connections and cables are corrosion-free.

Belts

- Belts may need replacing if they squeak or show signs of cracking or splitting.
- Trained dealer technicians have access to tools and equipment to inspect the belts and recommend adjustment or replacement when necessary.

Brakes

Brakes stop the vehicle and are crucial to safe driving.

- Signs of brake wear may include chirping, grinding, or squealing noises, or difficulty stopping.
- Trained dealer technicians have access to tools and equipment to inspect the brakes and recommend quality parts engineered for the vehicle.

Fluids

Proper fluid levels and approved fluids protect the vehicle's systems and components. See *Recommended Fluids and Lubricants on page 11-12* for GM approved fluids.

- Engine oil and windshield washer fluid levels should be checked at every fuel fill.
- Instrument cluster lights may come on to indicate that fluids may be low and need to be filled.

Hoses

Hoses transport fluids and should be regularly inspected to ensure that there are no cracks or leaks. With a multi-point inspection, your dealer can inspect the hoses and advise if replacement is needed.

Lamps

Properly working headlamps, taillamps, and brake lamps are important to see and be seen on the road.

- Signs that the headlamps need attention include dimming, failure to light, cracking, or damage. The brake lamps need to be checked periodically to ensure that they light when braking.
- With a multi-point inspection, your dealer can check the lamps and note any concerns.

Shocks and Struts

Shocks and struts help aid in control for a smoother ride.

- Signs of wear may include steering wheel vibration, bounce/sway while braking, longer stopping distance, or uneven tire wear.
- As part of the multi-point inspection, trained dealer technicians can visually inspect the shocks and struts for signs of leaking, blown seals, or damage, and can advise when service is needed.

Tires

Tires need to be properly inflated, rotated, and balanced. Maintaining the tires can save money, fuel, and can reduce the risk of tire failure.

- Signs that the tires need to be replaced include three or more visible treadwear indicators; cord or fabric showing through the rubber; cracks or cuts in the tread or sidewall; or a bulge or split in the tire.
- Trained dealer technicians can inspect and recommend the right tires. Your dealer can also provide tire/wheel balancing services to ensure smooth vehicle operation at all speeds. Your dealer sells and services name brand tires.

Vehicle Care

To help keep the vehicle looking like new, vehicle care products are available from your dealer. For information on how to clean and protect the vehicle's interior and exterior, see *Interior Care on page 10-71* and *Exterior Care on page 10-68*.

Wheel Alignment

Wheel alignment is critical for ensuring that the tires deliver optimal wear and performance.

- Signs that the alignment may need to be adjusted include pulling, improper vehicle handling, or unusual tire wear.
- Your dealer has the required equipment to ensure proper wheel alignment.

Windshield

For safety, appearance, and the best viewing, keep the windshield clean and clear.

- Signs of damage include scratches, cracks, and chips.
- Trained dealer technicians can inspect the windshield and recommend proper replacement if needed.

Wiper Blades

Wiper blades need to be cleaned and kept in good condition to provide a clear view.

- Signs of wear include streaking, skipping across the windshield, and worn or split rubber.
- Trained dealer technicians can check the wiper blades and replace them when needed.

Recommended Fluids, Lubricants, and Parts

Recommended Fluids and Lubricants

Fluids and lubricants identified below by name, part number, or specification can be obtained from your dealer.

Usage	Fluid/Lubricant
Engine Oil	Use only engine oil licensed to the dexos1 specfication, or equivalent, of the proper SAE viscosity grade. ACDelco dexos1 Synthetic Blend is recommended. See *Engine Oil on page 10-7*.
Engine Coolant	50/50 mixture of clean, drinkable water and use only DEX-COOL Coolant. See *Engine Coolant on page 10-13*.
Hydraulic Brake/Clutch System	DOT 4 Hydraulic Brake Fluid (GM Part No. 88958860, in Canada 88901244).
Windshield Washer	Automotive windshield washer fluid that meets regional freeze protection requirements.
Automatic Transmission	AW-1 Automatic Transmission Fluid (GM Part No. 19256039, in Canada 19256040).
Manual Transmission	75W-85 Manual Transmission Fluid (GM Part No. 88862472, in Canada 88862473).
Key Lock Cylinders	Multi-Purpose Lubricant, Superlube (GM Part No. 12346241, in Canada 10953474).

Usage	Fluid/Lubricant
Hood Latch Assembly, Secondary Latch, Pivots, Spring Anchor, and Release Pawl	Lubriplate Lubricant Aerosol (GM Part No. 89021668, in Canada 89021674) or lubricant meeting requirements of NLGI #2, Category LB or GC-LB.
Hood and Door Hinges	Multi-Purpose Lubricant, Superlube (GM Part No. 12346241, in Canada 10953474).
Weatherstrip Conditioning	Weatherstrip Lubricant (GM Part No. 3634770, in Canada 10953518) or Dielectric Silicone Grease (GM Part No. 12345579, in Canada 10953481).

Maintenance Replacement Parts

Replacement parts identified below by name, part number, or specification can be obtained from your dealer.

Maintenance Replacement Parts

Part	GM Part Number	ACDelco Part Number
Engine Air Cleaner/Filter	96910360	—
Engine Oil Filter	96985730	—
Passenger Compartment Air Filter	13271190	—
Spark Plugs	25181358	—
Wiper Blades		
Driver Side – 60 cm (23.6 in)	95108156	—
Passenger Side – 40 cm (15.7 in)	95108153	—
Rear	96688389	—

Maintenance Records

After the scheduled services are performed, record the date, odometer reading, who performed the service, and the type of services performed in the boxes provided. Retain all maintenance receipts.

Date	Odometer Reading	Serviced By	Services Performed

Date	Odometer Reading	Serviced By	Services Performed

Technical Data

Vehicle Identification
Vehicle Identification Number (VIN) 12-1
Service Parts Identification Label 12-1

Vehicle Data
Capacities and Specifications 12-2
Engine Drive Belt Routing . . . 12-4

Vehicle Identification

Vehicle Identification Number (VIN)

This legal identifier is in the front corner of the instrument panel, on the left side of the vehicle. It can be seen through the windshield from outside. The VIN also appears on the Vehicle Certification and Service Parts labels and certificates of title and registration.

Engine Identification

The eighth character in the VIN is the engine code. This code identifies the vehicle's engine, specifications, and replacement parts. See “Engine Specifications” under *Capacities and Specifications on page 12-2* for the vehicle's engine code.

Service Parts Identification Label

This label, on the inside of the glove box, has the following information:

- Vehicle Identification Number (VIN).
- Model designation.
- Paint information.
- Production options and special equipment.

Do not remove this label from the vehicle.

Vehicle Data

Capacities and Specifications

The following approximate capacities are given in metric and English conversions. See *Recommended Fluids and Lubricants on page 11-12* for more information.

Application	Capacities	
	Metric	English
Air Conditioning Refrigerant	For the air conditioning system refrigerant type and charge amount, see the refrigerant label under the hood. See your dealer for more information.	
Cooling System	4.8 L	5.0 qt
Engine Oil with Filter	3.8 L	4.0 qt
Fuel Tank	35 L	9 gal
Transmission, Automatic	4.5 L	4.8 qt
Wheel Nut Torque	125 N•m	92 lb ft
All capacities are approximate. When adding, be sure to fill to the approximate level, as recommended in this manual. Recheck fluid level after filling.		

Engine Specifications

Engine	VIN Code	Transmission	Spark Plug Gap
1.2L L4	9	Automatic and Manual	0.8 mm (0.031 in)

Engine Drive Belt Routing

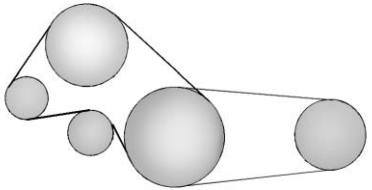

Customer Information

Customer Information
Customer Satisfaction Procedure 13-1
Customer Assistance Offices 13-3
Customer Assistance for Text Telephone (TTY) Users 13-4
Online Owner Center 13-4
GM Mobility Reimbursement Program 13-5
Roadside Assistance Program 13-5
Scheduling Service Appointments 13-7
Courtesy Transportation Program 13-7
Collision Damage Repair 13-9
Service Publications Ordering Information 13-11

Reporting Safety Defects
Reporting Safety Defects to the United States Government 13-12
Reporting Safety Defects to the Canadian Government 13-13
Reporting Safety Defects to General Motors 13-13

Vehicle Data Recording and Privacy
Vehicle Data Recording and Privacy 13-13
Event Data Recorders 13-14
OnStar® 13-15
Radio Frequency Identification (RFID) 13-15
Radio Frequency Statement 13-15

Customer Information

Customer Satisfaction Procedure

Your satisfaction and goodwill are important to your dealer and to Chevrolet. Normally, any concerns with the sales transaction or the operation of the vehicle will be resolved by your dealer's sales or service departments. Sometimes, however, despite the best intentions of all concerned, misunderstandings can occur. If your concern has not been resolved to your satisfaction, the following steps should be taken:

STEP ONE: Discuss your concern with a member of dealership management. Normally, concerns can be quickly resolved at that level. If the matter has already been reviewed with the sales, service, or parts manager, contact the owner of your dealership or the general manager.

STEP TWO: If after contacting a member of dealership management, it appears your concern cannot be resolved by your dealership without further help, in the U.S., call the Chevrolet Customer Assistance Center at 1-800-222-1020. In Canada, call General Motors of Canada Customer Care Centre at 1-800-263-3777 (English), or 1-800-263-7854 (French).

We encourage you to call the toll-free number in order to give your inquiry prompt attention. Have the following information available to give the Customer Assistance representative:

- Vehicle Identification Number (VIN). This is available from the vehicle registration or title, or the plate at the top left of the instrument panel and visible through the windshield.
- Dealership name and location.
- Vehicle delivery date and present mileage.

When contacting Chevrolet, remember that your concern will likely be resolved at a dealer's facility. That is why we suggest following Step One first.

STEP THREE — U.S. Owners: Both General Motors and your dealer are committed to making sure you are completely satisfied with the new vehicle. However, if you continue to remain unsatisfied after following the procedure outlined in Steps One and Two, you can file with the Better Business Bureau (BBB) Auto Line® Program to enforce your rights.

The BBB Auto Line Program is an out-of-court program administered by the Council of Better Business Bureaus to settle automotive disputes regarding vehicle repairs or the interpretation of the New Vehicle Limited Warranty. Although you may be required to resort to this informal dispute resolution program prior to filing a court action, use of the program is free of charge and your case will generally be heard within 40 days. If you do not agree with the decision given in your case, you may reject it and proceed with any other venue for relief available to you.

You may contact the BBB Auto Line Program using the toll-free telephone number or write them at the following address:

BBB Auto Line Program
Council of Better Business Bureaus, Inc.
4200 Wilson Boulevard
Suite 800
Arlington, VA 22203-1838

Telephone: 1-800-955-5100
www.dr.bbb.org/goauto

This program is available in all 50 states and the District of Columbia. Eligibility is limited by vehicle age, mileage, and other factors. General Motors reserves the right to change eligibility limitations and/or discontinue its participation in this program.

STEP THREE — Canadian Owners: In the event that you do not feel your concerns have been addressed after following the procedure outlined in Steps One and Two, General Motors of Canada Limited wants you to be aware of its participation in a no-charge Mediation/Arbitration Program. General Motors of Canada Limited has committed to binding arbitration of owner disputes involving factory-related vehicle service claims. The program provides for the review of the facts involved by an impartial third party arbiter, and may include an informal hearing before the arbiter. The program is designed so that the entire dispute settlement process, from the time you file your complaint to the final decision, should be completed in about 70 days. We believe our impartial program offers advantages over courts in most jurisdictions because it is informal, quick, and free of charge.

For further information concerning eligibility in the Canadian Motor Vehicle Arbitration Plan (CAMVAP), call toll-free 1-800-207-0685, or call the General Motors Customer Care Centre, 1-800-263-3777 (English), 1-800-263-7854 (French), or write to:

The Mediation/Arbitration Program
c/o Customer Care Centre
General Motors of Canada Limited
Mail Code: CA1-163-005
1908 Colonel Sam Drive
Oshawa, Ontario L1H 8P7

The inquiry should be accompanied by the Vehicle Identification Number (VIN).

Customer Assistance Offices

Chevrolet encourages customers to call the toll-free number for assistance. However, if a customer wishes to write or e-mail Chevrolet, the letter should be addressed to:

United States and Puerto Rico

Chevrolet Motor Division
Chevrolet Customer Assistance Center
P.O. Box 33170
Detroit, MI 48232-5170
www.Chevrolet.com

1-800-222-1020
1-800-833-2438 (For Text Telephone Devices (TTYs))
Roadside Assistance:
1-800-243-8872

From U.S. Virgin Islands:

1-800-496-9994

Canada

General Motors of Canada Limited
Customer Care Centre, Mail Code: CA1-163-005
1908 Colonel Sam Drive
Oshawa, Ontario L1H 8P7
www.gm.ca

1-800-263-3777 (English)
1-800-263-7854 (French)
1-800-263-3830 (For Text Telephone devices (TTYs))
Roadside Assistance:
1-800-268-6800

Overseas

Please contact the local General Motors Business Unit.

Customer Assistance for Text Telephone (TTY) Users

To assist customers who are deaf, hard of hearing, or speech-impaired and who use Text Telephones (TTYs), Chevrolet has TTY equipment available at its Customer Assistance Center. Any TTY user in the U.S. can communicate with Chevrolet by dialing: 1-800-833-2438. TTY users in Canada can dial 1-800-263-3830.

Online Owner Center

Online Owner Experience (U.S.) my.chevrolet.com

The Chevrolet online owner experience is a one-stop resource that allows interaction with Chevrolet and keeps important vehicle-specific information in one place.

Membership Benefits

(Vehicle Information): Download owner manuals and view vehicle-specific how-to videos.

(Maintenance Information): View maintenance schedules, required alerts, OnStar onboard vehicle diagnostic information, and schedule service appointments.

(Service History): View printable dealer-recorded service records and self-recorded service records.

(Preferred Dealer Information): Select a preferred dealer and view dealer location, maps, phone numbers, and hours.

(Warranty Tracking Information): Track the vehicle's warranty information.

(Recall Information): View active recalls or search by Vehicle Identification Number (VIN). See *Vehicle Identification Number (VIN) on page 12-1*.

(Other Account Information): View GM Card, SiriusXM Satellite radio, and OnStar account information.

(Live Chat Support): Chat live with online help representatives.

Visit my.chevrolet.com to register your vehicle.

Chevrolet Owner Centre (Canada) chevroletowner.ca

Take a trip to the Chevrolet Owner Centre:

- Chat live with online help representatives.
- Use the Vehicle Tools section.
- Access third party enthusiast sites and social media networks.
- Locate owner resources such as lease-end, financing, and warranty information.
- Retrieve your favorite articles, quizzes, tips, and multimedia galleries organized into the Features and Auto Care Sections.
- Download the owner manual for your vehicle, quickly and easily.
- Find the Chevrolet-recommended maintenance services for your vehicle.

GM Mobility Reimbursement Program

This program is available to qualified applicants for cost reimbursement of eligible aftermarket adaptive equipment required for the vehicle, such as hand controls or a wheelchair/scooter lift for the vehicle.

For more information on the limited offer, visit www.gmmobility.com or call the GM Mobility Assistance Center at 1-800-323-9935. Text Telephone (TTY) users, call 1-800-833-9935.

General Motors of Canada also has a Mobility Program. Call 1-800-GM-DRIVE (463-7483) for details. TTY users call 1-800-263-3830.

Roadside Assistance Program

For U.S.-purchased vehicles, call 1-800-243-8872; (Text Telephone (TTY): 1-888-889-2438).

For Canadian-purchased vehicles, call 1-800-268-6800.

Service is available 24 hours a day, 365 days a year.

Calling for Assistance

When calling Roadside Assistance, have the following information ready:

- Your name, home address, and home telephone number.
- Telephone number of your location.
- Location of the vehicle.

- Model, year, color, and license plate number of the vehicle.
- Odometer reading, Vehicle Identification Number (VIN), and delivery date of the vehicle.
- Description of the problem.

Coverage

Services are provided up to 5 years/ 160 000 km (100,000 mi), whichever comes first.

In the U.S., anyone driving the vehicle is covered. In Canada, a person driving the vehicle without permission from the owner is not covered.

Roadside Assistance is not a part of the New Vehicle Limited Warranty. Chevrolet and General Motors of Canada Limited reserve the right to make any changes or discontinue the Roadside Assistance program at any time without notification.

Chevrolet and General Motors of Canada Limited reserve the right to limit services or payment to an owner or driver if they decide the claims are made too often, or the same type of claim is made many times.

Services Provided

- **Emergency Fuel Delivery:** Delivery of enough fuel for the vehicle to get to the nearest service station.
- **Lock-Out Service:** Service to unlock the vehicle if you are locked out. A remote unlock may be available if you have OnStar. For security reasons, the driver must present identification before this service is given.
- **Emergency Tow from a Public Road or Highway:** Tow to the nearest Chevrolet dealer for warranty service, or if the vehicle was in a crash and cannot be driven. Assistance is also given when the vehicle is stuck in the sand, mud, or snow.
- **Flat Tire Change:** Service to change a flat tire with the spare tire. The spare tire, if equipped, must be in good condition and properly inflated. It is the owner's responsibility for the repair or replacement of the tire if it is not covered by the warranty.
- **Battery Jump Start:** Service to jump start a dead battery.

Services Not Included in Roadside Assistance

- Impound towing caused by violation of any laws.
- Legal fines.
- Mounting, dismounting, or changing of snow tires, chains, or other traction devices.
- Towing or services for vehicles driven on a non-public road or highway.

Services Specific to Canadian-Purchased Vehicles

- **Fuel Delivery:** Reimbursement is approximately $5 Canadian. Diesel fuel delivery may be

restricted. Propane and other fuels are not provided through this service.

- **Lock-Out Service:** Vehicle registration is required.
- **Trip Interruption Benefits and Assistance:** Must be over 250 kilometers from where your trip was started to qualify. General Motors of Canada Limited requires pre-authorization, original detailed receipts, and a copy of the repair orders. Once authorization has been received, the Roadside Assistance advisor will help to make arrangements and explain how to receive payment.
- **Alternative Service:** If assistance cannot be provided right away, the Roadside Assistance advisor may give permission to get local emergency road service. You will receive payment, up to $100, after sending the original receipt to Roadside Assistance. Mechanical failures may be covered, however any cost for parts and labor for repairs not covered by the warranty are the owner responsibility.

Scheduling Service Appointments

When the vehicle requires warranty service, contact your dealer and request an appointment. By scheduling a service appointment and advising the service consultant of your transportation needs, your dealer can help minimize your inconvenience.

If the vehicle cannot be scheduled into the service department immediately, keep driving it until it can be scheduled for service, unless, of course, the problem is safety related. If it is, please call your dealership, let them know this, and ask for instructions.

If your dealer requests you to bring the vehicle for service, you are urged to do so as early in the work day as possible to allow for same-day repair.

Courtesy Transportation Program

To enhance your ownership experience, we and our participating dealers are proud to offer Courtesy Transportation, a customer support program for vehicles with the Bumper-to-Bumper (Base Warranty Coverage period in Canada), extended powertrain, and/or hybrid-specific warranties in both the U.S. and Canada.

Several Courtesy Transportation options are available to assist in reducing inconvenience when warranty repairs are required.

Courtesy Transportation is not a part of the New Vehicle Limited Warranty. A separate booklet entitled “Limited Warranty and

Owner Assistance Information” furnished with each new vehicle provides detailed warranty coverage information.

Transportation Options

Warranty service can generally be completed while you wait. However, if you are unable to wait, GM helps to minimize inconvenience by providing several transportation options. Depending on the circumstances, your dealer can offer one of the following:

Shuttle Service

Shuttle service is the preferred means of offering Courtesy Transportation. Dealers may provide shuttle service to get you to your destination with minimal interruption of your daily schedule. This includes one-way or round-trip shuttle service within reasonable time and distance parameters of your dealer's area.

Public Transportation or Fuel Reimbursement

If the vehicle requires overnight warranty repairs, and public transportation is used instead of your dealer's shuttle service, the expense must be supported by original receipts and can only be up to the maximum amount allowed by GM for shuttle service. In addition, for U.S. customers, should you arrange transportation through a friend or relative, limited reimbursement for reasonable fuel expenses may be available. Claim amounts should reflect actual costs and be supported by original receipts. See your dealer for information regarding the allowance amounts for reimbursement of fuel or other transportation costs.

Courtesy Rental Vehicle

Your dealer may arrange to provide you with a courtesy rental vehicle or reimburse you for a rental vehicle that you obtain if the vehicle is kept for an overnight warranty repair. Rental reimbursement will be limited and must be supported by original receipts. This requires that you sign and complete a rental agreement and meet state/provincial, local, and rental vehicle provider requirements. Requirements vary and may include minimum age requirements, insurance coverage, credit card, etc. You are responsible for fuel usage charges and may also be responsible for taxes, levies, usage fees, excessive mileage, or rental usage beyond the completion of the repair.

It may not be possible to provide a like vehicle as a courtesy rental.

Additional Program Information

All program options, such as shuttle service, may not be available at every dealer. Please contact your dealer for specific information about availability. All Courtesy Transportation arrangements will be administered by appropriate dealer personnel.

General Motors reserves the right to unilaterally modify, change, or discontinue Courtesy Transportation at any time and to resolve all questions of claim eligibility pursuant to the terms and conditions described herein at its sole discretion.

Collision Damage Repair

If the vehicle is involved in a collision and it is damaged, have the damage repaired by a qualified technician using the proper equipment and quality replacement parts. Poorly performed collision repairs diminish the vehicle resale value, and safety performance can be compromised in subsequent collisions.

Collision Parts

Genuine GM Collision parts are new parts made with the same materials and construction methods as the parts with which the vehicle was originally built. Genuine GM Collision parts are the best choice to ensure that the vehicle's designed appearance, durability, and safety are preserved. The use of Genuine GM parts can help maintain the GM New Vehicle Limited Warranty.

Recycled original equipment parts may also be used for repair. These parts are typically removed from vehicles that were total losses in prior crashes. In most cases, the parts being recycled are from undamaged sections of the vehicle. A recycled original equipment GM part may be an acceptable choice to maintain the vehicle's originally designed appearance and safety performance; however, the history of these parts is not known. Such parts are not covered by the GM New Vehicle Limited Warranty, and any related failures are not covered by that warranty.

Aftermarket collision parts are also available. These are made by companies other than GM and may not have been tested for the vehicle. As a result, these parts may fit poorly, exhibit premature durability/corrosion problems, and may not perform properly in subsequent collisions. Aftermarket parts are not covered by the GM New Vehicle Limited Warranty, and any vehicle failure related to such parts is not covered by that warranty.

Repair Facility

GM also recommends that you choose a collision repair facility that meets your needs before you ever need collision repairs. Your dealer may have a collision repair center with GM-trained technicians and state-of-the-art equipment, or be able to recommend a collision repair center that has GM-trained technicians and comparable equipment.

Insuring the Vehicle

Protect your investment in the GM vehicle with comprehensive and collision insurance coverage. There are significant differences in the quality of coverage afforded by various insurance policy terms.

Many insurance policies provide reduced protection to the GM vehicle by limiting compensation for damage repairs by using aftermarket collision parts. Some insurance companies will not specify aftermarket collision parts. When purchasing insurance, we recommend that you ensure that the vehicle will be repaired with GM original equipment collision parts. If such insurance coverage is not available from your current insurance carrier, consider switching to another insurance carrier.

If the vehicle is leased, the leasing company may require you to have insurance that ensures repairs with Genuine GM Original Equipment Manufacturer (OEM) parts or Genuine Manufacturer replacement parts. Read the lease carefully, as you may be charged at the end of the lease for poor quality repairs.

If a Crash Occurs

If there has been an injury, call emergency services for help. Do not leave the scene of a crash until all matters have been taken care of. Move the vehicle only if its position puts you in danger, or you are instructed to move it by a police officer.

Give only the necessary information to police and other parties involved in the crash.

For emergency towing see *Roadside Assistance Program on page 13-5*.

Gather the following information:

- Driver name, address, and telephone number.
- Driver license number.
- Owner name, address, and telephone number.
- Vehicle license plate number.
- Vehicle make, model, and model year.
- Vehicle Identification Number (VIN).
- Insurance company and policy number.
- General description of the damage to the other vehicle.

Choose a reputable repair facility that uses quality replacement parts. See “Collision Parts” earlier in this section.

If the airbag has inflated, see *What Will You See after an Airbag Inflates? on page 3-22*.

Managing the Vehicle Damage Repair Process

In the event that the vehicle requires damage repairs, GM recommends that you take an active role in its repair. If you have a pre-determined repair facility of choice, take the vehicle there, or have it towed there. Specify to the facility that any required replacement collision parts be original equipment parts, either new Genuine GM parts or recycled

original GM parts. Remember, recycled parts will not be covered by the GM vehicle warranty.

Insurance pays the bill for the repair, but you must live with the repair. Depending on your policy limits, your insurance company may initially value the repair using aftermarket parts. Discuss this with the repair professional, and insist on Genuine GM parts. Remember, if the vehicle is leased, you may be obligated to have the vehicle repaired with Genuine GM parts, even if your insurance coverage does not pay the full cost.

If another party's insurance company is paying for the repairs, you are not obligated to accept a repair valuation based on that insurance company's collision policy repair limits, as you have no contractual limits with that company. In such cases, you can have control of the repair and parts choices as long as the cost stays within reasonable limits.

Service Publications Ordering Information

Service Manuals

Service Manuals have the diagnosis and repair information on the engines, transmission, axle, suspension, brakes, electrical, steering, body, etc.

Service Bulletins

Service Bulletins give additional technical service information needed to knowledgeably service General Motors cars and trucks. Each bulletin contains instructions to assist in the diagnosis and service of the vehicle.

Owner Information

Owner publications are written specifically for owners and intended to provide basic operational information about the vehicle. The Owner Manual includes the Maintenance Schedule for all models.

In-Portfolio: Includes a Portfolio, Owner Manual, and Warranty Booklet.

RETAIL SELL PRICE: $35.00 (U.S.) plus handling and shipping fees.

Without Portfolio: Owner Manual only.

RETAIL SELL PRICE: $25.00 (U.S.) plus handling and shipping fees.

Current and Past Models

Technical Service Bulletins and Manuals are available for current and past model GM vehicles.

ORDER TOLL FREE:
1-800-551-4123 Monday – Friday
8:00 AM – 6:00 PM Eastern Time

For Credit Card Orders Only (VISA-MasterCard-Discover), see Helm, Inc. at: www.helminc.com.

Or write to:

Helm, Incorporated
Attention: Customer Service
47911 Halyard Drive
Plymouth, MI 48170

Prices are subject to change without notice and without incurring obligation. Allow ample time for delivery.

All listed prices are quoted in U.S. funds. Make checks payable in U.S. funds.

Reporting Safety Defects

Reporting Safety Defects to the United States Government

If you believe that your vehicle has a defect which could cause a crash or could cause injury or death, you should immediately inform the National Highway Traffic Safety Administration (NHTSA) in addition to notifying General Motors.

If NHTSA receives similar complaints, it may open an investigation, and if it finds that a safety defect exists in a group of vehicles, it may order a recall and remedy campaign.

However, NHTSA cannot become involved in individual problems between you, your dealer, or General Motors.

To contact NHTSA, you may call the Vehicle Safety Hotline toll-free at 1-888-327-4236 (TTY: 1-800-424-9153); go to *http://www.safercar.gov;* or write to:

Administrator, NHTSA
1200 New Jersey Avenue, S.E.
Washington, D.C. 20590

You can also obtain other information about motor vehicle safety from *http://www.safercar.gov*.

Reporting Safety Defects to the Canadian Government

If you live in Canada, and you believe that the vehicle has a safety defect, notify Transport Canada immediately, and notify General Motors of Canada Limited. Call Transport Canada at 1-800-333-0510 or write to:

Transport Canada
Road Safety Branch
80 rue Noel
Gatineau, QC J8Z 0A1

Reporting Safety Defects to General Motors

In addition to notifying NHTSA (or Transport Canada) in a situation like this, notify General Motors.

Call 1-800-222-1020, or write:

Chevrolet Motor Division
Chevrolet Customer Assistance Center
P.O. Box 33170
Detroit, MI 48232-5170

In Canada, call 1-800-263-3777 (English) or 1-800-263-7854 (French), or write:

General Motors of Canada Limited
Customer Care Centre, Mail Code: CA1-163-005
1908 Colonel Sam Drive
Oshawa, Ontario L1H 8P7

Vehicle Data Recording and Privacy

The vehicle has a number of computers that record information about the vehicle's performance and how it is driven. For example, the vehicle uses computer modules to monitor and control engine and transmission performance, to monitor the conditions for airbag deployment and deploy them in a crash, and, if equipped, to provide antilock braking to help the driver control the vehicle. These modules may store data to help the dealer technician service the vehicle. Some modules may also store data about how the vehicle is operated, such as rate of fuel consumption or average speed. These modules may retain personal preferences, such as radio presets, seat positions, and temperature settings.

Event Data Recorders

This vehicle is equipped with an event data recorder (EDR). The main purpose of an EDR is to record, in certain crash or near crash-like situations, such as an air bag deployment or hitting a road obstacle, data that will assist in understanding how a vehicle's systems performed. The EDR is designed to record data related to vehicle dynamics and safety systems for a short period of time, typically 30 seconds or less. The EDR in this vehicle is designed to record such data as:

- How various systems in your vehicle were operating;
- Whether or not the driver and passenger safety belts were buckled/fastened;
- How far (if at all) the driver was depressing the accelerator and/or brake pedal; and,
- How fast the vehicle was traveling.

These data can help provide a better understanding of the circumstances in which crashes and injuries occur. NOTE: EDR data are recorded by your vehicle only if a non-trivial crash situation occurs; no data are recorded by the EDR under normal driving conditions and no personal data (e.g., name, gender, age, and crash location) are recorded. However, other parties, such as law enforcement, could combine the EDR data with the type of personally identifying data routinely acquired during a crash investigation.

To read data recorded by an EDR, special equipment is required, and access to the vehicle or the EDR is needed. In addition to the vehicle manufacturer, other parties, such as law enforcement, that have the special equipment, can read the information if they have access to the vehicle or the EDR.

GM will not access this data or share it with others except: with the consent of the vehicle owner or, if the vehicle is leased, with the consent of the lessee; in response to an official request by police or similar government office; as part of GM's defense of litigation through the discovery process; or, as required by law. Data that GM collects or receives may also be used for GM research needs or may be made available to others for research purposes, where a need is shown and the data is not tied to a specific vehicle or vehicle owner.

OnStar®

If the vehicle is equipped with OnStar® and has an active subscription, additional data may be collected through the OnStar system. This includes information about the vehicle's operation; about collisions involving the vehicle; the use of the vehicle and its features; and, in certain situations, the location and approximate GPS speed of the vehicle. Refer to the OnStar Terms and Conditions and Privacy Statement on the OnStar website.

Radio Frequency Identification (RFID)

RFID technology is used in some vehicles for functions such as tire pressure monitoring and ignition system security, as well as in connection with conveniences such as Remote Keyless Entry (RKE) transmitters for remote door locking/unlocking and starting, and in-vehicle transmitters for garage door openers. RFID technology in GM vehicles does not use or record personal information or link with any other GM system containing personal information.

Radio Frequency Statement

This vehicle has systems that operate on a radio frequency that comply with Part 15 of the Federal Communications Commission (FCC) rules and with Industry Canada Standards RSS-GEN/210/220/310.

Operation is subject to the following two conditions:

1. The device may not cause harmful interference.
2. The device must accept any interference received, including interference that may cause undesired operation of the device.

Changes or modifications to any of these systems by other than an authorized service facility could void authorization to use this equipment.

✍ NOTES

OnStar

OnStar Overview
OnStar Overview 14-1

OnStar Services
Emergency 14-2
Security 14-2
Navigation 14-2
Connections 14-3
Diagnostics 14-5

OnStar Additional Information
OnStar Additional Information 14-5

OnStar Overview

The vehicle will have one of these sets of buttons.

If equipped, this vehicle has a comprehensive, in-vehicle system that can connect to a live Advisor for Emergency, Security, Navigation, Connection, and Diagnostic Services.

The OnStar system status light is next to the OnStar buttons. If the status light is:

- Solid Green: System is ready.
- Flashing Green: On a call.
- Red: Indicates a problem.

Press , or call 1-888-4ONSTAR (1-888-466-7827) to speak to an Advisor.

Press or to:

- Make a call, end a call, or answer an incoming call.
- Give OnStar Hands-Free Calling voice commands.
- Give OnStar Turn-by-Turn Navigation voice commands. Requires the available Directions and Connections service plan.

Press to connect to a live Advisor to:

- Verify account information or update contact information.
- Get driving directions. Requires the available Directions and Connections service plan.
- Receive On-Demand Diagnostics for a check of the vehicle's key operating systems.
- Receive Roadside Assistance.

Press the OnStar Emergency button, or , to get a priority connection to an Emergency Advisor available 24/7 to:

- Get help for an emergency.
- Be a Good Samaritan or respond to an AMBER Alert.
- Get crisis assistance and evacuation routes.

OnStar Services

Emergency

With Automatic Crash Response, the built-in system can automatically connect to help in most crashes, even if help cannot be requested.

Press or to connect to an Emergency Advisor. GPS technology is used to identify the vehicle location and can provide critical information to emergency personnel. The Advisor is also trained to offer critical assistance in emergency situations before first responders arrive.

Security

OnStar provides services like Stolen Vehicle Assistance, Remote Ignition Block, and Roadside Assistance, if the vehicle is equipped with these services. OnStar can unlock the vehicle doors remotely, if it is equipped with automatic door locks, and can help police locate the vehicle if it is stolen.

Navigation

OnStar navigation requires the Directions and Connections service plan.

Press to receive directions or have them sent to the vehicle navigation screen, if equipped. Destinations can also be forwarded to the vehicle from MapQuest.com. The OnStar mapping database is continuously updated. For coverage maps, see www.onstar.com (U.S.), www.onstar.ca (Canada).

Turn-by-Turn Navigation

1. Press to connect to a live Advisor.
2. Request directions.
3. Directions are downloaded to the vehicle.
4. Follow the voice-guided commands.

Using Voice Commands During a Planned Route

Cancel Route

1. Press or . System responds: “OnStar ready,” then a tone. Say “Cancel route.” System responds: “Do you want to cancel directions?”
2. Say “Yes.” System responds: “OK, request completed, thank you, goodbye.”

Route Preview

1. Press or . System responds: “OnStar ready,” then a tone.
2. Say “Route preview.” System responds with the next three maneuvers.
3. Say “Goodbye.” Exits voice commands.

Repeat

1. Press or . System responds: “OnStar ready,” then a tone.
2. Say “Repeat.” System responds with the last direction given, then responds with “OnStar ready,” then a tone.
3. Say “Goodbye.” Exits voice commands.

Get My Destination

1. Press or . System responds: “OnStar ready,” then a tone.
2. Say “Get my destination.” System responds with address and the distance to the destination, then responds with “OnStar ready,” then a tone.
3. Say “Goodbye.” Exits voice commands.

Other Navigation Services Available from OnStar

OnStar eNav: Allows subscribers to send destinations from MapQuest.com to their Turn-by-Turn Navigation or screen-based navigation system. When ready, the directions will be downloaded to the vehicle.

Destination Download: Press , then request the Advisor to download directions to the navigation system in the vehicle. After the call ends, press the “Go” button on the navigation screen to begin driving directions.

Destinations can also be downloaded on the go. For coverage maps, see www.onstar.com (U.S.), www.onstar.ca (Canada).

Connections

OnStar Hands-Free Calling allows calls to be made and received from the vehicle. The vehicle can also be

controlled from a cell phone through the OnStar RemoteLink mobile app. For coverage maps, see www.onstar.com (U.S.), www.onstar.ca (Canada).

Hands-Free Calling

1. Press or . System responds: “OnStar ready.”
2. Say “Call.” System responds: “Please say the name or number to call.”
3. Say the entire number without pausing, including a “1” and the area code. System responds: “OK calling.”

Calling 911 Emergency

1. Press or . System responds “OnStar Ready,” followed by a tone.
2. Say “Call.” System responds “Please say the name or number to call.”
3. Say “911” without pausing. System responds “911.”
4. Say “Call.” System responds “OK, dialing 911.”

Retrieve My Number

1. Press or . System responds: “OnStar ready.”
2. Say “My number.” System responds: “Your OnStar Hands-Free Calling number is.”

End a Call

Press or . System responds: “Call ended.”

Store a Name Tag for Speed Dialing

1. Press or . System responds: “OnStar ready.”
2. Say “Store.” System responds: “Please say the number you would like to store.”
3. Say the entire number without pausing. System responds: “Please say the name tag.”
4. Pick a name tag. System responds: “About to store <name tag>. Does that sound OK?”
5. Say “Yes” or “No” to try again. System responds: “OK, storing <name tag>.”

Place a Call Using a Stored Number

1. Press or . System responds: “OnStar ready.”
2. Say “Call <name tag>.” System responds: “OK, calling <name tag>.”

Verify Minutes and Expiration

Press or and say “Minutes” then “Verify” to check how many minutes remain and their expiration date.

OnStar Mobile App

Download the OnStar RemoteLink mobile app to select iPhone, Android and Blackberry devices to check vehicle fuel level, oil life, or tire pressure; to start the vehicle (if equipped) or unlock it; or to connect to an OnStar Advisor. For OnStar RemoteLink information and compatibility, see www.onstar.com (U.S.), www.onstar.ca (Canada).

Diagnostics

OnStar Vehicle Diagnostics will perform a vehicle check every month. It will check the engine, transmission, antilock brakes, and major vehicle systems. It also checks the tire pressures, if the vehicle is equipped with the Tire Pressure Monitoring System. If a diagnostics check is needed between e-mails, press , and an Advisor can run a check.

OnStar Additional Information

Transferring Service

Push to request account transfer eligibility information. The Advisor can assist in canceling or removing account information. If OnStar receives information that vehicle ownership has changed, OnStar may send a voice message to the vehicle, requesting updated account information.

Reactivation for Subsequent Owners

Push and follow the prompts to speak to an Advisor as soon as possible after acquiring the vehicle. The Advisor will update vehicle records and will explain the OnStar service offers and options available.

How OnStar Service Works

Automatic Crash Response, Emergency Services, Crisis Assist, Stolen Vehicle Assistance, Vehicle Diagnostics, Remote Door Unlock, Roadside Assistance, Turn-by-Turn Navigation, and Hands-Free Calling are available on most vehicles. Not all OnStar services are available everywhere or on all vehicles. For more information, a full description of OnStar services, system limitations, and OnStar terms and conditions:

- In the U.S. see www.onstar.com (U.S.) or call 1.888.4.ONSTAR. (1.888.466.7827).
- In Canada see www.onstar.ca (Canada) or call 1.888.4.ONSTAR. (1.888.466.7827).
- Press to speak with an Advisor.

OnStar services require a vehicle electrical system, wireless service, and GPS satellite technologies to be available and operating for features to function properly. These systems may not operate if the battery is discharged or disconnected.

OnStar service cannot work unless your vehicle is in a place where OnStar has an agreement with a wireless service provider for service in that area, and the wireless service provider has coverage, network capacity, reception, and technology compatible with OnStar service. Service involving location information about the vehicle cannot work unless GPS signals are available, unobstructed, and compatible with the OnStar hardware. OnStar service may not work if the OnStar equipment is not properly installed or it has not been properly maintained. If equipment or software is added, connected, or modified, OnStar service may not work. Other problems beyond the control of OnStar may prevent service such as hills, tall buildings, tunnels, weather, electrical system design and architecture of the vehicle, damage to the vehicle in a crash, or wireless phone network congestion or jamming.

See *Radio Frequency Statement on page 13-15* for information regarding Part 15 of the Federal Communications Commission (FCC) rules and Industry Canada Standards RSS-GEN/210/220/310.

Services for People with Disabilities

Advisors provide services to help subscribers with physical disabilities and medical conditions.

Push for help with:

- Locating a gas station with an attendant to pump gas.
- Finding a hotel, restaurant, etc., that meets accessibility needs.
- Providing directions to the closest hospital or pharmacy in urgent situations.

TTY Users

OnStar has the ability to communicate to the deaf, hard-of-hearing, or speech-impaired customers while in the vehicle. The available dealer-installed TTY system can provide in-vehicle access to all of the OnStar services, except Virtual Advisor and OnStar Turn-by-Turn Navigation.

OnStar.com (U.S.) or OnStar.ca (Canada)

The website provides access to account information, allows management of the OnStar subscription, and viewing of videos of each service. Get subscription plan pricing and sign up for OnStar Vehicle Diagnostics. Click on the “My Account” tab on the home page. The website navigation and services provided may vary by country.

OnStar Personal Identification Number (PIN)

A PIN is needed to access some of the OnStar services, like Remote Door Unlock and Stolen Vehicle Assistance. You will be prompted to change the PIN the first time when speaking with an Advisor. To change the OnStar PIN, call OnStar and provide the Advisor with the current number.

Warranty

OnStar equipment may be warranted as part of the New Vehicle Limited Warranty. The manufacturer of the vehicle furnishes detailed warranty information.

Languages

The vehicle can be programmed to respond in French or Spanish. Push and ask an Advisor. Advisors can speak French or Spanish.

Potential Issues

Some OnStar services are disabled after five days. OnStar cannot perform Remote Door Unlock or Stolen Vehicle Assistance after the vehicle has been off continuously for five days. After five days, OnStar can contact Roadside Assistance and a locksmith to help gain access to the vehicle.

Global Positioning System (GPS)

- Obstruction of the GPS can occur in a large city with tall buildings; in parking garages; around airports; in tunnels, underpasses, or parking garages; or in an area with very dense trees. If GPS signals are not available, the OnStar system should still operate to call OnStar. However, OnStar could have difficulty identifying the exact location.
- In emergency situations, OnStar can use the last stored GPS location to send to emergency responders.
- A temporary loss of GPS can cause loss of the ability to send a Turn-by-Turn Navigation route. The Advisor may give a verbal route or may ask for a call back after the vehicle is driven into an open area.

Cellular and GPS Antennas

Avoid placing items over or near the antenna to prevent blocking cellular and GPS signal reception. Cellular reception is required for OnStar to send remote signals to the vehicle.

Unable to Connect to OnStar Message

If there is limited cellular coverage or the cellular network has reached maximum capacity, this message may come on. Push to try the call again or try again after driving a few miles into another cellular area.

Vehicle and Power Issues

OnStar services require a vehicle electrical system, wireless service, and GPS satellite technologies to be available and operating for features to function properly. These systems may not operate if the battery is discharged or disconnected.

Add-on Electrical Equipment

The OnStar system is integrated into the electrical architecture of the vehicle. Do not add any electrical equipment. See *Add-On Electrical Equipment on page 9-37*. Added electrical equipment may interfere with the operation of the OnStar system and cause it to not operate.

Privacy

The complete OnStar Privacy Statement may be found at www.onstar.com (U.S.), or www.onstar.ca (Canada). Privacy-sensitive users of wireless communications are cautioned that the privacy of any information sent via wireless cellular communications cannot be assured. Third parties may unlawfully intercept or access transmissions and private communications without consent.

OnStar - libcurl and unzip acknowledgments

Certain OnStar components include libcurl and unzip software. Below are the notices and licenses associated with this software:

libcurl:

COPYRIGHT AND PERMISSION NOTICE

Copyright (c) 1996 - 2010, Daniel Stenberg, <daniel@haxx.se>.

All rights reserved.

Permission to use, copy, modify, and distribute this software for any purpose with or without fee is hereby granted, provided that the above copyright notice and this permission notice appear in all copies.

THE SOFTWARE IS PROVIDED “AS IS,” WITHOUT WARRANTY OF ANY KIND, EXPRESS OR IMPLIED, INCLUDING BUT NOT LIMITED TO THE WARRANTIES OF MERCHANTABILITY, FITNESS FOR A PARTICULAR PURPOSE AND NONINFRINGEMENT OF THIRD PARTY RIGHTS. IN NO EVENT SHALL THE AUTHORS OR COPYRIGHT HOLDERS BE LIABLE FOR ANY CLAIM, DAMAGES OR OTHER LIABILITY, WHETHER IN AN ACTION OF CONTRACT, TORT OR OTHERWISE, ARISING FROM, OUT OF OR IN CONNECTION WITH THE SOFTWARE OR THE USE OR OTHER DEALINGS IN THE SOFTWARE.

Except as contained in this notice, the name of a copyright holder shall not be used in advertising or otherwise to promote the sale, use or other dealings in this Software without prior written authorization of the copyright holder.

unzip:

This is version 2005-Feb-10 of the Info-ZIP copyright and license. The definitive version of this document should be available at ftp://ftp.info-zip.org/pub/infozip/license.html indefinitely.

Copyright (c) 1990-2005 Info-ZIP. All rights reserved.

For the purposes of this copyright and license, “Info-ZIP” is defined as the following set of individuals:

Mark Adler, John Bush, Karl Davis, Harald Denker, Jean-Michel Dubois, Jean-loup Gailly, Hunter Goatley, Ed Gordon, Ian Gorman, Chris Herborth, Dirk Haase, Greg Hartwig, Robert Heath, Jonathan Hudson, Paul Kienitz, David Kirschbaum, Johnny Lee, Onno van der Linden, Igor Mandrichenko, Steve P. Miller, Sergio Monesi, Keith Owens, George Petrov, Greg Roelofs, Kai Uwe Rommel, Steve Salisbury, Dave Smith, Steven M. Schweda, Christian Spieler, Cosmin Truta, Antoine Verheijen, Paul von Behren, Rich Wales, Mike White

This software is provided “as is,” without warranty of any kind, express or implied. In no event shall Info-ZIP or its contributors be held liable for any direct, indirect, incidental, special or consequential damages arising out of the use of or inability to use this software.

Permission is granted to anyone to use this software for any purpose, including commercial applications, and to alter it and redistribute it freely, subject to the following restrictions:

1. Redistributions of source code must retain the above copyright notice, definition, disclaimer, and this list of conditions.
2. Redistributions in binary form (compiled executables) must reproduce the above copyright notice, definition, disclaimer, and this list of conditions in documentation and/or other materials provided with the distribution. The sole exception to this condition is redistribution of a standard UnZipSFX binary (including SFXWiz) as part of a self-extracting archive; that is permitted without inclusion of this license, as long as the normal SFX banner has not been removed from the binary or disabled.
3. Altered versions–including, but not limited to, ports to new operating systems, existing ports with new graphical interfaces, and dynamic, shared, or static library versions–must be plainly marked as such and must not be misrepresented as being the original source. Such altered versions also must not be misrepresented as being Info-ZIP releases–including, but not limited to, labeling of the altered versions with the names “Info-ZIP” (or any variation thereof, including, but not limited to, different capitalizations),

“Pocket UnZip,” “WiZ” or “MacZip” without the explicit permission of Info-ZIP. Such altered versions are further prohibited from misrepresentative use of the Zip-Bugs or Info-ZIP e-mail addresses or of the Info-ZIP URL(s).

4. Info-ZIP retains the right to use the names “Info-ZIP,” “Zip,” “UnZip,” “UnZipSFX,” “WiZ,” “Pocket UnZip,” “Pocket Zip,” and “MacZip” for its own source and binary releases.

A

Accessories and
Modifications 10-2
Accessory Power 9-17
Add-On Electrical
Equipment 9-37
Additional Information
OnStar® 14-5
Air Cleaner/Filter, Engine 10-11
Air Filter, Passenger
Compartment 8-4
Air Intake 8-4
Air Vents 8-3
Airbag System
Check 3-29
How Does an Airbag
Restrain? 3-22
Passenger Sensing
System 3-24
What Makes an Airbag
Inflate? 3-22
What Will You See after an
Airbag Inflates? 3-22
When Should an Airbag
Inflate? 3-21
Where Are the Airbags? 3-19
Airbags
Adding Equipment to the
Vehicle 3-28
Passenger Status Indicator . . .5-10
Readiness Light 5-9
Servicing Airbag-Equipped
Vehicles 3-28
System Check 3-17
Alarm
Vehicle Security 2-8
AM-FM Radio 7-9
Antenna
Multi-band 7-16
Antilock Brake
System (ABS) 9-25
Warning Light 5-15
Appearance Care
Exterior 10-68
Interior 10-71
Armrest
Front Seat 3-5
Assistance Program,
Roadside 13-5
Audio System
Radio Reception 7-15
Theft-Deterrent Feature 7-2
Automatic
Door Locks 2-5
Transmission 9-21
Transmission Fluid 10-10
Automatic Transmission
Shift Lock Control
Function Check 10-21
Auxiliary
Devices 7-17

B

Battery 10-20
Jump Starting 10-62
Power Protection 6-5
Blade Replacement, Wiper . . .10-22
Bluetooth 7-21, 7-23
Brake
System Warning Light 5-14
Brakes 10-18
Antilock 9-25
Assist 9-26
Fluid 10-19
Parking 9-26
Braking 9-3
Break-In, New Vehicle 9-13

Bulb Replacement 10-26
Fog Lamps 6-3
Halogen Bulbs 10-24
Headlamp Aiming 10-23
Headlamps 10-24
Headlamps, Front Turn Signal, and Parking Lamps 10-24
License Plate Lamps 10-26
Taillamps, Turn Signal, Stoplamps, and Back-up Lamps 10-25
Buying New Tires 10-48

C

California
Fuel Requirements 9-33
Perchlorate Materials Requirements 10-2
Warning 10-2
Canadian Vehicle Owners iii
Capacities and Specifications 12-2
Carbon Monoxide
Engine Exhaust 9-20
Liftgate 2-7
Winter Driving 9-7
Cargo
Cover 4-1
Cargo Net 4-2
Cautions, Danger, and Warnings iv
Central Locking System 2-5
Chains, Tire 10-53
Charging System Light 5-11
Check
Engine Light 5-11
Ignition Transmission Lock 10-21
Child Restraints
Infants and Young Children 3-32
Lower Anchors and Tethers for Children 3-37
Older Children 3-30
Securing 3-44, 3-47
Systems 3-34
Circuit Breakers 10-27
Cleaning
Exterior Care 10-68
Interior Care 10-71
Climate Control Systems 8-1
Air Conditioning 8-1
Heating 8-1
Clock 5-4
Cluster, Instrument 5-7
Clutch, Hydraulic 10-10
Collision Damage Repair 13-9
Compressor Kit, Tire Sealant 10-55
Connections
OnStar® 14-3
Control of a Vehicle 9-3
Convex Mirrors 2-10
Coolant
Engine 10-13
Engine Temperature Warning Light 5-17
Cooling System 10-12
Courtesy Lamps 6-4
Courtesy Transportation Program 13-7
Cover
Cargo 4-1

Cruise Control 9-30
Light 5-20
Customer Assistance 13-4
Offices 13-3
Text Telephone (TTY)
Users 13-4
Customer Information
Service Publications
Ordering Information 13-11
Customer Satisfaction
Procedure 13-1

D

Damage Repair, Collision 13-9
Danger, Warnings, and
Cautions iv
Data Recorders, Event 13-14
Daytime Running
Lamps (DRL) 6-2
Indicator Light 5-19
Defensive Driving 9-2
Devices
Auxiliary 7-17
Diagnostics
OnStar® 14-5
Distracted Driving 9-2
Dome Lamps 6-4
Door
Ajar Light 5-20
Ajar Reminder 2-5
Central Locking System 2-5
Locks 2-4
Drive Belt Routing, Engine 12-4
Driver Information
Center (DIC) 5-21
Driving
Defensive 9-2
Drunk 9-3
For Better Fuel Economy 1-15
Highway Hypnosis 9-6
Hill and Mountain Roads 9-6
If the Vehicle is Stuck 9-8
Loss of Control 9-4
Off-Road Recovery 9-4
Vehicle Load Limits 9-9
Wet Roads 9-5
Winter 9-7

E

Electrical Equipment,
Add-On 9-37
Electrical System
Engine Compartment
Fuse Block 10-28
Fuses and Circuit
Breakers 10-27
Instrument Panel Fuse
Block 10-32
Overload 10-27
Emergency
OnStar® 14-2
Engine
Air Cleaner/Filter 10-11
Check and Service Engine
Soon Light 5-11
Compartment Overview 10-6
Coolant 10-13
Coolant Temperature
Warning Light 5-17
Cooling System 10-12
Drive Belt Routing 12-4
Exhaust 9-20
Heater 9-16
Oil Life System 10-9

Engine (cont'd)
Overheating 10-16
Pressure Light 5-18
Reduced Power Light 5-19
Running While Parked 9-21
Starting 9-15
Event Data Recorders 13-14
Exit Lighting 6-5
Extender, Safety Belt 3-16
Exterior Lamp Controls 6-1
Exterior Lamps Off Reminder ... 6-1

F

Filter,
Engine Air Cleaner 10-11
Flash-to-Pass 6-2
Flashers, Hazard Warning 6-2
Flat Tire 10-53
Floor Mats 10-74
Fluid
Automatic Transmission 10-10
Brakes 10-19
Washer 10-17
Fog Lamps
Bulb Replacement 6-3
Folding Mirrors 2-11
Front Fog Lamp
Light 5-20
Front Seat Armrest 3-5
Front Seats
Adjustment 3-3
Heated 3-6
Fuel 9-32
Additives 9-33
Economy Driving 1-15
Filling a Portable Fuel
Container 9-36
Filling the Tank 9-34
Foreign Countries 9-33
Gasoline Specifications 9-33
Gauge 5-8
Low Fuel Warning Light.....5-18
Recommended 9-32
Requirements, California 9-33
Fuses
Engine Compartment
Fuse Block 10-28
Fuses and Circuit
Breakers 10-27
Instrument Panel Fuse
Block 10-32

G

Gasoline
Specifications 9-33
Gauges
Fuel 5-8
Odometer 5-8
Speedometer 5-8
Tachometer 5-8
Trip Odometer 5-8
Warning Lights and
Indicators 5-6
General Information
Service and Maintenance 11-1
Towing 9-36
Vehicle Care 10-2
Glove Box 4-1
GM Mobility Reimbursement
Program 13-5

H

Halogen Bulbs 10-24
Hands-Free Phone 7-28
Hazard Warning Flashers 6-2
Head Restraints 3-2

Headlamps
Aiming 10-23
Bulb Replacement 10-24
Daytime Running
Lamps (DRL) 6-2
Daytime Running Lamps
(DRL) Indicator Light 5-19
Flash-to-Pass 6-2
High-Beam On Light 5-19
High/Low Beam Changer 6-1
Lamps On Reminder 5-20
Heated Front Seats 3-6
Heater
Engine 9-16
Heating and Air Conditioning . . . 8-1
High-Beam On Light 5-19
Highway Hypnosis 9-6
Hill and Mountain Roads 9-6
Hill Start Assist (HSA) 9-27
Home Page 7-5
Hood 10-4
Hooks
Shopping Bag 4-2
Horn 5-2
How to Wear Safety Belts
Properly 3-10
Hydraulic Clutch 10-10

I

Ignition Positions 9-14
Ignition Transmission Lock
Check 10-21
Immobilizer 2-9
Light 5-18
Indicator
Owner Manual 5-14
Infants and Young Children,
Restraints 3-32
Infotainment 7-1
Instrument Cluster 5-7
Introduction iii

J

Jump Starting 10-62

K

Keyless Entry
Remote (RKE) System 2-3
Keys 2-1

L

Labeling, Tire Sidewall 10-36
Lamps
Courtesy 6-4
Daytime Running (DRL) 6-2
Dome 6-4
Exterior Controls 6-1
Exterior Lamps Off
Reminder 6-1
Headlamps, Front Turn
Signal, and Parking
Lamps 10-24
License Plate 10-26
Malfunction Indicator 5-11
On Reminder 5-20
Lap-Shoulder Belt 3-11

LATCH System
Replacing Parts after a Crash 3-44
LATCH, Lower Anchors and Tethers for Children 3-37
Liftgate
Carbon Monoxide 2-7
Lighting
Exit 6-5
Illumination Control 6-4
Lights
Airbag Readiness 5-9
Antilock Brake System (ABS) Warning 5-15
Brake System Warning 5-14
Charging System 5-11
Cruise Control 5-20
Daytime Running Lamps (DRL) 5-19
Door Ajar 5-20
Engine Coolant Temperature Warning 5-17
Engine Oil Pressure 5-18
Flash-to-Pass 6-2
Lights (cont'd)
Front Fog Lamp 5-20
High-Beam On 5-19
High/Low Beam Changer 6-1
Immobilizer 5-18
Low Fuel Warning 5-18
Reduced Engine Power 5-19
Safety Belt Reminders 5-9
Service Vehicle Soon 5-14
StabiliTrak® OFF 5-16
Tire Pressure 5-17
Traction Control System (TCS)/StabiliTrak® 5-16
Traction Off 5-16
Up-Shift 5-15
Warning, Power Steering 5-15
Link
Smartphone 7-31, 7-33, 7-34
Locks
Automatic Door 2-5
Central Locking System 2-5
Door 2-4
Safety 2-6
Loss of Control 9-4
Low Fuel Warning Light 5-18
Lower Anchors and Tethers for Children (LATCH System) 3-37

M

Maintenance
Records 11-15
Maintenance Schedule
Recommended Fluids and Lubricants 11-12
Malfunction Indicator Lamp 5-11
Manual Mirrors 2-10
Manual Transmission 9-23
Fluid 10-10
Messages
Vehicle 5-24
Mirrors
Convex 2-10
Folding 2-11
Manual 2-10
Manual Rearview 2-11
Power 2-11

Monitor System, Tire
Pressure 10-42
Movies 7-36, 7-41, 7-42
Multi-band Antenna 7-16

N

Navigation
OnStar® 14-2
Net
Cargo 4-2
New Vehicle Break-In 9-13

O

Odometer 5-8
Trip 5-8
Off-Road
Recovery 9-4
Oil
Engine 10-7
Engine Oil Life System 10-9
Pressure Light 5-18
Older Children, Restraints 3-30
Online Owner Center 13-4
OnStar®
System, In Brief 1-16
OnStar® Additional
Information 14-5
OnStar® Connections 14-3
OnStar® Diagnostics 14-5
OnStar® Emergency 14-2
OnStar® Navigation 14-2
OnStar® Overview 14-1
OnStar® Security 14-2
OnStar® System 7-19
Operation, Infotainment
System 7-6
Ordering
Service Publications 13-11
Outlets
Power 5-5
Overheating, Engine 10-16
Overview, Infotainment
System 7-3
Owner Manual Indicator 5-14

P

Park
Shifting Into 9-17
Shifting Out of 9-19
Parking 9-20
Brake 9-26
Brake and P (Park)
Mechanism Check 10-22
Over Things That Burn 9-20
Passenger Airbag Status
Indicator 5-10
Passenger Compartment Air
Filter 8-4
Passenger Sensing System . . . 3-24
Perchlorate Materials
Requirements, California 10-2
Personalization
Vehicle 5-25
Phone
Bluetooth 7-21, 7-23
Hands-Free 7-28

Pictures and
Movies 7-36, 7-41, 7-42
Port
USB 7-16
Power
Mirrors 2-11
Outlets 5-5
Protection, Battery 6-5
Reduced Engine Light 5-19
Retained Accessory (RAP) ...9-17
Windows 2-12
Power Steering Warning
Lights 5-15
Pregnancy, Using Safety
Belts 3-15
Privacy
Radio Frequency
Identification (RFID) 13-15
Program
Courtesy Transportation 13-7
Proposition 65 Warning,
California 10-2

R

Radio Frequency
Identification (RFID) 13-15
Statement 13-15
Radios
AM-FM Radio 7-9
Reception 7-15
Satellite 7-13
Rear Seats 3-6
Rear Window Washer/Wiper 5-3
Rearview Mirrors 2-11
Reclining Seatbacks 3-4
Recommended
Fuel 9-32
Recommended Fluids and
Lubricants 11-12
Records
Maintenance 11-15
Recreational Vehicle
Towing 10-65
Reduced Engine Power
Light 5-19
Reimbursement Program,
GM Mobility 13-5
Remote Keyless Entry
(RKE) System 2-2, 2-3
Replacement Bulbs 10-26
Replacement Parts
Airbags 3-29
Maintenance 11-14
Replacing Airbag System 3-29
Replacing LATCH System
Parts after a Crash 3-44
Replacing Safety Belt
System Parts after a Crash ... 3-16
Reporting Safety Defects
Canadian Government 13-13
General Motors 13-13
U.S. Government 13-12
Restraints
Where to Put 3-36
Retained Accessory
Power (RAP) 9-17
Roads
Driving, Wet 9-5

Roadside Assistance Program 13-5
Roof Rack System 4-3
Rotation, Tires 10-46
Routing, Engine Drive Belt 12-4
Running the Vehicle While Parked 9-21

S

Safety Belts 3-9
Care 3-16
Extender 3-16
How to Wear Safety Belts Properly 3-10
Lap-Shoulder Belt 3-11
Reminders 5-9
Replacing after a Crash 3-16
Use During Pregnancy 3-15
Safety Defects Reporting
Canadian Government 13-13
General Motors 13-13
U.S. Government 13-12
Safety Locks 2-6
Safety System Check 3-16
Satellite Radio 7-13
Scheduling Appointments 13-7
Sealant Kit, Tire 10-55
Seats
Adjustment, Front 3-3
Head Restraints 3-2
Heated Front 3-6
Rear 3-6
Reclining Seatbacks 3-4
Securing Child Restraints 3-44, 3-47
Security
OnStar® 14-2
Vehicle 2-8
Vehicle Alarm 2-8
Service
Accessories and Modifications 10-2
Doing Your Own Work 10-3
Engine Soon Light 5-11
Maintenance Records 11-15
Maintenance, General Information 11-1
Parts Identification Label 12-1
Publications Ordering Information 13-11
Scheduling Appointments 13-7
Vehicle Soon Light 5-14
Servicing the Airbag 3-28
Shift Lock Control Function Check, Automatic Transmission 10-21
Shifting
Into Park 9-17
Out of Park 9-19
Shopping Bag Hooks 4-2
Signals, Turn and Lane-Change 6-3
Smartphone Link 7-31, 7-33, 7-34
Specifications and Capacities 12-2
Speedometer 5-8
StabiliTrak
OFF Light 5-16
System 9-28
Start Assist, Hills 9-27
Starter Switch Check 10-21
Starting the Engine 9-15
Steering 9-3
Power, Warning Lights 5-15
Wheel Adjustment 5-2
Wheel Controls 5-2

Stoplamps and Back-up Lamps
Bulb Replacement 10-25
Storage Areas
Cargo Cover 4-1
Glove Box 4-1
Roof Rack System 4-3
Storing the Tire Sealant
and Compressor Kit 10-62
Stuck Vehicle 9-8
Sun Visors 2-13
Symbols iv
System
Infotainment 7-1
Roof Rack 4-3

T

Tachometer 5-8
Taillamps
Bulb Replacement 10-25
Text Telephone (TTY) Users ... 13-4
Theft-Deterrent Systems 2-9
Immobilizer 2-9
Time 5-4
Tires
Buying New Tires 10-48
Chains 10-53
Designations 10-38
Different Size 10-50
If a Tire Goes Flat 10-53
Inflation Monitor System 10-43
Inspection 10-46
Pressure Light 5-17
Pressure Monitor System ... 10-42
Rotation 10-46
Sealant and
Compressor Kit 10-55
Sealant and Compressor
Kit, Storing 10-62
Sidewall Labeling 10-36
Terminology and
Definitions 10-38
Uniform Tire Quality
Grading 10-51
Wheel Alignment and Tire
Balance 10-52
Wheel Replacement 10-52
Tires (cont'd)
When It Is Time for New
Tires 10-48
Winter 10-36
Towing
General Information 9-36
Recreational Vehicle 10-65
Vehicle 10-65
Traction
Control System (TCS) 9-27
Control System (TCS)/
StabiliTrak® Light 5-16
Off Light 5-16
Transmission
Automatic 9-21
Fluid, Automatic 10-10
Fluid, Manual 10-10
Transportation Program,
Courtesy 13-7
Trip Odometer 5-8
Turn and Lane-Change
Signals 6-3
Turn Signal
Bulb Replacement 10-25

U

Uniform Tire Quality
Grading 10-51
Up-Shift Light 5-15
USB Port 7-16
Using This Manual iv

V

Vehicle
Alarm System 2-8
Canadian Owners iii
Control 9-3
Identification
Number (VIN) 12-1
Load Limits 9-9
Messages 5-24
Personalization 5-25
Security 2-8
Service Soon Light 5-14
Towing 10-65
Vehicle Care
Storing the Tire Sealant
and Compressor Kit 10-62
Tire Pressure 10-41
Ventilation, Air 8-3
Visors 2-13

W

Warning
Brake System Light 5-14
Warning Lights, Gauges, and
Indicators 5-6
Warnings iv
Cautions and Danger iv
Hazard Flashers 6-2
Washer Fluid 10-17
Wheels
Alignment and Tire
Balance 10-52
Different Size 10-50
Replacement 10-52
When It Is Time for New
Tires 10-48
Where to Put the Restraint 3-36
Windows 2-12
Power 2-12
Windshield
Wiper/Washer 5-2
Winter
Driving 9-7
Winter Tires 10-36
Wiper Blade Replacement 10-22
Wipers
Rear Washer 5-3

✍ NOTES