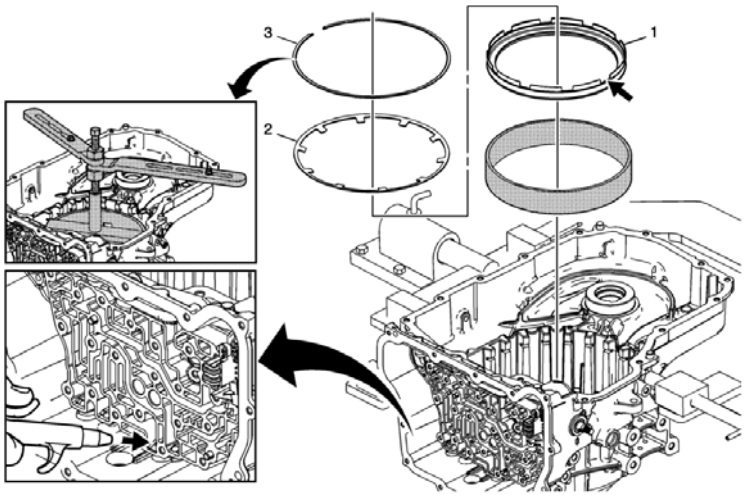

2-6 Clutch Piston Installation

Callout	Component Name
1	2–6 Clutch Piston Assembly **Note:** • Position the 2–6 piston air bleed and large slot toward the top of the case. • *DT-47796* seal protector prevents the piston seal lip from damage during installation. Apply a thin coat of ATF to the I.D. of the *DT-47796* seal protector to ease installation of the piston. **Special Tool** *DT-47796* Seal Protector For equivalent regional tools, refer to Special Tools.
2	2–6 Clutch Spring
3	2–6 Clutch Spring Retainer **Caution:** Regulate the air pressure to 276 kPa (40 psi) maximum. High pressure could cause the piston to over travel and damage the piston seals. **Note:** • Place the retainer on the 2-6 clutch spring and align the retainer opening with the largest gap in the case splines toward the bottom of the case. The retainer opening should be supported by a spline tooth of the case. • Apply shop air to the clutch fluid feed hole in the case to verify proper piston operation. **Special Tools** • *DT-47797* Spring Installer • *DT-48056* Spring Compressor Bridge For equivalent regional tools, refer to Special Tools.

cardiagn.com

Cleaning Procedure

- Clean the lower crankcase (bed plate) sealing surface.
- Clean the engine block sealing surface.
- Clean the lower crankcase (bed plate) tightening bolts.
- Clean the lower crankcase (bed plate) bolt holes.

Axial Play Measurement

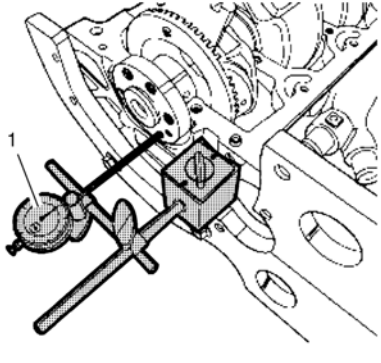

Using a dial gauge (1), inspect the crankshaft end play with the crankshaft bearing installed. Refer to Engine Mechanical Specifications for recommended limits.

cardiagn.com

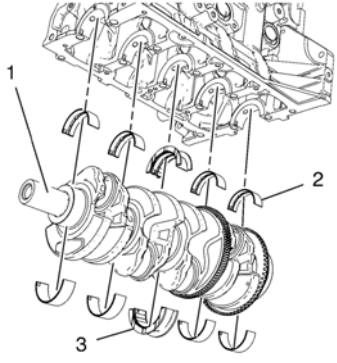

Note: If the old crankshaft bearing shells was reused, set it in as removed. The middle crankshaft bearing (3) contains the thrust bearing.

1. Coat the crankshaft bearing shells with engine oil.
2. Install the 5 upper crankshaft bearings.

Note: Take extreme care to prevent any scratches or damage to the crankshaft.

3. Install the crankshaft (1).
4. Install the 5 lower crankshaft bearings (2).

cardiagn.com

Special Tools

EN-45059 Torque Angle Sensor Kit

For equivalent regional tools, refer to Special Tools

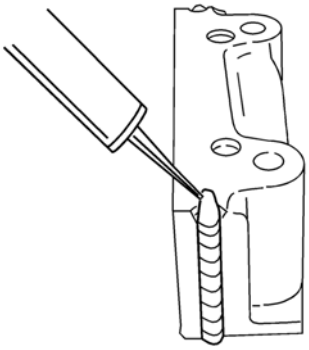

Note: Inspect the installation position.

1. Install the crankshaft bearing clips, oil bearing clips.
2. Install the crankshaft.

Note: Inspect the installation position.

3. Install the crankshaft bearing caps 1-4.

- Oil bearing clips.
- Install the 8 NEW crankshaft bearing cap bolts.

Note: Inspect the installation position.

- Install the crankshaft bearing cap.

1. Apply black adhesive sealing compound to the grooves of the rear crankshaft bearing cap.
2. Install the 2 NEW crankshaft bearing cap bolts.

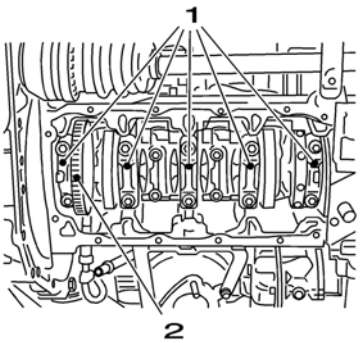

Caution: Refer to Fastener Caution.

Caution: Refer to Torque-to-Yield Fastener Caution.

- Tighten the bolts for the crankshaft bearing caps (1) in 3 passes using the *EN-45059* sensor kit:

- First pass to **50 Y (37 lb ft)**
- Second pass to **45°**
- Third pass to **15°**

cardiagn.com

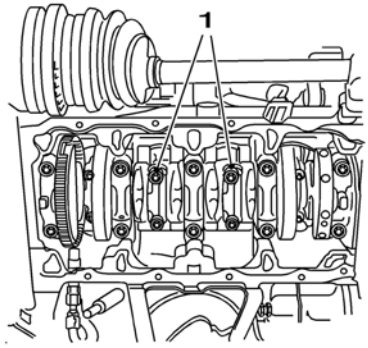

Note: Inspect the installation position.

- Install the connecting rod bearing caps 2 and 3 (1) and oil the bearing clips.
- Install 4 NEW connecting rod bearing cap bolts and tighten in 3 passes use the *EN-45059* sensor kit:

  - First pass to **35 Y (26 lb ft)**
  - Second pass to **45°**
  - Third pass to **15°**

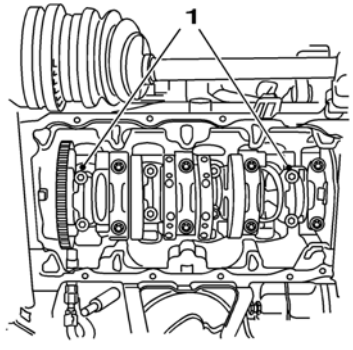

- Turn the crankshaft through **180°**.

Note: Inspect the installation position.

- Install the connecting rod bearing caps 1 and 4 (1) and oil the bearing clips.
- Install 4 NEW connecting rod bearing cap bolts and tighten in 3 passes use the *EN-45059* sensor kit:

  - First pass to **35 Y (26 lb ft)**
  - Second pass to **45°**
  - Third pass to **15°**

cardiagn.com

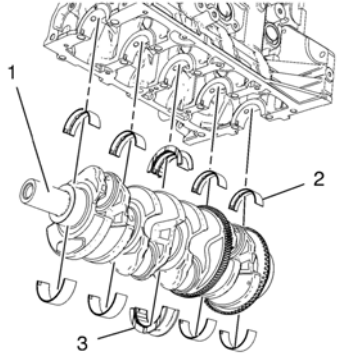

Note: Mark the installation position of the crankshaft bearings. Set aside in order removed. The middle crankshaft bearing (3) contains the thrust bearing.

1. Remove the 5 lower crankshaft bearings.

Note: Take extreme care to prevent any scratches or damage to the crankshaft.

2. Remove the crankshaft (1).
3. Remove the 5 upper crankshaft bearings (2).

cardiagn.com

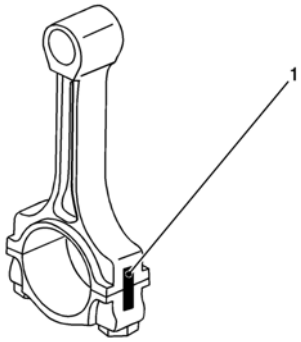

1. Identify all the connecting rod bearing caps (1).

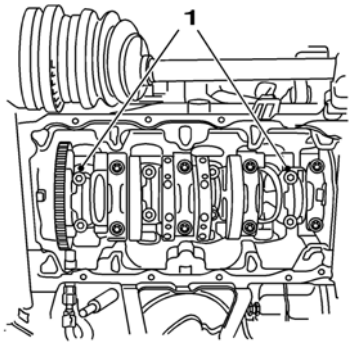

2. Remove the 4 bolts.
3. Remove the connecting rod bearing caps 1 and 4 (1).
4. Turn the crankshaft through 180°.

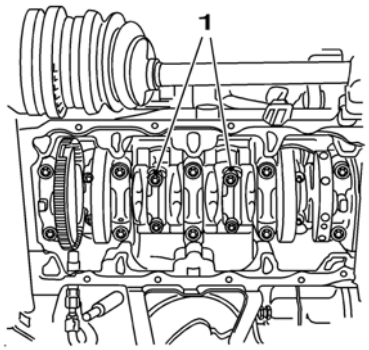

5. Remove the 4 bolts.
6. Remove the connecting rod bearing caps 2 and 3 (1).
7. Identify the crankshaft bearing caps.

cardiagn.com

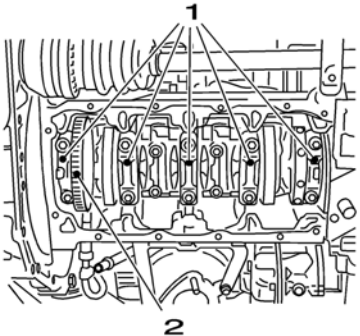

8. Remove the crankshaft bearing caps (1).
9. Remove the 10 bolts.
10. Remove the crankshaft (2).
11. Remove the crankshaft bearing clips.

cardiagn.com

Special Tools

EN-50431 BSM - Backlash Measure Adapter

For equivalent regional tools, refer to Special Tools.

Warning: Refer to Safety Glasses and Compressed Air Warning.

1. Remove the coating remains on the balance shaft module gear by using compressed air.
2. Check the balancer for damages.

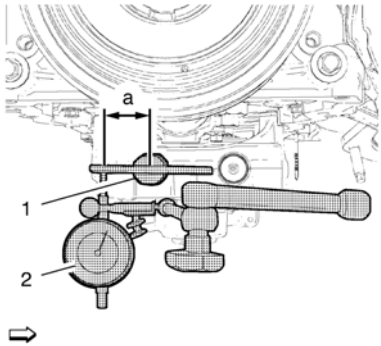

Note: The *EN-50431* adapter must be horizontal to the balancer.

3. Install the *EN-50431* adapter (1) to the balancer.
4. Install the dial gauge (2), in the distance “a” of **38.217 mm (1.505 in)** to the center of the balance shaft axle.

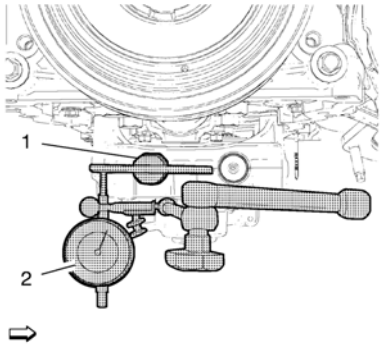

5. Using the dial gauge (2), move the balance shaft module gear by using fingers and measure the backlash.
6. Compare the measurement results with the engine mechanical specifications. Refer to Engine Mechanical Specifications.
7. If the balance shaft module is out of specification, try the procedure (1~6) again.
8. If the balance shaft module gear backlash is out of the specifications, replace the balance shaft module by a NEW balance shaft module.

cardiagn.com

Special Tools

- *EN-652* Flywheel Holder
- *EN-45059* Angle Meter

For equivalent regional tools, refer to Special Tools.

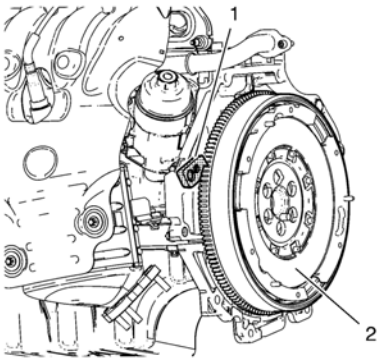

1. Install the *EN-652* holder (1), lock the flywheel (2) or the automatic transmission flex plate via the starter ring gear.

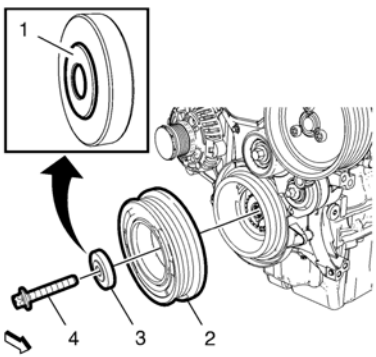

Note: Use care that the height (1) of the washer is facing towards the bolt.

2. Install the crankshaft balancer (2) and the washer (3).

Caution: Refer to Fastener Caution.

Caution: Refer to Torque-to-Yield Fastener Caution.

3. Install a NEW crankshaft balancer bolt (4) and tighten the bolt in 3 passes using the *EN-45059* meter

    1. First pass to **95 Y (70 lb ft)**.
    2. Second pass to an additional **45°**,
    3. Final pass to an additional **15°**.

cardiagn.com

Special Tools

- *EN-50430* Pin - Balance Shaft Module Locking
- *EN-50431* Adapter - Backlash Measurement

For equivalent regional tools, refer to Special Tools.

cardiagn.com

1. Set the piston of cylinder #1 to TDC of combustion stroke.

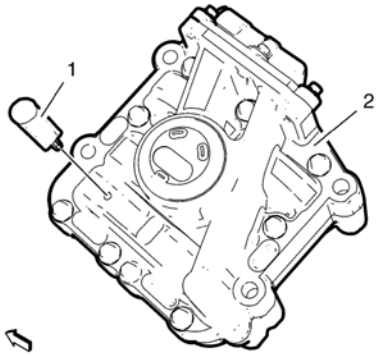

2. Install the *EN-50430* locking pin (1) and lock the gear of the balance shaft module (2).

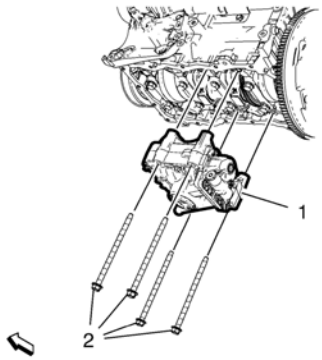

3. Install the balance shaft module (1) to the lower crankcase.

Note: Install the balance shaft module retaining bolts in a cross sequence.

4. Install 4 NEW balance shaft module retaining bolts (2). Tighten the bolts (2) only to the extent to which the balance shaft module (1) is still sliding on the lower crankcase.
5. Remove the *EN-50430* locking pin .

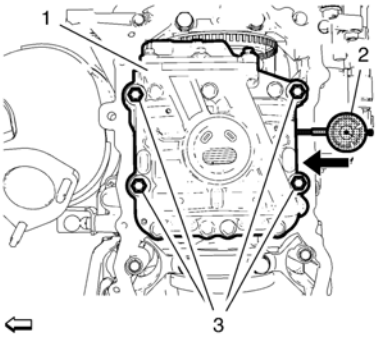

6. Push the balance shaft module (1) to the exhaust side of the engine.
7. Install a dial gauge (2) to the intake side of the balance shaft module.
8. Set the dial gauge to zero.

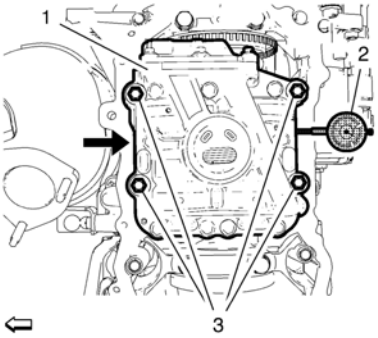

cardiagn.com

9. Set driver (1) into the exhaust side like graphic shown and push the balance shaft module (2) 1,1 mm (0.039 in) to the intake side.

   Caution: Refer to Fastener Caution.

   Caution: Refer to Torque-to-Yield Fastener Caution.

   Note: Tighten the balance shaft module retaining bolts in a cross sequence.

10. Tighten the balance shaft module bolts (2) to **20 Y (15 lb ft)**.
11. Check the balance shaft module backlash specifications. Refer to Crankshaft Balancer Cleaning and Inspection.
12. Tighten the balance shaft module bolts (2) to **50 Y + 90° (37 lb ft) + 90°**.

cardiagn.com

Special Tools

EN-652 Flywheel Holder

For equivalent regional tools, refer to Special Tools.

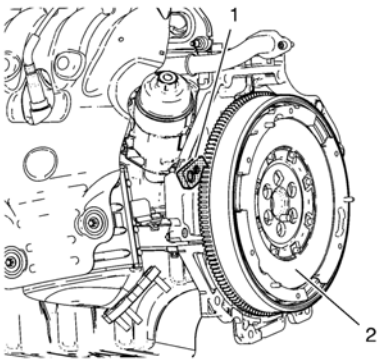

1. Install the *EN-652* holder (1). Lock the flywheel (2) or the automatic transmission flex plate via the starter ring gear.

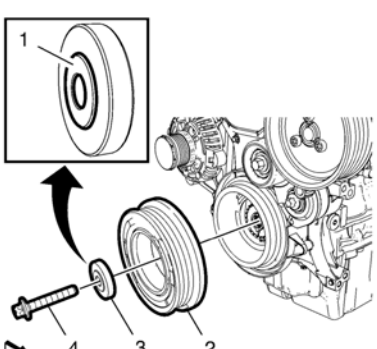

2. Remove and DISCARD the crankshaft balancer bolt (4).
3. Remove the crankshaft balancer washer (3).
4. Remove the crankshaft balancer (2).

cardiagn.com

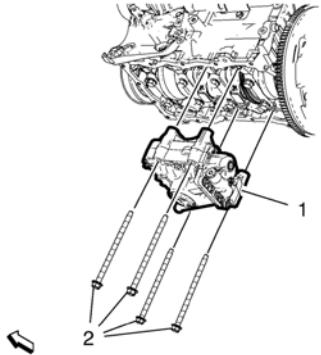

1. Remove 4 balancer retaining bolts (2).
2. Remove the balancer (1).

cardiagn.com

Special Tools

- *EN-6625* Crankshaft Locking Device
- *EN-45059* Angle Meter

For equivalent regional tools, refer to Special Tools.

Removal Procedure

1. Raise and support the vehicle. Refer to Lifting and Jacking the Vehicle.
2. Remove the front compartment splash shield. Refer to Front Compartment Splash Shield Replacement.
3. Remove the drive belt. Refer to Drive Belt Replacement.

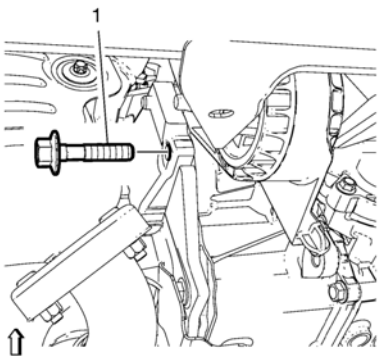

4. Remove the fastener (1).

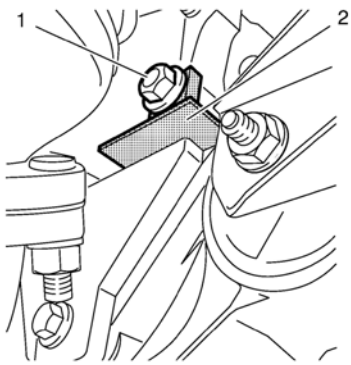

5. Install the *EN–6625* locking device (2) to lock the crankshaft.
6. Install the bolt (1).

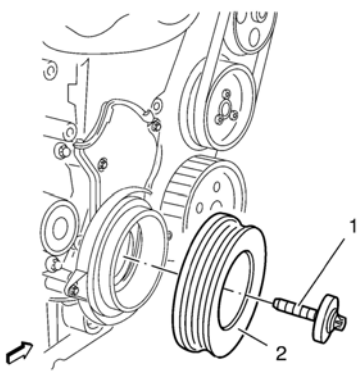

7. Remove and DISCARD the crankshaft balancer bolt (1).
8. Remove the crankshaft balancer (2).

Installation Procedure

cardiagn.com

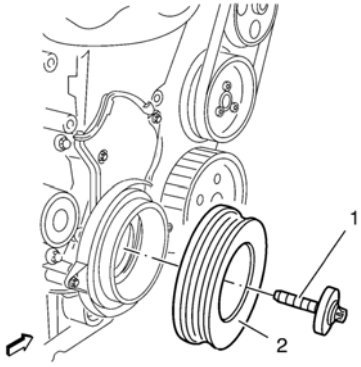

1. Install the crankshaft balancer (2).

Caution: Refer to Fastener Caution.

2. Install a NEW crankshaft balancer bolt (1) and tighten a first pass to **95 Y (70 lb ft)**.

Caution: Refer to Torque-to-Yield Fastener Caution.

3. Tighten the NEW crankshaft balancer bolt a second pass to an additional **45 degrees**, using the *EN-45059* meter
4. Tighten the NEW crankshaft balancer bolt a final pass to an additional **15 degrees**, using the *EN-45059* meter.

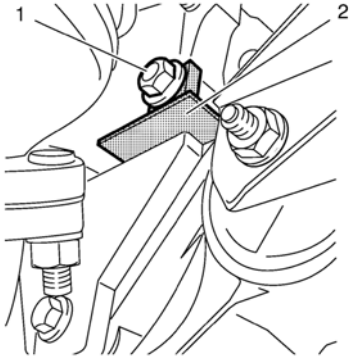

5. Remove the bolt (1).
6. Remove *EN–6625* locking device (2) to unlock the crankshaft.

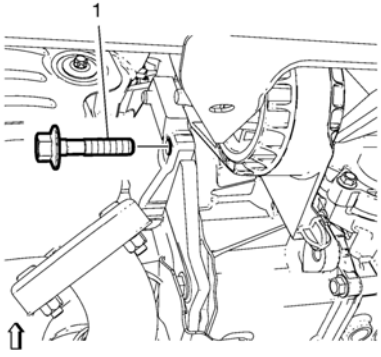

7. Install the fastener (1) and tighten to **58 Y (43 lb ft)**.
8. Install the drive belt. Refer to Drive Belt Replacement.
9. Install the front compartment splash shield. Refer to Front Compartment Splash Shield Replacement.
10. Lower the vehicle.

cardiagn.com

Special Tools

- *EN-6625* Crankshaft Locking Device
- *EN-45059* Angle Meter

For equivalent regional tools, refer to Special Tools.

Removal Procedure

1. Raise and support the vehicle. Refer to Lifting and Jacking the Vehicle.
2. Remove the front compartment splash shield. Refer to Front Compartment Splash Shield Replacement.
3. Remove the drive belt. Refer to Drive Belt Replacement.

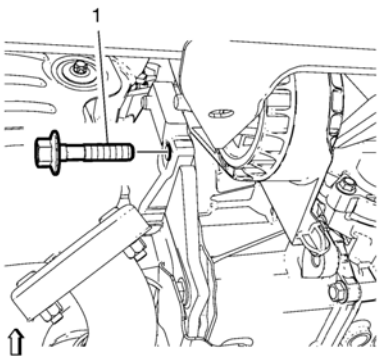

4. Remove the bolt (1).

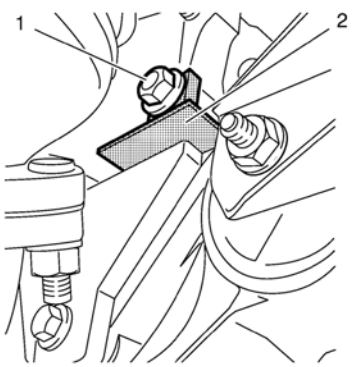

5. Install the *EN–6625* locking device (2) to lock the crankshaft.
6. Install the bolt (1).

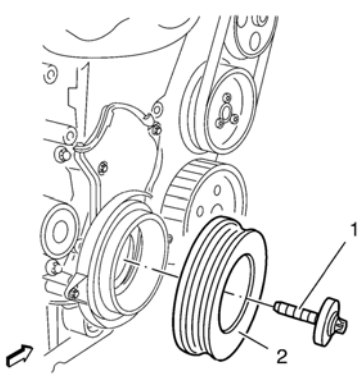

7. Remove and DISCARD the crankshaft balancer bolt (1).
8. Remove the crankshaft balancer (2).

Installation Procedure

cardiagn.com

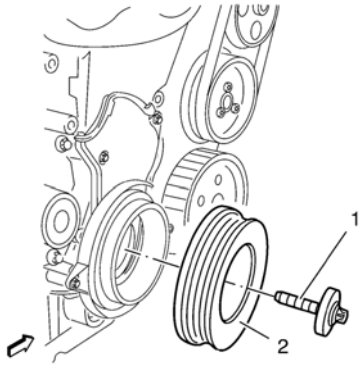

1. Install the crankshaft balancer (2).

Caution: Refer to Fastener Caution.

2. Install a NEW crankshaft balancer bolt (1) and tighten a first pass to **95 Y (70 lb ft)**.

Caution: Refer to Torque-to-Yield Fastener Caution.

3. Tighten the NEW crankshaft balancer bolt a second pass to an additional **45 degrees**, using the *EN-45059* meter.
4. Tighten the NEW crankshaft balancer bolt a final pass to an additional **15 degrees**, using the *EN-45059* meter.

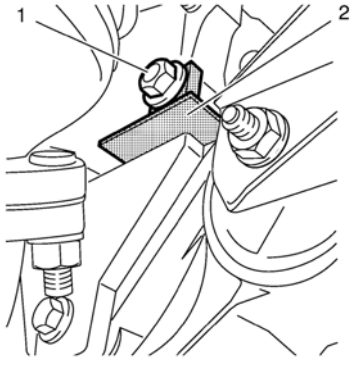

5. Remove the bolt (1).
6. Remove *EN–6625* locking device (2) to unlock the crankshaft.

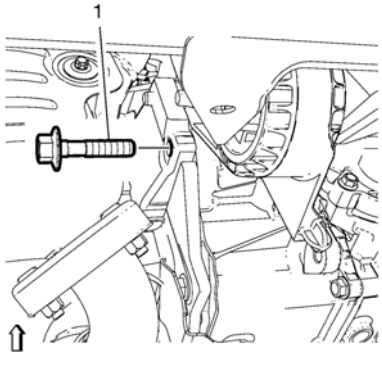

7. Install the bolt (1) and tighten to **75 Y (55 lb ft)**.
8. Install the drive belt. Refer to Drive Belt Replacement.
9. Install the front compartment splash shield. Refer to Front Compartment Splash Shield Replacement.
10. Lower the vehicle.

cardiagn.com

Special Tools

- *EN-50430* Pin - Balancer Locking
- *EN-50431* Adapter - Backlash Measurement

For equivalent regional tools, refer to Special Tools

Removal Procedure

1. Remove upper oil pan. Refer to Upper Oil Pan Replacement.

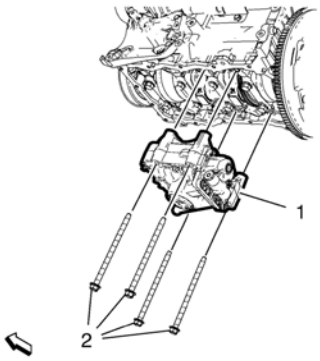

2. Remove and DISCARD the 4 balancer retaining bolts (2).
3. Remove the balancer (1).

Installation Procedure

1. Set the piston of cylinder 1 to TDC of combustion stroke.

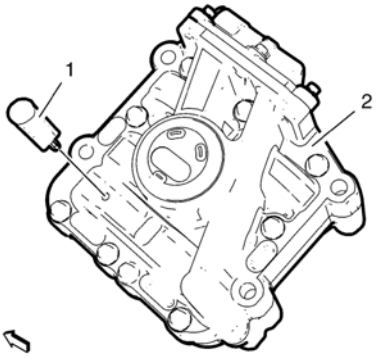

2. Install the *EN-50430* locking pin (1) and lock the gear of the balancer (2).

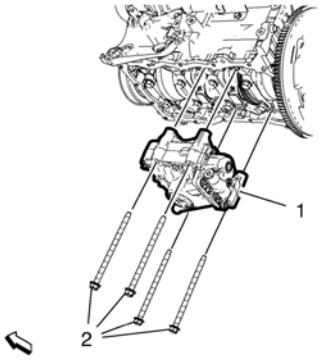

3. Install the balancer (1) to the lower crankcase.

Note: Install the balancer retaining bolts in a cross sequence.

cardiagn.com

4. Install the 4 NEW balancer retaining bolts (2). Handtighten the bolts (2) so that the balancer (1) stays slidable without clearance on the lower crankcase.
5. Remove the *EN-50430* locking pin .

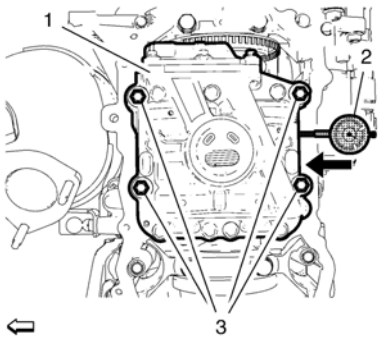

6. Push the balancer (1) to the exhaust side of the engine.
7. Install a dial gauge (2) at the intake side of the balancer.
8. Set the dial gauge to zero.

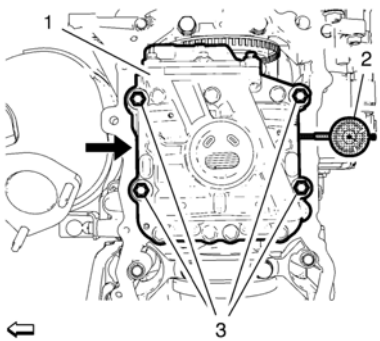

9. Set screwdriver (1) into the exhaust side as shown and push the balancer (2) **1.1 mm (0.0433 in)**to the Intake side.

   Caution: Refer to Fastener Caution.

   Caution: Refer to Torque-to-Yield Fastener Caution.

   Note: Tighten the balancer retaining bolts in a cross sequence.
10. Tighten the NEW balancer bolts to **20 Y** (15 lb ft).
11. Check the balancer backlash specifications. Refer to Crankshaft Balancer Cleaning and Inspection.
12. Tighten the balancer bolts to **50 Y +90° (37 lb ft + 90°)**.
13. Install the upper oil pan. Refer to Upper Oil Pan Replacement.

cardiagn.com

Special Tools

EN-6351 Mounting Sleeves

For equivalent regional tools, refer to Special Tools.

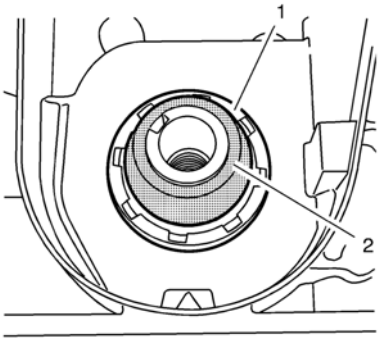

1. Clean the sealing surfaces.
2. Slide the *EN-6351* sleeves (2) protective sleeve onto the crankshaft journal.
3. Slide the crankshaft front oil seal (1) over the protective sleeve on the crankshaft journal.

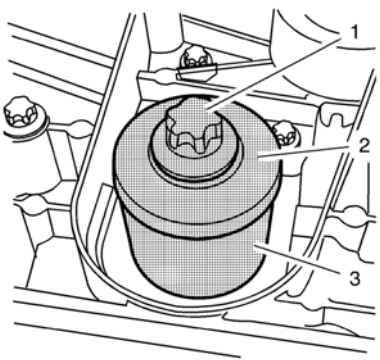

4. Remove the protective sleeve, and using the *EN-6351* sleeves (3), press the seal ring into the pump housing.
5. Use the crankshaft drive gear bolt (1) and washer (2) to press in the crankshaft front oil seal.

cardiagn.com

Special Tools

EN-50427 Installer - Crankshaft Front Oil Seal

For equivalent regional tools, refer to Special Tools.

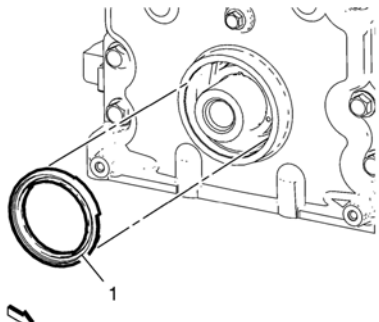

Note: Observe the installation position of the removed crankshaft front oil seal ring to install the NEW crankshaft front oil seal ring in the same position.

Install the crankshaft front oil seal (1), using the *EN-50427* installer.

cardiagn.com

Special Tools

EN-45000 Remover

For equivalent regional tools, refer to Special Tools.

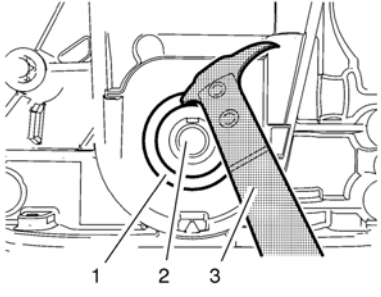

Caution: Clean the crankshaft sealing surface with a clean, lint-free towel. Inspect lead-in edge of crankshaft for burrs/sharp edges that could damage the rear main oil seal. Remove burrs/sharp edges with crocus cloth before proceeding.

Using the *EN-45000* remover (3), remove the crankshaft front oil seal (1) from the crankshaft (2).

cardiagn.com

Special Tools

EN-45000 Remover - Oil Seal

For equivalent regional tools, refer to Special Tools.

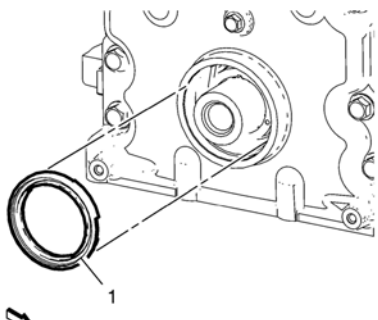

Note: Be careful do not damage the sealing surfaces.

Note: Observe the installation position of the crankshaft front oil seal ring before removing, to install the NEW crankshaft front oil seal ring in the same position.

Remove the crankshaft front oil seal (1), using the *EN-45000* remover.

cardiagn.com

Special Tools

- *EN-6351* Mounting Sleeves
- *EN-45000* Remover

For equivalent regional tools, refer to Special Tools.

Removal Procedure

1. Replace the timing belt. Refer to Timing Belt Replacement.

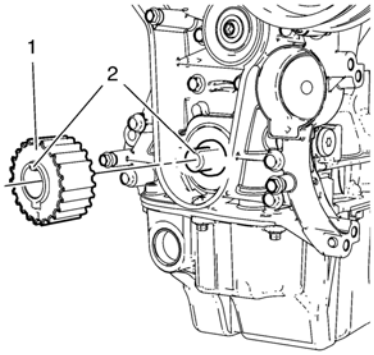

2. Remove the crankshaft sprocket (1).

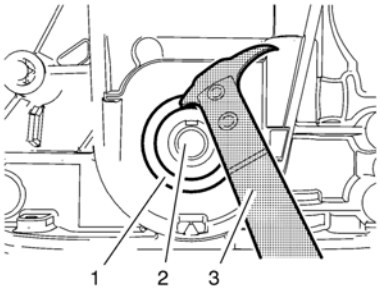

Caution: Clean the crankshaft sealing surface with a clean, lint-free towel. Inspect lead-in edge of crankshaft for burrs/sharp edges that could damage the rear main oil seal. Remove burrs/sharp edges with crocus cloth before proceeding.

3. Using the *EN-45000* remover (3), remove the crankshaft front oil seal (1) from the crankshaft (2).

Installation Procedure

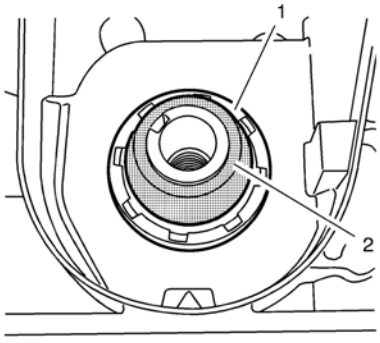

1. Clean the sealing surfaces.
2. Slide the *EN-6351* mounting sleeves (2) protective sleeve onto the crankshaft journal.

cardiagn.com

3. Slide the crankshaft front oil seal (1) over the protective sleeve on the crankshaft journal.

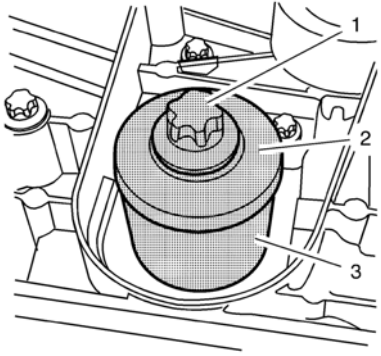

4. Remove the protective sleeve, and using the *EN-6351* mounting sleeves (3), press the seal ring into the pump housing.
5. Use the crankshaft drive gear bolt (1) and washer (2) to press in the crankshaft front oil seal.

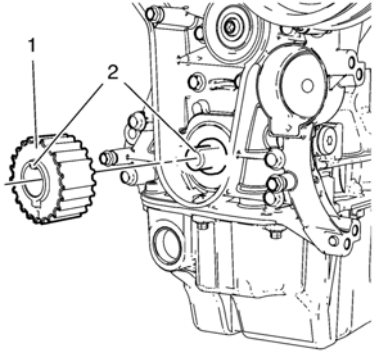

Note: When installing the crankshaft sprocket, the cam and the groove must align (2).

6. Install the crankshaft sprocket (1).
7. Install the timing belt. Refer to Timing Belt Replacement.

cardiagn.com

Special Tools

- *EN-45000* Remover - Oil Seal
- *EN-50427* Installer

For equivalent regional tools, refer to Special Tools.

Removal Procedure

1. Remove the crankshaft pulley. Refer to Crankshaft Pulley Replacement.

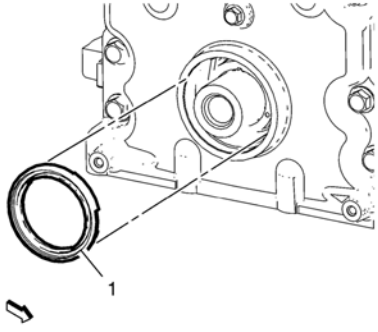

Note: Be careful do not damage the sealing surfaces.

Note: Observe the installation position of the crankshaft front oil seal ring before removing, to install the NEW crankshaft front oil seal ring in the same position.

2. Remove the crankshaft front oil seal (1) using *EN-45000* remover.

Installation Procedure

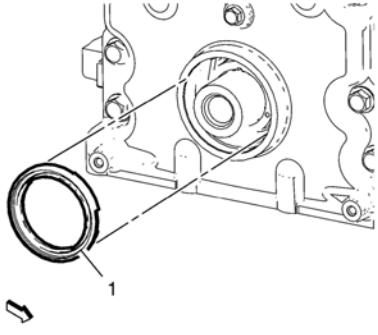

Note: Observe the installation position of the removed crankshaft front oil seal ring, to install the NEW crankshaft front oil seal ring in the same position.

1. Install the crankshaft front oil seal ring (1) using the *EN-50427* installer.
2. Install the crankshaft pulley. Refer to Crankshaft Pulley Replacement.

cardiagn.com

Note: The crankshaft position sensor system variation learn procedure is required when the following service procedures have been performed, regardless of whether DTC P0315 00 is set:

- Engine replacement
- Engine control module (ECM) replacement
- Crankshaft damper replacement
- Crankshaft replacement
- Crankshaft Position Sensor Replacement
- Any engine repairs which disturb the crankshaft to crankshaft position sensor relationship

Note: The scan tool monitors certain component signals to determine if all the conditions are met to continue with the crankshaft position sensor system variation learn procedure. The scan tool only displays the condition that inhibits the procedure. The scan tool monitors the following components:

- Crankshaft Position Sensor activity – If there is a crankshaft position sensor condition, refer to the applicable DTC that set.
- Camshaft position signal activity – If there is a camshaft position sensor signal condition, refer to the applicable DTC that set.
- Engine coolant temperature (ECT) – If the engine coolant temperature is not warm enough, idle the engine until the engine coolant temperature reaches the correct temperature.

1. Install a scan tool.
2. Monitor the ECM for DTCs with a scan tool. If other DTCs are set, except DTC P0315 00, refer to Diagnostic Trouble Code (DTC) List - Vehicle for the applicable DTC that set.
3. With a scan tool, select the Crankshaft Position System Variation Learn procedure and perform the following:

    1. Observe the fuel cut-off for the applicable engine.
    2. Block the drive wheels.
    3. Set the parking brake.
    4. Place the vehicles transmission in Park or Neutral.
    5. Turn the air conditioning (A/C) OFF.
    6. Cycle the ignition from OFF to ON.
    7. Apply and hold the brake pedal for the duration of the procedure.
    8. Start and idle the engine.
    9. Accelerate to wide open throttle (WOT). The engine should not accelerate beyond the calibrated fuel cut-off RPM value noted in step 3.1. Release the throttle immediately if the value is exceeded.

    Note: While the learn procedure is in progress, release the throttle immediately when the engine starts to decelerate. The engine control is returned to the operator and the engine responds to throttle position after the learn procedure is complete.

    10. Release the throttle when fuel cut-off occurs.

- Accelerate to wide open throttle (WOT). The engine should not accelerate beyond the calibrated fuel cut-off RPM value noted in step 3.1. Release the throttle immediately if the value is exceeded.

Note: While the learn procedure is in progress, release the throttle immediately when the engine starts to decelerate. The engine control is returned to the operator and the engine responds to throttle position after the learn procedure is complete.

- The scan tool displays Learn Status: Learned this Ignition. If the scan tool indicates that DTC P0315 00 only) ran and passed, the crankshaft position sensor variation learn procedure is complete. If the scan tool indicates DTC P0315 00 failed or did not run, refer to DTC P0315. If any other DTCs set, refer to Diagnostic Trouble Code (DTC) List - Vehicle for the applicable DTC that set.
- Turn OFF the ignition for 30 s after the learn procedure is completed successfully.

cardiagn.com

Special Tools

- *EN-658-1* Installer
- *EN-235-D* Installer Kit

For equivalent regional tools, refer to Special Tools.

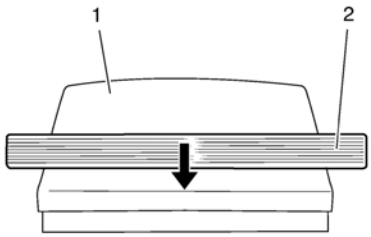

1. Slide the crankshaft rear oil seal (2) across the *EN-235-6* installer (1) contained in *EN-235-D* kit.

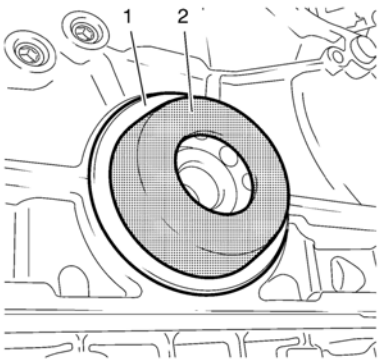

2. Install the crankshaft rear oil seal (1) with *EN-235-6* installer (2) to the crankshaft.

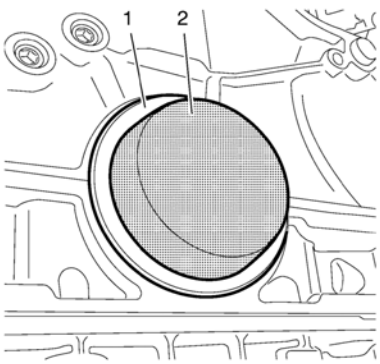

3. Use *EN-658-1* installer (2) to strike the crankshaft rear oil seal (1)

cardiagn.com

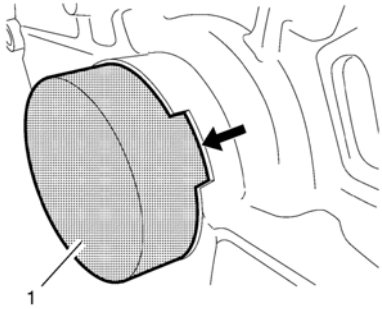

4. Check the crankshaft rear oil seal for proper seat, the *EN-658-1* installer must be flush with the cylinder block at the position (1).

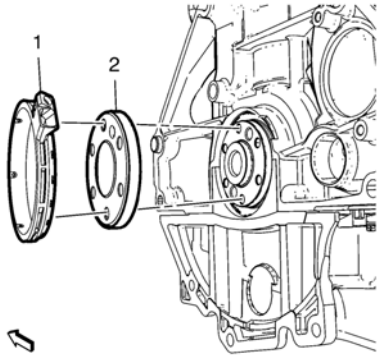

5. Install the crankshaft position sensor reluctor ring (2).

Caution: Do not allow the crankshaft encoder wheel to come into contact with external magnetic fields or sharp metal objects. Do not drop the crankshaft encoder wheel. Do not damage the rubberized encoder track. Failure to follow these precautions may cause damage to the component.

6. Install the crankshaft rear oil seal housing (1).

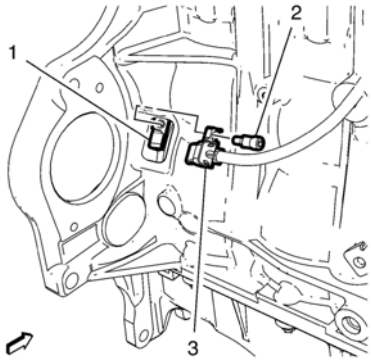

7. Install the crankshaft position sensor (3) to the crankshaft rear oil seal housing (1).

Caution: Refer to Fastener Caution.

8. Install the crankshaft position sensor bolt (2) and tighten to **4.5 Y (40 lb in)**.

cardiagn.com

Special Tools

EN-48251 Installer - Crankshaft Rear Oil Seal

For equivalent regional tools, refer to Special Tools.

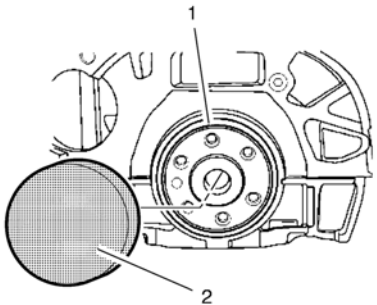

Note: Observe the installation position of the removed crankshaft rear oil seal ring to install the NEW crankshaft rear oil seal ring in the same position.

Install the crankshaft rear oil seal ring (1) using the *EN-48251* installer(2).

cardiagn.com

Special Tools

- *EN-328-B* Pin Remover
- *EN-6624* Remover

For equivalent regional tools, refer to Special Tools.

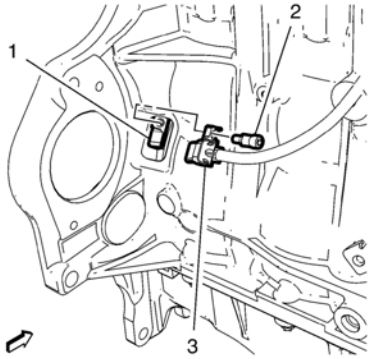

1. Remove the crankshaft position sensor bolt (2).
2. Remove the crankshaft position sensor (3) from the crankshaft rear oil seal housing (1).

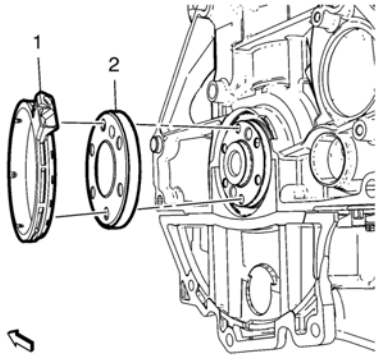

Caution: Do not allow the crankshaft encoder wheel to come into contact with external magnetic fields or sharp metal objects. Do not drop the crankshaft encoder wheel. Do not damage the rubberized encoder track. Failure to follow these precautions may cause damage to the component.

3. Remove the crankshaft rear oil seal housing (1).
4. Remove the crankshaft position sensor reluctor ring (2).

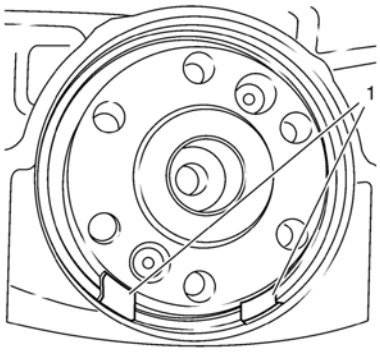

Note: The diameter of the hole must not exceed 2 mm (0.0787 in). If the diameter of the hole exceeds 2 mm (0.0787 in), the bolt of *EN-6624* remover will not be able to grip.

5. Only make a hole at the 5 o'clock and 7 o'clock positions (1), these are the only positions where is a cavity behind the seal ring.

cardiagn.com

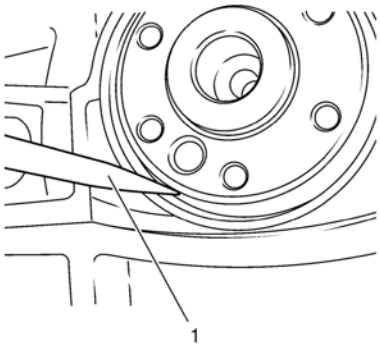

6. Using a suitable tool, such as a scribe (1), make a hole in the crankshaft rear oil seal.

   Position the scribe (1) at the outer edge of the crankshaft rear oil seal.

7. Remove the seal ring.

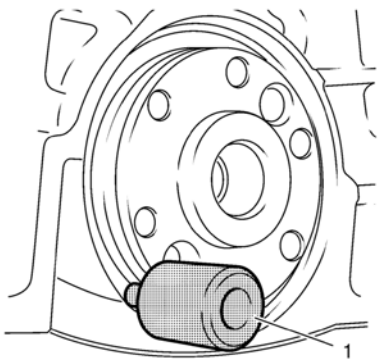

8. Install *EN-6624* remover (1) to the crankshaft rear oil seal and tighten the bolt.

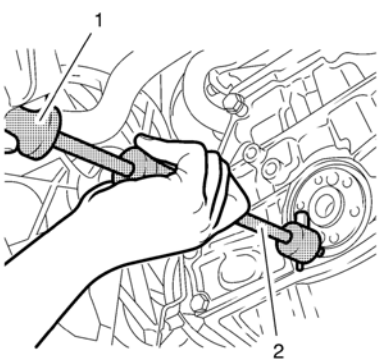

9. Install the *EN-328-B* remover (1) to *EN-6624* remover (2) and remove the crankshaft rear oil seal.

cardiagn.com

Special Tools

EN-45000 Remover - Oil Seal

For equivalent regional tools, refer to Special Tools.

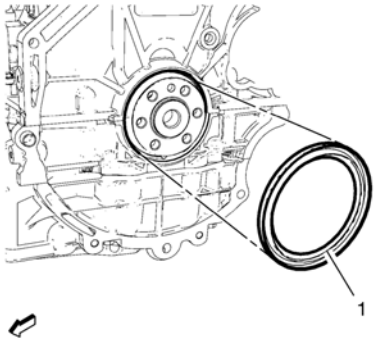

Note: Be careful do not damage the sealing surfaces.

Note: Observe the installation position of the crankshaft rear oil seal ring before removing, to install the NEW crankshaft rear oil seal ring in the same position.

Remove the crankshaft rear oil seal (1), using the *EN-45000* remover.

cardiagn.com

Special Tools

- *EN-45000* Remover - Oil Seal
- *EN-48251* Installer - Crankshaft Rear Oil Seal

For equivalent regional tools, refer to Special Tools.

Removal Procedure

1. Remove the engine flywheel / automatic transmission flexplate.

- Manual Transmission, refer to Engine Flywheel Replacement.
- Automatic Transmission, refer to Automatic Transmission Flex Plate Replacement.

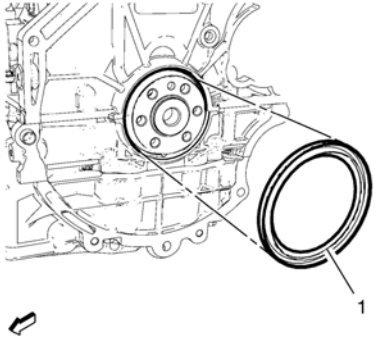

Note: Be careful do not damage the sealing surfaces.

Note: Observe the installation position of the crankshaft rear oil seal ring before removing, to install the NEW crankshaft rear oil seal ring in the same position.

- Remove the crankshaft front oil seal (1), using the *EN-45000* remover.

Installation Procedure

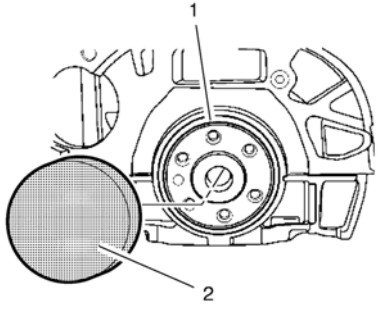

Note: Observe the installation position of the removed crankshaft rear oil seal ring, to install the NEW crankshaft rear oil seal ring in the same position.

1. Install the crankshaft rear oil seal ring (1), using the *EN-48251* installer (2).
2. Install the engine flywheel / automatic transmission flexplate.

- Manual transmission, refer to Engine Flywheel Replacement.
- Automatic transmission, refer to Automatic Transmission Flex Plate Replacement.

cardiagn.com

Special Tools

- *EN-235-D* Installer Kit
- *EN-328-B* Pin Remover
- *EN-658-1* Installer
- *EN-6624* Remover

For equivalent regional tools, refer to Special Tools.

Removal Procedure

1. For vehicle with automatic transmission: remove the automatic transmission flex plate. Refer to Automatic Transmission Flex Plate Replacement.
2. For vehicle with manual transmission: remove the engine flywheel. Refer to Engine Flywheel Replacement.
3. Place the collecting basin underneath.

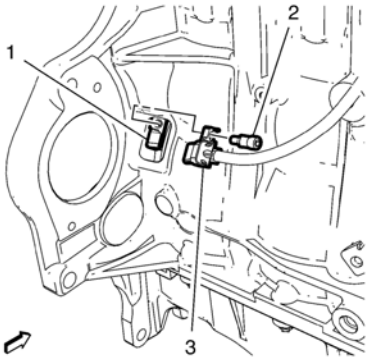

4. Remove the crankshaft position sensor bolt (2).
5. Remove the crankshaft position sensor (3) from the crankshaft rear oil seal housing (1).

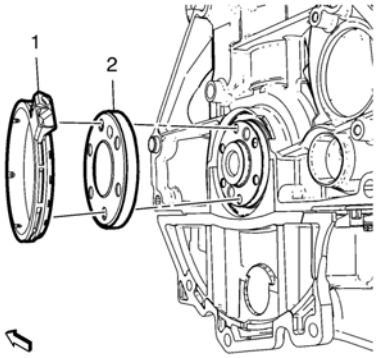

Caution: Do not allow the crankshaft encoder wheel to come into contact with external magnetic fields or sharp metal objects. Do not drop the crankshaft encoder wheel. Do not damage the rubberized encoder track. Failure to follow these precautions may cause damage to the component.

6. Remove the crankshaft rear oil seal housing (1).
7. Remove the crankshaft position sensor reluctor ring (2).

cardiagn.com

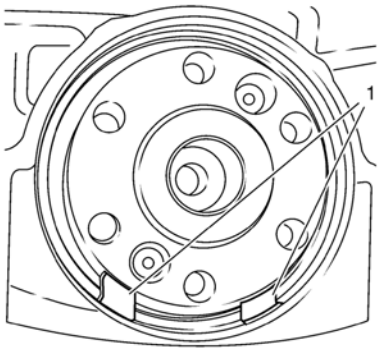

Note: The diameter of the hole must not exceed 2 mm (0.0787 in). If the diameter of the hole exceeds 2 mm (0.0787 in), the bolt of *EN-6624* remover will not be able to grip.

8. Only make a hole at the 5 o'clock and 7 o'clock positions (1), these are the only positions where is a cavity behind the seal ring.

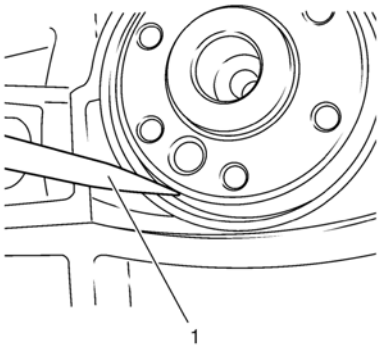

9. Using a suitable tool, such as a scribe (1), make a hole in the crankshaft rear oil seal.

   Position the scribe (1) at the outer edge of the crankshaft rear oil seal.

10. Remove the seal ring.

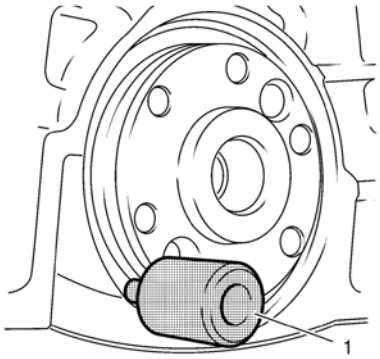

11. Install *EN-6624* remover (1) to the crankshaft rear oil seal and tighten the bolt.

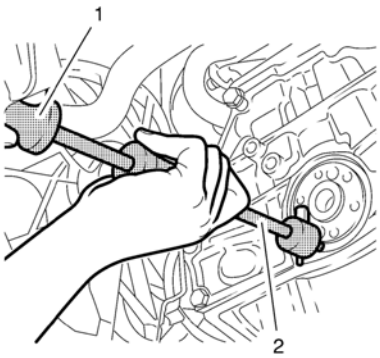

12. Install the *EN-328-B* remover (1) to *EN-6624* remover (2) and remove the crankshaft rear oil seal.

Installation Procedure

cardiagn.com

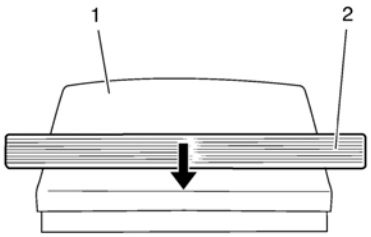

1. Slide the crankshaft rear oil seal (2) across the *EN-235-6* installer (1) contained in *EN-235-D* kit.

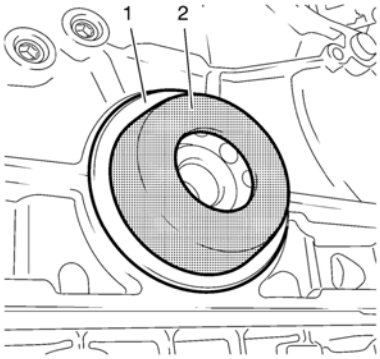

2. Install the crankshaft rear oil seal (1) with *EN-235-6* installer (2) to the crankshaft.

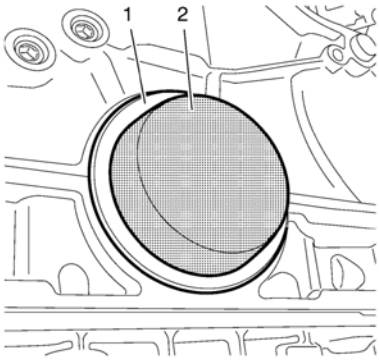

3. Use *EN-658-1* installer (2) to strike the crankshaft rear oil seal (1)

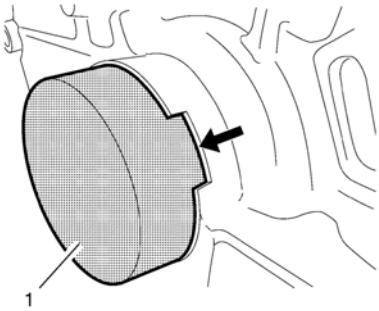

4. Check the crankshaft rear oil seal for proper seat, the *EN-658-1* installer (1) must be flush with the cylinder block at the position (arrow).

cardiagn.com

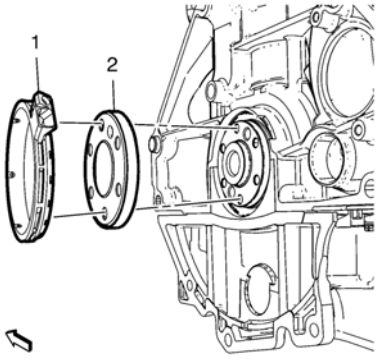

5. Install the crankshaft position sensor reluctor ring (2).

Caution: Do not allow the crankshaft encoder wheel to come into contact with external magnetic fields or sharp metal objects. Do not drop the crankshaft encoder wheel. Do not damage the rubberized encoder track. Failure to follow these precautions may cause damage to the component.

6. Install the crankshaft rear oil seal housing (1).

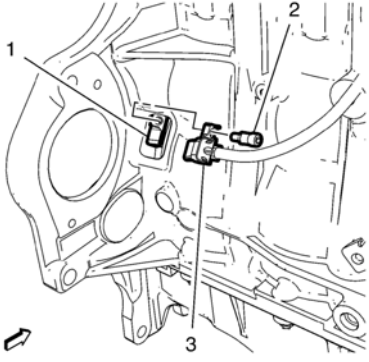

7. Install the crankshaft position sensor (3) to the crankshaft rear oil seal housing (1).

Caution: Refer to Fastener Caution.

8. Install the crankshaft position sensor bolt (2) and tighten to **4.5 Y (40 lb in)**.
9. Remove the collecting basin.
10. For vehicle with manual transmission: install the engine flywheel. Refer to Engine Flywheel Replacement.
11. For vehicle with automatic transmission: install the automatic transmission flex plate. Refer to Automatic Transmission Flex Plate Replacement.

cardiagn.com

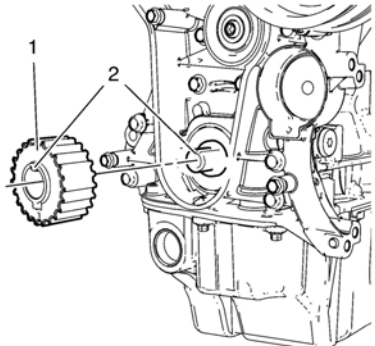

Note: When installing the crankshaft sprocket, the cam and the groove must align (2).

Install the crankshaft sprocket (1).

cardiagn.com

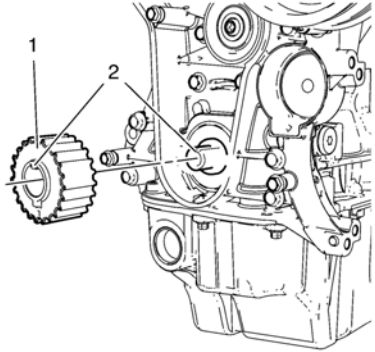

Remove the crankshaft sprocket (1).

cardiagn.com

Removal Procedure

1. Remove the camshaft timing chain. Refer to Camshaft Timing Chain Replacement.

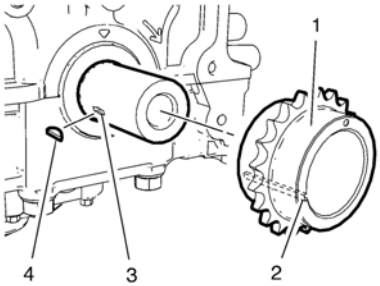

Note: The cam (4) is only plugged into the recess (3) and may fall down.

2. Remove the crankshaft sprocket (1) from the crankshaft.

Installation Procedure

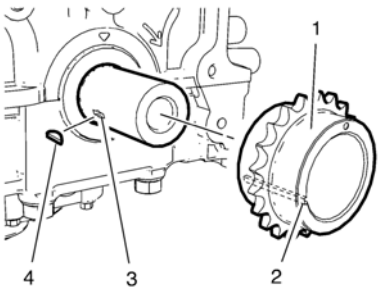

1. If necessary plug the cam (4) into the recess (3).

Note: The cam (4) and the sprocket groove (2) must align.

2. Install the crankshaft sprocket (1) to the crankshaft.
3. Check the correct seat of the sprocket (2). The sprocket must not turn independent of the crankshaft.
4. Install the camshaft timing chain. Refer to Camshaft Timing Chain Replacement.

cardiagn.com

Special Tools

- *EN-46569* Valve Spring Compressor
- *EN-48247* Adapter - Valve Spring Compression
- *EN-46116* Installer - Stem Seal

For equivalent regional tools, refer to Special Tools.

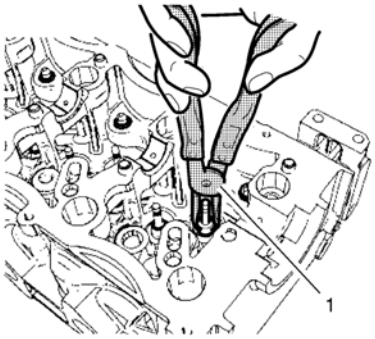

1. Install 16 NEW valve stem oil seals, using the *EN-46116* installer - stem seal (1).

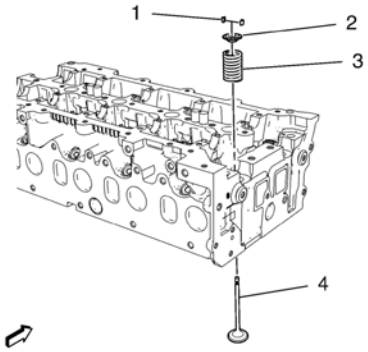

2. Install the valve (4).
3. Install the valve spring (3).
4. Install the valve spring retainer (2).

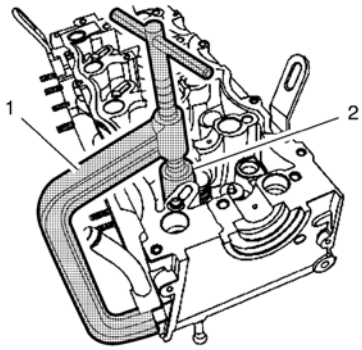

Note: The *EN-48247* adapter (2) must be aligned vertically to the valve spring retainers.

5. Install the *EN-46569* compressor (1) with the *EN-48247* compression adapter (2) to install the valve assembly.
6. Tension the valve spring.
7. Install both valve stem keys.
8. Release tension from the valve spring. Remove the *EN-46569* compressor (1) with *EN-48247* compression adapter (2).

cardiagn.com

9. Check proper seat of the valve stem keys.
10. Repeat the steps for each other valve assembly.

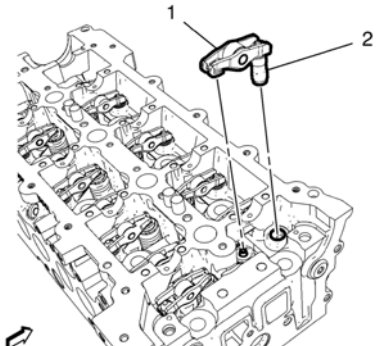

11. Install the 16 valve rocker arms (1) along with the 16 hydraulic valve lash adjusters (2).

cardiagn.com

Special Tools

- *EN-958* Installer for 5 mm (0.2 in) Valve Stem Sealings
- *EN-6086* Basic Kit, Spring and Wedge Replacer
- *EN-6167* Counter Holder
- *EN-6215-3* Locking Pins

For equivalent regional tools, refer to Special Tools.

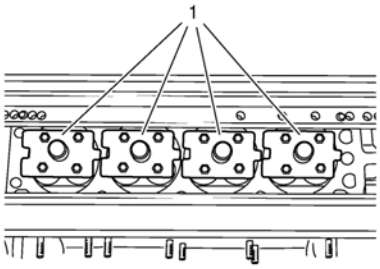

Note: Condition: All construction units are cleaned and checked. The cylinder head is installed on the assembly fixture and stands on the head.

Note: Depending upon the combustion chamber organization, different holders must be used to protect the valves.

1. Counter holder type A (1).

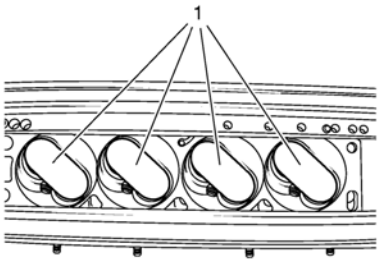

2. Counter holder type B (1).
3. Coat all valve guides and valves with oil and install them in the cylinder head in sequence. Install the counter holder. For different combustion chambers you have to use the correct counter holder to safe the valves.

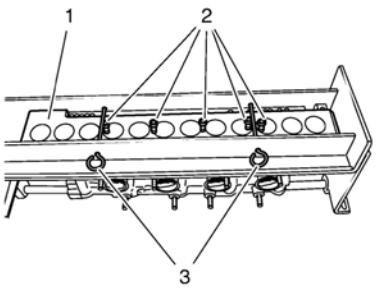

4. Install the counter holder *EN-6167-1* holder (1). Fasten the *EN-6215-3* locking pins (3) with safety lock pins. Fasten the holding screws (2). Turn the cylinder head baseplate again.

cardiagn.com

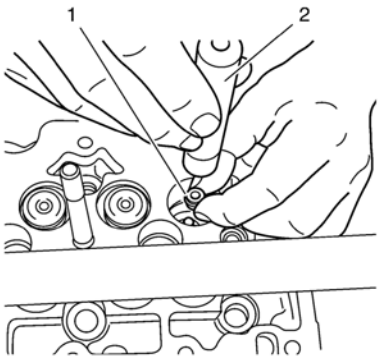

5. Install the valve stem sealings (1) with the appropriate tools (2) carefully.

   For 5 mm (0.2 in) use the *EN-958* installer.

Note: It is necessary that the components of the assembly head are built together in correct sequence.

6. Attach the valve springs and valve retainers into the cylinder head in sequence.

   The respective sizes are hit on the head of the thrust pieces.

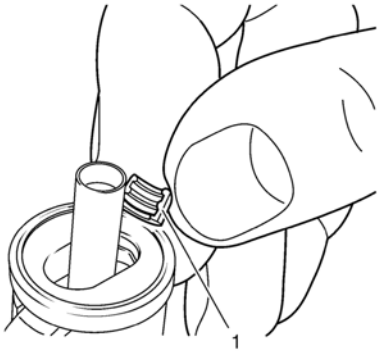

Caution: Ensure that the assembly head and thrust piece are held together securely. Failure to secure the assembly head and thrust piece can prevent valve stem key installation and cause damage to the thrust pieces.

7. Push the fixing case (1) downward and install the valve wedges in the assembly head. Now push the fixing case upward, through this procedure the valve wedges are fixed.

   Attach assembly head to lever *EN-6086* lever.

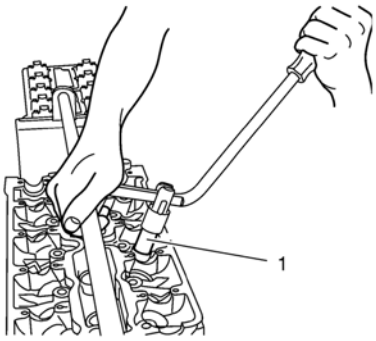

Note: To facilitate the assembly of the valve shim, the assembly head is to touch down (1) with the thrust piece on the valve stem. This avoids damage of the thrust pieces.

8. Adjust (align) the lever tool until the assembly head is positioned perpendicularly over the valve.

   Press the assembly head with the lever tool carefully and slowly with little pressure until the valve wedges engage audibly into the valve stem.

cardiagn.com

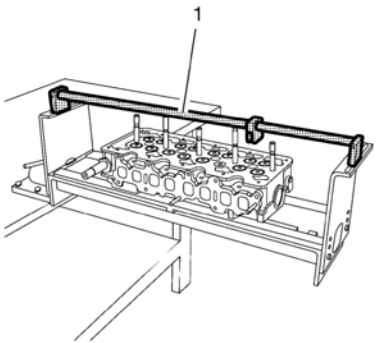

9. Remove the lever tool (1) and lateral took up.

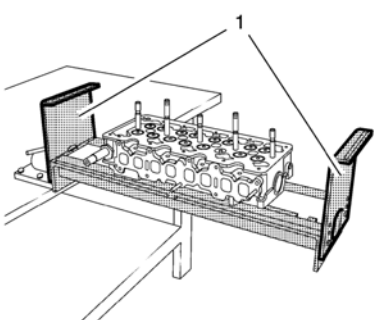

Note: After the assembly of all attachments the cylinder head is to be cleaned thoroughly.

10. Remove the counter holder (1).

    Detach the cylinder head from the assembly fixture.

cardiagn.com

Valve Cleaning and Inspection

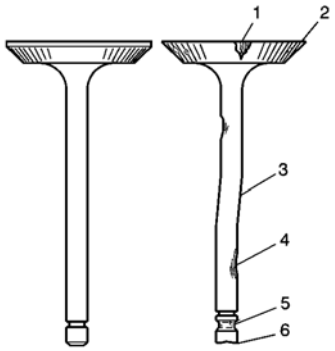

Warning: Bodily injury may occur if the cleaning solvent is inhaled or exposed to the skin.

Note: Do not scratch the valve stem with the wire brush.

1. Clean the valves of carbon, oil and varnish. Carbon can be removed with a wire brush. Varnish can be removed by soaking in Parts Immersion Solvent.
2. Clean the valve guides.
3. Inspect the valve stem for wear (4).
4. Inspect the valve key groove for chipping or wear (5). Replace the valve if chipped or worn.
5. Inspect the valve face for burning or cracking (1). If pieces are broken off, inspect the corresponding piston and cylinder head area for damage.
6. Inspect the valve stem for burrs and scratches. Burrs and minor scratches may be removed with an oil stone.
7. Inspect the valve stem for straightness and the valve head for bending or distortion (3) using V blocks. Bent or distorted valves must be replaced.
8. Clean the deposits from the valve face. Inspect the valve face for grooving.
9. Replace the valve if the face is grooved. Valve faces cannot be machined. If worn, or damaged, the valves must be replaced.
10. The valves may be lightly lapped to the valve seats.

Cylinder Head and Gasket Surface Cleaning and Inspection

1. Remove the spark plugs. Refer to Spark Plug Replacement.
2. Inspect the cylinder head gasket and mating surfaces for leaks, corrosion and blow-by. If the gasket has failed, use the following faults to determine the cause:

    1. Improper installation.
    2. Loose or warped cylinder head.
    3. Missing, off location or not fully seated dowel pins.
    4. Corrosion in the seal area around the coolant passages.
    5. Chips or debris in the cylinder head bolt holes.
    6. Bolt holes in the cylinder block not drilled or tapped deep enough.

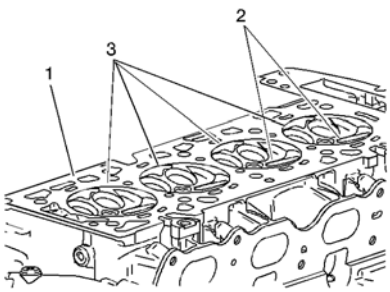

3. Inspect the cylinder head gasket surface.

- Cylinder head may be reused if corrosion is found only outside a 4 mm (0.375 in) band around each combustion chamber (1).
- Replace the cylinder head if the area between the valve seats is cracked (2).
- Replace the cylinder head if corrosion has been found inside a 4 mm (0.375 in) band around each combustion chamber (3).
- Clean the cylinder head bolts.

cardiagn.com

Cylinder Head Cleaning and Inspection

Note: Do not use a wire brush on any gasket sealing surface.

- Clean the cylinder head. Remove all varnish, soot and carbon to the bare metal.
- Clean the valve guides.
- Clean the threaded holes. Use a nylon bristle brush.
- Clean the remains of the sealer from the plug holes.
- Inspect the cylinder head bolts for damaged threads or stretching and damaged heads caused by improper use of tools.
- Replace all suspect bolts.
- Inspect the cylinder head for cracks. Check between the valve seats and in the exhaust ports.

  Note: Do not attempt to weld the cylinder head, replace it.
- Inspect the cylinder head deck for corrosion, sand inclusions and blow holes.

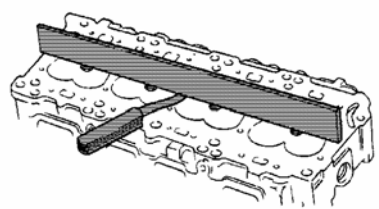

- Inspect the cylinder head deck surface for flatness. Refer to Engine Mechanical Specifications. If the cylinder head is out of specification, replace the cylinder head. Do not machine the cylinder head.
- Inspect all the threaded holes for damage. Threads may be reconditioned with thread inserts.
- Inspect the sealing surfaces.
- Inspect the cylinder head plugs.

cardiagn.com

Cleaning Procedure

- Remove any old thread sealant, gasket material or sealant.
- Clean all cylinder head surfaces with non-corrosive solvent.

Warning: Refer to Safety Glasses and Compressed Air Warning.

- Dry the cylinder head with compressed air.
- Remove any carbon deposits from the combustion chamber.

Visual Inspection

1. Inspect the cylinder head for the following:

- Cracks, damage or pitting in the combustion chambers.
- Debris in the oil galleries. Continue to clean the galleries until all debris is removed.
- Coolant leaks or damage to the deck face sealing surface.
- Damage to any gasket surfaces.
- Damage to any threaded bolt holes.
- Burnt or eroded areas in the combustion chamber.
- Cracks in the exhaust ports and combustion chambers.
- External cracks in the water passages.
- Restrictions in the intake or exhaust passages.
- Restrictions in the cooling system passages.
- Rusted, damaged or leaking core plugs.
- If the cylinder head is cracked or damaged, it must be replaced. No welding or patching of the cylinder head is recommended.

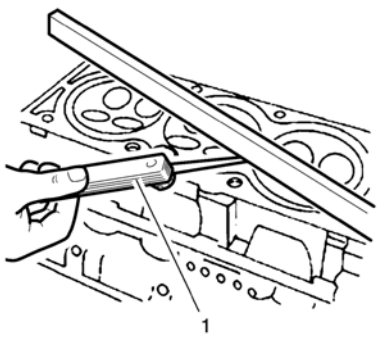

- Measure the clearance between the straight-edge and the cylinder head deck face, using a feeler gauge (1) at four points along the straight-edge.
- Check the sealing surfaces for deformation and warpage. The cylinder head sealing surfaces must be flat within 0.05 mm (0.002 in) maximum.

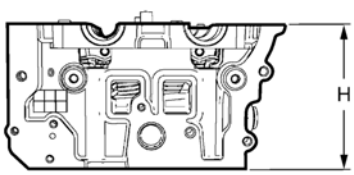

- Measure the height H of the cylinder head from sealing surface to sealing surface. The cylinder head height should be 129.9 to 130.1 mm (5.1142 to 5.1220 in).
- If the cylinder head height is out of specifications, replace the cylinder head.

Measuring Procedure

Valve Inspection

cardiagn.com

Cylinder Head Cleaning and Inspection

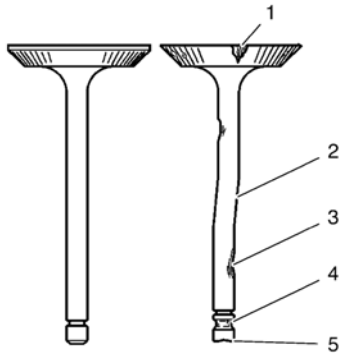

1. Inspect the valve for damage from the head to tip for the following conditions.

- Inspect the valve faces for burning and cracking (1). If pieces are broken, replace the valve and inspect the corresponding piston and cylinder head area for damage.
- Inspect the valve for straightness and distortion (2).
- Inspect the valve stem for wear (3).
- Inspect the valve key grooves for chipping and wear (4) and (5).
- Replace the valve if any of these conditions exist.
- Inspect the valve springs. If the valve spring ends are not parallel, replace the valve spring.
- Inspect the valve spring seating surface of the valve rotators for wear or gouges. Replace as required.

cardiagn.com

Special Tools

- *EN-46569* Valve Spring Compressor
- *EN-48247* Adapter - Valve Spring Compression
- *EN-46116* Installer - Stem Seal

For equivalent regional tools, refer to Special Tools.

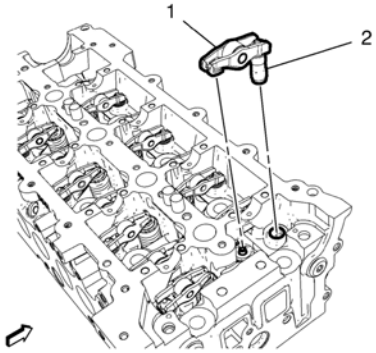

1. Remove the 16 valve rocker arms (1) along with 16 hydraulic valve lash adjusters (2).

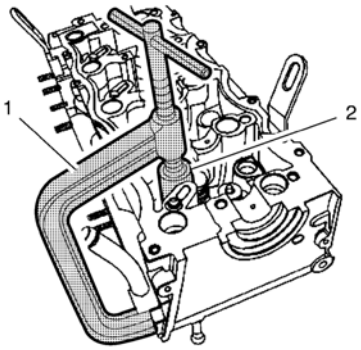

Note: The *EN-48247* adapter (2) must be aligned vertically to the valve spring retainers.

2. Install the *EN-46569* compressor (1) with the *EN-48247* compression adapter (2) to remove the valve assembly.

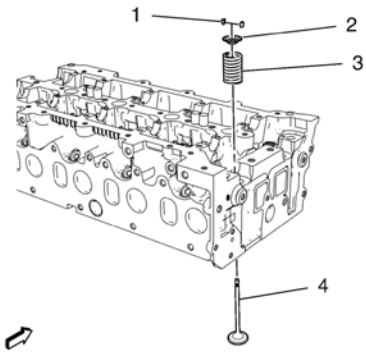

3. Press down the valve spring (3) and the valve spring retainer (2) with the *EN-46569* compressor and the *EN-48247* compression adapter until the valve keys (1) are released from the spring load.

Note: Set the parts aside in order removed to ensure they will be installed in their original position.

4. Remove the valve stem keys (1).
5. Release tension from the valve spring. Remove the *EN-46569* compressor with *EN-48247* compression adapter .
6. Remove the valve spring retainer (2).

cardiagn.com

7. Remove the valve spring.
8. Remove the valve (4).
9. Repeat the steps for each other valve assembly.

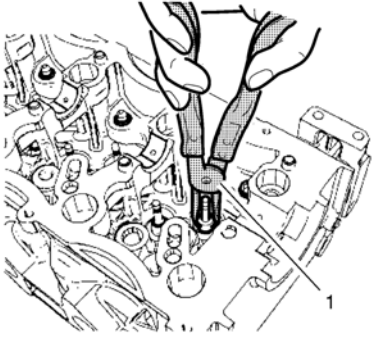

Note: Set the oil stem seals aside in order removed to ensure they will be installed in their original position.

10. Remove the 16 valve stem oil seals, using the *EN-46116* installer - stem seal (1).

cardiagn.com

Special Tools

- *EN-849* Assembly Tray
- *EN-6167* Fixing Tool
- *EN-6171* Release Tool
- *EN-6215* Mounting Equipment
- *EN-840* Remover

For equivalent regional tools, refer to Special Tools.

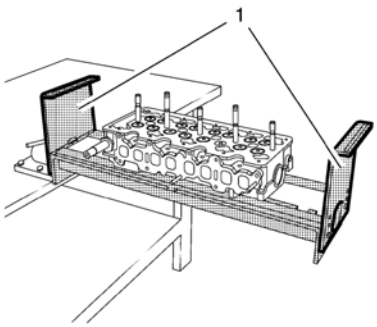

Note: Consider the appropriate screwing on points for the *EN-6215-5* side mounts .

1. Fit *EN-6215-5* side mounts (1) for *EN-6215-4* assembly device .

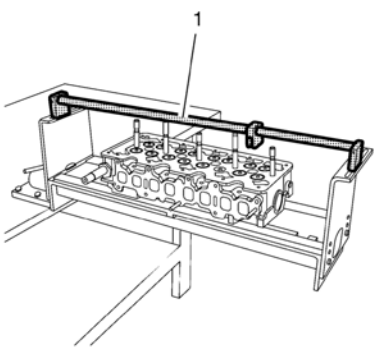

2. Install *EN-6215-4* assembly device (1).

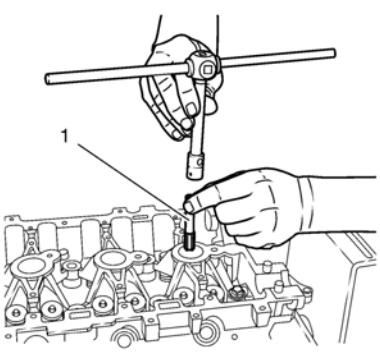

3. The spark plug threads must be cleaned of combustion residues to ensure that the counterhold can be attached correctly. Insert tap M14 x 1.25 (1) in the spark plug thread and screw in evenly.
4. Turn the cylinder head baseplate.

cardiagn.com

Note: There are 2 kinds of counter holder. Type A and Type B. Choose the correct type for the existing combustion chamber.

5. Install the counter holder.

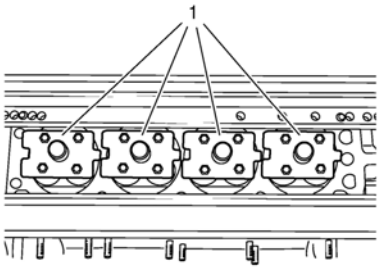

Note: Depending upon the combustion chamber organization, it must be used different holders to protect the valves.

6. Counter holder type A (1).

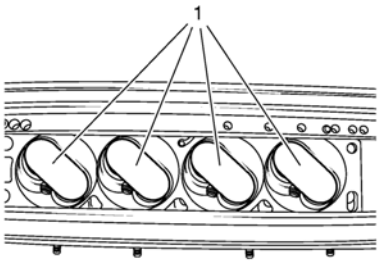

Note: Depending upon the combustion chamber organization, it must be used different holders to protect the valves.

7. Counter holder type B (1).

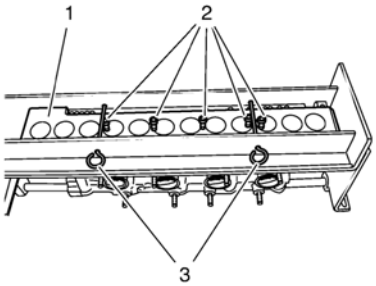

8. Install the *EN-6167* fixing tool (1). Attach the *EN-6215-3* mounting equipment (3) with safety lock pins. Install the fixing bolts (2). Turn the cylinder head baseplate again.

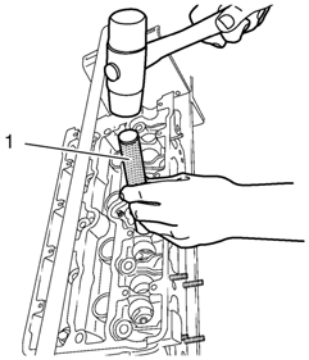

9. To ensure that no special tools are damaged during the disassembly of the valve wedges, the valve retainers are to release with *EN-6171* release tool (1). Put the *EN-6171* release tool on the valve retainers and with a short impact of a rubber hammer all valve retainers will loose (setting behavior).

cardiagn.com

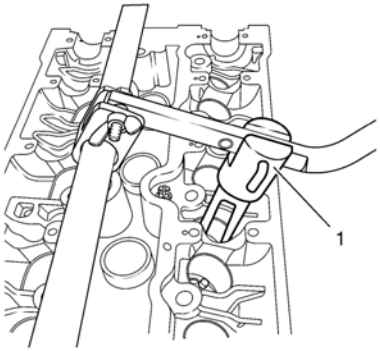

Note: The valve-spring depressing tool (1) must be positioned parallel onto the valve spring cap to ensure that neither tools nor components are damaged. Select the appropriate bore in the lever for this purpose. If the valve-spring compressor cannot be positioned parallel, the lever must be adjusted accordingly.

10. Push the depressing tool (1) down with lever until the valve spring cap is released. Remove valve cotters.

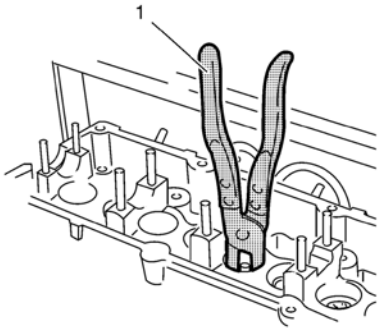

11. Remove the upper valve spring cap and valve springs and place them in sequence on *EN-849* assembly tray .

    Release the valve stem sealings by turning with *EN-840* remover (1) and remove from the valve guides.

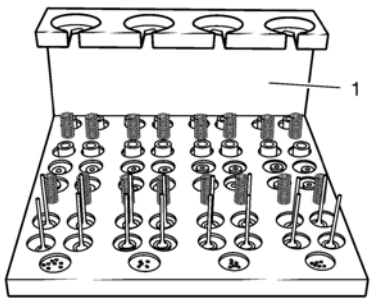

12. Remove lower valve spring caps or valve rotators from cylinder head and also place on *EN-849* valve box (1).
13. Remove lever tool.
14. Turn cylinder head baseplate. Remove wooden board *EN-6215* mounting equipment and counter holder if attached.
15. Remove all valves in sequence and place on *EN-849* assembly tray (1) in sequence.

cardiagn.com

Special Tools

- *EN-470-B* Angle Meter
- *GE-571-B* Dial Gauge
- *EN-50437* Height Gauge - Piston TDC

For equivalent regional tools, refer to Special Tools.

Cleaning Procedure

Note: Ensure that the cylinder head and the cylinder block sealing surfaces are clear of oil, grease and old gasket material.

Clean the engine block in order to assure a proper measurement. Refer to Engine Block Cleaning and Inspection.

Choose the Gasket

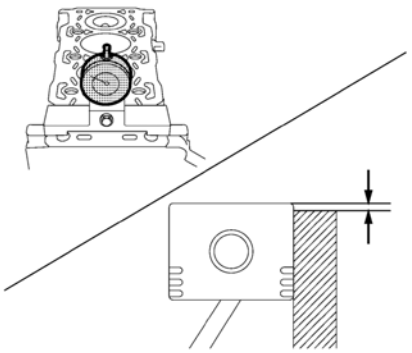

1. Align TDC of the piston 1.
2. Measure the piston projection thickness, using the *EN-50437* height gauge - piston TDC .
3. Repeat the measuring process for the cylinders 2, 3, 4 and average the measured piston projection values.
4. Choose the cylinder head gasket according the specifications below.

Piston Projection (mm)	Gasket Thickness (mm)
0.21–0.30	1.05 (1 U-Groove)
0.31–0.39	1.15 (2 U-Grooves)
0.40–0.49	1.25(3 U-Grooves)

Installation Procedure

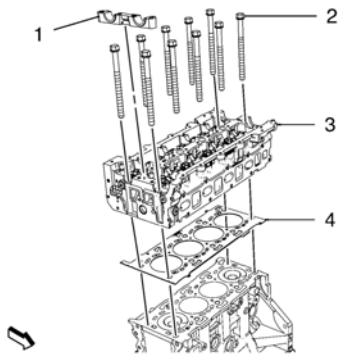

1. Install the cylinder head (3) and a NEW gasket (4).

   Note: DO NOT tighten the bolts yet.
2. Install the 10 NEW cylinder head retaining bolts (2).

cardiagn.com

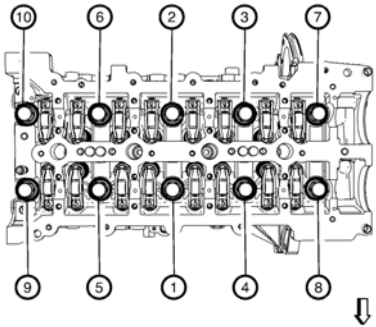

Caution: Refer to Fastener Caution.

Caution: Refer to Torque-to-Yield Fastener Caution.

3. Tighten the NEW cylinder head retaining bolts (2) in 4 steps in sequence as shown in the graphic above:

    1. First step **30 Y (22 lb ft)**
    2. Second step **100 Y (74 lb ft)**
    3. Third step **90°**. Use the *EN-470-B* angle meter .
    4. Fourth step **90°**. Use the *EN-470-B* angle meter .

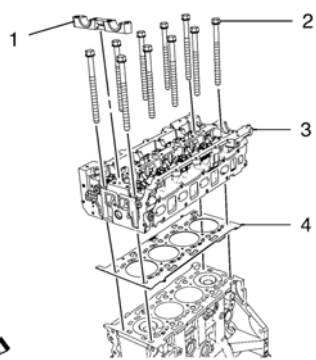

4. Install the camshaft seat guide (1).

cardiagn.com

Special Tools

EN-45059 Torque Angle Sensor Kit

For equivalent regional tools, refer to Special Tools.

1. Clean the sealing surfaces.
2. Inspect for plane surface.

- Cylinder block, cylinder head
- Straight-edge, feeler gauge

- Install the cylinder head gasket.
- Install the cylinder head.

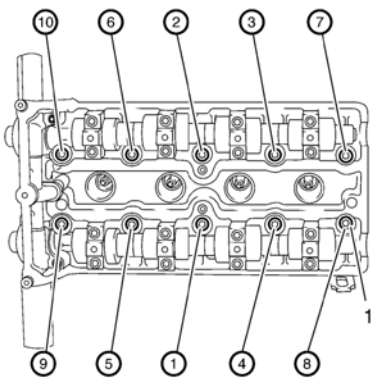

Caution: Refer to Fastener Caution.

Caution: Refer to Torque-to-Yield Fastener Caution.

Note: Note the correct tightening sequence.

- Install NEW cylinder head bolts.
- Tighten the bolts (1) in 5 passes. Use the *EN-45059* sensor kit :

  - First pass to **25 Y (18 lb ft)**
  - Second pass to **90°**
  - Third pass to **90°**
  - Fourth pass to **90°**
  - Fifth pass to **45°**

cardiagn.com

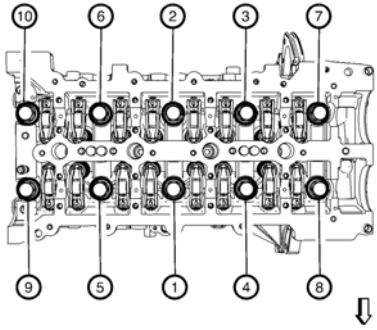

1. Loosen the 10 cylinder head retaining bolts in sequence as shown.

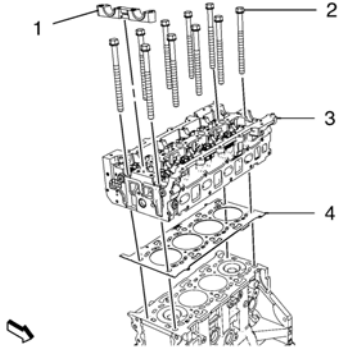

2. Remove the camshaft seat guide (1).
3. Remove the 10 cylinder head retaining bolts (2).
4. Remove the cylinder head (3) along with the gasket (4).

cardiagn.com

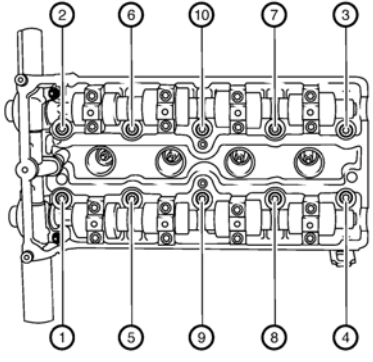

1. Remove the 10 cylinder head bolts in sequence as shown.

    1. Loosen the 10 bolts **90°**.
    2. Loosen the 10 bolts **180°**.
2. Remove the cylinder head and place on a suitable base.
3. Remove the cylinder head gasket.

cardiagn.com

Special Tools

- *CH-904* Underframe
- *CH-49290* Mounting Engine/Transmission
- *EN-6333* Timing Belt Tensioner Locking Pin
- *EN-6340* Camshaft Adjuster Locking Tool
- *EN-6625* Crankshaft Locking Device
- *EN-6628-A* Camshaft Locking Tool
- *EN-45059* Angle Meter

For equivalent regional tools, refer to Special Tools.

Removal Procedure

1. Disconnect the battery negative cable. Refer to Battery Negative Cable Disconnection and Connection.
2. Remove the air cleaner assembly. Refer to Air Cleaner Assembly Replacement.
3. Raise and support the vehicle. Refer to Lifting and Jacking the Vehicle.
4. Drain the cooling system. Refer to Cooling System Draining and Filling.
5. Drain the engine oil. Refer to Engine Oil and Oil Filter Replacement.
6. Remove the intake manifold. Refer to Intake Manifold Replacement.

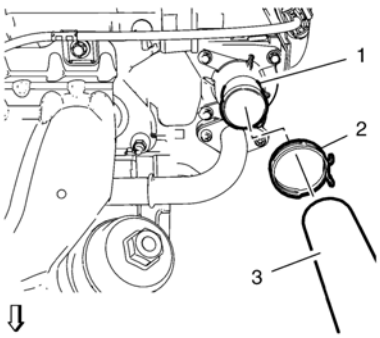

7. Loosen the radiator inlet hose clamp (2).
8. Remove the radiator inlet hose (3) from the engine coolant thermostat (1).
9. Remove the heater outlet hose from the engine coolant thermostat housing. Refer to Heater Outlet Hose Replacement.
10. Remove the heater inlet hose from the engine coolant thermostat housing. Refer to Heater Inlet Hose Replacement.

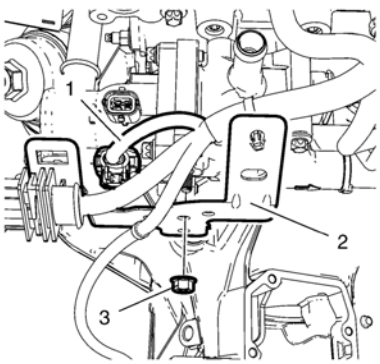

11. Disconnect the thermostat wiring harness plug (1).
12. Remove the thermostat housing bracket nut (3).
13. Hang the thermostat housing bracket (2) with attached wiring harness aside.
14. Remove the exhaust manifold. Refer to Exhaust Manifold Replacement.

cardiagn.com

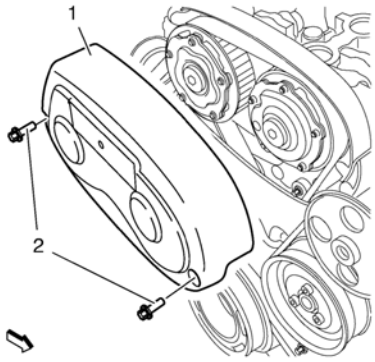

15. Remove the 2 timing belt upper front cover bolts (2).
16. Remove the timing belt upper front cover (1).
17. Remove the camshaft cover. Refer to Camshaft Cover Replacement.
18. Remove the 2 camshaft position sensor. Refer to Camshaft Position Sensor Replacement.
19. Remove the 2 camshaft position actuator solenoid valve. Refer to Camshaft Position Actuator Solenoid Valve Replacement.
20. Remove the drive belt tensioner. Refer to Drive Belt Tensioner Replacement.

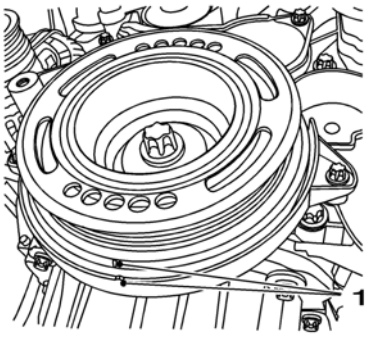

21. Set the crankshaft balancer in direction of engine rotation until the markings (1) line up with the cylinder 1 at TDC.
22. Remove the crankshaft balancer. Refer to Crankshaft Balancer Replacement.

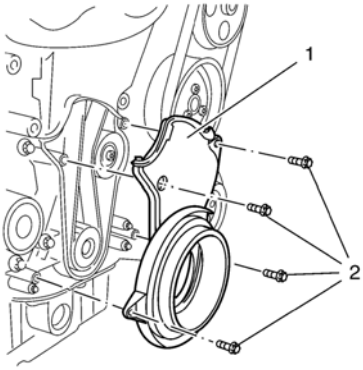

23. Remove the 4 lower timing belt cover bolts (2).
24. Remove the lower timing belt cover (1).

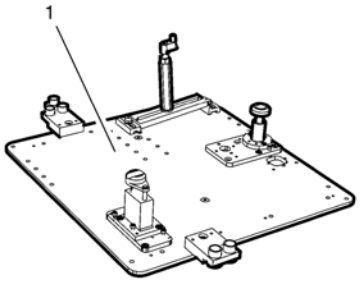

Note: The SPX installation manual is supplied with the special tool and is also available online from SPX directly. Go to www.spxtools-shop.com.

cardiagn.com

25. Assemble the *CH-49290* support tool (1) according to the details provided in the SPX installation manual.
26. Support the *CH-904* base frame on a jack.
27. Support the *CH-49290* support tool on the *CH-904* base frame.

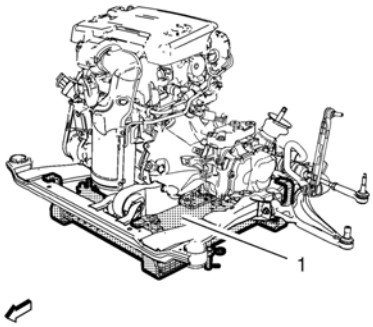

Note: The SPX installation manual is supplied with the special tool and is also available online from SPX directly. Go to www.spxtools-shop.com.

28. Install the *CH-49290* support tool (1) according to the details provided in the SPX installation manual.
29. Lower the vehicle.

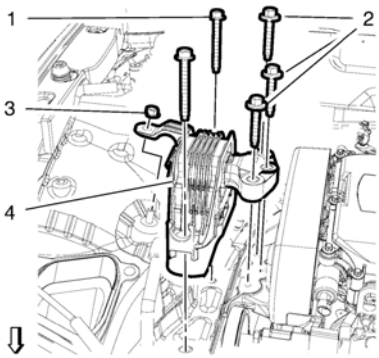

30. Remove the engine mount nut (3).
31. Remove the 5 engine mount bolts (1, 2).
32. Remove the engine mount (4).

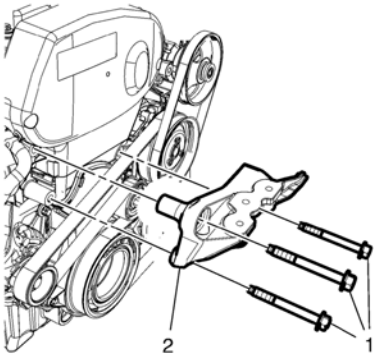

33. Remove the 3 engine mount bracket bolts (1).
34. Remove the engine mount bracket (2).

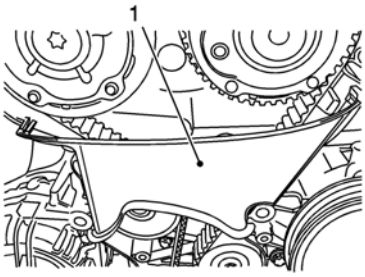

cardiagn.com

35. Remove the center front timing belt cover from the rear timing belt cover at 2 locations.
36. Remove the center front timing belt cover (1).

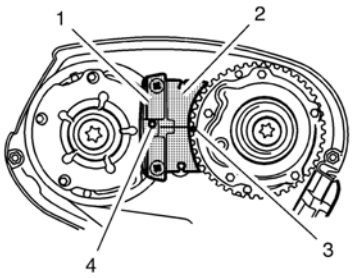

37. Install the *EN-6340* locking tool into the camshaft adjusters.

Note: The spot type marking (4) on the intake camshaft adjuster does not correspond to the groove of *EN-6340* locking tool – left during this process but must be somewhat above as shown.

- Install the *EN-6340* locking tool – left (1) in the camshaft adjusters as shown.

Note: The spot type marking (3) on the exhaust camshaft adjuster must correspond to the groove on *EN-6340* locking tool – right.

- Install *EN-6340* locking tool – right (2) in the camshaft adjusters as shown.

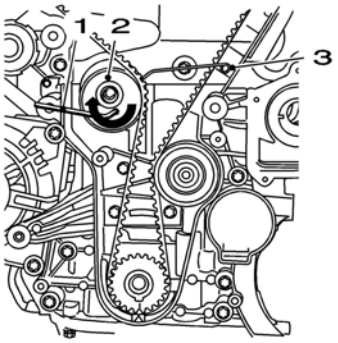

- Apply tension to the timing belt tensioner (2) in the direction of the arrow, using an allen key (1).
- Install the *EN-6333* pin (3).

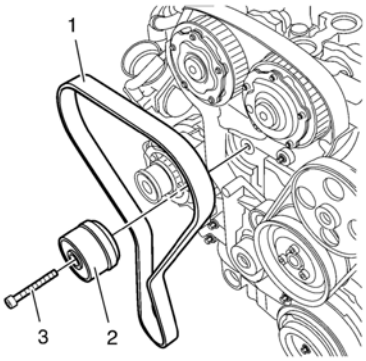

Note: Note the direction of the belt, if the timing belt will be reused.

- Remove the timing belt (1).
- Remove and DISCARD the timing belt tensioner bolt (3).
- Remove the timing belt tensioner (2).
- Raise the vehicle.

cardiagn.com

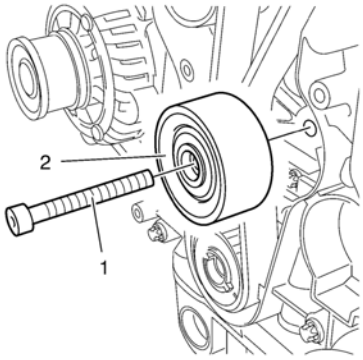

- Remove the timing belt idler pulley bolt (1).
- Remove the timing belt idler pulley (2).
- Remove the *EN-6625* locking device.

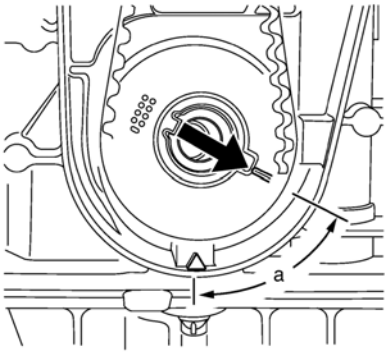

- Set the crankshaft in direction of engine rotation to **60 degrees** (a) before TDC. Use the *EN-45059* meter and the crankshaft balancer bolt.

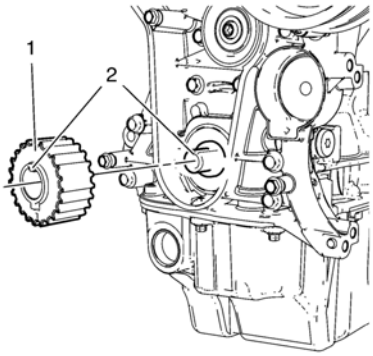

Note: Some engine oil will run out of the camshaft and the camshaft position actuator adjuster. That is the reason for the removal of the whole timing assembly.

- Remove the crankshaft sprocket (1).
- Lower the vehicle.
- Remove the *EN-6340* locking tool.

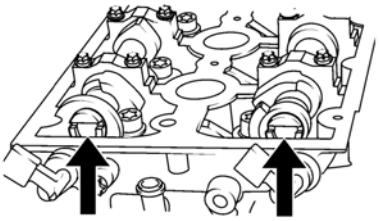

Note: Note the arrows.

- Turn the camshaft by the camshaft position actuator adjuster until the groove on the end of the camshafts is horizontal.

cardiagn.com

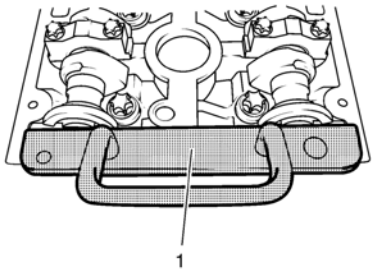

- Install the *EN-6628-A* locking tool (1).
- Place a collecting basin underneath the vehicle.

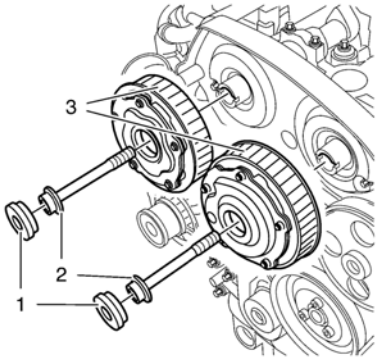

- Remove the camshaft position actuator adjuster closure bolt (1) of the intake camshaft position actuator adjuster and the exhaust camshaft position actuator adjuster (3).

Note: A second technician is required.

Note: Use an appropriate open-end wrench in order to counterhold the camshaft hexagon. A thin cross-section wrench is required for a better fit. The usage of *EN-6628-A* locking tool is for the camshaft adjustment to prevent misalignment of the camshafts. The wrench is required to counterhold the camshafts during bolt torque procedure.

- Remove and DISCARD the intake camshaft position actuator adjuster bolt and/or the exhaust camshaft position actuator adjuster bolt (2).
- Remove the intake camshaft position actuator adjuster and the exhaust camshaft position actuator adjuster (3).
- Remove the timing belt rear cover. Refer to Timing Belt Rear Cover Removal.

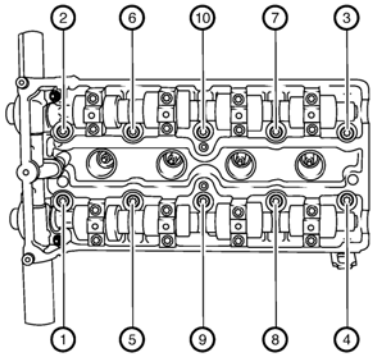

- Loosen the 10 cylinder head bolts in sequence as shown.

  1. Loosen the 10 bolts **90 degrees**.
  2. Loosen the 10 bolts **180 degrees**.

cardiagn.com

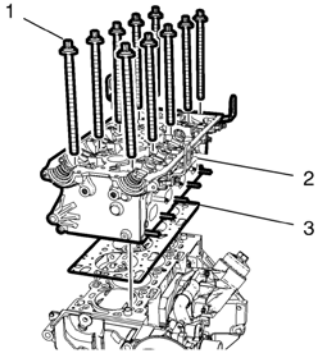

- Remove and DISCARD the 10 cylinder head bolts (1).
- Remove the cylinder head (2).
- Remove and DISCARD the cylinder head gasket (3).
- In case of re-use, then clean and inspect the cylinder head. Refer to Cylinder Head Cleaning and Inspection.
- Remove the thermostat housing. Refer to Engine Coolant Thermostat Housing Removal.
- Remove the camshafts. Refer to Camshaft Removal.
- Remove the valve lifter. Refer to Valve Lifter Removal.
- Disassemble the cylinder head. Refer to Cylinder Head Disassemble.

Installation Procedure

1. Assemble the cylinder head. Refer to Cylinder Head Assemble.
2. Install the valve lifter. Refer to Valve Lifter Installation.
3. Install the camshafts. Refer to Camshaft Installation.
4. Install the thermostat housing. Refer to Engine Coolant Thermostat Housing Installation.
5. Clean the sealing surfaces.
6. Inspect for plane surface.

- Cylinder block, cylinder head
- Straight-edge, feeler gauge

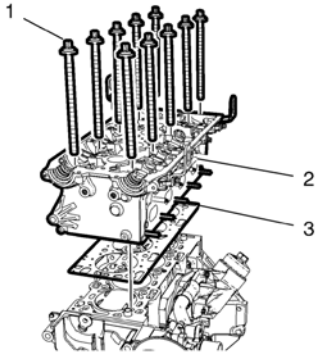

- Install a NEW cylinder head gasket (3).
- Install the cylinder head (2).

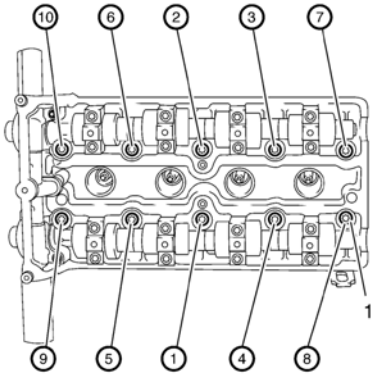

Caution: Refer to Fastener Caution.

Caution: Refer to Torque-to-Yield Fastener Caution.

- Install 10 NEW cylinder head bolts (1).
- Tighten the bolts as shown in sequence in 5 passes, using the *EN-45059* meter:

1. First pass to **25 Y (18 lb ft)**.

cardiagn.com

2. Second pass to **90 degrees**.
3. Third pass to **90 degrees**.
4. Fourth pass to **90 degrees**
5. Final pass to **45 degrees**

- Install the timing belt rear cover. Refer to Timing Belt Rear Cover Installation.

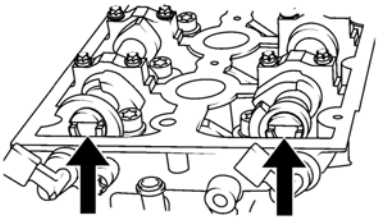

- Align the camshafts horizontally by the hexagon arrows, until the *EN-6628-A* locking tool can be inserted in both camshafts.

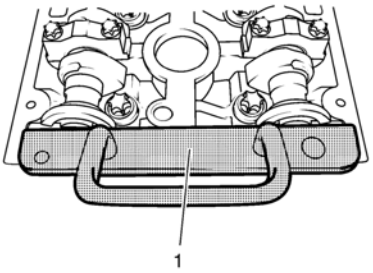

- Insert the *EN-6628-A* locking tool (1) into the camshafts.

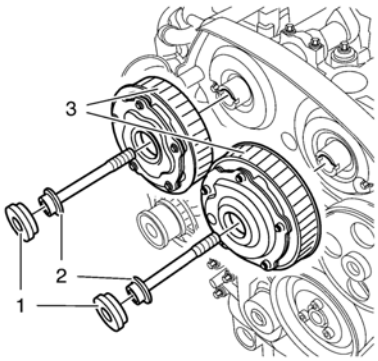

Note: If the cover is contaminated with oil, you have to clean it close.

Note: A second person is required. Counterhold against the hexagon of corresponding camshaft with an open-ended wrench.

- Install intake camshaft position actuator adjuster and/or the exhaust camshaft position actuator adjuster (3).
- Install a NEW intake camshaft position actuator adjuster bolt and/or a NEW exhaust camshaft position actuator adjuster bolt (2).

cardiagn.com

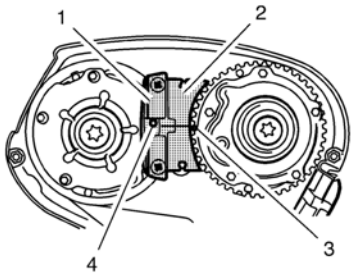

- Install the *EN-6340* locking tool into the camshaft position actuator adjusters.

  Note: The spot type marking (4) on the intake camshaft position actuator adjuster does not correspond to the groove of *EN-6340* locking tool – left during this process but must be somewhat above as shown.

  1. Install the *EN-6340* locking tool – left (1) in the camshaft position actuator adjusters as shown.

     Note: The spot type marking (3) on the exhaust camshaft position actuator adjuster must correspond to the groove on *EN-6340* locking tool – right.

  2. Install the *EN-6340* locking tool – right (2) in the camshaft position actuator adjusters as shown.

Caution: Refer to Torque-to-Yield Fastener Caution.

Note: If the cover is contaminated with oil, you have to clean it close.

Note: A second technician is required.

Note: Use an appropriate open-end wrench in order to counterhold the camshaft hexagon. A thin cross-section wrench is required for a better fit. The Use of *EN-6628-A* locking tool is for the camshaft adjustment to prevent misalignment of the camshafts. The wrench is required to counterhold the camshafts during bolt torque procedure.

- Tighten the camshaft position actuator adjuster bolts (2) in three passes use the *EN-45059* meter:

  Hold at the appropriate camshaft hexagon.

  1. First pass tighten to **50 Y (37 lb ft)**.
  2. Second pass to **150 degrees**.
  3. Final pass to **15 degrees**.

Note: Check the closure bolt seal ring.

- Install the 2 camshaft position actuator adjuster closure plugs (1) and tighten to **30 Y (22 lb ft)**.
- Remove the *EN-6628-A* locking tool.

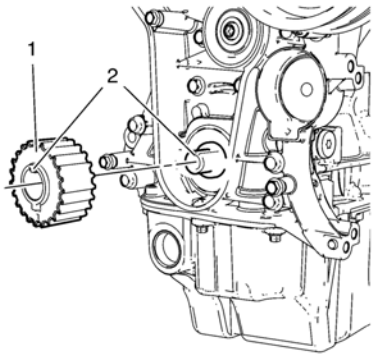

Note: When installing the crankshaft sprocket, the cam and the groove must align (2).

- Install the crankshaft sprocket (1).

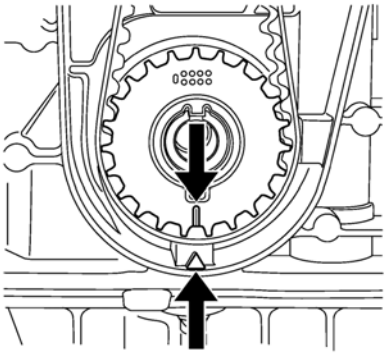

cardiagn.com

Note: The crankshaft sprocket and oil pump housing must align.

- Set the crankshaft in the direction of engine rotation to TDC. Use the crankshaft balancer bolt.

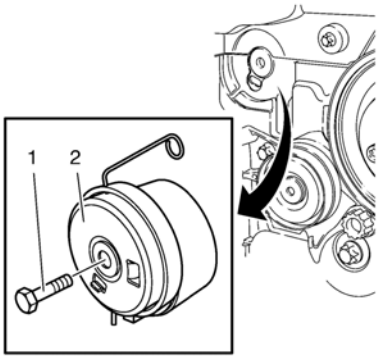

Caution: Refer to Torque-to-Yield Fastener Caution.

- Install the timing belt tensioner (2) and tighten the NEW timing belt tensioner bolt (1) in three passes use the *EN-45059* meter:

  1. First pass tighten to **20 Y (15 lb ft)**.
  2. Second pass to **120 degrees**.
  3. Third pass to **15 degrees**.

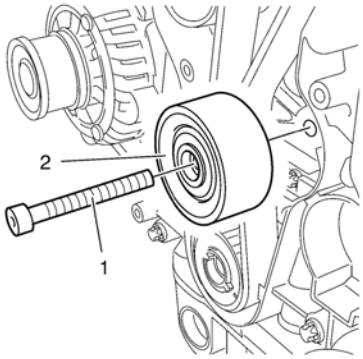

Caution: Refer to Torque-to-Yield Fastener Caution.

- Install the timing belt idler pulley (2) and tighten the NEW bolt (1) in three passes use the *EN-45059* meter:

  1. First pass tighten to **20 Y (15 lb ft)**.
  2. Second pass to **120 degrees**.
  3. Third pass to **15 degrees**.

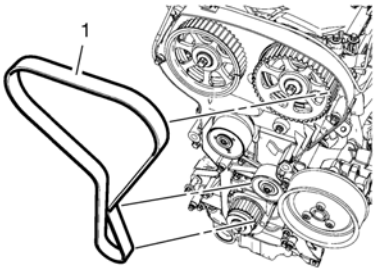

- Install the timing belt (1).
- Guide the timing belt past the tensioner and place it on the crankshaft sprocket wheel.
- Place the timing belt on the exhaust and intake camshaft position actuator adjusters.

cardiagn.com

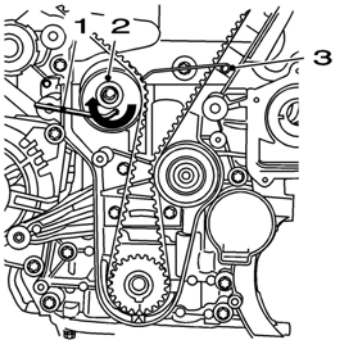

- Apply tension to the timing belt tensioner (2) in the direction of the arrow, using an allen key (1).
- Remove the *EN-6333* pin (3).

Note: The timing belt tensioner moves automatically to the correct position.

- Release tension on timing belt tensioner.
- Lower the vehicle.

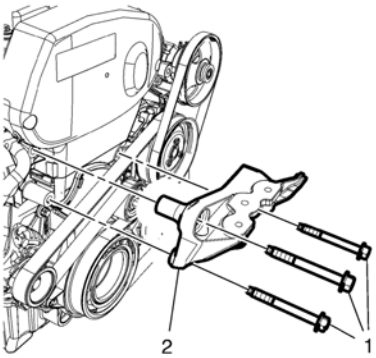

- Install the engine mount bracket (2).
- Install the 3 engine mount bracket bolts (1) tighten to **62 Y (46 lb ft)**.

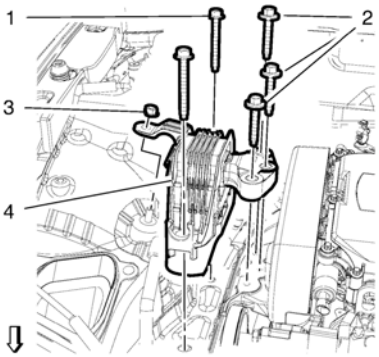

- Install the engine mount (4).
- Install the 2 engine mount bolts (1) and tighten to **62 Y (46 lb ft)**.

Caution: Refer to Torque-to-Yield Fastener Caution.

- Install the 3 engine mount bolts (2) and tighten in three passes use the *EN-45059* meter.

  1. First pass tighten to **50 Y (37 lb ft)**.
  2. Second pass to **60 degrees**.
  3. Third pass to **15 degrees**.

cardiagn.com

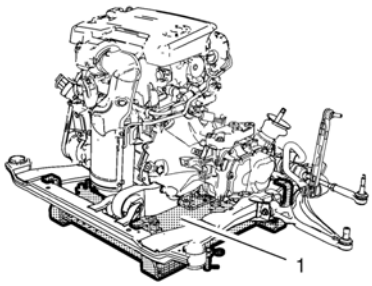

- Lower the *CH-49290* support tool (1) with the *CH-904* base frame and a jack.
- Remove the *CH-49290* support tool from the *CH-904* base frame.

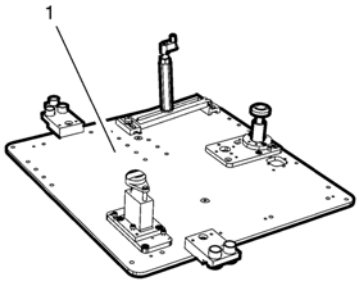

Note: The SPX installation manual is supplied with the special tool and is also available online from SPX directly. Go to www.spxtools-shop.com.

- Disassemble the *CH-49290* support tool (1) according to the details provided in the SPX installation manual.
- Lower the vehicle.
- Remove *EN-6340* locking tool.

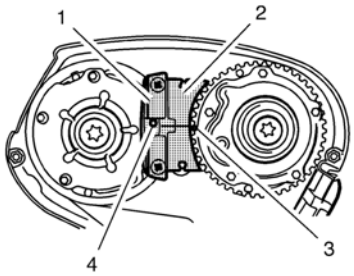

- Check the timing

Note: Note the marking at the camshaft sprockets.

- Turn the crankshaft 720° in the direction of engine rotation by the bolt on the crankshaft balancer.

Note: The spot type marking (4) on the intake camshaft adjuster does not correspond to the groove of *EN-6340* locking tool – left during this process but must be somewhat above as shown.

- Install *EN-6340* locking tool – left (1) into the camshaft adjusters as shown.

Note: The spot type marking (3) on the exhaust camshaft adjuster must correspond to the groove on *EN-6340* locking tool – right.

- Install *EN-6340* locking tool – right (2) into the camshaft adjusters as shown.
- Raise the vehicle.

cardiagn.com

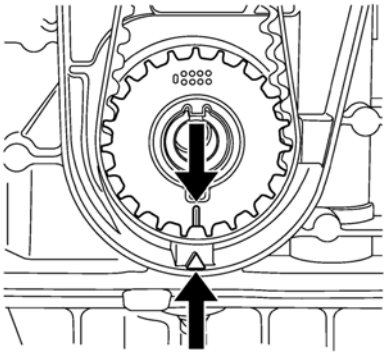

Note: The crankshaft sprocket and oil pump housing must align.

- Check the crankshaft position.

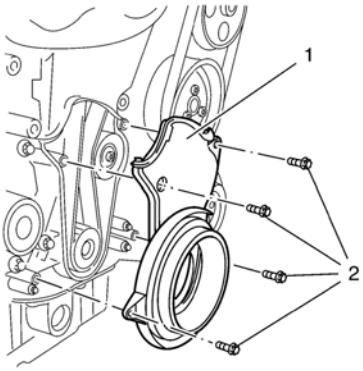

- Install the lower timing belt cover (1).

Caution: Refer to Fastener Caution.

- Install the 4 lower timing belt cover bolts (2) and tighten to **6 Y (53 lb in)**.
- Install the crankshaft balancer. Refer to Crankshaft Balancer Replacement.
- Lower the vehicle.
- Remove the *EN-6340* locking tool.
- Install the camshaft position actuator solenoid valve. Refer to Camshaft Position Actuator Solenoid Valve Replacement.
- Install the 2 camshaft position sensors. Refer to Camshaft Position Sensor Replacement.
- Install the camshaft cover. Refer to Camshaft Cover Replacement.

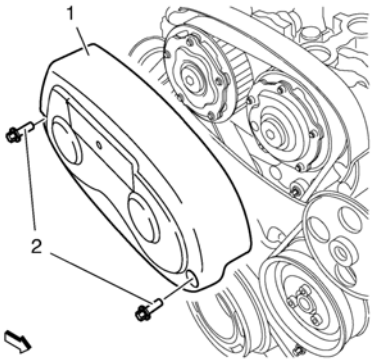

- Install the timing belt upper front cover (1).
- Install the 2 timing belt upper front cover bolts (2) and tighten to **6 Y (53 lb in)**.
- Install the exhaust manifold. Refer to Exhaust Manifold Replacement.

cardiagn.com

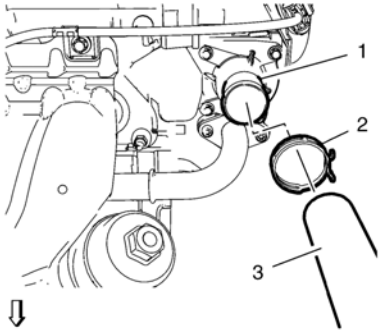

- Install the radiator inlet hose (3) with the radiator inlet hose clamp (2) to the engine coolant thermostat (1).
- Install the heater inlet hose to the engine coolant thermostat housing. Refer to Heater Inlet Hose Replacement.
- Install the heater outlet hose to the engine coolant thermostat housing. Refer to Heater Outlet Hose Replacement.

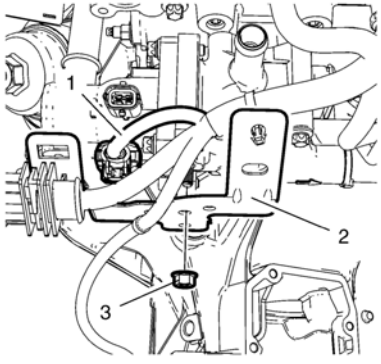

- Install the engine coolant thermostat housing bracket (2).
- Install the engine coolant thermostat housing bracket nut (3) and tighten to **6 Y (53 lb in)**.
- Connect the thermostat wiring harness plug (1).
- Install the intake manifold. Refer to Intake Manifold Replacement.
- Install the air cleaner assembly. Refer to Air Cleaner Assembly Replacement.
- Fill engine oil. Refer to Engine Mechanical Specifications.
- Connect the battery negative cable. Refer to Battery Negative Cable Disconnection and Connection.
- Fill the cooling system. Refer to Cooling System Draining and Filling.

cardiagn.com

Special Tools

- *EN-470-B* Anglemeter
- *EN-50437* Height Gauge - Piston TDC
- *GE-571-B* Dial Gauge

For equivalent regional tools, refer to Special Tools.

Removal Procedure

1. Remove the intake manifold bracket. Refer to Intake Manifold Bracket Replacement
2. Remove the exhaust gas recirculation manifold cooling return hose from the thermostat bypass pipe. Refer to Exhaust Gas Recirculation Manifold Cooling Return Hose Replacement
3. Remove the oil level indicator tube. Refer to Oil Level Indicator Tube Replacement
4. Remove the turbocharger. Refer to Turbocharger Replacement
5. Remove the charge air cooler outlet hose from the throttle body module. Refer to Charge Air Cooler Outlet Hose Replacement
6. Remove the engine water outlet adapter. Refer to Engine Water Outlet Adapter Replacement
7. Remove the intake camshaft. Refer to Intake Camshaft Replacement.

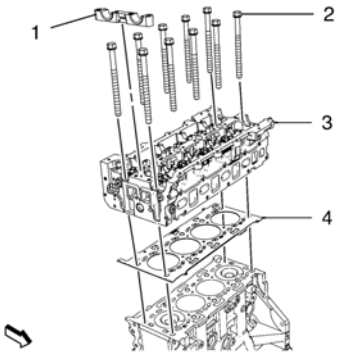

8. Remove the camshaft seat guide (1).

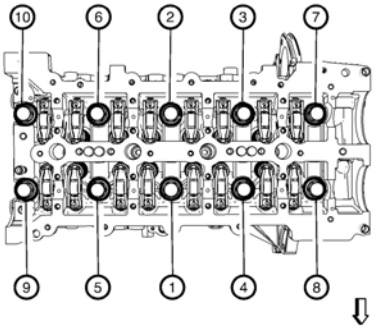

9. Loosen the 10 cylinder head retaining bolts in sequence as shown.

cardiagn.com

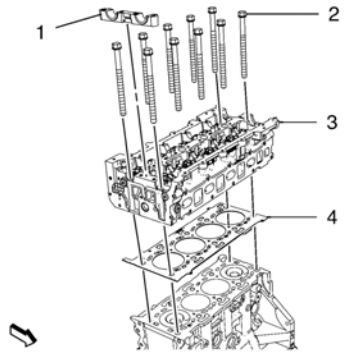

10. Remove and DISCARD 10 cylinder head retaining bolts (2).
11. Remove the cylinder head (3) and the gasket (4).
12. Remove the intake manifold. Refer to Intake Manifold Replacement
13. Remove the exhaust manifold. Refer to Exhaust Manifold Replacement
14. Remove the hydraulic valve adjusters. Refer to Hydraulic Valve Lash Adjuster Replacement

Cleaning Procedure

Note: Ensure that the cylinder head and the cylinder block sealing surfaces are clear of oil, grease and old gasket material.

1. Clean the sealing surfaces.
2. Inspect the flatness of cylinder head and cylinder block sealing surfaces.
3. Clean the piston surfaces.

Choose the Gasket

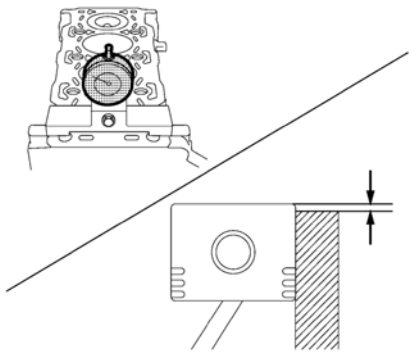

1. Align TDC of the piston 1.
2. Measure the piston projection thickness using *EN-50437* height gauge .
3. Repeat the measuring process on the cylinders 2, 3, 4 and average the measured piston projection values.
4. Choose the cylinder head gasket through below the specifications. Refer to Engine Mechanical Specifications.

Installation Procedure

1. Install the hydraulic valve lash adjusters. Refer to Hydraulic Valve Lash Adjuster Replacement
2. Install the intake manifold. Refer to Intake Manifold Replacement
3. Install the exhaust manifold. Refer to Exhaust Manifold Replacement

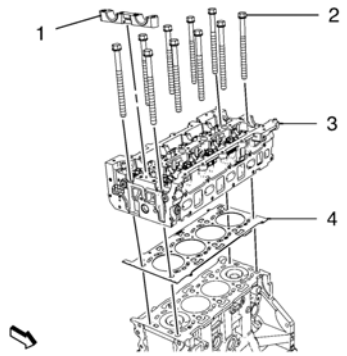

4. Clean the sealing surfaces.
5. Install the cylinder head (3) and a NEW gasket (4).

Note: Do not tighten the bolts.

cardiagn.com

6. Install 10 NEW cylinder head retaining bolts (2).

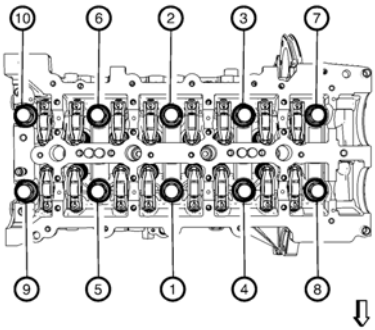

Caution: Refer to Fastener Caution.

Caution: Refer to Torque-to-Yield Fastener Caution.

7. Tighten the cylinder head retaining bolts (2) in four steps, in a sequence as shown in the graphic above:

- First step **30 Y** (22 lb ft).
- Second step **100 Y** (74 lb ft).
- Third step **90°**. Use *EN-470-B* anglemeter .
- Fourth step **90°**. Use *EN-470-B* anglemeter .

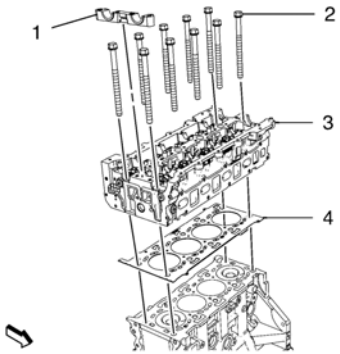

- Install the camshaft seat guide (1).
- Install the intake camshaft. Refer to Intake Camshaft Replacement.
- Install the engine water outlet adapter. Refer to Engine Water Outlet Adapter Replacement
- Install the charge air cooler outlet hose to the throttle body module. Refer to Charge Air Cooler Outlet Hose Replacement
- Install the turbocharger. Refer to Turbocharger Replacement
- Install the oil level indicator tube. Refer to Oil Level Indicator Tube Replacement
- Install the exhaust gas recirculation manifold cooling return hose to the thermostat bypass pipe. Refer to Exhaust Gas Recirculation Manifold Cooling Return Hose Replacement
- Install the intake manifold bracket. Refer to Intake Manifold Bracket Replacement

cardiagn.com

Special Tools

EN-8087 Gauge

For equivalent regional tools, refer to Special Tools.

Cleaning Procedure

1. Remove any old thread sealant, gasket material or sealant.
2. Clean all the following areas with solvent:

- Sealing surfaces
- Cooling passages
- Oil passages
- Bearing journals
- Clean all threaded and through holes with solvent.

Warning: Refer to Safety Glasses and Compressed Air Warning.

- Dry the engine block with compressed air.

Visual Inspection

1. Inspect the crankshaft bearings journals for damage or spun bearings. The crankshaft bearing journals are not repairable, if the crankshaft bearing journals are damaged the engine block assembly must be replaced.
2. Inspect all sealing and mating surfaces for damage, repair or replace the engine block assembly if necessary.
3. Inspect all threaded and through holes for damage or excessive debris.
4. Inspect all bolts for damage, if damaged replace with NEW bolts only.
5. Inspect the cylinder walls for cracks or damage. The cylinder sleeves must not serviced separately, if the cylinders are damaged the cylinder block assembly must be replaced.
6. Inspect the engine block for cracks. DO NOT repair any cracks. If cracks are found, the cylinder block assembly must be replaced.

Measuring Procedure

Engine Block Flatness Inspection

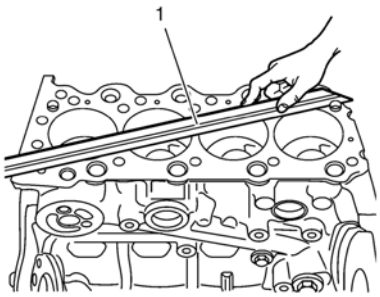

1. Inspect the engine block as shown for distortion. Use a straightedge (1) and a feeler gauge.

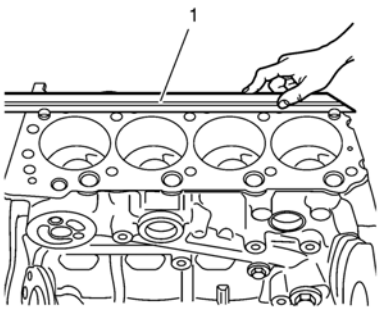

2. Inspect the engine block as shown for deflection. Use a straightedge (1) and a feeler gauge.
3. If the deflection is less than 0.06 mm (0.0024 in), engine block replacement is not necessary.

cardiagn.com

4. If the deflection is larger than 0.06 mm (0.0024 in), replace the engine block.

Cylinder Sleeve Diameter Inspection

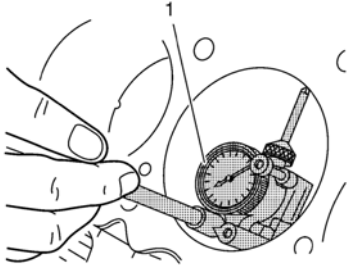

1. Inspect the cylinder bores using the *EN-8087* gauge (1). Inspect for the following items:

- Wear of cylinder sleeve
- Cylinder sleeve diameter
- Tapering of cylinder sleeve
- Oval status of cylinder sleeve
- Measure the cylinder bore diameter 86 mm (3,39 in) from the deck face using a dial gauge.

Refer to Engine Mechanical Specifications for the correct specifications.

cardiagn.com

Special Tools

EN-8087 Cylinder Gauge

For equivalent regional tools, refer to Special Tools.

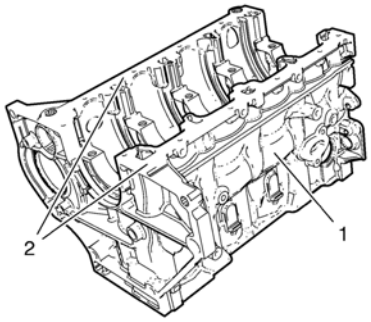

1. Clean the sealing material from the gasket mating surfaces (2).
2. Clean the engine block (1) and lower crankcase in a cleaning tank with solvent appropriate for aluminum. Refer to Adhesives, Fluids, Lubricants, and Sealers for the recommended solvent.
3. Flush the engine block with clean water or steam.
4. Clean the oil passages.
5. Clean the blind holes.
6. Spray the cylinder bores and the machined surfaces with engine oil.
7. Inspect the threaded holes. Clean the threaded holes with a rifle brush. If necessary, drill out the holes and install thread inserts. Refer to Thread Inserts.

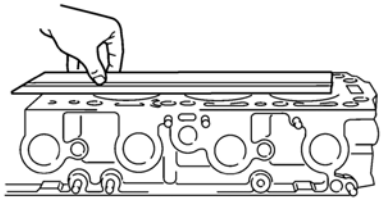

Note: Do not attempt to machine the lower crankcase to engine block surfaces.

8. Inspect the engine block for sag in length and width on the sealing surfaces.

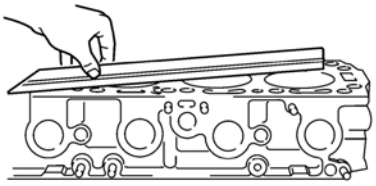

9. Inspect the engine block for distortion along the diagonals.

cardiagn.com

If the deck surface is out of specification, replace the block. Do not machine the block.

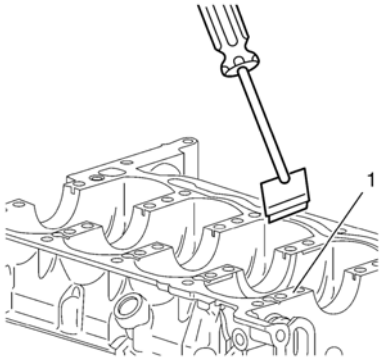

10. Clean the sealing material from the gasket mating surfaces (1) on the lower crankcase oil pan side.

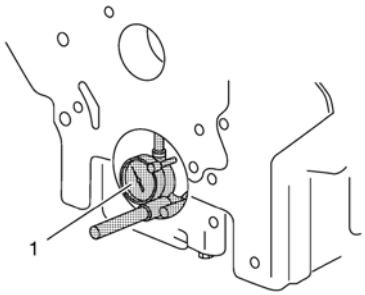

11. Inspect the crankshaft main bearing bores. Use the *EN-8087* gauge (1) to measure the bearing bore concentricity and alignment.
12. Replace the engine block and bed plate if the crankshaft bearing bores are out of specification.

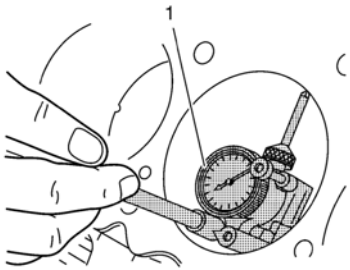

13. Inspect the cylinder bores using the *EN-8087* gauge (1). Inspect for the following items:

- Wear
- Taper
- Runout
- Ridging

- Check the cylinder bores specifications. Refer to Engine Mechanical Specifications.
- If the cylinder bores are out of specification, replace the engine block.

cardiagn.com

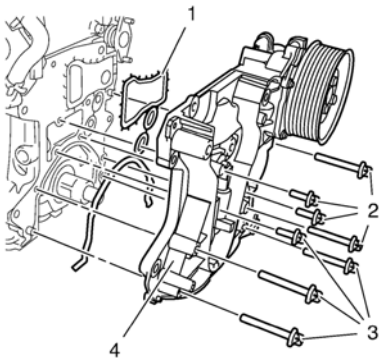

1. Install the NEW engine cover gasket (1).
2. Install the engine cover with the included oil pump (4).

   Caution: Refer to Fastener Caution.

3. Install the 8 engine cover bolts (2, 3) and tighten to **20 Y (15 lb ft)**.

cardiagn.com

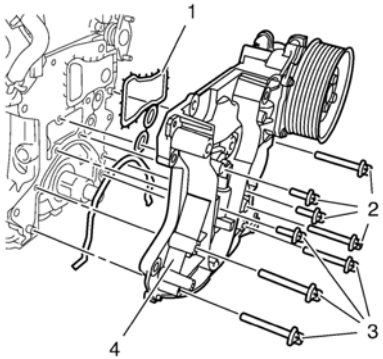

Note: Note the different screw lengths.

1. Remove the 8 bolts (2, 3).
2. Remove the engine front cover with the included oil pump (4).
3. Remove the gasket (1).

Note: Do not damage the sealing surfaces.

4. Clean the sealing surface.

cardiagn.com

Special Tools

EN-50435 Guide Pins

For equivalent regional tools, refer to Special Tools.

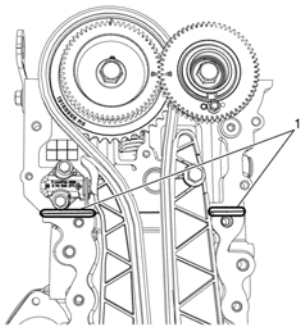

Note: Do not dig old sealant filled at T-joint area (1) between cylinder head and cylinder block when removing old sealant.

1. Remove any old sealant and gasket material with a suitable tool.
2. Clean the front cover and front cover components with solvent.

Note: Ensure that the sealing surface is clear of oil, grease and old sealant material.

3. Clean out debris from the bolt holes.

Warning: Refer to Safety Glasses and Compressed Air Warning.

4. Dry the front cover and front cover components with compressed air.

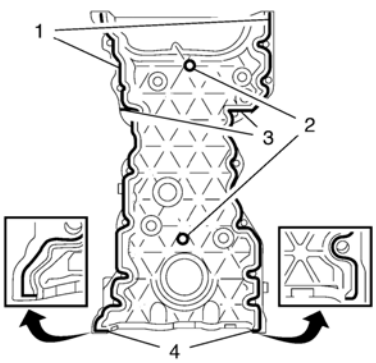

Note: The complete installation procedure of the camshaft guide should be done in 10 minutes.

Note: Do not coat sealing compound on the engine front cover bolt holes and bolt threads.

5. Apply sealing compound on sealant line (1), 2 hole faces (2) and 2 areas (3).
6. Apply sealing compound to the edge of the chamfer (4).

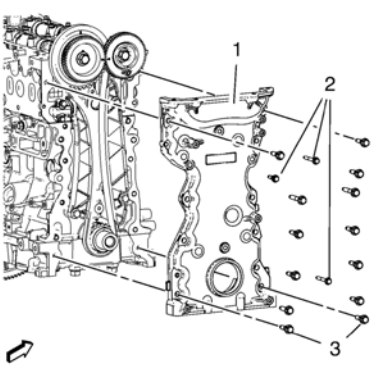

cardiagn.com

Note: The alignment pins will help maintaining position while installing the bolts.

7. To aid in cover alignment, install 2 *EN-50435* guide pins on the engine block.
8. Install the engine front cover (1).

Caution: Refer to Fastener Caution.

9. Install the engine front cover bolts and remove the *EN-50435* guide pins.
10. Install the 13 engine front cover retaining bolts (M8) (3) and tighten evenly to **22 Y (16 lb ft)**.
11. Install the 3 engine cover retaining bolts (M6) (2) and tighten to **9 Y (80 lb in)**.

cardiagn.com

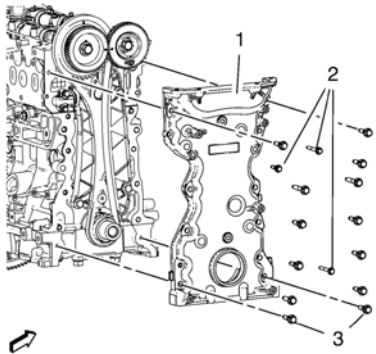

1. Remove the 16 engine front cover retaining bolts (2, 3).

   Note: Carefully detach from engine block, using a suitable tool. Do not damage the sealing surfaces.

2. Remove the engine front cover (1).

cardiagn.com

Special Tools

EN-50435 Guide Pin

For equivalent regional tools, refer to Special Tools.

Removal Procedure

1. Remove camshaft cover. Refer to Camshaft Cover Replacement.
2. Remove the drive belt tensioner. Refer to Drive Belt Tensioner Replacement.
3. Remove the crankshaft pulley. Refer to Crankshaft Pulley Replacement.
4. Remove the oil filter adapter. Refer to Oil Filter Adapter and Oil Cooler Assembly Replacement.
5. Remove the upper oil pan. Refer to Upper Oil Pan Replacement.
6. Remove the engine mount bracket. Refer to Engine Mount Bracket Replacement.
7. Remove the charge air control vacuum hose.

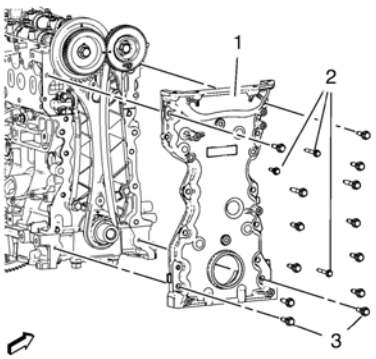

8. Remove 16 engine front cover retaining bolts (2, 3).

   Note: Detach carefully from engine block using suitable tool. Do not damage sealing surfaces.
9. Remove the engine front cover (1).

Installation Procedure

1. Remove any old sealant and gasket material with a suitable tool.
2. Clean the front cover and front cover components with solvent.

   Note: Ensure that the sealing surface is clear of oil, grease and old sealing material.
3. Clean out debris from the bolt holes.

   Warning: Refer to Safety Glasses and Compressed Air Warning.
4. Dry the front cover and front cover components with compressed air.

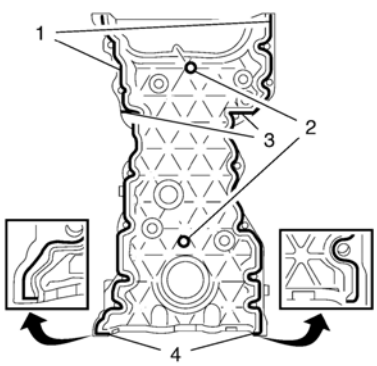

   Note: The complete installation procedure of the engine front cover should be done in 10 minutes.

   Note: Do not coat sealing compound on the engine front cover bolt holes and bolt threads.
5. Apply sealing compound on sealant line (1), 2 hole faces (2) and 2 areas (3).
6. Apply sealing compound to the edge of chamfer (4).

cardiagn.com

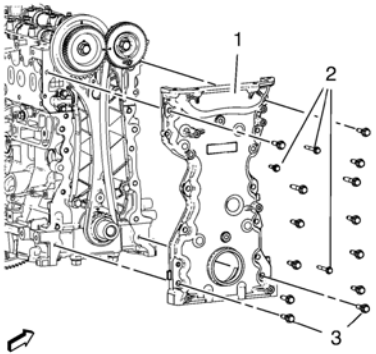

Note: The alignment pins will help maintaining position while installing the bolts.

7. To aid in cover alignment, install 2 *EN-50435* guide pins on the engine block.
8. Install the engine front cover (1).

Caution: Refer to Fastener Caution.

9. Install the engine front cover bolts and remove the *EN-50435* guide pins.
10. Install 13 engine front cover retaining bolts (M8) (3). Tighten the bolts evenly to **22 Y (16 lb ft)**.
11. Install 3 engine cover retaining bolts (M6) (2). Tighten the bolts to **9 Y (80 lb in)**.
12. Install the engine mount bracket. Refer to Engine Mount Bracket Replacement.
13. Install camshaft cover. Refer to Engine Front Cover Removal.
14. Install the oil filter adapter. Refer to Oil Filter Adapter and Oil Cooler Assembly Replacement.
15. Install the crankshaft pulley. Refer to Crankshaft Pulley Replacement.
16. Install the drive belt tensioner. Refer to Drive Belt Tensioner Replacement.
17. Install the upper oil pan. Refer to Upper Oil Pan Replacement.

cardiagn.com

Removal Procedure

1. Open the hood.
2. Disconnect the negative battery cable. Refer to Battery Negative Cable Disconnection and Connection.
3. Remove the exhaust manifold. Refer to Exhaust Manifold Replacement.
4. Drain the cooling system. Refer to Cooling System Draining and Filling.
5. Remove the air conditioning compressor. Refer to Air Conditioning Compressor Replacement.
6. Remove the generator. Refer to Generator Replacement.
7. Remove the timing belt rear cover. Refer to Timing Belt Rear Cover Replacement.
8. Remove the oil pan. Refer to Oil Pan Replacement.
9. Remove the radiator outlet hose from the water pump. Refer to Radiator Outlet Hose Replacement.

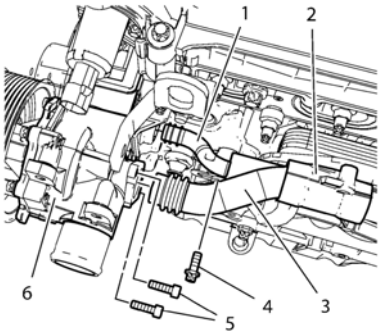

10. Remove the engine oil cooler inlet pipe bolt (4).
11. Push the engine oil cooler inlet pipe (1) into the engine oil cooler housing (2).
12. Remove the 2 engine oil cooler outlet pipe bolts (5) from the water pump.
13. Push the engine oil cooler outlet pipe (3) into the engine oil cooler housing (2).

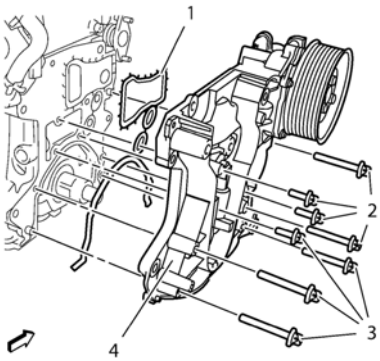

14. Remove the 8 engine front cover bolts (2, 3).
15. Remove the engine front cover (4).
16. Remove the engine front cover seal (1).

Installation Procedure

1. Clean sealing surface.

cardiagn.com

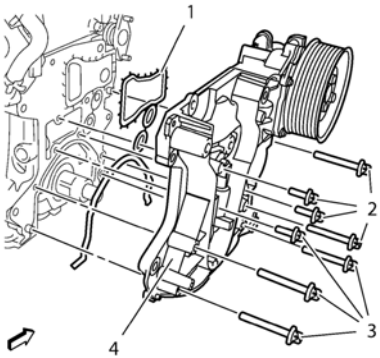

2. Install a NEW engine front cover seal (1).
3. Install the engine front cover (4).

Caution: Refer to Fastener Caution.

4. Install the 8 engine front cover bolts (2, 3) and tighten to **20 Y (15 lb ft)**.

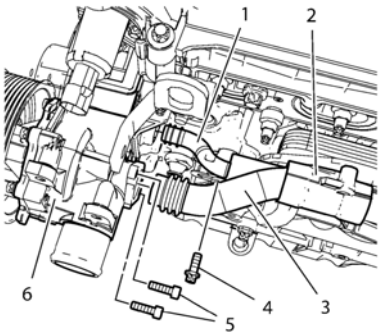

5. Push the engine oil cooler outlet pipe (3) to the water pump (6).
6. Install the engine oil cooler outlet pipe bolts (5) and tighten to **8 Y (71 lb in)**.
7. Push the engine oil cooler inlet pipe (1) into the water pump (6).
8. Install the engine oil cooler inlet pipe bolt (4) and tighten to **8 Y (71 lb in)**.
9. Install the radiator outlet hose to the water pump. Refer to Radiator Outlet Hose Replacement.
10. Install the oil pan. Refer to Oil Pan Replacement.
11. Install the timing belt rear cover. Refer to Timing Belt Rear Cover Replacement.
12. Install the generator. Refer to Generator Replacement.
13. Install the air conditioning compressor. Refer to Air Conditioning Compressor Replacement.
14. Install the exhaust manifold. Refer to Exhaust Manifold Replacement.
15. Connect the negative battery cable. Refer to Battery Negative Cable Disconnection and Connection.
16. Fill the cooling system. Refer to Cooling System Draining and Filling.
17. Close the hood.

cardiagn.com

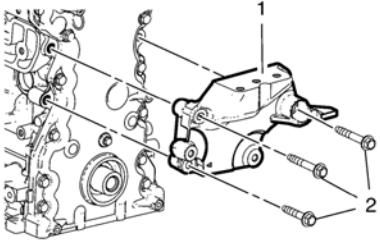

1. Install the engine mount bracket (1).

   Caution: Refer to Fastener Caution.

2. Install the 3 engine mount bracket bolts (2) and tighten to **58 Y (43 lb ft)**.

cardiagn.com

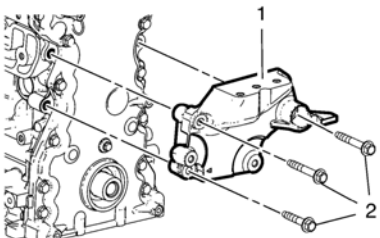

1. Remove the 3 engine mount bracket bolts (2).
2. Remove the engine mount bracket (1).

cardiagn.com

Removal Procedure

1. Remove the air cleaner assembly. Refer to Air Cleaner Assembly Replacement.
2. Remove the engine sight shield. Refer to Engine Sight Shield Replacement.
3. Install the engine lifter to the engine lift rear bracket.
4. Remove the engine mount. Refer to Engine Mount Replacement.
5. Remove the belt idler pulley - upper. Refer to Belt Idler Pulley Replacement - Upper.
6. Remove the belt idler pulley - lower. Refer to Belt Idler Pulley Replacement - Lower.

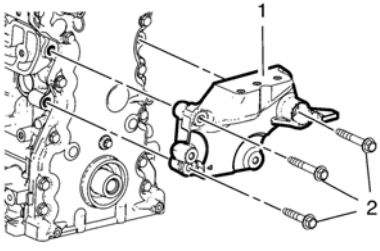

7. Remove the 3 engine mount bracket retaining bolts (2).
8. Remove the engine mount bracket (1).

Installation Procedure

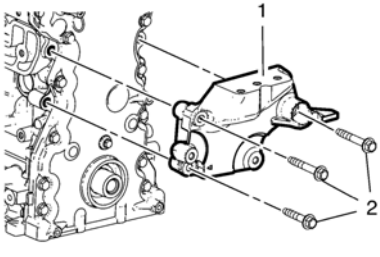

1. Install the engine mount bracket (1).

Caution: Refer to Fastener Caution.

2. Install the 3 engine mount bracket bolts (2) and tighten to **58 Y (43 lb ft)**.
3. Install the belt idler pulley - lower. Refer to Belt Idler Pulley Replacement - Lower.
4. Install the belt idler pulley - upper. Refer to Belt Idler Pulley Replacement - Upper.
5. Install the engine mount. Refer to Engine Mount Replacement.
6. Remove the engine lifter from the rear engine lift bracket.
7. Install the engine sight shield. Refer to Engine Sight Shield Replacement.
8. Install the air cleaner assembly. Refer to Air Cleaner Assembly Replacement.

cardiagn.com

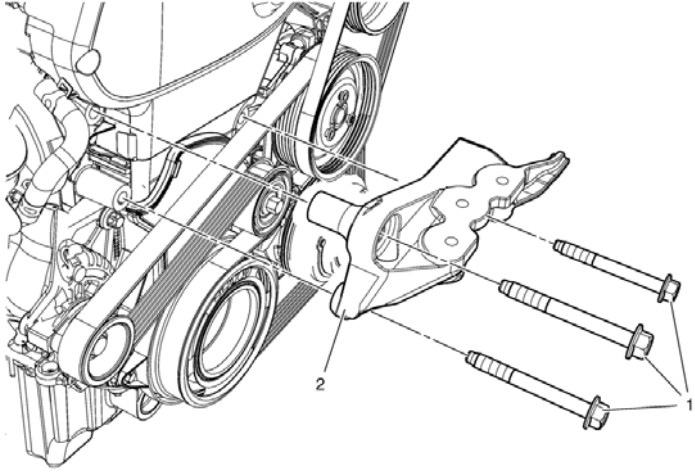

Engine Mount Bracket Replacement

Callout	Component Name
Preliminary Procedure	
Remove the engine mount. Refer to Engine Mount Replacement.	
1	Engine Mount Bracket Bolt (Qty: 3) **Caution:** Refer to Fastener Caution. **Tighten** 60 Y (44 lb ft) + 45 degrees +15 degrees
2	Engine Mount Bracket

cardiagn.com

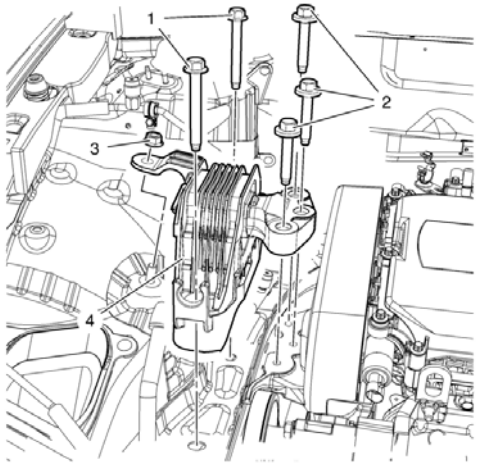

Engine Mount Replacement

Callout	Component Name
Preliminary Procedures	

1. Remove the air cleaner assembly. Refer to Air Cleaner Assembly Replacement.
2. Support the engine. Install a suitable engine lifting device. Install a suitable cable at the 3 engine lift brackets and at the engine lifting device.

1	Engine Mount Bolt (Qty: 2) **Caution:** Refer to Fastener Caution. **Tighten** 62 Y (46 lb ft)
2	Engine Mount Bracket Bolt (Qty: 3) **Caution:** Refer to Torque-to-Yield Fastener Caution. **Procedure** Install NEW bolts, do NOT reuse old bolts **Tighten** 50 Y + 60°–75° (37 lb ft + 60°–75°)
3	Engine Mount Nut **Tighten** 62 Y (46 lb ft)
4	Engine Mount

cardiagn.com

Removal Procedure

1. Remove the engine sight shield. Refer to Engine Sight Shield Replacement.
2. Remove the air cleaner assembly. Refer to Air Cleaner Assembly Replacement.
3. Install the engine lifter to the engine lift rear bracket.

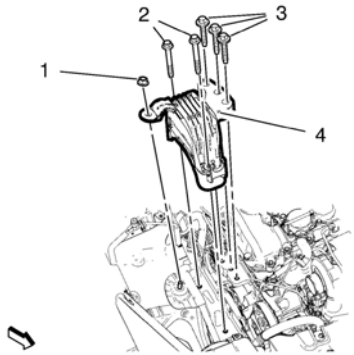

4. Remove the 5 engine mount bolts (2, 3) and the engine mount nut (1).
5. Remove the engine mount (4).

Installation Procedure

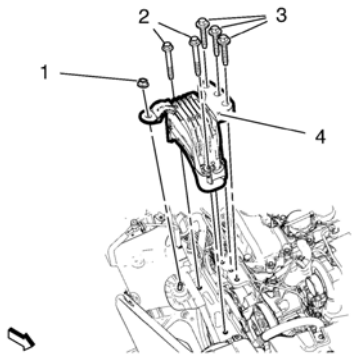

1. Install the engine mount (4).

   Note: Do not tighten the bolts.

2. Install the 3 engine mount to bracket bolts (3). DO NOT reuse the engine mount to bracket bolts (3) to install the mount (4). Use NEW bolts only.

   Caution: Refer to Fastener Caution.

3. Install the 2 engine mount to body bolts (2) and the engine mount to body nut (1).

- Tighten the 2 engine mount to body bolts (2) to **62 Y (46 lb ft)**.
- Tighten the engine mount to body nut (1) to **62 Y (46 lb ft)**.
- Tighten the 3 NEW engine mount to bracket bolts (3) to **50 Y + 60° – 75° (37 lb ft + 60° – 75°)**.
- Remove the engine lifter from the rear engine lift bracket.
- Install the air cleaner assembly. Refer to Air Cleaner Assembly Replacement.
- Install the engine sight shield. Refer to Engine Sight Shield Replacement.

cardiagn.com

Special Tools

- *EN–47649* Engine Bridge
- *EN–47649-100* Engine Bridge Feet
- *EN–47650* Retainer Frame
- *EN–47650-250* Front Adapter
- *EN–47650-300* Rear Adapter
- *EN–47650-310* Adapter to EN-47650–300

For equivalent regional tools refer to Special Tools.

Assemble EN-47649 Engine Bridge

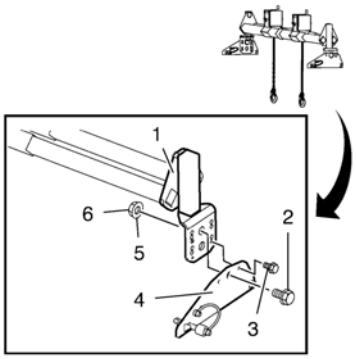

Install *EN–47649-100* feet (4) to *EN 47649* bridge (1).

1. Tighten mounting bolt (2) and nut (6) on both sides.

   Put washer (5) under nut on both sides.
2. Tighten adjustment screw (3) when bridge is adjusted vertical on both sides.

Assemble and Adjustment of EN-47650 – Retainer Frame

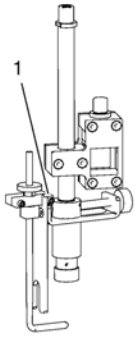

- Pre-assemble *EN–47650-250* adapter (1) by following manufacturer's instructions.

  Note: Pre-assemble special tool assembly outside the vehicle, in accordance with the table.
- Pre-assemble *EN–47650* frame off vehicle.

cardiagn.com

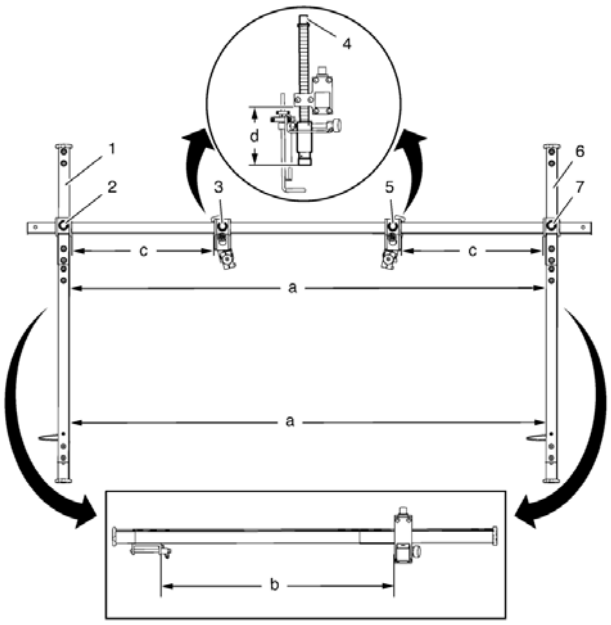

Measurement	Dimension
a	1350 mm (53.1 in)
b	575 mm (23.6 in)
c	385 mm (15.1 in)
d	90 mm (3.5 in)

Note: *EN–47650-30* extension is equipment of *EN–47650* frame and enclosed in the *EN–47650* frame tool kit .

1. Install *EN–47650-30* extension bars (1, 6) of the frame set to *EN–47650* frame .

   Note: Outer bars of *EN 47650* frame MUST be arranged parallel.

2. Tighten hexagons (2, 6) on both sides.
3. Adjust height of *EN 47650* frame .

- Tighten hexagons (3, 5) on both sides
- Adjust height with hexagons (4) on both sides

Installation Procedure

1. Remove dash upper extension panel opening cover. Refer to Dash Upper Extension Panel Opening Cover Replacement.

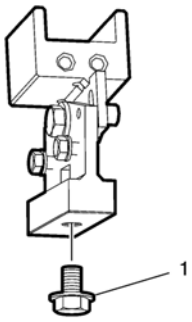

2. Use *EN–47650-310* adapter (1) for this operation.

cardiagn.com

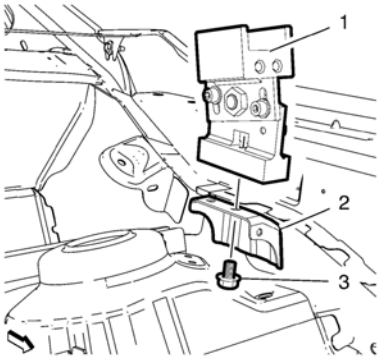

Caution: To avoid paint damage, use protective covers on the fenders.

Note: Do NOT tighten fasteners of *EN 47650-300* adapter .

3. Install *EN–47650-300* adapter (1) over hole (2) in the front compartment rail and tighten bolt (3).

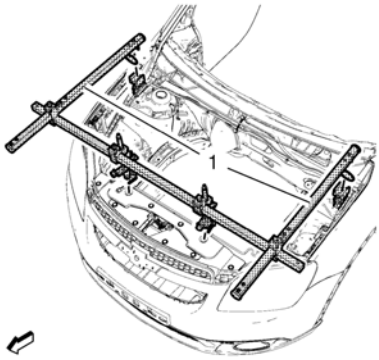

4. With the aid of an assistant install *EN–47650* frame (1) to the vehicle. If necessary readjust *EN–47650* frame (1) for appropriate fitting.

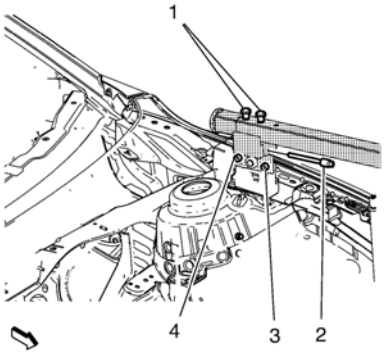

5. Tighten rear side of *EN–47650* frame :

   1. Insert safety pins (2) through the *EN–47650-300* adapters and the side bar to prevent movement.
   2. Tighten *EN–47650* frame to *EN–47650-300* adapters with mounting bolts (1).
   3. Tighten bolts (3, 4, 5).

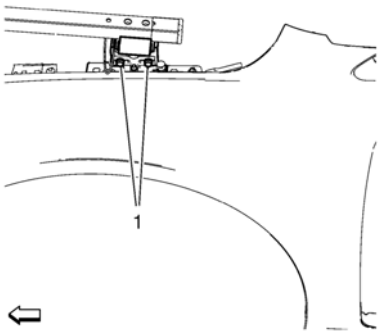

   4. Tighten outer bolts (1) *EN–47650–300* adapters .
   5. Retighten ALL hexagons of *EN–47650* frame .

cardiagn.com

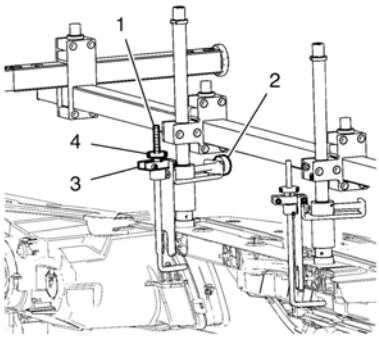

Note: Left hook must not be tightened!

6. Tighten only front right side of *EN–47650* frame :

    1. Align the right hook (1) with thumb wheel (2) to upper tie bar.
    2. Tighten the right hook (1) to upper tie bar, using the thumb wheel (4).
    3. Tighten bolts at right clamping piece (3).

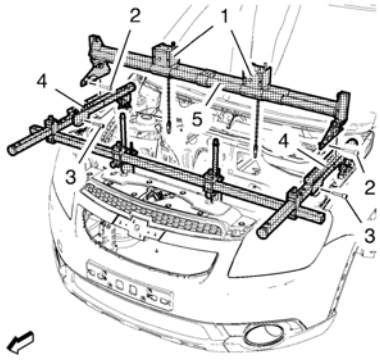

Note: *EN–47650-50* rail is equipment of *EN–47650* frame and enclosed in the *EN–47650* frame tool kit .

7. Install *EN–47650-50* rail (4) to *EN–47650* frame .

    Secure *EN–47650-50* rail (4) with safety pins (3).

Note: Secure chain boxes with hook chains on the outside of engine bride.

8. Install *EN–47649* bridge (5) with the aid of an assistant onto *EN–47650-050* rail (4).

    Secure *EN–47649* bridge (5) with safety pins (2).

9. When tool assemble *EN–47650* frame and *EN–47649* bridge is under load, adjust complete assemble and retighten ALL fasteners.

Removal Procedure

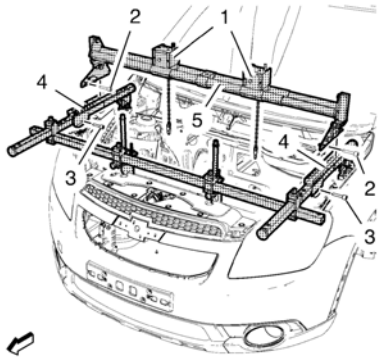

Note: Secure chain boxes with hook chains on the outside of engine bride.

1. Remove *EN–47649* bridge (5) with the aid of an assistant.

    Remove safety pins (2).

Note: *EN-47650-50* rail is equipment of *EN–47650* frame and enclosed in the *EN–47650* frame tool kit .

2. Remove *EN 47650-50* rail (4) from *EN 47650* frame .

    Remove safety pins (3).

cardiagn.com

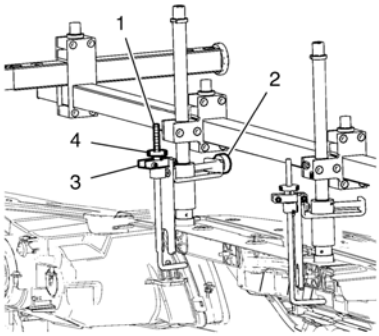

3. Remove front right side of *EN–47650* frame :

- Loosen the bolts from right clamping piece (3).
- Loosen the right hook (1) with thumb wheel (2) and turn the hook 90° from upper tie bar.

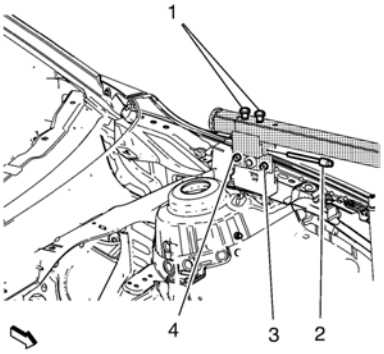

- Loosen rear side of *EN–47650* frame :

1. Loosen *EN–47650* frame from *EN–47650-300* adapters with mounting bolts (1).
2. Remove safety pins (2) from the *EN–47650-300* adapters and the side bars.

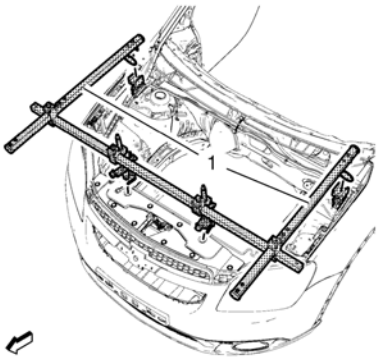

- With the aid of an assistant remove *EN–47650* frame (1) from the vehicle.

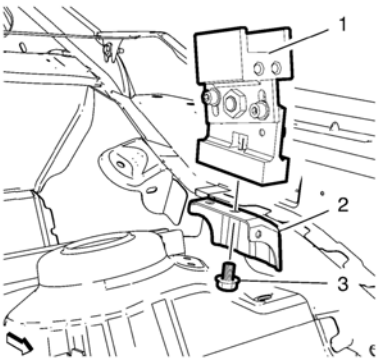

- Remove bolt (3) and *EN–47650-300* adapter (1) from front compartment rail (2).

cardiagn.com

Engine Support Fixture

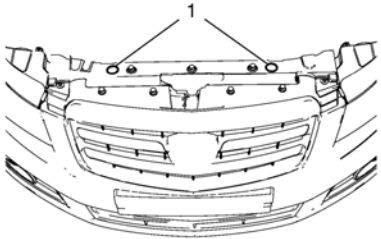

- Clean contact surfaces (1) from *EN–47650* frame on the upper tie bar with solvent.
- Remove dash upper extension panel opening cover. Refer to Dash Upper Extension Panel Opening Cover Replacement.

cardiagn.com

Special Tools

- *EN–47649* Engine Bridge
- *EN–47649-100* Engine Bridge Feet
- *EN–47650* Retainer Frame
- *EN–47650-250* Front Adapter
- *EN–47650-300* Rear Adapter
- *EN–47650-310* Adapter to EN-47650–300

For equivalent regional tools refer to, Special Tools.

Assemble EN-47649 Engine Bridge

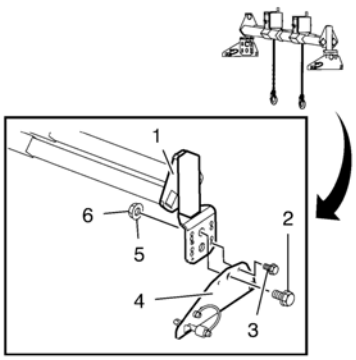

Install *EN–47649-100* feet (4) to *EN 47649* bridge (1).

1. Tighten mounting bolt (2) and nut (6) on both sides.

   Put washer (5) under nut on both sides.
2. Tighten adjustment screw (3) when bridge is adjusted vertical on both sides.

Assemble and Adjustment of EN-47650 – Retainer Frame

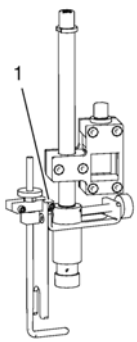

- Pre-assemble *EN–47650-250* adapter (1) by following manufacturer's instructions.

Note: Pre-assemble special tool assembly outside the vehicle, in accordance with the table.

- Pre-assemble *EN–47650* frame off vehicle.

cardiagn.com

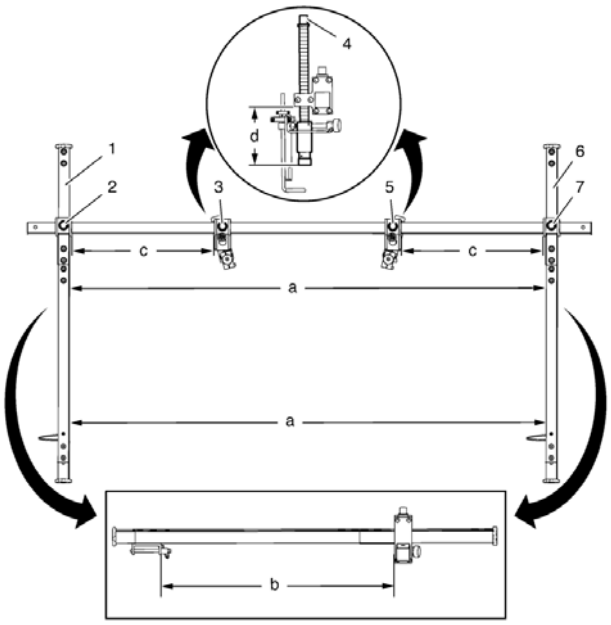

Measurement	Dimension
a	1350 mm (53.1 in)
b	575 mm (23.6 in)
c	385 mm (15.1 in)
d	90 mm (3.5 in)

Note: *EN–47650-30* extension is equipment of *EN–47650* frame and enclosed in the *EN–47650* frame tool kit.

1. Install *EN–47650-30* extension bars (1, 6) of the frame set to *EN–47650* frame .

Note: Outer bars of *EN 47650* frame MUST be arranged parallel.

2. Tighten hexagons (2, 6) on both sides.
3. Adjust height of *EN 47650* frame .

- Tighten hexagons (3, 5) on both sides
- Adjust height with hexagons (4) on both sides

Installation Procedure

1. Remove dash upper extension panel opening cover. Refer to Dash Upper Extension Panel Opening Cover Replacement.

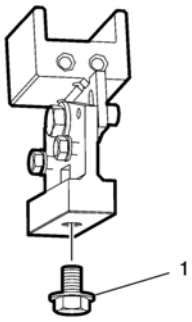

2. Use *EN–47650-310* adapter (1) for this operation.

cardiagn.com

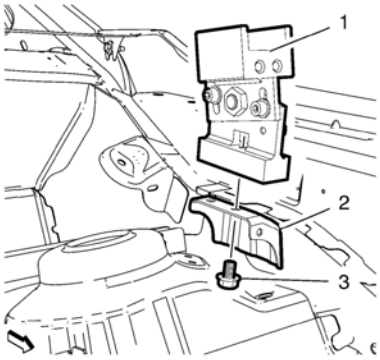

Caution: To avoid paint damage, use protective covers on the fenders.

Note: Do NOT tighten fasteners of *EN 47650-300* adapter .

3. Install *EN–47650-300* adapter (1) over hole (2) in the front compartment rail and tighten bolt (3).

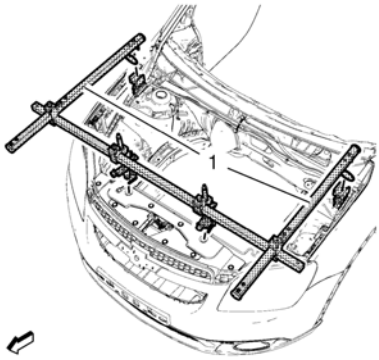

4. With the aid of an assistant install *EN–47650* frame (1) to the vehicle. If necessary readjust *EN–47650* frame (1) for appropriate fitting.

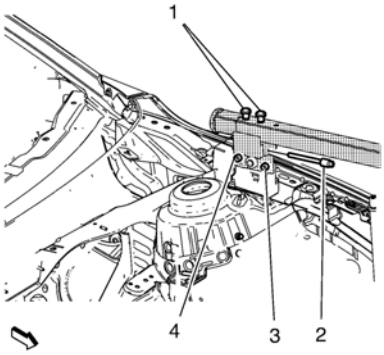

5. Tighten rear side of *EN–47650* frame :

   1. Insert safety pins (2) through the *EN–47650-300* adapters and the side bar to prevent movement.
   2. Tighten *EN–47650* frame to *EN–47650-300* adapters with mounting bolts (1).
   3. Tighten bolts (3, 4, 5).

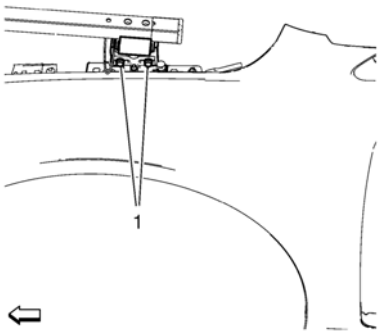

   4. Tighten outer bolts (1) of *EN–47650–300* adapters .
   5. Retighten ALL hexagons of *EN–47650* frame .

cardiagn.com

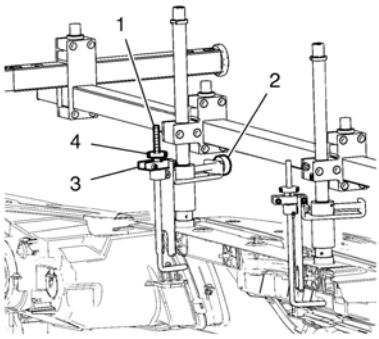

Note: Left hook must not be tightened!

6. Tighten only front right side of *EN–47650* frame :

    1. Align the right hook (1) with thumb wheel (2) to upper tie bar.
    2. Tighten the right hook (1) to upper tie bar, using the thumb wheel (4).
    3. Tighten bolts at right clamping piece (3).

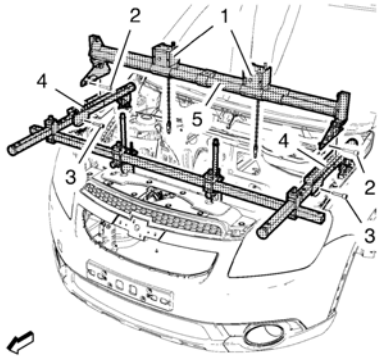

Note: *EN–47650-50* rail is equipment of *EN–47650* frame and enclosed in the *EN–47650* frame tool kit.

7. Install *EN–47650-50* rail (4) to *EN–47650* frame .

    Secure *EN–47650-50* rail (4) with safety pins (3).

Note: Secure chain boxes with hook chains on the outside of engine bride.

8. Install *EN–47649* bridge (5) with the aid of an assistant onto *EN–47650-050* rail (4).

    Secure *EN–47649* bridge (5) with safety pins (2).

9. When tool assemble *EN–47650* frame and *EN–47649* bridge is under load, adjust complete assemble and retighten ALL fasteners.

Removal Procedure

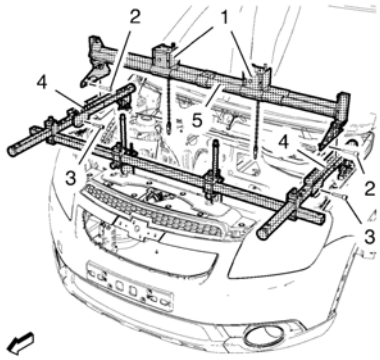

Note: Secure chain boxes with hook chains on the outside of engine bride.

1. Remove *EN–47649* bridge (5) with the aid of an assistant.

    Remove safety pins (2).

Note: *EN-47650-50* rail is equipment of *EN–47650* frame and enclosed in the *EN–47650* frame tool kit .

2. Remove *EN 47650-50* rail (4) from *EN 47650* frame .

    Remove safety pins (3).

cardiagn.com

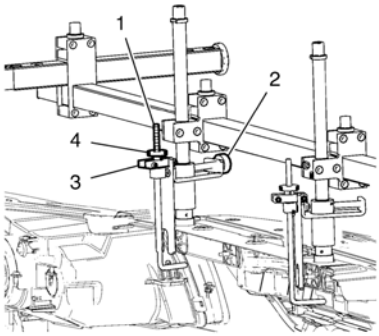

3. Remove front right side of *EN–47650* frame :

- Loosen the bolts from right clamping piece (3).
- Loosen the right hook (1) with thumb wheel (2) and turn the hook 90° from upper tie bar.

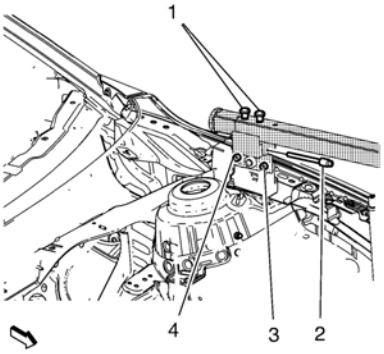

- Loosen rear side of *EN–47650* frame :

1. Loosen *EN–47650* frame from *EN–47650-300* adapters with mounting bolts (1).
2. Remove safety pins (2) from the *EN–47650-300* adapters and the side bars.

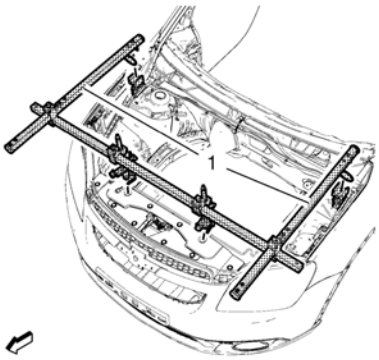

- With the aid of an assistant remove *EN–47650* frame (1) from the vehicle.

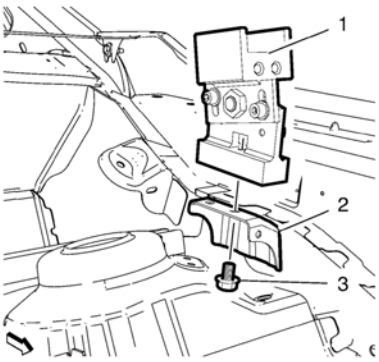

- Remove bolt (3) and *EN–47650-300* adapter (1) from front compartment rail (2).

cardiagn.com

Engine Support Fixture

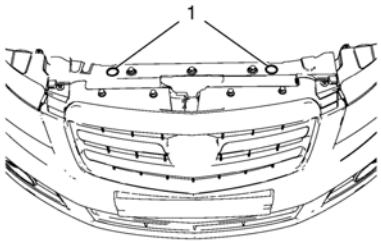

- Clean contact surfaces (1) from *EN–47650* frame on the upper tie bar with solvent.
- Remove dash upper extension panel opening cover. Refer to Dash Upper Extension Panel Opening Cover Replacement.

cardiagn.com

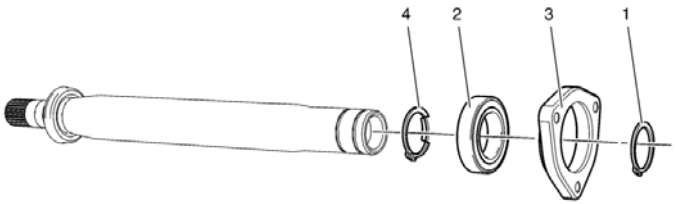

Front Wheel Drive Intermediate Shaft Bearing Replacement

Callout	Component Name
Preliminary Procedure	
Remove intermediate shaft. Refer to Front Wheel Drive Intermediate Shaft Replacement.	
1	Intermediate Shaft Retaining Ring **Procedure** DISCARD retaining ring. Use NEW only.
2	Intermediate Shaft Bearing **Procedure** Use hydraulic press to remove bearing from shaft.
3	Intermediate Shaft Bearing Flange **Procedure** Use hydraulic press to remove flange from bearing.
4	Retaining Ring **Procedure** DISCARD retaining ring. Use NEW only.

cardiagn.com

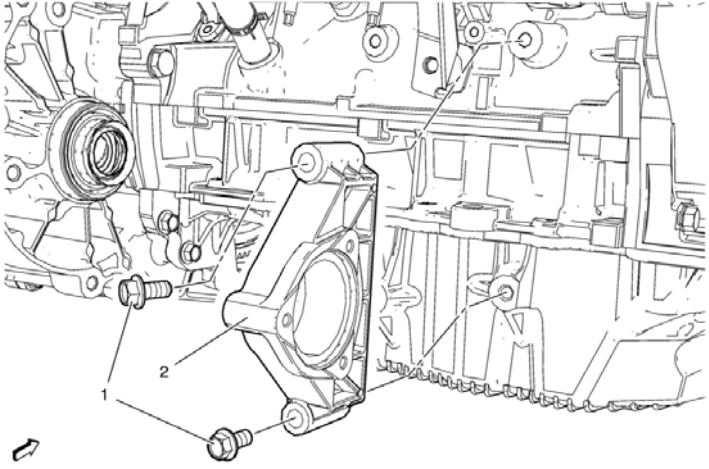

Front Wheel Drive Intermediate Shaft Bracket Replacement

Callout	Component Name
Preliminary Procedure	
Remove intermediate shaft. Refer to Front Wheel Drive Intermediate Shaft Replacement.	
1	Intermediate Shaft Bracket Bolt (Qty: 2) **Caution:** Refer to Fastener Caution. **Tighten** 58 Y (43 lb ft)
2	Intermediate Shaft Bracket

cardiagn.com

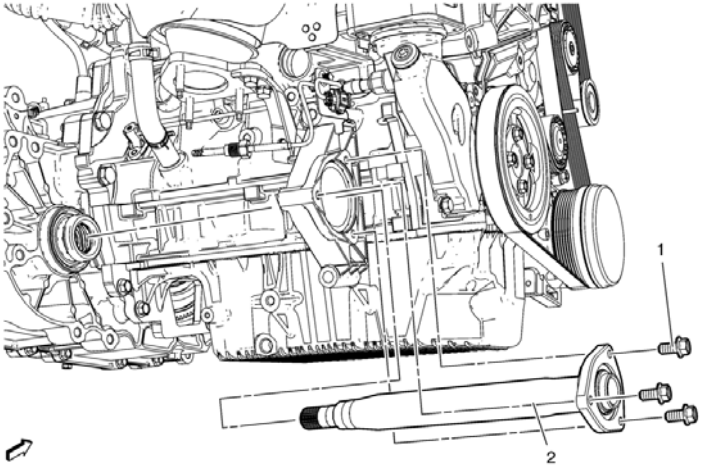

Front Wheel Drive Intermediate Shaft Replacement

Callout	Component Name
Preliminary Procedures	
Remove the right front wheel drive shaft. Refer to Front Wheel Drive Shaft Replacement - Right Side.	
1	Front Wheel Drive Intermediate Shaft Bearing Bolt (Qty: 3) **Caution:** Refer to Fastener Caution. **Tighten** 22 Y (16 lb ft)
2	Front Wheel Drive Intermediate Shaft and Bracket Assembly **Procedure** 1. Drain and collect the transmission fluid. 1. For vehicles equipped with GF6 transmission, refer to Transmission Fluid Drain and Fill. 2. For vehicles equipped with F40 transmission, refer to Transmission Fluid Drain and Fill. 2. The *DT-6332* protector must be installed into the differential output shaft seal prior removal and installation of the intermediate shaft. 3. Refill the transmission with the collected transmission fluid. 1. For vehicles equipped with GF6 transmission, refer to Transmission Fluid Drain and Fill. 2. For vehicles equipped with F40 transmission, refer to Transmission Fluid Drain and Fill. **Special Tools** *DT-6332* Seal Protector For equivalent regional tools, refer to Special Tools.

cardiagn.com

Special Tools

- *CH-313* Slide Hammer
- *CH-6003* Axle Shaft Remover
- *CH-49376* Holding Wrench
- *CH-49400* Hub Spindle Remover
- *EN-956-1* Extension

For equivalent regional tools, refer to Special Tools.

Removal Procedure

Warning: To prevent personal injury and/or component damage, do not allow the weight of the vehicle to load the front wheels, or attempt to operate the vehicle, when the wheel drive shaft(s) or wheel drive shaft nut(s) are removed. To do so may cause the inner bearing race to separate, resulting in damage to brake and suspension components and loss of vehicle control.

Caution: Wheel drive shaft boots, seals and clamps should be protected from sharp objects any time service is performed on or near the wheel drive shaft(s). Damage to the boot(s), the seal(s) or the clamp(s) may cause lubricant to leak from the joint and lead to increased noise and possible failure of the wheel drive shaft.

1. Raise and suitably support the vehicle. Refer to Lifting and Jacking the Vehicle.
2. Remove the tire and wheel assembly. Refer to Tire and Wheel Removal and Installation.

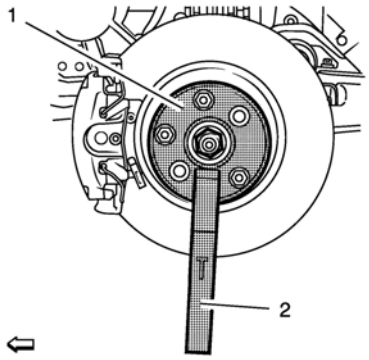

3. Using the *CH-49376* holding wrench (1) with *EN-956-1* extension (2).

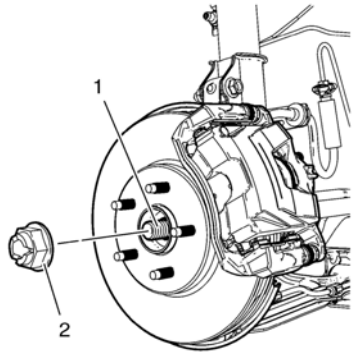

Note: DO NOT re-use the wheel drive shaft nut. Discard the nut and replace with NEW.

4. Remove and DISCARD the wheel drive shaft nut (2) from the wheel drive shaft (1).

cardiagn.com

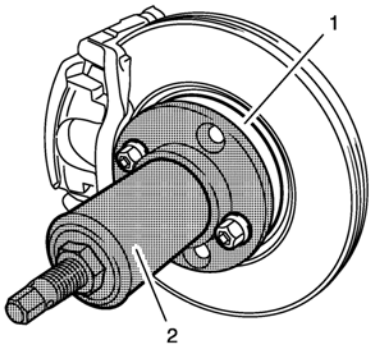

Caution: Support the brake caliper with heavy mechanic wire, or equivalent, whenever it is separated from its mount and the hydraulic flexible brake hose is still connected. Failure to support the caliper in this manner will cause the flexible brake hose to bear the weight of the caliper, which may cause damage to the brake hose and in turn may cause a brake fluid leak.

5. Using the *CH-49400* remover (2), separate the brake rotor and wheel bearing/hub assembly (1).
6. Remove the outer tie rod assembly from the steering knuckle. Refer to Steering Linkage Outer Tie Rod Replacement.
7. Remove the ball joint from the steering knuckle. Refer to Lower Control Arm Replacement.

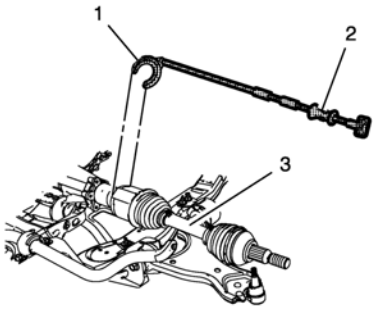

8. Using the *CH-313* slide hammer (2) with *CH-6003* remover (1) remove the wheel drive shaft (3) from the vehicle.

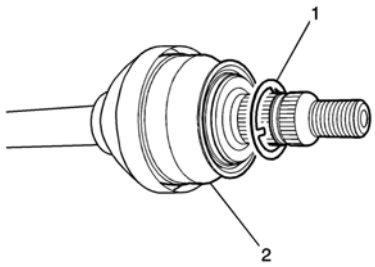

Note: If there is no washer on the wheel drive shaft, install a NEW washer.

9. Remove and DISCARD the washer (1) from the wheel drive shaft (2). Do NOT re-use the washer, replace with a NEW one only!

Installation Procedure

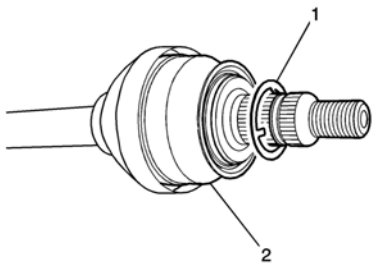

cardiagn.com

1. Install a NEW washer (1) to the wheel drive shaft.

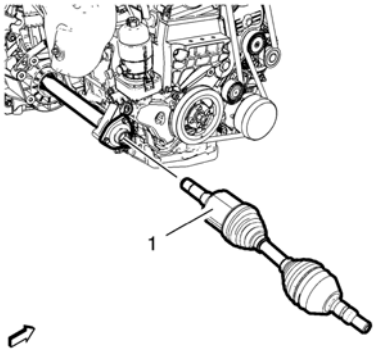

2. Carefully install the wheel drive shaft into the intermediate shaft.
3. Install the wheel drive shaft into the differential until the retaining ring is fully seated.
4. Confirm that the front wheel drive shaft retaining ring is properly seated by holding the inner housing and pull the inner housing outward.
5. Install the front wheel drive shaft into the front wheel bearing/hub.
6. Install the ball joint to the steering knuckle. Refer to Lower Control Arm Replacement.
7. Install the outer tie rod assembly at the steering knuckle. Refer to Steering Linkage Outer Tie Rod Replacement.

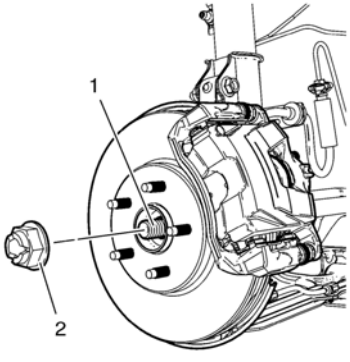

Warning: Refer to Torque-to-Yield Fastener Warning.

Caution: Refer to Fastener Caution.

8. Install the NEW wheel drive shaft nut (2) to the wheel drive shaft (1) tighten in 3 passes.

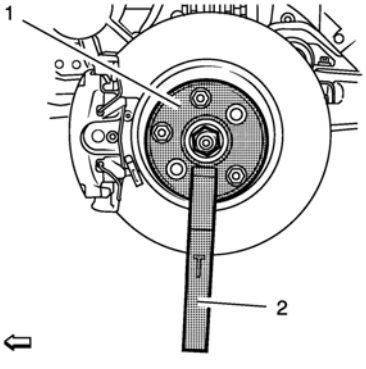

9. Using the *CH-49376* holding wrench (1) with *EN-956-1* extension (2).
10. Using a torque wrench and the appropriate size socket, tighten the wheel drive shaft nut to **150 Y (111 lb ft)**.
11. Release the wheel drive shaft nut (2) trough **45 degrees**.
12. Retighten the wheel drive shaft nut (2) to **250 Y (185 lb ft)**.
13. Install the tire and wheel assembly. Refer to Tire and Wheel Removal and Installation.
14. Lower and unsupport the vehicle.

cardiagn.com

Special Tools

- *CH-313* Slide Hammer
- *CH-6003* Axle Shaft Remover
- *CH-49376* Holding Wrench
- *CH-49400* Hub Spindle Remover
- *DT-6332* Seal Protector
- *EN-956-1* Extension

For equivalent regional tools, refer to Special Tools.

Removal Procedure

Warning: To prevent personal injury and/or component damage, do not allow the weight of the vehicle to load the front wheels, or attempt to operate the vehicle, when the wheel drive shaft(s) or wheel drive shaft nut(s) are removed. To do so may cause the inner bearing race to separate, resulting in damage to brake and suspension components and loss of vehicle control.

Caution: Wheel drive shaft boots, seals and clamps should be protected from sharp objects any time service is performed on or near the wheel drive shaft(s). Damage to the boot(s), the seal(s) or the clamp(s) may cause lubricant to leak from the joint and lead to increased noise and possible failure of the wheel drive shaft.

1. Raise and suitably support the vehicle. Refer to Lifting and Jacking the Vehicle.
2. Remove the tire and wheel assembly. Refer to Tire and Wheel Removal and Installation.
3. Drain the transmission.

- Refer to the Transmission Fluid Drain and Fill procedure for vehicles equipped with D16/D20 transmission.
- Refer to the Transmission Fluid Drain and Fill procedure for vehicles equipped with GF6 transmission.

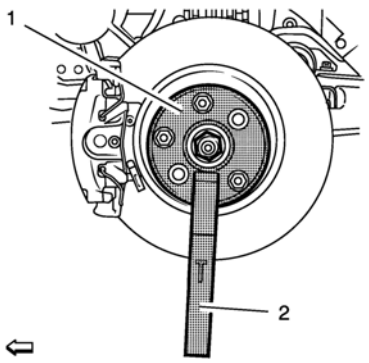

- Using the *CH-49376* holding wrench (1) with *EN-956-1* extension (2).

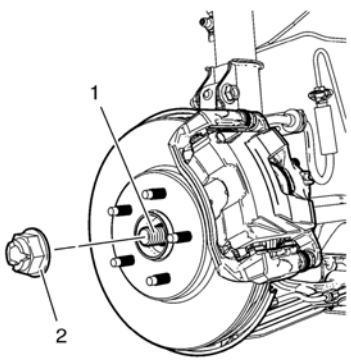

Note: DO NOT re-use the wheel drive shaft nut. Discard the nut and replace with NEW.

- Remove and DISCARD the wheel drive shaft nut (2) from the wheel drive shaft (1).

cardiagn.com

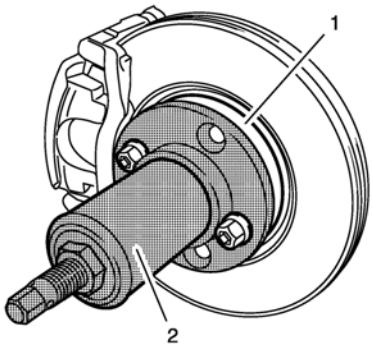

Caution: Support the brake caliper with heavy mechanic wire, or equivalent, whenever it is separated from its mount and the hydraulic flexible brake hose is still connected. Failure to support the caliper in this manner will cause the flexible brake hose to bear the weight of the caliper, which may cause damage to the brake hose and in turn may cause a brake fluid leak.

- Using the *CH-49400* remover (2), separate the brake rotor and wheel bearing/hub assembly (1).
- Remove the outer tie rod assembly from the steering knuckle. Refer to Steering Linkage Outer Tie Rod Replacement.
- Remove the ball joint from the steering knuckle. Refer to Lower Control Arm Replacement.

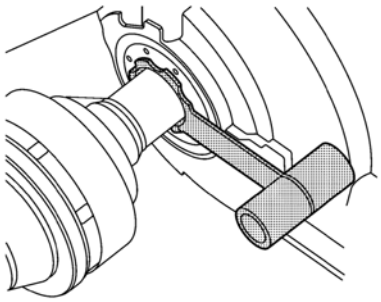

Caution: DT-6332 or equivalent must be installed into the front wheel drive shaft oil seal prior to removing and installing the front wheel drive shaft. Failure to use the DT-6332 may cause the spline of the front wheel drive shaft to cut the front wheel drive shaft oil seal. Damage to the front wheel drive shaft oil seal will result in lubricant leaks.

- Install the *DT-6332* protector into the differential output shaft seal.

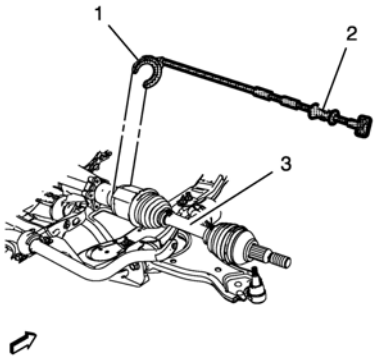

- Using the *CH-313* slide hammer (2) with *CH-6003* remover (1) remove the wheel drive shaft (3) from the vehicle.

Installation Procedure

cardiagn.com

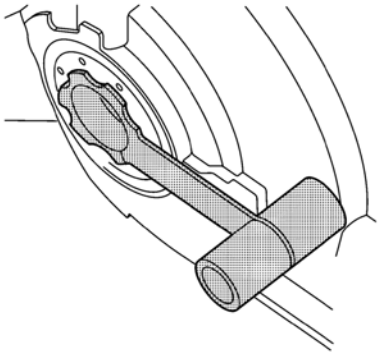

Caution: DT-6332 or equivalent must be installed into the front wheel drive shaft oil seal prior to removing and installing the front wheel drive shaft. Failure to use the DT-6332 may cause the spline of the front wheel drive shaft to cut the front wheel drive shaft oil seal. Damage to the front wheel drive shaft oil seal will result in lubricant leaks.

1. Install the *DT-6332* protector into the differential output shaft seal.

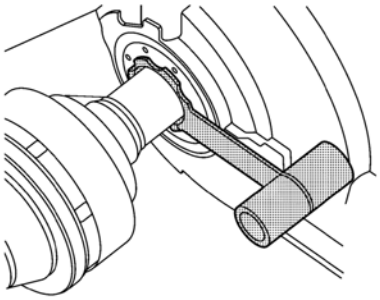

2. Carefully install the wheel drive shaft into the differential until the splines are past the *DT-6332* protector.

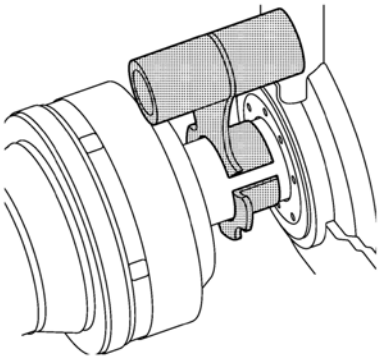

3. Remove the *DT-6332* protector from the differential output shaft seal.
4. Install the wheel drive shaft into the differential until the retaining ring is fully seated.
5. Confirm that the front wheel drive shaft retaining ring is properly seated by holding the inner housing and pull the inner housing outward.
6. Install the front wheel drive shaft into the front wheel bearing/hub.
7. Install the ball joint to the steering knuckle. Refer to Lower Control Arm Replacement.
8. Install the outer tie rod assembly at the steering knuckle. Refer to Steering Linkage Outer Tie Rod Replacement.

cardiagn.com

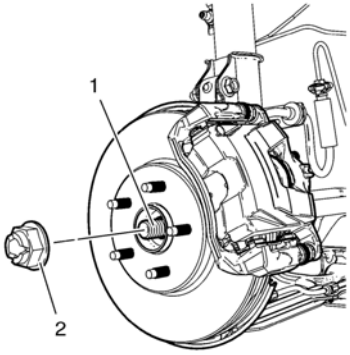

Warning: Refer to Torque-to-Yield Fastener Warning.

Caution: Refer to Fastener Caution.

9. Install the NEW wheel drive shaft nut (2) to the wheel drive shaft (1) tighten in 3 passes.

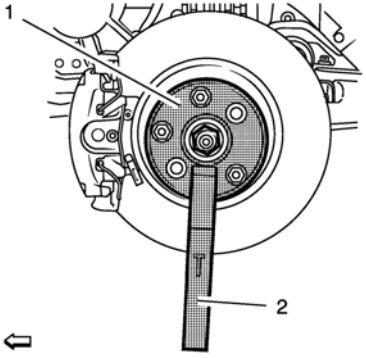

10. Using the *CH-49376* holding wrench (1) with *EN-956-1* extension (2).
11. Using a torque wrench and the appropriate size socket, tighten the wheel drive shaft nut to **150 Y (111 lb ft)**.
12. Release the wheel drive shaft nut (2) trough **45 degrees**.
13. Retighten the wheel drive shaft nut (2) to **250 Y (185 lb ft)**.
14. Install the tire and wheel assembly. Refer to Tire and Wheel Removal and Installation.
15. Refill the transmission.

- Refer to the Transmission Fluid Drain and Fill procedure for vehicles equipped with D16/D20 transmission.
- Refer to the Transmission Fluid Drain and Fill procedure for vehicles equipped with GF6 transmission.
- Lower the vehicle.

cardiagn.com

1. Clean the sealing surfaces.

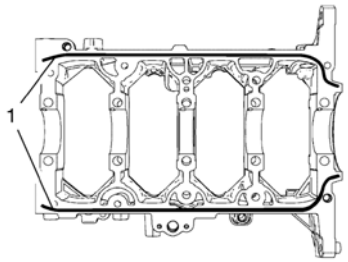

Note: The complete installation procedure of the lower crankcase should be done in 10 minutes.

Note: Do not coat sealing compound on the crankcase bolt holes and threads.

2. Apply the sealing compound (1) as shown.

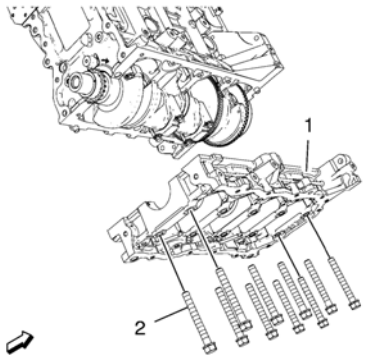

3. Install the lower crankcase (1).

Note: Do not tighten the bolts.

4. Install the 10 lower crankcase retaining bolts (2).

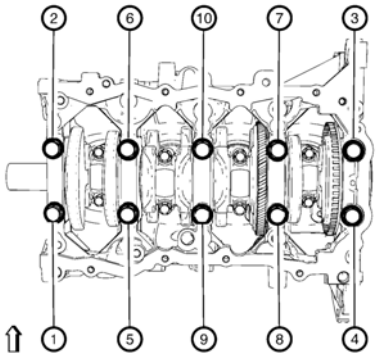

Caution: Refer to Fastener Caution.

Caution: Refer to Torque-to-Yield Fastener Caution.

5. Tighten the 10 NEW lower crankcase bolts in 2 steps as shown in the sequence above.

    1. First Step: Tighten the 10 lower crankcase bolts to **55 Y (41 lb ft)**.
    2. Second Step: Tighten the 10 lower crankcase bolts **120°**.

cardiagn.com

Lower Crankcase Installation

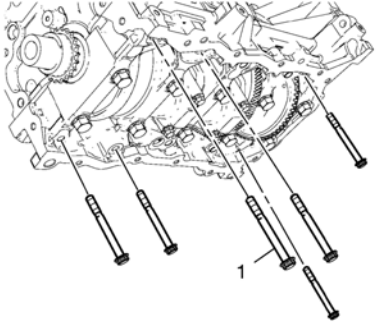

6. Tighten the 6 lower crankcase retaining bolts (1) to **35 Y (26 lb ft)**.

cardiagn.com

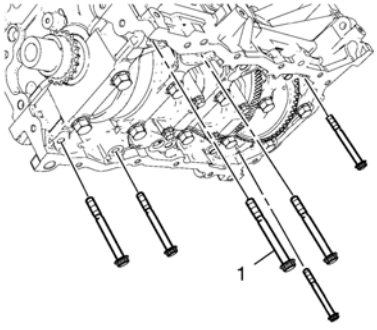

1. Remove the 6 lower crankcase retaining bolts (1).

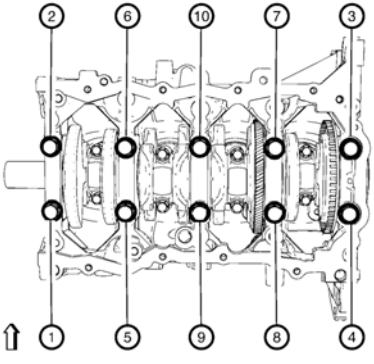

2. Evenly loosen the 10 lower crankcase bolts in sequence as shown.

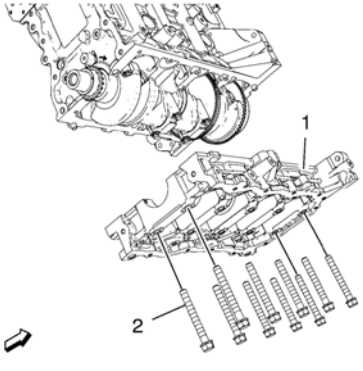

Note: The crankshaft is only loosely fitted in the cylinder block after removal of the lower crankcase retaining bolts.

3. Remove the 10 lower crankcase retaining bolts (2).

Note: Carefully detach from engine block, using a suitable tool. Do not damage sealing surfaces.

4. Remove the lower crankcase (1).

cardiagn.com

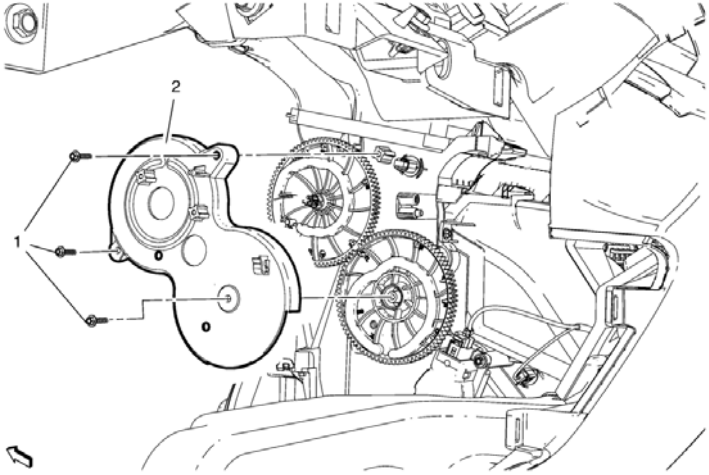

Mode Control Cam Cover Replacement

Callout	Component Name

Preliminary Procedures

1. Remove instrument panel lower trim pad cover. Refer to Instrument Panel Lower Trim Pad Cover Replacement.
2. Remove mode control cam actuator. Refer to Mode Control Cam Actuator Replacement.

1	Heater and Air Conditioning Mode Control Cam Cover Bolt (Qty: 3) **Caution:** Refer to Fastener Caution.
2	Heater and Air Conditioning Mode Control Cam Cover

cardiagn.com

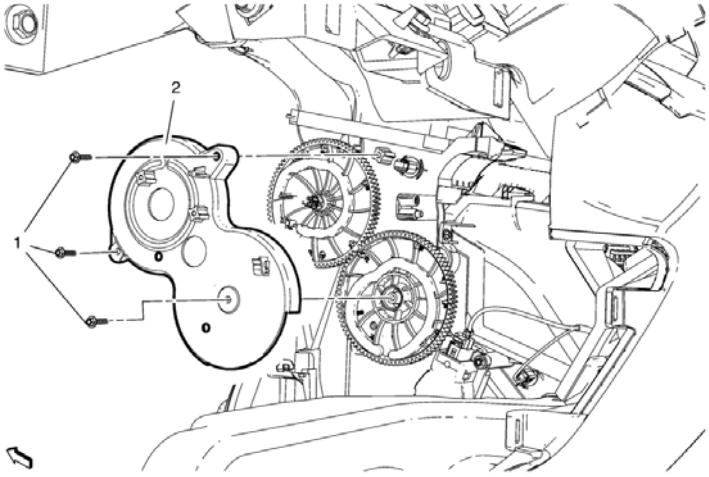

Mode Control Cam Cover Replacement

Callout	Component Name

Preliminary Procedures

1. Remove the instrument panel compartment. Refer to Instrument Panel Compartment Replacement.
2. Remove the floor front air outlet duct — left side. Refer to Floor Front Air Outlet Duct Replacement - Left Side.
3. Remove the radio cooling duct. Refer to Radio Cooling Duct Replacement.
4. Remove the blower motor control module. Refer to Blower Motor Control Module Replacement.

1	Heater and Air Conditioning Mode Control Cam Cover Bolt (Qty: 3) **Caution:** Refer to Fastener Caution.
2	Heater and Air Conditioning Mode Control Cam Cover **Procedure** Remove the mode control cam actuator from heater and air conditioning mode control cam cover. Refer to Mode Control Cam Actuator Replacement

cardiagn.com

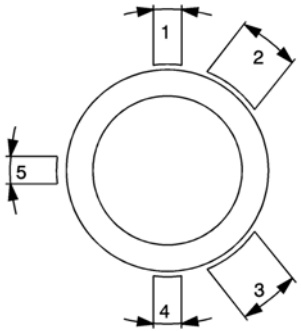

1. Install the piston rings.

- Insert into the pistons with piston ring wrench and "TOP" pointing upwards.
- Set the piston ring gap.

  - First piston ring (right-hand ring) in position (1)
  - Second piston ring (minute ring) in position (2)
  - Interim ring of oil scraper ring in position (3), steel band rings of oil scraper ring in position (4 and/or 5)

Note: Note installation position of the piston in respect of the connection rod.

- Attach the piston to the connection rod.

  1. Press the piston pin into the piston and the connection rod by hand.
  2. Insert the retainer in the annular groove on the piston.
  3. Ensure the retainer is firmly seated in the groove.

- Install the piston with connection rod. Refer to Piston, Connecting Rod, and Bearing Installation.

cardiagn.com

Special Tools

EN-45059 Torque Angle Sensor Kit

For equivalent regional tools, refer to Special Tools.

1. Remove the oil pan. Refer to Oil Pan Removal.

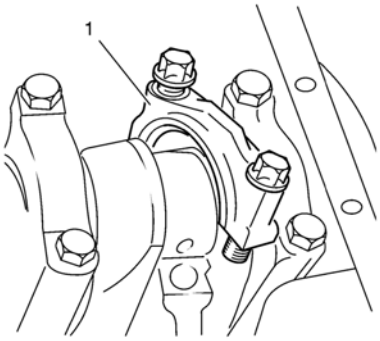

2. Remove the connecting rod bearing cap (1).

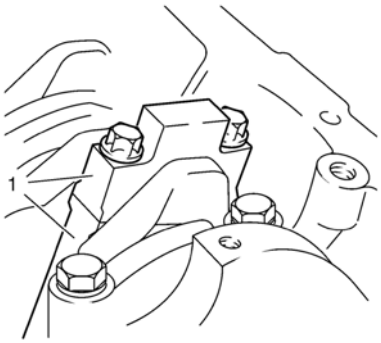

   1. Mark the installation position (1) of the connecting rod bearing cap.
   2. Remove the 2 bolts.
   3. Degrease the connecting rod bearing cap and wet the connecting rod bearing clip with engine oil.

Note: Do not rotate the crankshaft.

3. Lay on plastigage. Refer to Adhesives, Fluids, Lubricants, and Sealers.

   Lay plastigage (flexible plastic thread) over the entire width of the connecting rod bearing journal.

4. Install the connecting rod bearing cap.

Caution: Refer to Fastener Caution

5. Tighten the 2 bolts in three passes using the *EN-45059* sensor kit :

   1. First pass tighten to **35 Y (26 lb ft)**.
   2. Second pass tighten to an additional **45°**
   3. Third pass tighten to an additional **15°**

cardiagn.com

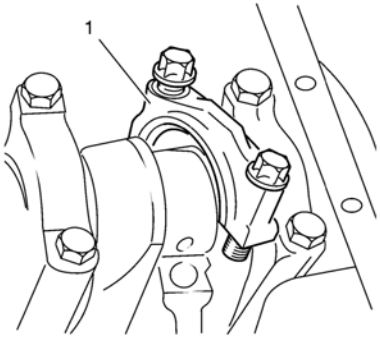

6. Remove the 2 bolts.
7. Remove the connecting rod bearing cap (1).

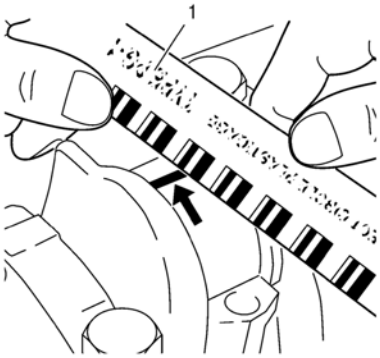

Note: When reading the value, do not confuse millimeters and inches on the measuring scale (1).

8. Measure the connecting rod bearing play.

- Compare the width of the flattened plastic thread with the measuring scale.
- Permissible connecting rod bearing play: 0.019-0.071 mm (0.0007-0.0028 in).

Note: Check markings on parts.

- Install the connecting rod bearing cap.

- Wet the connecting rod bearing journal and con-rod bearing clips with engine oil.
- Renew the bolts.

- Tighten the 2 bolts in three passes using the *EN-45059* sensor kit :

1. First pass tighten to **35 Y (26 lb ft)**
2. Second pass tighten to an additional **45°**
3. Third pass tighten to an additional **15°**

- Install the oil pan. Refer to Oil Pan Installation.

cardiagn.com

Visual Inspection and Cleaning Procedure

Connecting Rod

Warning: Refer to Safety Glasses and Compressed Air Warning.

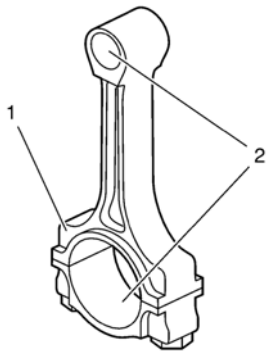

1. Clean the connecting rods (1) in solvent and dry with compressed air.
2. Inspect the connecting rods for the following:

- Signs of being twisted, bent, nicked, or cracked
- Scratches or abrasion on the rod bearing seating surface
- If the beam of the rod is scratched or has other damage replace the connecting rod.
- If there is still excessive clearance, replace the connecting rod.

Piston

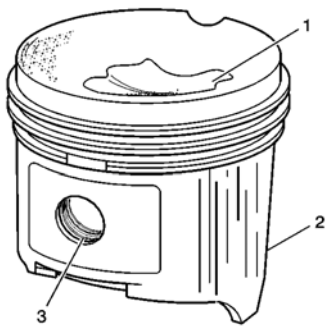

1. Clean the piston skirts and the pins with a cleaning solvent. DO NOT wire brush any part of the piston.
2. Clean the piston ring grooves with a groove cleaner. Make sure that the oil ring holes and slots are clean.
3. Inspect the pistons for the following conditions:

- Cracked ring lands, skirts, or pin bosses.
- Ring grooves for nicks, burrs that may cause binding.
- Eroded areas at the top of the piston (1).
- Scuffed or damaged skirts (2).
- Worn piston pin bores (3).
- If there is any excessive wear, replace the piston.

Piston and Connecting Rod Measurement Procedure

Piston Pin to Connecting Rod Bore and Piston Bore Clearance

1. Measure clearance between piston pin and connecting rod bore. Use the following procedure:
2. Measure the piston pin outside diameter.
3. Measure the connecting rod bore diameter.
4. Substract the piston ring diameter from the connecting rod diameter.

Refer to Engine Mechanical Specifications.

cardiagn.com

Piston Ring Clearance

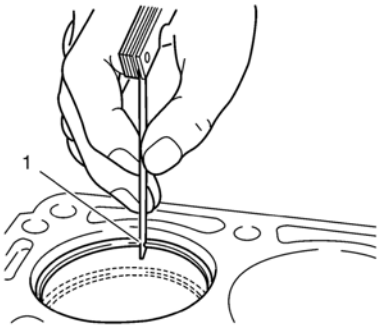

1. Install the piston rings to the cylinder as shown (1) and measure the piston ring end gap. Compare the measurements with the Engine Mechanical Specifications.
2. If the clearance is greater than the provided specifications, the piston rings must be replaced.

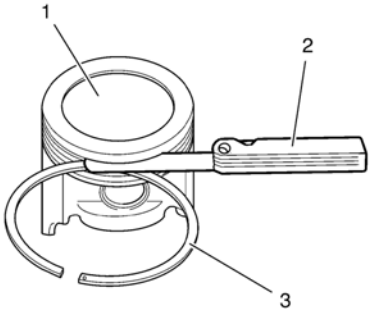

3. Measure the piston ring side clearance as shown (1). Compare the measurements with the Engine Mechanical Specifications.
4. If the clearance is greater than the provided specifications, replace the piston rings.
5. If the clearance is still to great, replace the pistons.

Connecting Rod Bearing Clearance

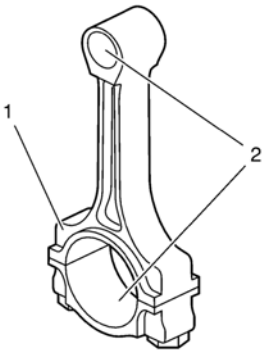

1. Inspect the connecting rod end play and refer to Engine Mechanical Specifications.
2. Measure the piston pin to connecting rod bore using the following procedure:
    1. Using an outside micrometer, take 2 measurements of the piston pin in the area of the connecting rod contact.
    2. Using an inside micrometer, measure the connecting rod piston pin bore (2).
    3. Subtract the piston pin diameter from the piston pin bore diameter.
3. Compare the measurements with the Engine Mechanical Specifications.
4. If there is excessive clearance, replace the piston pin.

cardiagn.com

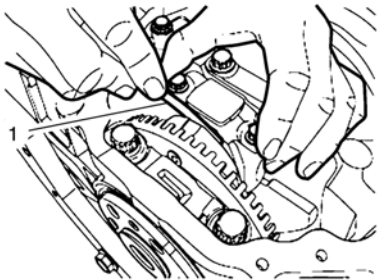

5. Inspect the connecting rod end play (1).
6. Compare the measurements with the Engine Mechanical Specifications.

cardiagn.com

Special Tools

- *EN-50425* Compressor - Piston Ring
- *EN-470-B* Angle Meter

For equivalent regional tools, refer to Special Tools.

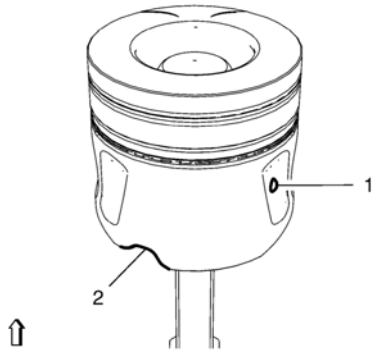

Note: The dot (1) on the piston skirt must point to the timing side to ensure that the notch (2) for the oil nozzle is at the correct position.

1. Displace the piston ring joints 120° to each other.
2. Coat all pistons and cylinder bores and the *EN-50425* compressor with engine oil.
3. Turn the crankshaft to TDC of combustion stroke of cylinder 2.

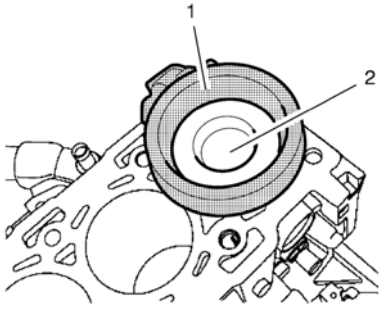

4. Use the *EN-50425* compressor (1) as shown in the graphic above.

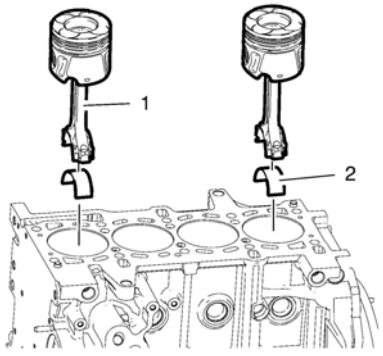

Note: When using the old pistons, old connecting rods and old connecting rod bearing caps, install them at their original position.

5. Install the 2 pistons with the connecting rod (1) and the connecting rod upper bearing shells (2) into the cylinder 1 and 4.

cardiagn.com

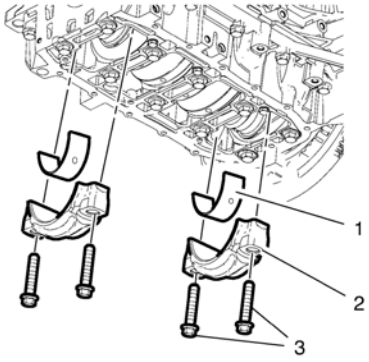

6. Install the 2 connecting rod bearing caps (2) with the connecting rod lower bearing shells (1) to the cylinder 1 and 4.

Note: Do not tighten the bearing cap retaining bolts (3).

7. Install 4 NEW connecting rod bearing shell bolts (3).

Caution: Refer to Fastener Caution.

Caution: Refer to Torque-to-Yield Fastener Caution.

8. Tighten the 4 NEW connecting rod bearing shell bolts (3) in 2 steps.

    1. First Step: **30 Y (22 lb ft)**
    2. Second Step: **+ 70°**. Use the *EN-470-B* anglemeter .

9. Turn crankshaft through **180°**and set crankshaft to TDC of combustion stroke of cylinder 1.

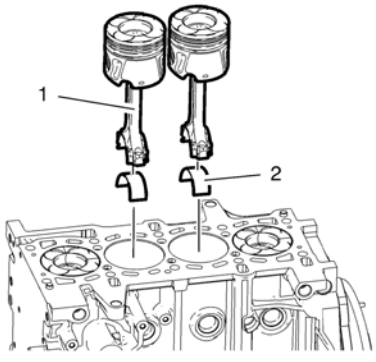

Note: When using the old pistons, old connecting rods and old connecting rod bearing caps, install them at their original position.

10. Install 2 pistons with connecting rod (1) and connecting rod upper bearing shells (2) into cylinder 2 and 3.

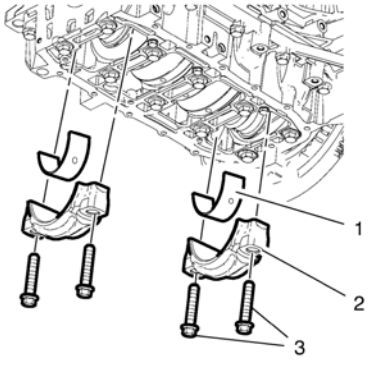

11. Install 2 connecting rod bearing caps (2) with connecting rod lower bearing shells (1) to cylinder 2 and 3.

Note: Do not tighten the bearing cap retaining bolts (3).

12. Install 4 NEW connecting rod bearing shell bolts (3).

Caution: Refer to Fastener Caution.

13. Tighten the 4 connecting rod bearing shell bolts (3) in two steps.

    1. First Step: **30 Y (22 lb ft)**
    2. Second Step: **+ 70°**. Use *EN-470-B* anglemeter .

cardiagn.com

Special Tools

EN-45059 Angle Meter

For equivalent regional tools, refer to Special Tools.

1. Lubricate the piston rings, piston, inner cylinder bore surface and a piston ring compressor with clean engine oil.
2. Install the piston ring compressor in order to compress the piston rings.

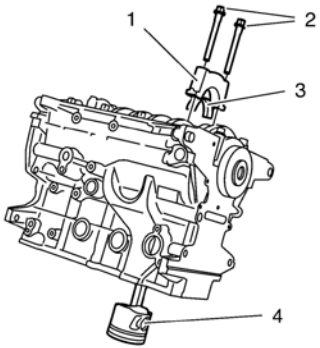

3. Install the piston and connecting rod assembly (4).
4. Install the connecting rod bearing (3).
5. Install the connecting rod cap (1).

Caution: Refer to Fastener Caution.

Caution: Refer to Torque-to-Yield Fastener Caution.

6. Install NEW connecting rod bolts (2) and tighten a first pass to **35 Y (26 lb ft)**.
7. Tighten the NEW connecting rod bolts a second pass to an additional **45 degrees**, using the *EN-45059* meter.
8. Tighten the NEW connecting rod bolts a final pass to an additional **15 degrees**, using the *EN-45059* meter.
9. Assemble the caps and connecting rods in the marked position.
10. Rotate the crankshaft to a position where the connecting rod bolts are easy accessible.

cardiagn.com

1. Install the crankshaft balancer bolt.
2. Set the pistons 1 and 4 to TDC in direction of engine rotation.

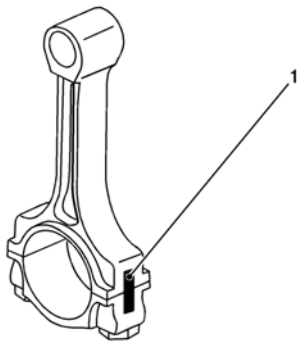

Note: Note cylinder sequence.

3. Mark the connecting rod with the connecting rod bearing cover (1).

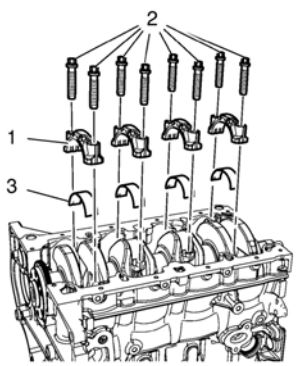

4. Remove the 4 connecting rod bearing caps bolts (2) of cylinder 1 and 4.
5. Remove the connecting rod bearing caps (1) and the connecting rod bearing (3).

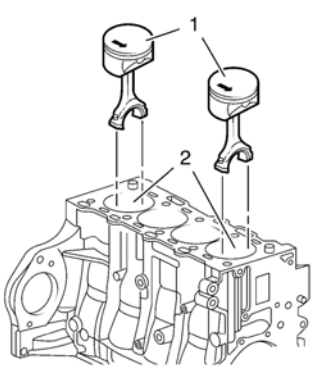

6. Push the pistons 1 and 4 (1) out of the cylinder bore (2).

Note: The shear surfaces of the con-rod and the con-rod bearing cover form a unique fit and must not be swapped or damaged. Do not lay down on the shear surfaces.

7. Remove the pistons 1 and 4 (1).
8. Turn crankshaft on crankshaft balancer through 180° in direction of rotation of engine.

cardiagn.com

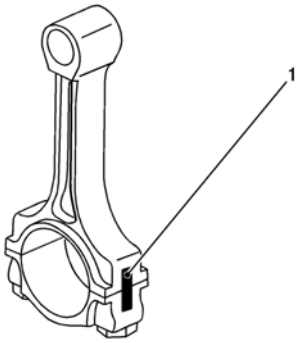

Note: Note cylinder sequence.

9. Mark the connecting rod with the connecting rod bearing cover (1).

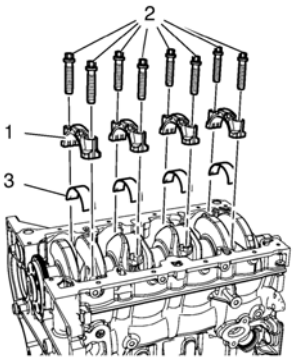

10. Remove the 4 connecting rod bearing caps bolts (2) of cylinder 2 and 3.
11. Remove the connecting rod bearing caps (1) and the connecting rod bearing (3).

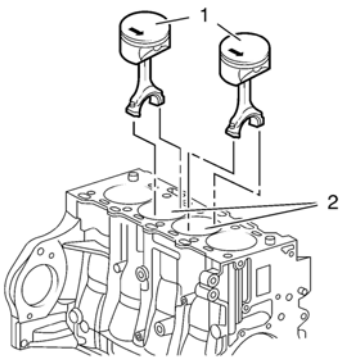

12. Push the pistons 2 and 3 (1) out of the cylinder bore (2).

Note: The shear surfaces of the con-rod and the con-rod bearing cover form a unique fit and must not be swapped or damaged. Do not lay down on the shear surfaces.

13. Remove the pistons 2 and 3 (1).

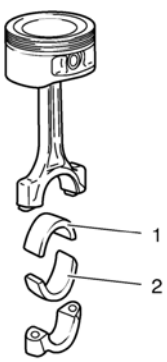

Note: Observe correct fitting position, observe alignment.

14. Remove the connecting rod bearing (1, 2).
15. Check the components. Refer to Piston, Connecting Rod, and Bearing Cleaning and Inspection.

cardiagn.com

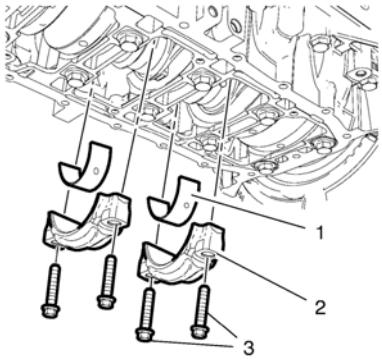

1. Set the crankshaft to TDC of combustion stroke of cylinder 1.
2. Remove the 4 connecting rod bearing cap retaining bolts (3) from the cylinder 2 and 3.

   Note: Set the connecting rod bearing caps aside in the order removed.

   Note: The shear surfaces of the connecting rod and the connecting rod bearing cap form a unique fit and must not be swapped or damaged. Do not lay down on the shear surfaces.
3. Remove the 2 bearing caps (2) from the cylinder 2 and 3.

   Note: Set aside in the order removed.
4. Remove the 2 lower connecting rod bearings (1) from the cylinder 2 and 3.

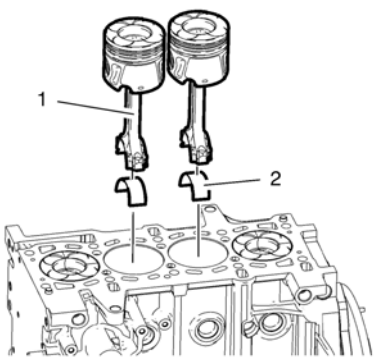

   Note: Set aside in the order removed.
5. Push the 2 pistons with the connecting rod (1) from the cylinder 2 and 3 upwards.
6. Remove the 2 connecting rod upper bearings (2) from the cylinder 2 and 3.
7. Turn the crankshaft through 180° and set the crankshaft to TDC of combustion stroke of cylinder 2.

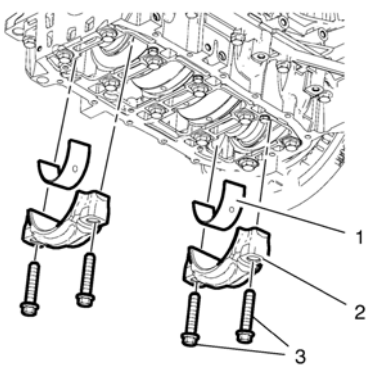

8. Remove the 4 connecting rod bearing cap bolts (3) from the cylinder 1 and 4.

   Note: Set the connecting rod bearing caps aside in the order removed.

   Note: The shear surfaces of the connecting rod and the connecting rod bearing cap form a unique fit and must not be swapped or damaged. Do not lay down on

cardiagn.com

the shear surfaces.

9. Remove the 2 connecting rod bearing caps (2) from the cylinder 1 and 4.

Note: Set aside in the order removed.

10. Remove the 2 connecting rod lower bearings (1).

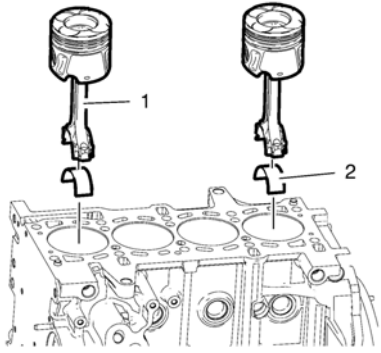

Note: Note the marking (2) of the connecting rod. Set aside in the order removed.

11. Push the 2 pistons with connecting rod (1) from the cylinder 1 and 4 upwards.

Note: Set aside in the order removed.

12. Remove the 2 connecting rod upper bearings (2) from the cylinder 1 and 4.

cardiagn.com

Special Tools

- *EN-470-B* Angle Meter
- *EN-50425* Compressor - Piston Ring

For equivalent regional tools, refer to Special Tools.

Removal Procedure

1. Remove intake camshaft. Refer to Intake Camshaft Replacement.
2. Remove crankshaft balancer. Refer to Crankshaft Balancer Removal.

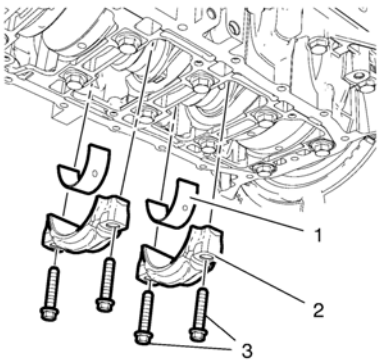

3. Set the crankshaft to TDC of combustion stroke of cylinder 1.
4. Remove and DISCARD the 4 connecting rod bearing cap retaining bolts (3) from the cylinder 2 and 3.
5. Remove the 2 bearing caps (2) from the cylinder 2 and 3.
6. Remove the 2 lower connecting rod bearings (1) from the cylinder 2 and 3.

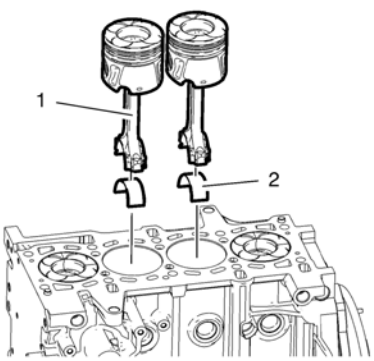

7. Push the 2 pistons with the connecting rod (1) from the cylinder 2 and 3 upwards.
8. Remove the 2 connecting rod upper bearings (2) from the cylinder 2 and 3.
9. Turn the crankshaft through 180° and set the crankshaft to TDC of combustion stroke of cylinder 2.

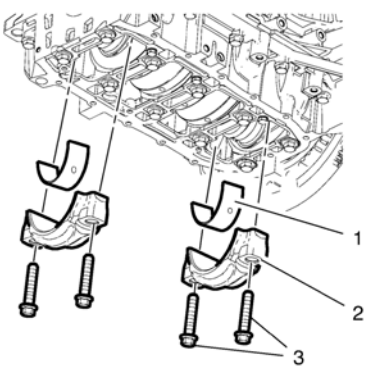

10. Remove and DISCARD the 4 connecting rod bearing cap bolts (3) from the cylinder 1 and 4.

cardiagn.com

11. Remove the 2 connecting rod bearing caps (2) from the cylinder 1 and 4.
12. Remove the 2 connecting rod lower bearings (1).

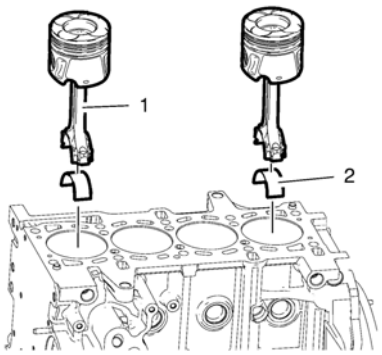

13. Push the 2 pistons with connecting rod (1) from the cylinder 1 and 4 upwards.
14. Remove the 2 connecting rod upper bearings (2) from the cylinder 1 and 4.

Installation Procedure

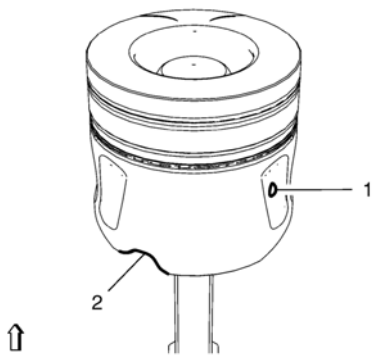

Note: The dot (1) on the piston skirt must point to the timing side to ensure that the notch (2) for the oil nozzle is at the correct position.

1. Displace the NEW piston ring joints 120° to each other.
2. Coat all pistons and cylinder bores and the *EN-50425* compressor with engine oil.
3. Turn the crankshaft to TDC of combustion stroke of cylinder 2.

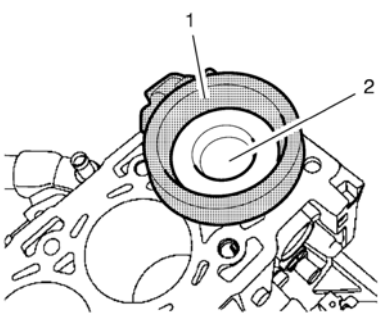

4. Use the *EN-50425* compressor (1) as shown in the graphic above.

Note: When using the old pistons, old connecting rods and old connecting rod bearing caps, install them at their original position.

5. Install the 2 NEW pistons with the NEW connecting rod (1) and the NEW connecting rod upper bearing shells (2) into the cylinder 1 and 4.

cardiagn.com

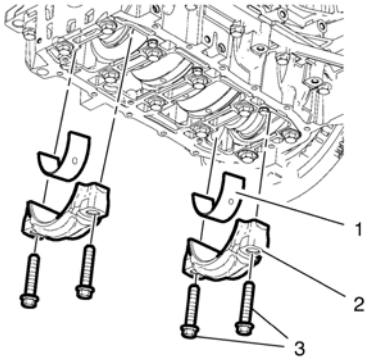

6. Install the 2 connecting rod bearing caps (2) with the connecting rod lower bearing shells (1) to the cylinder 1 and 4.

   Note: Do not tighten the bearing cap retaining bolts (3).

7. Install 4 NEW connecting rod bearing shell bolts (3).

   Caution: Refer to Fastener Caution.

   Caution: Refer to Torque-to-Yield Fastener Caution.

8. Tighten the 4 connecting rod bearing shell bolts (3) in 2 steps.

   1. First step tighten to **30 Y (22 lb ft)**.
   2. Second step to an additional **70°**, use the *EN-470-B* meter .

9. Turn crankshaft through **180°**and set the crankshaft to TDC of combustion stroke of cylinder 1.

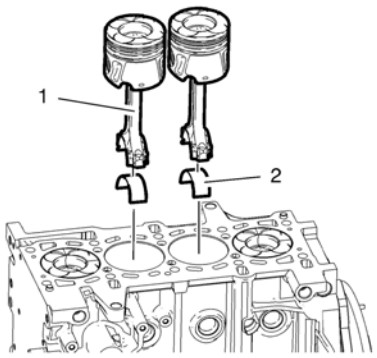

   Note: When using the old pistons, old connecting rods and old connecting rod bearing caps, install them at their original position.

10. Install 2 NEW pistons with NEW connecting rod (1) and NEW connecting rod upper bearing shells (2) into cylinder 2 and 3.

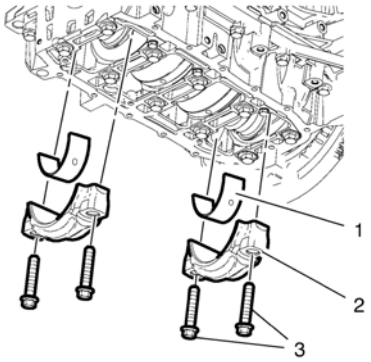

11. Install 2 NEW connecting rod bearing caps (2) with NEW connecting rod lower bearing shells (1) to cylinder 2 and 3.

    Note: Do not tighten the bearing cap retaining bolts (3).

12. Install 4 NEW connecting rod bearing shell bolts (3).
13. Tighten the 4 connecting rod bearing shell bolts (3) in 2 steps.

    1. First step tighten to **30 Y (22 lb ft)**.
    2. Second step to an additional **70°**, use the *EN-470-B* meter .

14. Install crankshaft balancer. Refer to Crankshaft Balancer Installation.
15. Install intake camshaft. Refer to Intake Camshaft Replacement.

cardiagn.com

Special Tools

EN-48952 Fixing Pin

For equivalent regional tools, refer to Special Tools.

Removal Procedure

1. Raise and support the vehicle. Refer to Lifting and Jacking the Vehicle.
2. Remove the front compartment insulator. Refer to Front Compartment Insulator Replacement.
3. Remove the front part of the right front wheelhouse liner. Refer to Front Wheelhouse Liner Replacement.
4. Remove the drive belt and pulley cover. Refer to Drive Belt and Pulley Cover Removal.

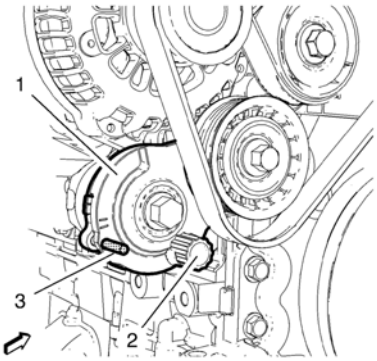

5. Apply tension to the drive belt tensioner (1) with a suitable wrench on the holder (2) by rotating counterclockwise.
6. Install the *EN-48952* fixing pin (3).
7. Remove the drive belt from the drive belt tensioner.

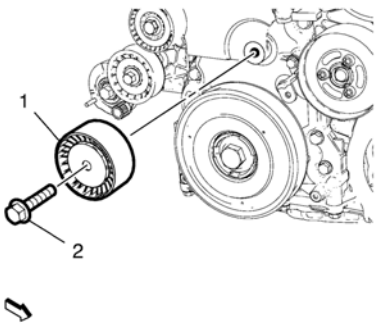

8. Remove the lower drive belt idler pulley bolt (2).
9. Remove the lower drive belt idler pulley (1).

Installation Procedure

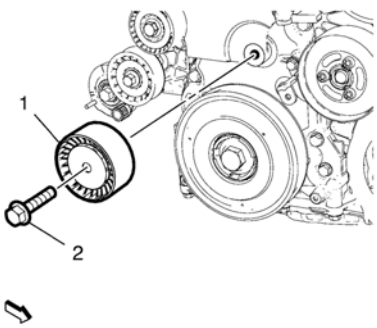

cardiagn.com

1. Install the lower drive belt idler pulley (1).

Caution: Refer to Fastener Caution.

2. Install the lower drive belt idler pulley bolt (2) and tighten to **58 Y (43 lb ft)**.
3. Install the drive belt to the drive belt tensioner.

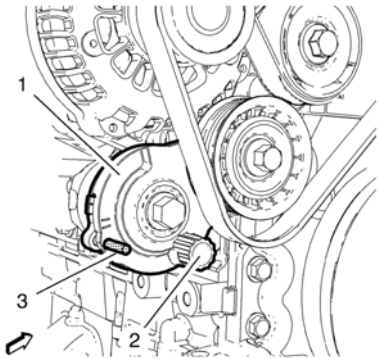

4. Apply tension to the drive belt tensioner (1) with a suitable wrench on the holder (2) by rotating counterclockwise.
5. Remove the *EN-48952* fixing pin (3).
6. Release tension from the drive belt tensioner (1) and allow the tensioner to slide back slowly.
7. Inspect the drive belt for proper seat.
8. Install the drive belt and pulley cover. Refer to Drive Belt and Pulley Cover Installation.
9. Install the front part of the right front wheelhouse liner. Refer to Front Wheelhouse Liner Replacement.
10. Install the front compartment insulator. Refer to Front Compartment Insulator Replacement.
11. Lower the vehicle.

cardiagn.com

Special Tools

EN-48952 Drive Belt Tensioner Holding Pin

For equivalent regional tools, refer to Special Tools.

Removal Procedure

1. Raise and support the vehicle. Refer to Lifting and Jacking the Vehicle.
2. Remove the front compartment insulator. Refer to Front Compartment Insulator Replacement.
3. Remove the front part of the right front wheelhouse liner. Refer to Front Wheelhouse Liner Replacement.
4. Remove the drive belt and pulley cover. Refer to Drive Belt and Pulley Cover Removal.

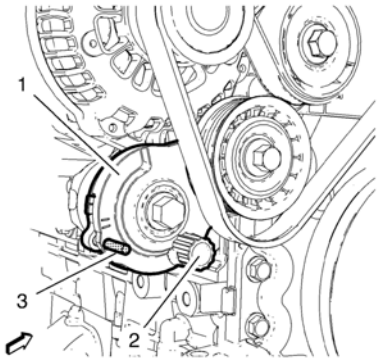

5. Apply tension to the drive belt tensioner (1) with a suitable wrench on the holder (2) by rotating counterclockwise.
6. Install the *EN-48952* holding pin (3).
7. Remove the drive belt from the generator pulley, the upper drive belt pulley and the drive belt tensioner.

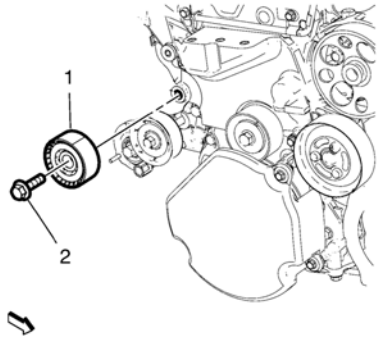

8. Remove the upper drive belt idler pulley bolt (2).
9. Remove the upper drive belt idler pulley (1).

Installation Procedure

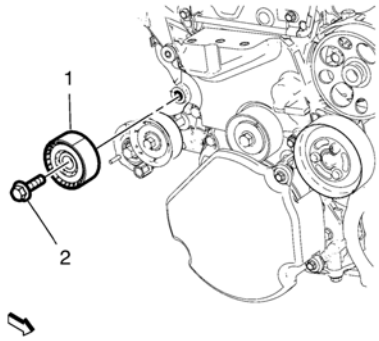

cardiagn.com

1. Install the upper drive belt idler pulley (1).

Caution: Refer to Fastener Caution.

2. Install the upper drive belt pulley bolt (2) and tighten to **58 Y (43 lb ft)**.
3. Install the drive belt to the generator pulley, the upper drive belt pulley and the drive belt tensioner.

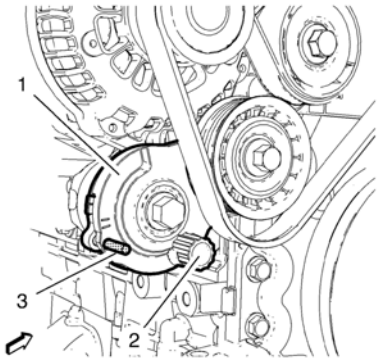

4. Apply tension to the drive belt tensioner (1) with a suitable wrench on the holder (2) by rotating counterclockwise.
5. Remove the *EN-48952* holding pin (3).
6. Release tension from the drive belt tensioner (1) and allow the tensioner to slide back slowly.
7. Inspect the drive belt for proper seat.
8. Install the drive belt and pulley cover. Refer to Drive Belt and Pulley Cover Installation.
9. Install the front part of the right front wheelhouse liner. Refer to Front Wheelhouse Liner Replacement.
10. Install the front compartment insulator. Refer to Front Compartment Insulator Replacement.
11. Lower the vehicle.

cardiagn.com

Special Tools

EN-50432 Adapter Flywheel Fixing

For equivalent regional tools, refer to Special Tools.

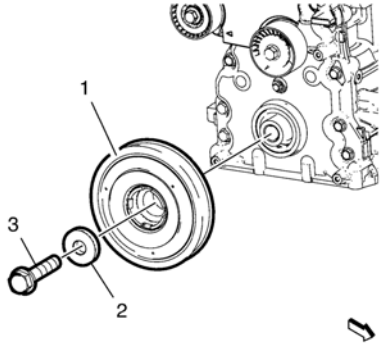

1. Install the crankshaft pulley (1).
2. Loosely install a NEW crankshaft pulley bolt (3) and the washer (2).

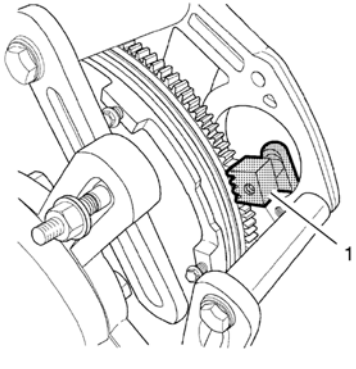

3. Install the *EN-50432* flywheel fixing (1).

   Caution: Refer to Fastener Caution.

   Caution: Refer to Torque-to-Yield Fastener Caution.
4. Tighten the crankshaft pulley bolt to **120 Y + 90° (89 lb ft + 90°)**.

cardiagn.com

Special Tools

- *EN-50432* Adapter Flywheel Fixing
- *EN-50436* Remover-Crankshaft Pulley Bolt .

For equivalent regional tools, refer to Special Tools.

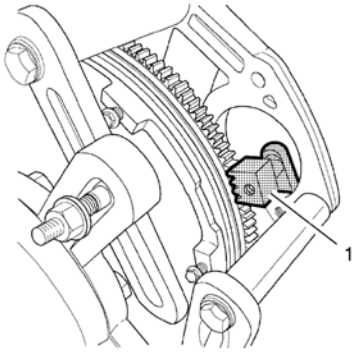

1. Install the *EN-50432* flywheel fixing (1).

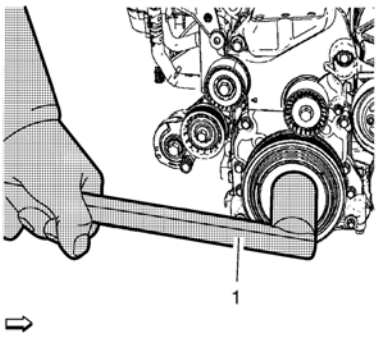

2. Loosen the crankshaft pulley bolt with *EN-50436* remover (1).

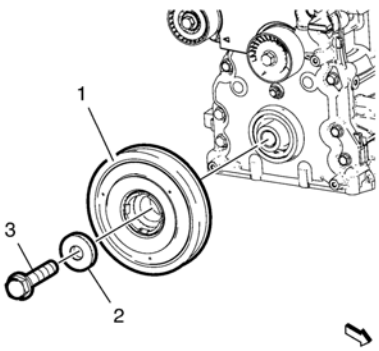

3. Remove the crankshaft pulley bolt (3) and washer (2).
4. Remove the crankshaft pulley (1).
5. Remove the *EN-50432* flywheel fixing .

cardiagn.com

Special Tools

- *EN-470-B* Angle Meter
- *EN-48952* Drive Belt Tensioner Holding Pin
- *EN-50432* Adapter Flywheel Fixing
- *EN-50436* Remover-Crankshaft Pulley Bolt

For equivalent regional tools, refer to Special Tools.

Removal Procedure

1. Disconnect battery negative cable. Refer to Battery Negative Cable Disconnection and Connection.
2. Raise and support the vehicle. Refer to Lifting and Jacking the Vehicle.
3. Remove the front compartment insulator. Refer to Front Compartment Insulator Replacement.
4. Remove the front part of the right front wheelhouse liner. Refer to Front Wheelhouse Liner Replacement.
5. Remove the drive belt and pulley cover. Refer to Drive Belt and Pulley Cover Removal.

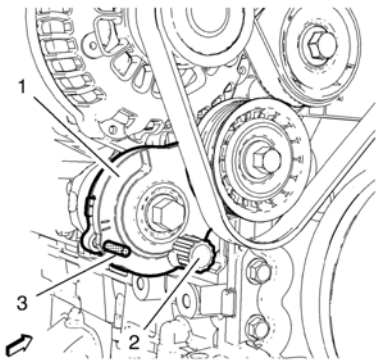

6. Apply tension to the drive belt tensioner (1) with a suitable wrench on the holder (2) by rotating counterclockwise.
7. Install the *EN-48952* holding pin (3).
8. Remove the drive belt from the crankshaft pulley.
9. Remove the starter. Refer to Starter Replacement.

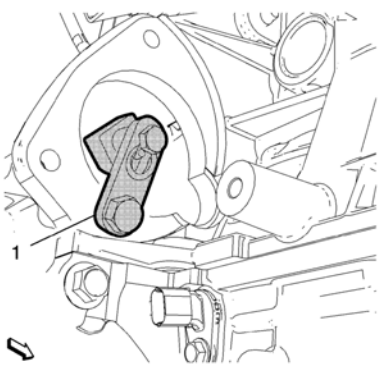

10. Install the *EN-50432* flywheel fixing (1) to counterhold the crankshaft.

cardiagn.com

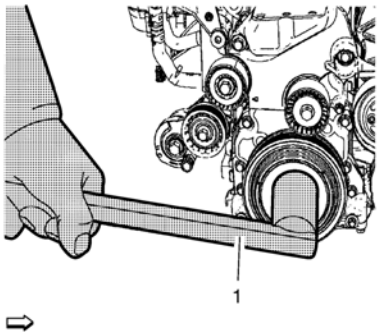

11. Loosen the crankshaft pulley bolt with the *EN-50436* remover (1).

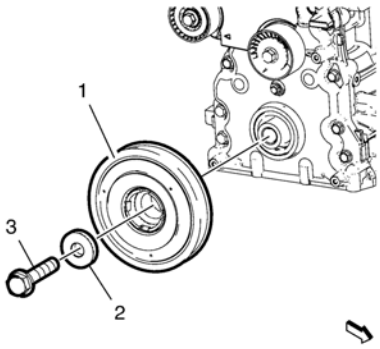

12. Remove and DISCARD the crankshaft pulley bolt (3) and washer (2).
13. Remove the crankshaft pulley (1).

Installation Procedure

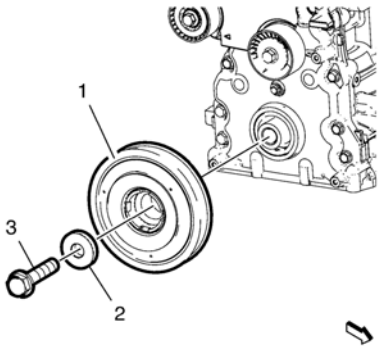

1. Install the crankshaft pulley (1).
2. Install the NEW crankshaft pulley bolt (3) and washer (2).

   Caution: Refer to Fastener Caution.

   Caution: Refer to Torque-to-Yield Fastener Caution.

3. Tighten the crankshaft pulley bolt (3) in 2 steps.

- First step: **120 Y (89 lb ft)**.
- Second step: **+90°**. Use *EN-470-B* meter .
- Remove the *EN-50432* flywheel fixing .
- Install the starter. Refer to Starter Replacement.
- Install the drive belt to the crankshaft pulley.

cardiagn.com

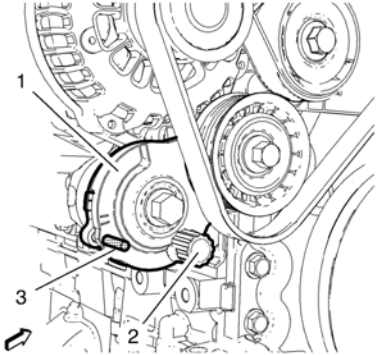

- Apply tension the drive belt tensioner (1) with a suitable wrench on the holder (2) by rotating counterclockwise.
- Remove the *EN-48952* holding pin (3).
- Release tension from the drive belt tensioner (1) and allow the tensioner to slide back slowly.
- Inspect the drive belt for proper seat.
- Install the drive belt and pulley cover. Refer to Drive Belt and Pulley Cover Installation.
- Install the front part of the right front wheelhouse liner. Refer to Front Wheelhouse Liner Replacement.
- Install the front compartment insulator. Refer to Front Compartment Insulator Replacement.
- Lower the vehicle.
- Connect the battery negative cable. Refer to Battery Negative Cable Disconnection and Connection.

cardiagn.com

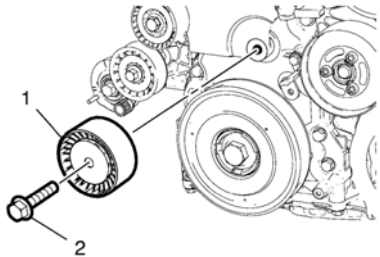

1. Install the lower drive belt idler pulley (1).

   Caution: Refer to Fastener Caution.

2. Install the lower drive belt idler pulley bolt (2) and tighten to **58 Y (43 lb ft)**.

cardiagn.com

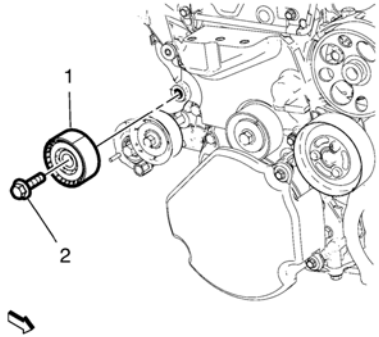

1. Install the upper drive belt idler pulley (1).

   Caution: Refer to Fastener Caution.

2. Install the upper drive belt pulley bolt (2) and tighten to **58 Y (43 lb ft)**.

cardiagn.com

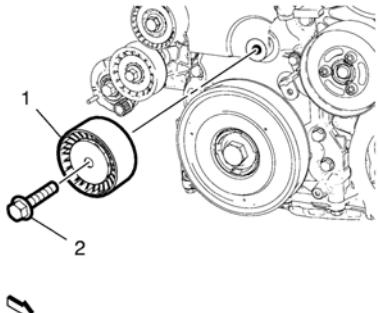

1. Remove the lower drive belt idler pulley bolt (2).
2. Remove the lower drive belt idler pulley (1).

cardiagn.com

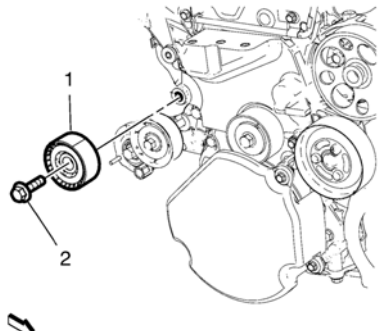

1. Remove the upper drive belt idler pulley bolt (2).
2. Remove the upper drive belt idler pulley (1).

cardiagn.com

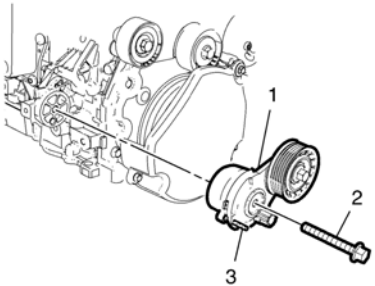

1. Install the drive belt tensioner (1).

   Caution: Refer to Fastener Caution.

2. Install the drive belt tensioner bolt (2) and tighten to **45 Y (33 lb ft)**.

cardiagn.com

1. Clean the drive belt tensioner thread.

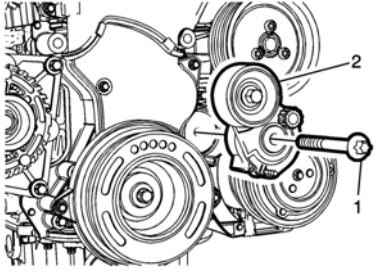

2. Install drive belt tensioner (2).

   Caution: Refer to Fastener Caution.

3. Install drive belt tensioner bolt (1) and tighten to **55 Y (41 lb ft)**.

cardiagn.com

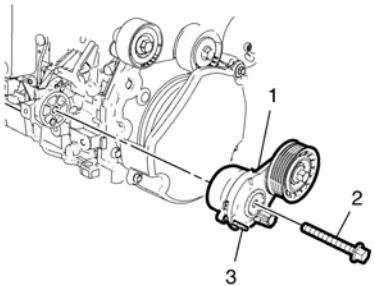

1. Remove the drive belt tensioner bolt (2).
2. Remove the drive belt tensioner (1).

cardiagn.com

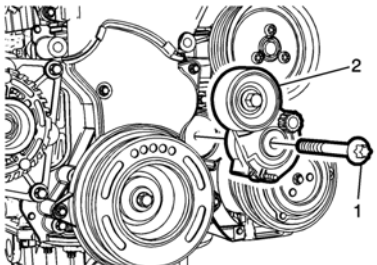

1. Remove the drive belt tensioner bolt (1).
2. Remove the drive belt tensioner (2).

cardiagn.com

Removal Procedure

1. Remove the generator and air conditioning compressor belt. Refer to Drive Belt Replacement.

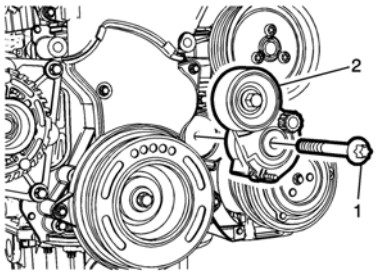

2. Remove the drive belt tensioner bolt (1).
3. Remove the drive belt tensioner (2).

Installation Procedure

1. Clean the drive belt tensioner thread.

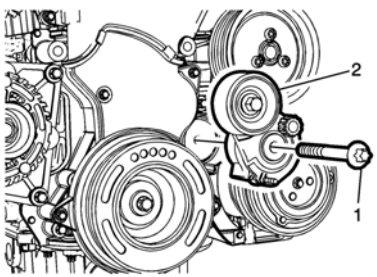

2. Install drive belt tensioner (2).

Caution: Refer to Fastener Caution.

3. Install the drive belt tensioner bolt (1) and tighten to **55 Y (41 lb ft)**.
4. Install the generator and air conditioning compressor belt. Refer to Drive Belt Replacement.

cardiagn.com

Special Tools

EN-48952 Tensioner Spring Holding Pin

For equivalent regional tools, refer to Special Tools.

Removal Procedure

1. Raise and support the vehicle. Refer to Lifting and Jacking the Vehicle.
2. Remove the front compartment insulator. Refer to Front Compartment Insulator Replacement.
3. Remove the front part of the right front wheelhouse liner. Refer to Front Wheelhouse Liner Replacement.
4. Remove the drive belt and pulley cover. Refer to Drive Belt and Pulley Cover Removal.

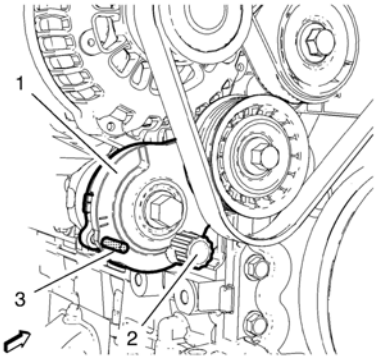

5. Apply tension to the drive belt tensioner (1) with a suitable wrench on the holder (2) by rotating counterclockwise.
6. Install the *EN-48952* holding pin (3).
7. Remove the drive belt from the generator pulley, the upper belt idler pulley and the drive belt tensioner.

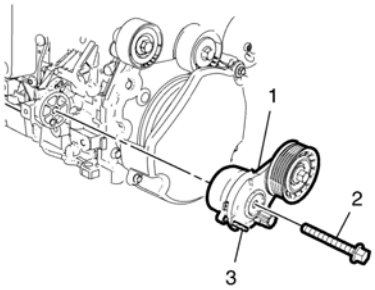

8. Remove the drive belt tensioner bolt (2).
9. Remove the drive belt tensioner (1).

Installation Procedure

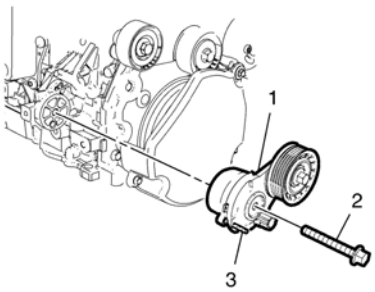

cardiagn.com

1. Install the drive belt tensioner (1).

Caution: Refer to Fastener Caution.

2. Install the drive belt tensioner bolt (2) and tighten to **45 Y (33 lb ft)**.
3. Install the drive belt to the generator pulley, the upper belt idler pulley and the drive belt tensioner.

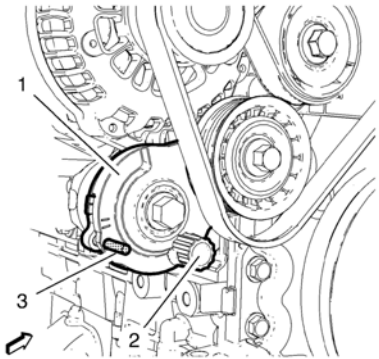

4. Apply tension the drive belt tensioner (1) with a suitable wrench on the holder (2) by rotating counterclockwise.
5. Remove the *EN-48952* holding pin (3).
6. Release tension from the drive belt tensioner (1) and allow the tensioner to slide back slowly.
7. Inspect the drive belt for proper seat.
8. Install the drive belt and pulley cover. Refer to Drive Belt and Pulley Cover Installation.
9. Install the front part of the right front wheelhouse liner. Refer to Front Wheelhouse Liner Replacement.
10. Install the front compartment insulator. Refer to Front Compartment Insulator Replacement.
11. Lower the vehicle. Refer to Lifting and Jacking the Vehicle.

cardiagn.com

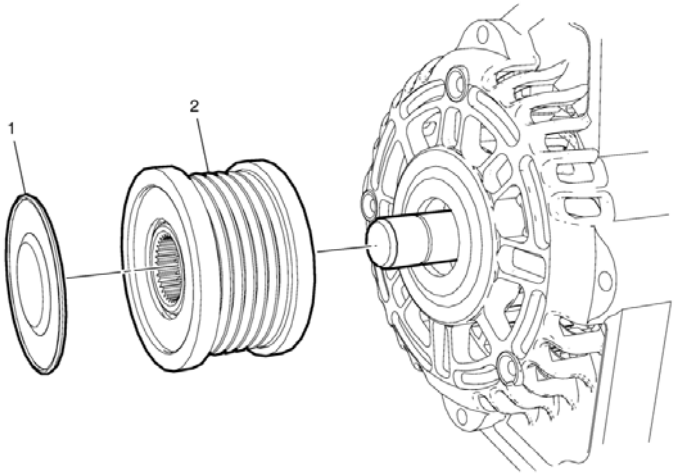

Generator Pulley Replacement

Callout	Component Name
Preliminary Procedure	
Remove the generator. Refer to Generator Replacement.	
1	Generator Pulley Nut Cap
2	Generator Pulley **Caution:** Refer to Fastener Caution. **Procedure** Remove the generator pulley nut by using *EN-6372* counterhold. **Note:** Be aware of the left-hand thread. **Tighten** 80 Y (59 lb ft) **Special Tools** *EN-6372* Counterhold For equivalent regional tools, refer to Special Tools.

cardiagn.com

Camshaft Actuator System Overview

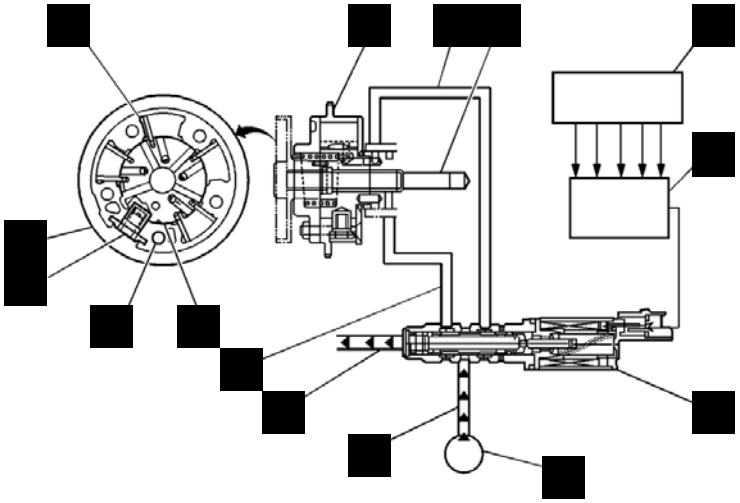

(1) Camshaft Actuator Vane
(2) Timing Chain Sprocket
(3) Engine Oil Pressure-For retarding the camshaft
(4) Camshaft
(5) Input Signals from Engine Sensors
(6) Engine Control Module (ECM)
(7) Camshaft Actuator Solenoid
(8) Engine Oil Pump
(9) Engine Oil Pressure Supply
(10) Engine Oil Drain
(11) Engine Oil Pressure-For advancing the camshaft
(12) Camshaft Actuator Rotor
(13) Camshaft Position Sensor Reluctor
(14) Camshaft Actuator Lock Pin
(15) Camshaft Actuator Housing

The camshaft actuator system enables the engine control module (ECM) to change camshaft timing of all 4 camshafts while the engine is operating. The camshaft position (CMP) actuator assembly (15) varies the camshaft position in response to directional changes in oil pressure. The CMP actuator solenoid valve controls the oil pressure that is applied to advance or retard a camshaft. Modifying camshaft timing under changing engine demand provides better balance between the following performance concerns:

- Engine power output
- Fuel economy
- Tailpipe emissions

The CMP actuator solenoid valve (7) is controlled by the ECM. The crankshaft position (CKP) sensor and the CMP sensors are used to monitor changes in camshaft positions. The ECM uses the following information in order to calculate the desired camshaft positions:

- Engine coolant temperature
- Calculated engine oil temperature (EOT)
- Mass air flow (MAF)
- Throttle position (TP)
- Vehicle speed
- Volumetric efficiency

Operation

The CMP actuator assembly has an outer housing that is driven by an engine timing chain. Inside the assembly is a rotor with fixed vanes that is attached to the camshaft. Oil pressure that is applied to the fixed vanes will rotate a specific camshaft in relationship to the crankshaft. The movement of the intake camshafts will advance the intake valve timing. The movement of the exhaust camshafts will retard the exhaust valve timing. When oil pressure is applied to the return side of the vanes, the camshafts will return to 0 crankshaft degrees, or top dead center (TDC). The CMP actuator solenoid valve directs the oil flow that controls the camshaft movement. The ECM commands the CMP solenoid to move the solenoid plunger and spool valve until oil flows from the advance passage (11). Oil flowing thru the CMP actuator assembly from the CMP solenoid advance passage applies pressure to the advance side of the vanes in the CMP actuator assembly. When the camshaft position is retarded, the CMP actuator solenoid valve directs oil to flow into the CMP actuator assembly from the retard passage (3). The ECM can also command the CMP actuator solenoid valve to stop oil flow from both passages in order to hold the current camshaft position.

The ECM operates the CMP actuator solenoid valve by pulse width modulation (PWM) of the solenoid coil. The higher the PWM duty cycle, the larger the change

cardiagn.com

in camshaft timing. The CMP actuator assembly also contains a lock pin (14) that prevents movement between the outer housing and the rotor vane assembly. The lock pin is released by oil pressure before any movement in the CMP actuator assembly takes place. The ECM is continuously comparing CMP sensor inputs with CKP sensor input in order to monitor camshaft position and detect any system malfunctions. If a condition exists in either the intake or exhaust camshaft actuator system, the opposite bank, intake or exhaust, camshaft actuator will default to 0 crankshaft degrees.

CMP Actuator System Operation

Driving Condition	Change in Camshaft Position	Objective	Result
Idle	No Change	Minimize Valve Overlap	Stabilized Idle Speed
Light Engine Load	Retarded Valve Timing	Decrease Valve Overlap	Stabled Engine Output
Medium Engine Load	Advanced Valve Timing	Increase Valve Overlap	Better Fuel Economy with Lower Emissions
Low to Medium RPM with Heavy Load	Advanced Valve Timing	Advance Intake Valve Closing	Improved Low to Mid-range Torque
High RPM with Heavy Load	Retarded Valve Timing	Retard Intake Valve Closing	Improved Engine Output

cardiagn.com

1. Clean the sealing surfaces.

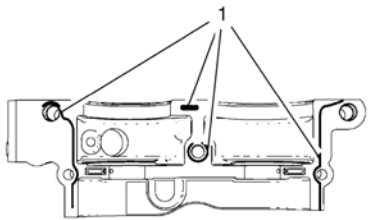

Note: The complete installation procedure of the camshaft guide should be done in 10 minutes.

Note: Do not coat sealing compound on the camshaft guide bolt holes.

2. Apply sealing compound on the sealant line (1).

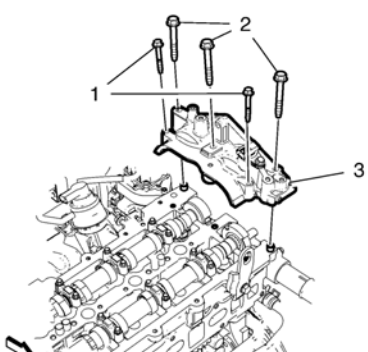

3. Install the camshaft guide (1).

Caution: Refer to Fastener Caution.

4. Install the 3 camshaft guide retaining bolts (3) and tighten to **25 Y (18 lb ft)**.
5. Install the 2 camshaft guide retaining bolts (2) and tighten to **10 Y (89 lb in)**.

cardiagn.com

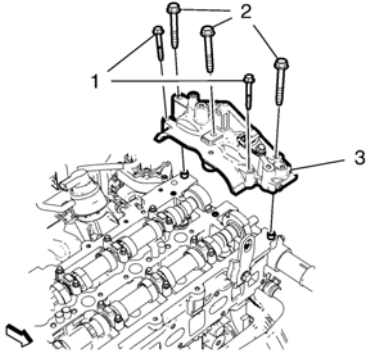

1. Remove the 5 camshaft guide retaining bolts (2, 3).

   Note: Carefully detach from engine block, using a suitable tool. Do not damage sealing surfaces.

2. Remove the camshaft guide (1).

cardiagn.com

Cleaning Procedure

1. Clean the camshaft in solvent.

   Warning: Refer to Safety Glasses and Compressed Air Warning.

2. Dry the camshaft with compressed air.

Visual Inspection

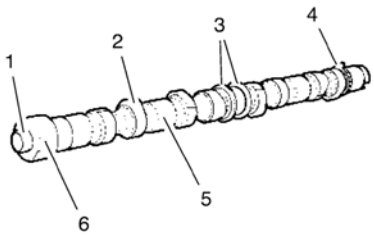

1. Inspect the camshaft drive sprocket thread hole (1) for damage.
2. Inspect the camshaft lobes (2) and journals (5) for the following conditions:

- Excessive scoring or pitting
- Discoloration from overheating
- Deformation from excessive wear, especially the camshaft lobes
- Inspect the camshaft thrust surface (3) for damage.
- Inspect the camshaft position rotator (4) for damage.
- Inspect the camshaft sealing surface (6) for damage.

Camshaft Measurement

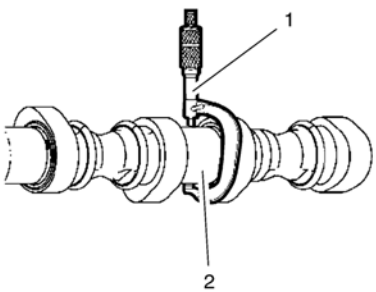

1. Measure the camshaft journals (2) for diameter and out-of-round using a micrometer gauge (1).
2. Check specifications. Refer to Engine Mechanical Specifications.

- If the diameter is smaller than specifications, replace the camshaft.
- If the out-of-round exceeds specifications, replace the camshaft.

cardiagn.com

Special Tools

- *EN-845* Suction Device
- *EN-6361* Feeler Gauge

For equivalent regional tools, refer to Special Tools.

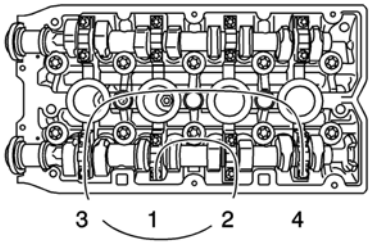

Note: Note the identification marking on the camshaft bearing caps.

1. Install the exhaust camshaft (1).

   Lubricate the exhaust camshaft with MoS 2 lubricating paste. Refer to Adhesives, Fluids, Lubricants, and Sealers for the recommended lubricating paste.

Caution: Refer to Fastener Caution.

2. Tighten the camshaft bearing caps 1–4 in a spiral from the inside to the outside and tighten to **8 Y (71 lb in).**

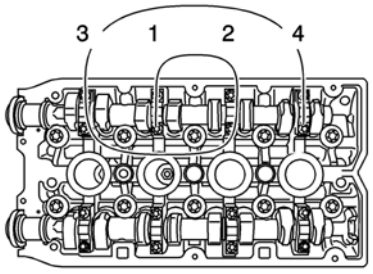

3. Install the intake camshaft (1).

   Lubricate the exhaust camshaft with MoS 2 lubricating paste. Refer to Adhesives, Fluids, Lubricants, and Sealers for the recommended lubricating paste.

4. Tighten the camshaft bearing caps 1–4 in a spiral from the inside to the outside and tighten to **8 Y (71 lb in)**.

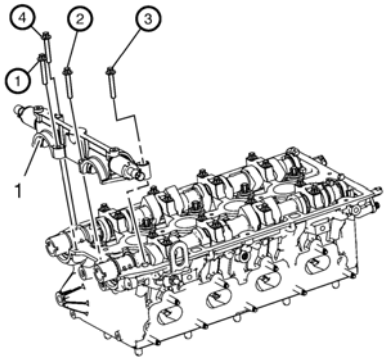

cardiagn.com

Note:

- Ensure no sealant reaches the camshafts.
- Note the installation sequence 1–4.

5. Install the first camshaft bearing cap (1) and the 4 bolts and tighten to **8 Y (71 lb in)**.
6. When replacing the intake camshaft, inspect the valve lash of the intake valves.
7. Inspect the 2 valve lash, intake valve cylinder 1.
   1. Turn the intake camshaft in the direction of engine rotation by the camshaft hexagon until the cams of cylinder 1 are in the test position.
   2. Insert the *EN-6361* gauge , inspect the valve lash.

      Write down the result.
8. Inspect the 2 valve lash, intake valve cylinder 3.
   1. Turn the intake camshaft in the direction of engine rotation by the camshaft hexagon until the cams of cylinder 3 are in the test position.
   2. Insert the *EN-6361* gauge , inspect the valve lash.

      Write down the result.
9. Inspect the 2 valve lash, intake valve cylinder 4.
   1. Turn the intake camshaft in the direction of engine rotation by the camshaft hexagon until the cams of cylinder 4 are in the test position.
   2. Insert the *EN-6361* gauge , inspect the valve lash.

      Write down the result.
10. Inspect the 2 valve lash, intake valve cylinder 2.
    1. Turn the intake camshaft in the direction of engine rotation by the camshaft hexagon until the cams of cylinder 2 are in the test position.
    2. Insert the *EN-6361* gauge , inspect the valve lash.

       Write down the result.
11. When replacing the exhaust camshaft, inspect the valve lash of the exhaust valves.
12. Inspect the 2 valve lash, exhaust valve cylinder 4.
    1. Turn the exhaust camshaft in the direction of engine rotation by the camshaft hexagon until the cams of cylinder 4 are in the test position.
    2. Insert the *EN-6361* gauge , inspect the valve lash.

       Write down the result.
13. Inspect the 2 valve lash, exhaust valve cylinder 2.
    1. Turn the exhaust camshaft in the direction of engine rotation by the camshaft hexagon until the cams of cylinder 2 are in the test position.
    2. Insert the *EN-6361* gauge , inspect the valve lash.

       Write down the result.
14. Inspect the 2 valve lash, exhaust valve cylinder 1.
    1. Turn the exhaust camshaft in the direction of engine rotation by the camshaft hexagon until the cams of cylinder 1 are in the test position.
    2. Insert the *EN-6361* gauge , inspect the valve lash.

       Write down the result.
15. Inspect the 2 valve lash, exhaust valve cylinder 3.
    1. Turn the exhaust camshaft in the direction of engine rotation by the camshaft hexagon gear until the cams of cylinder 3 are in the test position.
    2. Insert the *EN-6361* gauge , inspect the valve lash.

       Write down the result.

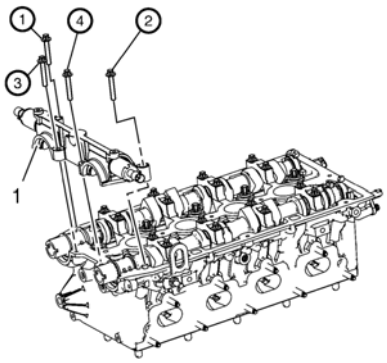

Note: Note the removal sequence 1–4.

16. Remove the 4 camshaft bearing support bolts.
17. Release the bearing support by striking it gently with a plastic hammer.
18. Remove the 1st camshaft bearing support (1).

Note: Mark the exhaust camshaft bearing caps before removal.

19. Detach the camshaft bearing caps 1–4 working from outside to inside in a spiral in steps of 1/2 up to 1 turn.
20. Remove the camshaft bearing cover from the cylinder head.

cardiagn.com

21. Remove the intake camshaft.

Note: Mark the intake camshaft bearing caps before removal.

22. Detach the camshaft bearing caps 1–4 working from outside to inside in a spiral in steps of 1/2 up to 1 turn.
23. Remove the camshaft bearing cover from the cylinder head.
24. Remove the exhaust camshaft.

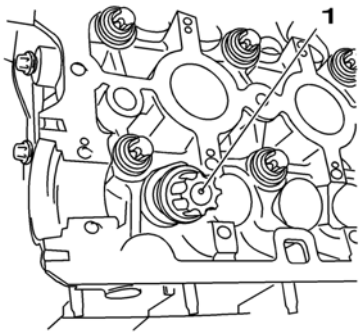

25. Using the *EN 845* device (1), remove the 16 valve tappets.

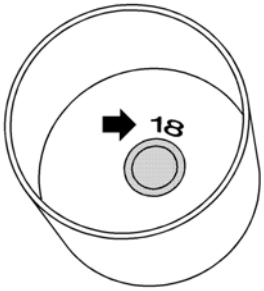

26. Determine valve tappet size.

    1. Measurement of the cup tappet installed 3.12 mm (0.123 in), identification number 12.
    2. Measured value between cams and cup tappets +0.31 mm (0.012 in) = 3.43 mm (0.135 in)
    3. Required value, valve lash – 0.25 mm (0.010 in)

    Note: The identification number, arrow, is on the inside of the valve tappet.

    4. Measurement of the new cup tappet = 3.18 mm (0.125 in), identification number 18.
    5. Use a valve tappet with this dimension or one that is nearest to it.

cardiagn.com

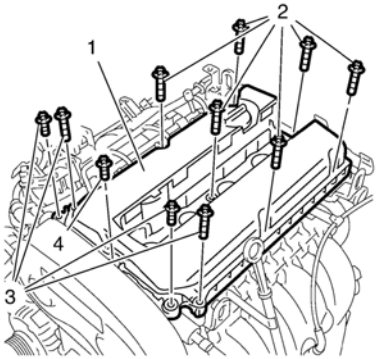

1. Clean the bolt and the camshaft cover bolt (4) thread.
2. Apply sealant to the camshaft cover bolt (4). Refer to Adhesives, Fluids, Lubricants, and Sealers.
3. Insert a NEW gasket in the camshaft cover.
4. Install the camshaft cover (1).

Caution: Refer to Fastener Caution.

5. Install the 11 bolts (2, 3, 4) and tighten to **8 Y (71 lb in)**.

cardiagn.com

1. Clean the sealing surfaces.

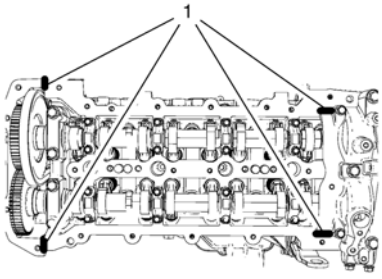

Note: The complete installation procedure of the camshaft cover should be done in 10 minutes.

Note: Do not coat sealing compound on the camshaft guide bolt holes and threads.

2. Apply sealing compound on sealant lines (1).

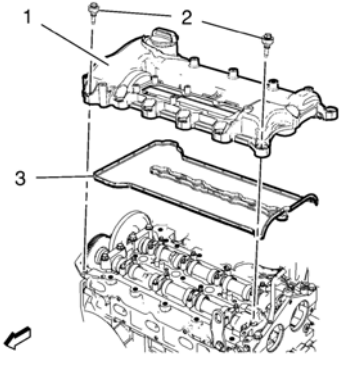

3. Install the camshaft cover (1) along with a NEW gasket (3).

Caution: Refer to Fastener Caution.

4. Install 20 camshaft cover retaining bolts (2) and tighten to **10 Y (89 lb in)**.

cardiagn.com

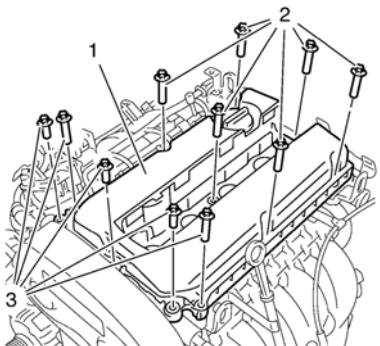

1. Remove the 11 bolts (2, 3).
2. Remove the camshaft cover (1).

cardiagn.com

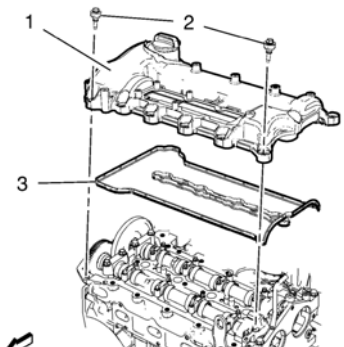

1. Remove the 20 camshaft cover retaining bolts (2).
2. Remove the camshaft cover (1) along with the gasket (3).

cardiagn.com

Removal Procedure

1. Remove the engine sight shield. Refer to Engine Sight Shield Replacement.
2. Remove the positive crankcase ventilation. Refer to Positive Crankcase Ventilation Hose/Pipe/Tube Replacement.
3. Remove the fuel injection feed pipes - fuel rail to fuel injector. Refer to Fuel Injection Fuel Feed Pipe Replacement - Fuel Injection Pump to Fuel Rail.
4. Remove the fuel injectors. Refer to Fuel Injector Replacement.
5. Remove the turbocharger coolant return pipe. Refer to Turbocharger Coolant Return Pipe Replacement.

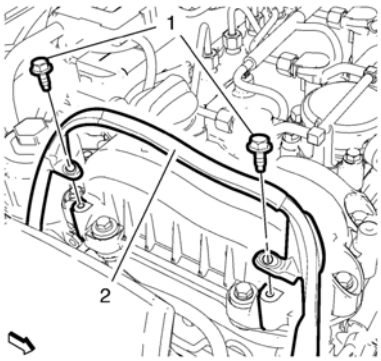

6. Remove the 2 wiring harness retaining bolts (1), lay the wiring harness (2) aside.

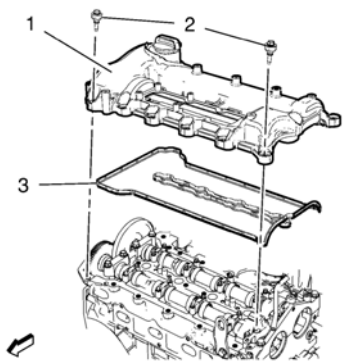

7. Remove 20 camshaft cover retaining bolts (2).
8. Remove the camshaft cover (1) along with the gasket (3).

Installation Procedure

1. Clean the sealing surfaces.

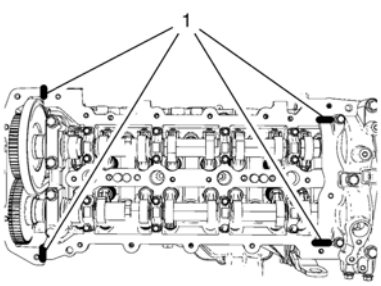

Note: The complete installation procedure of the camshaft cover should be done in 10 minutes.

Note: Do not coat the sealing compound on the camshaft guide bolt holes and threads.

2. Apply the sealing compound on the sealant lines (1).

cardiagn.com

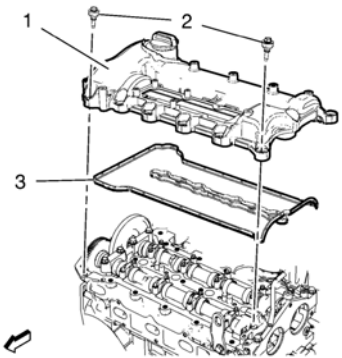

3. Install the camshaft cover (1) in conjunction with a NEW gasket (3).

Caution: Refer to Fastener Caution.

4. Install the 20 camshaft cover retaining bolts (2) and tighten to **10 Y (89 lb in)**.

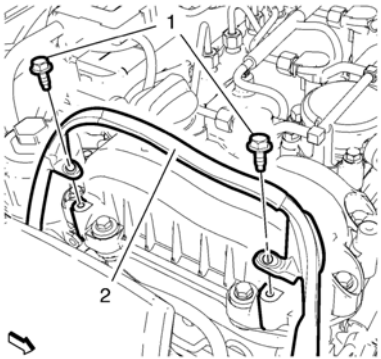

5. Install the 2 wiring harness retaining bolts (1) and tighten to **10 Y (89 lb in)**.
6. Install the turbocharger coolant return pipe. Refer to Turbocharger Coolant Return Pipe Replacement.
7. Install the fuel injectors. Refer to Fuel Injector Replacement.
8. Install the fuel injection feed pipes - fuel rail to fuel injector. Refer to Fuel Injection Fuel Feed Pipe Replacement - Fuel Injection Pump to Fuel Rail.
9. Install the positive crankcase ventilation. Refer to Positive Crankcase Ventilation Hose/Pipe/Tube Replacement.
10. Install the engine sight shield. Refer to Engine Sight Shield Replacement.

cardiagn.com

Special Tools

EN-422 Installer

For equivalent regional tools, refer to Special Tools.

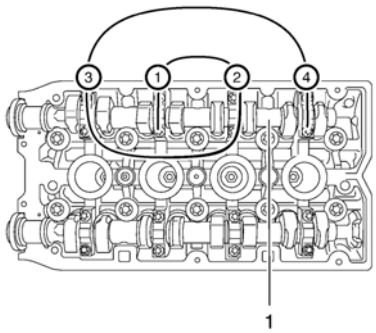

Note: Coat with MoS 2 lubricating paste. Refer to Adhesives, Fluids, Lubricants, and Sealers.

1. Install the intake camshaft (1).

Note: Note the identification marking on the camshaft bearing cover.

2. Install the 4 intake camshaft bearing cover number 2-5.

Caution: Refer to Fastener Caution.

3. Install the 8 intake camshaft bearing cover bolts and tighten in a spiral from the inside to the outside to **8 Y (71 lb in)**.

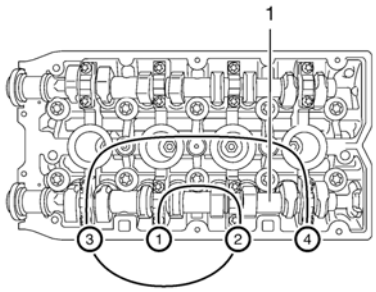

Note: Coat with MoS 2 lubricating paste. Refer to Adhesives, Fluids, Lubricants, and Sealers.

4. Install the exhaust camshaft (1).

Note: Note the identification marking on the camshaft bearing cover.

5. Install the 4 exhaust camshaft bearing cover number 6-9.
6. Install the 8 exhaust camshaft bearing cover bolts and tighten in a spiral from the inside to the outside to **8 Y (71 lb in)**.

cardiagn.com

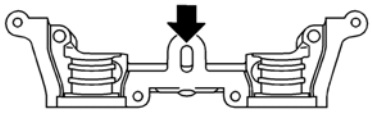

Note: Sealing surfaces must be free from oil and grease.

7. Clean sealing surfaces of the first camshaft bearing support and the cylinder head with a suitable tool.

   Clean oil duct from any sealant residue.

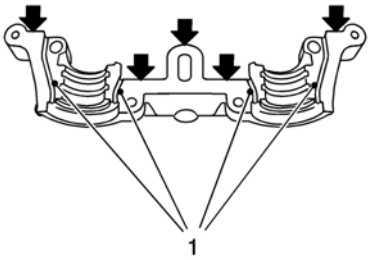

Note:

- Sealing surfaces (arrows) must be free from oil and grease.
- It is essential to ensure that no sealant is applied outside the marked sealing areas (1).
- The grooves adjacent to the sealing surfaces must remain free from sealant.

8. Apply surface sealant to sealing surfaces of the first camshaft bearing cap thinly and evenly.
9. Position the first camshaft bearing cap on the cylinder block and tighten the bolts approximately to **2 Y (18 lb in)**.

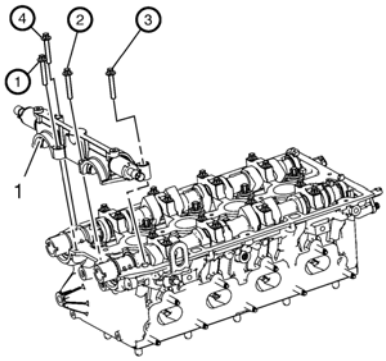

Note: No sealant may reach the camshafts.

10. Install the first camshaft bearing cap.

Note: Note installation sequence 1-4.

11. Install the first camshaft bearing cap (1) bolts and tighten to **8 Y (71 lb in)**.

cardiagn.com

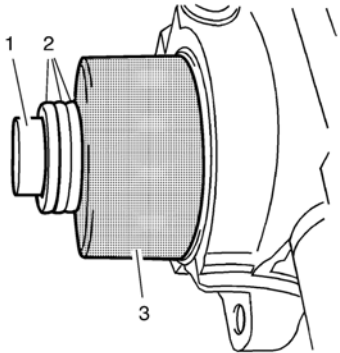

12. Install 2 NEW sealing rings to the camshafts.
13. Tighten the seal ring with *EN-422* installer (3) on the camshaft until this is in contact with the cylinder head.
14. To install, use camshaft sprocket bolt (1) in conjunction with shims (2) with a total thickness of approximately 10 mm.
15. Remove the *EN-422* installer (3).

cardiagn.com

Special Tools

- *EN-6340* Camshaft Adjuster Locking Tool
- *EN-6628-A* Camshaft Locking Tool
- *EN-45059* Angle Meter

For equivalent regional tools, refer to Special Tools.

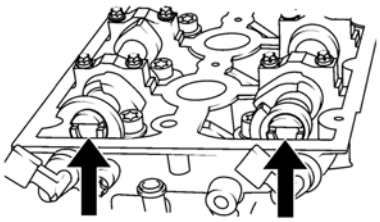

Note: Note the arrows.

1. Turn the camshaft by the hexagon until the groove on the end of the camshafts is horizontal.

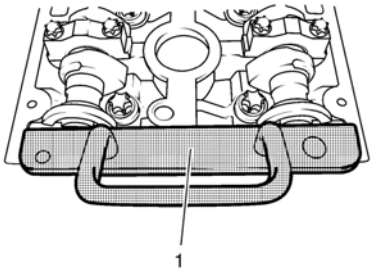

2. Install the *EN-6628-A* locking tool (1).

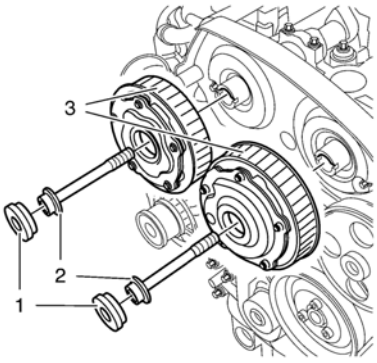

Note: If the cover is contaminated with oil, you have to clean it close.

3. Install intake camshaft position actuator adjuster and/or the exhaust camshaft position actuator adjuster (3).
4. Install a NEW intake camshaft position actuator adjuster bolt and/or a NEW exhaust camshaft position actuator adjuster bolt (2). DO NOT tighten the bolts yet.

cardiagn.com

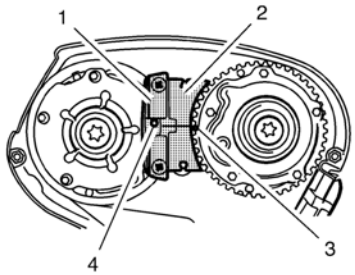

5. Install the *EN-6340* locking tool into the camshaft position actuator adjusters.

   Note: The spot type marking (4) on the intake camshaft position actuator adjuster does not correspond to the groove of *EN-6340-left* locking tool - left during this process but must be somewhat above as shown.

   1. Install the *EN-6340-left* locking tool (1) in the camshaft position actuator adjusters as shown.

   Note: The spot type marking (3) on the exhaust camshaft position actuator adjuster must correspond to the groove on *EN-6340-left* locking tool - right.

   2. Install the *EN-6340-right* locking tool (2) in the camshaft position actuator adjusters as shown.

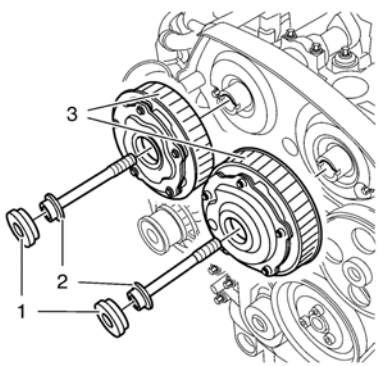

Caution: Refer to Fastener Caution.

Caution: Refer to Torque-to-Yield Fastener Caution.

Note: A second technician is required.

Note: Use an appropriate open-end wrench in order to counterhold the camshaft hexagon. A thin cross-section wrench is required for a better fit. The usage of EN-6628-A locking tool is for the camshaft adjustment to prevent misalignment of the camshafts. The wrench is required to counterhold the camshafts during bolt torque procedure.

6. Install the camshaft position actuator adjuster bolts (2) and tighten the bolts in 3 passes using the *EN-45059* meter.

   1. First pass to **50 Y (37 lb ft)**
   2. Second pass to an additional **150 degrees**
   3. Final pass to an additional **15 degrees**

   Note: Check the closure bolt seal ring.

7. Install the 2 camshaft position actuator adjuster closure plugs (1) and tighten to **30 Y (22 lb ft)**.
8. Remove the *EN-6628-A* locking tool.
9. After the installation of the timing belt, rotate the engine 720 degrees and check the position of the crankshaft and camshafts, again. Refer to Timing Belt Adjustment.

cardiagn.com

Special Tools

- *EN-6340* Camshaft Adjuster Locking Tool
- *EN-6628-A* Camshaft Locking Tool

For equivalent regional tools, refer to Special Tools.

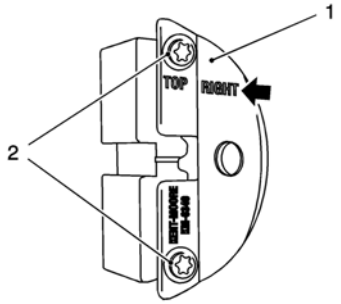

Note: The right half of the *EN-6340* locking tool can be recognized by the lettering "right", arrow, on the tool.

1. Prepare the right half of the *EN-6340* locking tool.

    1. Remove the 2 bolts (2).
    2. Remove the front panel (1) from the *EN-6340* locking tool - right.

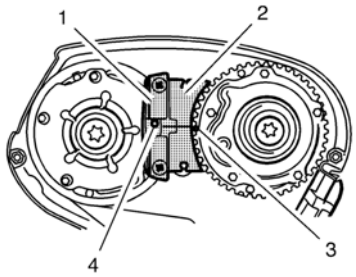

2. Install the *EN-6340* locking tool into the camshaft adjusters.

Note: The spot type marking (4) on the intake camshaft adjuster does not correspond to the groove of *EN-6340* locking tool - left during this process but must be somewhat above as shown.

- Install the *EN-6340* locking tool - left (1) into the camshaft adjusters as shown.

Note: The spot type marking (3) on the exhaust camshaft adjuster must correspond to the groove on *EN-6340* locking tool - right.

- Install *EN-6340* locking tool - right (2) into the camshaft adjusters as shown.

cardiagn.com

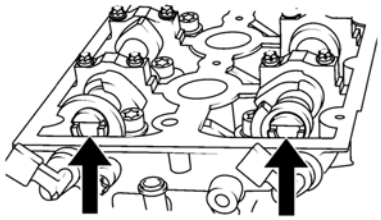

Note: Note the arrows.

- Turn the camshaft by the hexagon until the groove on the end of the camshafts is horizontal.

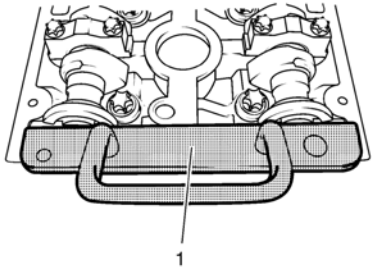

- Install the *EN-6628-A* locking tool (1).

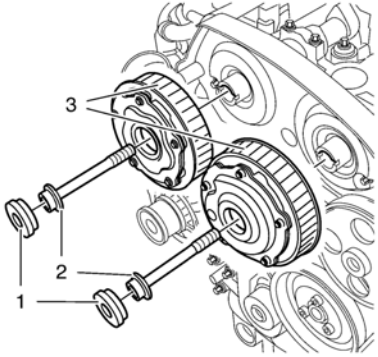

- Remove the camshaft position actuator adjuster closure bolt (1) of the intake camshaft position actuator adjuster and/or the exhaust camshaft position actuator adjuster (3).

Note: A second technician is required.

Note: Use an appropriate open-end wrench in order to counterhold the camshaft hexagon. A thin cross-section wrench is required for a better fit. The usage of *EN-6628-A* locking tool is for the camshaft adjustment to prevent misalignment of the camshafts. The wrench is required to counterhold the camshafts during bolt torque procedure.

- Remove and DISCARD the intake camshaft position actuator adjuster bolt and/or the exhaust camshaft position actuator adjuster bolt (2).
- Remove the intake camshaft position actuator adjuster and/or the exhaust camshaft position actuator adjuster (3).

cardiagn.com

Special Tools

- *EN-6333* Timing Belt Tensioner Locking Pin
- *EN-6340* Camshaft Adjuster Locking Tool
- *EN-6625* Crankshaft Locking Device
- *EN-6628-A* Camshaft Locking Tool
- *EN-45059* Angle Meter

For equivalent regional tools, refer to Special Tools.

Removal Procedure

1. Remove the air cleaner housing. Refer to Air Cleaner Assembly Replacement.

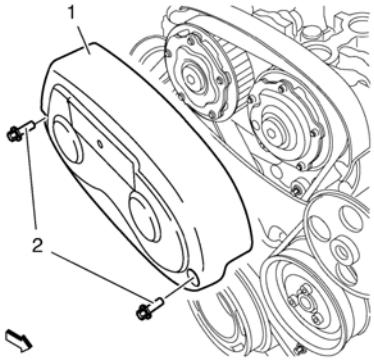

2. Remove the 2 timing belt upper front cover bolts (2).
3. Remove the timing belt upper front cover (1).
4. Remove the camshaft cover. Refer to Camshaft Cover Replacement.
5. Remove the 2 camshaft position actuator solenoid valve. Refer to Camshaft Position Actuator Solenoid Valve Replacement.
6. Remove the drive belt. Refer to Drive Belt Replacement.
7. Remove the drive belt tensioner. Refer to Drive Belt Tensioner Replacement.

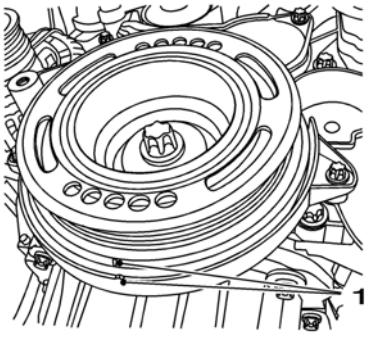

8. Set the crankshaft balancer in direction of engine rotation until the markings (1) line up with the cylinder 1 at TDC.
9. Remove the crankshaft balancer. Refer to Crankshaft Balancer Replacement.
10. Remove the *EN-6625* locking device.

cardiagn.com

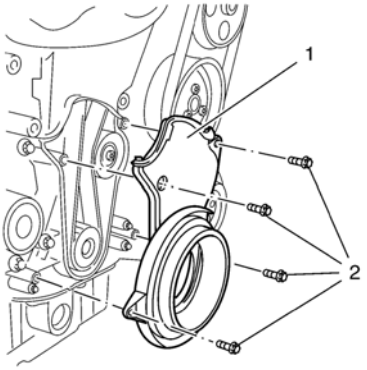

11. Remove the 4 lower timing belt cover bolts (2).
12. Remove the lower timing belt cover (1).
13. Lower the vehicle.

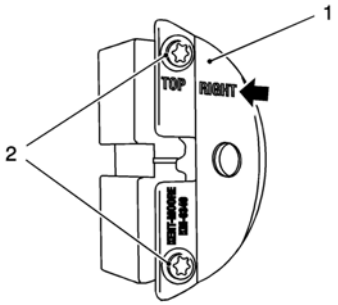

Note: The right half of the *EN-6340* locking tool can be recognized by the lettering "right", arrow, on the tool.

14. Prepare the right half of the *EN-6340* locking tool.

    1. Remove the 2 bolts (2).
    2. Remove the front panel (1) from the *EN-6340* locking tool - right.

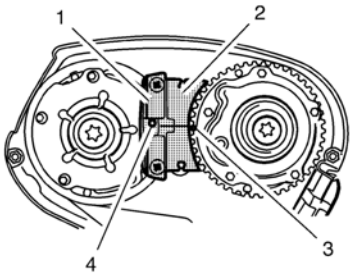

15. Install the *EN-6340* locking tool into the camshaft adjusters.

Note: The spot type marking (4) on the intake camshaft adjuster does not correspond to the groove of *EN-6340* locking tool - left during this process but must be somewhat above as shown.

- Install the *EN-6340* locking tool - left (1) in the camshaft adjusters as shown.

Note: The spot type marking (3) on the exhaust camshaft adjuster must correspond to the groove on *EN-6340* locking tool - right.

- Install *EN-6340* locking tool - right (2) in the camshaft adjusters as shown.
- Support the engine. Install a suitable engine lifting device. Install a suitable cable at the 3 engine lift brackets and at the engine lifting device.

cardiagn.com

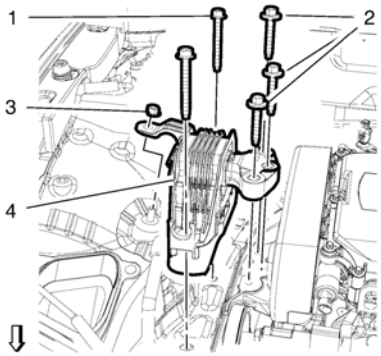

- Remove the engine mount nut (3).
- Remove the 5 engine mount bolts (1, 2).
- Remove the engine mount (4).

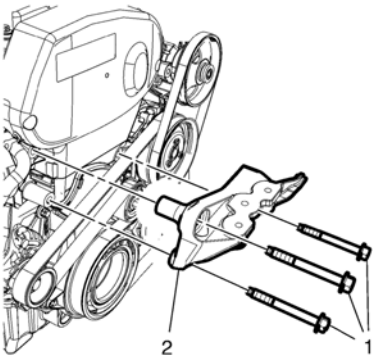

- Remove the 3 engine mount bracket bolts (1).
- Remove the engine mount bracket (2).

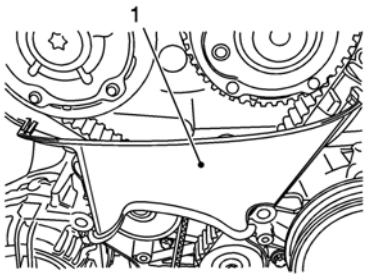

- Remove the center front timing belt cover from the rear timing belt cover at 2 locations.
- Remove the center front timing belt cover (1).

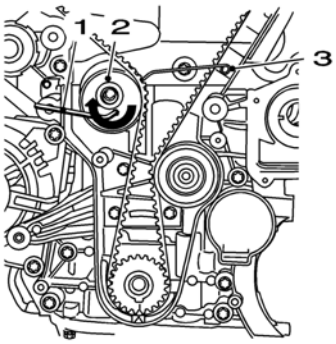

- Apply tension to the timing belt tensioner (2) in the direction of the arrow, using an allen key (1).
- Install the *EN-6333* locking pin (3).

cardiagn.com

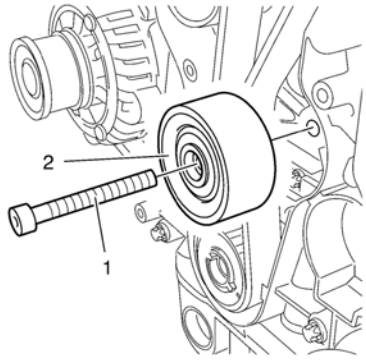

- Remove and DISCARD the timing belt idler pulley bolt (1).
- Remove the timing belt idler pulley (2).

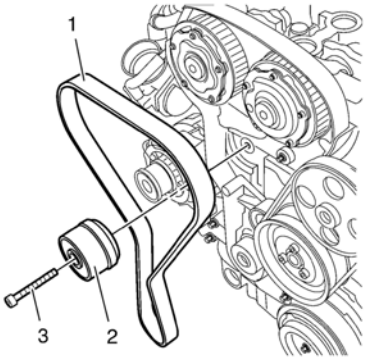

Note: Note the direction of the belt, if the timing belt will be reused.

- Remove the timing belt (1).
- Remove and DISCARD the timing belt tensioner bolt (3).
- Remove the timing belt tensioner (2).

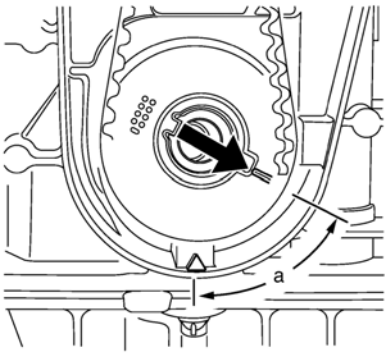

- Set the crankshaft in direction of engine rotation to **60 degrees** (a) before TDC. Use the *EN-45059* meter and the crankshaft balancer bolt.

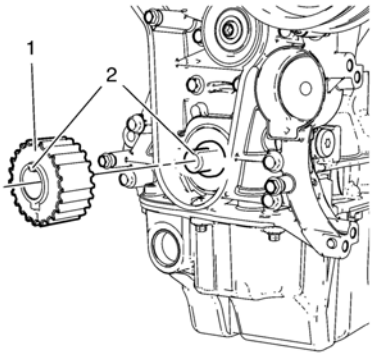

Note: Some engine oil will run out of the camshaft and the camshaft position actuator adjuster. That is the reason for the removal of the whole timing assembly.

- Remove the crankshaft sprocket (1).

cardiagn.com

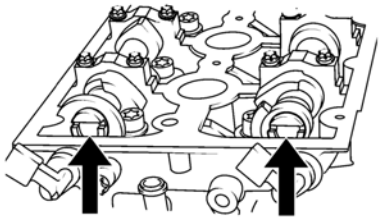

Note: Note the arrows.

- Turn the camshaft by the hexagon until the groove on the end of the camshafts is horizontal.

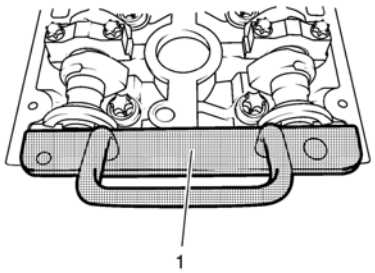

- Install the *EN-6628–A* locking tool (1).
- Raise and support the vehicle. Refer to Lifting and Jacking the Vehicle.
- Place a collecting basin underneath the vehicle.

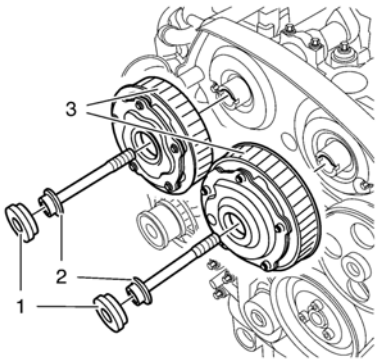

- Remove the camshaft position actuator adjuster closure bolt (1) of the intake camshaft position actuator adjuster and/or the exhaust camshaft position actuator adjuster (3).

Note: A second technician is required.

Note: Use an appropriate open-end wrench in order to counterhold the camshaft hexagon. A thin cross-section wrench is required for a better fit. The usage of *EN-6628-A* locking tool is for the camshaft adjustment to prevent misalignment of the camshafts. The wrench is required to counterhold the camshafts during bolt torque procedure.

- Remove and DISCARD the intake camshaft position actuator adjuster bolt and/or the exhaust camshaft position actuator adjuster bolt (2).
- Remove the intake camshaft position actuator adjuster and/or the exhaust camshaft position actuator adjuster (3).

Installation Procedure

cardiagn.com

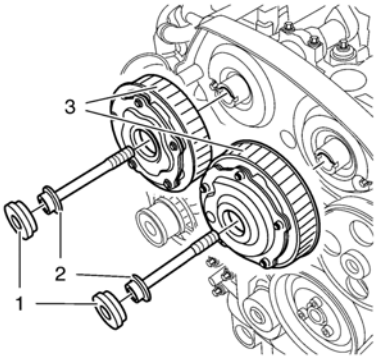

Note: If the cover is contaminated with oil, you have to clean it close.

1. Install intake camshaft position actuator adjuster and/or the exhaust camshaft position actuator adjuster (3).

Note: Do not tighten.

2. Install a NEW intake camshaft position actuator adjuster bolt and/or a NEW exhaust camshaft position actuator adjuster bolt (2).

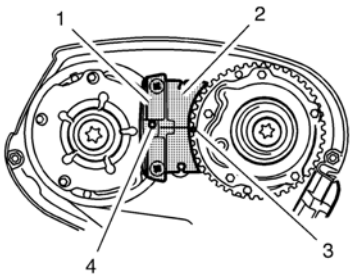

3. Install the *EN-6340* locking tool into the camshaft position actuator adjusters.

   Note: The spot type marking (4) on the intake camshaft position actuator adjuster does not correspond to the groove of *EN-6340-left* locking tool during this process but must be somewhat above as shown.

   1. Install the *EN-6340-left* locking tool (1) in the camshaft position actuator adjusters as shown.

   Note: The spot type marking (3) on the exhaust camshaft position actuator adjuster must correspond to the groove on *EN-6340-right* locking tool.

   2. Install the *EN-6340-right* locking tool (2) in the camshaft position actuator adjusters as shown.

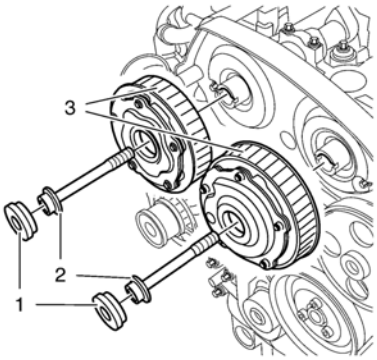

Caution: Refer to Torque-to-Yield Fastener Caution.

Note: If the cover is contaminated with oil, you have to clean it close.

Note: A second technician is required.

Note: Use an appropriate open-end wrench in order to counterhold the camshaft hexagon. A thin cross-section wrench is required for a better fit. The usage of *EN-6628–A* locking tool is for the camshaft adjustment to prevent misalignment of the camshafts. The wrench is required to counterhold the camshafts during bolt torque procedure.

4. Tighten the camshaft position actuator adjuster bolts (2) in three passes use the *EN-45059* meter:

   1. First pass tighten to **50 Y (37 lb ft)**.
   2. Second pass to **150 degrees**.
   3. Third pass to **15 degrees**.

Note: Check the closure bolt seal ring.

5. Install the 2 camshaft position actuator adjuster closure plugs (1) and tighten to **30 Y (22 lb ft)**.
6. Remove the *EN-6628-A* locking tool.

cardiagn.com

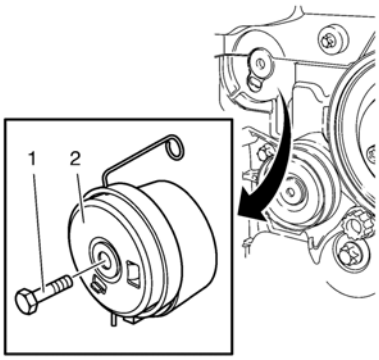

7. Clean the timing belt tensioner thread.
8. Install the timing belt tensioner (2) and tighten the NEW timing belt tensioner bolt (1) in three passes use the *EN-45059* meter:

    1. First pass tighten to **20 Y (15 lb ft)**.
    2. Second pass to **120 degrees**.
    3. Third pass to **15 degrees**.

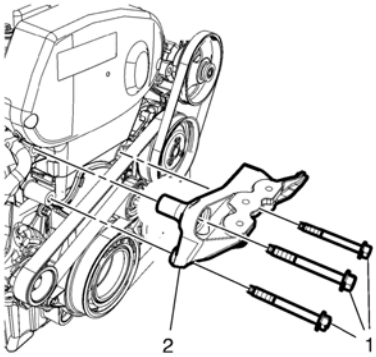

9. Install the engine mount bracket (2).
10. Install the 3 engine mount bracket bolts (1) tighten to **62 Y (46 lb ft)**.

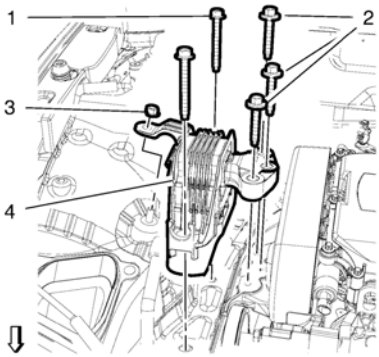

11. Install the engine mount (4).
12. Install the 2 engine mount bolts (1) and tighten to **62 Y (46 lb ft)**.

    Caution: Refer to Torque-to-Yield Fastener Caution.

13. Install the 3 engine mount bolts (2) and tighten in three passes use the *EN-45059* meter.

    1. First pass tighten to **50 Y (37 lb ft)**.
    2. Second pass to **60 degrees**.
    3. Third pass to **15 degrees**.
14. Remove the engine lifting device.

cardiagn.com

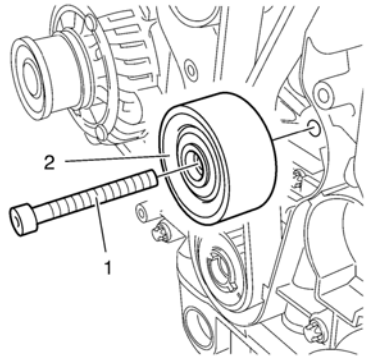

15. Clean the timing belt idler pulley thread.

    Install the timing belt idler pulley (2) and tighten the NEW bolt (1) in three passes use the *EN-45059* meter:

    1. First pass tighten to **20 Y (15 lb ft)**.
    2. Second pass to **120 degrees**.
    3. Third pass to **15 degrees**.

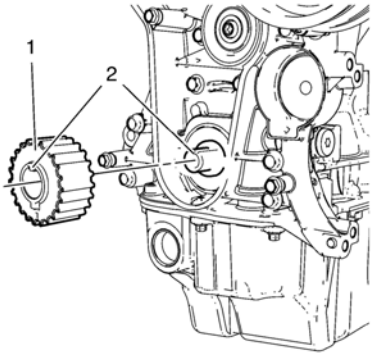

Note: When installing the crankshaft sprocket, the cam and the groove must align (2).

16. Install the crankshaft sprocket (1).

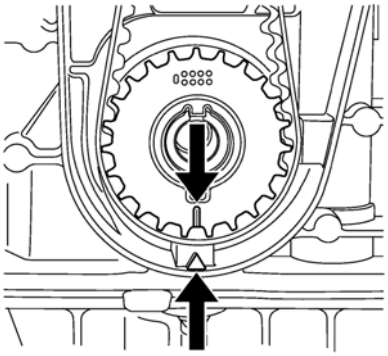

17. Set the crankshaft in the direction of engine rotation to TDC. Use the crankshaft balancer bolt.

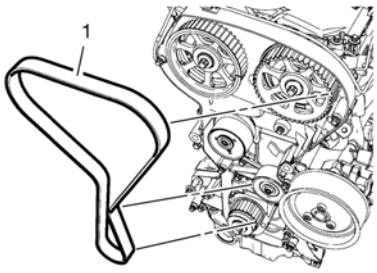

18. Install the timing belt (1).
19. Guide the timing belt past the tensioner and place it on the crankshaft sprocket wheel.

cardiagn.com

20. Place the timing belt on the exhaust and intake camshaft position actuator adjusters.

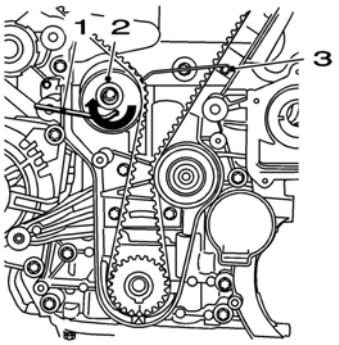

21. Apply tension to the timing belt tensioner (2) in the direction of the arrow, using an Allen key (1).
22. Remove the *EN-6333* locking pin (3).

Note: The timing belt tensioner moves automatically to the correct position.

23. Release tension on timing belt tensioner.
24. Check position of the camshaft and camshaft position actuator adjuster.

    1. Turn crankshaft **720 degrees** in the direction of engine rotation by the crankshaft balancer bolt.

    Note: Note marking, camshaft position actuator adjuster.

    2. Insert *EN-6340* locking tool into camshaft position actuator adjuster.

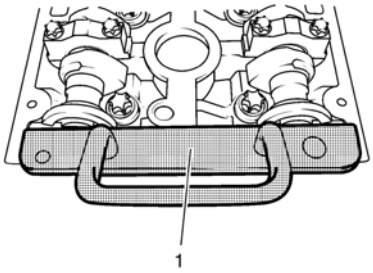

25. Insert the *EN-6628-A* locking tool (1) into the camshafts.
26. Align camshafts by hexagon until *EN-6628-A* locking tool can be inserted in both camshafts.

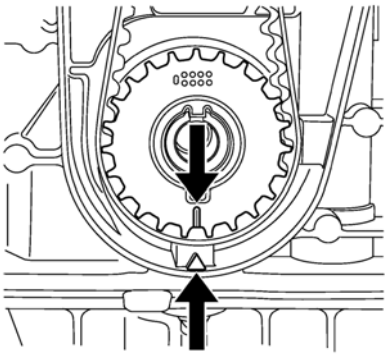

Note: The crankshaft sprocket and oil pump housing must align.

27. Check the crankshaft position.
28. Remove the *EN-6628-A* locking tool.

cardiagn.com

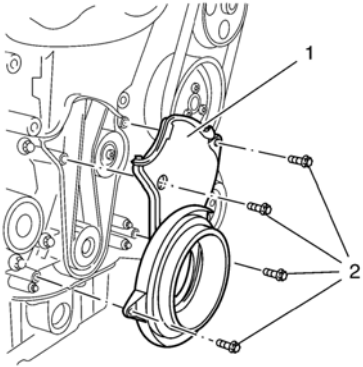

29. Install the lower front timing belt cover (1) and tighten the 4 bolts (2) to **6 Y (53 lb in)**.
30. Install the crankshaft balancer. Refer to Crankshaft Balancer Replacement.
31. Install the drive belt tensioner. Refer to Drive Belt Tensioner Replacement.
32. Install the drive belt. Refer to Drive Belt Replacement.
33. Lower the vehicle.
34. Install the camshaft position actuator solenoid valve. Refer to Camshaft Position Actuator Solenoid Valve Replacement.
35. Install the camshaft cover. Refer to Camshaft Cover Replacement.

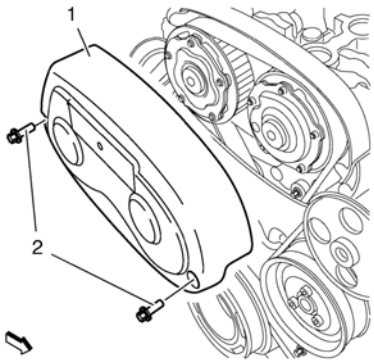

36. Install the timing belt upper front cover (1).
37. Install the 2 timing belt upper front cover bolts (2) and tighten to **6 Y (53 lb in)**.
38. Install the air cleaner housing. Refer to Air Cleaner Assembly Replacement.

cardiagn.com

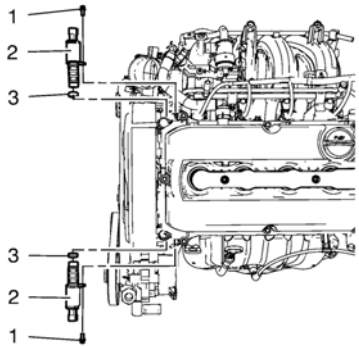

Note: Lubricate the NEW camshaft position actuator solenoid valve seals with NEW engine oil. Refer to Adhesives, Fluids, Lubricants, and Sealers.

1. Install NEW camshaft position actuator solenoid valve seals (3).
2. Install the camshaft position actuator solenoid valves (2).

Caution: Refer to Fastener Caution.

3. Install the camshaft position actuator solenoid valve bolts (1) and tighten to **6 Y (53 lb in)**.

cardiagn.com

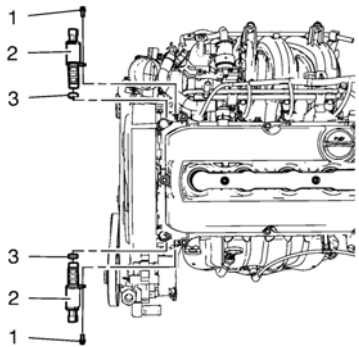

1. Remove the camshaft position actuator solenoid valve bolts (1).
2. Remove the camshaft position actuator solenoid valves (2).
3. Remove the camshaft position actuator solenoid valve seals (3).

cardiagn.com

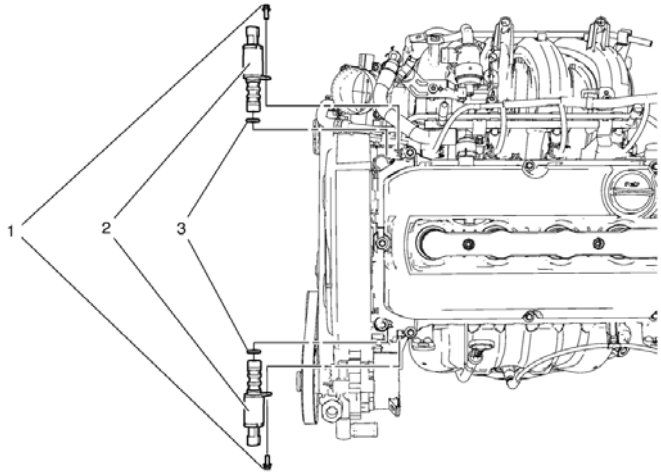

Camshaft Position Actuator Solenoid Valve Replacement

Callout	Component Name
1	Camshaft Position Actuator Solenoid Valve Bolt (Qty: 2) **Caution:** Refer to Fastener Caution. **Tighten** 6 Y (53 lb in)
2	Camshaft Position Actuator Solenoid Valve (Qty: 2)
3	Camshaft Position Actuator Solenoid Valve Seal (Qty: 2) **Tip:** Coat the camshaft position actuator solenoid valve seals with NEW engine oil.

cardiagn.com

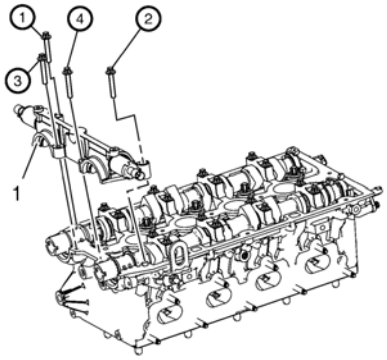

Note: Note removal sequence 1–4.

1. Remove the 4 camshaft bearing cap bolts.

Note: Release the bearing support by striking it gently with a plastic hammer.

2. Remove the first camshaft bearing cap (1).

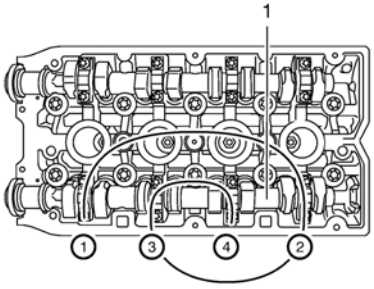

3. Loosen the 8 exhaust camshaft bearing cap bolts working from outside to inside in a spiral in steps of 1/2 up to 1 turn.
4. Remove the 8 exhaust camshaft bearing cap bolts.

Note: Mark camshaft bearing caps before removal.

5. Remove the 4 exhaust camshaft bearing caps numbers 6–9 from the cylinder head.
6. Remove the exhaust camshaft (1).

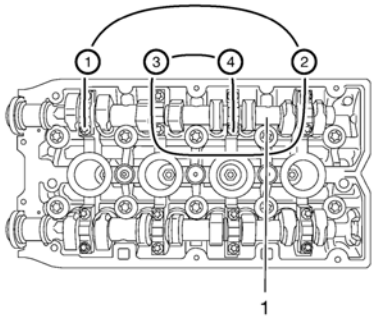

7. Loosen the 8 intake camshaft bearing cap bolts working from outside to inside in a spiral in steps of 1/2 up to 1 turn.
8. Remove the 8 intake camshaft bearing cap bolts.

Note: Mark camshaft bearing caps before removal.

9. Remove the 4 intake camshaft bearing caps numbers 2–5 from the cylinder head.
10. Remove the intake camshaft (1).
11. Remove the camshaft seal rings.

cardiagn.com

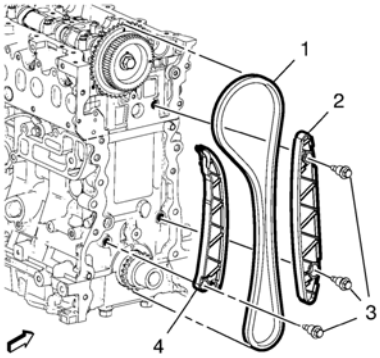

Note: The marks on the timing chain are asymmetric on the timing chain.

1. Install the camshaft timing chain (1).

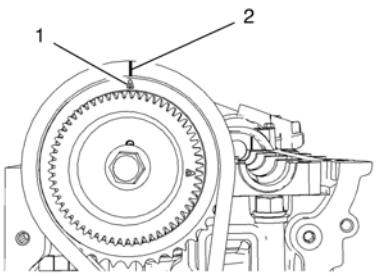

2. The mark on the intake camshaft gear (1) must match with the mark on the timing chain (2).

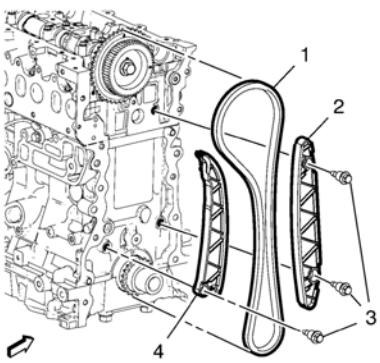

3. Install the timing chain guide (2).
4. Apply safety agent to the timing chain dampener retaining bolt (3).

Caution: Refer to Fastener Caution.

5. Install 2 retaining bolts (3) from the timing chain guide (2) and tighten to **25 Y (18 lb ft)**.

cardiagn.com

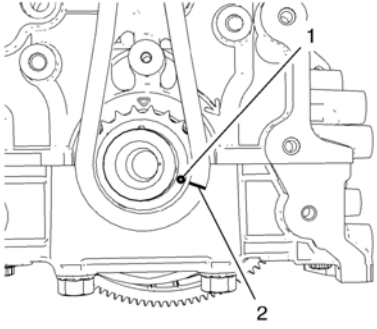

6. The mark on the intake crankshaft gear (1) must match with the mark on the timing chain (2).

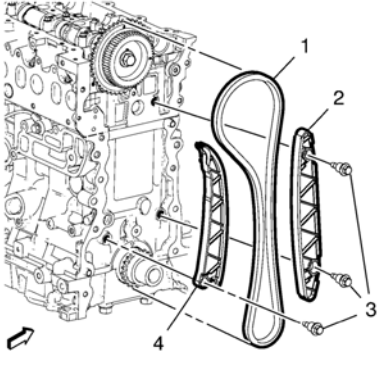

7. Install the timing chain dampener (4).
8. Apply safety agent to the timing chain dampener retaining bolt (3).
9. Install bolt (3) to the timing chain dampener (4) and tighten to **25 Y (18 lb ft)**.

cardiagn.com

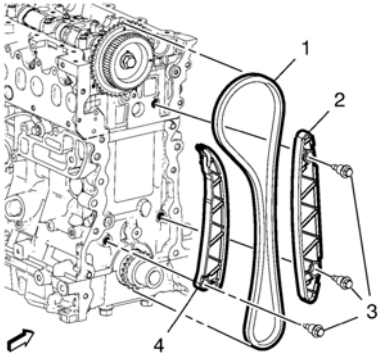

1. Remove the 2 retaining bolts (3) from the timing chain guide (2).
2. Remove the timing chain guide (2).
3. Remove bolt (3) from the timing chain dampener (4).
4. Remove the timing chain dampener (4).
5. Remove the camshaft timing chain (1).

cardiagn.com

Removal Procedure

1. Remove the exhaust camshaft. Refer to Exhaust Camshaft Replacement.

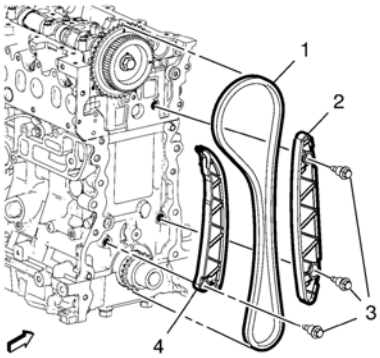

2. Remove both retaining bolts (3) from the timing chain guide (2).
3. Remove the timing chain guide (2).
4. Remove 1 bolt (3) from the timing chain dampener (4).
5. Remove the timing chain dampener (4).
6. Remove the camshaft timing chain (1)

Installation Procedure

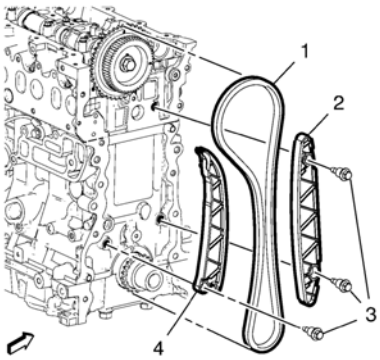

Note: The marks on the timing chain are asymmetric on the timing chain.

1. Install the camshaft timing chain (1).

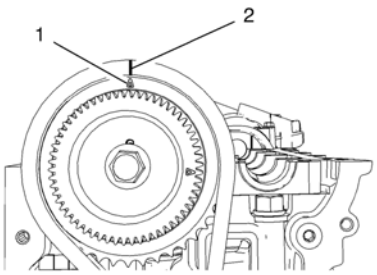

2. The mark on the intake camshaft gear (1) must match with the mark on the timing chain (2).

cardiagn.com

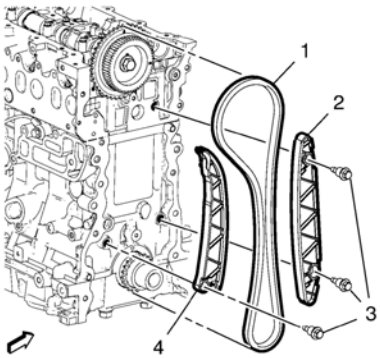

3. Install the timing chain guide (2).
4. Apply safety agent to the timing chain dampener retaining bolt (3).

Caution: Refer to Fastener Caution.

5. Install the 2 timing chain guide retaining bolts (3) and tighten to **25 Y (18 lb ft)**.

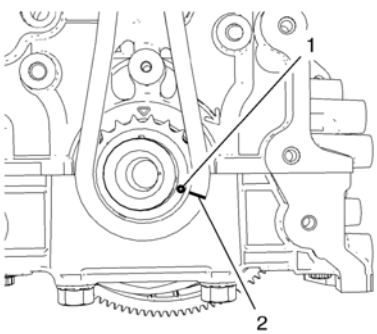

6. The mark on the crankshaft gear (1) must match with the mark on the timing chain (2).

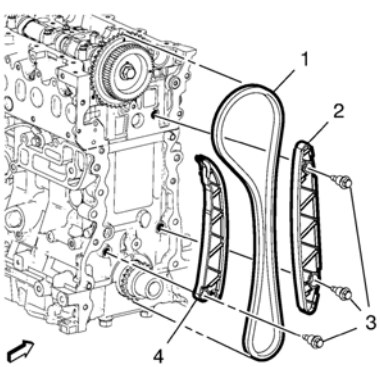

7. Install the timing chain dampener (4).
8. Apply safety agent to the timing chain dampener retaining bolt (3).
9. Install the timing chain dampener bolt (3) and tighten to **25 Y (18 lb ft)**.
10. Install the exhaust camshaft. Refer to Exhaust Camshaft Replacement.

cardiagn.com

Special Tools

EN-50433 Adapter - Exhaust Camshaft Sprocket Fixing

For equivalent regional tools, refer to Special Tools.

1. Ensure that the crankshaft is 90° beyond TDC of combustion stroke of cylinder 1.

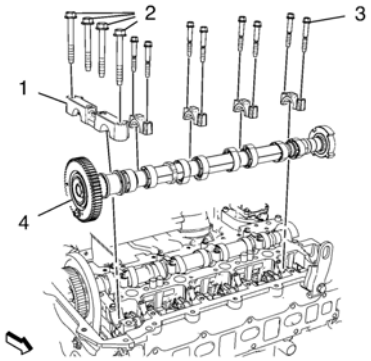

Caution: Use extreme care when removing the camshaft not to nick, scratch, or damage the camshaft lobes or bearing surfaces.

Note: Install the camshaft guides in order as removed.

Note: Clean the contact surfaces from camshaft , camshaft sprocket and camshaft sprocket bolt.

2. Coat the camshaft bearing surfaces with engine oil.
3. Install the exhaust camshaft (4).

Note: Tighten the camshaft seat guide cap from 2. cylinder at first.

4. Install the 4 camshaft seat guide caps.

Caution: Refer to Fastener Caution.

5. Install the 8 camshaft seat guide cap retaining bolts (3) and tighten to **10 Y (89 lb in)**.
6. Install the camshaft seat guide cap (1).
7. Install 4 camshaft seat guide cap retaining bolts (2) and tighten to **25 Y (18 lb ft)**.

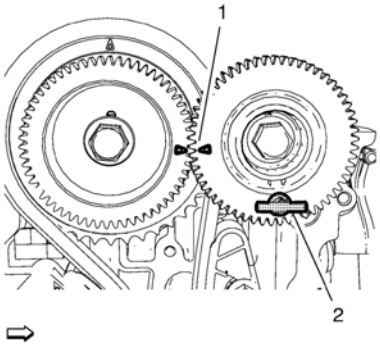

8. The arrows on the camshaft sprockets must align as shown (1).
9. Remove the *EN-50433* sprocket fixing (2) from the exhaust camshaft sprocket.

cardiagn.com

Exhaust Camshaft Installation

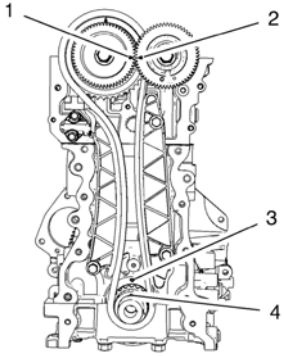

10. Rotate the engine 2 revolutions clockwise.
11. Set crankshaft 90° beyond TDC of combustion stroke of cylinder 1.

- The arrow on the intake camshaft gear (1) must align with the arrow on the exhaust camshaft gear (2).
- The notch in the camshaft sprocket (4) must align with the mark on the engine block (3)

cardiagn.com

Special Tools

EN-50433 Adapter - Exhaust Camshaft Sprocket Fixing

For equivalent regional tools, refer to Special Tools.

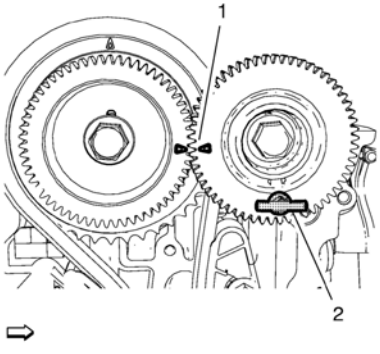

1. Set crankshaft 90° beyond TDC of combustion stroke of cylinder 1. The arrows on the camshaft sprockets must align as shown (1).
2. Fix the exhaust camshaft sprocket with the *EN-50433* sprocket fixing (2).

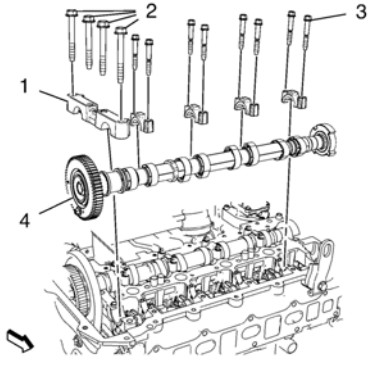

Caution: Use extreme care when removing the camshaft not to nick, scratch, or damage the camshaft lobes or bearing surfaces.

Note: Remove the camshaft seat guide cap from the 2. cylinder at least. Set the camshaft guides aside in order as removed.

3. Remove the 4 camshaft seat guide cap retaining bolts (2).
4. Remove the camshaft seat guide cap (1).
5. Remove the 8 camshaft seat guide cap retaining bolts (3).
6. Remove the 4 camshaft seat guide caps.
7. Remove the exhaust camshaft (4).

cardiagn.com

Special Tools

EN-50433 Adapter - Exhaust Camshaft Sprocket Fixing

For equivalent regional tools, refer to Special Tools.

Removal Procedure

1. Remove the engine front cover. Refer to Engine Front Cover Replacement.
2. Remove the camshaft bearing rear cap. Refer to Camshaft Bearing Cap Removal - Rear.

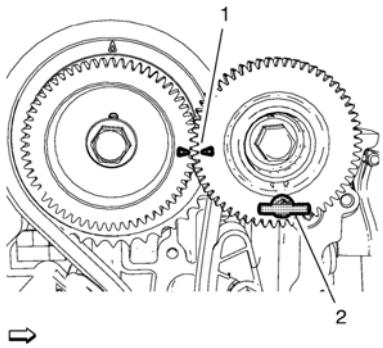

3. Set crankshaft **90°**beyond TDC of combustion stroke of cylinder 1. The arrows on the camshaft sprockets must match as shown (1).
4. Fix the exhaust camshaft sprocket with the *EN-50433* sprocket fixing (2).

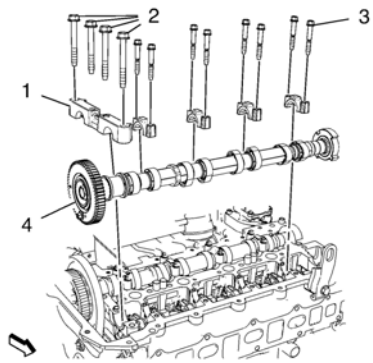

Note: Take extreme care to prevent any scratches or damage to the camshaft and the bearing surfaces. Set the camshaft guides aside in order as removed.

Note: Remove camshaft seat guide cap from cylinder 2 at least.

5. Remove 4 camshaft seat guide cap retaining bolts (2).
6. Remove the camshaft seat guide cap (1).
7. Remove 8 camshaft seat guide cap retaining bolts (3).
8. Remove 4 camshaft seat guide caps.
9. Remove the exhaust camshaft (4).

Installation Procedure

1. Ensure that the crankshaft is **90°**beyond TDC of combustion stroke of cylinder 1.

cardiagn.com

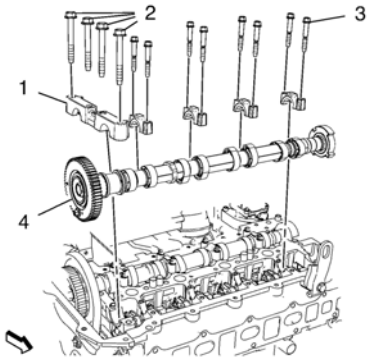

Note: Take extreme care to prevent any scratches or damage to the camshaft and the bearing surfaces. Install the camshaft guides in order as removed.

Note: Clean the contact surfaces from camshaft, camshaft sprocket and camshaft sprocket bolt.

2. Coat camshaft bearing surfaces with engine oil.
3. Install the exhaust camshaft (4).

Note: Tighten the camshaft seat guide cap from cylinder 2 at first.

4. Install 4 camshaft seat guide caps.

Caution: Refer to Fastener Caution.

5. Install 8 camshaft seat guide cap retaining bolts (3) and tighten to **10 Y (89 lb in)**.
6. Install the camshaft seat guide cap (1).
7. Install 4 camshaft seat guide cap retaining bolts (2) and tighten to **25 Y (18 lb ft)**.

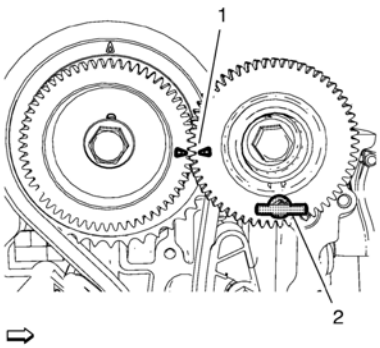

8. The arrows on the camshaft sprockets must match as shown (1).
9. Remove the *EN-50433* sprocket fixing (2) from the exhaust camshaft sprocket.

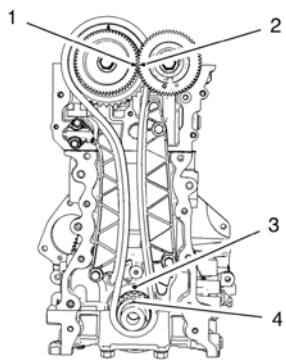

10. Rotate the engine 2 revolutions clockwise.
11. Set crankshaft **90°**beyond TDC of combustion stroke of cylinder 1.

- The arrow on the intake camshaft gear (1) must match with the arrow on the exhaust camshaft gear (2).
- The notch in the camshaft sprocket (4) must match with mark on the engine block (3)
- Install the camshaft bearing rear cap removal. Refer to Camshaft Bearing Cap Installation - Rear.
- Remove the engine front cover. Refer to Engine Front Cover Replacement.

cardiagn.com

Removal Procedure

1. Remove the intake camshaft. Refer to Intake Camshaft Replacement.

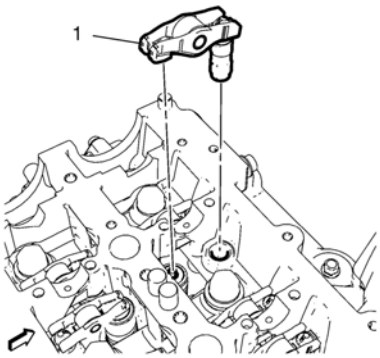

Note: Set aside in the order removed.

2. Remove the 16 valve rocker arms with the hydraulic valve lash adjusters (1).

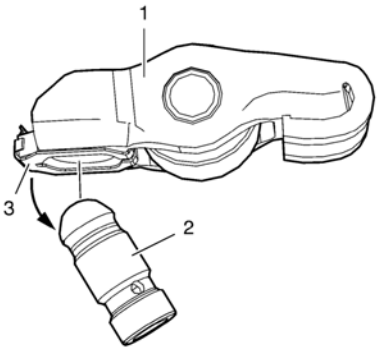

Note: Unclip the valve lifter from valve rocker arm in direction as shown (arrow). Mind to the centering link on retaining spring (3).

3. Remove the 16 hydraulic valve lash adjusters (2) from the valve rocker arms (1).

Installation Procedure

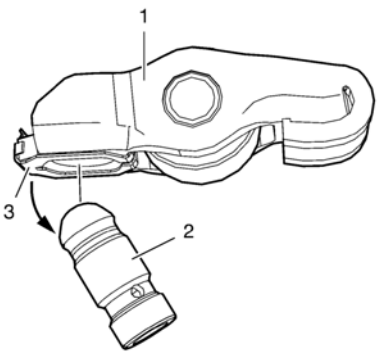

Note: Clip in the valve lifter to the valve rocker arm. Mind to the centering link on the retaining spring (3).

1. Install the 16 hydraulic valve lash adjusters (2) to the valve rocker arms (1).
2. Coat the 16 hydraulic valve lash adjusters with engine oil.

cardiagn.com

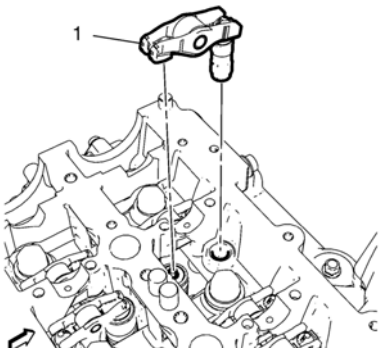

Note: If the valve rocker arms are being reused, the valve rocker arms must be installed in their original position.

3. Install the 16 valve rocker arms (1) with the hydraulic valve lash adjusters.
4. Install the intake camshaft. Refer to Intake Camshaft Replacement.

cardiagn.com

Special Tools

EN-50432 Adapter - Flywheel Fixing

For equivalent regional tools, refer to Special Tools.

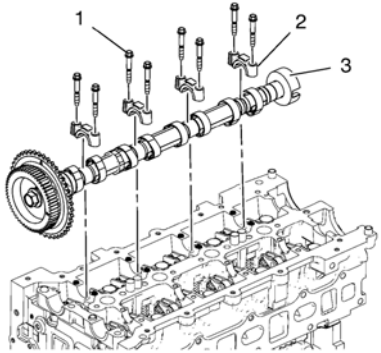

Caution: Use extreme care when installing the camshaft not to nick, scratch, or damage the camshaft lobes or bearing surfaces.

Note:

- Ensure that the crankshaft is fixed 90° beyond TDC with the *EN-50433* fixing tool .
- Install the camshaft guides in order as removed.
- Clean the contact surfaces from camshaft , camshaft sprocket and camshaft sprocket bolt. Coat the camshaft bearing surfaces with engine oil.

1. Install the intake camshaft (3).

Note: Tighten the camshaft seat guide cap from 4. cylinder at first.

2. Install the 4 camshaft seat guide caps (2).

Caution: Refer to Fastener Caution.

3. Install the 8 camshaft seat guide cap retaining bolts (1) and tighten to **10 Y (89 lb in)**.

cardiagn.com

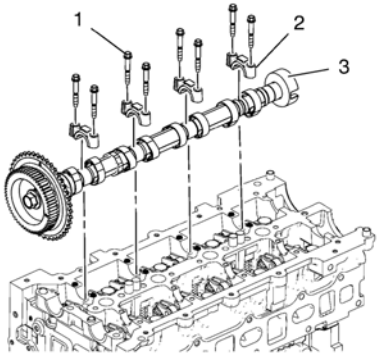

Caution: Use extreme care when removing the camshaft not to nick, scratch, or damage the camshaft lobes or bearing surfaces.

Note: Remove the camshaft seat guide cap from the 4. cylinder at least. Set the camshaft seat guide caps aside in order as removed.

1. Remove the 8 camshaft seat guide cap retaining bolts (1).
2. Remove the 4 camshaft seat guide caps (2).
3. Remove the intake camshaft (3).

cardiagn.com

Removal Procedure

1. Remove the timing chain. Refer to Camshaft Timing Chain Replacement.

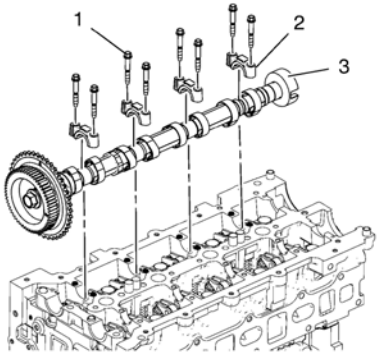

Note: Take extreme care to prevent any scratches or damage to the camshafts.

Note: Remove camshaft seat guide cap from 4. cylinder at least. Set the camshaft seat guide caps aside in order as removed.

2. Remove the 8 camshaft seat guide cap retaining bolts (1).
3. Remove the 4 camshaft seat guide caps (2).
4. Remove the intake camshaft (3).

Installation Procedure

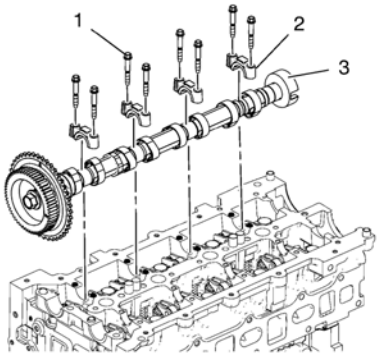

Note:

- Ensure that the crankshaft is fixed 90° beyond TDC with *EN-50433* fixing tool
- Take extreme care to prevent any scratches or damage to the camshaft. Install the camshaft guides in order as removed.
- Clean the contact surfaces from camshaft , camshaft sprocket and camshaft sprocket bolt. Coat camshaft bearing surfaces with engine oil.

1. Install the intake camshaft (3).

Note: Tighten the camshaft seat guide cap from cylinder 4 at first.

2. Install 4 camshaft seat guide caps (2).

Caution: Refer to Fastener Caution.

3. Install 8 camshaft seat guide cap retaining bolts (1). Tighten the 8 camshaft seat guide cap retaining bolts (1) to **10 Y (89 lb in)**.
4. Install the timing chain. Refer to Camshaft Timing Chain Replacement.

cardiagn.com

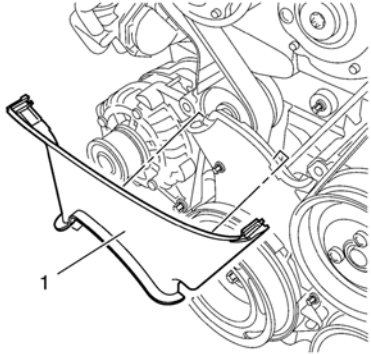

Install the timing belt center front cover (1) to the timing belt rear cover at 2 locations.

cardiagn.com

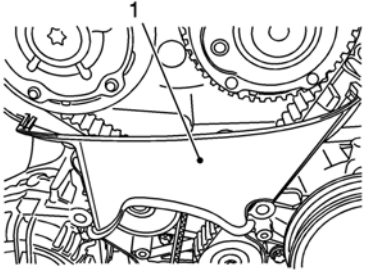

1. Remove the center front timing belt cover from the rear timing belt cover at 2 locations.
2. Remove the center front timing belt cover (1).

cardiagn.com

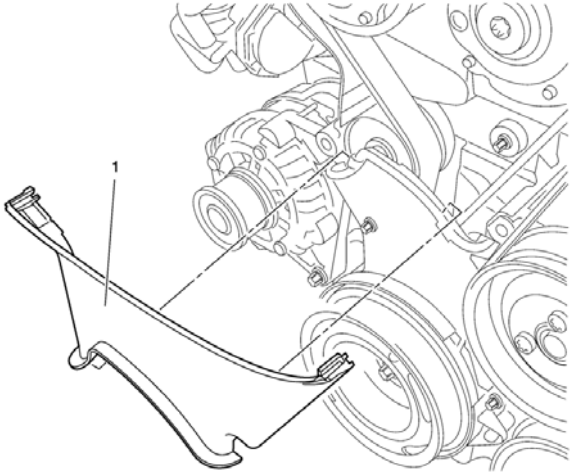

Timing Belt Center Front Cover Replacement

Callout	Component Name
Preliminary Procedure	
1. Remove the timing belt upper front cover. Refer to Timing Belt Upper Front Cover Replacement. 2. Remove the engine mount bracket. Refer to Engine Mount Bracket Replacement.	
1	Timing Belt Center Front Cover

cardiagn.com

Special Tools

EN-45059 Angle Meter

For equivalent regional tools, refer to Special Tools.

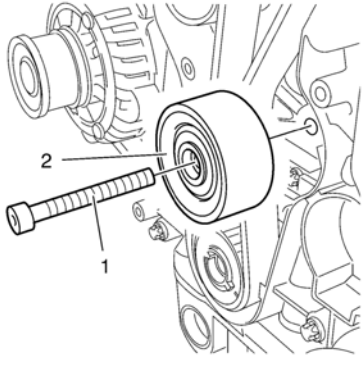

Caution: Refer to Fastener Caution.

Caution: Refer to Torque-to-Yield Fastener Caution.

1. Re-cut the timing belt idler pulley thread.
2. Install the timing belt idler pulley (2) and tighten the NEW timing belt idler pulley bolt (1) a first pass to **20 Y (15 lb ft)**.
3. Tighten the NEW timing belt idler pulley bolt a second pass to an additional **120 degrees**, using the *EN-45059* meter.
4. Tighten the NEW timing belt idler pulley bolt a final pass to an additional **15 degrees**, using the *EN-45059* meter.

cardiagn.com

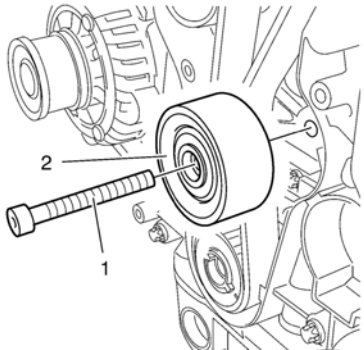

1. Remove the timing belt idler pulley bolt (1).
2. Remove the timing belt idler pulley (2).

cardiagn.com

Special Tools

EN-45059 Angle Meter

For equivalent regional tools, refer to Special Tools.

Removal Procedure

1. Remove the timing belt. Refer to Timing Belt Replacement.

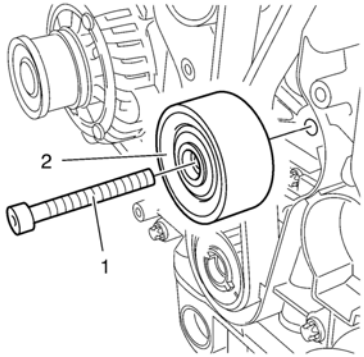

2. Remove and DISCARD the timing belt idler pulley bolt (1).
3. Remove the timing belt idler pulley (2).

Installation Procedure

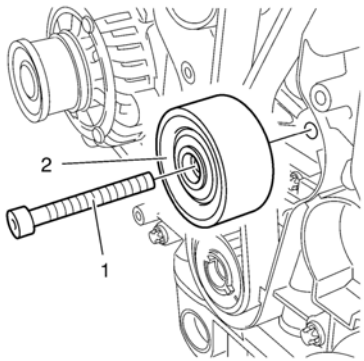

Caution: Refer to Fastener Caution.

Caution: Refer to Torque-to-Yield Fastener Caution.

1. Re-cut the timing belt idler pulley thread.

   Install the timing belt idler pulley (2) and tighten the NEW bolt (1) in three passes use the *EN-45059* meter:

   1. First pass tighten to **20 Y (15 lb ft)**.
   2. Second pass to **120 degrees**.
   3. Final pass to **15 degrees**.
2. Install the timing belt. Refer to Timing Belt Replacement.

cardiagn.com

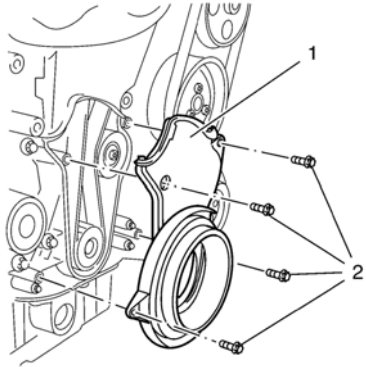

Caution: Refer to Fastener Caution.

Install the timing belt cover (1) and tighten the 4 timing belt lower front cover bolts (2) to **6 Y (53 lb in)**.

cardiagn.com

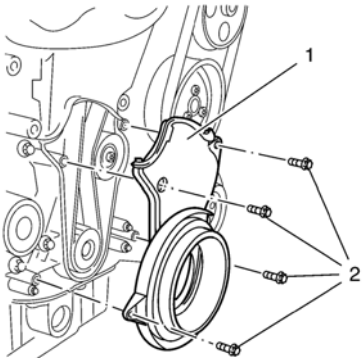

1. Remove the 4 timing belt lower front cover bolts (2).
2. Remove the timing belt lower front cover (1).

cardiagn.com

For equivalent regional tools, refer to Special Tools

Removal Procedure

1. Raise and support the vehicle. Refer to Lifting and Jacking the Vehicle
2. Remove the crankshaft balancer. Refer to Crankshaft Balancer Replacement

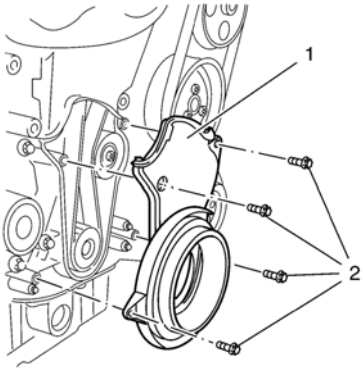

3. Remove the 4 lower timing belt cover bolts (2).
4. Remove the lower timing belt cover (1).

Installation Procedure

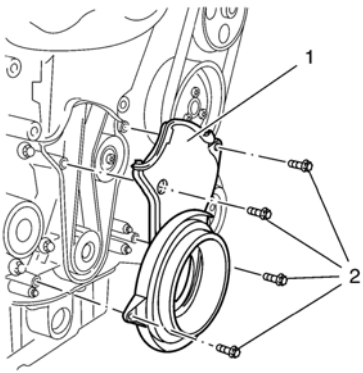

Caution: Refer to Fastener Caution

1. Install the lower timing belt cover (1).
2. Install the 4 lower timing belt cover bolts (2) and tighten to **6 Y (53 lb in)**.
3. Install the crankshaft balancer. Refer to Crankshaft Balancer Replacement
4. Lower the vehicle.

cardiagn.com

1. Re-cut the 4 rear timing belt cover threads.

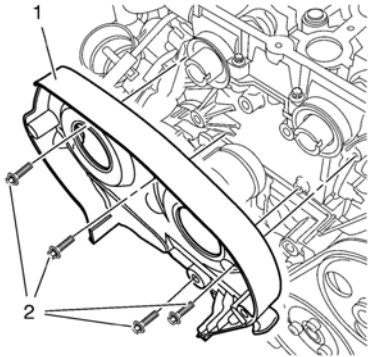

2. Install the timing belt rear cover (1).

   Caution: Refer to Fastener Caution.

   Note: Service may offer bolts that are not microencapsulated. If this is the case apply thread lock agent to the bolt. If fastener is microencapsulated, install a NEW 4 timing belt rear cover bolts. DO NOT reuse the old bolt.

3. Install the 4 NEW timing belt rear cover bolts (2) and tighten to **6 Y (53 lb in)**.

cardiagn.com

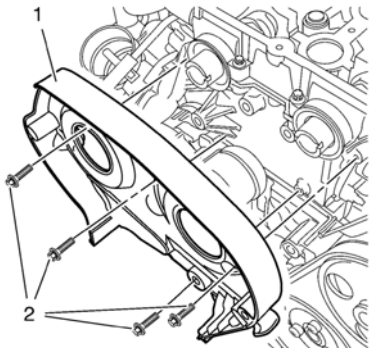

1. Remove and DISCARD the 4 timing belt rear cover bolts (2).
2. Remove the timing belt rear cover (1).

cardiagn.com

Special Tools

EN-45059 Angle Meter

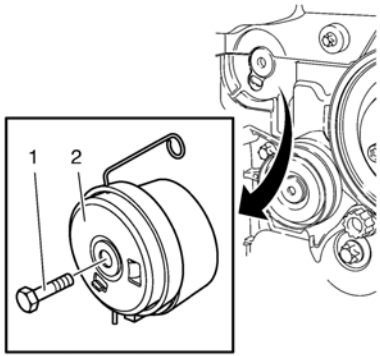

1. Clean the timing belt tensioner thread.
2. Install the timing belt tensioner (2).

   Caution: Refer to Fastener Caution.

   Caution: Refer to Torque-to-Yield Fastener Caution.
3. Install a NEW timing belt tensioner bolt (1) and tighten the bolt in 3 passes using the *EN-45059* meter.

   1. First pass to **20 Y (15 lb ft)**.
   2. Second pass to an additional **120 degrees**.
   3. Final pass to an additional **15 degrees**.

cardiagn.com

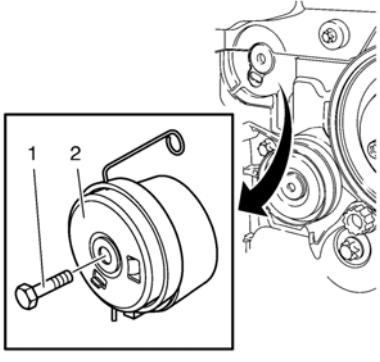

1. Remove the tensioner bolt (1).
2. Remove the timing belt tensioner (2).

cardiagn.com

EN-49073 Pin - Timing Chain Tensioner

For equivalent regional tools, refer to Special Tools

Removal Procedure

1. Remove the engine front cover. Refer to Engine Front Cover Replacement.

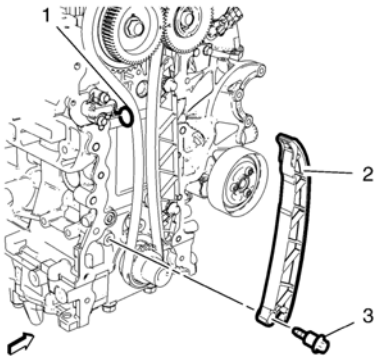

Note: Avoid that the timing chain skips.

2. Tension the timing chain tensioner. Fix the tensioner with the *EN-49073* pin (1).
3. Remove the timing chain dampener bolt (3).
4. Remove the timing chain dampener (2).

Installation Procedure

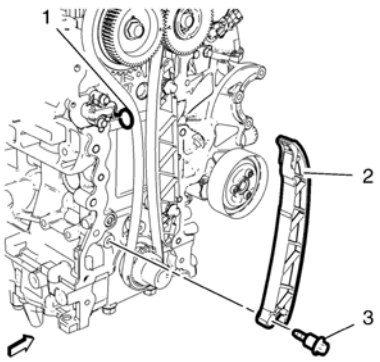

1. Apply safety agent to the timing chain dampener bolt (3).

Note: Avoid that the timing chain skips.

2. Install the timing chain dampener (2).

Caution: Refer to Fastener Caution.

3. Install the timing chain dampener bolt (3) and tighten to **25 Y (18 lb ft)**.
4. Remove the *EN-49073* tensioner (1).

cardiagn.com

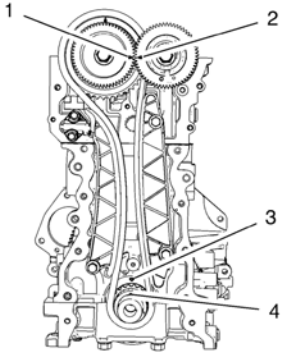

5. Rotate the engine 2 revolutions clockwise.
6. Set crankshaft **90°**beyond TDC of combustion stroke of cylinder 1 and inspect for the following conditions:

- The arrow on the intake camshaft gear (1) must match with the arrow on the exhaust camshaft gear (2).
- The notch in the camshaft sprocket (4) must match with mark on the engine block (3).

- Install the engine front cover. Refer to Engine Front Cover Replacement.

cardiagn.com

Removal Procedure

1. Remove the engine front cover. Refer to Engine Front Cover Replacement.

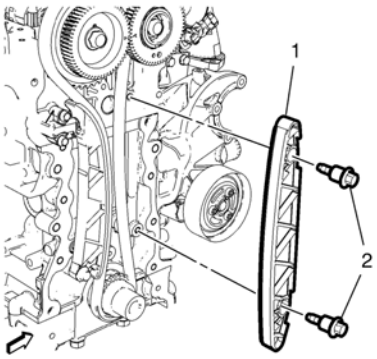

Note: Avoid that the timing chain skips.

2. Remove the 2 timing chain guide bolts (2).
3. Remove the timing chain guide (1).

Installation Procedure

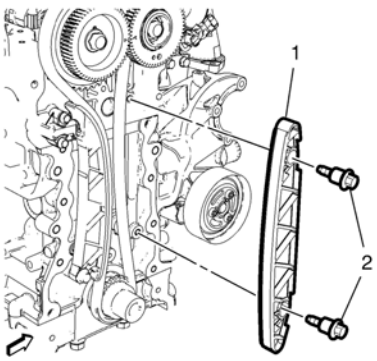

1. Apply safety agent to the 2 timing chain guide bolts (2).

Note: Avoid that the timing chain skips.

2. Install the timing chain guide (1).

Caution: Refer to Fastener Caution.

3. Install the 2 timing chain guide bolts (2) and tighten to **25 Y (18 lb ft)**.

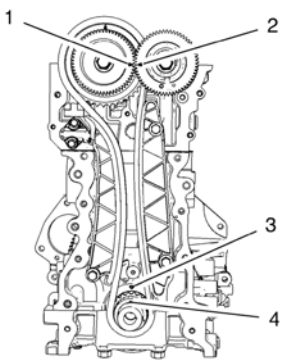

4. Rotate the engine 2 revolutions clockwise.
5. Set the crankshaft **90°**beyond TDC of combustion stroke of cylinder 1 and inspect for the following conditions:

cardiagn.com

- The arrow on the intake camshaft gear (1) must match with the arrow on the exhaust camshaft gear (2).
- The notch in the camshaft sprocket (4) must match with mark on the engine block (3).

- Install the engine front cover. Refer to Engine Front Cover Replacement.

cardiagn.com

Special Tools

EN-49073 Pin - Timing Chain Tensioner

For equivalent regional tools, refer to Special Tools.

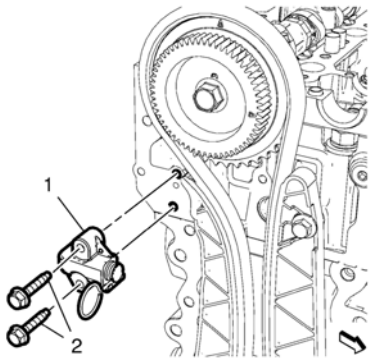

1. Tension the timing chain tensioner (1) with the *EN-49073* tensioner .
2. Install the timing chain tensioner (1).

   Caution: Refer to Fastener Caution.
3. Install the 2 timing chain tensioner retaining bolts (2) and tighten to **10Y(89 lb in)**.
4. Remove the *EN-49073* tensioner .

cardiagn.com

Special Tools

EN-49073 Pin - Timing Chain Tensioner

For equivalent regional tools, refer to Special Tools.

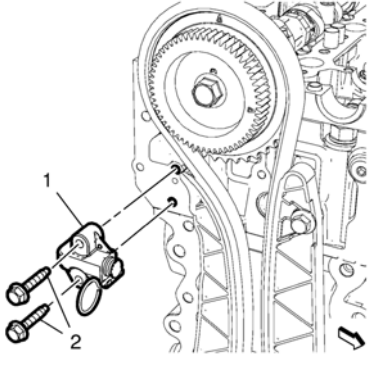

1. Tension the timing chain tensioner with the *EN-49073* tensioner .
2. Remove the 2 timing chain tensioner retaining bolts (2).
3. Remove the timing chain tensioner (1).

cardiagn.com

Special Tools

EN-49073 Pin - Timing Chain Tensioner

For equivalent regional tools, refer to Special Tools.

Removal Procedure

1. Remove the engine front cover. Refer to Engine Front Cover Replacement.

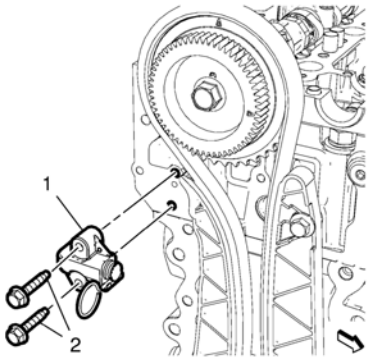

2. Apply tension the timing chain tensioner (1). Fix the tensioner with the *EN-49073* pin .
3. Remove the 2 timing chain tensioner retaining bolts (2).
4. Remove the timing chain tensioner (1).

Installation Procedure

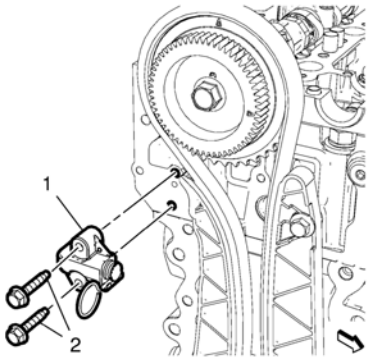

1. Apply tension to the timing chain tensioner and fix with the *EN-49073* pin .
2. Install the timing chain tensioner (1).

Caution: Refer to Fastener Caution.

3. Install 2 timing chain tensioner retaining bolts (2). Tighten the retaining bolts (2) to **10 Y (89 lb in)**.
4. Remove the *EN-49073* pin .
5. Install the engine front cover. Refer to Engine Front Cover Replacement.

cardiagn.com

Caution: A wrench must be used on the hex of the camshaft when loosening or tightening in order to prevent component damage. Failure to prevent the torque reaction against the timing drive chain can lead to timing drive chain failure.

carlogic.com

Valve Cleaning Procedure

1. Use soft bristle wire brush to clean any carbon build-up from the valve head. DO NOT use a wire brush on any part of the valve stem. The valve stem is chrome plated to provide enhanced wear characteristics. Wire brushing the stem could remove the chrome plating.
2. Thoroughly clean the valve with solvent and wipe dry.

Valve Visual Inspection Procedure

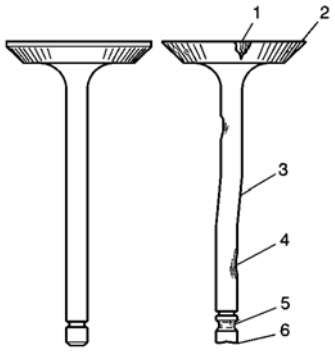

1. Inspect the valve for damage from the head to tip for the following conditions:

- Pitting in the valve seat area (1)
- Lack of valve margin (2)
- Bending in the valve stem (3)
- Pitting or excessive wear in the stem (4)
- Worn valve key grooves (5)
- Worn valve tip (6)
- Replace the valve if any of these conditions exist.

Valve Measurement and Reconditioning Overview

Note:

- Proper valve service is critical to engine performance. Therefore, all detailed measurement procedures must be followed to identify components that are out of specification.
- If the measurement procedures reveal that the valve or valve seat must be reconditioned, it is critical to perform the measurement procedures after reconditioning.

Valve Seat Width Measurement Procedure

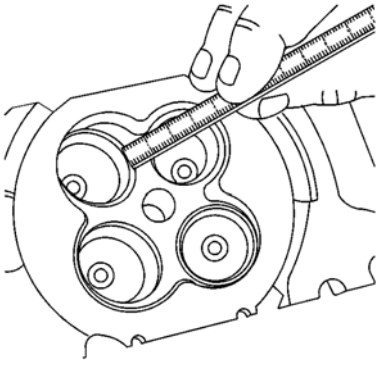

1. Measure the valve seat width in the cylinder head using a proper scale.

cardiagn.com

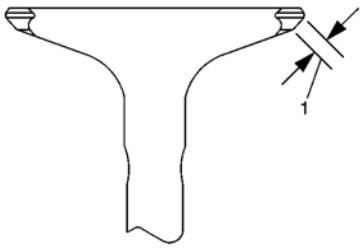

2. Measure the seat width on the valve face (1) using a proper scale.

Note: The seat contact area must be at least 0.5 mm (0.020 in) from the outer diameter (margin) of the valve. If the contact area is too close to the margins, the seat must be reconditioned to move the contact area away from the margin.

3. Compare your measurements with the specifications, refer to Engine Mechanical Specifications.
4. If the seat widths are acceptable, check the valve seat roundness using the Valve Seat Roundness Measurement Procedure.
5. If the seat width is not acceptable, you must grind the valve seat using the Valve and Seat Reconditioning Procedure to bring the width back into specification. Proper valve seat width is critical to providing the correct amount of valve heat dissipation.

Valve Seat Roundness Measurement Procedure

1. Measure the valve seat roundness using a dial indicator attached to a tapered pilot installed in the guide. The pilot should have a slight bind when installed in the guide.

Caution: The correct size pilot must be used. Do not use adjustable diameter pilots. Adjustable pilots may damage the valve guides.

2. Compare your measurements with the specifications, refer to Engine Mechanical Specifications.
3. If the valve seat exceeds the roundness specification, you must grind the valve and valve seat using the Valve and Seat Reconditioning Procedure.
4. If new valves are being used, the valve seat roundness must be within 0.05 mm (0.002 in).

Valve Margin Measurement Procedure

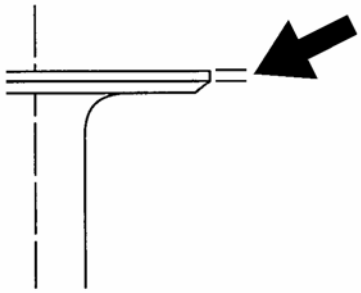

1. Measure the valve margin using an appropriate scale.
2. Reference the specifications in this section for minimum valve margin and compare them to your measurements.
3. If the valve margins are beyond specification, replace the valves.
4. If the valve margins are within specification and do not require refacing, test the valve for seat concentricity using the Valve-to-Seat Concentricity Measurement Procedure.

Valve-to-Seat Concentricity Measurement Procedure

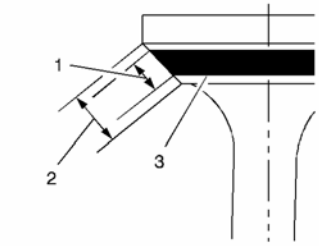

Note:

cardiagn.com

- Checking the valve-to-seat concentricity determines whether the valve and seat are sealing properly.
- You must measure the valve face and the valve seat to ensure proper valve sealing.

1. Coat the valve face lightly with blue dye (3).
2. Install the valve in the cylinder head.
3. Turn the valve against the seat with enough pressure to wear off the dye.
4. Remove the valve from the cylinder head.
5. Inspect the valve face.

- If the valve face is concentric, providing a proper seal, with the valve stem, a continuous mark will be made around the entire face (1).

  Note: The wear mark MUST be at least 0.5 mm (0.020 in) from the outer diameter, the margin, of the valve. If the wear mark is too close to the margin, the seat must be reconditioned to move the contact area away from the margin.
- If the face is not concentric with the stem, the mark will NOT be continuous around the valve face. The valve should be refaced or replaced and the seat must be reconditioned using the Valve and Seat Reconditioning Procedure.

Valve and Seat Reconditioning Procedure

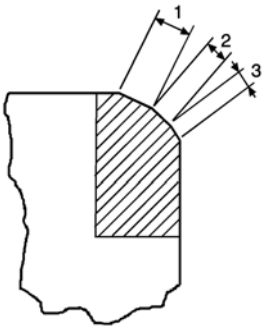

Note:

- If the valve seat width, roundness or concentricity is beyond specifications, you must grind the seats in order to ensure proper heat dissipation and prevent the build up of carbon on the seats.
- It is necessary to reface the valve if seat reconditioning is required unless a new valve is used.

1. Grind the valve seats (2) to the proper angle specification, refer to Engine Mechanical Specifications.
2. Using the proper angle specification, refer to Engine Mechanical Specifications, grind, relieve, the valve seats (1) to correctly position the valve seating surface (2) to the valve.
3. Using the proper angle specification listed in engine mechanical specifications, refer to Engine Mechanical Specifications, grind, undercut, the valve seats (3) to narrow the valve seat widths to the specifications, refer to Engine Mechanical Specifications.
4. If the original valve is being used, grind the valve to the specifications, refer to Engine Mechanical Specifications. Measure the valve margin again after grinding using the Valve Margin Measurement Procedure. Replace the valve if the margin is out of specification. New valves do not require grinding.
5. When grinding the valves and seats, grind off as little material as possible. Cutting valve seat results in lowering the valve spring pressure.
6. Install the valve in the cylinder head.

- If you are using refaced valves, lap the valves into the seats with a fine grinding compound. The refacing and reseating operations should leave the refinished surfaces smooth and true so that minimal lapping is required. Excessive lapping will groove the valve face and prevent a good seat when hot.

  Note: Be sure to clean any remaining lapping compound from the valve and seat with solvent and compressed air prior to final assembly.
- If you are using new valves, do not lap the valves under any condition.
- After obtaining the proper valve seat width in the cylinder head, you must re-measure the valve stem height using the Valve Stem Height Measurement Procedure.
- If the valve stem height is acceptable, test the seats for concentricity using the Valve-to-Seat Concentricity Measurement Procedure.

Valve Stem Height Measurement Procedure

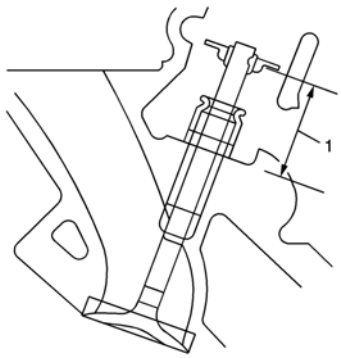

Note: To determine the valve stem height measurement, measure from the valve spring seat to the valve spring retainer.

cardiagn.com

1. Install the valve into the valve guide.
2. Ensure the valve is seated to the cylinder head valve seat.
3. Install the valve stem oil seal.
4. Install the valve spring retainer and valve stem locks.
5. Measure the distance (1) between the cylinder head to the bottom of the valve spring retainer. Refer to Engine Mechanical Specifications.
6. If the maximum height specification is exceeded, a new valve should be installed and the valve stem height re-measured.

   Caution: DO NOT grind the valve stem tip. The tip of the valve is hardened and grinding the tip will eliminate the hardened surface causing premature wear and possible engine damage.

   Caution: DO NOT use shims in order to adjust valve stem height. The use of shims will cause the valve spring to bottom out before the camshaft lobe is at peak lift and engine damage could result.
7. If the valve stem height still exceeds the maximum height specification, the cylinder head must be replaced.

cardiagn.com

Removal Procedure

1. Remove the intake camshaft. Refer to Intake Camshaft Replacement.

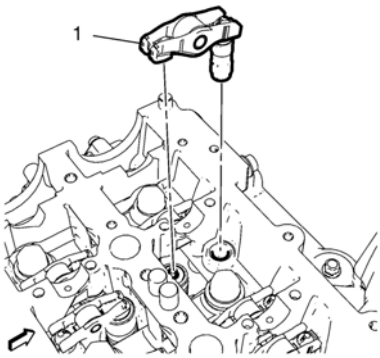

Note: Set aside in the order removed.

2. Remove the 16 valve rocker arms with the hydraulic valve lash adjusters (1).

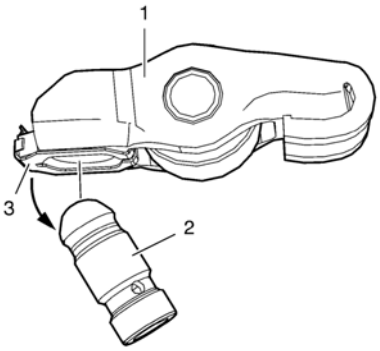

Note: Unclip the valve lifter from valve rocker arm in direction as shown (arrow). Mind to the centering link on retaining spring (3).

3. Remove the 16 valve rocker arms (1) from the hydraulic valve lash adjusters (2).

Installation Procedure

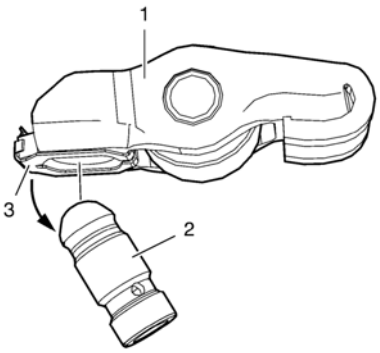

Note: Clip in the valve rocker arm to the valve lifter. Mind to the centering link on the retaining spring (3).

1. Install the 16 valve rocker arms (1) to the hydraulic valve lash adjusters (2).
2. Coat the 16 hydraulic valve lash adjusters with engine oil.

cardiagn.com

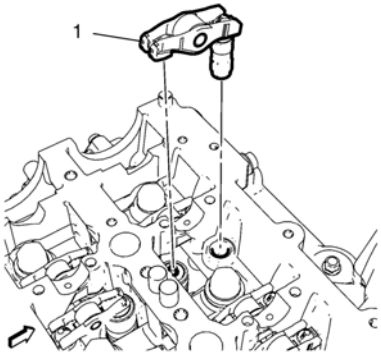

Note: If the hydraulic valve lash adjusters are beeing reused, the hydraulic valve lash adjusters must be installed in their original position.

3. Install the 16 valve rocker arms (1) with the hydraulic valve lash adjusters.
4. Install the intake camshaft. Refer to Intake Camshaft Replacement.

cardiagn.com

Special Tool

GE-22738-B Valve Spring Tester

For equivalent regional tools, refer to Special Tools.

Inspection Procedure

1. Clean the valve springs in solvent.

   Warning: Wear safety glasses in order to avoid eye damage.
2. Dry the valve springs with compressed air.
3. Inspect the valve springs for broken coils or coil ends.

Measurement Procedure

1. Measure the tension of the valve spring using the *GE-22738-B* tester . Refer to Engine Mechanical Specifications.
2. If low valve spring load is found, replace the valve springs. DO NOT use shims to increase spring load. The use of shims can cause the valve spring to bottom out before the camshaft lobe is at peak lift.

cardiagn.com

Special Tools

- *EN-46116* Remover / Installer Stem Seal
- *EN-47632* Cleaning Tool
- *EN-48247* Adapter - Valve Spring Compression
- *EN-49074* Compressor - Universal Valve Spring
- *EN-50453* Adapter - Air Compression

For equivalent regional tools refer to Special Tools.

Removal Procedure

1. Remove the 16 valve rocker arms. Refer to Valve Rocker Arm Replacement.

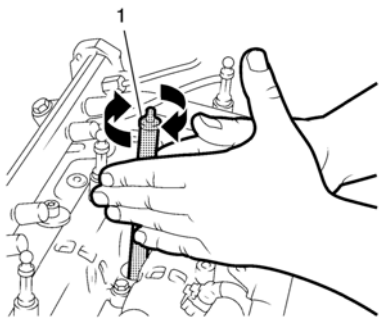

Caution: Refer to EN-47632 Cleaning Tool Rotation Caution.

2. Clean the injector sealing surfaces in the cylinder head, using the *EN-47632* cleaning tool (1) in following procedure:

- first take the brush side to loosen the dirt.
- second take the sponge side to remove the dirt.

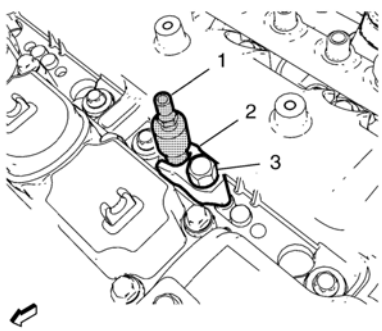

- Install the *EN-50453* adapter (1) to cylinder 1.
- Install the fuel injector bracket (2).

Caution: Refer to Fastener Caution.

- Install the fuel injector bracket bolt (3) and tighten the bolt to **20 Y (15 lb ft)**.

cardiagn.com

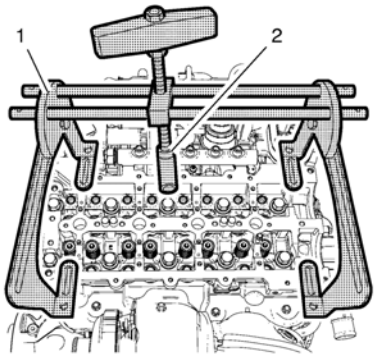

- Install the *EN-49074* compressor (1) with the *EN-48247* adapter (2).

Note: The following step will hold the valve seated and keep it from falling into the cylinder.

- Connect the compressed air hose to *EN-50453* adapter.
- Subject cylinder 1 with compressed air.

Note: The *EN-48247* adapter must be applied parallel to the valve retainers in order to prevent damage to the tools or the valve train components.

- Press down the valve spring and the upper valve spring retainer until the valve keys are discharged from spring load. Remove the valve keys.
- Remove the valve spring retainer and valve spring.

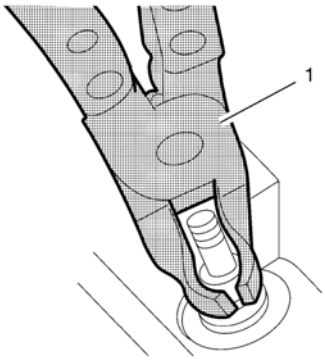

- Remove the valve stem oil seals. Use the *EN-46116* remover / installer (1).

Installation Procedure

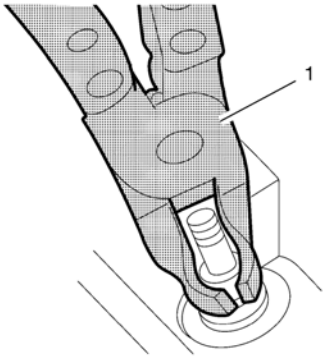

1. Install the NEW valve stem oil seals. Use the *EN-46116* remover / installer (1).
2. Install the valve spring retainer and valve spring.

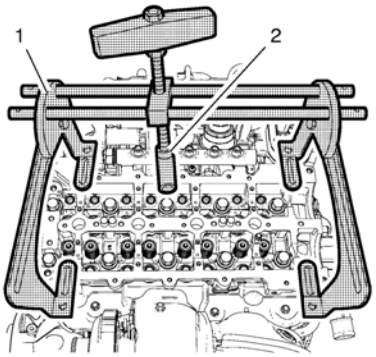

cardiagn.com

Note: Ensure that the cylinder is subject with compressed air.

3. Push the *EN-49074* compressor (1) with the *EN-48247* adapter slightly down until the valve keys are engaged in evidence.
4. Disconnect the compressed air hose from *EN-50453* adapter.
5. Repeat the procedure for the cylinder 2, 3 and 4.
6. Remove the *EN-49074* compressor (1) with the *EN-48247* adapter (2).

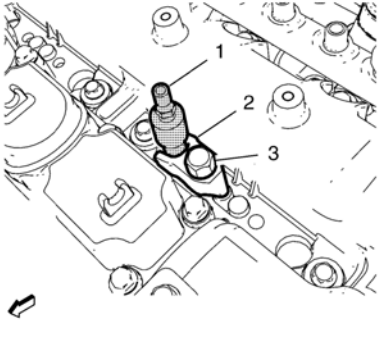

7. Remove fuel injector bracket bolt (3).
8. Remove the fuel injector bracket (2).
9. Remove *EN-50453* adapter (1) from cylinder 1.
10. Install the 16 valve rocker arms. Refer to Valve Rocker Arm Replacement.

cardiagn.com

Removal Procedure

1. Remove the battery cover. Refer to Battery Cover Replacement.
2. Disconnect the battery negative cable. Refer to Battery Negative Cable Disconnection and Connection.

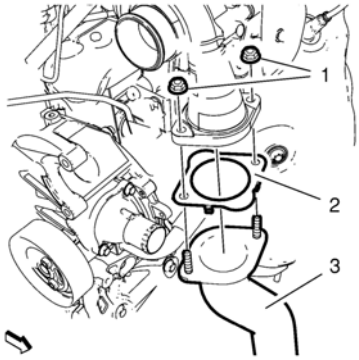

3. Remove the 2 charge air cooler inlet hose nuts (1).
4. Remove the charge air cooler inlet hose (3) from the turbocharger and remove the gasket (2).
5. Remove the intake air duct. Refer to Intake Air Duct Replacement.

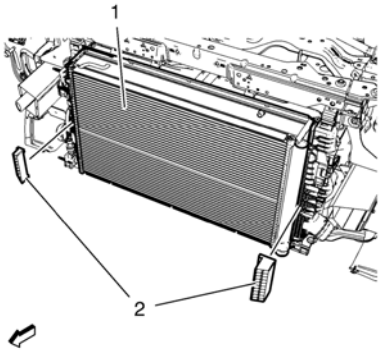

6. Disconnect the air conditioning refrigerant pressure sensor wiring harness plug from the air conditioning condenser.
7. Unclip the 2 radiator protector fenders (2) from the radiator (1).

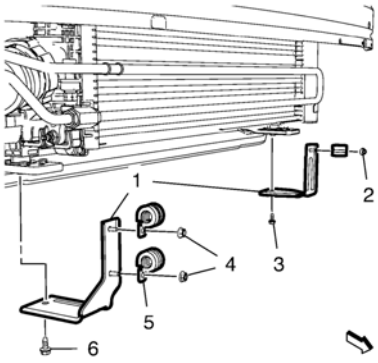

8. Remove the 3 power steering fluid cooling pipe loop bracket hose clamp nuts (2, 4).
9. Remove the 2 power steering fluid cooling pipe loop bracket bolts (3, 6).
10. Remove the 2 power steering fluid cooling pipe loop brackets (1).
11. Remove the radiator air seal.

cardiagn.com

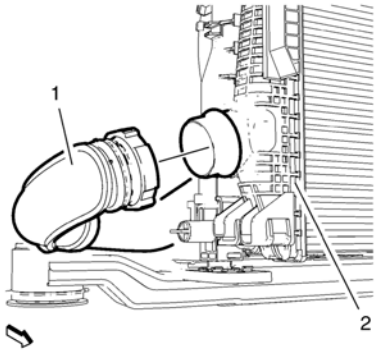

12. Remove the charge air cooler inlet hose (1) from the charge air cooler (2).
13. Remove the radiator upper brackets. Refer to Radiator Upper Bracket Replacement.

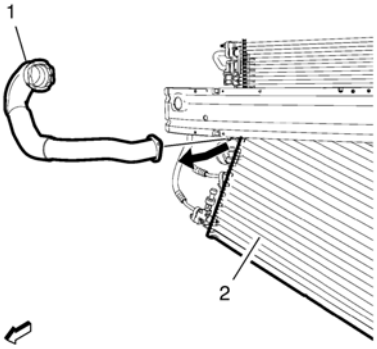

14. Unclip the air conditioning condenser (2) from the charge air cooler.
15. Hang the air conditioning condenser (2) aside and secure with safety belts.

Note: Move the radiator forward to remove the charge air cooler inlet hose.

16. Remove the charge air cooler inlet hose (1) downwards from the vehicle.

Installation Procedure

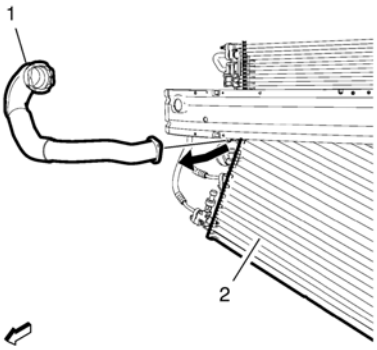

Note: Move the radiator forward to install the charge air cooler inlet hose.

1. Position the charge air cooler inlet hose (1) to the vehicle.
2. Install the air conditioning condenser (2) to the charge air cooler.

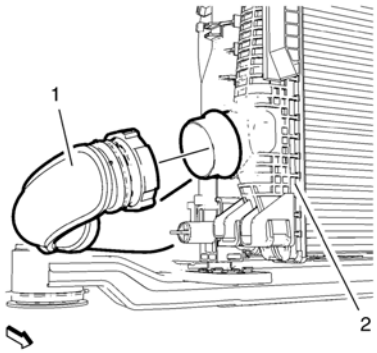

cardiagn.com

3. Install the charge air cooler inlet hose (1) to the charge air cooler (2).
4. Install the radiator upper brackets. Refer to Radiator Upper Bracket Replacement.

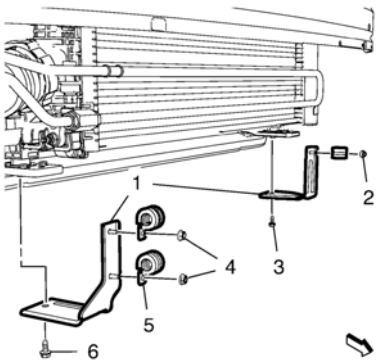

Caution: Refer to Fastener Caution.

5. Install the 2 power steering fluid cooling pipe loop brackets (1).
6. Install the 2 power steering fluid cooling pipe loop bracket bolts (3, 6) and tighten to **9 Y (80 lb in)**.
7. Install the 3 power steering fluid cooling pipe loop bracket hose clamp nuts (2, 4) and tighten to **9 Y (80 lb in)**.
8. Install the radiator air seal.

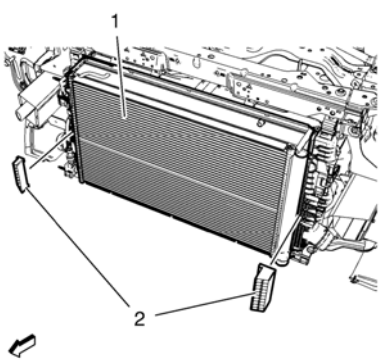

9. Clip in the 2 radiator protector fenders (2) to the radiator (1).
10. Connect the air conditioning refrigerant pressure sensor wiring harness plug to the air conditioning condenser.
11. Install the intake air duct. Refer to Intake Air Duct Replacement.

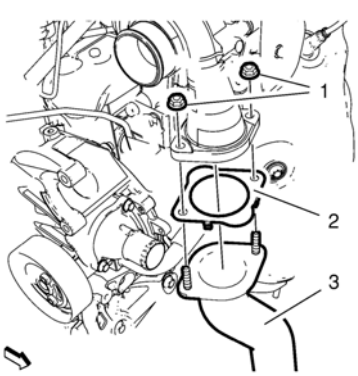

12. Install a NEW gasket (2).
13. Install the charge air cooler inlet hose (3) to the turbocharger.
14. Install the 2 charge air cooler inlet hose nuts (1) and tighten to **22 Y (16 lb ft)**.
15. Connect the battery negative cable. Refer to Battery Negative Cable Disconnection and Connection.
16. Install the battery cover. Refer to Battery Cover Replacement.

cardiagn.com

Removal Procedure

1. Remove the engine sight shield. Refer to Engine Sight Shield Replacement.
2. Remove the battery tray. Refer to Battery Tray Replacement.
3. Remove the engine control module. Refer to Engine Control Module Replacement.
4. Remove the radiator surge tank. Refer to Radiator Surge Tank Replacement.
5. Unclip the engine wiring harness retaining clip from the charge air cooler outlet front hose.
6. Unclip the transmission vent hose from the charge air cooler outlet front hose.

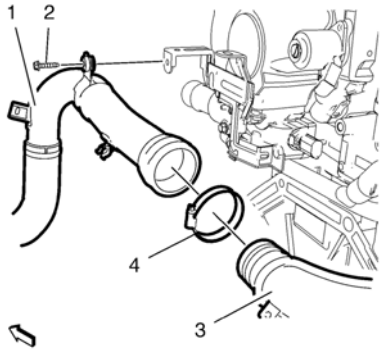

7. Remove the charge air cooler outlet front hose bracket bolt (2).
8. Loosen the charge air cooler outlet front hose to rear hose clamp (4).
9. Detach the charge air cooler outlet front hose (1) along with the clamp (4) from the charge air cooler outlet rear hose (3).

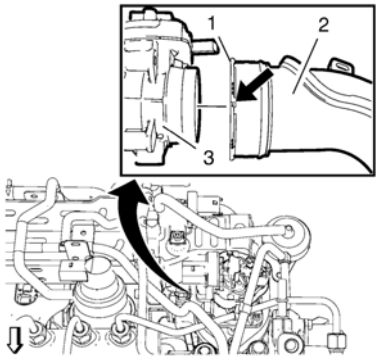

10. Unclip the 2 wiring harness retaining clips from the charge air cooler outlet rear hose (2).
11. Place a suitable tool at the rabbet (1) and rotate the lock ring counterclockwise.
12. Detach the charge air cooler outlet rear hose (2) from the throttle body (3).
13. Remove the charge air cooler outlet rear hose (2).

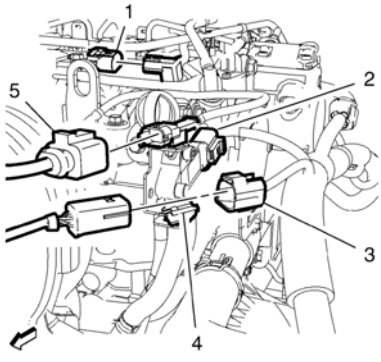

14. Disconnect the exhaust temperature sensor wiring harness plug (5).
15. Unclip the heated oxygen sensor wiring harness plug (3) from the retainer clip (4) and disconnect the heated oxygen sensor wiring harness plug (3).
16. Disconnect the exhaust pressure differential sensor hose wiring harness plug (2).

cardiagn.com

17. Unclip the engine wiring harness retaining clip from the charge air cooler outlet front hose.
18. Unclip the transmission vent hose from the charge air cooler outlet front hose.

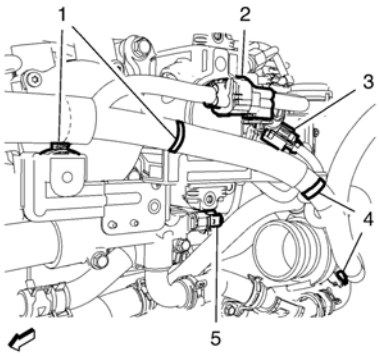

19. Unclip the 2 wiring harness clips (1) from the wiring harness bracket.
20. Remove the upper radiator brackets. Refer to Radiator Upper Bracket Replacement.
21. Remove the intake air duct. Refer to Intake Air Duct Replacement.
22. Remove the left radiator protector fender from the radiator.
23. Remove the charge air cooler inlet and outlet hose from the charge air cooler.

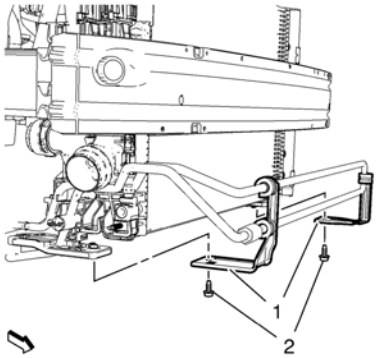

24. Remove the power steering fluid cooling pipe loop bracket bolts (2).
25. Hang the power steering fluid cooling pipe loop aside.

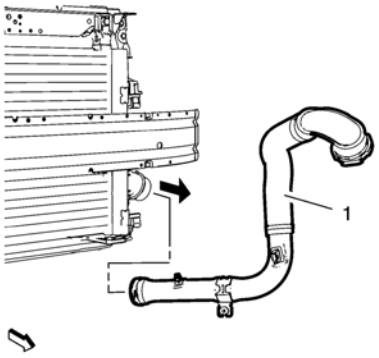

Note: Move the radiator forward to remove the charge air cooler outlet hose.

26. Remove the charge air cooler outlet hose (1) downwards from the vehicle.

Installation Procedure

cardiagn.com

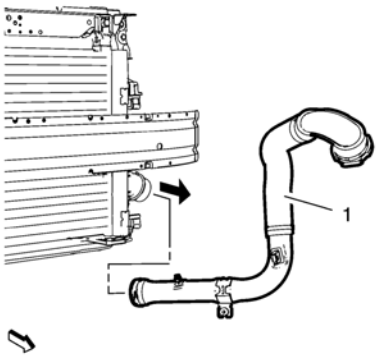

Note: Move the radiator forward to install the charge air cooler outlet hose.

1. Position the charge air cooler outlet hose (1) to the vehicle.

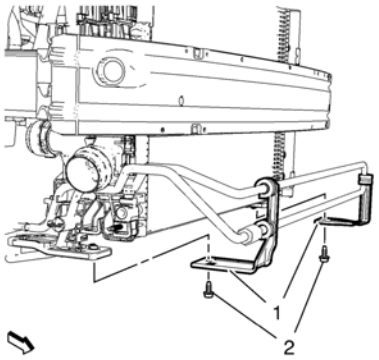

Caution: Refer to Fastener Caution.

2. Install the power steering fluid cooling pipe loop.
3. Install the 2 power steering fluid cooling pipe loop bracket bolts (2) and tighten to **9 Y (80 lb in)**.
4. Install the charge air cooler inlet and outlet hose to the charge air cooler.
5. Install the left radiator protector fender to the radiator.
6. Install the radiator upper brackets. Refer to Radiator Upper Bracket Replacement.
7. Install the intake air duct. Refer to Intake Air Duct Replacement.

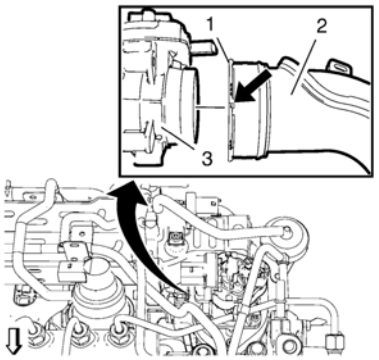

Note: Make sure that the retaining ring is locked.

8. Install the charge air cooler outlet rear hose (2) to the throttle body (3).
9. Clip in the 2 wiring harness retaining clips to the charge air cooler outlet rear hose (2).

cardiagn.com

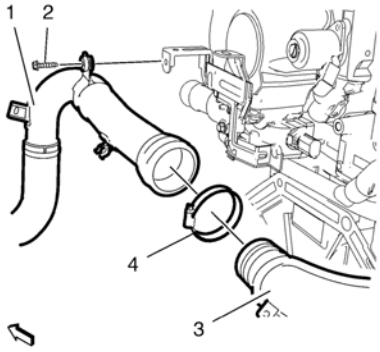

10. Install the charge air cooler outlet front hose (1) along with the clamp (4) to the charge air cooler outlet rear hose (3).

Caution: Refer to Fastener Caution.

11. Install the charge air cooler outlet front hose bracket bolt (2) and tighten to **9 Y (80 lb in)**.
12. Tighten the charge air cooler outlet front hose tor rear hose clamp (4) to **4 Y (35 lb in)**.
13. Clip in the engine wiring harness retaining clip to the charge air cooler outlet front hose.

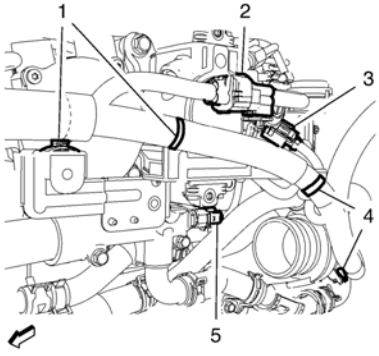

14. Clip in the 2 wiring harness clips (1) to the wiring harness bracket.

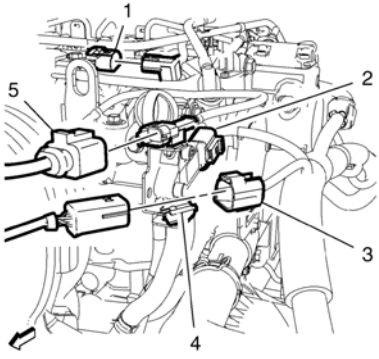

15. Connect the exhaust temperature sensor wiring harness plug (5).
16. Clip the heated oxygen sensor wiring harness plug (3) to the retainer clip (4) and connect the heated oxygen sensor wiring harness plug (3).
17. Connect the exhaust pressure differential sensor hose wiring harness plug (2).
18. Clip in the transmission vent hose to the charge air cooler outlet front hose.
19. Install the radiator surge tank. Refer to Radiator Surge Tank Replacement.
20. Install the engine control module. Refer to Engine Control Module Replacement.
21. Install the battery tray. Refer to Battery Tray Replacement.
22. Install the engine sight shield. Refer to Engine Sight Shield Replacement.

cardiagn.com

Removal Procedure

1. Remove the engine sight shield. Refer to Engine Sight Shield Replacement.
2. Remove the battery tray. Refer to Battery Tray Replacement.
3. Remove the engine control module. Refer to Engine Control Module Replacement.
4. Remove the radiator surge tank. Refer to Radiator Surge Tank Replacement.
5. Unclip the engine wiring harness retaining clip from the charge air cooler outlet front hose.

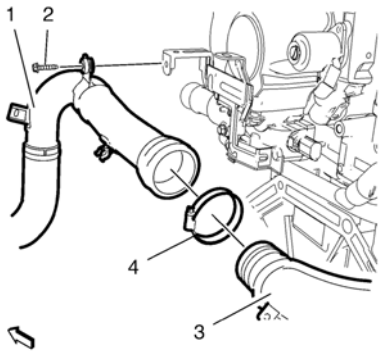

6. Remove the charge air cooler outlet front hose bracket bolt (2).
7. Loosen the charge air cooler outlet front hose to rear hose clamp (4).
8. Detach the charge air cooler outlet front hose (1) along with the clamp (4) from the charge air cooler outlet rear hose (3).

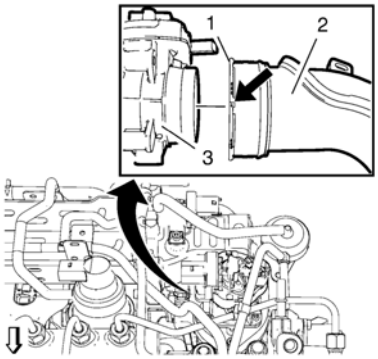

9. Unclip the 2 wiring harness retaining clips from the charge air cooler outlet rear hose (2).
10. Place a suitable tool at the rabbet (1) and rotate the lock ring counterclockwise.
11. Detach the charge air cooler outlet rear hose (2) from the throttle body (3).
12. Remove the charge air cooler outlet rear hose (2).
13. Remove the front bumper fascia. Refer to Front Bumper Fascia Removal and Installation.

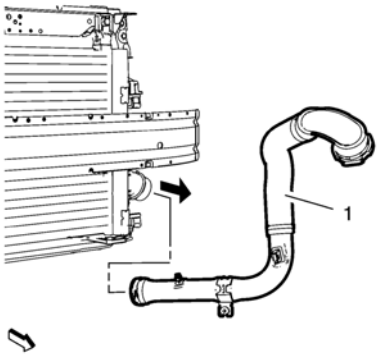

14. Unclip the charge air cooler outlet hose (1) from the charge air cooler.
15. Remove the charge air cooler outlet hose (1) downwards from the vehicle.

cardiagn.com

Installation Procedure

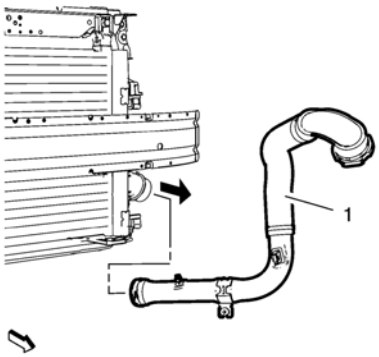

1. Position the charge air cooler outlet hose (1) to the vehicle.
2. Connect the charge air cooler outlet hose (1) to the charge air cooler.
3. Install the front bumper fascia. Refer to Front Bumper Fascia Removal and Installation.

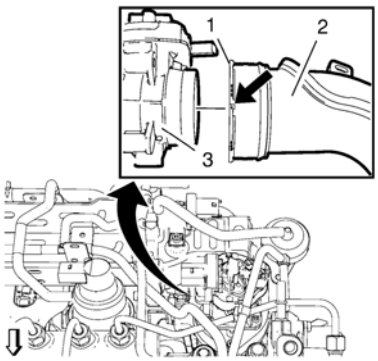

Note: Make sure that the retaining ring is locked.

4. Install the charge air cooler outlet rear hose (2) to the throttle body (3).
5. Clip in the 2 wiring harness retaining clips to the charge air cooler outlet rear hose (2).

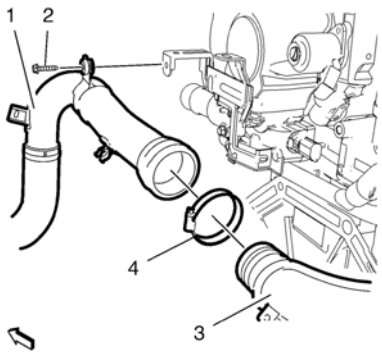

6. Install the charge air cooler outlet front hose (1) along with the clamp (4) to the charge air cooler outlet rear hose (3).

Caution: Refer to Fastener Caution.

7. Install the charge air cooler outlet front hose bracket bolt (2) and tighten to **9 Y (80 lb in)**.
8. Tighten the charge air cooler outlet front hose tor rear hose clamp (4) to **4 Y (35 lb in)**.
9. Clip in the engine wiring harness retaining clip to the charge air cooler outlet front hose.
10. Install the radiator surge tank. Refer to Radiator Surge Tank Replacement.
11. Install the engine control module. Refer to Engine Control Module Replacement.
12. Install the battery tray. Refer to Battery Tray Replacement.
13. Install the engine sight shield. Refer to Engine Sight Shield Replacement.

cardiagn.com

Removal Procedure

1. Remove the battery cover. Refer to Battery Cover Replacement.
2. Disconnect the battery negative cable. Refer to Battery Negative Cable Disconnection and Connection.
3. Remove the intake air duct. Refer to Intake Air Duct Replacement.
4. Remove the radiator air seal.

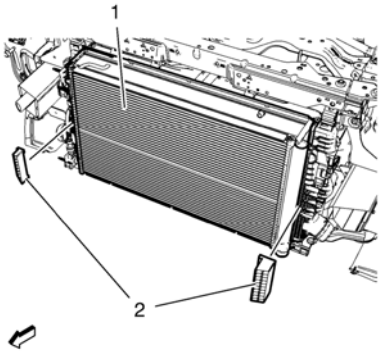

5. Disconnect the air conditioning refrigerant pressure sensor wiring harness plug from the air conditioning condenser.
6. Unclip the 2 radiator protector fenders (2) from the radiator (1).

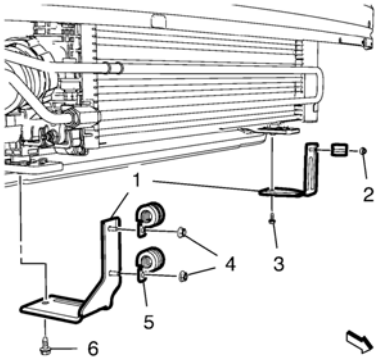

7. If equipped, remove the 3 power steering fluid cooling loop pipe bracket hose clamp nuts (2, 4).
8. If equipped, remove the 3 hose clamps (5).
9. If equipped, remove the 2 power steering fluid cooling loop pipe bracket bolts (3, 6).
10. If equipped, remove the 2 power steering fluid cooling loop pipe brackets (1).

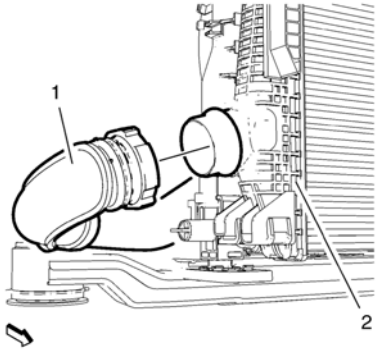

11. Remove the charge air cooler inlet hose (1) from the charge air cooler (2).

cardiagn.com

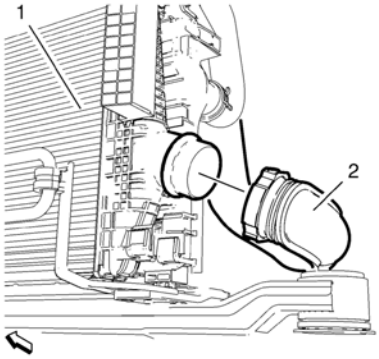

12. Remove the charge air cooler outlet hose (2) from the charge air cooler (1).

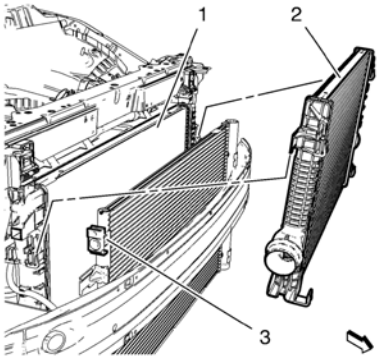

Note: Handle the cooling module with care.

13. Remove the condenser (3) from the charge air cooler (2) and secure with safety belts.
14. Remove the charge air cooler (2) in top direction from the radiator (1).

Installation Procedure

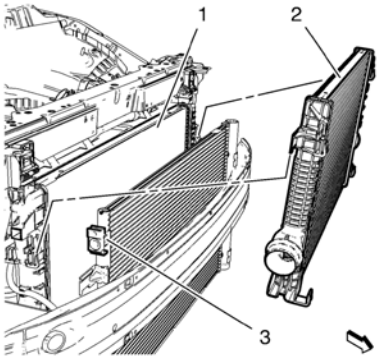

Note: Handle the cooling module with care.

1. Install the charge air cooler (2) to the radiator (1).
2. Remove the safety belts and install the condenser (3) to the charge air cooler (2).

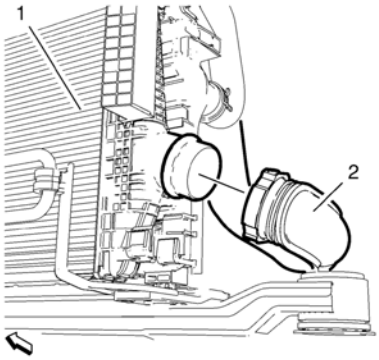

3. Install the charge air cooler outlet hose (2) to the charge air cooler (1).

cardiagn.com

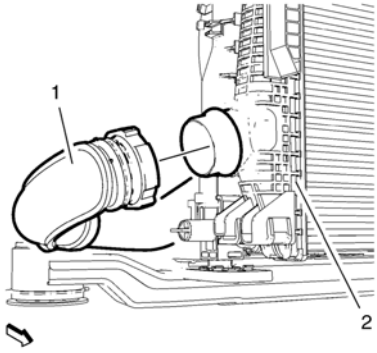

4. Install the charge air cooler inlet hose (1) to the charge air cooler (2).

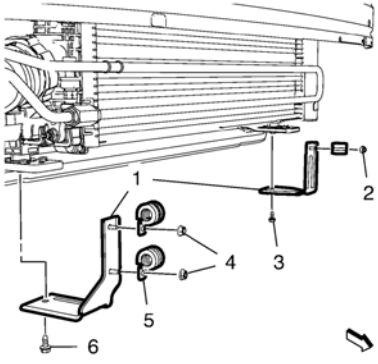

Caution: Refer to Fastener Caution.

5. If equipped, install the 2 power steering fluid cooling loop pipe brackets (1).
6. If equipped, install the 2 power steering fluid cooling loop pipe bracket bolts (3, 6) and tighten to **9 Y (80 lb in)**.
7. If equipped, install the 3 hose clamps (5).
8. If equipped, install the 3 power steering fluid cooling loop pipe bracket hose clamp nuts (2, 4) and tighten to **9 Y (80 lb in)**.

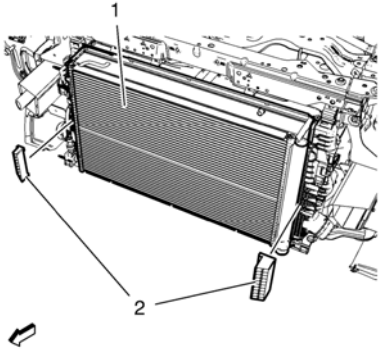

9. Clip in the 2 radiator protector fenders (2) to the radiator (1).
10. Connect the air conditioning refrigerant pressure sensor wiring harness plug to the air conditioning condenser.
11. Install the radiator air seal.
12. Install the intake air duct. Refer to Intake Air Duct Replacement.
13. Connect the battery negative cable. Refer to Battery Negative Cable Disconnection and Connection.
14. Install the battery cover. Refer to Battery Cover Replacement.

cardiagn.com

Note: Do not use a chemical flush.

Store used coolant in the proper manner, such as in a used engine coolant holding tank.

Do not pour used coolant down a drain. Ethylene glycol antifreeze is a very toxic chemical.

Do not dispose of coolant into the sewer system or ground water. This is illegal and ecologically unsound.

Various methods and equipment can be used to flush the cooling system. If special equipment is used, such as a back flusher, follow the manufactures instruction. However, always remove the thermostat before back flushing the system.

1. Apply the park brake.
2. Drain the coolant. Refer to Cooling System Draining and Filling.
3. Fill the coolant system with clean drinkable water. Refer to Cooling System Draining and Filling.
4. Start the engine and run at 2,000 RPM until the thermostat opens.
5. Turn OFF the engine.
6. Drain the coolant system. Refer to Cooling System Draining and Filling.
7. Repeat the above procedure until the water from the coolant system is colorless.
8. Drain the coolant system. Refer to Cooling System Draining and Filling.
9. Add 3.8 liters (1.0 gal) of concentrated antifreeze since there will be some water in the system.
10. Add a mixture of 50/50 antifreeze and clean drinkable water until the level stabilizes at the weld seam on the surge tank. Refer to Cooling System Draining and Filling.

cardiagn.com

Cooling System

The cooling system's function is to maintain an efficient engine operating temperature during all engine speeds and operating conditions. The cooling system is designed to remove approximately one-third of the heat produced by the burning of the air-fuel mixture. When the engine is cold, the coolant does not flow to the radiator until the thermostat opens. This allows the engine to warm quickly. Refer to the following illustration for the components in the system and the basic flow path of the coolant.

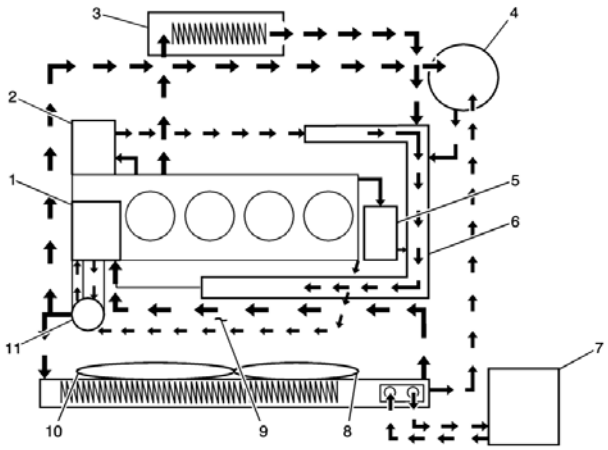

The cooling system consists of the following components:

- The Water Pump (1)
- The Engine Oil Cooler (2)
- The Heater (3)
- The Surge Tank (4)
- The EGR Cooler (5)
- The Water Pipe (6)
- Transaxle (7)
- Auxiliary Cooling Fan (8)
- Intake Manifold (9)
- Main Cooling Fan (10)
- Thermostat (11)

Water Pump

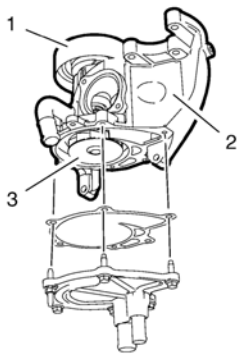

Water pump is a component of the engine cooling system and circulated the coolant from each cooling circuit components. This water pump consists of gasket, bearing, pulley (1), housing (2) and impeller (3) and is driven by the drive belt with the back of drive belt to loose noise to water pump pulley. Water pump apply drain hole cup to cap to prevent coolant leakage for customers.

Thermostat

cardiagn.com

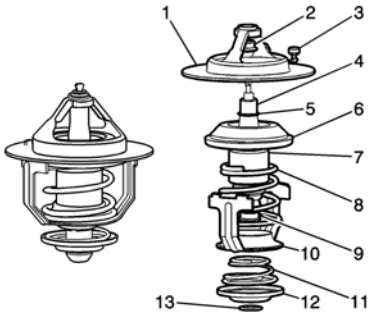

Thermostat controls coolant flowing and is assembled on the water pump housing. By coolant temperature, the wax-pellet (7) of the thermostat expanded and shrunk mechanically main spring to flow the coolant. The thermostat begins to open at 80°C (176°F) and fully open at 95°C (203°F). The thermostat closes at 75°C (167°F).

Radiator

The radiator is a heat exchanger. It consists of a core and 2 tanks. The aluminum core is a tube and fin cross-flow design that extends from the inlet tank to the outlet tank. Fins are placed around the outside of the tubes to improve heat transfer to the atmosphere. The inlet and outlet tanks are a molded, high temperature, nylon reinforced plastic material. A high temperature rubber gasket seals the tank flange edge to the aluminum core. The tanks are clamped to the core with clinch tabs. The tabs are part of the aluminum header at each end of the core. The radiator also has a drain cock located in the bottom of the right hand tank. The drain cock unit includes the drain cock and drain cock seal. The radiator removes heat from the coolant passing through it. The fins on the core transfer heat from the coolant passing through the tubes. As air passes between the fins, it absorbs heat and cools the coolant.

Surge Tank

The surge tank is a plastic tank with a threaded pressure cap. The tank is mounted at a point higher than all other coolant passages. The surge tank provides an air space in the cooling system that allows the coolant to expand and contract. The surge tank provides a coolant fill point and a central air bleed location. During vehicle use, the coolant heats and expands. The increased coolant volume flows into the surge tank. As the coolant circulates, any air is allowed to bubble out. Coolant without air bubbles absorbs heat much better than coolant with bubbles.

Cooling Fan

The cooling fans are mounted behind the radiator in the engine compartment. The engine cooling fan is driven by electric power. The cooling fan draws air through the radiator to improve the transfer of heat from the coolant to the atmosphere. As the fan blades spin, they increase the flow of air across the radiator core and across the condenser on air condition (A/C) equipped vehicles. This helps to speed cooling when the vehicle is at idle or moving at low speeds.

cardiagn.com

Warning: With a pressurized cooling system, the coolant temperature in the radiator can be considerably higher than the boiling point of the solution at atmospheric pressure. Removal of the surge tank cap, while the cooling system is hot and under high pressure, causes the solution to boil instantaneously with explosive force. This will cause the solution to spew out over the engine, the fenders, and the person removing the cap. Serious bodily injury may result.

Note: Use only a GM released anti-freeze mixture and ensure a concentration of 50 percent water to 50 percent antifreeze. Antifreeze does not just prevent the cooling system from freezing up, it also protects all the components that are in contact with coolant from rust/limescale deposits. As a result, antifreeze should always be added, even in tropical countries.

In addition to the anti-freeze mixture, water quality also plays an important role. Potable tap water should normally suffice to fulfil this requirement. The quality of regenerated sea water is not suitable.

Damage may also be caused to the engine if unauthorized anti-freeze agent is used.

If radiator, cylinder head or cylinder head seal have been replaced the old coolant must not be re-used.

Cooling System Draining

1. Open cooling system. Unscrew coolant surge tank cap.

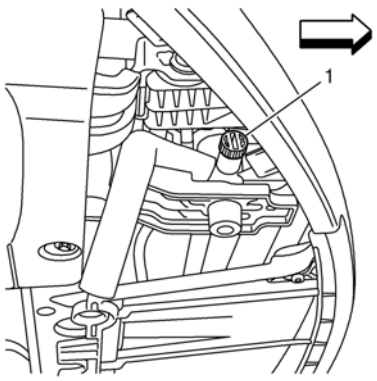

2. For draining the cooling system, open the drain screw (1) on the radiator.

Cooling System Filling

1. Vehicles with air condition, switch air conditioning off.
2. After draining the system, close the drain screw on the radiator.

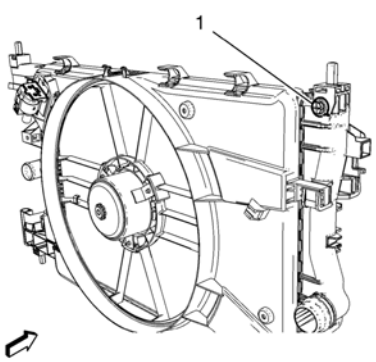

Note: Close vent screw when coolant flows out on the loosen vent screw.

3. Remove the vent screw (1) on radiator and turn in one thread again.

cardiagn.com

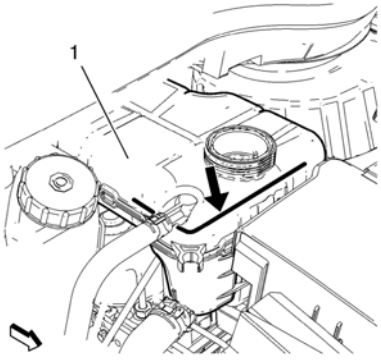

4. Top up coolant up to the bottom line of the bleed nozzle on the coolant surge tank (1).

   When the coolant has stopped dropping top up the coolant until the bottom line of the down pipe hole (black arrow).
5. Start the Engine

   Note: After Engine Start top up coolant immediately until the bottom line of the down pipe hole (black arrow) and close cap.

   Note: After removing the heater core (located in passenger room) the following additional work has to be done:

   Kick the accelerator pedal 3 times immediately – thereby the engine speed should not exceed 2500 RPM.
6. Warm up the engine.

   Note: After removing the heater core (located in passenger room) let the engine run for further 2 minutes at 2.000–2.500 RPM. This ensures complete venting of the cooling system.
7. Vent cooling system

   Kick the accelerator pedal 3 times – thereby the engine speed should not exceed 2.500 RPM.
8. Switch the engine off and let the engine cool down.

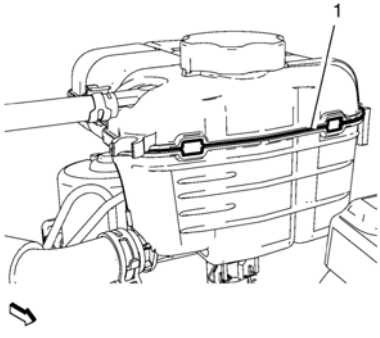

9. Check coolant level and correct the coolant to welding area (1) if necessary.
10. After a test drive let the engine cool down and check the coolant level again. Adjust the coolant level to welding area (1) if necessary.

cardiagn.com

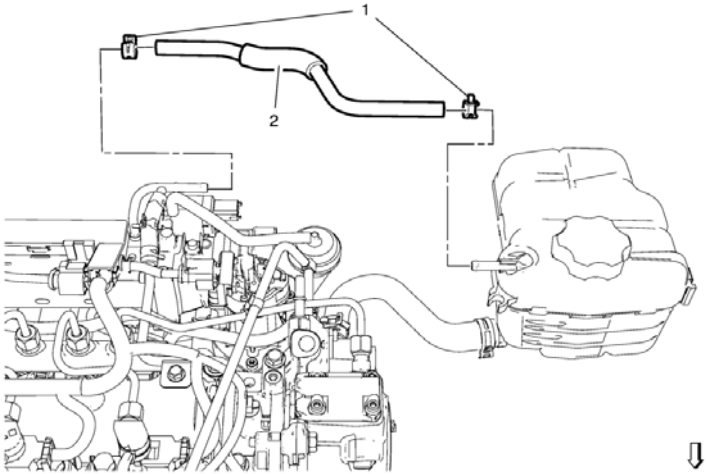

Engine Coolant Air Bleed Hose Replacement

Callout	Component Name

Warning: To avoid being burned, do not remove the radiator cap or surge tank cap while the engine is hot. The cooling system will release scalding fluid and steam under pressure if radiator cap or surge tank cap is removed while the engine and radiator are still hot.

Preliminary Procedures

1. Remove/Install the engine sight shield. Refer to Engine Sight Shield Replacement.
2. Fill the cooling system. Refer to Cooling System Draining and Filling.

	Engine Coolant Air Bleed Hose Clamp (Qty: 2)
1	**Procedure** Place a collecting basin underneath.
2	Engine Coolant Air Bleed Hose

cardiagn.com

Removal Procedure

1. For vehicles with manual transmission – F40, remove the radiator. Refer to Radiator Replacement.
2. For vehicles with automatic transmission – 6T45, remove the engine coolant fan shroud. Refer to Engine Coolant Fan Shroud Replacement.

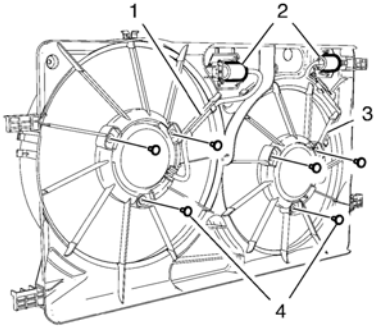

Note: For vehicles with manual transmission, the engine coolant fan shroud remains in the vehicle.

3. Unclip the 2 engine coolant fan wiring harnesses (1, 3) from the engine coolant fan shroud.
4. Unclip the 2 engine coolant fan resistor brackets (2) from the engine coolant fan shroud.
5. Remove the 6 engine coolant fan bolts (4) from the 2 engine coolant fans.
6. Remove the 2 engine coolant fans from the engine coolant fan shroud.

Installation Procedure

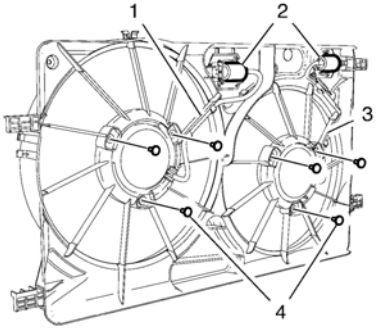

1. Install the 2 engine coolant fans to the engine coolant fan shroud.

Caution: Refer to Fastener Caution.

2. Install the 6 engine coolant fan bolts (4) to the 2 engine coolant fans and tighten to **4 Y (35 lb in)**.
3. Clip the 2 engine coolant fan resistor brackets (2) into the engine coolant fan shroud.
4. Clip in the 2 engine coolant fan wiring harnesses (1, 3) to the engine coolant fan shroud.
5. For vehicles with manual transmission – F40, install the radiator. Refer to Radiator Replacement.
6. For vehicles with automatic transmission – 6T45, install the engine coolant fan shroud. Refer to Engine Coolant Fan Shroud Replacement.

cardiagn.com

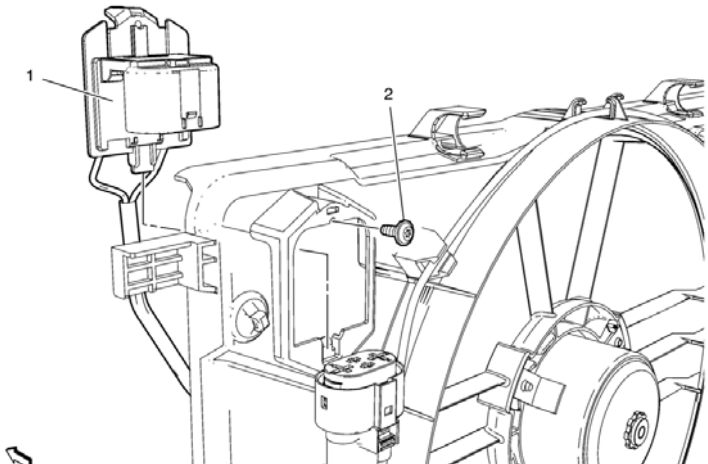

Engine Coolant Fan Resistor Mount Repair

Callout	Component Name

Preliminary Procedure

Remove the engine cooling fan shroud. Refer to Engine Coolant Fan Shroud Replacement.

1	Engine Coolant Fan Resistor Mount
2	Engine Coolant Fan Resistor Mount Bolt **Caution:** Refer to Fastener Caution.

cardiagn.com

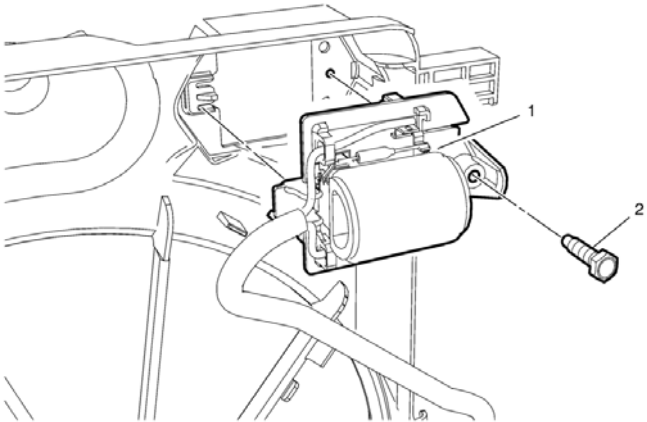

Engine Coolant Fan Resistor Mount Repair

Callout	Component Name
Preliminary Procedures	
Remove the engine cooling fan shroud. Refer to Engine Coolant Fan Replacement.	
1	Engine Coolant Fan Resistor Mount
2	Engine Coolant Fan Resistor Mount Bolt **Caution:** Refer to Fastener Caution. **Procedure** In case of a broken engine coolant fan resistor mount use this repair procedure. **Tighten** 5 Y (44 lb in)

cardiagn.com

Removal Procedure

1. Drain the cooling system. Refer to Cooling System Draining and Filling.
2. Remove the charge air cooler. Refer to Charge Air Cooler Replacement.

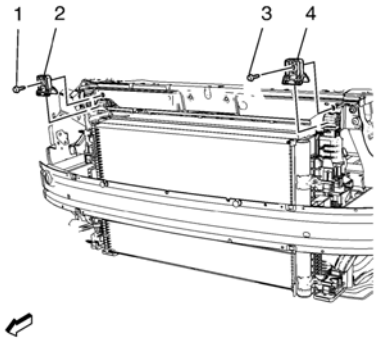

3. Remove the 2 upper radiator bracket bolts (1, 3).
4. Remove the 2 upper radiator brackets (2, 4).
5. Remove the radiator outlet hose from the radiator. Refer to Radiator Outlet Hose Replacement.

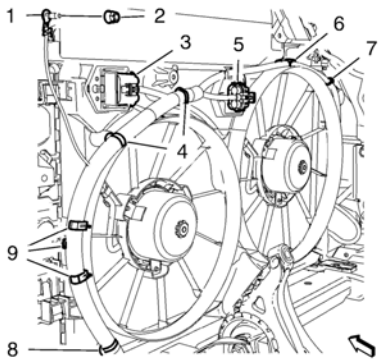

6. Unclip the wiring harness clip (8) from the engine coolant fan shroud.
7. Unclip the wiring harness from the engine coolant fan shroud holders (9) and hang the wiring harness aside.
8. Disconnect the 2 engine coolant fan motor wiring harness plugs (3, 5).
9. Unclip the wiring harness clip (4, 7) from the engine coolant fan shroud.
10. Unclip the wiring harness from the engine coolant fan shroud holders (6).
11. Hang the engine coolant fan shroud wiring harness aside.

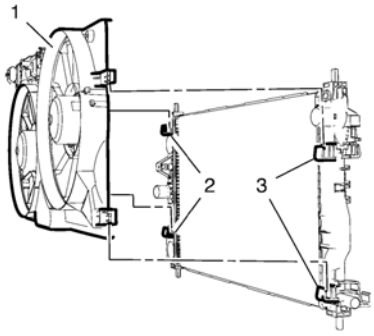

12. Remove the engine coolant fan shroud (1) in top direction from the 4 radiator clips (2, 3).

cardiagn.com

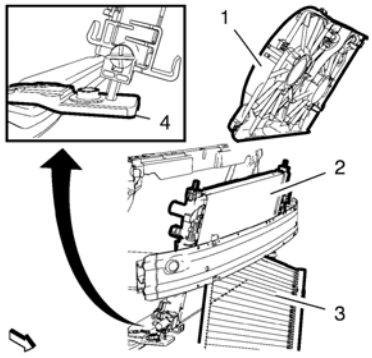

Note: Ensure that the air conditioning condenser (3) is secured with safety belts.

13. Remove the radiator (2) from the radiator lower brackets (4) in top direction and tipping the radiator forward.
14. Remove the engine coolant fan shroud (1) in top direction from the vehicle.

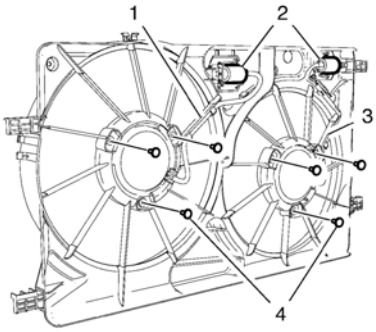

15. Unclip the 2 engine coolant fan wiring harnesses (1, 3) from the engine coolant fan shroud.
16. Unclip the 2 engine coolant fan connectors (2) from the engine coolant fan shroud.
17. Remove the 6 engine coolant fan bolts (4) from the 2 engine coolant fans.
18. Remove the 2 engine coolant fans from the engine coolant fan shroud.

Installation Procedure

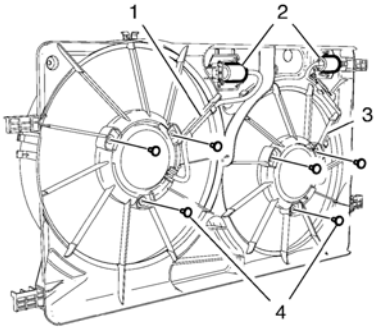

1. Install the 2 engine coolant fans to the engine coolant fan shroud.

Caution: Refer to Fastener Caution.

2. Install the 6 engine coolant fan bolts (4) to the 2 engine coolant fans and tighten to **4 Y (35 lb in)**.
3. Clip the 2 engine coolant fan connectors (2) into the engine coolant fan shroud.
4. Clip in the 2 engine coolant fan wiring harnesses (1, 3) to the engine coolant fan shroud.

cardiagn.com

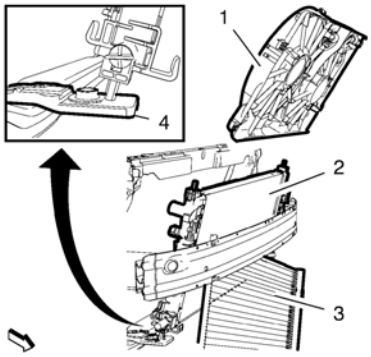

5. Install the engine coolant fan shroud (1) to the vehicle.
6. Install the radiator (2) to the radiator lower brackets.

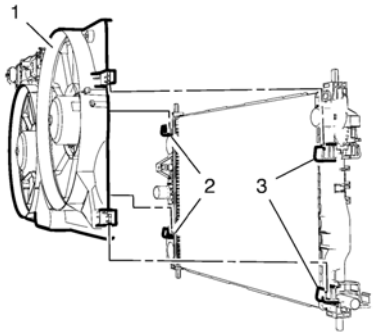

7. Install the engine coolant fan shroud (1) to the 4 radiator clips (2, 3).

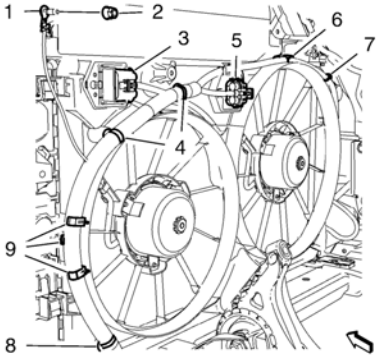

8. Install and position the engine coolant fan shroud wiring harness.
9. Clip in the wiring harness to the engine coolant fan shroud holders (6).
10. Clip the wiring harness clip (4, 7) into the engine coolant fan shroud.
11. Connect the 2 engine coolant fan motor wiring harness plugs (3, 5).
12. Clip the wiring harness into the engine coolant fan shroud holders (9).
13. Clip the wiring harness clip (8) into the engine coolant fan shroud.
14. Install the radiator outlet hose to the radiator. Refer to Radiator Outlet Hose Replacement.

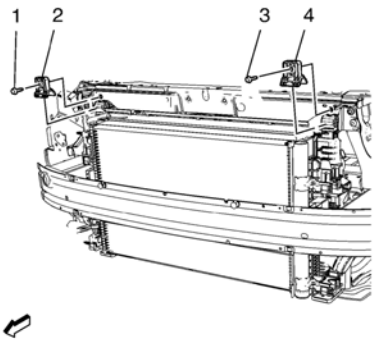

Caution: Refer to Fastener Caution.

cardiagn.com

15. Install the 2 upper radiator brackets (2, 4).
16. Install the 2 upper radiator bracket bolts (1, 3) and tighten to **22 Y (16 lb ft)**.
17. Install the charge air cooler. Refer to Charge Air Cooler Replacement.
18. Fill the cooling system. Refer to Cooling System Draining and Filling.

cardiagn.com

Removal Procedure

1. Open the hood.
2. Remove the battery cover. Refer to Battery Cover Replacement.
3. Disconnect the battery negative cable. Refer to Battery Negative Cable Disconnection and Connection.

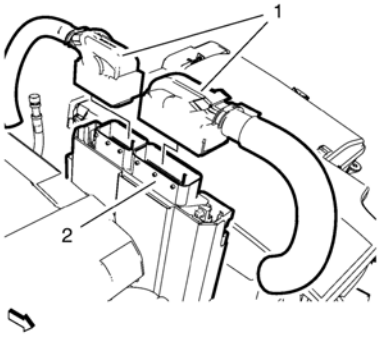

4. Disconnect the 2 engine control module wiring harness plugs (1) from the engine control module (2).

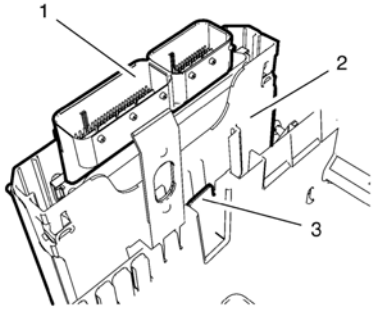

5. Remove the engine control module bracket (2) along with the engine control module (1) from the battery tray (3).
6. Remove the battery tray. Refer to Battery Tray Replacement.
7. Remove the front bumper fascia. Refer to Front Bumper Fascia Removal and Installation.

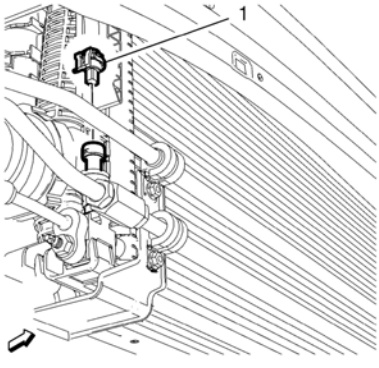

8. Disconnect the air conditioning refrigerant pressure sensor wiring harness plug (1).
9. Raise and support the vehicle. Refer to Lifting and Jacking the Vehicle.
10. Remove the engine compartment insulator. Refer to Front Compartment Insulator Replacement.

cardiagn.com

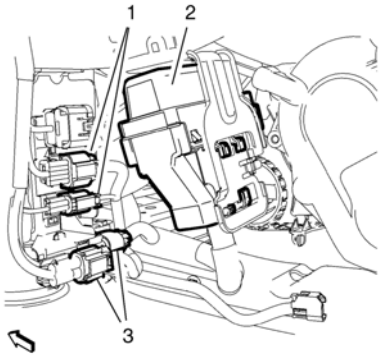

11. Slide the CRFM module box (2) to the right and remove the CRFM module box from the bracket.
12. Disconnect the 4 wiring harness connectors (1, 3).

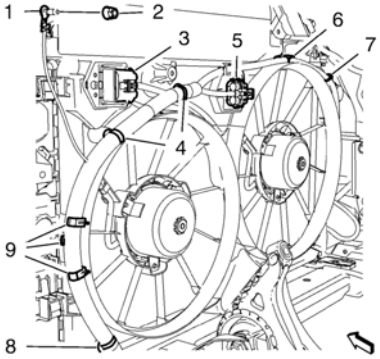

13. Unclip the wiring harness clip (8) from the engine coolant fan shroud.
14. Unclip the wiring harness from the engine coolant fan shroud holders (9). Hang the wiring harness aside.
15. Lower the vehicle.
16. Remove the wiring harness ground cable nut (2) and the wiring harness ground cable (1).
17. Disconnect the 2 engine coolant fan motor wiring harness plugs (3, 5).
18. Unclip the wiring harness clip (4, 7) from the engine coolant fan shroud.
19. Unclip the wiring harness from the engine coolant fan shroud holders (6).
20. Remove the engine coolant fan shroud wiring harness from the vehicle.

Installation Procedure

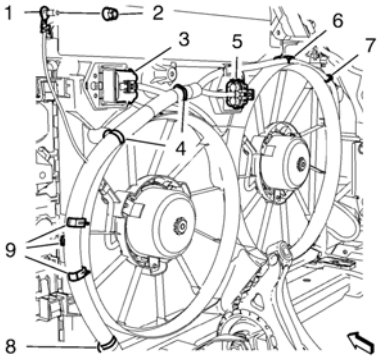

1. Install and position the engine coolant fan shroud wiring harness plug.
2. Clip the wiring harness to the engine coolant fan shroud holders (6).
3. Clip the wiring harness clip (4, 7) to the engine coolant fan shroud.
4. Connect the 2 engine coolant fan motor wiring harness plugs (3, 5).

Caution: Refer to Fastener Caution.

5. Install the wiring harness ground cable (1) and the wiring harness ground cable nut (2) and tighten to **9 Y (80 lb in)**.
6. Raise the vehicle.
7. Clip the wiring harness to the engine coolant fan shroud holders (9).
8. Clip the wiring harness clip (8) to the engine coolant fan shroud.

cardiagn.com

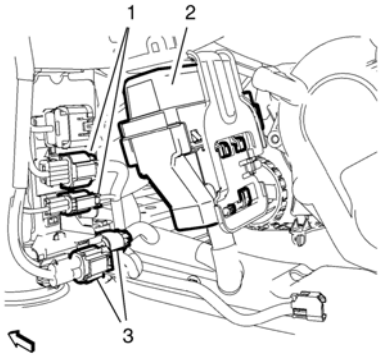

9. Connect the 4 wiring harness connectors (1, 3).
10. Install the CRFM module box (2) to the bracket and slide the CRFM module box to the left until it stops.

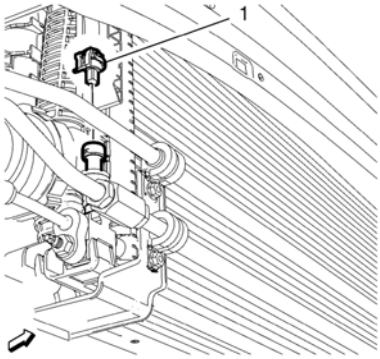

11. Install the engine compartment insulator. Refer to Front Compartment Insulator Replacement.
12. Lower the vehicle.
13. Connect the air conditioning refrigerant pressure sensor wiring harness plug (1).

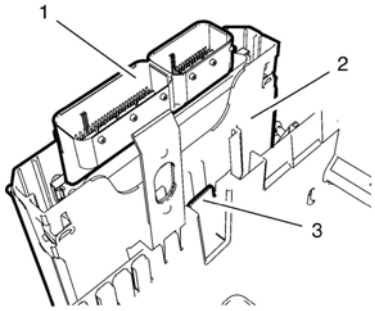

14. Install the front bumper fascia. Refer to Front Bumper Fascia Removal and Installation.
15. Install the battery tray. Refer to Battery Tray Replacement.
16. Install the engine control module bracket (2) along with the engine control module (1) to the battery tray (3).

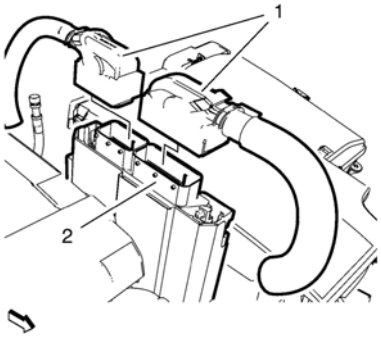

17. Connect the 2 engine control module wiring harness plugs (1) to the engine control module (2).
18. Connect the battery negative cable. Refer to Battery Negative Cable Disconnection and Connection.
19. Install the battery cover. Refer to Battery Cover Replacement.
20. Close the hood.

cardiagn.com

Removal Procedure

1. Remove the engine sight shield. Refer to Engine Sight Shield Replacement.
2. Raise and support the vehicle. Refer to Lifting and Jacking the Vehicle.
3. Remove the front compartment insulator. Refer to Front Compartment Insulator Replacement.
4. Drain the cooling system. Refer to Cooling System Draining and Filling.
5. Remove the exhaust particulate filter. Refer to Exhaust Particulate Filter Replacement.

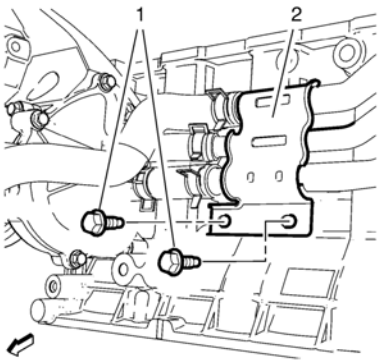

6. Remove the 2 thermostat bypass pipe bolts (1) from the thermostat bypass pipe bracket (2).

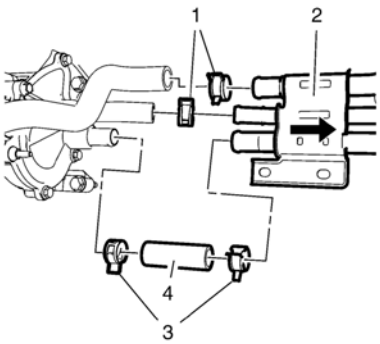

7. Loosen the water pump inlet hose clamp and the thermostat bypass hose clamp (1) from the thermostat bypass pipes.
8. Loosen the engine coolant inlet hose clamp from the thermostat bypass pipe and move the thermostat bypass pipes along with the thermostat bypass pipe bracket (2) aside (see arrow).
9. Remove the 2 engine coolant inlet hose clamps (3) and the engine coolant inlet hose (4) from the water pump.

Installation Procedure

cardiagn.com

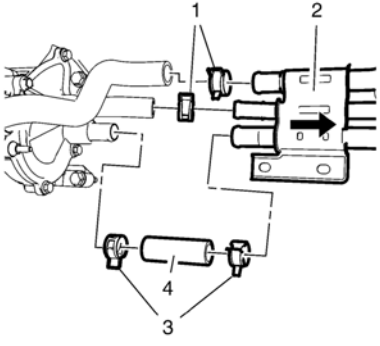

1. Install the engine coolant inlet hose (4) to the water pump and position the 2 engine coolant inlet hose clamps (3).
2. Position the water pump inlet hose clamp and the thermostat bypass hose clamp (1).
3. Install the thermostat bypass pipes along with the thermostat bypass pipe bracket (2) to the 3 hoses and position the clamps (1, 3).

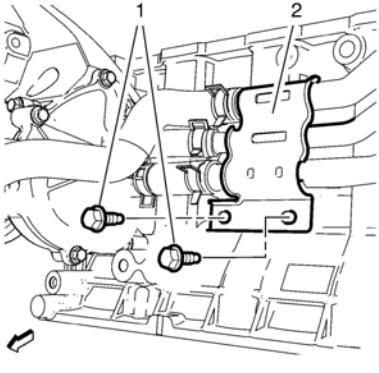

Caution: Refer to Fastener Caution.

4. Install the 2 thermostat bypass pipe bolts (1) to the thermostat bypass pipe bracket (2) and tighten to **22 Y (16 lb ft)**.
5. Install the exhaust particulate filter. Refer to Exhaust Particulate Filter Replacement.
6. Install the front compartment insulator. Refer to Front Compartment Insulator Replacement.
7. Lower the vehicle.
8. Fill the cooling system. Refer to Cooling System Draining and Filling.
9. Install the engine sight shield. Refer to Engine Sight Shield Replacement.

cardiagn.com

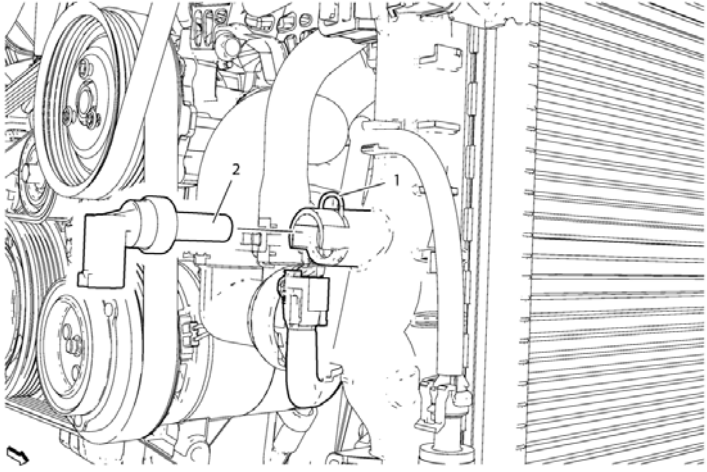

Engine Coolant Temperature Sensor Replacement

Callout	Component Name
Preliminary Procedure	
1. Drain the cooling system. Refer to Cooling System Draining and Filling 2. Disconnect the electrical connection.	
1	Retaining Clamp
2	Engine Coolant Temperature Sensor

cardiagn.com

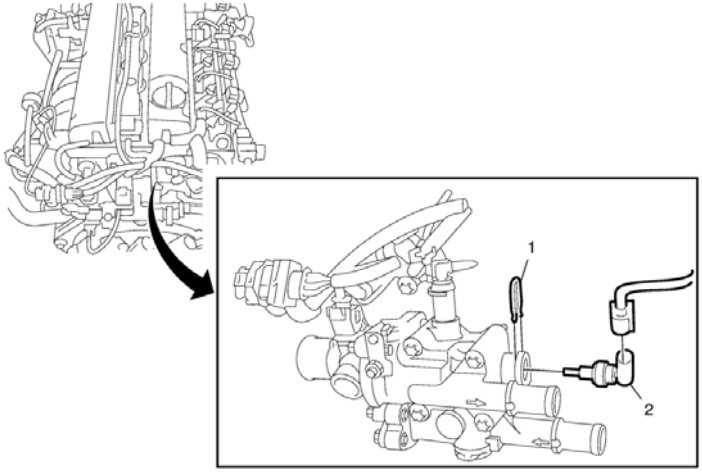

Engine Coolant Temperature Sensor Replacement

Callout	Component Name

Preliminary Procedure

1. Drain the cooling system. Refer to Cooling System Draining and Filling.
2. Disconnect the electrical connection.

1	Engine Coolant Temperature Sensor Fastener
2	Engine Coolant Temperature Sensor

cardiagn.com

Caution: Use care when performing this procedure. Use of excessive force may damage the coolant thermostat.

Removal Procedure

1. Remove the engine sight shield. Refer to Engine Sight Shield Replacement.
2. Drain the engine cooling system. Refer to Cooling System Draining and Filling.
3. Remove the air cleaner outlet duct. Refer to Air Cleaner Outlet Duct Replacement.
4. Remove the air cleaner assembly. Refer to Air Cleaner Assembly Replacement.
5. Remove the 3 power steering pump retaining bolts. Hang the pump aside.
6. Remove the radiator outlet hose clamp from the thermostat housing.
7. Remove the radiator outlet hose from the thermostat housing.

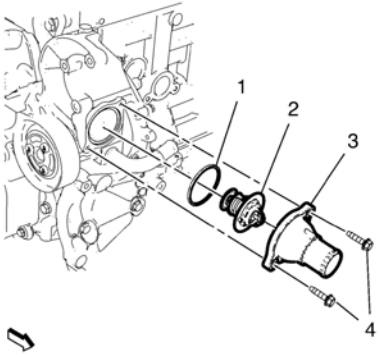

8. Remove the 2 bolts (4). Remove the thermostat housing (3).

Installation Procedure

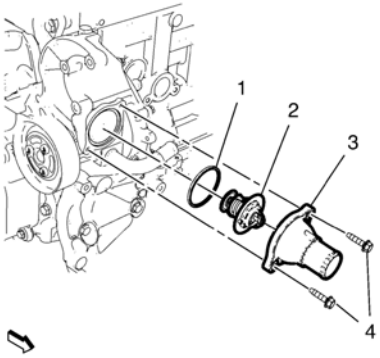

1. Inspect the seal ring (1) for damages or cracks. Install a NEW seal ring (1) if necessary.

Caution: Refer to Fastener Caution.

2. Install the thermostat housing (3) and the 2 thermostat housing retaining bolts (4). Tighten the bolts (4) to **10 Y (89 lb in)**.
3. Install the radiator outlet hose to the thermostat housing.
4. Install the radiator outlet hose clamp to the thermostat housing.
5. Install the power steering pump to the water pump housing. Install the 3 power steering pump retaining bolts. Tighten the bolts to **22 Y (16 lb ft)**.
6. Install the air cleaner assembly. Refer to Air Cleaner Assembly Replacement.
7. Install the air cleaner outlet duct. Refer to Air Cleaner Outlet Duct Replacement.
8. Fill the engine cooling system. Refer to Cooling System Draining and Filling.
9. Install the engine sight shield. Refer to Engine Sight Shield Replacement.

cardiagn.com

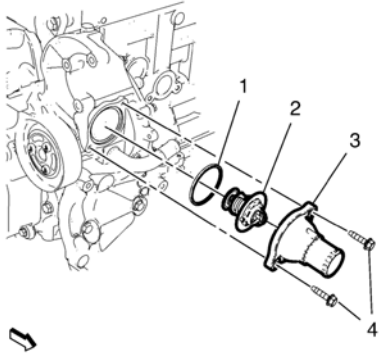

1. Install the thermostat (2) and a NEW seal ring (1).

   Caution: Refer to Fastener Caution.

2. Install the thermostat housing (3) and the 2 thermostat housing retaining bolts (4) and tighten to **10 Y (89 lb in)**.

cardiagn.com

Caution: Refer to Engine Coolant Thermostat Housing Caution.

1. Clean sealing surface.
2. Install a NEW engine coolant thermostat housing seal.

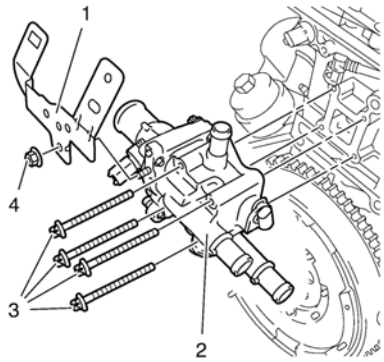

3. Install the engine coolant thermostat housing (2).

Caution: Refer to Fastener Caution.

Note: Screw in the 4 bolts until the engine coolant thermostat housing is in contact with the cylinder head.

4. Install the 4 engine coolant thermostat housing bolts (3) and tighten to **2 Y (18 lb in)**.

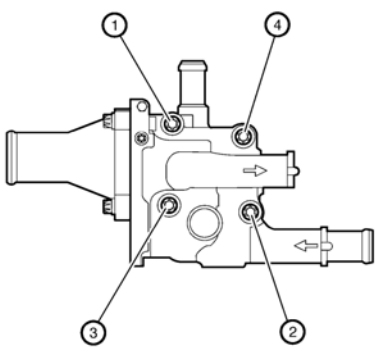

Caution: Following the proper fastener tightening sequence and torque is essential. Failure to do so may fracture the thermostat housing.

5. Tighten the 4 engine coolant thermostat housing bolts to **8 Y (71 lb in)** in sequence (1–2–3–4).

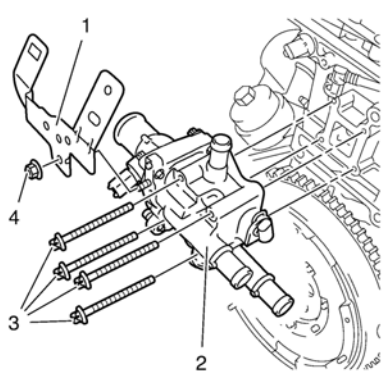

6. Install the engine coolant thermostat housing retainer (1).
7. Install the engine coolant thermostat housing retainer nut (4) and tighten to **6 Y (53 lb in)**.

cardiagn.com

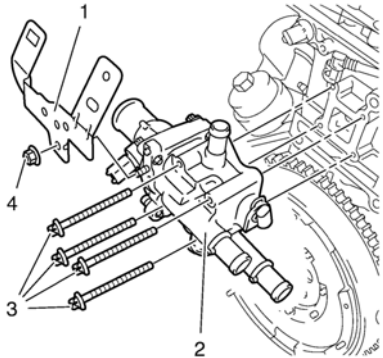

Caution: Refer to Engine Coolant Thermostat Housing Caution.

1. Remove the engine coolant thermostat housing retainer nut (4).
2. Remove the engine coolant thermostat housing retainer (1).
3. Remove the 4 engine coolant thermostat housing bolts (3).
4. Remove the engine coolant thermostat housing (2).

cardiagn.com

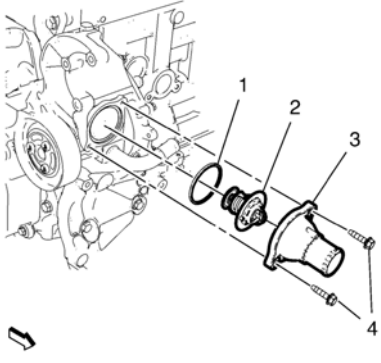

1. Remove the 2 thermostat housing bolts (4).
2. Remove the thermostat housing (3).
3. Remove the thermostat (2).
4. Remove the thermostat seal ring (1).

cardiagn.com

Removal Procedure

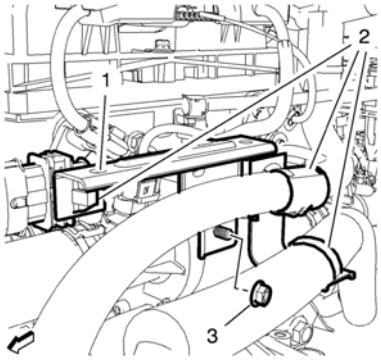

1. Unclip the 3 wiring harness clips (2).
2. Remove the engine wiring harness bracket nut (3).
3. Remove the engine wiring harness bracket (1).
4. Raise and support the vehicle. Refer to Lifting and Jacking the Vehicle.
5. Place collecting basin underneath.
6. Drain the cooling system. Refer to Cooling System Draining and Filling.
7. Lower the vehicle.

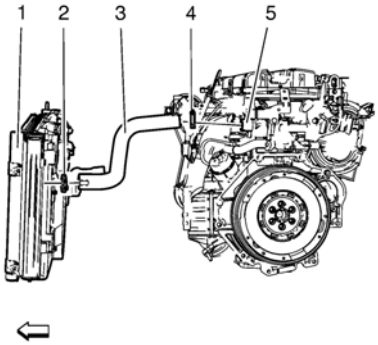

8. Loosen the radiator inlet hose clamp (4).
9. Remove the radiator inlet hose (3) from the engine coolant thermostat (5).

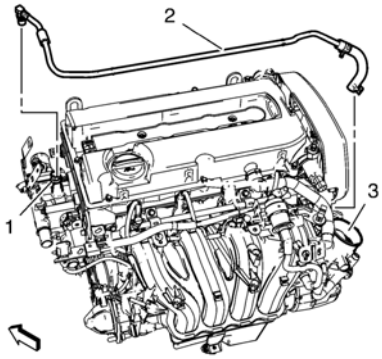

10. Remove the throttle body heater inlet hose (2) from the engine coolant thermostat (1).
11. Remove the heater inlet hose from the engine coolant thermostat housing. Refer to Heater Inlet Hose Replacement.
12. Remove the heater outlet hose from the engine coolant thermostat housing. Refer to Heater Outlet Hose Replacement.

cardiagn.com

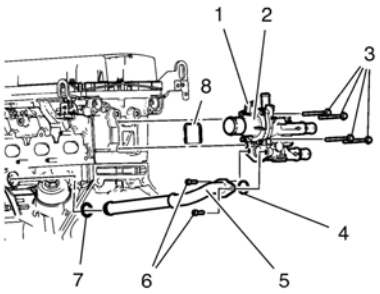

13. Disconnect the engine coolant temperature sensor connector (1).
14. Remove the 2 engine oil cooler pipe bolts (6).

Note: Pull the engine oil cooler pipe out of the engine oil cooler.

15. Remove the engine oil cooler pipe (5).
16. Remove the engine oil cooler pipe seals (4, 7).
17. Remove the 4 engine coolant thermostat housing bolts (3).
18. Remove the thermostat housing (2).
19. Remove the thermostat housing seal (8).

Installation Procedure

1. Clean sealing surface.

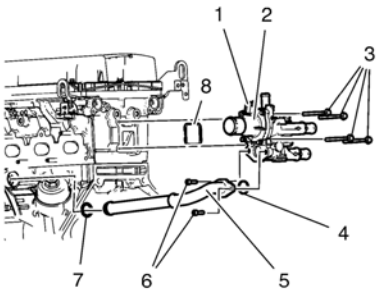

2. Install a NEW engine coolant thermostat housing seal (8).
3. Install the engine coolant thermostat housing (2).

Caution: Refer to Fastener Caution.

Note: Carefully install the 4 bolts until the engine coolant thermostat housing is in contact with the cylinder head.

4. Install the 4 engine coolant thermostat housing bolts (3) and tighten to **2 Y (18 lb in)**.

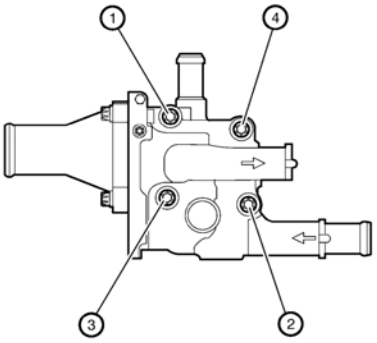

Caution: Following the proper fastener tightening sequence and torque is essential. Failure to do so may fracture the thermostat housing.

5. Tighten the 4 engine coolant thermostat housing bolts to **8 Y (71 lb in)**in sequence (1-2-3-4).

cardiagn.com

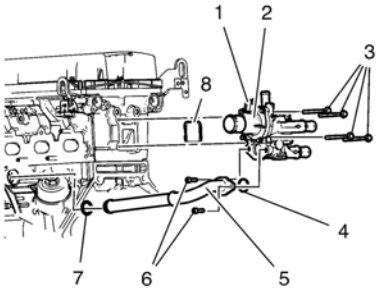

6. Install NEW engine oil cooler pipe seals (4, 7).

Note: Push the engine oil cooler pipe into the engine oil cooler.

7. Install the engine oil cooler pipe (5).
8. Install the 2 engine oil cooler pipe bolts (6) and tighten to **8 Y (71 lb in)**.
9. Install the heater outlet hose to the engine coolant thermostat housing. Refer to Heater Outlet Hose Replacement.
10. Install the heater inlet hose to the engine coolant thermostat housing. Refer to Heater Inlet Hose Replacement.
11. Connect the engine coolant temperature sensor connector (1).

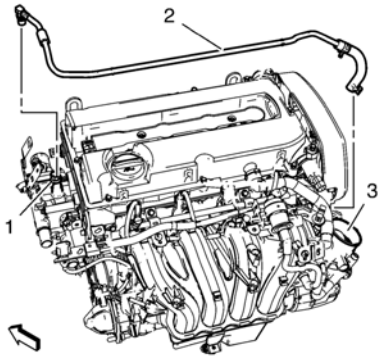

12. Install the throttle body heater inlet hose (2) to the engine coolant thermostat housing (1).

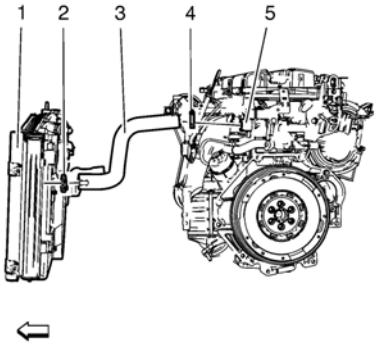

13. Install the radiator inlet hose (3) to the engine coolant thermostat (5).
14. Install the radiator inlet hose clamp (4).
15. Fill the cooling system. Refer to Cooling System Draining and Filling.

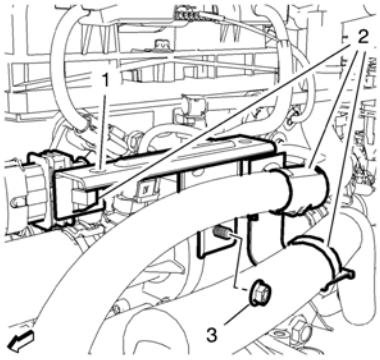

cardiagn.com

16. Install the engine wiring harness bracket (1).
17. Install the engine wiring harness bracket nut (3) and tighten to **6 Y (53 lb in)**.
18. Clip in the 3 wiring harness clips (2).

cardiagn.com

Caution: Refer to Engine Coolant Thermostat Housing Caution.

1. Clean the engine coolant sealing surfaces.

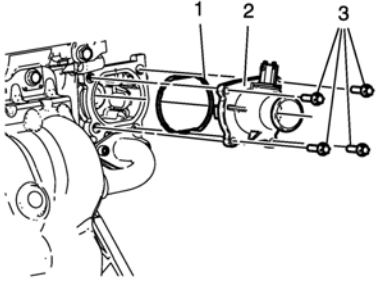

2. Install the engine coolant seal (1).
3. Install the engine coolant thermostat assembly (2).

Caution: Refer to Fastener Caution.

4. Install the 4 engine coolant thermostat bolts (3) and tighten to **8 Y (71 lb in)**.

cardiagn.com

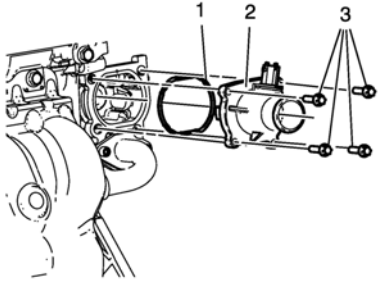

Caution: Refer to Engine Coolant Thermostat Housing Caution.

1. Remove the 4 engine coolant thermostat bolts (3).
2. Remove the engine coolant thermostat assembly (2).
3. Remove the engine coolant seal (1).

cardiagn.com

Removal Procedure

1. Disconnect the battery negative cable. Refer to Battery Negative Cable Disconnection and Connection.
2. Remove the engine sight shield. Refer to Engine Sight Shield Replacement.
3. Drain the engine cooling system. Refer to Cooling System Draining and Filling.
4. Remove the air cleaner outlet duct. Refer to Air Cleaner Outlet Duct Replacement.
5. Remove the air cleaner assembly. Refer to Air Cleaner Assembly Replacement.
6. Remove the 3 power steering pump retaining bolts. Refer to Power Steering Pump Replacement. Hang the pump aside.
7. Remove the radiator outlet hose clamp from the thermostat housing.
8. Remove the radiator outlet hose from the thermostat housing.

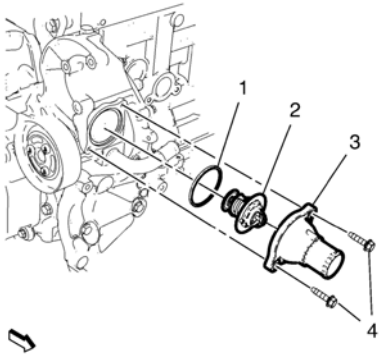

9. Remove the 2 bolts (4).
10. Remove the thermostat housing (3).
11. Remove the thermostat (2) along with the seal ring (1).

Installation Procedure

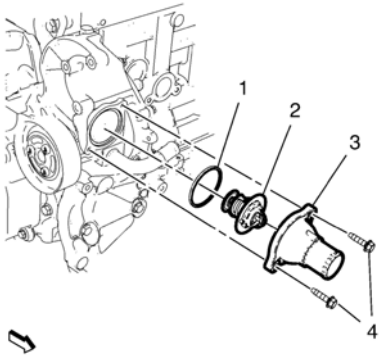

1. Install the thermostat (2) and a NEW seal ring (1).
2. Install the thermostat housing (3).

Caution: Refer to Fastener Caution.

3. Install the 2 thermostat housing retaining bolts (4) and tighten to **10 Y (89 lb in)**.
4. Install the radiator outlet hose to the thermostat housing.
5. Install the radiator outlet hose clamp to the thermostat housing.
6. Install the power steering pump to the water pump housing. Refer to Power Steering Pump Replacement.
7. Install the air cleaner assembly. Refer to Air Cleaner Assembly Replacement.
8. Install the air cleaner outlet duct. Refer to Air Cleaner Outlet Duct Replacement.
9. Fill the engine cooling system. Refer to Cooling System Draining and Filling.
10. Install the engine sight shield. Refer to Engine Sight Shield Replacement.
11. Connect the battery negative cable. Refer to Battery Negative Cable Disconnection and Connection.

cardiagn.com

Engine Number

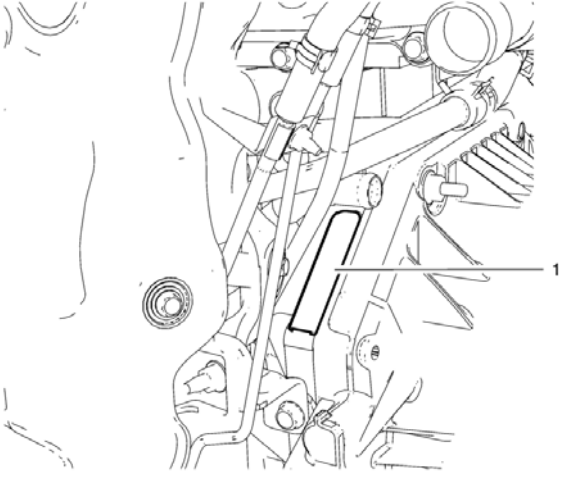

The engine number is stamped to the engine block (1).

Note: The engine identification number must be stamped to the cylinder block in case of engine replacement.

cardiagn.com

Removal Procedure

1. Remove the engine sight shield. Refer to Engine Sight Shield Replacement.
2. Remove the battery tray. Refer to Battery Tray Replacement.
3. Remove the engine control module. Refer to Engine Control Module Replacement.
4. Raise and support the vehicle. Refer to Lifting and Jacking the Vehicle.
5. Remove the front compartment insulator. Refer to Front Compartment Insulator Replacement.
6. Drain the cooling system. Refer to Cooling System Draining and Filling.

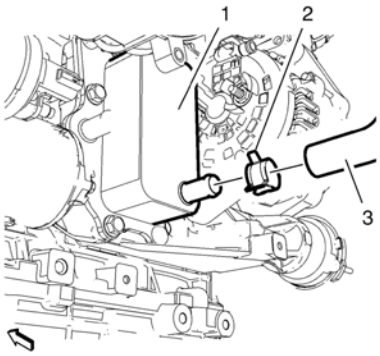

7. Remove the engine oil cooler outlet hose clamp (2) and the engine oil cooler outlet hose (3) from the engine oil cooler (1).
8. Lower the vehicle.
9. Remove the charge air cooler outlet rear hose from the throttle body and the charge air cooler outlet front hose from the charge air cooler outlet front hose bracket and hang it aside. Refer to Charge Air Cooler Outlet Hose Replacement.
10. Remove the throttle body. Refer to Throttle Body Assembly Replacement.

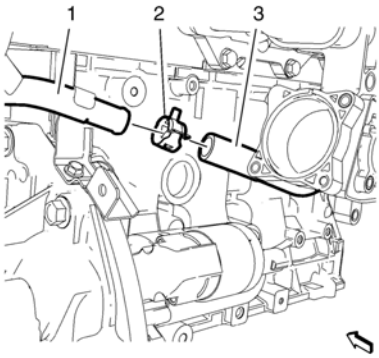

11. Remove the engine oil cooler outlet hose clamp (2) and the engine oil cooler outlet hose (3) from the thermostat bypass pipe (1).
12. Remove the engine oil cooler outlet hose (3).

Installation Procedure

cardiagn.com

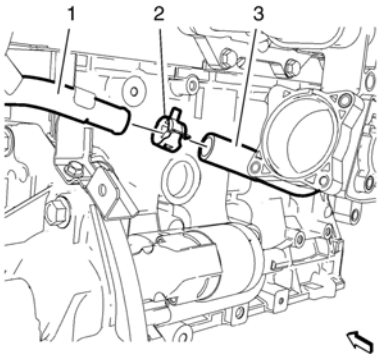

1. Reposition the engine oil cooler outlet hose (3).
2. Install the engine oil cooler outlet hose (3) with the engine oil cooler outlet hose clamp (2) to the thermostat bypass pipe (1).
3. Install the throttle body. Refer to Throttle Body Assembly Replacement.
4. Install the charge air cooler outlet rear hose to the throttle body and the charge air cooler outlet front hose to the charge air cooler outlet front hose bracket. Refer to Charge Air Cooler Outlet Hose Replacement.
5. Raise the vehicle.

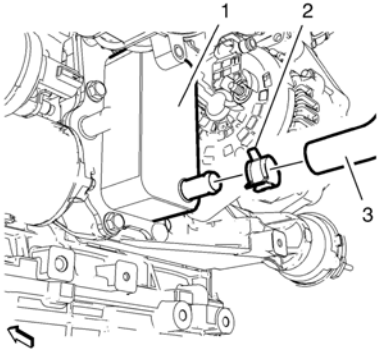

6. Install the engine oil cooler outlet hose (3) with the engine oil cooler outlet hose clamp (2) to the engine oil cooler (1).
7. Install the front compartment insulator. Refer to Front Compartment Insulator Replacement.
8. Lower the vehicle.
9. Fill the cooling system. Refer to Cooling System Draining and Filling.
10. Install the engine control module. Refer to Engine Control Module Replacement.
11. Install the battery tray. Refer to Battery Tray Replacement.
12. Install the engine sight shield. Refer to Engine Sight Shield Replacement.

cardiagn.com

Removal Procedure

1. Drain the engine oil. Refer to Engine Oil and Oil Filter Replacement.
2. Drain the engine cooling system. Refer to Cooling System Draining and Filling.
3. Remove the generator. Refer to Generator Replacement.
4. Remove the engine oil cooler outlet hose. Refer to Engine Oil Cooler Outlet Hose Replacement.
5. Remove the exhaust gas recirculation valve cooling feed hose. Refer to Exhaust Gas Recirculation Valve Cooling Feed Hose Replacement.

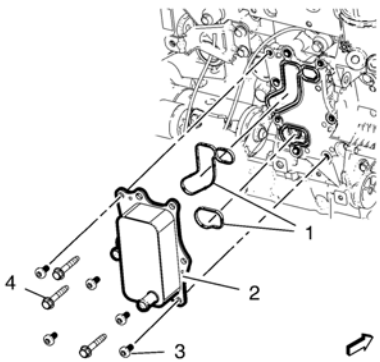

6. Remove the 8 engine oil cooler retaining bolts (3, 4).
7. Remove the engine oil cooler (2) along with the 2 engine oil cooler gaskets (1).

Installation Procedure

1. Clean the sealing surfaces.

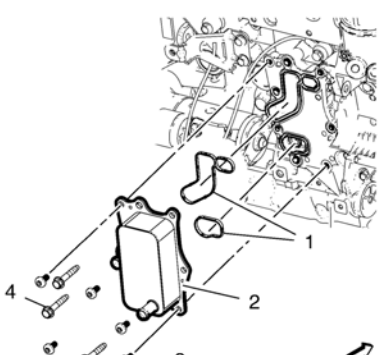

2. Install the engine oil cooler (2) along with 2 NEW engine oil cooler gaskets (1).

Caution: Refer to Fastener Caution.

3. Install the 8 engine oil cooler retaining bolts (3, 4). Tighten the bolts to **25 Y (18 lb ft)**.
4. Install the engine oil cooler outlet hose. Refer to Engine Oil Cooler Outlet Hose Replacement.
5. Install the exhaust gas recirculation valve cooling feed hose. Refer to Exhaust Gas Recirculation Valve Cooling Feed Hose Replacement.
6. Install the generator. Refer to Generator Replacement.
7. Fill the engine cooling system. Refer to Cooling System Draining and Filling.
8. Fill in the engine oil. Refer to Engine Oil and Oil Filter Replacement.

cardiagn.com

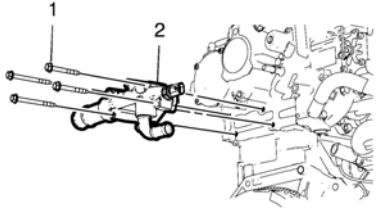

1. Install the engine water adapter housing (2) and a NEW gasket.

   Caution: Refer to Fastener Caution.

2. Install the 4 engine water outlet adapter bolts (1) and tighten to **10 Y (89 lb in)**.

cardiagn.com

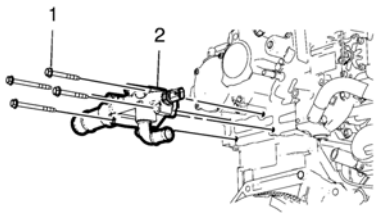

1. Remove the 4 engine water outlet housing bolts (1).
2. Remove the engine water outlet housing (2).

Note: Replace the engine water outlet housing seal if it is porous or cracked.

3. Inspect the engine water outlet seal.

cardiagn.com

Removal Procedure

1. Remove the engine sight shield. Refer to Engine Sight Shield Replacement.
2. Disconnect the battery negative cable. Refer to Battery Negative Cable Disconnection and Connection.
3. Remove the engine control module. Refer to Engine Control Module Replacement.
4. Remove the battery tray. Refer to Battery Tray Replacement.
5. Raise and support the vehicle. Refer to Lifting and Jacking the Vehicle.
6. Remove the front compartment insulator. Refer to Front Compartment Insulator Replacement.
7. Drain the cooling system. Refer to Cooling System Draining and Filling.
8. Lower the vehicle.
9. Remove the charge air cooler outlet front hose from the charge air cooler outlet front hose bracket. Remove the charge air cooler outlet front hose from the charge air cooler outlet rear hose and hang it aside. Refer to Charge Air Cooler Outlet Hose Replacement.
10. Unclip the 2 engine wiring harness retaining clips from the engine wiring harness bracket.

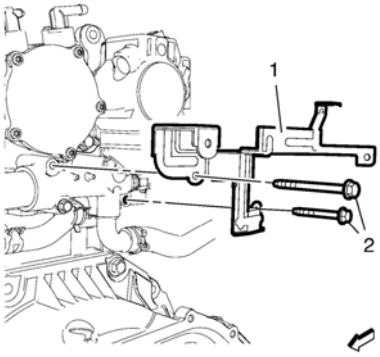

11. Remove the 2 engine wiring harness bracket and engine water outlet adapter bolts (2) from the engine water outlet adapter.
12. Remove the engine wiring harness bracket (1) from the engine water outlet adapter.

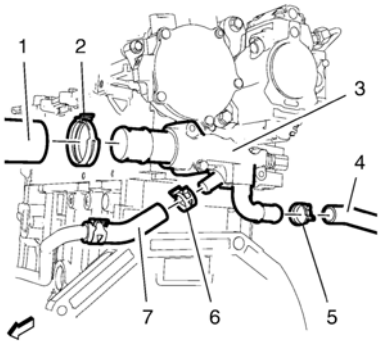

13. Remove the radiator inlet hose (1) with the radiator inlet hose clamp (2) from the engine water outlet adapter (3).
14. Remove the heater inlet hose (4) with the heater inlet hose clamp (5) from the engine water outlet adapter (3).
15. Remove the thermostat bypass hose (7) with the thermostat bypass hose clamp (6) from the engine water outlet adapter (3).

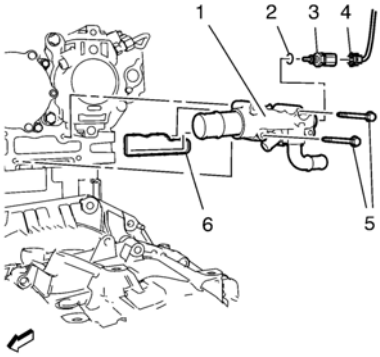

cardiagn.com

16. Disconnect the engine coolant temperature sensor wiring harness plug (4) from the engine coolant temperature sensor (3).
17. Remove the 2 engine water outlet adapter bolts (5).
18. Remove the engine water outlet adapter (1) and the engine water outlet adapter gasket (6) from the engine.
19. Remove the engine coolant temperature sensor (3) and the engine coolant temperature sensor seal ring (2) from the engine water outlet adapter (1).

Installation Procedure

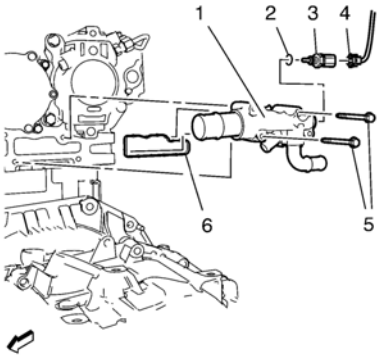

Caution: Refer to Fastener Caution.

1. Preinstall the engine coolant temperature sensor (3) with a NEW engine coolant temperature sensor seal ring (2) to the engine water outlet adapter (1) and tighten the sensor to **13 Y (115 lb in)**.
2. Install the engine water outlet adapter (1) with a NEW engine water outlet adapter gasket (6) to the engine.
3. Install the 2 engine water outlet adapter bolts (5) to the engine water adapter (1) and tighten to **10 Y (89 lb in)**.
4. Connect the engine coolant temperature sensor wiring harness plug (4) to the engine coolant temperature sensor (3).

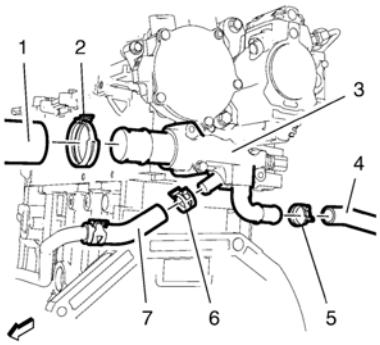

5. Install the thermostat bypass hose (7) with the thermostat bypass hose clamp (6) to the engine water outlet adapter (3).
6. Install the heater inlet hose (4) with the heater inlet hose clamp (5) to the engine water outlet adapter (3).
7. Install the radiator inlet hose (1) with the radiator inlet hose clamp (2) to the engine water outlet adapter (3).

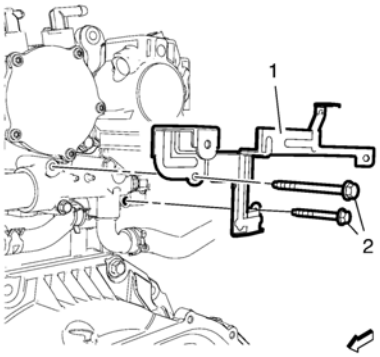

8. Install the engine wiring harness bracket (1) to the engine water outlet adapter.
9. Install the 2 engine wiring harness bracket and engine water outlet adapter bolts (2) to the engine water outlet adapter and tighten to **10 Y (89 lb in)**.
10. Clip the 2 engine wiring harness retaining clips into the engine wiring harness bracket.
11. Install the charge air cooler outlet front hose to the charge air cooler outlet front hose bracket. Install the charge air cooler outlet front hose to the charge air cooler outlet rear hose. Refer to Charge Air Cooler Outlet Hose Replacement.
12. Fill the cooling system. Refer to Cooling System Draining and Filling.
13. Raise the vehicle.
14. Install the front compartment insulator. Refer to Front Compartment Insulator Replacement.
15. Lower the vehicle.
16. Install the battery tray. Refer to Battery Tray Replacement.
17. Install the engine control module. Refer to Engine Control Module Replacement.

cardiagn.com

18. Connect the battery negative cable. Refer to Battery Negative Cable Disconnection and Connection.
19. Install the engine sight shield. Refer to Engine Sight Shield Replacement.

cardiagn.com

Removal Procedure

1. Remove the engine sight shield. Refer to Engine Sight Shield Replacement.
2. Remove the engine control module. Refer to Engine Control Module Replacement.
3. Remove the battery tray. Refer to Battery Tray Replacement.
4. Drain the engine cooling system. Refer to Cooling System Draining and Filling.
5. If equipped, disconnect the automatic transmission hose from the radiator surge tank mount.
6. Remove the radiator surge tank clip. Refer to Radiator Surge Tank Replacement. Hang the radiator surge tank aside.
7. Remove the charge air cooler outlet hose. Refer to Charge Air Cooler Outlet Hose Replacement.

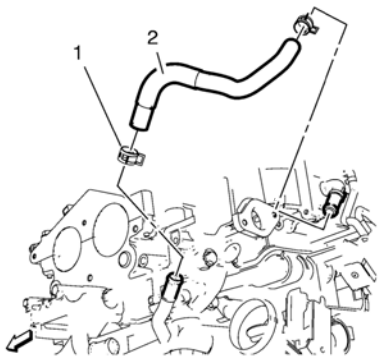

8. Remove the 2 clamps (1).
9. Remove the exhaust gas recirculation manifold cooling return hose (2).

Installation Procedure

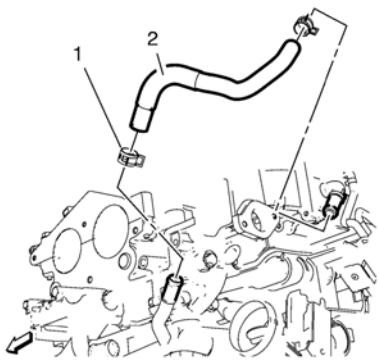

1. Install the exhaust gas recirculation manifold cooling return hose (2).
2. Install the 2 clamps (1).
3. Install the charge air cooler outlet hose. Refer to Charge Air Cooler Outlet Hose Replacement.
4. Clip the radiator surge tank into the mount. Refer to Radiator Surge Tank Replacement.
5. If equipped, connect the automatic transmission hose clip to the radiator surge tank mount.
6. Install the battery tray. Refer to Battery Tray Replacement.
7. Install the engine control module. Refer to Engine Control Module Replacement.
8. Fill the engine cooling system. Refer to Cooling System Draining and Filling.
9. Install the engine sight shield. Refer to Engine Sight Shield Replacement.

cardiagn.com

Removal Procedure

1. Remove the engine sight shield. Refer to Engine Sight Shield Replacement.
2. Drain the engine cooling system. Refer to Cooling System Draining and Filling.

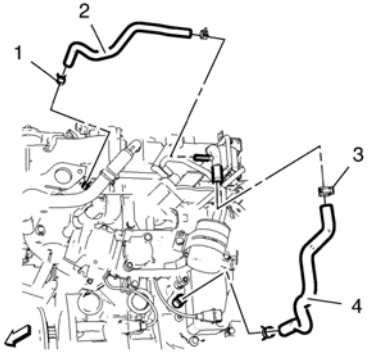

3. Remove the 2 clamps (3).
4. Remove the exhaust gas recirculation valve cooling feed hose (4).

Installation Procedure

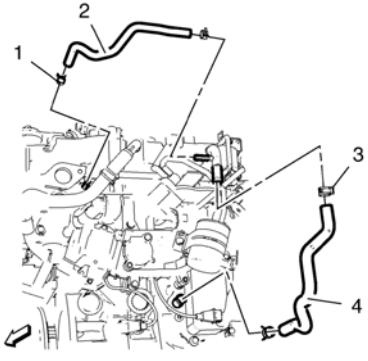

1. Install the exhaust gas recirculation valve feed hose (4).
2. Install the 2 clamps (3).
3. Fill the engine cooling system. Refer to Cooling System Draining and Filling.
4. Install the engine sight shield. Refer to Engine Sight Shield Replacement.

cardiagn.com

1. Remove the radiator. Refer to Radiator Replacement.
2. Remove the charge air cooler. Refer to Charge Air Cooler Replacement.

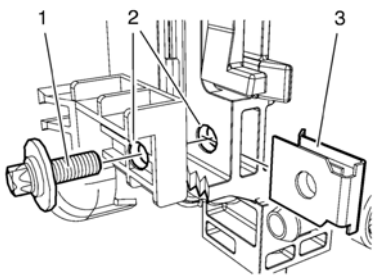

3. Drill hole in the charge air cooler bracket and radiator bracket (2) using a **7 mm (0.28 in)**drill.
4. Install the j-clip (3) to the radiator.
5. Install the radiator. Refer to Radiator Replacement.
6. Install the charge air cooler to the radiator. Refer to Charge Air Cooler Replacement.

Caution: Refer to Fastener Caution

7. Install the repair bolt (1) with locking compound and tighten to **5 Y (45 lb in)**.

cardiagn.com

Warning: NEVER spray water on a hot heat exchanger. The resulting steam could cause personal injury.

Caution: The heat exchanger fins are necessary for good heat transfer. Do not brush the fins. This may cause damage to the fins, reducing heat transfer.

Note: Remove bugs, leaves, dirt and other debris by blowing compressed air through the engine side of the radiator.

- Some conditions may require the use of warm water and a mild detergent.
- Clean the A/C condenser fins.
- Clean between the A/C condenser and radiator.
- Clean the radiator cooling fins.
- Straighten any damaged cooling fins.

cardiagn.com

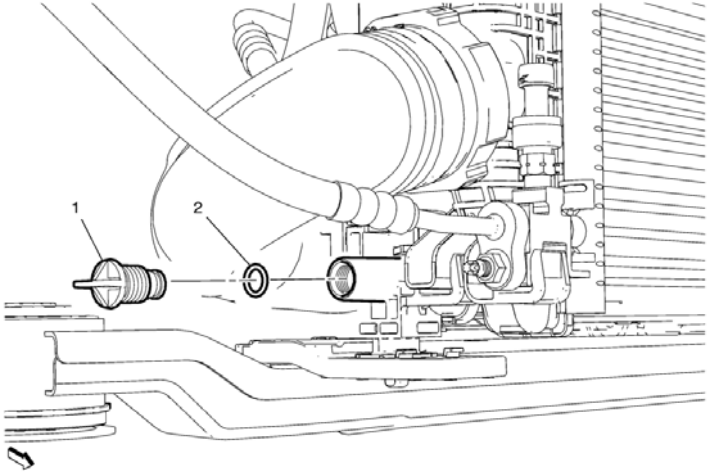

Radiator Drain Cock Replacement

Callout	Component Name

Warning: With a pressurized cooling system, the coolant temperature in the radiator can be considerably higher than the boiling point of the solution at atmospheric pressure. Removal of the surge tank cap, while the cooling system is hot and under high pressure, causes the solution to boil instantaneously with explosive force. This will cause the solution to spew out over the engine, the fenders, and the person removing the cap. Serious bodily injury may result.

Preliminary Procedures

Drain the cooling system. Refer to Cooling System Draining and Filling.

1	Radiator Drain Cock
2	Radiator Drain Cock Seal Ring

cardiagn.com

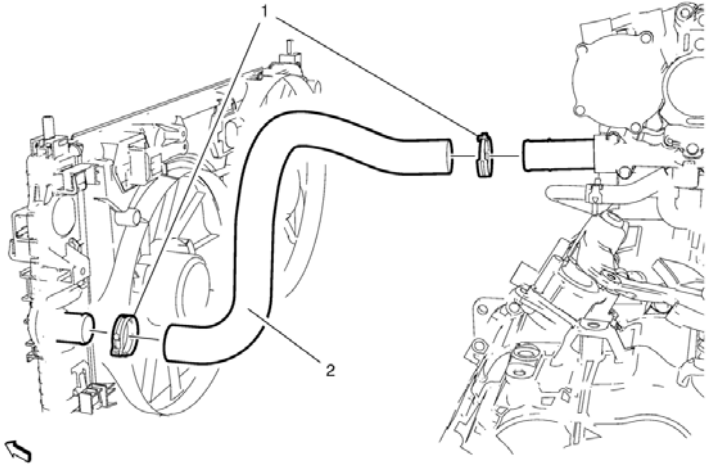

Radiator Inlet Hose Replacement

Callout	Component Name

Preliminary Procedures

1. Disconnect the battery negative cable. Refer to Battery Negative Cable Disconnection and Connection.
2. Remove the engine control module. Refer to Engine Control Module Replacement.
3. Remove the battery tray. Refer to Battery Tray Replacement.
4. Drain the cooling system. Refer to Cooling System Draining and Filling.

	Radiator Inlet Hose Clamp (Qty: 2)
1	**Procedure**
	Reposition the 2 radiator inlet hose clamps.
2	Radiator Inlet Hose

cardiagn.com

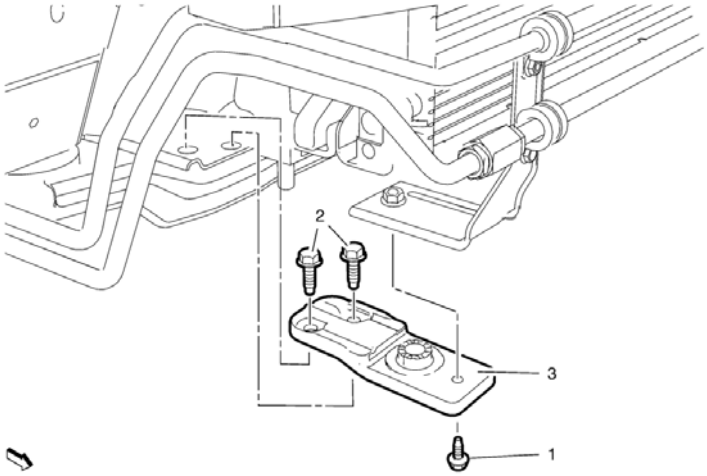

Radiator Lower Bracket Replacement

Callout	Component Name
Preliminary Procedures	
1	Power Steering Fluid Cooling Pipe Bracket Bolt **Caution:** Refer to Fastener Caution. **Procedure** Remove bolt if power steering fluid cooling pipe is equipped. **Tighten** 9 Y (80 lb in)
2	Radiator Lower Bracket Bolt (Qty: 2) **Procedure** Secure the radiator. **Tighten** 22 Y (16 lb ft)
3	Radiator Lower Bracket

1. Remove the front bumper fascia. Refer to Front Bumper Fascia Removal and Installation.
2. Remove the charge air cooler inlet and outlet hose from the charge air cooler. Refer to Charge Air Cooler Inlet Hose Replacement and Charge Air Cooler Outlet Hose Replacement.

cardiagn.com

Repair Procedure

1. Pressure test the cooling system. Refer to Cooling System Leak Testing. If the radiator is not leaky, perform the following procedure.
2. Remove the radiator. Refer to Radiator Replacement.

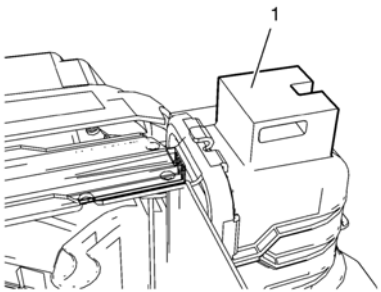

3. Grind the fracture surface (1) with a proper tool.
4. Drill a hole in the center of the fractured surface, using a **6 mm (0.24 in)**drill.

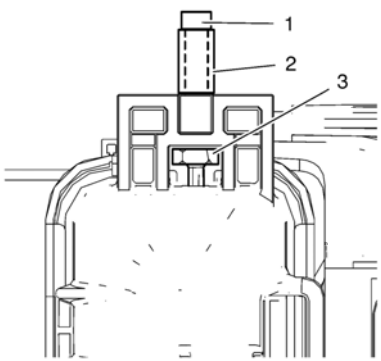

5. Install the new radiator mounting pin (2).

- Install the nut (3).

Note: The bolt should not be longer than **35 mm (1.38 in)**.

- Install the radiator mounting pin (2) with the bolt (1).

Caution: Refer to Fastener Caution.

- Tighten the bolt **5 Y (44 lb in)**.
- Install the radiator. Refer to Radiator Replacement.

cardiagn.com

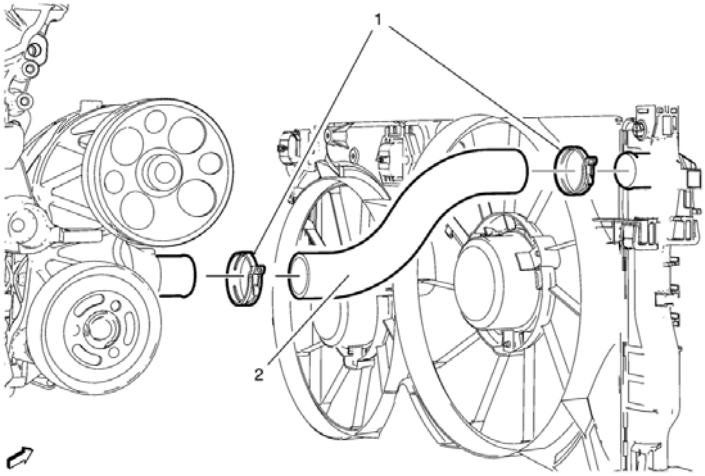

Radiator Outlet Hose Replacement

Callout	Component Name

Preliminary Procedures

1. Disconnect the battery negative cable. Refer to Battery Negative Cable Disconnection and Connection.
2. Drain the cooling system. Refer to Cooling System Draining and Filling.
3. Remove the air cleaner outlet front duct and the air cleaner outlet rear duct. Refer to Air Cleaner Outlet Duct Replacement.

	Radiator Outlet Hose Clamp (Qty: 2)
1	**Procedure** Reposition the 2 radiator inlet hose clamps.
2	Radiator Outlet Hose

cardiagn.com

Removal Procedure

1. Remove the battery cover. Refer to Battery Cover Replacement.
2. Disconnect the battery negative cable. Refer to Battery Negative Cable Disconnection and Connection.
3. Remove the charge air cooler. Refer to Charge Air Cooler Replacement.
4. Raise and support the vehicle. Refer to Lifting and Jacking the Vehicle.
5. Drain the cooling system. Refer to Cooling System Draining and Filling.
6. Remove the radiator upper brackets. Refer to Radiator Upper Bracket Replacement.
7. Remove the radiator support bracket insulators.

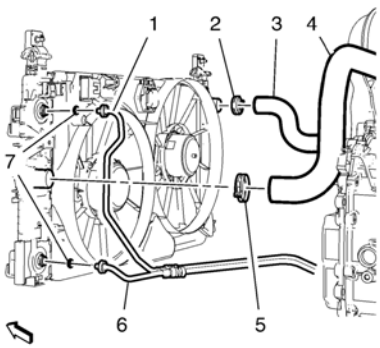

8. Remove the radiator outlet hose clamp (2) and the radiator outlet hose (3) from the radiator.
9. Remove the radiator inlet hose clamp (5) and the radiator inlet hose (4) from the radiator (1).
10. Remove the safety rings and remove the upper and lower transmission fluid pipes (1, 6) with the transmission fluid pipe seal rings (7) from the radiator.

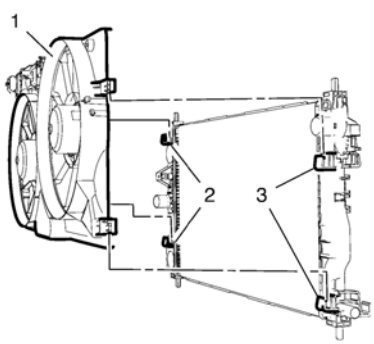

11. Remove the engine coolant fan shroud (1) in top direction from the 4 radiator clips (2, 3) and place it inside the vehicle.

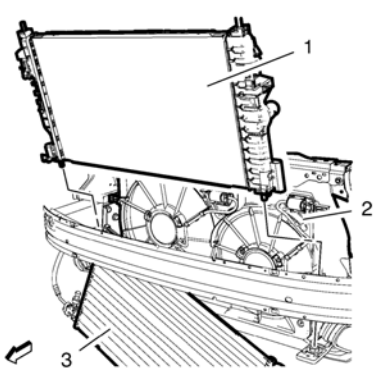

Note: The engine coolant fan shroud (2) remains in the vehicle.

12. Hang the air conditioning condenser (3) aside and secure with safety belts.
13. Remove the radiator (1) in top direction from the vehicle.

Installation Procedure

cardiagn.com

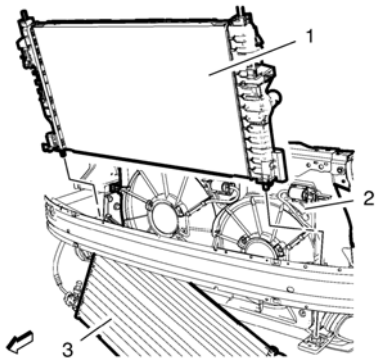

1. Install the radiator (1) to the radiator lower support brackets.

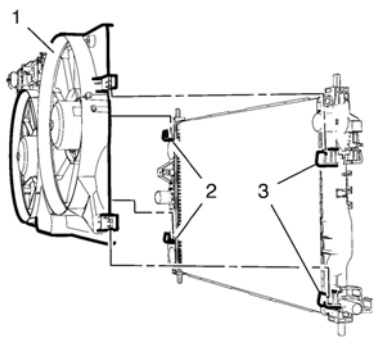

2. Install the engine coolant fan shroud (1) to the 4 radiator clips (2, 3).

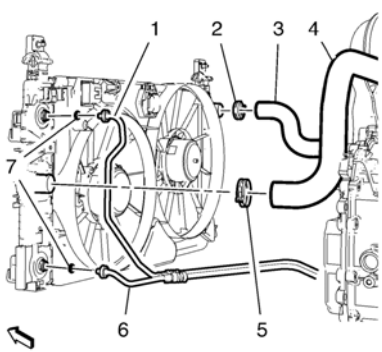

3. Install 2 NEW transmission fluid pipe seal rings (7) and clip the upper and lower transmission fluid pipes (1, 6) with the safety rings into the radiator.
4. Install the radiator inlet hose (4) with the radiator inlet hose clamp (5) to the radiator (1).
5. Install the radiator outlet hose (3) with the radiator outlet hose clamp (2) to the radiator (1).
6. Install the radiator support bracket insulators.
7. Install the radiator upper brackets. Refer to Radiator Upper Bracket Replacement.
8. Install the charge air cooler. Refer to Charge Air Cooler Replacement.
9. Lower and unsupport the vehicle.
10. Connect the battery negative cable. Refer to Battery Negative Cable Disconnection and Connection.
11. Install the battery cover. Refer to Battery Cover Replacement.
12. Fill the cooling system. Refer to Cooling System Draining and Filling.
13. Top up and correct the transmission fluid. Refer to Transmission Fluid Drain and Fill.

cardiagn.com

Removal Procedure

1. Remove the battery cover. Refer to Battery Cover Replacement.
2. Disconnect the battery negative cable. Refer to Battery Negative Cable Disconnection and Connection.
3. Remove the charge air cooler. Refer to Charge Air Cooler Replacement.
4. Raise and support the vehicle. Refer to Lifting and Jacking the Vehicle.
5. Drain the cooling system. Refer to Cooling System Draining and Filling.
6. Remove the radiator upper brackets. Refer to Radiator Upper Bracket Replacement.
7. Remove the radiator support bracket insulators.

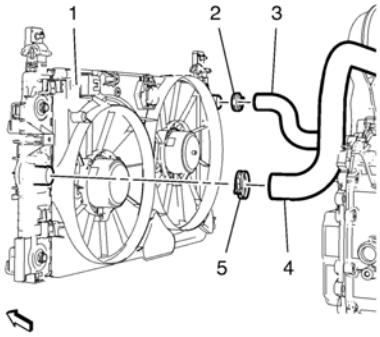

8. Remove the radiator outlet hose clamp (2) and the radiator outlet hose (3) from the radiator (1).
9. Remove the radiator inlet hose clamp (5) and the radiator inlet hose (4) from the radiator (1).

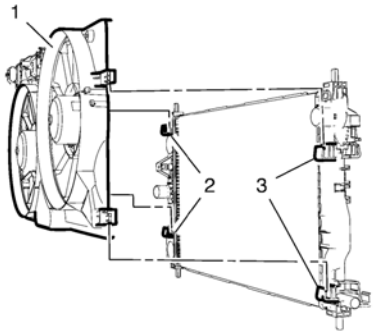

10. Remove the engine coolant fan shroud (1) in top direction from the 4 radiator clips (2, 3) and place it inside the vehicle.

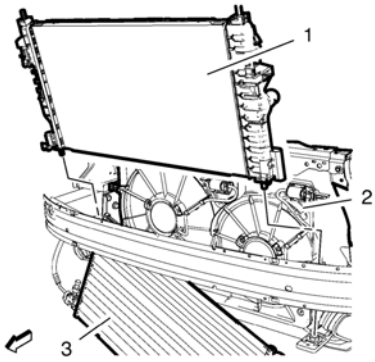

Note: The engine coolant fan shroud (2) remains in the vehicle.

11. Hang the air conditioning condenser (3) aside and secure with safety belts.
12. Remove the radiator (1) in top direction from the vehicle.

Installation Procedure

cardiagn.com

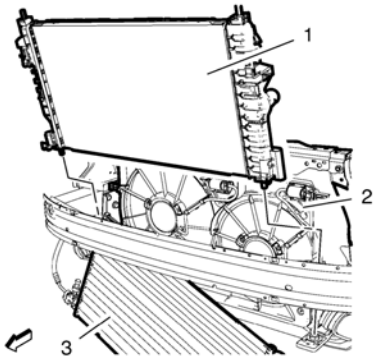

1. Install the radiator (1) to the radiator lower support brackets.

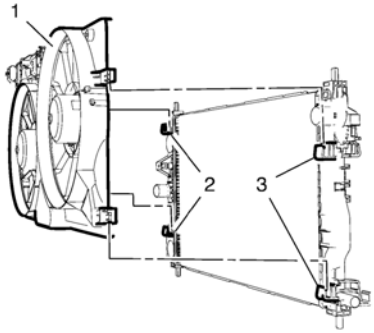

2. Install the engine coolant fan shroud (1) to the 4 radiator clips (2, 3).

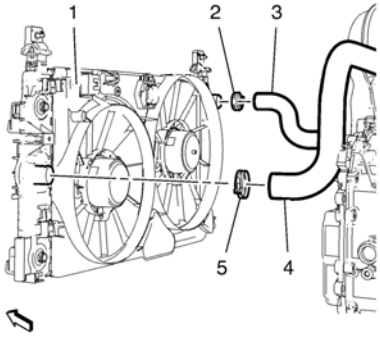

3. Install the radiator inlet hose (4) with the radiator inlet hose clamp (5) to the radiator (1).
4. Install the radiator outlet hose (3) with the radiator outlet hose clamp (2) to the radiator (1).
5. Install the radiator support bracket insulators.
6. Install the radiator upper brackets. Refer to Radiator Upper Bracket Replacement.
7. Install the charge air cooler. Refer to Charge Air Cooler Replacement.
8. Lower and unsupport the vehicle.
9. Connect the battery negative cable. Refer to Battery Negative Cable Disconnection and Connection.
10. Install the battery cover. Refer to Battery Cover Replacement.
11. Fill the cooling system. Refer to Cooling System Draining and Filling.

cardiagn.com

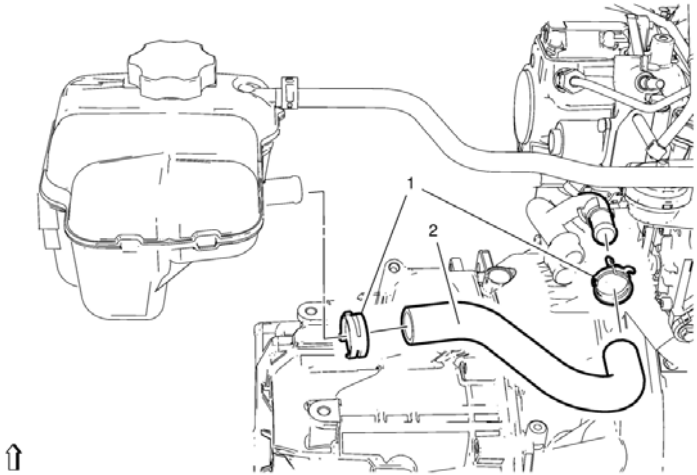

Radiator Surge Tank Outlet Hose Replacement

Callout	Component Name

Warning: With a pressurized cooling system, the coolant temperature in the radiator can be considerably higher than the boiling point of the solution at atmospheric pressure. Removal of the surge tank cap, while the cooling system is hot and under high pressure, causes the solution to boil instantaneously with explosive force. This will cause the solution to spew out over the engine, the fenders, and the person removing the cap. Serious bodily injury may result.

Preliminary Procedures

1. Remove the engine sight shield. Refer to Engine Sight Shield Replacement.
2. Drain the cooling system. Refer to Cooling System Draining and Filling.

1	Radiator Surge Tank Outlet Hose Clamp (Qty: 2)
2	Radiator Surge Tank Outlet Hose

cardiagn.com

Removal Procedure

Warning: With a pressurized cooling system, the coolant temperature in the radiator can be considerably higher than the boiling point of the solution at atmospheric pressure. Removal of the surge tank cap, while the cooling system is hot and under high pressure, causes the solution to boil instantaneously with explosive force. This will cause the solution to spew out over the engine, the fenders, and the person removing the cap. Serious bodily injury may result.

Note: Use only a GM released anti-freeze mixture and ensure a concentration of 50 percent water to 50 percent antifreeze. Antifreeze does not just prevent the cooling system from freezing up, it also protects all the components that are in contact with coolant from rust/limescale deposits. As a result, antifreeze should always be added, even in tropical countries.

In addition to the anti-freeze mixture, water quality also plays an important role. Potable tap water should normally suffice to fulfil this requirement. The quality of regenerated sea water is not suitable.

1. Open the cooling system by removing the radiator surge tank cap.
2. Raise and support the vehicle. Refer to Lifting and Jacking the Vehicle.

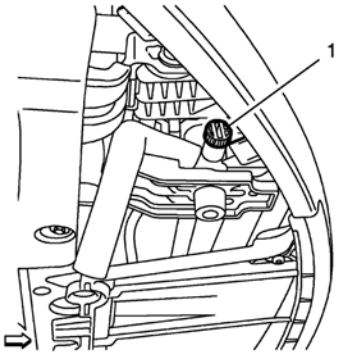

Note: Do NOT drain more than **1.5 liter (1.36 quarts)** of coolant fluid to avoid necessity of the coolant system bleeding procedure.

3. Install a drain hose, slowly open the drain screw (1) and allow the to drain out max. **1.5 liter (1.36 quarts)** coolant fluid into a clean measuring pincher.
4. Lower the vehicle.

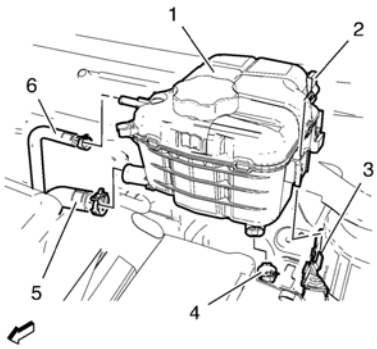

5. Remove the engine coolant air bleed hose (6), remove the clamp.
6. Remove the radiator surge tank engine hose (5), remove the clamp.
7. Remove radiator surge tank clip (2).
8. Disconnect coolant level sensor wiring harness plug (4).
9. Remove the radiator surge tank (1), unclip from the bracket (3).

Installation Procedure

cardiagn.com

Radiator Surge Tank Replacement

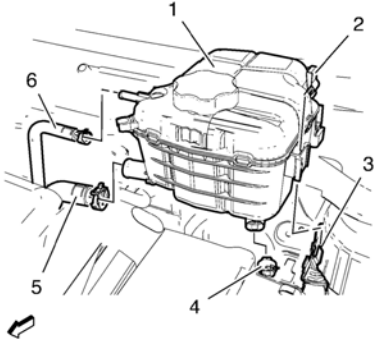

1. Install the radiator surge tank (1) and clip into the bracket (3).
2. Connect coolant level sensor wiring harness plug (4).
3. Install radiator surge tank clip (2).
4. Install the radiator surge tank engine hose (5), install the clamp.
5. Install the engine coolant air bleed hose (6), install the clamp.
6. Refill the radiator surge tank with the coolant fluid, which has been drained out before.

cardiagn.com

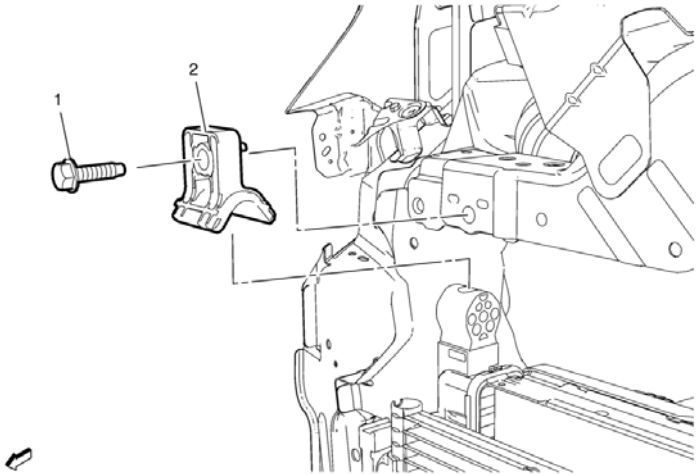

Radiator Upper Bracket Replacement

Callout	Component Name
	Preliminary Procedure
	Remove the front bumper fascia. Refer to Front Bumper Fascia Removal and Installation.
1	Radiator Support Bracket Bolt **Caution:** Refer to Fastener Caution. **Tighten** 22 Y (16 lb in)
2	Radiator Support Bracket **Procedure** Pull the radiator forward until the bracket is accessible.

cardiagn.com

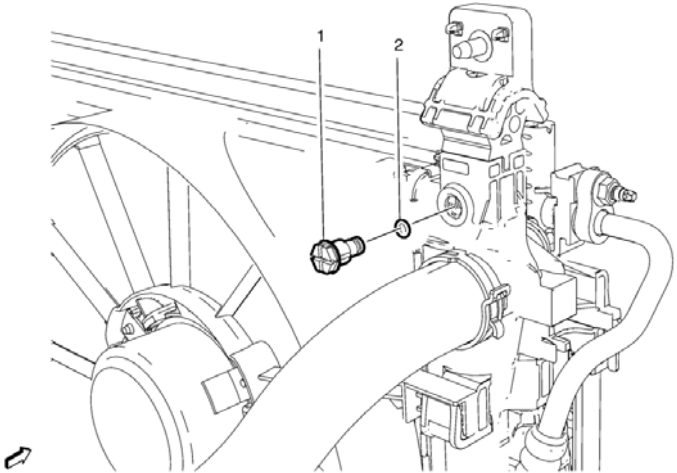

Radiator Vent Valve Replacement

Callout	Component Name

Warning: With a pressurized cooling system, the coolant temperature in the radiator can be considerably higher than the boiling point of the solution at atmospheric pressure. Removal of the surge tank cap, while the cooling system is hot and under high pressure, causes the solution to boil instantaneously with explosive force. This will cause the solution to spew out over the engine, the fenders, and the person removing the cap. Serious bodily injury may result.

Preliminary Procedures

Drain the cooling system. Refer to Cooling System Draining and Filling.

1	Radiator Vent Valve
2	Radiator Vent Valve Seal Ring

cardiagn.com

Illustration	Tool Number/ Description
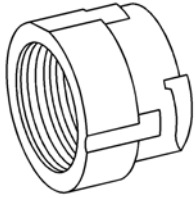	EN-471 KM-471 Adapter
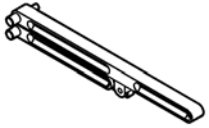	EN-46104 J-46104 Water Pump Pulley Holding Tool (for 2.0 Diesel LNP)
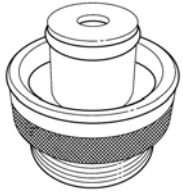	EN-6327-A KM-6327-A Cooling System Test Adapter

cardiagn.com

Removal Procedure

1. Remove the engine water outlet adapter. Refer to Engine Water Outlet Adapter Replacement.

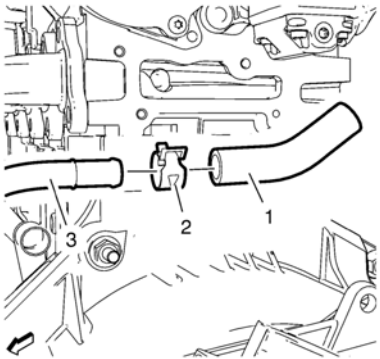

2. Remove the thermostat bypass hose clamp (2) and the thermostat bypass hose (1) from the thermostat bypass pipe (3).

Installation Procedure

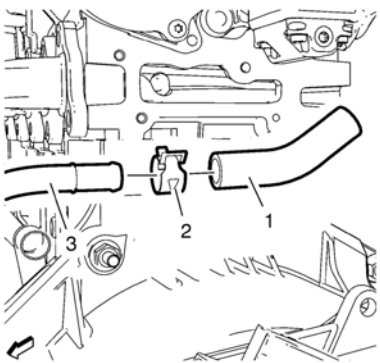

1. Install the thermostat bypass hose clamp (2) and the thermostat bypass hose (1) to the thermostat bypass pipe (3).
2. Install the engine water outlet adapter. Refer to Engine Water Outlet Adapter Replacement.

cardiagn.com

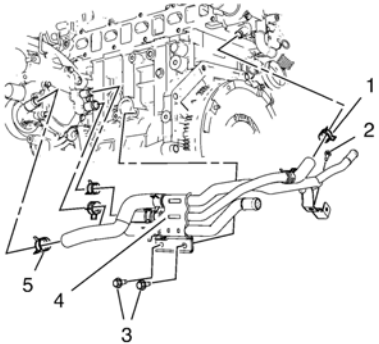

1. Install the thermostat bypass pipe (4).

Caution: Refer to Fastener Caution.

2. Install the thermostat bypass pipe retaining bolts (2) and tighten to **10 Y (89 lb in)**.
3. Install the 2 thermostat bypass pipe retaining bolts (3) and tighten to **25 Y (18 lb ft)**.
4. Install the 4 clamps (1, 5).

cardiagn.com

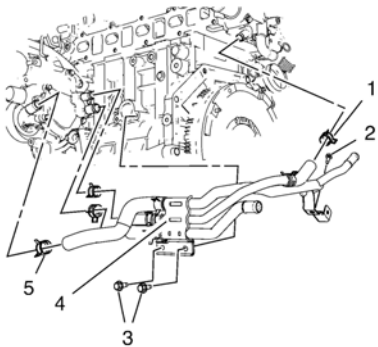

1. Remove the 4 clamps (1, 5).
2. Remove the 3 thermostat bypass pipe retaining bolts (2, 3).
3. Remove the thermostat bypass pipe (4).

cardiagn.com

Removal Procedure

1. Remove the engine water outlet adapter. Refer to Engine Water Outlet Adapter Replacement.
2. Remove the thermostat bypass hose. Refer to Thermostat Bypass Hose Replacement.

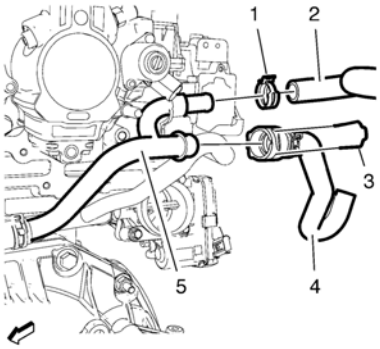

3. Remove the surge tank outlet front hose clamp (1) and the surge tank outlet front hose (2) from the surge tank outlet pipe (5).
4. Remove the heater outlet hose clip (3) and the heater outlet hose (4) from the surge tank outlet pipe (5).

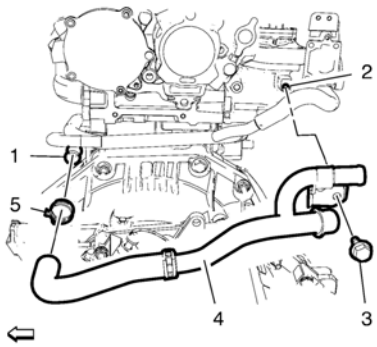

5. Remove the surge tank outlet rear hose clamp (5).
6. Remove the surge tank outlet pipe bracket bolt (3) from the intake manifold (2).
7. Remove the surge tank outlet rear hose along with the surge tank outlet pipe (4) from the thermostat bypass pipe (1).
8. Remove the throttle body assembly. Refer to Throttle Body Assembly Replacement.

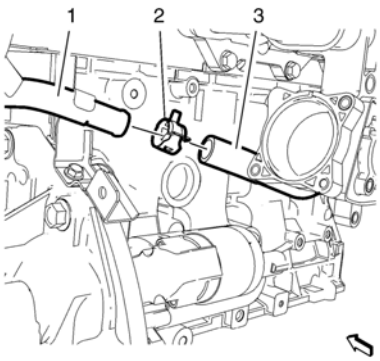

9. Remove the engine oil cooler outlet hose clamp (2) and the engine oil cooler outlet hose (3) from the thermostat bypass pipe (1).
10. Remove the exhaust particulate filter. Refer to Exhaust Particulate Filter Replacement.

cardiagn.com

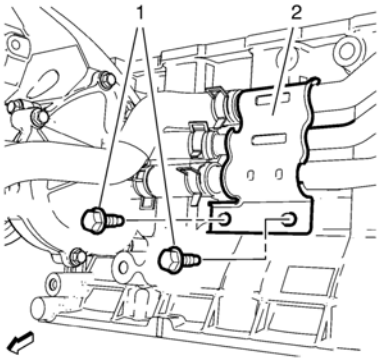

11. Remove the 2 thermostat bypass pipe bolts (1) from the thermostat bypass pipe bracket (2).

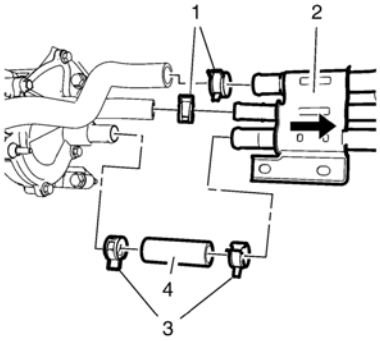

12. Remove the water pump inlet hose clamp and the thermostat bypass hose clamp (1) from the thermostat bypass pipes.
13. Loosen the engine coolant inlet hose clamp from the thermostat bypass pipe and move the thermostat bypass pipes along with the thermostat bypass pipe bracket (2) aside (see arrow).

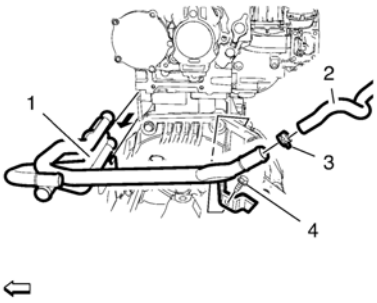

14. Remove the exhaust gas recirculation manifold cooling return hose clamp (3) and the exhaust gas recirculation manifold cooling return hose (2) from the thermostat bypass pipe (1).
15. Remove the thermostat bypass pipe bracket bolt (4) and remove the thermostat bypass pipe (1) in arrow direction.

Installation Procedure

cardiagn.com

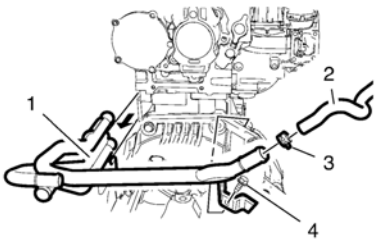

Caution: Refer to Fastener Caution.

1. Position the thermostat bypass pipe (1) to the engine and install the thermostat bypass pipe bracket bolt (4). Tighten the bolt to **10 Y (89 lb in)**.
2. Install the exhaust gas recirculation manifold cooling return hose clamp (3) with the exhaust gas recirculation manifold cooling return hose (2) to the thermostat bypass pipe (1).

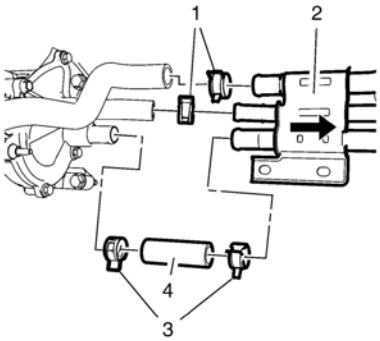

3. Position the thermostat bypass pipes along with the thermostat bypass pipe bracket (2) to the thermostat bypass hose and the engine coolant inlet hose (4).
4. Install the engine coolant inlet hose clamp (3) to the thermostat bypass pipe (2).
5. Install the thermostat bypass hose clamp and the water pump inlet hose clamp (1).

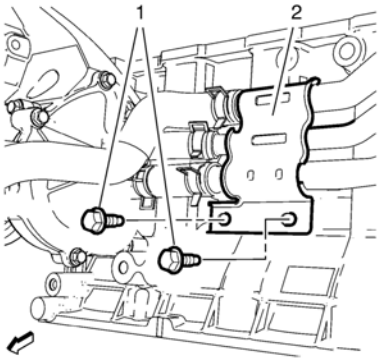

6. Install the 2 thermostat bypass pipe bolts (1) to the thermostat bypass pipe bracket (2) and tighten to **22 Y (16 lb ft)**.
7. Install the exhaust particulate filter. Refer to Exhaust Particulate Filter Replacement.

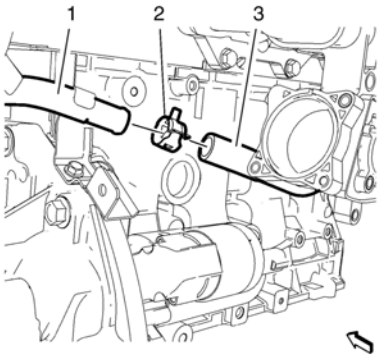

8. Install the engine oil cooler outlet hose clamp (2) with the engine oil cooler outlet hose (3) to the thermostat bypass pipe (1).

cardiagn.com

9. Install the throttle body assembly. Refer to Throttle Body Assembly Replacement.

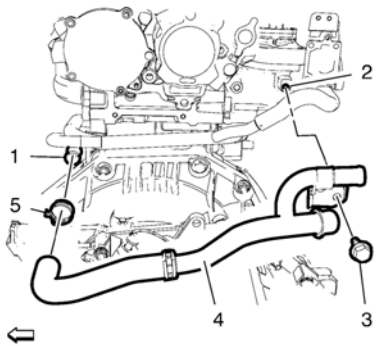

10. Install the surge tank outlet rear hose along with the surge tank outlet pipe (4) to the thermostat bypass pipe (1) and install the surge tank outlet rear hose clamp (5).
11. Install the surge tank outlet pipe bracket bolt (3) to the intake manifold (2) and tighten to **9 Y (80 lb in)**.

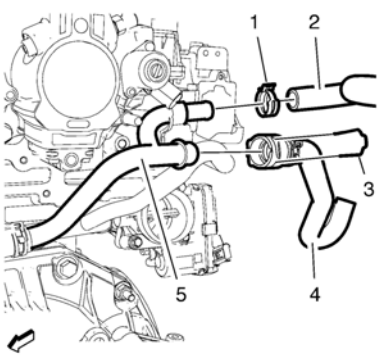

12. Install the heater outlet hose (4) to the surge tank outlet pipe (5) and install the heater outlet hose clip (3).
13. Install the surge tank outlet front hose clamp (1) with the surge tank outlet front hose (2) to the surge tank outlet pipe (5).
14. Install the thermostat bypass hose. Refer to Thermostat Bypass Hose Replacement.
15. Install the engine water outlet adapter. Refer to Engine Water Outlet Adapter Replacement.

cardiagn.com

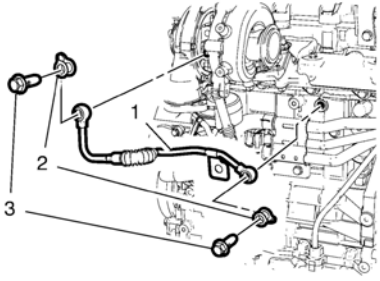

1. Install the turbocharger coolant feed pipe (1) and NEW gaskets (2).

Caution: Refer to Fastener Caution.

2. Install the 2 hollow bolts (3) to the turbocharger coolant feed pipe (1) and tighten to **32 Y (24 lb ft)**.

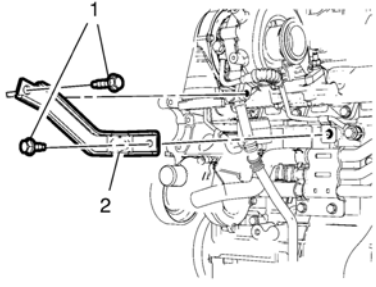

3. Install the turbocharger bracket (2).
4. Install the 2 turbocharger bracket bolts (1) to the turbocharger bracket (2) and tighten to **25 Y (18 lb ft)**.

cardiagn.com

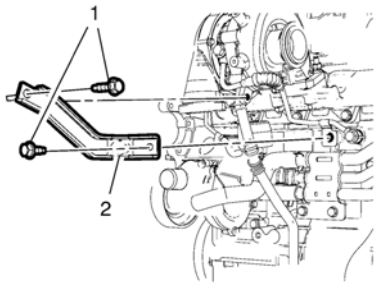

1. Remove the 2 turbocharger bracket bolts (1) from the turbocharger and engine block.
2. Remove the turbocharger bracket (2).

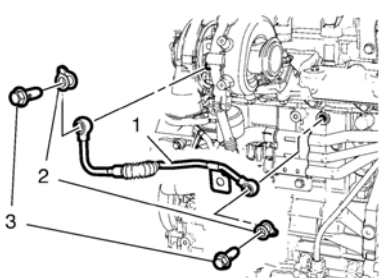

3. Remove the 2 hollow bolts (3) from the turbocharger and engine block.
4. Remove the turbocharger coolant feed pipe (1).
5. Remove the 2 turbocharger coolant feed pipe gasket (2).

cardiagn.com

Removal Procedure

1. Disconnect the battery negative cable. Refer to Battery Negative Cable Disconnection and Connection.

   Warning: Refer to Exhaust Service Warning.

2. Remove the turbocharger heat shield. Refer to Turbocharger Heat Shield Replacement.
3. Remove the exhaust particulate filter. Refer to Exhaust Particulate Filter Replacement.

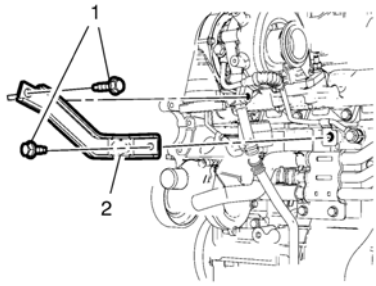

4. Remove the 2 turbocharger bracket bolts (1) from the turbocharger and the engine block.
5. Remove the turbocharger bracket (2).

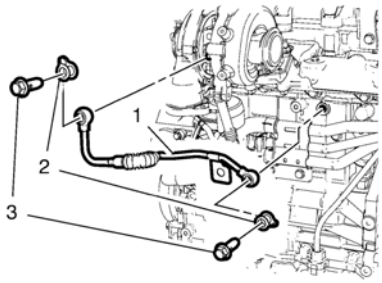

6. Remove the 2 hollow bolts (3) from the turbocharger and the engine block.
7. Remove the turbocharger coolant feed pipe (1).
8. Remove the 2 turbocharger coolant feed pipe gaskets (2).

Installation Procedure

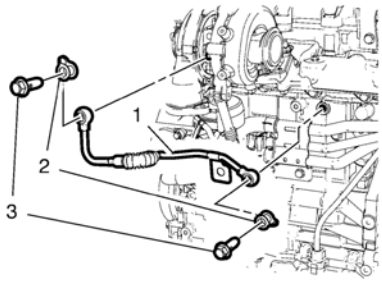

1. Install the turbocharger coolant feed pipe (1) with NEW gaskets (2).

   Caution: Refer to Fastener Caution.

2. Install the 2 hollow bolts (3) to the turbocharger coolant feed pipe (1) and tighten to **32 Y (24 lb ft)**.

cardiagn.com

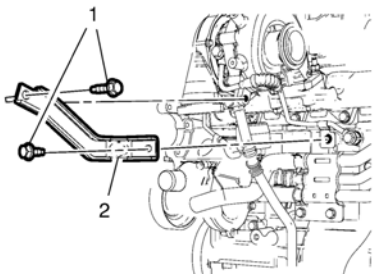

3. Install the turbocharger bracket (2).
4. Install the 2 bolts (1) to the turbocharger bracket (2) and tighten to **25 Y (18 lb ft)**.
5. Install the exhaust particulate filter. Refer to Exhaust Particulate Filter Replacement.
6. Install the turbocharger heat shield. Refer to Turbocharger Heat Shield Replacement.
7. Connect the battery negative cable. Refer to Battery Negative Cable Disconnection and Connection.

cardiagn.com

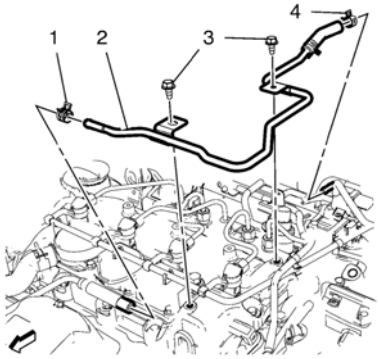

1. Install the turbocharger coolant return rear pipe (2).

Caution: Refer to Fastener Caution.

2. Install the 2 bolts (3) to the turbocharger coolant return rear pipe brackets and tighten to **10 Y (89 lb in)**.
3. Install the 2 clamps (1, 4) to the turbocharger coolant return rear pipe (2).

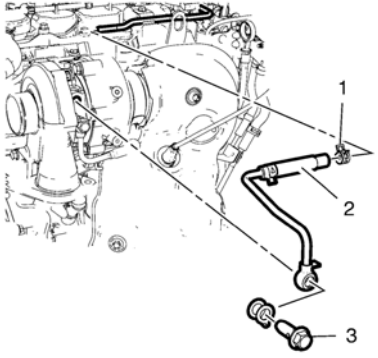

4. Install the turbocharger coolant return front pipe (2).
5. Install the hollow bolt (3) to the turbocharger coolant return front pipe (2) and a NEW gasket and tighten to **32 Y (24 lb ft)**.
6. Install the clamp (1) to the turbocharger coolant return front pipe (2).

cardiagn.com

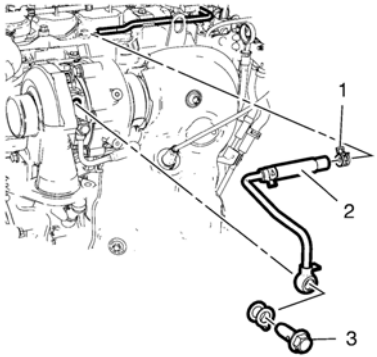

1. Remove the hollow bolt (3) from the turbocharger.
2. Remove the clamp (1) from the turbocharger coolant return front pipe (2).
3. Remove the turbocharger coolant return front pipe (2).

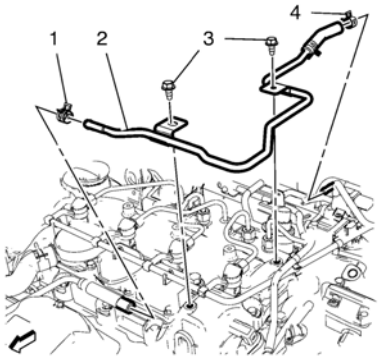

4. Remove the clamp (4) from the turbocharger coolant return rear pipe (2).
5. Remove the 2 bolts (3) from the camshaft cover.
6. Remove the turbocharger coolant return rear pipe (2).

cardiagn.com

Removal Procedure

1. Disconnect the battery negative cable. Refer to Battery Negative Cable Disconnection and Connection.
2. Remove the engine sight shield. Refer to Engine Sight Shield Replacement.

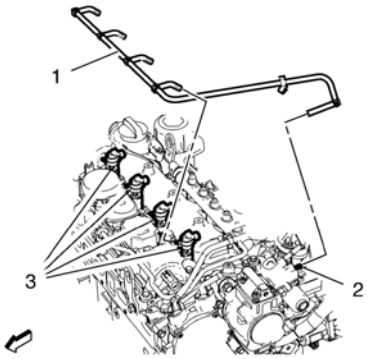

3. Unclip the fuel injection fuel return hose (2) from the positive crankcase ventilation valve.
4. Unclip the fuel return hose from the 2 retainer clips.
5. Remove the fuel injection fuel return hose (1) from the fuel injection pump (2) and the fuel injectors (3).
6. Remove the fuel injection fuel return hose (1).

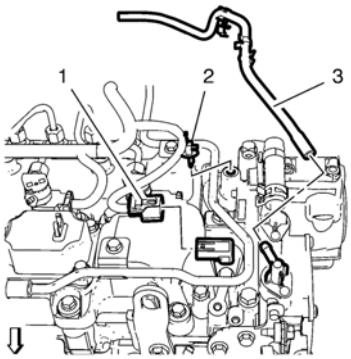

7. Unclip and remove the vacuum hose (3) from the vacuum pump.
8. Disconnect the camshaft position sensor wiring harness plug (1).
9. Unclip the camshaft position sensor wiring harness retaining clip (2) and hang the wiring harness aside.

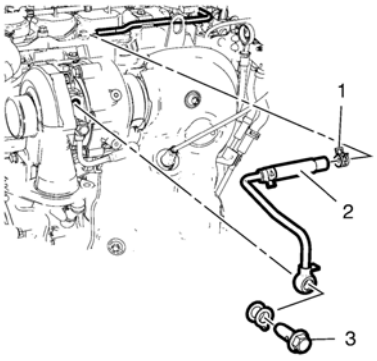

10. Remove the hollow bolt (3) from the turbocharger.
11. Remove the clamp (1) from the turbocharger coolant return front pipe (2).
12. Remove the turbocharger coolant return front pipe (2).

cardiagn.com

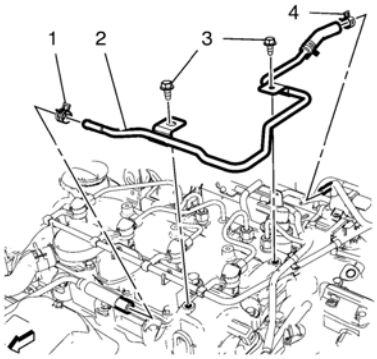

13. Remove the clamp (4) from the turbocharger coolant return rear pipe (2).
14. Remove the 2 bolts (3) from the camshaft cover.
15. Remove the turbocharger coolant return rear pipe (2).

Installation Procedure

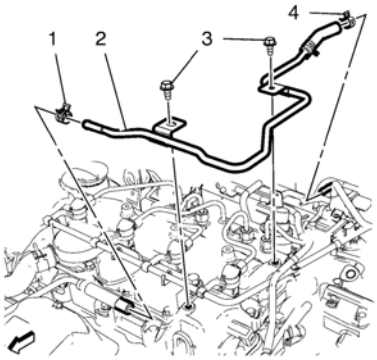

1. Install the turbocharger coolant return rear pipe (2).

Caution: Refer to Fastener Caution.

2. Install the 2 turbocharger coolant return pipe bracket bolts (3) and tighten to **10 Y (89 lb in)**.
3. Install both clamps (1, 4) to the turbocharger coolant return rear pipe (2).

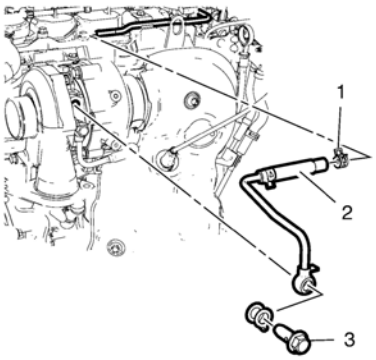

4. Install the turbocharger coolant return pipe (2).
5. Install the hollow bolt (3) to the turbocharger coolant return pipe (2) with a NEW gasket and tighten to **32 Y (24 lb ft)**.
6. Install the clamp (1) to the turbocharger coolant return pipe (2).

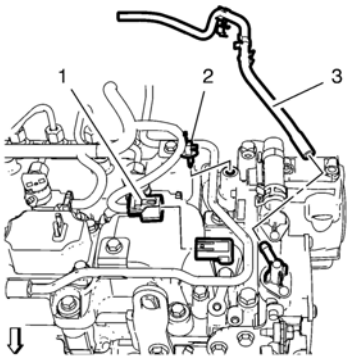

cardiagn.com

7. Clip in the camshaft position sensor wiring harness retaining clip (2).
8. Connect the camshaft position sensor wiring harness plug (1).
9. Install the vacuum hose (3) to the vacuum pump and clip in the vacuum hose retainer.

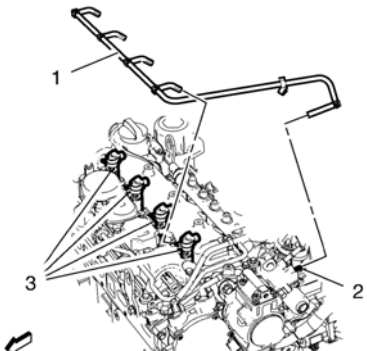

10. Install the fuel injection fuel return hose (1) to the fuel injection pump (2) and the fuel injectors (3).
11. Clip the fuel return hose into the 2 retainer clips.
12. Clip the fuel injection fuel return hose (2) to the positive crankcase ventilation valve.
13. Install the engine sight shield. Refer to Engine Sight Shield Replacement.
14. Connect the battery negative cable. Refer to Battery Negative Cable Disconnection and Connection.

cardiagn.com

Removal Procedure

1. Remove the engine sight shield. Refer to Engine Sight Shield Replacement.
2. Remove the front compartment insulator. Refer to Front Compartment Insulator Replacement.
3. Drain the cooling system. Refer to Cooling System Draining and Filling.
4. Remove the air cleaner outlet front and rear duct. Refer to Air Cleaner Outlet Duct Replacement.
5. Remove the exhaust particulate filter. Refer to Exhaust Particulate Filter Replacement.

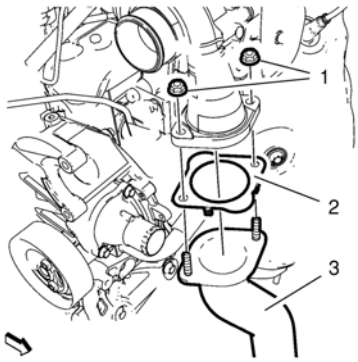

6. Remove the 2 charge air cooler inlet hose nuts (1).
7. Remove the charge air cooler inlet hose (3) from the turbocharger and remove the gasket (2).
8. Hang the charge air cooler inlet hose (3) aside.

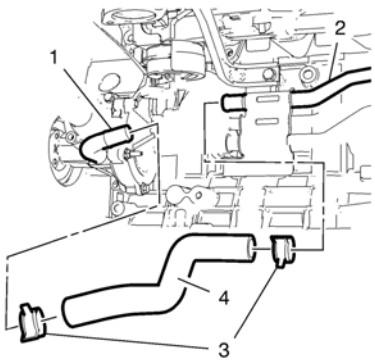

9. Remove the 2 water pump inlet hose clamps (3).
10. Remove the water pump inlet hose (4) from the thermostat bypass pipe (2) and from the water pump inlet pipe (1).

Installation Procedure

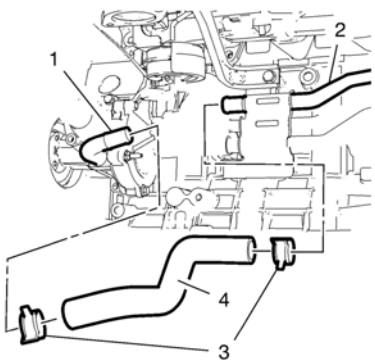

1. Install the water pump inlet hose (4) to the thermostat bypass pipe (2) and to the water pump inlet pipe (1).
2. Install the 2 water pump inlet hose clamps (3).

cardiagn.com

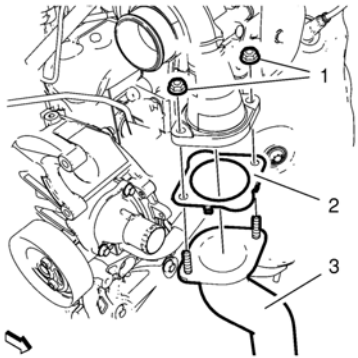

Caution: Refer to Fastener Caution.

3. Install the charge air cooler inlet hose (3) with a NEW gasket (2) to the turbo charger.
4. Install the 2 charge air cooler inlet hose nuts (1) and tighten to **10 Y (89 lb in)**.
5. Install the exhaust particulate filter. Refer to Exhaust Particulate Filter Replacement.
6. Install the front compartment insulator. Refer to Front Compartment Insulator Replacement.
7. Install the air cleaner outlet front and rear duct. Refer to Air Cleaner Outlet Duct Replacement.
8. Fill the cooling system. Refer to Cooling System Draining and Filling.
9. Install the engine sight shield. Refer to Engine Sight Shield Replacement.

cardiagn.com

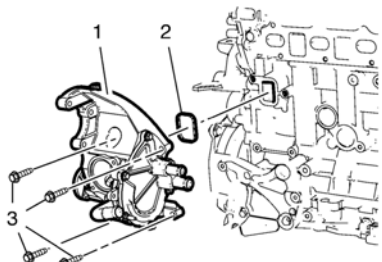

1. Install the water pump (1) with a NEW gasket (2).

   Caution: Refer to Fastener Caution.

2. Install the water pump retaining bolts (3) and tighten to **25 Y(18 lb ft)**.

cardiagn.com

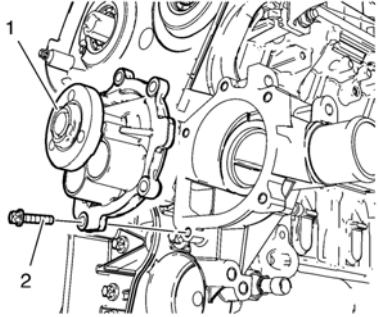

1. Clean the sealing surfaces and the 3 coolant pump threads.
2. Install NEW gasket.

Caution: Refer to Fastener Caution.

Caution: Refer to Torque-to-Yield Fastener Caution.

3. Install the coolant pump (1).
4. Install 5 NEW bolts (2) and tighten to **8 Y (71 lb in)**.

cardiagn.com

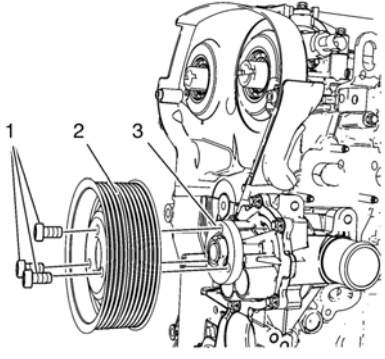

Note: Counterhold the crankshaft balancer. The belt has to be installed for this procedure.

1. Install the water pump pulley (2) to the water pump (3).

Caution: Refer to Fastener Caution.

2. Install the 3 water pump pulley bolts (1) with locking compound and tighten to **20 Y (15 lb ft)**.

   Refer to Adhesives, Fluids, Lubricants, and Sealers.

cardiagn.com

Special Tools

EN-46104 Water Pump Pulley Holding Tool

For equivalent regional tools, refer to Special Tools.

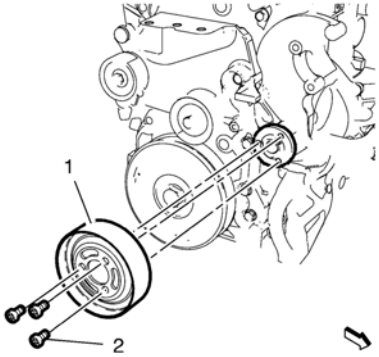

1. Install the water pump pulley (1).
2. Install the 3 water pump pulley retaining bolts (2).

   Caution: Refer to Fastener Caution.
3. Counterhold the water pump pulley with *EN-46104* holding tool and tighten the bolts (2) to **18 Y (13 lb ft)**.

cardiagn.com

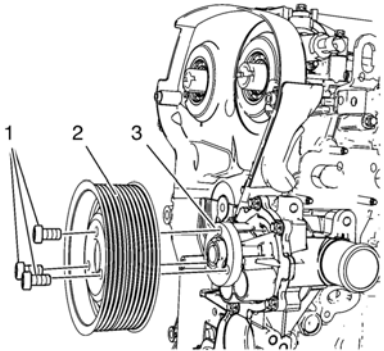

Note: Counterhold the crankshaft balancer. For this procedure the drive belt has to be installed.

1. Loosen the 3 water pump pulley bolts (1).
2. Remove the 3 water pump pulley bolts (1).
3. Remove the water pump pulley (2) from the water pump (3).

cardiagn.com

Special Tools

EN-46104 Water Pump Pulley Holding Tool.

For equivalent regional tools, refer to Special Tools.

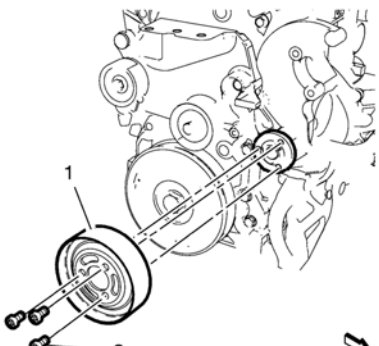

1. Remove 3 water pump pulley bolts (2) while counterhold water pump pulley with *EN-46104* holding tool .
2. Remove the water pump pulley (1).

cardiagn.com

Special Tools

EN-46104 Water Pump Pulley Holding Tool

For equivalent regional tools, refer to Special Tools.

Removal Procedure

1. Raise and support the vehicle. Refer to Lifting and Jacking the Vehicle.
2. Remove the engine compartment insulator. Refer to Front Compartment Insulator Replacement.
3. Remove the right front wheelhouse liner. Refer to Front Wheelhouse Liner Replacement.
4. Remove the drive belt and pulley cover. Refer to Drive Belt and Pulley Cover Removal.
5. Remove the drive belt. Refer to Drive Belt Replacement.

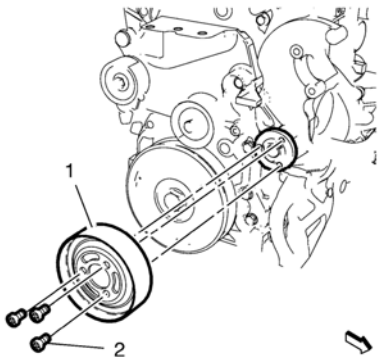

6. Counterhold the water pump pulley with the *EN-46104* holding tool and remove the 3 water pump pulley bolts (2).
7. Remove the water pump pulley (1).

Installation Procedure

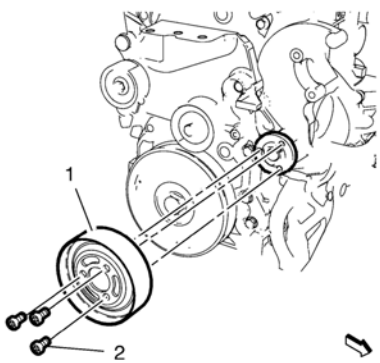

1. Install the water pump pulley (1).
2. Install the water pump pulley bolts (2).

Caution: Refer to Fastener Caution.

3. Counterhold the water pump pulley with the *EN-46104* holding tool and tighten the bolts (2) to **18 Y (13 lb ft)**.
4. Install the drive belt. Refer to Drive Belt Replacement.
5. Install the drive belt and pulley cover. Refer to Drive Belt and Pulley Cover Installation.
6. Install the right front wheelhouse liner. Refer to Front Wheelhouse Liner Replacement.
7. Install the engine compartment insulator. Refer to Front Compartment Insulator Replacement.
8. Lower the vehicle.

cardiagn.com

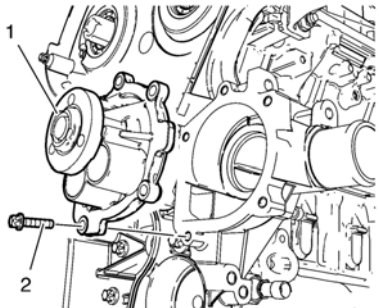

1. Remove the 5 water pump bolts (2).
2. Remove the water pump (1).
3. Remove the water pump seal.

cardiagn.com

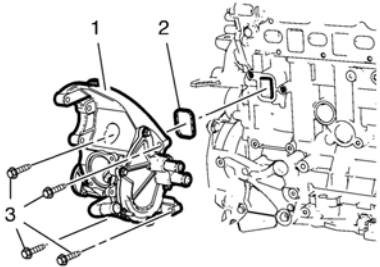

1. Remove the 4 water pump bolts (3).
2. Remove the water pump (1).
3. Remove the water pump gasket (2).

cardiagn.com

Removal procedure

1. Recover the refrigerant. Refer to Refrigerant Recovery and Recharging.
2. Disconnect the battery negative cable. Refer to Battery Negative Cable Disconnection and Connection.
3. Remove the engine sight shield. Refer to Engine Sight Shield Replacement.
4. Remove the air cleaner outlet front and rear duct. Refer to Air Cleaner Outlet Duct Replacement.
5. Remove the engine compartment insulator. Refer to Front Compartment Insulator Replacement.
6. Drain the cooling system. Refer to Cooling System Draining and Filling.
7. Remove the air conditioning compressor. Refer to Air Conditioning Compressor Replacement.
8. Remove the power steering pump. Refer to Power Steering Pump Replacement.
9. Remove the exhaust particulate filter. Refer to Exhaust Particulate Filter Replacement.

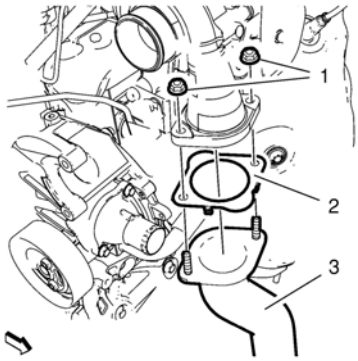

10. Remove the 2 charge air cooler inlet hose nuts (1).
11. Remove the charge air cooler inlet hose (3) from the turbocharger and remove the gasket (2).
12. Hang the charge air cooler inlet hose (3) aside.
13. Remove the radiator outlet hose. Refer to Radiator Outlet Hose Replacement.

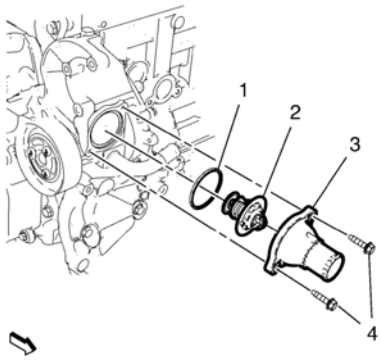

14. Remove the 2 thermostat housing bolts (4).
15. Remove the thermostat housing (3).
16. Remove the thermostat (2).
17. Remove the thermostat seal ring (1).

cardiagn.com

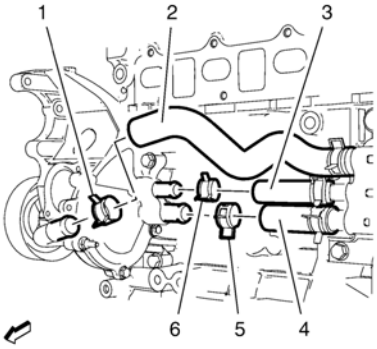

18. Remove the water pump inlet hose clamp (1) and the water pump inlet hose (2).
19. Remove the thermostat bypass hose clamp (6) and the thermostat bypass hose (3).
20. Remove the engine coolant inlet hose clamp (5) and the engine coolant inlet hose (4).
21. Remove the water pump pulley. Refer to Water Pump Pulley Replacement.

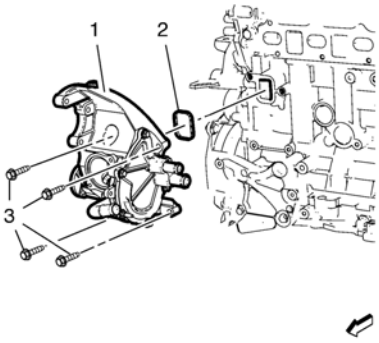

22. Remove the 4 water pump bolts (3).
23. Remove the water pump (1).
24. Remove the water pump gasket (2).

Installation Procedure

1. Clean the sealing surfaces.

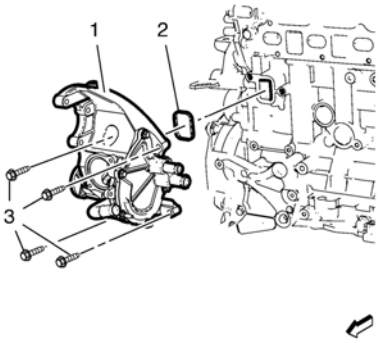

2. Install the water pump (1) with a NEW water pump gasket (2).

Caution: Refer to Fastener Caution.

3. Install the 4 water pump bolts (3) and tighten to **25 Y (18 lb ft)**.
4. Install the water pump pulley. Refer to Water Pump Pulley Replacement.

cardiagn.com

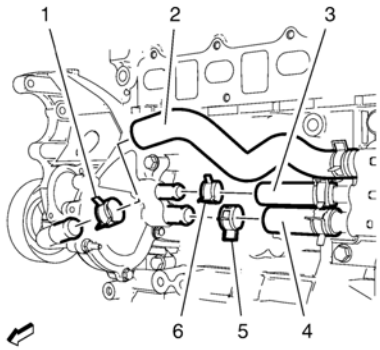

5. Install the engine coolant inlet hose (4) with the engine coolant inlet hose clamp (5).
6. Install the thermostat bypass hose (3) with the thermostat bypass hose clamp (6).
7. Install the water pump inlet hose (2) with the water pump inlet hose clamp (1).

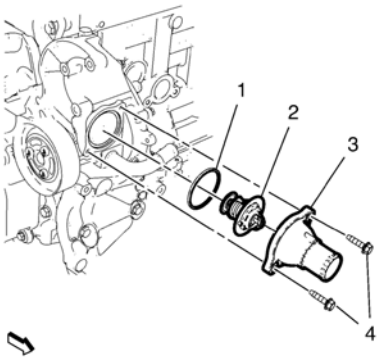

8. Install the thermostat (2) with a NEW thermostat seal ring (1).
9. Install the thermostat housing (3).
10. Install the 2 thermostat housing bolts (4) and tighten to **8 Y (71 lb in)**.

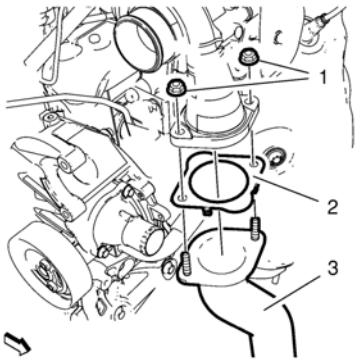

11. Install the charge air cooler inlet hose (3) with a NEW gasket (2) to the turbocharger.
12. Install the 2 charge air cooler inlet hose nuts (1) and tighten to **10 Y (89 lb in)**.
13. Install the exhaust particulate filter. Refer to Exhaust Particulate Filter Replacement.
14. Install the power steering pump. Refer to Power Steering Pump Replacement.
15. Install the air conditioning compressor. Refer to Air Conditioning Compressor Replacement.
16. Install the engine compartment insulator. Refer to Front Compartment Insulator Replacement.
17. Lower the vehicle.
18. Fill the cooling system. Refer to Cooling System Draining and Filling.
19. Install the air cleaner outlet front and rear duct. Refer to Air Cleaner Outlet Duct Replacement.
20. Install the engine sight shield. Refer to Engine Sight Shield Replacement.
21. Connect the battery negative cable. Refer to Battery Negative Cable Disconnection and Connection.
22. Recharge the refrigerant. Refer to Refrigerant Recovery and Recharging.

cardiagn.com

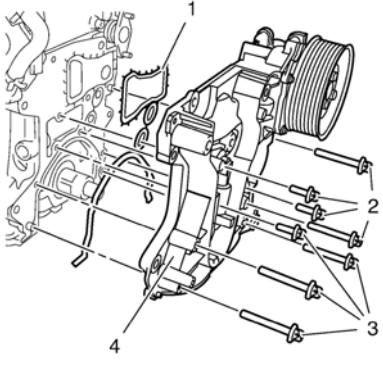

1. Install the NEW engine cover gasket (1).
2. Install the engine cover with the included oil pump (4).

Caution: Refer to Fastener Caution.

3. Install the 8 engine cover bolts (2, 3) and tighten to **20 Y (15 lb ft)**.

cardiagn.com

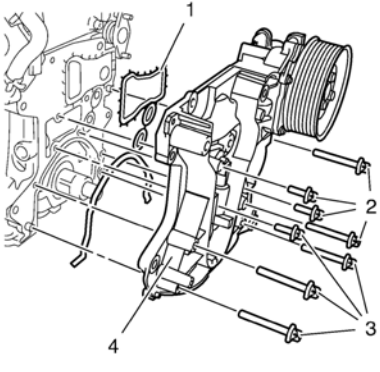

Note: Note the different screw lengths.

1. Remove the 8 bolts (2, 3).
2. Remove the engine front cover with the included oil pump (4).
3. Remove the gasket (1).

Note: Do not damage the sealing surfaces.

4. Clean the sealing surface.

cardiagn.com

Removal Procedure

1. Open the hood.
2. Disconnect the negative battery cable. Refer to Battery Negative Cable Disconnection and Connection.
3. Remove the exhaust manifold. Refer to Exhaust Manifold Replacement.
4. Drain the cooling system. Refer to Cooling System Draining and Filling.
5. Remove the air conditioning compressor. Refer to Air Conditioning Compressor Replacement.
6. Remove the generator. Refer to Generator Replacement.
7. Remove the timing belt rear cover. Refer to Timing Belt Rear Cover Replacement.
8. Remove the oil pan. Refer to Oil Pan Replacement.
9. Remove the radiator outlet hose from the water pump. Refer to Radiator Outlet Hose Replacement.

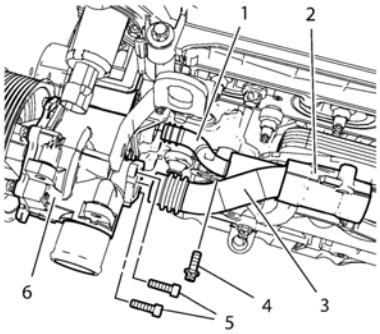

10. Remove the engine oil cooler inlet pipe bolt (4).
11. Push the engine oil cooler inlet pipe (1) into the engine oil cooler housing (2).
12. Remove the 2 engine oil cooler outlet pipe bolts (5) from the water pump.
13. Push the engine oil cooler outlet pipe (3) into the engine oil cooler housing (2).

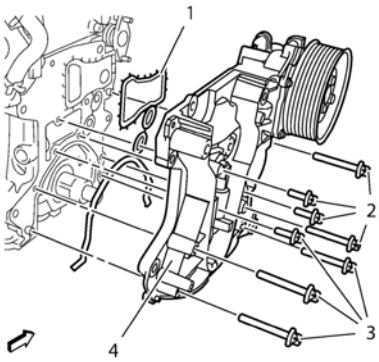

14. Remove the 8 engine front cover bolts (2, 3).
15. Remove the engine front cover (4).
16. Remove the engine front cover seal (1).

Installation Procedure

1. Clean sealing surface.

cardiagn.com

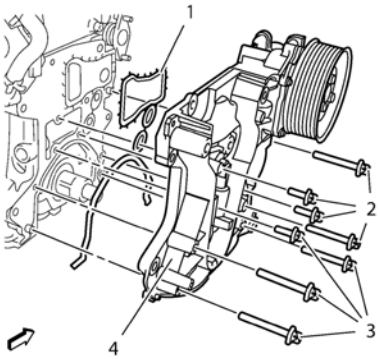

2. Install a NEW engine front cover seal (1).
3. Install the engine front cover (4).

Caution: Refer to Fastener Caution.

4. Install the 8 engine front cover bolts (2, 3) and tighten to **20 Y (15 lb ft)**.

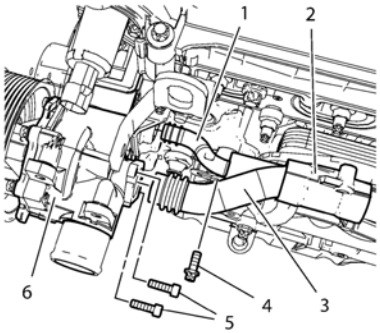

5. Push the engine oil cooler outlet pipe (3) to the water pump (6).
6. Install the engine oil cooler outlet pipe bolts (5) and tighten to **8 Y (71 lb in)**.
7. Push the engine oil cooler inlet pipe (1) into the water pump (6).
8. Install the engine oil cooler inlet pipe bolt (4) and tighten to **8 Y (71 lb in)**.
9. Install the radiator outlet hose to the water pump. Refer to Radiator Outlet Hose Replacement.
10. Install the oil pan. Refer to Oil Pan Replacement.
11. Install the timing belt rear cover. Refer to Timing Belt Rear Cover Replacement.
12. Install the generator. Refer to Generator Replacement.
13. Install the air conditioning compressor. Refer to Air Conditioning Compressor Replacement.
14. Install the exhaust manifold. Refer to Exhaust Manifold Replacement.
15. Connect the negative battery cable. Refer to Battery Negative Cable Disconnection and Connection.
16. Fill the cooling system. Refer to Cooling System Draining and Filling.
17. Close the hood.

cardiagn.com

Removal Procedure

1. Raise and support the vehicle. Refer to Lifting and Jacking the Vehicle.
2. Remove the front compartment insulator. Refer to Front Compartment Insulator Replacement.
3. Place a drain pan under the oil drain plug.

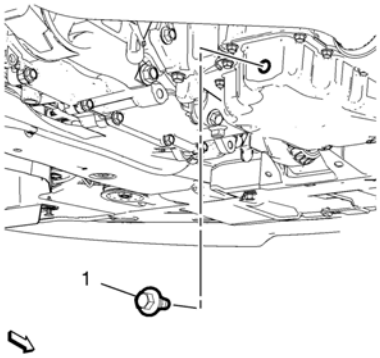

4. Remove the oil pan drain plug (1).

Caution: Refer to Fastener Caution.

5. Install the oil pan drain plug (1) and tighten to **25 Y (18 lb ft)**after draining the engine oil.
6. Remove the drain pan under the oil drain plug.
7. Install the front compartment insulator. Refer to Front Compartment Insulator Replacement.
8. Lower the vehicle.
9. Remove the engine sight shield. Refer to Engine Sight Shield Replacement.

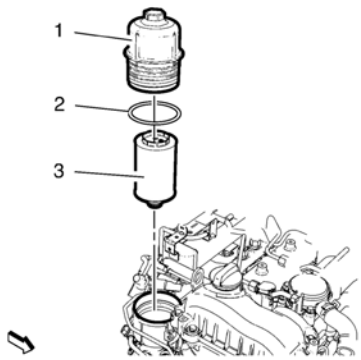

10. Remove the oil filter cap (1) from the oil filter housing.
11. Remove the oil filter cap seal (2).
12. Remove the oil filter (3) from the oil filter cap (1).

Installation Procedure

cardiagn.com

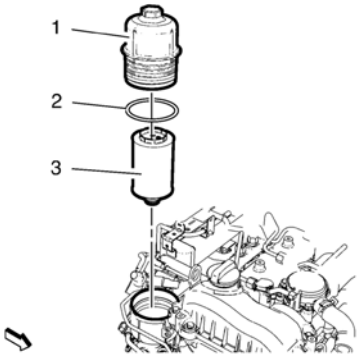

1. Install a NEW oil filter cap seal (2).
2. Install a NEW oil filter (3) to the oil filter cap (1).
3. Install the oil filter cap (1) to the oil filter housing and tighten the oil filter cap (1) to **25 Y (18 lb ft)**.
4. Install the engine sight shield. Refer to Engine Sight Shield Replacement.
5. Fill the engine with engine oil. Refer to Engine Mechanical Specifications.

cardiagn.com

1. Clean the engine oil cooler to the oil filter housing sealing surfaces.

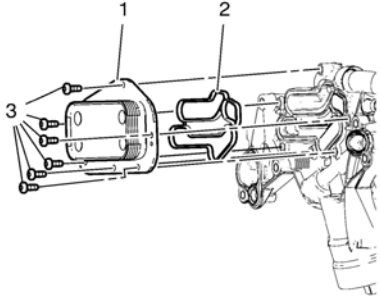

2. Install the NEW engine oil cooler gasket (2) and the engine oil cooler (1) to the engine oil cooler housing.

   Caution: Refer to Fastener Caution.

3. Install the 6 engine oil cooler bolts (3) and tighten to **8 Y (71 lb in)**.

cardiagn.com

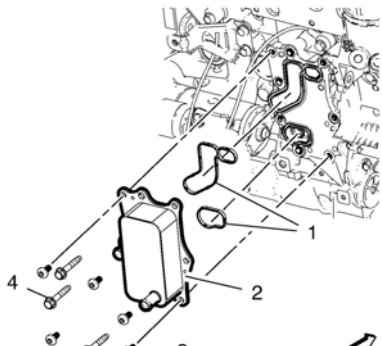

1. Install the engine oil cooler (2) along with 2 NEW engine oil cooler gaskets (1).

   Caution: Refer to Fastener Caution.

2. Install the 8 engine oil cooler retaining bolts (3, 4) and tighten to **25 Y (18 lb ft)**.

cardiagn.com

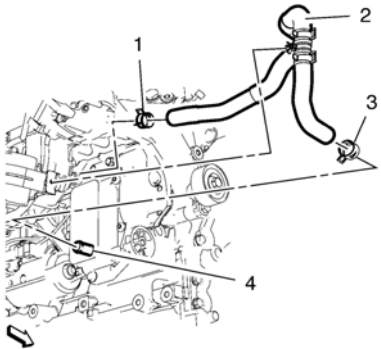

1. Install the engine oil cooler outlet hose (2).
2. Install the 2 clamps (1, 3).

cardiagn.com

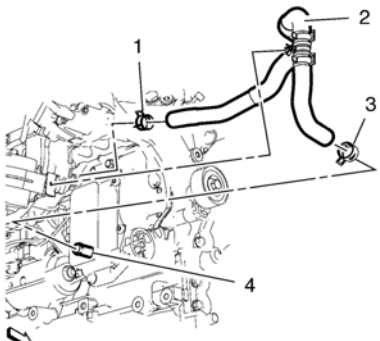

1. Remove the clamps (1, 3).
2. Remove the engine oil cooler outlet hose (2).

cardiagn.com

Removal Procedure

1. Remove the engine sight shield. Refer to Engine Sight Shield Replacement.
2. Remove the battery tray. Refer to Battery Tray Replacement.
3. Remove the engine control module. Refer to Engine Control Module Replacement.
4. Raise and support the vehicle. Refer to Lifting and Jacking the Vehicle.
5. Remove the front compartment insulator. Refer to Front Compartment Insulator Replacement.
6. Drain the cooling system. Refer to Cooling System Draining and Filling.

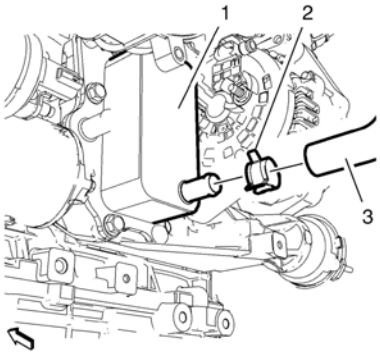

7. Remove the engine oil cooler outlet hose clamp (2) and the engine oil cooler outlet hose (3) from the engine oil cooler (1).
8. Lower the vehicle.
9. Remove the charge air cooler outlet rear hose from the throttle body and the charge air cooler outlet front hose from the charge air cooler outlet front hose bracket and hang it aside. Refer to Charge Air Cooler Outlet Hose Replacement.
10. Remove the throttle body. Refer to Throttle Body Assembly Replacement.

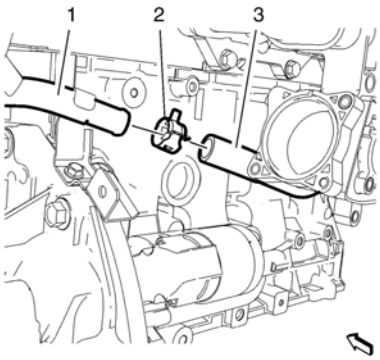

11. Remove the engine oil cooler outlet hose clamp (2) and the engine oil cooler outlet hose (3) from the thermostat bypass pipe (1).
12. Remove the engine oil cooler outlet hose (3).

Installation Procedure

cardiagn.com

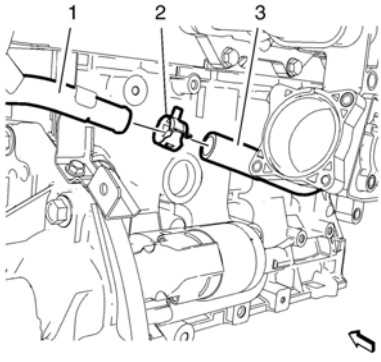

1. Reposition the engine oil cooler outlet hose (3).
2. Install the engine oil cooler outlet hose (3) with the engine oil cooler outlet hose clamp (2) to the thermostat bypass pipe (1).
3. Install the throttle body. Refer to Throttle Body Assembly Replacement.
4. Install the charge air cooler outlet rear hose to the throttle body and the charge air cooler outlet front hose to the charge air cooler outlet front hose bracket. Refer to Charge Air Cooler Outlet Hose Replacement.
5. Raise the vehicle.

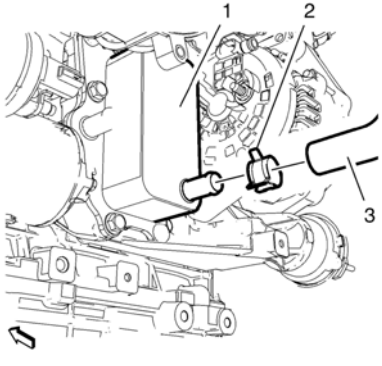

6. Install the engine oil cooler outlet hose (3) with the engine oil cooler outlet hose clamp (2) to the engine oil cooler (1).
7. Install the front compartment insulator. Refer to Front Compartment Insulator Replacement.
8. Lower the vehicle.
9. Fill the cooling system. Refer to Cooling System Draining and Filling.
10. Install the engine control module. Refer to Engine Control Module Replacement.
11. Install the battery tray. Refer to Battery Tray Replacement.
12. Install the engine sight shield. Refer to Engine Sight Shield Replacement.

cardiagn.com

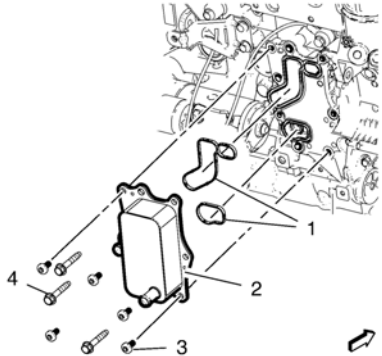

1. Remove the engine oil cooler retaining bolts (3, 4).
2. Remove the engine oil cooler (2) in conjunction with the engine oil cooler gaskets (1).

cardiagn.com

Removal Procedure

1. Drain the engine oil. Refer to Engine Oil and Oil Filter Replacement.
2. Drain the engine cooling system. Refer to Cooling System Draining and Filling.
3. Remove the generator. Refer to Generator Replacement.
4. Remove the engine oil cooler outlet hose. Refer to Engine Oil Cooler Outlet Hose Replacement.
5. Remove the exhaust gas recirculation valve cooling feed hose. Refer to Exhaust Gas Recirculation Valve Cooling Feed Hose Replacement.

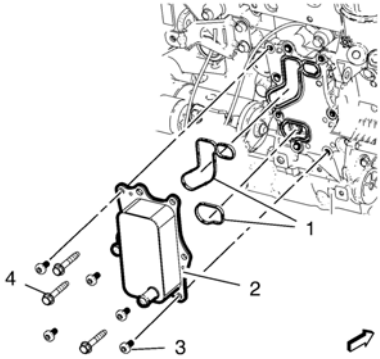

6. Remove the 8 engine oil cooler retaining bolts (3, 4).
7. Remove the engine oil cooler (2) along with the 2 engine oil cooler gaskets (1).

Installation Procedure

1. Clean the sealing surfaces.

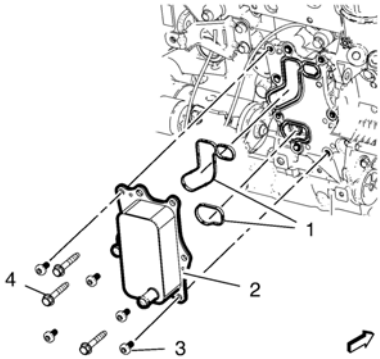

2. Install the engine oil cooler (2) along with 2 NEW engine oil cooler gaskets (1).

Caution: Refer to Fastener Caution.

3. Install the 8 engine oil cooler retaining bolts (3, 4). Tighten the bolts to **25 Y (18 lb ft)**.
4. Install the engine oil cooler outlet hose. Refer to Engine Oil Cooler Outlet Hose Replacement.
5. Install the exhaust gas recirculation valve cooling feed hose. Refer to Exhaust Gas Recirculation Valve Cooling Feed Hose Replacement.
6. Install the generator. Refer to Generator Replacement.
7. Fill the engine cooling system. Refer to Cooling System Draining and Filling.
8. Fill in the engine oil. Refer to Engine Oil and Oil Filter Replacement.

cardiagn.com

Removal Procedure

1. Raise and support the vehicle. Refer to Lifting and Jacking the Vehicle.
2. Remove the front compartment insulator. Refer to Front Compartment Insulator Replacement.
3. Drain the engine oil. Refer to Engine Oil and Oil Filter Replacement.

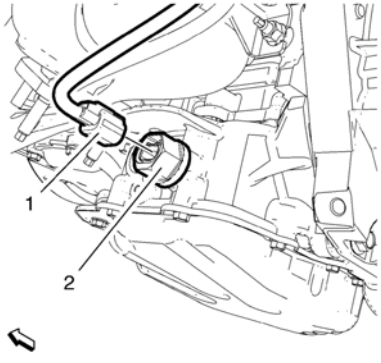

4. Disconnect the engine oil level indicator switch wiring harness plug (1) from the engine oil level indicator switch (2).
5. Remove the engine oil level indicator switch (2).

Installation Procedure

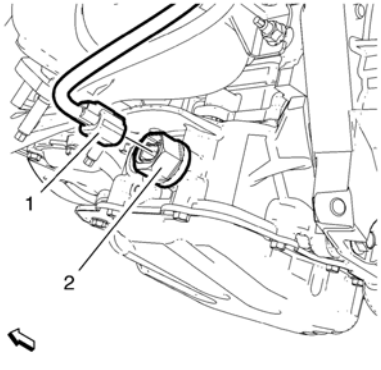

Caution: Refer to Fastener Caution.

1. Install the engine oil level indicator switch (2). Tighten the oil level indicator switch to **20 Y (15 lb ft)**.
2. Connect the engine oil level indicator switch wiring harness plug (1) to the engine oil level indicator (2).
3. Install the front compartment insulator. Refer to Front Compartment Insulator Replacement.
4. Lower the vehicle.
5. Fill the engine with engine oil. Refer to Engine Mechanical Specifications.

cardiagn.com

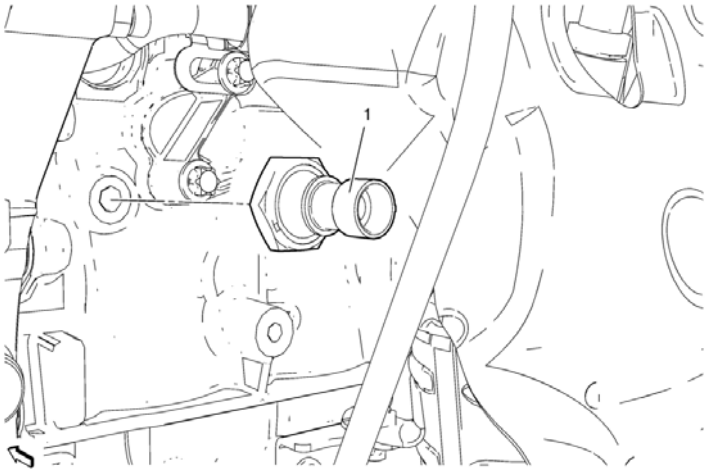

Engine Oil Pressure Indicator Switch Replacement

Callout	Component Name
Preliminary Procedure	
Remove the air conditioning compressor. Refer to Air Conditioning Compressor Replacement.	
1	Oil Pressure Switch **Caution:** Refer to Fastener Caution. **Procedure** Disconnect the oil pressure switch wiring harness plug and remove the switch. **Tighten** 30 Y (22 lb ft)

cardiagn.com

1. Remove any old thread sealant and gasket material with a suitable tool.
2. Clean the lower oil pan and lower oil pan components with solvent.

Note: Ensure that the sealing surface is clear of oil, grease and old sealant material.

3. Clean out debris from the bolt holes.

Warning: Refer to Safety Glasses and Compressed Air Warning.

4. Dry the lower oil pan and lower oil pan components with compressed air.

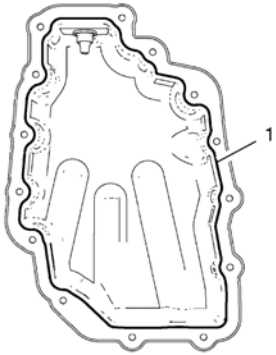

Note: The complete installation procedure of the lower oil pan should be done in 10 minutes.

Note: Do not coat sealing compound on the oil pan bolt holes and threads.

5. Apply sealing compound on sealant line (1).

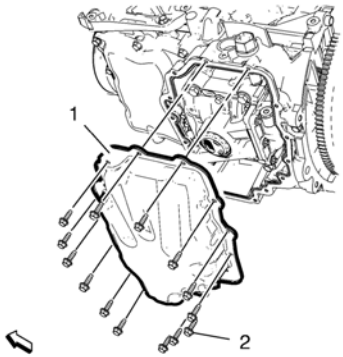

6. Install the lower oil pan (1).

Caution: Refer to Fastener Caution.

7. Install the 14 lower oil pan retaining bolts (2) and tighten evenly to **10 Y (89 lb in)**.

cardiagn.com

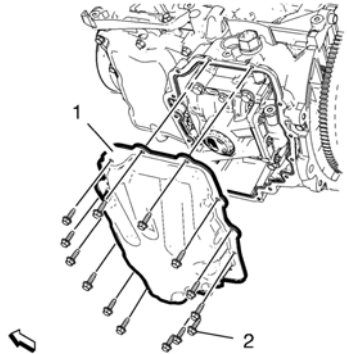

1. Remove the 14 lower oil pan retaining bolts (2).

   Note: Carefully detach from engine block using suitable tool. Do not damage the sealing surfaces.

2. Remove the lower oil pan (1).

cardiagn.com

Removal Procedure

1. Raise and support the vehicle. Refer to Lifting and Jacking the Vehicle.
2. Remove the front compartment insulator. Refer to Front Compartment Insulator Replacement.
3. Drain the engine oil. Refer to Engine Oil and Oil Filter Replacement.

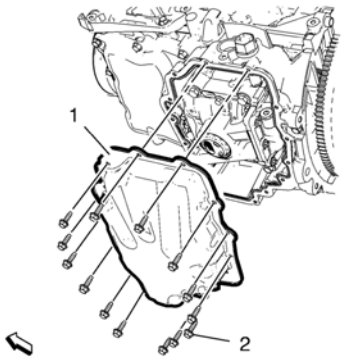

4. Remove the 14 lower oil pan retaining bolts (2).

   Note: Carefully detach from engine block, using a suitable tool. Do not damage sealing surfaces.
5. Remove the oil pan (1).

Installation Procedure

1. Remove any old thread sealant and gasket material with a suitable tool.
2. Clean the lower oil pan and lower oil pan components with solvent.

   Note: Ensure that the sealing surface is clear of oil, grease and old sealant material.
3. Clean out debris from the bolt holes.

   Warning: Refer to Safety Glasses and Compressed Air Warning.
4. Dry the lower oil pan and lower oil pan components with compressed air.

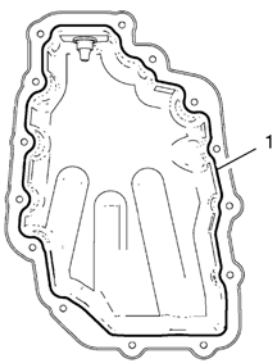

   Note: The complete installation procedure of the lower oil pan should be done in 10 minutes.

   Note: Do not coat sealing compound on the oil pan bolt holes and threads.
5. Apply sealing compound on the sealant line (1).

cardiagn.com

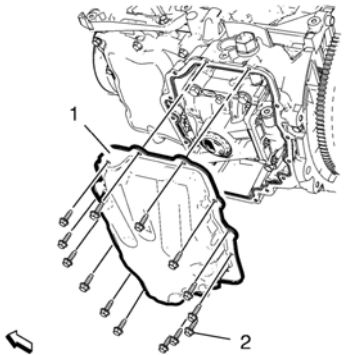

6. Install the lower oil pan (1).

Caution: Refer to Fastener Caution.

7. Install the 14 lower oil pan retaining bolts (2) and tighten evenly to **10 Y (89 lb in)**.
8. Install the front compartment insulator. Refer to Front Compartment Insulator Replacement.
9. Lower the vehicle.
10. Fill the engine with engine oil. Refer to Engine Mechanical Specifications.

cardiagn.com

Removal Procedure

1. Remove the engine sight shield. Refer to Engine Sight Shield Replacement.
2. Remove the turbocharger oil feed pipe from the oil filter adapter. Refer to Turbocharger Oil Feed Pipe Replacement.
3. Remove the oil pressure switch. Refer to Engine Oil Pressure Switch Replacement.
4. Remove the drive belt tensioner. Refer to Drive Belt Tensioner Removal.
5. Remove the generator. Refer to Generator Replacement.
6. Drain the cooling system. Refer to Cooling System Draining and Filling.
7. Remove the oil cooler outlet hose. Refer to Engine Oil Cooler Outlet Hose Replacement.
8. Remove the exhaust gas recirculation valve cooling feed hose. Refer to Exhaust Gas Recirculation Valve Cooling Feed Hose Replacement.
9. Remove the engine oil cooler. Refer to Engine Oil Cooler Replacement.

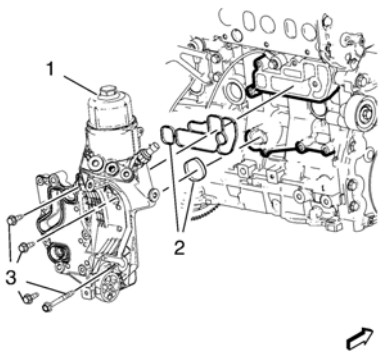

10. Remove the 4 oil filter assembly retaining bolts (3).
11. Remove the oil filter assembly (1) along with the oil filter assembly gasket (2).

Installation Procedure

1. Clean the sealant surfaces.

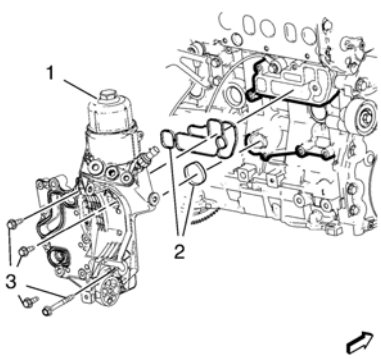

2. Install the oil filter assembly (1) along with the NEW oil filter assembly gasket (2).

Caution: Refer to Fastener Caution.

3. Install 4 oil filter assembly retaining bolts (3) and tighten to **25 Y (18 lb ft)**.
4. Install the engine oil cooler. Refer to Engine Oil Cooler Replacement.
5. Install the exhaust gas recirculation valve cooling feed hose. Refer to Exhaust Gas Recirculation Valve Cooling Feed Hose Replacement.
6. Install the oil cooler outlet hose. Refer to Engine Oil Cooler Outlet Hose Replacement.
7. Install the generator. Refer to Generator Replacement.
8. Install the drive belt tensioner. Refer to Drive Belt Tensioner Removal.
9. Install the oil pressure switch. Refer to Engine Oil Pressure Switch Replacement.
10. Install the turbocharger oil feed pipe to the oil filter adapter. Refer to Turbocharger Oil Feed Pipe Replacement.
11. Fill the cooling system. Refer to Cooling System Draining and Filling.
12. Change engine oil and oil filter. Refer to Engine Oil and Oil Filter Replacement.
13. Install the engine sight shield. Refer to Engine Sight Shield Replacement.

cardiagn.com

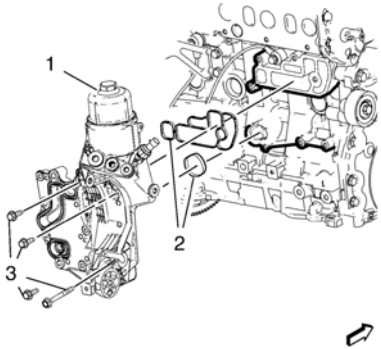

1. Install the oil filter assembly (1) along with a NEW oil filter assembly gasket (2).

   Caution: Refer to Fastener Caution.

2. Install the 4 oil filter assembly retaining bolts (3) and tighten to **25 Y (18 lb ft)**.

cardiagn.com

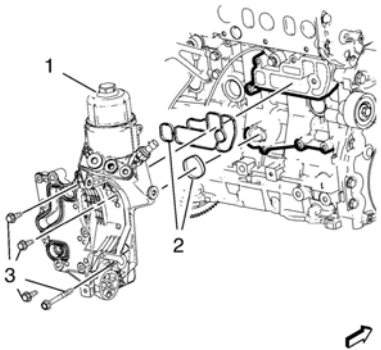

1. Remove the 4 oil filter assembly retainer bolts (3).
2. Remove the oil filter assembly (1) along with the oil filter assembly gasket (2).

cardiagn.com

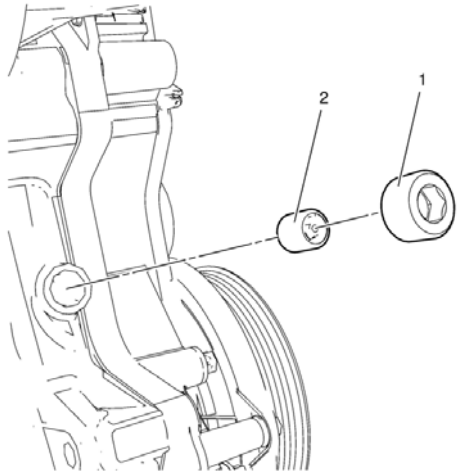

Oil Flow Check Valve Replacement

Callout	Component Name
Preliminary Procedure	
Remove the generator. Refer to Generator Replacement.	
1	Oil Flow Check Valve Bore Plug **Caution:** Refer to Fastener Caution. **Tighten** 21 Y (16 lb ft)
2	Oil Flow Check Valve

cardiagn.com

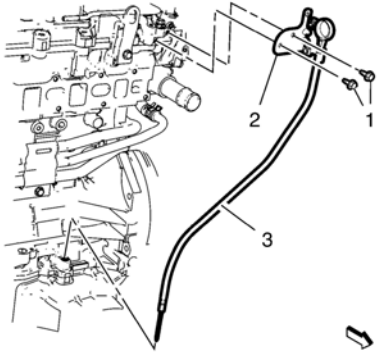

1. Install the oil level indicator tube (3) to the lower crankcase with a NEW seal ring.

   Caution: Refer to Fastener Caution.

2. Install the 2 bolts (1) to the oil level indicator tube bracket (2) and tighten to **10 Y(89 lb in)**.

cardiagn.com

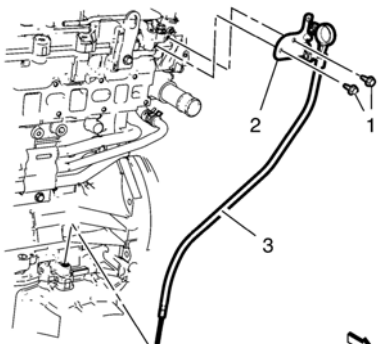

1. Remove 2 bolts (1) from the oil level indicator tube bracket (2).
2. Remove the oil level indicator tube (3) from the lower crankcase.

cardiagn.com

Removal Procedure

1. Remove the exhaust particulate filter. Refer to Exhaust Particulate Filter Replacement.

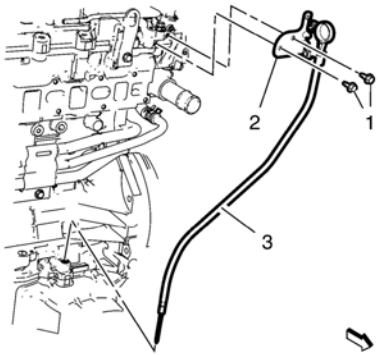

2. Remove the 2 bolts (1) from the oil level indicator tube bracket (2).
3. Remove the oil level indicator tube (3) from the lower crankcase.
4. Remove the oil level indicator tube seal ring.

Installation Procedure

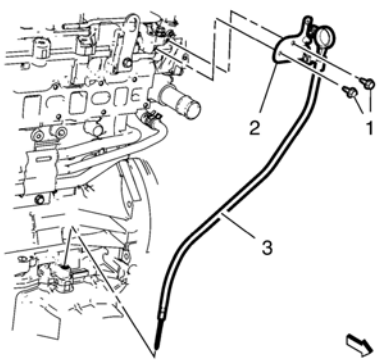

1. Install the oil level indicator tube (3) to the lower crankcase with a NEW seal ring.

   Caution: Refer to Fastener Caution.
2. Install the bolts (1) to the oil level indicator tube bracket (2) and tighten to **10 Y (89 lb in)**.
3. Install the exhaust particulate filter. Refer to Exhaust Particulate Filter Replacement.

cardiagn.com

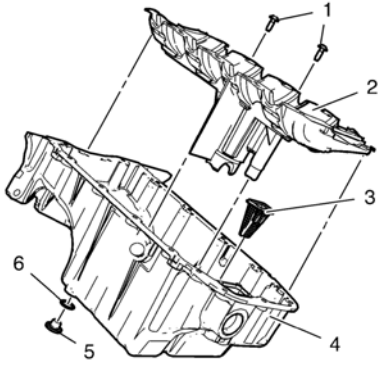

1. Remove the 2 oil pan baffle bolts (1) and the oil pan baffle (2).
2. Remove the oil pump screen (3).
3. Clean the oil pan (4). Remove all the sludge and the oil deposits.
4. Remove the oil pan drain plug (5) and the oil pan drain plug seal (6).
5. Inspect the thread of the oil pan drain plug.
6. Inspect the oil pan for cracking near the pan rail and the transmission mounting points.
7. Inspect the oil pan for cracking resulting from impact or flying road debris.
8. Inspect the oil pan baffle and oil pump screen.
9. Repair or replace the oil pan as necessary.

cardiagn.com

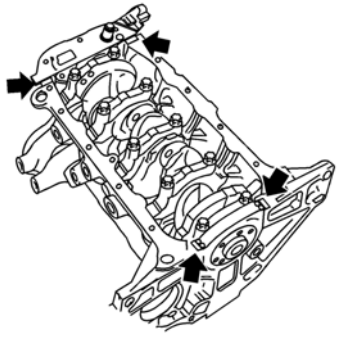

1. Clean the sealing surfaces.
2. Apply approximately a 3.5 mm (0.138 in) thick bead of oil pan sealant to the joints (arrows). Refer to Adhesives, Fluids, Lubricants, and Sealers for the recommended sealant.

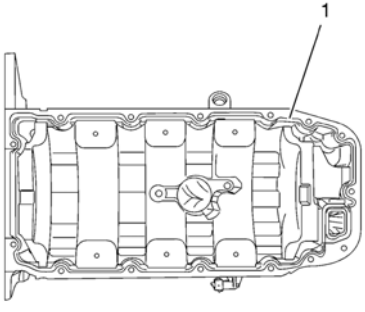

Note: The assembly time, including torque check, must take no longer than 10 minutes.

3. Apply approximately a 3.5 mm (0.138 in) thick bead of oil pan sealant (1) to the oil pan. Refer to Adhesives, Fluids, Lubricants, and Sealers for the recommended sealant.

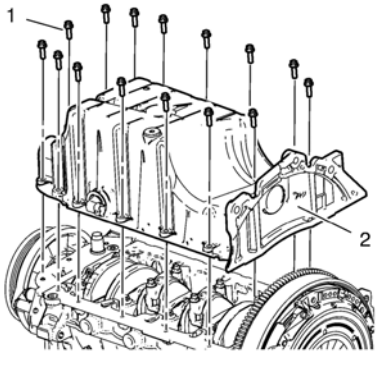

4. Install the oil pan (2).

Caution: Refer to Fastener Caution

5. Install the 15 oil pan bolts (1) on the cylinder block and tighten to **10 Y (89 lb in)**.

cardiagn.com

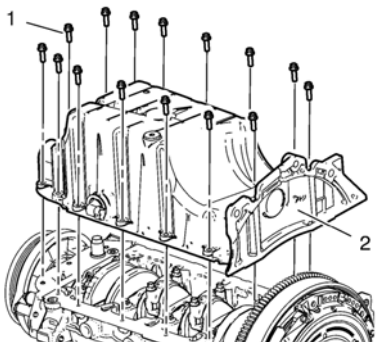

1. Remove the 15 oil pan bolts (1) from the engine block.
2. Use a suitable tool to remove the oil pan (2) evenly all the way around.

cardiagn.com

Removal Procedure

1. Raise and support the vehicle. Refer to Lifting and Jacking the Vehicle.
2. Place collecting basin underneath.
3. Remove the oil drain bolt.
4. Collect the engine oil.

Caution: Refer to Fastener Caution.

5. Install the NEW seal ring and the oil drain bolt, tighten to **14 Y (124 lb in)**.
6. Lower the vehicle.
7. Remove the oil level indicator tube. Refer to Oil Level Indicator Tube Replacement.
8. Raise the vehicle.
9. Remove the front compartment splash shield. Refer to Front Compartment Splash Shield Replacement.
10. Remove the exhaust front pipe. Refer to Exhaust Front Pipe Replacement.

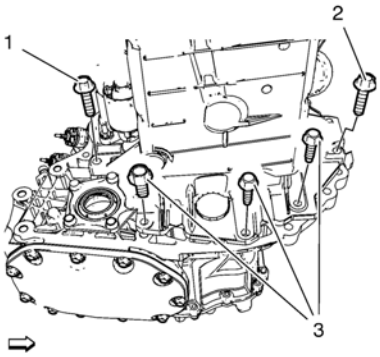

11. Remove the 3 oil pan bolts (3 from the transmission.

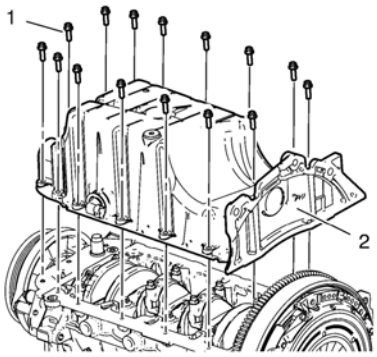

Note: Remove the oil pan evenly all the way around with a suitable tool.

12. Remove the 15 oil pan bolts (1) and remove the oil pan (2).

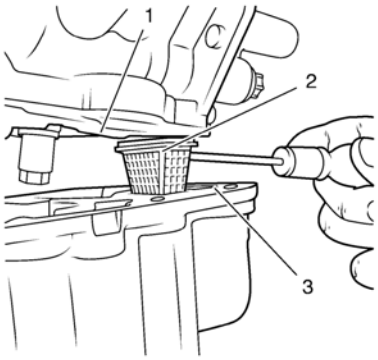

cardiagn.com

Note: Use a screwdriver or another suitable tool.

13. To prevent damage to the oil screen, ensure that the oil screen (2) remains in the oil pan (3). If the oil screen gets caught on the cylinder block (1), push it into the oil pan.
14. Remove the oil pan.

Installation Procedure

1. Clean the sealing surfaces.

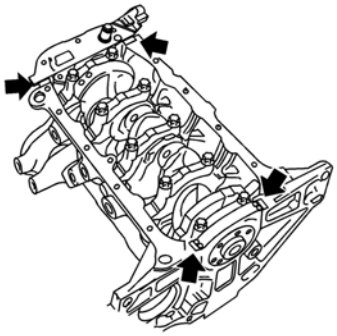

2. Apply an approximately 3.5 mm (0.14 in) thick bead of oil pan sealant to the joints (arrows).

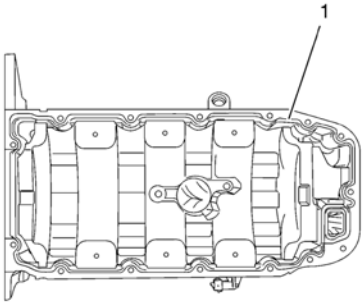

Note: The assembly time including torque check must take no longer than 10 minutes.

3. Apply an approximately 3.5 mm (0.14 in) thick bead of oil pan sealant (1) as illustrated.

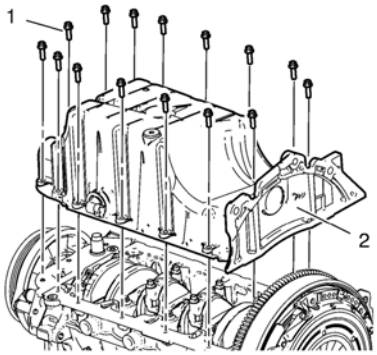

Caution: Refer to Fastener Caution.

4. Install the 15 oil pan bolts (1) to the oil pan (2) and tighten to **10 Y (89 lb in)**.

cardiagn.com

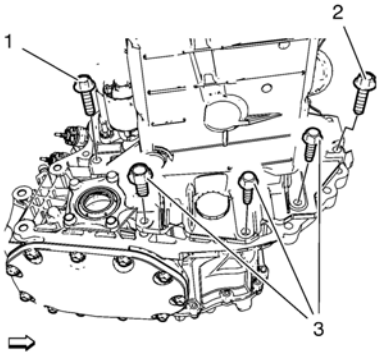

5. Install the 3 oil pan bolts (3) to the transmission and tighten to **45 Y (33 lb ft)**.
6. Install the exhaust front pipe. Refer to Exhaust Front Pipe Replacement.
7. Install the front compartment splash shield. Refer to Front Compartment Splash Shield Replacement.
8. Lower the vehicle.
9. Install the oil level indicator tube. Refer to Oil Level Indicator Tube Replacement.

Note: Inspect the engine oil level and correct if necessary.

10. Refill the collected engine oil.

cardiagn.com

Removal Procedure

1. Remove the oil pan. Refer to Oil Pan Replacement.

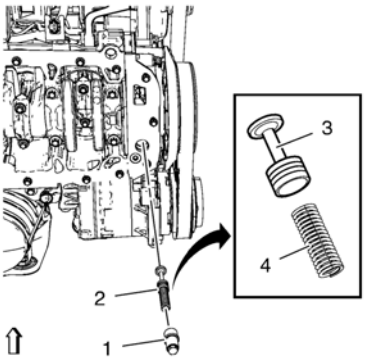

2. Remove the oil pressure relief valve closure bolt (1).
3. Remove the oil pressure relief valve assembly (2).
4. Remove the piston (3) and the spring (4).

Warning: Bodily injury may occur if the cleaning solvent is inhaled or exposed to the skin.

Warning: To avoid eye injury, use approved safety lenses, goggles, or face shield when using buffing and cleaning equipment.

5. Clean the parts.
6. Inspect the parts.
7. Clean the thread.

Installation Procedure

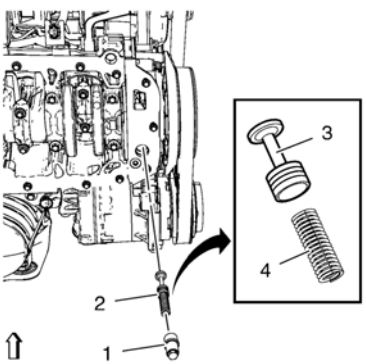

1. Install the piston (3) and the spring (4).
2. Install the oil pressure relief valve assembly (2).

Caution: Refer to Fastener Caution.

3. Install the oil pressure relief valve closure bolt (1) and tighten to **30 Y (22 lb ft)**.
4. Install the oil pan. Refer to Oil Pan Replacement.

cardiagn.com

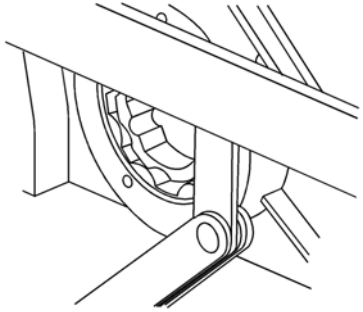

1. Remove the external rotor with the internal rotor.
2. Visually inspect the components.
3. Install the external and the internal rotors.
4. Inspect the axial clearance of the rotors in respect to the control unit housing upper edge.
   Specifications
   Permissible measurement is 0.02–0.058 mm (0.00079–0.00228 in).

cardiagn.com

Special Tools

EN-50435 Guide Pins

For equivalent regional tools, refer to Special Tools.

1. Remove any old thread sealant and gasket material with a suitable tool.
2. Clean the upper oil pan and upper oil pan components with solvent.

   Note: Ensure that the sealing surface is clear of oil, grease and old sealant material.
3. Clean out debris from the bolt holes.

   Warning: Refer to Safety Glasses and Compressed Air Warning.
4. Dry the upper oil pan and upper oil pan components with compressed air.

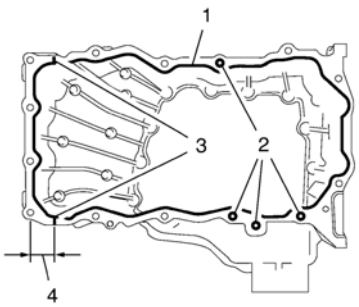

   Note: The complete installation procedure of the camshaft guide should be done in 10 minutes.

   Note: Do not coat sealing compound on the oil pan bolt holes and threads.
5. Apply sealing compound on sealant line (1) including circular dispensing on 4 holes (2).
6. Apply spot dispensing at 2 areas (3).
7. There must be a seal line which extends **26 mm (1.023 in)**from the last bolt hole (4).

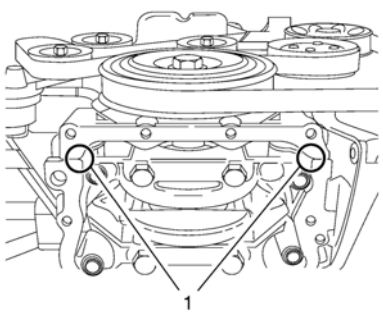

8. Fill sealant compound at 2 areas (1) between front cover and bed plate if the space is empty.

cardiagn.com

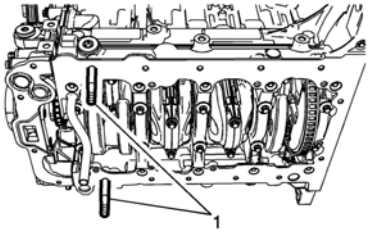

Note: The alignment pins will help maintaining position while installing the bolts.

9. To aid in upper oil pan alignment, install 2 *EN-50435* guide pins (1) on the bed plate.

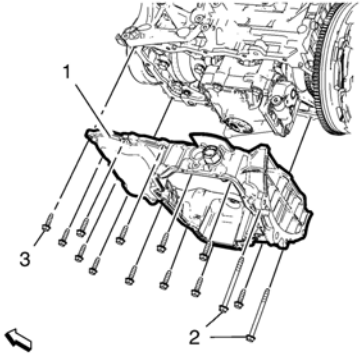

10. Install the upper oil pan (1).

Caution: Refer to Fastener Caution.

11. Install the 14 oil pan retaining bolts (2, 3) and handtighten.
12. Remove the *EN-50435* guide pins .
13. Tighten the 14 upper oil pan retaining bolts (2, 3) evenly to **25 Y (18 lb ft)**.

cardiagn.com

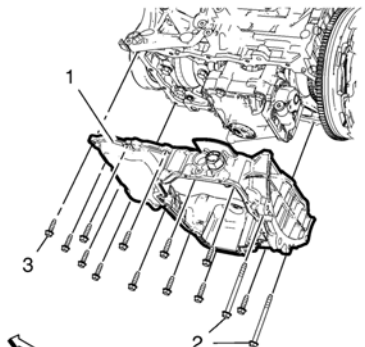

1. Remove the 14 upper oil pan retaining bolts (2, 3).

   Note: Carefully detach from engine block using suitable tool. Do not damage the sealing surfaces.

2. Remove the upper oil pan (1).

cardiagn.com

Special Tools

EN-50435 Guide Pin

For equivalent regional tools, refer to Special Tools.

Removal Procedure

1. Remove the oil level indicator.
2. Raise and support the vehicle. Refer to Lifting and Jacking the Vehicle.
3. Remove the front compartment insulator. Refer to Front Compartment Insulator Replacement.
4. Drain the engine oil. Refer to Engine Oil and Oil Filter Replacement.
5. Remove the lower oil pan. Refer to Lower Oil Pan Replacement.
6. Remove the exhaust front pipe. Refer to Exhaust Front Pipe Replacement.
7. Remove the front wheel drive intermediate shaft bracket. Refer to Front Wheel Drive Intermediate Shaft Bracket Replacement.

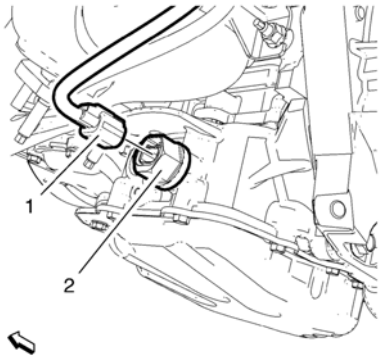

8. Disconnect the engine oil level indicator wiring harness plug (1) from the engine oil level indicator (2).

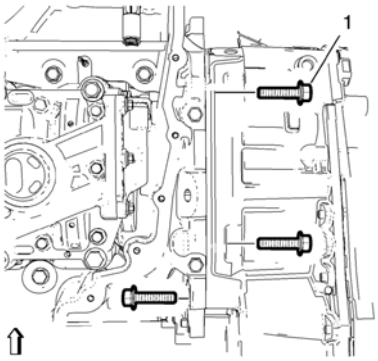

9. For manual transmission, remove the 3 oil pan to transmission bolts (1).

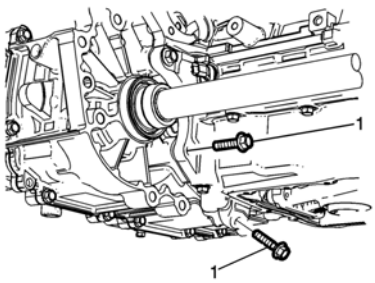

10. For automatic transmission, remove the 2 oil pan to transmission bolts (1).

cardiagn.com

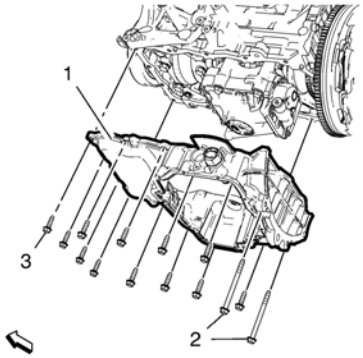

11. Remove 14 upper oil pan retaining bolts (2, 3).

    Note: Carefully detach from engine block using suitable tool. Do not damage sealing surfaces.

12. Remove the oil pan (1).

Installation Procedure

1. Remove any old thread sealant and gasket material with a suitable tool.
2. Clean the upper oil pan and upper oil pan components with solvent.

   Note: Ensure that the sealing surface is clear of oil, grease and old sealing material.

3. Clean out debris from the bolt holes.

   Warning: Refer to Safety Glasses and Compressed Air Warning.

4. Dry the upper oil pan and upper oil pan components with compressed air.

   Note: The complete installation procedure of the upper oil pan should be done in 10 minutes.

   Note: DO NOT coat sealing compound on the upper oil pan bolt holes and bolt threads.

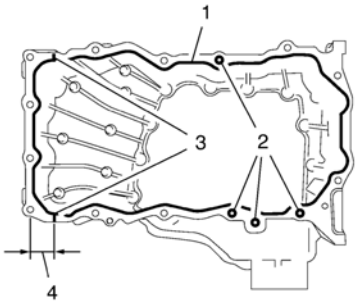

5. Apply sealing compound on the sealant line (1) including circular dispensing on 4 holes (2).
6. Apply spot dispensing at 2 areas (3).
7. There must be a seal line which extends **26 mm (1.02 in)**from the last hole (4).

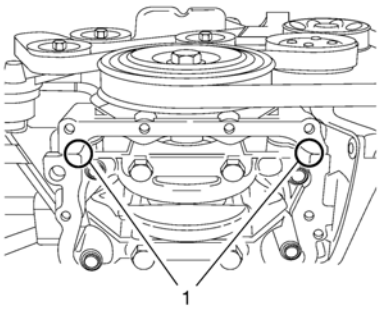

8. Fill sealant compound at 2 areas (1) between front cover and bed plate if the space is empty.

cardiagn.com

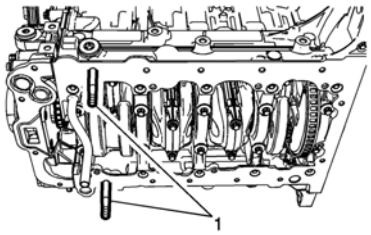

Note: The alignment pins will help maintaining position while installing the bolts.

9. To aid in upper oil pan alignment, install 2 *EN-50435* guide pins (1) on the bed plate.

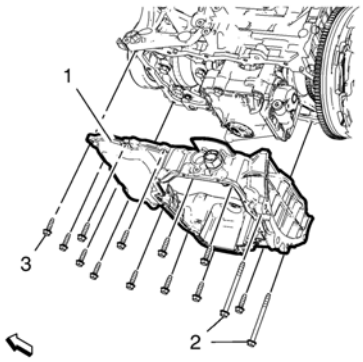

10. Install the upper oil pan (1).

Caution: Refer to Fastener Caution.

11. Install the oil pan retaining bolts and handtighten.
12. Remove the *EN-50435* guide pins .
13. Install 14 upper oil pan retaining bolts (2, 3) and tighten evenly to **25 Y (18 lb ft)**.

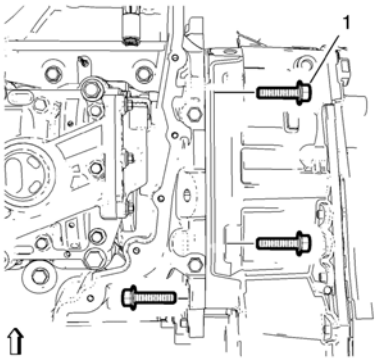

14. For manual transmission, install the 3 oil pan to transmission bolts (1) and tighten to **58 Y (43 lb ft)**.

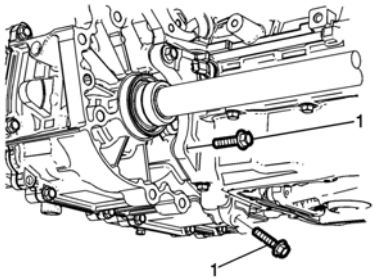

15. For automatic transmission, install the 2 oil pan to transmission bolts (1) and tighten to **58 Y (43 lb ft)**.

cardiagn.com

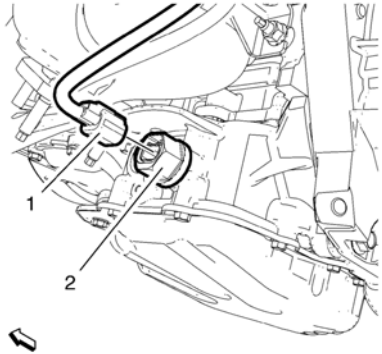

16. Connect the engine oil level indicator wiring harness plug (1) to the engine oil level indicator (2).
17. Install the front wheel drive intermediate shaft bracket. Refer to Front Wheel Drive Intermediate Shaft Bracket Replacement.
18. Install the exhaust front pipe. Refer to Exhaust Front Pipe Replacement.
19. Install the lower oil pan. Refer to Lower Oil Pan Replacement.
20. Install the front compartment insulator. Refer to Front Compartment Insulator Replacement.
21. Lower the vehicle.
22. Install the oil level indicator.
23. Fill the engine with engine oil. Refer to Engine Mechanical Specifications.

cardiagn.com

Special Tools

CH–807 Plug

For equivalent regional tools, refer to Special Tools.

Removal Procedure

1. Raise and support the vehicle. Refer to Lifting and Jacking the Vehicle.

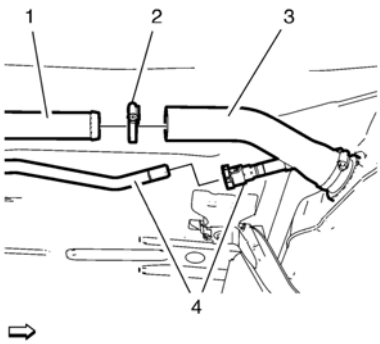

Warning: Do not breathe the air through the EVAP component tubes or hoses. The fuel vapors inside the EVAP components may cause personal injury.

Warning: Gasoline or gasoline vapors are highly flammable. A fire could occur if an ignition source is present. Never drain or store gasoline or diesel fuel in an open container, due to the possibility of fire or explosion. Have a dry chemical (Class B) fire extinguisher nearby.

Warning: Always wear safety goggles when working with fuel in order to protect the eyes from fuel splash.

Note: Do not remove the fuel tank filler hose when the fuel contents in the fuel tank is over the half filled with fuel.

2. If the fuel level is over half filled, refer to Fuel Tank Draining.
3. Remove the clamp (2).
4. Remove the fuel tank filler hose (3) from the fuel tank filler pipe (1).
5. Disconnect the fuel tank filler vent pipe (4). Refer to Plastic Collar Quick Connect Fitting Service.
6. Unclip the fuel feed pipe and the fuel vent pipe from the rear bracket clip at the underbody.
7. Place a suitable adjustable jack under the fuel tank.

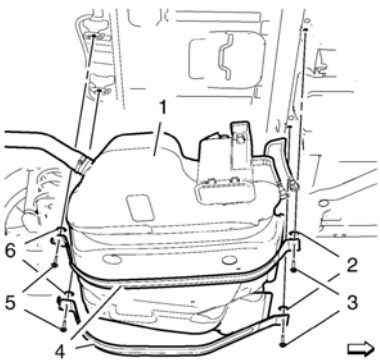

8. Remove the 2 fuel tank strap bolts (3) and the fuel tank strap bolt retainers (2).
9. Remove the 2 fuel tank strap bolts (5) and the fuel tank strap bolt retainers (6).
10. Demount the 2 fuel tank straps (4).

Note: Attention to other parts like pipes or hoses that are installed at the fuel tank. Lower the fuel tank only a little bit, when its not able to remove the evaporative emission canister easily. Remove the fuel tank, if necessary.

Note: A second technician is required.

11. Lower the fuel tank to a height where its able to remove the evaporative emission canister easily.

cardiagn.com

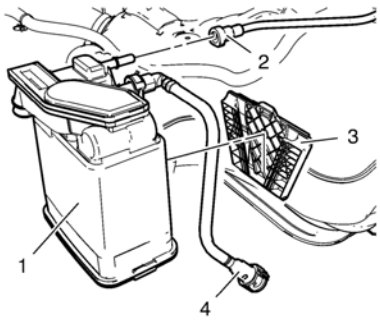

12. Disconnect the fuel tank vent pipe (2).
13. Close the fuel tank vent pipe (2) with the *CH-807* plug .
14. Disconnect the evaporative emission canister purge pipe (4).
15. Close the evaporative emission canister purge pipe (4) with the *CH-807* plug .
16. Remove the evaporative emission canister (1) from the evaporative emission canister bracket (3).

Installation Procedure

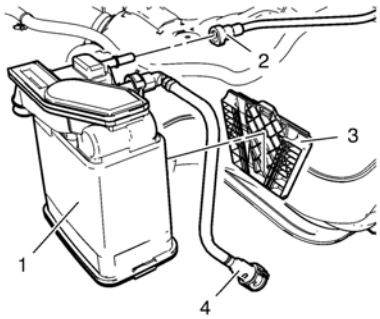

1. Install the evaporative emission canister (1) to the evaporative emission canister bracket (3).
2. Remove the *CH-807* plug from the evaporative emission canister purge pipe (4).
3. Connect the evaporative emission canister purge pipe (4).
4. Remove the *CH-807* plug from the fuel tank vent pipe (2).
5. Connect the fuel tank vent pipe (2).

Note: A second technician is required.

6. Raise the fuel tank to the original position.

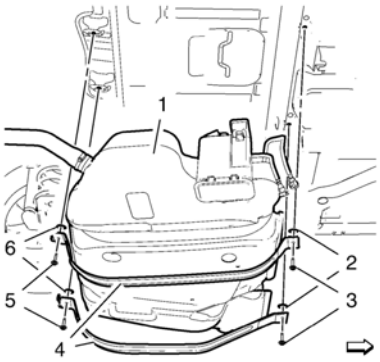

7. Pre-install the 4 fuel tank strap bolts (3, 5) with the 4 fuel tank strap bolt retainers (2, 6) to the fuel tank straps (4).
8. Mount the 2 fuel tank straps (4).

Caution: Refer to Fastener Caution.

9. Install the 4 fuel tank strap bolts (3, 5) and tighten to **20 Y (15 lb ft)**.
10. Remove the adjustable jack from the fuel tank.
11. Clip the fuel feed pipe and the fuel vent pipe into the rear bracket clip at the underbody.

cardiagn.com

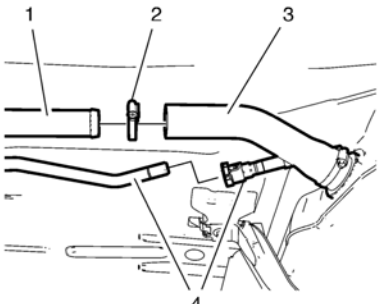

12. Connect the fuel tank filler vent pipe (4). Refer to Plastic Collar Quick Connect Fitting Service.
13. Install the fuel tank filler hose (3) to the fuel tank filler pipe (1).
14. Install the clamp (2).
15. Lower the vehicle.

cardiagn.com

EVAP System Operation

The evaporative emission (EVAP) control system used is the charcoal canister storage method. This method transfers fuel vapor from the fuel tank to an activated carbon, charcoal, storage device, or canister, to hold the vapors when the vehicle is not operating. When the engine is running, the fuel vapor is purged from the carbon element by intake airflow and consumed in the normal combustion process.

Gasoline vapors from the fuel tank flow into the canister. These vapors are absorbed into the carbon. The canister is purged by the engine control module (ECM) when the engine has been running for a specified amount of time. Air is drawn into the canister and mixed with the vapor. This mixture is then drawn into the intake manifold.

The ECM supplies a ground to energize the evaporative emission (EVAP) canister purge solenoid valve. This valve is pulse width modulated (PWM) or turned ON and OFF several times a second. The evaporative emission (EVAP) canister purge solenoid valve PWM duty cycle varies according to operating conditions determined by engine load, fuel trim, and intake air temperature.

Poor idle, stalling, and poor driveability can be caused by the following conditions:

- An inoperative evaporative emission (EVAP) canister purge solenoid valve
- A damaged canister
- Hoses that are split, cracked, or not connected to the proper tubes

Evaporative Emission Canister

The Evaporative Emission (EVAP) canister is an emission control device containing activated charcoal granules. The EVAP emission canister is used to store fuel vapors from the fuel tank. Once certain conditions are met, the engine control module (ECM) activates the evaporative emission (EVAP) canister purge solenoid valve, allowing the fuel vapors to be drawn into the engine cylinders and burned.

cardiagn.com

The exhaust gas recirculation (EGR) system is used to reduce the amount of nitrogen oxide (NOx) emission levels caused by high combustion temperatures. At temperatures above 1 371°C (2 500°F), oxygen and nitrogen combine to form oxides of nitrogen (NOx). Introducing small amounts of exhaust gas back into the combustion chamber displaces the amount of oxygen entering the engine. With less oxygen in the air/fuel mixture and as a result combustion temperatures are decreased, restricting the formation of NOx.

The EGR valve motor is a direct current (DC) stepper motor utilizing a worm gear that extends from the motor to push on the EGR valve stem. The worm gear is not attached to the valve stem and can only force the valve open. A return spring is used to force the valve closed.

Exhaust Gas Recirculation (EGR) System Operation

The exhaust gas recirculation (EGR) valve is controlled by the engine control module (ECM) through the EGR motor high control and EGR motor low control circuits. The ECM supplies voltage that is near ignition voltage to the high and low control circuits at all times. This voltage is used by the ECM as a reference voltage during non EGR operation in order to detect circuit failures. The ECM will pulse width modulate (PWM) the low control circuit to ground and an increase in amperage on the high control circuit can be observed with a DMM when the EGR valve is commanded open. A lower pulse width will increase the open position of the valve. In order to close the EGR valve, the ECM will PWM the high control circuit to ground.

When the ignition is turned ON, the ECM will drive the EGR motor worm gear out with just enough force to touch the EGR valve stem. The ECM will do this 3 times in quick succession. This action determines the minimum closed position of the valve and only happens once per ignition cycle. If the valve is prevented from closing all of the way after the minimum closed position is learned, the scan tool EGR Position parameter will not reflect this position until the next ignition cycle. The EGR motor worm gear is not connected to the EGR valve stem and can only push the valve open. The valve is returned to the closed position by a return spring.

The ECM uses the EGR position sensor to determine the position of the EGR valve. The ECM sends a reference voltage through the 5 V reference circuit to the EGR position sensor. The ECM provides a voltage return path for the sensor through the low reference circuit. A variable voltage signal, based on the EGR valve position, is sent from the sensor to the ECM through the EGR position sensor signal circuit.

EGR Valve Control Enabling Conditions

Exhaust gas recirculation (EGR) valve control will only be enabled during idle and cruising conditions while the following conditions are met:

- The intake air temperature (IAT) is more than 5.25°C (41.5°F). EGR valve control will remain enabled until the IAT is less than 0°C (32°F) and will not enable again until the IAT is more than 5.25°C (41.5°F).
- The engine coolant temperature (ECT) is between 60–96.75°C (140–206.15°F). EGR valve control will remain enabled until the ECT is less than 57°C (134.6°F) or more than 99.75°C (211.55°F) and will not enable again until the ECT is between 60–96.75°C (140–206.15°F).
- The barometric pressure is more than 74 kPa (10.73 PSI). EGR valve control will remain enabled until the barometric pressure is less than 72 kPa (10.44 PSI) and will not enable again until 74 kPa (10.73 PSI).

cardiagn.com

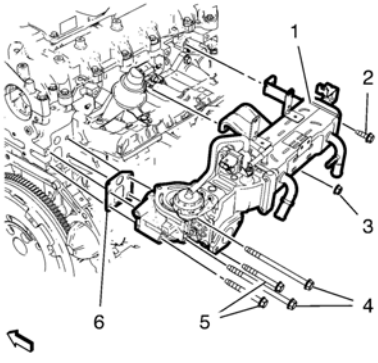

1. Install the exhaust gas recirculation (EGR) cooler (1) with a NEW gasket (6).

Caution: Refer to Fastener Caution.

2. Install 5 retaining bolts (2, 4, 5) and the nut (3) and tighten to **25 Y (18 lb ft)**.

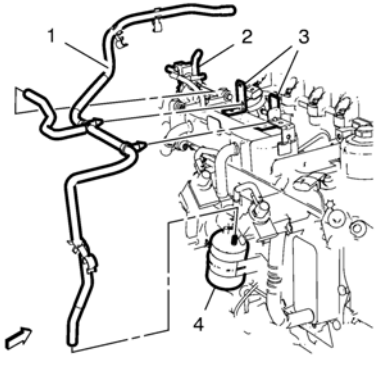

3. Install the vacuum hose (1). Clip the vacuum hose (1) to the brackets (3).
4. Install the vacuum hose (1) to the vacuum surge tank (2) and the exhaust gas recirculation vacuum regulator solenoid valve (4).

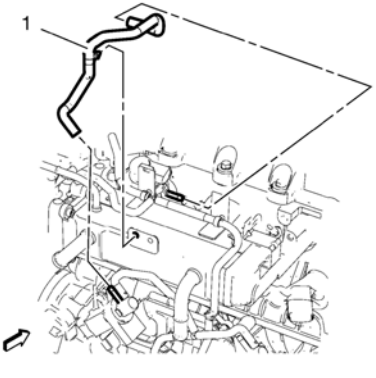

5. Install the vacuum control solenoid valve hose (1) to the charge air bypass regulator solenoid valve and the intake manifold runner control valve actuator.

cardiagn.com

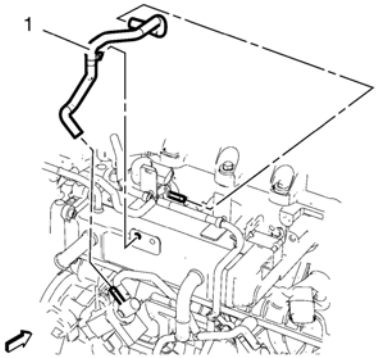

1. Remove the vacuum control solenoid valve hose (1) from the charge air bypass regulator solenoid valve and the intake manifold runner control valve actuator.

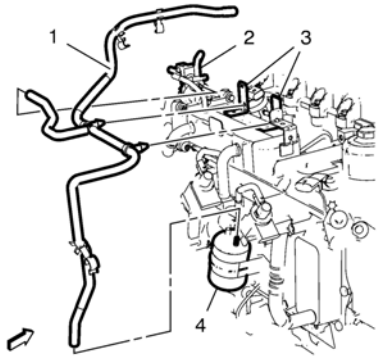

2. Remove the vacuum hose (1) from the vacuum surge tank (2) and the exhaust gas recirculation vacuum regulator solenoid valve (4).
3. Remove the vacuum hose (1). Clip the vacuum hose (1) in the brackets (3).

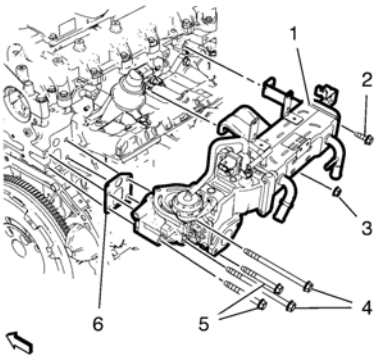

4. Remove 5 retaining bolts (2, 4, 5) and the nut (3).
5. Remove the exhaust gas recirculation (EGR) cooler (1) and the gasket (6).

cardiagn.com

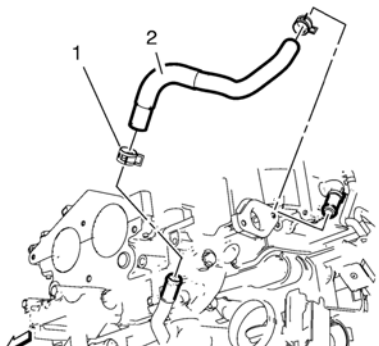

1. Install the exhaust gas recirculation manifold cooling return hose (2).
2. Install the 2 clamps (1).

cardiagn.com

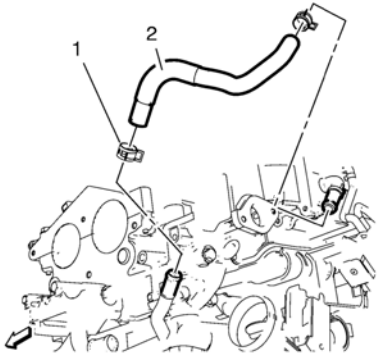

1. Remove the 2 clamps (1).
2. Remove the exhaust gas recirculation manifold cooling return hose (2).

cardiagn.com

Removal Procedure

1. Remove the engine sight shield. Refer to Engine Sight Shield Replacement.
2. Remove the engine control module. Refer to Engine Control Module Replacement.
3. Remove the battery tray. Refer to Battery Tray Replacement.
4. Drain the engine cooling system. Refer to Cooling System Draining and Filling.
5. If equipped, disconnect the automatic transmission hose from the radiator surge tank mount.
6. Remove the radiator surge tank clip. Refer to Radiator Surge Tank Replacement. Hang the radiator surge tank aside.
7. Remove the charge air cooler outlet hose. Refer to Charge Air Cooler Outlet Hose Replacement.

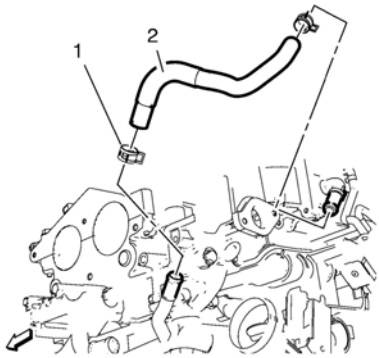

8. Remove the 2 clamps (1).
9. Remove the exhaust gas recirculation manifold cooling return hose (2).

Installation Procedure

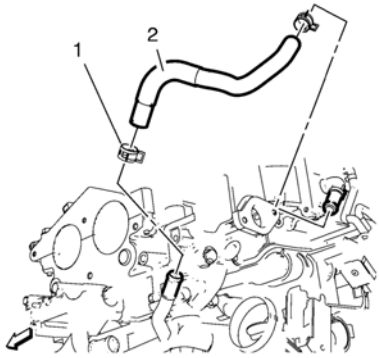

1. Install the exhaust gas recirculation manifold cooling return hose (2).
2. Install the 2 clamps (1).
3. Install the charge air cooler outlet hose. Refer to Charge Air Cooler Outlet Hose Replacement.
4. Clip the radiator surge tank into the mount. Refer to Radiator Surge Tank Replacement.
5. If equipped, connect the automatic transmission hose clip to the radiator surge tank mount.
6. Install the battery tray. Refer to Battery Tray Replacement.
7. Install the engine control module. Refer to Engine Control Module Replacement.
8. Fill the engine cooling system. Refer to Cooling System Draining and Filling.
9. Install the engine sight shield. Refer to Engine Sight Shield Replacement.

cardiagn.com

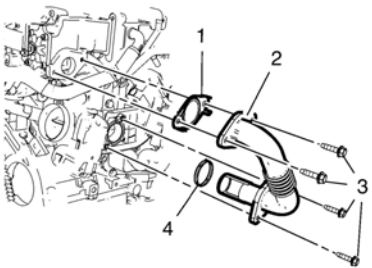

Note: Clean the sealing surfaces.

1. Install the exhaust gas recirculation pipe (2) along with NEW gaskets (1, 4).

Caution: Refer to Fastener Caution.

2. Install the 4 exhaust gas recirculation retaining bolts (3) and tighten to **10 Y (89 lb in)**.

cardiagn.com

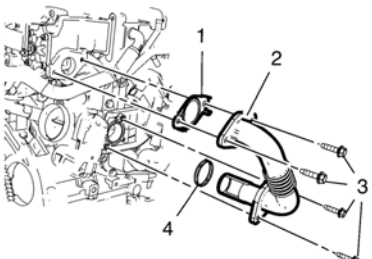

1. Remove the 4 exhaust gas recirculation retaining bolts (3).
2. Remove the exhaust gas recirculation pipe (2) along with the gaskets (1, 4).

cardiagn.com

Removal Procedure

1. Disconnect the battery negative cable. Refer to Battery Negative Cable Disconnection and Connection.
2. Remove the air inlet grille panel. Refer to Air Inlet Grille Panel Replacement.
3. Remove front compartment insulator. Refer to Front Compartment Insulator Replacement.

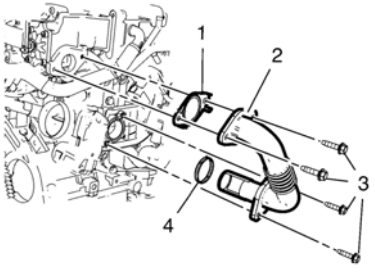

4. Remove the 4 exhaust gas recirculation bolts (3).
5. Remove the exhaust gas recirculation pipe (2) along with the gaskets (1, 4).

Installation Procedure

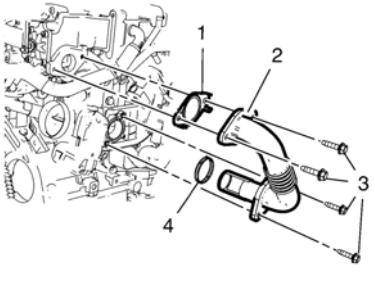

Note: Clean the sealing surfaces.

1. Install the exhaust gas recirculation pipe (2) along with NEW gaskets (1, 4).

Caution: Refer to Fastener Caution.

2. Install the 4 exhaust gas recirculation bolts (3) and tighten to **10 Y (89 lb in)**.
3. Install front compartment insulator. Refer to Front Compartment Insulator Replacement.
4. Install the air inlet grille panel. Refer to Air Inlet Grille Panel Replacement.
5. Connect the battery negative cable. Refer to Battery Negative Cable Disconnection and Connection.

cardiagn.com

Removal Procedure

1. Remove the engine sight shield. Refer to Engine Sight Shield Replacement

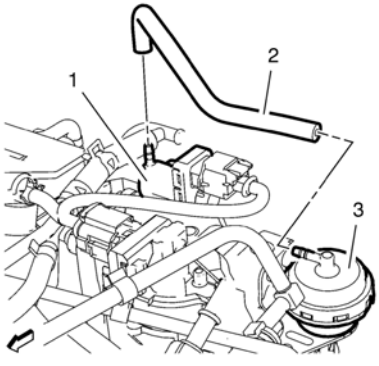

2. Remove the exhaust gas recirculation vacuum regulator solenoid valve vacuum hose (2) from the exhaust gas recirculation vacuum regulator solenoid valve (1).
3. Remove the exhaust gas recirculation vacuum regulator solenoid valve vacuum hose (2) from the exhaust gas recirculation bypass valve (3).

Installation Procedure

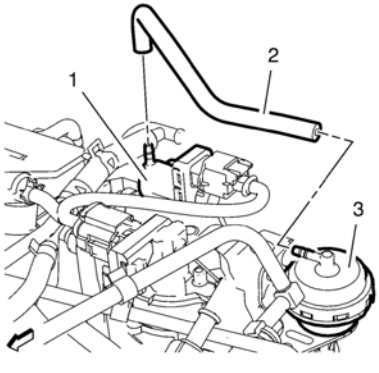

1. Install the exhaust gas recirculation vacuum regulator solenoid valve vacuum hose (2) to the exhaust gas recirculation vacuum regulator solenoid valve (1).
2. Install the exhaust gas recirculation vacuum regulator solenoid valve vacuum hose (2) to the exhaust gas recirculation bypass valve (3).
3. Install the engine sight shield. Refer to Engine Sight Shield Replacement

cardiagn.com

Removal Procedure

1. Remove the engine sight shield. Refer to Engine Sight Shield Replacement.

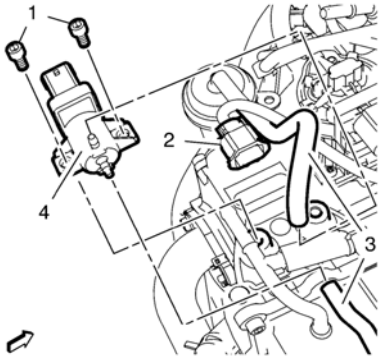

2. Disconnect the exhaust gas recirculation bypass control solenoid valve wiring harness plug (2).
3. Remove the 2 exhaust gas recirculation bypass control solenoid valve hoses (3).
4. Remove the 2 exhaust gas recirculation bypass control solenoid valve bolts (1).
5. Remove the exhaust gas recirculation valve cooler bypass control solenoid valve (4).

Installation Procedure

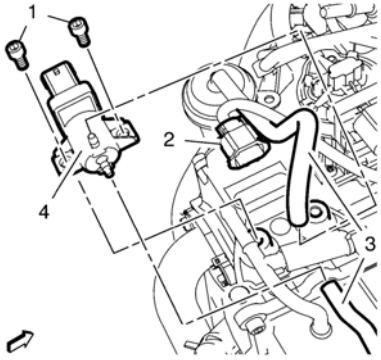

1. Install the exhaust gas recirculation valve cooler bypass control solenoid valve (4).

Caution: Refer to Fastener Caution.

2. Install the 2 exhaust gas recirculation bypass control solenoid valve bolts (1) and tighten to **6 Y (53 lb in)**.
3. Install the 2 exhaust gas recirculation bypass control solenoid valve hoses (3).
4. Connect the exhaust gas recirculation bypass control solenoid valve wiring harness plug (2).
5. Install the engine sight shield. Refer to Engine Sight Shield Replacement.

cardiagn.com

Removal Procedure

1. Remove the engine sight shield. Refer to Engine Sight Shield Replacement.
2. Remove the dash upper extension panel opening cover. Refer to Dash Upper Extension Panel Opening Cover Replacement.
3. Remove the battery tray. Refer to Battery Tray Replacement.
4. Raise and support the vehicle. Refer to Lifting and Jacking the Vehicle.
5. Drain the cooling system. Refer to Cooling System Draining and Filling.
6. Remove the exhaust gas recirculation pipe. Refer to Exhaust Gas Recirculation Pipe Replacement.
7. Lower the vehicle.
8. For vehicles with MT: Disconnect the transmission shift lever and selector cable from the transmission. Refer to Manual Transmission Shift Lever and Selector Lever Cable Replacement.

   For vehicles with AT: Disconnect the range selector lever cable from the automatic transmission. Refer to Range Selector Lever Cable Replacement.

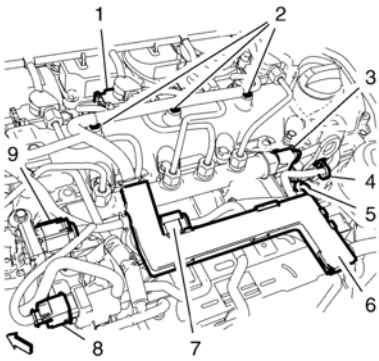

9. Disconnect the vacuum solenoid valve wiring harness plug (8).
10. Disconnect the exhaust gas recirculation valve wiring harness plug (9).
11. Disconnect the intake actuator valve wiring harness plug (7).
12. Disconnect the fuel injection rail pressure sensor wiring harness plug (3).
13. Disconnect the 4 glow plug wiring harness plugs (5).
14. Disconnect the 4 fuel injector wiring harness plugs (1).
15. Unclip the 4 engine wiring harness clips (2, 4) from the camshaft cover.
16. Unclip the engine wiring harness conduit (6) in top direction from the 3 exhaust gas recirculation cooler brackets. Hang the engine wiring harness aside.
17. Remove the engine coolant air bleed hose. Refer to Engine Coolant Air Bleed Hose Replacement.
18. Remove the vacuum pump hose. Refer to Vacuum Pump Hose Replacement.
19. Remove the intake manifold tuning valve vacuum control solenoid valve hose. Refer to Intake Manifold Tuning Valve Vacuum Control Solenoid Valve Hose Replacement.
20. Unclip the engine wiring harness retaining clip from the charge air cooler outlet front hose.
21. Unclip the transmission vent hose from the charge air cooler outlet front hose.

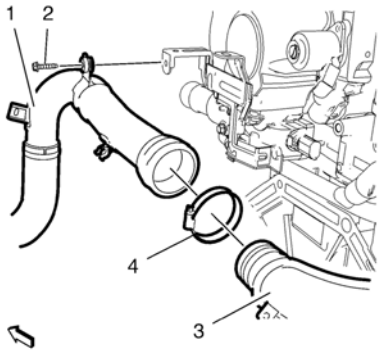

22. Remove the charge air cooler outlet front hose bracket bolt (2).
23. Loosen the charge air cooler outlet front hose to rear hose clamp (4).
24. Detach the charge air cooler outlet front hose (1) along with the clamp (4) from the charge air cooler outlet rear hose (3).

cardiagn.com

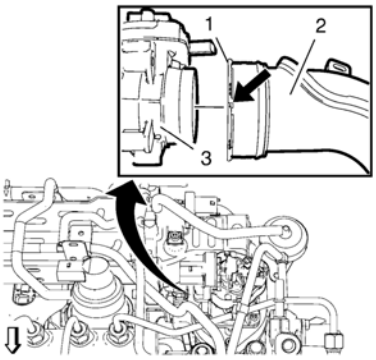

25. Unclip the 2 wiring harness retaining clips from the charge air cooler outlet rear hose (2).
26. Place a suitable tool at the market position (arrow) and rotate the lock ring (1) counterclockwise.
27. Detach the charge air cooler outlet rear hose (2) from the throttle body (3).
28. Remove the charge air cooler outlet rear hose (2).
29. Remove the exhaust gas recirculation manifold cooling return hose. Refer to Exhaust Gas Recirculation Manifold Cooling Return Hose Replacement.
30. Remove the exhaust gas recirculation cooling feed hose. Refer to Exhaust Gas Recirculation Valve Cooling Feed Hose Replacement.
31. Remove the turbocharger coolant return pipe from the exhaust gas recirculation cooler. Refer to Turbocharger Coolant Return Pipe Removal.

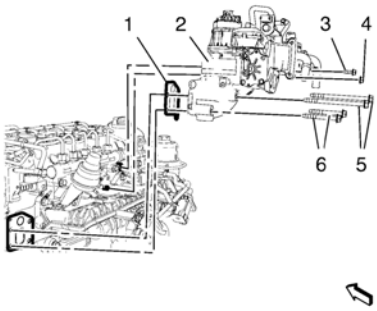

32. Remove the exhaust gas recirculation cooler nut (5) and the 5 exhaust gas recirculation cooler bolt (3, 4 and 6).
33. Remove the exhaust gas recirculation cooler (2) and the gasket (1).

Installation Procedure

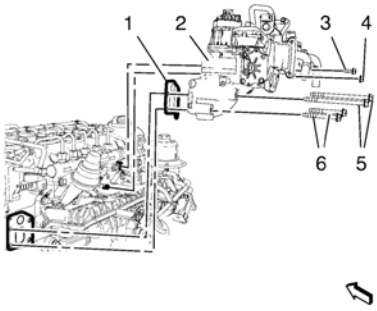

1. Install the exhaust gas recirculation cooler (2) and a NEW gasket (1).

Caution: Refer to Fastener Caution.

2. Install the 5 exhaust gas recirculation cooler bolt (3, 4 and 6) and the exhaust gas recirculation cooler nut (5) and tighten to **25 Y (18 lb ft)**.
3. Install the turbocharger coolant return pipe to the exhaust gas recirculation cooler. Refer to Turbocharger Coolant Return Pipe Removal.
4. Install the exhaust gas recirculation cooling feed hose. Refer to Exhaust Gas Recirculation Valve Cooling Feed Hose Replacement.
5. Install the exhaust gas recirculation manifold cooling return hose. Refer to Exhaust Gas Recirculation Manifold Cooling Return Hose Replacement.

cardiagn.com

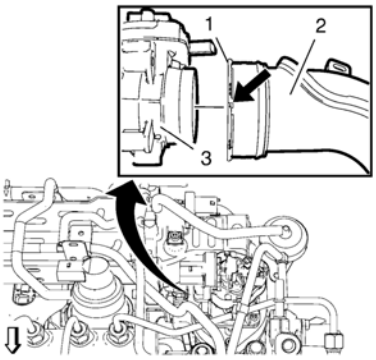

Note: Note: Ensure that the retaining ring (1) is locked.

6. Install the charge air cooler outlet rear hose (2) to the throttle body (3).
7. Clip in the 2 wiring harness retaining clips to the charge air cooler outlet rear hose (2).

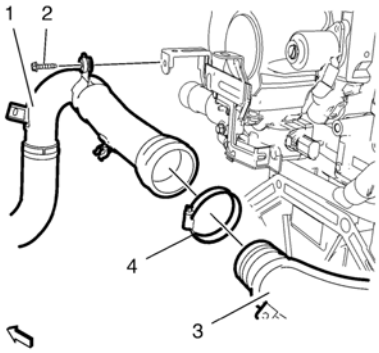

8. Install the charge air cooler outlet front hose (1) along with the clamp (4) to the charge air cooler outlet rear hose (3).
9. Install the charge air cooler outlet front hose bracket bolt (2) and tighten to **9 Y (80 lb in)**.
10. Tighten the charge air cooler outlet front hose tor rear hose clamp (4) to **4 Y (35 lb in)**.
11. Clip in the transmission vent hose to the charge air cooler outlet front hose.
12. Clip in the engine wiring harness retaining clip to the charge air cooler outlet front hose.
13. Install the intake manifold tuning valve vacuum control solenoid valve hose. Refer to Intake Manifold Tuning Valve Vacuum Control Solenoid Valve Hose Replacement.
14. Install the vacuum pump hose. Refer to Vacuum Pump Hose Replacement.
15. Install the engine coolant air bleed hose. Refer to Engine Coolant Air Bleed Hose Replacement.

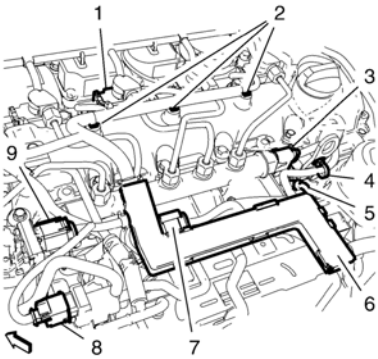

16. Position the engine wiring harness to the vehicle.
17. Clip the engine wiring harness conduit (6) to the 3 exhaust gas recirculation cooler brackets.
18. Clip the 4 engine wiring harness clips (2, 4) to the camshaft cover.
19. Connect the 4 fuel injector wiring harness plugs (1).
20. Connect the fuel injection rail pressure sensor wiring harness plug (3).
21. Connect the 4 glow plug wiring harness plugs (5).
22. Connect the intake actuator valve wiring harness plug (7).
23. Connect the exhaust gas recirculation valve wiring harness plug (9).
24. Connect the vacuum solenoid valve wiring harness plug (8).
25. For vehicles with MT: Connect the transmission shift lever and selector cable from the transmission. Refer to Manual Transmission Shift Lever and Selector Lever Cable Replacement.

    For vehicles with AT: Connect the range selector lever cable from the automatic transmission. Refer to Range Selector Lever Cable Replacement.
26. Raise the vehicle.
27. Install the exhaust gas recirculation pipe. Refer to Exhaust Gas Recirculation Pipe Replacement.

cardiagn.com

28. Fill the engine cooling system. Refer to Cooling System Draining and Filling.
29. Lower the vehicle.
30. Install the battery tray. Refer to Battery Tray Replacement.
31. Install the dash upper extension panel opening cover. Refer to Dash Upper Extension Panel Opening Cover Replacement.
32. Install the engine sight shield. Refer to Engine Sight Shield Replacement.

cardiagn.com

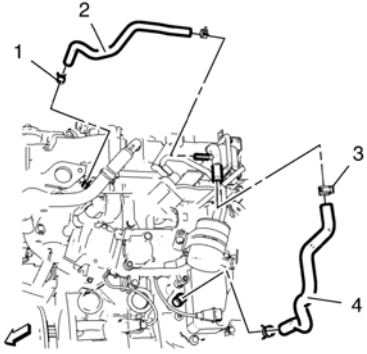

1. Install the exhaust gas recirculation valve cooling feed hose (4).
2. Install the 2 clamps (3) to the exhaust gas recirculation valve cooling feed hose (4).
3. Install the exhaust gas recirculation valve cooling feed hose (2).
4. Install the 2 clamps (1) to the exhaust gas recirculation valve cooling feed hose (2).

cardiagn.com

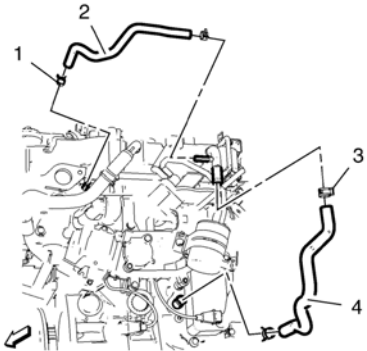

1. Remove 2 clamps (1) from the exhaust gas recirculation valve cooling feed hose (2).
2. Remove the exhaust gas recirculation valve cooling feed hose (2).
3. Remove 2 clamps (3) from the exhaust gas recirculation valve cooling feed hose (4).
4. Remove exhaust gas recirculation valve cooling feed hose (4).

cardiagn.com

Removal Procedure

1. Remove the engine sight shield. Refer to Engine Sight Shield Replacement.
2. Drain the engine cooling system. Refer to Cooling System Draining and Filling.

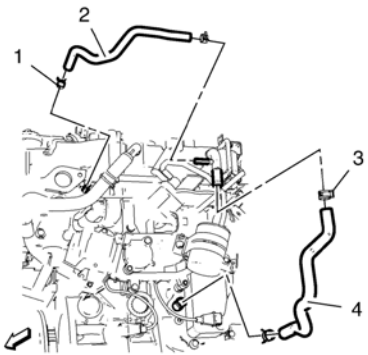

3. Remove the 2 clamps (3).
4. Remove the exhaust gas recirculation valve cooling feed hose (4).

Installation Procedure

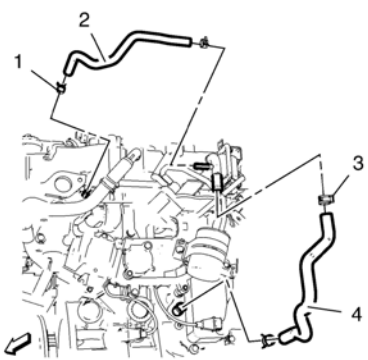

1. Install the exhaust gas recirculation valve feed hose (4).
2. Install the 2 clamps (3).
3. Fill the engine cooling system. Refer to Cooling System Draining and Filling.
4. Install the engine sight shield. Refer to Engine Sight Shield Replacement.

cardiagn.com

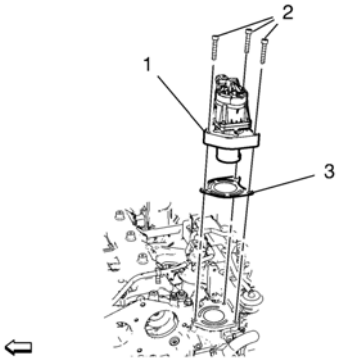

1. Install the exhaust gas recirculation valve (1) along with a NEW gasket (3).

   Caution: Refer to Fastener Caution.

2. Install the 3 exhaust gas recirculation valve retaining bolts (2) and tighten to **25 Y (18 lb ft)**.

cardiagn.com

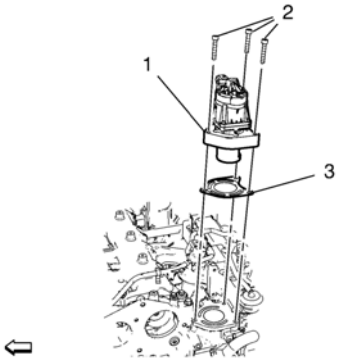

1. Remove 3 exhaust gas recirculation valve retaining bolts (2).
2. Remove the exhaust gas recirculation valve (1) along with the gasket (3).

cardiagn.com

Removal Procedure

1. Remove the engine sight shield. Refer to Engine Sight Shield Replacement.
2. Disconnect exhaust gas recirculation valve wiring harness plug.

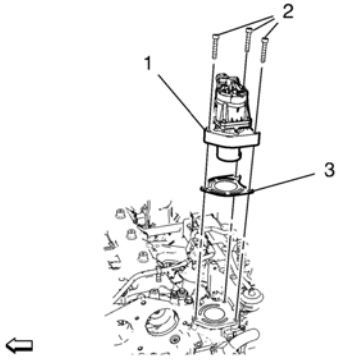

3. Remove the 3 exhaust gas recirculation valve bolts (2).
4. Remove the exhaust gas recirculation valve (1) and the gasket (3).

Installation Procedure

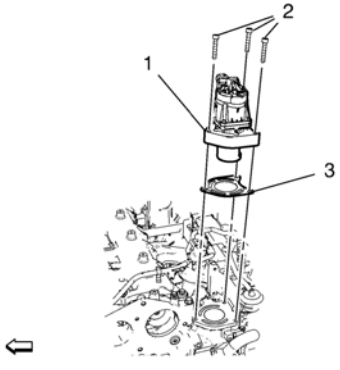

1. Install the exhaust gas recirculation valve (1) and a NEW gasket (3).

   Caution: Refer to Fastener Caution.
2. Install the 3 exhaust gas recirculation valve bolts (2) and tighten to **25 Y (18 lb ft)**.
3. Connect exhaust gas recirculation valve wiring harness plug.
4. Install the engine sight shield. Refer to Engine Sight Shield Replacement.

cardiagn.com

Warning: In order to reduce the risk of fire and personal injury observe the following items:

- Replace all nylon fuel pipes that are nicked, scratched or damaged during installation, do not attempt to repair the sections of the nylon fuel pipes
- Do not hammer directly on the fuel harness body clips when installing new fuel pipes. Damage to the nylon pipes may result in a fuel leak.
- Always cover nylon vapor pipes with a wet towel before using a torch near them. Also, never expose the vehicle to temperatures higher than 115°C (239°F) for more than one hour, or more than 90°C (194°F) for any extended period.
- Apply a few drops of clean engine oil to the male pipe ends before connecting fuel pipe fittings. This will ensure proper reconnection and prevent a possible fuel leak. (During normal operation, the O-rings located in the female connector will swell and may prevent proper reconnection if not lubricated.)

cardiagn.com

Warning: Do not breathe the air through the EVAP component tubes or hoses. The fuel vapors inside the EVAP components may cause personal injury.

Caution: Clean all of the following areas before performing any disconnections in order to avoid possible contamination in the system:

- The fuel pipe connections
- The hose connections
- The areas surrounding the connections

cardiagn.com

Removal Procedure

1. Remove the engine sight shield. Refer to. Engine Sight Shield Replacement.

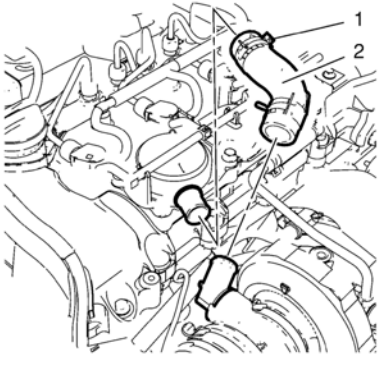

2. Remove the 2 positive crankcase ventilation valve hose clamps (1).
3. Remove the positive crankcase ventilation valve hose (2).

Installation Procedure

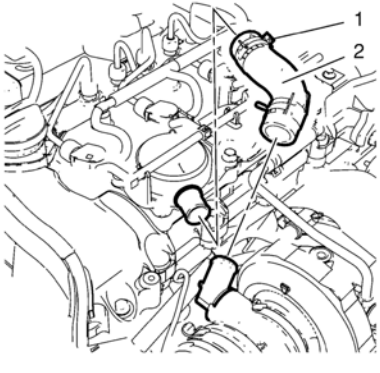

1. Install the positive crankcase ventilation valve hose (2).
2. Install the 2 positive crankcase ventilation valve hose clamps (1).
3. Install the engine sight shield. Refer to Engine Sight Shield Replacement.

cardiagn.com

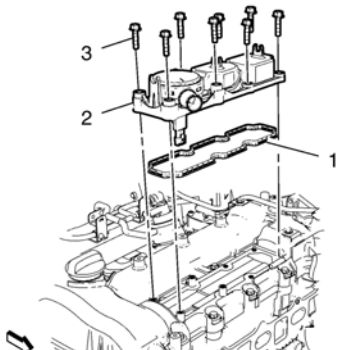

1. Install the positive crankcase ventilation valve (2) and a NEW gasket (1).

Caution: Refer to Fastener Caution.

2. Install the 8 positive crankcase ventilation valve retaining bolts (3) and tighten evenly to **10 Y (89 lb in)**.

cardiagn.com

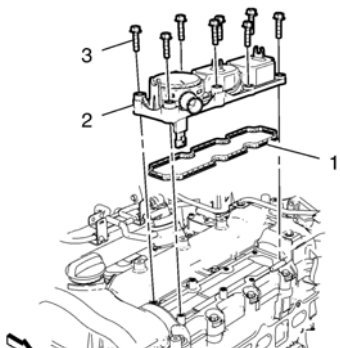

1. Remove 8 positive crankcase ventilation valve retaining bolts (3).
2. Remove the positive crankcase ventilation valve (2) along with the gasket (1).

cardiagn.com

Removal Procedure

1. Remove the engine sight shield. Refer to Engine Sight Shield Replacement.
2. Remove the fuel injection fuel return hose. Refer to Fuel Injection Fuel Return Hose Replacement.
3. Remove the positive crankcase ventilation hose. Refer to Positive Crankcase Ventilation Hose/Pipe/Tube Replacement.

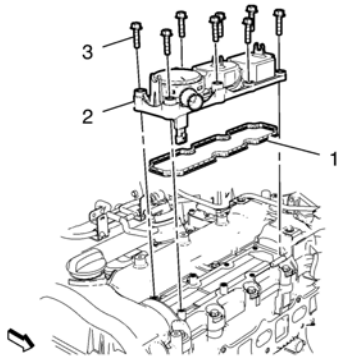

4. Remove 8 positive crankcase ventilation valve retaining bolts (3).
5. Remove the positive crankcase ventilation valve (2) and the gasket (1).

Installation Procedure

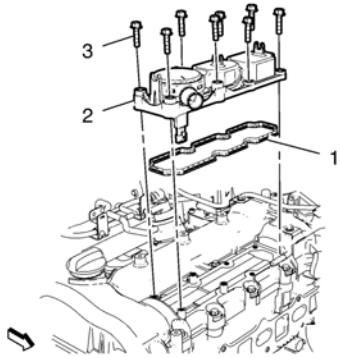

1. Install the positive crankcase ventilation valve (2) and a NEW gasket (1).

   Caution: Refer to Fastener Caution.
2. Install 8 positive crankcase ventilation valve retaining bolts (3). Tighten to **10 Y (89 lb in)**.
3. Install the positive crankcase ventilation hose. Refer to Positive Crankcase Ventilation Hose/Pipe/Tube Replacement.
4. Install the fuel injection fuel return hose. Refer to Fuel Injection Fuel Return Hose Replacement.
5. Install the engine sight shield. Refer to Engine Sight Shield Replacement.

cardiagn.com

Caution: In order to avoid damaging the replacement three-way catalytic converter, correct the engine misfire or mechanical fault before replacing the three-way catalytic converter.

carlabs.com

Removal Procedure

1. Disconnect the battery negative cable. Refer to Battery Negative Cable Disconnection and Connection.
2. Raise and support the vehicle. Refer to Lifting and Jacking the Vehicle.
3. Place a collecting basin underneath.

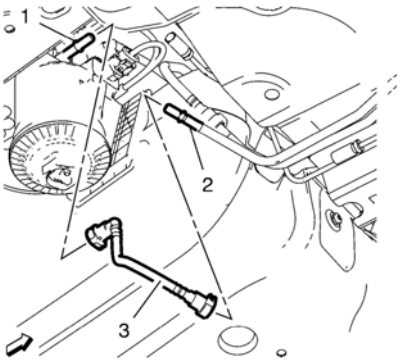

Warning: Refer to Gasoline/Gasoline Vapors Warning.

4. Disconnect the fuel feed pipe (3) from the fuel filter (1). Refer to Plastic Collar Quick Connect Fitting Service.
5. Disconnect the fuel feed pipe (3) from the fuel feed pipe (2). Refer to Plastic Collar Quick Connect Fitting Service.

Installation Procedure

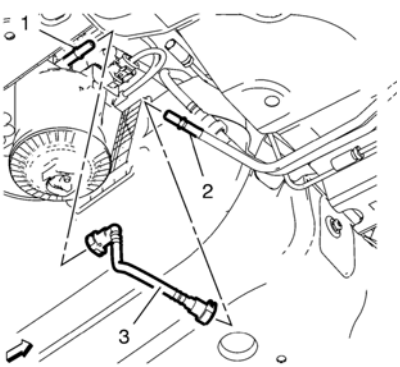

1. Connect the fuel feed pipe (3) to the fuel feed pipe (2). Refer to Plastic Collar Quick Connect Fitting Service.
2. Connect the fuel feed pipe (3) to the fuel filter (1). Refer to Plastic Collar Quick Connect Fitting Service.
3. Lower the vehicle.
4. Connect the battery negative cable. Refer to Battery Negative Cable Disconnection and Connection.

cardiagn.com

Removal Procedure

1. Remove the fuel tank. Refer to Fuel Tank Replacement.

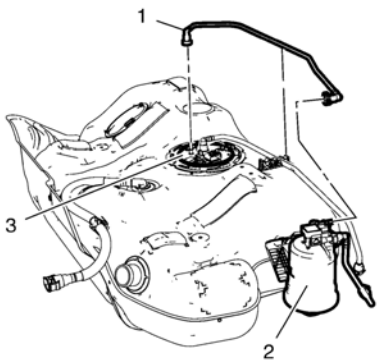

2. Disconnect the fuel feed pipe (1) from the fuel tank fuel pump module (3). Refer to Plastic Collar Quick Connect Fitting Service.
3. Disconnect the fuel feed pipe (1) from the fuel filter (2). Refer to Plastic Collar Quick Connect Fitting Service.
4. Unclip the fuel feed pipe from the retainer clip.

Installation Procedure

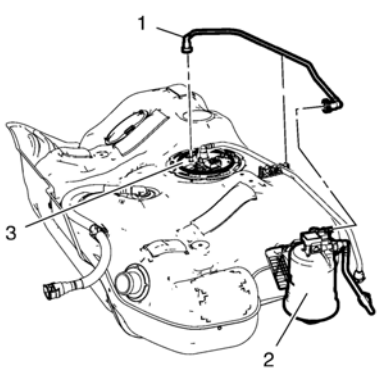

1. Position the fuel feed pipe (1) and clip in to the retainer clip.
2. Connect the fuel feed pipe (1) to the fuel filter (2). Refer to Plastic Collar Quick Connect Fitting Service.
3. Connect the fuel feed pipe (1) to the fuel tank fuel pump module (3). Refer to Plastic Collar Quick Connect Fitting Service.
4. Install the fuel tank. Refer to Fuel Tank Replacement.

cardiagn.com

Removal Procedure

1. Remove the fuel tank. Refer to Fuel Tank Replacement.

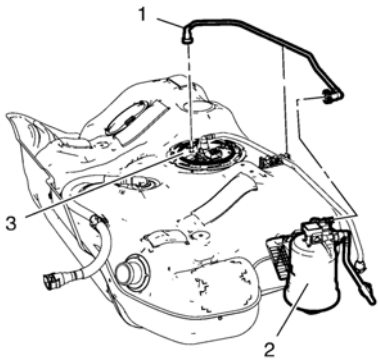

2. Disconnect the fuel feed pipe (1) from the fuel tank fuel pump module (3). Refer to Plastic Collar Quick Connect Fitting Service.
3. Disconnect the fuel feed pipe (1) from the fuel filter (2). Refer to Plastic Collar Quick Connect Fitting Service.
4. Unclip the fuel feed pipe from the retainer clip.

Installation Procedure

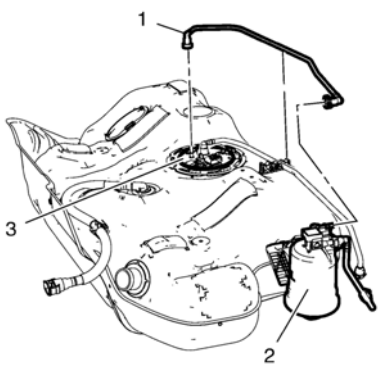

1. Position the fuel feed pipe (1) and clip in to the retainer clip.
2. Connect the fuel feed pipe (1) to the fuel filter (2). Refer to Plastic Collar Quick Connect Fitting Service.
3. Connect the fuel feed pipe (1) to the fuel tank fuel pump module (3). Refer to Plastic Collar Quick Connect Fitting Service.
4. Install the fuel tank. Refer to Fuel Tank Replacement.

cardiagn.com

Removal Procedure

1. Remove the fuel tank. Refer to Fuel Tank Replacement.

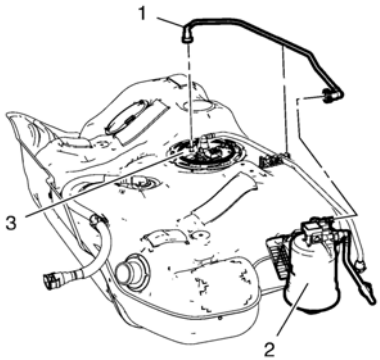

2. Disconnect the fuel feed pipe (1) from the fuel tank fuel pump module (3). Refer to Plastic Collar Quick Connect Fitting Service.
3. Disconnect the fuel feed pipe (1) from the fuel filter (2). Refer to Plastic Collar Quick Connect Fitting Service.
4. Unclip the fuel feed pipe from the retainer clip.

Installation Procedure

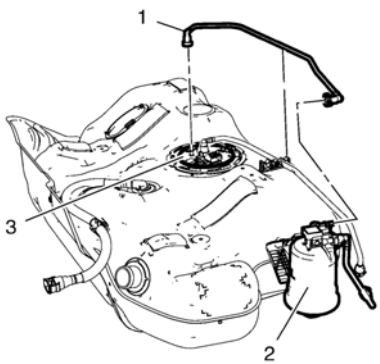

1. Position the fuel feed pipe (1) and clip in to the retainer clip.
2. Connect the fuel feed pipe (1) to the fuel filter (2). Refer to Plastic Collar Quick Connect Fitting Service.
3. Connect the fuel feed pipe (1) to the fuel tank fuel pump module (3). Refer to Plastic Collar Quick Connect Fitting Service.
4. Install the fuel tank. Refer to Fuel Tank Replacement.

cardiagn.com

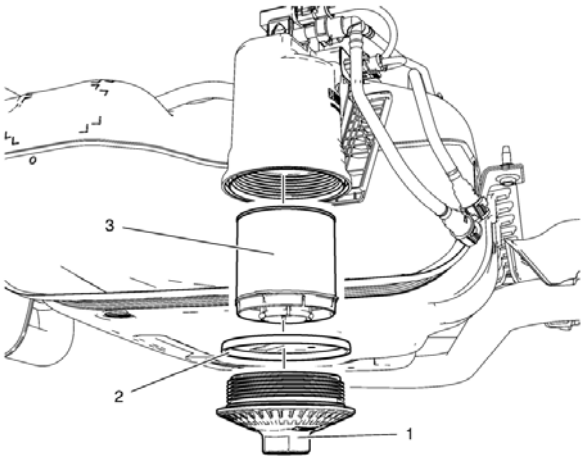

Fuel Filter Replacement

Callout	Component Name

Warning: Refer to Gasoline/Gasoline Vapors Warning.

Preliminary Procedure

1. Disconnect the battery negative cable. Refer to Battery Negative Cable Disconnection and Connection.
2. Raise and support the vehicle. Refer to Lifting and Jacking the Vehicle.

1	Fuel Filter Cap **Caution:** Refer to Fastener Caution. **Tighten** 25 Y (19 lb in)
2	Fuel Filter Sealant
3	Fuel Filter

cardiagn.com

Special Tools

EN-50434 Dust Cap - Fuel Rail Port

For equivalent regional tools, refer to Special Tools.

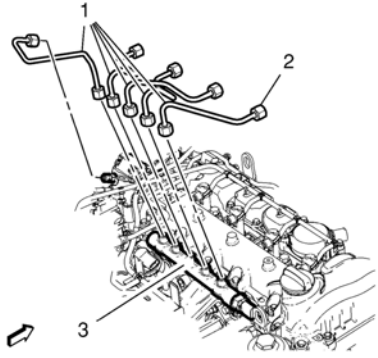

1. Remove the *EN-50434* dust cap from the multiport fuel injection fuel rail (3).
2. Loosen the 2 fuel injection fuel rail retaining bolts.
3. Install the fuel feed pipes (1).

   Caution: Refer to Fastener Caution.

4. Tighten the 10 fuel injection fuel feed pipe nuts (2) to **27 Y(20 lb ft)**.
5. Tighten the 2 fuel injection fuel rail retaining bolts to **25 Y(18 lb ft)**.

cardiagn.com

Special Tools

EN-50434 Dust Cap - Fuel Rail Port

For equivalent regional tools, refer to Special Tools.

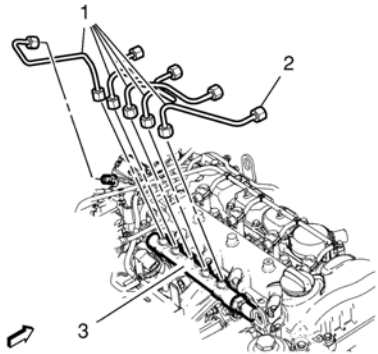

1. Remove the 10 fuel injection fuel feed pipe nuts from the fuel injection pump, the fuel feed rail (3), and the 4 fuel injectors (2).
2. Remove the 5 fuel feed pipes (1).
3. Close all connections with the *EN-50434* dust caps .

cardiagn.com

Special Tools

EN-50434 Closure Plugs

For equivalent regional tools, refer to Special Tools.

Removal Procedure

Warning: Gasoline or gasoline vapors are highly flammable. A fire could occur if an ignition source is present. Never drain or store gasoline or diesel fuel in an open container, due to the possibility of fire or explosion. Have a dry chemical (Class B) fire extinguisher nearby.

Warning: Always wear safety goggles when working with fuel in order to protect the eyes from fuel splash.

Caution: Clean all fuel pipe and hose connections and surrounding areas before disassembling to avoid possible contamination of the fuel system. Spray the fuel pump module cam-lock ring tang with penetrating oil prior to attempting removal.

1. Remove the engine sight shield. Refer to Engine Sight Shield Replacement.

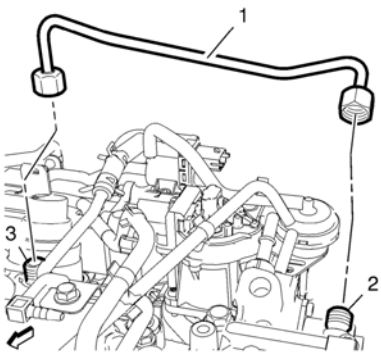

2. Remove the fuel injection fuel rail pipe (1) from the fuel injection pump (2) and from the fuel injection fuel rail (3).
3. Close the fuel feed injection fuel rail and the fuel injection pump with the *EN-50434* closure plugs .

Installation Procedure

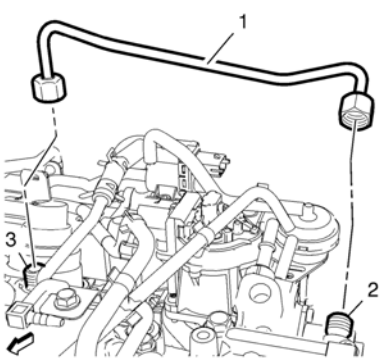

1. Remove the *EN-50434* closure plugs from the fuel feed injection fuel rail and the fuel injection pump.

Caution: Refer to Fastener Caution.

2. Install the fuel injection fuel rail pipe (1) to the fuel injection pump (2) and to the fuel injection fuel rail (3) and tighten to **27 Y (20 lb ft)**.
3. Install the engine sight shield. Refer to Engine Sight Shield Replacement.

cardiagn.com

Special Tools

EN-50434 Closure Plugs

For equivalent regional tools, refer to Special Tools.

Removal Procedure

Warning: Gasoline or gasoline vapors are highly flammable. A fire could occur if an ignition source is present. Never drain or store gasoline or diesel fuel in an open container, due to the possibility of fire or explosion. Have a dry chemical (Class B) fire extinguisher nearby.

Warning: Always wear safety goggles when working with fuel in order to protect the eyes from fuel splash.

Caution: Clean all fuel pipe and hose connections and surrounding areas before disassembling to avoid possible contamination of the fuel system. Spray the fuel pump module cam-lock ring tang with penetrating oil prior to attempting removal.

1. Remove the engine sight shield. Refer to Engine Sight Shield Replacement.
2. Disconnect the 4 fuel injectors wiring harness plugs.

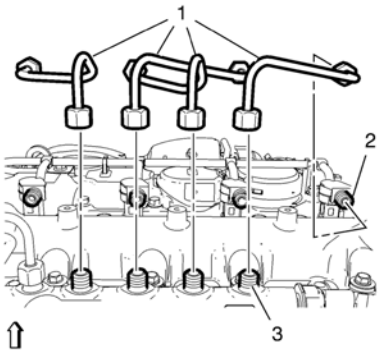

3. Remove the 4 fuel injector feed pipes (1) from the 4 fuel injectors (2) and from the fuel rail (3).
4. Close the 4 fuel injectors (2) and the fuel rail (3) with the *EN-50434* closure plugs .

Installation Procedure

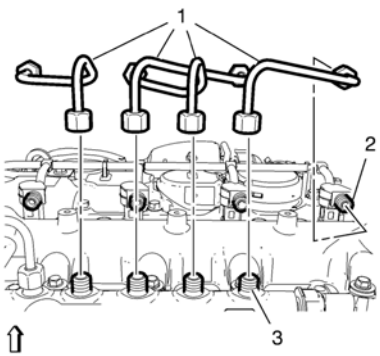

1. Remove the *EN-50434* closure plugs from the 4 fuel injectors (2) and the fuel rail (3).

Caution: Refer to Fastener Caution.

2. Install the 4 fuel injector feed pipes (1) to the 4 fuel injectors (2) and to the fuel rail (3) and tighten to **27 Y (20 lb ft)**.
3. Connect the 4 fuel injectors wiring harness plugs.
4. Install the engine sight shield. Refer to Engine Sight Shield Replacement.

cardiagn.com

Special Tools

EN-50434 Closure Plugs

For equivalent regional tools, refer to Special Tools.

Removal Procedure

Warning: Gasoline or gasoline vapors are highly flammable. A fire could occur if an ignition source is present. Never drain or store gasoline or diesel fuel in an open container, due to the possibility of fire or explosion. Have a dry chemical (Class B) fire extinguisher nearby.

Warning: Always wear safety goggles when working with fuel in order to protect the eyes from fuel splash.

Caution: Clean all fuel pipe and hose connections and surrounding areas before disassembling to avoid possible contamination of the fuel system. Spray the fuel pump module cam-lock ring tang with penetrating oil prior to attempting removal.

1. Remove the engine sight shield. Refer to Engine Sight Shield Replacement.
2. Disconnect the 4 fuel injectors wiring harness plugs.

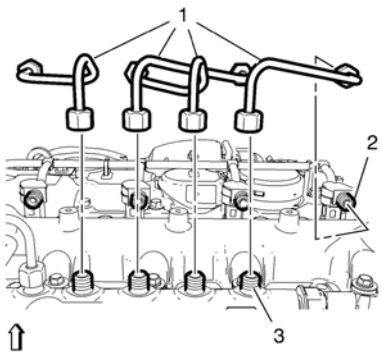

3. Remove the 4 fuel injector feed pipes (1) from the 4 fuel injectors (2) and from the fuel rail (3).
4. Close the 4 fuel injectors (2) and the fuel rail (3) with the *EN-50434* closure plugs .

Installation Procedure

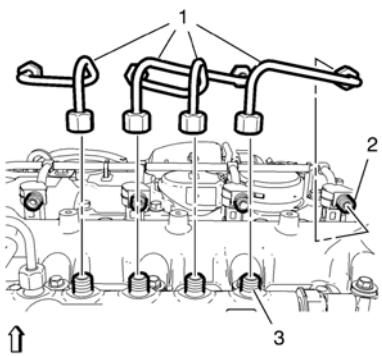

1. Remove the *EN-50434* closure plugs from the 4 fuel injectors (2) and the fuel rail (3).

Caution: Refer to Fastener Caution.

2. Install the 4 fuel injector feed pipes (1) to the 4 fuel injectors (2) and to the fuel rail (3) and tighten to **27 Y (20 lb ft)**.
3. Connect the 4 fuel injectors wiring harness plugs.
4. Install the engine sight shield. Refer to Engine Sight Shield Replacement.

cardiagn.com

Special Tools

EN-50434 Dust Cap - Fuel Rail Port

For equivalent regional tools, refer to Special Tools.

Removal Procedure

1. Remove the engine sight shield. Refer to Engine Sight Shield Replacement.
2. Remove the fuel injection fuel feed pipe - fuel injection pump to fuel rail. Refer to Fuel Injection Fuel Feed Pipe Replacement - Fuel Injection Pump to Fuel Rail.
3. Remove the fuel injection fuel feed pipe - fuel rail to fuel injector. Refer to Fuel Injection Fuel Feed Pipe Replacement - Fuel Rail to Fuel Injector.
4. Close all connections with the *EN-50434* plugs .

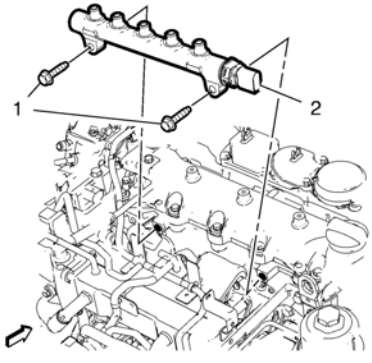

5. Remove the 2 fuel injection fuel rail retaining bolts (1).
6. Remove the fuel injection fuel rail (2).

Installation Procedure

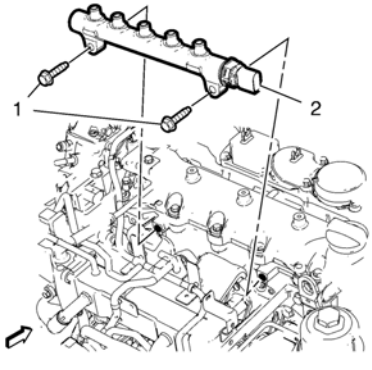

1. Install the fuel injection fuel rail (2).

Caution: Refer to Fastener Caution.

2. Install 2 fuel injection fuel rail retaining bolts and tighten to **25 Y (18 lb ft)**.
3. Remove the *EN-50434* plugs .
4. Install the fuel injection fuel feed pipe - fuel rail to fuel injector. Refer to Fuel Injection Fuel Feed Pipe Replacement - Fuel Rail to Fuel Injector.
5. Install the fuel injection fuel feed pipe - fuel injection pump to fuel rail. Refer to Fuel Injection Fuel Feed Pipe Replacement - Fuel Injection Pump to Fuel Rail.
6. Install the engine sight shield. Refer to Engine Sight Shield Replacement.

cardiagn.com

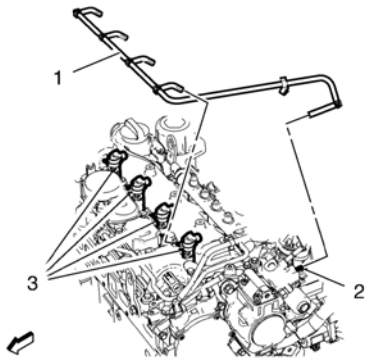

1. Install the fuel injection fuel return hose (1).
2. Install the fuel injection fuel return hose to the fuel injection pump (2) and the fuel injectors (3).
3. Clip in the fuel injection fuel return hose to the mountings at the positive crankcase ventilation valve.

cardiagn.com

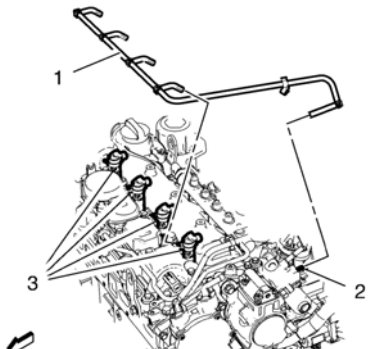

1. Unclip the fuel injection fuel return hose (1) from the mountings at the positive crankcase ventilation valve.
2. Remove the fuel injection fuel return hose (1) from the fuel injection pump (2) and the fuel injectors (3).

cardiagn.com

Removal Procedure

1. Remove the engine sight shield. Refer to Engine Sight Shield Replacement.

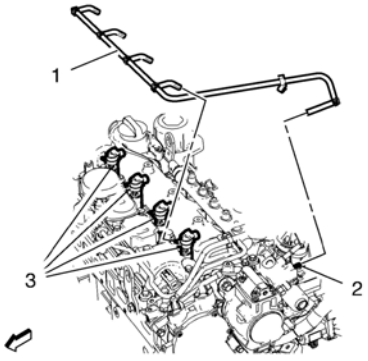

2. Unclip the fuel injection fuel return hose (2) 3 times from the mountings at the positive crankcase ventilation valve.
3. Unclip the fuel return hose from the 2 retainer clips.
4. Remove the fuel injection fuel return hose (1) from the fuel injection pump (2) and the fuel injectors (3).
5. Discard the fuel injection fuel return hose (1).

Installation Procedure

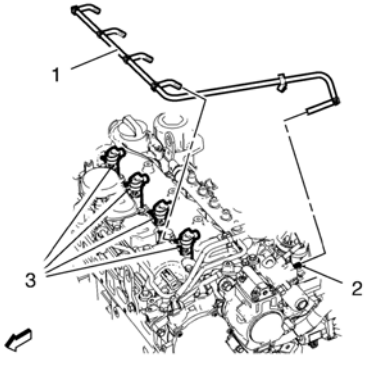

Note: Do not reuse the fuel injection fuel return hose. After fuel injection fuel return hose is removed, install a NEW fuel injection fuel return hose.

1. Install a NEW fuel injection fuel return hose (1) to the fuel injection pump (2) and the fuel injectors (3).
2. Clip the fuel injection fuel return hose (2) 3 times in the mountings at the positive crankcase ventilation valve.
3. Clip in the fuel return hose to the 2 retainer clips.
4. Install the engine sight shield. Refer to Engine Sight Shield Replacement.

cardiagn.com

Special Tools

EN-50434 Dust Cap - Fuel Rail Port

For equivalent regional tools, refer to Special Tools.

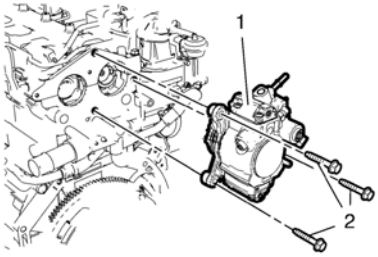

Note: Do not tilt the fuel injection pump actuator at the intake camshaft.

1. Install the fuel injection pump (1).

Caution: Refer to Fastener Caution.

2. Install the 3 fuel injection pump retaining bolts (2) and tighten to **22 Y (16 lb ft)**.
3. Remove the *EN-50434* dust cap .

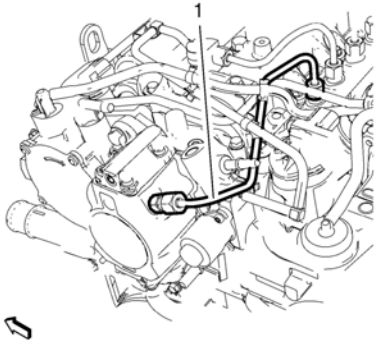

4. Install the fuel feed pipe (1).
5. Install 2 fuel injection fuel feed pipe nuts to the fuel feed rail and the fuel injection pump. Tighten the fuel pipe nuts to **27 Y (20 lb ft)**.

cardiagn.com

Special Tools

EN-50434 Dust Cap - Fuel Rail Port

For equivalent regional tools, refer to Special Tools.

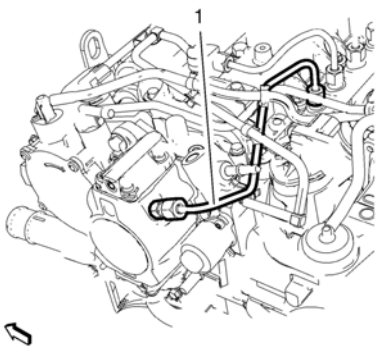

1. Remove the 2 fuel injection fuel feed pipe nuts from the fuel feed rail and the fuel injection pump.
2. Remove the fuel feed pipe (1).
3. Close all connections with the *EN-50434* dust caps .

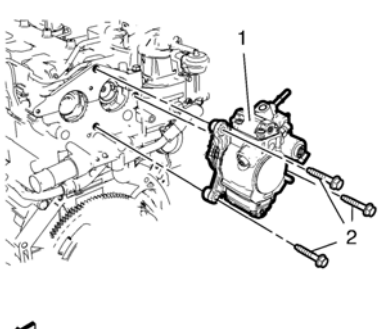

4. Remove the 3 fuel injection pump retaining bolts (2).

   Note: Do not tilt the fuel injection pump actuator at intake camshaft.
5. Remove the fuel injection pump (1).

cardiagn.com

Special Tools

- *EN-796* Remover-Quick Connector
- *EN-807* Closure Plugs
- *EN-6015* Closure Plugs

For equivalent regional tools, refer to Special Tools.

Removal Procedure

1. Remove the engine sight shield. Refer to Engine Sight Shield Replacement.
2. Disconnect the battery negative cable. Refer to Battery Negative Cable Disconnection and Connection.
3. Remove the engine control module. Refer to Engine Control Module Replacement.

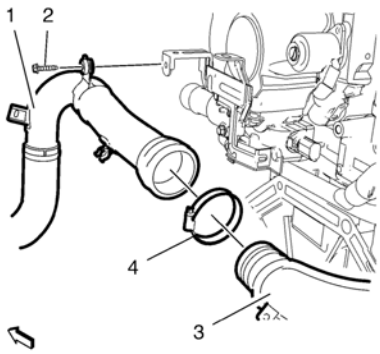

4. Remove the charge air cooler outlet front hose bracket bolt (2).
5. Loosen the charge air cooler outlet front hose to rear hose clamp (4).
6. Detach the charge air cooler outlet front hose (1) along with the clamp (4) from the charge air cooler outlet rear hose (3). Hang the charge air cooler outlet front hose aside (1).

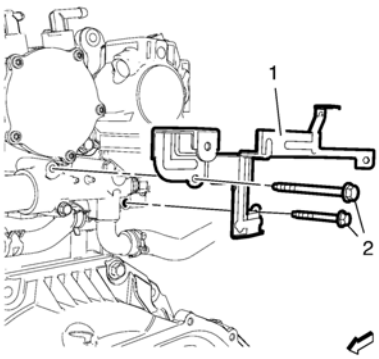

7. Unclip the 4 engine wiring harness retaining clips from the engine wiring harness bracket.
8. Remove the 2 engine wiring harness bracket and engine water outlet adapter bolts (2) from the engine water outlet adapter.
9. Remove the engine wiring harness bracket (1) from the engine water outlet adapter.

cardiagn.com

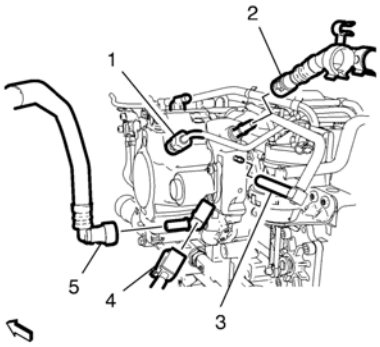

10. Disconnect the fuel injection pump wiring harness plug (4).
11. Remove the fuel injection fuel return hose (3).
12. Disconnect the fuel feed front pipe (5) and unclip from the fuel return front pipe clip. Refer to Plastic Collar Quick Connect Fitting Service.
13. Close the fuel return front pipe with the *EN-6015* closure plugs .
14. Disconnect the fuel return front pipe (2), using the *EN-796* remover . Refer to Plastic Collar Quick Connect Fitting Service.
15. Remove the fuel injection fuel feed pipe (1). Refer to Fuel Injection Fuel Feed Pipe Replacement - Fuel Injection Pump to Fuel Rail.
16. Close the fuel injection fuel feed pipe with the *EN-807* closure plugs .

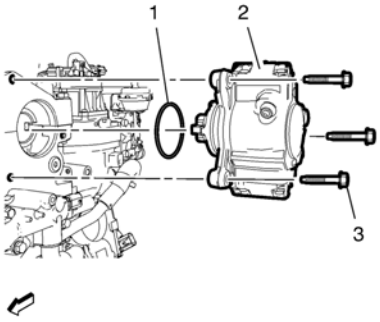

17. Remove the 3 injection pump bolts (3).
18. Remove the injection pump (2) and the gasket (1).

Installation Procedure

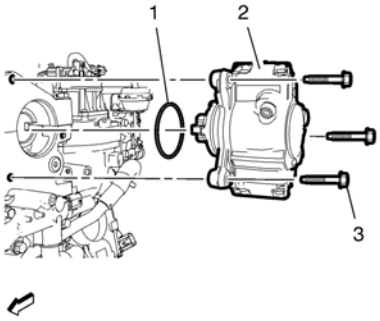

1. Install the injection pump (2) and a NEW gasket (1).

   Caution: Refer to Fastener Caution.
2. Install the 3 injection pump bolts (3) and tighten to **25 Y (18 lb ft)**.

cardiagn.com

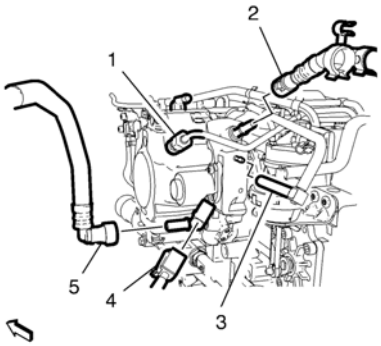

3. Remove the *EN-807* closure plugs from the fuel injection fuel feed pipe (1).
4. Install the fuel injection fuel feed pipe (1). Refer to Fuel Injection Fuel Feed Pipe Replacement - Fuel Injection Pump to Fuel Rail.
5. Remove the *EN-6015* closure plugs from the fuel return front pipe (2).
6. Connect the fuel return front pipe (2). Refer to Plastic Collar Quick Connect Fitting Service.
7. Connect the fuel feed front pipe (5) and clip to the fuel return front pipe clip. Refer to Plastic Collar Quick Connect Fitting Service.
8. Install the fuel injection fuel return hose (3).
9. Connect the fuel injection pump wiring harness plug (4).

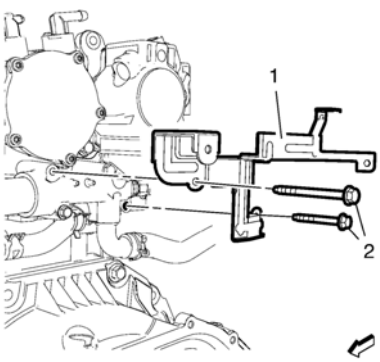

10. Install the engine wiring harness bracket (1) to the engine water outlet adapter.
11. Install the 2 engine wiring harness bracket and engine water outlet adapter bolts (2) to the engine water outlet adapter and tighten to **10 Y (89 lb in)**.
12. Clip the 4 engine wiring harness retaining clips into the engine wiring harness bracket.

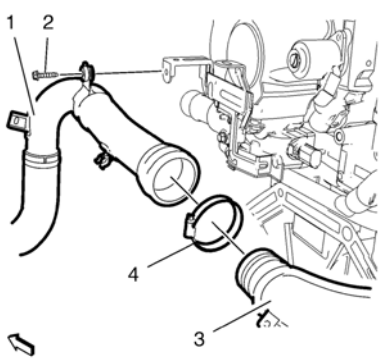

13. Install the charge air cooler outlet front hose (1) along with the clamp (4) to the charge air cooler outlet rear hose (3).
14. Install the charge air cooler outlet front hose bracket bolt (2) and tighten to **9 Y (80 lb in)**.
15. Tighten the charge air cooler outlet front hose to the rear hose clamp (4) to **4 Y (35 lb in)**.
16. Install the engine control module. Refer to Engine Control Module Replacement.
17. Connect the battery negative cable. Refer to Battery Negative Cable Disconnection and Connection.
18. Install the engine sight shield. Refer to Engine Sight Shield Replacement.

cardiagn.com

Diagnostic Instructions

- Perform the Diagnostic System Check - Vehicle prior to using this diagnostic procedure.
- Review Strategy Based Diagnosis for an overview of the diagnostic approach.
- Diagnostic Procedure Instructions provides an overview of each diagnostic category.

Circuit/System Description

The control module enables the appropriate fuel injector pulse for each cylinder. The ignition voltage is supplied directly to the fuel injectors. The control module controls each fuel injector by grounding the control circuit via a solid state device called a driver. A fuel injector coil winding resistance that is too high or too low will affect the engine driveability. A fuel injector control circuit DTC may not set, but a misfire may be apparent. The fuel injector coil windings are affected by temperature. The resistance of the fuel injector coil windings will increase as the temperature of the fuel injector increases.

The active fuel injector tester *CH 47976* Active Fuel Injector Tester is used to test the fuel pump, fuel system leak down, and the fuel injectors. Following the user guide, and the on screen prompts or selections, will indicate the steps required to perform each of the available tests. The tester will perform all of the tests automatically and display the results of the test. The results can also be downloaded for storage and printing.

Reference Information

Schematic Reference

Engine Controls Schematics

Connector End View Reference

Component Connector End Views

Electrical Information Reference

- Circuit Testing
- Connector Repairs
- Testing for Intermittent Conditions and Poor Connections
- Wiring Repairs

Special Tools

CH 47976 Active Fuel Injector Tester

For equivalent regional tools, refer to Special Tools.

Component Testing

Fuel Injector Coil Static Test

Verify the resistance of each fuel injector with one of the following methods:

- If the B34A Engine Coolant Temperature Sensor 1 is between 10–32°C (50–90°F), the resistance of each fuel injector should be 11–14 Ω.
  - If the injectors measure OK, perform the active fuel injector tester test procedure.
  - If not within the specified range, replace the fuel injector.
- If the B34A Engine Coolant Temperature Sensor 1 is not between 10–32°C (50–90°F), measure and record the resistance of each fuel injector with a DMM. Subtract the lowest resistance value from the highest resistance value. The difference between the two should be equal to or less than 3 Ω.
  - If the difference is equal to or less than 3 Ω, refer to active fuel injector tester test procedure for further diagnosis of the fuel injectors.
  - If the difference is more than 3 Ω, add all of the fuel injector resistance values to obtain a total resistance value. Divide the total resistance value by the number of fuel injectors to obtain an average resistance value. Subtract the lowest individual fuel injector resistance value from the average resistance value. Compute the difference between the highest individual fuel injector resistance value and the average resistance value. Replace the fuel injector that displays the greatest difference above or below the average.

Active Fuel Injector Tester Static Test Procedure

Note:

- DO NOT perform this test if the engine coolant temperature (ECT) is above 94°C (201°F). Irregular fuel pressure readings may result due to hot soak fuel boiling.
- Verify that adequate fuel is in the fuel tank before proceeding with this diagnostic.

1. Turn OFF all accessories.
2. Turn OFF the ignition.
3. Install the active fuel injector tester. Refer to the active fuel injector tester user guide.
4. Turn ON the active fuel injector tester and select the vehicle.
5. Turn ON the ignition and perform the injector test.

- If the active fuel injector tester aborts testing due to fuel pressure or fuel leak down, refer to Fuel System Diagnosis.
- View the test results.
  - If any injector exceeds the recommended tolerance, replace the injector(s).

Repair Instructions

cardiagn.com

Fuel Injector Diagnosis (Special Tool)

Perform the Diagnostic Repair Verification after completing the diagnostic procedure.

cardiagn.com

Circuit/System Description

The control functions for the fuel injection system are integrated in the engine control module (ECM). Each injectors flow rate information, or injection quantity adjustment flow rate numbers, and cylinder position are stored in the memory of the ECM. The fuel injector flow rate programming must be done when any of the following procedures are performed:

- The ECM is replaced
- A fuel injector is replaced

Injector Flow Rate Programming

1. Ignition OFF.
2. Record all the injection quantity adjustment codes from the corresponding cylinder from each injector that is being replaced or from all injectors if the ECM was replaced.

   Note: Enter the 20 digit injection quantity adjustment code from the injector or injectors that is printed on the top.
3. Perform the scan tool Injector Flow Rate Programming and follow the instructions on the screen.

Repair Verification

1. Install any components or connectors that have been removed or replaced during diagnosis.
2. Perform any adjustment, programming or setup procedures that are required when a component or module is removed or replaced.
3. Ignition OFF for 60 s.
4. Ignition ON, engine OFF.
5. Clear the DTCs.
6. If the repair was related to a DTC, duplicate the Conditions for Running the DTC and use the Freeze Frame/Failure Records, if applicable, in order to verify the DTC does not reset. If the DTC resets or another DTC is present, refer to the Diagnostic Trouble Code (DTC) List - Vehicle and perform the appropriate diagnostic procedure.

cardiagn.com

Special Tools

- *EN-47632* Cleaning Tool
- *EN-48559* Injector Protective Caps

For equivalent regional tools, refer to Special Tools.

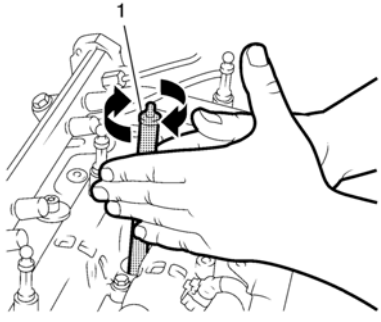

Caution: Refer to EN-47632 Cleaning Tool Rotation Caution.

Note: Use both sides of the *EN-47632* cleaning tool (1), one for loosing the dirt and the other to remove the dirt.

1. Clean the sealing surfaces, using the *EN-47632* cleaning tool.

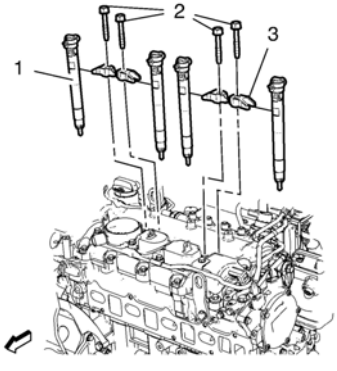

Caution: Refer to Fastener Caution.

2. Install the 4 camshaft cover retaining bolts. Tighten the bolts to **10 Y (89 lb in)**.
3. Remove the 4 *EN-48559* protective caps.
4. Install the 4 fuel injectors (1).
5. Install the 4 fuel injector brackets (3).

Caution: Refer to Torque-to-Yield Fastener Caution.

6. Install the 4 NEW fuel injector bracket retaining bolts (2) and tighten to **14 Y + 110° (10 lb ft + 110°)**.

cardiagn.com

Special Tools

- *EN-50428* Remover - Injector
- *EN-48559* Injector Protective Caps

For equivalent regional tools, refer to Special Tools.

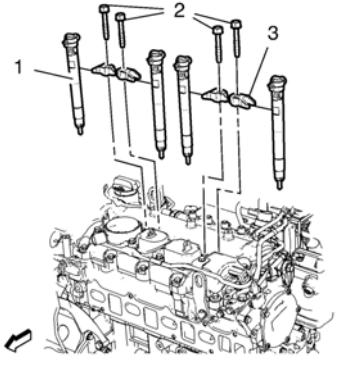

1. Remove the 4 fuel injector bracket retaining bolts (2).
2. Remove the 4 fuel injector brackets (3).
3. Remove the 4 inner camshaft cover retaining bolts to install the *EN-50428* remover .
4. Remove the 4 fuel injectors (1), using the *EN-50428* remover .
5. Close the 4 fuel injector nozzles with the *EN-48559* protective caps .

cardiagn.com

Special Tools

- *EN-34730-91* Fuel Pressure Gauge
- *CH-807* Closure Plugs

For equivalent regional tools, refer to Special Tools.

Removal Procedure

1. Open the hood.
2. Disconnect the negative cable from the battery. Refer to Battery Negative Cable Disconnection and Connection.
3. Remove the positive crankcase ventilation tube. Refer to Positive Crankcase Ventilation Hose/Pipe/Tube Replacement.
4. Disconnect the wiring harness from the:
    1. Evaporative emission purge valve
    2. Fuel injectors
5. Place a collecting basin underneath.

   Warning: Gasoline or gasoline vapors are highly flammable. A fire could occur if an ignition source is present. Never drain or store gasoline or diesel fuel in an open container, due to the possibility of fire or explosion. Have a dry chemical (Class B) fire extinguisher nearby.
6. Release the fuel pressure using the test connection with *EN-34730-91* gauge .

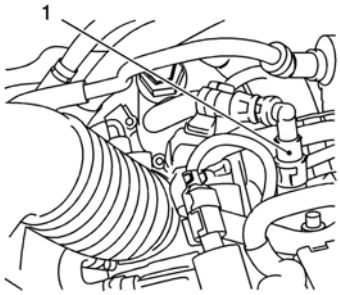

7. Disconnect the quick-release fitting of the fuel feed pipe (1). Refer to Plastic Collar Quick Connect Fitting Service.
8. Install and close the fuel feed pipe with *CH-807* plug .

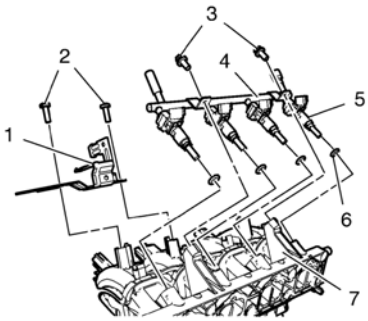

9. Remove the 2 evaporative emission canister purge solenoid valve bracket bolts (2).
10. Remove the evaporative emission canister purge solenoid valve bracket (1) from the intake manifold (7).
11. Remove the 2 multiport fuel injection fuel rail bolts (3).
12. Remove the multiport fuel injection fuel rail (4) with the fuel injectors (5) from the intake manifold (7).
13. Remove the 4 fuel injector seals (6).

cardiagn.com

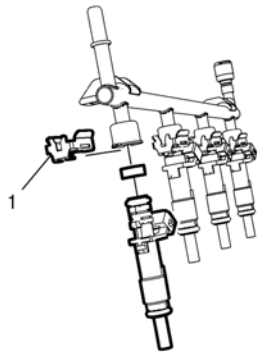

14. Remove the fuel injector retainer (1).
15. Remove the fuel injectors.

Installation Procedure

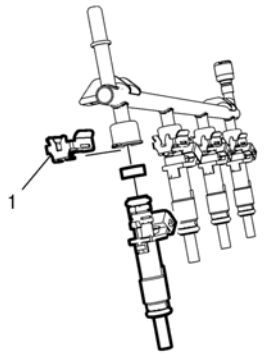

1. Install the fuel injectors.

Note: Install NEW fuel injector seals, coat the multiport fuel injector seals with silicone grease.

2. Install the fuel injector retainer (1).

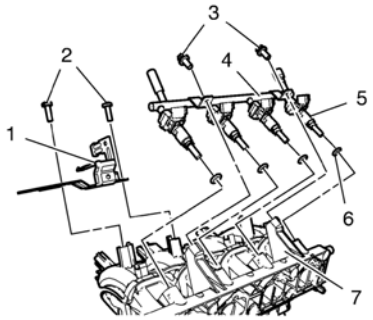

Note: Coat the fuel injector seals with silicone grease.

3. Install the 4 NEW fuel injector seals (6).
4. Install the multiport fuel injection fuel rail (4) and the fuel injectors (5) to the intake manifold (7).

Caution: Refer to Fastener Caution.

5. Install the 2 multiport fuel injection fuel rail bolts (3) and tighten to **8 Y (71 lb in)**.
6. Install the evaporative emission canister purge solenoid valve bracket (1) to the intake manifold (7).
7. Install the 2 evaporative emission canister purge solenoid valve bracket bolts (2) and tighten to **8 Y (71 lb in)**.

cardiagn.com

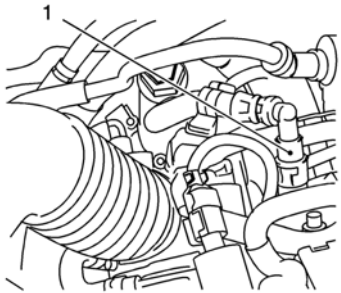

8. Remove the *CH-807* plug .
9. Connect the quick-release fitting of the fuel feed pipe (1). Refer to Plastic Collar Quick Connect Fitting Service.
10. Connect the wiring harness to the:

    1. Evaporative emission purge valve
    2. Fuel injectors
11. Install the positive crankcase ventilation tube. Refer to Positive Crankcase Ventilation Hose/Pipe/Tube Replacement.
12. Connect the negative cable to the battery. Refer to Battery Negative Cable Disconnection and Connection.
13. Close the hood.

cardiagn.com

Special Tools

- *EN-50428* Remover - Injector
- *EN-48559* Injector Protective Caps
- *EN-47632* Cleaning Tool

For equivalent regional tools, refer to Special Tools.

Removal Procedure

1. Remove the engine sight shield. Refer to Engine Sight Shield Replacement.
2. Remove the 4 fuel injection fuel feed pipes - fuel rail to fuel injector. Refer to Fuel Injection Fuel Feed Pipe Replacement - Fuel Rail to Fuel Injector.
3. Remove the fuel injection fuel feed pipe - fuel pump to fuel rail. Refer to Fuel Injection Fuel Feed Pipe Replacement - Fuel Injection Pump to Fuel Rail.

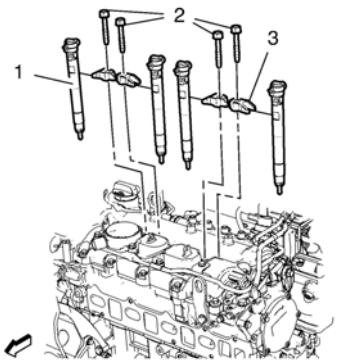

4. Remove and DISCARD the 4 fuel injector bracket retaining bolts (2).
5. Remove the 4 fuel injector brackets (3).
6. Remove the 4 fuel injectors (1), using the *EN-50428* remover. Remove the 4 inner camshaft cover retaining bolts to use remover.
7. Close the 4 fuel injector nozzles with the *EN-48559* protective caps.

Installation Procedure

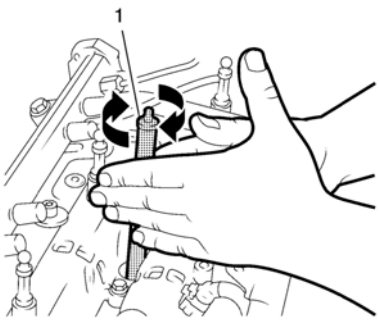

Caution: Refer to EN-47632 Cleaning Tool Rotation Caution.

Note: Use both sides of EN-47632 cleaning tool, one for loosing the dirt and the other to haul out the dirt.

1. Clean the sealing surfaces, use the *EN-47632* cleaning tool.

cardiagn.com

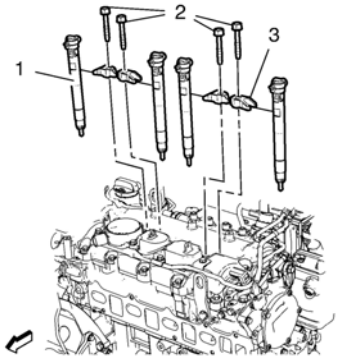

Caution: Refer to Fastener Caution.

2. Install the 4 camshaft cover retaining bolts. Tighten the bolts to **10 Y (89 lb in)**.
3. Remove the 4 *EN-48559* protective caps.
4. Install the 4 fuel injectors (1).
5. Install the 4 fuel injector brackets (3).

Caution: Refer to Torque-to-Yield Fastener Caution.

6. Install the 4 NEW fuel injector bracket retaining bolts (2). Tighten the bolts to **14 Y + 110° (10 lb ft + 110°)**.
7. Install the 4 fuel injection fuel feed pipes - fuel rail to fuel injector. Refer to Fuel Injection Fuel Feed Pipe Replacement - Fuel Rail to Fuel Injector.
8. Install the fuel injection fuel feed pipe - fuel pump to fuel rail. Refer to Fuel Injection Fuel Feed Pipe Replacement - Fuel Injection Pump to Fuel Rail.
9. Install the engine sight shield. Refer to Engine Sight Shield Replacement.

cardiagn.com

Warning: Refer to Gasoline/Gasoline Vapors Warning.

Warning: Remove the fuel tank cap and relieve the fuel system pressure before servicing the fuel system in order to reduce the risk of personal injury. After you relieve the fuel system pressure, a small amount of fuel may be released when servicing the fuel lines, the fuel injection pump, or the connections. In order to reduce the risk of personal injury, cover the fuel system components with a shop towel before disconnection. This will catch any fuel that may leak out. Place the towel in an approved container when the disconnection is complete.

1. Disconnect the battery. Refer to Battery Negative Cable Disconnection and Connection.

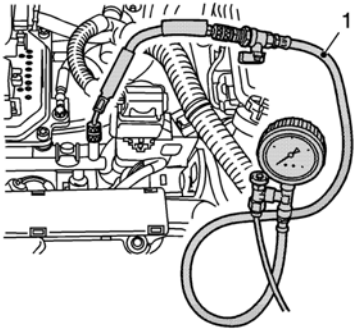

2. Remove the protective cap from the test connection.
3. Relieve the fuel pressure, using the *EN-34730–91* Pressure Tester (1).

cardiagn.com

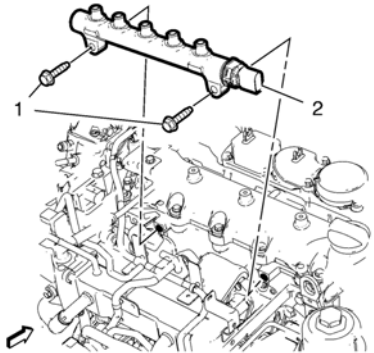

1. Install the fuel rail (2).

   Caution: Refer to Fastener Caution.

2. Install the 2 fuel rail retaining bolts (1) and tighten to **25 Y (18 lb ft)**.

cardiagn.com

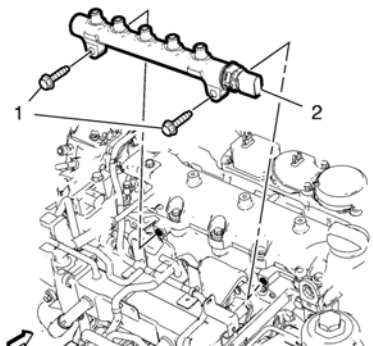

1. Remove the 2 fuel rail retaining bolts (1).
2. Remove the fuel rail (2).

cardiagn.com

Removal Procedure

1. Remove the fuel tank. Refer to Fuel Tank Replacement.

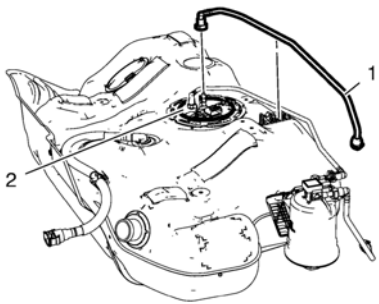

2. Disconnect the fuel return pipe (1) from the fuel tank fuel pump module (2). Refer to Plastic Collar Quick Connect Fitting Service.
3. Unclip the fuel return pipe from the retainer clip.

Installation Procedure

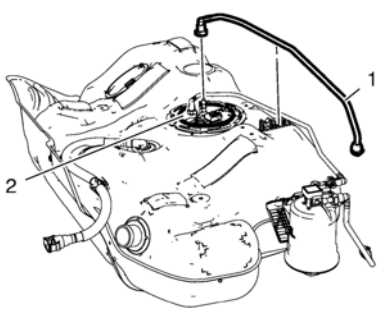

1. Position the fuel return pipe (1) and clip in to the retainer clip.
2. Connect the fuel return pipe (1) to the fuel tank fuel pump module (2). Refer to Plastic Collar Quick Connect Fitting Service.
3. Install the fuel tank. Refer to Fuel Tank Replacement.

cardiagn.com

Special Tools

EN-6015 Closure Plugs

For equivalent regional tools, refer to Special Tools.

Removal Procedure

1. Disconnect the battery negative cable. Refer to Battery Negative Cable Disconnection and Connection.
2. Remove the engine sight shield. Refer to Engine Sight Shield Replacement.

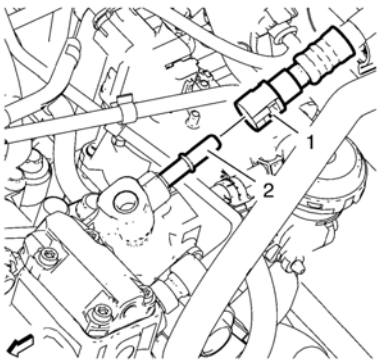

Warning: Refer to Gasoline/Gasoline Vapors Warning.

3. Disconnect the fuel return pipe (1) from the fuel injection pump (2) and unclip from 2 retainer clips. Refer to Plastic Collar Quick Connect Fitting Service.
4. Plug the connections with *EN-6015* plugs .

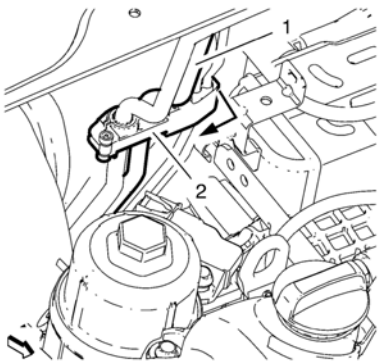

5. Open the upper bulkhead bracket (2).
6. Unclip the fuel return pipe (1) from the bulkhead bracket.
7. Raise and support the vehicle. Refer to Lifting and Jacking the Vehicle.
8. Remove the front compartment insulator. Refer to Front Compartment Insulator Replacement.

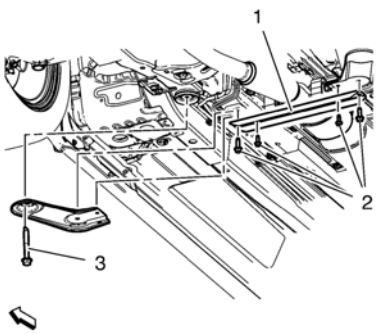

cardiagn.com

9. Remove the 4 exhaust pipe front hanger bracket bolts (2).
10. Remove the drivetrain and the front suspension frame bolt (3).
11. Remove the right drivetrain and the front suspension frame support.

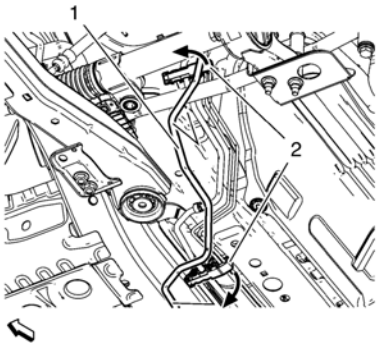

12. Unclip the fuel return pipe (1) from the 4 bracket clips (2).

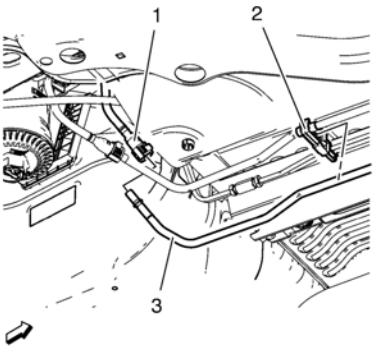

13. Disconnect the fuel return pipe (3) from the fuel return pipe connector (1). Refer to Plastic Collar Quick Connect Fitting Service.
14. Plug the connections with *EN-6015* plugs .
15. Unclip the fuel return pipe (3) from the last bracket clip (2).
16. Remove the fuel return pipe (3).

Installation Procedure

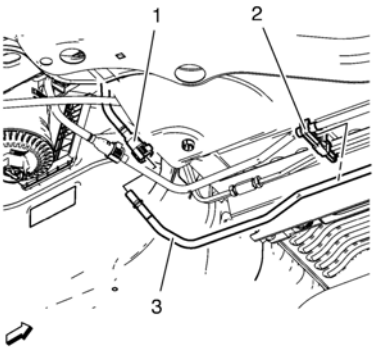

1. Install and position the fuel return pipe (3) and clip it in to the last bracket clip (2).
2. Remove the *EN-6015* plugs .
3. Connect the fuel return pipe (3) to the fuel return pipe connector (1).

cardiagn.com

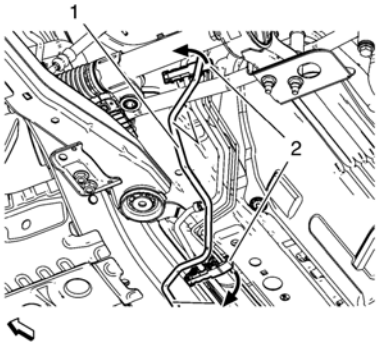

4. Clip in the fuel return pipe (1) to the 4 bracket clips (2).

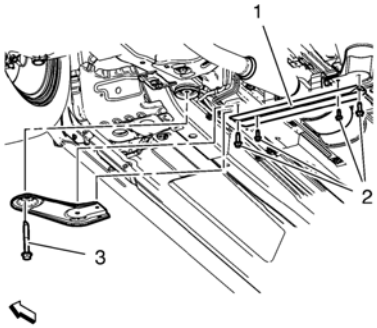

5. Install the right drivetrain and the front suspension frame support.
6. Install the drivetrain and the front suspension frame bolt (3).
7. Install the 4 exhaust pipe front hanger bracket bolts (2). Refer to Exhaust Pipe Front Hanger Bracket Replacement.

Caution: Refer to Fastener Caution.

8. Tighten the drivetrain and the front suspension frame bolt (3) to **160 Y (118 lb ft)**.
9. Install the front compartment insulator. Refer to Front Compartment Insulator Replacement.
10. Lower the vehicle.

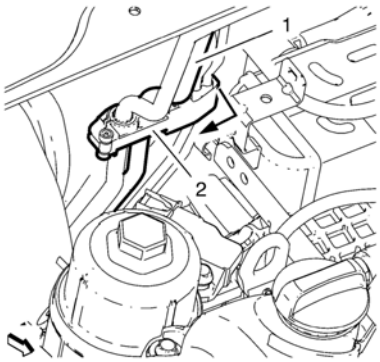

11. Clip in the fuel return pipe (1) to the upper bulkhead bracket (2).
12. Close the upper bulkhead bracket.

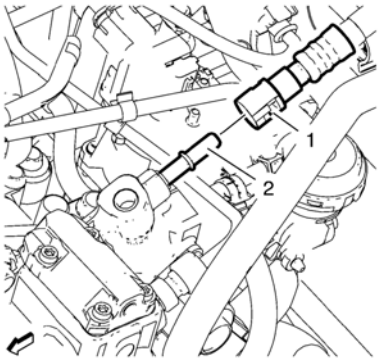

13. Remove the *EN-6015* plugs .
14. Connect the fuel return pipe (1) to the fuel injection pump (2) and clip it in to 2 retainer clips.

cardiagn.com

15. Install the engine sight shield. Refer to Engine Sight Shield Replacement.
16. Connect the battery negative cable. Refer to Battery Negative Cable Disconnection and Connection.

carlogic.com

Warning: Always wear safety goggles when working with fuel in order to protect the eyes from fuel splash.

Cleaning Water From the Fuel System

1. Disconnect the negative battery. Refer to Battery Negative Cable Disconnection and Connection.
2. Remove the fuel tank. Refer to Fuel Tank Replacement.
3. Inspect the fuel tank and the fuel sender for rust, fungi or bacteria. If there is rust, replace the rusted components.
4. Clean the inside of the fuel tank and the fuel sender with hot water.

   Warning: Wear safety glasses when using compressed air in order to prevent eye injury.

5. Use compressed air in order to dry the fuel tank and the fuel sender.
6. Disconnect the ends of the following lines:

- The fuel filter inlet line (both ends)
- The fuel filter outlet line (both ends)
- The fuel filter drain
- The fuel return line (both ends)

- Inspect each of the pipes and lines.
- Clean the inside of the fuel filter housing.
- Dry the fuel filter housing with compressed air.
- Dry the inside of each line with low pressure air.
- Install a new fuel filter. Refer to Fuel Filter Replacement.
- Install the fuel tank. Refer to Fuel Tank Replacement.
- Add clean diesel fuel to the primary tank until the tank is 1/4 full.
- Reconnect the following lines:

  - The fuel filter inlet line
  - The fuel filter outlet line
  - The transfer pump pressure and suction (both ends) lines
  - The fuel return line (tank end)

- Connect the fuel filter drain to a line that flows into a clean metal container.
- Connect the batteries.
- Operate the fuel system hand primer at the fuel filter until clean fuel flows from the fuel filter drain into a metal container.
- Install a hose on the fuel return line , and insert other end into a 7.6 liters (2 gallons) metal container.
- Crank the engine for 30 second time intervals, with 1 minute cool-down periods. Continue until 3.8 liters (1 gallon) of fuel has passed into the container.
- Connect the fuel return line.
- Start and run the engine.
- Stop the engine.
- Clean any fuel spillage from the engine.
- Fill the fuel tank and add a biocide, if needed.

Cleaning Fuel From the Fuel System

1. Drain the fuel tank.
2. Fill the fuel tank to 1/4 full.
3. Unplug the crankshaft position (CKP) sensor.
4. Disconnect the fuel return line near the cylinder head.
5. Install a hose on the fuel return line, and insert the other end into a 7.6 liters (2 gallons) metal container.
6. Crank the engine for 15 second time intervals, with 1 minute cool-down periods. Continue until 3.8 liters (1 gallon) of fuel has passed into the container.
7. Reconnect the fuel return line.
8. Plug in the CKP sensor.
9. Attempt to start and run the engine for 15 minutes. If the engine does not start, turn on/off ignition ten times, that the fuel pump module convey fuel to the fuel injection pump.
10. Stop the engine.
11. Clean any fuel spillage from the engine.
12. Clear the engine of any diagnostic trouble codes (DTCs).

Fuel Tank Cleaning

Note:

- Only use oil free compressed air to blow out the fuel pipes.
- Inspect the fuel tank internally and clean the fuel tank if you find a plugged fuel filter.

1. Disconnect the negative battery cable. Refer to Battery Negative Cable Disconnection and Connection.

cardiagn.com

2. Drain the fuel tank. Refer to Fuel Tank Draining.
3. Remove the fuel tank. Refer to Fuel Tank Replacement.
4. Inspect the fuel pump strainer. Replace a contaminated strainer and inspect the fuel pump.
5. Inspect the fuel pump inlet for dirt and debris. Replace the fuel pump if you find dirt or debris in the fuel pump inlet.
6. Locate a stand or fixture suitable to support the weight of the fuel tank and water.
7. Turn the in-frame rail fuel tank over so that the modular reservoir assembly opening is facing down.
8. Install side mounted fuel tanks upright and horizontal on stand of fixture and remove the drain plug and set aside for re-installation.

   Note:

   - When flushing the fuel tank, handle the fuel and water mixture as a hazardous material. Handle the fuel and water mixture in accordance with all applicable local, state, and federal laws and regulations.
   - Do not drill any access or drain holes in the fuel tank.
9. Using a high pressure water spray-wand, spray all interior surfaces with clean/non-contaminated water. Be sure to spray all interior tank surfaces including for and aft sections of tank behind baffles, while allowing water to drain out the modular reservoir assembly opening or drain hole. Perform each wash cycle for a minimum of 30 seconds using a minimum of 4 liters (1 gallon) of clean/non-contaminated water.
10. Using a high pressure wand, dry all interior tank surfaces. Tank should be tipped accordingly to facilitate removal of water. Assure pressurized air does not contain any contaminants.
11. Repeat steps 10 and 11 for a total of 3 wash/dry cycles.
12. Hand dry tank surfaces with a white towel to confirm dryness and cleanliness.

    Use a non-metallic extension to push the towel beyond tank baffles.

cardiagn.com

Note: If the fuel filter is plugged, the fuel tank should be inspected internally and cleaned if necessary.

1. Drain the fuel tank. Refer to Fuel Tank Draining.
2. Remove the fuel pump module assembly. Refer to Fuel Tank Fuel Pump Module Replacement.
3. Inspect the fuel pump module strainer. Replace the pump module assembly if the fuel strainer is contaminated.

Note: When flushing the fuel tank, handle the fuel and water mixture as a hazardous material. Handle the fuel and water in accordance with all applicable local, state, and federal laws and regulations.

4. Flush the fuel tank with hot water.
5. Pour the water out of the fuel sender assembly opening in the fuel tank. Rock the fuel tank in order to be sure that the removal of the water from the fuel tank is complete.
6. Allow the tank to dry completely before reassembly.
7. Disconnect the fuel feed pipe at the engine fuel rail. Refer to Fuel Feed Pipe Replacement.

Note: Only use oil-free compressed air to blow out the fuel pipes.

8. Clean the fuel pipes by applying air pressure in the opposite direction of the fuel flow.
9. Connect the fuel feed pipe to the engine fuel rail. Refer to Fuel Feed Pipe Replacement.
10. Install the fuel pump module assembly. Refer to Fuel Tank Fuel Pump Module Replacement.

cardiagn.com

Fuel System Overview

The fuel pump module, located in the right side of the fuel tank, supplies fuel through the fuel feed pipe to the high pressure mechanical fuel injection pump. The mechanical fuel injection pump is located on the lower left side of the engine. Fuel is drawn through the fuel filter/heater element housing, which combines a water separator, a fuel heater element, and a filter element. The mechanical fuel injection pump output is controlled by the engine control module (ECM), and provides fuel at the pressure needed by the fuel injectors. The fuel injectors supply fuel directly to the combustion chambers of the engine. A separate pipe returns unused fuel through to the fuel tank. The mechanical fuel injection pump, fuel rail pressure, fuel injection timing, and injection duration are controlled by the ECM.

Fuel Tank

The fuel tank stores the fuel supply. The fuel pump is an electric pump that is attached to the primary fuel tank module assembly. The fuel pump supplies fuel to the high pressure mechanical fuel injection pump. The fuel pump also supplies fuel to the siphon jet pump. The siphon jet pump draws fuel from the secondary side of the fuel tank to the primary side of the fuel tank.

The fuel tank is held in place by 2 metal straps that attach to the frame. The fuel tank is molded from high density polyethylene.

Fuel Filler Cap

The fuel filler cap has a torque-limiting device that prevents the cap from being over tightened. To install , turn the cap clockwise until you hear audible clicks. This indicates that the cap is fully seated.

Fuel Sender Assembly

The fuel tank module is located inside of the fuel tank. The fuel tank module consists of the following major components:

- The fuel pump and reservoir assembly
- The fuel level sensor
- The fuel strainer

Fuel Level Sensor

The fuel level sensor consists of a float, a wire float arm, and a ceramic resistor card. The position of the float arm indicates the fuel level. The fuel level sensor contains a variable resistor which changes resistance in correspondence with the amount of fuel in the fuel tank. The engine control module (ECM) sends the fuel level information to the instrument panel cluster. This information is used for the instrument panel fuel gauge and the low fuel warning indicator, if applicable. The ECM also monitors the fuel level input for various diagnostics.

Fuel Strainer

The fuel strainer attaches to the lower end of the fuel sender. The fuel strainer is made of woven plastic. The functions of the fuel strainer are to filter contaminants and to wick fuel. The fuel strainer is self-cleaning and normally requires no maintenance. Fuel stoppage at this point indicates that the fuel tank contains an abnormal amount of sediment.

Fuel Pump

The fuel pump is mounted in the primary fuel tank module reservoir. The fuel pump is an electric pump. Fuel is pumped to the mechanical fuel injection pump at a specified flow and pressure. The control module controls the electric fuel pump operation through a fuel pump relay.

Fuel Injection Pump

The fuel injection pump is a mechanical high pressure pump. The fuel injection pump is located on the lower left side of the engine. Fuel is pumped to the fuel rails at a specified pressure. Fuel pressure is regulated by the fuel pressure regulator which is located on the inlet side of the fuel injection pump, controlled by the engine control module (ECM). Excess fuel from the fuel injection pump returns to the fuel tank through the fuel return pipe.

Fuel Filter

The fuel filter assembly is located at the right rear of the engine compartment. The paper filter element traps particles in the fuel that may damage the fuel injection system.

Fuel Feed and Return Pipes

The fuel feed pipe carries fuel from the fuel tank to the fuel filter/heater element housing. The fuel return pipe carries fuel from the fuel rail assemblies back to the fuel tank. The fuel pipes consist of 2 sections:

- The rear fuel pipe assemblies are located from the top of the fuel tank to the chassis fuel pipes. The rear fuel pipes are constructed of steel with sections of rubber hose covered with braiding.
- The chassis fuel pipes are located under the vehicle and connect the rear fuel pipes to the fuel rail pipes. These pipes are constructed of steel with sections of rubber hose covered with braiding.

Quick-Connect Fittings

Quick-connect fittings provide a simplified means of installing and connecting fuel system components. The fittings consist of a unique female connector and a compatible male pipe end. O-rings, located inside the female connector, provide the fuel seal. Integral locking tabs inside the female connector hold the fittings together.

Fuel Pipe O-Rings

O-rings seal the connections in the fuel system. Fuel system O-ring seals are made of special material. Service the O-ring seals with the correct service part.

Fuel Rail Assembly

The fuel rail assembly attaches to the cylinder head. The fuel rail assembly distributes pressurized fuel to the fuel injectors through the fuel lines.

The fuel rail pressure sensor gives the engine control module (ECM) an indication of fuel pressure. The ECM uses this information to regulate fuel pressure, by commanding the fuel pressure regulator open or closed on the inlet of the fuel injection pump.

cardiagn.com

Fuel System Description

Fuel Injectors and Return Lines

A fuel injector is a solenoid device, controlled by the ECM, that meters pressurized fuel to a single engine cylinder. Fuel pressure is released from above the fuel injector pintle, and is returned to the fuel tank through the fuel return lines. The difference in fuel pressure above and below the pintle causes the pintle to open. Fuel from the fuel injector tip is sprayed directly into the combustion chamber on the compression stroke of the engine.

The control functions for the fuel injection system are integrated in the engine control module (ECM).

cardiagn.com

Fuel System Overview

The fuel system is a returnless on-demand design. The fuel pressure regulator is a part of the fuel pump module, eliminating the need for a return pipe from the engine. A returnless fuel system reduces the internal temperature of the fuel tank by not returning hot fuel from the engine to the fuel tank. Reducing the internal temperature of the fuel tank results in lower evaporative emissions.

An electric turbine-style fuel pump is attached to the fuel pump module inside the fuel tank. The fuel pump supplies high pressure fuel through the fuel feed pipe to the fuel injection system. The fuel pump provides fuel at a higher rate of flow than is needed by the fuel injection system. The fuel pump module contains a reverse flow check valve. The check valve and the fuel pressure regulator maintain fuel pressure in the fuel feed pipe and the fuel rail in order to prevent long cranking times.

Fuel Tank

The fuel tank stores the fuel supply. The fuel tank is located in the rear of the vehicle. The fuel tank is held in place by 2 metal straps that are attached to the underbody. The fuel tank is molded from high-density polyethylene.

Fuel Filler Cap

Note: If a fuel tank filler cap requires replacement, use only a fuel tank filler cap with the same features. Failure to use the correct fuel tank filler cap can result in a serious malfunction of the fuel and Evaporative Emission (EVAP) system.

The fuel fill pipe has a tethered fuel filler cap. A torque-limiting device prevents the cap from being overtightened. To install the cap, turn the cap clockwise until the cap clicks audibly. This indicates that the cap is correctly torqued and fully seated. A fuel filler cap that is not fully seated may cause a malfunction in the emission system.

Fuel Pump Module

The fuel pump module consists of the following major components:

- The fuel level sensor
- The fuel pump
- The fuel strainer
- The fuel pressure regulator
- The fuel filter

Fuel Level Sensor

The fuel level sensor consists of a float, a wire float arm, and a ceramic resistor card. The position of the float arm indicates the fuel level. The fuel level sensor contains a variable resistor which changes resistance in correspondence with the position of the float arm. The ECM sends the fuel level information via the serial data circuit to the instrument panel cluster. This information is used for the instrument panel cluster fuel gauge and the low fuel warning indicator, if applicable. The ECM also monitors the fuel level input for various diagnostics.

Fuel Pump

The fuel pump is mounted in the fuel pump module reservoir. The fuel pump is an electric low-pressure pump. Fuel is pumped to the fuel injection system at specified rates of flow and pressure. The fuel pump delivers a constant flow of fuel to the engine even during low fuel conditions and aggressive vehicle maneuvers. The ECM controls the electric fuel pump operation through a fuel pump relay. The fuel pump flex pipe acts to dampen the fuel pulses and noise generated by the fuel pump.

Fuel Strainer

The fuel strainer is attached to the lower end of the fuel pump module. The fuel strainer is made of woven plastic. The functions of the fuel strainer are to filter contaminants and to wick away fuel. Normally, the fuel strainer does not require maintenance. Fuel stoppage at this point indicates that the fuel tank contains an abnormal amount of sediment or contamination.

Fuel Pressure Regulator

The fuel pressure regulator is contained in the fuel pump module near the fuel pump outlet. The fuel pressure regulator is a diaphragm relief valve. The diaphragm has fuel pressure on one side and regulator spring pressure on the other side. Fuel pressure is controlled by a pressure balance across the regulator. The fuel system pressure is constant.

Fuel Feed Pipes

The fuel feed pipe carries fuel from the fuel tank to the fuel injection system. The fuel pipe consists of 3 sections:

- The rear fuel pump fuel feed hose runs from the top of the fuel tank to the chassis fuel pipe. The rear fuel hose is constructed of nylon.
- The fuel feed intermediate pipe is located under the vehicle and connects the rear fuel pump fuel feed hose to the front fuel pump fuel feed hose. The intermediate fuel pipe is constructed of a combination of nylon and steel pipes.
- The front fuel pump fuel feed hose connects the fuel feed intermediate pipe to the fuel rail. The front fuel hose contains the fuel pulse dampener and is constructed of a combination of nylon and steel pipes.

Nylon Fuel Pipes

Warning: Refer to Fuel and Evaporative Emission Pipe Warning.

Nylon pipes are constructed to withstand maximum fuel system pressure, exposure to fuel additives, and changes in temperature.

Heat resistant rubber hose or corrugated plastic conduit protect the sections of the pipes that are exposed to chasing, high temperature, or vibration.

Nylon fuel pipes are somewhat flexible and can be shaped around gradual turns under the vehicle. However, if nylon fuel pipes are forced into sharp bends, the pipes may kink and restrict the flow of fuel. Also, once exposed to fuel, nylon pipes may become stiffer and are more likely to kink if bent too far. Exercise special care when working on a vehicle with nylon fuel pipes.

Quick-Connect Fittings

cardiagn.com

Nylon fuel pipes are somewhat flexible and can be shaped around gradual turns under the vehicle. However, if nylon fuel pipes are forced into sharp bends, the pipes may kink and restrict the flow of fuel. Also, once exposed to fuel, nylon pipes may become stiffer and are more likely to kink if bent too far. Exercise special care when working on a vehicle with nylon fuel pipes.

Fuel Pulse Dampener

The fuel pulse dampener is a part of the front fuel pump fuel feed hose. The fuel pulse dampener is diaphragm-operated with fuel pump pressure on one side and with spring pressure on the other side. The function of the dampener is to dampen the fuel pump pressure pulsations.

Fuel Rail Assembly

The fuel rail assembly is attached to the cylinder head. The fuel rail assembly performs the following functions:

- Positions the injectors in the intake ports of the cylinder head
- Distributes fuel evenly to the injectors

Fuel Injectors

The fuel injector assembly is a solenoid device controlled by the ECM that meters pressurized fuel to a single engine cylinder. The ECM energizes the high-impedance, 12 Ω, injector solenoid to open a ball valve, normally closed. This allows fuel to flow into the top of the injector, past the ball valve, and through a director plate at the injector outlet. The director plate has machined holes that control the flow of fuel, generating a spray of finely atomized fuel at the injector tip. Fuel from the injector tip is directed at the intake valve, causing the fuel to become further atomized and vaporized before entering the combustion chamber. This fine atomization improves fuel economy and emissions. The fuel pressure regulator compensates for engine load by increasing fuel pressure as the engine vacuum drops.

Fuel Metering Modes of Operation

The ECM monitors voltages from several sensors in order to determine how much fuel to feed to the engine. The ECM controls the amount of fuel delivered to the engine by changing the fuel injector pulse width. The fuel is delivered under one of several modes.

Starting Mode

When the ECM detects reference pulses from the crankshaft position sensor, the ECM will enable the fuel pump. The fuel pump runs and builds up pressure in the fuel system. The ECM then monitors the manifold absolute pressure (MAP), intake air temperature (IAT), engine coolant temperature (ECT), and accelerator pedal position (APP) sensor signals in order to determine the required injector pulse width for starting.

Run Mode

The run mode has 2 conditions referred to as open loop and closed loop. When the engine is first started and the engine speed is above a predetermined rounds per minute, the system begins open loop operation. The ECM ignores the signal from the heated oxygen sensor (HO2S). The engine ECM calculates the air/fuel ratio based on inputs from the engine coolant temperature (ECT), the manifold absolute pressure (MAP), and accelerator pedal position (APP) sensor. The system stays in open loop until meeting the following conditions:

- The heated oxygen sensor (HO2S) has varying voltage output, showing that the heated oxygen sensor (HO2S) is hot enough to operate properly.
- The ECT sensor is above a specified temperature.
- A specific amount of time has elapsed after starting the engine.

Specific values for the above conditions exist for each different engine, and are stored in the programmable read-only memory (EEPROM), which may be erased electrically. The system begins closed loop operation after reaching these values. In closed loop, the ECM calculates the air/fuel ratio, injector ON time, based upon the signal from various sensors, but mainly from the heated oxygen sensor (HO2S). This allows the air/fuel ratio to stay very close to 14.7:1.

Acceleration Mode

The ECM monitors the changes in the accelerator pedal position (APP) sensor. and the manifold absolute pressure (MAP) sensor signal in order to determine when the vehicle is being accelerated. The ECM will then increase the injector pulse width in order to provide more fuel for increased performance.

Deceleration Mode

The ECM monitors changes in accelerator pedal position (APP) sensor and manifold absolute pressure (MAP) sensor signals to determine when the vehicle is being decelerated. The ECM will then decrease injector pulse width or even turn OFF injectors for short periods to reduce exhaust emissions, and for better (engine braking) deceleration.

Battery Voltage Correction Mode

When the battery voltage is low, the ECM compensates for the weak spark delivered by the ignition system in the following ways:

- Increasing the amount of fuel delivered
- Increasing the idle engine speed
- Increasing the ignition dwell time

Fuel Cutoff Mode

The ECM cuts OFF fuel from the fuel injectors when the following conditions are met in order to protect the powertrain from damage and improve driveability:

- The ignition is OFF. This prevents engine run-on.
- The ignition is ON but there is no ignition reference signal. This prevents flooding or backfiring.
- The engine speed is too high, above red line.
- During an extended, high speed, closed throttle coast down, this reduces emissions and increases engine braking.

Fuel Trim

The ECM controls the air/fuel metering system in order to provide the best possible combination of driveability, fuel economy, and emission control. The ECM monitors the heated oxygen sensor (HO2S) signal voltage while in closed loop and regulates the fuel delivery by adjusting the pulse width of the injectors based on this signal. The ideal fuel trim values are around 0% for both short and long term fuel trim. A positive fuel trim value indicates the ECM is adding fuel in order to compensate for a lean condition by increasing the pulse width. A negative fuel trim value indicates that the ECM is reducing the amount of fuel in order to compensate for a rich condition by decreasing the pulse width. A change made to the fuel delivery changes the long and short term fuel trim values. The short term fuel trim values change rapidly in response to the heated oxygen sensor (HO2S) signal voltage. These changes fine-tune the engine fueling. The long term fuel trim makes rough adjustments to fueling in order to recenter and restore control to short term fuel trim. A scan tool can be used to monitor the short and long term fuel trim values. The long term fuel trim diagnostic is based on an average of several of the long term speed load learn cells. The ECM selects the cells based on the engine speed and engine load. If the ECM detects an excessively lean or rich condition, the ECM will set a fuel trim diagnostic trouble code (DTC).

cardiagn.com

Note: In order for the diesel fuel system to work properly, the fuel lines must be full of fuel and contain no air. If air gets into the fuel lines, it will be necessary to prime the fuel system to eliminate the air before operating the vehicle. Air could have entered the system in one of the following ways:

- The vehicle ran out of fuel.
- The filter was removed for service or replacement.
- The fuel lines were removed or disconnected for servicing.
- The fuel pump was removed for servicing.
- The fuel filter water drain cock was opened while the engine was running.

If one or more of the above occurred, air has entered the fuel system and you will need to prime the system prior to operating the vehicle.

1. Turn the ignition key ON and wait 5 seconds.

   Note:

   - Do not turn the ignition key to START. It could damage the injection pump.
   - Fuel priming can be performed using the scan tool.
2. Turn the ignition key OFF and wait 3 seconds.
3. Repeat steps 1 and 2 five more times.

cardiagn.com

Removal Procedure

Warning: Refer to Fuel Vapors in Evaporative Emission Components Warning.

Warning: Refer to Gasoline/Gasoline Vapors Warning.

Warning: Refer to Safety Goggles and Fuel Warning.

1. Remove the fuel tank. Refer to Fuel Tank Replacement.
2. Place the fuel tank onto a workbench.
3. Remove the fuel tank fuel pump module. Refer to Fuel Tank Fuel Pump Module Replacement.

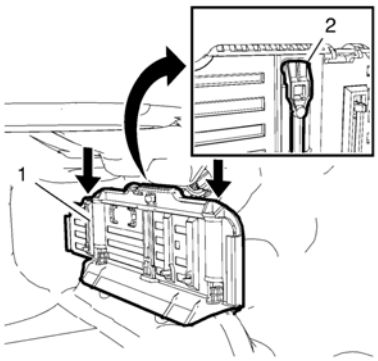

4. Press the fuel tank baffle (1) completely down as shown in the picture.
5. Push the lug (2) toward the baffle and hold it.
6. Release tension from the fuel tank baffle (1) until the lug (2) engages safely.

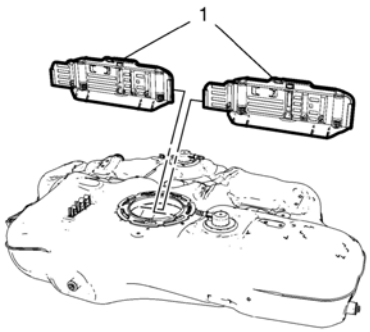

7. Remove the baffles (1) one by one.
8. Repeat steps 5 to 8 to remove the other baffle.

Installation Procedure

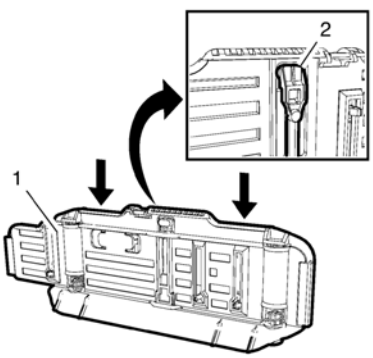

cardiagn.com

Note: Perform the steps 1–3 only when the fuel tank baffles are not transferred from the OLD to the NEW tank.

1. Tension the fuel tank baffle (1) completely by pressing it down.
2. Push the lug (2) toward the baffle and hold it.
3. Release tension from the fuel tank baffle (1) until the lug (2) engages safely.

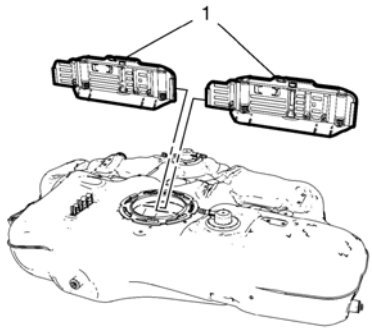

4. Install the baffles (1) one by one.

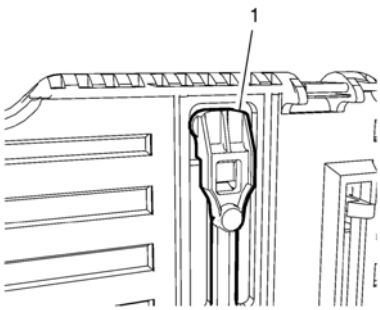

5. Press the fuel tank baffle together until the lug (1) becomes unlocked.
6. Release tension slowly from the fuel tank baffle and let the baffle engage safely in the installation site.

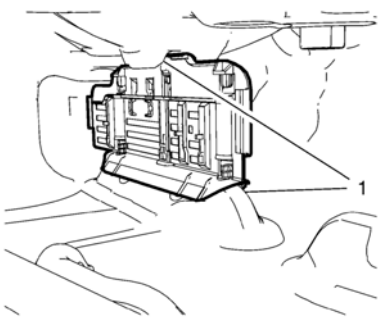

7. Check the proper seat of the fuel tank baffle at the fuel tank installation sites (1). Use a mirror if necessary.
8. Repeat steps 1–7 to install the other baffle.
9. Install the fuel tank fuel pump module. Refer to Fuel Tank Fuel Pump Module Replacement.
10. Install the fuel tank. Refer to Fuel Tank Replacement.

cardiagn.com

Removal Procedure

Warning: Refer to Fuel Vapors in Evaporative Emission Components Warning.

Warning: Refer to Gasoline/Gasoline Vapors Warning.

Warning: Refer to Safety Goggles and Fuel Warning.

1. Remove the fuel tank. Refer to Fuel Tank Replacement.
2. Place the fuel tank onto a workbench.
3. Remove the fuel tank fuel pump module. Refer to Fuel Tank Fuel Pump Module Replacement.

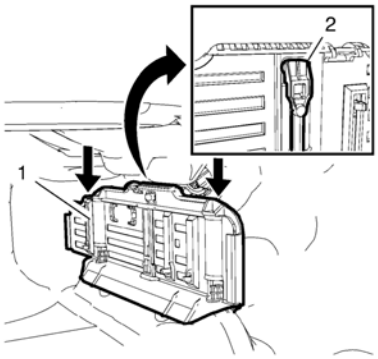

4. Press the fuel tank baffle (1) completely together as shown in the picture.
5. Push the lug (2) toward the baffle and hold it.
6. Release tension from the fuel tank baffle (1) and let the lug (2) engage safely.

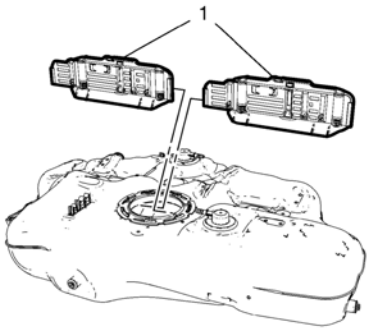

7. Remove the baffles (1) one by one.
8. Repeat steps 5 to 7 to remove the other baffle.

Installation Procedure

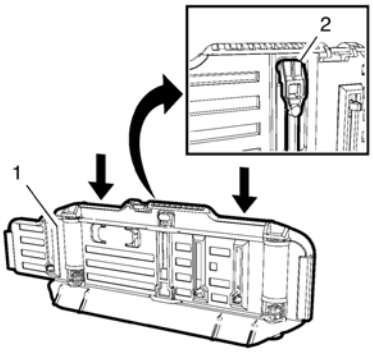

Note: Perform the following steps 1–3 only when the fuel tank baffles are retrofitted.

cardiagn.com

1. Tension the fuel tank baffle (1) completely together by press it down.
2. Push the lug (2) toward the baffle and hold it.
3. Release tension from the fuel tank baffle (1) and let the lug (2) engage safely.

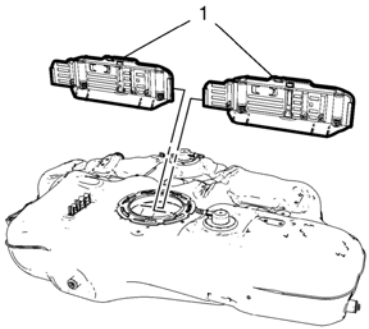

Note: Mount the baffles in the shown direction.

4. Install the baffles (1) one by one.

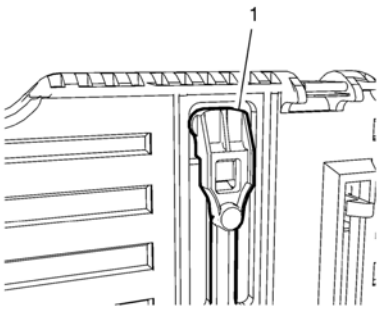

5. Press the fuel tank baffle together. The lug (1) will unlock by its own.
6. Release slowly tension from the fuel tank baffle and let the baffle engage safely in the installation site.

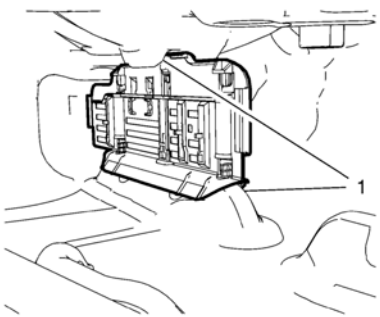

7. Check for proper seat of the fuel tank baffle at the fuel tank installation sites (1). Use a mirror if necessary.
8. Repeat steps 1 to 7 to install the other baffle.
9. Install the fuel tank fuel pump module. Refer to Fuel Tank Fuel Pump Module Replacement.
10. Install the fuel tank. Refer to Fuel Tank Replacement.

cardiagn.com

Special Tools

CH-45004 Fuel Tank Drain Hose

For equivalent regional tools, refer to Special Tools.

Warning: Never drain or store fuel in an open container. Always use an approved fuel storage container in order to reduce the chance of fire or explosion.

Warning: Place a dry chemical (Class B) fire extinguisher nearby before performing any on-vehicle service procedures. Failure to follow these precautions may result in personal injury.

Warning: Always wear safety goggles when working with fuel in order to protect the eyes from fuel splash.

1. Open the hood.
2. Disconnect the battery negative cable. Refer to Battery Negative Cable Disconnection and Connection.
3. Remove the fuel fill cap.
4. Raise and suitably support the vehicle. Refer to Lifting and Jacking the Vehicle.
5. Remove the fuel tank filler pipe from the fuel tank. Refer to Fuel Tank Filler Pipe Replacement.
6. Insert the *CH-45004* drain hose into the fuel tank until the hose reaches the bottom of the fuel tank.
7. Use an hand or air operated pump device in order to drain as much fuel as possible.

cardiagn.com

Warning: Refer to Gasoline/Gasoline Vapors Warning.

Warning: Refer to Safety Goggles and Fuel Warning.

Caution: The fuel tank is fitted with a fuel tank filler valve. This filler valve is located on the end of the fuel tank filler hose at the entrance of the fuel tank. To prevent damaging to the fuel tank filler valve during fuel tank draining, a flexible but inherently stable suction hose with a diameter of no more than 10 mm (0.4 in) must be used.

Note: The fuel tank must be drained with a suitable, commercially-available fuel removal unit and suction hose - follow safety regulations and national legislation. In the presence of fuel vapors or escaping fuel - observe safety regulations and national legislation. Store drained fuel in a suitable, sealable container.

1. Disconnect the negative battery cable. Refer to Battery Negative Cable Disconnection and Connection.
2. Remove the fuel tank filler cap.
3. Insert a suitable suction hose into the fuel tank filler pipe.
4. Attach a suitable suction hose to the hose used with the hand or air operated pump devise.
5. Using a hand or air operated pump drain as much fuel from the tank as possible.

cardiagn.com

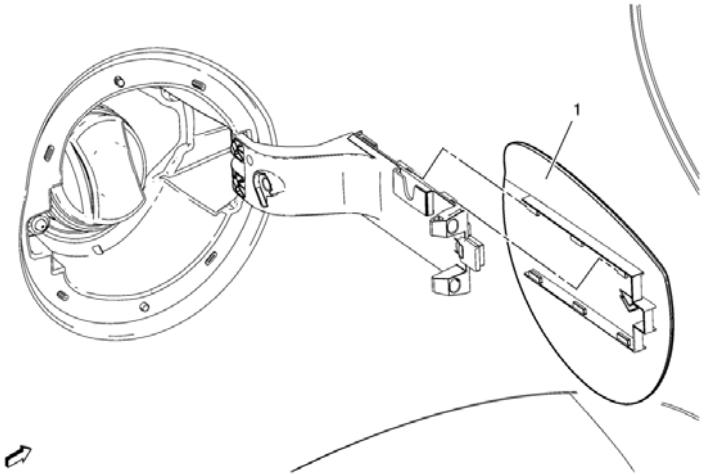

Fuel Tank Filler Door Replacement

Callout	Component Name
	Fuel Tank Filler Door

Procedure

1

1. Open the fuel tank filler door.
2. Unclip the fuel tank filler door.

cardiagn.com

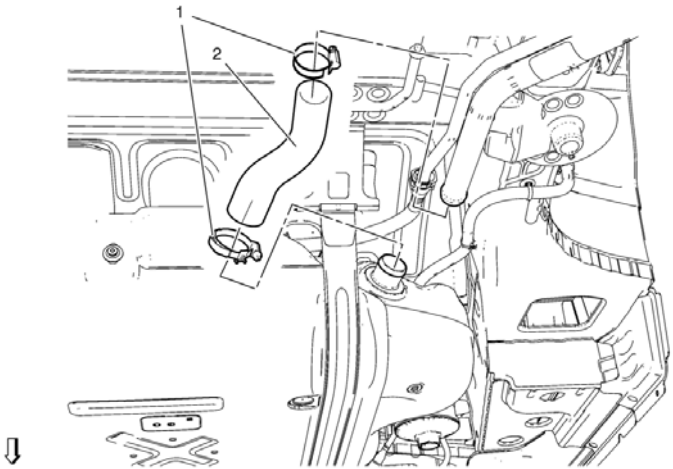

Fuel Tank Filler Hose Replacement

Callout	Component Name

Warning: Gasoline or gasoline vapors are highly flammable. A fire could occur if an ignition source is present. Never drain or store gasoline or diesel fuel in an open container, due to the possibility of fire or explosion. Have a dry chemical (Class B) fire extinguisher nearby.

Preliminary Procedures

1. Open the hood.
2. Disconnect the battery negative cable. Refer to Battery Negative Cable Disconnection and Connection.
3. Drain the fuel tank. Refer to Fuel Tank Draining.

1	Fuel Tank Filler Hose Clamp (Qty: 2)
2	Fuel Tank Filler Hose

cardiagn.com

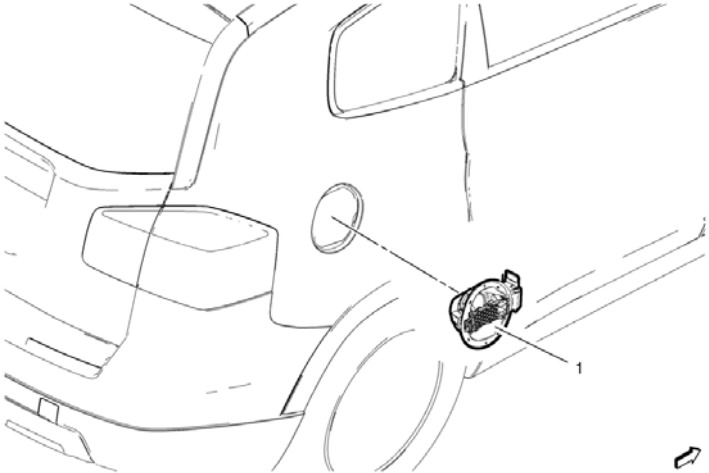

Fuel Tank Filler Pipe Housing Replacement

Callout	Component Name

Preliminary Procedures

Remove the rear wheelhouse panel liner. Refer to Rear Wheelhouse Liner Replacement.

Fuel Tank Filler Pipe Housing

Procedure

1

1. Disconnect electrical connector from fuel tank filler door lock actuator.
2. Clip out the fuel tank filler pipe housing.

cardiagn.com

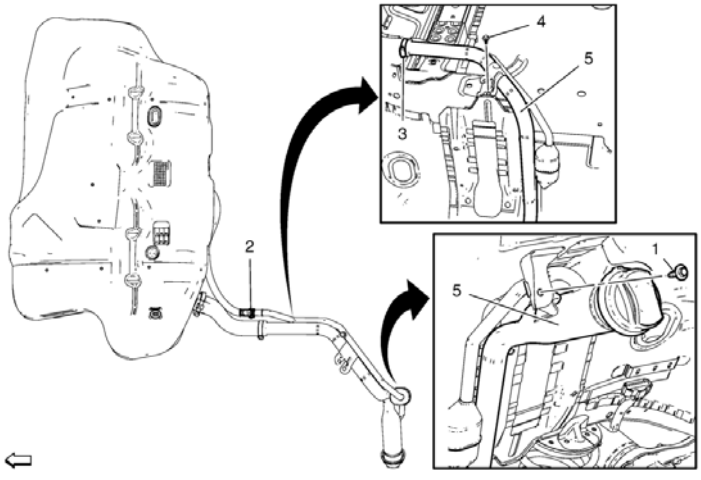

Fuel Tank Filler Pipe Replacement

Callout	Component Name
1	Fuel Tank Filler Pipe Bracket Bolt **Caution:** Refer to Fastener Caution. **Tighten** 9 Y (80 lb in)
2	Lower Recirculation Tube Quick Release Fitting
3	Fuel Tank Filler Pipe Clamp
4	Fuel Tank Filler Pipe Ground Bolt **Tighten** 9 Y (80 lb in)
5	Fuel Tank Filler Pipe

Warning: Gasoline or gasoline vapors are highly flammable. A fire could occur if an ignition source is present. Never drain or store gasoline or diesel fuel in an open container, due to the possibility of fire or explosion. Have a dry chemical (Class B) fire extinguisher nearby.

Preliminary Procedures

1. Disconnect battery negative cable. Refer to Battery Negative Cable Disconnection and Connection.
2. Remove the fuel tank filler pipe housing. Refer to Fuel Tank Filler Pipe Housing Replacement.
3. Drain the fuel tank. Refer to Fuel Tank Draining.

cardiagn.com

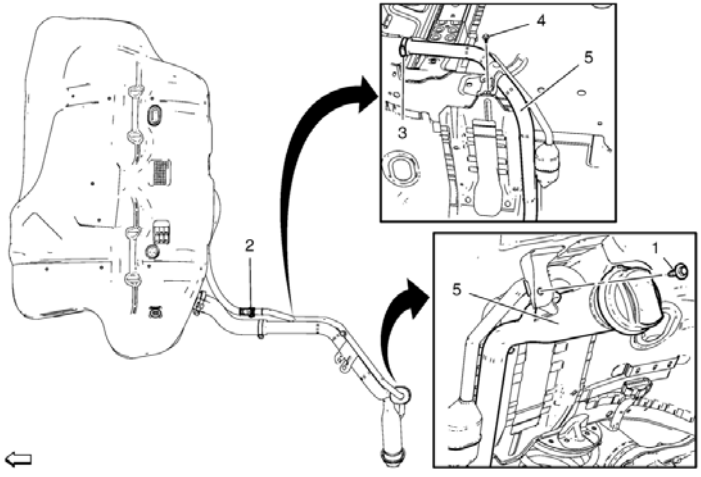

Fuel Tank Filler Pipe Replacement

Callout	Component Name
1	Fuel Tank Filler Pipe Bracket Bolt **Caution:** Refer to Fastener Caution. **Tighten** 9 Y (80 lb in)
2	Lower Recirculation Tube Quick Release Fitting
3	Fuel Tank Filler Pipe Clamp
4	Fuel Tank Filler Pipe Ground Bolt **Tighten** 9 Y (80 lb in)
5	Fuel Tank Filler Pipe

Warning: Gasoline or gasoline vapors are highly flammable. A fire could occur if an ignition source is present. Never drain or store gasoline or diesel fuel in an open container, due to the possibility of fire or explosion. Have a dry chemical (Class B) fire extinguisher nearby.

Preliminary Procedures

1. Open the hood.
2. Disconnect the negative battery cable. Refer to Battery Negative Cable Disconnection and Connection.
3. Remove the fuel tank filler pipe housing. Refer to Fuel Tank Filler Pipe Housing Replacement.
4. Drain the fuel tank. Refer to Fuel Tank Draining.

cardiagn.com

Special Tools

EN-48279 Main Fuel Pump Locking Ring Remover/Installer

For equivalent regional tools, refer to Special Tools.

Removal Procedure

Warning: Refer to Gasoline/Gasoline Vapors Warning.

1. Remove the fuel tank. Refer to Fuel Tank Replacement.

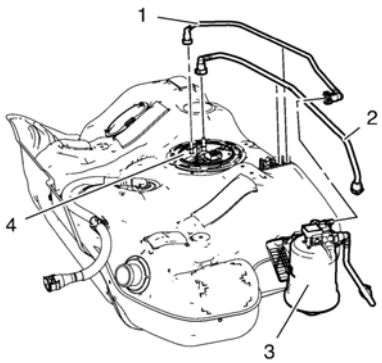

2. Remove the fuel feed pipe (1) from the fuel tank fuel pump module (4) and the fuel filter housing (3). Refer to Plastic Collar Quick Connect Fitting Service.
3. Remove the fuel return pipe (2) from the fuel tank fuel pump module (4). Refer to Plastic Collar Quick Connect Fitting Service.

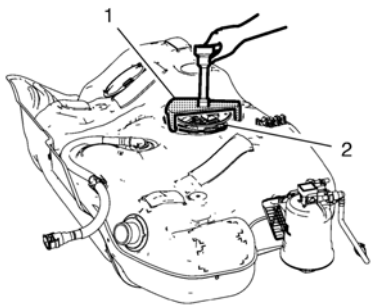

4. Install the *EN-48253* remover/installerto the fuel pump module lock ring.

   Note: Do NOT use impact tools. Significant force will be required to release the lock ring. The use of a hammer and screwdriver is not recommended. Secure the fuel tank in order to prevent fuel tank rotation.
5. Using the *EN-48253* remover/installer and a long breaker-bar, rotate the lock ring in a counterclockwise direction in order to unlock the lock ring.

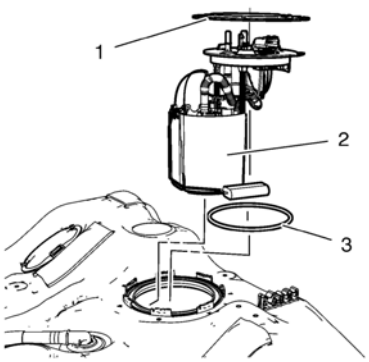

cardiagn.com

6. Remove the fuel pump module lock ring (1).
7. Remove the fuel pump module (2).

Note: Lift the fuel pump module up slightly.

8. Remove and discard the fuel pump module seal (3).
9. Remove the fuel level sensor from the fuel pump module. Refer to Fuel Level Sensor Replacement.

Installation Procedure

1. Install the fuel level sensor to the fuel pump module. Refer to Fuel Level Sensor Replacement.

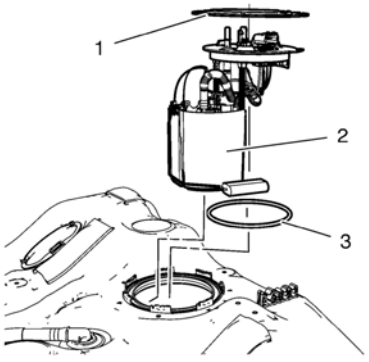

2. Install a NEW fuel pump module seal (3).
3. Install the fuel pump module (2).
4. Install the fuel pump module lock ring (1).

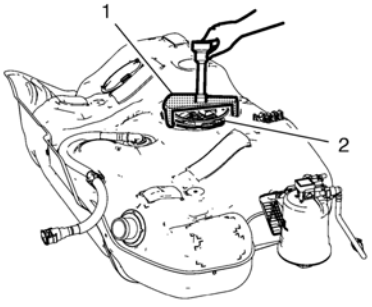

5. Install the *EN-48253* remover/installer (1) to the fuel pump module lock ring (2).

Note: Do NOT use impact tools. Significant force will be required to release the lock ring. The use of a hammer and screwdriver is not recommended. Secure the fuel tank in order to prevent fuel tank rotation.

6. Using the *EN-48253* remover/installer and a long breaker-bar, rotate the lock ring in a clockwise direction in order to lock the lock ring.

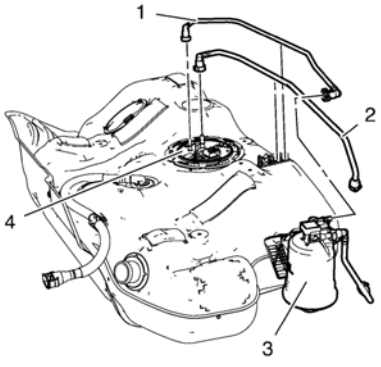

7. Install the fuel return pipe (2) to the fuel tank fuel pump module (4). Refer to Plastic Collar Quick Connect Fitting Service.
8. Install the fuel feed pipe (1) to the fuel tank fuel pump module (4) and the fuel filter housing (3). Refer to Plastic Collar Quick Connect Fitting Service.
9. Install the fuel tank. Refer to Fuel Tank Replacement.

cardiagn.com

Special Tools

EN-48279 Main Fuel Pump Locking Ring Remover/Installer

For equivalent regional tools, refer to Special Tools.

Removal Procedure

Warning: Refer to Gasoline/Gasoline Vapors Warning.

1. Remove the fuel tank. Refer to Fuel Tank Replacement.

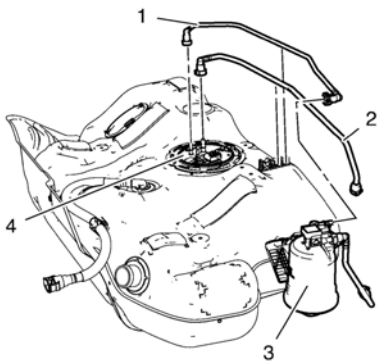

2. Remove the fuel feed pipe (1) from the fuel tank fuel pump module (4) and the fuel filter housing (3). Refer to Plastic Collar Quick Connect Fitting Service.
3. Remove the fuel return pipe (2) from the fuel tank fuel pump module (4). Refer to Plastic Collar Quick Connect Fitting Service.

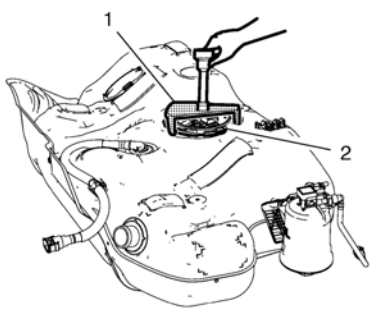

4. Install the *EN-48253* remover/installerto the fuel pump module lock ring.

Note: Do NOT use impact tools. Significant force will be required to release the lock ring. The use of a hammer and screwdriver is not recommended. Secure the fuel tank in order to prevent fuel tank rotation.

5. Using the *EN-48253* remover/installer and a long breaker-bar, rotate the lock ring in a counterclockwise direction in order to unlock the lock ring.

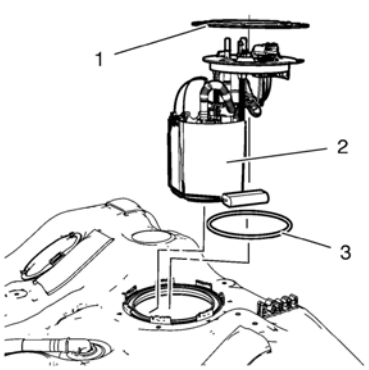

cardiagn.com

6. Remove the fuel pump module lock ring (1).
7. Remove the fuel pump module (2).

Note: Lift the fuel pump module up slightly.

8. Remove and discard the fuel pump module seal (3).
9. Remove the fuel level sensor from the fuel pump module. Refer to Fuel Level Sensor Replacement.

Installation Procedure

1. Install the fuel level sensor to the fuel pump module. Refer to Fuel Level Sensor Replacement.

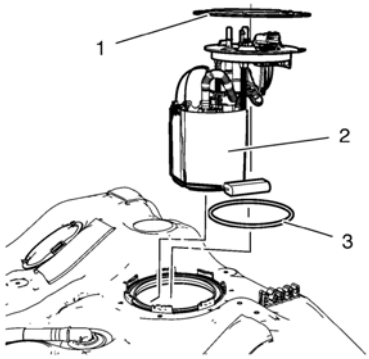

2. Install a NEW fuel pump module seal (3).
3. Install the fuel pump module (2).
4. Install the fuel pump module lock ring (1).

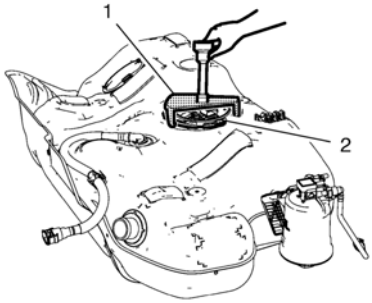

5. Install the *EN-48253* remover/installer (1) to the fuel pump module lock ring (2).

Note: Do NOT use impact tools. Significant force will be required to release the lock ring. The use of a hammer and screwdriver is not recommended. Secure the fuel tank in order to prevent fuel tank rotation.

6. Using the *EN-48253* remover/installer and a long breaker-bar, rotate the lock ring in a clockwise direction in order to lock the lock ring.

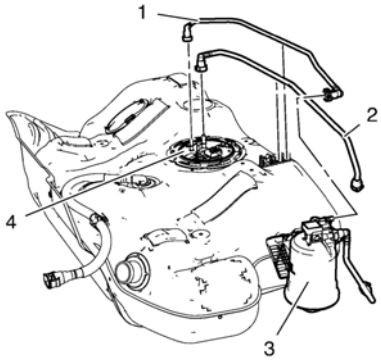

7. Install the fuel return pipe (2) to the fuel tank fuel pump module (4). Refer to Plastic Collar Quick Connect Fitting Service.
8. Install the fuel feed pipe (1) to the fuel tank fuel pump module (4) and the fuel filter housing (3). Refer to Plastic Collar Quick Connect Fitting Service.
9. Install the fuel tank. Refer to Fuel Tank Replacement.

cardiagn.com

Special Tools

EN-6015 Closure Plugs

For equivalent regional tools, refer to Special Tools.

Removal Procedure

Warning: Refer to Gasoline/Gasoline Vapors Warning.

1. Disconnect the battery negative cable. Refer to Battery Negative Cable Disconnection and Connection.
2. Fuel tank draining. Refer to Fuel Tank Draining.
3. Remove the rear wheelhouse panel liner. Refer to Rear Wheelhouse Liner Replacement.
4. Raise and support the vehicle. Refer to Lifting and Jacking the Vehicle.

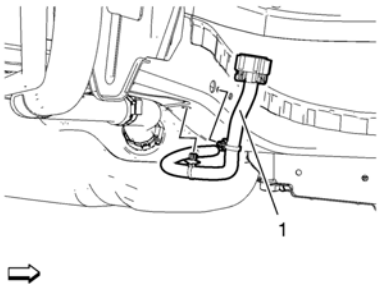

5. Disconnect the fuel tank fuel pump module wiring harness (1) and unclip from the body.

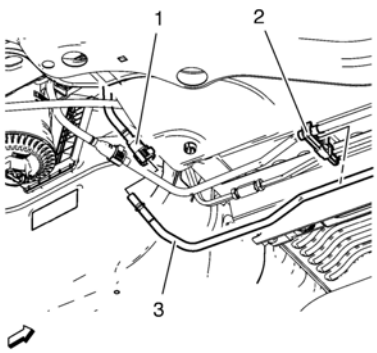

6. Disconnect the fuel return pipe (3) from the fuel return pipe connector (1). Refer to Plastic Collar Quick Connect Fitting Service.
7. Close all connections with *EN-6015* plugs .

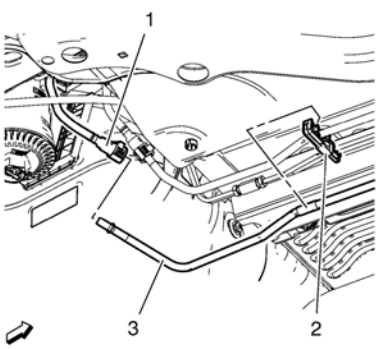

8. Disconnect the fuel feed pipe (3) from the fuel feed pipe connector (1). Refer to Plastic Collar Quick Connect Fitting Service.
9. Close all connections with *EN-6015* plugs .

cardiagn.com

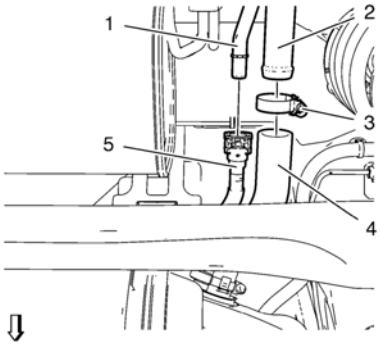

10. Disconnect the fuel tank fill EVAP emission pipe quick connect fitting (5) from the fuel tank vent pipe (1). Refer to Plastic Collar Quick Connect Fitting Service.
11. Close all connection with *EN-6015* plugs .
12. Loosen the fuel filler pipe clamp (3).
13. Remove the fuel filler hose (4) from the fuel filler pipe (2).
14. Place a suitable adjustable jack under the fuel tank.

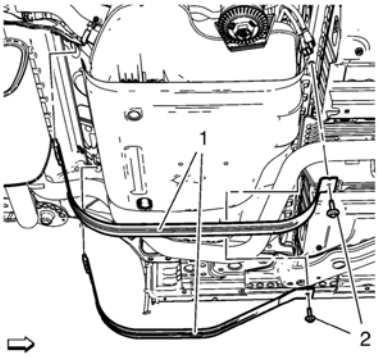

15. Remove the 2 fuel tank strap bolts (2).
16. Remove the 2 fuel tank straps (1).

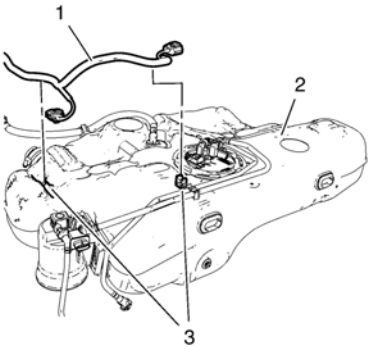

17. Lower the fuel tank (2) slowly and carefully to a height where the fuel pump wiring harness (1) is accessible.

    Unclip the fuel tank fuel pump module wiring harness from the 2 bracket clips (3).

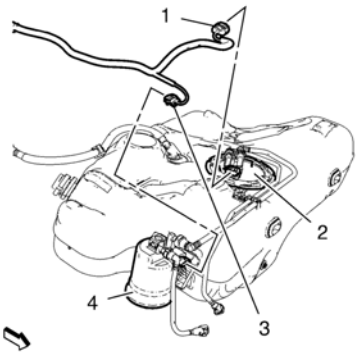

18. Disconnect the fuel pump wiring harness plug (1) from the fuel tank fuel pump module (2).
19. Disconnect the fuel filter wiring harness plug (3) from the fuel filter (4).

cardiagn.com

Installation Procedure

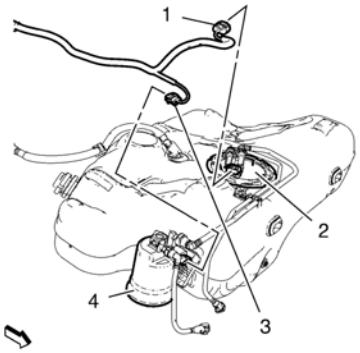

1. Connect the fuel pump wiring harness plug (1) to the fuel tank fuel pump module (2).
2. Connect the fuel filter wiring harness plug (3) to the fuel filter (4).

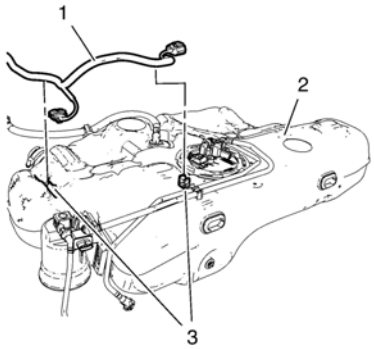

3. Clip the fuel tank fuel pump module wiring harness (1) to the 2 bracket clips (3).

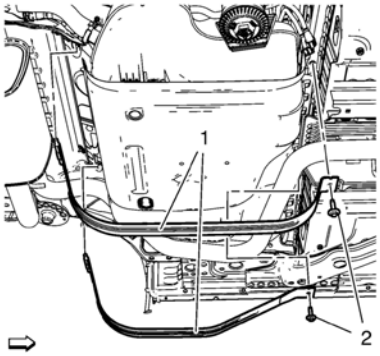

4. Install the 2 fuel tank straps (1).

Caution: Refer to Fastener Caution.

5. Install the 2 fuel tank strap bolts (2) and tighten to **23 Y (17 lb ft)**.

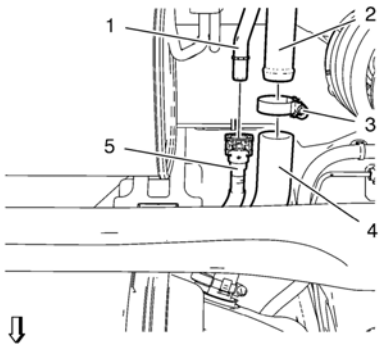

6. Install the fuel filler hose (4) to the fuel filler pipe (2).
7. Install the fuel filler pipe clamp (3).
8. Remove the *EN-6015* plugs from all connections.

cardiagn.com

9. Connect the fuel tank fill EVAP emission pipe quick connect fitting (5) to the fuel tank vent pipe (1). Refer to Plastic Collar Quick Connect Fitting Service.

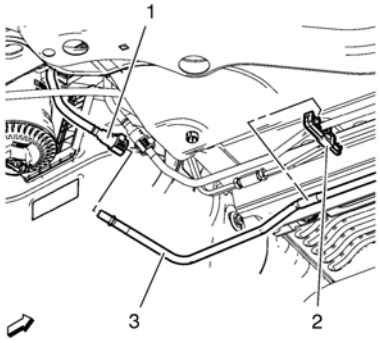

10. Remove the *EN-6015* plugs plugs from all connections.
11. Connect the fuel feed pipe (3) to the fuel feed pipe connector (1). Refer to Plastic Collar Quick Connect Fitting Service.

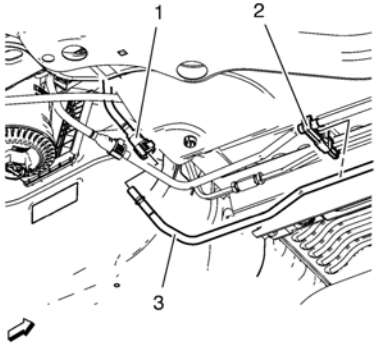

12. Remove the *EN-6015* plugs from all connections.
13. Connect the fuel return pipe (3) to the fuel return pipe connector (1). Refer to Plastic Collar Quick Connect Fitting Service.

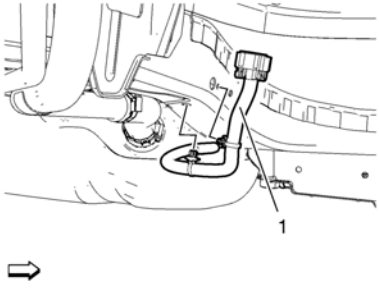

14. Clip the fuel tank fuel pump module wiring harness (1) to the body.
15. Install the rear wheelhouse panel liner. Refer to Rear Wheelhouse Liner Replacement.
16. Lower the vehicle.
17. Connect the battery negative cable. Refer to Battery Negative Cable Disconnection and Connection.

cardiagn.com

Special Tools

EN-6015 Closure Plugs

For equivalent regional tools, refer to Special Tools.

Removal Procedure

Warning: Refer to Gasoline/Gasoline Vapors Warning.

1. Disconnect the battery negative cable. Refer to Battery Negative Cable Disconnection and Connection.
2. Fuel tank draining. Refer to Fuel Tank Draining.
3. Remove the rear wheelhouse panel liner. Refer to Rear Wheelhouse Liner Replacement.
4. Raise and support the vehicle. Refer to Lifting and Jacking the Vehicle.

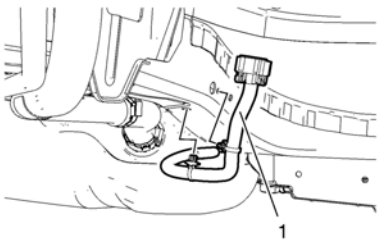

5. Disconnect the fuel tank fuel pump module wiring harness (1) and unclip from the body.

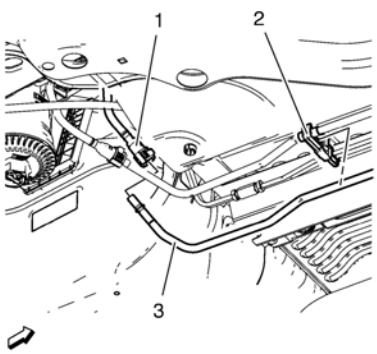

6. Disconnect the fuel return pipe (3) from the fuel return pipe connector (1). Refer to Plastic Collar Quick Connect Fitting Service.
7. Close all connections with *EN-6015* plugs .

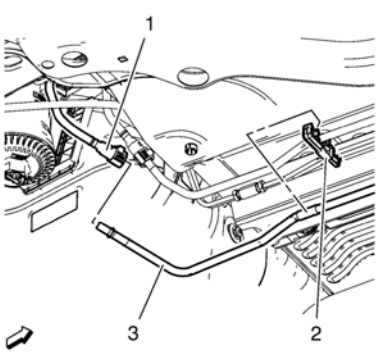

8. Disconnect the fuel feed pipe (3) from the fuel feed pipe connector (1). Refer to Plastic Collar Quick Connect Fitting Service.
9. Close all connections with *EN-6015* plugs .

cardiagn.com

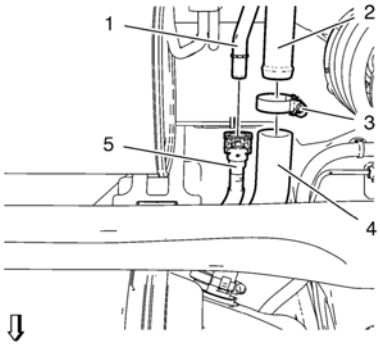

10. Disconnect the fuel tank fill EVAP emission pipe quick connect fitting (5) from the fuel tank vent pipe (1). Refer to Plastic Collar Quick Connect Fitting Service.
11. Close all connection with *EN-6015* plugs .
12. Loosen the fuel filler pipe clamp (3).
13. Remove the fuel filler hose (4) from the fuel filler pipe (2).
14. Place a suitable adjustable jack under the fuel tank.

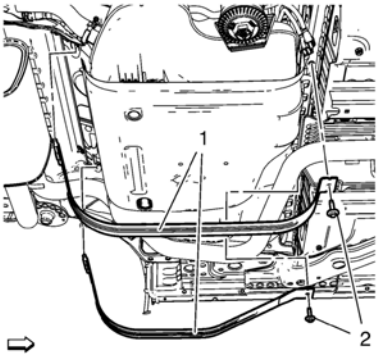

15. Remove the 2 fuel tank strap bolts (2).
16. Remove the 2 fuel tank straps (1).

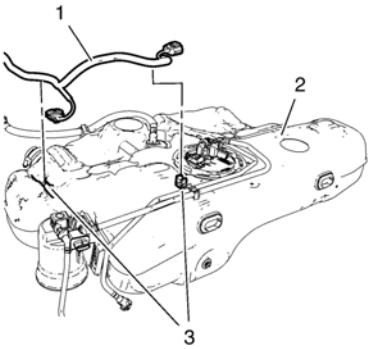

17. Lower the fuel tank (2) slowly and carefully to a height where the fuel pump wiring harness (1) is accessible.

    Unclip the fuel tank fuel pump module wiring harness from the 2 bracket clips (3).

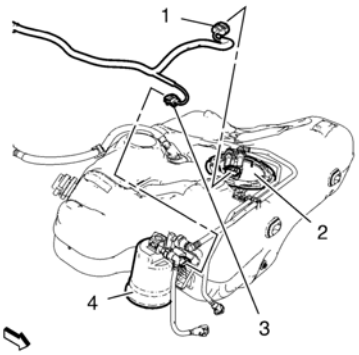

18. Disconnect the fuel pump wiring harness plug (1) from the fuel tank fuel pump module (2).
19. Disconnect the fuel filter wiring harness plug (3) from the fuel filter (4).

cardiagn.com

Installation Procedure

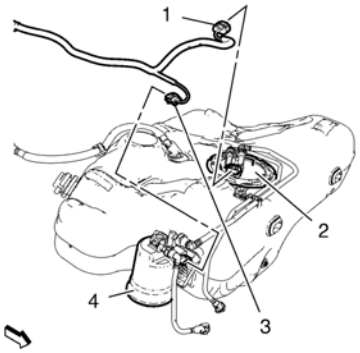

1. Connect the fuel pump wiring harness plug (1) to the fuel tank fuel pump module (2).
2. Connect the fuel filter wiring harness plug (3) to the fuel filter (4).

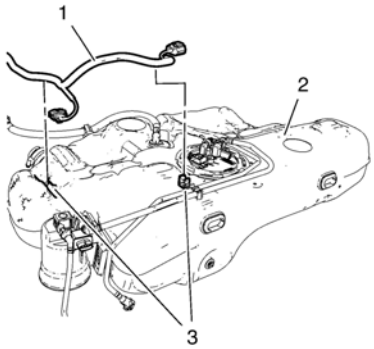

3. Clip the fuel tank fuel pump module wiring harness (1) to the 2 bracket clips (3).

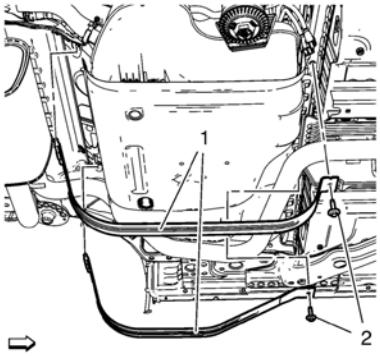

4. Install the 2 fuel tank straps (1).

Caution: Refer to Fastener Caution.

5. Install the 2 fuel tank strap bolts (2) and tighten to **23 Y (17 lb ft)**.

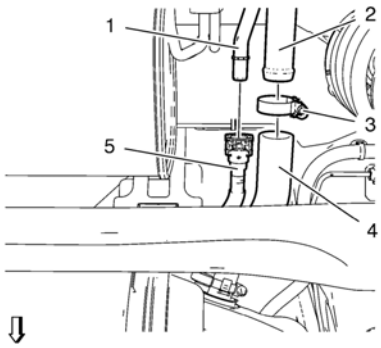

6. Install the fuel filler hose (4) to the fuel filler pipe (2).
7. Install the fuel filler pipe clamp (3).
8. Remove the *EN-6015* plugs from all connections.

cardiagn.com

9. Connect the fuel tank fill EVAP emission pipe quick connect fitting (5) to the fuel tank vent pipe (1). Refer to Plastic Collar Quick Connect Fitting Service.

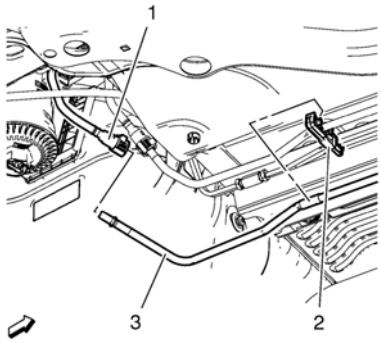

10. Remove the *EN-6015* plugs plugs from all connections.
11. Connect the fuel feed pipe (3) to the fuel feed pipe connector (1). Refer to Plastic Collar Quick Connect Fitting Service.

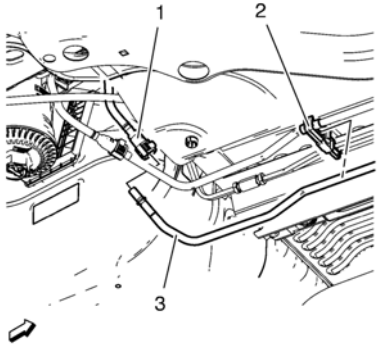

12. Remove the *EN-6015* plugs from all connections.
13. Connect the fuel return pipe (3) to the fuel return pipe connector (1). Refer to Plastic Collar Quick Connect Fitting Service.

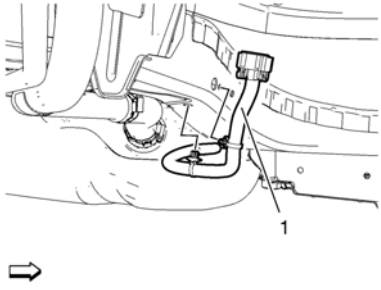

14. Clip the fuel tank fuel pump module wiring harness (1) to the body.
15. Install the rear wheelhouse panel liner. Refer to Rear Wheelhouse Liner Replacement.
16. Lower the vehicle.
17. Connect the battery negative cable. Refer to Battery Negative Cable Disconnection and Connection.

cardiagn.com

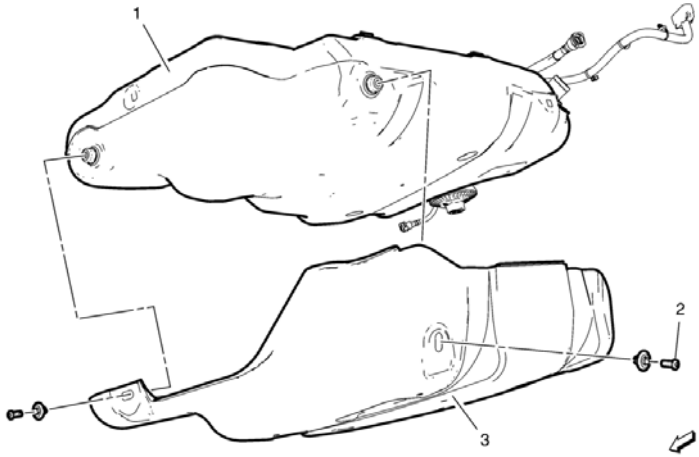

Fuel Tank Heat Shield Replacement

Callout	Component Name

Warning: Refer to Safety Goggles and Fuel Warning.

Warning: Refer to Actions to Take When Working with Fuel Warning.

Preliminary Procedures

Remove the fuel tank. Refer to Fuel Tank Replacement.

1	Fuel Tank
2	Fuel Tank Heat Shield Retaining Clamp (Qty: 2)
3	Fuel Tank Heat Shield

cardiagn.com

Special Tools

EN-48279 Main Fuel Pump Locking Ring Remover/Installer

For equivalent regional tools, refer to Special Tools.

Removal Procedure

Warning: Refer to Gasoline/Gasoline Vapors Warning.

1. Disconnect the battery negative cable. Refer to Battery Negative Cable Disconnection and Connection.
2. Drain the fuel tank. Refer to Fuel Tank Draining.
3. Raise and support the vehicle. Refer to Lifting and Jacking the Vehicle.

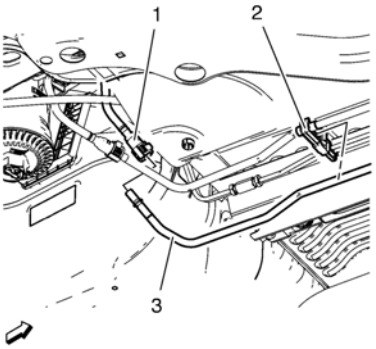

4. Disconnect the fuel return pipe (3) from the fuel return pipe connector (1). Refer to Plastic Collar Quick Connect Fitting Service.

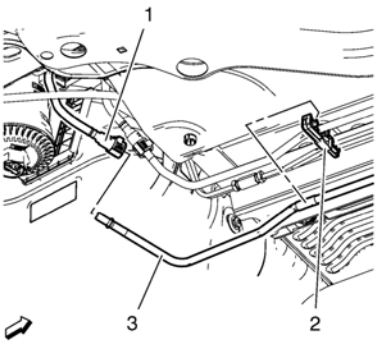

5. Disconnect the fuel feed pipe (3) from the fuel feed pipe connector (1). Refer to Plastic Collar Quick Connect Fitting Service.

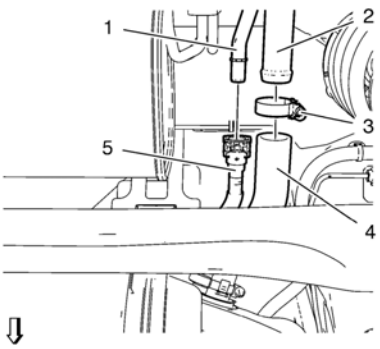

6. Disconnect the fuel tank fill EVAP emission pipe quick connect fitting (5) from the fuel tank vent pipe (1). Refer to Plastic Collar Quick Connect Fitting Service.
7. Loosen the fuel filler pipe clamp (3).

cardiagn.com

8. Remove the fuel filler hose (4) from the fuel filler pipe (2).
9. Place a suitable adjustable jack under the fuel tank.

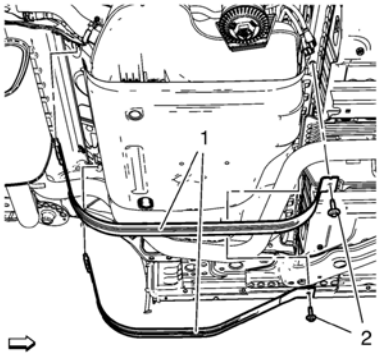

10. Remove the 2 fuel tank strap bolts (2).
11. Remove the 2 fuel tank straps (1).

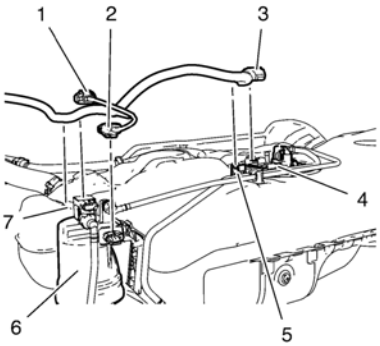

12. Lower the fuel tank slowly down to a height where the fuel pump wiring harness plug (3) is accessible.
13. Disconnect the fuel pump wiring harness plug (3) from the fuel pump module (4).
14. Disconnect the 2 fuel filter wiring harness plugs (1) and (2) from the fuel filter (6).
15. Unclip the wiring harness from the clip (5) and (7).
16. Lower the fuel tank.

Disassembly Procedure

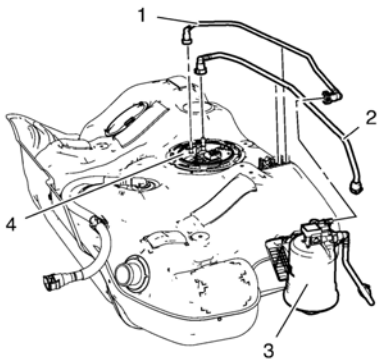

1. Remove the fuel feed pipe (1) from fuel tank fuel pump module (4) and fuel filter housing (3). Refer to Plastic Collar Quick Connect Fitting Service.
2. Remove the fuel return pipe (2) from fuel tank fuel pump module (4). Refer to Plastic Collar Quick Connect Fitting Service.

cardiagn.com

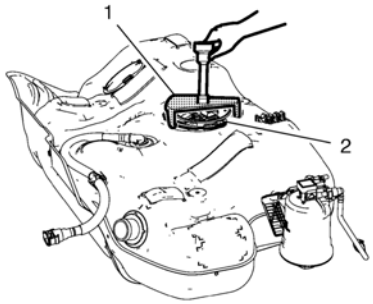

3. Install the *EN-48253* remover/installer to the fuel pump module lock ring.

Note: Do NOT use impact tools. Significant force will be required to release the lock ring. The use of a hammer and screwdriver is not recommended. Secure the fuel tank in order to prevent fuel tank rotation.

4. Using the *EN-48253* remover/installer and a long breaker-bar, rotate the lock ring in a counterclockwise direction in order to unlock the lock ring.

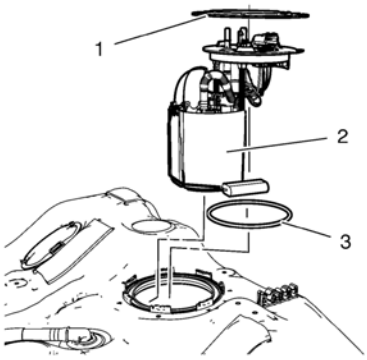

5. Remove the fuel pump module lock ring (1).
6. Remove the fuel pump module (2).

   Note: Lift the fuel pump module up slightly.

7. Remove and discard the fuel pump module seal (3).

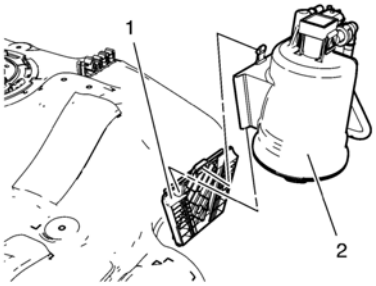

8. Remove the fuel filter (2) from the fuel filter bracket (1).
9. Remove the fuel tank heat shield. Refer to Fuel Tank Heat Shield Replacement.
10. Remove the fuel tank baffle. Refer to Fuel Tank Baffle Replacement.

Assembly Procedure

1. Install the fuel tank baffle. Refer to Fuel Tank Baffle Replacement.
2. Install the fuel tank heat shield. Refer to Fuel Tank Heat Shield Replacement.

cardiagn.com

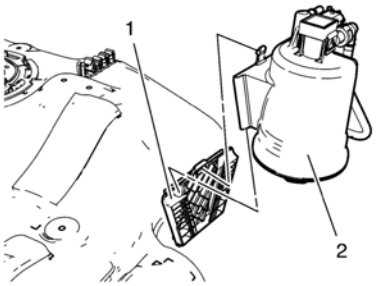

3. Install the fuel filter (2) at the fuel filter bracket (1).

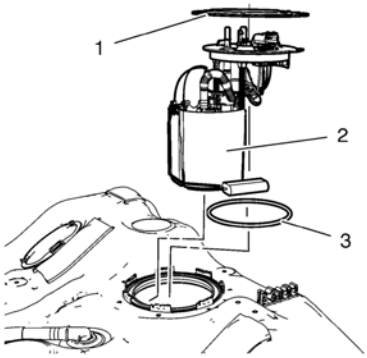

4. Install a NEW fuel pump module seal (3).
5. Install the fuel pump module (2).
6. Install the fuel pump module lock ring (1).

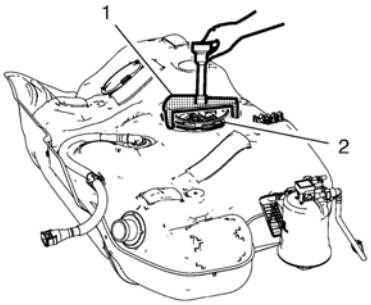

7. Install the *EN-48253* remover/installer (1) to the fuel pump module lock ring (2).

   Note: Do NOT use impact tools. Significant force will be required to release the lock ring. The use of a hammer and screwdriver is not recommended. Secure the fuel tank in order to prevent fuel tank rotation.

8. Using the *EN-48253* remover/installer and a long breaker-bar, rotate the lock ring in a clockwise direction in order to lock the lock ring.

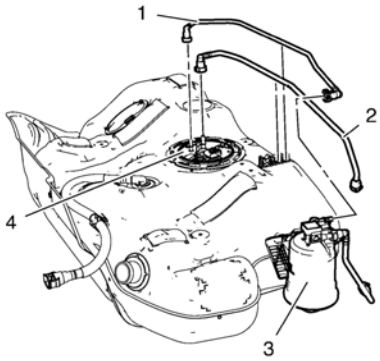

9. Install the fuel return pipe (2) to the fuel tank fuel pump module (4). Refer to Plastic Collar Quick Connect Fitting Service.
10. Install the fuel feed pipe (1) to the fuel tank fuel pump module (4) and fuel filter housing (3). Refer to Plastic Collar Quick Connect Fitting Service.

Installation Procedure

cardiagn.com

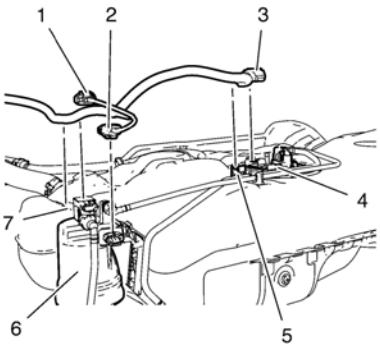

1. Raise the fuel tank with a suitable adjustable jack to a height where the fuel pump wiring harness plug (3) is accessible.
2. Clip in the wiring harness to the clip (5) and (7).
3. Connect the fuel pump wiring harness plug (3) to the fuel pump module (4).
4. Connect the 2 fuel filter wiring harness plugs (1) and (2) to the fuel filter (6).

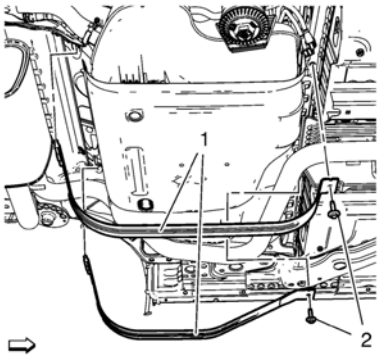

5. Install the 2 fuel tank straps (1).

   Caution: Refer to Fastener Caution.
6. Install the 2 fuel tank strap bolts (2) and tighten to **23 Y (17 lb ft)**.

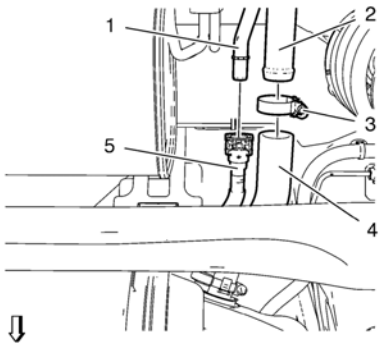

7. Install the fuel filler hose (4) to the fuel filler pipe (2).
8. Install the fuel filler pipe clamp (3).
9. Connect the fuel tank fill EVAP emission pipe quick connect fitting (5) to the fuel tank vent pipe (1). Refer to Plastic Collar Quick Connect Fitting Service.

cardiagn.com

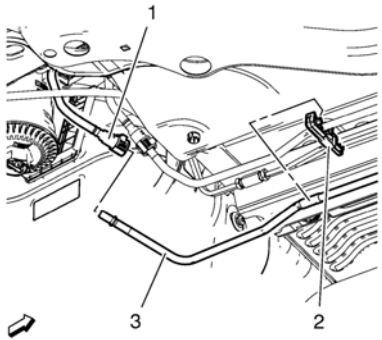

10. Connect the fuel feed pipe (3) to the fuel feed pipe connector (1). Refer to Plastic Collar Quick Connect Fitting Service.

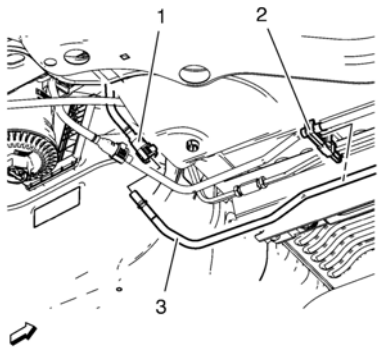

11. Connect the fuel return pipe (3) to the fuel return pipe connector (1). Refer to Plastic Collar Quick Connect Fitting Service.
12. Lower the vehicle.
13. Connect the battery negative cable. Refer to Battery Negative Cable Disconnection and Connection.

cardiagn.com

Special Tools

EN–6015 Closer Plug

For equivalent regional tools, refer to Special Tools.

Removal Procedure

Warning: Gasoline or gasoline vapors are highly flammable. A fire could occur if an ignition source is present. Never drain or store gasoline or diesel fuel in an open container, due to the possibility of fire or explosion. Have a dry chemical (Class B) fire extinguisher nearby.

Warning: Always wear safety goggles when working with fuel in order to protect the eyes from fuel splash.

1. Open the hood.
2. Disconnect the battery negative cable. Refer to Battery Negative Cable Disconnection and Connection.

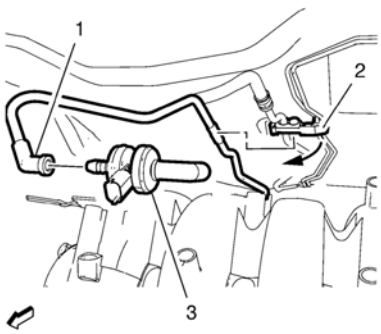

3. Remove the fuel tank vent pipe (1) from the evaporative emission canister purge solenoid valve (3).
4. Close the fuel tank vent pipe with *EN-6015* closer plug .
5. Unclip the fuel tank vent pipe (1) from the brake and fuel pipe clip (2).
6. Raise and support the vehicle. Refer to Lifting and Jacking the Vehicle.

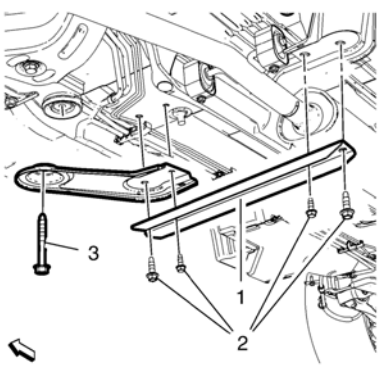

7. Remove the exhaust pipe front hanger and front suspension support bolts (2).
8. Remove the drivetrain and front suspension frame bolt (3).
9. Remove the drivetrain and front suspension frame support.

cardiagn.com

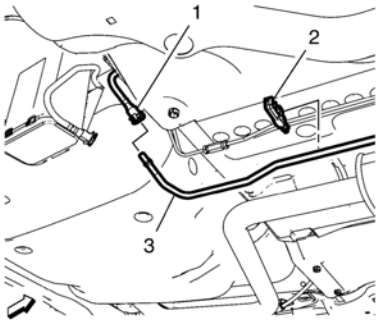

10. Unclip the fuel vent pipe (3) from the rear brake and fuel pipe clip (2).
11. Disconnect the evaporative emission canister fuel vent pipe connector (1) from the fuel tank vent pipe (3). Refer to Plastic Collar Quick Connect Fitting Service.
12. Close the fuel tank vent pipe and emission canister fuel vent pipe with *EN-6015* plugs .

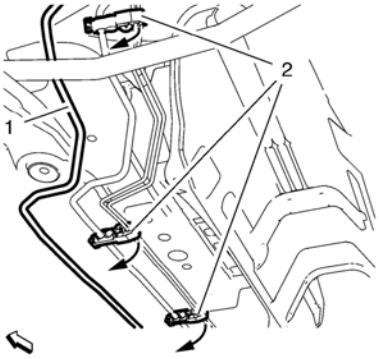

13. Unclip the fuel tank vent pipe (1) from the 4 other brake and fuel pipe clips (2).

    Note: Do not bend the fuel tank vent pipe.
14. Remove the fuel tank vent pipe (1).

Installation Procedure

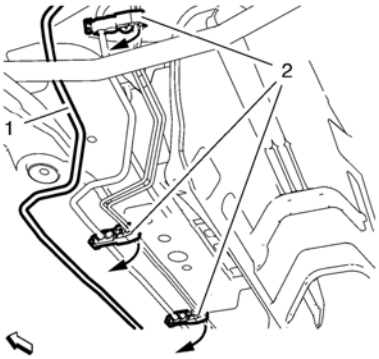

Note: Do not bend the fuel tank vent pipe.

1. Install the fuel tank vent pipe (1).
2. Clip the fuel tank vent pipe (1) into the 4 brake and fuel pipe clips (2).

cardiagn.com

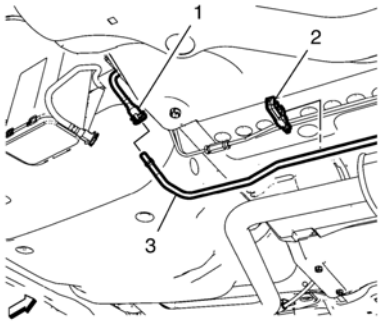

3. Remove the *EN-6015* closer plugs from the emission canister fuel vent pipe (1) and the fuel tank vent pipe (3).
4. Connect the fuel vent pipe (3) to the emission canister fuel vent pipe (1). Refer to Plastic Collar Quick Connect Fitting Service.

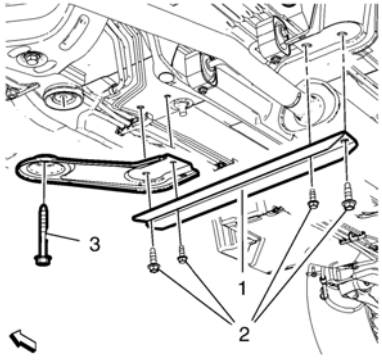

5. Install the drivetrain and front suspension frame support.

Caution: Refer to Fastener Caution.

Note: Do NOT reuse old bolts.

6. Install the NEW drivetrain and front suspension frame bolt (3) and tighten to **160 Y (118 lb ft)**.
7. Install the NEW exhaust pipe front hanger bolts (2) - M8 and tighten to **20 Y (15 lb ft)**.
8. Install the NEW front suspension support bolts (2) - M10 and tighten to **60 Y (44 lb ft)**.
9. Lower the vehicle.

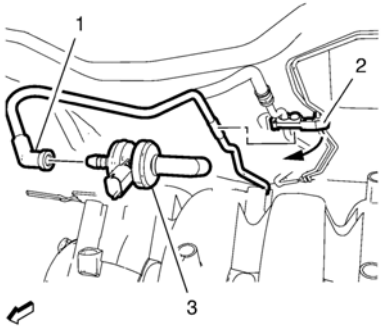

10. Remove the *EN-6015* closer plug from the fuel tank vent pipe (1).
11. Install the fuel tank vent pipe (1) to the evaporative emission canister purge solenoid valve (3).
12. Clip the fuel tank vent pipe (1) into the brake and fuel pipe clip (2).
13. Connect the battery negative cable. Refer to Battery Negative Cable Disconnection and Connection.
14. Close the hood.

cardiagn.com

Warning: Remove the fuel tank cap and relieve the fuel system pressure before servicing the fuel system in order to reduce the risk of personal injury. After you relieve the fuel system pressure, a small amount of fuel may be released when servicing the fuel lines, the fuel injection pump, or the connections. In order to reduce the risk of personal injury, cover the fuel system components with a shop towel before disconnection. This will catch any fuel that may leak out. Place the towel in an approved container when the disconnection is complete.

autodata.com

Removal Procedure

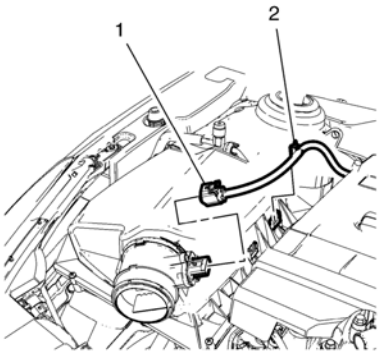

1. Disconnect the mass air flow sensor wiring harness plug (1) from mass air flow sensor.
2. Unclip the mass air flow sensor wiring harness clip (2) from the air filter assembly.

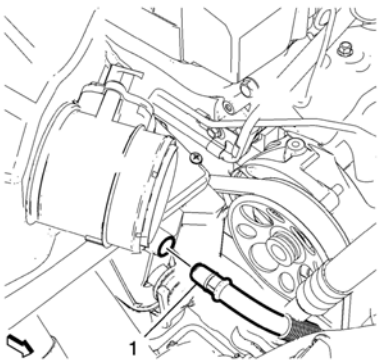

3. Remove the air cleaner draining hose (1) from the air cleaner housing.

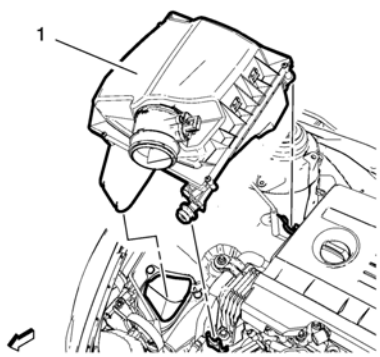

4. Remove the air cleaner assembly (1).
5. Remove the 2 air cleaner bracket insulators.

Installation Procedure

1. Install the 2 air cleaner bracket insulators.

cardiagn.com

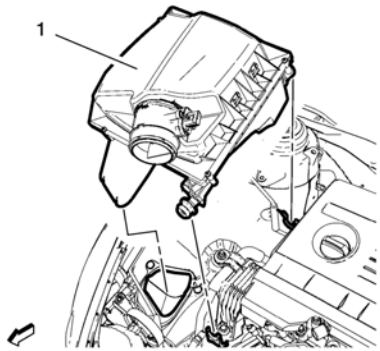

2. Install the air cleaner assembly (1).

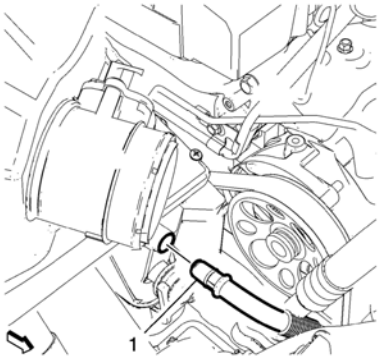

3. Install the air cleaner housing draining hose (1) to the air cleaner housing.

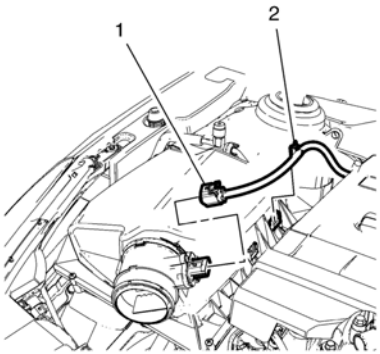

4. Clip in the mass air flow sensor wiring harness clip (2) to the air filter assembly.
5. Connect the mass air flow sensor wiring harness plug (1) to the mass air flow sensor.

cardiagn.com

Removal Procedure

1. Remove the front bumper fascia. Refer to Front Bumper Fascia Removal and Installation.

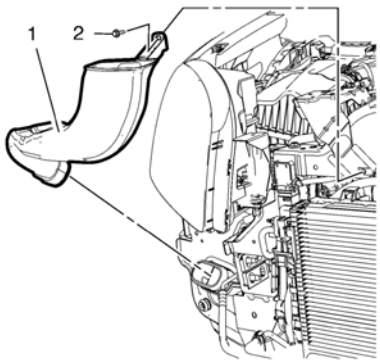

2. Remove the intake air duct bolt (2).
3. Remove the intake air duct (1).

Installation Procedure

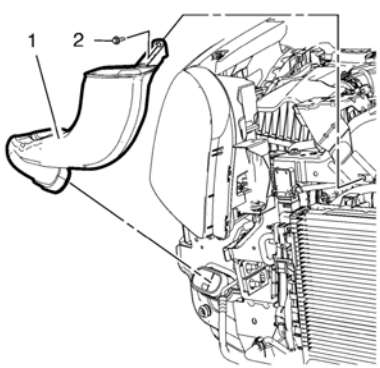

1. Install the intake air duct (1).

   Caution: Refer to Fastener Caution.
2. Install the intake air duct bolt (2) and tighten to **5 Y (44 lb in)**.
3. Install the front bumper fascia. Refer to Front Bumper Fascia Removal and Installation.

cardiagn.com

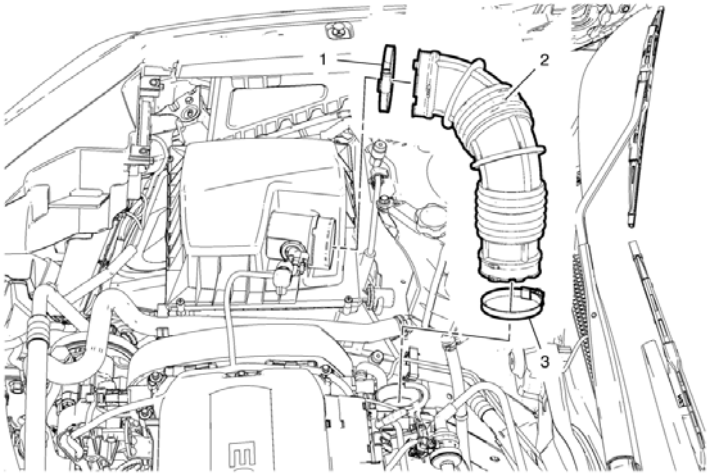

Air Cleaner Outlet Duct Replacement

Callout	Component Name
	Caution: Any time service is being performed which requires removal of the air cleaner assembly, always cover the throttle body opening. This will prevent any foreign material from entering the engine.
1	Air Cleaner Outlet Duct to Air Cleaner Housing Cover Clamp **Caution:** Refer to Fastener Caution. **Tighten** 3.5 Y (31 lb in)
2	Air Cleaner Outlet Duct
3	Air Cleaner Outlet Duct to Intake Manifold Clamp **Tighten** 3.5 Y (31 lb in)

cardiagn.com

Removal Procedure

1. Remove the engine sight shield. Refer to Engine Sight Shield Replacement.

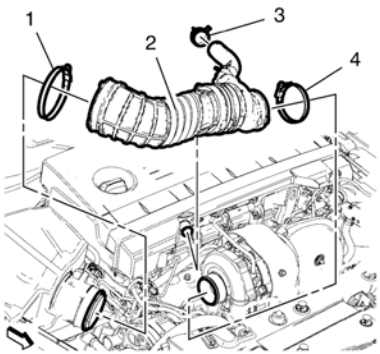

2. Remove the 2 clamps (1, 4).
3. Remove the clamp (3).
4. Remove the air cleaner outlet duct (2).
5. Remove the positive crankcase ventilation valve hose from the air cleaner outlet duct. Refer to Positive Crankcase Ventilation Hose/Pipe/Tube Replacement.

Installation Procedure

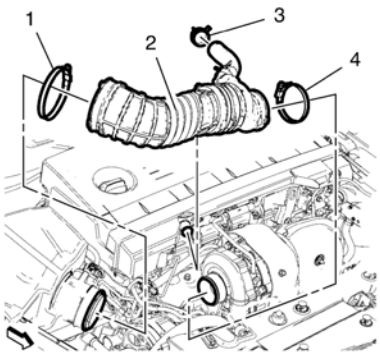

1. Install the positive crankcase ventilation valve hose to the air cleaner outlet duct. Refer to Positive Crankcase Ventilation Hose/Pipe/Tube Replacement.
2. Install the air cleaner outlet duct (2).
3. Install the 2 clamps (1, 4).
4. Install the clamp (3).
5. Install the engine sight shield. Refer to Engine Sight Shield Replacement.

cardiagn.com

Removal Procedure

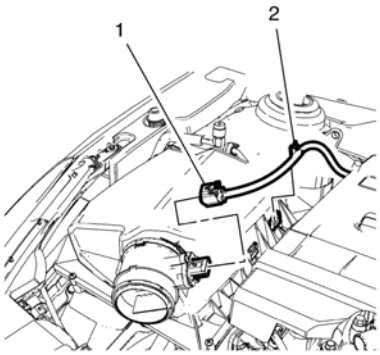

1. Disconnect the mass air flow sensor wiring harness plug (1) from mass air flow sensor.
2. Unclip the mass air flow sensor wiring harness clip (2) from the air filter assembly.

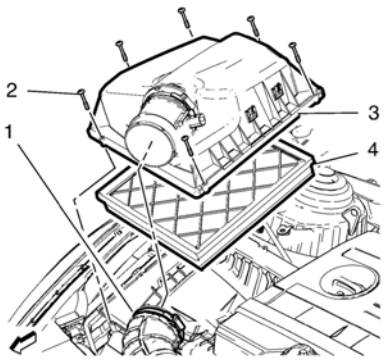

3. Remove the air cleaner outlet duct (1) from the mass air flow sensor.
4. Remove the 6 air cleaner housing bolts (2).
5. Remove the air cleaner housing cover (3).
6. Remove the air cleaner element (4).

Installation Procedure

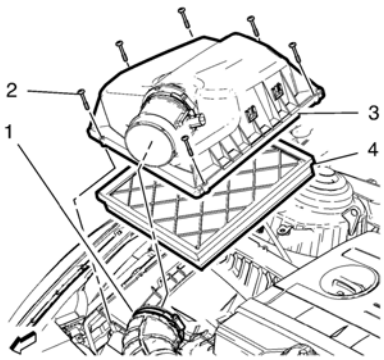

1. Install the air cleaner element (4).
2. Install the air cleaner housing cover (3).
3. Install the 6 air cleaner housing bolts (2).
4. Install the air cleaner outlet duct (1) to the mass air flow sensor.

cardiagn.com

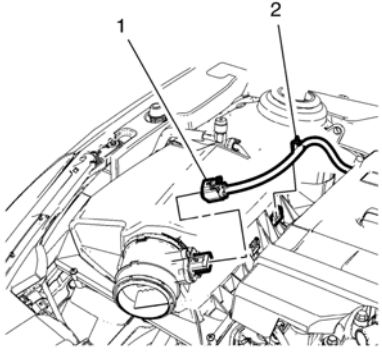

5. Clip in the mass air flow sensor wiring harness clip (2) to the air filter assembly.
6. Connect the mass air flow sensor wiring harness plug (1) to the mass air flow sensor.

cardiagn.com

Circuit/System Description

The primary function of the air intake system is to provide filtered air to the engine. The system uses a filter-element mounted in a housing. The filter-housing is remotely mounted and uses intake ducts to route the incoming air into the throttle body. The secondary function of the air intake system is to muffle air induction noise. This is achieved by the use of resonators attached to the air intake ducts. The resonators are tuned to the specific powertrain. The intake air temperature (IAT) sensor is used to measure the temperature of the air entering the engine.

cardiagn.com

Removal Procedure

1. Remove the front bumper fascia. Refer to Front Bumper Fascia Removal and Installation.

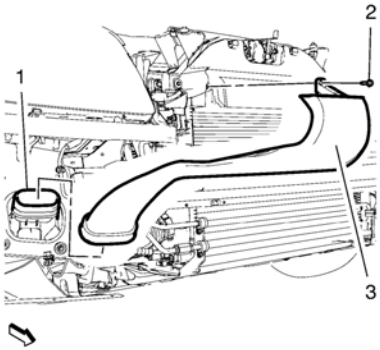

2. Remove the front intake air duct bolt (2).
3. Remove the front intake air duct (3) from the rear intake air duct (1).

Installation Procedure

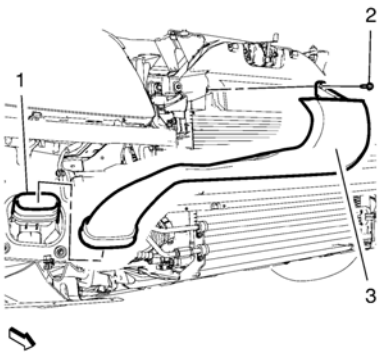

1. Install the front intake air duct (3) to the rear intake air duct (1).

   Caution: Refer to Fastener Caution.
2. Install the front intake air duct bolt (2) and tighten.
3. Install the front bumper fascia. Refer to Front Bumper Fascia Removal and Installation.

cardiagn.com

Removal Procedure

1. Remove the engine sight shield. Refer to Engine Sight Shield Replacement.

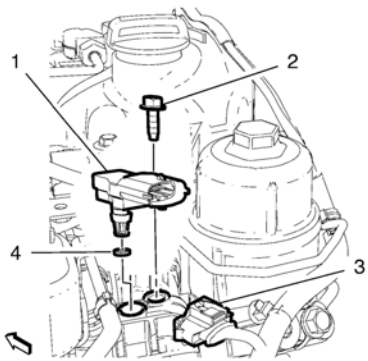

2. Disconnect the intake air pressure/temperature sensor wiring harness plug (3).
3. Remove the intake air pressure/temperature sensor bolt (2).
4. Remove the intake air pressure/temperature sensor (1) and the gasket (4).

Installation Procedure

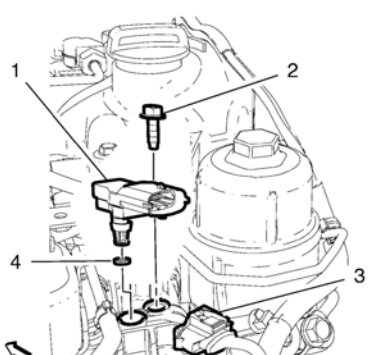

1. Install the intake air pressure/temperature sensor (1) and a NEW gasket (4).

Caution: Refer to Fastener Caution.

2. Install the intake air pressure/temperature sensor bolt (2) and tighten to **9 Y (80 lb in)**.
3. Connect the intake air pressure/temperature sensor wiring harness plug (3).
4. Install the engine sight shield. Refer to Engine Sight Shield Replacement.

cardiagn.com

Removal Procedure

1. Remove the engine sight shield. Refer to Engine Sight Shield Replacement.

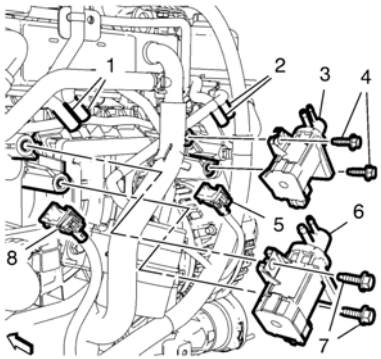

2. Disconnect the 2 tuning valve vacuum control solenoid valve wiring harness plugs (5, 8).
3. Remove the 4 tuning valve vacuum control solenoid valve hoses (1, 2).
4. Remove the 2 tuning valve vacuum control solenoid valve bolts (4).
5. Remove the intake air tuning valve vacuum control solenoid valve (3).
6. Remove the 2 additional tuning valve vacuum control solenoid valve bolts (7).
7. Remove the additional intake air tuning valve vacuum control solenoid valve (6).

Installation Procedure

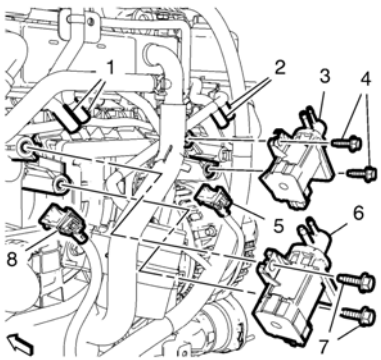

1. Install the additional intake air tuning valve vacuum control solenoid valve (6).

   Caution: Refer to Fastener Caution.

2. Install the 2 additional tuning valve vacuum control solenoid valve bolts (7) and tighten to **10 Y (89 lb in)**.
3. Install the intake air tuning valve vacuum control solenoid valve (3).
4. Install the 2 tuning valve vacuum control solenoid valve bolts (4) and tighten to **10 Y (89 lb in)**.
5. Install the 4 tuning valve vacuum control solenoid valve hoses (1, 2).
6. Connect the 2 tuning valve vacuum control solenoid valve wiring harness plugs (5, 8).
7. Install the engine sight shield. Refer to Engine Sight Shield Replacement.

cardiagn.com

Removal Procedure

1. Remove the starter. Refer to Starter Replacement.

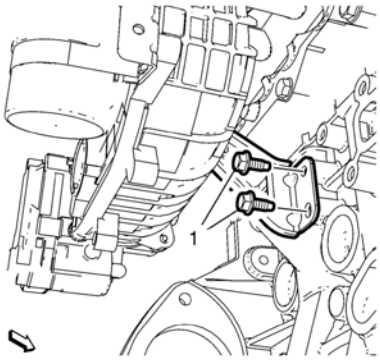

2. Remove the 2 intake manifold bracket bolts (1) from the engine block.

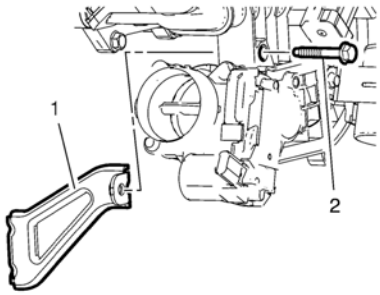

3. Remove the intake manifold bracket bolt (2) from the intake manifold.
4. Remove the intake manifold bracket (1).

Installation Procedure

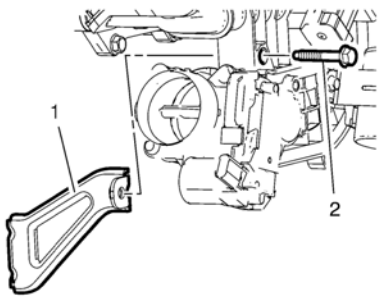

1. Install the intake manifold bracket (1).

   Caution: Refer to Fastener Caution.

2. Install the intake manifold bracket bolt (2) to the intake manifold and tighten to **25 Y (18 lb ft)**.

cardiagn.com

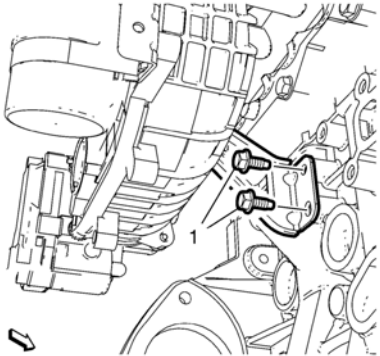

3. Install the 2 intake manifold bracket bolts (1) to the engine block and tighten to **25 Y (18 lb ft)**.
4. Install the starter. Refer to Starter Replacement.

cardiagn.com

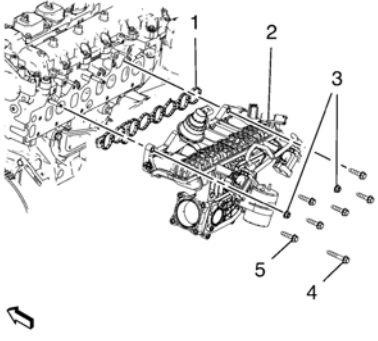

1. Install the intake manifold (2) along with a NEW intake manifold gasket (1).

Caution: Refer to Fastener Caution.

2. Install the 6 retaining bolts (5) and the 2 retaining nuts (3). Tighten the bolts and the nut to **25 Y (18 lb ft)**.
3. Install the retaining bolt (4) to the intake manifold bracket and tighten to **25 Y (18 lb ft)**.

cardiagn.com

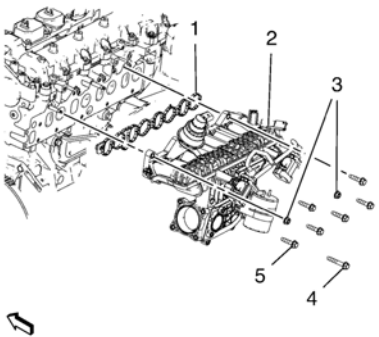

1. Remove the retaining bolt (4) from the intake manifold bracket.
2. Remove the 6 retaining bolts (5) and the 2 retaining nuts (3).
3. Remove the intake manifold along with the intake manifold gasket (1).

cardiagn.com

Removal Procedure

1. Remove the exhaust gas recirculation valve cooler. Refer to Exhaust Gas Recirculation Valve Cooler Replacement.
2. Remove the 2 intake air tuning valve vacuum control solenoid valves. Refer to Intake Air Tuning Valve Vacuum Control Solenoid Valve Replacement.

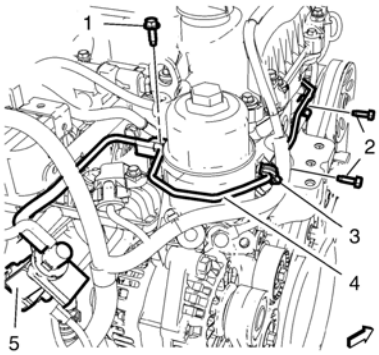

3. Remove the charge air control vacuum hose bracket bolt (1) from intake manifold.
4. Remove the 2 charge air control vacuum hose bracket bolts (2) from engine front cover.

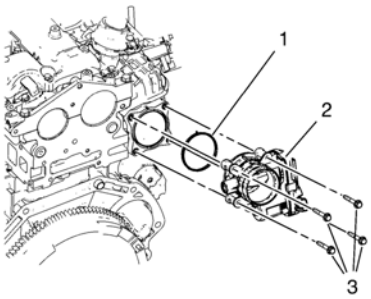

5. Remove the 4 throttle body assembly bolts (3).
6. Remove the throttle body assembly (2) along with the gasket (1).
7. Remove the starter. Refer to Starter Replacement.

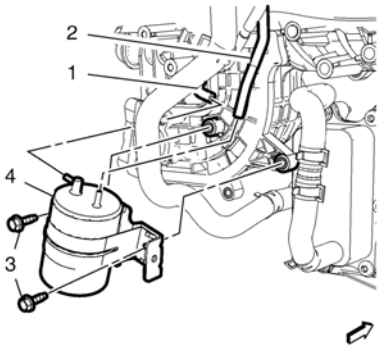

8. Remove the vacuum regulator valve hose (1) from charge air bypass valve vacuum tank (4).
9. Remove the vacuum pump hose (2) from the charge air bypass valve vacuum tank (4).
10. Remove the 2 charge air bypass valve vacuum tank bracket bolts (3).

cardiagn.com

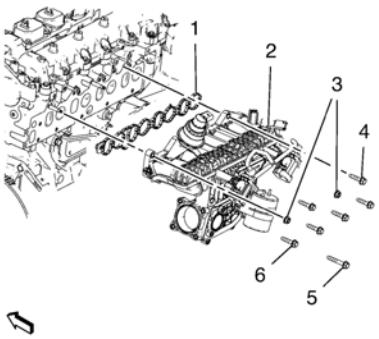

11. Remove the intake manifold bracket bolt (5).
12. Remove the 4 lower intake manifold bolts (6).
13. Lower the vehicle.
14. Remove the 2 intake manifold nuts (3).
15. Remove the 2 upper intake manifold bolts (4).
16. Remove the intake manifold (2).
17. Remove the intake manifold gasket (1).

Installation Procedure

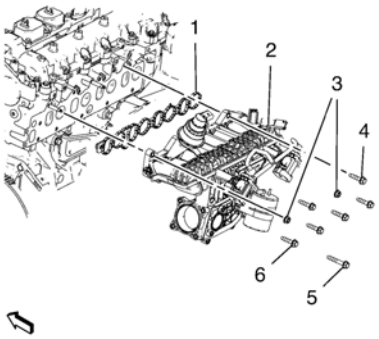

1. Install the intake manifold (2) along with a NEW intake manifold gasket (1).

   Caution: Refer to Fastener Caution.
2. Install the 2 upper intake manifold bolts (4) and the 2 intake manifold nuts (3) and tighten to **25 Y (18 lb ft)**.
3. Raise the vehicle.
4. Install 4 lower intake manifold bolts (6) and tighten to **25 Y (18 lb ft)**.
5. Install intake manifold bracket bolt (5) and tighten to **25 Y (18 lb ft)**.

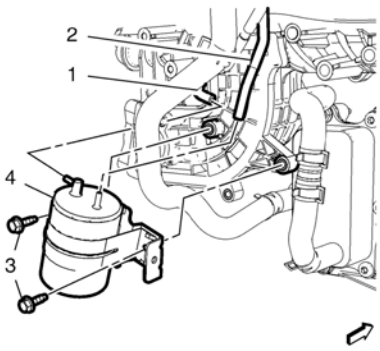

6. Install 2 charge air bypass valve vacuum tank bracket bolts (3) and tighten to **10 Y (89 lb in)**.
7. Install the vacuum pump hose (2) to the charge air bypass valve vacuum tank (4).
8. Install the vacuum regulator valve hose (1) to the charge air bypass valve vacuum tank (4).
9. Install the starter. Refer to Starter Replacement.
10. Lower the vehicle.

cardiagn.com

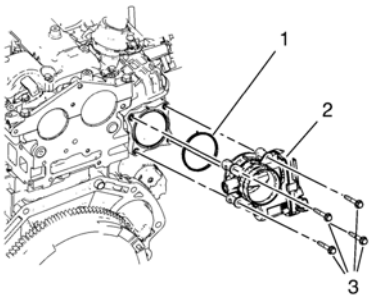

11. Install the throttle body assembly (2) along with a NEW gasket (1).
12. Install 4 throttle body assembly bolts (3) and tighten to **10 Y (89 lb in)**.

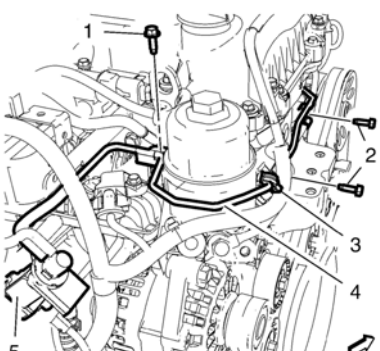

13. Install the 3 charge air control vacuum hose bolts (1, 2) and tighten to **9 Y (80 lb ft)**.
14. Install the 2 intake air tuning valve vacuum control solenoid valves. Refer to Intake Air Tuning Valve Vacuum Control Solenoid Valve Replacement.
15. Install the exhaust gas recirculation valve cooler. Refer to Exhaust Gas Recirculation Valve Cooler Replacement.

cardiagn.com

Special Tools

- *CH-807* Closure Plugs
- *EN-6015* Closure Plugs
- *EN-34730-91* Fuel Pressure Gauge

For equivalent regional tools, refer to Special Tools.

Removal Procedure

Warning: Gasoline or gasoline vapors are highly flammable. A fire could occur if an ignition source is present. Never drain or store gasoline or diesel fuel in an open container, due to the possibility of fire or explosion. Have a dry chemical (Class B) fire extinguisher nearby.

Warning: Always wear safety goggles when working with fuel in order to protect the eyes from fuel splash.

1. Open the hood.
2. Disconnect the battery negative cable. Refer to Battery Negative Cable Disconnection and Connection.
3. Remove the dash upper extension panel opening cover. Refer to Dash Upper Extension Panel Opening Cover Replacement.
4. Place a drip pan underneath.
5. Release the fuel pressure, using the test connection with *EN-34730-91* gauge .
6. Remove the air cleaner outlet duct. Refer to Air Cleaner Outlet Duct Replacement.
7. Raise and support the vehicle. Refer to Lifting and Jacking the Vehicle.

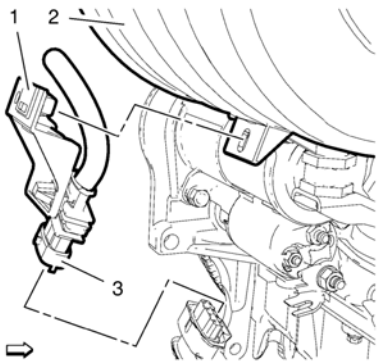

8. Disconnect the oxygen wiring harness (3).
9. Remove the wiring harness bracket (1) from the intake manifold (2).

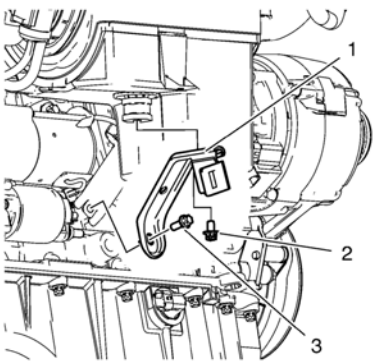

10. Remove the 2 intake manifold brace bolts (2, 3).
11. Remove the intake manifold brace (1).
12. Lower the vehicle.

cardiagn.com

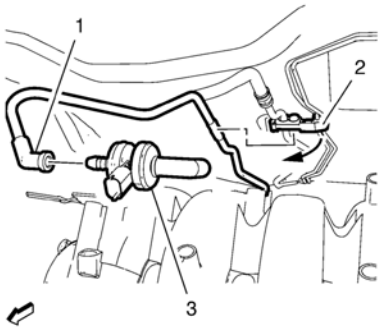

13. Remove the fuel tank vent pipe (1) from the evaporative emission canister purge solenoid valve (3). Refer to Plastic Collar Quick Connect Fitting Service.
14. Close the fuel tank vent pipe (1) with *EN-6015* closure plugs .

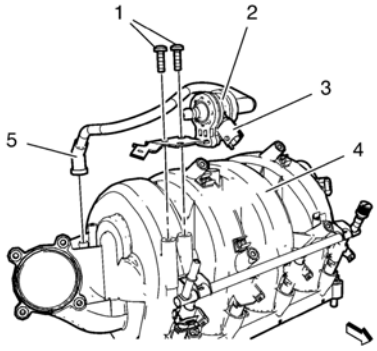

15. Disconnect wiring harness plug (3).
16. Disconnect the pipe (5) from the evaporative emission canister purge solenoid valve (2) to intake manifold (4). Refer to Plastic Collar Quick Connect Fitting Service.
17. Remove the 2 evaporative emission canister bracket bolts (1).
18. Remove the evaporative emission canister purge solenoid valve (2) and the rubber mounting from the intake manifold (4).
19. Close the fuel tank vent pipe with *EN-6015* closure plugs .

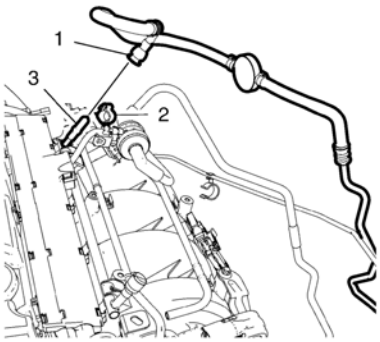

20. Unclip the fuel feed pipe (1) from the fuel feed pipe clip (2). Refer to Plastic Collar Quick Connect Fitting Service.
21. Release the fuel feed pipe (1) from the multiport fuel injection fuel rail (3).
22. Close the fuel feed pipe (1) and the multiport fuel injection fuel rail (3) with *CH-807* closure plugs .

cardiagn.com

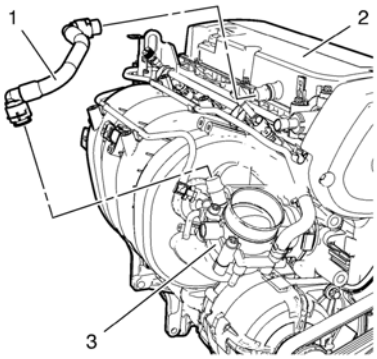

23. Remove the positive crankcase ventilation tube (1) from throttle body (3) and the camshaft cover (2). Refer to Plastic Collar Quick Connect Fitting Service.

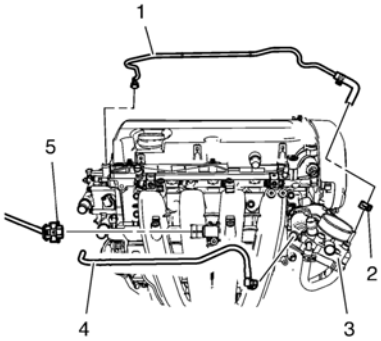

24. Disconnect the manifold absolute pressure sensor wiring harness plug (5).
25. Remove the clamp (2) and remove the throttle body heater inlet hose (1) from the throttle body (3). Refer to Plastic Collar Quick Connect Fitting Service.
26. Disconnect the throttle body heater outlet hose (4) from the throttle body (3). Refer to Plastic Collar Quick Connect Fitting Service.
27. Remove the engine management wiring harness and the fuel injectors wiring harness.

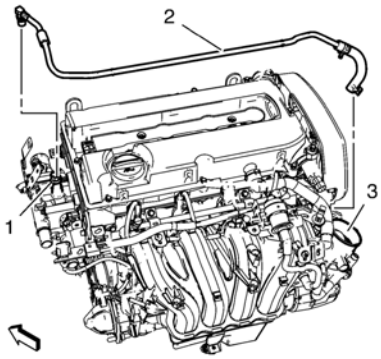

28. Disconnect the throttle body heater inlet hose connector from the engine coolant thermostat housing (1). Refer to Plastic Collar Quick Connect Fitting Service.
29. Remove the throttle body heater inlet hose (2).
30. Remove the throttle body assembly. Refer to Throttle Body Assembly Replacement.

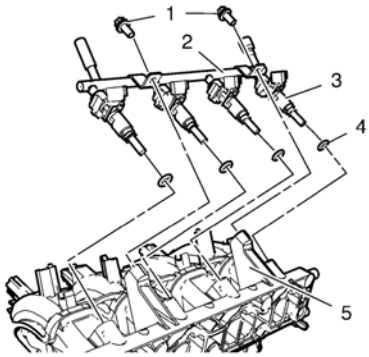

31. Remove the 2 multiport fuel injection fuel rail bolts (1).
32. Remove the multiport fuel injection fuel rail (2) and the fuel injectors (4) from the intake manifold (5).

cardiagn.com

33. Remove the 4 multiport fuel injector seals (4).

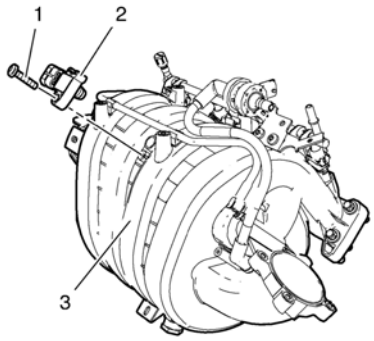

34. Remove the manifold absolute pressure sensor bolt (1).
35. Remove the manifold absolute pressure sensor (2) from the intake manifold (3).

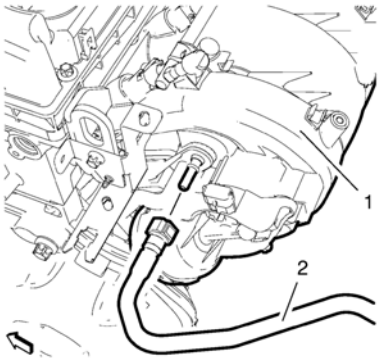

36. Disconnect the booster vacuum pipe (2) from the intake manifold (1).

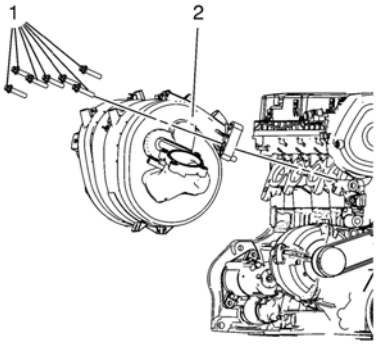

37. Remove the 7 intake manifold bolts (1).
38. Remove the intake manifold (2).

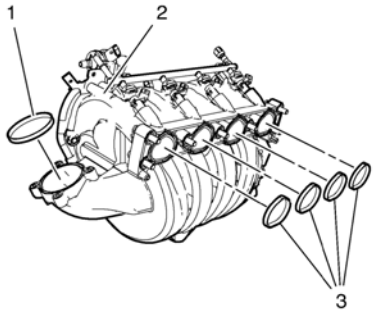

39. Remove the intake manifold gaskets (1, 3) from the intake manifold (2).

cardiagn.com

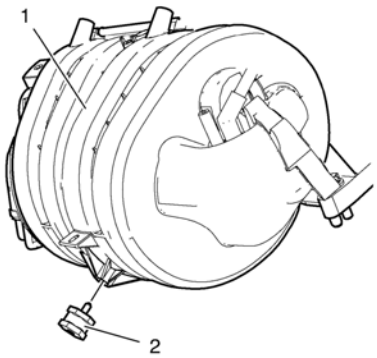

40. Remove the rubber bracket (2) from the intake manifold (1).

Cleaning and Inspection Procedure

Clean and inspect the intake manifold. Refer to Intake Manifold Cleaning and Inspection.

Installation Procedure

1. Clean the sealing surfaces.

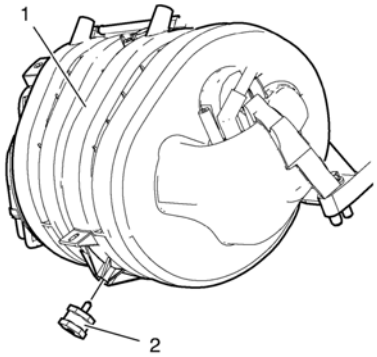

2. Install the rubber bracket (2) to the intake manifold (1).

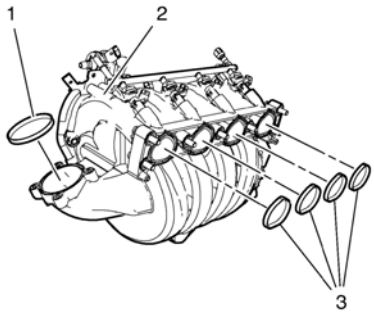

3. Install the NEW gaskets (1, 3) to the intake manifold (2).

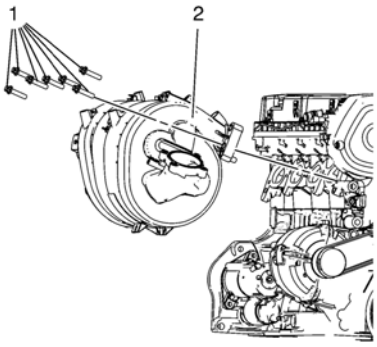

Caution: Refer to Fastener Caution.

4. Install the intake manifold (2) and the 7 intake manifold bolts (1) and tighten to **20 Y (15 lb ft)**.

cardiagn.com

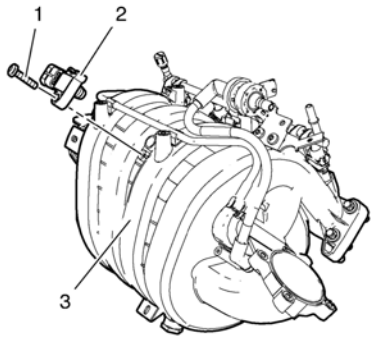

5. Install the manifold absolute pressure sensor (2) to the intake manifold (3).
6. Install the manifold absolute pressure sensor bolt (1) and tighten to **6 Y (53 lb in)**.

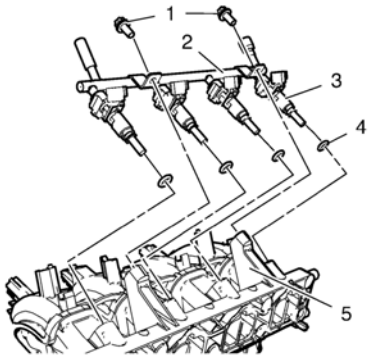

7. Install the 4 multiport fuel injector seals (4).
8. Install the multiport fuel injection fuel rail (2) and the fuel injectors (3) to the intake manifold (5).
9. Install the 2 multiport fuel injection fuel rail bolts (1) and tighten to **8 Y (71 lb in)**.

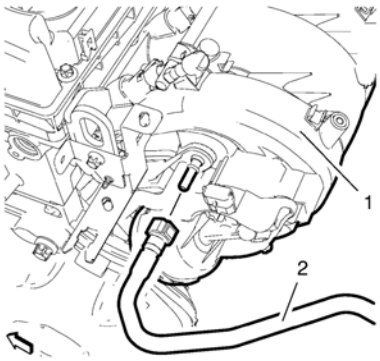

10. Connect the booster vacuum pipe (2) to the intake manifold (1).
11. Install the throttle body assembly. Refer to Throttle Body Assembly Replacement.

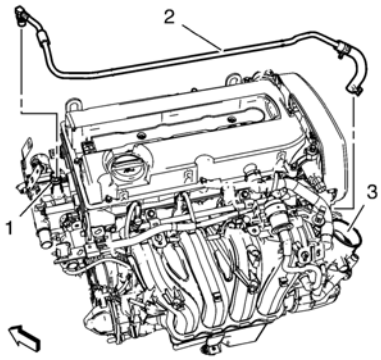

12. Install the throttle body heater inlet hose (2).
13. Connect the throttle body heater inlet hose (2) to the engine coolant thermostat housing (1). Refer to Plastic Collar Quick Connect Fitting Service.

cardiagn.com

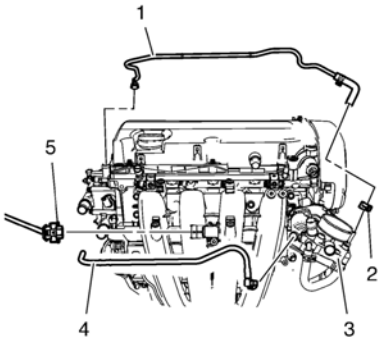

14. Connect the throttle body heater outlet hose (4) to the throttle body (3). Refer to Plastic Collar Quick Connect Fitting Service.
15. Install the throttle body heater inlet hose (1) to the throttle body (3) install the clamp (2).
16. Connect the manifold absolute pressure sensor wiring harness plug (5).
17. Install the engine management wiring harness and the fuel injectors wiring harness.

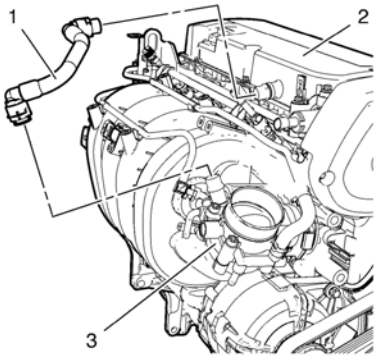

18. Install the positive crankcase ventilation tube (1) to the throttle body (3) and to the camshaft cover (2). Refer to Plastic Collar Quick Connect Fitting Service.

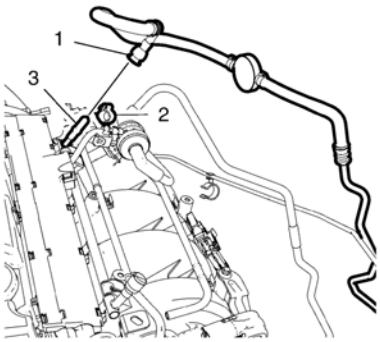

19. Remove the *CH-807* closure plugs from the fuel feed pipe (1) and the multiport fuel injection fuel rail (3).
20. Install the fuel feed pipe (1) to the multiport fuel injection fuel rail (3). Refer to Plastic Collar Quick Connect Fitting Service.
21. Clip the fuel feed pipe (1) into the fuel feed pipe clip (2).

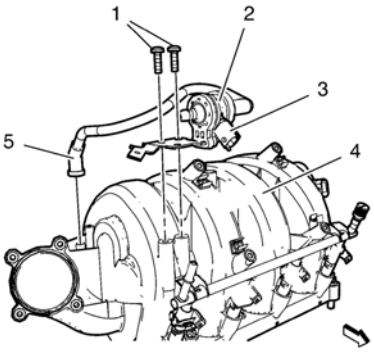

22. Install the evaporative emission canister purge solenoid valve (2) and the rubber mounting to the intake manifold (4).
23. Install the 2 evaporative emission canister bracket bolts (1) and tighten to **8 Y (71 lb in)**.
24. Connect the pipe (5) to the evaporative emission canister purge solenoid valve (2) and to the intake manifold (4). Refer to Plastic Collar Quick Connect

cardiagn.com

Fitting Service.

25. Connect wiring harness plug (3).

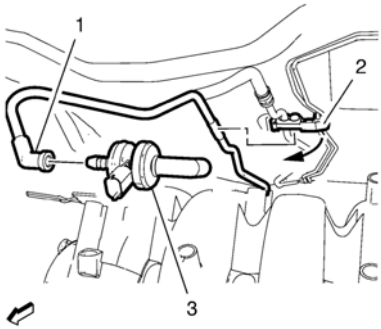

26. Remove the *EN-6015* closure plug from the fuel tank vent pipe (1).
27. Install the fuel tank vent pipe (1) to the evaporative emission canister purge solenoid valve (3). Refer to Plastic Collar Quick Connect Fitting Service.
28. Raise the vehicle.

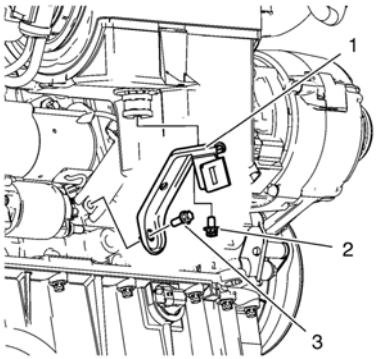

29. Install the intake manifold brace (1).
30. Install the 2 intake manifold brace bolts (2, 3) and tighten to **8 Y (71 lb in)**.

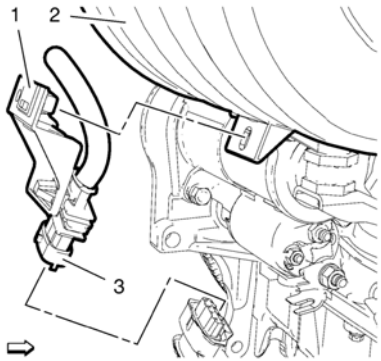

31. Install the wiring harness bracket (1) to the intake manifold (2).
32. Connect the oxygen wiring harness (3).
33. Lower the vehicle.
34. Install the air cleaner outlet duct. Refer to Air Cleaner Outlet Duct Replacement.
35. Install the dash upper extension panel opening cover. Refer to Dash Upper Extension Panel Opening Cover Replacement.
36. Connect the battery negative cable. Refer to Battery Negative Cable Disconnection and Connection.
37. Close the hood.

cardiagn.com

Removal Procedure

1. Remove the engine sight shield. Refer to Engine Sight Shield Replacement.

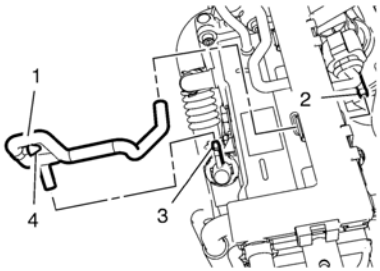

⇨

2. Remove the intake manifold tuning valve vacuum control solenoid valve hose (1) from the intake air tuning valve vacuum control solenoid valve (3) and from the intake manifold runner control valve actuator (2).
3. Remove the intake manifold tuning valve vacuum control solenoid valve hose clip (4) from the exhaust gas recirculation cooler.
4. Remove the intake manifold tuning valve vacuum control solenoid valve hose.

Installation Procedure

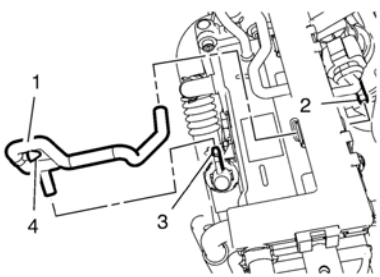

⇨

1. Install the intake manifold tuning valve vacuum control solenoid valve hose (1).
2. Install the intake manifold tuning valve vacuum control solenoid valve hose to the intake air tuning valve vacuum control solenoid valve (3) and to the intake manifold runner control valve actuator (2).
3. Install the intake manifold tuning valve vacuum control solenoid valve hose clip (4) to the exhaust gas recirculation cooler.
4. Install the engine sight shield. Refer to Engine Sight Shield Replacement.

cardiagn.com

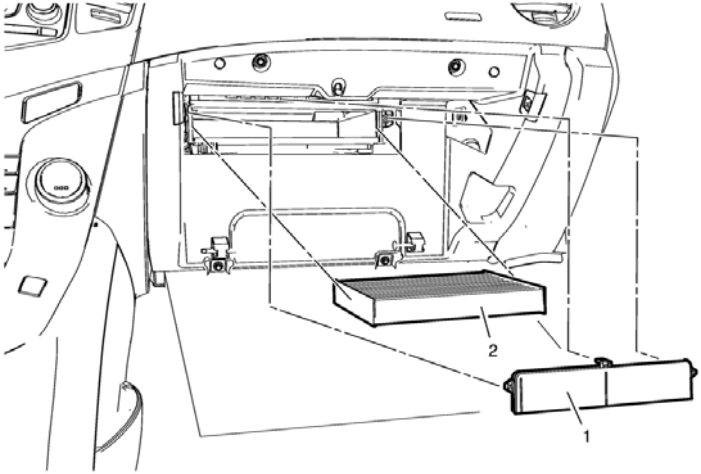

Passenger Compartment Air Filter Replacement

Callout	Component Name
Preliminary Procedure	
Unhinge the instrument panel compartment door.	
	Passenger Compartment Air Filter Cover
1	**Procedure**
	Unlock the 3 retaining tabs.
2	Passenger Compartment Air Filter

cardiagn.com

Removal Procedure

1. Remove the front bumper fascia. Refer to Front Bumper Fascia Removal and Installation.

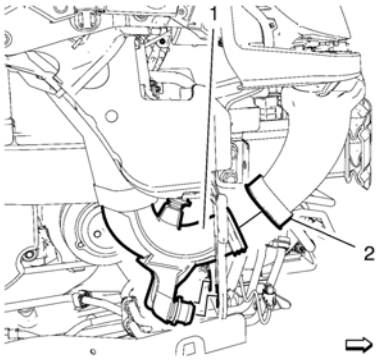

2. Separate the front intake air duct (2) from the rear intake air duct (1).
3. Push the rear intake air duct carefully out of the 2 lower bracket insulators.

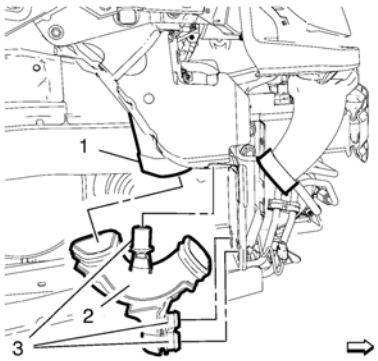

4. Remove the rear intake air duct (2) from the air cleaner adapter (1) and from the brackets.
5. Remove the 3 rear intake air duct bracket insulators (3) from the rear intake air duct (2).

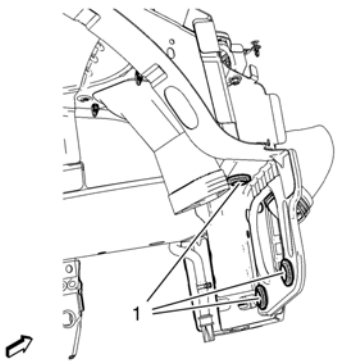

6. Install the 3 bracket insulator (1) to the guidance.

Installation Procedure

cardiagn.com

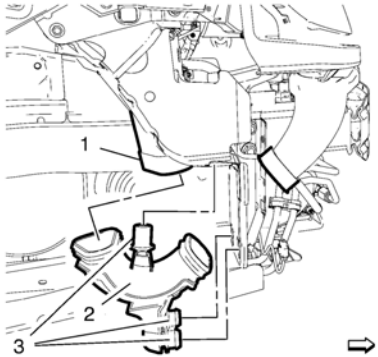

Note: Ensure that the rear intake duct is properly engaged into the bracket insulator (3).

1. Install the rear intake air duct (2) to the air cleaner adapter (1) and to the brackets.

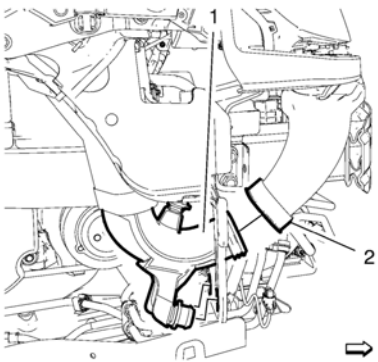

2. Push the rear intake air duct (1) carefully into the 2 lower bracket insulators and to the front intake air duct (2).
3. Install the front bumper fascia. Refer to Front Bumper Fascia Removal and Installation.

cardiagn.com

Removal Procedure

1. Remove the battery tray. Refer to Battery Tray Replacement.

   Note: Do NOT disconnect engine coolant hoses.

2. Remove the radiator surge tank. Refer to Radiator Surge Tank Replacement.
3. Position the radiator surge tank aside.

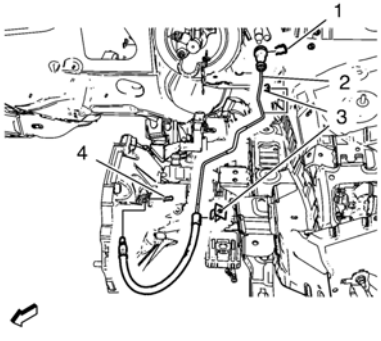

   Note: Before disconnecting the clutch actuator cylinder front pipe, remove the clutch/brake fluid from the reservoir tank.

4. Remove the clutch actuator cylinder front pipe retainer (1, 4).
5. Remove the clutch actuator cylinder front pipe from the retainer (3).
6. Remove the clutch actuator cylinder front pipe (2).

Installation Procedure

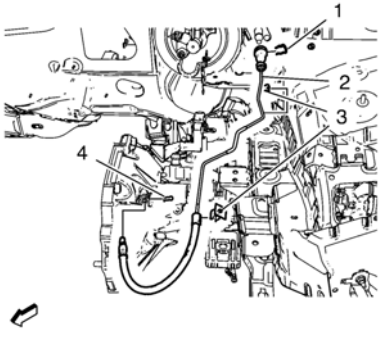

1. Install the clutch actuator cylinder front pipe (2).
2. Install the clutch actuator cylinder front pipe to the retainer (3).
3. Install the clutch actuator cylinder front pipe retainer (1, 4).
4. Bleed the hydraulic clutch system. Refer to Hydraulic Clutch System Bleeding.
5. Fill the reservoir with clutch/brake fluid up to the MAX level.
6. Install the radiator surge tank. Refer to Radiator Surge Tank Replacement.
7. Install the battery tray. Refer to Battery Tray Replacement.

cardiagn.com

Removal Procedure

1. Remove brake pressure modulator valve bracket. Refer to Brake Pressure Modulator Valve Bracket Replacement.
2. Place basin underneath.
3. Clip clutch actuator cylinder front pipe out of retainers at bulkhead.

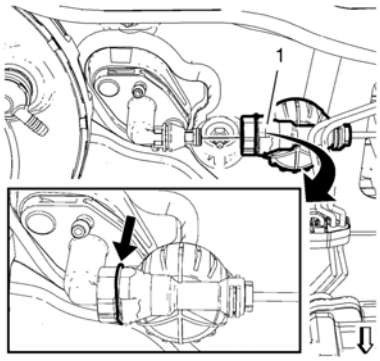

4. Open retaining clip (arrow).
5. Disconnect clutch actuator cylinder front pipe (1) from clutch master cylinder.

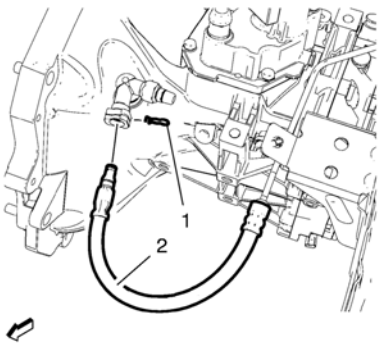

6. Open retaining clip (1).
7. Disconnect clutch actuator cylinder front pipe (2) from clutch actuator cylinder pipe elbow.
8. Remove clutch actuator cylinder front pipe.

Installation Procedure

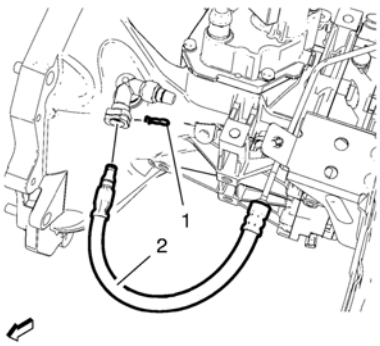

1. Install clutch actuator cylinder front pipe (2).
2. Connect clutch actuator cylinder front pipeto clutch actuator cylinder pipe elbow.
3. Close retaining clip (1).

cardiagn.com

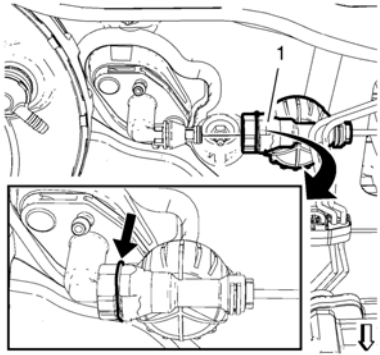

4. Connect clutch actuator cylinder front pipe (1) to clutch master cylinder.
5. Close retaining clip (arrow).
6. Clip clutch actuator cylinder front pipe into retainers at bulkhead.
7. Install brake pressure modulator valve bracket. Refer to Brake Pressure Modulator Valve Bracket Replacement.
8. Bleed hydraulic clutch system. Refer to Hydraulic Clutch System Bleeding.

cardiagn.com

Removal Procedure

1. Remove battery tray. Refer to Battery Tray Replacement.
2. Remove radiator surge tank Radiator Surge Tank Replacement and lay aside.
3. Place basin underneath.

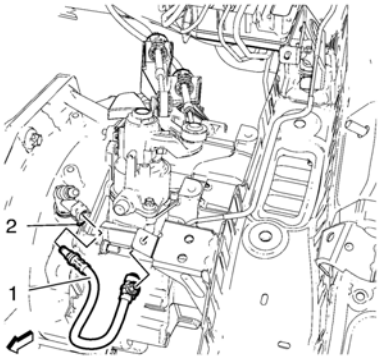

4. Clip clutch actuator cylinder front pipe (2) out of 2 retainers.
5. Open retaining clip (1).
6. Disconnect clutch actuator cylinder front pipe from clutch actuator cylinder pipe elbow.

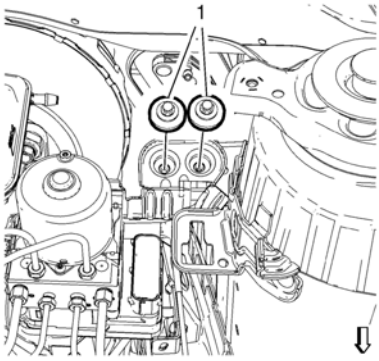

7. Remove 2 brake pressure modulator valve bracket bolts (1).

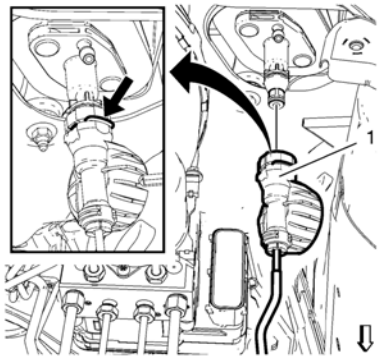

8. Open retaining clip (arrow).
9. Disconnect clutch actuator cylinder front pipe (1) from clutch master cylinder.

Note: For removal of clutch actuator cylinder front pipe lift brake pressure modulator valve bracket carefully.

10. Remove clutch actuator cylinder front pipe.

Installation Procedure

Note: For installation of clutch actuator cylinder front pipe lift brake pressure modulator valve bracket carefully.

1. Install clutch actuator cylinder front pipe.

cardiagn.com

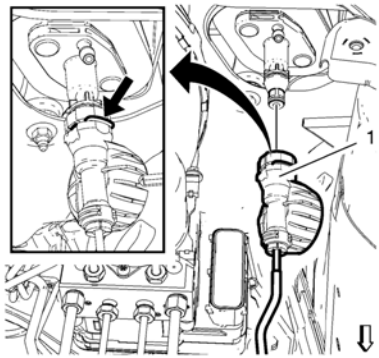

2. Connect clutch actuator cylinder front pipe (1) to clutch master cylinder.
3. Close retaining clip (arrow).

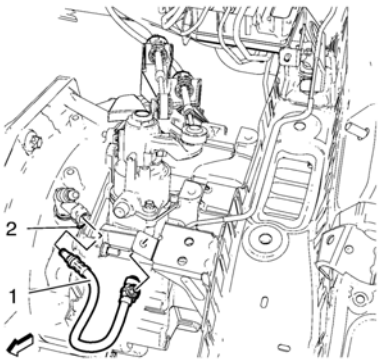

4. Connect clutch actuator cylinder front pipe (2) to clutch actuator cylinder pipe elbow.
5. Close retaining clip (1).
6. Clip clutch actuator cylinder front pipe (1) into 2 retainers.

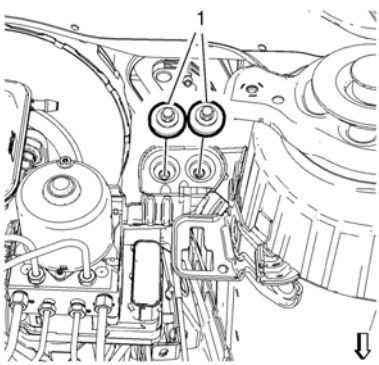

Caution: Refer to Fastener Caution.

7. Install 2 brake pressure modulator valve bracket bolts (1) and tighten to **20 Y (15 lb ft)**.
8. Install radiator surge tank Radiator Surge Tank Replacement.
9. Bleed hydraulic clutch system. Refer to Hydraulic Clutch System Bleeding.
10. Install battery tray. Refer to Battery Tray Replacement.

cardiagn.com

Removal Procedure

1. Remove brake pressure modulator valve bracket. Refer to Brake Pressure Modulator Valve Bracket Replacement.
2. Place basin underneath.
3. Clip clutch actuator cylinder front pipe out of retainers at bulkhead.

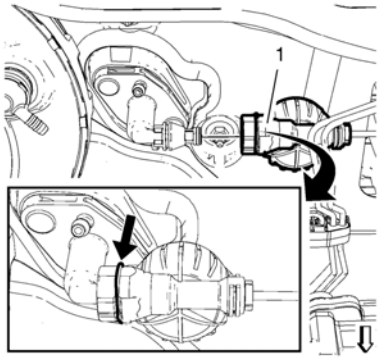

4. Open retaining clip (arrow).
5. Disconnect clutch actuator cylinder front pipe (1) from clutch master cylinder.

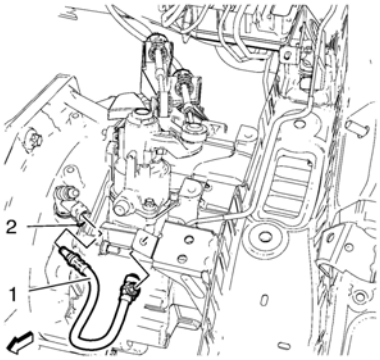

6. Open retaining clip (arrow).
7. Disconnect clutch actuator cylinder front pipe (1) from clutch actuator cylinder pipe elbow.
8. Remove clutch actuator cylinder front pipe (2).

Installation Procedure

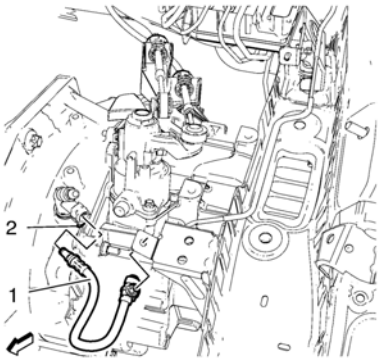

1. Install clutch actuator cylinder front pipe.
2. Connect clutch actuator cylinder front pipe (1) to clutch actuator cylinder pipe elbow.
3. Close retaining clip (arrow).

cardiagn.com

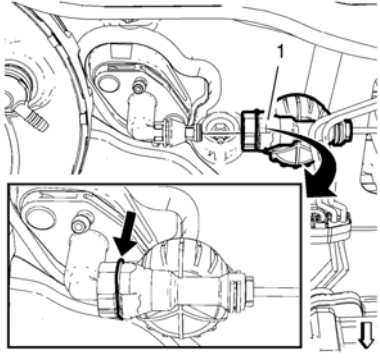

4. Connect clutch actuator cylinder front pipe (1) to clutch master cylinder.
5. Close retaining clip (arrow).
6. Clip clutch actuator cylinder front pipe into retainers at bulkhead.
7. Install brake pressure modulator valve bracket. Refer to Brake Pressure Modulator Valve Bracket Replacement.
8. Bleed hydraulic clutch system. Refer to Hydraulic Clutch System Bleeding.

cardiagn.com

Warning: Refer to Exhaust Service Warning.

Warning: Refer to Protective Goggles and Glove Warning.

Caution: Do not bend the exhaust flex pipe more than 10 degrees in any direction. Bending of more than 10 degrees or twisting in a range of ±0.5 degrees will damage the exhaust flex decoupler.

Removal Procedure

1. Raise and support the vehicle. Refer to Lifting and Jacking the Vehicle.
2. Remove the front compartment insulator. Refer to Front Compartment Insulator Replacement.

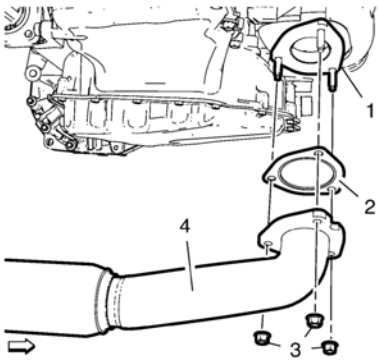

3. Support the exhaust system.
4. Remove the 3 catalytic converter to exhaust front pipe nuts (3).
5. Remove the exhaust front pipe (4) from the catalytic converter flange (1).
6. Remove the gasket (2).

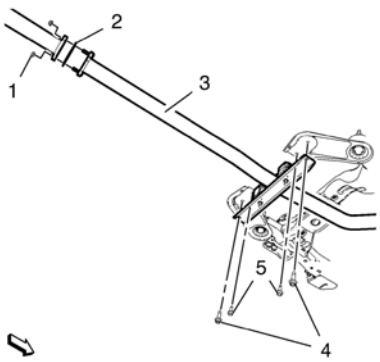

7. Remove the 2 exhaust front pipe to intermediate pipe nuts (1).
8. Remove and DISCARD the 2 drive frame bolts (4)
9. Remove the 2 exhaust front pipe hanger bracket bolts (5).
10. Remove the exhaust front pipe (3) and the gasket (2).
11. Remove the exhaust front pipe hanger bracket from the exhaust front pipe. Refer to Exhaust Pipe Front Hanger Bracket Replacement.

Installation Procedure

cardiagn.com

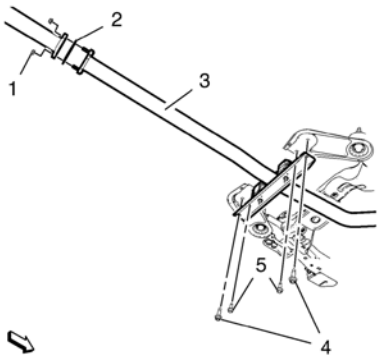

1. Install the exhaust front pipe hanger bracket to the exhaust front pipe. Refer to Exhaust Pipe Front Hanger Bracket Replacement.
2. Install the exhaust front pipe (3) and a NEW gasket (2).

Warning: Refer to Torque-to-Yield Fastener Warning.

Caution: Refer to Fastener Caution.

3. Install the 2 NEW drive frame bolts M10 (4) and tighten the bolts to **60 Y +30°-45° (44 lb ft +30°-45°)**.
4. Install the 2 exhaust front pipe to intermediate pipe nuts (1) and tighten the nuts to **17 Y (13 lb ft)**.
5. Install the 2 exhaust front pipe hanger bracket bolts M8 (5) and tighten the bolts to **22 Y (17 lb ft)**.

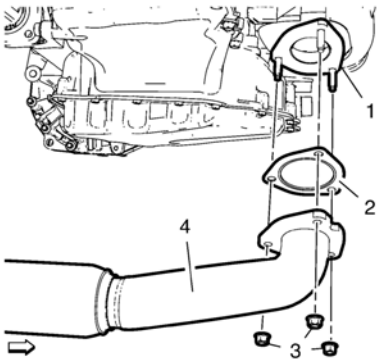

6. Install the exhaust front pipe (4) to the catalytic converter flange (1) with a NEW gasket (2).
7. Install the 3 catalytic converter to exhaust front pipe nuts (3) and tighten the nuts to **22 Y (16 lb ft)**.
8. Install the front compartment insulator. Refer to Front Compartment Insulator Replacement.
9. Lower the vehicle.

cardiagn.com

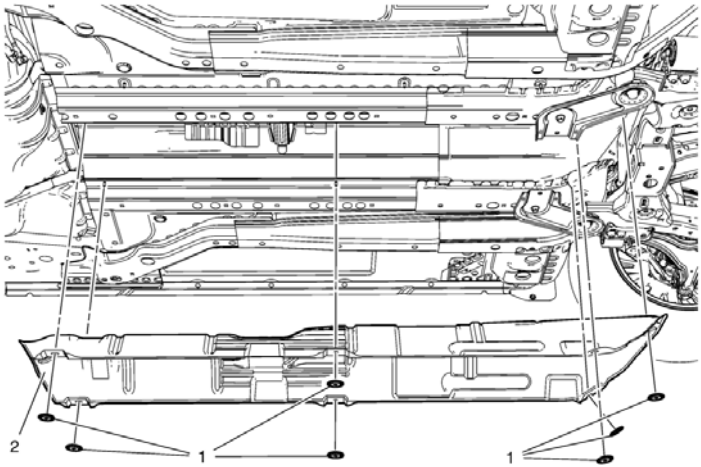

Exhaust Heat Shield Replacement

Callout	Component Name

Warning: In order to avoid being burned, do not service the exhaust system while it is still hot. Service the system when it is cool.

Warning: Always wear protective goggles and gloves when removing exhaust parts as falling rust and sharp edges from worn exhaust components could result in serious personal injury.

Preliminary Procedure

Remove the exhaust front pipe. Refer to Exhaust Front Pipe Replacement.

1	Heat Shield Retainer (Qty: 7)
2	Heat Shield

cardiagn.com

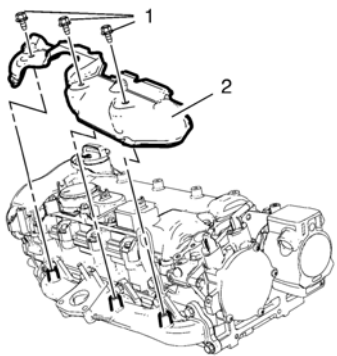

1. Install the exhaust manifold heat shield (2).

   Caution: Refer to Fastener Caution.

2. Install the 3 exhaust manifold heat shield bolts (1) and tighten to **10 Y (89 lb in)**.

cardiagn.com

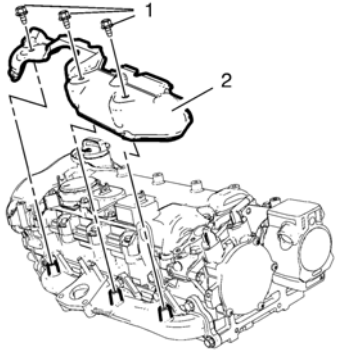

1. Install the exhaust manifold heat shield (2).

   Caution: Refer to Fastener Caution.

2. Install the 3 exhaust manifold heat shield bolts (1) and tighten to **10 Y (89 lb in)**.

cardiagn.com

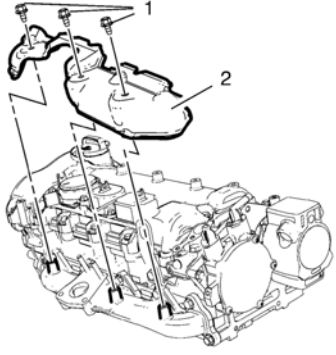

1. Remove the 3 exhaust manifold heat shield bolts (1).
2. Remove the exhaust manifold heat shield (2).

cardiagn.com

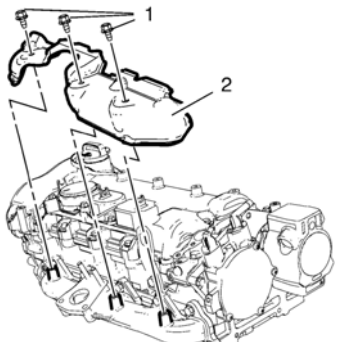

1. Remove the 3 exhaust manifold heat shield bolts (1).
2. Remove the exhaust manifold heat shield (2).

cardiagn.com

Removal Procedure

Warning: Refer to Exhaust Service Warning.

Warning: Refer to Protective Goggles and Glove Warning.

Caution: Do not bend the exhaust flex pipe more than 10 degrees in any direction. Bending of more than 10 degrees or twisting in a range of ±0.5 degrees will damage the exhaust flex decoupler.

1. Remove the turbocharger. Refer to Turbocharger Replacement.

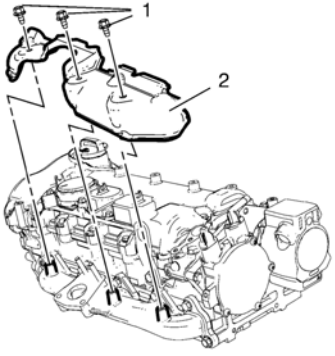

2. Remove 3 exhaust manifold heat shield bolts (1).
3. Remove the exhaust manifold heat shield (2).

Installation Procedure

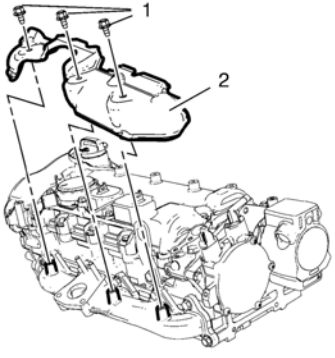

1. Install the exhaust manifold heat shield (2).

Caution: Refer to Fastener Caution.

2. Install the exhaust manifold heat shield bolts (1) and tighten the bolts to **10 Y (89 lb in)**.
3. Install the turbocharger. Refer to Turbocharger Replacement.

cardiagn.com

Removal Procedure

Warning: Refer to Exhaust Service Warning.

Warning: Refer to Protective Goggles and Glove Warning.

Caution: Do not bend the exhaust flex pipe more than 10 degrees in any direction. Bending of more than 10 degrees or twisting in a range of ±0.5 degrees will damage the exhaust flex decoupler.

1. Remove the turbocharger. Refer to Turbocharger Replacement.

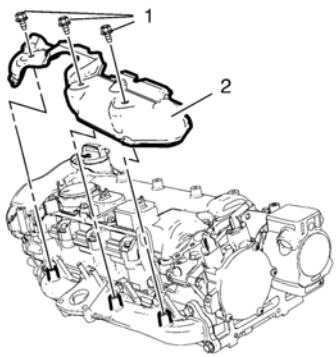

2. Remove 3 exhaust manifold heat shield bolts (1).
3. Remove the exhaust manifold heat shield (2).

Installation Procedure

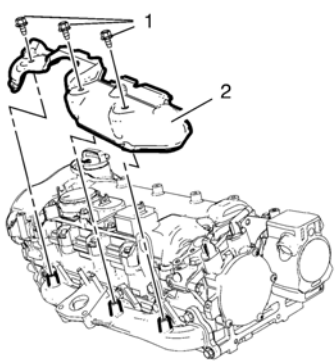

1. Install the exhaust manifold heat shield (2).

Caution: Refer to Fastener Caution.

2. Install the exhaust manifold heat shield bolts (1) and tighten the bolts to **10 Y (89 lb in)**.
3. Install the turbocharger. Refer to Turbocharger Replacement.

cardiagn.com

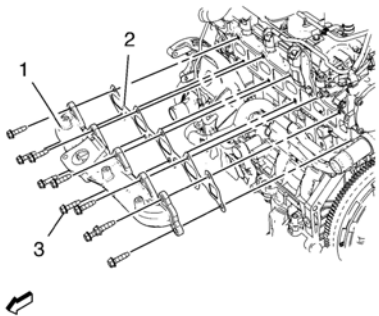

1. Install the exhaust manifold (1) and a NEW exhaust manifold gasket (2).

   Caution: Refer to Fastener Caution.

2. Install the exhaust manifold bolts (3) and tighten to **20Y (15 lb ft)**.

cardiagn.com

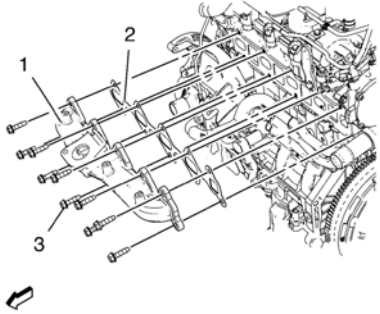

1. Remove 10 exhaust manifold bolts (3).
2. Remove the exhaust manifold (1).
3. Remove the exhaust manifold gasket (2).

cardiagn.com

Removal Procedure

Warning: Refer to Exhaust Service Warning.

Warning: Refer to Protective Goggles and Glove Warning.

Caution: Do not bend the exhaust flex pipe more than 10 degrees in any direction. Bending of more than 10 degrees or twisting in a range of ±0.5 degrees will damage the exhaust flex decoupler.

1. Remove the exhaust manifold heat shield. Refer to Exhaust Manifold Heat Shield Replacement.

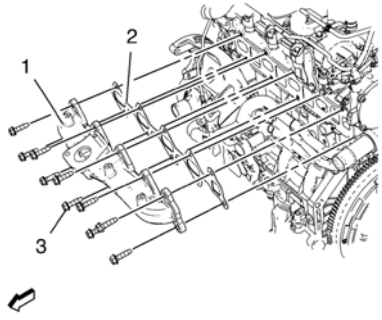

2. Remove 10 exhaust manifold bolts (3).
3. Remove the exhaust manifold (1).
4. Remove the exhaust manifold gasket (2).

Installation Procedure

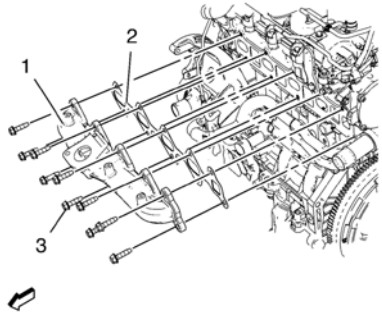

1. Install the exhaust manifold (1) and a NEW exhaust manifold gasket (2).

Caution: Refer to Fastener Caution.

2. Install the 10 exhaust manifold bolts (3) and tighten to **20 Y (15 lb ft)**.
3. Install the exhaust manifold heat shield. Refer to Exhaust Manifold Heat Shield Replacement.

cardiagn.com

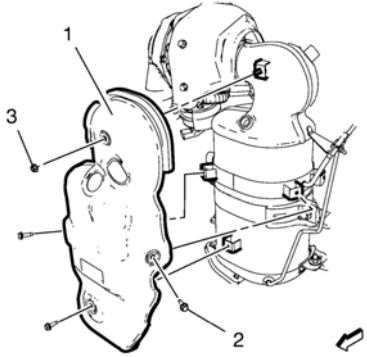

1. Install the exhaust particulate filter heat shield (1).

   Caution: Refer to Fastener Caution.

2. Install the 3 exhaust particulate filter heat shield retaining bolts (2) and the nut (3) and tighten to **9 Y (80 lb in)**.

cardiagn.com

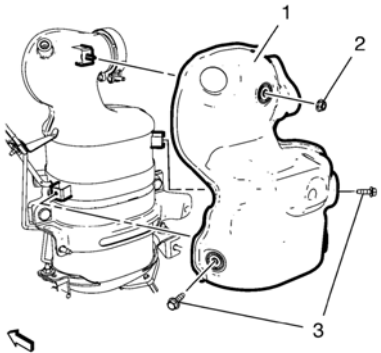

1. Install the rear exhaust particulate filter heat shield (1).

   Caution: Refer to Fastener Caution.

2. Install the 2 exhaust particulate filter heat shield bolts (3) and the nut (2) and tighten to **9 Y (80 lb in).**

cardiagn.com

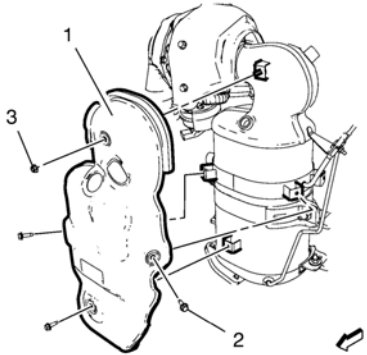

1. Remove 3 exhaust particulate filter heat shield retaining bolts (2) and 1 nut (3).
2. Remove the exhaust particulate filter heat shield (1).

cardiagn.com

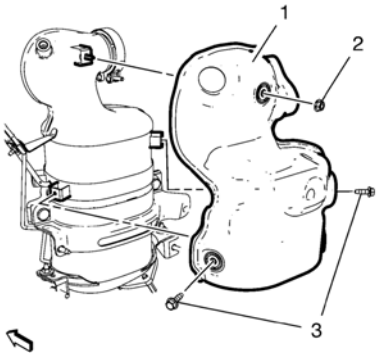

1. Remove 2 exhaust particulate filter heat shield bolts (3) and nut (2).
2. Remove the rear exhaust particulate filter heat shield (1).

cardiagn.com

Removal Procedure

Warning: Refer to Exhaust Service Warning.

Warning: Refer to Protective Goggles and Glove Warning.

Caution: Do not bend the exhaust flex pipe more than 10 degrees in any direction. Bending of more than 10 degrees or twisting in a range of ±0.5 degrees will damage the exhaust flex decoupler.

1. Disconnect battery negative cable. Refer to Battery Negative Cable Disconnection and Connection.
2. Disconnect the heated oxygen sensor wiring harness plug. Remove clip from DPF sensor bracket. Refer to Heated Oxygen Sensor Replacement.

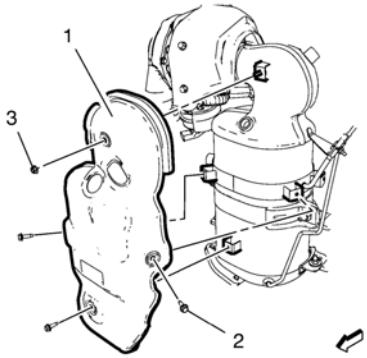

3. Remove 3 bolts (2) and the nut (3).
4. Remove the exhaust particulate filter heat shield - front (1).

Installation Procedure

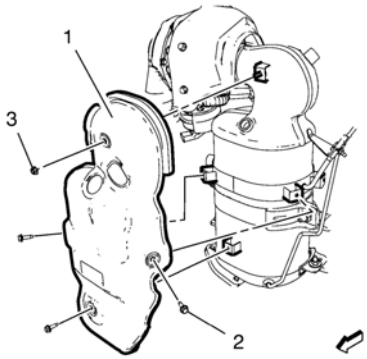

1. Install the exhaust particulate filter heat shield - front (1).

Caution: Refer to Fastener Caution.

2. Install the 3 bolts (2) and tighten the bolts to **9 Y (80 lb in)**.
3. Install the nut (3) and tighten the nut to **9 Y (80 lb in)**.
4. Install the heated oxygen sensor wiring harness plug. Install clip to DPF sensor bracket. Refer to Heated Oxygen Sensor Replacement.
5. Connect battery negative cable. Refer to Battery Negative Cable Disconnection and Connection.

cardiagn.com

Removal Procedure

Warning: Refer to Exhaust Service Warning.

Warning: Refer to Protective Goggles and Glove Warning.

Caution: Do not bend the exhaust flex pipe more than 10 degrees in any direction. Bending of more than 10 degrees or twisting in a range of ±0.5 degrees will damage the exhaust flex decoupler.

1. Disconnect battery negative cable. Refer to Battery Negative Cable Disconnection and Connection.
2. Remove the engine sight shield. Refer to Engine Sight Shield Replacement.
3. Remove the turbocharger heat shield. Refer to Turbocharger Heat Shield Replacement.
4. Remove the exhaust particulate filter. Refer to Exhaust Particulate Filter Replacement.

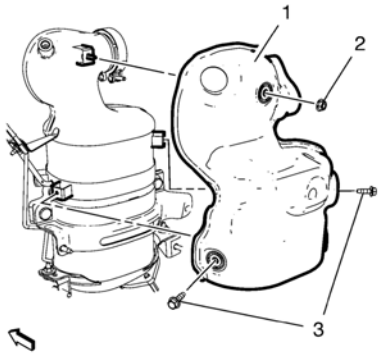

5. Remove the 2 exhaust particulate filter heat shield bolts (3) and the nut (2).
6. Remove exhaust particulate filter heat shield (1).

Installation Procedure

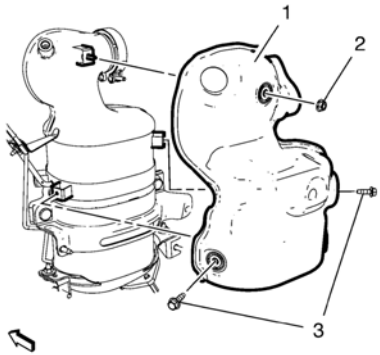

1. Install the exhaust particulate filter heat shield (1).

Caution: Refer to Fastener Caution.

2. Install the 2 bolts (3) and tighten the bolts to **9 Y (80 lb in)**.
3. Install the nut (2) and tighten the nut to **9 Y (80 lb in)**.
4. Install the exhaust particulate filter. Refer to Exhaust Particulate Filter Replacement.
5. Install the turbocharger heat shield. Refer to Turbocharger Heat Shield Replacement.
6. Install the engine sight shield. Refer to Engine Sight Shield Replacement.
7. Connect battery negative cable. Refer to Battery Negative Cable Disconnection and Connection.

cardiagn.com

Removal Procedure

Warning: Refer to Exhaust Service Warning.

Warning: Refer to Protective Goggles and Glove Warning.

Caution: Do not bend the exhaust flex pipe more than 10 degrees in any direction. Bending of more than 10 degrees or twisting in a range of ±0.5 degrees will damage the exhaust flex decoupler.

1. Raise and support the vehicle. Refer to Lifting and Jacking the Vehicle.

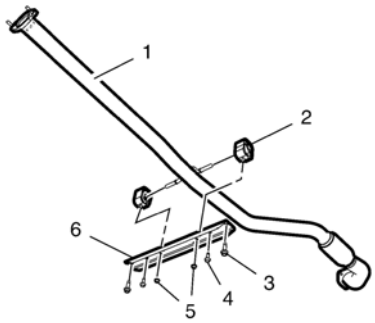

2. Support the exhaust front pipe (1).
3. Remove the 2 exhaust front pipe hanger bracket bolts (4) and the 2 drive frame bolts (3).
4. Remove the 2 exhaust front pipe hanger insulator nuts (5).
5. Remove the exhaust front pipe hanger bracket (6) from the exhaust front pipe hanger insulators (2).

Installation Procedure

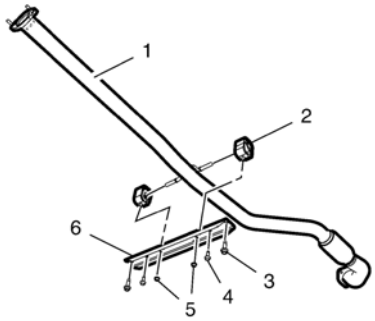

1. Install the exhaust front pipe hanger bracket (6) to the exhaust front pipe hanger insulators (2).

Caution: Refer to Fastener Caution.

2. Install the 2 exhaust front pipe hanger insulator nuts (5) and tighten the nuts to **22 Y (16 lb ft)**.
3. Install the 2 drive frame bolts M10 (3) and tighten the bolts to **60 Y + 30° - 45° (44 lb ft) + 30° - 45°**.
4. Install the 2 exhaust front pipe hanger bracket bolts M8 (4) and tighten the bolts to **22 Y (17 lb ft)**.
5. Remove the support from the exhaust front pipe (1).
6. Lower the vehicle.

cardiagn.com

Removal Procedure

Warning: In order to avoid being burned, do not service the exhaust system while it is still hot. Service the system when it is cool.

Warning: Always wear protective goggles and gloves when removing exhaust parts as falling rust and sharp edges from worn exhaust components could result in serious personal injury.

Caution: Do not bend the exhaust flex pipe more than 10 degrees in any direction. Bending of more than 10 degrees or twisting in a range of ±0.5 degrees will damage the exhaust flex decoupler.

1. Remove the Spare Wheel and Carrier. Refer to Spare Wheel and Carrier Replacement.

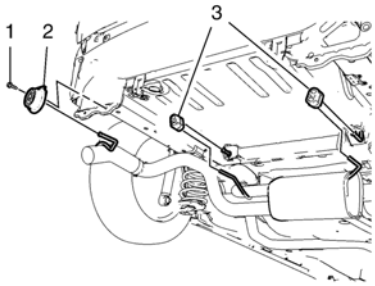

2. Remove the 2 exhaust rear muffler hanger insulators (3) from the exhaust rear muffler.
3. Remove the exhaust rear muffler hanger insulator bracket bolt (1) from the exhaust rear muffler hanger insulator bracket (2).
4. Place the exhaust system onto the rear axle.

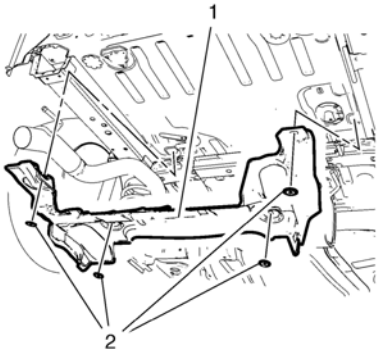

5. Remove the 4 exhaust rear muffler heat shield retainers (2).
6. Remove the exhaust rear muffler heat shield (1)

Installation Procedure

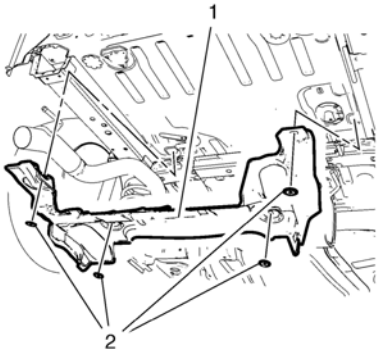

1. Install the exhaust rear muffler heat shield (1)

cardiagn.com

2. Install the 4 exhaust rear muffler heat shield retainers (2).

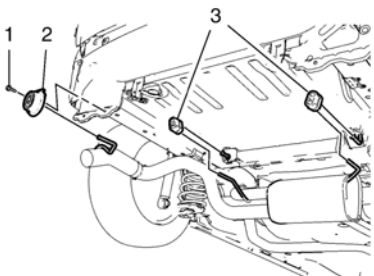

Caution: Refer to Fastener Caution.

3. Install the exhaust rear muffler hanger insulator bracket bolt (1) to the exhaust rear muffler hanger insulator bracket (2) and tighten the bolt to **25 Y (18 lb ft)**.
4. Install the 2 exhaust rear muffler hanger insulators (3) to the exhaust rear muffler.
5. Install the Spare Wheel and Carrier. Refer to Spare Wheel and Carrier Replacement.

cardiagn.com

Special Tools

CH–6614 Chain - Type Pipe Cutter

For equivalent regional tools, refer to Special Tools.

Removal Procedure

1. Raise and support the vehicle. Refer to Lifting and Jacking the Vehicle
2. Review the exhaust system cutting instructions. Refer to Exhaust System Cutting.

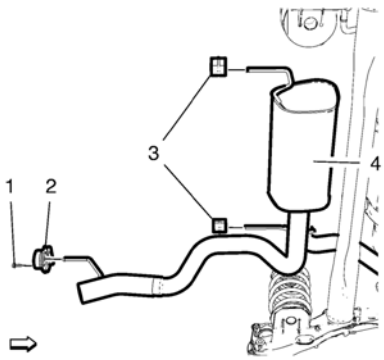

Warning: In order to avoid being burned, do not service the exhaust system while it is still hot. Service the system when it is cool.

Warning: Always wear protective goggles and gloves when removing exhaust parts as falling rust and sharp edges from worn exhaust components could result in serious personal injury.

Caution: Do not bend the exhaust flex pipe more than 10 degrees in any direction. Bending of more than 10 degrees or twisting in a range of ±0.5 degrees will damage the exhaust flex decoupler.

3. Remove the 2 exhaust rear muffler hanger insulators (3) from the exhaust rear muffler (4).
4. Remove the exhaust rear muffler hanger insulators bracket bolt (1) from the exhaust rear muffler end pipe bracket (2).
5. Remove the exhaust rear muffler end pipe bracket (2).
6. Place the exhaust system onto the rear axle.

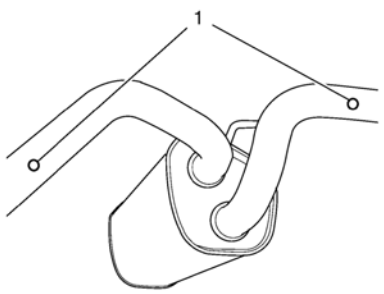

7. Note the dent marks (1) around the exhaust pipe.

cardiagn.com

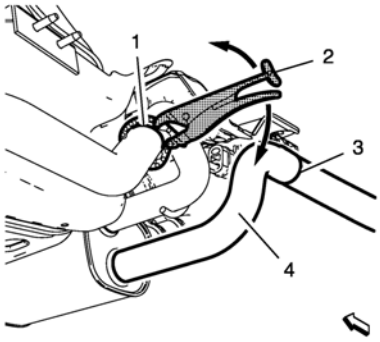

8. Support the intermediate pipe.

Note: A second technician is required.

9. Cut the exhaust rear muffler end pipe from the exhaust rear muffler (4) with the *CH-6614* cutter(2) at the marked positions (3).
10. Remove the exhaust rear muffler end pipe.
11. Cut the exhaust rear muffler (4) at the marked position (1).
12. Remove the exhaust rear muffler (4).

Installation Procedure

1. In case of reuse of the exhaust parts, check the exhaust pipes at the separating sets for the following conditions:

- roundness of the exhaust pipe, any deformation in the range of the double-clamp must be eliminated
- burrs inside and outside the exhaust pipe at the cutting edge, use a file to eliminate
- rust at the exhaust pipe outside, use a sandpaper to eliminate

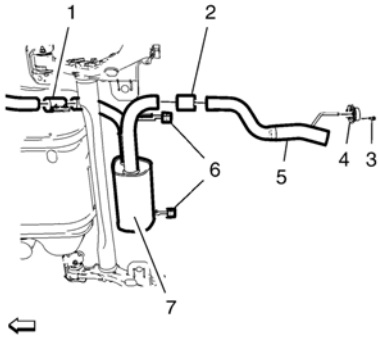

Note: A second technician is required.

- Install the exhaust rear muffler (7) to the 2 exhaust rear muffler hanger insulators (6).
- Install the exhaust pipe clamp (1) and loosely tighten.
- Install the exhaust rear muffler end pipe (5).
- Install the exhaust rear muffler end pipe bracket (4) to the exhaust rear muffler end pipe.

Caution: Refer to Fastener Caution.

- Install the exhaust rear muffler end pipe bracket bolt (3) to the exhaust rear muffler end pipe bracket (4) and tighten to **25 Y (18 lb ft)**.
- Install the exhaust pipe clamp (2) and loosely tighten.
- Position the exhaust rear muffler.
- Tighten the exhaust pipe clamp (1) to **30 Y (22 lb ft)**.
- Position the exhaust rear muffler end pipe (5).
- Tighten the exhaust pipe clamp (2) **30 Y (22 lb ft)**.

cardiagn.com

Cutting Instructions

General Instructions

- Cut the exhaust pipe with a chain type pipe cutter or a suitable tool.
- Make sure that the cutting is in an angle of **90 degrees** to the exhaust pipe.

How to use the Chain Type Pipe Cutter

- Lay the cutter chain around the exhaust pipe.
- Tighten the chain until the chain is loosely around the exhaust pipe.
- Position the chain type pipe cutter onto the required cutting position at the exhaust pipe.

Note: Don't compress the exhaust pipe with the cutter.

- Tighten the chain again so that the chain cutter is softly tensioned around the exhaust pipe.
- Make sure that the chain cuts in a line around the exhaust pipe
- Move the chain type pipe cutter back and forth around the exhaust pipe until the chain cutter could be moved easily.
- Tighten the chain again so that the chain cutter is softly tensioned around the exhaust pipe.
- Repeat the 2 previous steps until the pipe is completely cut.

Which cutting line to choose

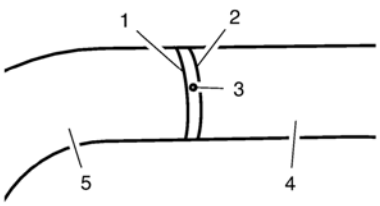

Note: The pipe must be cut that the dent marks are completely removed.

1. Note the dent marks (3) around the exhaust pipe. There will be 3 marks at each cutting position.

- Cut on line (1) left from the dent mark (3) to replace part (4) of the exhaust system.
- Cut on line (2) right from the dent mark (3) to replace part (5) of the exhaust system.

For example shown by a exhaust rear muffler replacement

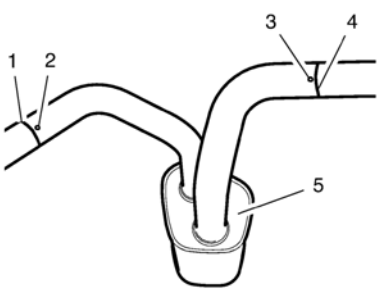

1. Cut on line (1) left from the dent mark (2) on the exhaust pipe.
2. Cut on line (4) right from the dent mark (3) on the exhaust pipe.
3. Remove the exhaust rear muffler (5).

Reuse of cut exhaust parts

Make sure that the following conditions are given.

cardiagn.com

Exhaust System Cutting

- Roundness of the exhaust pipe, any deformation in the range of the double-clamp must be eliminated.
- No burrs inside and outside the exhaust pipe at the cutting edge, use a file to eliminate.
- No rust at the exhaust pipe outside, use a sandpaper to eliminate.

cardiagn.com

Note: Use of non-OEM parts may cause driveability concerns.

The exhaust system carries exhaust gases, treated by the catalytic converter, through a resonator, if applicable and into the exhaust muffler where exhaust noise is lessened. In order to secure the exhaust pipe to the exhaust manifold, a flange and seal-joint coupling is utilized. The exhaust system may utilize a slip-joint coupling design with a clamp and a U-bolt or a flange connection with a gasket. Exhaust hangers and rubber insulators help to support the weight of the exhaust pipe along with insulating any exhaust system vibration, rattle, or noise. Exhaust hangers also space the exhaust system away from the underbody of the vehicle and allows the exhaust system to expand as the exhaust system warms up. Exhaust heat shields are used to protect the body and other components from damage due to the heat from the exhaust system. The exhaust system may be comprised of the following components:

- Exhaust manifold
- Exhaust pipes
- Catalytic converters
- Exhaust muffler
- Exhaust resonator, if equipped
- Exhaust tail pipe, if equipped
- Exhaust hangers
- Exhaust heat shields

Catalytic converter

The catalytic converter is an emission control device added to the engine exhaust system in order to reduce hydrocarbons (HC), carbon monoxide (CO), and oxides of nitrogen (NOx) pollutants from the exhaust gas. The catalytic converter is comprised of a ceramic monolith substrate, supported in insulation and housed within a sheet metal shell. The substrate may be washcoated with 3 noble metals:

- Platinum (Pt)
- Palladium (Pd)
- Rhodium (Rh)

The catalyst in the converter is not serviceable.

Muffler

The exhaust muffler reduces the noise levels of the engine exhaust by the use of tuning tubes. The tuning tubes create channels inside the exhaust muffler that lower the sound levels created by the combustion of the engine.

Resonator

Some exhaust systems are equipped with a resonator. The resonator, located either before or after the muffler, allows the use of mufflers with less back pressure. Resonators are used when vehicle characteristics require specific exhaust tuning.

cardiagn.com

Removal Procedure

Warning: Refer to Exhaust Service Warning.

Warning: Refer to Protective Goggles and Glove Warning.

1. Read the exhaust system cutting instructions. Refer to Exhaust System Cutting.
2. Remove the exhaust rear muffler. Refer to Exhaust Rear Muffler Replacement.
3. Remove the exhaust front pipe. Refer to Exhaust Front Pipe Replacement.
4. Remove all hanger insulators from the exhaust pipe and the underbody.

Installation Procedure

1. Install all hanger insulators to the exhaust pipe and the underbody.
2. Install the exhaust front pipe. Refer to Exhaust Front Pipe Replacement.
3. Install the exhaust rear muffler. Refer to Exhaust Rear Muffler Replacement.

cardiagn.com

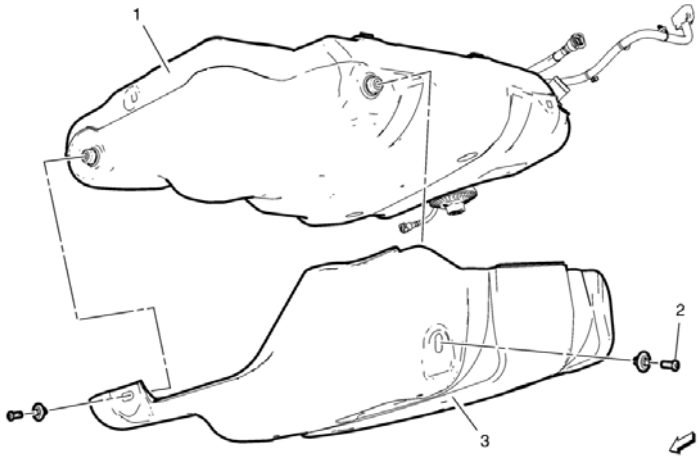

Fuel Tank Heat Shield Replacement

Callout	Component Name

Warning: Refer to Safety Goggles and Fuel Warning.

Warning: Refer to Actions to Take When Working with Fuel Warning.

Preliminary Procedures

Remove the fuel tank. Refer to Fuel Tank Replacement.

1	Fuel Tank
2	Fuel Tank Heat Shield Retaining Clamp (Qty: 2)
3	Fuel Tank Heat Shield

cardiagn.com

Warning: While engine is operating, the exhaust system will become extremely hot. To prevent burns avoid contacting a hot exhaust system.

carmanuals2.com

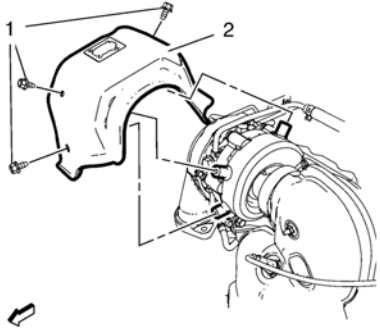

1. Install the turbocharger heat shield (2).

   Caution: Refer to Fastener Caution.

2. Install the 3 turbocharger heat shield retaining bolts (1) and tighten to **10 Y (89 lb in)**.

cardiagn.com

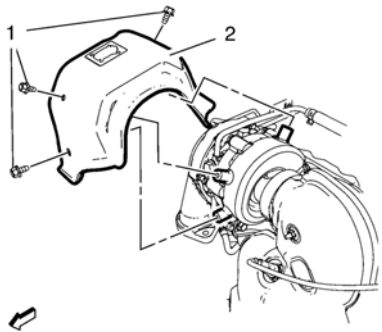

1. Remove 3 turbocharger heat shield retaining bolts (1).
2. Remove the turbocharger heat shield (2).

cardiagn.com

Removal Procedure

1. Remove the engine sight shield. Refer to Engine Sight Shield Replacement.

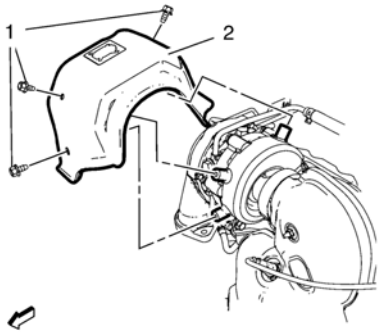

2. Remove 3 turbocharger heat shield retaining bolts (1).
3. Remove the turbocharger heat shield (2).

Installation Procedure

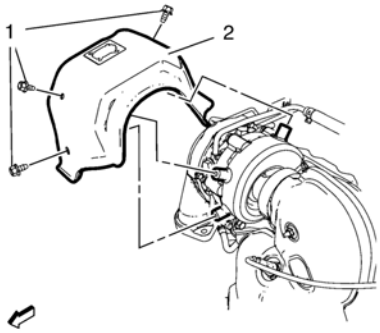

1. Install the turbocharger heat shield (2).

   Caution: Refer to Fastener Caution.
2. Install the 3 turbocharger heat shield retaining bolts (1), tighten to **10 Y (89 lb in).**
3. Install the engine sight shield. Refer to Engine Sight Shield Replacement.

cardiagn.com

Removal Procedure

1. Remove the battery cover. Refer to Battery Cover Replacement.
2. Disconnect the battery negative cable. Refer to Battery Negative Cable Disconnection and Connection.

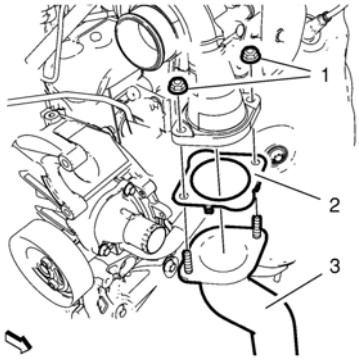

3. Remove the 2 charge air cooler inlet hose nuts (1).
4. Remove the charge air cooler inlet hose (3) from the turbocharger and remove the gasket (2).
5. Remove the intake air duct. Refer to Intake Air Duct Replacement.

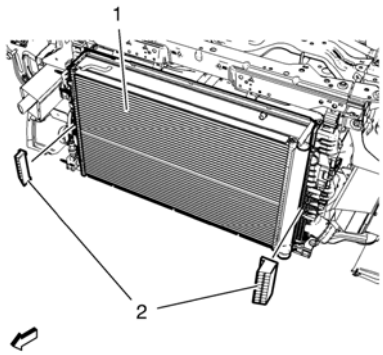

6. Disconnect the air conditioning refrigerant pressure sensor wiring harness plug from the air conditioning condenser.
7. Unclip the 2 radiator protector fenders (2) from the radiator (1).

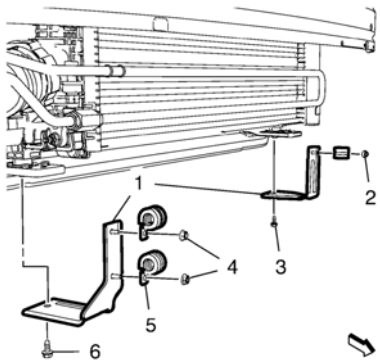

8. Remove the 3 power steering fluid cooling pipe loop bracket hose clamp nuts (2, 4).
9. Remove the 2 power steering fluid cooling pipe loop bracket bolts (3, 6).
10. Remove the 2 power steering fluid cooling pipe loop brackets (1).
11. Remove the radiator air seal.

cardiagn.com

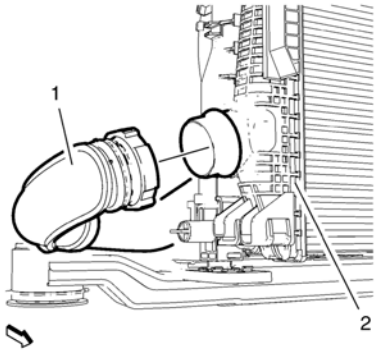

12. Remove the charge air cooler inlet hose (1) from the charge air cooler (2).
13. Remove the radiator upper brackets. Refer to Radiator Upper Bracket Replacement.

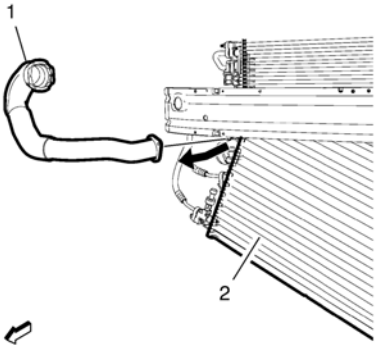

14. Unclip the air conditioning condenser (2) from the charge air cooler.
15. Hang the air conditioning condenser (2) aside and secure with safety belts.

Note: Move the radiator forward to remove the charge air cooler inlet hose.

16. Remove the charge air cooler inlet hose (1) downwards from the vehicle.

Installation Procedure

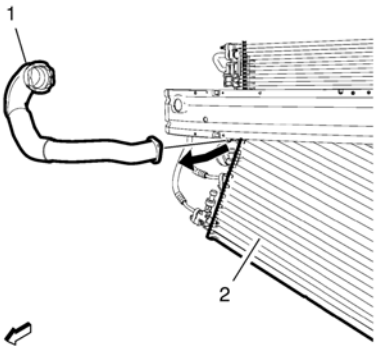

Note: Move the radiator forward to install the charge air cooler inlet hose.

1. Position the charge air cooler inlet hose (1) to the vehicle.
2. Install the air conditioning condenser (2) to the charge air cooler.

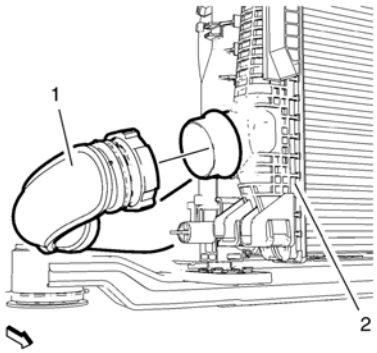

cardiagn.com

3. Install the charge air cooler inlet hose (1) to the charge air cooler (2).
4. Install the radiator upper brackets. Refer to Radiator Upper Bracket Replacement.

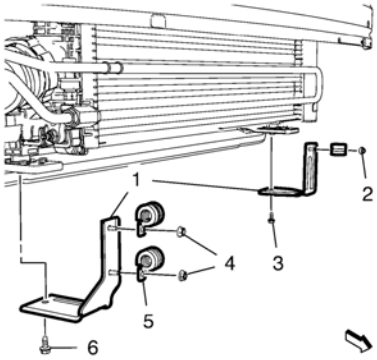

Caution: Refer to Fastener Caution.

5. Install the 2 power steering fluid cooling pipe loop brackets (1).
6. Install the 2 power steering fluid cooling pipe loop bracket bolts (3, 6) and tighten to **9 Y (80 lb in)**.
7. Install the 3 power steering fluid cooling pipe loop bracket hose clamp nuts (2, 4) and tighten to **9 Y (80 lb in)**.
8. Install the radiator air seal.

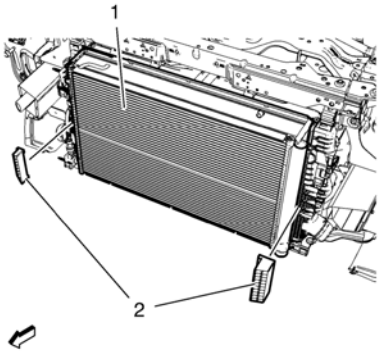

9. Clip in the 2 radiator protector fenders (2) to the radiator (1).
10. Connect the air conditioning refrigerant pressure sensor wiring harness plug to the air conditioning condenser.
11. Install the intake air duct. Refer to Intake Air Duct Replacement.

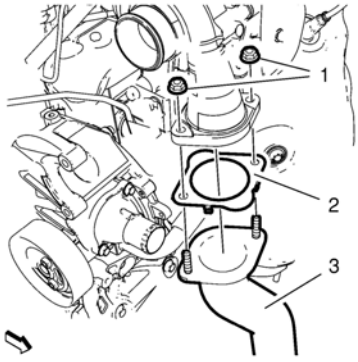

12. Install a NEW gasket (2).
13. Install the charge air cooler inlet hose (3) to the turbocharger.
14. Install the 2 charge air cooler inlet hose nuts (1) and tighten to **22 Y (16 lb ft)**.
15. Connect the battery negative cable. Refer to Battery Negative Cable Disconnection and Connection.
16. Install the battery cover. Refer to Battery Cover Replacement.

cardiagn.com

Removal Procedure

1. Remove the engine sight shield. Refer to Engine Sight Shield Replacement.
2. Remove the battery tray. Refer to Battery Tray Replacement.
3. Remove the engine control module. Refer to Engine Control Module Replacement.
4. Remove the radiator surge tank. Refer to Radiator Surge Tank Replacement.
5. Unclip the engine wiring harness retaining clip from the charge air cooler outlet front hose.
6. Unclip the transmission vent hose from the charge air cooler outlet front hose.

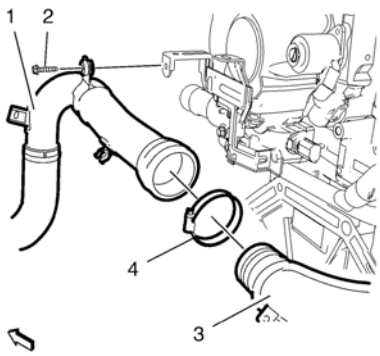

7. Remove the charge air cooler outlet front hose bracket bolt (2).
8. Loosen the charge air cooler outlet front hose to rear hose clamp (4).
9. Detach the charge air cooler outlet front hose (1) along with the clamp (4) from the charge air cooler outlet rear hose (3).

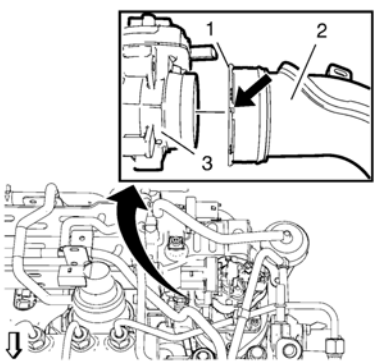

10. Unclip the 2 wiring harness retaining clips from the charge air cooler outlet rear hose (2).
11. Place a suitable tool at the rabbet (1) and rotate the lock ring counterclockwise.
12. Detach the charge air cooler outlet rear hose (2) from the throttle body (3).
13. Remove the charge air cooler outlet rear hose (2).

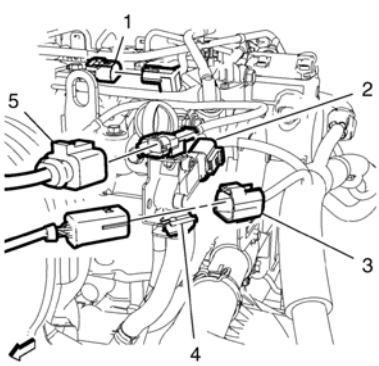

14. Disconnect the exhaust temperature sensor wiring harness plug (5).
15. Unclip the heated oxygen sensor wiring harness plug (3) from the retainer clip (4) and disconnect the heated oxygen sensor wiring harness plug (3).
16. Disconnect the exhaust pressure differential sensor hose wiring harness plug (2).

cardiagn.com

17. Unclip the engine wiring harness retaining clip from the charge air cooler outlet front hose.
18. Unclip the transmission vent hose from the charge air cooler outlet front hose.

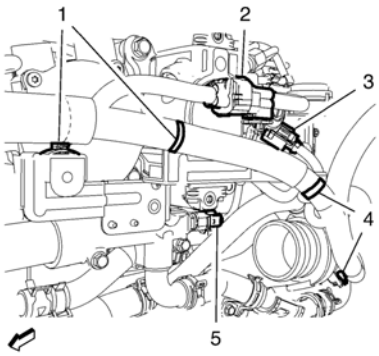

19. Unclip the 2 wiring harness clips (1) from the wiring harness bracket.
20. Remove the upper radiator brackets. Refer to Radiator Upper Bracket Replacement.
21. Remove the intake air duct. Refer to Intake Air Duct Replacement.
22. Remove the left radiator protector fender from the radiator.
23. Remove the charge air cooler inlet and outlet hose from the charge air cooler.

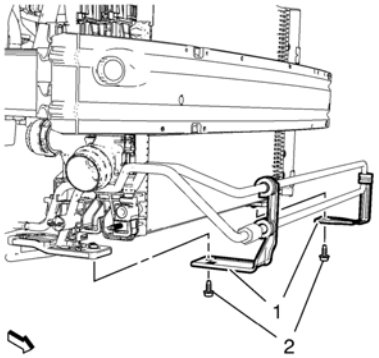

24. Remove the power steering fluid cooling pipe loop bracket bolts (2).
25. Hang the power steering fluid cooling pipe loop aside.

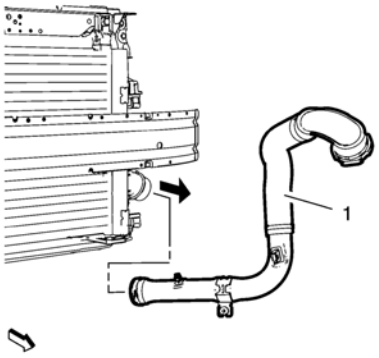

Note: Move the radiator forward to remove the charge air cooler outlet hose.

26. Remove the charge air cooler outlet hose (1) downwards from the vehicle.

Installation Procedure

cardiagn.com

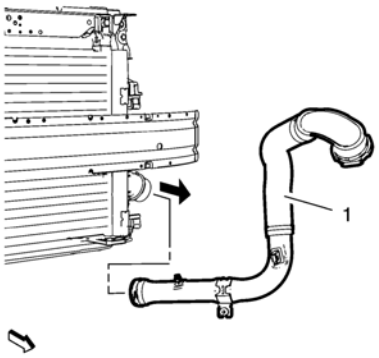

Note: Move the radiator forward to install the charge air cooler outlet hose.

1. Position the charge air cooler outlet hose (1) to the vehicle.

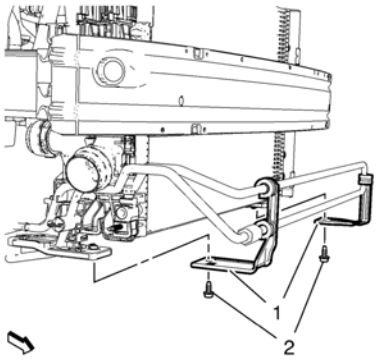

Caution: Refer to Fastener Caution.

2. Install the power steering fluid cooling pipe loop.
3. Install the 2 power steering fluid cooling pipe loop bracket bolts (2) and tighten to **9 Y (80 lb in)**.
4. Install the charge air cooler inlet and outlet hose to the charge air cooler.
5. Install the left radiator protector fender to the radiator.
6. Install the radiator upper brackets. Refer to Radiator Upper Bracket Replacement.
7. Install the intake air duct. Refer to Intake Air Duct Replacement.

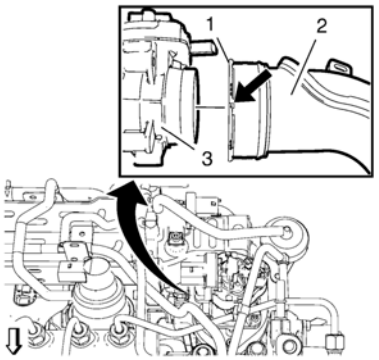

Note: Make sure that the retaining ring is locked.

8. Install the charge air cooler outlet rear hose (2) to the throttle body (3).
9. Clip in the 2 wiring harness retaining clips to the charge air cooler outlet rear hose (2).

cardiagn.com

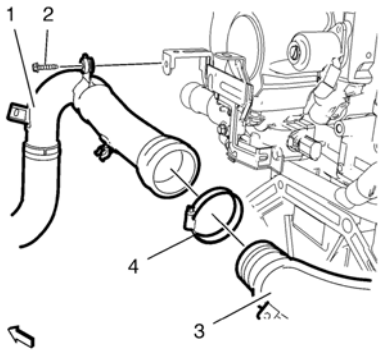

10. Install the charge air cooler outlet front hose (1) along with the clamp (4) to the charge air cooler outlet rear hose (3).

Caution: Refer to Fastener Caution.

11. Install the charge air cooler outlet front hose bracket bolt (2) and tighten to **9 Y (80 lb in)**.
12. Tighten the charge air cooler outlet front hose tor rear hose clamp (4) to **4 Y (35 lb in)**.
13. Clip in the engine wiring harness retaining clip to the charge air cooler outlet front hose.

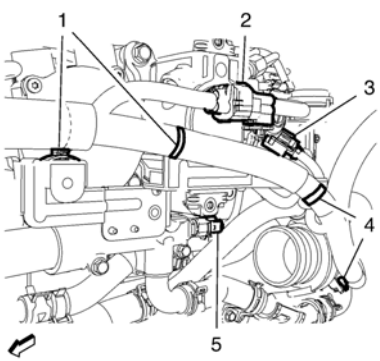

14. Clip in the 2 wiring harness clips (1) to the wiring harness bracket.

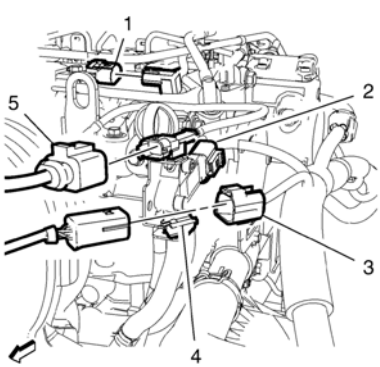

15. Connect the exhaust temperature sensor wiring harness plug (5).
16. Clip the heated oxygen sensor wiring harness plug (3) to the retainer clip (4) and connect the heated oxygen sensor wiring harness plug (3).
17. Connect the exhaust pressure differential sensor hose wiring harness plug (2).
18. Clip in the transmission vent hose to the charge air cooler outlet front hose.
19. Install the radiator surge tank. Refer to Radiator Surge Tank Replacement.
20. Install the engine control module. Refer to Engine Control Module Replacement.
21. Install the battery tray. Refer to Battery Tray Replacement.
22. Install the engine sight shield. Refer to Engine Sight Shield Replacement.

cardiagn.com

Removal Procedure

1. Remove the engine sight shield. Refer to Engine Sight Shield Replacement.
2. Remove the battery tray. Refer to Battery Tray Replacement.
3. Remove the engine control module. Refer to Engine Control Module Replacement.
4. Remove the radiator surge tank. Refer to Radiator Surge Tank Replacement.
5. Unclip the engine wiring harness retaining clip from the charge air cooler outlet front hose.

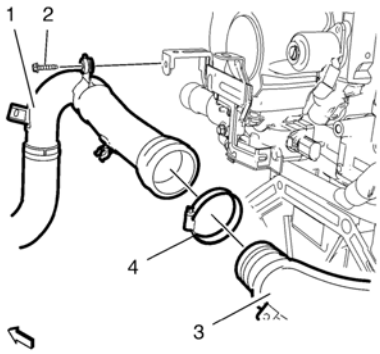

6. Remove the charge air cooler outlet front hose bracket bolt (2).
7. Loosen the charge air cooler outlet front hose to rear hose clamp (4).
8. Detach the charge air cooler outlet front hose (1) along with the clamp (4) from the charge air cooler outlet rear hose (3).

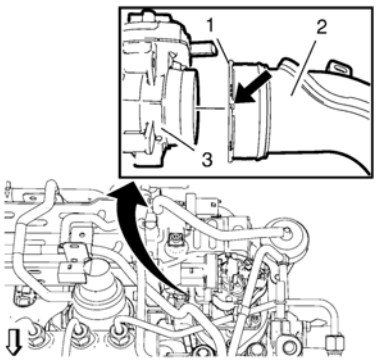

9. Unclip the 2 wiring harness retaining clips from the charge air cooler outlet rear hose (2).
10. Place a suitable tool at the rabbet (1) and rotate the lock ring counterclockwise.
11. Detach the charge air cooler outlet rear hose (2) from the throttle body (3).
12. Remove the charge air cooler outlet rear hose (2).
13. Remove the front bumper fascia. Refer to Front Bumper Fascia Removal and Installation.

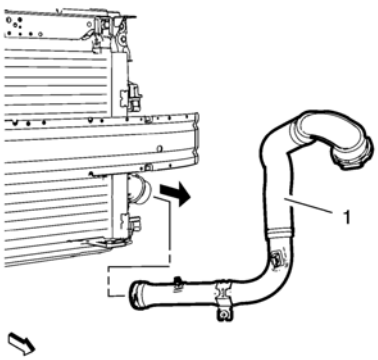

14. Unclip the charge air cooler outlet hose (1) from the charge air cooler.
15. Remove the charge air cooler outlet hose (1) downwards from the vehicle.

cardiagn.com

Installation Procedure

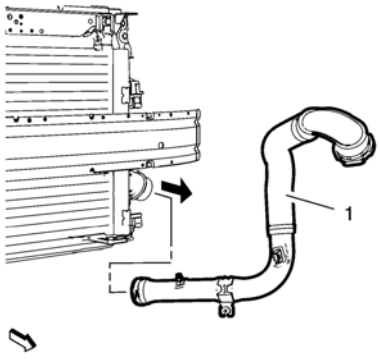

1. Position the charge air cooler outlet hose (1) to the vehicle.
2. Connect the charge air cooler outlet hose (1) to the charge air cooler.
3. Install the front bumper fascia. Refer to Front Bumper Fascia Removal and Installation.

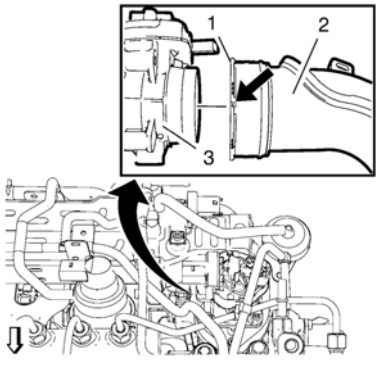

Note: Make sure that the retaining ring is locked.

4. Install the charge air cooler outlet rear hose (2) to the throttle body (3).
5. Clip in the 2 wiring harness retaining clips to the charge air cooler outlet rear hose (2).

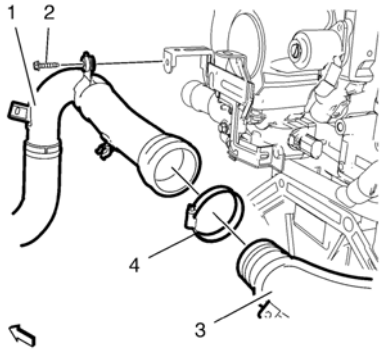

6. Install the charge air cooler outlet front hose (1) along with the clamp (4) to the charge air cooler outlet rear hose (3).

Caution: Refer to Fastener Caution.

7. Install the charge air cooler outlet front hose bracket bolt (2) and tighten to **9 Y (80 lb in)**.
8. Tighten the charge air cooler outlet front hose tor rear hose clamp (4) to **4 Y (35 lb in)**.
9. Clip in the engine wiring harness retaining clip to the charge air cooler outlet front hose.
10. Install the radiator surge tank. Refer to Radiator Surge Tank Replacement.
11. Install the engine control module. Refer to Engine Control Module Replacement.
12. Install the battery tray. Refer to Battery Tray Replacement.
13. Install the engine sight shield. Refer to Engine Sight Shield Replacement.

cardiagn.com

Removal Procedure

1. Remove the battery cover. Refer to Battery Cover Replacement.
2. Disconnect the battery negative cable. Refer to Battery Negative Cable Disconnection and Connection.
3. Remove the intake air duct. Refer to Intake Air Duct Replacement.
4. Remove the radiator air seal.

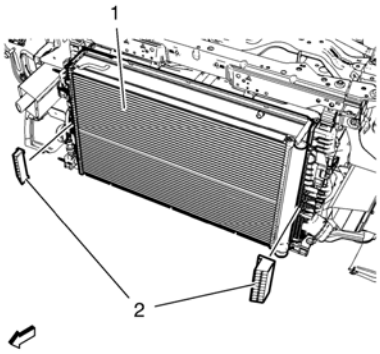

5. Disconnect the air conditioning refrigerant pressure sensor wiring harness plug from the air conditioning condenser.
6. Unclip the 2 radiator protector fenders (2) from the radiator (1).

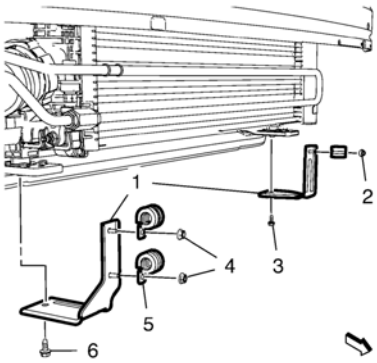

7. If equipped, remove the 3 power steering fluid cooling loop pipe bracket hose clamp nuts (2, 4).
8. If equipped, remove the 3 hose clamps (5).
9. If equipped, remove the 2 power steering fluid cooling loop pipe bracket bolts (3, 6).
10. If equipped, remove the 2 power steering fluid cooling loop pipe brackets (1).

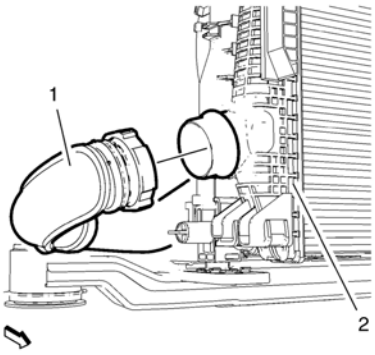

11. Remove the charge air cooler inlet hose (1) from the charge air cooler (2).

cardiagn.com

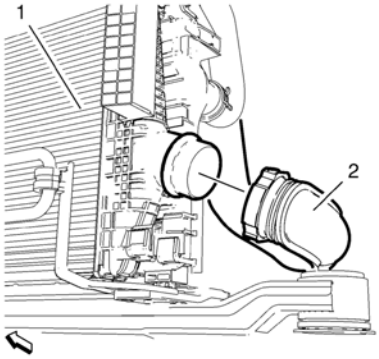

12. Remove the charge air cooler outlet hose (2) from the charge air cooler (1).

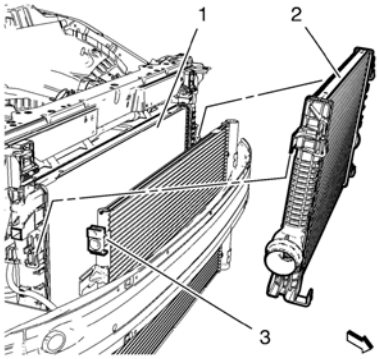

Note: Handle the cooling module with care.

13. Remove the condenser (3) from the charge air cooler (2) and secure with safety belts.
14. Remove the charge air cooler (2) in top direction from the radiator (1).

Installation Procedure

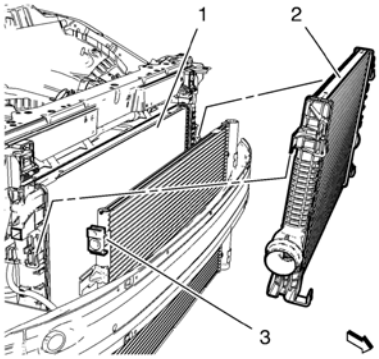

Note: Handle the cooling module with care.

1. Install the charge air cooler (2) to the radiator (1).
2. Remove the safety belts and install the condenser (3) to the charge air cooler (2).

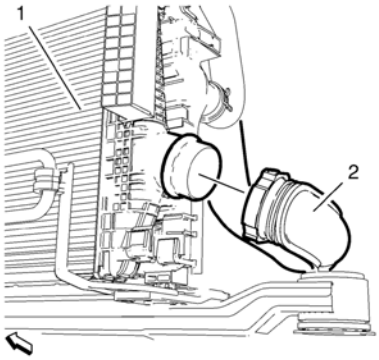

3. Install the charge air cooler outlet hose (2) to the charge air cooler (1).

cardiagn.com

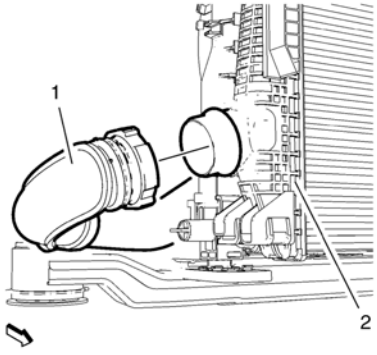

4. Install the charge air cooler inlet hose (1) to the charge air cooler (2).

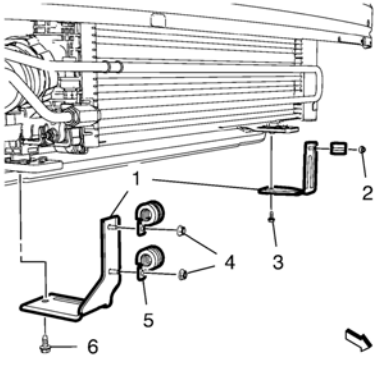

Caution: Refer to Fastener Caution.

5. If equipped, install the 2 power steering fluid cooling loop pipe brackets (1).
6. If equipped, install the 2 power steering fluid cooling loop pipe bracket bolts (3, 6) and tighten to **9 Y (80 lb in)**.
7. If equipped, install the 3 hose clamps (5).
8. If equipped, install the 3 power steering fluid cooling loop pipe bracket hose clamp nuts (2, 4) and tighten to **9 Y (80 lb in)**.

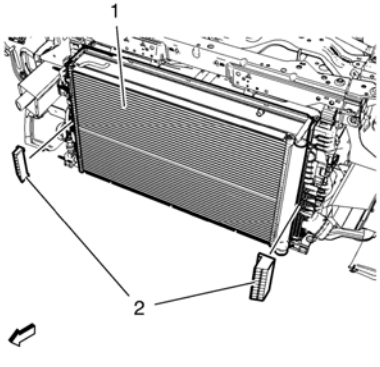

9. Clip in the 2 radiator protector fenders (2) to the radiator (1).
10. Connect the air conditioning refrigerant pressure sensor wiring harness plug to the air conditioning condenser.
11. Install the radiator air seal.
12. Install the intake air duct. Refer to Intake Air Duct Replacement.
13. Connect the battery negative cable. Refer to Battery Negative Cable Disconnection and Connection.
14. Install the battery cover. Refer to Battery Cover Replacement.

cardiagn.com

1. Remove the radiator. Refer to Radiator Replacement.
2. Remove the charge air cooler. Refer to Charge Air Cooler Replacement.

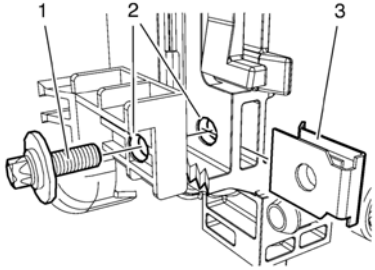

3. Drill hole in the charge air cooler bracket and radiator bracket (2) using a **7 mm (0.28 in)**drill.
4. Install the j-clip (3) to the radiator.
5. Install the radiator. Refer to Radiator Replacement.
6. Install the charge air cooler to the radiator. Refer to Charge Air Cooler Replacement.

Caution: Refer to Fastener Caution

7. Install the repair bolt (1) with locking compound and tighten to **5 Y (45 lb in)**.

cardiagn.com

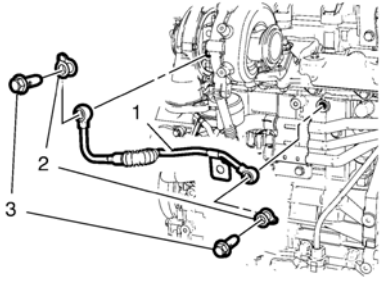

1. Install the turbocharger coolant feed pipe (1) and NEW gaskets (2).

   Caution: Refer to Fastener Caution.

2. Install the 2 hollow bolts (3) to the turbocharger coolant feed pipe (1) and tighten to **32 Y (24 lb ft)**.

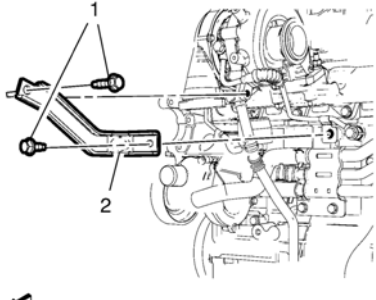

3. Install the turbocharger bracket (2).
4. Install the 2 turbocharger bracket bolts (1) to the turbocharger bracket (2) and tighten to **25 Y (18 lb ft)**.

cardiagn.com

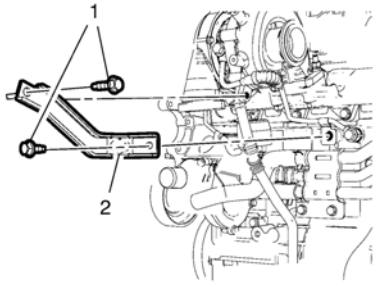

1. Remove the 2 turbocharger bracket bolts (1) from the turbocharger and engine block.
2. Remove the turbocharger bracket (2).

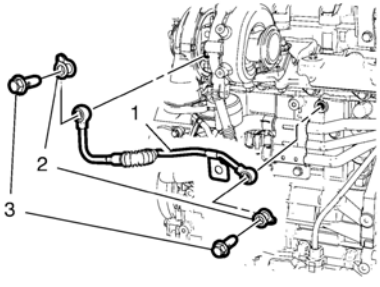

3. Remove the 2 hollow bolts (3) from the turbocharger and engine block.
4. Remove the turbocharger coolant feed pipe (1).
5. Remove the 2 turbocharger coolant feed pipe gasket (2).

cardiagn.com

Removal Procedure

1. Disconnect the battery negative cable. Refer to Battery Negative Cable Disconnection and Connection.

   Warning: Refer to Exhaust Service Warning.

2. Remove the turbocharger heat shield. Refer to Turbocharger Heat Shield Replacement.
3. Remove the exhaust particulate filter. Refer to Exhaust Particulate Filter Replacement.

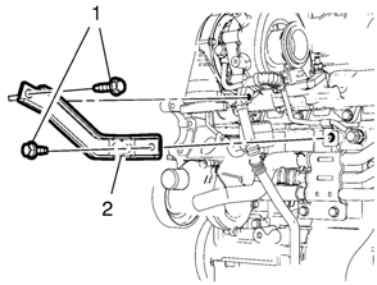

4. Remove the 2 turbocharger bracket bolts (1) from the turbocharger and the engine block.
5. Remove the turbocharger bracket (2).

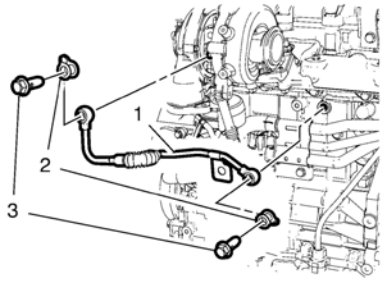

6. Remove the 2 hollow bolts (3) from the turbocharger and the engine block.
7. Remove the turbocharger coolant feed pipe (1).
8. Remove the 2 turbocharger coolant feed pipe gaskets (2).

Installation Procedure

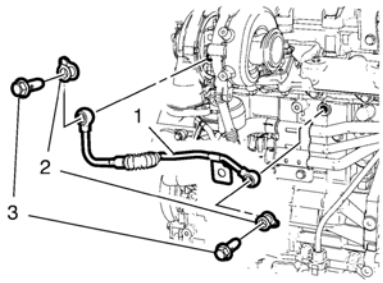

1. Install the turbocharger coolant feed pipe (1) with NEW gaskets (2).

   Caution: Refer to Fastener Caution.

2. Install the 2 hollow bolts (3) to the turbocharger coolant feed pipe (1) and tighten to **32 Y (24 lb ft)**.

cardiagn.com

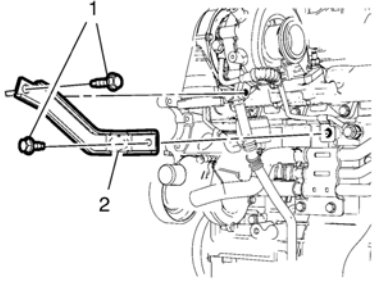

3. Install the turbocharger bracket (2).
4. Install the 2 bolts (1) to the turbocharger bracket (2) and tighten to **25 Y (18 lb ft)**.
5. Install the exhaust particulate filter. Refer to Exhaust Particulate Filter Replacement.
6. Install the turbocharger heat shield. Refer to Turbocharger Heat Shield Replacement.
7. Connect the battery negative cable. Refer to Battery Negative Cable Disconnection and Connection.

cardiagn.com

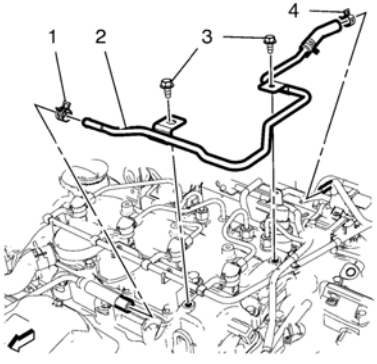

1. Install the turbocharger coolant return rear pipe (2).

Caution: Refer to Fastener Caution.

2. Install the 2 bolts (3) to the turbocharger coolant return rear pipe brackets and tighten to **10 Y (89 lb in)**.
3. Install the 2 clamps (1, 4) to the turbocharger coolant return rear pipe (2).

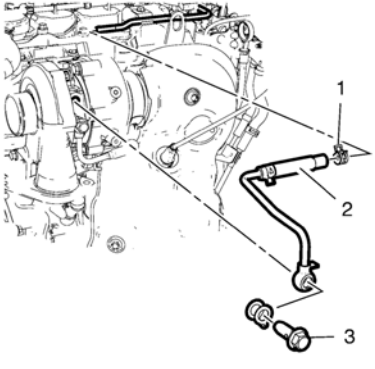

4. Install the turbocharger coolant return front pipe (2).
5. Install the hollow bolt (3) to the turbocharger coolant return front pipe (2) and a NEW gasket and tighten to **32 Y (24 lb ft)**.
6. Install the clamp (1) to the turbocharger coolant return front pipe (2).

cardiagn.com

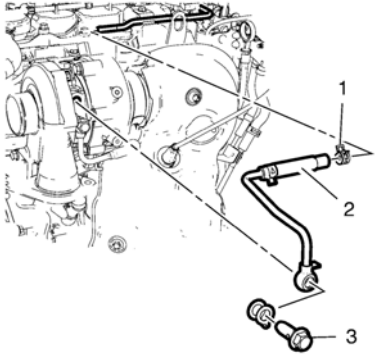

1. Remove the hollow bolt (3) from the turbocharger.
2. Remove the clamp (1) from the turbocharger coolant return front pipe (2).
3. Remove the turbocharger coolant return front pipe (2).

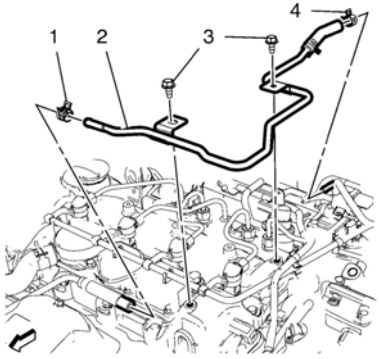

4. Remove the clamp (4) from the turbocharger coolant return rear pipe (2).
5. Remove the 2 bolts (3) from the camshaft cover.
6. Remove the turbocharger coolant return rear pipe (2).

cardiagn.com

Removal Procedure

1. Disconnect the battery negative cable. Refer to Battery Negative Cable Disconnection and Connection.
2. Remove the engine sight shield. Refer to Engine Sight Shield Replacement.

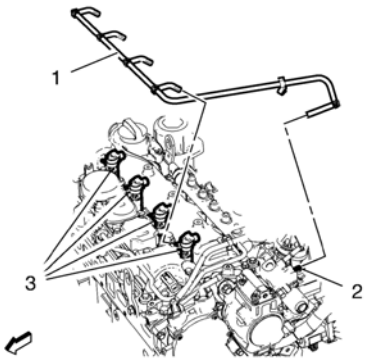

3. Unclip the fuel injection fuel return hose (2) from the positive crankcase ventilation valve.
4. Unclip the fuel return hose from the 2 retainer clips.
5. Remove the fuel injection fuel return hose (1) from the fuel injection pump (2) and the fuel injectors (3).
6. Remove the fuel injection fuel return hose (1).

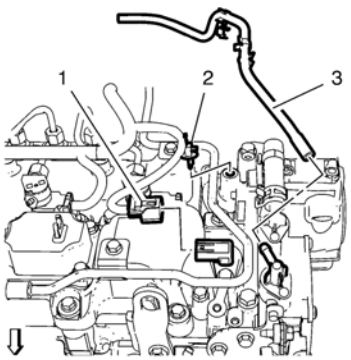

7. Unclip and remove the vacuum hose (3) from the vacuum pump.
8. Disconnect the camshaft position sensor wiring harness plug (1).
9. Unclip the camshaft position sensor wiring harness retaining clip (2) and hang the wiring harness aside.

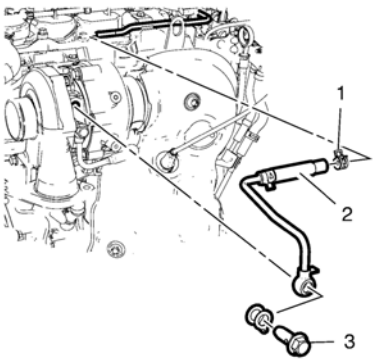

10. Remove the hollow bolt (3) from the turbocharger.
11. Remove the clamp (1) from the turbocharger coolant return front pipe (2).
12. Remove the turbocharger coolant return front pipe (2).

cardiagn.com

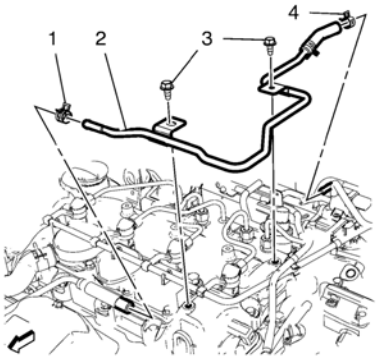

13. Remove the clamp (4) from the turbocharger coolant return rear pipe (2).
14. Remove the 2 bolts (3) from the camshaft cover.
15. Remove the turbocharger coolant return rear pipe (2).

Installation Procedure

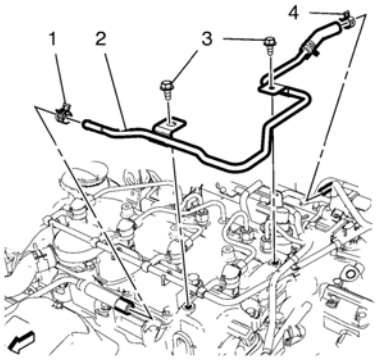

1. Install the turbocharger coolant return rear pipe (2).

Caution: Refer to Fastener Caution.

2. Install the 2 turbocharger coolant return pipe bracket bolts (3) and tighten to **10 Y (89 lb in)**.
3. Install both clamps (1, 4) to the turbocharger coolant return rear pipe (2).

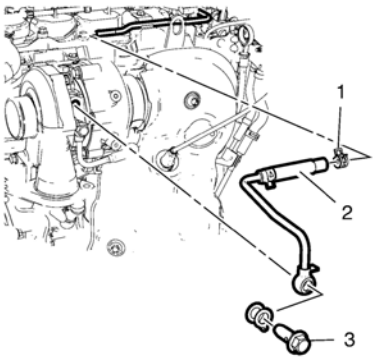

4. Install the turbocharger coolant return pipe (2).
5. Install the hollow bolt (3) to the turbocharger coolant return pipe (2) with a NEW gasket and tighten to **32 Y (24 lb ft)**.
6. Install the clamp (1) to the turbocharger coolant return pipe (2).

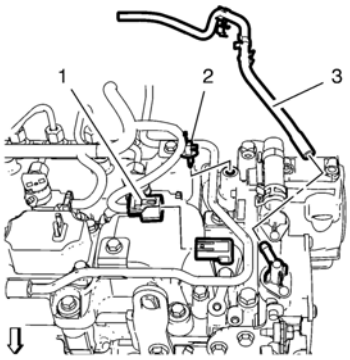

cardiagn.com

7. Clip in the camshaft position sensor wiring harness retaining clip (2).
8. Connect the camshaft position sensor wiring harness plug (1).
9. Install the vacuum hose (3) to the vacuum pump and clip in the vacuum hose retainer.

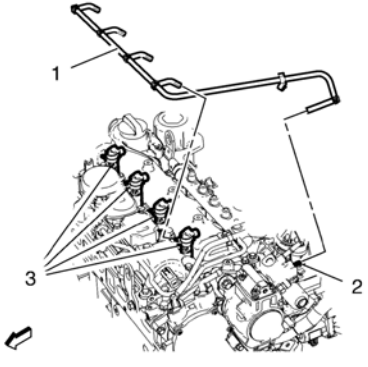

10. Install the fuel injection fuel return hose (1) to the fuel injection pump (2) and the fuel injectors (3).
11. Clip the fuel return hose into the 2 retainer clips.
12. Clip the fuel injection fuel return hose (2) to the positive crankcase ventilation valve.
13. Install the engine sight shield. Refer to Engine Sight Shield Replacement.
14. Connect the battery negative cable. Refer to Battery Negative Cable Disconnection and Connection.

cardiagn.com

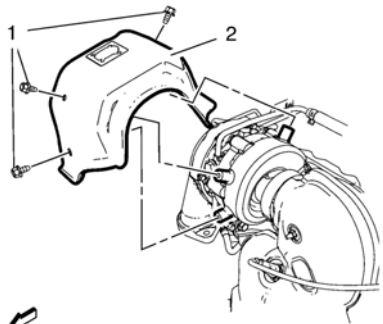

1. Install the turbocharger heat shield (2).

   Caution: Refer to Fastener Caution.

2. Install the 3 turbocharger heat shield retaining bolts (1) and tighten to **10 Y (89 lb in)**.

cardiagn.com

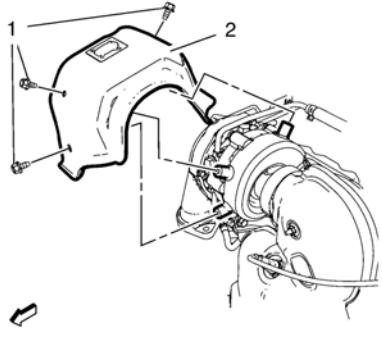

1. Remove 3 turbocharger heat shield retaining bolts (1).
2. Remove the turbocharger heat shield (2).

cardiagn.com

Removal Procedure

1. Remove the engine sight shield. Refer to Engine Sight Shield Replacement.

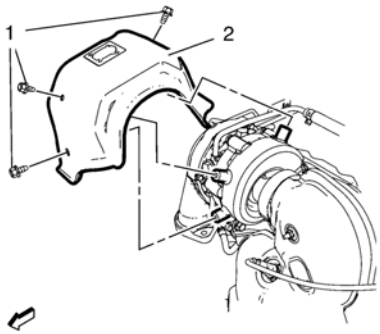

2. Remove 3 turbocharger heat shield retaining bolts (1).
3. Remove the turbocharger heat shield (2).

Installation Procedure

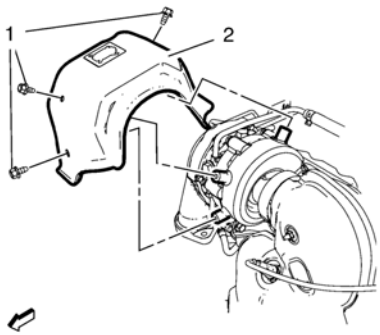

1. Install the turbocharger heat shield (2).

   Caution: Refer to Fastener Caution.
2. Install the 3 turbocharger heat shield retaining bolts (1), tighten to **10 Y (89 lb in).**
3. Install the engine sight shield. Refer to Engine Sight Shield Replacement.

cardiagn.com

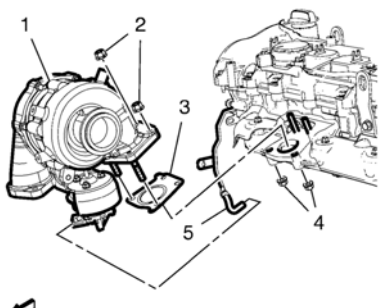

1. Install the turbocharger (1) and a NEW gasket (3) to the exhaust manifold.

   Caution: Refer to Fastener Caution.

2. Install the 4 exhaust turbocharger inlet pipe nuts (2, 4) and tighten to **30 Y (22 lb ft)**.
3. Install the charge air control vacuum hose (5) to the turbocharger (1).

cardiagn.com

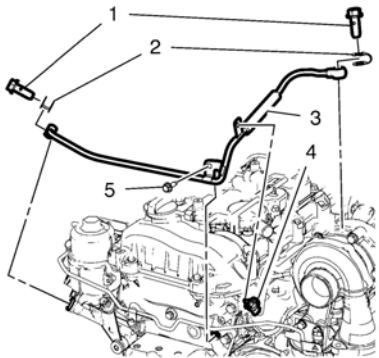

1. Install the turbocharger oil feed pipe (3) and 2 NEW turbocharger oil feed pipe gaskets (2).

Caution: Refer to Fastener Caution.

2. Install the 2 hollow bolts (1) to the turbocharger oil feed pipe (3) and tighten to **32 Y (24 lb ft)**.
3. Install the turbocharger oil feed pipe bracket bolt (5) and tighten to **10 Y (89 lb in)**.
4. Clip the wiring harness exhaust temperature sensor plug (4) to the turbocharger oil feed pipe bracket.

cardiagn.com

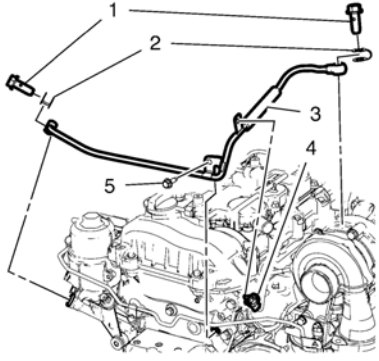

1. Unclip the wiring harness exhaust temperature sensor plug (4) from the turbocharger oil feed pipe bracket.
2. Remove the turbocharger oil feed pipe bracket bolt (5) from the engine front cover.
3. Remove the 2 hollow bolts (1) from the oil filter assembly and turbocharger.
4. Remove the turbocharger oil feed pipe (3).
5. Remove the 2 turbocharger oil feed pipe gaskets (2).

cardiagn.com

Removal Procedure

1. Remove the engine sight shield. Refer to Engine Sight Shield Replacement.
2. Remove the air cleaner assembly. Refer to Air Cleaner Assembly Replacement.
3. Remove the air cleaner outlet duct. Refer to Air Cleaner Outlet Duct Replacement.
4. Remove the turbocharger coolant return pipe from the turbocharger. Refer to Turbocharger Coolant Return Pipe Replacement.

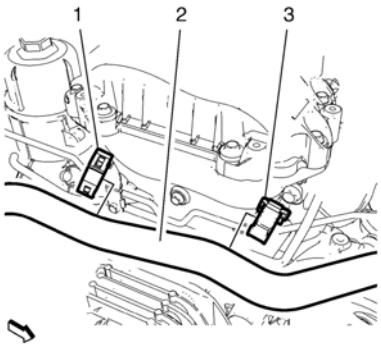

5. Open the retainer clamp (1).
6. Unclip the power steering fluid reservoir outlet hose (2) from the clamp (1) and the bracket (3).
7. Hang the power steering fluid reservoir outlet hose (2) aside.

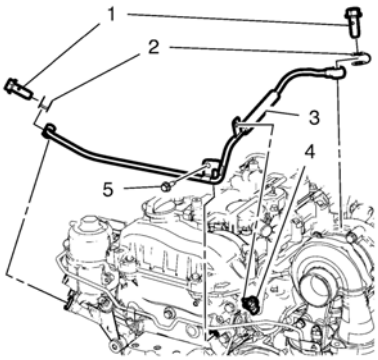

8. Unclip the exhaust temperature sensor wiring harness plug (4) from the turbocharger oil feed pipe bracket.
9. Remove the turbocharger oil feed pipe bracket bolt (5) from the engine front cover.
10. Remove the 2 hollow bolts (1) from the oil filter assembly and turbocharger.
11. Remove the turbocharger oil feed pipe (3).
12. Remove the 2 turbocharger oil feed pipe gaskets (2).

Installation Procedure

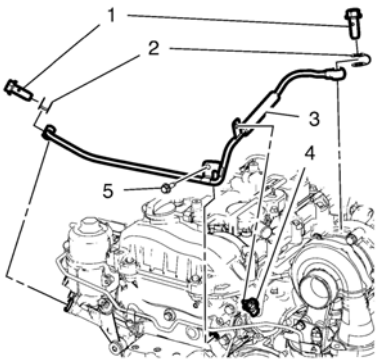

cardiagn.com

1. Install the turbocharger oil feed pipe (3) with 2 NEW gaskets (2).

Caution: Refer to Fastener Caution.

2. Install both hollow bolts (1) to the turbocharger oil feed pipe (3) and tighten to **32 Y (24 lb ft)**.
3. Install the turbocharger oil feed pipe bracket bolt (5) and tighten to **10 Y (89 lb in)**.
4. Clip in the exhaust temperature sensor wiring harness plug (4) to the turbocharger oil feed pipe bracket.

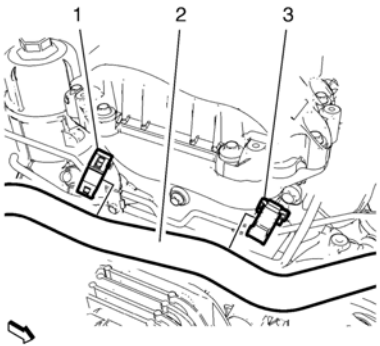

5. Install the power steering fluid reservoir outlet hose (2) to the clamp (1) and the bracket (3).
6. Close the retainer clamp (1).
7. Install the turbo charger coolant return pipe to the turbocharger. Refer to Turbocharger Coolant Return Pipe Replacement.
8. Install the air cleaner outlet duct. Refer to Air Cleaner Outlet Duct Replacement.
9. Install the air cleaner assembly. Refer to Air Cleaner Assembly Replacement.
10. Install the engine sight shield. Refer to Engine Sight Shield Replacement.

cardiagn.com

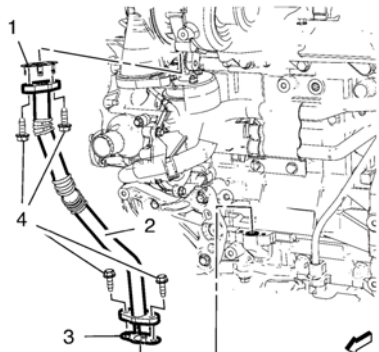

1. Install the turbocharger oil return pipe (2). Use 2 NEW gaskets (1, 3).

   Caution: Refer to Fastener Caution.

2. Install the 4 turbocharger oil return pipe bolts (4) to the turbocharger oil return pipe (2) and tighten to **10 Y (89 lb in)**.

cardiagn.com

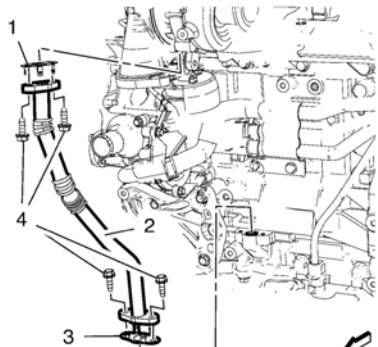

1. Remove 4 turbocharger oil return pipe bolts (4) from the turbocharger and upper oil pan.
2. Remove the turbocharger oil return pipe (2).
3. Remove the 2 turbocharger oil return pipe gaskets (1, 3).

cardiagn.com

Removal Procedure

1. Remove the battery negative cable. Refer to Battery Negative Cable Disconnection and Connection.
2. Remove the engine sight shield. Refer to Engine Sight Shield Replacement.
3. Remove the charge air cooler inlet hose. Refer to Charge Air Cooler Inlet Hose Replacement.
4. Remove the exhaust particulate filter. Refer to Exhaust Particulate Filter Removal.

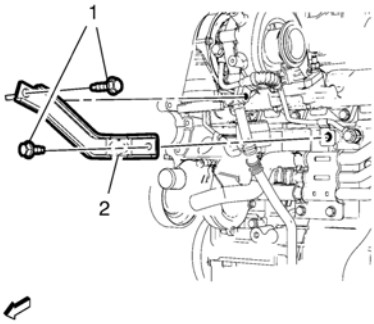

5. Remove the 2 turbocharger bracket bolts (1).
6. Remove the turbo charger bracket (2).

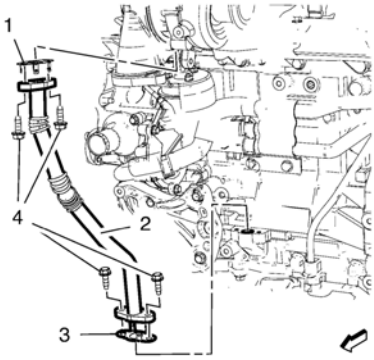

7. Remove the 4 turbocharger oil return pipe bolts (4).
8. Remove the turbocharger oil return pipe (2) and the 2 turbocharger oil return pipe gaskets (1, 3).

Installation Procedure

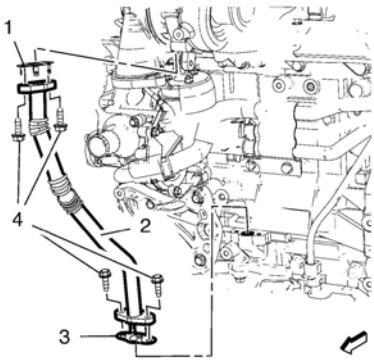

1. Install the turbocharger oil return pipe (2) and 2 NEW gaskets (1, 3).

   Caution: Refer to Fastener Caution.
2. Install the 4 turbocharger oil return pipe bolts (4) and tighten to **10 Y (89 lb in)**.

cardiagn.com

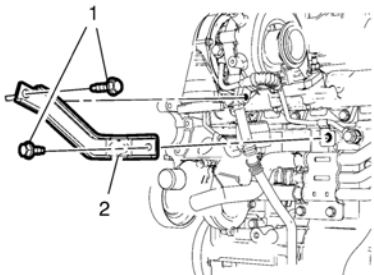

3. Install the turbocharger bracket (2).
4. Install the 2 bolts (1) to the turbocharger bracket (2) and tighten to **25 Y (18 lb ft)**.
5. Install the exhaust particulate filter. Refer to Exhaust Particulate Filter Installation.
6. Install the charge air cooler inlet hose. Refer to Charge Air Cooler Inlet Hose Replacement.
7. Install the engine sight shield. Refer to Engine Sight Shield Replacement.
8. Install the battery negative cable. Refer to Battery Negative Cable Disconnection and Connection.

cardiagn.com

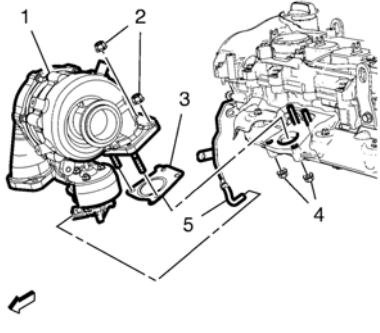

1. Remove the charge air control vacuum hose (5) from the turbocharger (1).
2. Remove the 4 exhaust turbocharger inlet pipe nuts (2, 4).
3. Remove the turbocharger (1).
4. Remove the turbocharger gasket (3).

cardiagn.com

Removal Procedure

Warning: Always wear protective goggles and gloves when removing exhaust parts as falling rust and sharp edges from worn exhaust components could result in serious personal injury.

Caution: Do not bend the exhaust flex decoupler more than 3 degrees in any direction. Movement of more than 3 degrees will damage the exhaust flex decoupler.

1. Disconnect battery negative cable. Refer to Battery Negative Cable Disconnection and Connection
2. Remove the engine sight shield. Refer to Engine Sight Shield Replacement.
3. Remove the air cleaner outlet duct. Refer to Air Cleaner Outlet Duct Replacement.
4. Remove the turbocharger heat shield. Refer to Turbocharger Heat Shield Replacement.
5. Remove the turbocharger coolant return pipe. Refer to Turbocharger Coolant Return Pipe Replacement.
6. Remove the turbocharger oil feed pipe. Refer to Turbocharger Oil Feed Pipe Replacement.
7. Remove the charge air cooler inlet air hose. Refer to Charge Air Cooler Inlet Hose Replacement.
8. Remove the exhaust particulate filter. Refer to Exhaust Particulate Filter Replacement.
9. Remove the turbo charger coolant feed pipe. Refer to Turbocharger Coolant Feed Pipe Replacement.
10. Disconnect the exhaust temperature sensor position 1 wiring harness plug. Refer to Exhaust Temperature Sensor Replacement - Position 1.

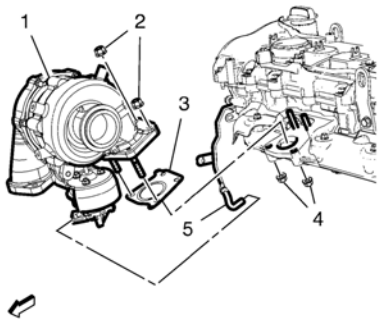

11. Remove the charge air control vacuum hose (5) from the turbocharger (1).
12. Disconnect turbocharger wastegate actuator wiring harness plug.
13. Remove the turbocharger oil return pipe. Refer to Turbocharger Oil Return Pipe Replacement.
14. Remove the 4 exhaust turbocharger inlet pipe nuts (2, 4).
15. Remove the turbocharger (1).
16. Remove the turbocharger gasket (3).
17. Remove the exhaust temperature sensor position 1 from the turbocharger. Refer to Exhaust Temperature Sensor Replacement - Position 1.

Installation Procedure

1. Install the exhaust temperature sensor position 1 to the turbo charger. Refer to Exhaust Temperature Sensor Replacement - Position 1.

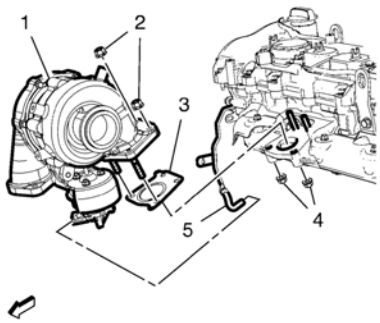

2. Install the turbocharger (1) to the exhaust manifold. Use a NEW gasket (3).

Caution: Refer to Fastener Caution.

3. Install the exhaust turbocharger inlet pipe nuts (2, 4) and tighten to **30 Y (22 lb ft)**.
4. Install the turbocharger oil return pipe. Refer to Turbocharger Oil Return Pipe Replacement.
5. Connect the turbocharger wastegate actuator wiring harness plug.

cardiagn.com

6. Install the charge air control vacuum hose (5) to the turbocharger (1).
7. Connect the exhaust temperature sensor position 1 wiring harness plug. Refer to Exhaust Temperature Sensor Replacement - Position 1.
8. Install the turbocharger coolant feed pipe. Refer to Turbocharger Coolant Feed Pipe Replacement.
9. Install the exhaust particulate filter. Refer to Exhaust Particulate Filter Replacement.
10. Install the charge air cooler inlet air hose. Refer to Charge Air Cooler Inlet Hose Replacement.
11. Install the turbocharger oil feed pipe. Refer to Turbocharger Oil Feed Pipe Replacement.
12. Install the turbocharger coolant return pipe. Refer to Turbocharger Coolant Return Pipe Replacement.
13. Install the turbocharger heat shield. Refer to Turbocharger Heat Shield Replacement.
14. Install the air cleaner outlet duct. Refer to Air Cleaner Outlet Duct Replacement.
15. Install the engine sight shield. Refer to Engine Sight Shield Replacement.
16. Connect battery negative cable. Refer to Battery Negative Cable Disconnection and Connection.

cardiagn.com

The turbocharger increases engine power by pumping compressed air into the combustion chambers, allowing a greater quantity of fuel to combust at the optimal air/fuel ratio.

Turbocharger Boost Pressure Sensor

The turbocharger boost pressure sensor is mounted on the intake manifold and measures boost pressure and air temperature.

Turbocharger Vane Position Control Solenoid or Boost Pressure Actuator

The turbocharger for this system uses a turbocharger vane position control solenoid valve or a boost pressure actuator and is controlled by the engine control module (ECM). The turbocharger vane position control solenoid valve uses an ignition voltage circuit and a control circuit. The turbocharger vanes are controlled to vary the amount of boost pressure. The boost pressure can be controlled independent of engine speed. There are 11 controllable vanes in this turbocharger. The vanes mount to a drive ring that can be rotated to change the vane angle. The ECM will vary the boost dependent upon the load requirements of the engine.

The turbocharger vanes are normally open when the engine is not under a load. The ECM will close the turbocharger vanes to increase engine power and to create a high pressure, using boost pressure actuator.

The ECM will often close the turbocharger vanes to create back pressure to drive exhaust gas through the exhaust gas recirculation (EGR) valve as required. At extreme cold temperatures, the ECM may close the turbocharger vanes at low load conditions in order to accelerate engine coolant heating. The ECM may also close the turbocharger vanes under exhaust braking conditions.

The Charged Air Cooler

The charged air cooler is located in front of the radiator. The turbocharger supplies hot compressed air from the turbine by sucking exhaust gas to the engine to increase power. The airflow through the radiator cools the hot compressed air from the turbocharger.

Engine Control Module (ECM)

The engine control module (ECM) controls all turbocharger control functions. The ECM monitors information from various sensor inputs that include the following:

- The accelerator pedal position (APP) sensor
- The engine coolant temperature (ECT) sensor
- The mass air flow (MAF) sensor
- The intake air temperature (IAT) sensor
- The vehicle speed sensor (VSS)
- The transmission gear position or range information sensors
- The manifold absolute pressure (MAP) sensor

cardiagn.com

Removal Procedure

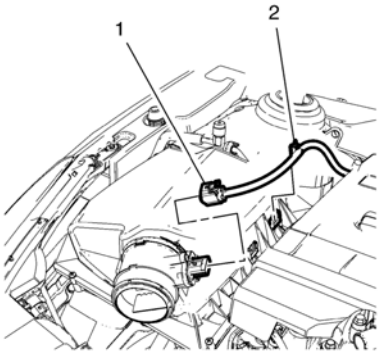

1. Disconnect the mass air flow sensor wiring harness plug (1) from mass air flow sensor.
2. Unclip the mass air flow sensor wiring harness clip (2) from the air filter assembly.

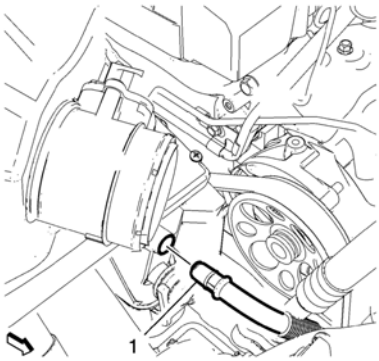

3. Remove the air cleaner draining hose (1) from the air cleaner housing.

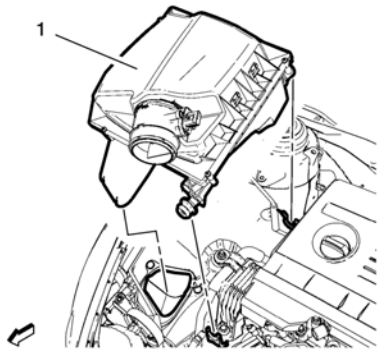

4. Remove the air cleaner assembly (1).
5. Remove the 2 air cleaner bracket insulators.

Installation Procedure

1. Install the 2 air cleaner bracket insulators.

cardiagn.com

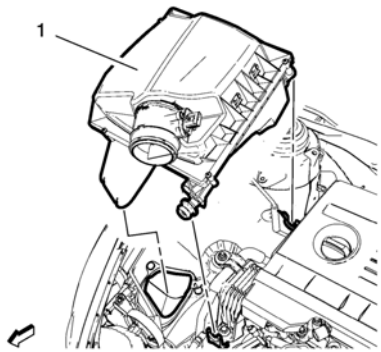

2. Install the air cleaner assembly (1).

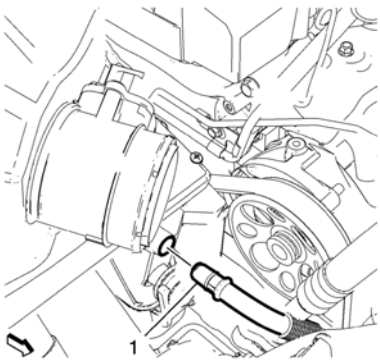

3. Install the air cleaner housing draining hose (1) to the air cleaner housing.

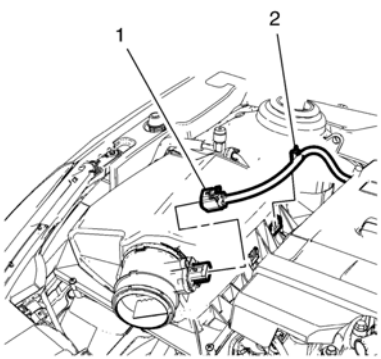

4. Clip in the mass air flow sensor wiring harness clip (2) to the air filter assembly.
5. Connect the mass air flow sensor wiring harness plug (1) to the mass air flow sensor.

cardiagn.com

Removal Procedure

1. Remove the front bumper fascia. Refer to Front Bumper Fascia Removal and Installation.

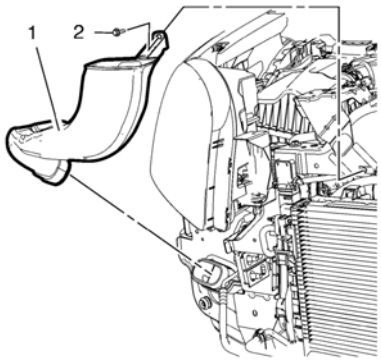

2. Remove the intake air duct bolt (2).
3. Remove the intake air duct (1).

Installation Procedure

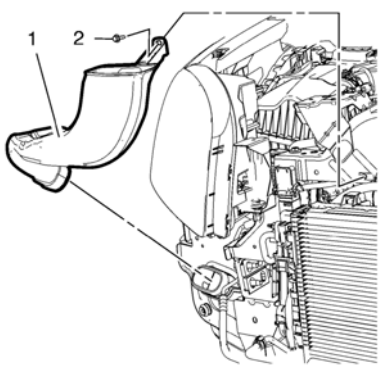

1. Install the intake air duct (1).

   Caution: Refer to Fastener Caution.

2. Install the intake air duct bolt (2) and tighten to **5 Y (44 lb in)**.
3. Install the front bumper fascia. Refer to Front Bumper Fascia Removal and Installation.

cardiagn.com

Removal Procedure

1. Remove the engine sight shield. Refer to Engine Sight Shield Replacement.

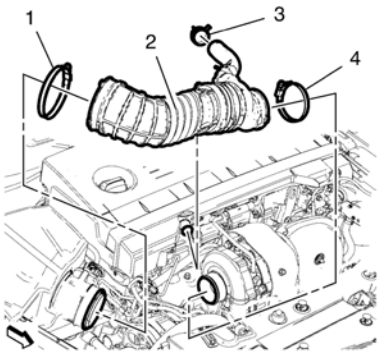

2. Remove the 2 clamps (1, 4).
3. Remove the clamp (3).
4. Remove the air cleaner outlet duct (2).
5. Remove the positive crankcase ventilation valve hose from the air cleaner outlet duct. Refer to Positive Crankcase Ventilation Hose/Pipe/Tube Replacement.

Installation Procedure

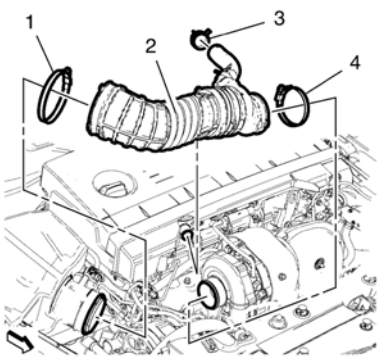

1. Install the positive crankcase ventilation valve hose to the air cleaner outlet duct. Refer to Positive Crankcase Ventilation Hose/Pipe/Tube Replacement.
2. Install the air cleaner outlet duct (2).
3. Install the 2 clamps (1, 4).
4. Install the clamp (3).
5. Install the engine sight shield. Refer to Engine Sight Shield Replacement.

cardiagn.com

Removal Procedure

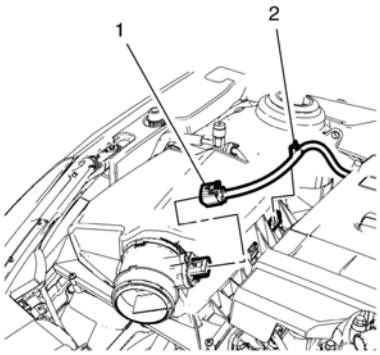

1. Disconnect the mass air flow sensor wiring harness plug (1) from mass air flow sensor.
2. Unclip the mass air flow sensor wiring harness clip (2) from the air filter assembly.

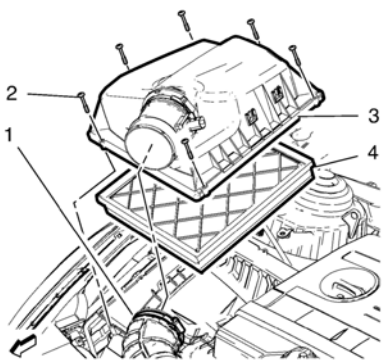

3. Remove the air cleaner outlet duct (1) from the mass air flow sensor.
4. Remove the 6 air cleaner housing bolts (2).
5. Remove the air cleaner housing cover (3).
6. Remove the air cleaner element (4).

Installation Procedure

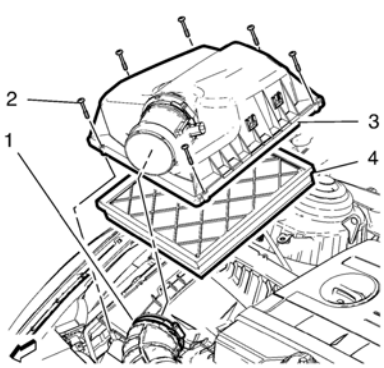

1. Install the air cleaner element (4).
2. Install the air cleaner housing cover (3).
3. Install the 6 air cleaner housing bolts (2).
4. Install the air cleaner outlet duct (1) to the mass air flow sensor.

cardiagn.com

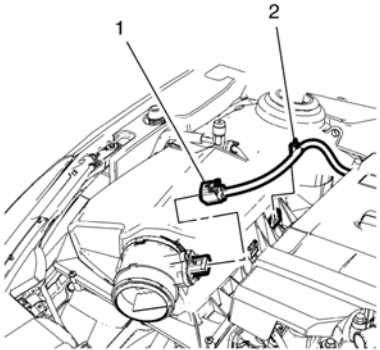

5. Clip in the mass air flow sensor wiring harness clip (2) to the air filter assembly.
6. Connect the mass air flow sensor wiring harness plug (1) to the mass air flow sensor.

cardiagn.com

Circuit/System Description

The primary function of the air intake system is to provide filtered air to the engine. The system uses a filter-element mounted in a housing. The filter-housing is remotely mounted and uses intake ducts to route the incoming air into the throttle body. The secondary function of the air intake system is to muffle air induction noise. This is achieved by the use of resonators attached to the air intake ducts. The resonators are tuned to the specific powertrain. The intake air temperature (IAT) sensor is used to measure the temperature of the air entering the engine.

cardiagn.com

Removal Procedure

1. Turn on the radio and record all of the customer radio station presets.
2. Ensure that all lamps and accessories are turned off.
3. Turn the ignition OFF and remove the ignition key.

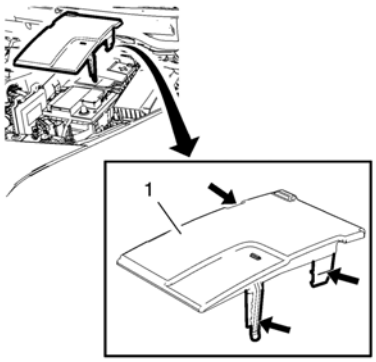

4. Remove the battery cover (1).

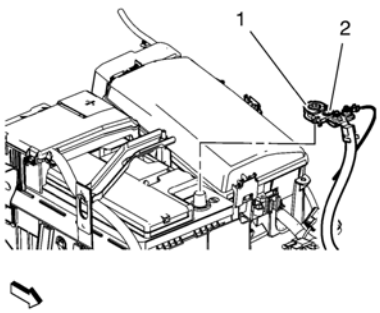

Warning: Refer to Battery Disconnect Warning.

5. Loosen the battery negative cable nut (2).
6. Remove the battery negative cable (1) from the battery.

Installation Procedure

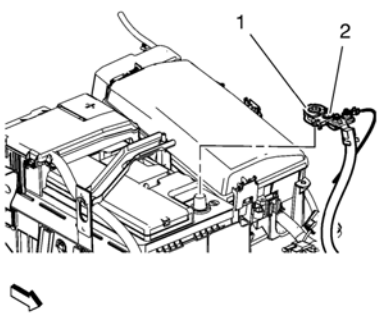

1. Install the battery negative cable (1) to the battery.

Caution: Refer to Fastener Caution.

2. Fasten the battery negative cable nut (2) and tighten the nut to **4.5 Y (40 lb in)**.

cardiagn.com

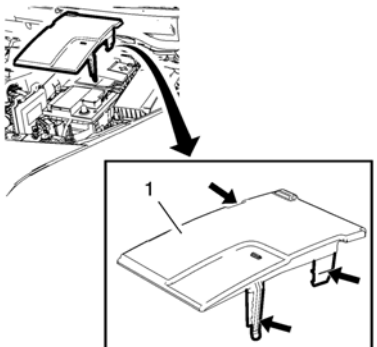

3. Install the battery cover (1).
4. Insert the ignition key and turn the ignition to the ON position.
5. Program volatile memory. Refer to Volatile Memory Programming.
6. Program all of the customer's radio station presets and set the radio clock to the current time.

cardiagn.com

Removal Procedure

1. Disconnect the battery negative cable. Refer to Battery Negative Cable Disconnection and Connection.

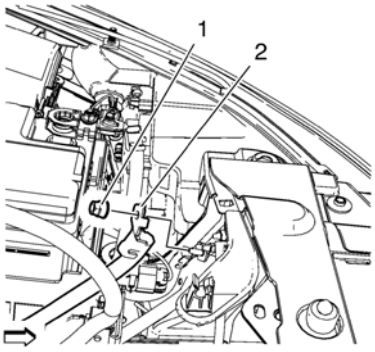

2. Remove the battery ground cable nut (1).
3. Remove the battery negative cable (2).

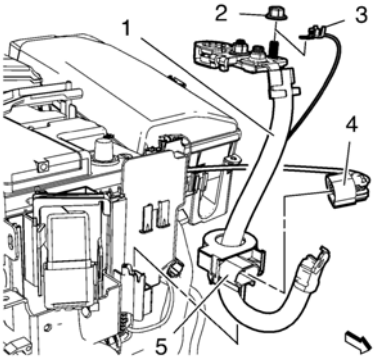

4. Disconnect the wiring harness current sensor plug (4).
5. Remove the current sensor (5) from the battery tray.
6. Remove battery ground cable from the battery negative cable nut (2).
7. Remove the ground cable (3).
8. Remove the battery negative cable (1).

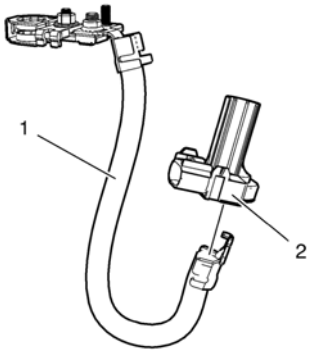

9. Remove the current sensor (2) from the battery negative cable (1).

Installation Procedure

cardiagn.com

Battery Negative Cable Replacement (without Start/Stop System)

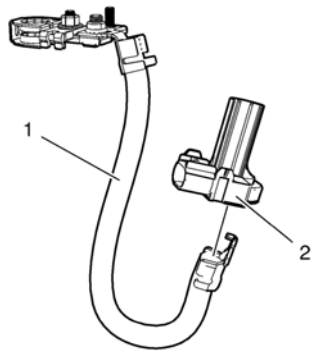

1. Install the current sensor (2) to the battery negative cable (1).

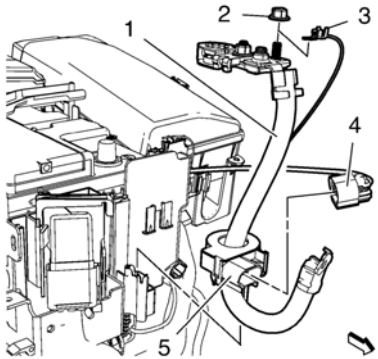

2. Install the battery negative cable (1).
3. Install the ground cable (3).

Caution: Refer to Fastener Caution.

4. Install the battery ground cable to the battery negative cable nut (2) and tighten to **9 Y (80 lb in)**.
5. Install the current sensor (5) at the battery tray.
6. Connect the wiring harness current sensor plug (4).

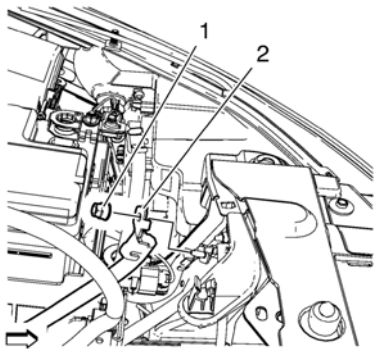

7. Install the battery negative cable (2).
8. Install the battery ground cable nut (1) and tighten to **9 Y (80 lb in)**.
9. Connect the battery negative cable. Refer to Battery Negative Cable Disconnection and Connection.

cardiagn.com

Removal Procedure

1. Open the hood.
2. Remove the battery. Refer to Battery Replacement.
3. Unclip all wiring harness from the battery tray.
4. Unclip the engine control module bracket from the battery tray.
5. If equipped, unclip the radiator surge tank engine hose from the battery tray.

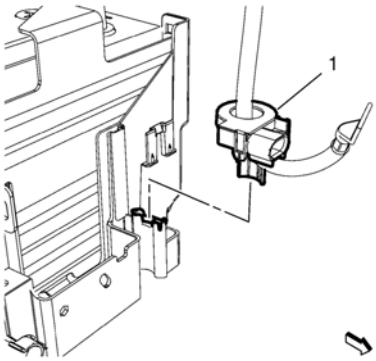

6. Unclip the battery current sensor (1) from the battery tray.

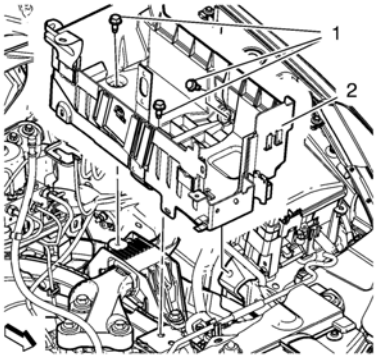

7. Remove the 3 battery tray bolts (1).
8. Remove the battery tray (2).

Installation Procedure

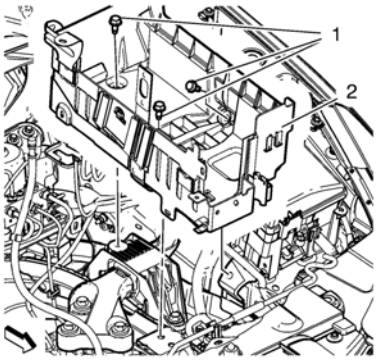

1. Install the battery tray (2).

   Caution: Refer to Fastener Caution.

2. Install the 3 battery tray bolts (1) and tighten to **15 Y (11 lb ft)**.

cardiagn.com

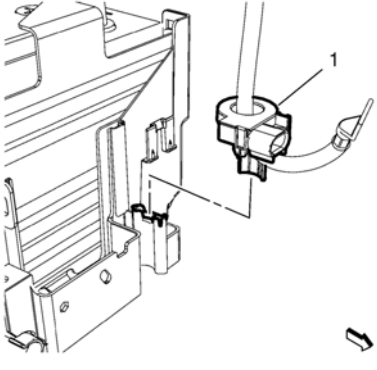

3. Clip in the battery current sensor (1) to the battery tray.
4. If equipped, clip in the radiator surge tank engine hose to the battery tray.
5. Install battery. Refer to Battery Replacement.
6. Clip in all wiring harness at the battery tray.
7. Clip in the engine control module bracket to the battery tray.
8. Close the hood.

cardiagn.com

Camshaft Actuator System Overview

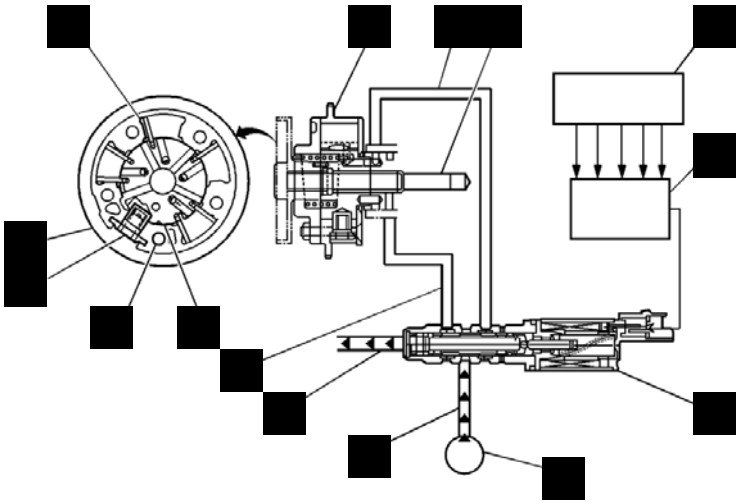

(1) Camshaft Actuator Vane
(2) Timing Chain Sprocket
(3) Engine Oil Pressure-For retarding the camshaft
(4) Camshaft
(5) Input Signals from Engine Sensors
(6) Engine Control Module (ECM)
(7) Camshaft Actuator Solenoid
(8) Engine Oil Pump
(9) Engine Oil Pressure Supply
(10) Engine Oil Drain
(11) Engine Oil Pressure-For advancing the camshaft
(12) Camshaft Actuator Rotor
(13) Camshaft Position Sensor Reluctor
(14) Camshaft Actuator Lock Pin
(15) Camshaft Actuator Housing

The camshaft actuator system enables the engine control module (ECM) to change camshaft timing of all 4 camshafts while the engine is operating. The camshaft position (CMP) actuator assembly (15) varies the camshaft position in response to directional changes in oil pressure. The CMP actuator solenoid valve controls the oil pressure that is applied to advance or retard a camshaft. Modifying camshaft timing under changing engine demand provides better balance between the following performance concerns:

- Engine power output
- Fuel economy
- Tailpipe emissions

The CMP actuator solenoid valve (7) is controlled by the ECM. The crankshaft position (CKP) sensor and the CMP sensors are used to monitor changes in camshaft positions. The ECM uses the following information in order to calculate the desired camshaft positions:

- Engine coolant temperature
- Calculated engine oil temperature (EOT)
- Mass air flow (MAF)
- Throttle position (TP)
- Vehicle speed
- Volumetric efficiency

Operation

The CMP actuator assembly has an outer housing that is driven by an engine timing chain. Inside the assembly is a rotor with fixed vanes that is attached to the camshaft. Oil pressure that is applied to the fixed vanes will rotate a specific camshaft in relationship to the crankshaft. The movement of the intake camshafts will advance the intake valve timing. The movement of the exhaust camshafts will retard the exhaust valve timing. When oil pressure is applied to the return side of the vanes, the camshafts will return to 0 crankshaft degrees, or top dead center (TDC). The CMP actuator solenoid valve directs the oil flow that controls the camshaft movement. The ECM commands the CMP solenoid to move the solenoid plunger and spool valve until oil flows from the advance passage (11). Oil flowing thru the CMP actuator assembly from the CMP solenoid advance passage applies pressure to the advance side of the vanes in the CMP actuator assembly. When the camshaft position is retarded, the CMP actuator solenoid valve directs oil to flow into the CMP actuator assembly from the retard passage (3). The ECM can also command the CMP actuator solenoid valve to stop oil flow from both passages in order to hold the current camshaft position.

The ECM operates the CMP actuator solenoid valve by pulse width modulation (PWM) of the solenoid coil. The higher the PWM duty cycle, the larger the change

cardiagn.com

in camshaft timing. The CMP actuator assembly also contains a lock pin (14) that prevents movement between the outer housing and the rotor vane assembly. The lock pin is released by oil pressure before any movement in the CMP actuator assembly takes place. The ECM is continuously comparing CMP sensor inputs with CKP sensor input in order to monitor camshaft position and detect any system malfunctions. If a condition exists in either the intake or exhaust camshaft actuator system, the opposite bank, intake or exhaust, camshaft actuator will default to 0 crankshaft degrees.

CMP Actuator System Operation

Driving Condition	Change in Camshaft Position	Objective	Result
Idle	No Change	Minimize Valve Overlap	Stabilized Idle Speed
Light Engine Load	Retarded Valve Timing	Decrease Valve Overlap	Stabled Engine Output
Medium Engine Load	Advanced Valve Timing	Increase Valve Overlap	Better Fuel Economy with Lower Emissions
Low to Medium RPM with Heavy Load	Advanced Valve Timing	Advance Intake Valve Closing	Improved Low to Mid-range Torque
High RPM with Heavy Load	Retarded Valve Timing	Retard Intake Valve Closing	Improved Engine Output

cardiagn.com

Note: The crankshaft position sensor system variation learn procedure is required when the following service procedures have been performed, regardless of whether DTC P0315 00 is set:

- Engine replacement
- Engine control module (ECM) replacement
- Crankshaft damper replacement
- Crankshaft replacement
- Crankshaft Position Sensor Replacement
- Any engine repairs which disturb the crankshaft to crankshaft position sensor relationship

Note: The scan tool monitors certain component signals to determine if all the conditions are met to continue with the crankshaft position sensor system variation learn procedure. The scan tool only displays the condition that inhibits the procedure. The scan tool monitors the following components:

- Crankshaft Position Sensor activity – If there is a crankshaft position sensor condition, refer to the applicable DTC that set.
- Camshaft position signal activity – If there is a camshaft position sensor signal condition, refer to the applicable DTC that set.
- Engine coolant temperature (ECT) – If the engine coolant temperature is not warm enough, idle the engine until the engine coolant temperature reaches the correct temperature.

1. Install a scan tool.
2. Monitor the ECM for DTCs with a scan tool. If other DTCs are set, except DTC P0315 00, refer to Diagnostic Trouble Code (DTC) List - Vehicle for the applicable DTC that set.
3. With a scan tool, select the Crankshaft Position System Variation Learn procedure and perform the following:

    1. Observe the fuel cut-off for the applicable engine.
    2. Block the drive wheels.
    3. Set the parking brake.
    4. Place the vehicles transmission in Park or Neutral.
    5. Turn the air conditioning (A/C) OFF.
    6. Cycle the ignition from OFF to ON.
    7. Apply and hold the brake pedal for the duration of the procedure.
    8. Start and idle the engine.
    9. Accelerate to wide open throttle (WOT). The engine should not accelerate beyond the calibrated fuel cut-off RPM value noted in step 3.1. Release the throttle immediately if the value is exceeded.

    Note: While the learn procedure is in progress, release the throttle immediately when the engine starts to decelerate. The engine control is returned to the operator and the engine responds to throttle position after the learn procedure is complete.

    10. Release the throttle when fuel cut-off occurs.

- Accelerate to wide open throttle (WOT). The engine should not accelerate beyond the calibrated fuel cut-off RPM value noted in step 3.1. Release the throttle immediately if the value is exceeded.

Note: While the learn procedure is in progress, release the throttle immediately when the engine starts to decelerate. The engine control is returned to the operator and the engine responds to throttle position after the learn procedure is complete.

- The scan tool displays Learn Status: Learned this Ignition. If the scan tool indicates that DTC P0315 00 only) ran and passed, the crankshaft position sensor variation learn procedure is complete. If the scan tool indicates DTC P0315 00 failed or did not run, refer to DTC P0315. If any other DTCs set, refer to Diagnostic Trouble Code (DTC) List - Vehicle for the applicable DTC that set.
- Turn OFF the ignition for 30 s after the learn procedure is completed successfully.

cardiagn.com

Electronic Ignition System Operation

The electronic ignition system produces and controls the high energy secondary spark. This spark ignites the compressed air/fuel mixture at precisely the correct time, providing optimal performance, fuel economy, and control of exhaust emissions. The engine control module (ECM) collects information from the crankshaft position sensor and the camshaft position sensor – intake and camshaft position sensor – exhaust to determine the sequence, dwell, and timing of the spark for each cylinder. The ECM transmits a frequency signal to the ignition coil assembly on the appropriate ignition control circuit to fire the spark plugs.

Crankshaft Position Sensor

The crankshaft position sensor circuits consist of an engine control module (ECM) supplied 5 V reference circuit, low reference circuit, and an output signal circuit. The crankshaft position sensor is an externally magnetically biased digital output integrated circuit sensing device. The sensor provides a pulse for each magnetic pole of the magnetic encoder wheel on the crankshaft. Each pole on the encoder wheel is spaced at 58-pole spacing, with 2 missing poles for the reference gap. The crankshaft position sensor produces an ON/OFF DC voltage of varying frequency, with 58 output pulses per crankshaft revolution. The frequency of the crankshaft position sensor output depends on the velocity of the crankshaft. The crankshaft position sensor sends a digital signal, which represents an image of the crankshaft encoder wheel, to the ECM as each pole on the wheel rotates past the crankshaft position sensor. The ECM uses each crankshaft position sensor signal pulse to determine crankshaft speed and decodes the crankshaft encoder wheel reference gap to identify crankshaft position. This information is then used to determine the optimal ignition and injection points of the engine. The ECM also uses crankshaft position sensor output information to determine the camshaft position sensor – intake and camshaft position sensor – exhaust relative to the crankshaft, to control camshaft phasing, and to detect cylinder misfire.

Crankshaft Encoder Wheel

The crankshaft encoder wheel is part of the crankshaft. The encoder wheel consists of 58 poles and a reference gap. Each pole on the encoder wheel is spaced 6° apart with a 12° space for the reference gap. The pulse from the reference gap is known as the sync pulse. The sync pulse is used to synchronize the coil firing sequence with the crankshaft position, while the other poles provide cylinder location during a revolution.

Camshaft Position Sensor

The camshaft position sensor – intake and camshaft position sensor – exhaust is triggered by a notched reluctor wheel built onto the intake camshaft sprocket. The camshaft position sensor – intake and camshaft position sensor – exhaust provides four signal pulses to every camshaft revolution. Each notch, or feature of the reluctor wheel is of a different size which is used to identify the compression stroke of each cylinder and to enable sequential fuel injection. The camshaft position sensor – intake and camshaft position sensor – exhaust is connected to the ECM by the following circuits:

- A 5 V reference circuit
- A low reference circuit
- A signal circuit

Ignition Coil Assembly

The ignition coil assembly used on this engine integrates the 4 coils and the module within a single sealed component.

The ignition coil has the following circuits:

- An ignition voltage circuit
- A ground
- 4 ignition control circuits

The ECM controls the individual coils by transmitting timing pulses on the ignition control circuit of each ignition coil to enable a spark event.

The spark plugs are connected to each coil by a short boot. The boot contains a spring that conducts the spark energy from the coil to the spark plug. The spark plug electrode is coated with platinum for long wear and higher efficiency.

Engine Control Module (ECM)

The ECM controls all ignition system functions, and constantly adjusts the spark timing. The ECM monitors information from various sensor inputs that include the following:

- The crankshaft position sensor
- The accelerator pedal position (APP)
- The manifold absolute pressure (MAP) sensor
- The intake air temperature (IAT) sensor
- The engine knock sensor
- The engine coolant temperature (ECT) sensor

cardiagn.com

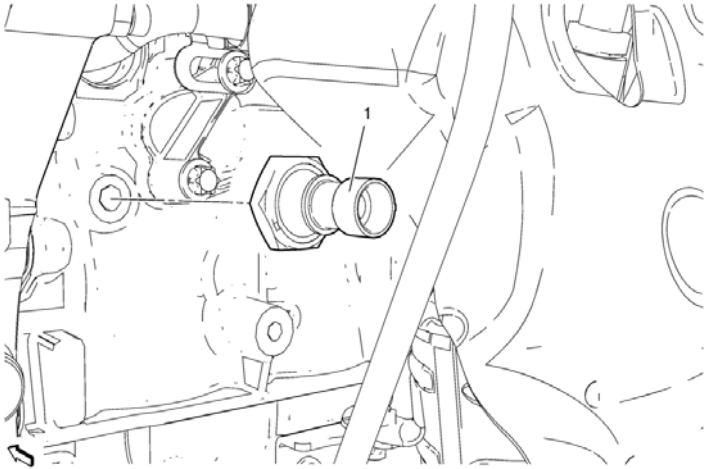

Engine Oil Pressure Indicator Switch Replacement

Callout	Component Name
Preliminary Procedure	
Remove the air conditioning compressor. Refer to Air Conditioning Compressor Replacement.	
1	Oil Pressure Switch **Caution:** Refer to Fastener Caution. **Procedure** Disconnect the oil pressure switch wiring harness plug and remove the switch. **Tighten** 30 Y (22 lb ft)

cardiagn.com

Special Tools

CH–807 Plug

For equivalent regional tools, refer to Special Tools.

Removal Procedure

1. Raise and support the vehicle. Refer to Lifting and Jacking the Vehicle.

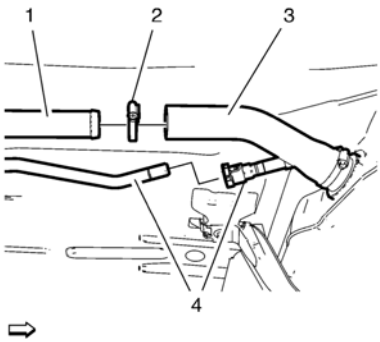

Warning: Do not breathe the air through the EVAP component tubes or hoses. The fuel vapors inside the EVAP components may cause personal injury.

Warning: Gasoline or gasoline vapors are highly flammable. A fire could occur if an ignition source is present. Never drain or store gasoline or diesel fuel in an open container, due to the possibility of fire or explosion. Have a dry chemical (Class B) fire extinguisher nearby.

Warning: Always wear safety goggles when working with fuel in order to protect the eyes from fuel splash.

Note: Do not remove the fuel tank filler hose when the fuel contents in the fuel tank is over the half filled with fuel.

2. If the fuel level is over half filled, refer to Fuel Tank Draining.
3. Remove the clamp (2).
4. Remove the fuel tank filler hose (3) from the fuel tank filler pipe (1).
5. Disconnect the fuel tank filler vent pipe (4). Refer to Plastic Collar Quick Connect Fitting Service.
6. Unclip the fuel feed pipe and the fuel vent pipe from the rear bracket clip at the underbody.
7. Place a suitable adjustable jack under the fuel tank.

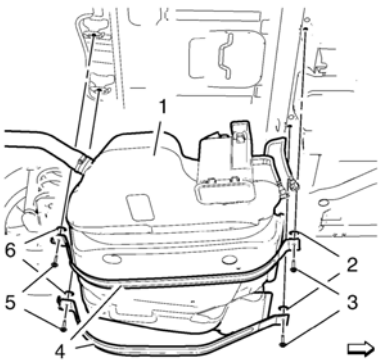

8. Remove the 2 fuel tank strap bolts (3) and the fuel tank strap bolt retainers (2).
9. Remove the 2 fuel tank strap bolts (5) and the fuel tank strap bolt retainers (6).
10. Demount the 2 fuel tank straps (4).

Note: Attention to other parts like pipes or hoses that are installed at the fuel tank. Lower the fuel tank only a little bit, when its not able to remove the evaporative emission canister easily. Remove the fuel tank, if necessary.

Note: A second technician is required.

11. Lower the fuel tank to a height where its able to remove the evaporative emission canister easily.

cardiagn.com

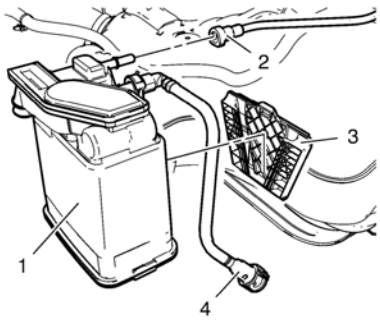

12. Disconnect the fuel tank vent pipe (2).
13. Close the fuel tank vent pipe (2) with the *CH-807* plug .
14. Disconnect the evaporative emission canister purge pipe (4).
15. Close the evaporative emission canister purge pipe (4) with the *CH-807* plug .
16. Remove the evaporative emission canister (1) from the evaporative emission canister bracket (3).

Installation Procedure

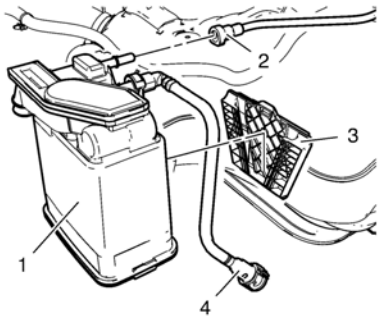

1. Install the evaporative emission canister (1) to the evaporative emission canister bracket (3).
2. Remove the *CH-807* plug from the evaporative emission canister purge pipe (4).
3. Connect the evaporative emission canister purge pipe (4).
4. Remove the *CH-807* plug from the fuel tank vent pipe (2).
5. Connect the fuel tank vent pipe (2).

Note: A second technician is required.

6. Raise the fuel tank to the original position.

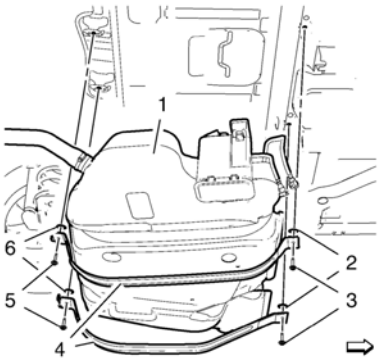

7. Pre-install the 4 fuel tank strap bolts (3, 5) with the 4 fuel tank strap bolt retainers (2, 6) to the fuel tank straps (4).
8. Mount the 2 fuel tank straps (4).

Caution: Refer to Fastener Caution.

9. Install the 4 fuel tank strap bolts (3, 5) and tighten to **20 Y (15 lb ft)**.
10. Remove the adjustable jack from the fuel tank.
11. Clip the fuel feed pipe and the fuel vent pipe into the rear bracket clip at the underbody.

cardiagn.com

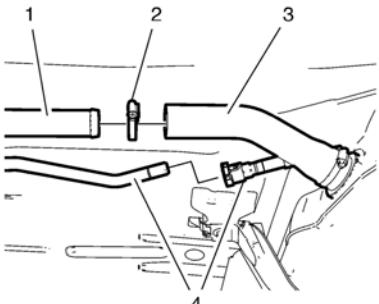

12. Connect the fuel tank filler vent pipe (4). Refer to Plastic Collar Quick Connect Fitting Service.
13. Install the fuel tank filler hose (3) to the fuel tank filler pipe (1).
14. Install the clamp (2).
15. Lower the vehicle.

cardiagn.com

EVAP System Operation

The evaporative emission (EVAP) control system used is the charcoal canister storage method. This method transfers fuel vapor from the fuel tank to an activated carbon, charcoal, storage device, or canister, to hold the vapors when the vehicle is not operating. When the engine is running, the fuel vapor is purged from the carbon element by intake airflow and consumed in the normal combustion process.

Gasoline vapors from the fuel tank flow into the canister. These vapors are absorbed into the carbon. The canister is purged by the engine control module (ECM) when the engine has been running for a specified amount of time. Air is drawn into the canister and mixed with the vapor. This mixture is then drawn into the intake manifold.

The ECM supplies a ground to energize the evaporative emission (EVAP) canister purge solenoid valve. This valve is pulse width modulated (PWM) or turned ON and OFF several times a second. The evaporative emission (EVAP) canister purge solenoid valve PWM duty cycle varies according to operating conditions determined by engine load, fuel trim, and intake air temperature.

Poor idle, stalling, and poor driveability can be caused by the following conditions:

- An inoperative evaporative emission (EVAP) canister purge solenoid valve
- A damaged canister
- Hoses that are split, cracked, or not connected to the proper tubes

Evaporative Emission Canister

The Evaporative Emission (EVAP) canister is an emission control device containing activated charcoal granules. The EVAP emission canister is used to store fuel vapors from the fuel tank. Once certain conditions are met, the engine control module (ECM) activates the evaporative emission (EVAP) canister purge solenoid valve, allowing the fuel vapors to be drawn into the engine cylinders and burned.

cardiagn.com

The exhaust gas recirculation (EGR) system is used to reduce the amount of nitrogen oxide (NOx) emission levels caused by high combustion temperatures. At temperatures above 1 371°C (2 500°F), oxygen and nitrogen combine to form oxides of nitrogen (NOx). Introducing small amounts of exhaust gas back into the combustion chamber displaces the amount of oxygen entering the engine. With less oxygen in the air/fuel mixture and as a result combustion temperatures are decreased, restricting the formation of NOx.

The EGR valve motor is a direct current (DC) stepper motor utilizing a worm gear that extends from the motor to push on the EGR valve stem. The worm gear is not attached to the valve stem and can only force the valve open. A return spring is used to force the valve closed.

Exhaust Gas Recirculation (EGR) System Operation

The exhaust gas recirculation (EGR) valve is controlled by the engine control module (ECM) through the EGR motor high control and EGR motor low control circuits. The ECM supplies voltage that is near ignition voltage to the high and low control circuits at all times. This voltage is used by the ECM as a reference voltage during non EGR operation in order to detect circuit failures. The ECM will pulse width modulate (PWM) the low control circuit to ground and an increase in amperage on the high control circuit can be observed with a DMM when the EGR valve is commanded open. A lower pulse width will increase the open position of the valve. In order to close the EGR valve, the ECM will PWM the high control circuit to ground.

When the ignition is turned ON, the ECM will drive the EGR motor worm gear out with just enough force to touch the EGR valve stem. The ECM will do this 3 times in quick succession. This action determines the minimum closed position of the valve and only happens once per ignition cycle. If the valve is prevented from closing all of the way after the minimum closed position is learned, the scan tool EGR Position parameter will not reflect this position until the next ignition cycle. The EGR motor worm gear is not connected to the EGR valve stem and can only push the valve open. The valve is returned to the closed position by a return spring.

The ECM uses the EGR position sensor to determine the position of the EGR valve. The ECM sends a reference voltage through the 5 V reference circuit to the EGR position sensor. The ECM provides a voltage return path for the sensor through the low reference circuit. A variable voltage signal, based on the EGR valve position, is sent from the sensor to the ECM through the EGR position sensor signal circuit.

EGR Valve Control Enabling Conditions

Exhaust gas recirculation (EGR) valve control will only be enabled during idle and cruising conditions while the following conditions are met:

- The intake air temperature (IAT) is more than 5.25°C (41.5°F). EGR valve control will remain enabled until the IAT is less than 0°C (32°F) and will not enable again until the IAT is more than 5.25°C (41.5°F).
- The engine coolant temperature (ECT) is between 60–96.75°C (140–206.15°F). EGR valve control will remain enabled until the ECT is less than 57°C (134.6°F) or more than 99.75°C (211.55°F) and will not enable again until the ECT is between 60–96.75°C (140–206.15°F).
- The barometric pressure is more than 74 kPa (10.73 PSI). EGR valve control will remain enabled until the barometric pressure is less than 72 kPa (10.44 PSI) and will not enable again until 74 kPa (10.73 PSI).

cardiagn.com

Removal Procedure

1. Disconnect the battery negative cable. Refer to Battery Negative Cable Disconnection and Connection.
2. Remove the air inlet grille panel. Refer to Air Inlet Grille Panel Replacement.
3. Remove front compartment insulator. Refer to Front Compartment Insulator Replacement.

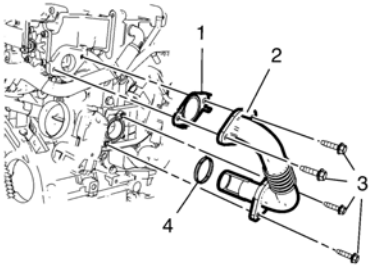

4. Remove the 4 exhaust gas recirculation bolts (3).
5. Remove the exhaust gas recirculation pipe (2) along with the gaskets (1, 4).

Installation Procedure

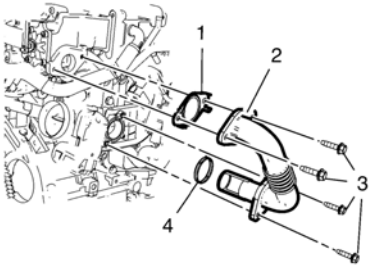

Note: Clean the sealing surfaces.

1. Install the exhaust gas recirculation pipe (2) along with NEW gaskets (1, 4).

Caution: Refer to Fastener Caution.

2. Install the 4 exhaust gas recirculation bolts (3) and tighten to **10 Y (89 lb in)**.
3. Install front compartment insulator. Refer to Front Compartment Insulator Replacement.
4. Install the air inlet grille panel. Refer to Air Inlet Grille Panel Replacement.
5. Connect the battery negative cable. Refer to Battery Negative Cable Disconnection and Connection.

cardiagn.com

Removal Procedure

1. Remove the engine sight shield. Refer to Engine Sight Shield Replacement

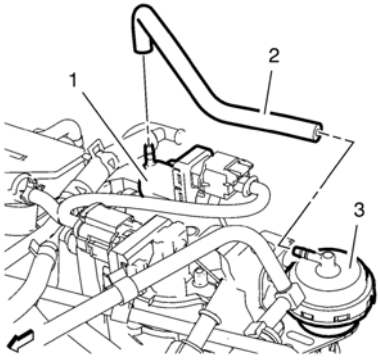

2. Remove the exhaust gas recirculation vacuum regulator solenoid valve vacuum hose (2) from the exhaust gas recirculation vacuum regulator solenoid valve (1).
3. Remove the exhaust gas recirculation vacuum regulator solenoid valve vacuum hose (2) from the exhaust gas recirculation bypass valve (3).

Installation Procedure

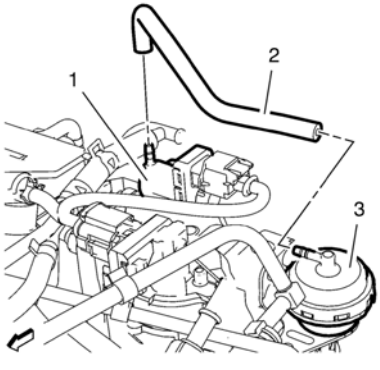

1. Install the exhaust gas recirculation vacuum regulator solenoid valve vacuum hose (2) to the exhaust gas recirculation vacuum regulator solenoid valve (1).
2. Install the exhaust gas recirculation vacuum regulator solenoid valve vacuum hose (2) to the exhaust gas recirculation bypass valve (3).
3. Install the engine sight shield. Refer to Engine Sight Shield Replacement

cardiagn.com

Removal Procedure

1. Remove the engine sight shield. Refer to Engine Sight Shield Replacement.

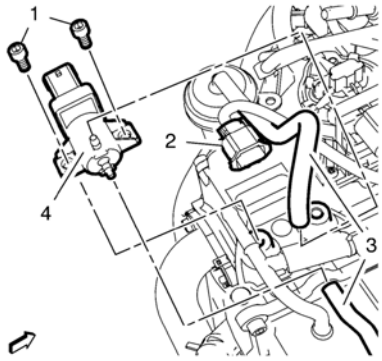

2. Disconnect the exhaust gas recirculation bypass control solenoid valve wiring harness plug (2).
3. Remove the 2 exhaust gas recirculation bypass control solenoid valve hoses (3).
4. Remove the 2 exhaust gas recirculation bypass control solenoid valve bolts (1).
5. Remove the exhaust gas recirculation valve cooler bypass control solenoid valve (4).

Installation Procedure

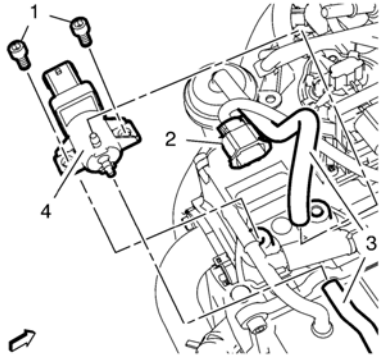

1. Install the exhaust gas recirculation valve cooler bypass control solenoid valve (4).

Caution: Refer to Fastener Caution.

2. Install the 2 exhaust gas recirculation bypass control solenoid valve bolts (1) and tighten to **6 Y (53 lb in)**.
3. Install the 2 exhaust gas recirculation bypass control solenoid valve hoses (3).
4. Connect the exhaust gas recirculation bypass control solenoid valve wiring harness plug (2).
5. Install the engine sight shield. Refer to Engine Sight Shield Replacement.

cardiagn.com

Removal Procedure

1. Remove the engine sight shield. Refer to Engine Sight Shield Replacement.
2. Remove the dash upper extension panel opening cover. Refer to Dash Upper Extension Panel Opening Cover Replacement.
3. Remove the battery tray. Refer to Battery Tray Replacement.
4. Raise and support the vehicle. Refer to Lifting and Jacking the Vehicle.
5. Drain the cooling system. Refer to Cooling System Draining and Filling.
6. Remove the exhaust gas recirculation pipe. Refer to Exhaust Gas Recirculation Pipe Replacement.
7. Lower the vehicle.
8. For vehicles with MT: Disconnect the transmission shift lever and selector cable from the transmission. Refer to Manual Transmission Shift Lever and Selector Lever Cable Replacement.

   For vehicles with AT: Disconnect the range selector lever cable from the automatic transmission. Refer to Range Selector Lever Cable Replacement.

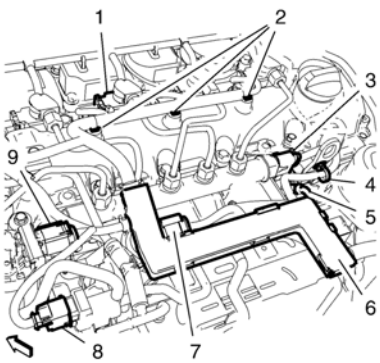

9. Disconnect the vacuum solenoid valve wiring harness plug (8).
10. Disconnect the exhaust gas recirculation valve wiring harness plug (9).
11. Disconnect the intake actuator valve wiring harness plug (7).
12. Disconnect the fuel injection rail pressure sensor wiring harness plug (3).
13. Disconnect the 4 glow plug wiring harness plugs (5).
14. Disconnect the 4 fuel injector wiring harness plugs (1).
15. Unclip the 4 engine wiring harness clips (2, 4) from the camshaft cover.
16. Unclip the engine wiring harness conduit (6) in top direction from the 3 exhaust gas recirculation cooler brackets. Hang the engine wiring harness aside.
17. Remove the engine coolant air bleed hose. Refer to Engine Coolant Air Bleed Hose Replacement.
18. Remove the vacuum pump hose. Refer to Vacuum Pump Hose Replacement.
19. Remove the intake manifold tuning valve vacuum control solenoid valve hose. Refer to Intake Manifold Tuning Valve Vacuum Control Solenoid Valve Hose Replacement.
20. Unclip the engine wiring harness retaining clip from the charge air cooler outlet front hose.
21. Unclip the transmission vent hose from the charge air cooler outlet front hose.

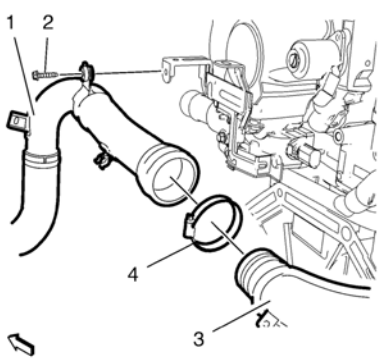

22. Remove the charge air cooler outlet front hose bracket bolt (2).
23. Loosen the charge air cooler outlet front hose to rear hose clamp (4).
24. Detach the charge air cooler outlet front hose (1) along with the clamp (4) from the charge air cooler outlet rear hose (3).

cardiagn.com

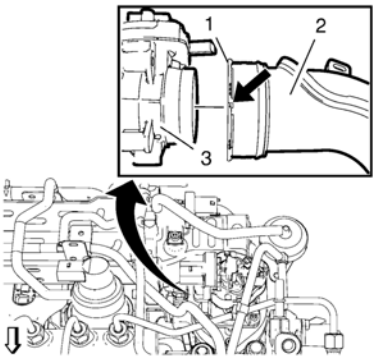

25. Unclip the 2 wiring harness retaining clips from the charge air cooler outlet rear hose (2).
26. Place a suitable tool at the market position (arrow) and rotate the lock ring (1) counterclockwise.
27. Detach the charge air cooler outlet rear hose (2) from the throttle body (3).
28. Remove the charge air cooler outlet rear hose (2).
29. Remove the exhaust gas recirculation manifold cooling return hose. Refer to Exhaust Gas Recirculation Manifold Cooling Return Hose Replacement.
30. Remove the exhaust gas recirculation cooling feed hose. Refer to Exhaust Gas Recirculation Valve Cooling Feed Hose Replacement.
31. Remove the turbocharger coolant return pipe from the exhaust gas recirculation cooler. Refer to Turbocharger Coolant Return Pipe Removal.

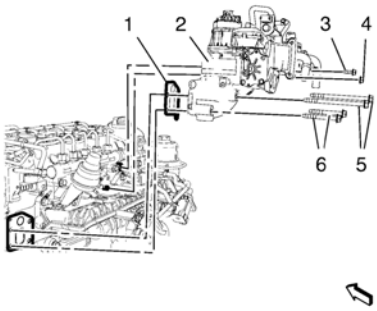

32. Remove the exhaust gas recirculation cooler nut (5) and the 5 exhaust gas recirculation cooler bolt (3, 4 and 6).
33. Remove the exhaust gas recirculation cooler (2) and the gasket (1).

Installation Procedure

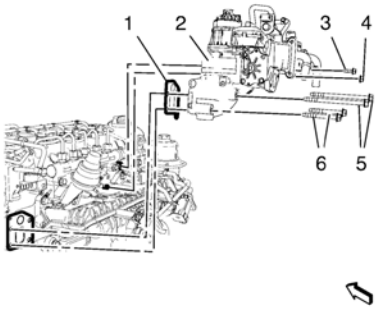

1. Install the exhaust gas recirculation cooler (2) and a NEW gasket (1).

Caution: Refer to Fastener Caution.

2. Install the 5 exhaust gas recirculation cooler bolt (3, 4 and 6) and the exhaust gas recirculation cooler nut (5) and tighten to **25 Y (18 lb ft)**.
3. Install the turbocharger coolant return pipe to the exhaust gas recirculation cooler. Refer to Turbocharger Coolant Return Pipe Removal.
4. Install the exhaust gas recirculation cooling feed hose. Refer to Exhaust Gas Recirculation Valve Cooling Feed Hose Replacement.
5. Install the exhaust gas recirculation manifold cooling return hose. Refer to Exhaust Gas Recirculation Manifold Cooling Return Hose Replacement.

cardiagn.com

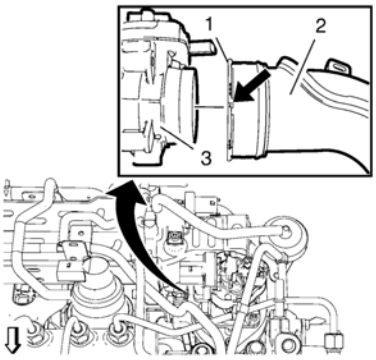

Note: Note: Ensure that the retaining ring (1) is locked.

6. Install the charge air cooler outlet rear hose (2) to the throttle body (3).
7. Clip in the 2 wiring harness retaining clips to the charge air cooler outlet rear hose (2).

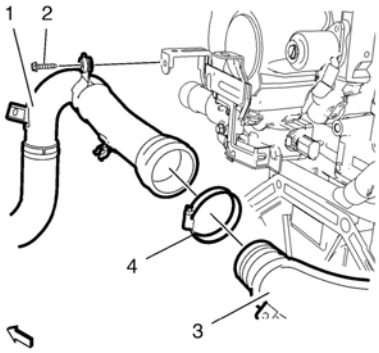

8. Install the charge air cooler outlet front hose (1) along with the clamp (4) to the charge air cooler outlet rear hose (3).
9. Install the charge air cooler outlet front hose bracket bolt (2) and tighten to **9 Y (80 lb in)**.
10. Tighten the charge air cooler outlet front hose tor rear hose clamp (4) to **4 Y (35 lb in)**.
11. Clip in the transmission vent hose to the charge air cooler outlet front hose.
12. Clip in the engine wiring harness retaining clip to the charge air cooler outlet front hose.
13. Install the intake manifold tuning valve vacuum control solenoid valve hose. Refer to Intake Manifold Tuning Valve Vacuum Control Solenoid Valve Hose Replacement.
14. Install the vacuum pump hose. Refer to Vacuum Pump Hose Replacement.
15. Install the engine coolant air bleed hose. Refer to Engine Coolant Air Bleed Hose Replacement.

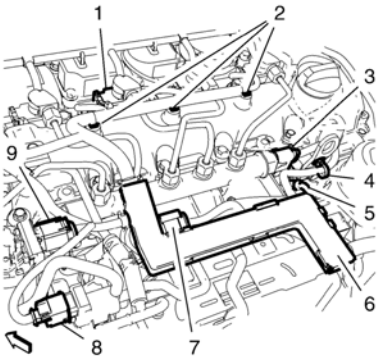

16. Position the engine wiring harness to the vehicle.
17. Clip the engine wiring harness conduit (6) to the 3 exhaust gas recirculation cooler brackets.
18. Clip the 4 engine wiring harness clips (2, 4) to the camshaft cover.
19. Connect the 4 fuel injector wiring harness plugs (1).
20. Connect the fuel injection rail pressure sensor wiring harness plug (3).
21. Connect the 4 glow plug wiring harness plugs (5).
22. Connect the intake actuator valve wiring harness plug (7).
23. Connect the exhaust gas recirculation valve wiring harness plug (9).
24. Connect the vacuum solenoid valve wiring harness plug (8).
25. For vehicles with MT: Connect the transmission shift lever and selector cable from the transmission. Refer to Manual Transmission Shift Lever and Selector Lever Cable Replacement.

    For vehicles with AT: Connect the range selector lever cable from the automatic transmission. Refer to Range Selector Lever Cable Replacement.
26. Raise the vehicle.
27. Install the exhaust gas recirculation pipe. Refer to Exhaust Gas Recirculation Pipe Replacement.

cardiagn.com

28. Fill the engine cooling system. Refer to Cooling System Draining and Filling.
29. Lower the vehicle.
30. Install the battery tray. Refer to Battery Tray Replacement.
31. Install the dash upper extension panel opening cover. Refer to Dash Upper Extension Panel Opening Cover Replacement.
32. Install the engine sight shield. Refer to Engine Sight Shield Replacement.

cardiagn.com

Removal Procedure

1. Remove the engine sight shield. Refer to Engine Sight Shield Replacement.
2. Disconnect exhaust gas recirculation valve wiring harness plug.

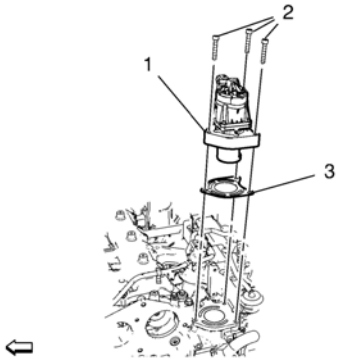

3. Remove the 3 exhaust gas recirculation valve bolts (2).
4. Remove the exhaust gas recirculation valve (1) and the gasket (3).

Installation Procedure

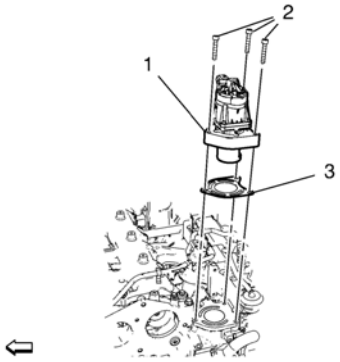

1. Install the exhaust gas recirculation valve (1) and a NEW gasket (3).

Caution: Refer to Fastener Caution.

2. Install the 3 exhaust gas recirculation valve bolts (2) and tighten to **25 Y (18 lb ft)**.
3. Connect exhaust gas recirculation valve wiring harness plug.
4. Install the engine sight shield. Refer to Engine Sight Shield Replacement.

cardiagn.com

Diagnostic Instructions

- Perform the Diagnostic System Check - Vehicle prior to using this diagnostic procedure.
- Review Strategy Based Diagnosis for an overview of the diagnostic approach.
- Diagnostic Procedure Instructions provides an overview of each diagnostic category.

Circuit/System Description

If a vehicle has an active or inactive diesel particulate filter (DPF) related diagnostic trouble code (DTC) a scan tool can be used to initiate a controlled service mode DPF regeneration. This function assists in locating the DPF components requiring repair. The service regeneration mode is also the only way to regenerate the DPF when the soot mass level has increased past the maximum threshold. When the DPF soot mass level exceeds a calibrated value, the ECM will command power reduction and normal driving regeneration is inhibited. Performing a service regeneration will remove the power reduction command. The service regeneration mode ignores many of the abort conditions required for normal driving regeneration. The service regeneration mode is also useful to verify that repairs to the DPF system have been successful. DPF diagnostics are active during a service regeneration. Monitoring for DPF DTCs during the service regeneration will help determine if any issues are present. If any DTCs occur, repair the issue and rerun the service regeneration mode. During the service regeneration procedure, the tailpipe outlet temperature will be greater than 550°C (1 022°F). Use caution around the engine compartment, and exhaust system during the regeneration procedure.

Reference Information

Scan Tool Reference

Control Module References for scan tool information

Circuit/System Verification

1. Ignition OFF, verify the coolant is at the correct level.

- *If the coolant is low*

  Refer to Loss of Coolant for diagnosis of the cooling system.

- *If the coolant is not low*

- Ignition ON, observe the scan tool diagnostic trouble code (DTC) information.
- Verify there are no DTCs set.

- *If there are any DTCs set*

  Refer to Diagnostic Trouble Code (DTC) List - Vehicle for further diagnosis.

- *If not DTCs are set*

- Engine idling, verify there are no engine mechanical conditions.
- Observe the scan tool DPF soot mass parameter. The parameter should be less than 5 g.

Circuit/System Testing

Warning: Tailpipe outlet exhaust temperatures will be greater than 550°C (1022°F) during service regeneration. In order to prevent personal injury or property damage from fire, or burns, perform the following:

1. Inspect and remove any debris from the exhaust system prior to service regeneration.
2. Do not connect any shop exhaust removal hoses to the vehicle tailpipe.
3. Park the vehicle outdoors with the hood open, away from walls or buildings.
4. Keep people, other vehicles, and combustible material away during service regeneration.
5. Do not leave the vehicle unattended.

Note: The service regeneration procedure can be stopped at any time in an emergency by switching off the ignition, depressing the brake pedal, or with a scan tool. Depressing the brake pedal returns the engine to idle speed. The scan tool function allows the engine to slowly return to idle.

1. Inspect the DPF.
2. Verify there is no soot leaking from the DPF.

- *If soot is present*

  Replace the DPF

- *If no soot present*

- Select the DPF service regeneration in the scan tool output control menu.
- Follow the corresponding instructions displayed on the screen of the scan tool.
- After completing the DPF service regeneration, operate the engine at 1 500 RPM for 1 min in order to let the exhaust cool evenly.
- Ignition OFF, allow the engine to cool down.
- Verify the coolant is at the correct level.

Repair Instructions

Exhaust Particulate Filter Replacement

cardiagn.com

Repair Verification

1. Ignition ON.
2. Verify there are no DTCs set.

- *If there are any DTCs set*

  Refer to Diagnostic Trouble Code (DTC) List - Vehicle for further diagnosis.

- *If there no DTCs are set*

- Engine idling.
- Verify the scan tool DPF soot mass parameter is near 0 g.

- *If not within the specified range*

  Repeat this service regeneration procedure.

cardiagn.com

Diesel Particulate Filter (DPF)

The diesel exhaust aftertreatment system consists of an under hood pre-catalyst and an underbody catalyst, which includes the main diesel oxidation catalyst and coated diesel particulate filter. The diesel particulate filter (DPF) consists of a solid honeycomb-like body made from silicon carbide, which is full of microscopic channels, and is coated with noble metal. The diesel exhaust after-treatment system reduces exhaust emissions such as hydrocarbons, carbon monoxide (CO) and particulate matter. The DPF collects particulate matter from the engine exhaust to minimize discharge of soot to the atmosphere. The exhaust flows through the channels and soot particles are deposited on the channel walls.

The soot particles accumulate in the channels of the DPF and are burned off at regular intervals, through a process called regeneration or cleaning. The DPF cleaning process prevents the DPF from clogging. Excess soot in filter can cause a drop in engine performance and crack the filter during regeneration.

DPF Differential Pressure Sensor

A DPF differential pressure sensor is connected across the DPF and provides feedback on soot level or exhaust back pressure to the engine control module (ECM) . The pressure pipes, which are connected to the differential pressure sensor, measure the pressure differential between the entrance and exit of the diesel particulate filter. The pressure differential or back pressure indicates the amount of soot collected in the DPF. To protect the engine, the ECM enables a regeneration when critical soot level is detected in the filter.

Exhaust Gas Temperature Sensor

The exhaust gas temperature sensor is a variable resistor that measures the temperature of the output of the pre-catalyst and the underbody catalyst. The engine control module (ECM) supplies 5 V to the exhaust gas temperature signal circuit and supplies a ground to the low reference circuit.

DPF Cleaning

During the cleaning process, additional fuel is injected via multiple post injections to increase the exhaust gas temperature. During this period, the DPF temperature is raised to approximately 600°C (1 112°F) and the deposited soot is oxidized or burned off to carbon dioxide (CO_2).

cardiagn.com

Removal Procedure

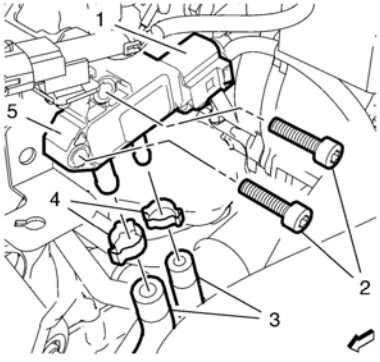

1. Disconnect the exhaust pressure differential sensor wiring harness plug (1).
2. Loosen the 2 exhaust pressure differential sensor hose clamps (4).
3. Remove the 2 exhaust pressure differential sensor hoses (3) and the 2 exhaust pressure differential sensor hose clamps.
4. Remove the 2 exhaust pressure differential sensor bolts (2).
5. Remove the exhaust pressure differential sensor (5).

Installation Procedure

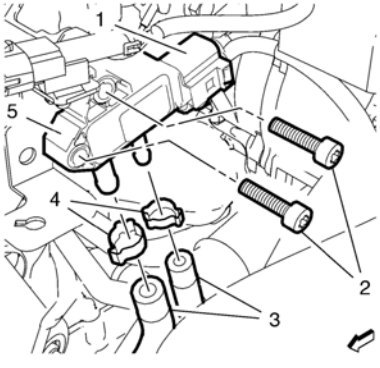

1. Install the exhaust pressure differential sensor (5).
2. Install the 2 exhaust pressure differential sensor bolts (2) and tighten to **9 Y (80 lb ft)**.
3. Install the 2 exhaust pressure differential sensor hoses (3) and the 2 exhaust pressure differential sensor hose clamps.
4. Fix the 2 exhaust pressure differential sensor hose clamps (4).
5. Connect the exhaust pressure differential sensor wiring harness plug (1).

cardiagn.com

Special Tools

EN-50429 Adapter Exhaust Temperature Sensor Remover/Installer

For equivalent regional tools, refer to Special Tools.

Removal Procedure

1. Remove the engine sight shield. Refer to Engine Sight Shield Replacement.
2. Remove the turbocharger heat shield. Refer to Turbocharger Heat Shield Replacement.
3. Remove the positive crankcase ventilation hose. Refer to Positive Crankcase Ventilation Hose/Pipe/Tube Replacement.
4. Remove the air cleaner outlet duct. Refer to Air Cleaner Outlet Duct Replacement.

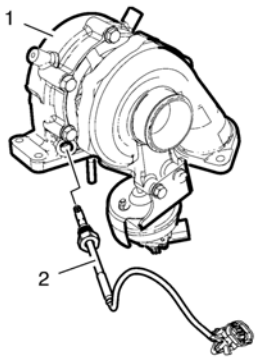

5. Disconnect the exhaust temperature sensor wiring harness plug position 1 from the engine wiring harness.
6. Remove the exhaust temperature sensor position 1 (2) from the turbocharger (1), using the *EN-50429* adapter .

Installation Procedure

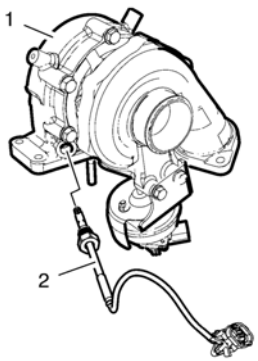

Caution: Refer to Fastener Caution.

1. Install the exhaust temperature sensor position 1 (2) to the turbocharger (1), using the *EN-50429* adapter . Tighten the exhaust temperature sensor position 1 (2) to **45 Y (33 lb ft)**.
2. Connect the exhaust temperature sensor wiring harness plug position 1 to the engine wiring harness.
3. Install the air cleaner outlet duct. Refer to Air Cleaner Outlet Duct Replacement.
4. Install the positive crankcase ventilation hose. Refer to Positive Crankcase Ventilation Hose/Pipe/Tube Replacement.
5. Install the turbocharger heat shield. Refer to Turbocharger Heat Shield Replacement.
6. Install the engine sight shield. Refer to Engine Sight Shield Replacement.

cardiagn.com

Special Tools

EN-50429 Adapter Exhaust Temperature Sensor Remover/Installer

For equivalent regional tools, refer to Special Tools.

Removal Installation

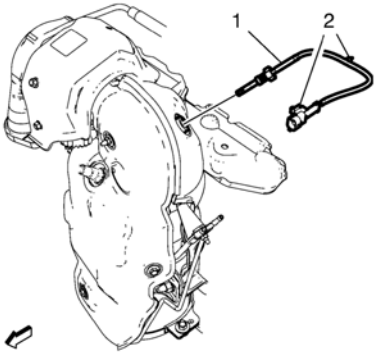

1. Disconnect and unclip the exhaust temperature sensor wiring harness plug (2) from the exhaust pressure sensor bracket.
2. Remove the exhaust temperature sensor position 2 (1) with the *EN-50429* adapter .

Installation Procedure

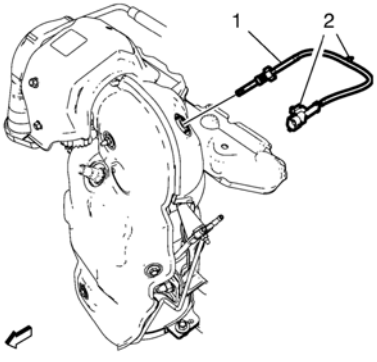

Caution: Refer to Fastener Caution.

1. Install the exhaust temperature sensor position 2 (1) with the *EN-50429* adapter and tighten to **45 Y (33 lb ft)**.
2. Connect and clip in the exhaust temperature sensor wiring harness plug (2) to the exhaust pressure sensor bracket.

cardiagn.com

Special Tools

EN-50429 Adapter Exhaust Temperature Sensor Remover/Installer

For equivalent regional tools, refer to Special Tools.

Removal Procedure

1. Remove the air cleaner outlet duct. Refer to Air Cleaner Outlet Duct Replacement.
2. Remove the 2 charge air cooler inlet air hose nuts. Hang the charge air cooler inlet air hose aside.

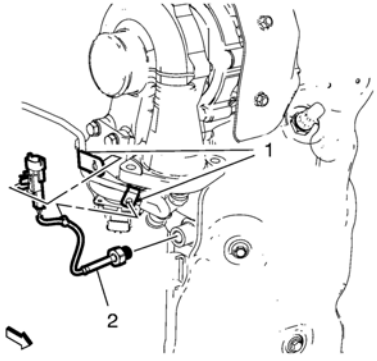

3. Disconnect and unclip the exhaust temperature sensor wiring harness plug from the charge air control vacuum pipe (1).
4. Remove the exhaust temperature sensor position 3 (2), using the *EN-50429* adapter .

Installation Procedure

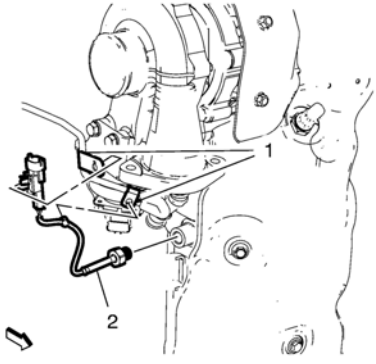

Caution: Refer to Fastener Caution.

1. Install the exhaust temperature sensor position 3 (2) and tighten to **45 Y (33 lb ft)**, using the *EN-50429* adapter .
2. Connect and clip in the exhaust temperature sensor wiring harness to the charge air control vacuum pipe (1).
3. Install the 2 charge air cooler inlet air hose nuts and tighten to **22 Y (16 lb ft)**.
4. Install the air cleaner outlet duct. Refer to Air Cleaner Outlet Duct Replacement.

cardiagn.com

Removal Procedure

1. Disconnect the battery negative cable. Refer to Battery Negative Cable Disconnection and Connection.
2. Raise and support the vehicle. Refer to Lifting and Jacking the Vehicle.
3. Place a collecting basin underneath.

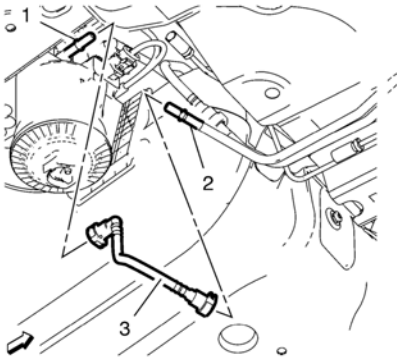

Warning: Refer to Gasoline/Gasoline Vapors Warning.

4. Disconnect the fuel feed pipe (3) from the fuel filter (1). Refer to Plastic Collar Quick Connect Fitting Service.
5. Disconnect the fuel feed pipe (3) from the fuel feed pipe (2). Refer to Plastic Collar Quick Connect Fitting Service.

Installation Procedure

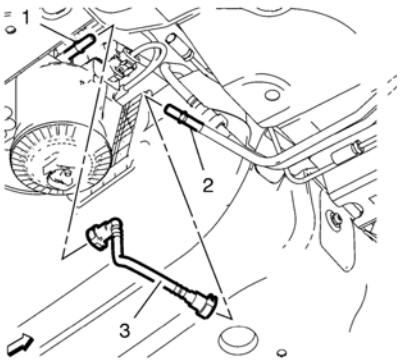

1. Connect the fuel feed pipe (3) to the fuel feed pipe (2). Refer to Plastic Collar Quick Connect Fitting Service.
2. Connect the fuel feed pipe (3) to the fuel filter (1). Refer to Plastic Collar Quick Connect Fitting Service.
3. Lower the vehicle.
4. Connect the battery negative cable. Refer to Battery Negative Cable Disconnection and Connection.

cardiagn.com

Removal Procedure

1. Remove the fuel tank. Refer to Fuel Tank Replacement.

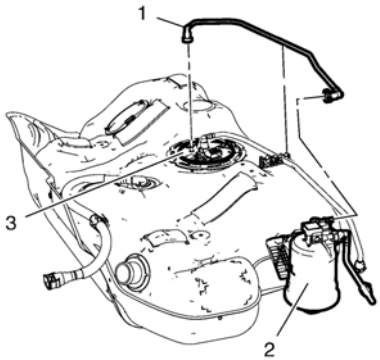

2. Disconnect the fuel feed pipe (1) from the fuel tank fuel pump module (3). Refer to Plastic Collar Quick Connect Fitting Service.
3. Disconnect the fuel feed pipe (1) from the fuel filter (2). Refer to Plastic Collar Quick Connect Fitting Service.
4. Unclip the fuel feed pipe from the retainer clip.

Installation Procedure

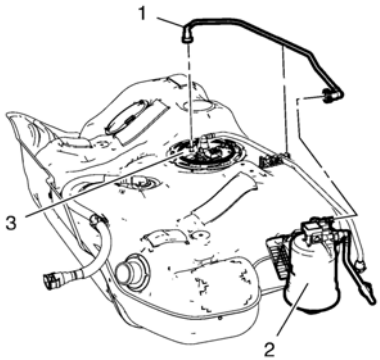

1. Position the fuel feed pipe (1) and clip in to the retainer clip.
2. Connect the fuel feed pipe (1) to the fuel filter (2). Refer to Plastic Collar Quick Connect Fitting Service.
3. Connect the fuel feed pipe (1) to the fuel tank fuel pump module (3). Refer to Plastic Collar Quick Connect Fitting Service.
4. Install the fuel tank. Refer to Fuel Tank Replacement.

cardiagn.com

Special Tools

- *EN-6015* Closer Plug
- *EN-34730-91* Fuel Pressure Gauge

For equivalent regional tools, refer to Special Tools.

Removal Procedure

Warning: Gasoline or gasoline vapors are highly flammable. A fire could occur if an ignition source is present. Never drain or store gasoline or diesel fuel in an open container, due to the possibility of fire or explosion. Have a dry chemical (Class B) fire extinguisher nearby.

Warning: Always wear safety goggles when working with fuel in order to protect the eyes from fuel splash.

1. Open the hood.
2. Disconnect the battery negative cable. Refer to Battery Negative Cable Disconnection and Connection.
3. Release the fuel pressure, using the test connection with *EN-34730-91* gauge .

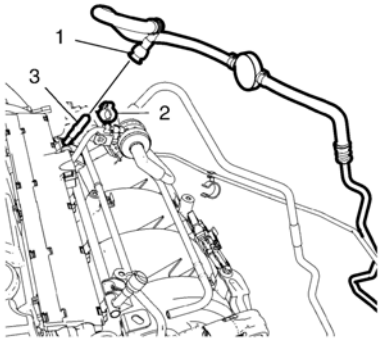

4. Unclip the fuel feed pipe (1) from the fuel feed pipe clip (2).
5. Release the fuel feed pipe (1) from the multiport fuel injection fuel rail (3).
6. Close the fuel feed pipe (1) and the multiport fuel injection fuel rail (3) with *EN–6015* plugs .
7. Raise and support the vehicle. Refer to Lifting and Jacking the Vehicle.

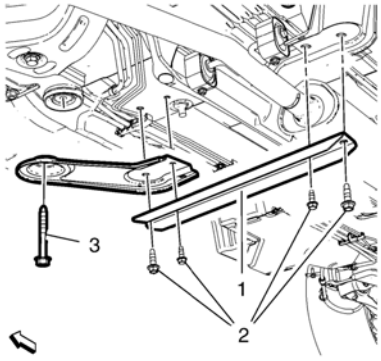

8. Remove the exhaust pipe front hanger and front suspension support bolts (2).
9. Remove the drivetrain and front suspension frame bolt (3).
10. Remove the drivetrain and front suspension frame support.

cardiagn.com

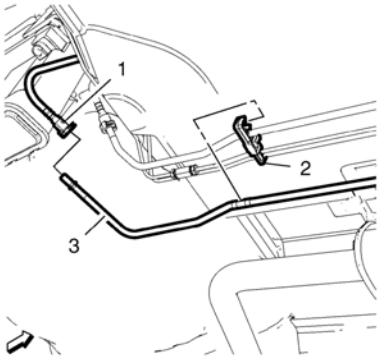

11. Unclip the fuel feed pipe (3) from the rear brake and fuel pipe clip (2).
12. Disconnect the fuel feed pipe (3) from the fuel feed pipe connector (1). Refer to Plastic Collar Quick Connect Fitting Service.
13. Close the fuel feed pipe (3) and the fuel feed pipe connector (1) with *EN-6015* plugs .

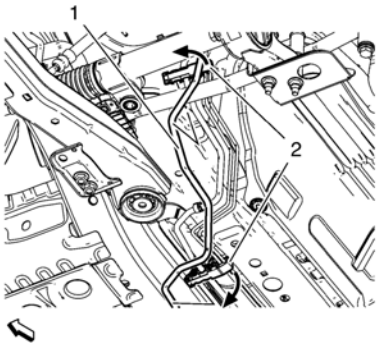

14. Unclip the fuel feed pipe (1) from the other 5 brake and fuel pipe clips (2).

    Note: Do not bend the fuel feed pipe.
15. Remove the fuel feed pipe (1).

Installation Procedure

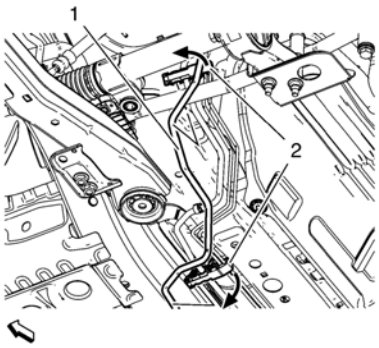

Note: Do not bend the fuel feed pipe.

1. Install the fuel feed pipe (1).
2. Clip the fuel feed pipe (1) into the 5 brake and fuel pipe clips (2).

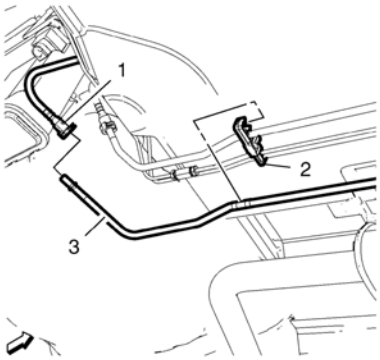

cardiagn.com

3. Remove the *EN-6015* closer plugs from the fuel feed pipe connector (1) and the fuel feed pipe (3).
4. Connect the fuel feed pipe (3) to the fuel feed pipe connector (1). Refer to Plastic Collar Quick Connect Fitting Service
5. Clip the fuel feed pipe (3) into the rear brake and fuel pipe clip (2).

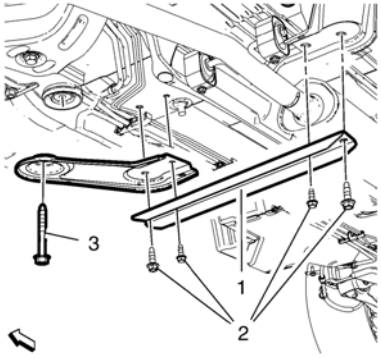

6. Install the drivetrain and front suspension frame support.

   Caution: Refer to Fastener Caution.

   Note: Do NOT reuse old bolts.
7. Install the NEW drivetrain and front suspension frame bolt (3) and tighten to **160 Y (118 lb ft)**.
8. Install the NEW exhaust pipe front hanger bolts (2) - M8 and tighten to **20 Y (15 lb ft)**.
9. Install the NEW front suspension support bolts (2) - M10 and tighten to **60 Y (44 lb ft)**.
10. Lower the vehicle.

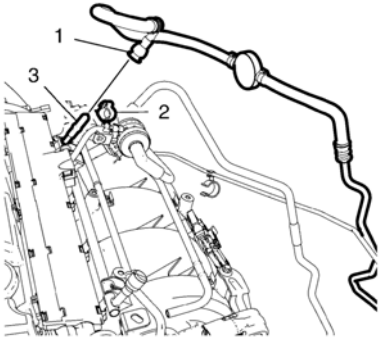

11. Remove the *EN-6015* closer plugs from the fuel feed pipe (1) and the multiport fuel injection fuel rail (3).
12. Install the fuel feed pipe (1) to the multiport fuel injection fuel rail (3).
13. Clip the fuel feed pipe (1) into the fuel feed pipe clip (2).
14. Connect the battery negative cable. Refer to Battery Negative Cable Disconnection and Connection.
15. Close the hood.

cardiagn.com

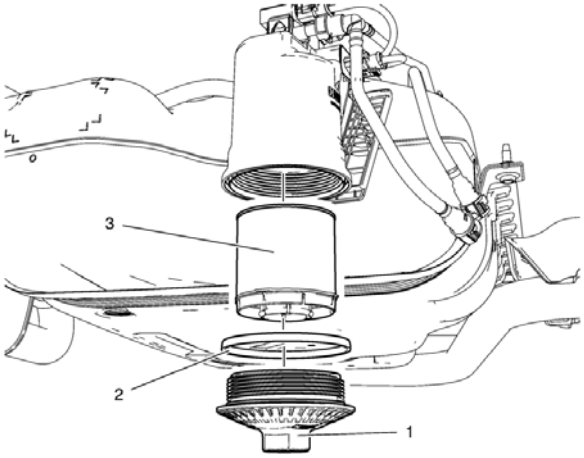

Fuel Filter Replacement

Callout	Component Name
1	Fuel Filter Cap **Caution:** Refer to Fastener Caution. **Tighten** 25 Y (19 lb in)
2	Fuel Filter Sealant
3	Fuel Filter

Warning: Refer to Gasoline/Gasoline Vapors Warning.

Preliminary Procedure

1. Disconnect the battery negative cable. Refer to Battery Negative Cable Disconnection and Connection.
2. Raise and support the vehicle. Refer to Lifting and Jacking the Vehicle.

cardiagn.com

Special Tools

EN-50434 Dust Cap - Fuel Rail Port

For equivalent regional tools, refer to Special Tools.

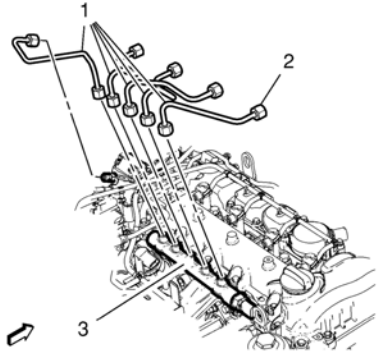

1. Remove the *EN-50434* dust cap from the multiport fuel injection fuel rail (3).
2. Loosen the 2 fuel injection fuel rail retaining bolts.
3. Install the fuel feed pipes (1).

Caution: Refer to Fastener Caution.

4. Tighten the 10 fuel injection fuel feed pipe nuts (2) to **27 Y(20 lb ft)**.
5. Tighten the 2 fuel injection fuel rail retaining bolts to **25 Y(18 lb ft)**.

cardiagn.com

Special Tools

EN-50434 Dust Cap - Fuel Rail Port

For equivalent regional tools, refer to Special Tools.

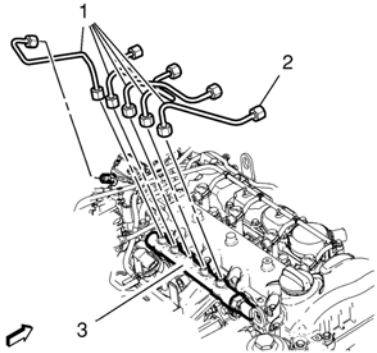

1. Remove the 10 fuel injection fuel feed pipe nuts from the fuel injection pump, the fuel feed rail (3), and the 4 fuel injectors (2).
2. Remove the 5 fuel feed pipes (1).
3. Close all connections with the *EN-50434* dust caps .

cardiagn.com

Special Tools

EN-50434 Closure Plugs

For equivalent regional tools, refer to Special Tools.

Removal Procedure

Warning: Gasoline or gasoline vapors are highly flammable. A fire could occur if an ignition source is present. Never drain or store gasoline or diesel fuel in an open container, due to the possibility of fire or explosion. Have a dry chemical (Class B) fire extinguisher nearby.

Warning: Always wear safety goggles when working with fuel in order to protect the eyes from fuel splash.

Caution: Clean all fuel pipe and hose connections and surrounding areas before disassembling to avoid possible contamination of the fuel system. Spray the fuel pump module cam-lock ring tang with penetrating oil prior to attempting removal.

1. Remove the engine sight shield. Refer to Engine Sight Shield Replacement.

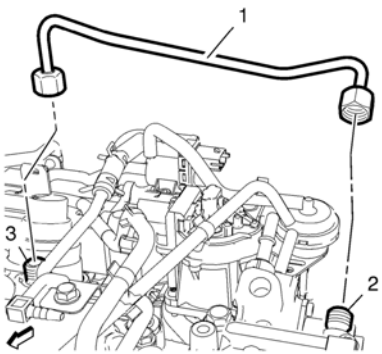

2. Remove the fuel injection fuel rail pipe (1) from the fuel injection pump (2) and from the fuel injection fuel rail (3).
3. Close the fuel feed injection fuel rail and the fuel injection pump with the *EN-50434* closure plugs .

Installation Procedure

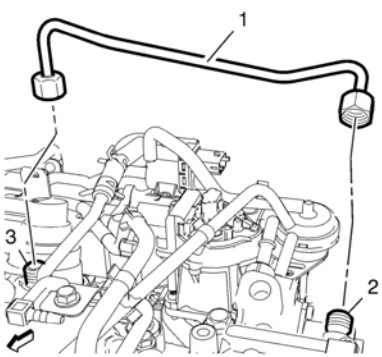

1. Remove the *EN-50434* closure plugs from the fuel feed injection fuel rail and the fuel injection pump.

Caution: Refer to Fastener Caution.

2. Install the fuel injection fuel rail pipe (1) to the fuel injection pump (2) and to the fuel injection fuel rail (3) and tighten to **27 Y (20 lb ft)**.
3. Install the engine sight shield. Refer to Engine Sight Shield Replacement.

cardiagn.com

Special Tools

EN-50434 Closure Plugs

For equivalent regional tools, refer to Special Tools.

Removal Procedure

Warning: Gasoline or gasoline vapors are highly flammable. A fire could occur if an ignition source is present. Never drain or store gasoline or diesel fuel in an open container, due to the possibility of fire or explosion. Have a dry chemical (Class B) fire extinguisher nearby.

Warning: Always wear safety goggles when working with fuel in order to protect the eyes from fuel splash.

Caution: Clean all fuel pipe and hose connections and surrounding areas before disassembling to avoid possible contamination of the fuel system. Spray the fuel pump module cam-lock ring tang with penetrating oil prior to attempting removal.

1. Remove the engine sight shield. Refer to Engine Sight Shield Replacement.
2. Disconnect the 4 fuel injectors wiring harness plugs.

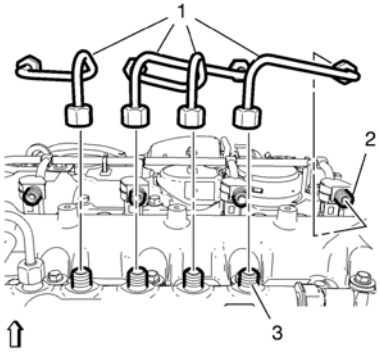

3. Remove the 4 fuel injector feed pipes (1) from the 4 fuel injectors (2) and from the fuel rail (3).
4. Close the 4 fuel injectors (2) and the fuel rail (3) with the *EN-50434* closure plugs .

Installation Procedure

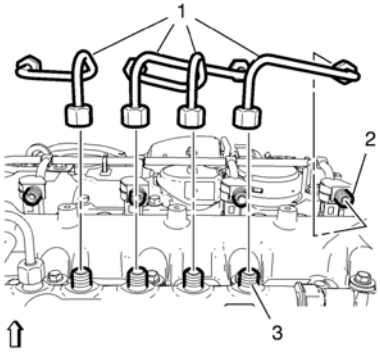

1. Remove the *EN-50434* closure plugs from the 4 fuel injectors (2) and the fuel rail (3).

Caution: Refer to Fastener Caution.

2. Install the 4 fuel injector feed pipes (1) to the 4 fuel injectors (2) and to the fuel rail (3) and tighten to **27 Y (20 lb ft)**.
3. Connect the 4 fuel injectors wiring harness plugs.
4. Install the engine sight shield. Refer to Engine Sight Shield Replacement.

cardiagn.com

Special Tools

EN-50434 Dust Cap - Fuel Rail Port

For equivalent regional tools, refer to Special Tools.

Removal Procedure

1. Remove the engine sight shield. Refer to Engine Sight Shield Replacement.
2. Remove the fuel injection fuel feed pipe - fuel injection pump to fuel rail. Refer to Fuel Injection Fuel Feed Pipe Replacement - Fuel Injection Pump to Fuel Rail.
3. Remove the fuel injection fuel feed pipe - fuel rail to fuel injector. Refer to Fuel Injection Fuel Feed Pipe Replacement - Fuel Rail to Fuel Injector.
4. Close all connections with the *EN-50434* plugs .

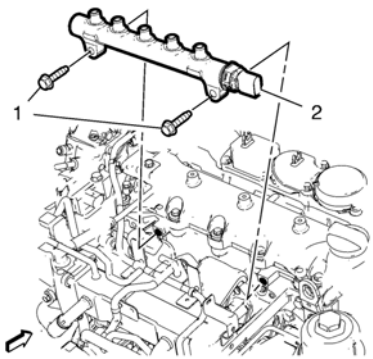

5. Remove the 2 fuel injection fuel rail retaining bolts (1).
6. Remove the fuel injection fuel rail (2).

Installation Procedure

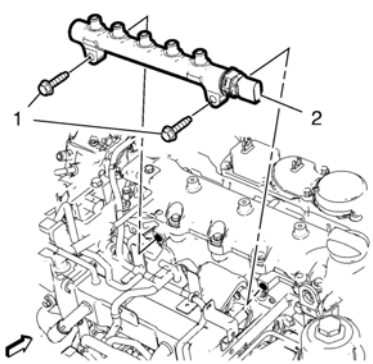

1. Install the fuel injection fuel rail (2).

Caution: Refer to Fastener Caution.

2. Install 2 fuel injection fuel rail retaining bolts and tighten to **25 Y (18 lb ft)**.
3. Remove the *EN-50434* plugs .
4. Install the fuel injection fuel feed pipe - fuel rail to fuel injector. Refer to Fuel Injection Fuel Feed Pipe Replacement - Fuel Rail to Fuel Injector.
5. Install the fuel injection fuel feed pipe - fuel injection pump to fuel rail. Refer to Fuel Injection Fuel Feed Pipe Replacement - Fuel Injection Pump to Fuel Rail.
6. Install the engine sight shield. Refer to Engine Sight Shield Replacement.

cardiagn.com

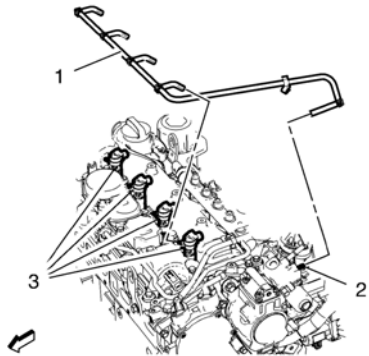

1. Install the fuel injection fuel return hose (1).
2. Install the fuel injection fuel return hose to the fuel injection pump (2) and the fuel injectors (3).
3. Clip in the fuel injection fuel return hose to the mountings at the positive crankcase ventilation valve.

cardiagn.com

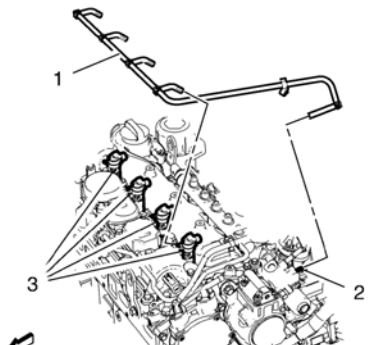

1. Unclip the fuel injection fuel return hose (1) from the mountings at the positive crankcase ventilation valve.
2. Remove the fuel injection fuel return hose (1) from the fuel injection pump (2) and the fuel injectors (3).

cardiagn.com

Removal Procedure

1. Remove the engine sight shield. Refer to Engine Sight Shield Replacement.

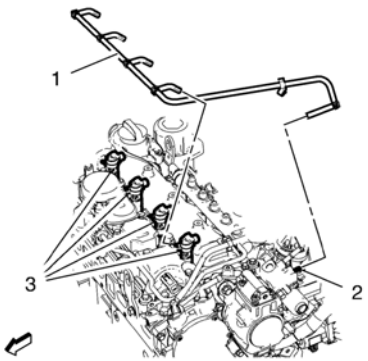

2. Unclip the fuel injection fuel return hose (2) 3 times from the mountings at the positive crankcase ventilation valve.
3. Unclip the fuel return hose from the 2 retainer clips.
4. Remove the fuel injection fuel return hose (1) from the fuel injection pump (2) and the fuel injectors (3).
5. Discard the fuel injection fuel return hose (1).

Installation Procedure

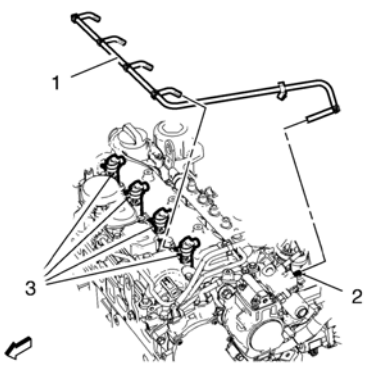

Note: Do not reuse the fuel injection fuel return hose. After fuel injection fuel return hose is removed, install a NEW fuel injection fuel return hose.

1. Install a NEW fuel injection fuel return hose (1) to the fuel injection pump (2) and the fuel injectors (3).
2. Clip the fuel injection fuel return hose (2) 3 times in the mountings at the positive crankcase ventilation valve.
3. Clip in the fuel return hose to the 2 retainer clips.
4. Install the engine sight shield. Refer to Engine Sight Shield Replacement.

cardiagn.com

Special Tools

- *EN-796* Remover-Quick Connector
- *EN-807* Closure Plugs
- *EN-6015* Closure Plugs

For equivalent regional tools, refer to Special Tools.

Removal Procedure

1. Remove the engine sight shield. Refer to Engine Sight Shield Replacement.
2. Disconnect the battery negative cable. Refer to Battery Negative Cable Disconnection and Connection.
3. Remove the engine control module. Refer to Engine Control Module Replacement.

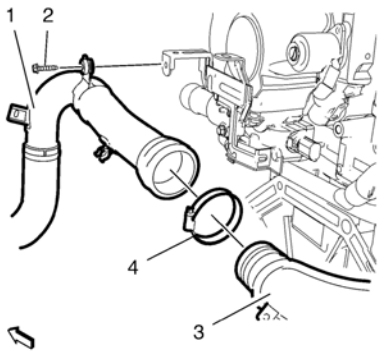

4. Remove the charge air cooler outlet front hose bracket bolt (2).
5. Loosen the charge air cooler outlet front hose to rear hose clamp (4).
6. Detach the charge air cooler outlet front hose (1) along with the clamp (4) from the charge air cooler outlet rear hose (3). Hang the charge air cooler outlet front hose aside (1).

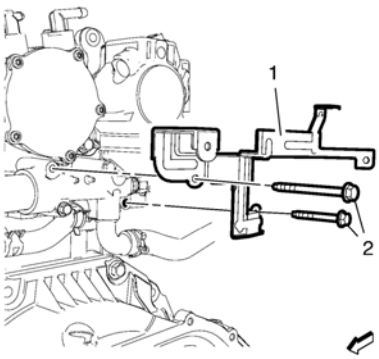

7. Unclip the 4 engine wiring harness retaining clips from the engine wiring harness bracket.
8. Remove the 2 engine wiring harness bracket and engine water outlet adapter bolts (2) from the engine water outlet adapter.
9. Remove the engine wiring harness bracket (1) from the engine water outlet adapter.

cardiagn.com

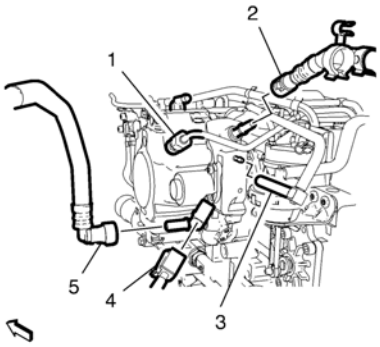

10. Disconnect the fuel injection pump wiring harness plug (4).
11. Remove the fuel injection fuel return hose (3).
12. Disconnect the fuel feed front pipe (5) and unclip from the fuel return front pipe clip. Refer to Plastic Collar Quick Connect Fitting Service.
13. Close the fuel return front pipe with the *EN-6015* closure plugs .
14. Disconnect the fuel return front pipe (2), using the *EN-796* remover . Refer to Plastic Collar Quick Connect Fitting Service.
15. Remove the fuel injection fuel feed pipe (1). Refer to Fuel Injection Fuel Feed Pipe Replacement - Fuel Injection Pump to Fuel Rail.
16. Close the fuel injection fuel feed pipe with the *EN-807* closure plugs .

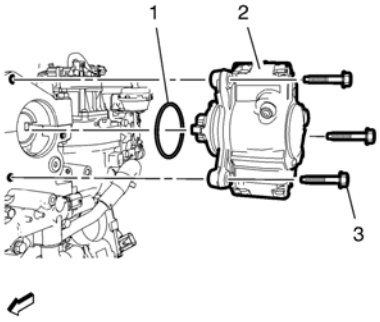

17. Remove the 3 injection pump bolts (3).
18. Remove the injection pump (2) and the gasket (1).

Installation Procedure

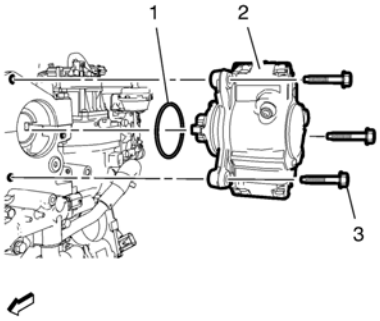

1. Install the injection pump (2) and a NEW gasket (1).

   Caution: Refer to Fastener Caution.
2. Install the 3 injection pump bolts (3) and tighten to **25 Y (18 lb ft)**.

cardiagn.com

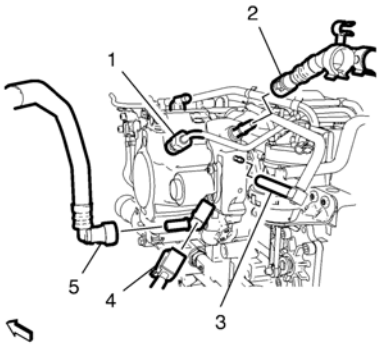

3. Remove the *EN-807* closure plugs from the fuel injection fuel feed pipe (1).
4. Install the fuel injection fuel feed pipe (1). Refer to Fuel Injection Fuel Feed Pipe Replacement - Fuel Injection Pump to Fuel Rail.
5. Remove the *EN-6015* closure plugs from the fuel return front pipe (2).
6. Connect the fuel return front pipe (2). Refer to Plastic Collar Quick Connect Fitting Service.
7. Connect the fuel feed front pipe (5) and clip to the fuel return front pipe clip. Refer to Plastic Collar Quick Connect Fitting Service.
8. Install the fuel injection fuel return hose (3).
9. Connect the fuel injection pump wiring harness plug (4).

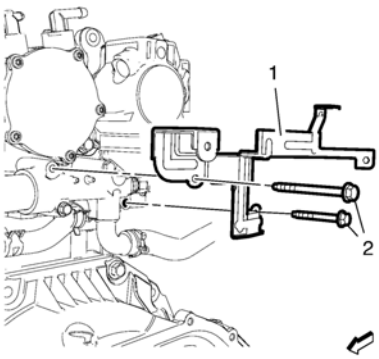

10. Install the engine wiring harness bracket (1) to the engine water outlet adapter.
11. Install the 2 engine wiring harness bracket and engine water outlet adapter bolts (2) to the engine water outlet adapter and tighten to **10 Y (89 lb in)**.
12. Clip the 4 engine wiring harness retaining clips into the engine wiring harness bracket.

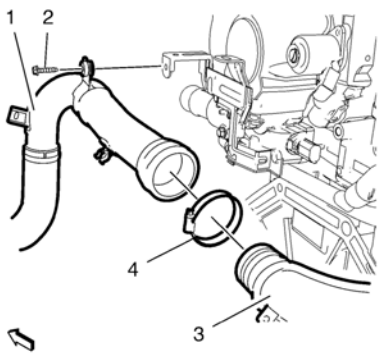

13. Install the charge air cooler outlet front hose (1) along with the clamp (4) to the charge air cooler outlet rear hose (3).
14. Install the charge air cooler outlet front hose bracket bolt (2) and tighten to **9 Y (80 lb in)**.
15. Tighten the charge air cooler outlet front hose to the rear hose clamp (4) to **4 Y (35 lb in)**.
16. Install the engine control module. Refer to Engine Control Module Replacement.
17. Connect the battery negative cable. Refer to Battery Negative Cable Disconnection and Connection.
18. Install the engine sight shield. Refer to Engine Sight Shield Replacement.

cardiagn.com

Diagnostic Instructions

- Perform the Diagnostic System Check - Vehicle prior to using this diagnostic procedure.
- Review Strategy Based Diagnosis for an overview of the diagnostic approach.
- Diagnostic Procedure Instructions provides an overview of each diagnostic category.

Circuit/System Description

The control module enables the appropriate fuel injector pulse for each cylinder. The ignition voltage is supplied directly to the fuel injectors. The control module controls each fuel injector by grounding the control circuit via a solid state device called a driver. A fuel injector coil winding resistance that is too high or too low will affect the engine driveability. A fuel injector control circuit DTC may not set, but a misfire may be apparent. The fuel injector coil windings are affected by temperature. The resistance of the fuel injector coil windings will increase as the temperature of the fuel injector increases.

The active fuel injector tester *CH 47976* Active Fuel Injector Tester is used to test the fuel pump, fuel system leak down, and the fuel injectors. Following the user guide, and the on screen prompts or selections, will indicate the steps required to perform each of the available tests. The tester will perform all of the tests automatically and display the results of the test. The results can also be downloaded for storage and printing.

Reference Information

Schematic Reference

Engine Controls Schematics

Connector End View Reference

Component Connector End Views

Electrical Information Reference

- Circuit Testing
- Connector Repairs
- Testing for Intermittent Conditions and Poor Connections
- Wiring Repairs

Special Tools

CH 47976 Active Fuel Injector Tester

For equivalent regional tools, refer to Special Tools.

Component Testing

Fuel Injector Coil Static Test

Verify the resistance of each fuel injector with one of the following methods:

- If the B34A Engine Coolant Temperature Sensor 1 is between 10–32°C (50–90°F), the resistance of each fuel injector should be 11–14 Ω.
  - If the injectors measure OK, perform the active fuel injector tester test procedure.
  - If not within the specified range, replace the fuel injector.
- If the B34A Engine Coolant Temperature Sensor 1 is not between 10–32°C (50–90°F), measure and record the resistance of each fuel injector with a DMM. Subtract the lowest resistance value from the highest resistance value. The difference between the two should be equal to or less than 3 Ω.
  - If the difference is equal to or less than 3 Ω, refer to active fuel injector tester test procedure for further diagnosis of the fuel injectors.
  - If the difference is more than 3 Ω, add all of the fuel injector resistance values to obtain a total resistance value. Divide the total resistance value by the number of fuel injectors to obtain an average resistance value. Subtract the lowest individual fuel injector resistance value from the average resistance value. Compute the difference between the highest individual fuel injector resistance value and the average resistance value. Replace the fuel injector that displays the greatest difference above or below the average.

Active Fuel Injector Tester Static Test Procedure

Note:

- DO NOT perform this test if the engine coolant temperature (ECT) is above 94°C (201°F). Irregular fuel pressure readings may result due to hot soak fuel boiling.
- Verify that adequate fuel is in the fuel tank before proceeding with this diagnostic.

1. Turn OFF all accessories.
2. Turn OFF the ignition.
3. Install the active fuel injector tester. Refer to the active fuel injector tester user guide.
4. Turn ON the active fuel injector tester and select the vehicle.
5. Turn ON the ignition and perform the injector test.

- If the active fuel injector tester aborts testing due to fuel pressure or fuel leak down, refer to Fuel System Diagnosis.
- View the test results.
- If any injector exceeds the recommended tolerance, replace the injector(s).

Repair Instructions

cardiagn.com

Fuel Injector Diagnosis (Special Tool)

Perform the Diagnostic Repair Verification after completing the diagnostic procedure.

cardiagn.com

Circuit/System Description

The control functions for the fuel injection system are integrated in the engine control module (ECM). Each injectors flow rate information, or injection quantity adjustment flow rate numbers, and cylinder position are stored in the memory of the ECM. The fuel injector flow rate programming must be done when any of the following procedures are performed:

- The ECM is replaced
- A fuel injector is replaced

Injector Flow Rate Programming

1. Ignition OFF.
2. Record all the injection quantity adjustment codes from the corresponding cylinder from each injector that is being replaced or from all injectors if the ECM was replaced.

   Note: Enter the 20 digit injection quantity adjustment code from the injector or injectors that is printed on the top.
3. Perform the scan tool Injector Flow Rate Programming and follow the instructions on the screen.

Repair Verification

1. Install any components or connectors that have been removed or replaced during diagnosis.
2. Perform any adjustment, programming or setup procedures that are required when a component or module is removed or replaced.
3. Ignition OFF for 60 s.
4. Ignition ON, engine OFF.
5. Clear the DTCs.
6. If the repair was related to a DTC, duplicate the Conditions for Running the DTC and use the Freeze Frame/Failure Records, if applicable, in order to verify the DTC does not reset. If the DTC resets or another DTC is present, refer to the Diagnostic Trouble Code (DTC) List - Vehicle and perform the appropriate diagnostic procedure.

cardiagn.com

Special Tools

- *EN-50428* Remover - Injector
- *EN-48559* Injector Protective Caps
- *EN-47632* Cleaning Tool

For equivalent regional tools, refer to Special Tools.

Removal Procedure

1. Remove the engine sight shield. Refer to Engine Sight Shield Replacement.
2. Remove the 4 fuel injection fuel feed pipes - fuel rail to fuel injector. Refer to Fuel Injection Fuel Feed Pipe Replacement - Fuel Rail to Fuel Injector.
3. Remove the fuel injection fuel feed pipe - fuel pump to fuel rail. Refer to Fuel Injection Fuel Feed Pipe Replacement - Fuel Injection Pump to Fuel Rail.

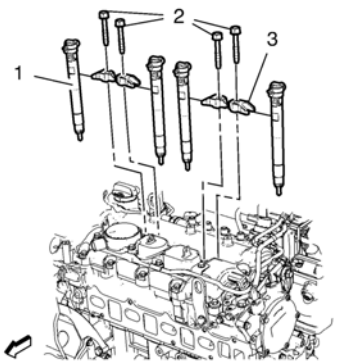

4. Remove and DISCARD the 4 fuel injector bracket retaining bolts (2).
5. Remove the 4 fuel injector brackets (3).
6. Remove the 4 fuel injectors (1), using the *EN-50428* remover. Remove the 4 inner camshaft cover retaining bolts to use remover.
7. Close the 4 fuel injector nozzles with the *EN-48559* protective caps.

Installation Procedure

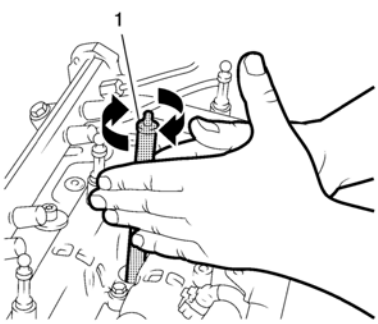

Caution: Refer to EN-47632 Cleaning Tool Rotation Caution.

Note: Use both sides of EN-47632 cleaning tool, one for loosing the dirt and the other to haul out the dirt.

1. Clean the sealing surfaces, use the *EN-47632* cleaning tool.

cardiagn.com

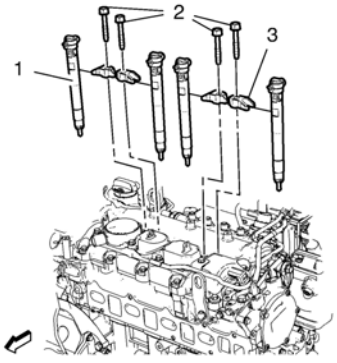

Caution: Refer to Fastener Caution.

2. Install the 4 camshaft cover retaining bolts. Tighten the bolts to **10 Y (89 lb in)**.
3. Remove the 4 *EN-48559* protective caps.
4. Install the 4 fuel injectors (1).
5. Install the 4 fuel injector brackets (3).

Caution: Refer to Torque-to-Yield Fastener Caution.

6. Install the 4 NEW fuel injector bracket retaining bolts (2). Tighten the bolts to **14 Y + 110° (10 lb ft + 110°)**.
7. Install the 4 fuel injection fuel feed pipes - fuel rail to fuel injector. Refer to Fuel Injection Fuel Feed Pipe Replacement - Fuel Rail to Fuel Injector.
8. Install the fuel injection fuel feed pipe - fuel pump to fuel rail. Refer to Fuel Injection Fuel Feed Pipe Replacement - Fuel Injection Pump to Fuel Rail.
9. Install the engine sight shield. Refer to Engine Sight Shield Replacement.

cardiagn.com

Special Tools

- *EN-50457* Fuel Pressure Gauge
- *EN-50517* Fuel Pressure Gauge Adapter

For equivalent regional tools, refer to Special Tools.

Removal Procedure

Warning: Refer to Relieving Fuel Pressure Warning.

Warning: Refer to Gasoline/Gasoline Vapors Warning.

Warning: Refer to Safety Goggles and Fuel Warning.

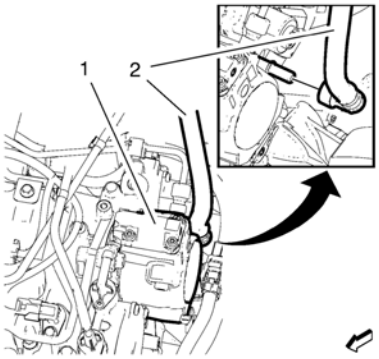

Disconnect the fuel feed pipe (2) from the fuel injection pump (1) and unclip from the retainer clip. Refer to Plastic Collar Quick Connect Fitting Service.

Installation Procedure

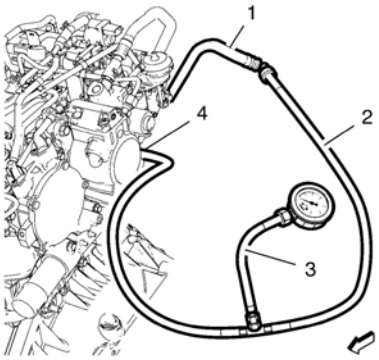

1. Connect the *EN–50517* Fuel Pressure Gauge Adapter (2) to the fuel feed line port at position (4) and to the fuel feed pipe (1).
2. Connect the *EN-50457* Fuel Pressure Gauge (3) to the *EN-50517* Fuel Pressure Gauge Adapter (2).
3. Check the fuel leakage.
4. Remove the *EN-50457* Fuel Pressure Gauge (3) from the *EN-50517* Fuel Pressure Gauge Adapter (2).
5. Remove the *EN-50517* Fuel Pressure Gauge Adapter (2) from the fuel feed line port (4) and from the fuel feed pipe (1).

cardiagn.com

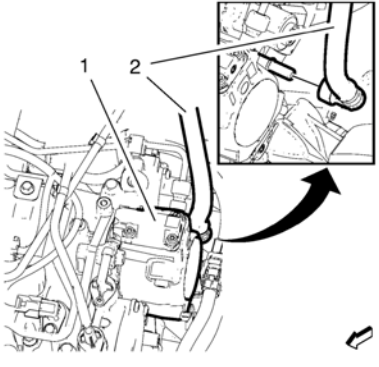

6. Connect the fuel feed pipe (2) to the fuel injection pump (1) and clip in to the retainer clip.
7. Prime the fuel system. Refer to Fuel System Priming.

cardiagn.com

Warning: Refer to Gasoline/Gasoline Vapors Warning.

Warning: Remove the fuel tank cap and relieve the fuel system pressure before servicing the fuel system in order to reduce the risk of personal injury. After you relieve the fuel system pressure, a small amount of fuel may be released when servicing the fuel lines, the fuel injection pump, or the connections. In order to reduce the risk of personal injury, cover the fuel system components with a shop towel before disconnection. This will catch any fuel that may leak out. Place the towel in an approved container when the disconnection is complete.

1. Disconnect the battery. Refer to Battery Negative Cable Disconnection and Connection.

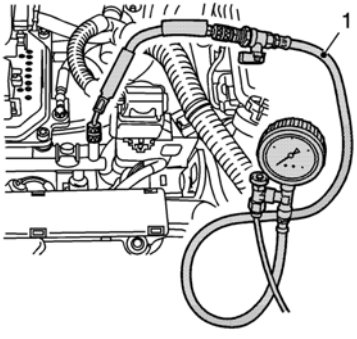

2. Remove the protective cap from the test connection.
3. Relieve the fuel pressure, using the *EN-34730–91* Pressure Tester (1).

cardiagn.com

Removal Procedure

1. Remove the fuel tank. Refer to Fuel Tank Replacement.

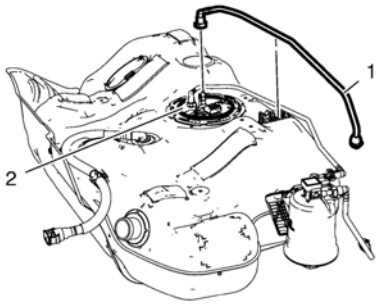

2. Disconnect the fuel return pipe (1) from the fuel tank fuel pump module (2). Refer to Plastic Collar Quick Connect Fitting Service.
3. Unclip the fuel return pipe from the retainer clip.

Installation Procedure

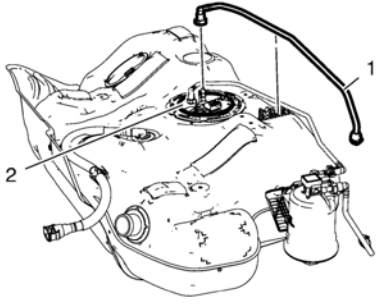

1. Position the fuel return pipe (1) and clip in to the retainer clip.
2. Connect the fuel return pipe (1) to the fuel tank fuel pump module (2). Refer to Plastic Collar Quick Connect Fitting Service.
3. Install the fuel tank. Refer to Fuel Tank Replacement.

cardiagn.com

Special Tools

EN-6015 Closure Plugs

For equivalent regional tools, refer to Special Tools.

Removal Procedure

1. Disconnect the battery negative cable. Refer to Battery Negative Cable Disconnection and Connection.
2. Remove the engine sight shield. Refer to Engine Sight Shield Replacement.

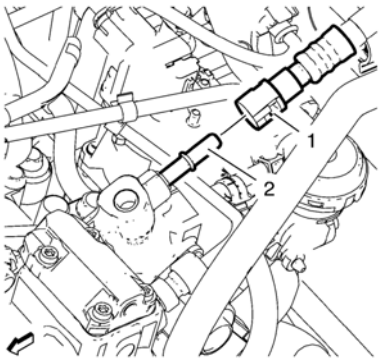

Warning: Refer to Gasoline/Gasoline Vapors Warning.

3. Disconnect the fuel return pipe (1) from the fuel injection pump (2) and unclip from 2 retainer clips. Refer to Plastic Collar Quick Connect Fitting Service.
4. Plug the connections with *EN-6015* plugs .

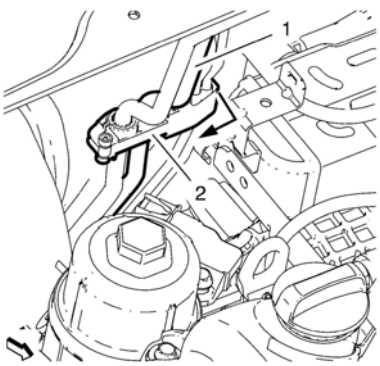

5. Open the upper bulkhead bracket (2).
6. Unclip the fuel return pipe (1) from the bulkhead bracket.
7. Raise and support the vehicle. Refer to Lifting and Jacking the Vehicle.
8. Remove the front compartment insulator. Refer to Front Compartment Insulator Replacement.

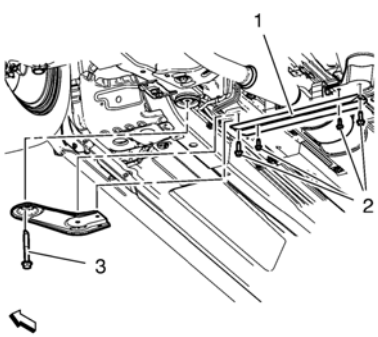

cardiagn.com

9. Remove the 4 exhaust pipe front hanger bracket bolts (2).
10. Remove the drivetrain and the front suspension frame bolt (3).
11. Remove the right drivetrain and the front suspension frame support.

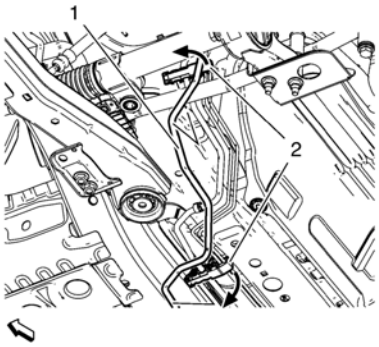

12. Unclip the fuel return pipe (1) from the 4 bracket clips (2).

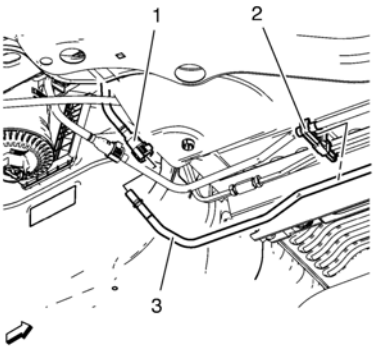

13. Disconnect the fuel return pipe (3) from the fuel return pipe connector (1). Refer to Plastic Collar Quick Connect Fitting Service.
14. Plug the connections with *EN-6015* plugs .
15. Unclip the fuel return pipe (3) from the last bracket clip (2).
16. Remove the fuel return pipe (3).

Installation Procedure

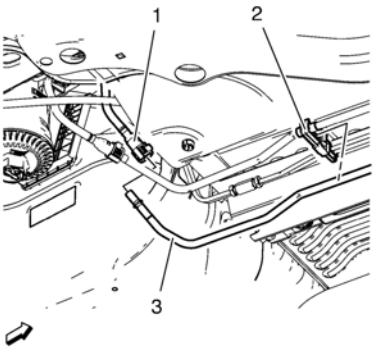

1. Install and position the fuel return pipe (3) and clip it in to the last bracket clip (2).
2. Remove the *EN-6015* plugs .
3. Connect the fuel return pipe (3) to the fuel return pipe connector (1).

cardiagn.com

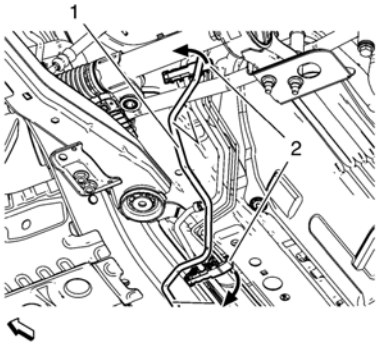

4. Clip in the fuel return pipe (1) to the 4 bracket clips (2).

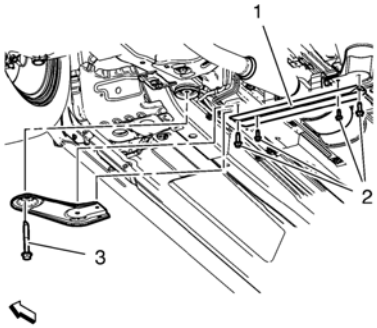

5. Install the right drivetrain and the front suspension frame support.
6. Install the drivetrain and the front suspension frame bolt (3).
7. Install the 4 exhaust pipe front hanger bracket bolts (2). Refer to Exhaust Pipe Front Hanger Bracket Replacement.

Caution: Refer to Fastener Caution.

8. Tighten the drivetrain and the front suspension frame bolt (3) to **160 Y (118 lb ft)**.
9. Install the front compartment insulator. Refer to Front Compartment Insulator Replacement.
10. Lower the vehicle.

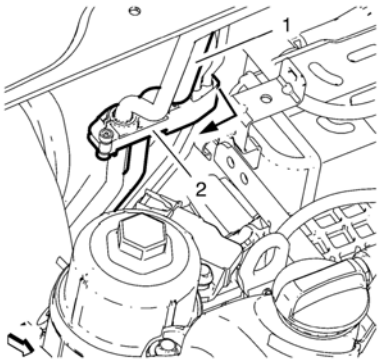

11. Clip in the fuel return pipe (1) to the upper bulkhead bracket (2).
12. Close the upper bulkhead bracket.

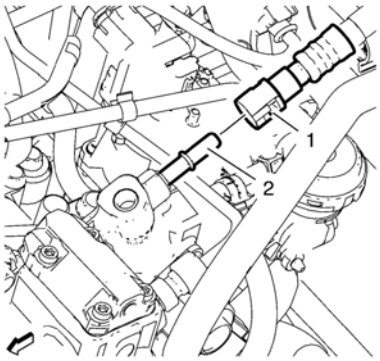

13. Remove the *EN-6015* plugs .
14. Connect the fuel return pipe (1) to the fuel injection pump (2) and clip it in to 2 retainer clips.

cardiagn.com

15. Install the engine sight shield. Refer to Engine Sight Shield Replacement.
16. Connect the battery negative cable. Refer to Battery Negative Cable Disconnection and Connection.

cardiagn.com

Note: If the fuel filter is plugged, the fuel tank should be inspected internally and cleaned if necessary.

1. Drain the fuel tank. Refer to Fuel Tank Draining.
2. Remove the fuel pump module assembly. Refer to Fuel Tank Fuel Pump Module Replacement.
3. Inspect the fuel pump module strainer. Replace the pump module assembly if the fuel strainer is contaminated.

Note: When flushing the fuel tank, handle the fuel and water mixture as a hazardous material. Handle the fuel and water in accordance with all applicable local, state, and federal laws and regulations.

4. Flush the fuel tank with hot water.
5. Pour the water out of the fuel sender assembly opening in the fuel tank. Rock the fuel tank in order to be sure that the removal of the water from the fuel tank is complete.
6. Allow the tank to dry completely before reassembly.
7. Disconnect the fuel feed pipe at the engine fuel rail. Refer to Fuel Feed Pipe Replacement.

Note: Only use oil-free compressed air to blow out the fuel pipes.

8. Clean the fuel pipes by applying air pressure in the opposite direction of the fuel flow.
9. Connect the fuel feed pipe to the engine fuel rail. Refer to Fuel Feed Pipe Replacement.
10. Install the fuel pump module assembly. Refer to Fuel Tank Fuel Pump Module Replacement.

cardiagn.com

Fuel System Overview

The fuel system is a returnless on-demand design. The fuel pressure regulator is a part of the fuel pump module, eliminating the need for a return pipe from the engine. A returnless fuel system reduces the internal temperature of the fuel tank by not returning hot fuel from the engine to the fuel tank. Reducing the internal temperature of the fuel tank results in lower evaporative emissions.

An electric turbine-style fuel pump is attached to the fuel pump module inside the fuel tank. The fuel pump supplies high pressure fuel through the fuel feed pipe to the fuel injection system. The fuel pump provides fuel at a higher rate of flow than is needed by the fuel injection system. The fuel pump module contains a reverse flow check valve. The check valve and the fuel pressure regulator maintain fuel pressure in the fuel feed pipe and the fuel rail in order to prevent long cranking times.

Fuel Tank

The fuel tank stores the fuel supply. The fuel tank is located in the rear of the vehicle. The fuel tank is held in place by 2 metal straps that are attached to the underbody. The fuel tank is molded from high-density polyethylene.

Fuel Filler Cap

Note: If a fuel tank filler cap requires replacement, use only a fuel tank filler cap with the same features. Failure to use the correct fuel tank filler cap can result in a serious malfunction of the fuel and Evaporative Emission (EVAP) system.

The fuel fill pipe has a tethered fuel filler cap. A torque-limiting device prevents the cap from being overtightened. To install the cap, turn the cap clockwise until the cap clicks audibly. This indicates that the cap is correctly torqued and fully seated. A fuel filler cap that is not fully seated may cause a malfunction in the emission system.

Fuel Pump Module

The fuel pump module consists of the following major components:

- The fuel level sensor
- The fuel pump
- The fuel strainer
- The fuel pressure regulator
- The fuel filter

Fuel Level Sensor

The fuel level sensor consists of a float, a wire float arm, and a ceramic resistor card. The position of the float arm indicates the fuel level. The fuel level sensor contains a variable resistor which changes resistance in correspondence with the position of the float arm. The ECM sends the fuel level information via the serial data circuit to the instrument panel cluster. This information is used for the instrument panel cluster fuel gauge and the low fuel warning indicator, if applicable. The ECM also monitors the fuel level input for various diagnostics.

Fuel Pump

The fuel pump is mounted in the fuel pump module reservoir. The fuel pump is an electric low-pressure pump. Fuel is pumped to the fuel injection system at specified rates of flow and pressure. The fuel pump delivers a constant flow of fuel to the engine even during low fuel conditions and aggressive vehicle maneuvers. The ECM controls the electric fuel pump operation through a fuel pump relay. The fuel pump flex pipe acts to dampen the fuel pulses and noise generated by the fuel pump.

Fuel Strainer

The fuel strainer is attached to the lower end of the fuel pump module. The fuel strainer is made of woven plastic. The functions of the fuel strainer are to filter contaminants and to wick away fuel. Normally, the fuel strainer does not require maintenance. Fuel stoppage at this point indicates that the fuel tank contains an abnormal amount of sediment or contamination.

Fuel Pressure Regulator

The fuel pressure regulator is contained in the fuel pump module near the fuel pump outlet. The fuel pressure regulator is a diaphragm relief valve. The diaphragm has fuel pressure on one side and regulator spring pressure on the other side. Fuel pressure is controlled by a pressure balance across the regulator. The fuel system pressure is constant.

Fuel Feed Pipes

The fuel feed pipe carries fuel from the fuel tank to the fuel injection system. The fuel pipe consists of 3 sections:

- The rear fuel pump fuel feed hose runs from the top of the fuel tank to the chassis fuel pipe. The rear fuel hose is constructed of nylon.
- The fuel feed intermediate pipe is located under the vehicle and connects the rear fuel pump fuel feed hose to the front fuel pump fuel feed hose. The intermediate fuel pipe is constructed of a combination of nylon and steel pipes.
- The front fuel pump fuel feed hose connects the fuel feed intermediate pipe to the fuel rail. The front fuel hose contains the fuel pulse dampener and is constructed of a combination of nylon and steel pipes.

Nylon Fuel Pipes

Warning: Refer to Fuel and Evaporative Emission Pipe Warning.

Nylon pipes are constructed to withstand maximum fuel system pressure, exposure to fuel additives, and changes in temperature.

Heat resistant rubber hose or corrugated plastic conduit protect the sections of the pipes that are exposed to chasing, high temperature, or vibration.

Nylon fuel pipes are somewhat flexible and can be shaped around gradual turns under the vehicle. However, if nylon fuel pipes are forced into sharp bends, the pipes may kink and restrict the flow of fuel. Also, once exposed to fuel, nylon pipes may become stiffer and are more likely to kink if bent too far. Exercise special care when working on a vehicle with nylon fuel pipes.

Quick-Connect Fittings

cardiagn.com

Nylon fuel pipes are somewhat flexible and can be shaped around gradual turns under the vehicle. However, if nylon fuel pipes are forced into sharp bends, the pipes may kink and restrict the flow of fuel. Also, once exposed to fuel, nylon pipes may become stiffer and are more likely to kink if bent too far. Exercise special care when working on a vehicle with nylon fuel pipes.

Fuel Pulse Dampener

The fuel pulse dampener is a part of the front fuel pump fuel feed hose. The fuel pulse dampener is diaphragm-operated with fuel pump pressure on one side and with spring pressure on the other side. The function of the dampener is to dampen the fuel pump pressure pulsations.

Fuel Rail Assembly

The fuel rail assembly is attached to the cylinder head. The fuel rail assembly performs the following functions:

- Positions the injectors in the intake ports of the cylinder head
- Distributes fuel evenly to the injectors

Fuel Injectors

The fuel injector assembly is a solenoid device controlled by the ECM that meters pressurized fuel to a single engine cylinder. The ECM energizes the high-impedance, 12 Ω, injector solenoid to open a ball valve, normally closed. This allows fuel to flow into the top of the injector, past the ball valve, and through a director plate at the injector outlet. The director plate has machined holes that control the flow of fuel, generating a spray of finely atomized fuel at the injector tip. Fuel from the injector tip is directed at the intake valve, causing the fuel to become further atomized and vaporized before entering the combustion chamber. This fine atomization improves fuel economy and emissions. The fuel pressure regulator compensates for engine load by increasing fuel pressure as the engine vacuum drops.

Fuel Metering Modes of Operation

The ECM monitors voltages from several sensors in order to determine how much fuel to feed to the engine. The ECM controls the amount of fuel delivered to the engine by changing the fuel injector pulse width. The fuel is delivered under one of several modes.

Starting Mode

When the ECM detects reference pulses from the crankshaft position sensor, the ECM will enable the fuel pump. The fuel pump runs and builds up pressure in the fuel system. The ECM then monitors the manifold absolute pressure (MAP), intake air temperature (IAT), engine coolant temperature (ECT), and accelerator pedal position (APP) sensor signals in order to determine the required injector pulse width for starting.

Run Mode

The run mode has 2 conditions referred to as open loop and closed loop. When the engine is first started and the engine speed is above a predetermined rounds per minute, the system begins open loop operation. The ECM ignores the signal from the heated oxygen sensor (HO2S). The engine ECM calculates the air/fuel ratio based on inputs from the engine coolant temperature (ECT), the manifold absolute pressure (MAP), and accelerator pedal position (APP) sensor. The system stays in open loop until meeting the following conditions:

- The heated oxygen sensor (HO2S) has varying voltage output, showing that the heated oxygen sensor (HO2S) is hot enough to operate properly.
- The ECT sensor is above a specified temperature.
- A specific amount of time has elapsed after starting the engine.

Specific values for the above conditions exist for each different engine, and are stored in the programmable read-only memory (EEPROM), which may be erased electrically. The system begins closed loop operation after reaching these values. In closed loop, the ECM calculates the air/fuel ratio, injector ON time, based upon the signal from various sensors, but mainly from the heated oxygen sensor (HO2S). This allows the air/fuel ratio to stay very close to 14.7:1.

Acceleration Mode

The ECM monitors the changes in the accelerator pedal position (APP) sensor. and the manifold absolute pressure (MAP) sensor signal in order to determine when the vehicle is being accelerated. The ECM will then increase the injector pulse width in order to provide more fuel for increased performance.

Deceleration Mode

The ECM monitors changes in accelerator pedal position (APP) sensor and manifold absolute pressure (MAP) sensor signals to determine when the vehicle is being decelerated. The ECM will then decrease injector pulse width or even turn OFF injectors for short periods to reduce exhaust emissions, and for better (engine braking) deceleration.

Battery Voltage Correction Mode

When the battery voltage is low, the ECM compensates for the weak spark delivered by the ignition system in the following ways:

- Increasing the amount of fuel delivered
- Increasing the idle engine speed
- Increasing the ignition dwell time

Fuel Cutoff Mode

The ECM cuts OFF fuel from the fuel injectors when the following conditions are met in order to protect the powertrain from damage and improve driveability:

- The ignition is OFF. This prevents engine run-on.
- The ignition is ON but there is no ignition reference signal. This prevents flooding or backfiring.
- The engine speed is too high, above red line.
- During an extended, high speed, closed throttle coast down, this reduces emissions and increases engine braking.

Fuel Trim

The ECM controls the air/fuel metering system in order to provide the best possible combination of driveability, fuel economy, and emission control. The ECM monitors the heated oxygen sensor (HO2S) signal voltage while in closed loop and regulates the fuel delivery by adjusting the pulse width of the injectors based on this signal. The ideal fuel trim values are around 0% for both short and long term fuel trim. A positive fuel trim value indicates the ECM is adding fuel in order to compensate for a lean condition by increasing the pulse width. A negative fuel trim value indicates that the ECM is reducing the amount of fuel in order to compensate for a rich condition by decreasing the pulse width. A change made to the fuel delivery changes the long and short term fuel trim values. The short term fuel trim values change rapidly in response to the heated oxygen sensor (HO2S) signal voltage. These changes fine-tune the engine fueling. The long term fuel trim makes rough adjustments to fueling in order to recenter and restore control to short term fuel trim. A scan tool can be used to monitor the short and long term fuel trim values. The long term fuel trim diagnostic is based on an average of several of the long term speed load learn cells. The ECM selects the cells based on the engine speed and engine load. If the ECM detects an excessively lean or rich condition, the ECM will set a fuel trim diagnostic trouble code (DTC).

cardiagn.com

Note: In order for the diesel fuel system to work properly, the fuel lines must be full of fuel and contain no air. If air gets into the fuel lines, it will be necessary to prime the fuel system to eliminate the air before operating the vehicle. Air could have entered the system in one of the following ways:

- The vehicle ran out of fuel.
- The filter was removed for service or replacement.
- The fuel lines were removed or disconnected for servicing.
- The fuel pump was removed for servicing.
- The fuel filter water drain cock was opened while the engine was running.

If one or more of the above occurred, air has entered the fuel system and you will need to prime the system prior to operating the vehicle.

1. Turn the ignition key ON and wait 5 seconds.

   Note:

   - Do not turn the ignition key to START. It could damage the injection pump.
   - Fuel priming can be performed using the scan tool.
2. Turn the ignition key OFF and wait 3 seconds.
3. Repeat steps 1 and 2 five more times.

cardiagn.com

Removal Procedure

Warning: Refer to Fuel Vapors in Evaporative Emission Components Warning.

Warning: Refer to Gasoline/Gasoline Vapors Warning.

Warning: Refer to Safety Goggles and Fuel Warning.

1. Remove the fuel tank. Refer to Fuel Tank Replacement.
2. Place the fuel tank onto a workbench.
3. Remove the fuel tank fuel pump module. Refer to Fuel Tank Fuel Pump Module Replacement.

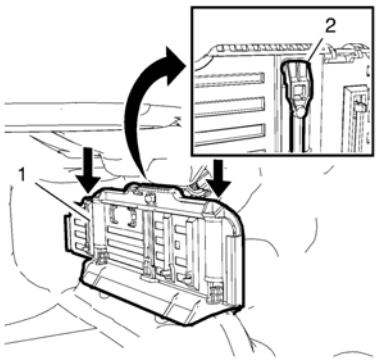

4. Press the fuel tank baffle (1) completely together as shown in the picture.
5. Push the lug (2) toward the baffle and hold it.
6. Release tension from the fuel tank baffle (1) and let the lug (2) engage safely.

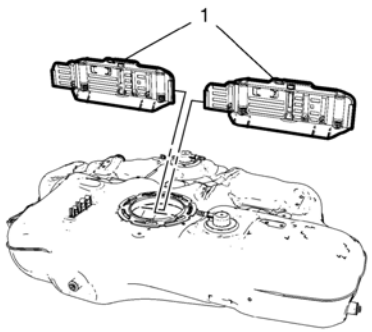

7. Remove the baffles (1) one by one.
8. Repeat steps 5 to 7 to remove the other baffle.

Installation Procedure

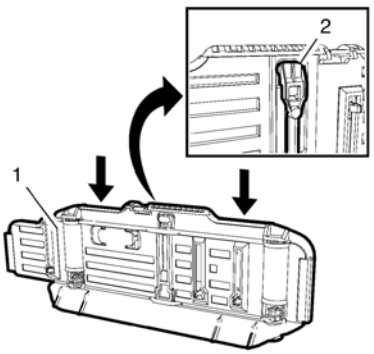

Note: Perform the following steps 1–3 only when the fuel tank baffles are retrofitted.

cardiagn.com

1. Tension the fuel tank baffle (1) completely together by press it down.
2. Push the lug (2) toward the baffle and hold it.
3. Release tension from the fuel tank baffle (1) and let the lug (2) engage safely.

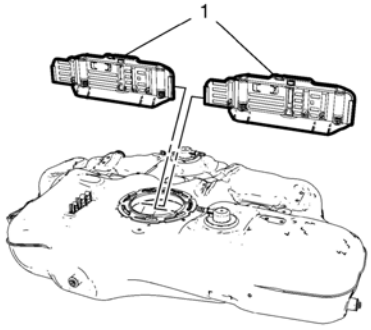

Note: Mount the baffles in the shown direction.

4. Install the baffles (1) one by one.

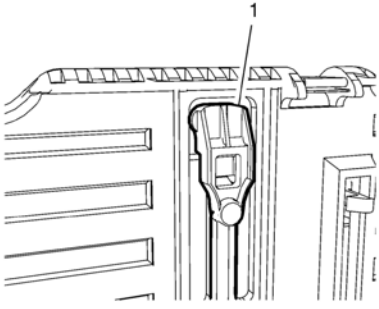

5. Press the fuel tank baffle together. The lug (1) will unlock by its own.
6. Release slowly tension from the fuel tank baffle and let the baffle engage safely in the installation site.

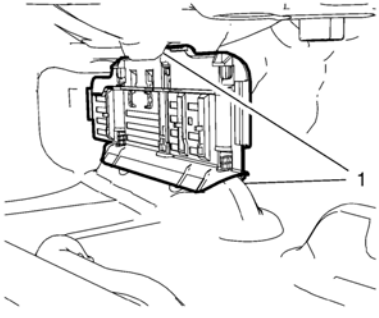

7. Check for proper seat of the fuel tank baffle at the fuel tank installation sites (1). Use a mirror if necessary.
8. Repeat steps 1 to 7 to install the other baffle.
9. Install the fuel tank fuel pump module. Refer to Fuel Tank Fuel Pump Module Replacement.
10. Install the fuel tank. Refer to Fuel Tank Replacement.

cardiagn.com

Special Tools

CH-45004 Fuel Tank Drain Hose

For equivalent regional tools, refer to Special Tools.

Warning: Never drain or store fuel in an open container. Always use an approved fuel storage container in order to reduce the chance of fire or explosion.

Warning: Place a dry chemical (Class B) fire extinguisher nearby before performing any on-vehicle service procedures. Failure to follow these precautions may result in personal injury.

Warning: Always wear safety goggles when working with fuel in order to protect the eyes from fuel splash.

1. Open the hood.
2. Disconnect the battery negative cable. Refer to Battery Negative Cable Disconnection and Connection.
3. Remove the fuel fill cap.
4. Raise and suitably support the vehicle. Refer to Lifting and Jacking the Vehicle.
5. Remove the fuel tank filler pipe from the fuel tank. Refer to Fuel Tank Filler Pipe Replacement.
6. Insert the *CH-45004* drain hose into the fuel tank until the hose reaches the bottom of the fuel tank.
7. Use an hand or air operated pump device in order to drain as much fuel as possible.

cardiagn.com

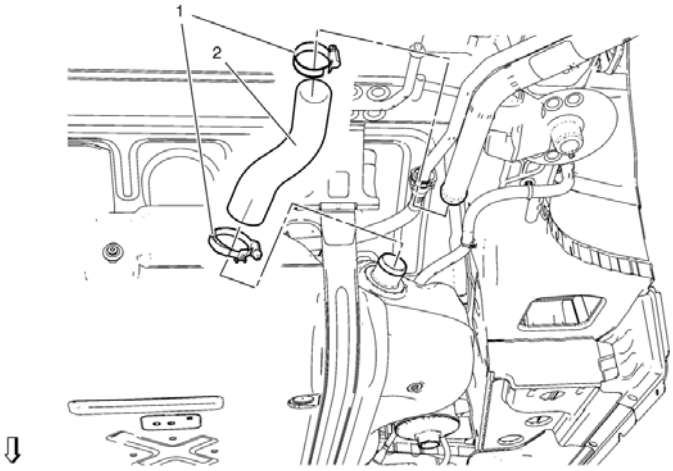

Fuel Tank Filler Hose Replacement

Callout	Component Name

Warning: Gasoline or gasoline vapors are highly flammable. A fire could occur if an ignition source is present. Never drain or store gasoline or diesel fuel in an open container, due to the possibility of fire or explosion. Have a dry chemical (Class B) fire extinguisher nearby.

Preliminary Procedures

1. Open the hood.
2. Disconnect the battery negative cable. Refer to Battery Negative Cable Disconnection and Connection.
3. Drain the fuel tank. Refer to Fuel Tank Draining.

1	Fuel Tank Filler Hose Clamp (Qty: 2)
2	Fuel Tank Filler Hose

cardiagn.com

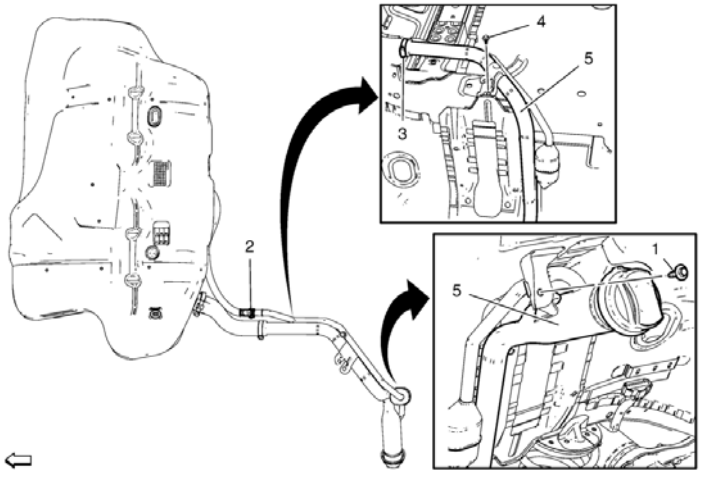

Fuel Tank Filler Pipe Replacement

Callout	Component Name
1	Fuel Tank Filler Pipe Bracket Bolt **Caution:** Refer to Fastener Caution. **Tighten** 9 Y (80 lb in)
2	Lower Recirculation Tube Quick Release Fitting
3	Fuel Tank Filler Pipe Clamp
4	Fuel Tank Filler Pipe Ground Bolt **Tighten** 9 Y (80 lb in)
5	Fuel Tank Filler Pipe

Warning: Gasoline or gasoline vapors are highly flammable. A fire could occur if an ignition source is present. Never drain or store gasoline or diesel fuel in an open container, due to the possibility of fire or explosion. Have a dry chemical (Class B) fire extinguisher nearby.

Preliminary Procedures

1. Disconnect battery negative cable. Refer to Battery Negative Cable Disconnection and Connection.
2. Remove the fuel tank filler pipe housing. Refer to Fuel Tank Filler Pipe Housing Replacement.
3. Drain the fuel tank. Refer to Fuel Tank Draining.

cardiagn.com

Special Tools

EN-48279 Main Fuel Pump Locking Ring Remover/Installer

For equivalent regional tools, refer to Special Tools.

Removal Procedure

Warning: Refer to Gasoline/Gasoline Vapors Warning.

1. Remove the fuel tank. Refer to Fuel Tank Replacement.

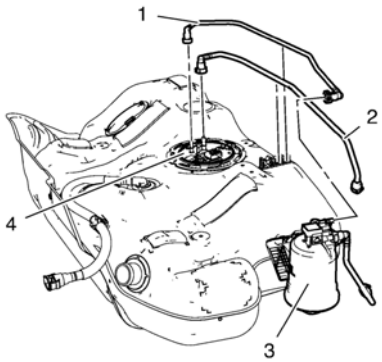

2. Remove the fuel feed pipe (1) from the fuel tank fuel pump module (4) and the fuel filter housing (3). Refer to Plastic Collar Quick Connect Fitting Service.
3. Remove the fuel return pipe (2) from the fuel tank fuel pump module (4). Refer to Plastic Collar Quick Connect Fitting Service.

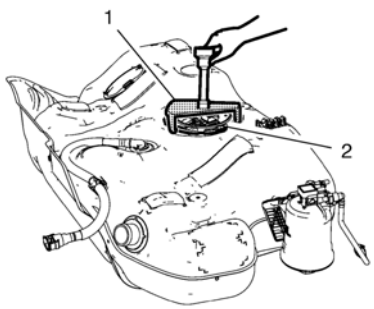

4. Install the *EN-48253* remover/installerto the fuel pump module lock ring.

Note: Do NOT use impact tools. Significant force will be required to release the lock ring. The use of a hammer and screwdriver is not recommended. Secure the fuel tank in order to prevent fuel tank rotation.

5. Using the *EN-48253* remover/installer and a long breaker-bar, rotate the lock ring in a counterclockwise direction in order to unlock the lock ring.

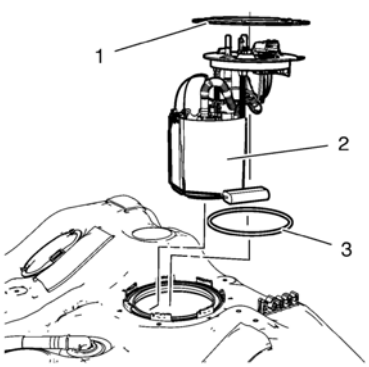

cardiagn.com

6. Remove the fuel pump module lock ring (1).
7. Remove the fuel pump module (2).

Note: Lift the fuel pump module up slightly.

8. Remove and discard the fuel pump module seal (3).
9. Remove the fuel level sensor from the fuel pump module. Refer to Fuel Level Sensor Replacement.

Installation Procedure

1. Install the fuel level sensor to the fuel pump module. Refer to Fuel Level Sensor Replacement.

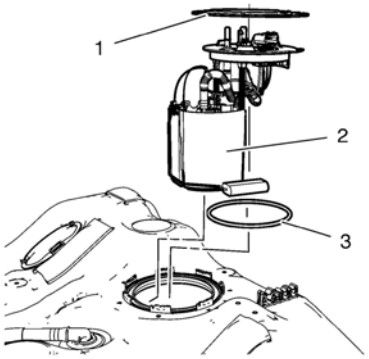

2. Install a NEW fuel pump module seal (3).
3. Install the fuel pump module (2).
4. Install the fuel pump module lock ring (1).

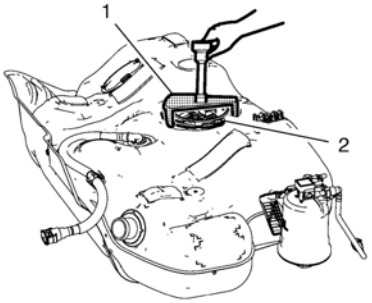

5. Install the *EN-48253* remover/installer (1) to the fuel pump module lock ring (2).

Note: Do NOT use impact tools. Significant force will be required to release the lock ring. The use of a hammer and screwdriver is not recommended. Secure the fuel tank in order to prevent fuel tank rotation.

6. Using the *EN-48253* remover/installer and a long breaker-bar, rotate the lock ring in a clockwise direction in order to lock the lock ring.

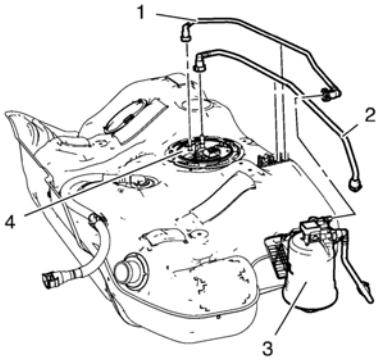

7. Install the fuel return pipe (2) to the fuel tank fuel pump module (4). Refer to Plastic Collar Quick Connect Fitting Service.
8. Install the fuel feed pipe (1) to the fuel tank fuel pump module (4) and the fuel filter housing (3). Refer to Plastic Collar Quick Connect Fitting Service.
9. Install the fuel tank. Refer to Fuel Tank Replacement.

cardiagn.com

Special Tools

EN-6015 Closure Plugs

For equivalent regional tools, refer to Special Tools.

Removal Procedure

Warning: Refer to Gasoline/Gasoline Vapors Warning.

1. Disconnect the battery negative cable. Refer to Battery Negative Cable Disconnection and Connection.
2. Fuel tank draining. Refer to Fuel Tank Draining.
3. Remove the rear wheelhouse panel liner. Refer to Rear Wheelhouse Liner Replacement.
4. Raise and support the vehicle. Refer to Lifting and Jacking the Vehicle.

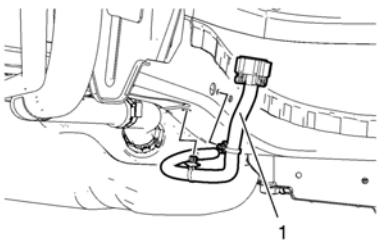

5. Disconnect the fuel tank fuel pump module wiring harness (1) and unclip from the body.

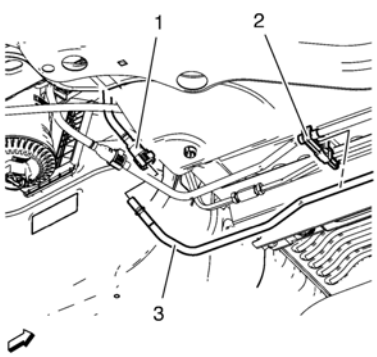

6. Disconnect the fuel return pipe (3) from the fuel return pipe connector (1). Refer to Plastic Collar Quick Connect Fitting Service.
7. Close all connections with *EN-6015* plugs .

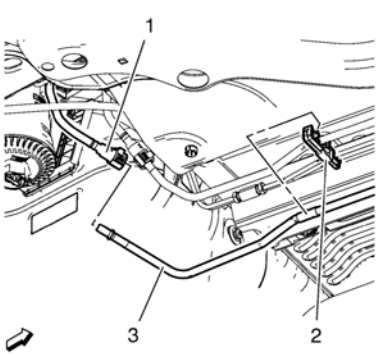

8. Disconnect the fuel feed pipe (3) from the fuel feed pipe connector (1). Refer to Plastic Collar Quick Connect Fitting Service.
9. Close all connections with *EN-6015* plugs .

cardiagn.com

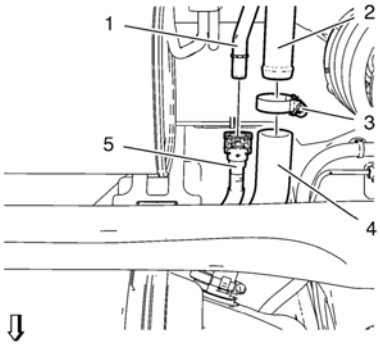

10. Disconnect the fuel tank fill EVAP emission pipe quick connect fitting (5) from the fuel tank vent pipe (1). Refer to Plastic Collar Quick Connect Fitting Service.
11. Close all connection with *EN-6015* plugs .
12. Loosen the fuel filler pipe clamp (3).
13. Remove the fuel filler hose (4) from the fuel filler pipe (2).
14. Place a suitable adjustable jack under the fuel tank.

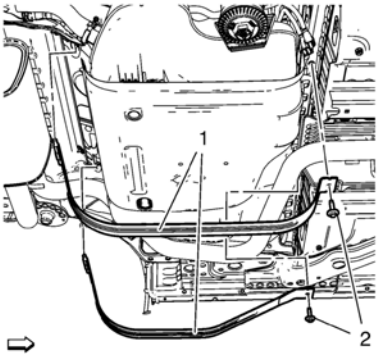

15. Remove the 2 fuel tank strap bolts (2).
16. Remove the 2 fuel tank straps (1).

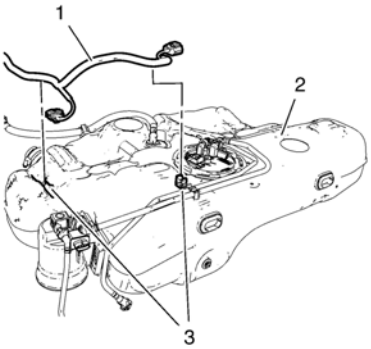

17. Lower the fuel tank (2) slowly and carefully to a height where the fuel pump wiring harness (1) is accessible.

    Unclip the fuel tank fuel pump module wiring harness from the 2 bracket clips (3).

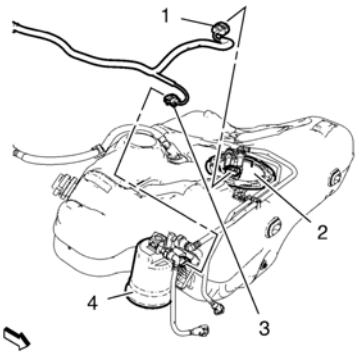

18. Disconnect the fuel pump wiring harness plug (1) from the fuel tank fuel pump module (2).
19. Disconnect the fuel filter wiring harness plug (3) from the fuel filter (4).

cardiagn.com

Installation Procedure

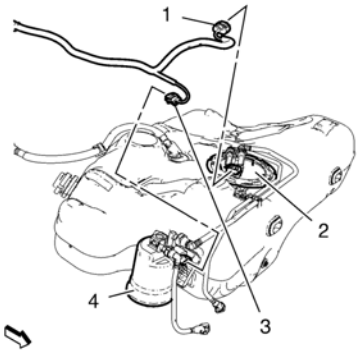

1. Connect the fuel pump wiring harness plug (1) to the fuel tank fuel pump module (2).
2. Connect the fuel filter wiring harness plug (3) to the fuel filter (4).

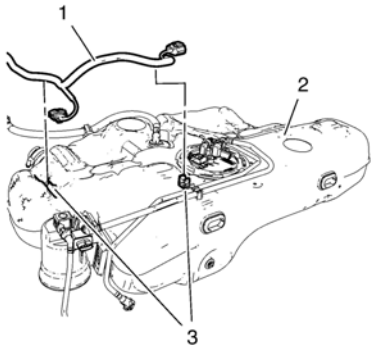

3. Clip the fuel tank fuel pump module wiring harness (1) to the 2 bracket clips (3).

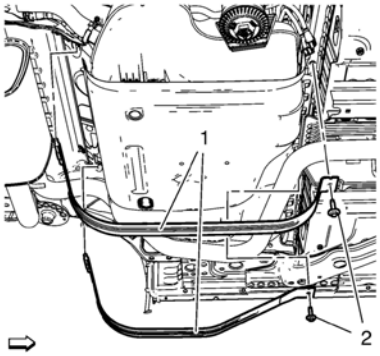

4. Install the 2 fuel tank straps (1).

Caution: Refer to Fastener Caution.

5. Install the 2 fuel tank strap bolts (2) and tighten to **23 Y (17 lb ft)**.

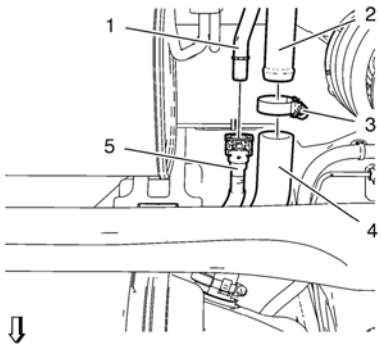

6. Install the fuel filler hose (4) to the fuel filler pipe (2).
7. Install the fuel filler pipe clamp (3).
8. Remove the *EN-6015* plugs from all connections.

cardiagn.com

9. Connect the fuel tank fill EVAP emission pipe quick connect fitting (5) to the fuel tank vent pipe (1). Refer to Plastic Collar Quick Connect Fitting Service.

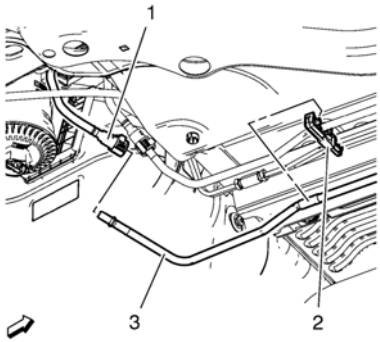

10. Remove the *EN-6015* plugs plugs from all connections.
11. Connect the fuel feed pipe (3) to the fuel feed pipe connector (1). Refer to Plastic Collar Quick Connect Fitting Service.

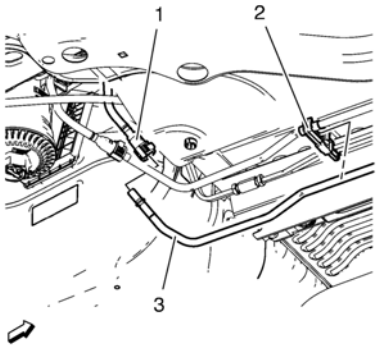

12. Remove the *EN-6015* plugs from all connections.
13. Connect the fuel return pipe (3) to the fuel return pipe connector (1). Refer to Plastic Collar Quick Connect Fitting Service.

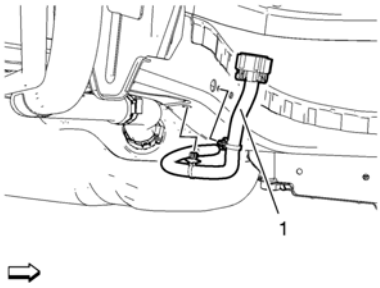

14. Clip the fuel tank fuel pump module wiring harness (1) to the body.
15. Install the rear wheelhouse panel liner. Refer to Rear Wheelhouse Liner Replacement.
16. Lower the vehicle.
17. Connect the battery negative cable. Refer to Battery Negative Cable Disconnection and Connection.

cardiagn.com

Special Tools

EN-48279 Main Fuel Pump Locking Ring Remover/Installer

For equivalent regional tools, refer to Special Tools.

Removal Procedure

Warning: Refer to Gasoline/Gasoline Vapors Warning.

1. Disconnect the battery negative cable. Refer to Battery Negative Cable Disconnection and Connection.
2. Drain the fuel tank. Refer to Fuel Tank Draining.
3. Raise and support the vehicle. Refer to Lifting and Jacking the Vehicle.

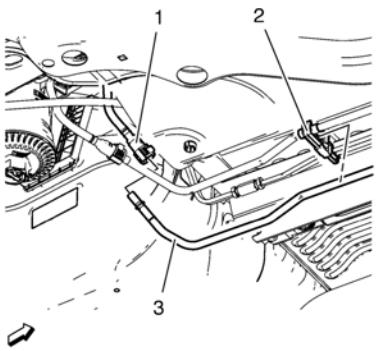

4. Disconnect the fuel return pipe (3) from the fuel return pipe connector (1). Refer to Plastic Collar Quick Connect Fitting Service.

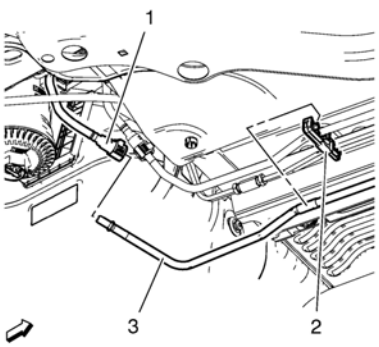

5. Disconnect the fuel feed pipe (3) from the fuel feed pipe connector (1). Refer to Plastic Collar Quick Connect Fitting Service.

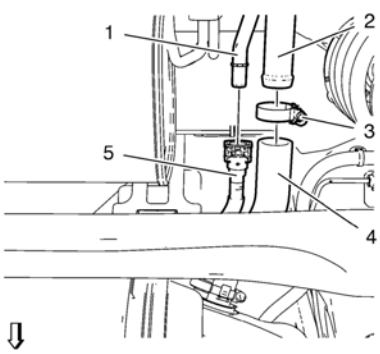

6. Disconnect the fuel tank fill EVAP emission pipe quick connect fitting (5) from the fuel tank vent pipe (1). Refer to Plastic Collar Quick Connect Fitting Service.
7. Loosen the fuel filler pipe clamp (3).

cardiagn.com

8. Remove the fuel filler hose (4) from the fuel filler pipe (2).
9. Place a suitable adjustable jack under the fuel tank.

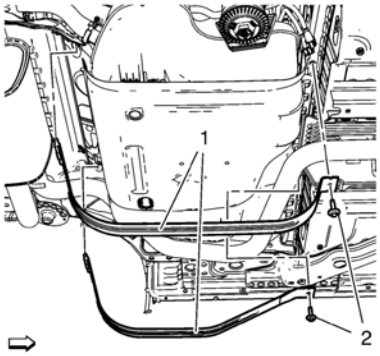

10. Remove the 2 fuel tank strap bolts (2).
11. Remove the 2 fuel tank straps (1).

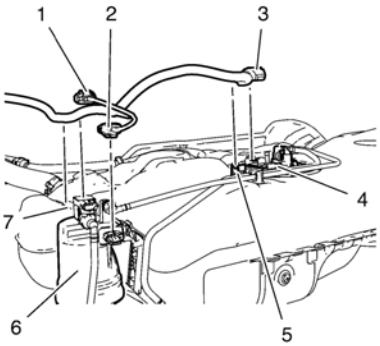

12. Lower the fuel tank slowly down to a height where the fuel pump wiring harness plug (3) is accessible.
13. Disconnect the fuel pump wiring harness plug (3) from the fuel pump module (4).
14. Disconnect the 2 fuel filter wiring harness plugs (1) and (2) from the fuel filter (6).
15. Unclip the wiring harness from the clip (5) and (7).
16. Lower the fuel tank.

Disassembly Procedure

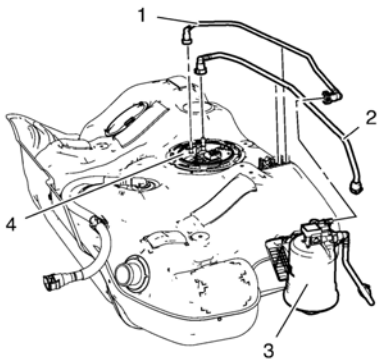

1. Remove the fuel feed pipe (1) from fuel tank fuel pump module (4) and fuel filter housing (3). Refer to Plastic Collar Quick Connect Fitting Service.
2. Remove the fuel return pipe (2) from fuel tank fuel pump module (4). Refer to Plastic Collar Quick Connect Fitting Service.

cardiagn.com

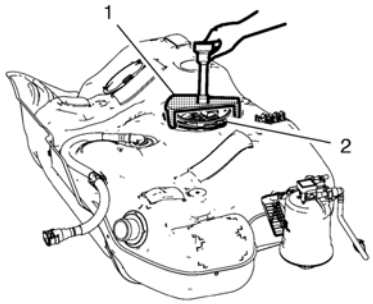

3. Install the *EN-48253* remover/installer to the fuel pump module lock ring.

Note: Do NOT use impact tools. Significant force will be required to release the lock ring. The use of a hammer and screwdriver is not recommended. Secure the fuel tank in order to prevent fuel tank rotation.

4. Using the *EN-48253* remover/installer and a long breaker-bar, rotate the lock ring in a counterclockwise direction in order to unlock the lock ring.

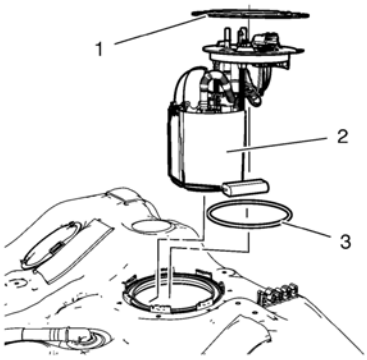

5. Remove the fuel pump module lock ring (1).
6. Remove the fuel pump module (2).

   Note: Lift the fuel pump module up slightly.

7. Remove and discard the fuel pump module seal (3).

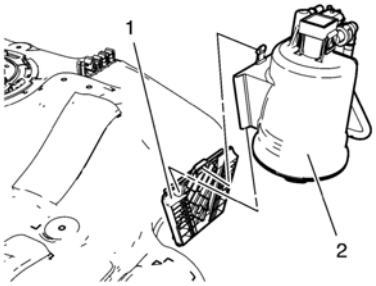

8. Remove the fuel filter (2) from the fuel filter bracket (1).
9. Remove the fuel tank heat shield. Refer to Fuel Tank Heat Shield Replacement.
10. Remove the fuel tank baffle. Refer to Fuel Tank Baffle Replacement.

Assembly Procedure

1. Install the fuel tank baffle. Refer to Fuel Tank Baffle Replacement.
2. Install the fuel tank heat shield. Refer to Fuel Tank Heat Shield Replacement.

cardiagn.com

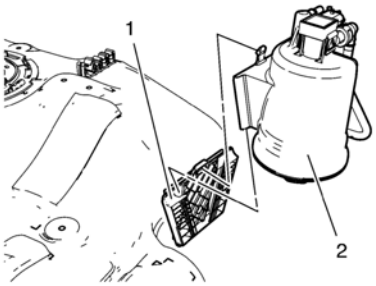

3. Install the fuel filter (2) at the fuel filter bracket (1).

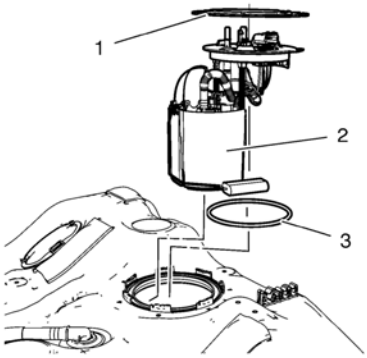

4. Install a NEW fuel pump module seal (3).
5. Install the fuel pump module (2).
6. Install the fuel pump module lock ring (1).

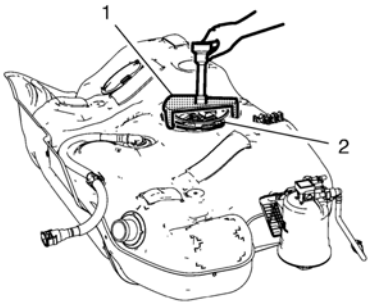

7. Install the *EN-48253* remover/installer (1) to the fuel pump module lock ring (2).

   Note: Do NOT use impact tools. Significant force will be required to release the lock ring. The use of a hammer and screwdriver is not recommended. Secure the fuel tank in order to prevent fuel tank rotation.

8. Using the *EN-48253* remover/installer and a long breaker-bar, rotate the lock ring in a clockwise direction in order to lock the lock ring.

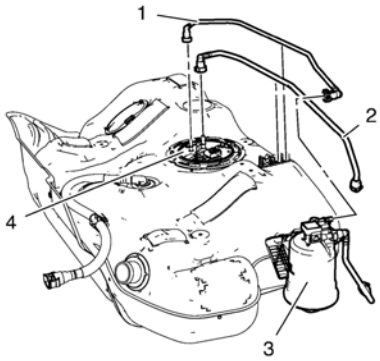

9. Install the fuel return pipe (2) to the fuel tank fuel pump module (4). Refer to Plastic Collar Quick Connect Fitting Service.
10. Install the fuel feed pipe (1) to the fuel tank fuel pump module (4) and fuel filter housing (3). Refer to Plastic Collar Quick Connect Fitting Service.

Installation Procedure

cardiagn.com

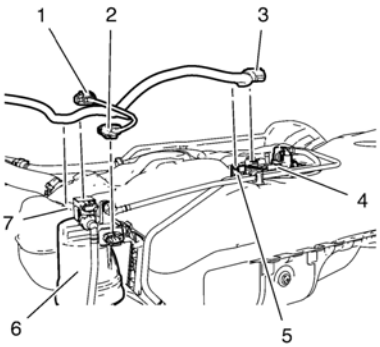

1. Raise the fuel tank with a suitable adjustable jack to a height where the fuel pump wiring harness plug (3) is accessible.
2. Clip in the wiring harness to the clip (5) and (7).
3. Connect the fuel pump wiring harness plug (3) to the fuel pump module (4).
4. Connect the 2 fuel filter wiring harness plugs (1) and (2) to the fuel filter (6).

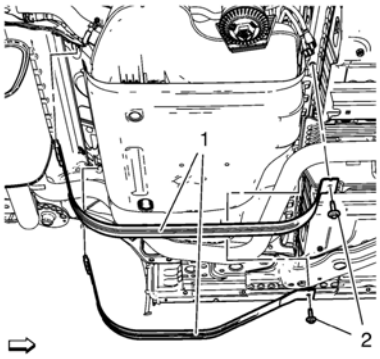

5. Install the 2 fuel tank straps (1).

   Caution: Refer to Fastener Caution.
6. Install the 2 fuel tank strap bolts (2) and tighten to **23 Y (17 lb ft)**.

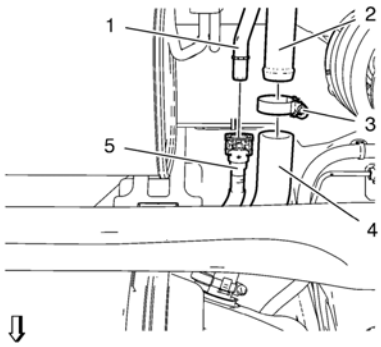

7. Install the fuel filler hose (4) to the fuel filler pipe (2).
8. Install the fuel filler pipe clamp (3).
9. Connect the fuel tank fill EVAP emission pipe quick connect fitting (5) to the fuel tank vent pipe (1). Refer to Plastic Collar Quick Connect Fitting Service.

cardiagn.com

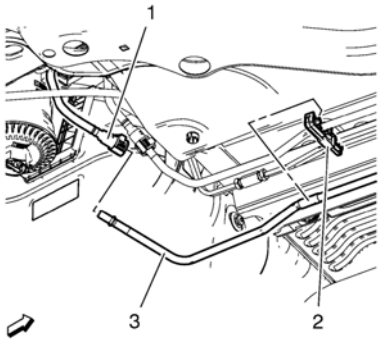

10. Connect the fuel feed pipe (3) to the fuel feed pipe connector (1). Refer to Plastic Collar Quick Connect Fitting Service.

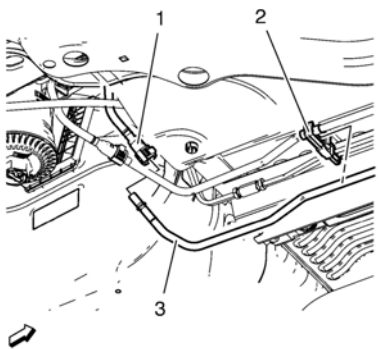

11. Connect the fuel return pipe (3) to the fuel return pipe connector (1). Refer to Plastic Collar Quick Connect Fitting Service.
12. Lower the vehicle.
13. Connect the battery negative cable. Refer to Battery Negative Cable Disconnection and Connection.

cardiagn.com

Special Tools

EN–6015 Closer Plug

For equivalent regional tools, refer to Special Tools.

Removal Procedure

Warning: Gasoline or gasoline vapors are highly flammable. A fire could occur if an ignition source is present. Never drain or store gasoline or diesel fuel in an open container, due to the possibility of fire or explosion. Have a dry chemical (Class B) fire extinguisher nearby.

Warning: Always wear safety goggles when working with fuel in order to protect the eyes from fuel splash.

1. Open the hood.
2. Disconnect the battery negative cable. Refer to Battery Negative Cable Disconnection and Connection.

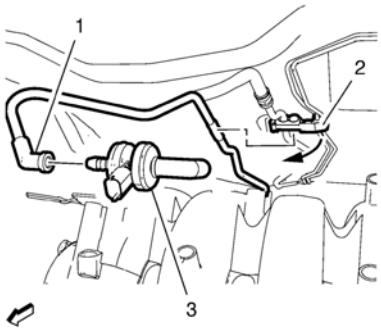

3. Remove the fuel tank vent pipe (1) from the evaporative emission canister purge solenoid valve (3).
4. Close the fuel tank vent pipe with *EN-6015* closer plug .
5. Unclip the fuel tank vent pipe (1) from the brake and fuel pipe clip (2).
6. Raise and support the vehicle. Refer to Lifting and Jacking the Vehicle.

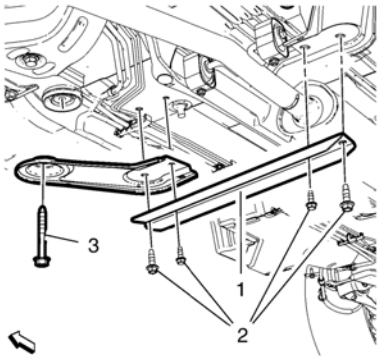

7. Remove the exhaust pipe front hanger and front suspension support bolts (2).
8. Remove the drivetrain and front suspension frame bolt (3).
9. Remove the drivetrain and front suspension frame support.

cardiagn.com

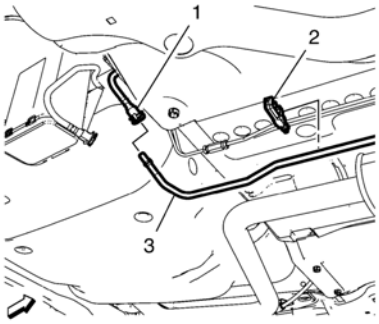

10. Unclip the fuel vent pipe (3) from the rear brake and fuel pipe clip (2).
11. Disconnect the evaporative emission canister fuel vent pipe connector (1) from the fuel tank vent pipe (3). Refer to Plastic Collar Quick Connect Fitting Service.
12. Close the fuel tank vent pipe and emission canister fuel vent pipe with *EN-6015* plugs .

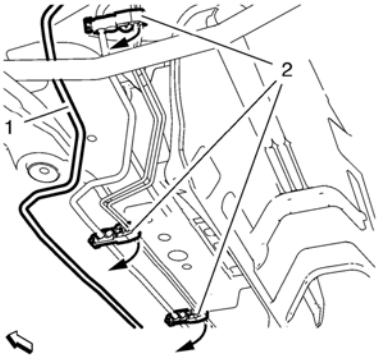

13. Unclip the fuel tank vent pipe (1) from the 4 other brake and fuel pipe clips (2).

    Note: Do not bend the fuel tank vent pipe.
14. Remove the fuel tank vent pipe (1).

Installation Procedure

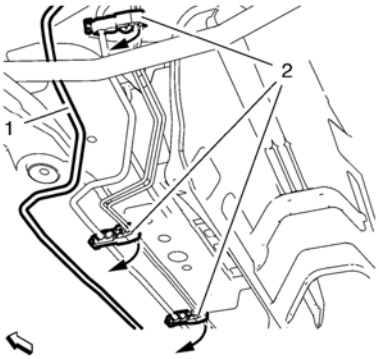

Note: Do not bend the fuel tank vent pipe.

1. Install the fuel tank vent pipe (1).
2. Clip the fuel tank vent pipe (1) into the 4 brake and fuel pipe clips (2).

cardiagn.com

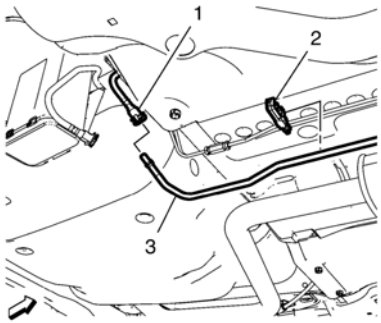

3. Remove the *EN-6015* closer plugs from the emission canister fuel vent pipe (1) and the fuel tank vent pipe (3).
4. Connect the fuel vent pipe (3) to the emission canister fuel vent pipe (1). Refer to Plastic Collar Quick Connect Fitting Service.

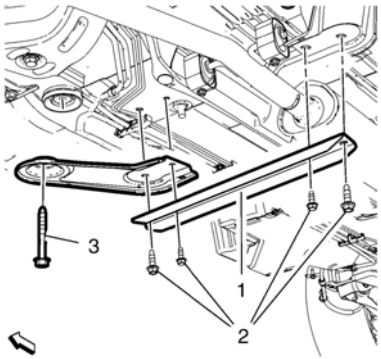

5. Install the drivetrain and front suspension frame support.

   Caution: Refer to Fastener Caution.

   Note: Do NOT reuse old bolts.
6. Install the NEW drivetrain and front suspension frame bolt (3) and tighten to **160 Y (118 lb ft)**.
7. Install the NEW exhaust pipe front hanger bolts (2) - M8 and tighten to **20 Y (15 lb ft)**.
8. Install the NEW front suspension support bolts (2) - M10 and tighten to **60 Y (44 lb ft)**.
9. Lower the vehicle.

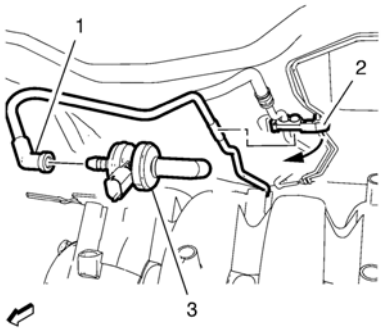

10. Remove the *EN-6015* closer plug from the fuel tank vent pipe (1).
11. Install the fuel tank vent pipe (1) to the evaporative emission canister purge solenoid valve (3).
12. Clip the fuel tank vent pipe (1) into the brake and fuel pipe clip (2).
13. Connect the battery negative cable. Refer to Battery Negative Cable Disconnection and Connection.
14. Close the hood.

cardiagn.com

Removal Procedure

1. Remove the glow plug controller. Refer to Glow Plug Controller Replacement.

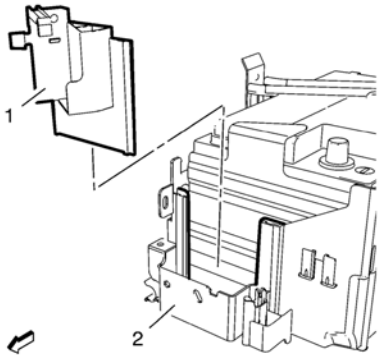

2. Remove the glow plug controller bracket (1) in top direction from the battery tray (2).

Installation Procedure

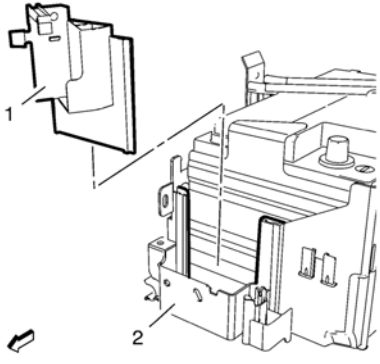

1. Install the glow plug controller bracket (1) to the battery tray (2).
2. Install the glow plug controller. Refer to Glow Plug Controller Replacement.

cardiagn.com

Removal Procedure

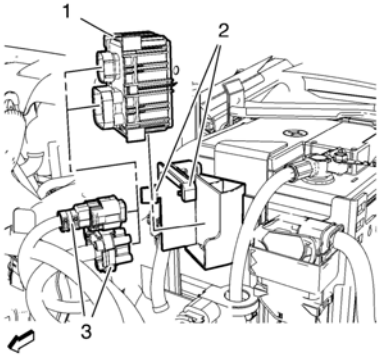

1. Disconnect the 2 wiring harness plugs (3).
2. Remove the glow plug control module (1) by loosening the 2 retainer clips (2).

Installation Procedure

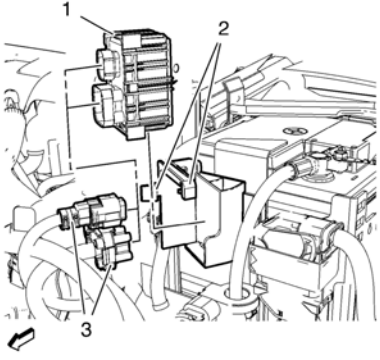

1. Install the glow plug control module (1). Slide the glow plug control module (1) to the 2 retainer clips (2) until they hearable engage.
2. Connect the 2 wiring harness plugs (3).

cardiagn.com

Removal Procedure

1. Remove the engine sight shield. Refer to Engine Sight Shield Replacement.

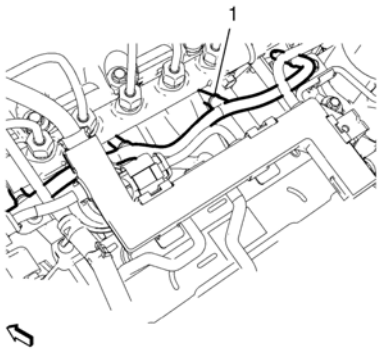

Caution: Use care when disconnecting the glow plug electrical connector. Use of excessive force may damage the electrical connector.

2. Disconnect the 4 glow plug wiring harness plugs (1).

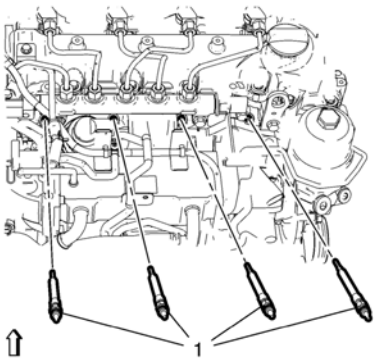

3. Remove the 4 glow plugs (1).

Installation Procedure

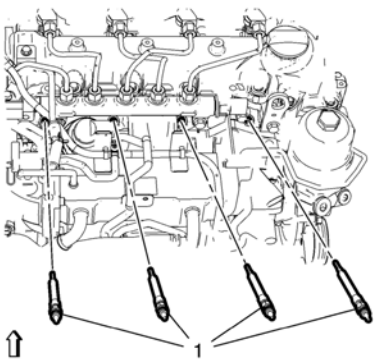

Caution: Refer to Fastener Caution.

1. Install the 4 glow plugs (1) and tighten to **11 Y (97 lb in)**.

cardiagn.com

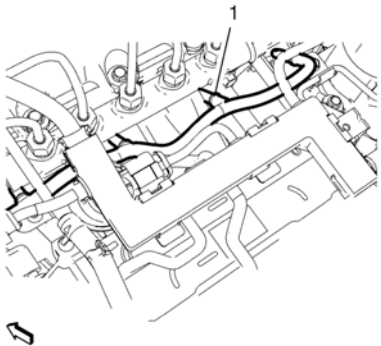

2. Connect the 4 glow plug wiring harness plugs (1).
3. Install the engine sight shield. Refer to Engine Sight Shield Replacement.

cardiagn.com

Glow plugs are used to heat the combustion chambers of diesel engines in cold conditions to help with ignition at cold start-up. In the tip of the glow plug is a coil of a resistive wire or a filament which heats up when electricity is connected.

Glow plugs are required because diesel engines produce the heat needed to ignite their fuel by the compression of air in the cylinder and combustion chamber. In cold weather, and when the engine block, engine oil and cooling water are cold, the heat generated during the first revolutions of the engine is conducted away by the cold surroundings, preventing ignition. The glow plugs are switched on prior to turning over the engine to provide heat to the combustion chamber, and remain on as the engine is turned over to ignite the first charges of fuel. Once the engine is running, the glow plugs are no longer needed, although some engines run the glow plugs for between 5–10 s after starting to ensure smooth and efficient running and sometimes to keep the engine within emissions regulations, since combustion efficiency is greatly reduced when the engine is very cold. During this period, the power fed to the glow plugs is greatly reduced to prevent them burning out by overheating.

Control of the glow plugs is accomplished by a glow plug control module. The temperature and the power consumption is controlled between the engine control module (ECM) and the controller within a wide range to suit the engine pre heating requirements. Each glow plug is energized individually. This capability yields more optimum heat times for the glow plugs, thus pre glow times can be kept to a minimum for short wait to crank times and maximum glow plug durability. A DTC will set if there is a glow plug system fault.

A normal functioning system operates as follows:

- Turn the ignition ON with the engine OFF, and at room temperature.
- The glow plugs turn ON and heat up in 2 s and then are pulse-width modulated (PWM) for another 2 s.
- The glow plug wait lamp is ON for 1 s during cold start.
- The glow plug wait lamp may not illuminate during a warm engine start.
- If the engine is cranked during or after the above sequence, the glow plugs may cycle ON and OFF after the ignition switch is returned from the start position, whether the engine starts or not. The engine does not have to be running to terminate the glow plug cycling.

The glow plug initial ON time will vary based on the system voltage and temperature. Lower temperatures cause longer ON times.

The ECM provides glow plug operation after starting a cold engine. This post-start operation is initiated when the ignition switch is returned to Run, from the Start position. This function helps clean up excessive white smoke and/or poor idle quality after starting.

Glow Plugs

The glow plugs are 4.4 V heaters in each of the cylinders that turn ON, then are pulse-width modulated when the ignition switch is turned to the RUN position prior to starting the engine. The glow plug controller remains pulsing the glow plugs a short time after starting, then are turned OFF.

A Wait to Start lamp on the instrument panel provides information on engine starting conditions. The Wait to Start lamp will not illuminate during post-start glow plug operation.

Glow Plug/Controller

The glow plug controller is a solid state device which operates the glow plugs. The glow plug controller is connected to the following circuits:

- The battery voltage circuits
- The CAN communication circuit located between the ECM and the glow plug controller
- The engine ground circuit
- The glow plug supply voltage circuits located between the glow plug controller and the glow plugs

The glow plug diagnostic circuits are directly monitored individually by using a separate transistor to control current to each glow plug. Individual diagnosis is thus possible for every glow plug.

cardiagn.com

Special Tools

EN-6009 Remover and Installer Ignition Coil

For equivalent regional tools, refer to Special Tools.

Removal Procedure

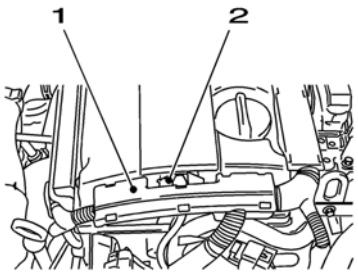

1. Remove the engine wiring harness guide (1) from the cylinder head.
2. Disconnect the ignition coil plug (2).

Note: Note the arrow on the cover.

3. Remove the cover of the ignition coil in the direction of the arrow.
4. Remove the 2 ignition coil bolts.

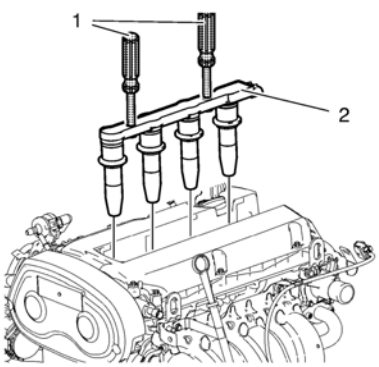

5. Install the *EN-6009* remover/installer (1).
6. Remove the ignition coil (2).
7. Remove the *EN-6009* remover/installer (1).

Installation Procedure

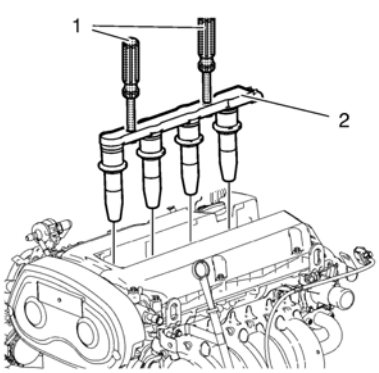

1. Install the *EN-6009* remover/installer (1).

cardiagn.com

2. Remove the ignition coil (2).
3. Remove the *EN-6009* remover/installer (1).

Caution: Refer to Fastener Caution.

4. Install the 2 ignition coil bolts an tighten to **9 Y (80 lb in)**.

Note: Note the arrow on the cover.

5. Install the ignition coil cover in the direction of the arrow.

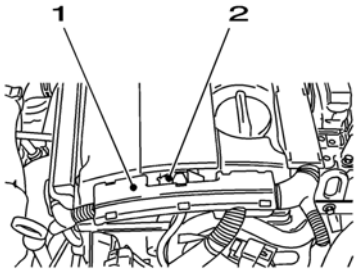

6. Connect the ignition coil plug (2).
7. Install the engine wiring harness guide (1) at the cylinder head.

cardiagn.com

Removal Procedure

1. Remove the front bumper fascia. Refer to Front Bumper Fascia Removal and Installation.

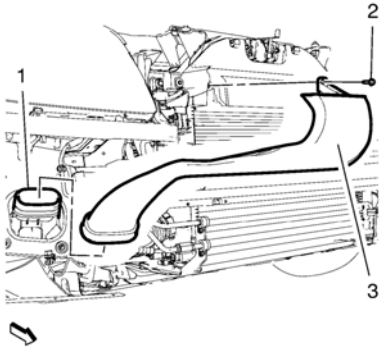

2. Remove the front intake air duct bolt (2).
3. Remove the front intake air duct (3) from the rear intake air duct (1).

Installation Procedure

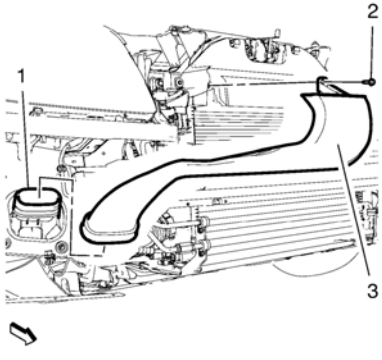

1. Install the front intake air duct (3) to the rear intake air duct (1).

   Caution: Refer to Fastener Caution.
2. Install the front intake air duct bolt (2) and tighten.
3. Install the front bumper fascia. Refer to Front Bumper Fascia Removal and Installation.

cardiagn.com

Removal Procedure

1. Remove the engine sight shield. Refer to Engine Sight Shield Replacement.

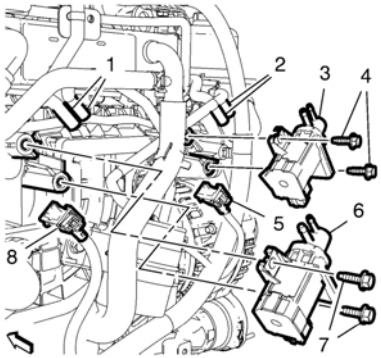

2. Disconnect the 2 tuning valve vacuum control solenoid valve wiring harness plugs (5, 8).
3. Remove the 4 tuning valve vacuum control solenoid valve hoses (1, 2).
4. Remove the 2 tuning valve vacuum control solenoid valve bolts (4).
5. Remove the intake air tuning valve vacuum control solenoid valve (3).
6. Remove the 2 additional tuning valve vacuum control solenoid valve bolts (7).
7. Remove the additional intake air tuning valve vacuum control solenoid valve (6).

Installation Procedure

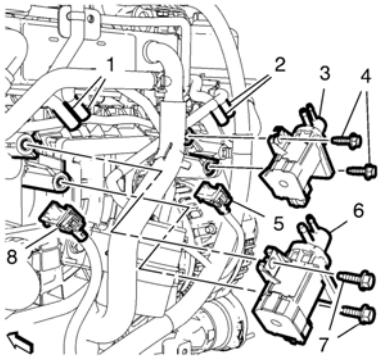

1. Install the additional intake air tuning valve vacuum control solenoid valve (6).

   Caution: Refer to Fastener Caution.

2. Install the 2 additional tuning valve vacuum control solenoid valve bolts (7) and tighten to **10 Y (89 lb in)**.
3. Install the intake air tuning valve vacuum control solenoid valve (3).
4. Install the 2 tuning valve vacuum control solenoid valve bolts (4) and tighten to **10 Y (89 lb in)**.
5. Install the 4 tuning valve vacuum control solenoid valve hoses (1, 2).
6. Connect the 2 tuning valve vacuum control solenoid valve wiring harness plugs (5, 8).
7. Install the engine sight shield. Refer to Engine Sight Shield Replacement.

cardiagn.com

Plastic Quick Connect Fitting Type Identification

Plastic Quick Connect Fitting Type A

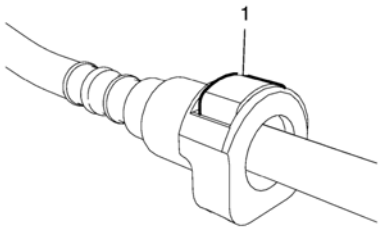

Quick connect fitting type A - TI loc with one latch (1).

Plastic Quick Connect Fitting Type B

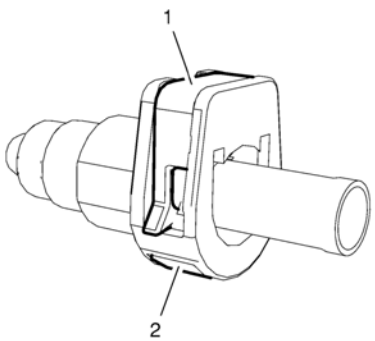

- Quick connect fitting type B – TI loc upper latch (1).
- Quick connect fitting type B – TI loc lower latch (2).

Plastic Quick Connect Fitting Type C

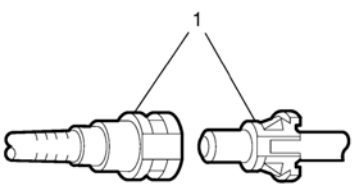

Quick connect fitting type C (1).

Plastic Quick Connect Fitting Type D

cardiagn.com

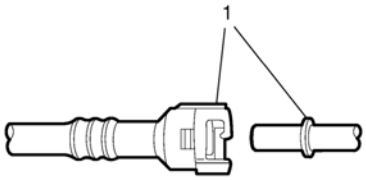

Quick connect fitting type D (1).

Plastic Quick Connect Fitting Type E

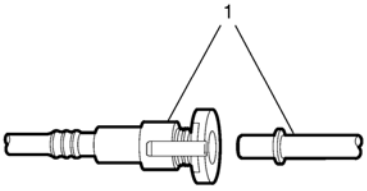

Quick connect fitting type E (1).

Plastic Quick Connect Fitting Type F

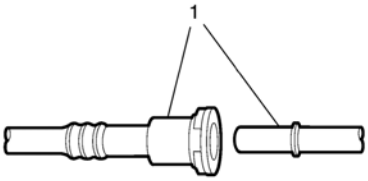

Quick connect fitting type F (1).

Plastic Quick Connect Fitting Type G

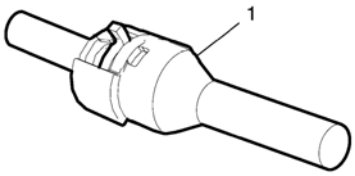

Quick connect fitting type G (1).

Plastic Quick Connect Fitting Type H

cardiagn.com

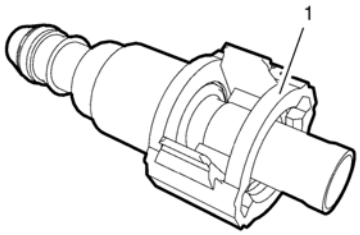

Quick connect fitting type H (1).

General Instructions for Handling the Connectors

Before Disconnection

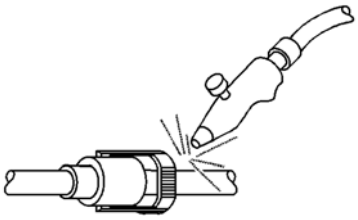

Warning: Wear safety glasses when using compressed air, as flying dirt particles may cause eye injury.

Note: The following instructions apply to all of these types of fittings.

Using compressed air, to blow any dirt out of the quick connect fitting.

After Disconnection

- Wipe off the male pipe end using a clean shop towel.
- Inspect both ends of the fitting for dirt and burrs.
- Clean components as required.
- Replace damaged components.

Type A - Disconnect/Connect

Disconnect

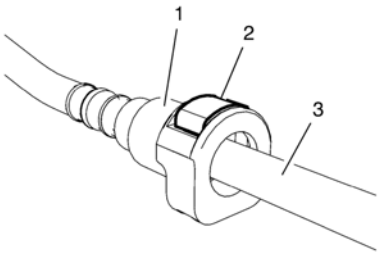

Note: Mechanical violence is not necessary for a successful disconnection/connection.

1. Push the tube (3) into the connector (1) and push down the latch (2).

cardiagn.com

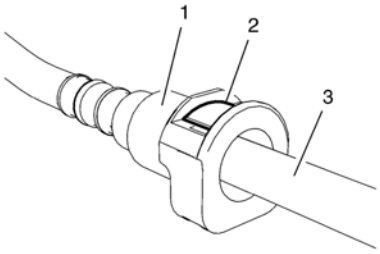

2. Push the latch (2) into the connector (1).

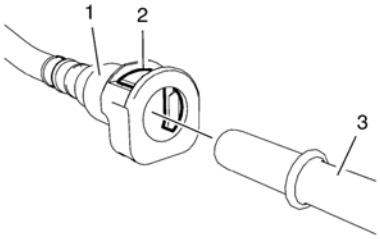

3. Pull the pipe (3) out of the connector (1).
4. Release the latch (2).

Connect

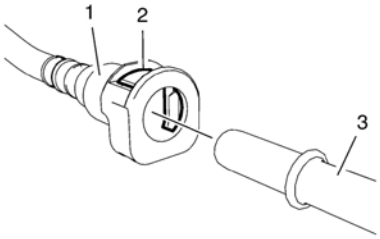

1. Push the pipe (3) into the connector (1).

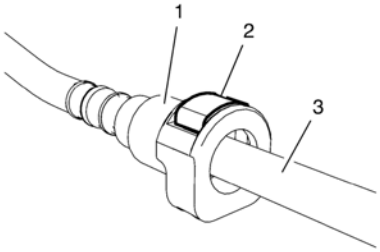

2. When the connector is locked correctly, the latch (2) must align to the connector (1).
3. Do not rely only on the audible click to confirm a secure connection has been made.

cardiagn.com

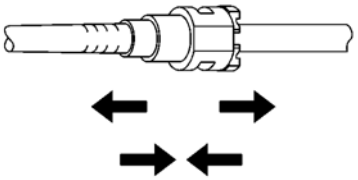

4. Pull on both sides of the quick connect fitting in order to make sure the connection is secure.

Type B - Disconnect/Connect

Disconnect

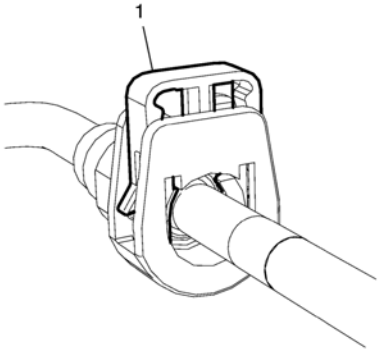

Note: Mechanical violence is not necessary for a successful disconnection/connection.

1. Unlock the connector by pulling the latch (1) out of the connector. Use a suitable tool if necessary.

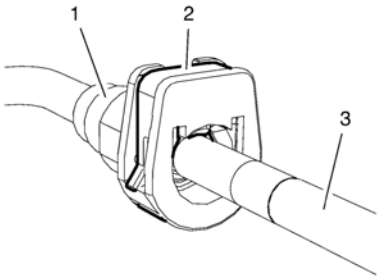

2. Push the pipe (3) into the connector (1).

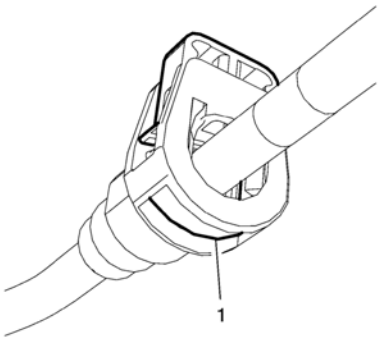

3. Push the latch (1) into the connector.

cardiagn.com

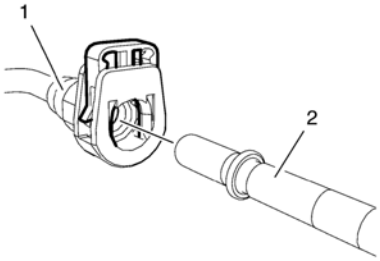

4. Pull the pipe (2) out of the connector (1).
5. Release the latch.

Connect

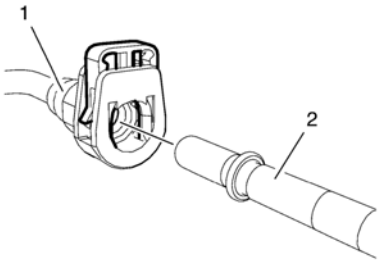

1. Push the pipe (2) into the connector (1).

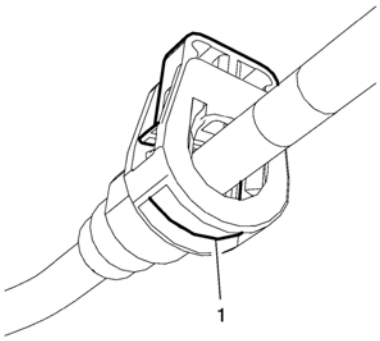

2. When the connector is locked correctly, the latch (1) must align to the connector.

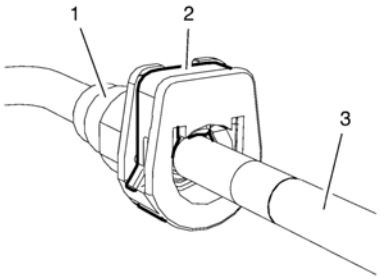

Note: The latch (2) can only pushed into the connector (1) when the pipe (3) is connected correctly.

3. Push the latch (2) into the connector (1) to secure the connection.
4. Do not rely only on the audible click to confirm a secure connection has been made.

cardiagn.com

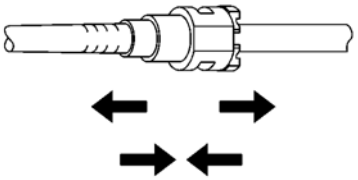

5. Pull on both sides of the quick connect fitting in order to make sure the connection is secure.

Type C - Disconnect/Connect

Disconnect

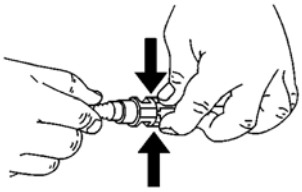

Note: Mechanical violence is not necessary for a successful disconnection/connection.

1. Squeeze the plastic quick connect fitting release tabs with the *EN-796-A* release tool.

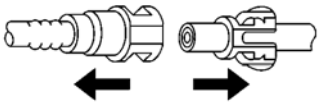

2. Pull the connection apart.

Connect

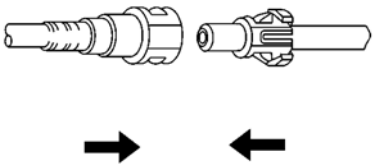

1. Push both sides of the quick connect fitting together in order to cause the retaining feature to snap into place.
2. Do not rely only on the audible click to confirm a secure connection has been made.

cardiagn.com

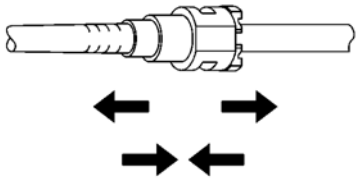

3. Once installed, pull on both sides of the quick connect fitting in order to make sure the connection is secure.

Type D - Disconnect/Connect

Disconnect

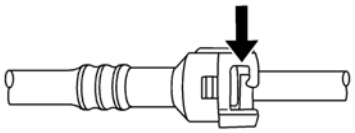

Note: Mechanical violence is not necessary for a successful disconnection/connection.

1. Release the fitting by pushing the tab toward the other side of the slot in the fitting.

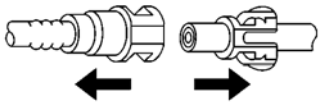

2. Pull the connection apart.

Connect

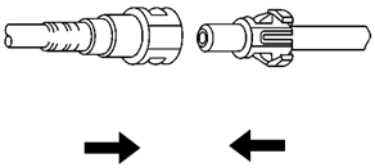

1. Push both sides of the quick connect fitting together in order to cause the retaining feature to snap into place.
2. Do not rely only on the audible click to confirm a secure connection has been made.

cardiagn.com

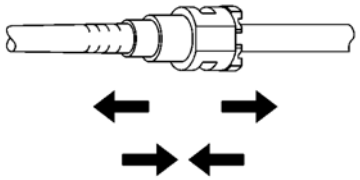

3. Once installed, pull on both sides of the quick connect fitting in order to make sure the connection is secure.

Type E – Disconnect/Connect

Disconnect

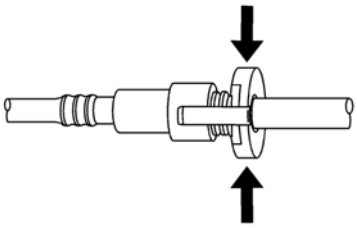

Note: Mechanical violence is not necessary for a successful disconnection/connection.

1. Squeeze where indicated by arrows on both sides of the plastic ring surrounding the quick connect fitting.

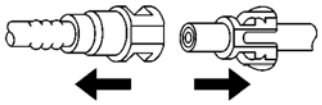

2. Pull the connection apart.

Connect

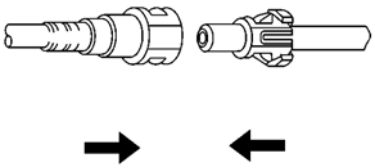

1. Push both sides of the quick connect fitting together in order to cause the retaining feature to snap into place.
2. Do not rely only on the audible click to confirm a secure connection has been made.

cardiagn.com

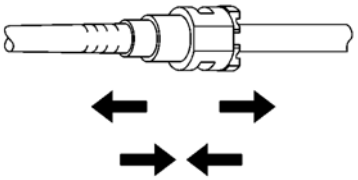

3. Once installed, pull on both sides of the quick connect fitting in order to make sure the connection is secure.

Type F – Disconnect/Connect

Disconnect

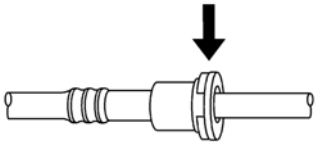

Note: Mechanical violence is not necessary for a successful disconnection/connection.

1. Release the fitting by pressing on one side of the release tab causing it to push in slightly. If the tab does not move, try pressing the tab in from the opposite side. The tab will only move in one direction.

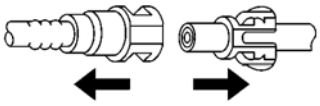

2. Pull the connection apart.

Connect

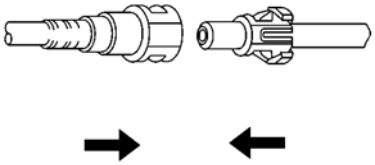

1. Push both sides of the quick connect fitting together in order to cause the retaining feature to snap into place.
2. Do not rely only on the audible click to confirm a secure connection has been made.

cardiagn.com

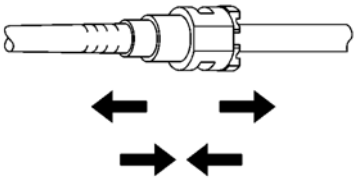

3. Once installed, pull on both sides of the quick connect fitting in order to make sure the connection is secure.

Type G – Disconnect/Connect

Disconnect

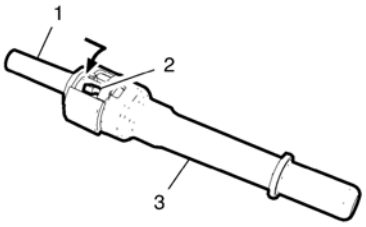

Note: Mechanical violence is not necessary for a successful disconnection/connection.

1. Push the tube (3) into the connector (1) and push down the latch (2) as the arrow shows.
2. Hold the latch (2) in this position.

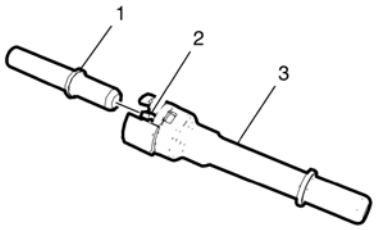

3. Pull the pipe (3) out of the connector (1).
4. Release the latch (2).

Connect

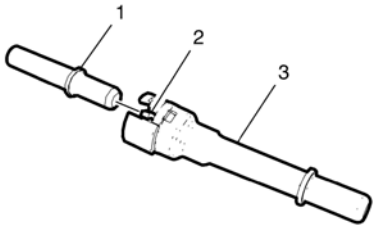

1. Push the pipe (3) into the connector (1).

cardiagn.com

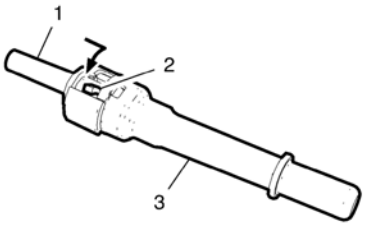

2. When the connector is locked correctly, the latch (2) must go back in opposite arrow direction.
3. Do not rely only on the audible click to confirm a secure connection has been made.

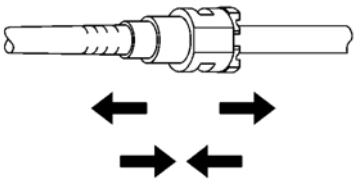

4. Pull on both sides of the quick connect fitting in order to make sure the connection is secure.

Type H – Disconnect/Connect

Disconnect

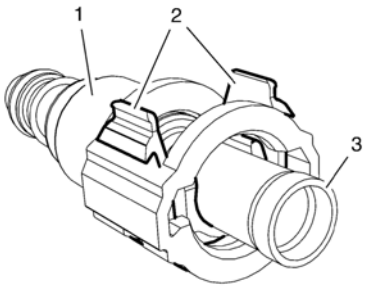

Note: Mechanical violence is not necessary for a successful disconnection/connection.

1. Push the tube (3) into the connector (1) and press the latches (2) together.
2. Hold the latch (2) in this position.

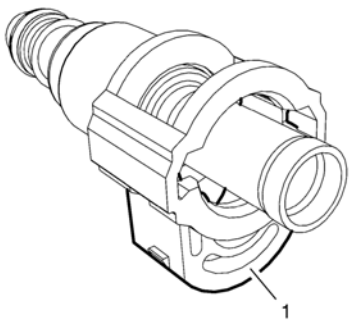

3. Push the latch (1) completely down into the connector.

cardiagn.com

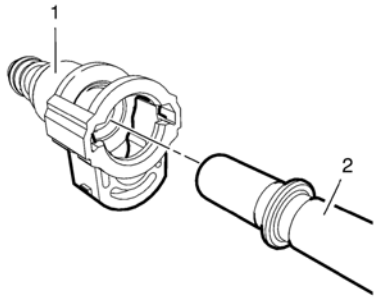

4. Pull the pipe (2) out of the connector (1).

Connect

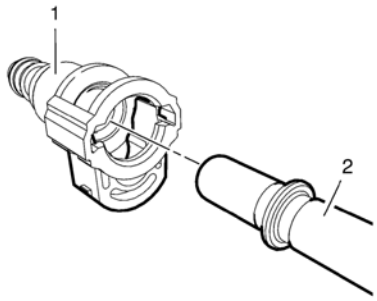

1. Push the pipe (2) into the connector (1).

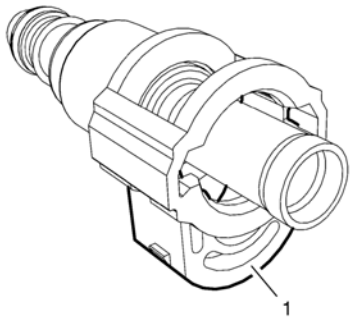

Note: The latch (1) can only pushed into the connector when the pipe is connected correctly.

2. When the connector is connected completely, push the latch (1) back into the connector.

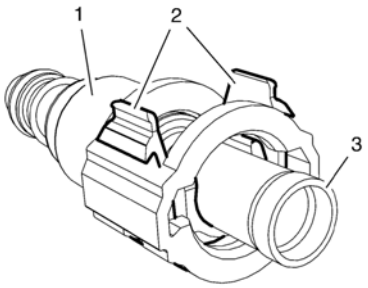

3. The latch (2) must completely lock at the outside at the connector (1).
4. Do not rely only on the audible click to confirm a secure connection has been made.

cardiagn.com

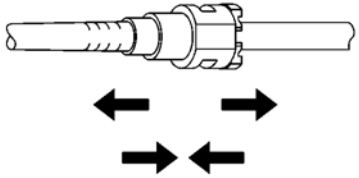

5. Pull on both sides of the quick connect fitting in order to make sure the connection is secure.

cardiagn.com

Removal Procedure

1. Remove the front bumper fascia. Refer to Front Bumper Fascia Removal and Installation.

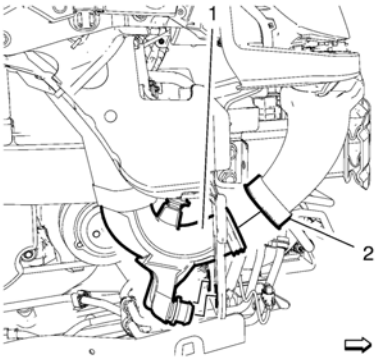

2. Separate the front intake air duct (2) from the rear intake air duct (1).
3. Push the rear intake air duct carefully out of the 2 lower bracket insulators.

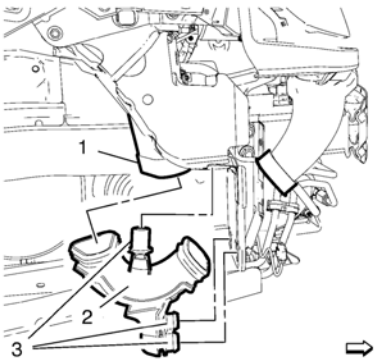

4. Remove the rear intake air duct (2) from the air cleaner adapter (1) and from the brackets.
5. Remove the 3 rear intake air duct bracket insulators (3) from the rear intake air duct (2).

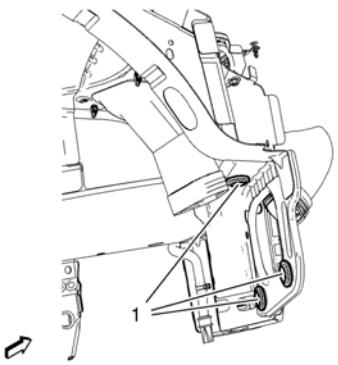

6. Install the 3 bracket insulator (1) to the guidance.

Installation Procedure

cardiagn.com

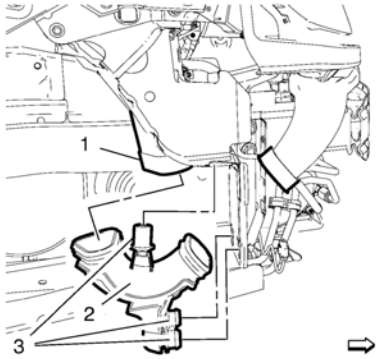

Note: Ensure that the rear intake duct is properly engaged into the bracket insulator (3).

1. Install the rear intake air duct (2) to the air cleaner adapter (1) and to the brackets.

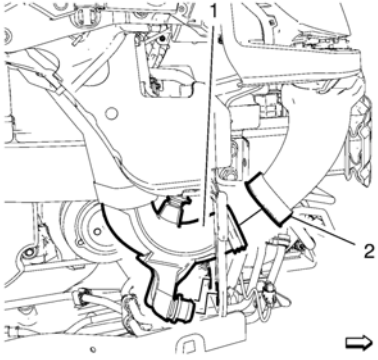

2. Push the rear intake air duct (1) carefully into the 2 lower bracket insulators and to the front intake air duct (2).
3. Install the front bumper fascia. Refer to Front Bumper Fascia Removal and Installation.

cardiagn.com

Spark Plug Usage

1. Ensure that the correct spark plug is installed. An incorrect spark plug causes driveability conditions. Refer to the electronic parts catalog for the correct spark plug.
2. Ensure that the spark plug has the correct heat range. An incorrect heat range causes the following conditions:

- Spark plug fouling—Colder plug
- Pre-ignition causing spark plug and/or engine damage—Hotter plug

Spark Plug Inspection

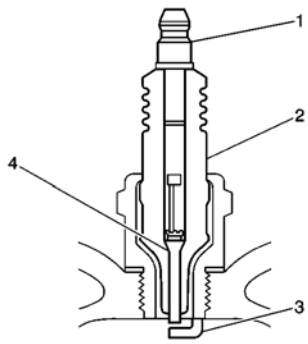

1. Inspect the terminal post (1) for damage.

- Inspect for a bent or broken terminal post (1).
- Test for a loose terminal post (1) by twisting and pulling the post. The terminal post (1) should NOT move.

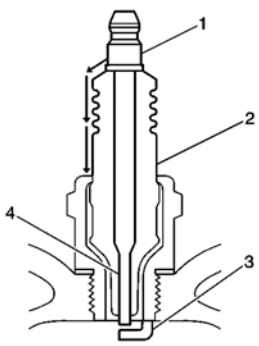

- Inspect the insulator (2) for flashover or carbon tracking, soot. This is caused by the electrical charge traveling across the insulator (2) between the terminal post (1) and ground. Inspect for the following conditions:

  - Inspect the spark plug boot for damage.
  - Inspect the spark plug recess area of the cylinder head for moisture, such as oil, coolant, or water. A spark plug boot that is saturated causes arcing to ground.

cardiagn.com

Spark Plug Inspection

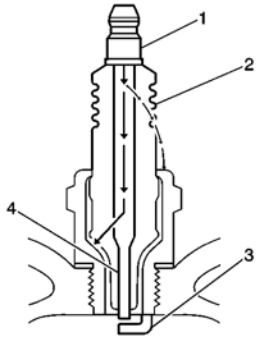

- Inspect the insulator (2) for cracks. All or part of the electrical charge may arc through the crack instead of the electrodes (3, 4).

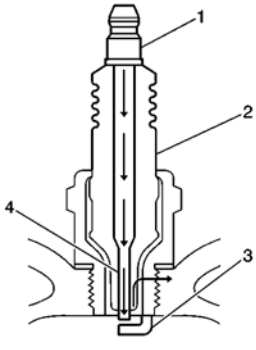

- Inspect for evidence of improper arcing.
  - Measure the gap between the center electrode (4) and the side electrode (3) terminals. Refer to Ignition System Specifications. An excessively wide electrode gap can prevent correct spark plug operation.
  - Inspect for the correct spark plug torque. Refer to Ignition System Specifications. Insufficient torque can prevent correct spark plug operation. An over torqued spark plug, causes the insulator (2) to crack.
  - Inspect for signs of tracking that occurred near the insulator tip instead of the center electrode (4).
  - Inspect for a broken or worn side electrode (3).
  - Inspect for a broken, worn, or loose center electrode (4) by shaking the spark plug.
- A rattling sound indicates internal damage.
- A loose center electrode (4) reduces the spark intensity.
  - Inspect for bridged electrodes (3, 4). Deposits on the electrodes (3, 4) reduce or eliminates the gap.
  - Inspect for worn or missing platinum pads on the electrodes (3, 4) If equipped.
  - Inspect for excessive fouling.
  - Inspect the spark plug recess area of the cylinder head for debris. Dirty or damaged threads can cause the spark plug not to seat correctly during installation.

Spark Plug Visual Inspection

1. Normal operation—Brown to grayish-tan with small amounts of white powdery deposits are normal combustion by-products from fuels with additives.
2. Carbon Fouled—Dry, fluffy black carbon, or soot caused by the following conditions:

- Rich fuel mixtures
- Leaking fuel injectors
- Excessive fuel pressure
- Restricted air filter element
- Incorrect combustion
- Reduced ignition system voltage output
- Weak coils
- Worn ignition wires
- Incorrect spark plug gap
- Excessive idling or slow speeds under light loads can keep spark plug temperatures so low that normal combustion deposits may not burn off.
- Deposit Fouling—Oil, coolant, or additives that include substances such as silicone, very white coating, reduces the spark intensity. Most powdery deposits will not effect spark intensity unless they form into a glazing over the electrode.

cardiagn.com

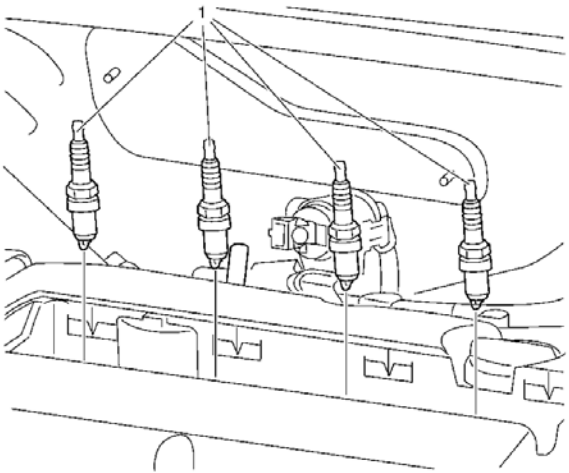

Spark Plug Replacement

Callout	Component Name
Preliminary Procedure	
Remove the ignition coil. Refer to Ignition Coil Replacement.	
1	Spark Plug Fastener **Caution:** Refer to Fastener Caution. **Tighten** 25 Y (18 lb ft)

cardiagn.com

Illustration	Tool Number/Description
	CH-44581 J-44581 Fuel Line Disconnect Tool
	CH-45004 J-45004 Fuel Tank Drain Hose
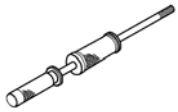	DT-49407-83 Sliding Hammer
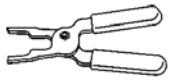	EL-43244 J-43244 Relay Puller Pliers
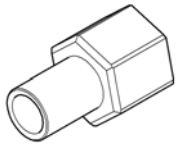	EN-32-025 Sliding Hammer Adapter
	EN-6015 KM-6015 Closure Plugs
	EN-6368 KM-6368 Set of Plugs

cardiagn.com

Illustration	Tool Number/Description
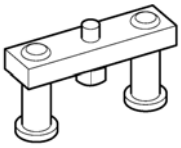	EN-6602 KM-6602 Remover
	EN-6603-KM Fixing Wrench
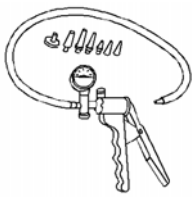	EN-23738-A J-23738-A Mityvac
	EN-24460-01 J-24460-01 Cooling System Pressure Tester
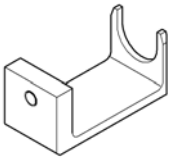	EN-46786-32 Injector Removal Tool
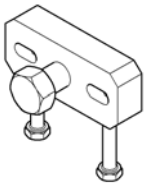	EN-46790-32 Puller
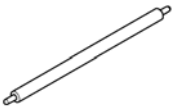	EN-47632-32 Cleaning Tool
	EN-48248 Cylinder Compression Pressure Gauge

cardiagn.com

Illustration	Tool Number/Description
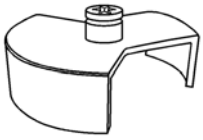	EN-48279 Main Fuel Pump Lock Ring Remover/Installer
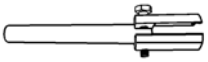	EN-48357 Injector Remover
	EN-48390 Remover/Installer Glow Plugs (For glow plugs without pressure sensor)
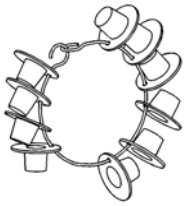	EN-48558 Glow Plug Socket Remover
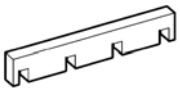	EN-48560 Injector Fixing Tool
	GE-42220 J-42220 Universal 12 V Leak Detection Lamp
	J-38641-B Diesel Fuel Quality Tester
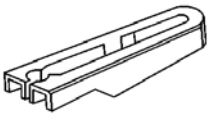	J-43178 Fuel Line Disconnect Tool

cardiagn.com

Special Tools

Illustration	Tool Number/Description
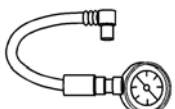	EN-50457 Fuel Pressure Gauge
	EN-50517 Fuel Pressure Gauge Adapter

cardiagn.com

Illustration	Tool Number / Description
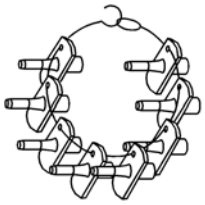	CH-807 Closure Plugs
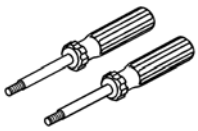	EN-6009 KM-6009 83 96 335 J-43301 Remover and Installer Ignition Coil
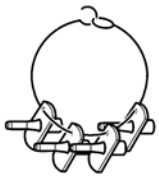	EN-6015 KM-6015 Closure Plugs
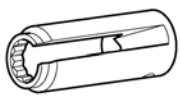	EN-6179 KM-6179 Heated Oxygen Sensor Remover/Installer
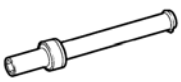	EN-6363 KM-6363 Spark Plug Remover/Installer
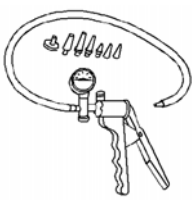	EN-23738-A J–23738-A DW09915-67310 Mityvac
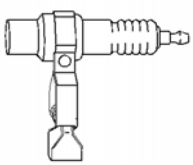	EL-26792 J 26792 HEI Spark Tester

cardiagn.com

Illustration	Tool Number / Description
	EN-34730-91 KM-J-34730-91 Pressure Tester Similar tools: CH-48027 Digital Pressure Gauge
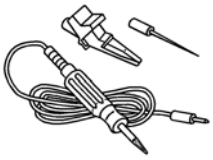	EL-35616-E J-35616-E KM-609 GM-Approved Terminal Test Kit includes J 35616-200 Test Light– Probe Kit
	EN-36012-A J-36012-A Ignition System Diagnosis Harness
	EN-41413-VLV J-41413-VLV EVAP Service Port Vent Fitting
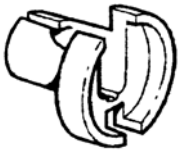	CH-41769 J-41769 Fuel Line Disconnect Tool Set
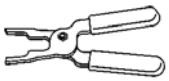	EL-43244 J-43244 DW540-010 Relay Puller Pliers
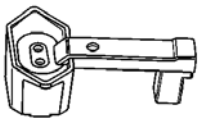	CH-44175 J 44175 Fuel Composition Tester
	CH-45004 J-45004 Fuel Tank Drain Hose

cardiagn.com

Special Tools

Illustration	Tool Number / Description
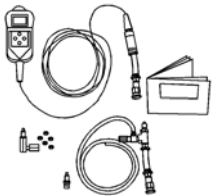	CH-48027 Digital Pressure Gauge Similar Tools: EN-34730-91 KM-J-34730-91 Pressure Tester
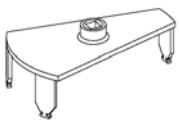	EN-48279 Main Fuel Pump Locking Ring Remover/Installer

cardiagn.com

The turbocharger increases engine power by pumping compressed air into the combustion chambers, allowing a greater quantity of fuel to combust at the optimal air/fuel ratio.

Turbocharger Boost Pressure Sensor

The turbocharger boost pressure sensor is mounted on the intake manifold and measures boost pressure and air temperature.

Turbocharger Vane Position Control Solenoid or Boost Pressure Actuator

The turbocharger for this system uses a turbocharger vane position control solenoid valve or a boost pressure actuator and is controlled by the engine control module (ECM). The turbocharger vane position control solenoid valve uses an ignition voltage circuit and a control circuit. The turbocharger vanes are controlled to vary the amount of boost pressure. The boost pressure can be controlled independent of engine speed. There are 11 controllable vanes in this turbocharger. The vanes mount to a drive ring that can be rotated to change the vane angle. The ECM will vary the boost dependent upon the load requirements of the engine.

The turbocharger vanes are normally open when the engine is not under a load. The ECM will close the turbocharger vanes to increase engine power and to create a high pressure, using boost pressure actuator.

The ECM will often close the turbocharger vanes to create back pressure to drive exhaust gas through the exhaust gas recirculation (EGR) valve as required. At extreme cold temperatures, the ECM may close the turbocharger vanes at low load conditions in order to accelerate engine coolant heating. The ECM may also close the turbocharger vanes under exhaust braking conditions.

The Charged Air Cooler

The charged air cooler is located in front of the radiator. The turbocharger supplies hot compressed air from the turbine by sucking exhaust gas to the engine to increase power. The airflow through the radiator cools the hot compressed air from the turbocharger.

Engine Control Module (ECM)

The engine control module (ECM) controls all turbocharger control functions. The ECM monitors information from various sensor inputs that include the following:

- The accelerator pedal position (APP) sensor
- The engine coolant temperature (ECT) sensor
- The mass air flow (MAF) sensor
- The intake air temperature (IAT) sensor
- The vehicle speed sensor (VSS)
- The transmission gear position or range information sensors
- The manifold absolute pressure (MAP) sensor

cardiagn.com

1. Remove the engine sight shield. Refer to Engine Sight Shield Replacement.

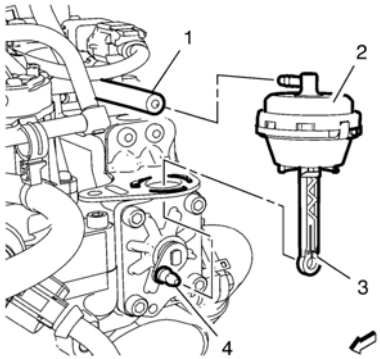

2. Remove the exhaust gas recirculation bypass control solenoid valve hose (1).
3. Unclip the vacuum modulator rod (3) from the exhaust gas recirculation cooler bypass valve shaft (4).
4. Turn the vacuum modulator (2) counterclockwise until it stops.
5. Remove the vacuum modulator in top direction from the exhaust gas recirculation cooler bypass valve bracket.

Installation Procedure

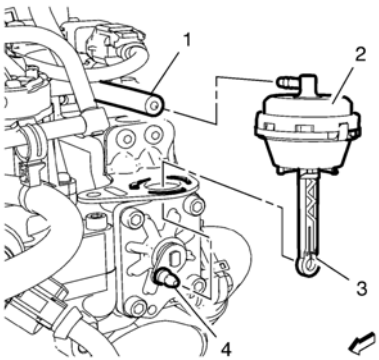

1. Install the vacuum modulator (2) to the exhaust gas recirculation cooler bypass valve bracket.
2. Turn the vacuum modulator clockwise until it stops.
3. Clip the vacuum modulator rod (3) to the exhaust gas recirculation cooler bypass valve shaft (4).
4. Install the exhaust gas recirculation bypass control solenoid valve hose (1).
5. Install the engine sight shield. Refer to Engine Sight Shield Replacement.

cardiagn.com

Removal Procedure

1. Remove the engine sight shield. Refer to Engine Sight Shield Replacement.
2. Disconnect the battery negative cable. Refer to Battery Negative Cable Disconnection and Connection.

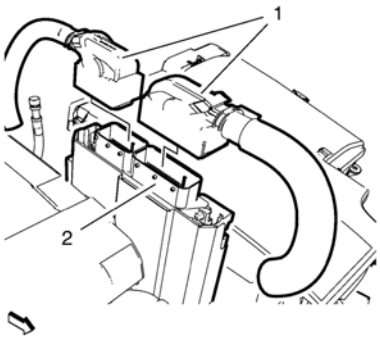

3. Disconnect the 2 engine control module wiring harness plugs (1) from the engine control module (2).

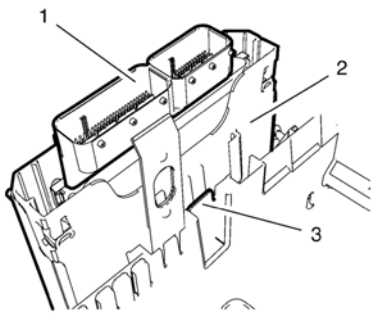

4. Remove the engine control module bracket (2) along with the engine control module (1) from the battery tray (3).

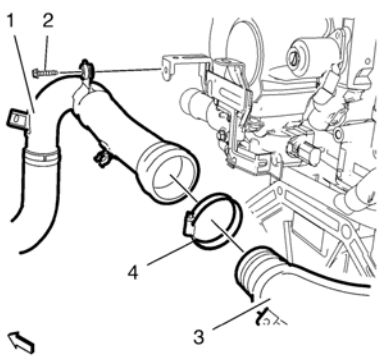

5. Remove the charge air cooler outlet front hose bracket bolt (2).
6. Loosen the charge air cooler outlet front hose to rear hose clamp (4).
7. Detach the charge air cooler outlet front hose (1) along with the rear hose clamp (4) from the charge air cooler outlet rear hose (3). Hang the charge air cooler outlet hose aside (1).
8. Disconnect the exhaust pressure differential wiring harness plug.
9. Disconnect the engine wiring harness from the glow plug wiring harness plug.
10. Unclip the engine wiring harness from the wiring harness bracket.

cardiagn.com

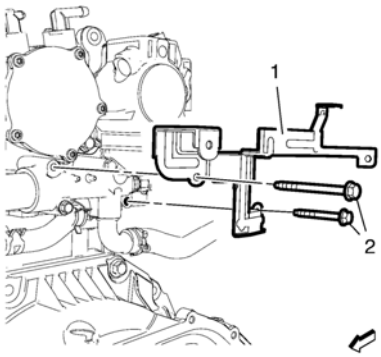

11. Remove the 2 engine wiring harness bracket and engine water outlet adapter bolts (2) from the engine water outlet adapter.
12. Remove the engine wiring harness bracket (1) from the engine water outlet adapter.

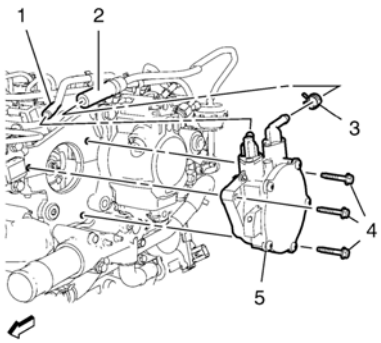

13. Remove the vacuum pump hose (1).
14. Loosen the power brake booster vacuum pipe clamp (3) and remove the power brake booster vacuum pipe (2).
15. Remove the 3 vacuum pump assembly bolts (4).
16. Remove the vacuum pump assembly (5) and the vacuum pump assembly gasket.

Installation Procedure

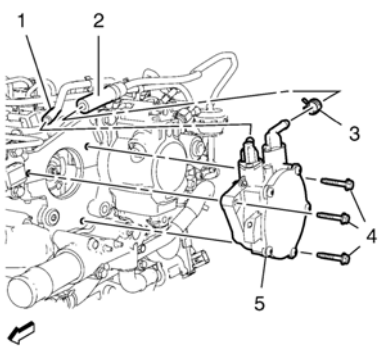

1. Install the vacuum pump assembly (5) and a NEW vacuum pump assembly gasket.

   Caution: Refer to Fastener Caution.
2. Install the 3 vacuum pump assembly bolts (4) and tighten to **10 Y (89 lb in)**.
3. Install the power brake booster vacuum pipe (2) and fix the power brake booster vacuum pipe clamp (3).
4. Install the vacuum pump hose (1).

cardiagn.com

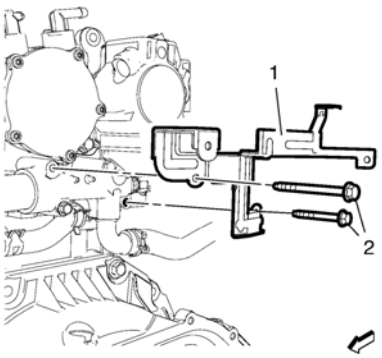

5. Install the engine wiring harness bracket (1) to the engine water outlet adapter.
6. Install the 2 engine wiring harness bracket and engine water outlet adapter bolts (2) to the engine water outlet adapter and tighten to **10 Y (89 lb in)**.
7. Clip the engine wiring harness to the wiring harness bracket.
8. Connect the engine wiring harness to the glow plug wiring harness plug.
9. Connect the exhaust pressure differential wiring harness plug.

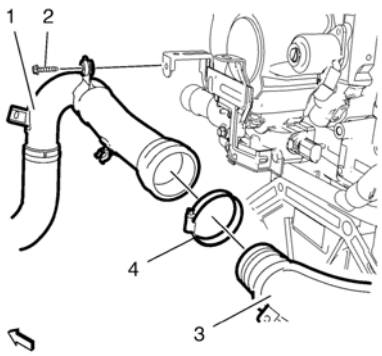

10. Install the charge air cooler outlet front hose (1) along with the rear hose clamp (4) to the charge air cooler outlet rear hose (3).
11. Tighten the charge air cooler outlet front hose to the rear hose clamp (4) to **4 Y (35 lb in)**.
12. Install the charge air cooler outlet front hose bracket bolt (2) and tighten to **9 Y (80 lb in)**.

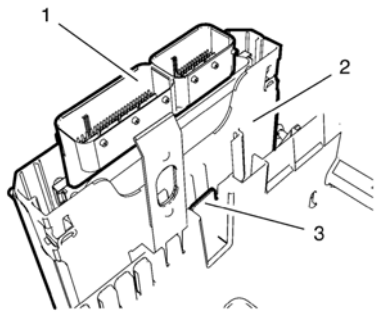

13. Install the engine control module bracket (2) along with the engine control module (1) to the battery tray (3).

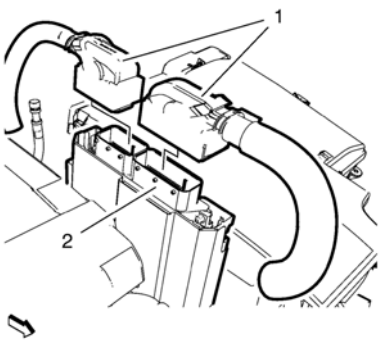

14. Connect the 2 engine control module wiring harness plugs (1) to the engine control module (2).
15. Connect the battery negative cable. Refer to Battery Negative Cable Disconnection and Connection.
16. Install the engine sight shield. Refer to Engine Sight Shield Replacement.

cardiagn.com

Removal Procedure

1. Remove the engine sight shield. Refer to Engine Sight Shield Replacement.

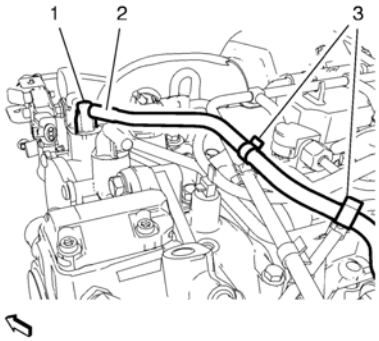

2. Remove the vacuum pump hose (2) from the vacuum pump (1).
3. Remove the vacuum pump hose from the 2 vacuum pump hose clips (3).

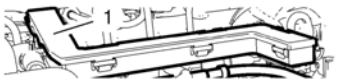

4. Remove the wiring harness conduit (1) in top direction from the 3 exhaust gas recirculation cooler brackets. Hang the wiring harness conduit aside.
5. Remove the vacuum pump hose (3) from the exhaust gas recirculation valve cooler bypass control solenoid valve (5).
6. Remove the 3 vacuum pump hose clips (2).
7. Remove the vacuum pump hose (3) from the charge air bypass valve vacuum tank (4).

Installation Procedure

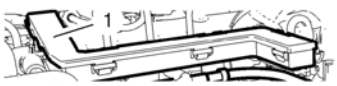

1. Install the vacuum pump hose (3) to the charge air bypass valve vacuum tank (4).
2. Install the 3 vacuum pump hose clips (2).
3. Install the vacuum pump hose (3) to the exhaust gas recirculation valve cooler bypass control solenoid valve (5).
4. Install the wiring harness conduit (1) to the 3 exhaust gas recirculation cooler brackets.

cardiagn.com

Vacuum Pump Hose Replacement

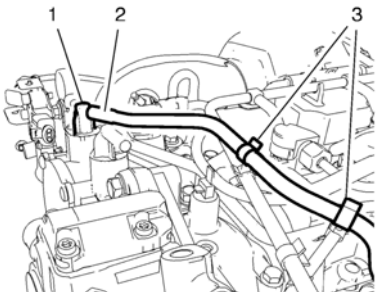

5. Install the vacuum pump hose to the 2 vacuum pump hose clips (3).
6. Install the vacuum pump hose (2) to the vacuum pump (1).
7. Install the engine sight shield. Refer to Engine Sight Shield Replacement.

cardiagn.com

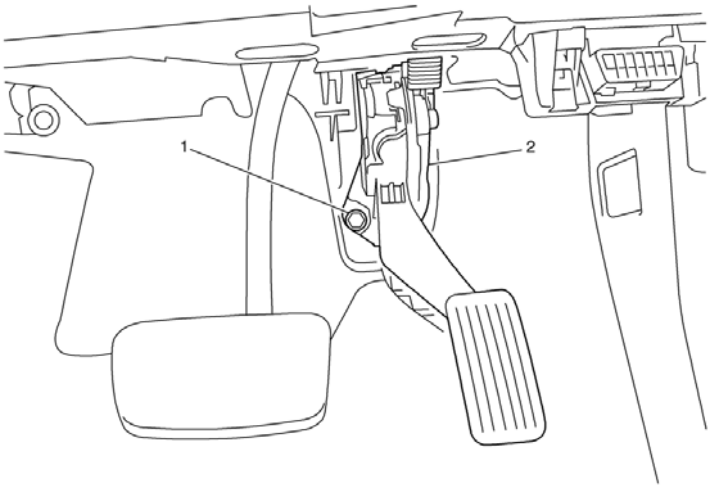

Accelerator Pedal Position Sensor Replacement

Callout	Component Name
1	Accelerator Pedal Position Sensor Fastener **Caution:** Refer to Fastener Caution. **Tighten** 10 Y (89 lb in)
2	Accelerator Pedal Position Sensor **Procedure** Disconnect electrical connector.

cardiagn.com

The accelerator pedal position (APP) system along with the engine control module (ECM) and other components is used to calculate and control the amount of acceleration and deceleration by controlling the amount of fuel delivery.

The APP system includes the following components:

- The APP sensor assembly
- The engine control module (ECM)

Accelerator Pedal Position (APP) Sensor

The APP sensor is mounted on the accelerator pedal control assembly. The sensor is made up of 2 individual sensors within one housing. Two separate signals, low reference, and 5 V reference circuits are used in order to interface the accelerator pedal sensor assembly with the engine control module (ECM). Each sensor has a unique functionality to determine pedal position. The ECM uses the APP sensor to determine the amount of acceleration or deceleration desired by the person driving the vehicle. The APP sensor 1 voltage should increase as the accelerator pedal is depressed, from below 0.7 V at 0% pedal travel to 4.5 V at 100% pedal travel. APP sensor 2 voltage should increase from above 0.3 V at 0% pedal travel to 2.2 V at 100% pedal travel.

cardiagn.com

Special Tools

- *DT-6202–A* Pliers
- *DT-6202–B* Pliers
- *DT-6202–20* Adapter to DT-6202–A
- *DT-50894* Remover

For equivalent regional tools, refer to Special Tools.

Removal Procedure

1. Remove the battery. Refer to Battery Replacement.
2. Remove the battery tray. Refer to Battery Tray Replacement.
3. Remove dash upper extension panel opening cover. Refer to Dash Upper Extension Panel Opening Cover Replacement.

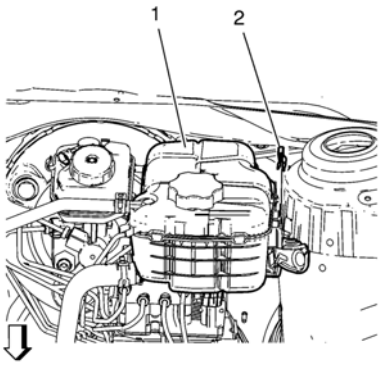

Note: Do NOT disconnect engine coolant hoses.

4. Remove the radiator surge tank clip (2).
5. Remove the radiator surge tank (1). Position the radiator surge tank (1) aside.

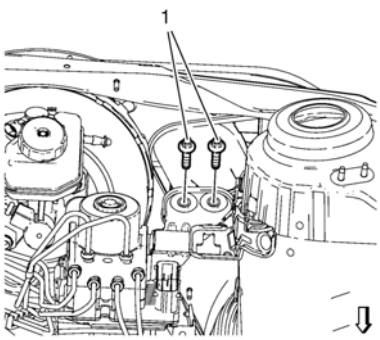

6. Remove the BPMV bracket bolts (1).

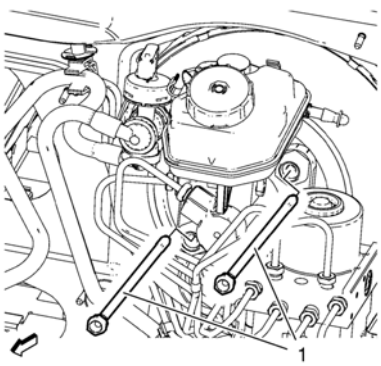

cardiagn.com

7. Remove the brake booster bolts (1).

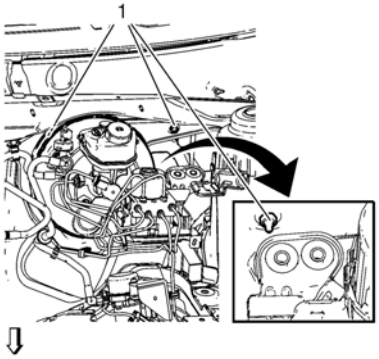

Note:

- Do NOT open hydraulic brake system.
- Second mechanic required.

8. Pull the brake booster and the BPMV assembly forward in order to get access to the brake pedal bracket nuts (1).
9. Remove the brake pedal bracket nuts (1).
10. Remove the instrument panel lower trim pad cover. Refer to Instrument Panel Lower Trim Pad Cover Replacement.
11. Remove the steering column upper trim cover. Refer to Steering Column Upper Trim Cover Replacement.
12. Remove the steering column lower trim cover. Refer to Steering Column Lower Trim Cover Replacement.
13. Remove the intermediate steering shaft. Refer to Intermediate Steering Shaft Replacement.
14. Remove the steering column. Refer to Steering Column Replacement.

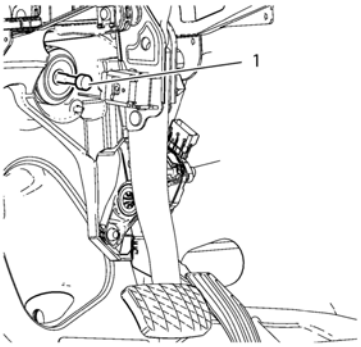

15. Disconnect the brake pedal pushrod (1) from the brake pedal with brake pedal applied a bit.

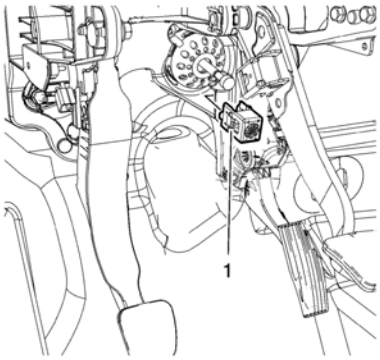

16. Replace click fit connector (1) between booster pushrod and brake pedal with new part.

cardiagn.com

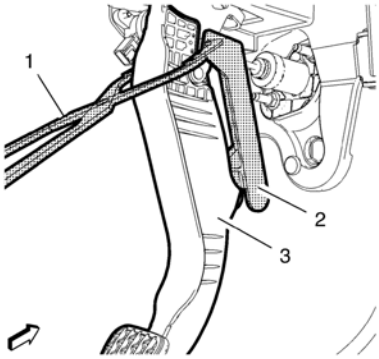

17. If equipped, disconnect the clutch master cylinder push rod from the clutch pedal (3), using either the *DT-6202–A* pliers (1) and the *DT-6202–20* adapters in conjunction with the *DT-50894* remover (2), or the *DT-6202–B* pliers (1) in conjunction with the *DT-50894* remover (2).

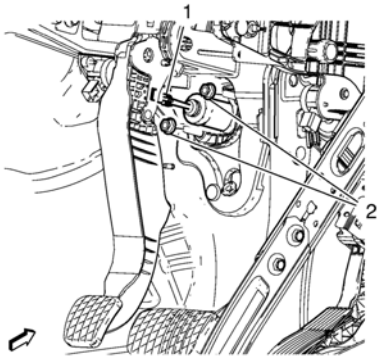

18. Remove the clutch master cylinder nuts (2) from the pedal bracket, if equipped.

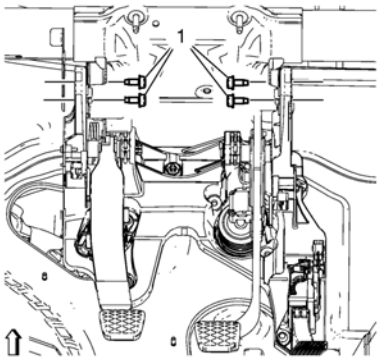

19. Remove the brake pedal bracket bolt (1) from the tie bar.
20. Separate wiring harness from pedal bracket.
21. Disconnect electrical connectors.

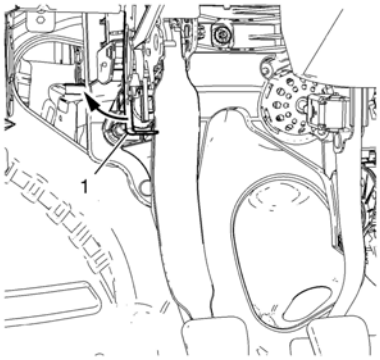

22. Carefully reposition the fuse box bracket (1) to the side to allow space for pedal assembly removal.
23. Remove brake and accelerator and clutch pedal assembly from vehicle.
24. Transfer component parts as needed.

Installation Procedure

1. Install the brake and accelerator and clutch pedal assembly to the vehicle.

cardiagn.com

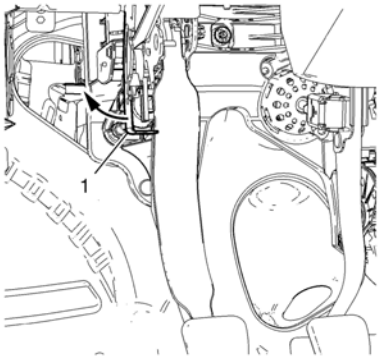

2. Carefully place the fuse box bracket (1) back in position
3. Install wiring harness to brake pedal bracket.
4. Connect electrical connectors.

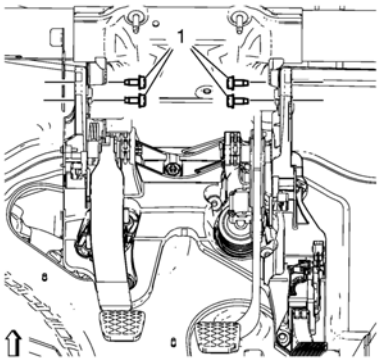

Caution: Refer to Fastener Caution.

5. Install brake pedal bracket bolts and tighten to **20 Y (15 lb ft)**.
6. Connect clutch master cylinder push rod (1) to the clutch pedal, if equipped.

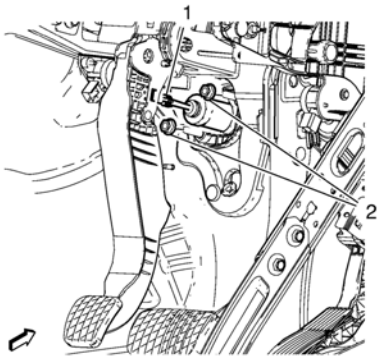

7. Install the clutch master cylinder nuts (2) to the pedal bracket, if equipped and tighten to **18 Y (13 lb ft)**.

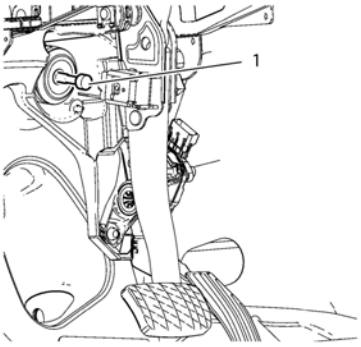

8. Connect the brake pedal pushrod (1) to the brake pedal.
9. Install the steering column. Refer to Steering Column Replacement.
10. Install the intermediate steering shaft. Refer to Intermediate Steering Shaft Replacement.
11. Install the steering column lower trim cover. Refer to Steering Column Lower Trim Cover Replacement.

cardiagn.com

12. Install the steering column upper trim cover. Refer to Steering Column Upper Trim Cover Replacement.
13. Install the instrument panel lower trim pad cover. Refer to Instrument Panel Lower Trim Pad Cover Replacement.

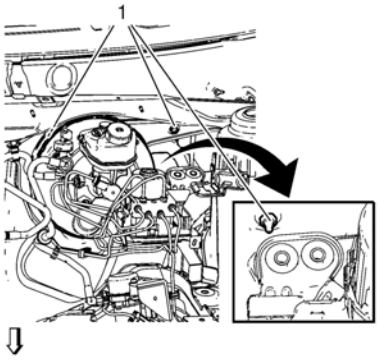

Note:

- Do NOT open hydraulic brake system.
- Second mechanic required.

14. Pull the brake booster and the BPMV assembly forward in order to gain access to the brake pedal bracket nuts (1).
15. Install the pedal bracket nuts (1) and tighten to **20 Y (15 lb ft)**.

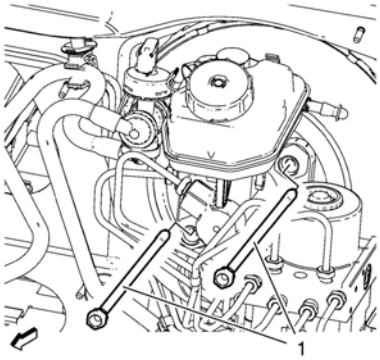

16. Install the brake booster bolts (1) and tighten to **19 Y (14 lb ft)**.

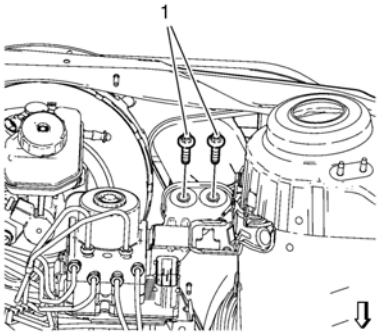

17. Install the BPMV bracket bolts (1) and tighten to **20 Y (15 lb ft)**.

cardiagn.com

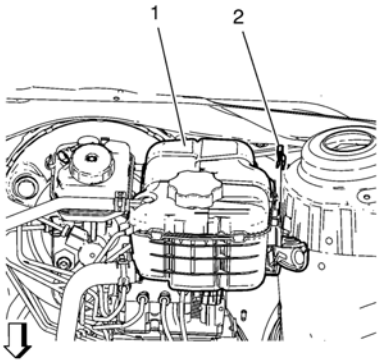

Note: Do NOT disconnect engine coolant hoses.

18. Install the radiator surge tank (1).
19. Install the radiator surge tank clip (2).
20. Install dash upper extension panel opening cover. Refer to Dash Upper Extension Panel Opening Cover Replacement.
21. Install the battery tray. Refer to Battery Tray Replacement.
22. Install the battery. Refer to Battery Replacement.
23. Calibrate the brake pedal position sensor. Refer to Brake Pedal Position Sensor Calibration.

cardiagn.com

Note: The clutch pedal is part of the brake, accelerator, and clutch pedal assembly and cannot be serviced separately.

To replace the brake, accelerator and clutch pedal assembly, refer to Brake, Accelerator, and Clutch Pedal Replacement.

cardiagn.com

Removal Procedure

1. Remove the engine sight shield. Refer to Engine Sight Shield Replacement.

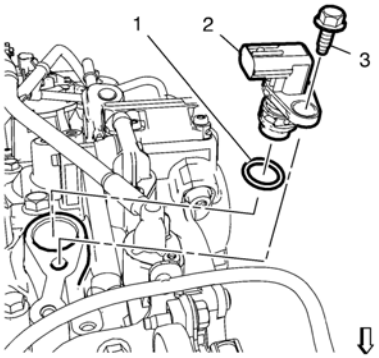

2. Disconnect the camshaft position sensor wiring harness plug.
3. Remove the camshaft position sensor bolt (3) and the camshaft position sensor (2).
4. Remove the camshaft position sensor gasket (1).

Installation Procedure

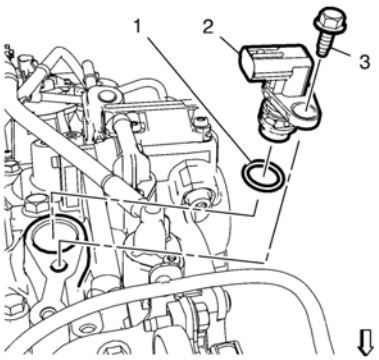

1. Install the camshaft position sensor (2) with a NEW camshaft position sensor gasket (1).

   Caution: Refer to Fastener Caution.
2. Install the camshaft position sensor bolt (3) and tighten to **10 Y (89 lb in)**.
3. Connect the camshaft position sensor wiring harness plug.
4. Install the engine sight shield. Refer to Engine Sight Shield Replacement.

cardiagn.com

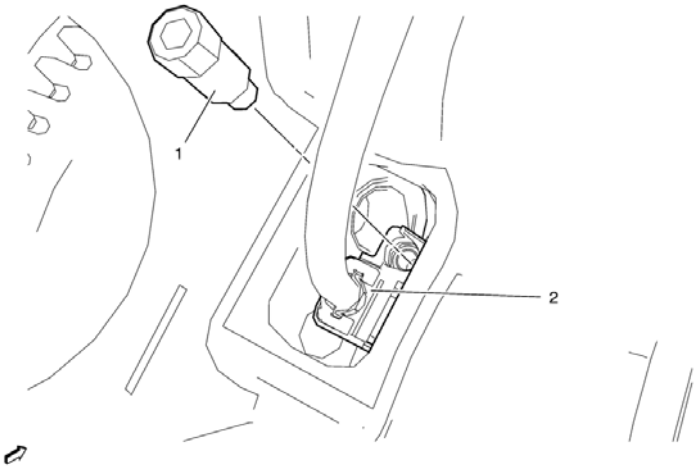

Crankshaft Position Sensor Replacement

Callout	Component Name
Preliminary Procedure	
Remove the starter motor. Refer to Starter Replacement.	
1	Crankshaft Position Sensor Fastener **Caution:** Refer to Fastener Caution. **Procedure** Remove the crankshaft position sensor bolt **Tighten** 4.5 Y (40 lb in)
2	Crankshaft Position Sensor **Procedure** Disconnect all electrical connectors as needed.

cardiagn.com

The engine control module (ECM) interacts with many emission related components and systems, and monitors the emission related components and systems for deterioration. OBD II diagnostics monitor the system performance and a diagnostic trouble code (DTC) sets if the system performance degrades.

The malfunction indicator lamp (MIL) operation and the DTC storage are dictated by the DTC type. A DTC is ranked as a type A or type B if the DTC is emissions-related. Type C is a non-emissions-related DTC.

The ECM is located in the engine compartment. The ECM is the control center of the engine controls system. The ECM controls the following components:

- The fuel injection system
- The ignition system
- The emission control systems
- The on-board diagnostics
- The A/C and fan systems
- The throttle body motor system

The ECM constantly monitors the information from various sensors and other inputs, and controls the systems that affect the vehicle performance and the emissions. The ECM also performs diagnostic tests on various parts of the system. The ECM can recognize operational conditions and alert the driver via the MIL. When the ECM detects a malfunction, the ECM stores a DTC. The condition area is identified by the particular DTC that is set. This helps the technician in making repairs.

ECM Function

The engine control module (ECM) can supply 5 V or 12 V to the various sensors or switches. This is done through pull-up resistors to the regulated power supplies within the ECM. In some cases, even an ordinary shop voltmeter will not give an accurate reading because the resistance is too low. Therefore, a DMM with at least 10 MΩ input impedance is required in order to ensure accurate voltage readings.

The ECM controls the output circuits by controlling the ground or the power feed circuit through the transistors or a device called an output driver module.

EEPROM

The programmable read only memory (EEPROM), which can be erased electronically, is a permanent memory that is physically part of the engine control module (ECM). The EEPROM contains program and calibration information that the ECM needs in order to control the powertrain operation.

Special equipment, as well as the correct program and calibration for the vehicle, are required in order to reprogram the ECM.

ECM Default Actions

When a malfunction occurs within the engine control system, the engine control module (ECM) maintains control of the system with default actions. Default actions are calculated values, and/or calibrated default values, that are stored within the ECM. A certain level of engine performance is possible when a malfunction occurs dependant on the default actions taken. The ECM default actions prevent a complete loss of engine performance.

ECM Output Controls

The scan tool can control certain solenoids, valves, motors, and relays. The output controls can be found under the special functions selection of the scan tool. Some output controls may be disabled by the engine control module (ECM) during certain types of vehicle operation.

Data Link Connector (DLC)

The data link connector (DLC) is a 16-pin connector that provides the technician with a means of accessing serial data for aid in the diagnosis. This connector allows the technician to use a scan tool in order to monitor the various serial data parameters, and display the DTC information. The DLC is located inside the drivers compartment, underneath the dash.

Malfunction Indicator Lamp (MIL)

The malfunction indicator lamp (MIL) is located on the instrument panel cluster or the driver information center. The MIL is controlled by the engine control module (ECM) and illuminates when the ECM detects a condition that affects the vehicle emissions.

ECM Service Precautions

The engine control module (ECM), by design, can withstand the normal current draws that are associated with the vehicle operations. However, care must be taken in order to avoid overloading any of these circuits. When testing for opens or shorts, do not ground or apply voltage to any of the ECM circuits unless the diagnostic procedure instructs you to do so. These circuits should only be tested with a DMM.

Aftermarket (Add-On) Electrical And Vacuum Equipment

Caution: Do not attach add-on vacuum operated equipment to this vehicle. The use of add-on vacuum equipment may result in damage to vehicle components or systems.

Caution: Connect any add-on electrically operated equipment to the vehicle's electrical system at the 12 V battery (power and ground) in order to prevent damage to the vehicle.

Aftermarket, add-on, electrical and vacuum equipment is defined as any equipment installed on a vehicle after leaving the factory that connects to the vehicles electrical or vacuum systems. No allowances have been made in the vehicle design for this type of equipment.

Add-on electrical equipment, even when installed to these strict guidelines, may still cause the powertrain system to malfunction. This may also include equipment not connected to the vehicle electrical system, such as portable telephones and radios. Therefore, the first step in diagnosing any powertrain condition is to make sure all of the after-market electrical equipment is removed or disconnected from the vehicle. After this has been done and if the condition still exists, the condition may be diagnosed in the normal manner.

Electrostatic Discharge (ESD) Damage

Note: In order to prevent possible electrostatic discharge damage to the ECM, do not touch the connector pins on the ECM.

The electronic components that are used in the control systems are often designed to carry very low voltage. The electronic components are susceptible to damage caused by electrostatic discharge. Less than 100 V of static electricity can cause damage to some electronic components. By comparison, it takes as much as 4000 V for a person to even feel the zap of a static discharge.

cardiagn.com

There are several ways for a person to become statically charged. The most common methods of charging are by friction and by induction. An example of charging by friction is a person sliding across a car seat.

Charging by induction occurs when a person with well insulated shoes stands near a highly charged object and momentarily touches ground. Charges of the same polarity are drained off leaving the person highly charged with the opposite polarity. Static charges can cause damage, therefore, it is important to exercise great care when handling and testing electronic components.

Underhood Inspection

Note: This inspection is very important and must be done carefully and thoroughly.

Perform a careful underhood inspection when performing any diagnostic procedure or diagnosing the cause of an emission test failure. This can often lead to repairing a condition without further steps. Use the following guidelines when performing an inspection:

- Inspect all of the vacuum hoses for correct routing, pinches, cuts, or disconnects.
- Inspect any hoses that are difficult to see.
- Inspect all of the wires in the engine compartment for the following conditions:
  - Burned or chased spots
  - Pinched wires
  - Contact with sharp edges
  - Contact with hot exhaust manifolds

cardiagn.com

Service of the engine control module (ECM) should consist of either replacement of the ECM of programming of the electrically erasable programmable read only memory (EEPROM). If the diagnostic procedures call for the ECM to be replaced, the replacement ECM should be checked to ensure that the correct part is being used. If the correct part is being used, remove the faulty ECM and install the new service ECM.

Caution:

- Turn the ignition OFF when installing or removing the control module connectors and disconnecting or reconnecting the power to the control module (battery cable, powertrain control module (PCM)/engine control module (ECM)/transaxle control module (TCM) pigtail, control module fuse, jumper cables, etc.) in order to prevent internal control module damage.
- Control module damage may result when the metal case contacts battery voltage. DO NOT contact the control module metal case with battery voltage when servicing a control module, using battery booster cables, or when charging the vehicle battery.
- In order to prevent any possible electrostatic discharge damage to the control module, do no touch the connector pins or the soldered components on the circuit board.
- Remove any debris from around the control module connector surfaces before servicing the control module. Inspect the control module connector gaskets when diagnosing or replacing the control module. Ensure that the gaskets are installed correctly. The gaskets prevent contaminant intrusion into the control module.
- The replacement control module must be programmed.

Note: Before removing the engine control module (ECM), use the scan tool to capture the ECM data. This captured data will then need to be restored into the NEW ECM. Refer to Control Module References.

Removal Procedure

1. Prepare the engine control module (ECM) for replacement. Refer to Control Module References.
2. Disconnect the battery negative cable. Refer to Battery Negative Cable Disconnection and Connection.

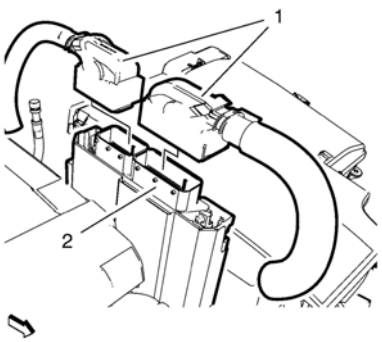

Caution: In order to prevent any possible electrostatic discharge damage to the ECM, do not touch the connector pins.

3. Disconnect the 2 ECM wiring harness plugs (1) from the ECM (2).

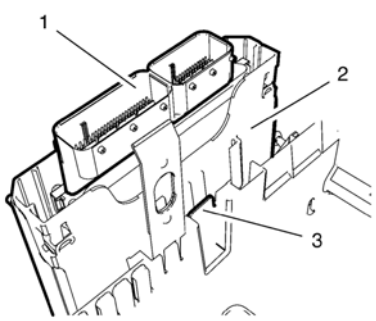

4. Unclip the retainer clip (3) with a screwdriver.
5. Remove the ECM bracket (2) along with the ECM (1) from the battery tray.

cardiagn.com

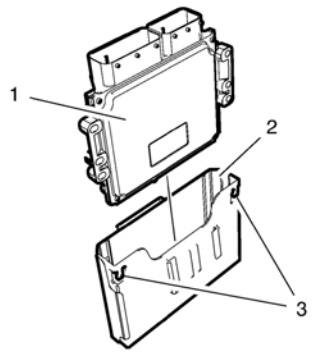

6. Unclip the retainer clips (3) with a screwdriver.
7. Remove the ECM (1) from the ECM bracket (2).

Installation Procedure

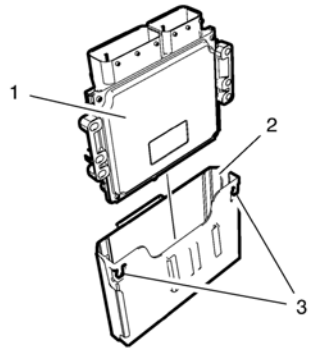

Note: The retainer clips (3) must engage safely.

1. Install the ECM (1) to the ECM bracket (2).

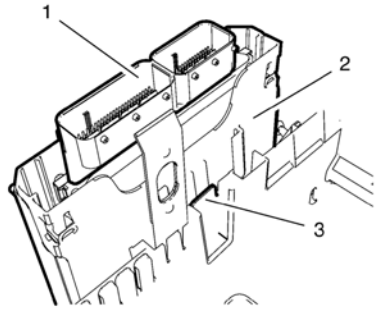

Note: The retainer clip (3) must engage safely.

2. Install the ECM bracket (2) with the ECM (1) to the battery tray.

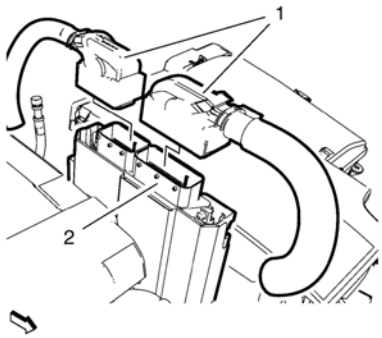

Note: The safety locks on the ECM wiring harness plugs (1) must engage safely.

3. Connect the ECM wiring harness plugs (1) to the ECM (2).
4. Connect the battery negative cable. Refer to Battery Negative Cable Disconnection and Connection.

cardiagn.com

5. Program the engine control module, if required. Refer to K20 Engine Control Module: Programming and Setup.
6. Turn OFF the ignition for at least 5 seconds after the programming is complete.

cardiagn.com

Removal Procedure

1. Disconnect the battery negative cable. Refer to Battery Negative Cable Disconnection and Connection.

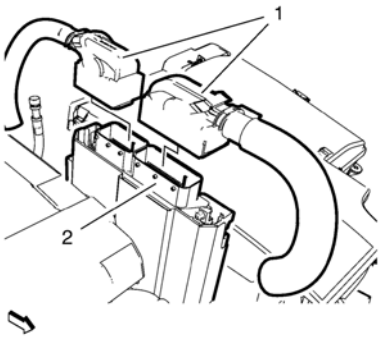

2. Disconnect the 2 engine control module wiring harness plugs (1) from the engine control module (2).

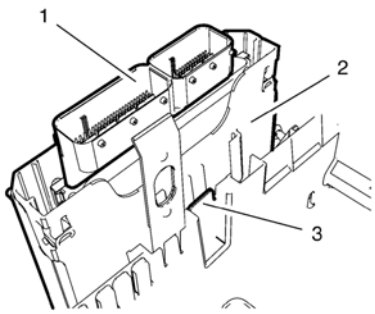

3. Remove the engine control module bracket (2) along with the engine control module (1) from the battery tray (3).
4. Remove the battery tray. Refer to Battery Tray Replacement.
5. Remove the windshield washer solvent container filler tube. Refer to Windshield Washer Solvent Container Filler Tube Replacement.
6. Remove the front compartment fuse block. Refer to Front Compartment Fuse Block Replacement.
7. Remove the engine sight shield. Refer to Engine Sight Shield Replacement.

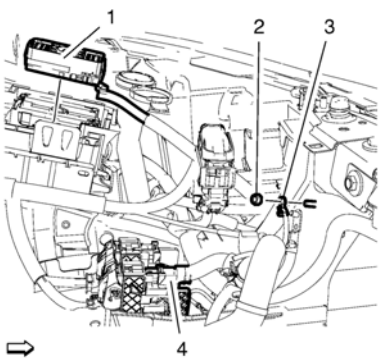

8. Remove the wiring harness ground cable nut (2) and remove the wiring harness ground cable (3).
9. Remove the wiring harness plug (1) in top direction from the front compartment fuse block housing.
10. Disconnect the wiring harness connection adapter plug (4).
11. Remove the 2 wiring harness clips from the drivetrain and front suspension frame front inner support and from the charge air cooler outlet hose.

cardiagn.com

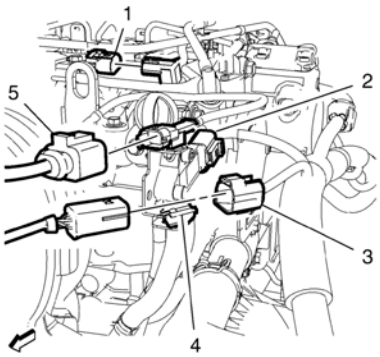

12. Disconnect the exhaust temperature sensor wiring harness plug (5).
13. Unclip the heated oxygen sensor wiring harness plug (3) from the retainer clip (4) and disconnect the heated oxygen sensor wiring harness plug (3).
14. Disconnect the exhaust pressure differential sensor hose wiring harness plug (2).
15. Disconnect the camshaft position sensor wiring harness plug (1).

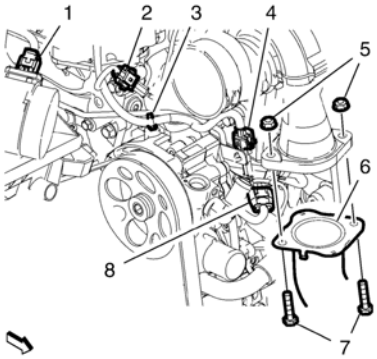

16. Remove the air cleaner outlet duct. Refer to Air Cleaner Outlet Duct Replacement.
17. Remove the 2 charge air cooler inlet air hose bolts (7) from the 2 charge air cooler inlet air hose nuts (5). Hang the charge air cooler inlet air hose (6) aside.
18. Disconnect the exhaust temperature sensor wiring harness plug (2).
19. Disconnect the exhaust temperature sensor wiring harness plug (4) and unclip the wiring harness clip (3) from the steering pump.
20. Disconnect the turbocharger wastegate actuator wiring harness plug (8).
21. Disconnect the mass air flow sensor wiring harness plug (1) and remove the wiring harness clip from the air cleaner housing.

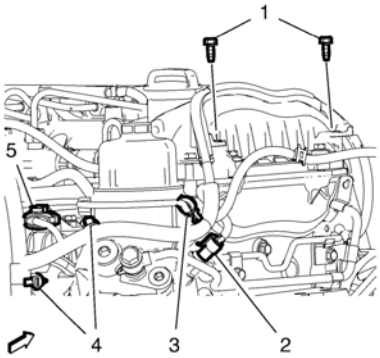

22. Disconnect the oil pressure sensor wiring harness plug (2).
23. Remove the wiring harness clip (3) from the charge air control vacuum hose.
24. Remove the 2 wiring harness channel bolts (1) from the wiring harness channel.
25. Disconnect the intake air pressure/temperature sensor wiring harness plug (5).
26. Disconnect the 2 wiring harness clips (4) from the oil filter assembly and from the intake manifold.

cardiagn.com

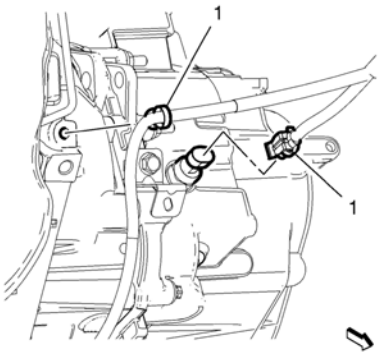

27. Disconnect the backup lamp switch wiring harness plug from the transmission.
28. Remove the wiring harness clip (1) from the transmission.
29. Raise and support the vehicle. Refer to Lifting and Jacking the Vehicle.
30. Remove the engine compartment insulator. Refer to Front Compartment Insulator Replacement.

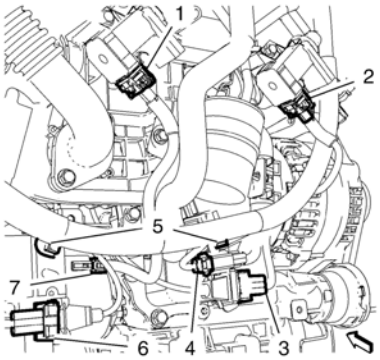

31. Disconnect the 2 knock sensor wiring harness plugs (3, 6).
32. Disconnect the generator wiring harness plug (4).
33. Disconnect the starter wiring harness plug (7).
34. Disconnect the vacuum solenoid valve wiring harness plug (1) and the vacuum solenoid valve wiring harness plug (2).
35. Remove the 2 wiring harness clips (5) from the 2 brackets.

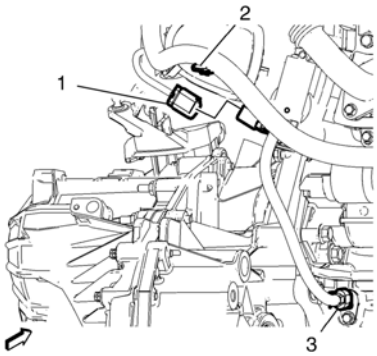

36. Disconnect the crankshaft position sensor wiring harness plug (3).
37. Disconnect the throttle body wiring harness plug (1).
38. Unclip the wiring harness clip (2) from the charge air cooler outlet hose.

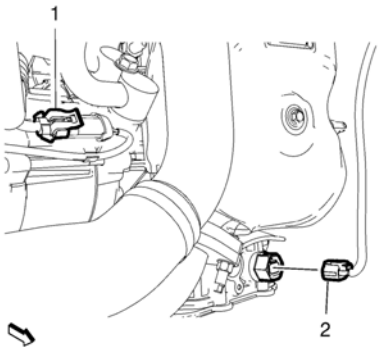

cardiagn.com

39. Disconnect the air conditioning wiring harness plug (1) and the engine oil level indicator wiring harness plug (2). Hang the wiring harness aside.
40. Lower the vehicle.

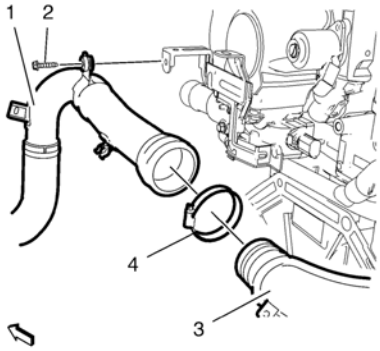

41. Remove the front charge air cooler outlet hose bolt (2) from the wiring harness bracket.
42. Remove the front charge air cooler outlet hose clamp (4) from the rear charge air cooler outlet hose (3). Hang the front charge air cooler hose (1) aside.

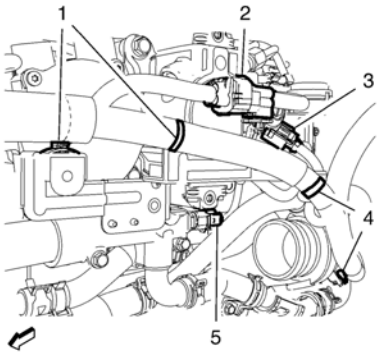

43. Unclip and disconnect the glow plug wiring harness plug (2) from the engine wiring harness bracket.
44. Disconnect the fuel pump wiring harness plug (3)
45. Disconnect the engine coolant temperature sensor wiring harness plug (5).
46. Unclip the 4 wiring harness clips (1, 4) from the wiring harness bracket.

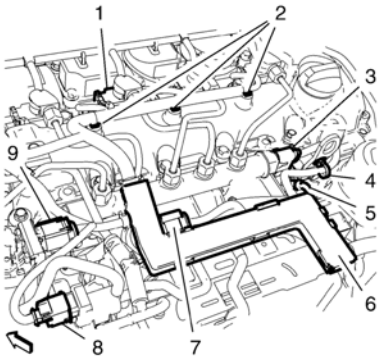

47. Disconnect the vacuum solenoid valve wiring harness plug (8).
48. Disconnect the exhaust gas recirculation valve wiring harness plug (9).
49. Disconnect the intake actuator valve wiring harness plug (7).
50. Disconnect the fuel injection rail pressure sensor wiring harness plug (3).
51. Disconnect the 4 glow plug wiring harness plugs (5).
52. Disconnect the 4 fuel injector wiring harness plugs (1).
53. Unclip the 4 engine wiring harness clips (2, 4) from the camshaft cover.
54. Unclip the engine wiring harness channel (6) in top direction from the 3 exhaust gas recirculation cooler brackets.
55. Remove the engine wiring harness from the vehicle.

Installation Procedure

cardiagn.com

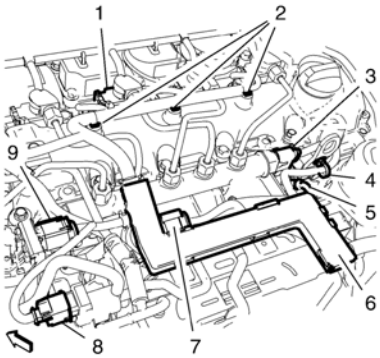

1. Position the engine wiring harness to the vehicle.
2. Clip the engine wiring harness channel (6) to the 3 exhaust gas recirculation cooler brackets.
3. Clip the 4 engine wiring harness clips (2, 4) to the camshaft cover.
4. Connect the 4 fuel injector wiring harness plugs (1).
5. Connect the fuel injection rail pressure sensor wiring harness plug (3).
6. Connect the 4 glow plug wiring harness plugs (5).
7. Connect the fuel injection pressure sensor wiring harness plug (3).
8. Connect the intake actuator valve wiring harness plug (7).
9. Connect the exhaust gas recirculation valve wiring harness plug (9).
10. Connect the vacuum solenoid valve wiring harness plug (8).

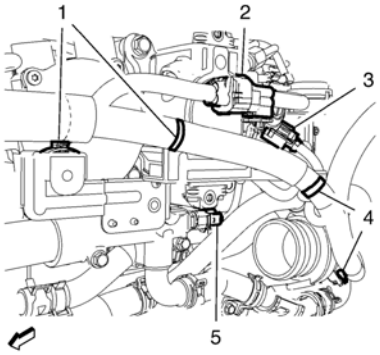

11. Clip the 4 wiring harness clips (1, 4) to the wiring harness bracket.
12. Connect the engine coolant temperature sensor wiring harness plug (5).
13. Connect the fuel pump wiring harness plug (3).
14. Clip and connect the glow plug wiring harness plug (2) to the engine wiring harness bracket.

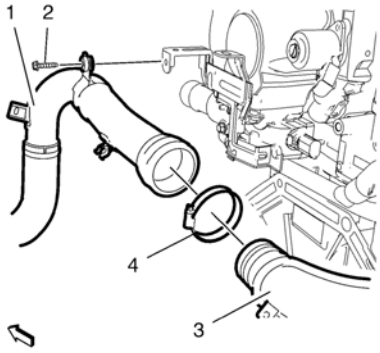

Caution: Refer to Fastener Caution.

15. Position the front charge air cooler outlet hose (1) along with the front charge air cooler outlet hose clamp (4) to the rear charge air cooler outlet hose (3) and tighten the clamp to **3.5 Y (31 lb in)**.
16. Install the front charge air cooler outlet hose bolt (2) to the wiring harness bracket and tighten to **10 Y (89 lb in)**.
17. Raise the vehicle.

cardiagn.com

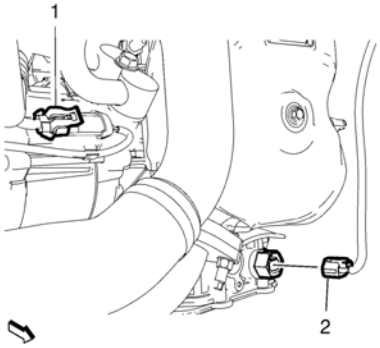

18. Position the wiring harness.
19. Connect the air conditioning wiring harness plug (1) and the engine oil level indicator wiring harness plug (2).

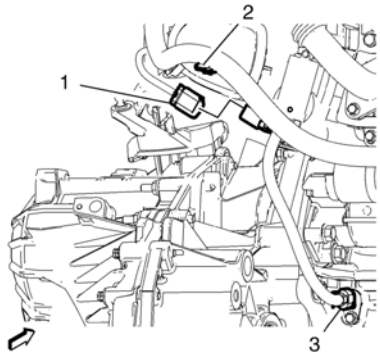

20. Clip the wiring harness clip (2) to the charge air cooler outlet hose.
21. Connect the throttle body wiring harness plug (1).
22. Connect the crankshaft position sensor wiring harness plug (3).

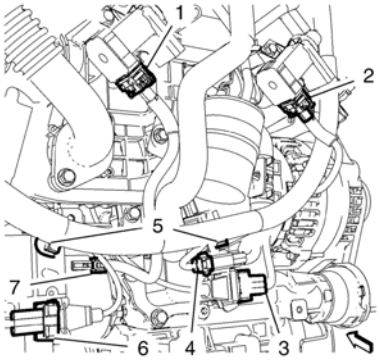

23. Install the 2 wiring harness clips (5) to the 2 brackets.
24. Connect the vacuum solenoid valve wiring harness plug (1) and the vacuum solenoid valve wiring harness plug (2).
25. Connect the starter wiring harness plug (7).
26. Connect the generator wiring harness plug (4).
27. Connect the 2 knock sensor wiring harness plugs (3, 6).
28. Install the engine compartment insulator. Refer to Front Compartment Insulator Replacement.
29. Lower the vehicle.

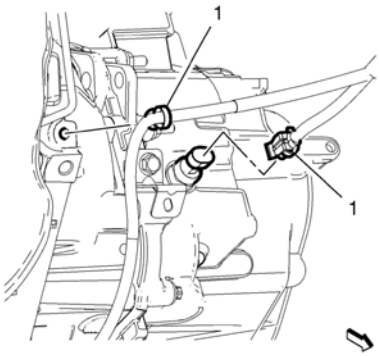

30. Install the wiring harness clip (1) to the transmission.

cardiagn.com

31. Connect the backup lamp switch wiring harness plug to the transmission.

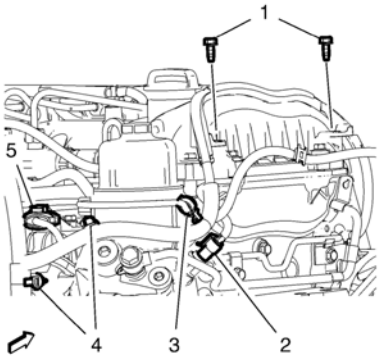

32. Connect the 2 wiring harness clips (4) to the oil filter assembly and to the intake manifold.
33. Connect the intake air pressure/temperature sensor wiring harness plug (5).
34. Install the 2 wiring harness channel bolts (1) to the wiring harness channel and tighten to **10 Y (89 lb in)**.
35. Install the wiring harness clip (3) to the charge air control vacuum hose.
36. Connect the oil pressure sensor wiring harness plug (2).

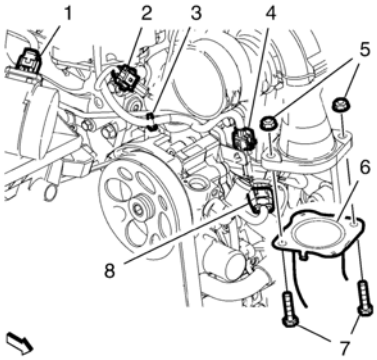

37. Connect the mass air flow sensor wiring harness plug (1) and install the wiring harness clip to the air cleaner housing.
38. Connect the turbocharger wastegate actuator wiring harness plug (8).
39. Connect the exhaust temperature sensor wiring harness plug (4) and clip the wiring harness clip (3) to the steering pump.
40. Connect the exhaust temperature sensor wiring harness plug (2).
41. Install the 2 charge air cooler inlet air hose bolts (7) to the 2 charge air cooler inlet air hose nuts (5) and tighten to **22 Y (16 lb ft)**.
42. Install the air cleaner outlet duct. Refer to Air Cleaner Outlet Duct Replacement.

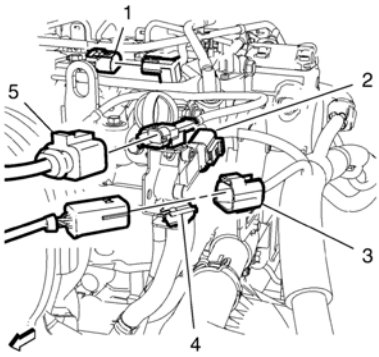

43. Connect the camshaft position sensor wiring harness plug (1).
44. Connect the exhaust pressure differential sensor hose wiring harness plug (2).
45. Clip the heated oxygen sensor wiring harness plug (3) to the retainer clip (4) and connect the heated oxygen sensor wiring harness plug (3).
46. Connect the exhaust temperature sensor wiring harness plug (5).

cardiagn.com

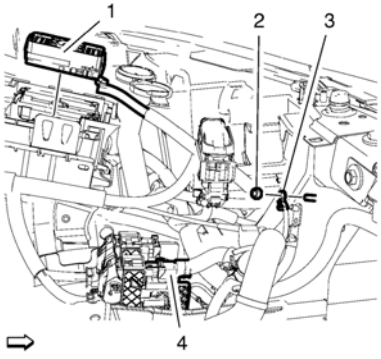

47. Install the 2 wiring harness clips to the drivetrain and front suspension frame front inner support and to the charge air cooler outlet hose.
48. Connect the wiring harness connection adapter plug (4).
49. Install the wiring harness plug (1) to the front compartment fuse block housing.
50. Install the wiring harness ground cable (3) and install the wiring harness ground cable nut (2) and tighten to **9 Y (80 lb in)**.
51. Install the front compartment fuse block. Refer to Front Compartment Fuse Block Replacement.
52. Install the engine sight shield. Refer to Engine Sight Shield Replacement.
53. Install the windshield washer solvent container filler tube. Refer to Windshield Washer Solvent Container Filler Tube Replacement.
54. Install the battery tray. Refer to Battery Tray Replacement.

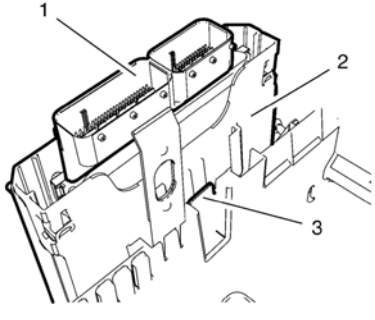

55. Install the engine control module bracket (2) along with the engine control module (1) to the battery tray (3).

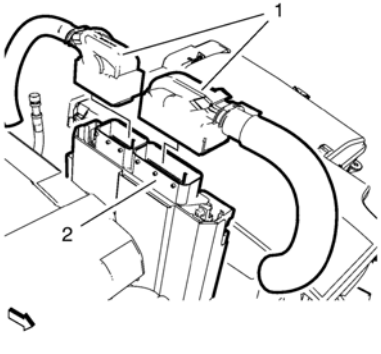

56. Connect the 2 engine control module wiring harness plugs (1) to the engine control module (2).
57. Connect the battery negative cable. Refer to Battery Negative Cable Disconnection and Connection.

cardiagn.com

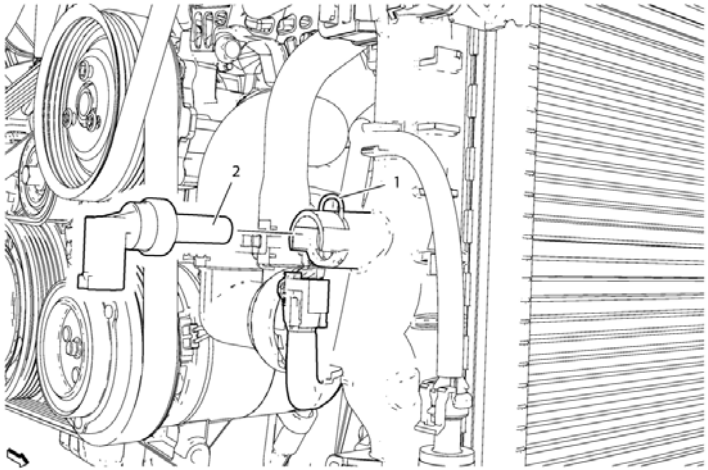

Engine Coolant Temperature Sensor Replacement

Callout	Component Name

Preliminary Procedure

1. Drain the cooling system. Refer to Cooling System Draining and Filling
2. Disconnect the electrical connection.

1	Retaining Clamp
2	Engine Coolant Temperature Sensor

cardiagn.com

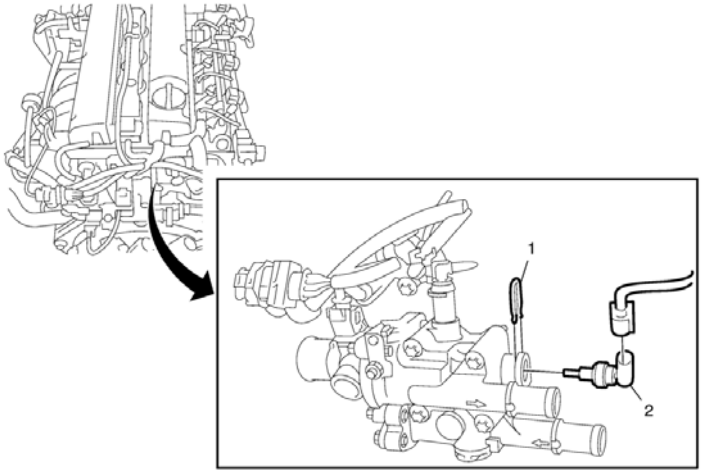

Engine Coolant Temperature Sensor Replacement

Callout	Component Name

Preliminary Procedure

1. Drain the cooling system. Refer to Cooling System Draining and Filling.
2. Disconnect the electrical connection.

1	Engine Coolant Temperature Sensor Fastener
2	Engine Coolant Temperature Sensor

cardiagn.com

Removal Procedure

1. Remove the engine sight shield. Refer to Engine Sight Shield Replacement.
2. Remove the battery tray. Refer to Battery Tray Replacement.
3. Loosen the charge air cooler outlet hose and hang aside. Refer to Charge Air Cooler Outlet Hose Replacement.

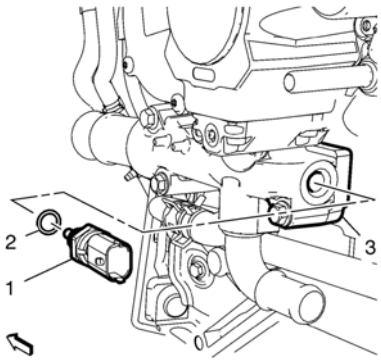

4. Disconnect the engine wiring harness plug from the engine coolant temperature sensor (1).
5. Remove the engine coolant temperature sensor and the engine coolant temperature sensor seal ring (2) from the engine water outlet adapter.

Installation Procedure

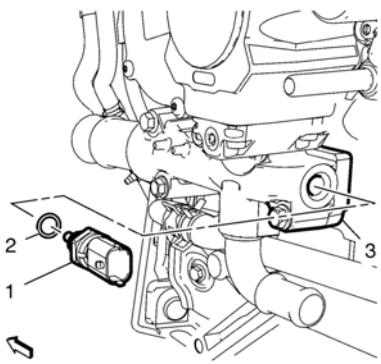

Caution: Refer to Fastener Caution.

1. Install the engine coolant temperature sensor with a NEW engine coolant temperature sensor seal ring (2) to the engine water outlet adapter and tighten to **13 Y (115 lb in)**.
2. Connect the engine wiring harness plug to the engine coolant temperature sensor (1).
3. Tighten the charge air cooler outlet hose. Refer to Charge Air Cooler Outlet Hose Replacement.
4. Install the battery tray. Refer to Battery Tray Replacement.
5. Fill the cooling system. Refer to Cooling System Draining and Filling.
6. Install the engine sight shield. Refer to Engine Sight Shield Replacement.

cardiagn.com

Removal Procedure

1. Remove the air cleaner outlet duct. Refer to Air Cleaner Outlet Duct Replacement.
2. Remove the air cleaner assembly. Refer to Air Cleaner Assembly Replacement.
3. Clip the power steering fluid reservoir outlet hose out of the 2 mounts and hang aside.

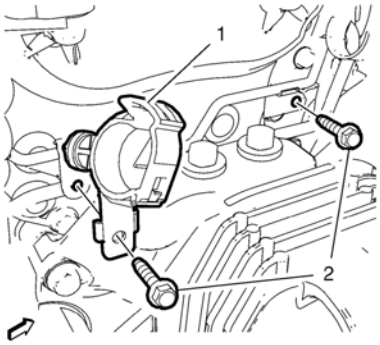

4. Remove the 2 bolts (2) from the mount brackets.
5. Remove the power steering fluid reservoir outlet hose mount bracket (1).

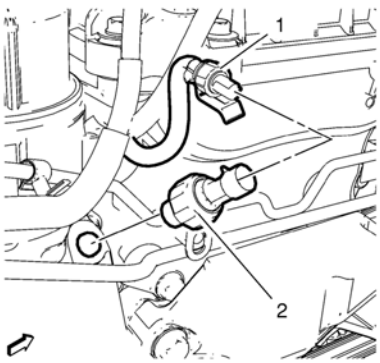

6. Disconnect the oil pressure switch wiring harness plug (1) from the engine oil pressure switch (2).
7. Remove the engine oil pressure switch (2).

Installation Procedure

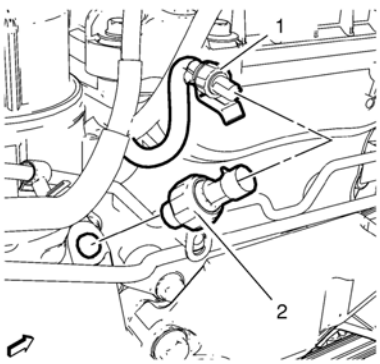

Caution: Refer to Fastener Caution.

1. Install the engine oil pressure switch (2) and tighten to **20 Y (15 lb ft)**.
2. Connect the oil pressure switch wiring harness plug (1) to the engine oil pressure switch (2).

cardiagn.com

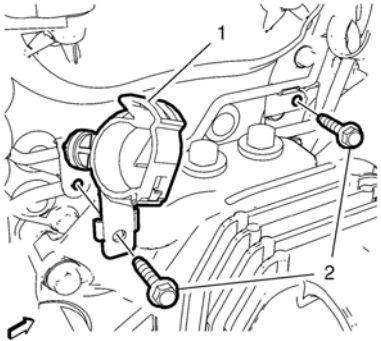

3. Install the power steering fluid reservoir outlet hose mount bracket (1).
4. Install the 2 retaining bolts (2) to the mount brackets and tighten to **10 Y (89 lb in)**.
5. Clip in the power steering fluid reservoir outlet hose into the 2 mounts.
6. Install the air cleaner assembly. Refer to Air Cleaner Assembly Replacement.
7. Install the air cleaner outlet duct. Refer to Air Cleaner Outlet Duct Replacement.

cardiagn.com

Caution: Do not remove the pigtail from either the heated oxygen sensor (HO2S) or the oxygen sensor (O2S). Removing the pigtail or the connector will affect sensor operation.

Handle the oxygen sensor carefully. Do not drop the HO2S. Keep the in-line electrical connector and the louvered end free of grease, dirt, or other contaminants. Do not use cleaning solvents of any type.

Do not repair the wiring, connector or terminals. Replace the oxygen sensor if the pigtail wiring, connector, or terminal is damaged.

This external clean air reference is obtained by way of the oxygen sensor signal and heater wires. Any attempt to repair the wires, connectors, or terminals could result in the obstruction of the air reference and degraded sensor performance.

The following guidelines should be used when servicing the heated oxygen sensor:

- Do not apply contact cleaner or other materials to the sensor or vehicle harness connectors. These materials may get into the sensor causing poor performance.
- Do not damage the sensor pigtail and harness wires in such a way that the wires inside are exposed. This could provide a path for foreign materials to enter the sensor and cause performance problems.
- Ensure the sensor or vehicle lead wires are not bent sharply or kinked. Sharp bends or kinks could block the reference air path through the lead wire.
- Do not remove or defeat the oxygen sensor ground wire, where applicable. Vehicles that utilize the ground wired sensor may rely on this ground as the only ground contact to the sensor. Removal of the ground wire will cause poor engine performance.
- Ensure that the peripheral seal remains intact on the vehicle harness connector in order to prevent damage due to water intrusion. The engine harness may be repaired using Packard's Crimp and Splice Seals Terminal Repair Kit. Under no circumstances should repairs be soldered since this could result in the air reference being obstructed.

cardiagn.com

Special Tools

EN-48259 Installer - Oxygen Sensor

For equivalent regional tools, refer to Special Tools.

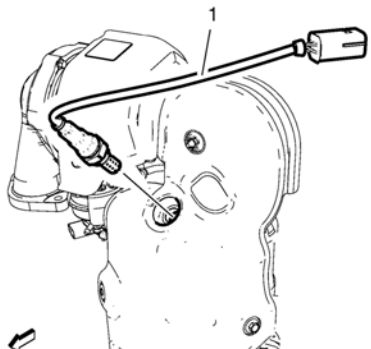

Caution: Refer to Fastener Caution.

Install the heated oxygen sensor (1), using the *EN-48259* installer and tighten to **50 Y (37 lb ft)**.

cardiagn.com

Special Tools

EN-48259 Remover - Oxygen Sensor

For equivalent regional tools, refer to Special Tools.

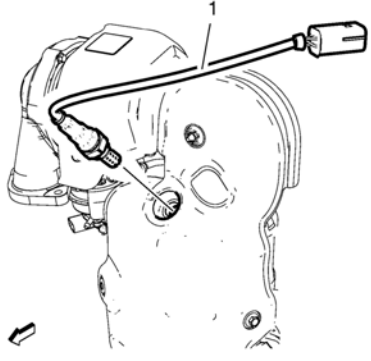

Remove the heated oxygen sensor (1), using *EN-48259* remover .

cardiagn.com

Special Tools

EN-48259 Remover - Oxygen Sensor

For equivalent regional tools, refer to Special Tools.

Removal Procedure

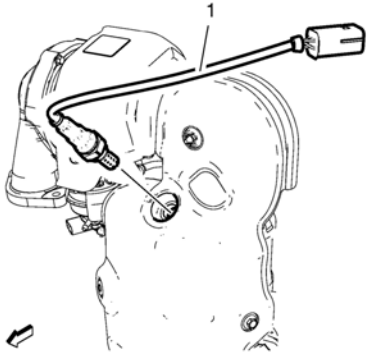

1. Disconnect the heated oxygen sensor wiring harness plug.
2. Remove the heated oxygen sensor (1), using the *EN-48259* remover .

Installation Procedure

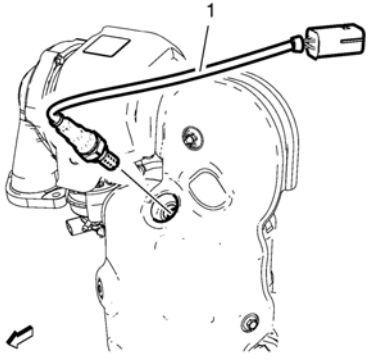

Caution: Refer to Fastener Caution.

1. Install the heated oxygen sensor (1), using the *EN-48259* installer and tighten to **50 Y (37 lb ft)**.
2. Connect the heated oxygen sensor wiring harness plug.

cardiagn.com

Caution: When replacing the HO2S perform the following:

- A code clear with a scan tool, regardless of whether or not a DTC is set
- HO2S heater resistance learn reset with a scan tool, where available

Perform the above in order to reset the HO2S resistance learned value and avoid possible HO2S failure.

cardiagn.com

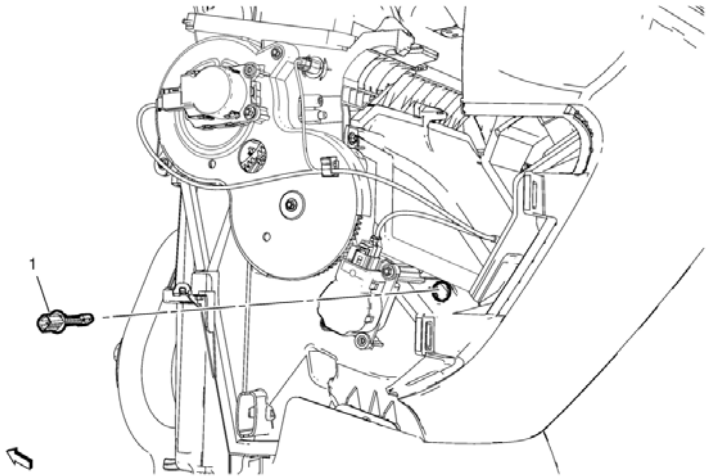

Inside Air Temperature Sensor Replacement - Left Side Lower

Callout	Component Name

Preliminary Procedures

Remove instrument panel lower trim pad cover. Refer to Instrument Panel Lower Trim Pad Cover Replacement.

1	Inside Air Temperature Sensor - Left Side Lower

cardiagn.com

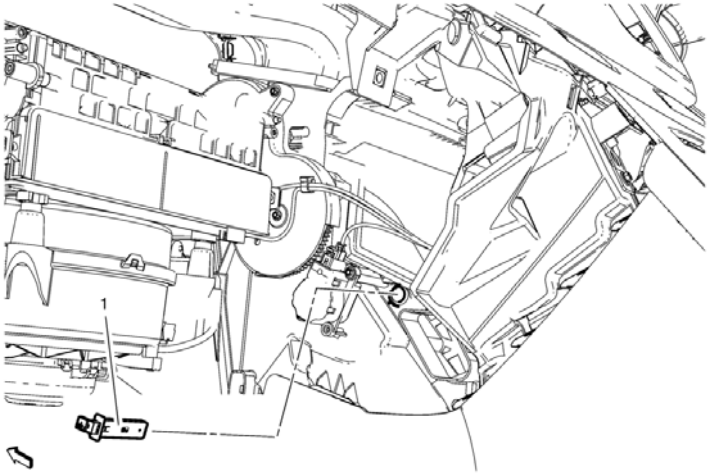

Inside Air Temperature Sensor Replacement - Left Side Lower

Callout	Component Name
Preliminary Procedures	

1. Remove instrument panel compartment. Refer to Instrument Panel Compartment Replacement.
2. Remove floor front air outlet duct— left side. Refer to Floor Front Air Outlet Duct Replacement - Left Side.
3. Remove radio cooling duct. Refer to Radio Cooling Duct Replacement.

	Inside Air Temperature Sensor
1	**Procedure**
	Disconnect electrical connectors.

cardiagn.com

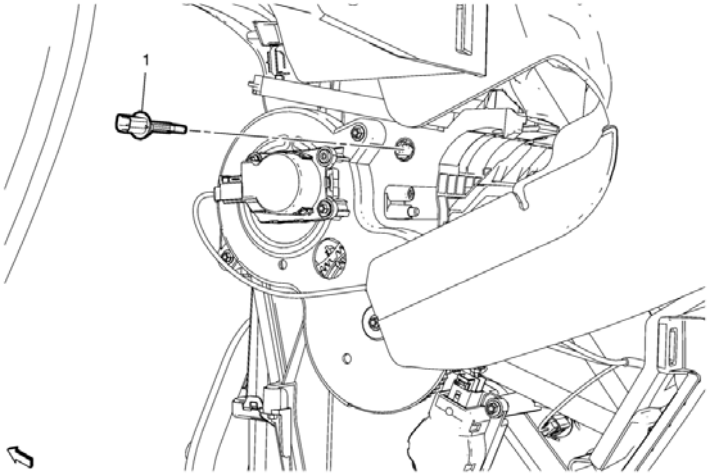

Inside Air Temperature Sensor Replacement - Left Side Upper

Callout	Component Name

Preliminary Procedures

Remove instrument panel lower trim pad cover. Refer to Instrument Panel Lower Trim Pad Cover Replacement.

1	Inside Air Temperature Sensor - Left Side Upper

cardiagn.com

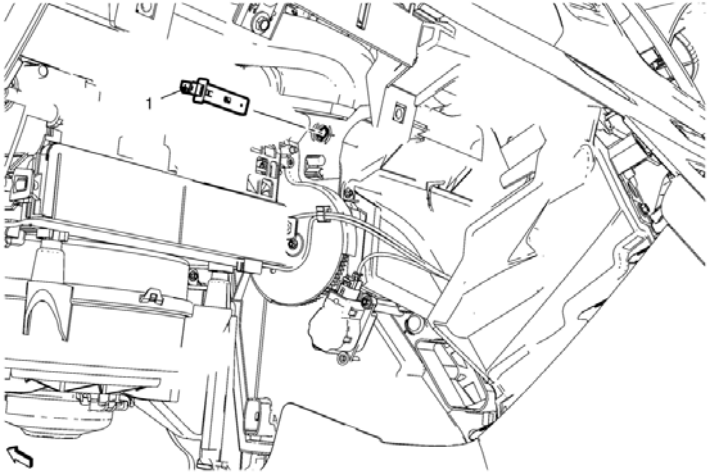

Inside Air Temperature Sensor Replacement - Left Side Upper

Callout	Component Name
Preliminary Procedures	
1	Inside Air Temperature Sensor

1. Remove instrument panel compartment. Refer to Instrument Panel Compartment Replacement.
2. Remove floor front air outlet duct— left side. Refer to Floor Front Air Outlet Duct Replacement - Left Side.
3. Remove radio cooling duct. Refer to Radio Cooling Duct Replacement.

Procedure

Disconnect electrical connectors.

cardiagn.com

Removal Procedure

1. Remove the engine sight shield. Refer to Engine Sight Shield Replacement.

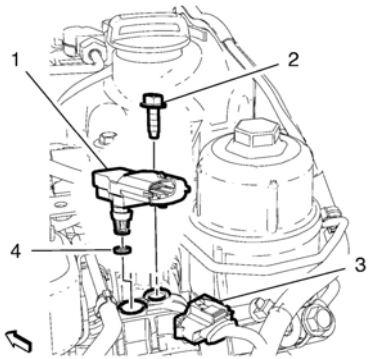

2. Disconnect the intake air pressure/temperature sensor wiring harness plug (3).
3. Remove the intake air pressure/temperature sensor bolt (2).
4. Remove the intake air pressure/temperature sensor (1) and the gasket (4).

Installation Procedure

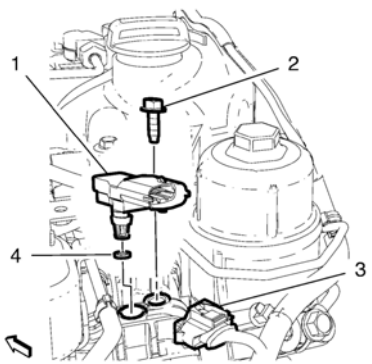

1. Install the intake air pressure/temperature sensor (1) and a NEW gasket (4).

Caution: Refer to Fastener Caution.

2. Install the intake air pressure/temperature sensor bolt (2) and tighten to **9 Y (80 lb in)**.
3. Connect the intake air pressure/temperature sensor wiring harness plug (3).
4. Install the engine sight shield. Refer to Engine Sight Shield Replacement.

cardiagn.com

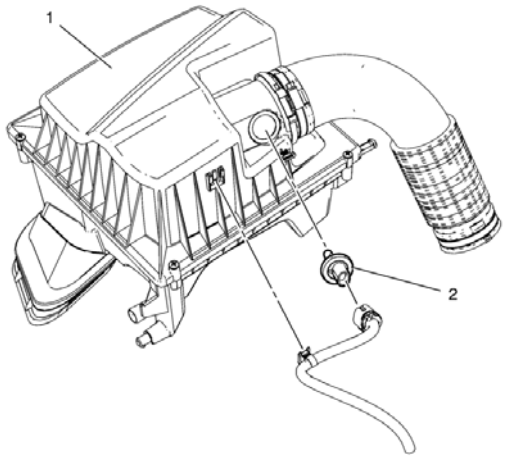

Intake Air Temperature Sensor Replacement

Callout	Component Name
1	Intake Air Temperature Sensor Assembly **Caution:** Any time service is being performed which requires removal of the air cleaner assembly, always cover the throttle body opening. This will prevent any foreign material from entering the engine.
2	Intake Air Temperature Sensor Cable Clip

cardiagn.com

Removal Procedure

1. Remove the engine sight shield. Refer to Engine Sight Shield Replacement.

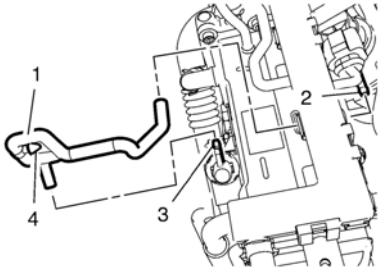

⇨

2. Remove the intake manifold tuning valve vacuum control solenoid valve hose (1) from the intake air tuning valve vacuum control solenoid valve (3) and from the intake manifold runner control valve actuator (2).
3. Remove the intake manifold tuning valve vacuum control solenoid valve hose clip (4) from the exhaust gas recirculation cooler.
4. Remove the intake manifold tuning valve vacuum control solenoid valve hose.

Installation Procedure

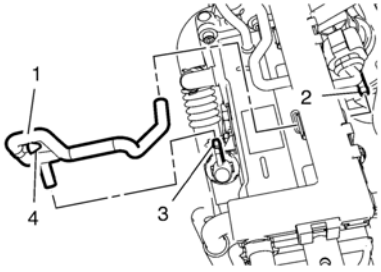

⇨

1. Install the intake manifold tuning valve vacuum control solenoid valve hose (1).
2. Install the intake manifold tuning valve vacuum control solenoid valve hose to the intake air tuning valve vacuum control solenoid valve (3) and to the intake manifold runner control valve actuator (2).
3. Install the intake manifold tuning valve vacuum control solenoid valve hose clip (4) to the exhaust gas recirculation cooler.
4. Install the engine sight shield. Refer to Engine Sight Shield Replacement.

cardiagn.com

The following service procedures require either a programming or a setup event performed for a complete repair.

Before Programming The Engine Control Module

Note: DO NOT program a control module unless you are directed by a service procedure or you are directed by a General Motors LLC service bulletin. Programming a control module at any other time will not permanently correct a customers concern.

Ensure the following conditions are met before programming a control module:

Vehicle system voltage

- There is no charging system concern. All charging system concerns must be repaired before programming a control module.
- Battery voltage is between 12–16 V. The battery must be charged before programming the control module if the battery voltage is low.
- A battery charger is NOT connected to the vehicle battery. Incorrect system voltage or voltage fluctuations from a battery charger may cause programming error or control module damage.

Turn OFF or disable any of the following systems that may put a load on the vehicle battery:

- Twilight sentinel
- Interior lights
- Daytime running lamps (DRL)—Applying the parking brake, on most vehicles, disables the DRL system. Refer to the Owners Manual.
- HVAC systems
- Engine cooling fans, etc.
- The ignition switch is in the proper position. The scan tool prompts you to turn ON the ignition, with the engine OFF. DO NOT change the position of the ignition switch during the programming procedure, unless instructed to do so.

All of the following tool connections are secure:

- The connection at the data link connector (DLC)
- The voltage supply circuits

DO NOT disturb the tool harnesses while programming. If an interruption occurs during the programming procedure, programming error or control module damage may occur.

ECM Replacement

If the engine control module (ECM) needs to be replaced, the following procedures must be performed:

1. Connect a scan tool to the vehicle and access SPS. Refer to Service Programming System (SPS).
2. Before removing the old control module, perform the SPS function Prepare Control Module for Removal.

   Note: The Prepare Control Module for Removal function can only be performed when communication with the old control module is still possible.
3. Replace the ECM.
4. Perform the SPS function Engine Control Module – Programming and follow the on-screen instructions.
5. Perform the SPS function Engine Control Module – Configuration and Setup and follow the on-screen instructions. On the screen Control Module – Configuration and Setup Function(s), select both control module Configuration/Reconfiguration and the appropriate control module Setup.
6. Perform the SPS Function Immobilizer Learn. Refer to Immobilizer System Component Programming.
7. Clear DTCs after completing the programming procedure.
8. Start and idle engine.
9. Using a scan tool, perform the Diesel Particulate Filter (DPF) Service Regeneration
10. If the SPS function Prepare Control Module for Removal could not be performed, perform the following:

Engine Oil Life Remaining—When available, use a scan tool to reset the Engine Oil Life back to the original percentage recorded before the module was replaced.

ECM Reprogramming

If the engine control module (ECM) needs to be reprogrammed, the following procedures must be performed:

1. Connect a scan tool to the vehicle and access SPS. Refer to Service Programming System (SPS).
2. Perform the SPS function Engine Control Module – Programming and follow the on-screen instructions.
3. Engine Oil Life Remaining—When available, use a scan tool to reset the Engine Oil Life back to the original percentage recorded before the module was reprogrammed.

Setup for Component Replacement

The replacement of some components will require a setup procedure for complete repair.

If any of the following components are replaced, use a scan tool to perform the appropriate learn function.

- Fuel Injector
- Fuel Rail Pressure Sensor

If any of the following components are replaced, use a scan tool to perform the appropriate reset function.

- Diesel Particulate Filter (DPF)

cardiagn.com

K20 Engine Control Module: Programming and Setup (LNP)

- Fuel Rail Pressure Sensor

Table 1: Engine Control Module Scan Tool Data
Table 2: Engine Control Module (ECM) Scan Tool Output Controls

The Engine Control Module Scan Tool Data List contains all engine related parameters that are available on the scan tool. This is a master list arranged in alphabetical order and not all the parameters listed are in every engine platform.

Use the Engine Scan Tool Data List only after the following is determined:

- The Diagnostic System Check - Vehicle
- No diagnostic trouble codes (DTCs)
- On-board diagnostics are functioning properly

The scan tool values from a properly running engine may be used for comparison with the engine you are diagnosing. The Engine Scan Tool Data List represents values that may be seen on a normally running engine.

Note: A scan tool that displays faulty data should not be used. The scan tool concern should be reported to the manufacturer. Use of a faulty scan tool can result in misdiagnosis and unnecessary parts replacement.

Only the parameters listed below are referenced in this service manual for use in diagnosis.

Engine Control Module Scan Tool Data

Parameter	System State	Expected Value	Description
Base Operating Conditions: Engine Idling/Radiator Hose Hot/Park or Neutral/Closed Loop			
5 V Reference 1 or 2 Circuit Status	Ignition ON	OK	This parameter displays OK if there is no 5 V reference circuit condition. If the circuit is shorted to ground or shorted to B+, Fault is displayed.
A/C Compressor Clutch Relay Command	A/C ON	Active	This parameter displays the state of the air conditioning (A/C) clutch relay control circuit as commanded by the control module.
A/C Disabled – A/C Pressure Out of Range	A/C ON	No	This parameter displays whether the A/C pressure is out of range for normal operation as determined by the control module.
A/C Disengage 1–8 History	A/C ON	Reason for A/C Disengagement	The parameter indicates the reason the air conditioning (A/C) compressor was disengaged. The scan tool displays None, A/C Pressure, Engine Speed, Battery Voltage, Anti Stall, RPM Unstable, WOT, Launch Performance, Coolant Hot, APP, Air Bag Deploy, or A/C Relay DTC.
A/C High Side Pressure Sensor	A/C OFF	0–5 V	This parameter displays the voltage from the A/C high side pressure sensor signal circuit to the control module.
	A/C ON	0–5 V	
A/C High Side Pressure Sensor	A/C OFF	700–900 kPa (101–130 PSI)	This parameter displays the pressure from the A/C high side pressure sensor signal circuit to the control module.
	A/C ON	900–1 300 kPa (130–174 PSI)	
A/C Off for WOT	A/C ON	Inactive	This parameter displays the state of the air conditioning (A/C) clutch relay control circuit as commanded by the control module.
Accelerator Pedal Position Sensor When Engine Overspeed Detected	—	Varies	This parameter displays the angle of accelerator pedal position in percentage if a engine overspeed condition is detected as calculated by the control module using the signals from the APP sensors.
APP Sensor 1 or 2	—	APP 1–0.94 V APP 2–0.47 V	This parameter displays the voltage of each APP sensor signal circuit as measured by the control module.
APP Sensors	—	0%	This parameter displays the angle of accelerator pedal position as calculated by the control module using the signals from the APP sensors.

cardiagn.com

Parameter	System State	Expected Value	Description
BARO	—	65–104 kPa (8–16 PSI) – Varies with altitude	This parameter displays the barometric pressure. The control module uses the barometric pressure sensor input for fuel control to compensate for altitude differences.
Boost Pressure Sensor	—	82–110 kPa (12–16 PSI)	This parameter displays the turbocharger boost pressure inside the engine as calculated by the control module based on the signal from the Boost pressure sensor.
Boost Pressure Sensor	—	0.85–1.55 V	This parameter displays the voltage of the turbocharger boost pressure inside the engine calculated by the control module based on the signal from the Boost pressure sensor.
Cooling Fan Relay Control 1, Control 2, or Control 3 Command	Fans Commanded ON	On	This parameter displays the control module commanded state of the fan relay control circuits.
CPP Learn Status	—	Inactive	This parameter displays the clutch pedal learn status. There are 6 different possible states for the clutch pedal learn status.
CPP Learned Apply Position	—	Volts	This parameter displays the position learned for the clutch pedal position sensor when the clutch pedal is fully applied during the associated learn procedure.
CPP Learned Release Position	—	Volts	This parameter displays the position learned for the clutch pedal position sensor when the clutch pedal is released.
CPP Sensor	—	%	This parameter displays the displacement of the clutch pedal (corrected and normalized based upon its learned released and fully applied positions), where 0% corresponds to the clutch pedal being released and 100% corresponds to the clutch pedal being fully applied.
CPP Sensor	—	Volts	This parameter displays the clutch pedal position sensor analog input as a percentage of its reference voltage.
Cruise Control Cancel Switch	Cruise Cancel Switch ON	Active	This parameter displays the state of the cruise Resume/Accelerate switch input to the control module from the cruise control system.
Cruise Control Disengage History 1–8	Cruise Control ON	Reason for Cruise Disengagement	The parameter displays the last 8 cruise control disengages in order from 1–8, with 8 being the most recent. There are approximately 40 possible causes for the cruise control to disengage.
Cruise Control ON/OFF Switch	Cruise Control ON	On	This parameter displays the state of the cruise ON/OFF switch input to the control module.
Cruise Control Resume Switch	Cruise Resume/Accelerate Switch ON	Active	This parameter displays the state of the cruise Resume/Accelerate switch input to the control module from the cruise control system.
Cruise Control Set Switch	Cruise Set/Coast Switch ON	Active	This parameter displays the state of the cruise Set/Coast switch input to the control module from the cruise control system.
Current Gear When Engine Overspeed Detected	—	Varies	This parameter displays the selected gear if an engine overspeed is detected.
Desired Boost Pressure	—	98 kPa (14.21 PSI)	This parameter displays the desired turbocharger boost pressure inside the engine as calculated by the control module based on the signal from the Boost pressure sensor.
Desired EGR Position	—	%	This parameter displays the desired EGR position as calculated by the control module.
Desired Fuel Rail Pressure	—	23–26 MPa 3 335.92–3 771.04 PSI	This parameter displays the desired fuel rail pressure as calculated by the control module. This value is calculated based on engine speed, engine load, and sensor inputs.
Desired Idle Speed	—	700–800 RPM	This parameter displays the desired engine idle speed as commanded by the control module.

cardiagn.com

Parameter	System State	Expected Value	Description
Desired Turbocharger Vane Position	—	0–100%	This parameter displays the desired turbocharger vane position as calculated by the control module based on the signal from the Boost pressure sensor.
Distance Since Last DPF Regeneration	—	Varies	This parameter displays the mileage that has elapsed since the last diesel particulate filter regeneration has occurred.
Distance Since Last DPF Replacement	—	Varies	This parameter displays the mileage since the last diesel particulate filter replacement.
Distance Since Last Oil Level Warning	—	Varies	This parameter displays the distance that has elapsed since the last oil level warning has occurred.
Distance Since Last Oil Pressure Warning	—	Varies	This parameter displays the distance that has elapsed since the last oil pressure warning has occurred.
Distance with MIL ON	—	Varies	This parameter displays the mileage that has elapsed since the last MIL on status has occurred.
DPF Differential Pressure Sensor	—	−3–15 kPa (−0.43–2.17 PSI)	This parameter indicates the pressure at the DPF and is calculated by the control module based on the signal from the sensor.
DPF Differential Pressure Sensor	—	0.40–0.60 V	This parameter displays the voltage calculated by the control module, based on the input from the exhaust gas temperature sensors when the particulate filter is full and needs a particulate filter regeneration.
DPF Soot Accumulation	—	0–100%	This parameter displays the amount of calculated soot in exhaust particulate filter.
ECM Challenge Status	—	Invalid	This parameter displays the status of the immobilizer system as received in the control unit.
ECT Sensor	—	−39 to +140°C (−38 to +284°F)	This parameter displays the temperature of the engine coolant based on input to the control module from the engine coolant temperature (ECT) sensor.
ECT Sensor	—	0–5 V	This parameter displays the voltage calculated by the control module from the engine coolant temperature (ECT) sensor.
EGR Command	—	40–55%	This parameter displays the percent of the duty cycle commanded by the control module.
EGR Cooler Bypass Valve Command	—	OFF	This parameter displays the status of the duty cycle commanded by the control module.
EGR Position Sensor	—	0–100%	This parameter displays the percent of the EGR position calculated by the control module.
EGR Position Sensor	—	Varies	This parameter displays the voltage of the EGR position calculated by the control module.
Engine Load	Engine Idling	11–30% Varies	This parameter displays the calculated engine load in percent based on inputs to the control module from various engine sensors.
	Engine speed at 2 500 RPM	25–40%	
Engine Oil Level Switch	—	OK	This parameter displays if the level of the engine oil is within range as determined by the control module from information received from the engine oil level switch.
Engine Oil Life Remaining	—	Varies	This parameter displays the remaining oil life.
Engine Oil Pressure Switch	—	OK	This parameter displays the state of the engine oil pressure as determined by the control module. The control module monitors the engine oil pressure switch to determine if the engine oil pressure is sufficient. The scan tool displays Low when the engine oil pressure is below a predetermined value.

cardiagn.com

Parameter	System State	Expected Value	Description
Engine Overheat Possible	—	OK	This parameter displays the calculated value from the ECM for a possible engine overheat situation to occur.
Engine Overspeed	—	Not Present	This parameter displays the status if overspeed detected.
Engine Overspeed Counter	—	Varies	This parameter displays the status if overspeed detected.
Engine Speed When Engine Overspeed Detected	—	Varies	This parameter displays the speed of the engine crankshaft rotation stored if an engine overspeed is detected.
Engine Run Time	Engine Operating	Varies	This parameter displays the time elapsed since the engine was started. The scan tool will display the time in hours, minutes and seconds. The engine run time will reset to zero when the engine stops running.
Engine Speed	Engine Cranking	Greater than 60 RPM	This parameter displays the speed of the engine crankshaft rotation from information received from the crankshaft position sensor.
	Engine Idling	Approximately 650–950 RPM	
Engine Speed out of range	—	OK	This parameter displays the status of the engine speed.
Exhaust Gas Temperature Sensor 1, 2 or 3	—	Exhaust Gas Temperature 1–110–140°C (230–284°F) Exhaust Gas Temperature 2–80–120°C (176–248°F)	This parameter displays the temperature of the exhaust gas calculated by the control module based on the input from the exhaust gas temperature sensors.
Exhaust Gas Temperature Sensor 1, 2 or 3	—	Exhaust Gas Temperature 1–1.00–1.15 V Exhaust Gas Temperature 2–0.90–1.10 V	This parameter displays the voltage calculated by the control module based on the input from the exhaust gas temperature sensors.
Fuel Level Sensor	—	Varies	This parameter displays the voltage from the sensor used to monitor the fuel level inside the fuel tank. The scan tool will display a low voltage reading when that the fuel level in the tank is low or near empty. The scan tool will display a high voltage reading when the fuel level in the tank is high or near full.
Fuel Pump Relay Command	Ignition ON, engine OFF	Fuel pump on for 2 s	This parameter displays the control modules commanded state of the fuel pump relay control circuit.
	Engine idling	On	
Fuel Rail Pressure Regulator 1 Command	—	%	This parameter displays the control modules commanded state of the fuel rail pressure regulator.
Fuel Rail Pressure Regulator Command	—	mA	This parameter displays the control modules commanded state of the fuel pressure regulator.
Fuel Rail Pressure Sensor	—	23–26 MPa 3 335.92–3 771.04 PSI	This parameter displays the fuel rail pressure calculated by the control module using the signal from the fuel rail pressure sensor.
Fuel Rail Pressure Sensor	—	0.80–1.20 V	This parameter displays the voltage of the fuel rail pressure calculated by the control module using the signal from the fuel rail pressure sensor.
Fuel Temperature Sensor	—	25–40°C (77–104°F)	This parameter displays the fuel temperature calculated by the control module based on input from the fuel temperature sensor.
Fuel Temperature Sensor	—	0.5–1.5 V	This parameter displays the voltage calculated by the control module based on input from the fuel temperature sensor.
Gear Engaged or Clutch Pressed	—	OK	This parameter displays the calculated status of the actual connection between the engine and transmission.

cardiagn.com

Parameter	System State	Expected Value	Description
Generator F-Terminal Signal	—	60–70%	This parameter displays the commanded state of the generator by the control module.
Generator L-Terminal Command	—	%	This parameter indicates the generator commanded state by the ECM.
Generator L-Terminal Signal Command	—	On/Off	This parameter indicates the generator commanded state by the ECM.
Glow Plug Command	—	Inactive	This parameter displays the control module commanded state of the glow plug.
IAT Sensor 1 or Sensor 2	—	−39 to +140°C (−38 to +284°F)	This parameter displays the temperature of the air entering the engine air duct calculated by the control module based on the input from the intake air temperature sensors.
Ignition 1 Signal	—	B+	This parameter displays B+ when the control module detects a voltage at the ignition 1 input terminal.
Ignition Accessory Signal	—	ON	This parameter displays the state of the ignition accessory position input to the control module from the ignition switch.
Ignition Switch Status	—	Active	This parameter displays the voltage measured at the ignition 1 circuit of the control module. Voltage is applied to the control module when the ignition switch is in the ignition 1 position.
Immobilizer Password Learn	Ignition ON	Enabled/Disabled	Learning Enabled indicates that learning of immobilizer code information is enabled.
Immobilizer Security Code Accepted	Ignition ON	Yes/No	This Parameter displays the status of the immobilizer system.
Immobilizer Security Code Lockout	Ignition ON	Yes/No	This Parameter displays the status of the immobilizer system.
Immobilizer Security Code Programmed	Ignition ON	Yes/No	This Parameter displays the status of the immobilizer system.
Immobilizer Security Information Programmed	Ignition ON	Yes/No	This Parameter displays the status of the immobilizer system.
Immobilizer System Status	Ignition ON	Standby/Immobilized at Startup/Immobilized No Response/Immobilized Negative Response/Immobilized Incorrect Response/Post-Release State/Pre-Release State/Release State	This Parameter displays the status of the immobilizer system.
Initial Brake Apply Signal	Brake Pedal applied	Active	This parameter displays the state of the brake pedal position input to the control module.
Injection Limitation Active	—	OK	This parameter displays status of the injection limitation as commanded by the ECM.
Intake Air Flow Valve Motor Command	—	Varies	This parameter displays the percent of the control modules commanded state of the intake air flow valve.
Intake Air Flow Valve Position	—	Varies	This parameter displays the percent of the position of the intake air flow valve.
Intake Air Flow Valve Position Sensor	—	Varies	This parameter displays the voltage of the position of the intake air flow valve.
Intake Manifold Runner Control Valve Command	—	Varies	This parameter displays the percent of the control modules commanded state of the intake manifold runner valve.
Intake Manifold Runner Control Valve Position Sensor	—	%	This parameter displays the position from the intake manifold runner valve in percentage.
MAF Sensor	—	g/s	This parameter displays the quantity calculated by the control module based on a signal from the mass air flow (MAF) sensor.

cardiagn.com

Parameter	System State	Expected Value	Description
MAF Sensor	—	1 700–2 100 Hz	This parameter indicates the frequency signal received from the MAF sensor by the control module. The scan tool will display a high value at high engine speeds, and a low value at low engine speeds.
MAF When Engine Overspeed Detected	—	Varies	This parameter displays the air flow of the engine as calculated by the control module based on the signal from the Mass Air Flow Sensor if a engine overspeed condition is detected.
Maximum Engine Speed When Engine Overspeed Detected	—	Varies	This parameter displays the maximum speed of the engine crankshaft rotation stored if an engine overspeed is detected.
MIL Command	—	Off	This parameter displays the status of the MIL indicator as commanded by the control module.
Odometer When Engine Overspeed Detected	—	Varies	This parameter displays the vehicle speed stored if an engine overspeed condition is detected.
Park/Neutral Position Switch	—	Varies	This parameter displays the position of the shift lever.
Power Mode	Ignition ON	OFF/Accessory /Run/Crank Request	This Parameter displays the state of the System Power Mode. This signal is based upon the state of the system power mode received over serial communication from the vehicle electronics. If the serial data signal not received, the Parameter will display OFF.
Remaining Fuel in Tank	—	0–100% Varies	This parameter displays the amount of fuel remaining in the fuel tank as measured in percentage. The control module determines the amount of fuel remaining in the tank by using information from the fuel level sensors. The scan tool will display a higher value with a full fuel tank, and a lower value with an empty fuel tank.
Reverse Position Switch	—	OFF	Manual Transmission Reverse Switch ON indicates that the reverse switch hard wire input to the ECM is active.
Soot Mass Too Large	—	OK	This parameter displays the status of the amount of soot in the DPF as calculated by the ECM.
Starter Relay Command	—	OFF	The scan tool displays ON or OFF. The scan tool displays OFF until the ignition is placed into the CRANK position.
System Voltage	—	11.0–14.5 V	This parameter displays the actual battery voltage.
Total Engine Overspeed Time	—	Varies	This parameter displays the time, how long an engine overspeed condition was detected.
Turbocharger Vane Position Sensor	—	0–100%	This parameter displays the percent of turbocharger vane position as calculated by the control module using the information from the turbocharger vane position sensor.
	—	Varies	This parameter displays the voltage of turbocharger vane position as calculated by the control module using the information from the turbocharger vane position sensor.
Turbocharger Vane Position Solenoid Valve Command	—	Varies	This parameter displays the percent of the control modules commanded state of the turbocharger vane position valve based on the boost pressure sensor.
Vehicle Speed	—	0 km/h (0 MPH)	This parameter displays the speed of the vehicle as calculated by the transmission control module (TCM) from information received from the vehicle speed sensor (VSS).
Vehicle Speed When Engine Overspeed Detected	—	0 km/h (0 MPH)	This parameter displays the speed of the vehicle if a engine overspeed condition is detected as calculated by the engine control module (ECM) from information received from the antilock brake system.

cardiagn.com

Engine Control Module (ECM) Scan Tool Output Controls

Output Control	Description
A/C Compressor Clutch Relay	This function activates the A/C compressor relay. The normal commanded state of the A/C relay is OFF. The A/C compressor will turn ON/OFF when commanded ON/OFF. The system remains in the commanded state for approximately 5 s. The engine control module (ECM) will inhibit the operation of the A/C relay when the ambient air temperature is low.
Clutch Pedal Position Learn	This device control is used to trigger the procedure to learn the clutch pedal fully applied position.
Compression Test	This device control is used to setup the engine for a compression test. The fuel system is disabled. The throttle is opened to a wide open throttle (WOT) position. The extended crank feature is not active. The scan tool initiates the test when the following conditions are met: • Transmission in Park or Neutral. • No transmission range switch DTCs set. • The engine speed is 0 RPM. • There are no crankshaft position sensor DTCs set. • The vehicle speed is 0 km/h (0 MPH). • There are no VSS sensor DTCs set.
Cooling Fan Relay 1	This function controls the low speed cooling fan relay. When commanded ON, the cooling fan will turn ON at low speed for approximately 5 s.
Cooling Fan Relay 2	This function controls the high speed cooling fan relay. When commanded ON, the cooling fan will turn ON at medium speed.
Cooling Fan Relay 3	This function controls the high speed cooling fan relay. When commanded ON, the cooling fan will turn ON at high speed.
Cylinder Power Balance	Fuel Injector Enable; Fuel Injector ON
DPF Reset	**Note:** This function is only allowed with the ignition ON, engine OFF. This function resets the learned values for the diesel particulate filter in the ECM after the DPF has been replaced.
DPF Pressure Sensor Learn	**Note:** This function is only allowed with the ignition ON, engine OFF. This function resets the learned values for the diesel particulate filter in the ECM after the DPF pressure sensor has been replaced.
DPF Service Regeneration	This function resets the learned values for the diesel particulate filter in the ECM after the DPF has been replaced.
EGR Cooler Bypass Valve	This function opens or closes the EGR cooler bypass valve. The device control will not change unless changed or cancelled by the scan tool.
EGR Valve	This function opens or closes the exhaust gas recirculation (EGR) solenoid. The EGR solenoid increases or decreases in 10% increments. The device control will not change unless changed or cancelled by the scan tool.
Engine Oil Life Reset	This function turns OFF the change oil lamp and resets the values in the ECM.
Engine Speed	**Note:** This function is only allowed with the engine idling. This function adjusts the engine speed in 25, 100, or 500 RPM increments between 600–1 500 RPM. The device control will not change unless changed or cancelled by the scan tool.
Fuel Heater Relay	This function activates the fuel heater relay ON or OFF. The Device Control will not change unless changed or cancelled by the scan tool.
Fuel Injector Learn	**Note:** This function is only allowed with the ignition ON, engine OFF. This function resets the learned fuel injector values in the ECM after the ECM has been replaced.
Fuel Pump Relay	**Note:** This function is only allowed with the ignition ON, engine OFF. This function activates the fuel transfer pump or prime pump (depending on application) ON or OFF. The Device Control will not change unless changed or cancelled by the scan tool.
Fuel Rail Pressure Sensor or Fuel Rail Learn	This function allows the fuel rail pressure sensor or fuel rail to be relearned by the ECM.
Generator L-Terminal	**Note:** This function is only allowed with the engine idling. This function controls the system voltage. When commanded ON, normal system voltage output is present. When commanded OFF, system voltage output is no longer present, Ignition 1 signal continues to drop, Generator L-Terminal goes to OFF and Generator F-Terminal continues to drop.
Glow Plugs	This function activates the Glow Plug Controller ON or OFF. The Device Control will be aborted after 12 s for the first activation, and after 5 s for every other activation. The Device Control is inhibited if the engine is running.

cardiagn.com

Output Control	Description
Injector Flow Rate Programming	This function resets the learned fuel injector values in the ECM after the injector or ECM has been replaced. **Note:** This function is only allowed with the ignition ON, engine OFF.
Intake Air Flow Valve Position	This function opens or closes the throttle blade. The throttle blade increases or decreases in 10% increments. The scan tool initiates the test when the following conditions are met: • There are no vehicle speed sensor DTCs set. • The vehicle speed is 0 km/h (0 MPH). • The ignition is ON, with the engine OFF. • The ECM is not commanding a throttle learn. The system remains in the commanded state until cancelled by the scan tool.
Intake Manifold Runner Control Valve	Intake Manifold Runner Command 0–100%
Intake Manifold Runner Control Valve Learn	The ECM executes the Intake Manifold Runner Learn Routine when commanded from the scan tool.
Malfunction Indicator Lamp (MIL)	This function activates the malfunction indicator lamp (MIL). The MIL will remain illuminated until cancelled by the scan tool. **Note:** This function is only allowed with the ignition ON, engine OFF.
Setup new Control Module	This function resets the following: • This function resets the learned values for the diesel particulate filter in the ECM after the ECM has been replaced. • This function resets the learned fuel injector values in the ECM after the ECM has been replaced. • This function resets the learned values for the diesel particulate filter in the ECM after one or more fuel injectors have been replaced.
Turbocharger Vane Position Solenoid Valve	**Note:** This function is only allowed with the engine idling. Cycles the turbocharger vane position solenoid to 95% boost and back to 0% boost. The device control is limited to engine speeds less than 2 000 RPM.

cardiagn.com

Removal Procedure

1. Disconnect the battery negative cable. Refer to Battery Negative Cable Disconnection and Connection.
2. Remove the engine sight shield. Refer to Engine Sight Shield Replacement.
3. Raise and support the vehicle. Refer to Lifting and Jacking the Vehicle.
4. Remove the front compartment insulator. Refer to Front Compartment Insulator Replacement.
5. Remove the starter. Refer to Starter Replacement.

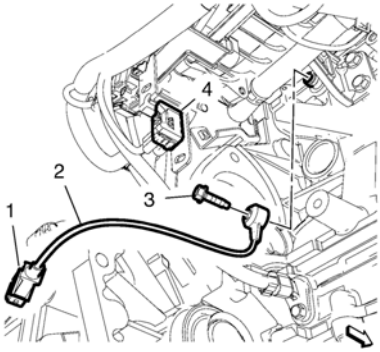

6. Remove the knock sensor wiring harness plug (1) from the wiring harness connector (4).
7. Remove the knock sensor bolt (3).
8. Remove the knock sensor (2).

Installation Procedure

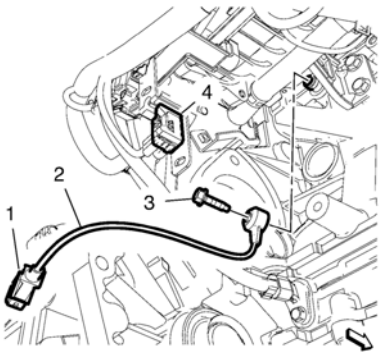

1. Install the knock sensor (2).
2. Install the knock sensor bolt (3) and tighten to **25 Y (18 lb ft)**.
3. Install the knock sensor wiring harness plug (1) to the wiring harness connector (4).
4. Install the starter. Refer to Starter Replacement.
5. Install the front compartment insulator. Refer to Front Compartment Insulator Replacement.
6. Lower the vehicle.
7. Install the engine sight shield. Refer to Engine Sight Shield Replacement.
8. Connect the battery negative cable. Refer to Battery Negative Cable Disconnection and Connection.

cardiagn.com

Removal Procedure

1. Disconnect the battery negative cable. Refer to Battery Negative Cable Disconnection and Connection.
2. Remove the engine sight shield. Refer to Engine Sight Shield Replacement.
3. Raise and support the vehicle. Refer to Lifting and Jacking the Vehicle.
4. Remove the front compartment insulator. Refer to Front Compartment Insulator Replacement.
5. Remove the engine oil cooler. Refer to Engine Oil Cooler Replacement.

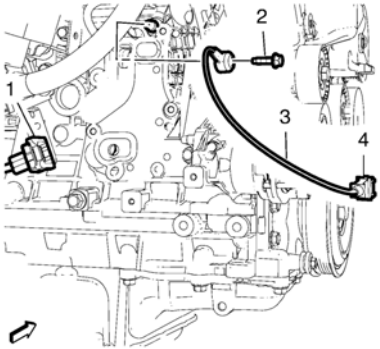

6. Disconnect the knock sensor wiring harness plug (4) from the wiring harness connector (1)
7. Remove the knock sensor bolt (2).
8. Remove the knock sensor (3).

Installation Procedure

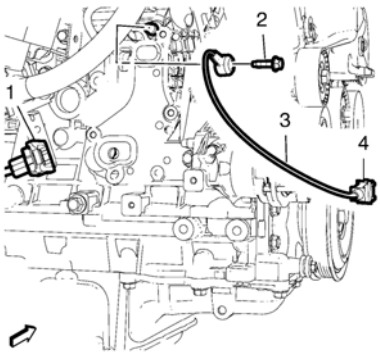

1. Install the knock sensor (3).
2. Install the knock sensor bolt (2) and tighten to **25 Y (18 lb ft)**.
3. Install the knock sensor wiring harness plug (4) to the wiring harness connector (1).
4. Install the engine oil cooler. Refer to Engine Oil Cooler Replacement.
5. Install the front compartment insulator. Refer to Front Compartment Insulator Replacement.
6. Lower the vehicle.
7. Install the engine sight shield. Refer to Engine Sight Shield Replacement.
8. Connect the battery negative cable. Refer to Battery Negative Cable Disconnection and Connection.

cardiagn.com

Circuit/System Description

The knock sensor system enables the engine control module (ECM) to control the ignition timing for the best possible performance while protecting the engine from potentially damaging levels of detonation. The ECM uses the knock sensor system to test for abnormal engine noise that may indicate detonation, also known as spark knock.

Sensor Description

This knock sensor system uses one or two flat response two-wire sensors. The sensor uses piezo-electric crystal technology that produces an alternating current voltage signal of varying amplitude and frequency based on the engine vibration or noise level. The amplitude and frequency are dependant upon the level of knock that the knock sensor detects. The ECM receives the knock sensor signal through 2 isolated signal circuits.

If the ECM has determined that knock is present, it will retard the ignition timing to attempt to reduce the knock. The ECM is capable of controlling spark retard on an individual cylinder basis. The ECM will always try to work back to a zero compensation level, or no spark retard. Knock sensor diagnostics are calibrated to detect faults with the knock sensor circuitry inside the ECM, the knock sensor wiring, or the knock sensor voltage output. Some diagnostics are also calibrated to detect constant noise from an outside influence such as a loose/damaged component or excessive mechanical engine noise.

cardiagn.com

Removal Procedure

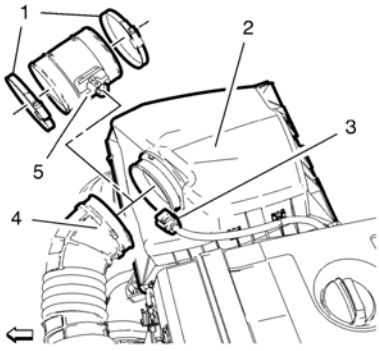

1. Disconnect the mass airflow sensor wiring harness plug (3).
2. Loosen the 2 mass airflow sensor clamps (1).
3. Remove the mass airflow sensor (5) from the air cleaner outlet front duct (4) and from the air cleaner assembly (2).

Installation Procedure

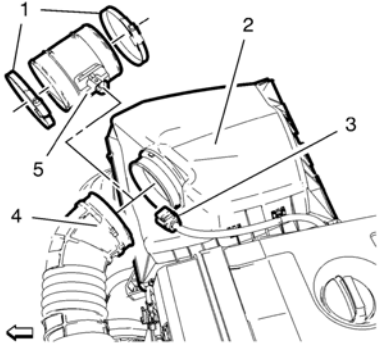

1. Install the mass airflow sensor (5) to the air cleaner assembly (2) and to the air cleaner outlet front duct (4).

   Caution: Refer to Fastener Caution.
2. Install the 2 mass airflow sensor clamps (1) and tighten.
3. Connect the mass airflow sensor wiring harness plug (3).

cardiagn.com

Removal Procedure

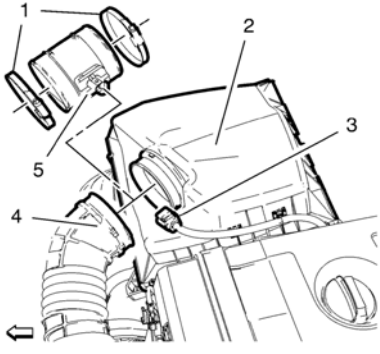

1. Disconnect the mass airflow sensor wiring harness plug (3).
2. Loosen the 2 mass airflow sensor clamps (1).
3. Remove the mass airflow sensor (5) from the air cleaner outlet front duct (4) and from the air cleaner assembly (2).

Installation Procedure

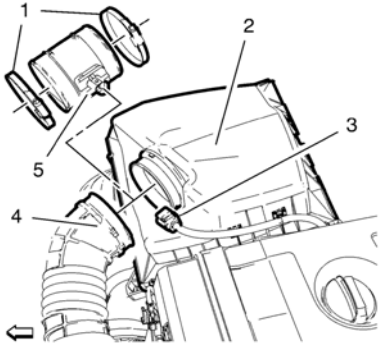

1. Install the mass airflow sensor (5) to the air cleaner assembly (2) and to the air cleaner outlet front duct (4).

   Caution: Refer to Fastener Caution.
2. Install the 2 mass airflow sensor clamps (1) and tighten.
3. Connect the mass airflow sensor wiring harness plug (3).

cardiagn.com

Caution: Contamination of the oxygen sensor can result from the use of an inappropriate RTV sealant (not oxygen sensor safe) or excessive engine coolant or oil consumption. Remove the HO2S and visually inspect the portion of the sensor exposed to the exhaust stream in order to check for contamination. If contaminated, the portion of the sensor exposed to the exhaust stream will have a white powdery coating. Silicon contamination causes a high but false HO2S signal voltage (rich exhaust indication). The control module will then reduce the amount of fuel delivered to the engine, causing a severe driveability problem. Eliminate the source of contamination before replacing the oxygen sensor.

cardiagn.com

Circuit/System Description

The engine control module (ECM) is the control center for the throttle actuator control (TAC) system. The ECM determines the driver intent based on input from the accelerator pedal position sensors, then calculates the appropriate throttle response based on the throttle position sensors. The ECM achieves throttle positioning by providing a pulse width modulated voltage to the throttle actuator motor. The throttle blade is spring loaded in both directions, and the default position is slightly open.

Modes Of Operation

Normal Mode

During the operation of the TAC system, several modes, or functions, are considered normal. The following modes may be entered during normal operations:

- Minimum pedal value — At key-up, the ECM updates the learned minimum pedal value.
- Minimum throttle position values — At key-up, the ECM updates the learned minimum throttle position value. In order to learn the minimum throttle position value, the throttle blade is moved to the closed position.
- Ice break mode — If the throttle blade is not able to reach a predetermined minimum throttle position, the ice break mode is entered. During the ice break mode, the ECM commands the maximum pulse width several times to the throttle actuator motor in the closing direction.
- Battery saver mode — After a predetermined time without engine speed, the ECM commands the battery saver mode. During the battery saver mode, the throttle body TAC module removes the voltage from the motor control circuits, which removes the current draw used to maintain the idle position and allows the throttle to return to the spring loaded default position.

Reduced Engine Power Mode

When the ECM detects a condition with the TAC system, the ECM may enter a reduced engine power mode. Reduced engine power may cause one or more of the following conditions:

- Acceleration limiting — The ECM will continue to use the accelerator pedal for throttle control, however, the vehicle acceleration is limited.
- Limited throttle mode — The ECM will continue to use the accelerator pedal for throttle control, however, the maximum throttle opening is limited.
- Throttle default mode — The ECM will turn OFF the throttle actuator motor, and the throttle will return to the spring loaded default position.
- Forced idle mode — The ECM will perform the following actions:
  - Limit engine speed to idle positioning the throttle position, or by controlling the fuel and spark if the throttle is turned OFF.
  - Ignore the accelerator pedal input.
- Engine shutdown mode — The ECM will disable fuel and de-energize the throttle actuator.

cardiagn.com

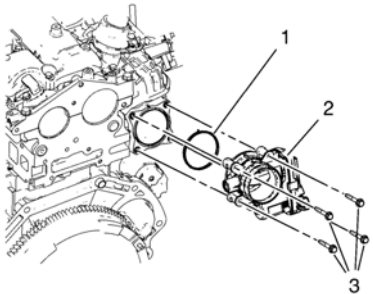

1. Install the throttle body assembly (2) along with a NEW gasket (1).

   Caution: Refer to Fastener Caution.

2. Install the 4 bolts (3) and tighten to **10 Y (89 lb in)**.

cardiagn.com

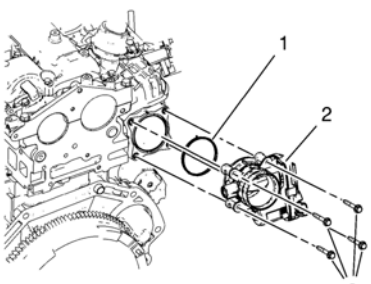

1. Remove the 4 bolts (3).
2. Remove the throttle body assembly (2) along with the gasket (1).

cardiagn.com

Removal Procedure

1. Disconnect the battery negative cable. Refer to Battery Negative Cable Disconnection and Connection.
2. Remove the battery tray. Refer to Battery Tray Replacement.
3. Remove the engine sight shield. Refer to Engine Sight Shield Replacement.
4. For vehicles with MT: Disconnect the transmission shift lever and selector cable from the transmission. Refer to Manual Transmission Shift Lever and Selector Lever Cable Replacement.

   For vehicles with AT: Disconnect the range selector lever cable from the automatic transmission. Refer to Range Selector Lever Cable Replacement.
5. Remove the radiator surge tank. Refer to Radiator Surge Tank Replacement.
6. Unclip the engine wiring harness retaining clip from the charge air cooler outlet front hose.
7. Unclip the transmission vent hose from the charge air cooler outlet front hose.

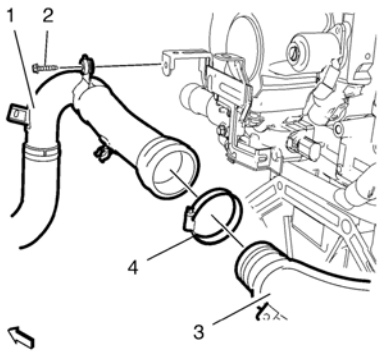

8. Remove the charge air cooler outlet front hose bracket bolt (2).
9. Loosen the charge air cooler outlet front hose to rear hose clamp (4).
10. Detach the charge air cooler outlet front hose (1) along with the clamp (4) from the charge air cooler outlet rear hose (3). Hang the charge air cooler outlet hose aside (1).

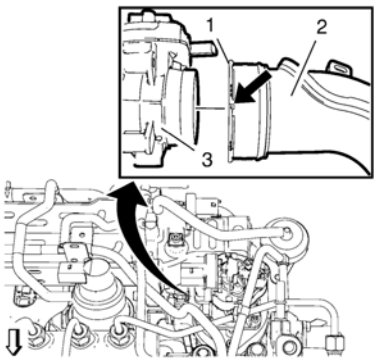

11. Unclip the 2 wiring harness retaining clips from the charge air cooler outlet rear hose (2).
12. Place a suitable tool at the flange (arrow) of the retaining ring (1) and rotate the retaining ring counterclockwise.
13. Detach the charge air cooler outlet rear hose (2) from the throttle body (3).
14. Remove the charge air cooler outlet rear hose (2).

cardiagn.com

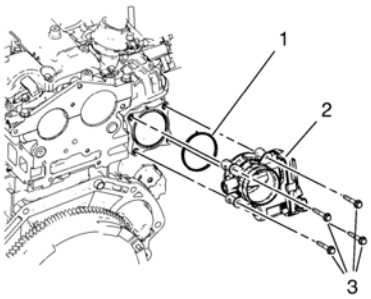

15. Remove the 4 throttle body assembly bolts (3).
16. Remove the throttle body assembly (2) along with the gasket (1).

Installation Procedure

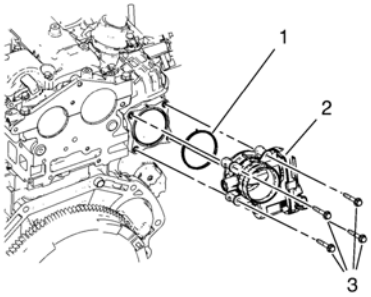

1. Install the throttle body assembly (2) along with a NEW gasket (1).

   Caution: Refer to Fastener Caution.
2. Install 4 throttle body assembly bolts (3) and tighten to **10 Y (89 lb in)**.

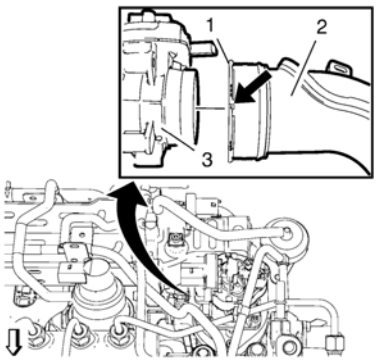

Note: Ensure that the retaining ring (1) is locked.

3. Install the charge air cooler outlet rear hose (2) to the throttle body (3).
4. Clip in the 2 wiring harness retaining clips to the charge air cooler outlet rear hose (2).

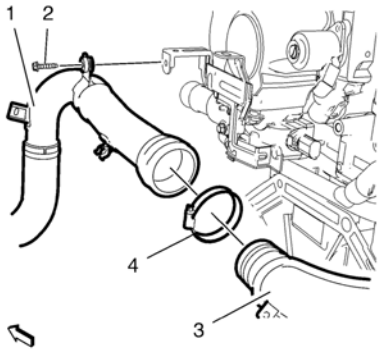

5. Install the charge air cooler outlet front hose (1) along with the clamp (4) to the charge air cooler outlet rear hose (3).

cardiagn.com

Caution: Refer to Fastener Caution.

6. Install the charge air cooler outlet front hose bracket bolt (2) and tighten to **9 Y (80 lb in)**.
7. Tighten the clamp (4) to **4 Y (35 lb in)**.
8. Clip in the engine wiring harness retaining clip to the charge air cooler outlet front hose.
9. Install the radiator surge tank. Refer to Radiator Surge Tank Replacement.
10. Clip in the transmission vent hose to the charge air cooler outlet front hose.
11. For vehicles with MT: Connect the transmission shift lever and selector cable to the transmission. Refer to Manual Transmission Shift Lever and Selector Lever Cable Replacement.

    For vehicles with AT: Connect the range selector lever cable to the automatic transmission. Refer to Range Selector Lever Cable Replacement.
12. Install the engine sight shield. Refer to Engine Sight Shield Replacement.
13. Install the battery tray. Refer to Battery Tray Replacement.
14. Connect the battery negative cable. Refer to Battery Negative Cable Disconnection and Connection.

cardiagn.com

Electronic Ignition System Operation

The electronic ignition system produces and controls the high energy secondary spark. This spark ignites the compressed air/fuel mixture at precisely the correct time, providing optimal performance, fuel economy, and control of exhaust emissions. The engine control module (ECM) collects information from the crankshaft position sensor and the camshaft position sensor – intake and camshaft position sensor – exhaust to determine the sequence, dwell, and timing of the spark for each cylinder. The ECM transmits a frequency signal to the ignition coil assembly on the appropriate ignition control circuit to fire the spark plugs.

Crankshaft Position Sensor

The crankshaft position sensor circuits consist of an engine control module (ECM) supplied 5 V reference circuit, low reference circuit, and an output signal circuit. The crankshaft position sensor is an externally magnetically biased digital output integrated circuit sensing device. The sensor provides a pulse for each magnetic pole of the magnetic encoder wheel on the crankshaft. Each pole on the encoder wheel is spaced at 58-pole spacing, with 2 missing poles for the reference gap. The crankshaft position sensor produces an ON/OFF DC voltage of varying frequency, with 58 output pulses per crankshaft revolution. The frequency of the crankshaft position sensor output depends on the velocity of the crankshaft. The crankshaft position sensor sends a digital signal, which represents an image of the crankshaft encoder wheel, to the ECM as each pole on the wheel rotates past the crankshaft position sensor. The ECM uses each crankshaft position sensor signal pulse to determine crankshaft speed and decodes the crankshaft encoder wheel reference gap to identify crankshaft position. This information is then used to determine the optimal ignition and injection points of the engine. The ECM also uses crankshaft position sensor output information to determine the camshaft position sensor – intake and camshaft position sensor – exhaust relative to the crankshaft, to control camshaft phasing, and to detect cylinder misfire.

Crankshaft Encoder Wheel

The crankshaft encoder wheel is part of the crankshaft. The encoder wheel consists of 58 poles and a reference gap. Each pole on the encoder wheel is spaced 6° apart with a 12° space for the reference gap. The pulse from the reference gap is known as the sync pulse. The sync pulse is used to synchronize the coil firing sequence with the crankshaft position, while the other poles provide cylinder location during a revolution.

Camshaft Position Sensor

The camshaft position sensor – intake and camshaft position sensor – exhaust is triggered by a notched reluctor wheel built onto the intake camshaft sprocket. The camshaft position sensor – intake and camshaft position sensor – exhaust provides four signal pulses to every camshaft revolution. Each notch, or feature of the reluctor wheel is of a different size which is used to identify the compression stroke of each cylinder and to enable sequential fuel injection. The camshaft position sensor – intake and camshaft position sensor – exhaust is connected to the ECM by the following circuits:

- A 5 V reference circuit
- A low reference circuit
- A signal circuit

Ignition Coil Assembly

The ignition coil assembly used on this engine integrates the 4 coils and the module within a single sealed component.

The ignition coil has the following circuits:

- An ignition voltage circuit
- A ground
- 4 ignition control circuits

The ECM controls the individual coils by transmitting timing pulses on the ignition control circuit of each ignition coil to enable a spark event.

The spark plugs are connected to each coil by a short boot. The boot contains a spring that conducts the spark energy from the coil to the spark plug. The spark plug electrode is coated with platinum for long wear and higher efficiency.

Engine Control Module (ECM)

The ECM controls all ignition system functions, and constantly adjusts the spark timing. The ECM monitors information from various sensor inputs that include the following:

- The crankshaft position sensor
- The accelerator pedal position (APP)
- The manifold absolute pressure (MAP) sensor
- The intake air temperature (IAT) sensor
- The engine knock sensor
- The engine coolant temperature (ECT) sensor

cardiagn.com

Removal Procedure

1. Remove the glow plug controller. Refer to Glow Plug Controller Replacement.

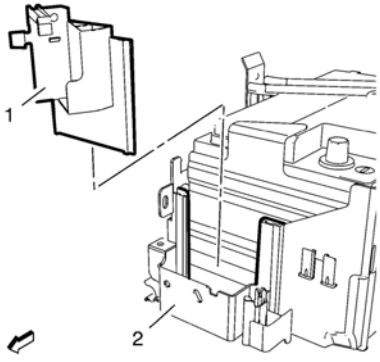

2. Remove the glow plug controller bracket (1) in top direction from the battery tray (2).

Installation Procedure

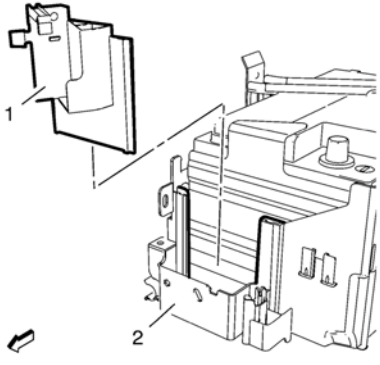

1. Install the glow plug controller bracket (1) to the battery tray (2).
2. Install the glow plug controller. Refer to Glow Plug Controller Replacement.

cardiagn.com

Removal Procedure

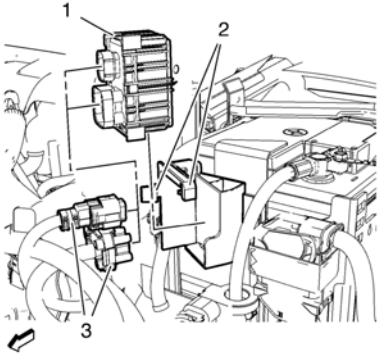

1. Disconnect the 2 wiring harness plugs (3).
2. Remove the glow plug control module (1) by loosening the 2 retainer clips (2).

Installation Procedure

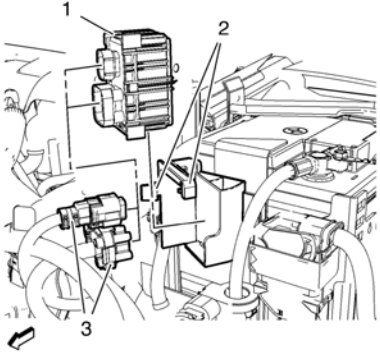

1. Install the glow plug control module (1). Slide the glow plug control module (1) to the 2 retainer clips (2) until they hearable engage.
2. Connect the 2 wiring harness plugs (3).

cardiagn.com

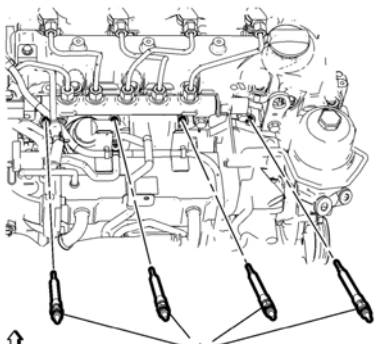

Caution: Refer to Fastener Caution.

Install the 4 glow plugs (1) and tighten to **11 Y (97 lb in)**.

cardiagn.com

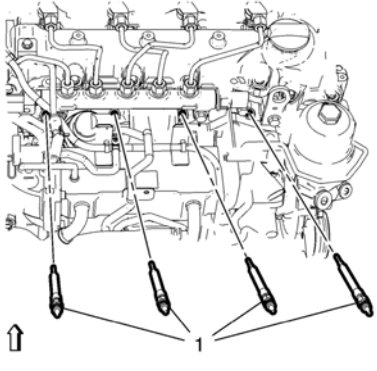

Remove 4 glow plugs (1)

cardiagn.com

Removal Procedure

1. Remove the engine sight shield. Refer to Engine Sight Shield Replacement.

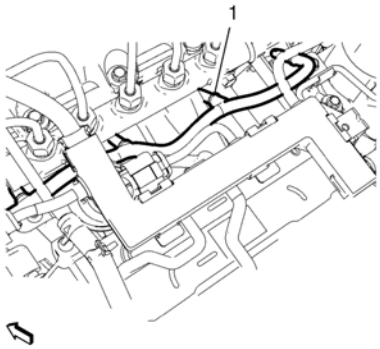

Caution: Use care when disconnecting the glow plug electrical connector. Use of excessive force may damage the electrical connector.

2. Disconnect the 4 glow plug wiring harness plugs (1).

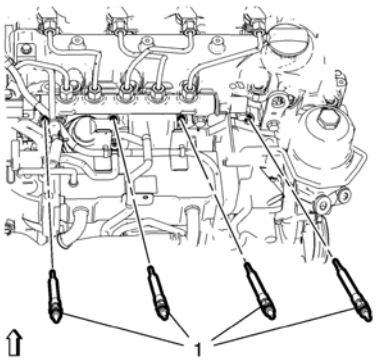

3. Remove the 4 glow plugs (1).

Installation Procedure

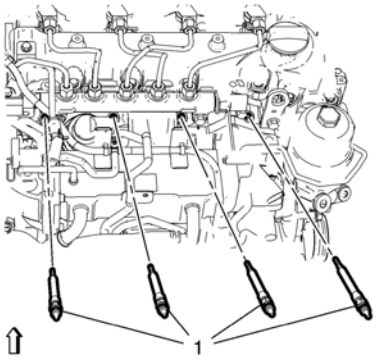

Caution: Refer to Fastener Caution.

1. Install the 4 glow plugs (1) and tighten to **11 Y (97 lb in)**.

cardiagn.com

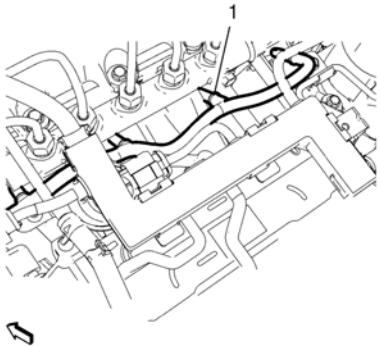

2. Connect the 4 glow plug wiring harness plugs (1).
3. Install the engine sight shield. Refer to Engine Sight Shield Replacement.

cardiagn.com

Glow plugs are used to heat the combustion chambers of diesel engines in cold conditions to help with ignition at cold start-up. In the tip of the glow plug is a coil of a resistive wire or a filament which heats up when electricity is connected.

Glow plugs are required because diesel engines produce the heat needed to ignite their fuel by the compression of air in the cylinder and combustion chamber. In cold weather, and when the engine block, engine oil and cooling water are cold, the heat generated during the first revolutions of the engine is conducted away by the cold surroundings, preventing ignition. The glow plugs are switched on prior to turning over the engine to provide heat to the combustion chamber, and remain on as the engine is turned over to ignite the first charges of fuel. Once the engine is running, the glow plugs are no longer needed, although some engines run the glow plugs for between 5–10 s after starting to ensure smooth and efficient running and sometimes to keep the engine within emissions regulations, since combustion efficiency is greatly reduced when the engine is very cold. During this period, the power fed to the glow plugs is greatly reduced to prevent them burning out by overheating.

Control of the glow plugs is accomplished by a glow plug control module. The temperature and the power consumption is controlled between the engine control module (ECM) and the controller within a wide range to suit the engine pre heating requirements. Each glow plug is energized individually. This capability yields more optimum heat times for the glow plugs, thus pre glow times can be kept to a minimum for short wait to crank times and maximum glow plug durability. A DTC will set if there is a glow plug system fault.

A normal functioning system operates as follows:

- Turn the ignition ON with the engine OFF, and at room temperature.
- The glow plugs turn ON and heat up in 2 s and then are pulse-width modulated (PWM) for another 2 s.
- The glow plug wait lamp is ON for 1 s during cold start.
- The glow plug wait lamp may not illuminate during a warm engine start.
- If the engine is cranked during or after the above sequence, the glow plugs may cycle ON and OFF after the ignition switch is returned from the start position, whether the engine starts or not. The engine does not have to be running to terminate the glow plug cycling.

The glow plug initial ON time will vary based on the system voltage and temperature. Lower temperatures cause longer ON times.

The ECM provides glow plug operation after starting a cold engine. This post-start operation is initiated when the ignition switch is returned to Run, from the Start position. This function helps clean up excessive white smoke and/or poor idle quality after starting.

Glow Plugs

The glow plugs are 4.4 V heaters in each of the cylinders that turn ON, then are pulse-width modulated when the ignition switch is turned to the RUN position prior to starting the engine. The glow plug controller remains pulsing the glow plugs a short time after starting, then are turned OFF.

A Wait to Start lamp on the instrument panel provides information on engine starting conditions. The Wait to Start lamp will not illuminate during post-start glow plug operation.

Glow Plug/Controller

The glow plug controller is a solid state device which operates the glow plugs. The glow plug controller is connected to the following circuits:

- The battery voltage circuits
- The CAN communication circuit located between the ECM and the glow plug controller
- The engine ground circuit
- The glow plug supply voltage circuits located between the glow plug controller and the glow plugs

The glow plug diagnostic circuits are directly monitored individually by using a separate transistor to control current to each glow plug. Individual diagnosis is thus possible for every glow plug.

cardiagn.com

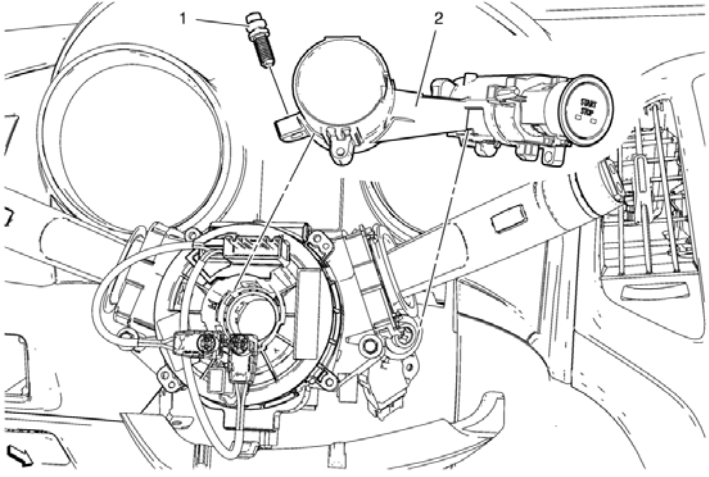

Ignition and Start Switch Housing Replacement

Callout	Component Name

Preliminary Procedures

1. Remove theft deterrent module. Refer to Theft Deterrent Module Replacement.
2. Disconnect electrical connector.

1	Ignition Lock Cylinder Bolt **Caution:** Refer to Fastener Caution. **:** Use suitable chisel to remove and install bolt.
2	Ignition and Start Switch Housing

cardiagn.com

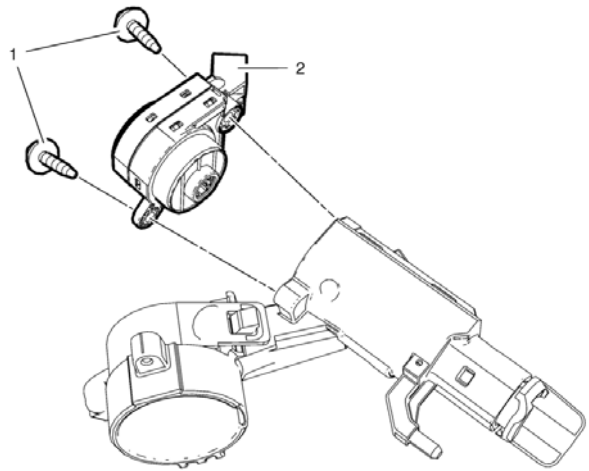

Ignition and Start Switch Replacement

Callout	Component Name

Preliminary Procedures

1. Remove ignition and start switch housing. Refer to Ignition and Start Switch Housing Replacement.
2. Disconnect electrical connector.

1	Ignition and Start Switch Bolt (Qty: 2) **Caution:** Refer to Fastener Caution.
2	Ignition and Start Switch

cardiagn.com

Special Tools

EN-6009 Remover/Installer Ignition Module

For equivalent regional tools, refer to Special Tools.

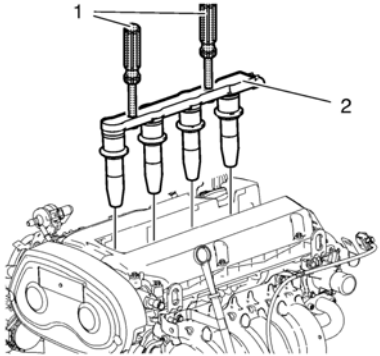

1. Install the ignition coil module (2) with the *EN-6009* remover/installer (1).
2. Remove the *EN-6009* remover/installer (1).

   Caution: Refer to Fastener Caution

   Note: Note the arrow on the cover.
3. Install the 2 ignition coil bolts and tighten to **8 Y (71 lb in)**.

   Note: Note the arrow on the cover.
4. Install the cover of the DIS ignition coil against the direction of the arrow.

cardiagn.com

Special Tools

EN-6009 Remover/Installer Ignition Module

For equivalent regional tools, refer to Special Tools.

Note: Note the arrow on the cover.

1. Remove the cover of the DIS ignition coil in the direction of the arrow.
2. Remove the 2 ignition coil bolts.

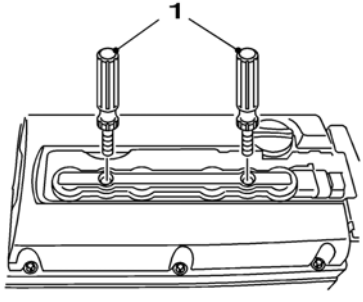

3. Install the *EN-6009* remover/installer (1).

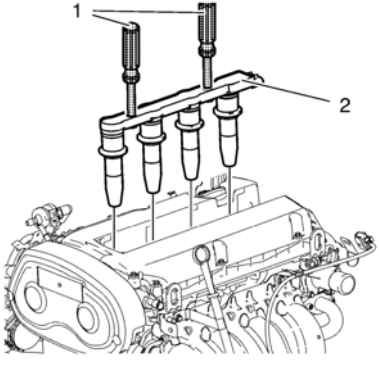

4. Remove the ignition coil module (2) with the *EN-6009* remover/installer (1).

cardiagn.com

Special Tools

EN-6009 Remover and Installer Ignition Coil

For equivalent regional tools, refer to Special Tools.

Removal Procedure

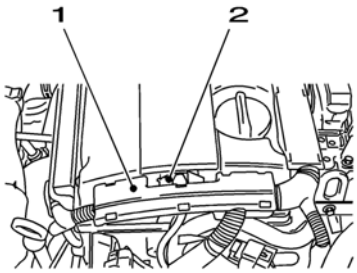

1. Remove the engine wiring harness guide (1) from the cylinder head.
2. Disconnect the ignition coil plug (2).

   Note: Note the arrow on the cover.
3. Remove the cover of the ignition coil in the direction of the arrow.
4. Remove the 2 ignition coil bolts.

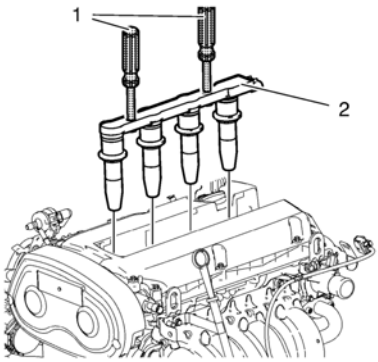

5. Install the *EN-6009* remover/installer (1).
6. Remove the ignition coil (2).
7. Remove the *EN-6009* remover/installer (1).

Installation Procedure

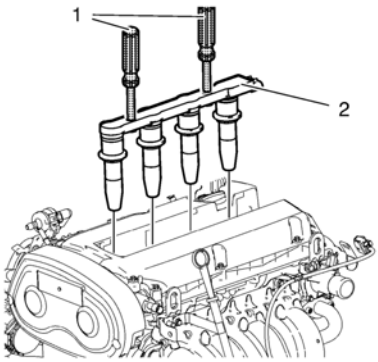

1. Install the *EN-6009* remover/installer (1).

cardiagn.com

2. Remove the ignition coil (2).
3. Remove the *EN-6009* remover/installer (1).

Caution: Refer to Fastener Caution.

4. Install the 2 ignition coil bolts an tighten to **9 Y (80 lb in)**.

Note: Note the arrow on the cover.

5. Install the ignition coil cover in the direction of the arrow.

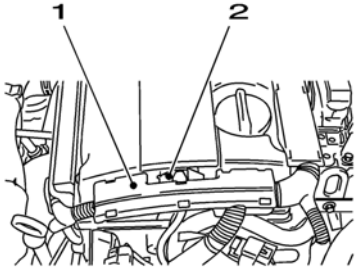

6. Connect the ignition coil plug (2).
7. Install the engine wiring harness guide (1) at the cylinder head.

cardiagn.com

Spark Plug Usage

1. Ensure that the correct spark plug is installed. An incorrect spark plug causes driveability conditions. Refer to the electronic parts catalog for the correct spark plug.
2. Ensure that the spark plug has the correct heat range. An incorrect heat range causes the following conditions:

- Spark plug fouling—Colder plug
- Pre-ignition causing spark plug and/or engine damage—Hotter plug

Spark Plug Inspection

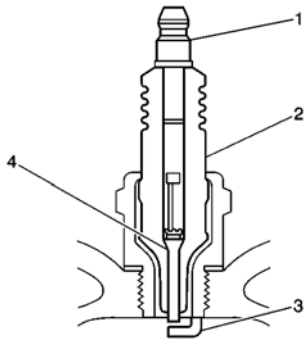

1. Inspect the terminal post (1) for damage.

- Inspect for a bent or broken terminal post (1).
- Test for a loose terminal post (1) by twisting and pulling the post. The terminal post (1) should NOT move.

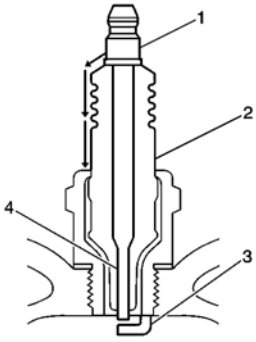

- Inspect the insulator (2) for flashover or carbon tracking, soot. This is caused by the electrical charge traveling across the insulator (2) between the terminal post (1) and ground. Inspect for the following conditions:

  - Inspect the spark plug boot for damage.
  - Inspect the spark plug recess area of the cylinder head for moisture, such as oil, coolant, or water. A spark plug boot that is saturated causes arcing to ground.

cardiagn.com

Spark Plug Inspection

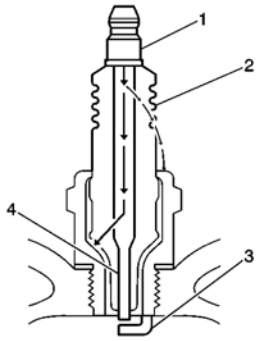

- Inspect the insulator (2) for cracks. All or part of the electrical charge may arc through the crack instead of the electrodes (3, 4).

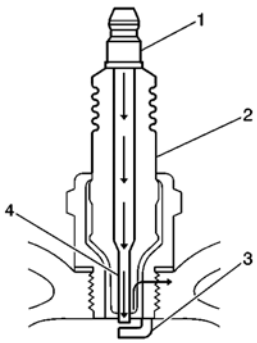

- Inspect for evidence of improper arcing.
  - Measure the gap between the center electrode (4) and the side electrode (3) terminals. Refer to Ignition System Specifications. An excessively wide electrode gap can prevent correct spark plug operation.
  - Inspect for the correct spark plug torque. Refer to Ignition System Specifications. Insufficient torque can prevent correct spark plug operation. An over torqued spark plug, causes the insulator (2) to crack.
  - Inspect for signs of tracking that occurred near the insulator tip instead of the center electrode (4).
  - Inspect for a broken or worn side electrode (3).
  - Inspect for a broken, worn, or loose center electrode (4) by shaking the spark plug.
- A rattling sound indicates internal damage.
- A loose center electrode (4) reduces the spark intensity.
  - Inspect for bridged electrodes (3, 4). Deposits on the electrodes (3, 4) reduce or eliminates the gap.
  - Inspect for worn or missing platinum pads on the electrodes (3, 4) If equipped.
  - Inspect for excessive fouling.
  - Inspect the spark plug recess area of the cylinder head for debris. Dirty or damaged threads can cause the spark plug not to seat correctly during installation.

Spark Plug Visual Inspection

1. Normal operation—Brown to grayish-tan with small amounts of white powdery deposits are normal combustion by-products from fuels with additives.
2. Carbon Fouled—Dry, fluffy black carbon, or soot caused by the following conditions:

- Rich fuel mixtures
- Leaking fuel injectors
- Excessive fuel pressure
- Restricted air filter element
- Incorrect combustion
- Reduced ignition system voltage output
- Weak coils
- Worn ignition wires
- Incorrect spark plug gap
- Excessive idling or slow speeds under light loads can keep spark plug temperatures so low that normal combustion deposits may not burn off.
- Deposit Fouling—Oil, coolant, or additives that include substances such as silicone, very white coating, reduces the spark intensity. Most powdery deposits will not effect spark intensity unless they form into a glazing over the electrode.

cardiagn.com

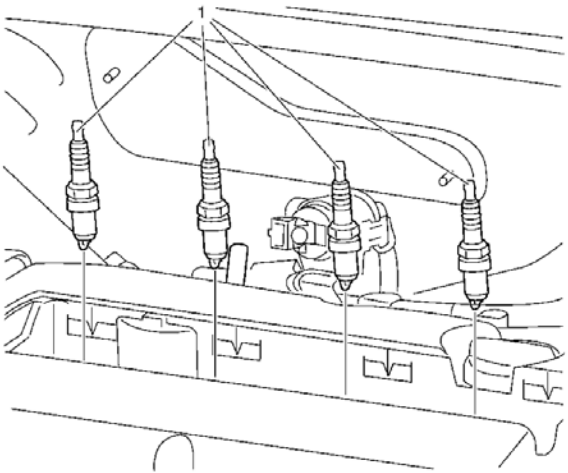

Spark Plug Replacement

Callout	Component Name
Preliminary Procedure	
Remove the ignition coil. Refer to Ignition Coil Replacement.	
1	Spark Plug Fastener **Caution:** Refer to Fastener Caution. **Tighten** 25 Y (18 lb ft)

cardiagn.com

Special Tools

EL 50313 Battery Tester

For equivalent regional tools, refer to Special Tools.

Diagnostic Aids

- For best results, use an automatic taper-rate battery charger with a voltage capability of 16 V.
- The charging area should be well ventilated.
- Do not charge a battery that appears to be frozen. Allow the battery to warm to room temperature and test it using the EL 50313 before charging.

Battery State of Charge

Note: Using voltage to determine the batteries state of charge is only accurate after the battery has been at rest for 24 hours. This is enough time for the acid in each cell to equalize. If the battery has been charged or discharged in the past 24 hours, the battery state of charge will only be an estimate.

The maintenance-free batteries state of charge is estimated by reading the voltage of the battery across the battery terminals. Because the voltage is affected by current flow into or out of the battery, the engine must be stopped and all electrical loads turned OFF, including parasitic loads, when checking the voltage. The voltage can also be affected if the battery has just been charged or discharged, so it is important to consider what has happened to the battery in the time just before testing. Use the following procedure to determine the battery's state of charge:

1. Be sure all electrical loads are turned OFF.
2. Determine whether the battery has been used in a vehicle or charged within the past 12 hours.

- If the answer is no, the terminal voltage will be stabilized and no action is necessary before reading the voltage. Skip to step 3.
- If the answer is yes, terminal voltage will not be stabilized and you should wait 12 hours since the last time the battery was used.
- Estimate the battery temperature by determining the average temperature to which the battery has been exposed for the past 12 hours.

Note: The table is accurate to 10 % only after the battery has been at rest for 12 hours.

- Measure the battery voltage at the battery terminals. Refer to the following table to determine the state of charge according to the estimated battery temperature:

Battery Voltage	% Charge at 0°C (32°F)	% Charge at 25°C (75°F)
12.75 V	100%	100%
12.7 V	100%	90%
12.6 V	90%	75%
12.45 V	75%	65%
12.2 V	65%	45%
12.0 V	40%	20%

Use the state of charge information as follows:

- A battery with a state of charge that is below 65% must always be recharged before returning it to service or continuing storage.
- A battery with a state of charge that is 65% or greater is generally considered to be charged enough in order to be returned to normal service or in order to continue storage. However, if the battery is being used in slow traffic or with short drive times, or if the temperature is very hot or very cold, the battery should be fully charged, to at least 90%, before returning it to service or continuing storage.

Charging Time Required

The time required to charge a battery will vary depending upon the following factors:

- The battery charger capacity—The higher the charger amperage, the less time it will take to charge the battery.
- The state of charge of the battery—A completely discharged battery requires more than twice as much charging time as a half charged battery. In a discharged battery with a voltage below 11 V, the battery has a very high internal resistance and may only accept a very low current at first. Later, as the charging current causes the acid content to increase in the electrolyte, the charging current will increase. Extremely discharged batteries may not activate the reversed voltage protection in some chargers. Refer to the manufacturer's instructions for operating this circuitry.
- The temperature of the battery—The colder the battery is, the more time it takes to recharge the battery. The charging current accepted by a cold battery is very low at first. As the battery warms, the charging current will increase.

Charging Procedure

Caution: Turn OFF the ignition when connecting or disconnecting the battery cables, the battery charger or the jumper cables. Failure to do so may damage the ECM/PCM or other electronic components.

Caution: Refer to Fastener Caution.

When charging side-terminal batteries with the battery cables connected, connect the charger to the positive cable bolt and to a ground located away from the battery. When charging side-terminal batteries with the battery cables disconnected, install the battery side terminal adapters and connect the charger to the

cardiagn.com

adapters.

Tighten

Tighten the battery side terminal adapters to 15 Y (11 lb ft).

Use the following procedure to charge the battery:

1. Turn OFF the charger.
2. Ensure that all of the battery terminal connections are clean and tight.
3. Connect the charger positive lead to the battery positive terminal on the battery or the remote jumper stud underhood.

   Caution: Do not connect the negative charger lead to the housings of other vehicle electrical accessories or equipment. The action of the battery charger may damage such equipment.

4. Connect the negative charger lead to a solid engine ground or to a ground stud in the engine compartment that is connected directly to the battery negative terminal, but away from the battery. If the negative battery cable is disconnected and a terminal adapter is being used, connect directly to the adapter.
5. Turn ON the charger and set to the highest setting for normal charging.
6. Inspect the battery every half hour after starting the battery charger.

- Charge the battery until the taper-rate charger indicates that the battery is fully charged.
- Estimate the battery temperature by feeling the side of the battery. If it feels hot to the touch or its temperature is over 45°C (125°F), discontinue charging and allow the battery to cool before resuming charging.
- After charging, test the battery. Refer to Battery Inspection/Test.

cardiagn.com

Removal Procedure

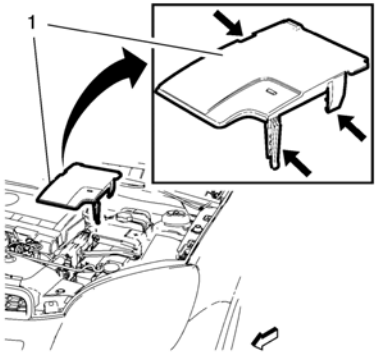

Note: Mind the 3 battery cover retainer clips (arrows). The battery cover could be damaged if the retainer clips are not fully unlocked.

Remove the battery cover (1) from the battery tray.

Installation Procedure

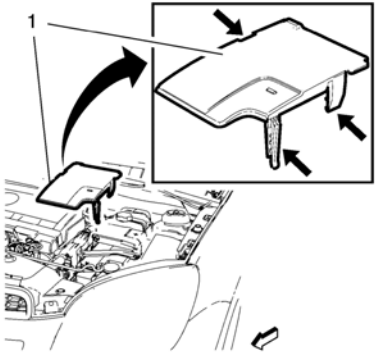

Note: Ensure the proper seat of the battery cover.

Install the battery cover (1) to the battery tray.

cardiagn.com

Removal Procedure

1. Disconnect the battery negative cable. Refer to Battery Negative Cable Disconnection and Connection.

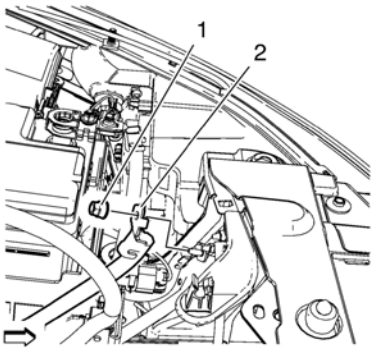

2. Remove the negative cable nut (1).
3. Remove the negative cable (2).

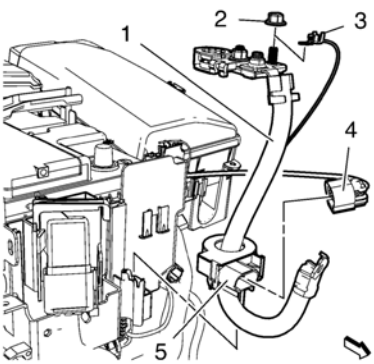

4. Disconnect the wiring harness current sensor plug (4).
5. Remove the current sensor (5) from the battery tray.

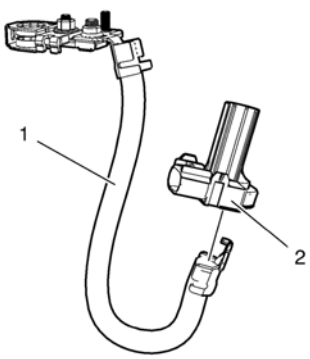

6. Remove the current sensor (2) from the battery negative cable (1).

Installation Procedure

cardiagn.com

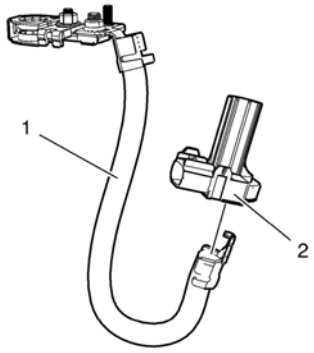

1. Install the current sensor (2) at the battery negative cable (1).

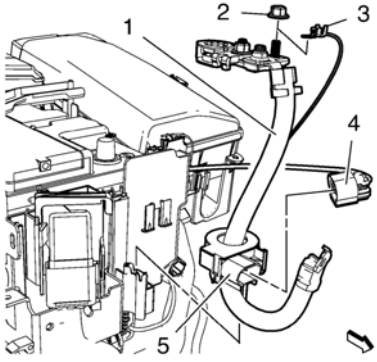

2. Install the current sensor (5) at the battery tray.
3. Connect the wiring harness current sensor plug (4).

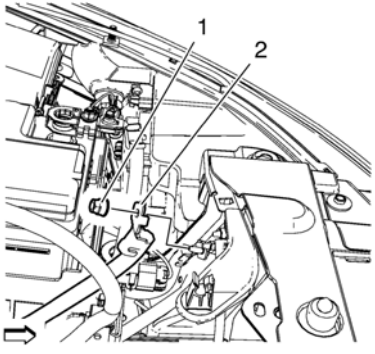

4. Install the negative cable (2).

Caution: Refer to Fastener Caution.

5. Install the negative cable nut (1) and tighten to **9 Y (80 lb in)**.
6. Connect the battery negative cable. Refer to Battery Negative Cable Disconnection and Connection.

cardiagn.com

Warning: Batteries produce explosive gases, contain corrosive acid, and supply levels of electrical current high enough to cause burns. Therefore, to reduce the risk of personal injury when working near a battery:

- Always shield your eyes and avoid leaning over the battery whenever possible.
- Do not expose the battery to open flames or sparks.
- Do not allow the battery electrolyte to contact the eyes or the skin. Flush immediately and thoroughly any contacted areas with water and get medical help.
- Follow each step of the jump starting procedure in order.
- Treat both the booster and the discharged batteries carefully when using the jumper cables.

Note: Because of the materials used in the manufacture of automotive lead acid batteries, dealers and service shops that handle them are subject to various regulations issued by OSHA, EPA, DOT, and various state or local agencies. Other regulations may also apply in other locations. Always know and follow these regulations when handling batteries.

Batteries that are no longer wanted must be disposed of by an approved battery recycler and must never be thrown in the trash or sent to a landfill.

Batteries that are not part of the vehicle itself, not the battery under the hood, must only be transported on public streets for business purposes via approved hazardous material transportation procedures.

Battery storage, charging and testing facilities in repair shops must meet various requirements for ventilation, safety equipment, material segregation, etc.

The maintenance free battery is standard. There are no vent plugs in the cover. The battery is completely sealed except for 2 small vent holes in the side. These vent holes allow the small amount of gas that is produced in the battery to escape.

The battery has 3 functions as a major source of energy:

- Engine cranking
- Voltage stabilizer
- Alternate source of energy with generator overload

Battery Low Start Vehicle Message

The body control module (BCM) monitors battery positive voltage to determine battery state of charge. If one or more of the BCM battery positive voltage terminals measure less than approximately 11.6V compared to the BCM ground circuits, this message will display and four chimes may sound. Start the vehicle immediately. If the vehicle is not started and the battery continues to discharge, the climate controls, heated seats, and audio systems will shut off and the vehicle may require a jump start. These systems will function again after the vehicle is started.

Battery Ratings

A battery has 2 ratings:

- Cold cranking amperage
- Amperage hours

When a battery is replaced use a battery with similar ratings. See battery specification label on the original battery.

Amperage Hours

The amperage hour rating tells you how much amperage is available when discharged evenly over a 20 hour period. The amperage hour rating is cumulative, so in order to know how many constant amperage the battery will output for 20 h, you have to divide the amperage hour rating by 20. Example: If a battery has an amperage hour rating of 74, dividing by 20 = 3.75. Such a battery can carry a 3.75 A load for 20 hours before dropping to 10.5 V. (10.5 V is the fully discharged level, at which point the battery needs to be recharged.) A battery with an amperage hour rating of 55 will carry a 2.75 A load for 20 hours before dropping to 10.5 V.

Cold Cranking Amperage

The cold cranking amperage is an indication of the ability of the battery to crank the engine at cold temperatures. The cold cranking amperage rating is the minimum amperage the battery must maintain for 30 seconds at −18°C (0°F) while maintaining at least 7.2 V. See battery label for the cold cranking amperage rating of this battery.

cardiagn.com

Warning: Unless directed otherwise, the ignition and start switch must be in the OFF or LOCK position, and all electrical loads must be OFF before servicing any electrical component. Disconnect the negative battery cable to prevent an electrical spark should a tool or equipment come in contact with an exposed electrical terminal. Failure to follow these precautions may result in personal injury and/or damage to the vehicle or its components.

For Vehicles equipped with OnStar® (UE1) with Back Up Battery:

The Back Up Battery is a redundant power supply to allow limited OnStar® functionality in the event of a main vehicle battery power disruption to the VCIM (OnStar®module). Do not disconnect the main vehicle battery or remove the OnStar® fuse with the ignition key in any position other than OFF. Retained accessory power should be allowed to time out or be disabled (simply opening the driver door should disable retained accessory power) before disconnecting power. Disconnecting power to the OnStar® module in any way while the ignition is On or with retained accessory power activated may cause activation of the OnStar® Back-Up Battery system and will discharge and permanently damage the back-up battery. Once the Back-Up Battery is activated it will stay on until it has completely discharged. The back-up battery is not rechargeable and once activated the back-up battery must be replaced.

cardiagn.com

Diagnostic Instructions

- Perform the Diagnostic System Check - Vehicle prior to using this diagnostic procedure.
- Review Strategy Based Diagnosis for an overview of the diagnostic approach.
- Diagnostic Procedure Instructions provides an overview of each diagnostic category.

Diagnostic Aids

Note: For Warranty repairs —

You must use regionally required battery test equipment for warranty repairs.For accurate test results the battery must be disconnected from the vehicle and the equipment connected directly to the battery posts. When setting up the equipment, select “Out of Vehicle” and then the correct battery type (Flooded or AGM) and rated CCA (both from the battery label) must be entered.

- Failure to obtain the correct connections during the test may result in a failed test on a good battery.
- Use the Out of Vehicle test (both batteries disconnected with test equipment connected directly to the post) test for each battery when testing a vehicle with dual batteries.

Follow these instructions in order to avoid an incorrect diagnosis because of connections:

- If testing the vehicle with the battery cables still connected, wiggle the battery tester clips on the terminal. This may cut through any coating or through any oxidation that may be present on the terminal.
- If correct connections to the battery terminals in the vehicle are in doubt, perform the following steps:
  1. Disconnect the negative battery cable.
  2. Disconnect the positive battery cable.
  3. Follow the instructions for testing a removed battery.
- If the tester displays a REPLACE BATTERY or BAD CELL-REPLACE result for a battery tested in the vehicle with the battery cables connected, perform the following steps:
  1. Disconnect the negative battery cable.
  2. Disconnect the positive battery cable.

     Note: Always write the test code displayed by the tester on the repair order for any warranty purposes. The number is a unique code that describes the test data for a particular battery at a particular time. The test code may occasionally repeat when you retest the same battery. More often, each test will result in a different code. Use the test code from the second, or Out of Vehicle test.
  3. Follow the instructions for testing a removed battery.
  4. Replace the battery only if the second test shows a REPLACE BATTERY or BAD CELL-REPLACE result.

     Use the test code from the second test for any warranty purposes.

Reference Information

Schematic Reference

Starting and Charging Schematics

Connector End View Reference

Component Connector End Views

Description and Operation

Starting System Description and Operation

Electrical Information Reference

- Circuit Testing
- Connector Repairs
- Testing for Intermittent Conditions and Poor Connections
- Wiring Repairs

Scan Tool Reference

Control Module References for scan tool information

Special Tools

EL 50313 Battery Tester

Circuit/System Testing

Warning: Unless directed otherwise, the ignition and start switch must be in the OFF or LOCK position, and all electrical loads must be OFF before servicing any electrical component. Disconnect the negative battery cable to prevent an electrical spark should a tool or equipment come in contact with an exposed electrical terminal. Failure to follow these precautions may result in personal injury and/or damage to the vehicle or its components.

For Vehicles equipped with OnStar® (UE1) with Back Up Battery:

The Back Up Battery is a redundant power supply to allow limited OnStar® functionality in the event of a main vehicle battery power disruption to the VCIM (OnStar®module). Do not disconnect the main vehicle battery or remove the OnStar® fuse with the ignition key in any position other than OFF. Retained accessory power should be allowed to time out or be disabled (simply opening the driver door should disable retained accessory power) before disconnecting power. Disconnecting power to the OnStar® module in any way while the ignition is On or with retained accessory power activated may cause activation of the OnStar® Back-Up Battery system and will discharge and permanently damage the back-up battery. Once the Back-Up Battery is activated it will stay on until it has

cardiagn.com

completely discharged. The back-up battery is not rechargeable and once activated the back-up battery must be replaced.

1. Verify the C1 or C1B Battery case is not cracked, broken, or damaged, which may be indicated by battery acid leakage.

- *If there is any apparent damage*

  Replace the C1 or C1B Battery.

- *If there is no damage*

- Verify the cold cranking amperage and amperage hour rating of the C1 or C1B Battery. Refer to the manufacturer specifications on the battery label.

- *If the C1 or C1B Battery does not meet specifications*

  Replace the C1 or C1B Battery.

- *If the C1 or C1B Battery meets specifications*

- Verify that the battery cables are clean and tight. The battery terminal bolts should be torqued as specified in Fastener Tightening Specifications.

- *If the battery cables need to be cleaned or tightened*

  Clean as required and tighten as specified.

- *If the battery cables are clean and tight*

- Install the battery tester and follow directions supplied by the tester.

Repair Instructions

Perform the Diagnostic Repair Verification after completing the repair.

Battery Replacement

cardiagn.com

Removal Procedure

1. Turn on the radio and record all of the customer radio station presets.
2. Ensure that all lamps and accessories are turned off.
3. Turn the ignition OFF and remove the ignition key.

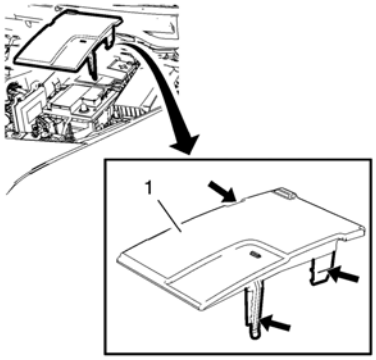

4. Remove the battery cover (1).

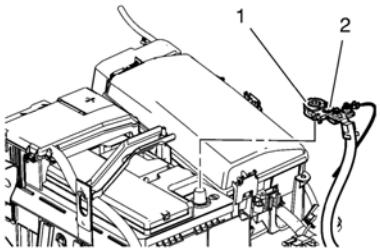

Warning: Refer to Battery Disconnect Warning.

5. Loosen the battery negative cable nut (2).
6. Remove the battery negative cable (1) from the battery.

Installation Procedure

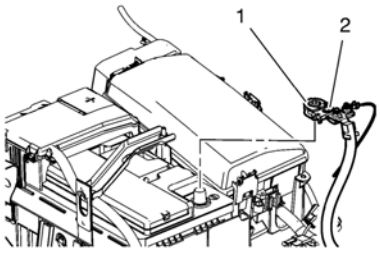

1. Install the battery negative cable (1) to the battery.

Caution: Refer to Fastener Caution.

2. Fasten the battery negative cable nut (2) and tighten the nut to **4.5 Y (40 lb in)**.

cardiagn.com

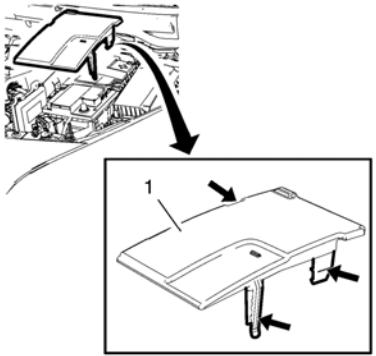

3. Install the battery cover (1).
4. Insert the ignition key and turn the ignition to the ON position.
5. Program volatile memory. Refer to Volatile Memory Programming.
6. Program all of the customer's radio station presets and set the radio clock to the current time.

cardiagn.com

Removal Procedure

1. Disconnect the battery negative cable. Refer to Battery Negative Cable Disconnection and Connection.

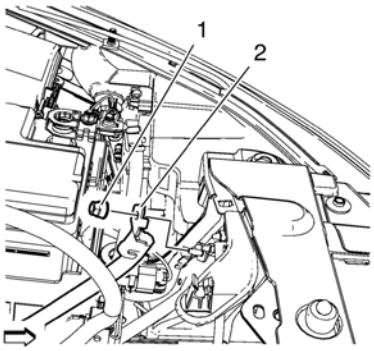

2. Remove the battery ground cable nut (1).
3. Remove the battery negative cable (2).

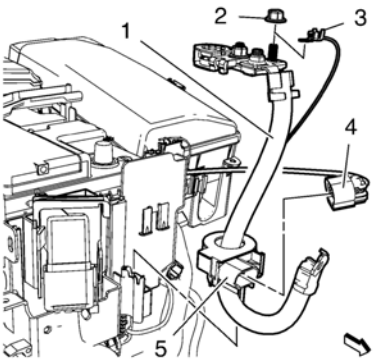

4. Disconnect the wiring harness current sensor plug (4).
5. Remove the current sensor (5) from the battery tray.
6. Remove battery ground cable from the battery negative cable nut (2).
7. Remove the ground cable (3).
8. Remove the battery negative cable (1).

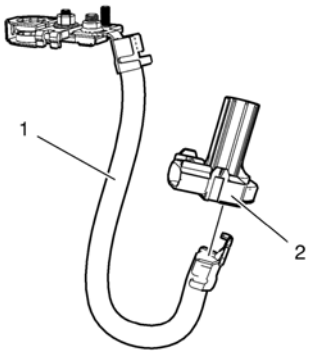

9. Remove the current sensor (2) from the battery negative cable (1).

Installation Procedure

cardiagn.com

Battery Negative Cable Replacement (without Start/Stop System)

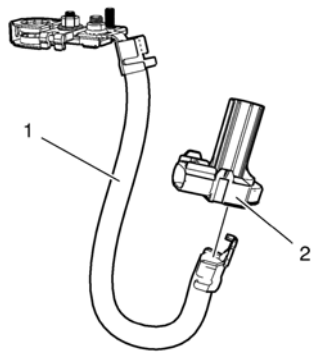

1. Install the current sensor (2) to the battery negative cable (1).

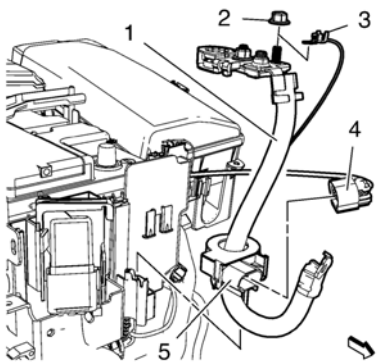

2. Install the battery negative cable (1).
3. Install the ground cable (3).

Caution: Refer to Fastener Caution.

4. Install the battery ground cable to the battery negative cable nut (2) and tighten to **9 Y (80 lb in)**.
5. Install the current sensor (5) at the battery tray.
6. Connect the wiring harness current sensor plug (4).

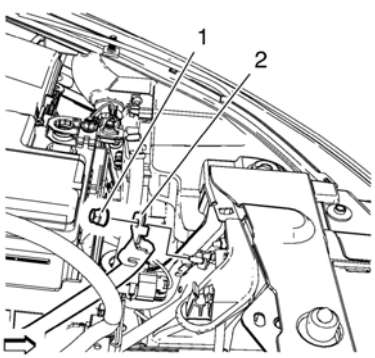

7. Install the battery negative cable (2).
8. Install the battery ground cable nut (1) and tighten to **9 Y (80 lb in)**.
9. Connect the battery negative cable. Refer to Battery Negative Cable Disconnection and Connection.

cardiagn.com

Removal Procedure

1. Remove the transmission fluid cooler outlet and inlet pipe. Refer to Transmission Fluid Cooler Outlet Pipe Replacement and Transmission Fluid Cooler Inlet Pipe Replacement.

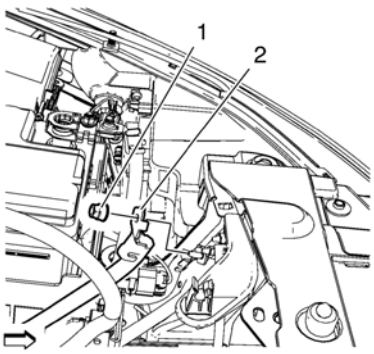

2. Remove the negative cable nut (1).
3. Remove the negative cable (2).

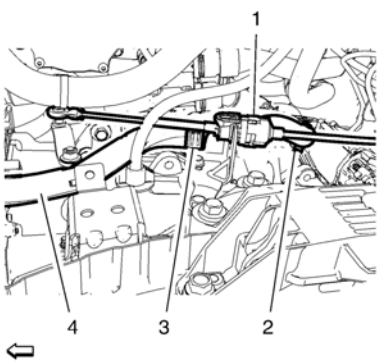

4. Disconnect the transmission range selector lever cable terminal from the transmission manual shift lever pin.
5. Press the locking tabs inward in order to release the transmission range selector lever cable (1) from the cable bracket.
6. Hang the transmission range selector lever cable aside to gain access to the generator and starter cable (4).
7. Unclip the generator and starter cable retainers (2) from the rear transmission bracket.
8. Unclip the generator and starter cable conduit retainers (3).
9. Raise and support the vehicle. Refer to Lifting and Jacking the Vehicle.
10. Remove the engine compartment insulator. Refer to Front Compartment Insulator Replacement.

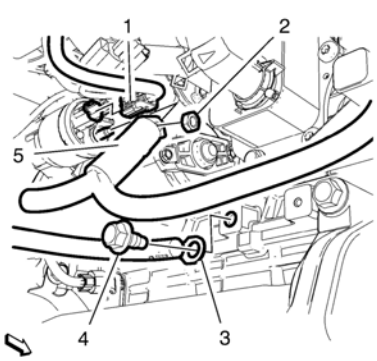

11. Remove the positive and negative cable nut (2).
12. Remove the positive and negative cable (5) from the starter.
13. Remove the ground cable bolt (4).

cardiagn.com

14. Remove the ground cable (3) from the engine block.
15. Unclip the positive and negative cable clip from bracket.

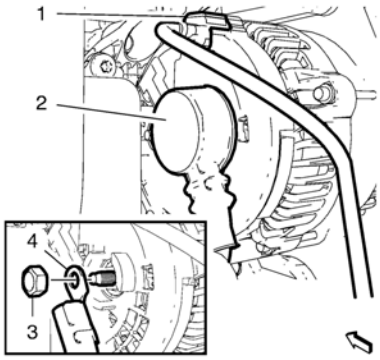

16. Fold the generator cap (2) aside.
17. Remove the generator positive cable retaining nut (3).
18. Remove the generator positive cable (4) from the generator.
19. Hang the positive and negative cable aside.
20. Lower the vehicle.
21. Remove the positive and negative cable from the vehicle.

Installation Procedure

1. Position the positive and negative cable to the vehicle.
2. Raise the vehicle.
3. Position the positive and negative cable.

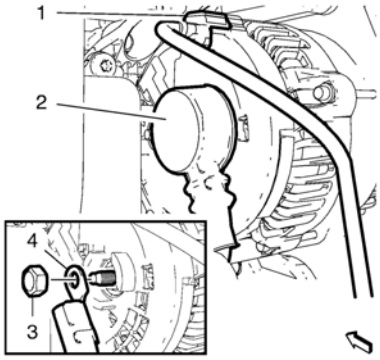

4. Install the positive and negative cable (4) to the generator.

Caution: Refer to Fastener Caution.

5. Install the positive and negative cable retaining nut (3) and tighten to **17 Y (13 lb ft)**.
6. Fold the generator cap (2) to the positive and negative cable terminal.

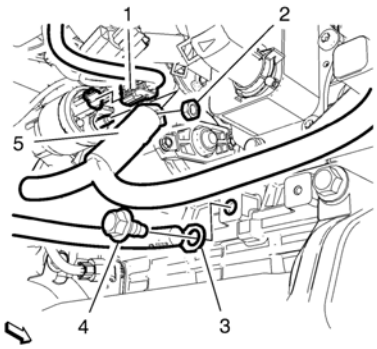

7. Clip in the positive and negative cable clip to the bracket.
8. Install the ground cable (3) to the engine block.
9. Install the ground cable bolt (4) and tighten to **22 Y (16 lb ft)**.
10. Install the positive and negative cable (5) to the starter.
11. Install the positive and negative cable nut (2) and tighten to **9.5 Y (84 lb in)**.
12. Install the engine compartment insulator. Refer to Front Compartment Insulator Replacement.
13. Lower the vehicle.

cardiagn.com

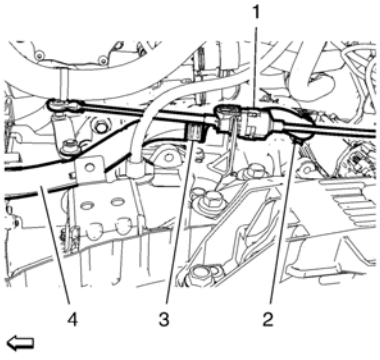

14. Clip in the generator and starter cable conduit retainers (3).
15. Clip in the generator and starter cable retainers (2) to the rear transmission bracket.
16. Install the transmission range selector lever cable (1) to the cable bracket.
17. Connect the transmission range selector lever cable terminal to the transmission manual shift lever pin.

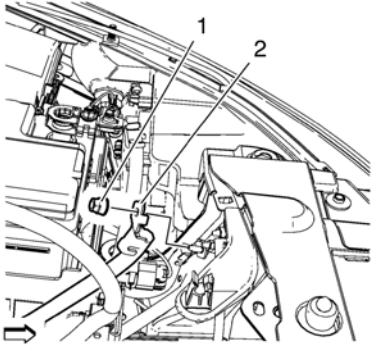

18. Install the negative cable (2).
19. Install the negative cable nut (1) and tighten to **9 Y (80 lb in)**.
20. Install the transmission fluid cooler outlet and inlet pipe. Refer to Transmission Fluid Cooler Outlet Pipe Replacement and Transmission Fluid Cooler Inlet Pipe Replacement.

cardiagn.com

Removal Procedure

1. Disconnect the battery negative cable. Refer to Battery Negative Cable Disconnection and Connection.

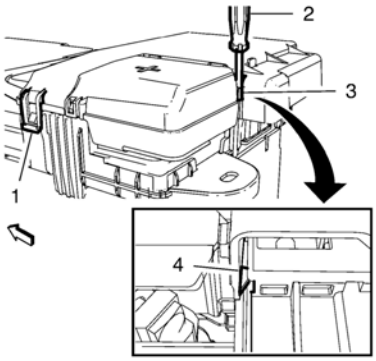

2. Unlock the retaining tab (1) on the battery fuse box cover.
3. Use a suitable screw driver (2) to unlock the clip (4) through the window (3).

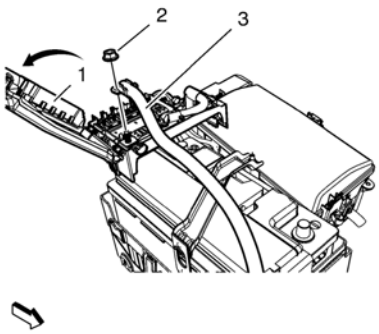

Note: Pull the battery fuse box housing. DO NOT pull the flap.

4. Open the battery fuse box cover (1).
5. Remove the battery positive to starter cable nut (2).
6. Remove the battery positive to starter cable (3) from the battery.

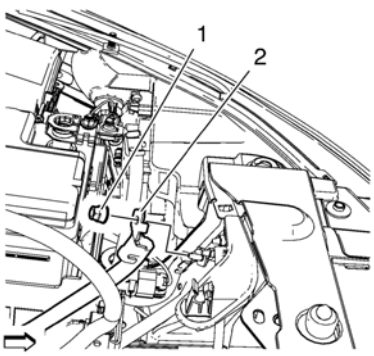

7. Remove the negative cable nut (1).
8. Remove the negative cable (2).

cardiagn.com

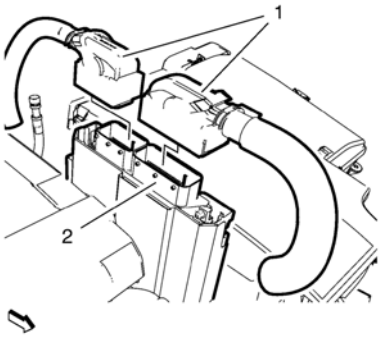

9. Disconnect the 2 engine control module wiring harness plugs (1) from the engine control module (2).
10. Remove the engine control module (2) in top direction.
11. Remove the battery tray. Refer to Battery Tray Replacement.

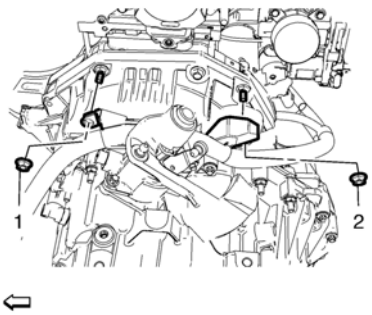

12. Remove the 2 positive and negative cable bracket nuts (1, 2).
13. Raise and support the vehicle. Refer to Lifting and Jacking the Vehicle.
14. Remove the engine compartment insulator. Refer to Front Compartment Insulator Replacement.

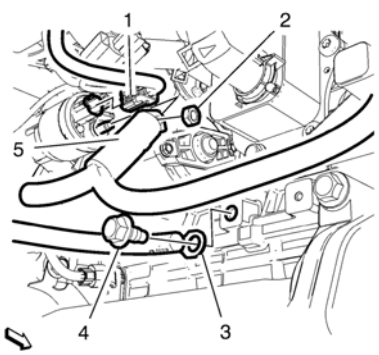

15. Remove the positive and negative cable nut (2).
16. Remove the positive and negative cable (5) from the starter.
17. Remove the ground cable bolt (4).
18. Remove the ground cable (3) from the engine block.
19. Unclip the positive and negative cable clip from bracket.

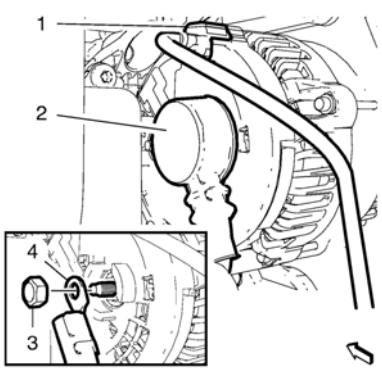

cardiagn.com

20. Fold the generator cap (2) aside.
21. Remove the generator positive cable retaining nut (3).
22. Remove the generator positive cable (4) from the generator.
23. Hang the positive and negative cable aside.
24. Lower the vehicle.
25. Remove the positive and negative cable from the vehicle.

Installation Procedure

1. Position the positive and negative cable to the vehicle.
2. Raise the vehicle.
3. Position the positive and negative cable.

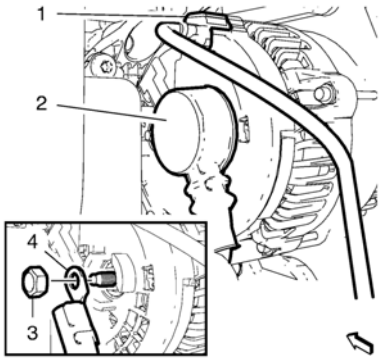

4. Install the positive and negative cable (4) to the generator.

Caution: Refer to Fastener Caution.

5. Install the positive and negative cable retaining nut (3) and tighten to **17 Y (13 lb ft)**.
6. Fold the generator cap (2) to the positive and negative cable terminal.

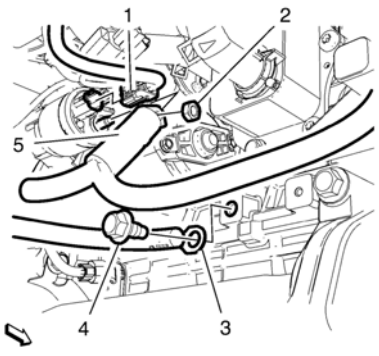

7. Clip in the positive and negative cable clip to the bracket.
8. Install the ground cable (3) to the engine block.
9. Install the ground cable bolt (4) and tighten to **22 Y (16 lb ft)**.
10. Install the positive and negative cable (5) to the starter.
11. Install the positive and negative cable nut (2) and tighten to **9,5 Y (84 lb in)**.
12. Install the engine compartment insulator. Refer to Front Compartment Insulator Replacement.
13. Lower the vehicle.

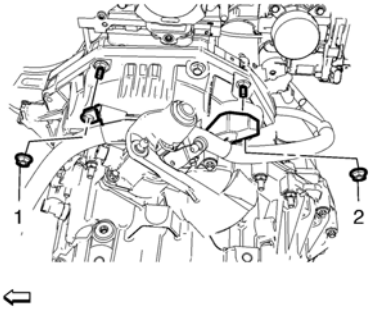

14. Install the 2 positive and negative cable bracket nuts (1, 2) and tighten to **17 Y (13 lb ft)**.

cardiagn.com

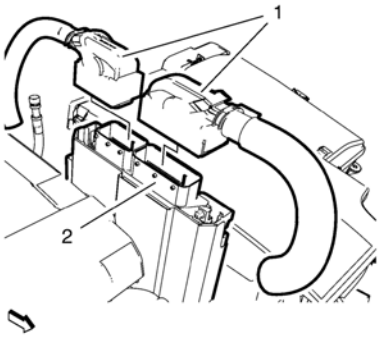

15. Connect the 2 engine control module wiring harness plugs (1) to the engine control module (2).
16. Install the battery tray. Refer to Battery Tray Replacement.
17. Install the engine control module (2).
18. Connect the 2 engine control module wiring harness plugs (1) to the engine control module (2).

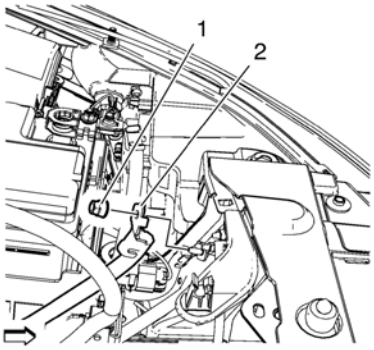

19. Install the negative cable (2).
20. Install the negative cable nut (1) and tighten to **9 Y (80 lb in)**.

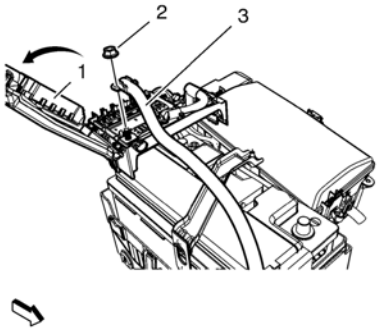

21. Install the battery positive to starter cable (3) to the battery.
22. Install and tighten the battery positive to starter cable nut (2).

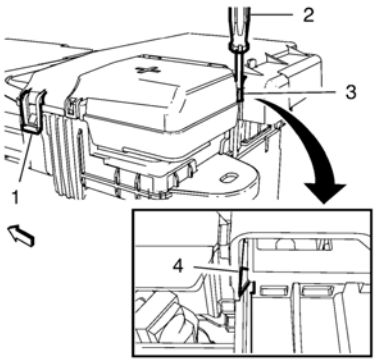

23. Close the battery fuse box cover and lock the retaining tabs (1) and (4).
24. Connect the battery negative cable. Refer to Battery Negative Cable Disconnection and Connection.

cardiagn.com

Removal Procedure

1. Disconnect the battery negative cable. Refer to Battery Negative Cable Disconnection and Connection.

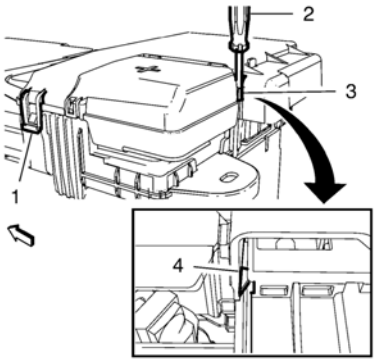

2. Unlock the retaining tab (1) on the battery fuse box cover.
3. Use a suitable screwdriver (2) to unlock the clip (4) through the window (3).

Note: Pull the battery fuse box housing, DO NOT pull the flap.

4. Open the battery fuse box cover.

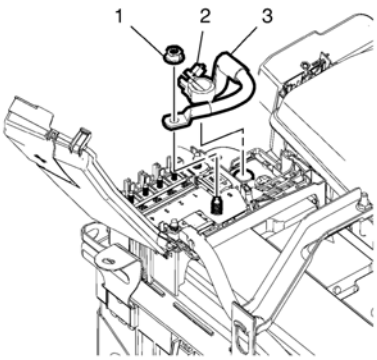

5. Remove the battery positive cable to fuse box nut (1).
6. Remove the battery positive cable to battery nut (2).
7. Remove the battery positive cable to fuse box cable (3).

Installation Procedure

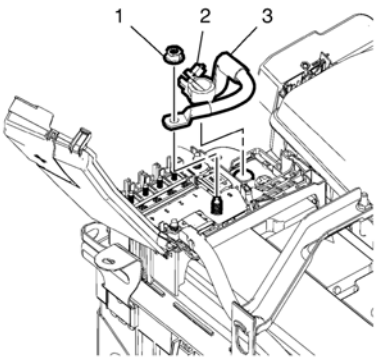

1. Install the battery positive cable to fuse box cable (3).

Caution: Refer to Fastener Caution.

2. Install the battery positive cable to battery nut (2) and tighten to **4.5 Y (40 lb in)**.
3. Install the battery positive cable to fuse box nut (1) and tighten to **9 Y (80 lb in)**.

cardiagn.com

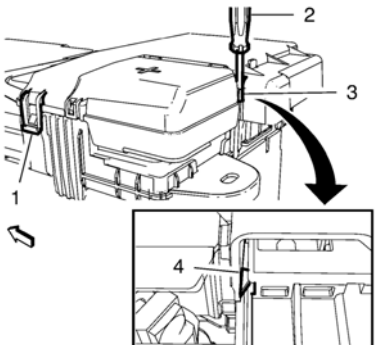

4. Close the battery fuse box cover and lock the retaining tabs (1) and (4).
5. Connect the battery negative cable. Refer to Battery Negative Cable Disconnection and Connection.

cardiagn.com

Special Tools

GE-49379 Battery Remover

For equivalent regional tools, refer to Special Tools

Removal Procedure

1. Disconnect battery negative cable. Refer to Battery Negative Cable Disconnection and Connection.

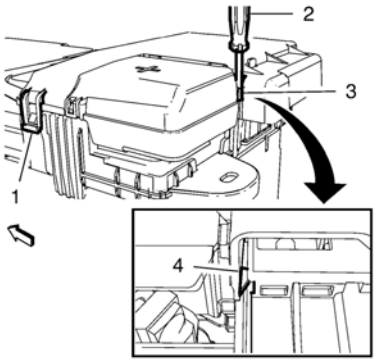

2. Unlock the retaining tab (1) on the battery fuse box cover.
3. Use a suitable screw driver (2) to unlock the clip (4) through the window (3).

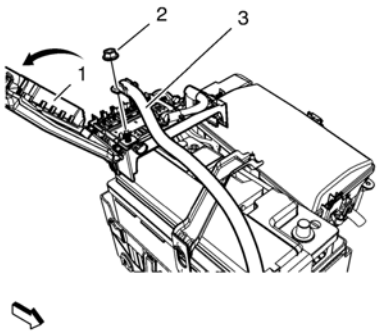

Note: Pull the battery fuse box housing. DO NOT pull the flap.

4. Open the battery fuse box cover (1).
5. Remove the positive battery cable to starter nut (2).
6. Remove the positive battery cable to starter (3) from the battery.

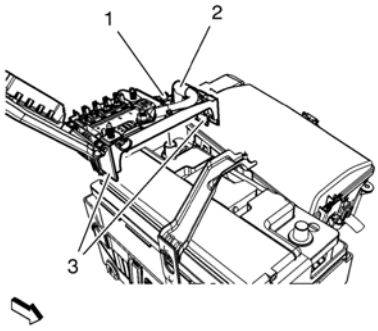

7. Loosen the positive battery cable nut (1) on the battery.
8. Remove the positive battery cable (2)
9. Unlock the 2 retaining tabs (3) and remove positive battery cable cover.

cardiagn.com

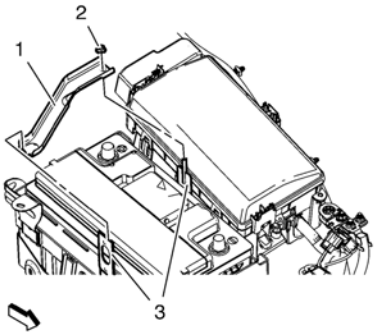

10. Remove the battery hold down retainer nut (2).
11. Remove the battery hold down retainer (1) from the battery tray (3).

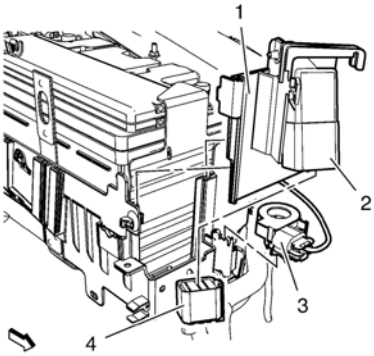

12. Unclip the battery current sensor (3) from the battery tray.
13. Disconnect the glow plug controller wiring harness plug (4).
14. Remove the glow plug controller bracket (2) from the battery tray.

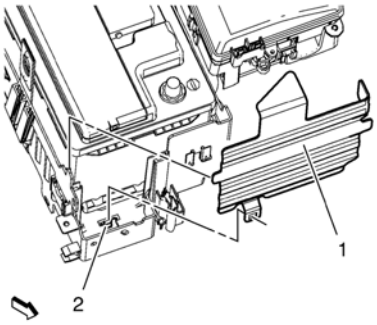

15. Unlock the retaining tab (2) and remove the protector battery tray (1).
16. Remove the battery with the *GE-49379* remover .

Installation Procedure

1. Install the battery with the *GE-49379* remover .

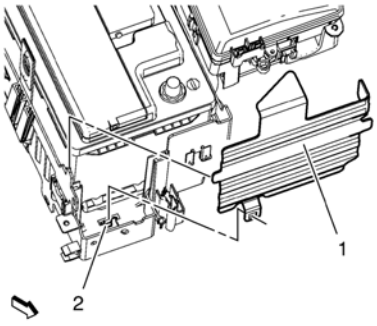

2. Install the protector battery tray (1).

cardiagn.com

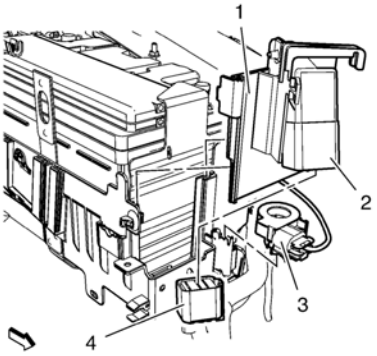

3. Install the glow plug controller bracket (2) at the battery tray.
4. Connect the glow plug controller wiring harness plug (4).
5. Clip in the battery current sensor (3) at the battery tray.

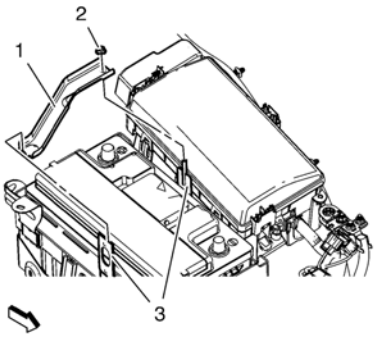

6. Install the battery hold down retainer (1) at the battery tray (3).

Caution: Refer to Fastener Caution.

7. Install the battery hold down retainer nut (2) and tighten to **9 Y (80 lb in)**.

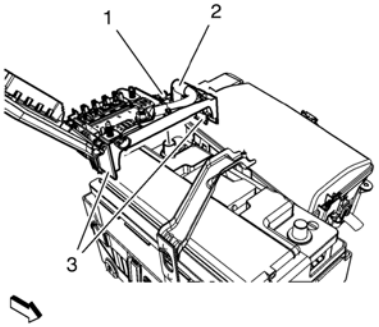

8. Install the positive battery cable cover and lock the 2 retaining tabs (3).
9. Install the positive battery cable (2).
10. Tighten the positive battery cable nut (1) on the battery to **9 Y (80 lb in)**.

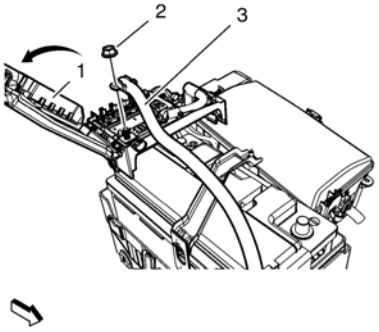

11. Install the positive battery cable to starter (3).
12. Install the positive battery cable to starter nut (2) and tighten to **9 Y (80 lb in)**.

cardiagn.com

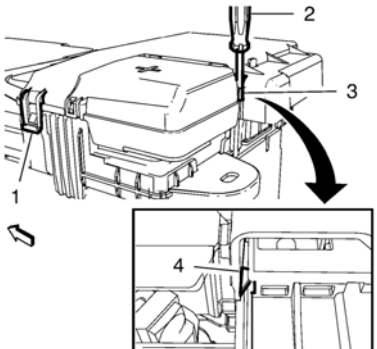

13. Close the battery fuse box cover and lock the retaining tabs (1) and (4).
14. Connect battery negative cable. Refer to Battery Negative Cable Disconnection and Connection.

cardiagn.com

Removal Procedure

1. Open the hood.
2. Remove the battery. Refer to Battery Replacement.
3. Unclip all wiring harness from the battery tray.
4. Unclip the engine control module bracket from the battery tray.
5. If equipped, unclip the radiator surge tank engine hose from the battery tray.

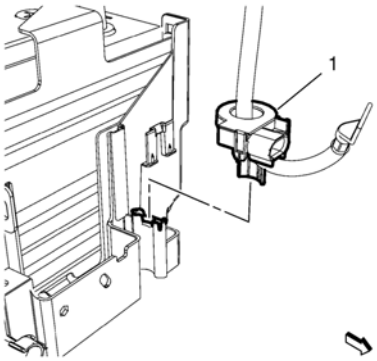

6. Unclip the battery current sensor (1) from the battery tray.

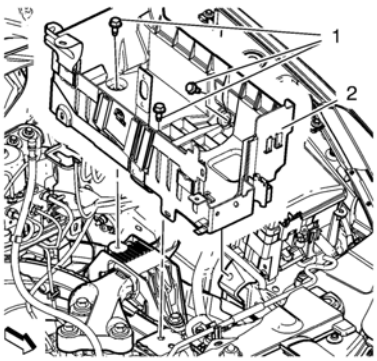

7. Remove the 3 battery tray bolts (1).
8. Remove the battery tray (2).

Installation Procedure

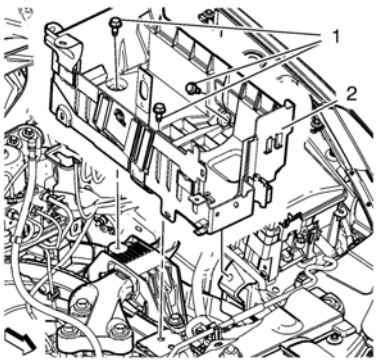

1. Install the battery tray (2).

Caution: Refer to Fastener Caution.

2. Install the 3 battery tray bolts (1) and tighten to **15 Y (11 lb ft)**.

cardiagn.com

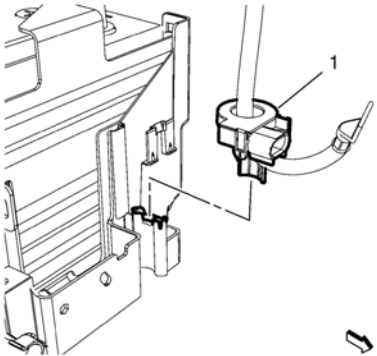

3. Clip in the battery current sensor (1) to the battery tray.
4. If equipped, clip in the radiator surge tank engine hose to the battery tray.
5. Install battery. Refer to Battery Replacement.
6. Clip in all wiring harness at the battery tray.
7. Clip in the engine control module bracket to the battery tray.
8. Close the hood.

cardiagn.com

Electrical Power Management Overview

The electrical power management system is designed to monitor and control the charging system and send diagnostic messages to alert the driver of possible problems with the battery and generator. This electrical power management system primarily utilizes existing on-board computer capability to maximize the effectiveness of the generator, to manage the load, improve battery state-of-charge and life, and minimize the system's impact on fuel economy. The electrical power management system performs 3 functions:

- It monitors the battery voltage and estimates the battery condition.
- It takes corrective actions by boosting idle speeds, and adjusting the regulated voltage.
- It performs diagnostics and driver notification.

The battery condition is estimated during ignition-off and during ignition-on. During ignition-off the state-of-charge of the battery is determined by measuring the open-circuit voltage. The state-of-charge is a function of the acid concentration and the internal resistance of the battery, and is estimated by reading the battery open circuit voltage when the battery has been at rest for several hours.

The state-of-charge can be used as a diagnostic tool to tell the customer or the dealer the condition of the battery. Throughout ignition-on, the algorithm continuously estimates state-of-charge based on adjusted net amp hours, battery capacity, initial state-of-charge, and temperature.

While running, the battery degree of discharge is primarily determined by a battery current sensor, which is integrated to obtain net amp hours.

In addition, the electrical power management function is designed to perform regulated voltage control to improve battery state-of-charge, battery life, and fuel economy. This is accomplished by using knowledge of the battery state-of-charge and temperature to set the charging voltage to an optimum battery voltage level for recharging without detriment to battery life.

The Charging System Description and Operation is divided into 3 sections. The first section describes the charging system components and their integration into the electrical power management. The second section describes charging system operation. The third section describes the instrument panel cluster operation of the charge indicator, driver information center messages, and voltmeter operation.

Charging System Components

Generator

The generator is a serviceable component. If there is a diagnosed failure of the generator it must be replaced as an assembly. The engine drive belt drives the generator. When the rotor is spun it induces an alternating current (AC) into the stator windings. The AC voltage is then sent through a series of diodes for rectification. The rectified voltage has been converted into a direct current (DC) for use by the vehicles electrical system to maintain electrical loads and the battery charge. The voltage regulator integral to the generator controls the output of the generator. It is not serviceable. The voltage regulator controls the amount of current provided to the rotor. If the generator has field control circuit failure, the generator defaults to an output voltage of 13.8 V.

Body Control Module (BCM)

The body control module (BCM) is a GMLAN device. It communicates with the engine control module (ECM) and the instrument panel cluster for electrical power management (electrical power management) operation. The BCM determines the output of the generator and sends the information to the ECM for control of the generator turn on signal circuit. It monitors the generator field duty cycle signal circuit information sent from the ECM for control of the generator. It monitors a battery current sensor, the battery positive voltage circuit, and estimated battery temperature to determine battery state of charge. The BCM performs idle boost.

Battery Current Sensor

The battery current sensor is a serviceable component that is connected to either the negative or positive battery cable at the battery. The battery current sensor is a 3-wire hall effect current sensor. The battery current sensor monitors the battery current. It directly inputs to the BCM. It creates a 5-volt pulse width modulation (PWM) signal of 128 Hz with a duty cycle of 0–100 percent. Normal duty cycle is between 5–95 percent. Between 0–5 percent and 95–100 percent are for diagnostic purposes.

Engine Control Module (ECM)

When the engine is running, the generator turn-on signal is sent to the generator from the ECM, turning on the regulator. The generator's voltage regulator controls current to the rotor, thereby controlling the output voltage. The rotor current is proportional to the electrical pulse width supplied by the regulator. When the engine is started, the regulator senses generator rotation by detecting AC voltage at the stator through an internal wire. Once the engine is running, the regulator varies the field current by controlling the pulse width. This regulates the generator output voltage for proper battery charging and electrical system operation. The generator field duty terminal is connected internally to the voltage regulator and externally to the ECM. When the voltage regulator detects a charging system problem, it grounds this circuit to signal the ECM that a problem exists. The ECM monitors the generator field duty cycle signal circuit, and receives control decisions based on information from the BCM.

Instrument Panel Cluster

The instrument panel cluster provides the customer notification in case a concern with the charging system. There are 2 means of notification, a charge indicator and a driver information center message of SERVICE BATTERY CHARGING SYSTEM if equipped.

Charging System Block Diagram

cardiagn.com

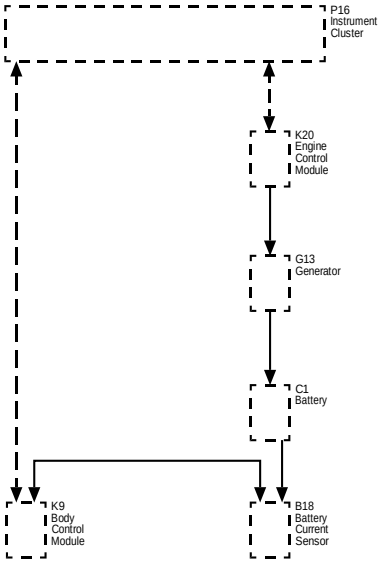

Charging System Operation

The purpose of the charging system is to maintain the battery charge and vehicle loads. There are 6 modes of operation and they include:

- Battery Sulfation Mode
- Charge Mode
- Fuel Economy Mode
- Headlamp Mode
- Start Up Mode
- Voltage Reduction Mode

The engine control module (ECM) controls the generator through the generator turn ON signal circuit. The ECM monitors the generator performance though the generator field duty cycle signal circuit. The signal is a pulse width modulation (PWM) signal of 128 Hz with a duty cycle of 0–100 percent. Normal duty cycle is between 5–95 percent. Between 0–5 percent and 95–100 percent are for diagnostic purposes. The following table shows the commanded duty cycle and output voltage of the generator:

Commanded Duty Cycle	Generator Output Voltage
10%	11 V
20%	11.56 V
30%	12.12 V
40%	12.68 V
50%	13.25 V
60%	13.81 V
70%	14.37 V
80%	14.94 V
90%	15.5 V

The generator provides a feedback signal of the generator voltage output through the generator field duty cycle signal circuit to the ECM. This information is sent to the body control module (BCM). The signal is PWM signal of 128 Hz with a duty cycle of 0–100 percent. Normal duty cycle is between 5–99 percent. Between 0–5 percent and 100 percent are for diagnostic purposes.

Battery Sulfation Mode

The BCM will enter this mode when the interpreted generator output voltage is less than 13.2 V for 45 minutes. When this condition exists the BCM will enter Charge Mode for 2–3 minutes. The BCM will then determine which mode to enter depending on voltage requirements.

Charge Mode

The BCM will enter Charge Mode when ever one of the following conditions are met.

- The wipers are ON for more than 3 seconds.
- GMLAN (Climate Control Voltage Boost Mode Request) is true, as sensed by the HVAC control head. High speed cooling fan, rear defogger and HVAC high speed blower operation can cause the BCM to enter the Charge Mode.

cardiagn.com

- The estimated battery temperature is less than 0°C (32°F).
- Battery State of Charge is less than 80 percent.
- Vehicle speed is greater than 145 km/h (90 mph)
- Current sensor fault exists.
- System voltage was determined to be below 12.56 V

When any one of these conditions is met, the system will set targeted generator output voltage to a charging voltage between 13.9–15.5 V, depending on the battery state of charge and estimated battery temperature.

Fuel Economy Mode

The BCM will enter Fuel Economy Mode when the estimated battery temperature is at least 0°C (32°F) but less than or equal to 80°C (176°F), the calculated battery current is less than 15 amperes and greater than −8 amperes, and the battery state-of-charge is greater than or equal to 80 percent. Its targeted generator output voltage is the open circuit voltage of the battery and can be between 12.5–13.1 V. The BCM will exit this mode and enter Charge Mode when any of the conditions described above are present.

Headlamp Mode

The BCM will enter Headlamp Mode when ever the headlamps are ON (high or low beams). Voltage will be regulated between 13.9–14.5 V.

Start Up Mode

When the engine is started the BCM sets a targeted generator output voltage of 14.5 V for 30 seconds.

Voltage Reduction Mode

The BCM will enter Voltage Reduction Mode when the calculated ambient air temperature is above 0°C (32°F). The calculated battery current is less than 1 ampere and greater than −7 amperes, and the generator field duty cycle is less than 99 percent. Its targeted generator output voltage is 12.9 V. The BCM will exit this mode once the criteria are met for Charge Mode.

Instrument Panel Cluster Operation

Charge Indicator Operation

The instrument panel cluster illuminates the charge indicator and displays a warning message in the driver information center if equipped, when the one or more of the following occurs:

- The engine control module (ECM) detects that the generator output is less than 11 V or greater than 16 V. The instrument panel cluster receives a GMLAN message from the ECM requesting illumination.
- The instrument panel cluster determines that the system voltage is less than 11 V or greater than 16 V for more than 30 seconds. The instrument panel cluster receives a GMLAN message from the body control module (BCM) indicating there is a system voltage range concern.
- The instrument panel cluster performs the displays test at the start of each ignition cycle. The indicator illuminates for approximately 3 seconds.

Display Message: BATTERY NOT CHARGING SERVICE CHARGING SYSTEM or SERVICE BATTERY CHARGING SYSTEM

The BCM and the ECM will send a serial data message to the driver information center for the BATTERY NOT CHARGING SERVICE CHARGING SYSTEM or SERVICE BATTERY CHARGING SYSTEM message to be displayed. It is commanded ON when a charging system DTC is a current DTC. The message is turned OFF when the conditions for clearing the DTC have been met.

cardiagn.com

Note: This is an overview of different serial data buses used by GM devices to communicate with each others. Use Data Communication Schematics to find out which serial data buses are configured for a specific vehicle.

Circuit Description

There are many components in a vehicle that rely on information from other sources, transmit information to other sources, or both. Serial data communication networks provide a reliable, cost effective, way for various components of the vehicle to “talk” to one another and share information.

GM uses a number of different communication buses to insure the timely and efficient exchange of information between devices. When compared to each other, some of these buses are different in nature as far as speed, signal characteristics, and behavior. An example of this is the High Speed GMLAN and Low Speed GMLAN buses.

On the other hand, when other buses are compared to each other they have similar characteristics and simply operate in parallel. In this case they are used to group together components which have high interaction. Examples are the High Speed GMLAN, Powertrain Expansion, and Chassis Expansion buses. This allows them to communicate with each other on a bus with reduced message congestion insuring faster and the more timely exchange of information than if all vehicle devices were on a single bus.

The majority of information that exists within a given network generally stays local; however some information will have to be shared on other networks. Control modules designated as Gateway’s perform the function of transferring information between the various buses. A Gateway module is connected to at least 2 buses and will interact with each network according to its message strategy and transmission models.

GMLAN provides the capability for a receiving device to monitor message transmissions from other devices in order to determine if messages of interest are not being received. The primary purpose is to allow reasonable default values to be substituted for the information no longer being received. Additionally, a device may set a Diagnostic Trouble Code to indicate that the device it is expecting information from is no longer communicating.

High Speed GMLAN Circuit Description

A High Speed GMLAN Bus is used where data needs to be exchanged at a high enough rate to minimize the delay between the occurrence of a change in sensor value and the reception of this information by a control device using the information to adjust vehicle system performance.

The High Speed GMLAN serial data network consists of two twisted wires. One signal circuit is identified as GMLAN-High and the other signal circuit is identified as GMLAN-Low. At each end of the data bus there is a 120 Ω termination resistor between the GMLAN-High and GMLAN-Low circuits.

Data symbols (1’s and 0’s) are transmitted sequentially at a rate of 500 Kbit/s. The data to be transmitted over the bus is represented by the voltage difference between the GMLAN-High signal voltage and the GMLAN-Low signal voltage.

When the two wire bus is at rest the GMLAN-High and GMLAN-Low signal circuits are not being driven and this represents a logic “1”. In this state both signal circuits are at the same voltage of 2.5 V. The differential voltage is approximately 0 V.

When a logic “0” is to be transmitted, the GMLAN-High signal circuit is driven higher to about 3.5 V and the GMLAN-Low circuit is driven lower to about 1.5 V. The differential voltage becomes approximately 2.0 (+/- 0.5) V.

Chassis High Speed GMLAN Circuit Description

The GMLAN Chassis Expansion Bus is basically a copy of the High Speed GMLAN Bus except that its use is reserved for chassis components. This implementation splits message congestion between two parallel buses helping to insure timely message transmission and reception. Sometimes communication is required between the Chassis Expansion Bus and the primary High Speed GMLAN Bus. This is accomplished by using the K17 Electronic Brake Control Module (EBCM) as the Gateway module. Since the High Speed GMLAN Chassis Expansion Bus and primary High Speed GMLAN Bus operate in the same manner, the diagnostics for each are similar.

Object High Speed GMLAN Circuit Description

The GMLAN Object Bus is basically a copy of the High Speed GMLAN Bus except that its use is reserved for the enhanced safety system. This implementation is used to isolate the heavy communication among the enhanced safety system devices from the other vehicle buses, reducing congestion. The K124 Active Safety Control Module is connected to the Object Bus as well as the Primary High Speed GMLAN Bus, the Chassis Expansion Bus, and the Low Speed GMLAN Bus. The K124 Active Safety Control Module acts as a Gateway module for all required communication between the Object Bus devices and devices on these other vehicle buses. The GMLAN Object Bus operates in the same manner as the Chassis Expansion and Primary High Speed buses and so the diagnostics are similar. The Object Bus is physically partitioned into a Front Object Bus and a Rear Object Bus with each partition having its own communication enable circuit to activate the partition, but functional operation of both is identical. The Front Object Bus standard devices are the K124 Active Safety Control Module, the K109 Frontview Camera Module, and the B233B Radar Sensor Module – Long Range. The Front Object Bus optional devices are the B233LF Radar Sensor Module – Short Range Left Front and the B233RF Radar Sensor Module – Short Range Right Front. The Rear Object Bus is optional and when present will have the K124 Active Safety Control Module and B233R Radar Sensor Module – Short Range Rear on the bus, and optionally the Radar Sensor Module – Short Range Right Rear. All Object Bus components are powered by the K124 Active Safety Control Module via the communication enable circuits, except the K109 Frontview Camera Module which is powered directly by battery.

Media Oriented Systems Transport (MOST) Circuit Description

The MOST Infotainment network is a dedicated high speed multimedia streaming data bus independent from GMLAN. The MOST bus will be configured in a physical hardwired loop with each device within the bus sends and receives data on an assigned MOST addresses in a set order. Each device on the MOST bus will be required to have twisted pair copper wires (2 transmit TX, 2 receive RX, and 1 electronic control line which is a 12 V wakeup signal line). The A11 Radio is the MOST Master and will monitor the bus for vehicle configuration, Infotainment data messages and errors on the bus. The MOST initialization consists of a short 100 ms low voltage pulse on the electronic control line (or MOST control line) connected to all devices contained on the MOST ring. This wakeup message once received by each device, will first respond with a generic device response. Once these initial responses on the MOST bus are reported successfully without error to the A11 Radio, the second data request will record the MOST device addresses, their functionality requirements and capabilities within. The A11 Radio will learn this information and also record the address node sequence on the MOST bus at this point. This node address list will now be stored within the A11 Radio as the MOST bus configuration (called “Last Working MOST ID of Node 1 – 9” on scan tool data display).

When MOST receive, transmit, or control line faults are detected, transmit/receive messages will not received as expected from the wakeup request. The A11 Radio and the K74 Human Machine Interface Control Module will then perform diagnostics to isolate these MOST faults. If the MOST control line is shorted low to 0 V for excess amount of time, the A11 Radio will set a U2098 DTC and K74 Human Machine Interface Control Module will set a U0029 02 DTC. At this point the MOST bus will be unable to communicate until the shorted MOST control line is repaired.

Once the shorted MOST control line diagnostics pass, the A11 Radio will attempt to resend the initial short pulse attempts up to 3 times on the MOST control line. If the expected responses are not received, the A11 Radio continues into a failure mode setting a U0028 DTC and will continue on to send one 300 ms long pulse, which will enable the furthest upstream transmitting device to become the surrogate MOST Master in this MOST fault/diagnostic mode. When the A11 Radio receives this new MOST Master identity, the surrogate MOST master device can be identified based on scan tool data parameter “Surrogate MOST Master Node

cardiagn.com

Upstream Position". The scan tool should be used to determine the MOST bus configuration and direction by utilizing the "Last Working MOST ID of Node 1 – 9" parameters from the A11 Radio data display. When a fault is present, it will indicate the newly enabled "Surrogate MOST Master Node Upstream Position" from the A11 Radio. This will assist in determining where the MOST bus/control is at fault. The MOST device upstream from the surrogate MOST master device, transmit, receive, or control lines will be the suspect areas for diagnostics at this point. These faults can be associated with any of the MOST transmit, receive, or control line twisted copper wires or possibly an internal device fault.

The K74 Human Machine Interface Control Module will set a U0029 00 DTC when it diagnoses a MOST bus not communicating properly after one attempt. When the DTC U0029 00 is set by the K74 Human Machine Interface Control Module without the corresponding DTC U0028 from the A11 Radio, it will be an indication of an intermittent wiring/device condition.

CAN Graphical Interface (CGI) Circuit Description

This bus is used by the Entertainment sub-system to transfer high-rate display graphics between the A11 Radio and the P17 Info Display Module and/or Radio/HVAC Control. The electrical characteristics of the CAN Graphical Interface (CGI) Bus are very similar to the High Speed GMLAN Bus. The message strategy and construction of messages are different however. Sometimes communication is required between the CAN Graphical Interface Bus and the Low Speed GMLAN Bus. This is accomplished by using the A11 Radio as the Gateway module. Since the CAN Graphical Interface Bus and primary High Speed GMLAN Bus have similar electrical characteristics, the diagnostics for each are similar.

In the case where the P17 Info Display Module and Radio/HVAC Control are separate devices the P17 Info Display Module is responsible for passing information between the A11 Radio and the Radio/HVAC Control. The A11 Radio interfaces only with the P17 Info Display Module and the P17 Info Display Module then communicates with the Radio/HVAC Control through a Local Interconnect Network (LIN) interface.

A bus wake up signal will be generated by the A11 Radio or by the P17 Info Display Module when the system functionality is required. The communication function of the CAN Graphical Interface shall be enabled or disabled based on the voltage level of the Center Stack Wake. The network will stay awake as long as the circuit voltage is driven low, to less than 1.5 V. Communications are disabled with a high circuit voltage around 5.0 V.

The A11 Radio can execute a warm reset of the P17 Info Display Module if the P17 Info Display Module fails to respond to the A11 Radio's request. The Center Stack Reset is a low-asserted pull down output (less than 1.5 V) from the A11 Radio to the P17 Info Display Module and has the same electrical characteristics as those for the Center Stack Wake signal defined above.

Mid Speed GMLAN Circuit Description

The Mid Speed GMLAN Bus is very similar to the High Speed GMLAN Bus except that it uses a slower transmission rate of 125 Kbit/s. This bus is intended for use where the system response time demands that a large amount of data be transmitted in a relatively short amount of time, such as updating a graphics display. As such it has usually been used for infotainment applications. Sometimes communication is required between the Low Speed GMLAN Bus and the Mid Speed GMLAN Bus. This is accomplished by using the A11 Radio as the Gateway module. Since the Mid Speed GMLAN Bus and primary High Speed GMLAN Bus operate in a similar manner, the diagnostics for each are similar.

Low Speed GMLAN Circuit Description

Low Speed GMLAN Bus is used in applications where a high data rate is not required which allows for the use of less complex components. It is typically used for operator controlled functions where the response time requirements are slower than those required for dynamic vehicle control.

The Low Speed GMLAN Serial Data Network consists of a single wire, ground referenced bus with high side voltage drive. During on road vehicle operation data symbols (1's and 0's) are transmitted sequentially at the normal rate of 33.3 Kbit/s. For component programming only, a special high speed data mode of 83.3 Kbit/s may be used.

Unlike the high speed dual wire networks, the single wire low speed network does not use terminating resistors at either end of the network.

The data symbols to be transmitted over the bus are represented by different voltage signals on the bus. When the Low Speed GMLAN Bus is at rest and is not being driven, there is a low signal voltage of approximately 0.2 V. This represents a logic "1". When a logic "0" is to be transmitted, the signal voltage is driven higher to around 4.0 V or higher.

Local Interconnect Network (LIN) Circuit Description

The Local Interconnect Network (LIN) Bus consists of a single wire with a transmission rate of 10.417 Kbit/s. This bus is used to exchange information between a master control module and other smart devices which provide supporting functionality. This type of configuration does not require the capacity or speed of either a High Speed GMLAN Bus or Low Speed GMLAN Bus and is thus relatively simpler.

The data symbols (1's and 0's) to be transmitted are represented by different voltage levels on the communication bus. When the LIN Bus is at rest and is not being driven, the signal is in a high voltage state of approximately Vbatt. This represents a logic "1". When a logic "0" is to be transmitted, the signal voltage is driven low to about ground (0.0 V).

Communication Enable Circuit Description

Devices on High Speed GMLAN Bus enable or disable communication based on the voltage level of the communication enable circuit. When the circuit voltage is high (around 12 V), communications are enabled. When the circuit is low, communications are disabled.

Data Link Connector (DLC)

The X84 Data Link Connector (DLC) is a standardized 16-cavity connector. Connector design and location is dictated by an industry wide standard, and is required to provide the following:

- Pin 1 Low speed GMLAN communications terminal
- Pin 2 Class 2 communications terminal
- Pin 3 Mid speed GMLAN serial bus (+) terminal or Object high speed GMLAN serial bus (+) terminal
- Pin 4 Scan tool power ground terminal
- Pin 5 Common signal ground terminal
- Pin 6 High speed GMLAN serial data bus (+) terminal
- Pin 7 Keyword communications terminal
- Pin 11 Mid speed GMLAN serial bus (-) terminal or Object high speed GMLAN serial bus (-) terminal
- Pin 12 Chassis high speed GMLAN serial bus (+) terminal
- Pin 13 Chassis high speed GMLAN serial bus (-) terminal
- Pin 14 High speed GMLAN serial data bus (-) terminal
- Pin 16 Scan tool power, battery positive voltage terminal

Serial Data Reference

The scan tool communicates over the various buses on the vehicle. When a scan tool is installed on a vehicle, the scan tool will try to communicate with every device that could be optioned into the vehicle. If an option is not installed on the vehicle, the scan tool will display No Comm (or Not Connected) for that optional device. In order to avert misdiagnoses of No Communication with a specific device, refer to Data Link References for a list of devices, the buses they communicate with, and the RPO codes for a specific device.

cardiagn.com

Electrical Power Management

The electrical power management is used to monitor and control the charging system and alert the driver of possible problems within the charging system. The electrical power management system makes the most efficient use of the generator output, improves the battery state-of-charge, extends battery life, and manages system electrical loads.

The load shed operation is a means of reducing electrical loads during a low voltage or low battery state-of-charge condition.

The idle boost operation is a means of improving generator performance during a low voltage or low battery state-of-charge condition.

Each electrical power management function, either idle boost or load shed, is discrete. No two functions are active at the same time. Idle boost is activated in incremental steps, idle boost 1 must be active before idle boost 2 can be active. The criteria used by the body control module (BCM) to regulate electrical power management are outlined below:

Electrical Power Management Block Diagram

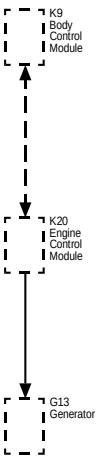

Function	Battery Temperature Calculation	Battery Voltage Calculation	Amp-Hour Calculation	Action Taken
Idle Boost 1 Start	Less Than −15°C (5°F)	Less Than 13 V	—	First level Idle boost requested
Idle Boost 1 Start	—	—	Battery has a net loss greater than 0.6 Ah	First level Idle boost requested
Idle Boost 1 Start	—	Less Than 10.9 V	—	First level Idle boost requested
Idle Boost 1 End	Greater Than −15°C (5°F)	Greater Than −12 V	Battery has a net loss less than 0.2 Ah	First level Idle boost request cancelled
Load Shed 1 Start	—	—	Battery has a net loss of 4 Ah	Rear Defrost, Heated Mirrors, Heated Seats cycled OFF for 20% of their cycle
Load Shed 1 Start	—	Less Than 10.9 V	—	Rear Defrost, Heated Mirrors, Heated Seats cycled OFF for 20% of their cycle
Load Shed 1 End	—	Greater Than 12 V	Battery has a net loss of less than 2 Ah	Clear Load Shed 1

cardiagn.com

Function	Battery Temperature Calculation	Battery Voltage Calculation	Amp-Hour Calculation	Action Taken
Idle Boost 2 Start	—	—	Battery has a net loss greater than 1.6 Ah	Second level Idle boost requested
Idle Boost 2 Start	—	Less Than 10.9 V	—	Second level Idle boost requested
Idle Boost 2 End	—	Greater Than 12 V	Battery has a net loss less than 0.8 Ah	Second level Idle boost request cancelled
Idle Boost 3 Start	—	—	Battery has a net loss of 10 Ah	Third level Idle boost requested
Idle Boost 3 Start	—	Less Than 10.9 V	—	Third level Idle boost requested
Idle Boost 3 End	—	Greater Than 12 V	Battery has a net loss of less than 6.0 Ah	Third level Idle boost request cancelled
Load Shed 2 Start	—	Less Than 10 V	Battery has a net loss greater than 12 Ah	Rear Defrost, Heated Mirrors, Heated Seats cycled OFF for 50% of their cycle. The BATTERY SAVER ACTIVE message will be displayed on the DIC
Load Shed 2 Start	—	Less Than 10.9 V	—	Rear Defrost, Heated Mirrors, Heated Seats cycled OFF for 50% of their cycle. The BATTERY SAVER ACTIVE message will be displayed on the DIC
Load Shed 2 End	—	Greater Than 12.6 V	Battery has a net loss of less than 10.5 Ah	Clear Load Shed 2
Load Shed 3 Start	—	Less Than 11.9 V	Battery has a net loss greater than 20 Ah	Rear Defrost, Heated Mirrors, Heated Seats cycled OFF for 100% of their cycle. The BATTERY SAVER ACTIVE message will be displayed on the DIC
Load Shed 3 End	—	Greater Than 12.6 V	Battery has a net loss of less than 15 Ah	Clear Load Shed 3

cardiagn.com

Removal Procedure

1. Disconnect the battery negative cable. Refer to Battery Negative Cable Disconnection and Connection.

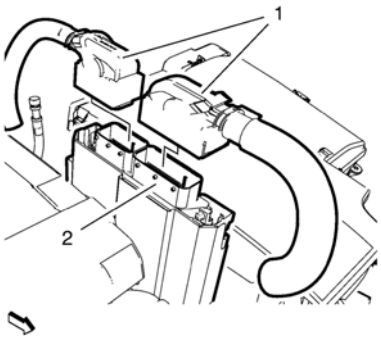

2. Disconnect the 2 engine control module wiring harness plugs (1) from the engine control module (2).

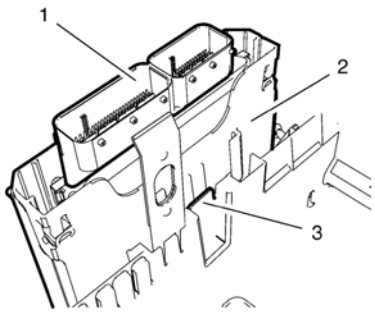

3. Remove the engine control module bracket (2) along with the engine control module (1) from the battery tray (3).
4. Remove the battery tray. Refer to Battery Tray Replacement.
5. Remove the windshield washer solvent container filler tube. Refer to Windshield Washer Solvent Container Filler Tube Replacement.
6. Remove the front compartment fuse block. Refer to Front Compartment Fuse Block Replacement.
7. Remove the engine sight shield. Refer to Engine Sight Shield Replacement.

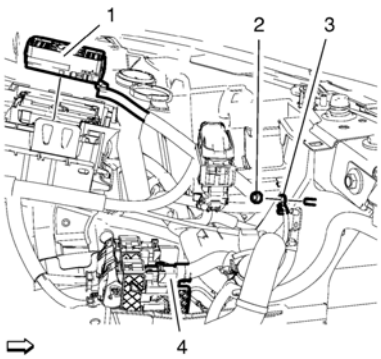

8. Remove the wiring harness ground cable nut (2) and remove the wiring harness ground cable (3).
9. Remove the wiring harness plug (1) in top direction from the front compartment fuse block housing.
10. Disconnect the wiring harness connection adapter plug (4).
11. Remove the 2 wiring harness clips from the drivetrain and front suspension frame front inner support and from the charge air cooler outlet hose.

cardiagn.com

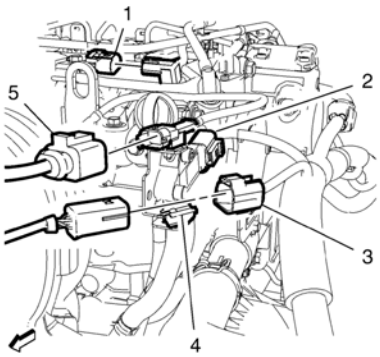

12. Disconnect the exhaust temperature sensor wiring harness plug (5).
13. Unclip the heated oxygen sensor wiring harness plug (3) from the retainer clip (4) and disconnect the heated oxygen sensor wiring harness plug (3).
14. Disconnect the exhaust pressure differential sensor hose wiring harness plug (2).
15. Disconnect the camshaft position sensor wiring harness plug (1).

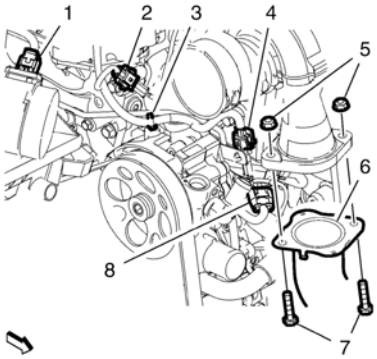

16. Remove the air cleaner outlet duct. Refer to Air Cleaner Outlet Duct Replacement.
17. Remove the 2 charge air cooler inlet air hose bolts (7) from the 2 charge air cooler inlet air hose nuts (5). Hang the charge air cooler inlet air hose (6) aside.
18. Disconnect the exhaust temperature sensor wiring harness plug (2).
19. Disconnect the exhaust temperature sensor wiring harness plug (4) and unclip the wiring harness clip (3) from the steering pump.
20. Disconnect the turbocharger wastegate actuator wiring harness plug (8).
21. Disconnect the mass air flow sensor wiring harness plug (1) and remove the wiring harness clip from the air cleaner housing.

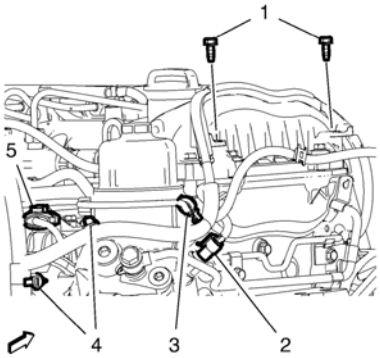

22. Disconnect the oil pressure sensor wiring harness plug (2).
23. Remove the wiring harness clip (3) from the charge air control vacuum hose.
24. Remove the 2 wiring harness channel bolts (1) from the wiring harness channel.
25. Disconnect the intake air pressure/temperature sensor wiring harness plug (5).
26. Disconnect the 2 wiring harness clips (4) from the oil filter assembly and from the intake manifold.

cardiagn.com

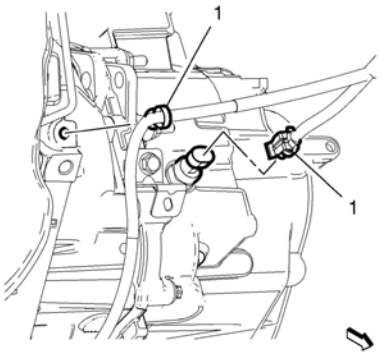

27. Disconnect the backup lamp switch wiring harness plug from the transmission.
28. Remove the wiring harness clip (1) from the transmission.
29. Raise and support the vehicle. Refer to Lifting and Jacking the Vehicle.
30. Remove the engine compartment insulator. Refer to Front Compartment Insulator Replacement.

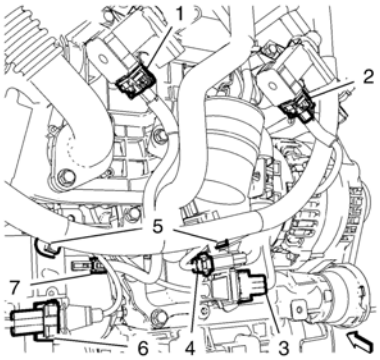

31. Disconnect the 2 knock sensor wiring harness plugs (3, 6).
32. Disconnect the generator wiring harness plug (4).
33. Disconnect the starter wiring harness plug (7).
34. Disconnect the vacuum solenoid valve wiring harness plug (1) and the vacuum solenoid valve wiring harness plug (2).
35. Remove the 2 wiring harness clips (5) from the 2 brackets.

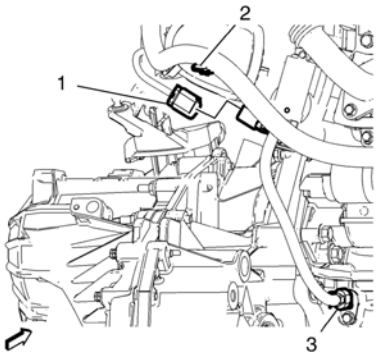

36. Disconnect the crankshaft position sensor wiring harness plug (3).
37. Disconnect the throttle body wiring harness plug (1).
38. Unclip the wiring harness clip (2) from the charge air cooler outlet hose.

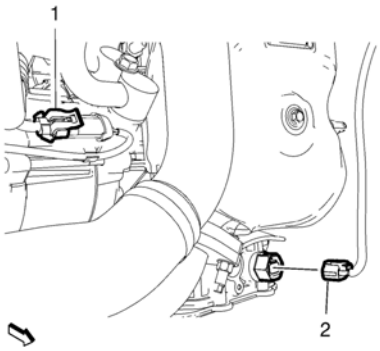

cardiagn.com

39. Disconnect the air conditioning wiring harness plug (1) and the engine oil level indicator wiring harness plug (2). Hang the wiring harness aside.
40. Lower the vehicle.

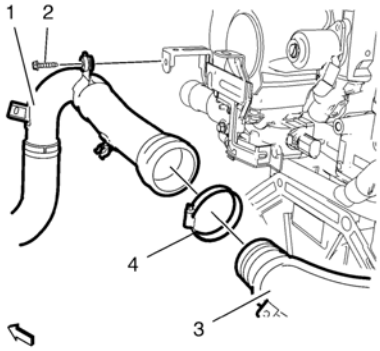

41. Remove the front charge air cooler outlet hose bolt (2) from the wiring harness bracket.
42. Remove the front charge air cooler outlet hose clamp (4) from the rear charge air cooler outlet hose (3). Hang the front charge air cooler hose (1) aside.

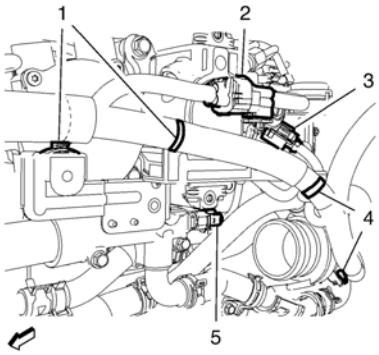

43. Unclip and disconnect the glow plug wiring harness plug (2) from the engine wiring harness bracket.
44. Disconnect the fuel pump wiring harness plug (3)
45. Disconnect the engine coolant temperature sensor wiring harness plug (5).
46. Unclip the 4 wiring harness clips (1, 4) from the wiring harness bracket.

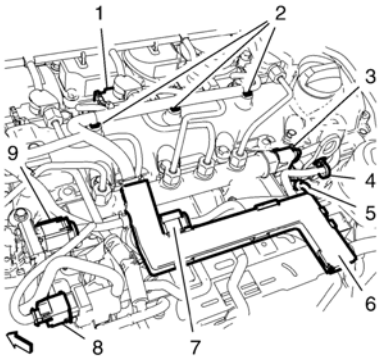

47. Disconnect the vacuum solenoid valve wiring harness plug (8).
48. Disconnect the exhaust gas recirculation valve wiring harness plug (9).
49. Disconnect the intake actuator valve wiring harness plug (7).
50. Disconnect the fuel injection rail pressure sensor wiring harness plug (3).
51. Disconnect the 4 glow plug wiring harness plugs (5).
52. Disconnect the 4 fuel injector wiring harness plugs (1).
53. Unclip the 4 engine wiring harness clips (2, 4) from the camshaft cover.
54. Unclip the engine wiring harness channel (6) in top direction from the 3 exhaust gas recirculation cooler brackets.
55. Remove the engine wiring harness from the vehicle.

Installation Procedure

cardiagn.com

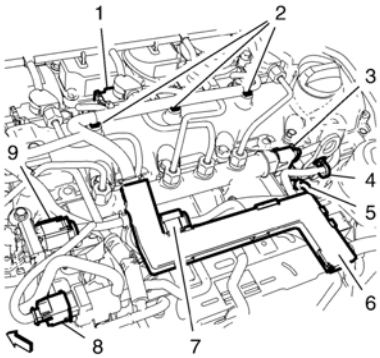

1. Position the engine wiring harness to the vehicle.
2. Clip the engine wiring harness channel (6) to the 3 exhaust gas recirculation cooler brackets.
3. Clip the 4 engine wiring harness clips (2, 4) to the camshaft cover.
4. Connect the 4 fuel injector wiring harness plugs (1).
5. Connect the fuel injection rail pressure sensor wiring harness plug (3).
6. Connect the 4 glow plug wiring harness plugs (5).
7. Connect the fuel injection pressure sensor wiring harness plug (3).
8. Connect the intake actuator valve wiring harness plug (7).
9. Connect the exhaust gas recirculation valve wiring harness plug (9).
10. Connect the vacuum solenoid valve wiring harness plug (8).

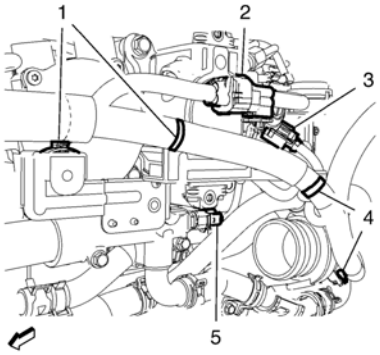

11. Clip the 4 wiring harness clips (1, 4) to the wiring harness bracket.
12. Connect the engine coolant temperature sensor wiring harness plug (5).
13. Connect the fuel pump wiring harness plug (3).
14. Clip and connect the glow plug wiring harness plug (2) to the engine wiring harness bracket.

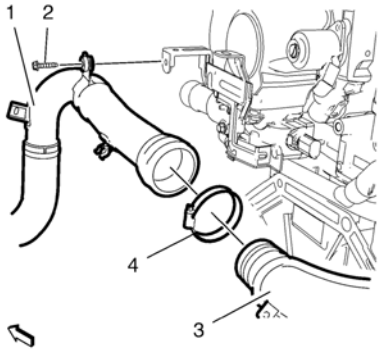

Caution: Refer to Fastener Caution.

15. Position the front charge air cooler outlet hose (1) along with the front charge air cooler outlet hose clamp (4) to the rear charge air cooler outlet hose (3) and tighten the clamp to **3.5 Y (31 lb in)**.
16. Install the front charge air cooler outlet hose bolt (2) to the wiring harness bracket and tighten to **10 Y (89 lb in)**.
17. Raise the vehicle.

cardiagn.com

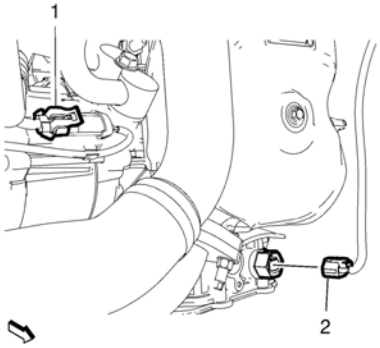

18. Position the wiring harness.
19. Connect the air conditioning wiring harness plug (1) and the engine oil level indicator wiring harness plug (2).

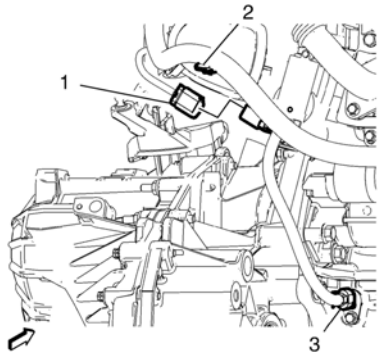

20. Clip the wiring harness clip (2) to the charge air cooler outlet hose.
21. Connect the throttle body wiring harness plug (1).
22. Connect the crankshaft position sensor wiring harness plug (3).

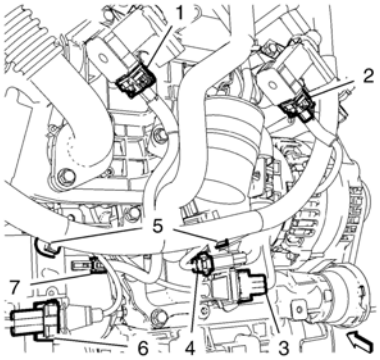

23. Install the 2 wiring harness clips (5) to the 2 brackets.
24. Connect the vacuum solenoid valve wiring harness plug (1) and the vacuum solenoid valve wiring harness plug (2).
25. Connect the starter wiring harness plug (7).
26. Connect the generator wiring harness plug (4).
27. Connect the 2 knock sensor wiring harness plugs (3, 6).
28. Install the engine compartment insulator. Refer to Front Compartment Insulator Replacement.
29. Lower the vehicle.

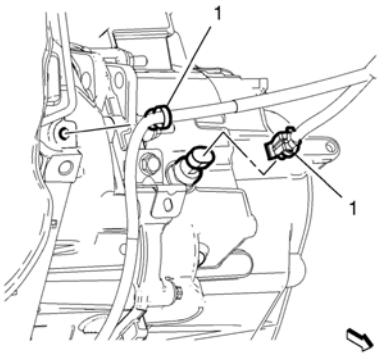

30. Install the wiring harness clip (1) to the transmission.

cardiagn.com

31. Connect the backup lamp switch wiring harness plug to the transmission.

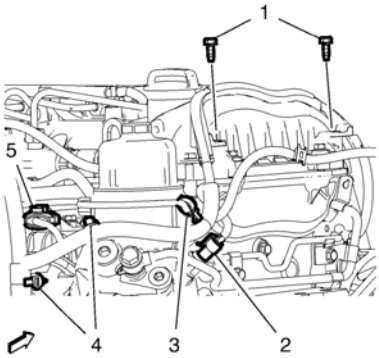

32. Connect the 2 wiring harness clips (4) to the oil filter assembly and to the intake manifold.
33. Connect the intake air pressure/temperature sensor wiring harness plug (5).
34. Install the 2 wiring harness channel bolts (1) to the wiring harness channel and tighten to **10 Y (89 lb in)**.
35. Install the wiring harness clip (3) to the charge air control vacuum hose.
36. Connect the oil pressure sensor wiring harness plug (2).

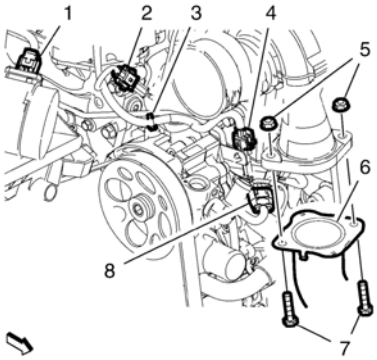

37. Connect the mass air flow sensor wiring harness plug (1) and install the wiring harness clip to the air cleaner housing.
38. Connect the turbocharger wastegate actuator wiring harness plug (8).
39. Connect the exhaust temperature sensor wiring harness plug (4) and clip the wiring harness clip (3) to the steering pump.
40. Connect the exhaust temperature sensor wiring harness plug (2).
41. Install the 2 charge air cooler inlet air hose bolts (7) to the 2 charge air cooler inlet air hose nuts (5) and tighten to **22 Y (16 lb ft)**.
42. Install the air cleaner outlet duct. Refer to Air Cleaner Outlet Duct Replacement.

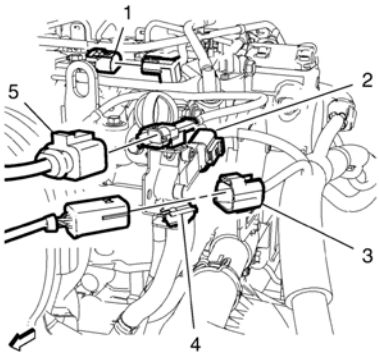

43. Connect the camshaft position sensor wiring harness plug (1).
44. Connect the exhaust pressure differential sensor hose wiring harness plug (2).
45. Clip the heated oxygen sensor wiring harness plug (3) to the retainer clip (4) and connect the heated oxygen sensor wiring harness plug (3).
46. Connect the exhaust temperature sensor wiring harness plug (5).

cardiagn.com

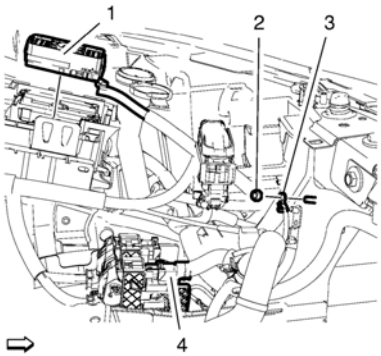

47. Install the 2 wiring harness clips to the drivetrain and front suspension frame front inner support and to the charge air cooler outlet hose.
48. Connect the wiring harness connection adapter plug (4).
49. Install the wiring harness plug (1) to the front compartment fuse block housing.
50. Install the wiring harness ground cable (3) and install the wiring harness ground cable nut (2) and tighten to **9 Y (80 lb in)**.
51. Install the front compartment fuse block. Refer to Front Compartment Fuse Block Replacement.
52. Install the engine sight shield. Refer to Engine Sight Shield Replacement.
53. Install the windshield washer solvent container filler tube. Refer to Windshield Washer Solvent Container Filler Tube Replacement.
54. Install the battery tray. Refer to Battery Tray Replacement.

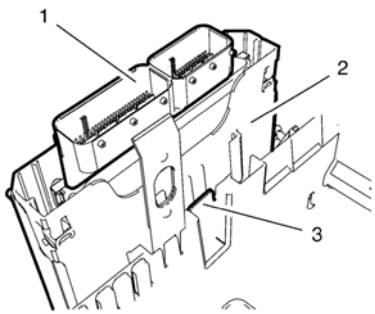

55. Install the engine control module bracket (2) along with the engine control module (1) to the battery tray (3).

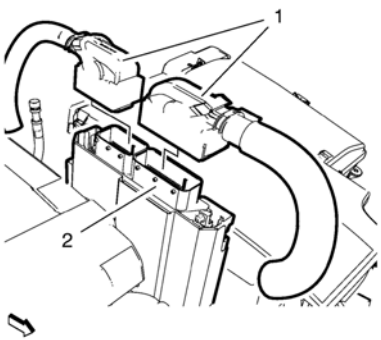

56. Connect the 2 engine control module wiring harness plugs (1) to the engine control module (2).
57. Connect the battery negative cable. Refer to Battery Negative Cable Disconnection and Connection.

cardiagn.com

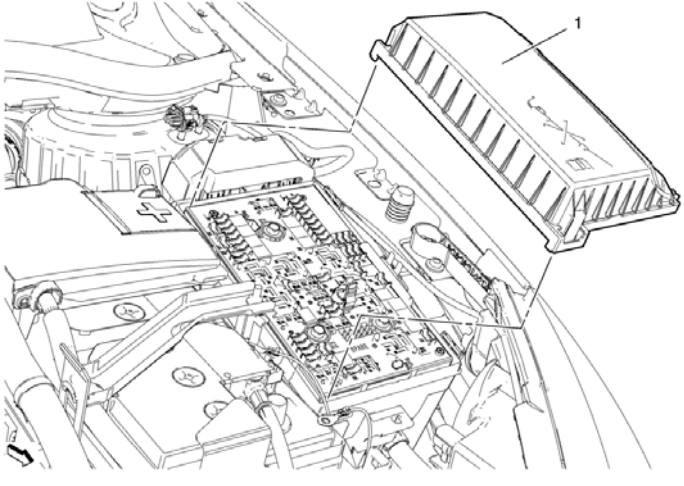

Front Compartment Fuse Block Cover Replacement

Callout	Component Name
	Front Compartment Fuse Block Cover
1	**Procedure**
	Squeeze 3 tabs to release cover.

cardiagn.com

Removal Procedure

1. Remove front compartment fuse block. Refer to Front Compartment Fuse Block Replacement.
2. Remove windshield washer solvent container filler tube.

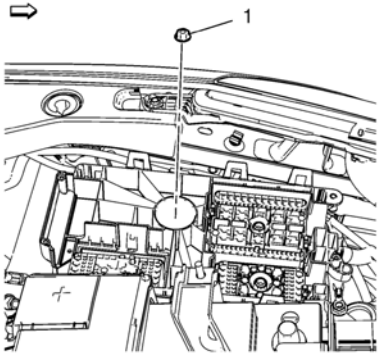

3. Remove front compartment fuse block housing nut (1).
4. Remove front compartment fuse block housing.

- Remove 3 connector from front compartment fuse block housing
- Remove attaching parts.

Installation Procedure

1. Install front compartment fuse block housing.

- Install attaching parts
- Install 3 connector.

Caution: Refer to Fastener Caution.

- Install wiring harness and install nut, tighten to **22 Y (16 lb ft)**.
- Install windshield washer solvent container filler tube.
- Install front compartment fuse block. Refer to Front Compartment Fuse Block Replacement.

cardiagn.com

Removal Procedure

1. Disconnect battery negative cable. Refer to Battery Negative Cable Disconnection and Connection
2. Remove the front compartment fuse block cover. Refer to Front Compartment Fuse Block Cover Replacement

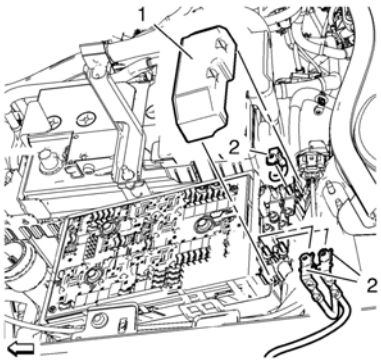

3. Open the front compartment fuse block housing cover (1) and remove the 3 power steering wiring harness nut (2) .

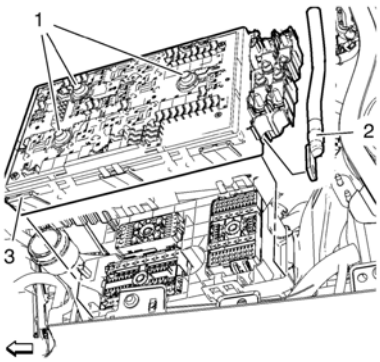

Note: Bolts (1) are encapsulated on the end of threads so that they can not be removed from the fuse block.

4. Remove the 3 front compartment fuse block bolt (1) and the front compartment fuse block wiring harness supply (2).
5. Unlock retaining tabs and remove the front compartment fuse block (3).

Installation Procedure

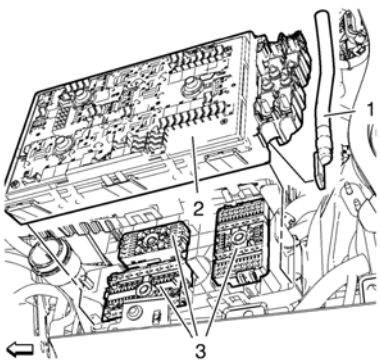

1. Push down the the 3 electrical connectors (3) before installation of the front compartment fuse block (2).

Caution: Refer to Fastener Caution

2. Install front compartment fuse block wiring harness supply (1) and tighten to **12 Y (106 lb in)**.

cardiagn.com

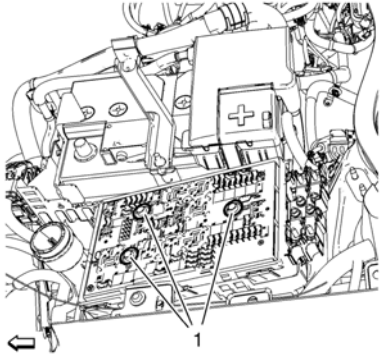

3. Install 3 front compartment fuse block bolt (1) and tighten to **7.2 Y (64 lb in)**.

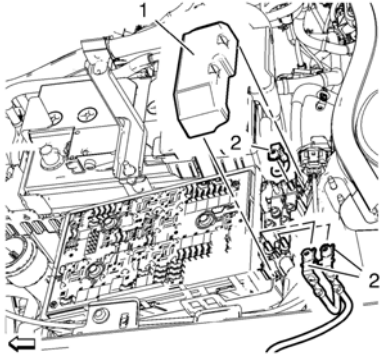

4. Install the 3 power steering wiring harness nut (2) and tighten to **4.7 Y (42 lb in)**.
5. Close the front compartment fuse block housing cover (1)
6. Install the front compartment fuse block cover. Refer to Front Compartment Fuse Block Cover Replacement
7. Connect battery negative cable. Refer to Battery Negative Cable Disconnection and Connection

cardiagn.com

Removal Procedure

1. Disconnect battery negative cable. Refer to Battery Negative Cable Disconnection and Connection.

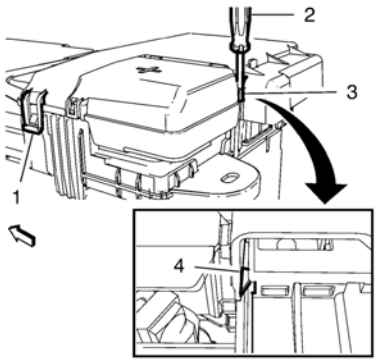

2. Unlock the retaining tab (1) on the battery fuse box cover.
3. Use a suitable screwdriver (2) to unlock the clip (4) through the window (3).

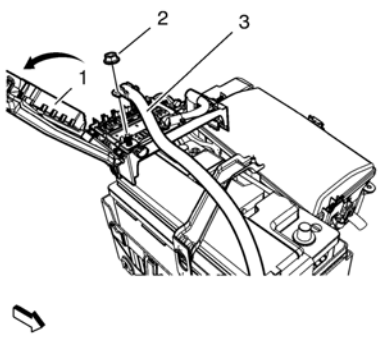

Note: Pull the battery fuse box housing. DO NOT pull the flap.

4. Open the battery fuse box cover (1).
5. Remove the positive battery cable to starter from the battery.

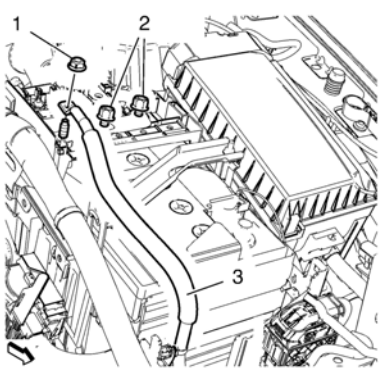

6. Remove the starter generator cable (3) and starter generator cable nut (1).
7. Loosen the 2 fuse block mounting panel nut (2).

cardiagn.com

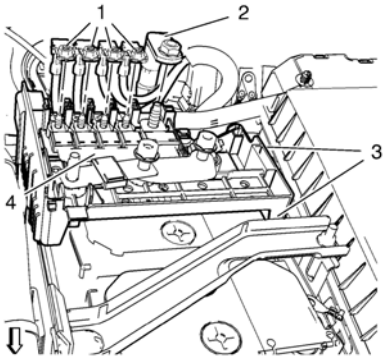

Note: Due to various option content there might be 2 or 4 body wiring harness nuts installed.

8. Remove body wiring harness nuts (1) and front compartment fuse block cable nut (2).
9. Unlock retaining tabs (3) and remove fuse block (4) with integrated positive battery cable.

Installation Procedure

1. Install fuse block with integrated positive battery cable and lock the retaining tabs.

   Caution: Refer to Fastener Caution.

   Note: Due to various option content there might be 2 or 4 body wiring harness nuts installed.
2. Install body wiring harness and body wiring harness nuts and tighten to **2.5 Y (22 lb in)**.
3. Install front compartment fuse block cable nut and tighten to **12 Y (106 lb in)**.
4. Install the starter generator cable and starter generator cable nut and tighten to **12 Y (106 lb in)**.
5. Install the 2 fuse block mounting panel nuts and tighten to **12 Y (106 lb in)**.
6. Install the positive battery cable to the battery and tighten to **4.5Y (40 lb in)**.

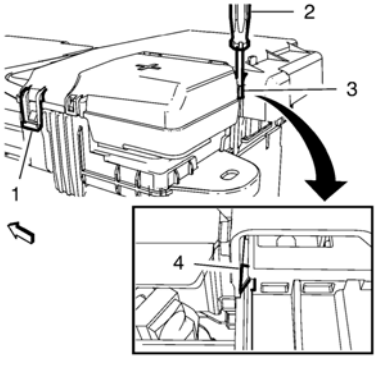

7. Close the battery fuse box cover and lock the retaining tabs (1, 4).
8. Connect battery negative cable. Refer to Battery Negative Cable Disconnection and Connection.

cardiagn.com

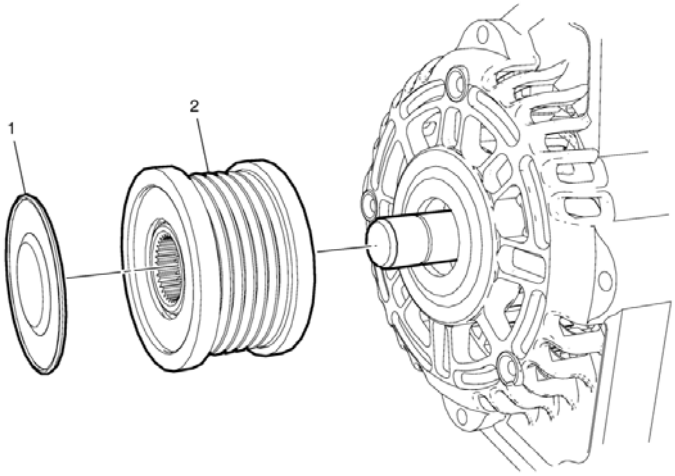

Generator Pulley Replacement

Callout	Component Name
Preliminary Procedure	
Remove the generator. Refer to Generator Replacement.	
1	Generator Pulley Nut Cap
2	Generator Pulley **Caution:** Refer to Fastener Caution. **Procedure** Remove the generator pulley nut by using *EN-6372* counterhold. **Note:** Be aware of the left-hand thread. **Tighten** 80 Y (59 lb ft) **Special Tools** *EN-6372* Counterhold For equivalent regional tools, refer to Special Tools.

cardiagn.com

Removal Procedure

1. Disconnect the battery negative cable. Refer to Battery Negative Cable Disconnection and Connection.
2. Raise and support the vehicle. Refer to Lifting and Jacking the Vehicle.
3. Remove the front compartment insulator. Refer to Front Compartment Insulator Replacement.
4. Remove the drive belt tensioner. Refer to Drive Belt Tensioner Replacement.
5. Remove the transmission mount:

- Automatic transmission, refer to Transmission Rear Mount Replacement.
- Manual transmission, refer to Transmission Rear Mount Replacement.

- Unclip the engine wiring harness from the knock sensor 2 wiring harness plug brackets.

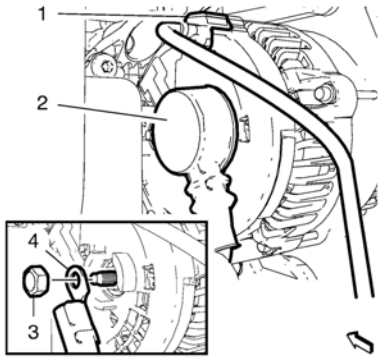

- Disconnect the generator wiring harness plug (1) from the generator.
- Fold the generator cap (2) aside.
- Remove the generator positive cable retaining nut (3).
- Remove the generator positive cable (4) from the generator.

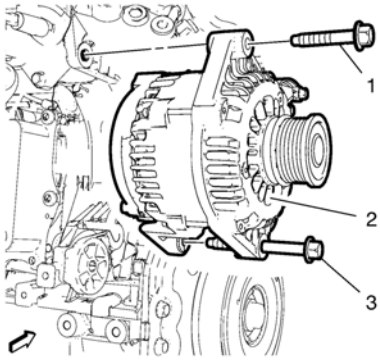

- Remove the upper generator retaining bolt (1).

Note: DO NOT pull the lower generator retaining bolt completely out of the generator mounting hole.

- Remove the lower generator retaining bolt (3).
- Remove the generator (2).

Installation Procedure

cardiagn.com

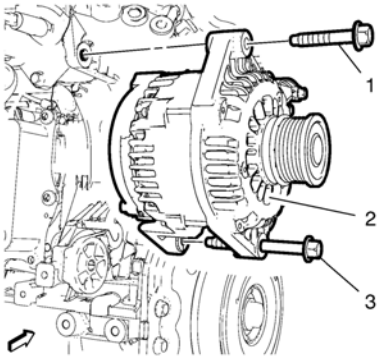

1. Install the generator (2).
2. Install the lower generator retaining bolt (3).
3. Install the upper generator retaining bolt (1).

Caution: Refer to Fastener Caution.

4. Tighten the 2 generator retaining bolts (1, 3) to **58 Y (43 lb ft)**.

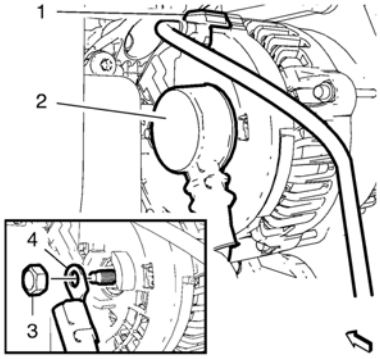

5. Install the positive generator cable (4) to the generator.
6. Install the generator positive cable retaining nut (3) and tighten to **17 Y (13 lb ft)**.
7. Fold the generator cap (2) to the generator positive cable terminal.
8. Connect the generator wiring harness plug (1) to the generator.
9. Clip in the engine wiring harness to the knock sensor 2 wiring harness plug bracket.
10. Install the transmission rear mount:

- Automatic transmission, refer to Transmission Rear Mount Replacement.
- Manual transmission, refer to Transmission Rear Mount Replacement.

- Install the drive belt tensioner. Refer to Drive Belt Tensioner Replacement.
- Install the front compartment insulator. Refer to Front Compartment Insulator Replacement.
- Lower the vehicle.
- Connect the battery negative cable. Refer to Battery Negative Cable Disconnection and Connection.

cardiagn.com

Electrical Power Management

The electrical power management is used to monitor and control the charging system and alert the driver of possible problems within the charging system. The electrical power management system makes the most efficient use of the generator output, improves the battery state-of-charge, extends battery life, and manages system electrical loads.

The load shed operation is a means of reducing electrical loads during a low voltage or low battery state-of-charge condition.

The idle boost operation is a means of improving generator performance during a low voltage or low battery state-of-charge condition.

Each electrical power management function, either idle boost or load shed, is discrete. No two functions are active at the same time. Idle boost is activated in incremental steps, idle boost 1 must be active before idle boost 2 can be active. The criteria used by the body control module (BCM) to regulate electrical power management are outlined below:

Function	Battery Temperature Calculation	Battery Voltage Calculation	Amp-Hour Calculation	Action Taken
Idle Boost 1 Start	Less Than −15°C (5°F)	Less Than 13 V	—	First level Idle boost requested
Idle Boost 1 Start	—	—	Battery has a net loss greater than 0.6 AH	First level Idle boost requested
Idle Boost 1 Start	—	Less Than 10.9 V	—	First level Idle boost requested
Idle Boost 1 End	Greater Than −15°C (5°F)	Greater Than −12 V	Battery has a net loss less than 0.2 AH	First level Idle boost request cancelled
Load Shed 1 Start	—	—	Battery has a net loss of 4 AH	Rear Defrost, Heated Mirrors, Heated Seats cycled OFF for 20% of their cycle
Load Shed 1 Start	—	Less Than 10.9 V	—	Rear Defrost, Heated Mirrors, Heated Seats cycled OFF for 20% of their cycle
Load Shed 1 End	—	Greater Than 12 V	Battery has a net loss of less than 2 AH	Clear Load Shed 1
Idle Boost 2 Start	—	—	Battery has a net loss greater than 1.6 AH	Second level Idle boost requested
Idle Boost 2 Start	—	Less Than 10.9 V	—	Second level Idle boost requested
Idle Boost 2 End	—	Greater Than 12 V	Battery has a net loss less than 0.8 AH	Second level Idle boost request cancelled
Idle Boost 3 Start	—	—	Battery has a net loss of 10.0 AH	Third level Idle boost requested
Idle Boost 3 Start	—	Less Than 10.9 V	—	Third level Idle boost requested
Idle Boost 3 End	—	Greater Than 12 V	Battery has a net loss of less than 6.0 AH	Third level Idle boost request cancelled
Load Shed 2 Start	—	Less Than 10.9 V	Battery has a net loss greater than 12 AH	Rear Defrost, Heated Mirrors, Heated Seats cycled OFF for 50% of their cycle. The BATTERY SAVER ACTIVE message will be displayed on the DIC
Load Shed 2 Start	—	Less Than 10.9 V	—	Rear Defrost, Heated Mirrors, Heated Seats cycled OFF for 50% of their cycle. The BATTERY SAVER ACTIVE message will

cardiagn.com

Function	Battery Temperature Calculation	Battery Voltage Calculation	Amp-Hour Calculation	Action Taken
				be displayed on the DIC
Load Shed 2 End	—	Greater Than 12.6 V	Battery has a net loss of less than 10.5 AH	Clear Load Shed 2
Load Shed 3 Start	—	Less Than 11.9 V	Battery has a net loss greater than 20 AH	Rear Defrost, Heated Mirrors, Heated Seats cycled OFF for 100% of their cycle. The BATTERY SAVER ACTIVE message will be displayed on the DIC
Load Shed 3 End	—	Greater Than 12.6 V	Battery has a net loss of less than 15 AH	Clear Load Shed 3

cardiagn.com

Removal Procedure

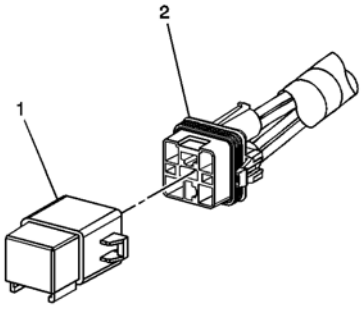

1. Locate the relay. Refer to the Master Electrical Component List to locate the relay in the vehicle.
2. Remove any fasteners which hold the relay in place.
3. Remove any connector position assurance (CPA) devices or secondary locks.

   Note: Use care when removing a relay in a wiring harness when the relay is secured by fasteners or tape.

4. Separate the relay (1) from the wire harness connector (2).

Installation Procedure

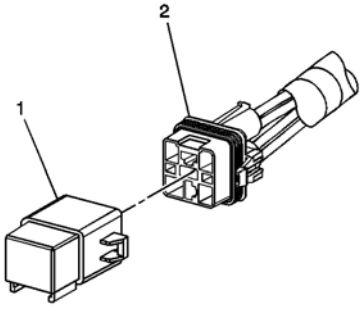

1. Connect the relay (1) to the wire harness connector (2).
2. Install any connector position assurance (CPA) devices or secondary locks.
3. Install the relay using any fasteners or tape that originally held the relay in place.

cardiagn.com

Illustration	Tool Number/Description
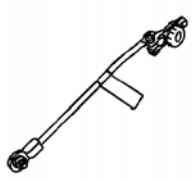	EL 38758 EL 50074 J 38758 Parasitic Draw Test Switch
	EL 50313 EL 42000 EL 50076 J 42000 Battery Tester

cardiagn.com

Illustration	Tool Number/ Description
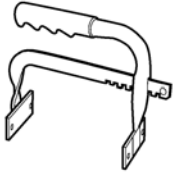	GE-49379 Battery Remover / Installer

cardiagn.com

Removal Procedure

1. Disconnect the battery negative cable. Refer to Battery Negative Cable Disconnection and Connection.
2. Raise and support the vehicle. Refer to Lifting and Jacking the Vehicle.
3. Remove the front compartment insulator. Refer to Front Compartment Insulator Replacement.
4. Remove the transmission rear mount. Refer to Transmission Rear Mount Replacement.

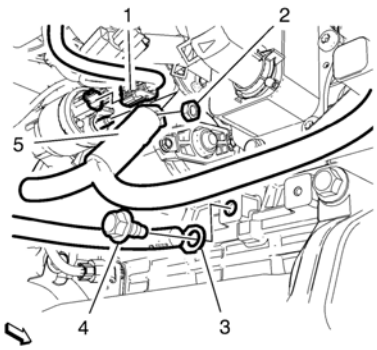

5. Disconnect the starter wiring harness plug (1).
6. Remove the positive starter cable nut (2) and the positive starter cable (5).
7. Remove the ground cable retaining bolt (4) and the ground cable (3) from the engine block.

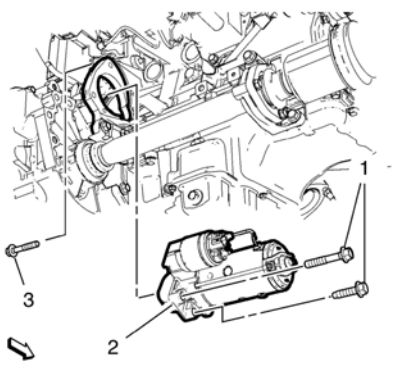

8. Remove the 3 starter retaining bolts (1, 3).
9. Remove the starter (2).

Installation Procedure

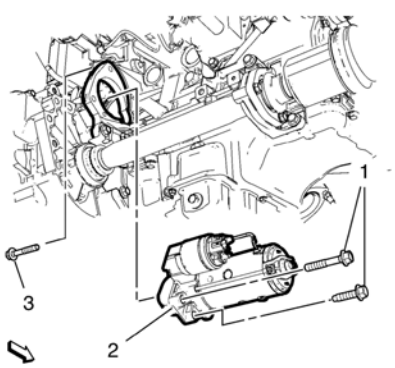

1. Install the starter (2).
2. Install the 3 starter retaining bolts (1, 3). Tighten the bolts (1, 3) to **58 Y (43 lb ft)**.

cardiagn.com

Starter Replacement (2.0L Diesel LNP with AT)

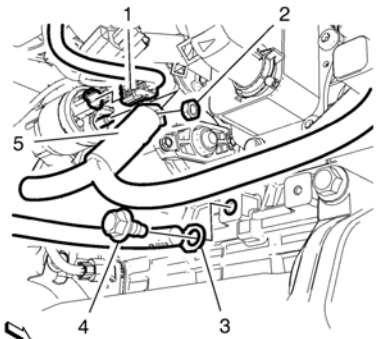

3. Connect the starter wiring harness plug (1).
4. Install the positive starter cable (5) and the positive starter cable nut (2). Tighten the nut to **95 Y (84 lb in)**.
5. Install the ground cable (3) and the ground cable retaining bolt (4) to the engine block. Tighten the bolt to **22 Y (16 lb ft)**.
6. Install the transmission rear mount. Refer to Transmission Rear Mount Replacement.
7. Install the front compartment insulator. Refer to Front Compartment Insulator Replacement.
8. Lower the vehicle.
9. Connect the battery negative cable. Refer to Battery Negative Cable Disconnection and Connection.

cardiagn.com

Removal Procedure

1. Disconnect the battery negative cable. Refer to Battery Negative Cable Disconnection and Connection.
2. Raise and support the vehicle. Refer to Lifting and Jacking the Vehicle.
3. Remove the front compartment insulator. Refer to Front Compartment Insulator Replacement.
4. Remove the transmission rear mount. Refer to Transmission Rear Mount Replacement.

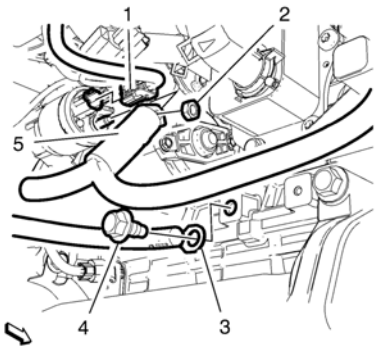

5. Disconnect the starter wiring harness plug (1).
6. Remove the positive starter cable nut (2) and the positive starter cable (5).
7. Remove the ground cable retaining bolt (4) and the ground cable (3) from the engine block.

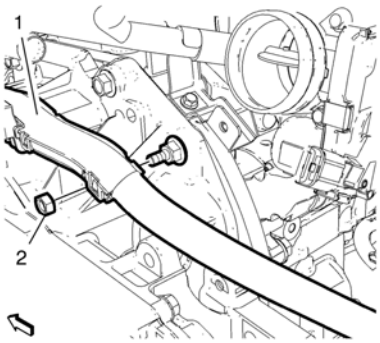

8. Remove the engine wiring harness bracket retaining nut (2) and remove the engine wiring harness (1).

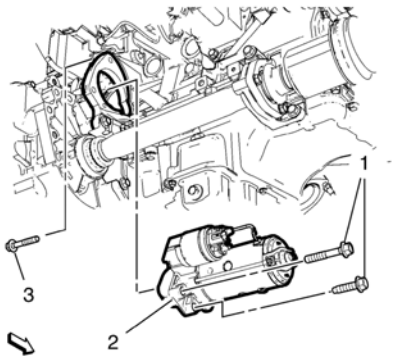

9. Remove the 3 starter retaining bolts (1, 3).
10. Remove the starter (2).

Installation Procedure

cardiagn.com

Starter Replacement (2.0L Diesel LNP with MT)

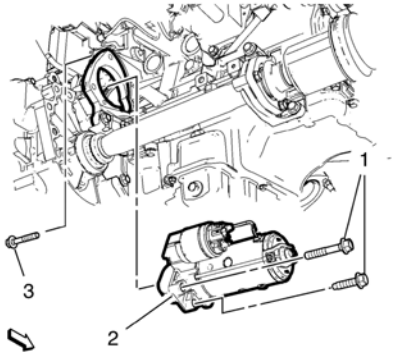

1. Install the starter (2).

Caution: Refer to Fastener Caution.

2. Install the 3 starter retaining bolts (1, 3) and tighten to **58 Y (43 lb ft)**.

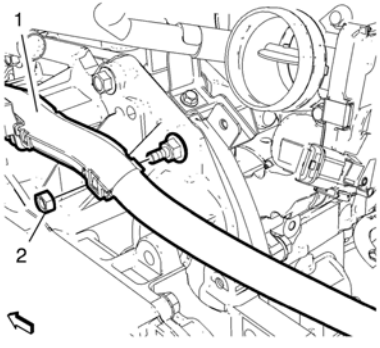

3. Install the engine wiring harness (1) and the engine wiring harness bracket retaining nut (2) and tighten to **9.5 Y (84 lb in)**.

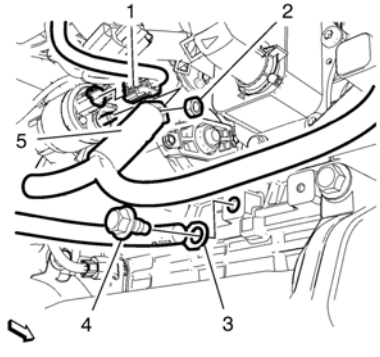

4. Connect the starter wiring harness plug (1).
5. Install the positive starter cable (5) and the positive starter cable nut (2). Tighten the nut to **9,5 Y (84 lb in)**.
6. Install the ground cable (3) and the ground cable retaining bolt (4) to the engine block. Tighten the bolt to **22 Y (16 lb ft)**.
7. Install the transmission rear mount. Refer to Transmission Rear Mount Replacement.
8. Install the front compartment insulator. Refer to Front Compartment Insulator Replacement.
9. Lower the vehicle.
10. Connect the battery negative cable. Refer to Battery Negative Cable Disconnection and Connection.

cardiagn.com

The starter motors are non-repairable starter motors. They have pole pieces that are arranged around the armature. Both solenoid windings are energized. The pull-in winding circuit is completed to the ground through the starter motor. The windings work together magnetically to pull and hold in the plunger. The plunger moves the shift lever. This action causes the starter drive assembly to rotate on the armature shaft spline as it engages with the flywheel ring gear on the engine. Moving at the same time, the plunger also closes the solenoid switch contacts in the starter solenoid. Full battery voltage is applied directly to the starter motor and it cranks the engine.

As soon as the solenoid switch contacts close, current stops flowing thorough the pull-in winding because battery voltage is applied to both ends of the windings. The hold-in winding remains energized. Its magnetic field is strong enough to hold the plunger, shift lever, starter drive assembly, and solenoid switch contacts in place to continue cranking the engine. When the engine starts, pinion overrun protects the armature from excessive speed until the switch is opened.

When the ignition switch is released from the START position, the START relay opens and battery voltage is removed from the starter solenoid S terminal. Current flows from the motor contacts through both windings to the ground at the end of the hold-in winding. However, the direction of the current flow through the pull-in winding is now opposite the direction of the current flow when the winding was first energized.

The magnetic fields of the pull-in and hold-in windings now oppose one another. This action of the windings, along with the help of the return spring, causes the starter drive assembly to disengage and the solenoid switch contacts to open simultaneously. As soon as the contacts open, the starter circuit is turned off.

Circuit Description (Key Start)

When the ignition switch is placed in the Start position, a discrete signal is supplied to the body control module (BCM) notifying it that the ignition is in the Start position. The BCM then sends a message to the engine control module (ECM) notifying it that CRANK has been requested. The ECM verifies that the transmission is in Park or Neutral. If it is, the ECM then supplies 12 volts to the control circuit of the crank relay. When this occurs, battery positive voltage is supplied through the switch side of the crank relay to the S terminal of the starter solenoid.

Starting System Block Diagram

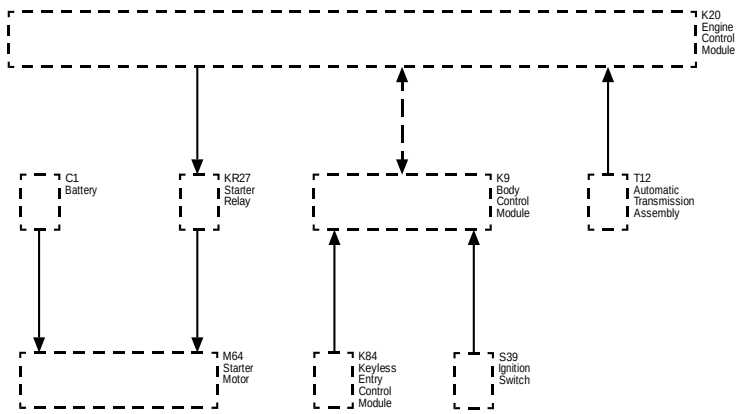

(HW)	Hard-Wired
(DD)	Serial Data - GMLAN High Speed
(HW)	Hard-Wired
(HW)	Hard-Wired
(HW)	Hard-Wired
(HW)	Hard-Wired
(HW)	Hard-Wired
(K20)	K20 Engine Control Module
(C1)	C1 Battery
(KR27)	KR27 Starter Relay
(K9)	K9 Body Control Module
(T12)	T12 Automatic Transmission Assembly
(M64)	M64 Starter Motor
(K84)	K84 Keyless Entry Control Module
(S39)	S39 Ignition Switch

cardiagn.com

Adhesives, Fluids, Lubricants, and Sealers

Application	Type of Material	GM Part Number
Bolt Connections	Screw Locking Compound	Refer to Electronic Parts Catalog
Camshaft and Hydraulic Valve Lifters	MoS 2 Lubricating Paste	Refer to Electronic Parts Catalog
Camshaft Cover Bolt	Pipe Sealant	Refer to Electronic Parts Catalog
Engine Oil	DEXOS II, 0-W30, 0-W40, 5-W30 and 5-W40	Refer to Electronic Parts Catalog
First Camshaft Bearing Cap	Surface Sealant	Refer to Electronic Parts Catalog
First Camshaft Bearing Cap and Cylinder Head Transition	Adhesive Sealing Compound	Refer to Electronic Parts Catalog
Oil Pan	Oil Pan Sealant	Refer to Electronic Parts Catalog
Oxygen Sensor	Assembly Paste	Refer to Electronic Parts Catalog
Seal Rings	Silicon Grease	Refer to Electronic Parts Catalog

cardiagn.com

Adhesives, Fluids, Lubricants, and Sealers

Application	Type of Material	GM Part Number
Engine Oil Viscosity	5W-30	Refer to electronic parts catalog
Engine Oil Quality	Dexos2	Refer to electronic parts catalog
Bolt Connections	Locking Compound	Refer to electronic parts catalog
Oil Pan, Camshaft Housing, Lower Crankcase	RTV Sealant	Refer to electronic parts catalog

cardiagn.com

Altitude Versus Barometric Pressure

Altitude Measured in Meters (m)	Altitude Measured in Feet (ft)	Barometric Pressure Measured in Kilopascals (kPa)	Barometric Pressure Measured in Pounds Per Square Inch (PSI)
Determine your altitude by contacting a local weather station or by using another reference source.			
4,267	14,000	56–64	8.1–9.3
3,962	13,000	58–66	8.4–9.6
3,658	12,000	61–69	8.8–10.0
3,353	11,000	64–72	9.3–10.4
3,048	10,000	66–74	9.6–10.7
2,743	9,000	69–77	10.0–11.2
2,438	8,000	71–79	10.3–11.5
2,134	7,000	74–82	10.7–11.9
1,829	6,000	77–85	11.2–12.3
1,524	5,000	80–88	11.6–12.8
1,219	4,000	83–91	12.0–13.2
914	3,000	87–95	12.6–13.8
610	2,000	90–98	13.1–14.2
305	1,000	94–102	13.6–14.8
0	0 Sea Level	96–104	13.9–15.1
−305	−1,000	101–105	14.6–15.2

cardiagn.com

Altitude Versus Barometric Pressure

Altitude Measured in Meters (m)	Altitude Measured in Feet (ft)	Barometric Pressure Measured in Kilopascal (kPa)
Determine your altitude by contacting a local weather station or by using another reference source.		
4 267	14 000	56–64
3 962	13 000	58–66
3 658	12 000	61–69
3 353	11 000	64–72
3 048	10 000	66–74
2 743	9 000	69–77
2 438	8 000	71–79
2 134	7 000	74–82
1 829	6 000	77–85
1 524	5 000	80–88
1 219	4 000	83–91
914	3 000	87–95
610	2 000	90–98
305	1 000	94–102
0	0 Sea Level	96–104
−305	−1 000	101–105

cardiagn.com

Engine Cooling System Specifications

Application	Specification	
	Metric	English
Coolant System		
• Cooling Filling Quantity	7.5 liters	7.9 quarts
• Type of Coolant Pump	Centrifugal Pump	
• Delivery Rate with 4500 RPM	220 liters / min	358.1 gal / min
Thermostat		
• Type	Outlet Thermostat System	
• Start to Opening	82° C	179.6° F
• Fully Open	95° C	203° F

cardiagn.com

Engine Mechanical Specifications

Application	Specification	
	Metric	English
General Data		
• RPO	LNP	
• Engine Type	4 Cylinder Inline	
• Displacement	1998 ccm	121.92 cu in
• Bore Diameter	86 mm	3.3858 in
• Stroke	86 mm	3.3858 in
• Compression Ratio	16.3:1	
• Output @ Engine Speed	120 KW / 3800 RPM	
• Torque @ Engine Speed	360 Y /1750–2750 RPM	265.5 lb ft / 1750–2750 RPM
• Idle Speed	725 RPM	
• No-Load max. Speed	5000 RPM	
• Injection Pressure of Common Rail System	1800 bar	26106.8 PSI
Engine Management		
• ECM Type	Delphi E20	
• Injection Pressure Pump Type	Delphi DFP 3.2	
• Injector Type	Delphi DFI 1,5	
• Firing Order	1-3-4-2	
• Glow Plug Type	Metallic, Low Voltage	
• Glow Plug Voltage	4.4 Volt	
Drive Belt		

cardiagn.com

Application	Specification	
	Metric	English
• Drive Belt Length • with Air Conditioning, Generator, Power Steering Pump	2220 mm	87.4 in
Oil Circulation System		
• Engine Oil Filling with Oil Filter	5.4 L	5.7 quarts
Engine Oil Quality (European Countries)	Dexos2	
• Engine Oil Viscosity	5W–30	
• Disposal of Engine Oil	For disposal the engine oil follow safety regulations and national legislation.	
• Oil Consumption / 1000 km	0.34 L	0.36 quarts
Oil Pump		
• Oil Pump Type	Rotor Pump – Located in BSM (Balanceshaft Module)	
• Oil Pressure with Idle Speed and under hot running conditions (120° C / 248° F)	>100 kPa / 725 RPM	
• Oil Pressure with 2000 RPM under hot running conditions (120° C / 248° F)	>200 kPa / 2000 RPM	
Coolant System		
• Type of Coolant Pump	Centrifugal Pump	
• Filling	7.5 L	7.93 quarts
• Delivery Rate with 4500 RPM	220 L / min	58.1 gal / min
Thermostat		
• Type	Outlet Thermostat System	
• Start to Opening	82° C	179.6° F
• Fully Open	95° C	203° F
Cylinder Head Gasket		
• Cylinder Head Gasket Thickness / Piston Projection Dimension (Gasket without Hole)	1.00–1.10 mm / 0.21–0.30 mm	0.0393–0.0433 in / 0.0082–0.0118 in
• Cylinder Head Gasket Thickness / Piston Projection Dimension (Gasket with one Hole)	1.10–1.20 mm / 0.31–0.39 mm	0.0433–0.0472 in / 0.0122–0.0153 in
• Cylinder Head Gasket Thickness / Piston Projection Dimension (Gasket with two Holes)	1.20–1.30 mm / 0.40–0.49 mm	0.0472–0.0511 in / 0.0157–0.0192 in

cardiagn.com

Application	Specification	
	Metric	English
Cylinder Head		
• Cylinder Head Height	130 mm	5.1 in
• Maximum Sag of Cylinder Head	0.10 mm	0.0039 in
• Valve Seat Angle at Valve Head	45°	
• Valve Guide External Diameter Standard	10.045–10.060 mm	0.3954–0.3960 in
• Valve Guide Internal Diameter	4.4–4.6 mm	0.1732–0.1811 in
Balanceshaft Module Gear Backlash		
• Gauge Value Min. (Gear Backlash Specification)	0.9 mm (0.046 mm)	0.0354 in (0.0018 in)
• Gauge Value Nominal (Gear Backlash Specification)	1.1 mm (0.087 mm)	0.0433 in (0.0034 in)
• Gauge Value Max. (Gear Backlash Specification)	1.3 mm (0.128 mm)	0.0512 in (0.0050 in)
Valves		
• Valve Stem Diameter – Intake	4.982–5.00 mm	0.1961–0.1968 in
• Valve Stem Diameter – Exhaust	4.972–4.990 mm	0.1957–0.1964 in
• Valve Spring Length – Unstressed	46.35 mm	1.82 in
• Valve Spring Length – 199.5 – 220.5 N	33.0 mm	1.30 in
• Valve Spring Length – 330.9 – 365.9 N	24.2 mm	0.95 in
• Valve Diameter Intake	28.7–28.9 mm	1.1299–1.1377 in
• Valve Diameter Exhaust	26.6–26.5 mm	1.0354–1.0433 in
Engine Block		
• Engine Block Height	245.5–245.6 mm	9.6653–9.6692 in
Deck Surface Flatness (Overall/Partial)	0.1 / 0.05 / 100 mm	0.0039 / 0.0019 / 3.93 in
• Conrod Length	150 mm	5.9 in
Camshaft		
• Camshaft Bearing Journal Diameter – 1. Bearing Journal	29.944–29.960 mm	1.1788–1.1795 in

cardiagn.com

Application	Specification	
	Metric	English
• Camshaft Bearing Journal Diameter – 2.-6. Bearing Journal	23.944–24.960 mm	0.9426–0.9826 in
• Camshaft Axial Clearance	0.1–0.171 mm	0.0039–0.0067 in
Camshaft Housing		
• Camshaft Bearing Diameter – 1. Bearing	30.00–30.021 mm	1.1811–1.1819 in
• Camshaft Bearing Diameter – 2.-6. Bearing	24.00–24.021 mm	0.9448–0.9457 in
Connecting Rod		
• Con Rod Bearing Clearance	0.024–0.042 mm	0.0009–0.0016 in
• Con Rod Bearing Journal Diameter – Class A	52.0190–52.0235 mm	2.0478–2.0481 in
• Con Rod Bearing Journal Diameter – Class B	52.0145–52.0190 mm	2.0478–2.0479 in
• Con Rod Bearing Journal Diameter – Class C	52.0100–52.0145 mm	2.0476–2.0478 in
• Con Rod Big End Bore Diameter – Class A	55.0045–55.0090 mm	2.1655–2.1657 in
• Con Rod Big End Bore Diameter – Class B	55.0090–55.0135 mm	2.1657–2.1658 in
• Con Rod Big End Bore Diameter – Class C	55.0135–55.0180 mm	2.01658–2.1660 in
• Con Rod Bearing Shell – Class A (violet)	1.474–1.478 mm	0.0580–0.0581 in
• Con Rod Bearing Shell – Class B (yellow)	1.479–1.483 mm	0.0582–0.0583 in
• Con Rod Bearing Shell – Class C (blue)	1.483–1.487 mm	0.0583–0.0585 in
Crankshaft		
• Axial Clearance	0.090–0.320 mm	0.0035–0.0125 in
• Main Bearing Clearance	0.024–0.042 mm	0.0009–0.0016 in
• Main Bearing Journal Diameter – Class A	60.0190–60.0235 mm	2.3629–2.3631 in
• Main Bearing Journal Diameter – Class B	60.0145–60.0190 mm	2.3627–2.3629 in
• Main Bearing Journal Diameter – Class C	60.0100–60.0145 mm	2.3626–2.3627 in
• Bearing Bore Diameter in Cylinder Block – Class A	64.0045–64.0090 mm	2.5198–2.5200 in

cardiagn.com

Application	Specification	
	Metric	English
• Bearing Bore Diameter in Cylinder Block – Class B	64.0090–64.0135 mm	2.5200–2.5202 in
• Bearing Bore Diameter in Cylinder Block – Class C	64.0145–64.0180 mm	2.5202–2.5203 in
• Main Bearing Shells – Class A (violet)	1.974–1.97 mm	0.0777–0.078 in
• Main Bearing Shells – Class B (yellow)	1.979–1.983 mm	0.0779–0.0780 in
• Main Bearing Shells – Class C (blue)	1.983–1.98 mm	0.0780–0.0782 in
Piston		
• Piston Diameter (99 grade)	85.925–85.935 mm	3.3828–3.3832 in
• Piston Diameter (00 grade)	85.935–85.945 mm	3.3832–3.3836 in
• Piston Diameter (01 grade)	85.945–85.955 mm	3.3836–3.384 in
• Piston Pin Diameter	32.993–32.008 mm	1.2989–1.2601 in
• Clearance Piston Pin in Piston	0.006–0.017 mm	0.0002–0.0006 in
• Clearance Piston Pin in Con Rod	0.024–0.041 mm	0.0009–0.0016 in
• Piston Weight Difference	± 0.007 kg	
Piston Rings		
• Compression Ring 1 – Thickness	3.45–3.75 mm	0.1358–0.1476 in
• Compression Ring 2 – Thickness	3.25–3.55 mm	0.1279–0.1397 in
• Oil Scraper Ring – Thickness	2.6–2.85 mm	0.1023–0.1122 in
• Compression Ring 1 – Axial Clearance	0.13–0.175 mm	0.0051–0.0068 in
• Compression Ring 2 – Axial Clearance	0.07–0.115 mm	0.0027–0.0045 in
• Oil Scraper Ring – Axial Clearance	0.03–0.07 mm	0.0011–0.0027 in
• Compression Ring 1 – Gap	0.24–0.40 mm	0.0094–0.0157 in
• Compression Ring 2 – Gap	0.6–0.8 mm	0.0236–0.0315 in
• Oil Scraper Ring – Gap	0.25–0.50 mm	0.0098–0.0196 in

cardiagn.com

Engine Mechanical Specifications

Application	Specification	
	Metric	English
General Data		
• RPO	LNP	
• Engine Type	4 Cylinder Inline	
• Displacement	1998 ccm	121.92 cu in
• Bore Diameter	86 mm	3.3858 in
• Stroke	86 mm	3.3858 in
• Compression Ratio	16.3:1	
• Output @ Engine Speed	120 KW / 3800 RPM	
• Torque @ Engine Speed	360 Y /1750–2750 RPM	265.5 lb ft / 1750–2750 RPM
• Idle Speed	725 RPM	
• No-Load max. Speed	5000 RPM	
• Injection Pressure of Common Rail System	1800 bar	26106.8 PSI
Engine Management		
• ECM Type	Delphi E20	
• Injection Pressure Pump Type	Delphi DFP 3.2	
• Injector Type	Delphi DFI 1,5	
• Firing Order	1-3-4-2	
• Glow Plug Type	Metallic, Low Voltage	
• Glow Plug Voltage	4.4 Volt	
Drive Belt		

cardiagn.com

Application	Specification	
	Metric	English
• Drive Belt Length • with Air Conditioning, Generator, Power Steering Pump	2220 mm	87.4 in
Oil Circulation System		
• Engine Oil Filling with Oil Filter	5.4 L	5.7 quarts
Engine Oil Quality (European Countries)	Dexos2	
• Engine Oil Viscosity	5W–30	
• Disposal of Engine Oil	For disposal the engine oil follow safety regulations and national legislation.	
• Oil Consumption / 1000 km	0.34 L	0.36 quarts
Oil Pump		
• Oil Pump Type	Rotor Pump – Located in BSM (Balanceshaft Module)	
• Oil Pressure with Idle Speed and under hot running conditions (120° C / 248° F)	>100 kPa / 725 RPM	
• Oil Pressure with 2000 RPM under hot running conditions (120° C / 248° F)	>200 kPa / 2000 RPM	
Coolant System		
• Type of Coolant Pump	Centrifugal Pump	
• Filling	7.5 L	7.93 quarts
• Delivery Rate with 4500 RPM	220 L / min	58.1 gal / min
Thermostat		
• Type	Outlet Thermostat System	
• Start to Opening	82° C	179.6° F
• Fully Open	95° C	203° F
Cylinder Head Gasket		
• Cylinder Head Gasket Thickness / Piston Projection Dimension (Gasket without Hole)	1.00–1.10 mm / 0.21–0.30 mm	0.0393–0.0433 in / 0.0082–0.0118 in
• Cylinder Head Gasket Thickness / Piston Projection Dimension (Gasket with one Hole)	1.10–1.20 mm / 0.31–0.39 mm	0.0433–0.0472 in / 0.0122–0.0153 in
• Cylinder Head Gasket Thickness / Piston Projection Dimension (Gasket with two Holes)	1.20–1.30 mm / 0.40–0.49 mm	0.0472–0.0511 in / 0.0157–0.0192 in

cardiagn.com

Application	Specification	
	Metric	English
Cylinder Head		
• Cylinder Head Height	130 mm	5.1 in
• Maximum Sag of Cylinder Head	0.10 mm	0.0039 in
• Valve Seat Angle at Valve Head	45°	
• Valve Guide External Diameter Standard	10.045–10.060 mm	0.3954–0.3960 in
• Valve Guide Internal Diameter	4.4–4.6 mm	0.1732–0.1811 in
Balanceshaft Module Gear Backlash		
• Gauge Value Min. (Gear Backlash Specification)	0.9 mm (0.046 mm)	0.0354 in (0.0018 in)
• Gauge Value Nominal (Gear Backlash Specification)	1.1 mm (0.087 mm)	0.0433 in (0.0034 in)
• Gauge Value Max. (Gear Backlash Specification)	1.3 mm (0.128 mm)	0.0512 in (0.0050 in)
Valves		
• Valve Stem Diameter – Intake	4.982–5.00 mm	0.1961–0.1968 in
• Valve Stem Diameter – Exhaust	4.972–4.990 mm	0.1957–0.1964 in
• Valve Spring Length – Unstressed	46.35 mm	1.82 in
• Valve Spring Length – 199.5 – 220.5 N	33.0 mm	1.30 in
• Valve Spring Length – 330.9 – 365.9 N	24.2 mm	0.95 in
• Valve Diameter Intake	28.7–28.9 mm	1.1299–1.1377 in
• Valve Diameter Exhaust	26.6–26.5 mm	1.0354–1.0433 in
Engine Block		
• Engine Block Height	245.5–245.6 mm	9.6653–9.6692 in
Deck Surface Flatness (Overall/Partial)	0.1 / 0.05 / 100 mm	0.0039 / 0.0019 / 3.93 in
• Conrod Length	150 mm	5.9 in
Camshaft		
• Camshaft Bearing Journal Diameter – 1. Bearing Journal	29.944–29.960 mm	1.1788–1.1795 in

cardiagn.com

Application	Specification	
	Metric	English
• Camshaft Bearing Journal Diameter – 2.-6. Bearing Journal	23.944–24.960 mm	0.9426–0.9826 in
• Camshaft Axial Clearance	0.1–0.171 mm	0.0039–0.0067 in
Camshaft Housing		
• Camshaft Bearing Diameter – 1. Bearing	30.00–30.021 mm	1.1811–1.1819 in
• Camshaft Bearing Diameter – 2.-6. Bearing	24.00–24.021 mm	0.9448–0.9457 in
Connecting Rod		
• Con Rod Bearing Clearance	0.024–0.042 mm	0.0009–0.0016 in
• Con Rod Bearing Journal Diameter – Class A	52.0190–52.0235 mm	2.0478–2.0481 in
• Con Rod Bearing Journal Diameter – Class B	52.0145–52.0190 mm	2.0478–2.0479 in
• Con Rod Bearing Journal Diameter – Class C	52.0100–52.0145 mm	2.0476–2.0478 in
• Con Rod Big End Bore Diameter – Class A	55.0045–55.0090 mm	2.1655–2.1657 in
• Con Rod Big End Bore Diameter – Class B	55.0090–55.0135 mm	2.1657–2.1658 in
• Con Rod Big End Bore Diameter – Class C	55.0135–55.0180 mm	2.01658–2.1660 in
• Con Rod Bearing Shell – Class A (violet)	1.474–1.478 mm	0.0580–0.0581 in
• Con Rod Bearing Shell – Class B (yellow)	1.479–1.483 mm	0.0582–0.0583 in
• Con Rod Bearing Shell – Class C (blue)	1.483–1.487 mm	0.0583–0.0585 in
Crankshaft		
• Axial Clearance	0.090–0.320 mm	0.0035–0.0125 in
• Main Bearing Clearance	0.024–0.042 mm	0.0009–0.0016 in
• Main Bearing Journal Diameter – Class A	60.0190–60.0235 mm	2.3629–2.3631 in
• Main Bearing Journal Diameter – Class B	60.0145–60.0190 mm	2.3627–2.3629 in
• Main Bearing Journal Diameter – Class C	60.0100–60.0145 mm	2.3626–2.3627 in
• Bearing Bore Diameter in Cylinder Block – Class A	64.0045–64.0090 mm	2.5198–2.5200 in

cardiagn.com

Application	Specification	
	Metric	English
• Bearing Bore Diameter in Cylinder Block – Class B	64.0090–64.0135 mm	2.5200–2.5202 in
• Bearing Bore Diameter in Cylinder Block – Class C	64.0145–64.0180 mm	2.5202–2.5203 in
• Main Bearing Shells – Class A (violet)	1.974–1.97 mm	0.0777–0.078 in
• Main Bearing Shells – Class B (yellow)	1.979–1.983 mm	0.0779–0.0780 in
• Main Bearing Shells – Class C (blue)	1.983–1.98 mm	0.0780–0.0782 in
Piston		
• Piston Diameter (99 grade)	85.925–85.935 mm	3.3828–3.3832 in
• Piston Diameter (00 grade)	85.935–85.945 mm	3.3832–3.3836 in
• Piston Diameter (01 grade)	85.945–85.955 mm	3.3836–3.384 in
• Piston Pin Diameter	32.993–32.008 mm	1.2989–1.2601 in
• Clearance Piston Pin in Piston	0.006–0.017 mm	0.0002–0.0006 in
• Clearance Piston Pin in Con Rod	0.024–0.041 mm	0.0009–0.0016 in
• Piston Weight Difference	± 0.007 kg	
Piston Rings		
• Compression Ring 1 – Thickness	3.45–3.75 mm	0.1358–0.1476 in
• Compression Ring 2 – Thickness	3.25–3.55 mm	0.1279–0.1397 in
• Oil Scraper Ring – Thickness	2.6–2.85 mm	0.1023–0.1122 in
• Compression Ring 1 – Axial Clearance	0.13–0.175 mm	0.0051–0.0068 in
• Compression Ring 2 – Axial Clearance	0.07–0.115 mm	0.0027–0.0045 in
• Oil Scraper Ring – Axial Clearance	0.03–0.07 mm	0.0011–0.0027 in
• Compression Ring 1 – Gap	0.24–0.40 mm	0.0094–0.0157 in
• Compression Ring 2 – Gap	0.6–0.8 mm	0.0236–0.0315 in
• Oil Scraper Ring – Gap	0.25–0.50 mm	0.0098–0.0196 in

cardiagn.com

Fastener Tightening Specifications

Application	Specification	
	Metric	English
Additional Intake Air Tuning Valve Vacuum Control Solenoid Valve Bolt	10 Y	89 lb in
Camshaft Cover Retaining Bolt	10 Y	89 lb in
Charge Air Cooler Inlet Air Hose Nut	22 Y	16 lb ft
Charge Air Cooler Outlet Front Hose Bracket Bolt	9 Y	80 lb in
Charge Air Cooler Outlet Front Hose Bracket Clamp	4 Y	35 lb in
Charge Air Control Vacuum Hose Bolt	9 Y	80 lb in
Drivetrain and Front Suspension Frame Bolt	160 Y	118 lb ft
Engine Oil Level Indicator Switch	20 Y	15 lb ft
Engine Water Outlet Adapter Bolt	10 Y	89 lb in
Exhaust Gas Recirculation Bypass Control Solenoid Valve Bolt	6 Y	53 lb in
Exhaust Gas Recirculation Cooler Bolt	25 Y	18 lb ft
Exhaust Gas Recirculation Cooler Nut	25 Y	18 lb ft
Exhaust Gas Recirculation Pipe Bolt	10 Y	89 lb in
Exhaust Gas Recirculation Valve Bolt	25 Y	18 lb ft
Exhaust Pressure Differential Sensor Bolt	9 Y	80 lb in
Exhaust Temperature Sensor Position 1	45 Y	33 lb ft
Exhaust Temperature Sensor Position 2	45 Y	33 lb ft
Exhaust Temperature Sensor Position 3	45 Y	33 lb ft
Front Intake Air Duct Bolt	5 Y	44 lb in
Fuel Injector Bracket Retaining Bolt	14 Y +110° (1)	124 lb in +110° (1)
Fuel Injection Fuel Feed Pipe Nut	27 Y	20 lb ft
Fuel Injection Fuel Rail Retaining Bolt	25 Y	18 lb ft
Fuel Injection Pump Bolt	25 Y	18 lb ft
Fuel Tank Filler Pipe Bracket Bolt	9 Y	80 lb in
Fuel Tank Filler Pipe Ground Bolt	9 Y	80 lb in
Fuel Tank Strap Bolt	23 Y	17 lb ft
Glow Plugs	11 Y	97 lb in
Heated Oxygen Sensor	50 Y	37 lb ft
Intake Air Pressure/Temperature Sensor Bolt	9 Y	80 lb in
Intake Air Tuning Valve Vacuum Control Solenoid Valve Bolt	10 Y	89 lb in
Knock Sensor 1	25 Y	18 lb ft
Knock Sensor 2	25 Y	18 lb ft
Mass Air Flow Sensor Clamps	3.5 Y	31 lb in

cardiagn.com

Fastener Tightening Specifications - Engine Control

Application	Specification	
	Metric	English
Positive Crankcase Ventilation Valve Retaining Bolt	10 Y	89 lb in
Throttle Body Assembly Bolt	10 Y	89 lb in
Vacuum Pump Assembly Bolt	10 Y	89 lb in

1 = Use NEW Fastener

cardiagn.com

Fastener Tightening Specifications

Application	Specification	
	Metric	English
Air Conditioning Compressor Bracket Mounting Bolt	22 Y	16 lb ft
Camshaft Cover Mounting Bolt	10 Y	89 lb ft
Camshaft Guide Retaining Bolt (M6)	10 Y	89 lb in
Camshaft Guide Retaining Bolt (M8)	25 Y	18 lb ft
Camshaft Position Sensor Bolt	10 Y	89 lb in
Charge Air Control Vacuum Hose Bracket Bolt	10 Y	89 lb in
Connecting Rod Bearing Cap Bolt	30 Y + 70° (1)	22 lb ft + 70° (1)
Crankshaft Balancer Retaining Bolt (Final)	50 Y + 90° (1)	37 lb ft + 90° (1)
Crankshaft Balancer Retaining Bolt (First)	20 Y	15 lb ft
Crankshaft Position Sensor Bolt	10 Y	89 lb in
Crankshaft Position Sensor Inner Exciter Ring Bolts	12 Y	106 lb in
Crankshaft Pulley Bolt	120 Y + 90° (1)	89 lb ft + 90° (1)
Cylinder Head Bolt	30 Y +100 Y + 90° + 90° (1)	22 lb ft + 74 lb ft + 90° + 90° (1)
Drive Belt and Pulley Cover Bolt	10 Y	89 lb in
Drive Belt Idler Pulley-Lower Bolt	58 Y	43 lb ft
Drive Belt Idler Pulley-Upper Bolt	58 Y	43 lb ft
Drive Belt Tensioner Bolt	45 Y	33 lb ft
Engine Automatic Transmission Flex Plate Bolt	60 Y + 45° (1)	44 lb ft + 45° (1)
Engine Coolant Outlet Adapter Bolt	10 Y	89 lb in
Engine Coolant Temperature Sensor	12.5 Y	111 lb in
Engine Coolant Thermostat Housing Bolt	10 Y	89 lb in
Engine Flywheel Bolt	160 Y (1)	118 lb ft (1)
Engine Front Cover Bolts (M6)	9 Y	80 lb in
Engine Front Cover Bolts (M8)	22 Y	16 lb ft
Engine Lift Front Bracket Bolt	22 Y	16 lb ft
Engine Lift Rear Bracket Bolt	22 Y	16 lb ft
Engine Mount Bolt to Body	62 Y	46 lb ft
Engine Mount Bolt to Bracket	50 Y + 60° - 75°	37 lb ft + 60° - 75°
Engine Mount Bracket Bolt	58 Y	43 lb ft
Engine Mount Nut to Body	62 Y	46 lb ft
Engine Oil Cooler Bolt	25 Y	18 lb ft
Engine Oil Pressure Switch	20 Y	15 lb ft

cardiagn.com

Application	Specification	
	Metric	English
Engine Wiring Harness Upper Channel Bolt (to Camshaft Cover)	10 Y	89 lb in
Exhaust Camshaft Cap Bolt (M6)	10 Y	89 lb in
Exhaust Camshaft Cap Bolt (M8)	25 Y	18 lb ft
Exhaust Gas Recirculation Cooler Assembly Bolt	25 Y	18 lb ft
Exhaust Gas Recirculation Cooler Assembly Nut	25 Y	18 lb ft
Exhaust Gas Recirculation Pipe Bolt	10 Y	89 lb in
Exhaust Manifold Bolt	20 Y	15 lb ft
Exhaust Manifold Heat Shield Bolt	10 Y	89 lb in
Exhaust Particulate Filter Bracket Bolt	22 Y	16 lb ft
Exhaust Particulate Filter Bracket Nut (to Engine Block)	28 Y	21 lb ft
Exhaust Particulate Filter Bracket Nut (to Exhaust Particulate Filter)	35 Y	26 lb ft
Exhaust Particulate Filter Heat Shield - Front Bolt/Nut	9 Y	80 lb in
Exhaust Particulate Filter Heat Shield - Rear Bolt/Nut	9 Y	80 lb in
Exhaust Temperature Sensor - Position 1	45 Y	33 lb ft
Exhaust Temperature Sensor - Position 2	45 Y	33 lb ft
Exhaust Temperature Sensor - Position 3	45 Y	33 lb ft
Fuel Injection Bracket Bolt	14 Y + 110° (1)	124 lb in + 110° (1)
Fuel Injection Fuel Feed Pipe	27 Y	20 lb ft
Fuel Injection Pump Bolt	25 Y	18 lb ft
Fuel Rail Bolt	25 Y	18 lb ft
Generator Bolt	58 Y	43 lb ft
Glow Plug	10.5 Y	93 lb in
Heated Oxygen Sensor	50 Y	37 lb ft
Intake Camshaft Cap Bolt (M6)	10 Y	89 lb in
Intake Camshaft Cap Bolt (M8)	25 Y	18 lb ft
Intake Manifold Bolt/Nut	25 Y	18 lb ft
Lower Crankcase Bolt (M12, Inner)	55 Y + 120° (1)	41 lb ft + 120° (1)
Lower Crankcase Bolt (Outer)	35 Y	26 lb ft
Lower Oil Pan Bolt	10 Y	89 lb in
Oil Filter Assembly Bolt	25 Y	18 lb ft
Oil Filter Cap	25 Y	18 lb ft
Oil Level Indicator and Tube Bracket Bolt	10 Y	89 lb in
Oil Level Indicator Switch	20 Y	15 lb ft
Oil Pan Drain Plug	25 Y	18 lb ft
Positive Crankcase Ventilation Valve Bolt	10 Y	89 lb in
Starter Bolt	58 Y	43 lb ft
Thermostat Bypass Pipe Bracket Bolt	25 Y	18 lb ft
Timing Chain Guide Bolt	25 Y	18 lb ft

cardiagn.com

Application	Specification	
	Metric	English
Timing Chain Tensioner Bolt	10 Y	89 lb in
Throttle Body Bolt	10 Y	89 lb in
Turbocharger Bracket Bolt	25 Y	18 lb ft
Turbocharger Coolant Feed Pipe Bolt	32 Y	24 lb ft
Turbocharger Coolant Return Pipe Bolt	32 Y	24 lb ft
Turbocharger Heat Shield Bolt	10 Y	89 lb in
Turbocharger Nut	30 Y	22 lb ft
Turbocharger Oil Feed Pipe Bolt (M12)	32 Y	24 lb ft
Turbocharger Oil Feed Pipe Bracket Bolt (M6)	10 Y	89 lb in
Turbocharger Oil Return Pipe Bolt	10 Y	89 lb in
Upper Oil Pan Bolt	25 Y	18 lb ft
Upper Oil Pan Bolt (to Transmission)	45 Y	33 lb ft
Vacuum Pump Bolt	10 Y	89 lb in
Water Pump Bracket Bolt	25 Y	18 lb ft
Water Pump Cover Bolt/Stud	8 Y	71 lb in
Water Pump Pulley Bolt	18 Y	13 lb ft

1 = Use NEW Fastener

cardiagn.com

Fastener Tightening Specifications

Application	Specification	
	Metric	English
Charge Air Cooler Inlet Hose Nut	22 Y	16 lb ft
Charge Air Cooler Outlet Front Hose Bracket Bolt	9 Y	80 lb in
Engine Coolant Temperature Sensor	13 Y	115 lb in
Engine Water Outlet Adapter Bolt	10 Y	89 lb in
Power Steering Fluid Cooling Pipe Bracket Bolt	9 Y	80 lb in
Radiator Lower Bracket Bolt	22 Y	16 lb ft
Radiator Upper Bracket Bolt	22 Y	16 lb ft
Surge Tank Outlet Pipe Bracket Bolt	9 Y	80 lb in
Thermostat Bypass Pipe Bolt	22 Y	16 lb ft
Thermostat Bypass Pipe Bracket Bolt	10 Y	89 lb in
Thermostat Housing Bolt	8 Y	71 lb in
Turbocharger Bracket Bolt	25 Y	18 lb ft
Turbocharger Coolant Feed Pipe Hollow Bolt	32 Y	24 lb ft
Turbocharger Coolant Return Pipe Bracket Bolt	10 Y	89 lb in
Turbocharger Coolant Return Pipe Hollow Bolt	32 Y	24 lb ft
Water Pump Bolt	25 Y	18 lb ft
Water Pump Pulley Bolt	18 Y	13 lb ft

cardiagn.com

Fastener Tightening Specifications

Application	Specification	
	Metric	English
Charge Air Cooler Inlet Air Hose Nut	22 Y	16 lb ft
Exhaust Front Pipe Nut (Front Pipe to Exhaust Particulate Filter)	22 Y	16 lb ft
Exhaust Front Pipe Hanger Bracket Bolt - M8	22 Y	16 lb ft
Exhaust Front Pipe Hanger Bracket Bolt - M10	60 Y +30° -45° (1)	44 lb ft +30° -45° (1)
Exhaust Front Pipe Hanger Insulator Nut	22 Y	16 lb ft
Exhaust Manifold Heat Shield Bolt	10 Y	89 lb in
Exhaust Manifold Mounting Bolt	20 Y	15 lb ft
Exhaust Particulate Filter Mounting Bolt	22 Y	16 lb ft
Exhaust Particulate Filter Mounting Nut	28 Y	21 lb ft
Exhaust Particulate Filter Clamp	9.5 Y	84 lb in
Exhaust Particulate Filter Heat Shield - Front Retaining Bolt/Nut	9 Y	80 lb in
Exhaust Particulate Filter Heat Shield - Rear Retaining Bolt/Nut	9 Y	80 lb in
Exhaust Pressure Differential Sensor Bolt	10 Y	89 lb in
Exhaust Temperature Sensor Pos. 1	45 Y	33 lb ft
Exhaust Temperature Sensor Pos. 2	45 Y	33 lb ft
Exhaust Temperature Sensor Pos. 3	45 Y	33 lb ft
Exhaust Rear Muffler Nut (Exhaust Rear Muffler to Exhaust Front Pipe)	22 Y	16 lb ft
Exhaust Rear Pipe Hanger Insulator Mounting Bolt	22 Y	16 lb ft
Heated Oxygen Sensor	50 Y	37 lb ft
Turbocharger Bracket Retaining Bolt	25 Y	18 lb ft
Turbocharger Bracket Retaining Bolt	25 Y	18 lb ft
Turbocharger Coolant Feed Pipe Hollow Bolt	32 Y	24 lb ft
Turbocharger Coolant Return Pipe Hollow Bolt	32 Y	24 lb ft
Turbocharger Heat Shield Bolt	10 Y	89 lb in
Turbocharger Nut - Lower	30 Y	22 lb ft
Turbocharger Nut - Upper	30 Y	22 lb ft
Turbocharger Oil Feed Pipe Hollow Bolt	32 Y	24 lb ft
Turbocharger Oil Feed Pipe Mounting Bolt	10 Y	89 lb in
Turbocharger Oil Return Pipe Mounting Bolt	10 Y	89 lb in

1 = Use NEW Fastener

cardiagn.com

Fastener Tightening Specifications

Application	Specification	
	Metric	English
Battery Ground Cable Nut	9 Y	80 lb in
Battery Ground Cable To Battery Negative Cable Nut	9 Y	80 lb in
Battery Hold Down Retainer Nut	12 Y	106 lb in
Battery Negative Cable Nut	4.5 Y	40 lb in
Battery Positive Cable Nut	4.5 Y	40 lb in
Battery Positive Cable To Fuse Box Nut	9 Y	80 lb in
Battery Positive Cable Nut To Starter Cable Nut	12 Y	106 lb in
Battery Positive Plate Nut	12 Y	106 lb in
Battery Tray Bolt	15 Y	11 lb ft
Engine Wiring Harness Channel Bolts	10 Y	89 lb in
Engine Coolant Fan Shroud Ground Cable Nut	9 Y	80 lb in
Front Compartment Fuse Block Bolts	22 Y	16 lb ft
Generator Bolt	58 Y	43 lb ft
Generator Positive Cable Nut	17 Y	13 lb ft
Positive And Negative Cable Bracket To Transmission Bolts	17 Y	13 lb ft
Starter Bolts	58 Y	43 lb ft
Starter Ground Cable To Engine Block Bolt	22 Y	16 lb ft
Starter And Generator Positive Cable Nut	9.5 Y	84 lb in

cardiagn.com

Ignition System Specifications

Application	Specification	
	Metric	English
Ignition Type	Coil-On-Plug	
Firing Order	1–3–4–2	
Spark Plug	25 Y	19 lb ft
Spark Plug Gap— 1.6L LDE	0.9 mm	0.035 in
Spark Plug Gap— 1.6L LXV	1.1 mm	0.043 in
Spark Plug Gap— 1.8L 2H0	0.9 mm	0.035 in
Spark Plug Gap— 1.8L LFH	0.7 mm	0.028 in

cardiagn.com

Table 1: Engine Control Module Scan Tool Data
Table 2: Engine Control Module (ECM) Scan Tool Output Controls

The Engine Control Module Scan Tool Data List contains all engine related parameters that are available on the scan tool. This is a master list arranged in alphabetical order and not all the parameters listed are in every engine platform.

Use the Engine Scan Tool Data List only after the following is determined:

- The Diagnostic System Check - Vehicle
- No diagnostic trouble codes (DTCs)
- On-board diagnostics are functioning properly

The scan tool values from a properly running engine may be used for comparison with the engine you are diagnosing. The Engine Scan Tool Data List represents values that may be seen on a normally running engine.

Note: A scan tool that displays faulty data should not be used. The scan tool concern should be reported to the manufacturer. Use of a faulty scan tool can result in misdiagnosis and unnecessary parts replacement.

Only the parameters listed below are referenced in this service manual for use in diagnosis.

Engine Control Module Scan Tool Data

Parameter	System State	Expected Value	Description
Base Operating Conditions: Engine Idling/Radiator Hose Hot/Park or Neutral/Closed Loop			
5 V Reference 1 or 2 Circuit Status	Ignition ON	OK	This parameter displays OK if there is no 5 V reference circuit condition. If the circuit is shorted to ground or shorted to B+, Fault is displayed.
A/C Compressor Clutch Relay Command	A/C ON	Active	This parameter displays the state of the air conditioning (A/C) clutch relay control circuit as commanded by the control module.
A/C Disabled – A/C Pressure Out of Range	A/C ON	No	This parameter displays whether the A/C pressure is out of range for normal operation as determined by the control module.
A/C Disengage 1–8 History	A/C ON	Reason for A/C Disengagement	The parameter indicates the reason the air conditioning (A/C) compressor was disengaged. The scan tool displays None, A/C Pressure, Engine Speed, Battery Voltage, Anti Stall, RPM Unstable, WOT, Launch Performance, Coolant Hot, APP, Air Bag Deploy, or A/C Relay DTC.
A/C High Side Pressure Sensor	A/C OFF A/C ON	0–5 V 0–5 V	This parameter displays the voltage from the A/C high side pressure sensor signal circuit to the control module.
A/C High Side Pressure Sensor	A/C OFF A/C ON	700–900 kPa (101–130 PSI) 900–1 300 kPa (130–174 PSI)	This parameter displays the pressure from the A/C high side pressure sensor signal circuit to the control module.
A/C Off for WOT	A/C ON	Inactive	This parameter displays the state of the air conditioning (A/C) clutch relay control circuit as commanded by the control module.
Accelerator Pedal Position Sensor When Engine Overspeed Detected	—	Varies	This parameter displays the angle of accelerator pedal position in percentage if a engine overspeed condition is detected as calculated by the control module using the signals from the APP sensors.
APP Sensor 1 or 2	—	APP 1–0.94 V APP 2–0.47 V	This parameter displays the voltage of each APP sensor signal circuit as measured by the control module.
APP Sensors	—	0%	This parameter displays the angle of accelerator pedal position as calculated by the control module using the signals from the APP sensors.

cardiagn.com

Parameter	System State	Expected Value	Description
BARO	—	65–104 kPa (8–16 PSI) – Varies with altitude	This parameter displays the barometric pressure. The control module uses the barometric pressure sensor input for fuel control to compensate for altitude differences.
Boost Pressure Sensor	—	82–110 kPa (12–16 PSI)	This parameter displays the turbocharger boost pressure inside the engine as calculated by the control module based on the signal from the Boost pressure sensor.
Boost Pressure Sensor	—	0.85–1.55 V	This parameter displays the voltage of the turbocharger boost pressure inside the engine calculated by the control module based on the signal from the Boost pressure sensor.
Cooling Fan Relay Control 1, Control 2, or Control 3 Command	Fans Commanded ON	On	This parameter displays the control module commanded state of the fan relay control circuits.
CPP Learn Status	—	Inactive	This parameter displays the clutch pedal learn status. There are 6 different possible states for the clutch pedal learn status.
CPP Learned Apply Position	—	Volts	This parameter displays the position learned for the clutch pedal position sensor when the clutch pedal is fully applied during the associated learn procedure.
CPP Learned Release Position	—	Volts	This parameter displays the position learned for the clutch pedal position sensor when the clutch pedal is released.
CPP Sensor	—	%	This parameter displays the displacement of the clutch pedal (corrected and normalized based upon its learned released and fully applied positions), where 0% corresponds to the clutch pedal being released and 100% corresponds to the clutch pedal being fully applied.
CPP Sensor	—	Volts	This parameter displays the clutch pedal position sensor analog input as a percentage of its reference voltage.
Cruise Control Cancel Switch	Cruise Cancel Switch ON	Active	This parameter displays the state of the cruise Resume/Accelerate switch input to the control module from the cruise control system.
Cruise Control Disengage History 1–8	Cruise Control ON	Reason for Cruise Disengagement	The parameter displays the last 8 cruise control disengages in order from 1–8, with 8 being the most recent. There are approximately 40 possible causes for the cruise control to disengage.
Cruise Control ON/OFF Switch	Cruise Control ON	On	This parameter displays the state of the cruise ON/OFF switch input to the control module.
Cruise Control Resume Switch	Cruise Resume/Accelerate Switch ON	Active	This parameter displays the state of the cruise Resume/Accelerate switch input to the control module from the cruise control system.
Cruise Control Set Switch	Cruise Set/Coast Switch ON	Active	This parameter displays the state of the cruise Set/Coast switch input to the control module from the cruise control system.
Current Gear When Engine Overspeed Detected	—	Varies	This parameter displays the selected gear if an engine overspeed is detected.
Desired Boost Pressure	—	98 kPa (14.21 PSI)	This parameter displays the desired turbocharger boost pressure inside the engine as calculated by the control module based on the signal from the Boost pressure sensor.
Desired EGR Position	—	%	This parameter displays the desired EGR position as calculated by the control module.
Desired Fuel Rail Pressure	—	23–26 MPa 3 335.92–3 771.04 PSI	This parameter displays the desired fuel rail pressure as calculated by the control module. This value is calculated based on engine speed, engine load, and sensor inputs.
Desired Idle Speed	—	700–800 RPM	This parameter displays the desired engine idle speed as commanded by the control module.

cardiagn.com

Parameter	System State	Expected Value	Description
Desired Turbocharger Vane Position	—	0–100%	This parameter displays the desired turbocharger vane position as calculated by the control module based on the signal from the Boost pressure sensor.
Distance Since Last DPF Regeneration	—	Varies	This parameter displays the mileage that has elapsed since the last diesel particulate filter regeneration has occurred.
Distance Since Last DPF Replacement	—	Varies	This parameter displays the mileage since the last diesel particulate filter replacement.
Distance Since Last Oil Level Warning	—	Varies	This parameter displays the distance that has elapsed since the last oil level warning has occurred.
Distance Since Last Oil Pressure Warning	—	Varies	This parameter displays the distance that has elapsed since the last oil pressure warning has occurred.
Distance with MIL ON	—	Varies	This parameter displays the mileage that has elapsed since the last MIL on status has occurred.
DPF Differential Pressure Sensor	—	−3–15 kPa (−0.43–2.17 PSI)	This parameter indicates the pressure at the DPF and is calculated by the control module based on the signal from the sensor.
DPF Differential Pressure Sensor	—	0.40–0.60 V	This parameter displays the voltage calculated by the control module, based on the input from the exhaust gas temperature sensors when the particulate filter is full and needs a particulate filter regeneration.
DPF Soot Accumulation	—	0–100%	This parameter displays the amount of calculated soot in exhaust particulate filter.
ECM Challenge Status	—	Invalid	This parameter displays the status of the immobilizer system as received in the control unit.
ECT Sensor	—	−39 to +140°C (−38 to +284°F)	This parameter displays the temperature of the engine coolant based on input to the control module from the engine coolant temperature (ECT) sensor.
ECT Sensor	—	0–5 V	This parameter displays the voltage calculated by the control module from the engine coolant temperature (ECT) sensor.
EGR Command	—	40–55%	This parameter displays the percent of the duty cycle commanded by the control module.
EGR Cooler Bypass Valve Command	—	OFF	This parameter displays the status of the duty cycle commanded by the control module.
EGR Position Sensor	—	0–100%	This parameter displays the percent of the EGR position calculated by the control module.
EGR Position Sensor	—	Varies	This parameter displays the voltage of the EGR position calculated by the control module.
Engine Load	Engine Idling	11–30% Varies	This parameter displays the calculated engine load in percent based on inputs to the control module from various engine sensors.
	Engine speed at 2 500 RPM	25–40%	
Engine Oil Level Switch	—	OK	This parameter displays if the level of the engine oil is within range as determined by the control module from information received from the engine oil level switch.
Engine Oil Life Remaining	—	Varies	This parameter displays the remaining oil life.
Engine Oil Pressure Switch	—	OK	This parameter displays the state of the engine oil pressure as determined by the control module. The control module monitors the engine oil pressure switch to determine if the engine oil pressure is sufficient. The scan tool displays Low when the engine oil pressure is below a predetermined value.

cardiagn.com

Parameter	System State	Expected Value	Description
Engine Overheat Possible	—	OK	This parameter displays the calculated value from the ECM for a possible engine overheat situation to occur.
Engine Overspeed	—	Not Present	This parameter displays the status if overspeed detected.
Engine Overspeed Counter	—	Varies	This parameter displays the status if overspeed detected.
Engine Speed When Engine Overspeed Detected	—	Varies	This parameter displays the speed of the engine crankshaft rotation stored if an engine overspeed is detected.
Engine Run Time	Engine Operating	Varies	This parameter displays the time elapsed since the engine was started. The scan tool will display the time in hours, minutes and seconds. The engine run time will reset to zero when the engine stops running.
Engine Speed	Engine Cranking	Greater than 60 RPM	This parameter displays the speed of the engine crankshaft rotation from information received from the crankshaft position sensor.
	Engine Idling	Approximately 650–950 RPM	
Engine Speed out of range	—	OK	This parameter displays the status of the engine speed.
Exhaust Gas Temperature Sensor 1, 2 or 3	—	Exhaust Gas Temperature 1–110–140°C (230–284°F) Exhaust Gas Temperature 2–80–120°C (176–248°F)	This parameter displays the temperature of the exhaust gas calculated by the control module based on the input from the exhaust gas temperature sensors.
Exhaust Gas Temperature Sensor 1, 2 or 3	—	Exhaust Gas Temperature 1–1.00–1.15 V Exhaust Gas Temperature 2–0.90–1.10 V	This parameter displays the voltage calculated by the control module based on the input from the exhaust gas temperature sensors.
Fuel Level Sensor	—	Varies	This parameter displays the voltage from the sensor used to monitor the fuel level inside the fuel tank. The scan tool will display a low voltage reading when that the fuel level in the tank is low or near empty. The scan tool will display a high voltage reading when the fuel level in the tank is high or near full.
Fuel Pump Relay Command	Ignition ON, engine OFF	Fuel pump on for 2 s	This parameter displays the control modules commanded state of the fuel pump relay control circuit.
	Engine idling	On	
Fuel Rail Pressure Regulator 1 Command	—	%	This parameter displays the control modules commanded state of the fuel rail pressure regulator.
Fuel Rail Pressure Regulator Command	—	mA	This parameter displays the control modules commanded state of the fuel pressure regulator.
Fuel Rail Pressure Sensor	—	23–26 MPa 3 335.92–3 771.04 PSI	This parameter displays the fuel rail pressure calculated by the control module using the signal from the fuel rail pressure sensor.
Fuel Rail Pressure Sensor	—	0.80–1.20 V	This parameter displays the voltage of the fuel rail pressure calculated by the control module using the signal from the fuel rail pressure sensor.
Fuel Temperature Sensor	—	25–40°C (77–104°F)	This parameter displays the fuel temperature calculated by the control module based on input from the fuel temperature sensor.
Fuel Temperature Sensor	—	0.5–1.5 V	This parameter displays the voltage calculated by the control module based on input from the fuel temperature sensor.
Gear Engaged or Clutch Pressed	—	OK	This parameter displays the calculated status of the actual connection between the engine and transmission.

cardiagn.com

Parameter	System State	Expected Value	Description
Generator F-Terminal Signal	—	60–70%	This parameter displays the commanded state of the generator by the control module.
Generator L-Terminal Command	—	%	This parameter indicates the generator commanded state by the ECM.
Generator L-Terminal Signal Command	—	On/Off	This parameter indicates the generator commanded state by the ECM.
Glow Plug Command	—	Inactive	This parameter displays the control module commanded state of the glow plug.
IAT Sensor 1 or Sensor 2	—	−39 to +140°C (−38 to +284°F)	This parameter displays the temperature of the air entering the engine air duct calculated by the control module based on the input from the intake air temperature sensors.
Ignition 1 Signal	—	B+	This parameter displays B+ when the control module detects a voltage at the ignition 1 input terminal.
Ignition Accessory Signal	—	ON	This parameter displays the state of the ignition accessory position input to the control module from the ignition switch.
Ignition Switch Status	—	Active	This parameter displays the voltage measured at the ignition 1 circuit of the control module. Voltage is applied to the control module when the ignition switch is in the ignition 1 position.
Immobilizer Password Learn	Ignition ON	Enabled/Disabled	Learning Enabled indicates that learning of immobilizer code information is enabled.
Immobilizer Security Code Accepted	Ignition ON	Yes/No	This Parameter displays the status of the immobilizer system.
Immobilizer Security Code Lockout	Ignition ON	Yes/No	This Parameter displays the status of the immobilizer system.
Immobilizer Security Code Programmed	Ignition ON	Yes/No	This Parameter displays the status of the immobilizer system.
Immobilizer Security Information Programmed	Ignition ON	Yes/No	This Parameter displays the status of the immobilizer system.
Immobilizer System Status	Ignition ON	Standby/Immobilized at Startup/Immobilized No Response/Immobilized Negative Response/Immobilized Incorrect Response/Post-Release State/Pre-Release State/Release State	This Parameter displays the status of the immobilizer system.
Initial Brake Apply Signal	Brake Pedal applied	Active	This parameter displays the state of the brake pedal position input to the control module.
Injection Limitation Active	—	OK	This parameter displays status of the injection limitation as commanded by the ECM.
Intake Air Flow Valve Motor Command	—	Varies	This parameter displays the percent of the control modules commanded state of the intake air flow valve.
Intake Air Flow Valve Position	—	Varies	This parameter displays the percent of the position of the intake air flow valve.
Intake Air Flow Valve Position Sensor	—	Varies	This parameter displays the voltage of the position of the intake air flow valve.
Intake Manifold Runner Control Valve Command	—	Varies	This parameter displays the percent of the control modules commanded state of the intake manifold runner valve.
Intake Manifold Runner Control Valve Position Sensor	—	%	This parameter displays the position from the intake manifold runner valve in percentage.
MAF Sensor	—	g/s	This parameter displays the quantity calculated by the control module based on a signal from the mass air flow (MAF) sensor.

cardiagn.com

Parameter	System State	Expected Value	Description
MAF Sensor	—	1 700–2 100 Hz	This parameter indicates the frequency signal received from the MAF sensor by the control module. The scan tool will display a high value at high engine speeds, and a low value at low engine speeds.
MAF When Engine Overspeed Detected	—	Varies	This parameter displays the air flow of the engine as calculated by the control module based on the signal from the Mass Air Flow Sensor if a engine overspeed condition is detected.
Maximum Engine Speed When Engine Overspeed Detected	—	Varies	This parameter displays the maximum speed of the engine crankshaft rotation stored if an engine overspeed is detected.
MIL Command	—	Off	This parameter displays the status of the MIL indicator as commanded by the control module.
Odometer When Engine Overspeed Detected	—	Varies	This parameter displays the vehicle speed stored if an engine overspeed condition is detected.
Park/Neutral Position Switch	—	Varies	This parameter displays the position of the shift lever.
Power Mode	Ignition ON	OFF/Accessory /Run/Crank Request	This Parameter displays the state of the System Power Mode. This signal is based upon the state of the system power mode received over serial communication from the vehicle electronics. If the serial data signal not received, the Parameter will display OFF.
Remaining Fuel in Tank	—	0–100% Varies	This parameter displays the amount of fuel remaining in the fuel tank as measured in percentage. The control module determines the amount of fuel remaining in the tank by using information from the fuel level sensors. The scan tool will display a higher value with a full fuel tank, and a lower value with an empty fuel tank.
Reverse Position Switch	—	OFF	Manual Transmission Reverse Switch ON indicates that the reverse switch hard wire input to the ECM is active.
Soot Mass Too Large	—	OK	This parameter displays the status of the amount of soot in the DPF as calculated by the ECM.
Starter Relay Command	—	OFF	The scan tool displays ON or OFF. The scan tool displays OFF until the ignition is placed into the CRANK position.
System Voltage	—	11.0–14.5 V	This parameter displays the actual battery voltage.
Total Engine Overspeed Time	—	Varies	This parameter displays the time, how long an engine overspeed condition was detected.
Turbocharger Vane Position Sensor	—	0–100%	This parameter displays the percent of turbocharger vane position as calculated by the control module using the information from the turbocharger vane position sensor.
	—	Varies	This parameter displays the voltage of turbocharger vane position as calculated by the control module using the information from the turbocharger vane position sensor.
Turbocharger Vane Position Solenoid Valve Command	—	Varies	This parameter displays the percent of the control modules commanded state of the turbocharger vane position valve based on the boost pressure sensor.
Vehicle Speed	—	0 km/h (0 MPH)	This parameter displays the speed of the vehicle as calculated by the transmission control module (TCM) from information received from the vehicle speed sensor (VSS).
Vehicle Speed When Engine Overspeed Detected	—	0 km/h (0 MPH)	This parameter displays the speed of the vehicle if a engine overspeed condition is detected as calculated by the engine control module (ECM) from information received from the antilock brake system.

cardiagn.com

Engine Control Module (ECM) Scan Tool Output Controls

Output Control	Description
A/C Compressor Clutch Relay	This function activates the A/C compressor relay. The normal commanded state of the A/C relay is OFF. The A/C compressor will turn ON/OFF when commanded ON/OFF. The system remains in the commanded state for approximately 5 s. The engine control module (ECM) will inhibit the operation of the A/C relay when the ambient air temperature is low.
Clutch Pedal Position Learn	This device control is used to trigger the procedure to learn the clutch pedal fully applied position.
Compression Test	This device control is used to setup the engine for a compression test. The fuel system is disabled. The throttle is opened to a wide open throttle (WOT) position. The extended crank feature is not active. The scan tool initiates the test when the following conditions are met: • Transmission in Park or Neutral. • No transmission range switch DTCs set. • The engine speed is 0 RPM. • There are no crankshaft position sensor DTCs set. • The vehicle speed is 0 km/h (0 MPH). • There are no VSS sensor DTCs set.
Cooling Fan Relay 1	This function controls the low speed cooling fan relay. When commanded ON, the cooling fan will turn ON at low speed for approximately 5 s.
Cooling Fan Relay 2	This function controls the high speed cooling fan relay. When commanded ON, the cooling fan will turn ON at medium speed.
Cooling Fan Relay 3	This function controls the high speed cooling fan relay. When commanded ON, the cooling fan will turn ON at high speed.
Cylinder Power Balance	Fuel Injector Enable; Fuel Injector ON
DPF Reset	**Note:** This function is only allowed with the ignition ON, engine OFF. This function resets the learned values for the diesel particulate filter in the ECM after the DPF has been replaced.
DPF Pressure Sensor Learn	**Note:** This function is only allowed with the ignition ON, engine OFF. This function resets the learned values for the diesel particulate filter in the ECM after the DPF pressure sensor has been replaced.
DPF Service Regeneration	This function resets the learned values for the diesel particulate filter in the ECM after the DPF has been replaced.
EGR Cooler Bypass Valve	This function opens or closes the EGR cooler bypass valve. The device control will not change unless changed or cancelled by the scan tool.
EGR Valve	This function opens or closes the exhaust gas recirculation (EGR) solenoid. The EGR solenoid increases or decreases in 10% increments. The device control will not change unless changed or cancelled by the scan tool.
Engine Oil Life Reset	This function turns OFF the change oil lamp and resets the values in the ECM.
Engine Speed	**Note:** This function is only allowed with the engine idling. This function adjusts the engine speed in 25, 100, or 500 RPM increments between 600–1 500 RPM. The device control will not change unless changed or cancelled by the scan tool.
Fuel Heater Relay	This function activates the fuel heater relay ON or OFF. The Device Control will not change unless changed or cancelled by the scan tool.
Fuel Injector Learn	**Note:** This function is only allowed with the ignition ON, engine OFF. This function resets the learned fuel injector values in the ECM after the ECM has been replaced.
Fuel Pump Relay	**Note:** This function is only allowed with the ignition ON, engine OFF. This function activates the fuel transfer pump or prime pump (depending on application) ON or OFF. The Device Control will not change unless changed or cancelled by the scan tool.
Fuel Rail Pressure Sensor or Fuel Rail Learn	This function allows the fuel rail pressure sensor or fuel rail to be relearned by the ECM.
Generator L-Terminal	**Note:** This function is only allowed with the engine idling. This function controls the system voltage. When commanded ON, normal system voltage output is present. When commanded OFF, system voltage output is no longer present, Ignition 1 signal continues to drop, Generator L-Terminal goes to OFF and Generator F-Terminal continues to drop.
Glow Plugs	This function activates the Glow Plug Controller ON or OFF. The Device Control will be aborted after 12 s for the first activation, and after 5 s for every other activation. The Device Control is inhibited if the engine is running.

cardiagn.com

Output Control	Description
Injector Flow Rate Programming	This function resets the learned fuel injector values in the ECM after the injector or ECM has been replaced. **Note:** This function is only allowed with the ignition ON, engine OFF.
Intake Air Flow Valve Position	This function opens or closes the throttle blade. The throttle blade increases or decreases in 10% increments. The scan tool initiates the test when the following conditions are met: • There are no vehicle speed sensor DTCs set. • The vehicle speed is 0 km/h (0 MPH). • The ignition is ON, with the engine OFF. • The ECM is not commanding a throttle learn. The system remains in the commanded state until cancelled by the scan tool.
Intake Manifold Runner Control Valve	Intake Manifold Runner Command 0–100%
Intake Manifold Runner Control Valve Learn	The ECM executes the Intake Manifold Runner Learn Routine when commanded from the scan tool.
Malfunction Indicator Lamp (MIL)	This function activates the malfunction indicator lamp (MIL). The MIL will remain illuminated until cancelled by the scan tool.
Setup new Control Module	**Note:** This function is only allowed with the ignition ON, engine OFF. This function resets the following: • This function resets the learned values for the diesel particulate filter in the ECM after the ECM has been replaced. • This function resets the learned fuel injector values in the ECM after the ECM has been replaced. • This function resets the learned values for the diesel particulate filter in the ECM after one or more fuel injectors have been replaced.
Turbocharger Vane Position Solenoid Valve	**Note:** This function is only allowed with the engine idling. Cycles the turbocharger vane position solenoid to 95% boost and back to 0% boost. The device control is limited to engine speeds less than 2 000 RPM.

cardiagn.com

Table 1: Engine Control Module Scan Tool Data
Table 2: Engine Control Module (ECM) Scan Tool Output Controls

The Engine Control Module Scan Tool Data List contains all engine related parameters that are available on the scan tool. This is a master list arranged in alphabetical order and not all the parameters listed are in every engine platform.

Use the Engine Scan Tool Data List only after the following is determined:

- The Diagnostic System Check - Vehicle
- No diagnostic trouble codes (DTCs)
- On-board diagnostics are functioning properly

The scan tool values from a properly running engine may be used for comparison with the engine you are diagnosing. The Engine Scan Tool Data List represents values that may be seen on a normally running engine.

Note: A scan tool that displays faulty data should not be used. The scan tool concern should be reported to the manufacturer. Use of a faulty scan tool can result in misdiagnosis and unnecessary parts replacement.

Only the parameters listed below are referenced in this service manual for use in diagnosis.

Engine Control Module Scan Tool Data

Parameter	System State	Expected Value	Description
Base Operating Conditions: Engine Idling/Radiator Hose Hot/Park or Neutral/Closed Loop			
5 V Reference 1 or 2 Circuit Status	Ignition ON	OK	This parameter displays OK if there is no 5 V reference circuit condition. If the circuit is shorted to ground or shorted to B+, Fault is displayed.
A/C Compressor Clutch Relay Command	A/C ON	Active	This parameter displays the state of the air conditioning (A/C) clutch relay control circuit as commanded by the control module.
A/C Disabled – A/C Pressure Out of Range	A/C ON	No	This parameter displays whether the A/C pressure is out of range for normal operation as determined by the control module.
A/C Disengage 1–8 History	A/C ON	Reason for A/C Disengagement	The parameter indicates the reason the air conditioning (A/C) compressor was disengaged. The scan tool displays None, A/C Pressure, Engine Speed, Battery Voltage, Anti Stall, RPM Unstable, WOT, Launch Performance, Coolant Hot, APP, Air Bag Deploy, or A/C Relay DTC.
A/C High Side Pressure Sensor	A/C OFF A/C ON	0–5 V 0–5 V	This parameter displays the voltage from the A/C high side pressure sensor signal circuit to the control module.
A/C High Side Pressure Sensor	A/C OFF A/C ON	700–900 kPa (101–130 PSI) 900–1 300 kPa (130–174 PSI)	This parameter displays the pressure from the A/C high side pressure sensor signal circuit to the control module.
A/C Off for WOT	A/C ON	Inactive	This parameter displays the state of the air conditioning (A/C) clutch relay control circuit as commanded by the control module.
Accelerator Pedal Position Sensor When Engine Overspeed Detected	—	Varies	This parameter displays the angle of accelerator pedal position in percentage if a engine overspeed condition is detected as calculated by the control module using the signals from the APP sensors.
APP Sensor 1 or 2	—	APP 1–0.94 V APP 2–0.47 V	This parameter displays the voltage of each APP sensor signal circuit as measured by the control module.
APP Sensors	—	0%	This parameter displays the angle of accelerator pedal position as calculated by the control module using the signals from the APP sensors.

cardiagn.com

Parameter	System State	Expected Value	Description
BARO	—	65–104 kPa (8–16 PSI) – Varies with altitude	This parameter displays the barometric pressure. The control module uses the barometric pressure sensor input for fuel control to compensate for altitude differences.
Boost Pressure Sensor	—	82–110 kPa (12–16 PSI)	This parameter displays the turbocharger boost pressure inside the engine as calculated by the control module based on the signal from the Boost pressure sensor.
Boost Pressure Sensor	—	0.85–1.55 V	This parameter displays the voltage of the turbocharger boost pressure inside the engine calculated by the control module based on the signal from the Boost pressure sensor.
Cooling Fan Relay Control 1, Control 2, or Control 3 Command	Fans Commanded ON	On	This parameter displays the control module commanded state of the fan relay control circuits.
CPP Learn Status	—	Inactive	This parameter displays the clutch pedal learn status. There are 6 different possible states for the clutch pedal learn status.
CPP Learned Apply Position	—	Volts	This parameter displays the position learned for the clutch pedal position sensor when the clutch pedal is fully applied during the associated learn procedure.
CPP Learned Release Position	—	Volts	This parameter displays the position learned for the clutch pedal position sensor when the clutch pedal is released.
CPP Sensor	—	%	This parameter displays the displacement of the clutch pedal (corrected and normalized based upon its learned released and fully applied positions), where 0% corresponds to the clutch pedal being released and 100% corresponds to the clutch pedal being fully applied.
CPP Sensor	—	Volts	This parameter displays the clutch pedal position sensor analog input as a percentage of its reference voltage.
Cruise Control Cancel Switch	Cruise Cancel Switch ON	Active	This parameter displays the state of the cruise Resume/Accelerate switch input to the control module from the cruise control system.
Cruise Control Disengage History 1–8	Cruise Control ON	Reason for Cruise Disengagement	The parameter displays the last 8 cruise control disengages in order from 1–8, with 8 being the most recent. There are approximately 40 possible causes for the cruise control to disengage.
Cruise Control ON/OFF Switch	Cruise Control ON	On	This parameter displays the state of the cruise ON/OFF switch input to the control module.
Cruise Control Resume Switch	Cruise Resume/Accelerate Switch ON	Active	This parameter displays the state of the cruise Resume/Accelerate switch input to the control module from the cruise control system.
Cruise Control Set Switch	Cruise Set/Coast Switch ON	Active	This parameter displays the state of the cruise Set/Coast switch input to the control module from the cruise control system.
Current Gear When Engine Overspeed Detected	—	Varies	This parameter displays the selected gear if an engine overspeed is detected.
Desired Boost Pressure	—	98 kPa (14.21 PSI)	This parameter displays the desired turbocharger boost pressure inside the engine as calculated by the control module based on the signal from the Boost pressure sensor.
Desired EGR Position	—	%	This parameter displays the desired EGR position as calculated by the control module.
Desired Fuel Rail Pressure	—	23–26 MPa 3 335.92–3 771.04 PSI	This parameter displays the desired fuel rail pressure as calculated by the control module. This value is calculated based on engine speed, engine load, and sensor inputs.
Desired Idle Speed	—	700–800 RPM	This parameter displays the desired engine idle speed as commanded by the control module.

cardiagn.com

Parameter	System State	Expected Value	Description
Desired Turbocharger Vane Position	—	0–100%	This parameter displays the desired turbocharger vane position as calculated by the control module based on the signal from the Boost pressure sensor.
Distance Since Last DPF Regeneration	—	Varies	This parameter displays the mileage that has elapsed since the last diesel particulate filter regeneration has occurred.
Distance Since Last DPF Replacement	—	Varies	This parameter displays the mileage since the last diesel particulate filter replacement.
Distance Since Last Oil Level Warning	—	Varies	This parameter displays the distance that has elapsed since the last oil level warning has occurred.
Distance Since Last Oil Pressure Warning	—	Varies	This parameter displays the distance that has elapsed since the last oil pressure warning has occurred.
Distance with MIL ON	—	Varies	This parameter displays the mileage that has elapsed since the last MIL on status has occurred.
DPF Differential Pressure Sensor	—	−3–15 kPa (−0.43–2.17 PSI)	This parameter indicates the pressure at the DPF and is calculated by the control module based on the signal from the sensor.
DPF Differential Pressure Sensor	—	0.40–0.60 V	This parameter displays the voltage calculated by the control module, based on the input from the exhaust gas temperature sensors when the particulate filter is full and needs a particulate filter regeneration.
DPF Soot Accumulation	—	0–100%	This parameter displays the amount of calculated soot in exhaust particulate filter.
ECM Challenge Status	—	Invalid	This parameter displays the status of the immobilizer system as received in the control unit.
ECT Sensor	—	−39 to +140°C (−38 to +284°F)	This parameter displays the temperature of the engine coolant based on input to the control module from the engine coolant temperature (ECT) sensor.
ECT Sensor	—	0–5 V	This parameter displays the voltage calculated by the control module from the engine coolant temperature (ECT) sensor.
EGR Command	—	40–55%	This parameter displays the percent of the duty cycle commanded by the control module.
EGR Cooler Bypass Valve Command	—	OFF	This parameter displays the status of the duty cycle commanded by the control module.
EGR Position Sensor	—	0–100%	This parameter displays the percent of the EGR position calculated by the control module.
EGR Position Sensor	—	Varies	This parameter displays the voltage of the EGR position calculated by the control module.
Engine Load	Engine Idling	11–30% Varies	This parameter displays the calculated engine load in percent based on inputs to the control module from various engine sensors.
	Engine speed at 2 500 RPM	25–40%	
Engine Oil Level Switch	—	OK	This parameter displays if the level of the engine oil is within range as determined by the control module from information received from the engine oil level switch.
Engine Oil Life Remaining	—	Varies	This parameter displays the remaining oil life.
Engine Oil Pressure Switch	—	OK	This parameter displays the state of the engine oil pressure as determined by the control module. The control module monitors the engine oil pressure switch to determine if the engine oil pressure is sufficient. The scan tool displays Low when the engine oil pressure is below a predetermined value.

cardiagn.com

Parameter	System State	Expected Value	Description
Engine Overheat Possible	—	OK	This parameter displays the calculated value from the ECM for a possible engine overheat situation to occur.
Engine Overspeed	—	Not Present	This parameter displays the status if overspeed detected.
Engine Overspeed Counter	—	Varies	This parameter displays the status if overspeed detected.
Engine Speed When Engine Overspeed Detected	—	Varies	This parameter displays the speed of the engine crankshaft rotation stored if an engine overspeed is detected.
Engine Run Time	Engine Operating	Varies	This parameter displays the time elapsed since the engine was started. The scan tool will display the time in hours, minutes and seconds. The engine run time will reset to zero when the engine stops running.
Engine Speed	Engine Cranking	Greater than 60 RPM	This parameter displays the speed of the engine crankshaft rotation from information received from the crankshaft position sensor.
	Engine Idling	Approximately 650–950 RPM	
Engine Speed out of range	—	OK	This parameter displays the status of the engine speed.
Exhaust Gas Temperature Sensor 1, 2 or 3	—	Exhaust Gas Temperature 1–110–140°C (230–284°F) Exhaust Gas Temperature 2–80–120°C (176–248°F)	This parameter displays the temperature of the exhaust gas calculated by the control module based on the input from the exhaust gas temperature sensors.
Exhaust Gas Temperature Sensor 1, 2 or 3	—	Exhaust Gas Temperature 1–1.00–1.15 V Exhaust Gas Temperature 2–0.90–1.10 V	This parameter displays the voltage calculated by the control module based on the input from the exhaust gas temperature sensors.
Fuel Level Sensor	—	Varies	This parameter displays the voltage from the sensor used to monitor the fuel level inside the fuel tank. The scan tool will display a low voltage reading when that the fuel level in the tank is low or near empty. The scan tool will display a high voltage reading when the fuel level in the tank is high or near full.
Fuel Pump Relay Command	Ignition ON, engine OFF	Fuel pump on for 2 s	This parameter displays the control modules commanded state of the fuel pump relay control circuit.
	Engine idling	On	
Fuel Rail Pressure Regulator 1 Command	—	%	This parameter displays the control modules commanded state of the fuel rail pressure regulator.
Fuel Rail Pressure Regulator Command	—	mA	This parameter displays the control modules commanded state of the fuel pressure regulator.
Fuel Rail Pressure Sensor	—	23–26 MPa 3 335.92–3 771.04 PSI	This parameter displays the fuel rail pressure calculated by the control module using the signal from the fuel rail pressure sensor.
Fuel Rail Pressure Sensor	—	0.80–1.20 V	This parameter displays the voltage of the fuel rail pressure calculated by the control module using the signal from the fuel rail pressure sensor.
Fuel Temperature Sensor	—	25–40°C (77–104°F)	This parameter displays the fuel temperature calculated by the control module based on input from the fuel temperature sensor.
Fuel Temperature Sensor	—	0.5–1.5 V	This parameter displays the voltage calculated by the control module based on input from the fuel temperature sensor.
Gear Engaged or Clutch Pressed	—	OK	This parameter displays the calculated status of the actual connection between the engine and transmission.

cardiagn.com

Parameter	System State	Expected Value	Description
Generator F-Terminal Signal	—	60–70%	This parameter displays the commanded state of the generator by the control module.
Generator L-Terminal Command	—	%	This parameter indicates the generator commanded state by the ECM.
Generator L-Terminal Signal Command	—	On/Off	This parameter indicates the generator commanded state by the ECM.
Glow Plug Command	—	Inactive	This parameter displays the control module commanded state of the glow plug.
IAT Sensor 1 or Sensor 2	—	−39 to +140°C (−38 to +284°F)	This parameter displays the temperature of the air entering the engine air duct calculated by the control module based on the input from the intake air temperature sensors.
Ignition 1 Signal	—	B+	This parameter displays B+ when the control module detects a voltage at the ignition 1 input terminal.
Ignition Accessory Signal	—	ON	This parameter displays the state of the ignition accessory position input to the control module from the ignition switch.
Ignition Switch Status	—	Active	This parameter displays the voltage measured at the ignition 1 circuit of the control module. Voltage is applied to the control module when the ignition switch is in the ignition 1 position.
Immobilizer Password Learn	Ignition ON	Enabled/Disabled	Learning Enabled indicates that learning of immobilizer code information is enabled.
Immobilizer Security Code Accepted	Ignition ON	Yes/No	This Parameter displays the status of the immobilizer system.
Immobilizer Security Code Lockout	Ignition ON	Yes/No	This Parameter displays the status of the immobilizer system.
Immobilizer Security Code Programmed	Ignition ON	Yes/No	This Parameter displays the status of the immobilizer system.
Immobilizer Security Information Programmed	Ignition ON	Yes/No	This Parameter displays the status of the immobilizer system.
Immobilizer System Status	Ignition ON	Standby/Immobilized at Startup/Immobilized No Response/Immobilized Negative Response/Immobilized Incorrect Response/Post-Release State/Pre-Release State/Release State	This Parameter displays the status of the immobilizer system.
Initial Brake Apply Signal	Brake Pedal applied	Active	This parameter displays the state of the brake pedal position input to the control module.
Injection Limitation Active	—	OK	This parameter displays status of the injection limitation as commanded by the ECM.
Intake Air Flow Valve Motor Command	—	Varies	This parameter displays the percent of the control modules commanded state of the intake air flow valve.
Intake Air Flow Valve Position	—	Varies	This parameter displays the percent of the position of the intake air flow valve.
Intake Air Flow Valve Position Sensor	—	Varies	This parameter displays the voltage of the position of the intake air flow valve.
Intake Manifold Runner Control Valve Command	—	Varies	This parameter displays the percent of the control modules commanded state of the intake manifold runner valve.
Intake Manifold Runner Control Valve Position Sensor	—	%	This parameter displays the position from the intake manifold runner valve in percentage.
MAF Sensor	—	g/s	This parameter displays the quantity calculated by the control module based on a signal from the mass air flow (MAF) sensor.

cardiagn.com

Parameter	System State	Expected Value	Description
MAF Sensor	—	1 700–2 100 Hz	This parameter indicates the frequency signal received from the MAF sensor by the control module. The scan tool will display a high value at high engine speeds, and a low value at low engine speeds.
MAF When Engine Overspeed Detected	—	Varies	This parameter displays the air flow of the engine as calculated by the control module based on the signal from the Mass Air Flow Sensor if a engine overspeed condition is detected.
Maximum Engine Speed When Engine Overspeed Detected	—	Varies	This parameter displays the maximum speed of the engine crankshaft rotation stored if an engine overspeed is detected.
MIL Command	—	Off	This parameter displays the status of the MIL indicator as commanded by the control module.
Odometer When Engine Overspeed Detected	—	Varies	This parameter displays the vehicle speed stored if an engine overspeed condition is detected.
Park/Neutral Position Switch	—	Varies	This parameter displays the position of the shift lever.
Power Mode	Ignition ON	OFF/Accessory /Run/Crank Request	This Parameter displays the state of the System Power Mode. This signal is based upon the state of the system power mode received over serial communication from the vehicle electronics. If the serial data signal not received, the Parameter will display OFF.
Remaining Fuel in Tank	—	0–100% Varies	This parameter displays the amount of fuel remaining in the fuel tank as measured in percentage. The control module determines the amount of fuel remaining in the tank by using information from the fuel level sensors. The scan tool will display a higher value with a full fuel tank, and a lower value with an empty fuel tank.
Reverse Position Switch	—	OFF	Manual Transmission Reverse Switch ON indicates that the reverse switch hard wire input to the ECM is active.
Soot Mass Too Large	—	OK	This parameter displays the status of the amount of soot in the DPF as calculated by the ECM.
Starter Relay Command	—	OFF	The scan tool displays ON or OFF. The scan tool displays OFF until the ignition is placed into the CRANK position.
System Voltage	—	11.0–14.5 V	This parameter displays the actual battery voltage.
Total Engine Overspeed Time	—	Varies	This parameter displays the time, how long an engine overspeed condition was detected.
Turbocharger Vane Position Sensor	—	0–100%	This parameter displays the percent of turbocharger vane position as calculated by the control module using the information from the turbocharger vane position sensor.
	—	Varies	This parameter displays the voltage of turbocharger vane position as calculated by the control module using the information from the turbocharger vane position sensor.
Turbocharger Vane Position Solenoid Valve Command	—	Varies	This parameter displays the percent of the control modules commanded state of the turbocharger vane position valve based on the boost pressure sensor.
Vehicle Speed	—	0 km/h (0 MPH)	This parameter displays the speed of the vehicle as calculated by the transmission control module (TCM) from information received from the vehicle speed sensor (VSS).
Vehicle Speed When Engine Overspeed Detected	—	0 km/h (0 MPH)	This parameter displays the speed of the vehicle if a engine overspeed condition is detected as calculated by the engine control module (ECM) from information received from the antilock brake system.

cardiagn.com

Engine Control Module (ECM) Scan Tool Output Controls

Output Control	Description
A/C Compressor Clutch Relay	This function activates the A/C compressor relay. The normal commanded state of the A/C relay is OFF. The A/C compressor will turn ON/OFF when commanded ON/OFF. The system remains in the commanded state for approximately 5 s. The engine control module (ECM) will inhibit the operation of the A/C relay when the ambient air temperature is low.
Clutch Pedal Position Learn	This device control is used to trigger the procedure to learn the clutch pedal fully applied position.
Compression Test	This device control is used to setup the engine for a compression test. The fuel system is disabled. The throttle is opened to a wide open throttle (WOT) position. The extended crank feature is not active. The scan tool initiates the test when the following conditions are met: • Transmission in Park or Neutral. • No transmission range switch DTCs set. • The engine speed is 0 RPM. • There are no crankshaft position sensor DTCs set. • The vehicle speed is 0 km/h (0 MPH). • There are no VSS sensor DTCs set.
Cooling Fan Relay 1	This function controls the low speed cooling fan relay. When commanded ON, the cooling fan will turn ON at low speed for approximately 5 s.
Cooling Fan Relay 2	This function controls the high speed cooling fan relay. When commanded ON, the cooling fan will turn ON at medium speed.
Cooling Fan Relay 3	This function controls the high speed cooling fan relay. When commanded ON, the cooling fan will turn ON at high speed.
Cylinder Power Balance	Fuel Injector Enable; Fuel Injector ON
DPF Reset	**Note:** This function is only allowed with the ignition ON, engine OFF. This function resets the learned values for the diesel particulate filter in the ECM after the DPF has been replaced.
DPF Pressure Sensor Learn	**Note:** This function is only allowed with the ignition ON, engine OFF. This function resets the learned values for the diesel particulate filter in the ECM after the DPF pressure sensor has been replaced.
DPF Service Regeneration	This function resets the learned values for the diesel particulate filter in the ECM after the DPF has been replaced.
EGR Cooler Bypass Valve	This function opens or closes the EGR cooler bypass valve. The device control will not change unless changed or cancelled by the scan tool.
EGR Valve	This function opens or closes the exhaust gas recirculation (EGR) solenoid. The EGR solenoid increases or decreases in 10% increments. The device control will not change unless changed or cancelled by the scan tool.
Engine Oil Life Reset	This function turns OFF the change oil lamp and resets the values in the ECM.
Engine Speed	**Note:** This function is only allowed with the engine idling. This function adjusts the engine speed in 25, 100, or 500 RPM increments between 600–1 500 RPM. The device control will not change unless changed or cancelled by the scan tool.
Fuel Heater Relay	This function activates the fuel heater relay ON or OFF. The Device Control will not change unless changed or cancelled by the scan tool.
Fuel Injector Learn	**Note:** This function is only allowed with the ignition ON, engine OFF. This function resets the learned fuel injector values in the ECM after the ECM has been replaced.
Fuel Pump Relay	**Note:** This function is only allowed with the ignition ON, engine OFF. This function activates the fuel transfer pump or prime pump (depending on application) ON or OFF. The Device Control will not change unless changed or cancelled by the scan tool.
Fuel Rail Pressure Sensor or Fuel Rail Learn	This function allows the fuel rail pressure sensor or fuel rail to be relearned by the ECM.
Generator L-Terminal	**Note:** This function is only allowed with the engine idling. This function controls the system voltage. When commanded ON, normal system voltage output is present. When commanded OFF, system voltage output is no longer present, Ignition 1 signal continues to drop, Generator L-Terminal goes to OFF and Generator F-Terminal continues to drop.
Glow Plugs	This function activates the Glow Plug Controller ON or OFF. The Device Control will be aborted after 12 s for the first activation, and after 5 s for every other activation. The Device Control is inhibited if the engine is running.

cardiagn.com

Output Control	Description
Injector Flow Rate Programming	This function resets the learned fuel injector values in the ECM after the injector or ECM has been replaced. **Note:** This function is only allowed with the ignition ON, engine OFF.
Intake Air Flow Valve Position	This function opens or closes the throttle blade. The throttle blade increases or decreases in 10% increments. The scan tool initiates the test when the following conditions are met: • There are no vehicle speed sensor DTCs set. • The vehicle speed is 0 km/h (0 MPH). • The ignition is ON, with the engine OFF. • The ECM is not commanding a throttle learn. The system remains in the commanded state until cancelled by the scan tool.
Intake Manifold Runner Control Valve	Intake Manifold Runner Command 0–100%
Intake Manifold Runner Control Valve Learn	The ECM executes the Intake Manifold Runner Learn Routine when commanded from the scan tool.
Malfunction Indicator Lamp (MIL)	This function activates the malfunction indicator lamp (MIL). The MIL will remain illuminated until cancelled by the scan tool.
Setup new Control Module	**Note:** This function is only allowed with the ignition ON, engine OFF. This function resets the following: • This function resets the learned values for the diesel particulate filter in the ECM after the ECM has been replaced. • This function resets the learned fuel injector values in the ECM after the ECM has been replaced. • This function resets the learned values for the diesel particulate filter in the ECM after one or more fuel injectors have been replaced.
Turbocharger Vane Position Solenoid Valve	**Note:** This function is only allowed with the engine idling. Cycles the turbocharger vane position solenoid to 95% boost and back to 0% boost. The device control is limited to engine speeds less than 2 000 RPM.

cardiagn.com

Battery Usage

Application	Specification
Cold Cranking Amperage (CCA)	525 A
AMP Hours	60 A/H

cardiagn.com

Fastener Tightening Specifications

Application	Specification	
	Metric	English
Battery Ground Cable Nut	9 Y	80 lb in
Battery Ground Cable To Battery Negative Cable Nut	9 Y	80 lb in
Battery Hold Down Retainer Nut	12 Y	106 lb in
Battery Negative Cable Nut	4.5 Y	40 lb in
Battery Positive Cable Nut	4.5 Y	40 lb in
Battery Positive Cable To Fuse Box Nut	9 Y	80 lb in
Battery Positive Cable Nut To Starter Cable Nut	12 Y	106 lb in
Battery Positive Plate Nut	12 Y	106 lb in
Battery Tray Bolt	15 Y	11 lb ft
Engine Wiring Harness Channel Bolts	10 Y	89 lb in
Engine Coolant Fan Shroud Ground Cable Nut	9 Y	80 lb in
Front Compartment Fuse Block Bolts	22 Y	16 lb ft
Generator Bolt	58 Y	43 lb ft
Generator Positive Cable Nut	17 Y	13 lb ft
Positive And Negative Cable Bracket To Transmission Bolts	17 Y	13 lb ft
Starter Bolts	58 Y	43 lb ft
Starter Ground Cable To Engine Block Bolt	22 Y	16 lb ft
Starter And Generator Positive Cable Nut	9.5 Y	84 lb in

cardiagn.com

Generator Usage

Application	Specification
1.6L (LXV)	
Generator Model	TG13 (Valeo)
Rated Output	125 A
Load Test Output	87 A
2.0L (diesel)	
Generator Model	TG13 (Valeo)
Rated Output	125 A
Load Test Output	87 A

cardiagn.com

Diagnostic Instructions

- Perform the Diagnostic System Check - Vehicle prior to using this diagnostic procedure.
- Review Strategy Based Diagnosis for an overview of the diagnostic approach.
- Diagnostic Procedure Instructions provides an overview of each diagnostic category.

Symptoms Description

Symptoms cover conditions that are not covered by DTCs. Certain conditions can cause multiple symptoms. These conditions are listed together under Symptoms Testing. Conditions that may only cause specific symptoms are listed separately under additional symptoms testing. Perform the symptoms testing before using the additional symptoms testing.

Symptoms Definition

Backfire

Fuel ignites in the intake manifold or in the exhaust system, making a loud popping noise.

Cuts Out, Misses

A steady pulsation or jerking that follows engine speed, which is usually more pronounced as the engine load increases. This condition is not normally felt above 1 500 RPM or 48 km/h (30 MPH). The exhaust has a steady spitting sound at idle or at low speed.

Detonation/Spark Knock

A mild to severe ping which usually gets worse while under acceleration. The engine makes sharp metallic knocks that change with throttle opening.

Dieseling, Run On

Fuel ignites in the intake manifold or in the exhaust system, making a loud popping noise.

Hard Start

Engine cranks OK, but does not start for a long time. The vehicle does eventually run, or may start but immediately stalls.

Hesitation, Sag, Stumble

Momentary lack of response as the accelerator is pushed down. This condition can occur at any vehicle speed. This condition is usually more pronounced when first trying to make the vehicle move, as from a stop. This condition may cause the engine to stall in severe conditions.

Lack of Power, Sluggishness, or Sponginess

The engine delivers less than expected power. Little or no increase in speed when the accelerator pedal is pushed down part way.

Poor Fuel Economy

Fuel economy, as measured by an actual road test, is noticeably lower than expected. Also, the fuel economy is noticeably lower than it was on this vehicle at one time, as previously shown by an actual road test.

Poor Fuel Fill Quality

Difficulty when refueling the vehicle.

Rough, Unstable, or Incorrect Idle and Stalling

The engine runs unevenly at idle. If severe, the engine or the vehicle may shake. Engine idle may vary in speed. Either condition may be severe enough to stall the engine.

Surges/Chuggles

Engine power variation under steady throttle or cruise. Feels like the vehicle speeds up and slows down with no change in the accelerator pedal position.

Symptoms Verification

- The engine control module (ECM) and the malfunction indicator lamp (MIL) are operating correctly.
- There are no DTCs stored.
- The scan tool data is within the normal operating range.
- Bulletins are not available for the current symptom.
- The ECM grounds are clean, tight, and in the correct locations.
- The vehicle tires are correctly inflated and meet original equipment specifications.
- The air filter element is not restricted.

Symptoms Testing

1. Test for the following conditions:

- For the correct installation of the Mass Air Flow (MAF)/Intake Air Temperature (IAT) Sensor.
- The fuel system for the following:
  - Correct fuel pressure. Refer to Fuel System Diagnosis.
  - Fuel injectors that are leaking or improper operation. Refer to Fuel Injector Diagnosis.
  - Contaminated or a poor fuel quality condition. Refer to Alcohol/Contaminants-in-Fuel Diagnosis.
- The ignition system for the following:
  - Spark plugs for incorrect heat range or an abnormal condition. Refer to Spark Plug Replacement.

cardiagn.com

  - For diagnosis of coolant or oil fouled spark plugs.
  - Wet down the secondary ignition system with water from a spray bottle. Wetting down the secondary ignition system may help locate damaged or deteriorated components. Look/listen for arcing or misfiring as the water is applied.
  - Weak spark using the *EL 26792* HEI Spark Tester . For equivalent regional tools, refer to Special Tools. Refer to Electronic Ignition System Diagnosis.
- The operation of the transmission torque converter clutch (TCC). The scan tool should indicate an engine speed drop when the TCC is commanded ON.
- The operation of the A/C compressor
- Items that can cause an engine to run lean or rich. Refer to DTC P0172 or P2096 or DTC P0171 or P2097.
- The crankshaft position sensor for the correct resistance. The crankshaft position sensor resistance may be out of range after a hot soak. The resistance should be between 700–1 200 Ω.
- The engine for the following mechanical failures. Refer to Symptoms - Engine Mechanical.
  - Excessive oil in the combustion chamber or leaking valve seals
  - Incorrect cylinder compression
  - Sticking or leaking valves
  - Worn camshaft lobes
  - Incorrect valve timing
  - Broken valve springs
  - Excessive carbon buildup in the combustion chambers. clean the chambers with top engine cleaner. Follow the instructions on the can.
  - Incorrect engine parts
- Vacuum hoses for splits or kinks. Verify that the routing and connections are as shown on the vehicle emission control information label.
- Knock sensor system for excessive spark retard activity. Refer to Knock Sensor Replacement and DTC P0335 or P0336.
- Fuel octane switch setting. Verify the fuel octane switch is set to the proper fuel octane rating for the fuel being used in the vehicle.
- Turbocharger system for proper operation, if equipped
- Turbocharger charge air cooler system has no leaks, if equipped
- The exhaust system components for the following:
  - Physical damage or possible internal failure
  - The 3-way catalytic converters for a restriction

    For more information, refer to Symptoms - Engine Exhaust.
- Electromagnetic interference on the reference circuit can cause a misfire condition. You can usually detect electromagnetic interference with a scan tool by monitoring the engine speed parameter. A sudden increase in the engine speed parameter with little change in actual engine speed indicates that electromagnetic interference is present. Inspect the high voltage components near the ignition control circuit if a condition exists.
- Inspect the positive crankcase ventilation system and all connections for leaks or restrictions.
- Evaporative Emission (EVAP) Canister Purge Solenoid Valve that is stuck open
- The engine cooling system for the following conditions:
  - The thermostat is the correct heat range. Refer to Thermostat Diagnosis.
  - The engine coolant thermostat heater is working proper. Refer to DTC P0597-P0599.
  - Proper engine coolant level. Refer to Cooling System Draining and Filling.
- If the above conditions do not address the symptom, refer to the additional symptoms tests.

Additional Symptoms Tests

Detonation/Spark Knock

Test the engine for an overheating condition. Refer to Symptoms - Engine Cooling.

Poor Fuel Economy

Inspect for foreign material accumulation in the throttle bore, and for carbon deposits on the throttle plate and shaft. Also inspect for throttle body tampering.

Rough, Unstable, or Incorrect Idle and Stalling

Inspect the engine mounts Engine Mount Replacement.

Surges/Chuggles

Test the heated oxygen sensors (HO2S). The HO2S should respond quickly to a change in throttle position. If the HO2S do not respond to different throttle positions, inspect for contamination from fuel, silicon, or the incorrect use of room temperature vulcanizing sealant. The sensors may have a white powdery coating and result in a high, but false, signal voltage, which gives a rich exhaust indication. The ECM reduces the amount of fuel delivered to the engine, causing a driveability condition.

Hard Start

- Test the engine coolant temperature (ECT) sensor. Compare the ECT sensor value to the intake air temperature (IAT) sensor value on a cold engine. The ECT and IAT sensor values should be within approximately 3°C (5°F). If the ECT sensor is out of range with the IAT sensor, test the resistance of the ECT sensor. Refer to Temperature Versus Resistance for resistance specifications. Replace the ECT sensor if the resistance is not within specification. If the sensor is within the specification, test the ECT circuits for a high resistance.
- Test the fuel pump relay operation. The fuel pump should turn ON for 2 s when the ignition is turned ON.

Hesitation, Sag, Stumble

- Test the fuel pressure. Refer to Fuel System Diagnosis.
- Test the manifold absolute pressure (MAP) sensor. Refer to DTC P0106.
- Test the generator. Refer to Symptoms - Engine Electrical. Repair the charging system if the generator output voltage is less than 9 V or more than 16 V.

Poor Fuel Economy

- Heavy loads being carried or towed
- Acceleration rate too much or too often
- Inspect for foreign material accumulation in the throttle bore, and for carbon deposits on the throttle plate and shaft. Also inspect for throttle body tampering.

Poor Fuel Fill Quality

Difficult to Fill

cardiagn.com

- Restricted vent lines
- High fuel temperature
- A condition with the internal components of the fuel tank assembly

For more information, refer to the following:

- Engine Controls Schematics
- Fuel System Description
- Evaporative Emission Control System Description

Fuel Odor

- Saturated EVAP canister. Refer to Evaporative Emission Control System Description.
- A condition with the internal components of the fuel tank assembly. Refer to Fuel System Description.

cardiagn.com

Engine Coolant Temperature (ECT) and Intake Air Temperature (IAT) Sensor

°C	°F	Ω
	Temperature vs. Resistance Values (Approximate)	
130	266	85
120	248	110
110	230	142
100	212	186
90	194	246
80	176	329
70	158	446
60	140	612
50	122	851
45	113	1 009
40	104	1 200
35	95	1 432
30	86	1 715
25	77	2 063
20	68	2 511
15	59	3 075
10	50	3 791
5	41	4 707
0	32	5 887
−5	23	7 419
−10	14	9 426
−15	5	12 078
−20	−4	15 614
−30	−22	26 854
−40	−40	48 153

cardiagn.com

Temperature Versus Resistance

°C	°F	OHMS
Temperature vs Resistance Values (Approximate)		
140	284	50
126	258	75
116	240	100
108	226	120
99	210	160
92	197	200
84	183	250
78	172	300
69	156	400
63	145	500
58	136	600
51	123	750
47	116	900
39	102	1200
33	91	1500
29	84	1800
24	75	2250
19	66	2800
15	59	3500
9	48	4500
5	41	5500
1	33	7000
−6	+22	9500
−9	+16	12000
−14	+7	16000
−19	−2	21500
−24	−11	28500
−24	−11	31000
−27	−16	33000
−27	−16	35000
−28	−18	39000
−30	−22	49000
−33	−27	60000

cardiagn.com

Temperature Versus Resistance (ECT)

°C	°F	OHMS
−37	−34	70000
−40	−40	93000

cardiagn.com

Temperature Versus Resistance

°C	°F	Ω
Temperature vs. Resistance Values (Approximate)		
1 000	1 832	849
900	1 652	795
800	1 472	738
700	1292	679
600	1 112	618
500	932	554
450	842	521
400	752	488
350	662	454
300	572	420
250	482	385
200	392	349
150	302	313
100	212	276
50	122	239
25	77	220
0	32	201
−20	−4	185
−40	−40	170

cardiagn.com