TRANSMISSION

Transfer Case - MP 3010 (NP0) - Escalade, Suburban, Tahoe, Yukon

SPECIFICATIONS

FASTENER SPECIFICATIONS

Application	Specification	
	Metric	English
Transfer Case Actuator Shaft Position Sensor Bolt/Screw	9 N.m	80 lb in
Transfer Case Adapter Bolt	50 N.m	37 lb ft
Transfer Case Bolts (Qty: 17)	25 N.m	18 lb ft
Transfer Case Nut	50 N.m	37 lb ft
Transfer Case Oil Drain Plug	18 N.m	13 lb ft
Transfer Case Oil Fill Plug	18 N.m	13 lb ft
Transfer Case 2/4 Wheel Drive Actuator Bolt/Screw	18 N.m	13 lb ft
Vehicle Speed Sensor Assembly	17 N.m	13 lb ft

APPROXIMATE FLUID CAPACITIES

Application	Specification	
	Metric	English
Transfer Case- MP 3010-NP0		
DEXRONÂ®VI	1.5 liters	1.6 quarts

ADHESIVES, FLUIDS, LUBRICANTS, AND SEALERS

Application	Type of Material	GM Part Number	
		United States	Canada
Transfer Case	DEXRONÂ®VI	88861037	19264717
Transfer Case Oil Drain Plug	Sealant	12346004	10953480
Transfer Case Oil Fill Plug	Sealant	12346004	10953480

cardiagn.com

Application	Type of Material	GM Part Number	
		United States	Canada
Transfer Case Rear Case Half to Transfer Case Front Half Assembly	Sealant	88861417 12378521	88861418
Transfer Case Vent	Sealant	12377901	10953504
Vehicle Speed Sensor - O-Ring - Seal	DEXRONÂ®VI	88861037	19264717

SCHEMATIC WIRING DIAGRAMS

TRANSFER CASE CONTROL WIRING SCHEMATICS

Power, Ground and Shift Controls

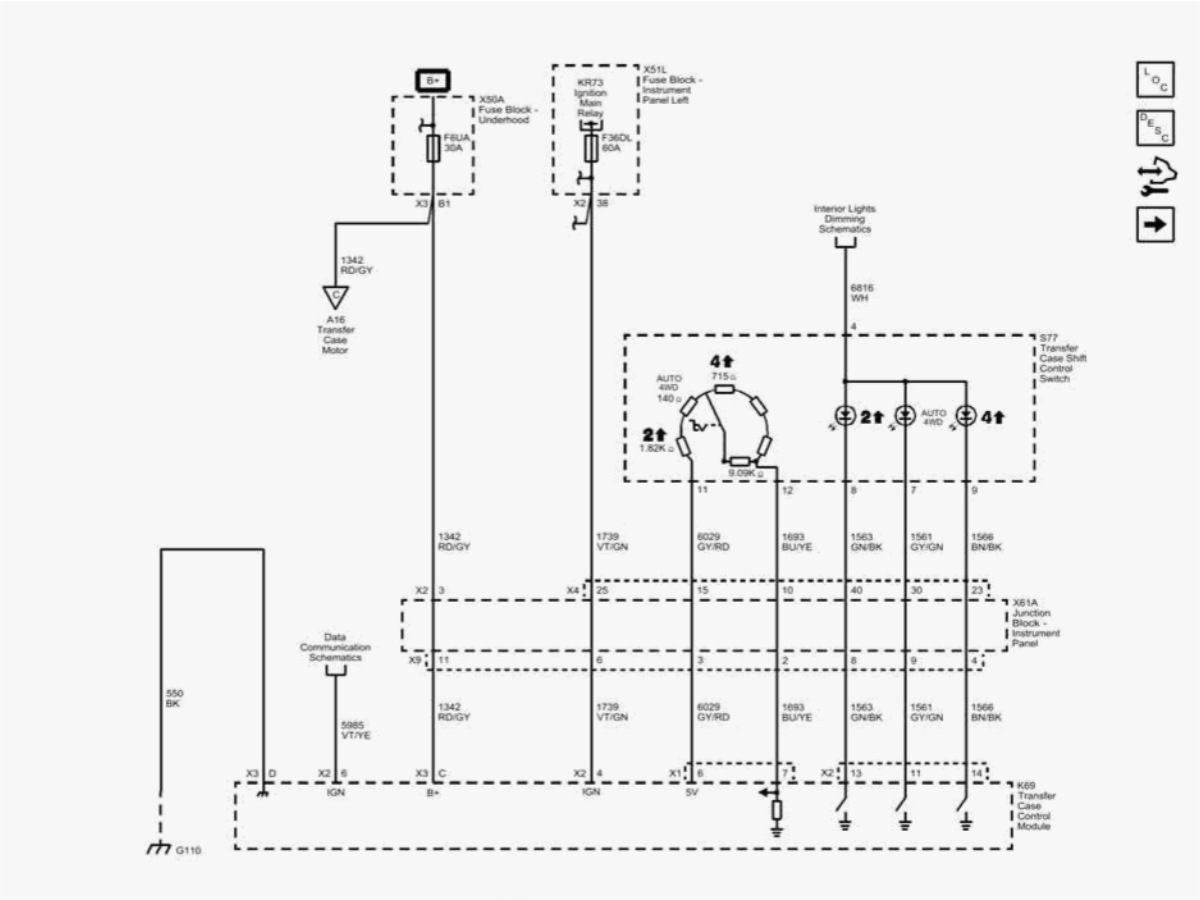

cardiagn.com

ade...

Fig. 1: Power, Ground and Shift Controls
Courtesy of GENERAL MOTORS COMPANY

Transfer Case Controls

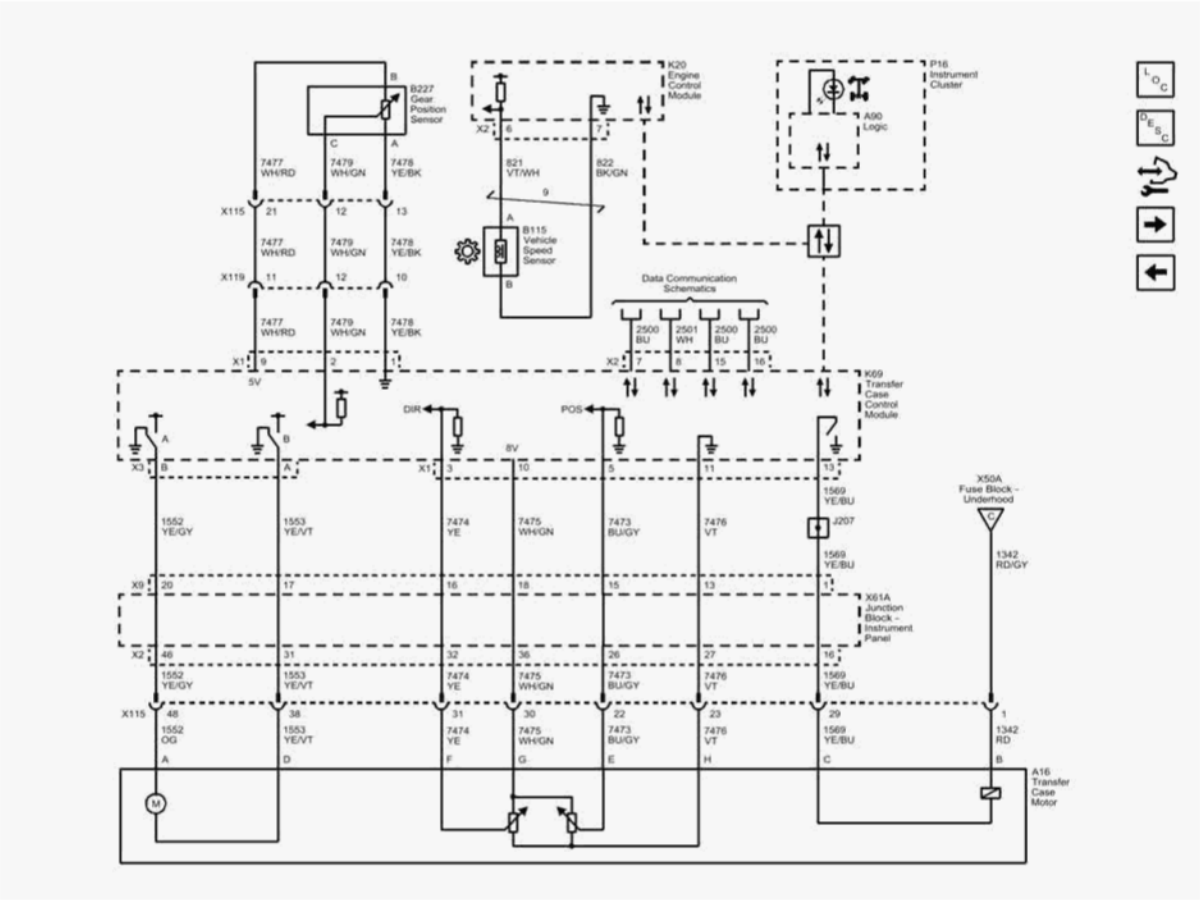

Fig. 2: Transfer Case Controls
Courtesy of GENERAL MOTORS COMPANY

Front Axle Controls

cardiagn.com

ade...

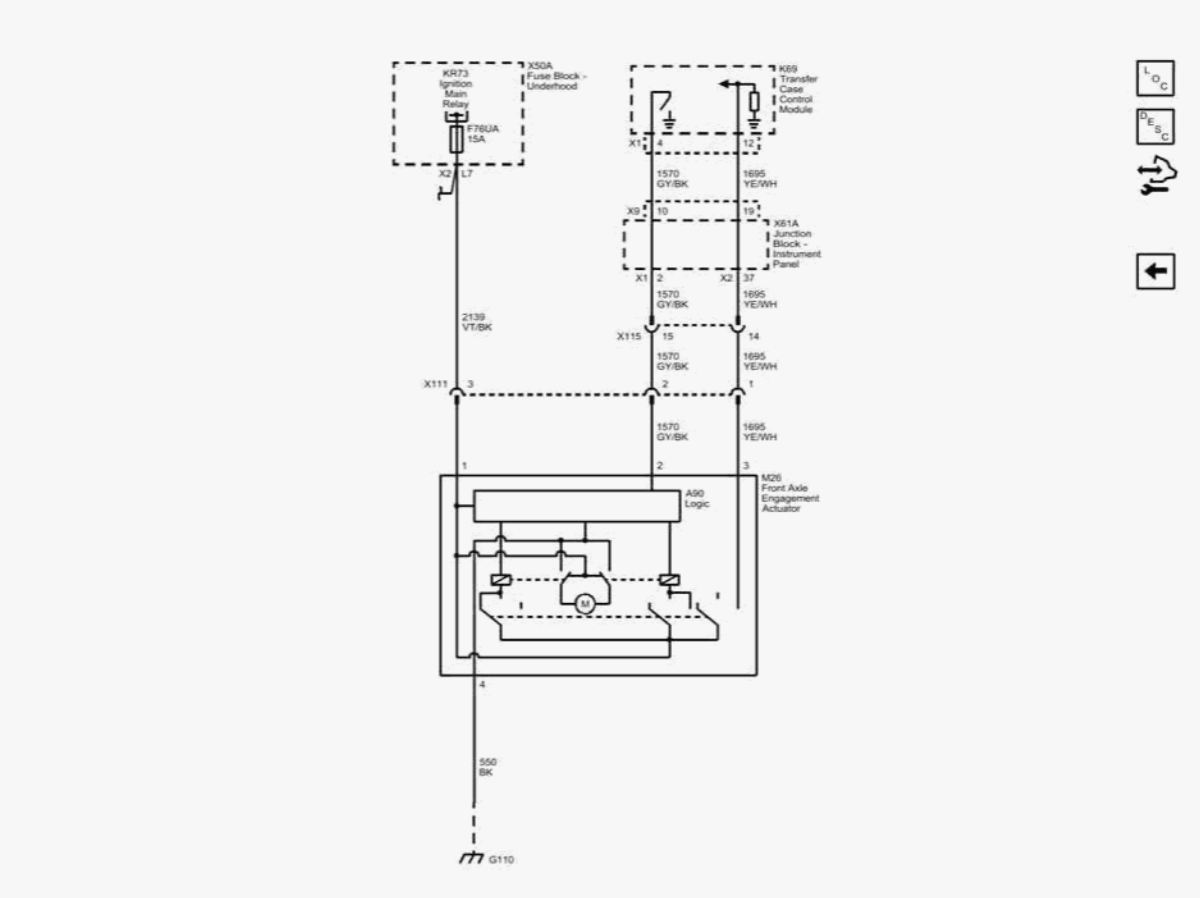

Fig. 3: Front Axle Controls
Courtesy of GENERAL MOTORS COMPANY

COMPONENT LOCATOR

TRANSFER CASE DISASSEMBLED VIEW

Case Half Components

cardiagn.com

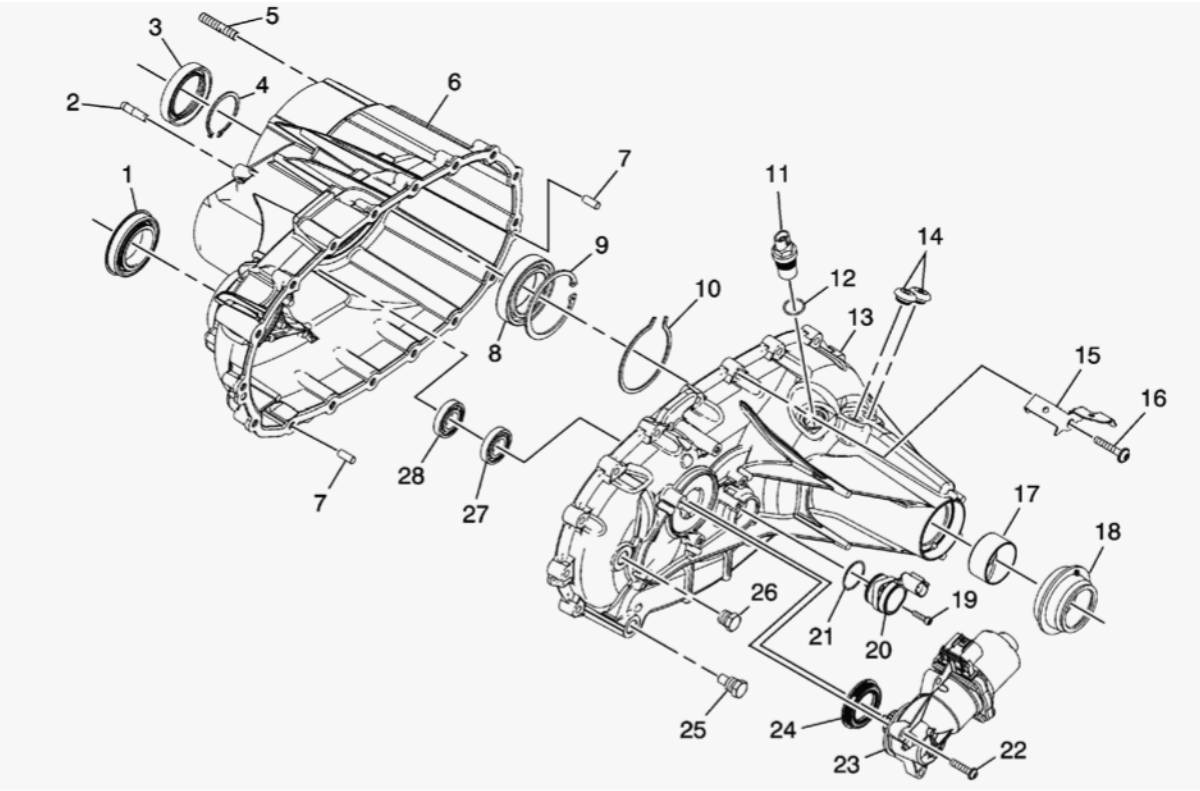

Fig. 4: Case Half Components
Courtesy of GENERAL MOTORS COMPANY

Callout	Component Name
1	Transfer Case Front Output Shaft Seal
2	Transfer Case Vent
3	Transfer Case Input Shaft Seal
4	Transfer Case Input Shaft Bearing Outer Retaining Ring
5	Transfer Case Stud
6	Transfer Case Front Half
7	Transfer Case Half Locating Pin
7	Transfer Case Half Locating Pin
8	Transfer Case Input Shaft Bearing Assembly
9	Transfer Case Input Shaft Inner Retaining Ring

cardiagn.com

Callout	Component Name
10	Transfer Case Rear Output Shaft Rear Bearing Outer Retaining Ring
11	Vehicle Speed Sensor Assembly
12	Vehicle Speed Sensor - O-Ring - Seal
13	Transfer Case Rear Half
14	Transfer Case Access Hole Plug
15	Transfer Case - Harness - Bracket
16	Transfer Case Half Bolt/Screw
17	Transfer Case Rear Output Shaft Bushing
18	Transfer Case Rear Output Shaft Seal
19	Transfer Case Actuator Shaft Position Sensor Bolt/Screw
20	Transfer Case Actuator Shaft Position Sensor Assembly
21	Transfer Case Actuator Shaft Position Sensor - O-Ring - Seal
22	Transfer Case Two/Four Wheel Drive Actuator Bolt/Screw
23	Transfer Case Two/Four Wheel Drive Actuator Assembly
24	Transfer Case Two/Four Wheel Drive Actuator Seal
25	Transfer Case Oil Drain Plug
26	Transfer Case Oil Fill Plug
27	Transfer Case Four Wheel Drive Actuator Lever Shaft Bearing Assembly
28	Transfer Case Four Wheel Drive Actuator Lever Shaft Bearing Assembly

Internal Components

cardiagn.com

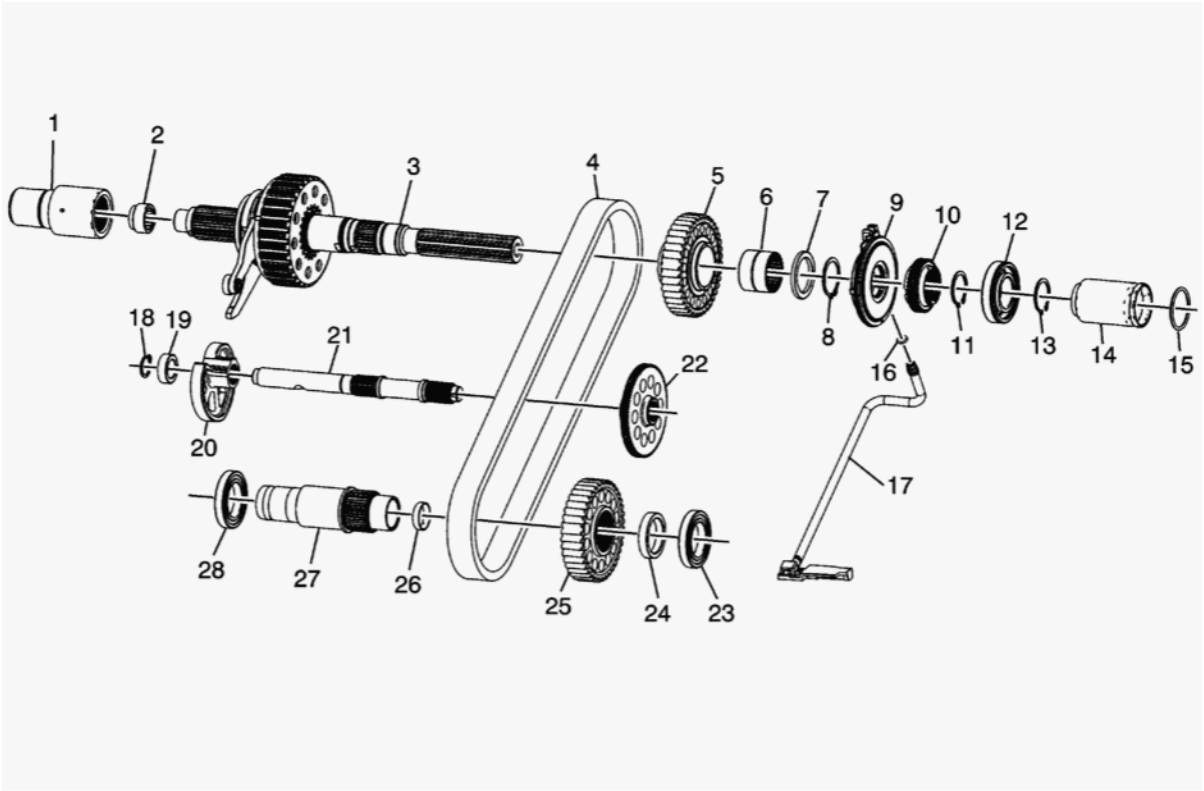

Fig. 5: Internal Components
Courtesy of GENERAL MOTORS COMPANY

Callout	Component Name
1	Transfer Case Input Shaft
2	Transfer Case Input Shaft Pilot Bearing Assembly
3	Transfer Case Rear Output Shaft Assembly
4	Transfer Case Front Output Shaft Drive Chain Assembly
5	Transfer Case Front Output Shaft Drive Sprocket
6	Transfer Case Front Output Shaft Drive Sprocket Bearing Assembly
7	Transfer Case Front Output Shaft Drive Sprocket Spacer - Rear
8	Transfer Case Front Output Shaft Drive Sprocket Retaining Ring
9	Transfer Case Oil Pump Assembly
10	Transfer Case Rear Output Shaft Speed Reluctor Wheel

cardiagn.com

Callout	Component Name
11	Transfer Case Rear Output Shaft Rear Bearing Retaining Ring
12	Transfer Case Rear Output Shaft Rear Bearing Assembly
13	Transfer Case Rear Output Shaft Rear Bearing Retaining Ring
14	Propeller Shaft Oil Seal Sleeve
15	Propeller Shaft Sleeve Seal
16	Transfer Case Oil Pump Suction Pipe Seal
17	Transfer Case Oil Pump Suction Pipe
18	Transfer Case Two/Four Wheel Drive Actuator Cam Retaining Ring
19	Transfer Case Two/Four Wheel Drive Actuator Cam Spacer
20	Transfer Case Two/Four Wheel Drive Actuator Cam
21	Transfer Case Control Actuator Shaft
22	Transfer Case Actuator Shaft Gear
23	Transfer Case Front Output Shaft Rear Bearing Assembly
24	Transfer Case Front Output Shaft Driven Sprocket Spacer
25	Transfer Case Front Output Shaft Driven Sprocket
26	Transfer Case Front Output Shaft Hole Plug
27	Transfer Case Front Output Shaft
28	Transfer Case Front Output Shaft Front Bearing Assembly

Clutch Components

cardiagn.com

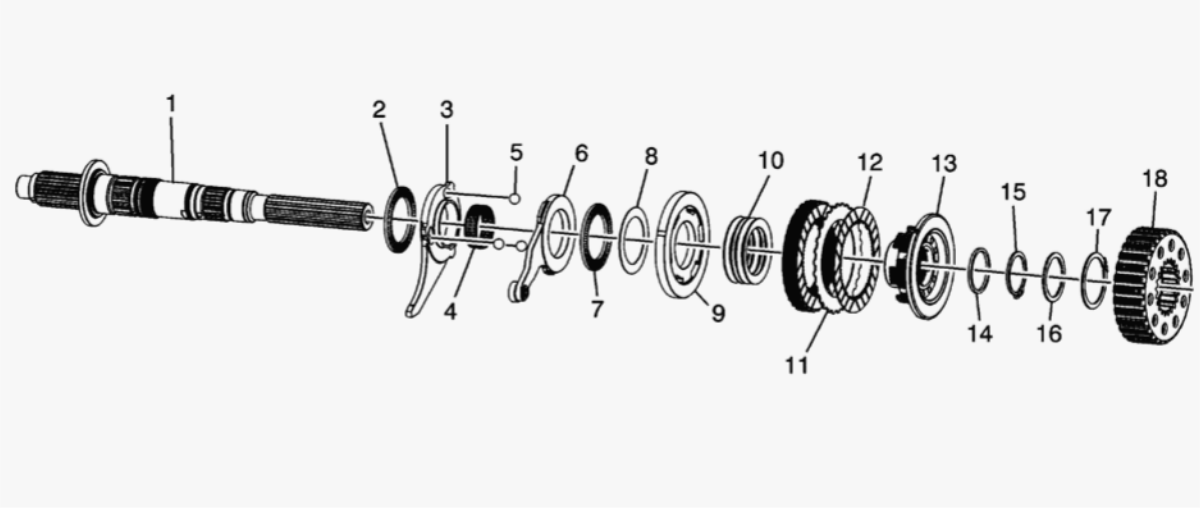

Fig. 6: Clutch Components
Courtesy of GENERAL MOTORS COMPANY

Callout	Component Name
1	Transfer Case Rear Output Shaft
2	Transfer Case Control Actuator Lever Thrust Bearing Assembly
3	Transfer Case Control Lever
4	Transfer Case Control Actuator Lever Bearing Assembly
5	Transfer Case Control Actuator Lever Ball (Qty: 3)
6	Transfer Case Control Actuator Lever Assembly
7	Transfer Case Control Actuator Lever Thrust Bearing Assembly
8	Transfer Case Control Actuator Lever Washer
9	Transfer Case Four Wheel Drive Clutch Pressure - Apply - Plate
10	Transfer Case Four Wheel Drive Clutch Pressure Plate Spring (Qty: 4)
11	Transfer Case Four Wheel Drive Clutch Pressure - Steel - Plate (Qty: 7)
12	Transfer Case Four Wheel Drive Clutch Pressure - Friction - Plate (Qty: 8)
13	Transfer Case Four Wheel Drive Clutch Hub
14	Transfer Case Four Wheel Drive Clutch Shim
15	Transfer Case Two/Four Wheel Drive Clutch Retaining Ring
16	Transfer Case Front Output Shaft Drive Sprocket Spacer - Front

cardiagn.com

Callout	Component Name
17	Transfer Case Four Wheel Drive Clutch Housing Retaining Ring
18	Transfer Case Four Wheel Drive Clutch Housing

DIAGNOSTIC INFORMATION AND PROCEDURES

DTC B0770: AWD INDICATOR CIRCUIT SHORT

Diagnostic Instructions

- Perform the **Diagnostic System Check - Vehicle** prior to using this diagnostic procedure.
- Review **Strategy Based Diagnosis** for an overview of the diagnostic approach
- Refer to **Diagnostic Procedure Instructions** to provide an overview of each diagnostic category

DTC Descriptors

DTC B0770 01

AWD Indicator Circuit Short to Battery

DTC B0770 06

AWD Indicator Circuit Short to Ground or Open

Diagnostic Fault Information

Circuit	Short to Ground	Open/High Resistance	Short to Voltage
Indicator Dimming Control	B0770 06, B0775 06, B0780 06, B0785 06	B0770 06, B0775 06, B0780 06, B0785 06	-
AWD Indicator Control Circuit	B0770 06	B0770 06	B0770 01

Circuit/System Description

The all wheel drive (AWD/4WD Auto) indicator circuit consists of a light emitting diode (LED) feed circuit, a LED and a LED control circuit. The indicator dimming control circuit is the LED feed circuit and continuously supplies B+ to the 2WD HI, 4WD Auto, 4WD HI, and 4WD LO LEDs. When the AWD mode has been selected by the driver, the transfer case shift control module (TCCM) provides a ground through the AWD indicator control circuit illuminating the LED.

cardiagn.com

The TCCM tests the AWD indicator circuit for unexpected voltage by monitoring the B+ supplied by the BCM on the indicator dimming control circuit by grounding the AWD indicator control circuit for 2 seconds during the Bulb Test at key ON.

Conditions for Running the DTC

B0770 01

- Ignition ON
- System voltage 10-18 V
- Instrument panel lights not dimmed.
- Daylight running lights MUST be commanded ON.
- Circuit tested when the AWD indicator is commanded ON.

B0770 06

- Ignition ON
- System voltage 10-18 V
- Instrument panel lights not dimmed.
- Daylight running lights MUST be commanded ON.
- Circuit tested when the AWD indicator is commanded OFF.

Conditions for Setting the DTC

B0770 01

The TCCM detects 3.4 V or greater on the AWD indicator control circuit when the AWD indicator is commanded ON.

B0770 06

The TCCM detects 1.6 V or less for 1.5 seconds on the AWD indicator control circuit when the AWD indicator is commanded OFF.

Action Taken When the DTC Sets

Normal operation, the SERVICE 4WD indicator is not commanded ON. Driver is informed of fault via bulb inspection.

Conditions for Clearing the DTC

cardiagn.com

- The transfer case shift control module clears the DTC once the condition for setting the DTC is no longer present.
- A history DTC clears after 40 consecutive warm up cycles without a fault present.
- History DTCs can be cleared using a scan tool.

Diagnostic Aids

- A TRUE B+ has enough current to light a test light.
- A DIAGNOSTIC B+ is a low current circuit that DOES NOT have enough current to light a test light.
- A short to ground on the AWD indicator control circuit will cause the AWD indicator to remain ON at all times.
- An open or high resistance on the AWD indicator control circuit will cause the AWD indicator to be inoperative during the 2 second bulb inspection.
- An open in the indicator dimming control circuit will cause the 2WD HI, AWD, 4WD HI and 4WD LO mode indicators to be inoperative during the 2 second bulb inspection.
- **EL-49741** harness is a good source for 9 V.
- **EL-49742** harness is a good source for B+ and ground.
- With key REMOVED - opening a door puts a true B+ on the indicator dimming control circuit, TCSCS X1 pin 4. Other possible voltages are listed below:
  - Door open, key removed - indicator dimming control circuit voltage = true B+.
  - Door open, key in, key OFF - indicator dimming control circuit voltage = true B+.
  - Door open, key ON, engine OFF - indicator dimming control circuit voltage = diagnostic B+.
  - All doors closed, key OFF - indicator dimming control circuit voltage = B+ (high current - enough to light a test light).
  - All doors closed, key ON, engine OFF - indicator dimming control circuit voltage = diagnostic B+.
  - Key ON, engine OFF. Place a shop light on the DRL sensor. When the DRL sensor commands the headlights OFF, the indicator dimming control circuit voltage, TCSCS X1 pin 4, will go from a diagnostic B+ to a true B+.

Reference Information

Schematic Reference

Transfer Case Control Schematics

Connector End View Reference

cardiagn.com

COMPONENT CONNECTOR END VIEWS - INDEX

Electrical Information Reference

- Circuit Testing
- Connector Repairs
- Testing for Intermittent Conditions and Poor Connections
- Wiring Repairs

Scan Tool Reference

Control Module References for scan tool information.

Special Tools

- **EL-49741** 9 V+ Power Source Harness
- **EL-49742** Battery Voltage B+ and Ground Source Harness
- **J-35616** GM-Approved Terminal Test Kit

For equivalent regional tools, refer to Special Tools.

Circuit/System Verification

Key ON, engine OFF. The TCCM runs a 2 second bulb test on all indicators of the TCSCS at key ON.

Circuit/System Testing

NOTE: **When test probing harness terminals, it is imperative to use the proper test probe from the most current version of the J-35616 GM terminal test kit. Use of an improper test probe may deform the terminal, resulting in intermittent open conditions.**

1. Remove key. Disconnect the X1 connector at the transfer case shift control switch (TCSCS).
2. Door open, key ON, engine OFF.
3. Using the L-BU probe J-35616-64B, test for a diagnostic B+ (+0.0/-1.0 V) between the indicator dimming control circuit, TCSCS X1 pin 4 and a good ground, such as the ground terminal of the **EL-49742** harness, black terminal.
    - If the voltage is less than the specified range, test the affected circuit for an open/high resistance, short to ground, or short to voltage. If

cardiagn.com

all circuits and connections test normal, test the body control module (BCM) for proper operation.

4. Using the L-BU probes J-35616-64B, test for a diagnostic B+ (+0.0/-1.0 V) between the indicator dimming control circuit, TCSCS X1 pin 4 and the AWD indicator control circuit, TSCSC X1 pin 7.
   - If the voltage is less than the specified range, test the AWD indicator control circuit for an open/high resistance or short to power. If all circuits and connections test normal, test the TCCM for proper operation.
5. Key OFF. Using the L-BU probe J-35616-64B, test for greater than 10 Ω between the indicator dimming control circuit, TCSCS X1 pin 4 and all other pins of the TCSCS X1.
   - If the resistance is less than the specified range, test the affected circuits for a shorted together condition. If all circuits and connections test normal, test the TCCM for proper operation.
6. Using the L-BU probe J-35616-64B, test for greater than 10 Ω between the 4WD HI indicator control circuit, TCSCS X1 pin 7 and all other pins of the TCSCS X1.
   - If the resistance is less than the specified range, test the affected circuits for a shorted together condition. If all circuits and connections test normal, test the TCCM for proper operation.
7. Test the TCSCS for proper operation.

Component Testing

BCM

1. Key OFF. Disconnect the X1 connector at the TCSCS.
2. Using the L-BU probe J-35616-64B, connect a test light between the indicator dimming control circuit, TCSCS harness X1 pin 4 and a good ground.
3. Key ON, engine OFF. The test light should be dull or OFF.
   - If the test light is bright, test the indicator dimming control circuit for a short to voltage condition. If all circuits and connections test normal, replace the BCM.

NOTE: **When the DRL sensor turns the headlights OFF the indicator dimming control circuit voltage, TCSCS X1 pin 4, will go from a diagnostic B+ to a true B+.**

4. Place a shop light on the DRL sensor. When the headlights go out the test light should illuminate brightly.
   - If the test light is dull or OFF, test the indicator dimming control circuit for an open/high resistance or short to ground condition. If all circuits and connections test normal, replace the BCM.

TCCM

cardiagn.com

1. Key OFF. Disconnect the X1 connector at the TCSCS.
2. Key ON, engine OFF.
3. Using the L-BU probe J-35616-64B, test for 4.5-5.5 V between the 5-volt reference circuit, TCSCS harness X1 pin 11 and a good ground.
   - If the voltage is greater than the specified range, test the 5-volt reference circuit for a short to voltage. If all circuits and connections test normal, replace the TCCM.
   - If the voltage is less than the specified range, test the 5-volt reference circuit for an open/high resistance or short to ground. If all circuits and connections test normal, replace the TCCM.
4. Using the L-BU probes J-35616-64B, connect a test light between the 5-volt reference circuit, TCSCS harness X1 pin 11 and a good ground. The test light should illuminate dimly.
   - If the test light does not illuminate, obtain a different test light and repeat step 4.
5. Key OFF. Wait 30 seconds for the TCCM to shut down.

NOTE: **The TCCM must see the added resistance of the test light on the control circuit at key ON or the TCCM will shut the control circuit drivers OFF. Volt meters will not work for this test.**

6. Using the L-BU probes J-35616-64B, connect a test light between the TCSCS harness as specified below for the LED control circuit being tested.
7. Key ON, engine OFF.
8. Using the Special Function ability of the scan tool, command the affected LED ON and OFF. The test light should turn OFF and ON as commanded.
   - If the test light remains illuminated when commanded OFF, test the affected control circuit for a short to ground. If all circuits and connections test normal, replace the TCCM.
   - If the test light remains OFF when commanded ON, test the affected control circuit for an open/high resistance or short to voltage. If all circuits and connections test normal, replace the TCCM.

Mode	2WD HI	4WD Auto	4WD HI	4WD LO	N
5-V Reference (pin)	11	11	11	11	11
Indicator Control Circuit (pin)	8	7	9	10	3

TCSCS

1. Using the L-BU probes J-35616-65B, connect the **EL-49741** 9 V+ power source harness to the TCSCS as specified below for the LED being tested. Connecting the harness in the opposite pins will not illuminate the LED.

cardiagn.com

2. Connect a 9 V battery to the **EL-49741** harness.
3. Verify that only the indicator being tested illuminates.
   - If the indicator does not illuminate when tested or the incorrect indicator illuminates, replace the TCSCS.

EL49741 Wire Color	2WD HI	4WD Auto	4WD HI	4WD LO	N
Red (pin)	4	4	4	4	2
Black (pin)	8	7	9	10	3

Repair Instructions

Perform the **Diagnostic Repair Verification** after completing the diagnostic procedure.

- Refer to **Transfer Case Selector Switch Replacement (Chevrolet / GMC)Transfer Case Selector Switch Replacement (Cadillac)**
- Refer to **Control Module References** for TCCM replacement, setup, and programming
- Refer to **Transfer Case High/Low Clutch Reset**

DTC B0775: 4WD HI INDICATOR CIRCUIT SHORT

Diagnostic Instructions

- Perform the **Diagnostic System Check - Vehicle** prior to using this diagnostic procedure.
- Review **Strategy Based Diagnosis** for an overview of the diagnostic approach.
- Refer to **Diagnostic Procedure Instructions** to provide an overview of each diagnostic category.

DTC Descriptors

DTC B0775 01

4WD HI Indicator Circuit Short to Battery

DTC B0775 06

4WD HI Indicator Circuit Short to Ground or Open

Diagnostic Fault Information

Circuit	Short to Ground	Open/High Resistance	Short to Voltage

cardiagn.com

Circuit	Short to Ground	Open/High Resistance	Short to Voltage
Indicator Dimming Control	B0770 06, B0775 06, B0780 06, B0785 06	B0770 06, B0775 06, B0780 06, B0785 06	-
4WD HI Indicator Control Circuit	B0775 06	B0775 06	B0775 01

Circuit/System Description

The 4WD HI indicator circuit consists of a light emitting diode (LED) feed circuit, a LED and a LED control circuit. The indicator dimming control circuit is the LED feed circuit and continuously supplies B+ to the 2WD HI, 4WD Auto, 4WD HI and 4WD LO LEDs. When the 4WD HI mode has been selected by the driver, the transfer case shift control module (TCCM) provides a ground through the 4 HI indicator control circuit illuminating the LED.

The TCCM tests the 4WD HI indicator circuit for unexpected voltage by monitoring the B+ supplied by the BCM on the indicator dimming control circuit by grounding the 4WD HI indicator control circuit for 2 seconds during the Bulb Test at key ON.

Conditions for Running the DTC

B0775 01

- Ignition ON
- System voltage 10-18 V
- Instrument panel lights not dimmed.
- Daylight running lights MUST be commanded ON.
- Circuit tested when the 4WD HI indicator is commanded ON.

B0775 06

- Ignition ON
- System voltage 10-18 V
- Instrument panel lights not dimmed.
- Daylight running lights MUST be commanded ON.
- Circuit tested when the 4WD HI indicator is commanded OFF.

Conditions for Setting the DTC

cardiagn.com

B0775 01

The TCCM detects 3.4 V or greater on the 4WD HI indicator control circuit when the 4WD HI indicator is commanded ON.

B0775 06

The TCCM detects 1.6 V or less for 1.5 seconds on the 4WD HI indicator control circuit when the 4WD HI indicator is commanded OFF.

Action Taken When the DTC Sets

Normal operation, the SERVICE 4WD indicator is not commanded ON. Driver is informed of fault via bulb inspection.

Conditions for Clearing the DTC

- The TCCM clears the DTC once the condition for setting the DTC is no longer present.
- A history DTC clears after 40 consecutive warm-up cycles without a fault present.
- History DTCs can be cleared using a scan tool.

Diagnostic Aids

- A TRUE B+ has enough current to light a test light.
- A DIAGNOSTIC B+ is a low current circuit that DOES NOT have enough current to light a test light.
- A short to ground on the 4WD HI indicator control circuit will cause the 4WD HI indicator to remain ON at all times.
- An open or high resistance on the 4WD HI indicator control circuit will cause the 4WD HI indicator to be inoperative during the 2 second bulb inspection.
- An open in the indicator dimming control circuit will cause the 2WD HI, 4WD Auto, 4WD HI and 4WD LO mode indicators to be inoperative during the 2 second bulb inspection.
- **EL-49741** harness is a good source for 9 V.
- **EL-49742** harness is a good source for B+ and ground
- With key REMOVED - opening a door puts a true B+ on the indicator dimming control circuit, TCSCS X1 pin 4. Other possible voltages are listed below:
  - Door open, key removed - indicator dimming control circuit voltage = true B+.
  - Door open, key in, key OFF - indicator dimming control circuit voltage = true B+.
  - Door open, key ON, engine OFF - indicator dimming control circuit voltage = diagnostic B+.
  - All doors closed, key OFF - indicator dimming control circuit voltage = B+ (high current - enough to light a test light).

cardiagn.com

- All doors closed, key ON, engine OFF - indicator dimming control circuit voltage = diagnostic B+.
- Key ON, engine OFF. Place a shop light on the DRL sensor. When the DRL sensor commands the headlights OFF, the indicator dimming control circuit voltage, TCSCS X1 pin 4, will go from a diagnostic B+ to a true B+.

Reference Information

Schematic Reference

Transfer Case Control Schematics

Connector End View Reference

COMPONENT CONNECTOR END VIEWS - INDEX

Electrical Information Reference

- **Circuit Testing**
- **Connector Repairs**
- **Testing for Intermittent Conditions and Poor Connections**
- **Wiring Repairs**

Scan Tool Reference

Control Module References for scan tool information

Special Tools

- **EL-49741** 9 V+ Power Source Harness
- **EL-49742** Battery Voltage B+ and Ground Source Harness
- **J-35616** GM-Approved Terminal Test Kit

For equivalent regional tools, refer to **Special Tools**.

Circuit/System Verification

Key ON, engine OFF. The TCCM runs a 2 second bulb test on all indicators of the TCSCS at key ON.

Circuit/System Testing

cardiagn.com

NOTE: **When test probing harness terminals, it is imperative to use the proper test probe from the most current version of the J-35616 GM terminal test kit. Use of an improper test probe may deform the terminal, resulting in intermittent open conditions.**

1. Remove key. Disconnect the X1 connector at the transfer case shift control switch (TCSCS).
2. Door, open, key ON, engine OFF. Using the L-BU probe J-35616-64B, test for a diagnostic B+ (+0.0/-1.0 V) between the indicator dimming control circuit, TCSCS X1 pin 4 and a good ground, such as the ground terminal of the **EL-49742** harness, black terminal.
   - If the voltage is less than the specified range, test the affected circuit for an open/high resistance, short to ground or short to voltage. If all circuits and connections test normal, test the body control module (BCM) for proper operation.
3. Using the L-BU probes J-35616-64B, test for a diagnostic B+ (+0.0/-1.0 V) between the indicator dimming control circuit, TCSCS X1 pin 4 and the 4WD HI indicator control circuit, TSCSC X1 pin 9.
   - If the voltage is less than the specified range, test the 4WD HI indicator control circuit for an open/high resistance or short to power. If all circuits and connections test normal, test the TCCM for proper operation.
4. Key OFF. Using the L-BU probe J-35616-64B, test for greater than 10 Ω between the indicator dimming control circuit, TCSCS X1 pin 4 and all other pins of the TCSCS X1.
   - If the resistance is less than the specified range, test the affected circuits for a shorted together condition. If all circuits and connections test normal, test the TCCM for proper operation.
5. Using the L-BU probe J-35616-64B, test for greater than 10 Ω between the 4WD HI indicator control circuit, TCSCS X1 pin 9 and all other pins of the TCSCS X1.
   - If the resistance is less than the specified range, test the affected circuits for a shorted together condition. If all circuits and connections test normal, test the TCCM for proper operation.
6. Test the TCSCS for proper operation.

Component Testing

BCM

1. Key OFF. Disconnect the X1 connector at the TCSCS.
2. Using the L-BU probe J-35616-64B, connect a test light between the indicator dimming control circuit, TCSCS harness X1 pin 4 and a good ground.
3. Key ON, engine OFF. The test light should be dull or OFF.
   - If the test light is bright, test the indicator dimming control circuit for a short to voltage condition. If all circuits and connections test normal, replace the BCM.

cardiagn.com

NOTE: **When the DRL sensor turns the headlights OFF the indicator dimming control circuit voltage, TCSCS X1 pin 4, will go from a diagnostic B+ to a true B+.**

4. Place a shop light on the DRL sensor. When the headlights go out the test light should illuminate brightly.
   - If the test light is dull or OFF, test the indicator dimming control circuit for an open/high resistance or short to ground condition. If all circuits and connections test normal, replace the BCM.

TCCM

1. Key OFF. Disconnect the X1 connector at the TCSCS.
2. Key ON, engine OFF.
3. Using the L-BU probe J-35616-64B, test for 4.5-5.5 V between the 5-volt reference circuit, TCSCS harness X1 pin 11 and a good ground.
   - If the voltage is greater than the specified range, test the 5-volt reference circuit for a short to voltage. If all circuits and connections test normal, replace the TCCM.
   - If the voltage is less than the specified range, test the 5-volt reference circuit for an open/high resistance or short to ground. If all circuits and connections test normal, replace the TCCM.
4. Using the L-BU probes J-35616-64B, connect a test light between the 5-volt reference circuit, TCSCS harness X1 pin 11 and a good ground. The test light should illuminate dimly.
   - If the test light does not illuminate, obtain a different test light and repeat step 4.
5. Key OFF. Wait 30 seconds for the TCCM to shut down.

NOTE: **The TCCM must see the added resistance of the test light on the control circuit at key ON or the TCCM will shut the control circuit drivers OFF. Volt meters will not work for this test.**

6. Using the L-BU probes J-35616-64B, connect a test light between the TCSCS harness as specified below for the LED control circuit being tested.
7. Key ON, engine OFF.
8. Using the Special Function ability of the scan tool, command the affected LED ON and OFF. The test light should turn OFF and ON as commanded.
   - If the test light remains illuminated when commanded OFF, test the affected control circuit for a short to ground. If all circuits and connections test normal, replace the TCCM.
   - If the test light remains OFF when commanded ON, test the affected control circuit for an open/high resistance or short to voltage. If all circuits and connections test normal, replace the TCCM.

cardiagn.com

Mode	2WD HI	4WD Auto	4WD HI	4WD LO	N
5-V Reference (pin)	11	11	11	11	11
Indicator Control Circuit (pin)	8	7	9	10	3

TCSCS

1. Using the L-BU probes J-35616-65B, connect the **EL-49741** 9 V+ power source harness to the TCSCS as specified below for the LED being tested. Connecting the harness in the opposite pins will not illuminate the LED.
2. Connect a 9 V battery to the **EL-49741** harness.
3. Verify that only the indicator being tested illuminates.
   - If the indicator does not illuminate when tested or the incorrect indicator illuminates, replace the TCSCS.

EL49741 Wire Color	2WD HI	4WD Auto	4WD HI	4WD LO	N
Red (pin)	4	4	4	4	2
Black (pin)	8	7	9	10	3

Repair Instructions

Perform the **Diagnostic Repair Verification** after completing the diagnostic procedure.

- Refer to **Transfer Case Selector Switch Replacement (Chevrolet / GMC)Transfer Case Selector Switch Replacement (Cadillac)**
- Refer to **Control Module References** for TCSCM replacement, setup, and programming
- Refer to **Transfer Case High/Low Clutch Reset**

DTC B0785: 2WD HI INDICATOR CIRCUIT SHORT

Diagnostic Instructions

- Perform the **Diagnostic System Check - Vehicle** prior to using this diagnostic procedure.
- Review **Strategy Based Diagnosis** for an overview of the diagnostic approach.
- Refer to **Diagnostic Procedure Instructions** to provide an overview of each diagnostic category.

DTC Descriptors

DTC B0785 01

cardiagn.com

2WD HI Indicator Circuit Short to Battery

DTC B0785 06

2WD HI Indicator Circuit Short to Ground or Open

Diagnostic Fault Information

Circuit	Short to Ground	Open/High Resistance	Short to Voltage
Indicator Dimming Control	B0770 06, B0775 06, B0780 06, B0785 06	B0770 06, B0775 06, B0780 06, B0785 06	-
2WD HI Indicator Control Circuit	B0785 06	B0785 06	B0785 01

Circuit/System Description

The 2WD HI indicator circuit consists of a light emitting diode (LED) feed circuit, a LED and a LED control circuit. The indicator dimming control circuit is the LED feed circuit and continuously supplies B+ to the 2WD HI, 4WD Auto, 4WD HI and 4WD LO LEDs. When the 2WD HI mode has been selected by the driver, the transfer case shift control module (TCCM) provides a ground through the 2WD HI indicator control circuit illuminating the LED.

The TCCM tests the 2WD HI indicator circuit for unexpected voltage by monitoring the B+ supplied by the BCM on the indicator dimming control circuit by grounding the 2WD HI indicator control circuit for 2 seconds during the Bulb Test at key ON.

Conditions for Running the DTC

B0785 01

- Ignition ON
- System voltage 10-18 V
- Instrument panel lights not dimmed.
- Daylight running lights MUST be commanded ON.
- Circuit tested when the 2WD HI indicator is commanded ON.

B0785 06

- Ignition ON
- System voltage 10-18 V

cardiagn.com

- Instrument panel lights not dimmed.
- Daylight running lights MUST be commanded ON.
- Circuit tested when the 2WD HI indicator is commanded OFF.

Conditions for Setting the DTC

B0785 01

The TCCM detects 3.4 V or greater on the 2WD HI indicator control circuit when the 2WD HI indicator is commanded ON.

B0785 06

The TCCM detects 1.6 V or less for 1.5 seconds on the 2WD HI indicator control circuit when the 2WD HI indicator is commanded OFF.

Action Taken When the DTC Sets

Normal operation, the SERVICE 4WD indicator is not commanded ON. Driver is informed of fault via bulb inspection.

Conditions for Clearing the DTC

- The TCCM clears the DTC once the condition for setting the DTC is no longer present.
- A history DTC clears after 40 consecutive warm up cycles without a fault present.
- History DTCs can be cleared using a scan tool.

Diagnostic Aids

- A TRUE B+ has enough current to light a test light.
- A DIAGNOSTIC B+ is a low current circuit that DOES NOT have enough current to light a test light.
- A short to ground on the 2WD HI indicator control circuit will cause the 2WD HI indicator to remain ON at all times.
- An open or high resistance will cause the 2WD HI indicator to be inoperative during the 2 second bulb inspection.
- An open in the indicator dimming control circuit will cause the 2WD HI, 4WD Auto, 4WD HI and 4WD LO mode indicators to be inoperative during the 2 second bulb inspection.
- **EL-49741** harness is a good source for 9 V.
- **EL-49742** harness is a good source for B+ and ground.
- With key REMOVED - opening a door puts a true B+ on the indicator dimming control circuit, TCSCS X1 pin 4. Other possible voltages are listed below:

cardiagn.com

- Door open, key removed - indicator dimming control circuit voltage = true B+.
- Door open, key in, key OFF - indicator dimming control circuit voltage = true B+.
- Door open, key ON, engine OFF - indicator dimming control circuit voltage = diagnostic B+.
- All doors closed, key OFF - indicator dimming control circuit voltage = B+ (high current - enough to light a test light).
- All doors closed, key ON, engine OFF - indicator dimming control circuit voltage = diagnostic B+.
- Key ON, engine OFF. Place a shop light on the DRL sensor. When the DRL sensor commands the headlights OFF, the indicator dimming control circuit voltage, TCSCS X1 pin 4, will go from a diagnostic B+ to a true B+.

Reference Information

Schematic Reference

Transfer Case Control Schematics

Connector End View Reference

COMPONENT CONNECTOR END VIEWS - INDEX

Electrical Information Reference

- **Circuit Testing**
- **Connector Repairs**
- **Testing for Intermittent Conditions and Poor Connections**
- **Wiring Repairs**

Scan Tool Reference

Control Module References for scan tool information

Special Tools

- **EL-49741** 9 V+ Power Source Harness
- **EL-49742** Battery Voltage B+ and Ground Source Harness
- **J-35616** GM-Approved Terminal Test Kit

For equivalent regional tools, refer to **Special Tools**.

cardiagn.com

Circuit/System Verification

Key ON, engine OFF. The TCCM runs a 2 second bulb test on all indicators of the TCSCS at key ON.

Circuit/System Testing

NOTE: **When test probing harness terminals, it is imperative to use the proper test probe from the most current version of the J-35616 GM terminal test kit. Use of an improper test probe may deform the terminal, resulting in intermittent open conditions.**

1. Remove key. Disconnect the X1 connector at the transfer case shift control switch (TCSCS).
2. Door open, key ON, engine OFF. Using the L-BU probe J-35616-64B, test for a diagnostic B+ (+0.0/-1.0 V) between the indicator dimming control circuit, TCSCS X1 pin 4 and a good ground, such as the ground terminal of the **EL-49742** harness, black terminal.
   - If the voltage is less than the specified range, test the affected circuit for an open/high resistance, short to ground or short to voltage. If all circuits and connections test normal, test the body control module (BCM) for proper operation.
3. Using the L-BU probes J-35616-64B, test for a diagnostic B+ (+0.0/-1.0 V) between the indicator dimming control circuit, TCSCS X1 pin 4 and the 2WD HI indicator control circuit, TSCSC X1 pin 8.
   - If the voltage is less than the specified range, test the 2WD HI indicator control circuit for an open/high resistance or short to power. If all circuits and connections test normal, test the TCCM for proper operation.
4. Key OFF. Using the L-BU probe J-35616-64B, test for greater than 10 Ω between the indicator dimming control circuit, TCSCS X1 pin 4 and all other pins of the TCSCS X1.
   - If the resistance is less than the specified range, test the affected circuits for a shorted together condition. If all circuits and connections test normal, test the TCCM for proper operation.
5. Using the L-BU probe J-35616-64B, test for greater than 10 Ω between the 2WD HI indicator control circuit, TCSCS X1 pin 8 and all other pins of the TCSCS X1.
   - If the resistance is less than the specified range, test the affected circuits for a shorted together condition. If all circuits and connections test normal, test the TCCM for proper operation.
6. Test the TCSCS for proper operation.

Component Testing

BCM

1. Key OFF. Disconnect the X1 connector at the TCSCS.
2. Using the L-BU probe J-35616-64B, connect a test light between the indicator dimming control circuit, TCSCS harness X1 pin 4 and a good

cardiagn.com

ground.

3. Key ON, engine OFF. The test light should be dull or OFF.
   - If the test light is bright, test the indicator dimming control circuit for a short to voltage condition. If all circuits and connections test normal, replace the BCM.

NOTE: **When the DRL sensor turns the headlights OFF the indicator dimming control circuit voltage, TCSCS X1 pin 4, will go from a diagnostic B+ to a true B+.**

4. Place a shop light on the DRL sensor. When the headlights go out the test light should illuminate brightly.
   - If the test light is dull or off, test the indicator dimming control circuit for an open/high resistance or short to ground condition. If all circuits and connections test normal, replace the BCM.

TCCM

1. Key OFF. Disconnect the X1 connector at the TCSCS.
2. Key ON, engine OFF.
3. Using the L-BU probe J-35616-64B, test for 4.5-5.5 V between the 5-volt reference circuit, TCSCS harness X1 pin 11 and a good ground.
   - If the voltage is greater than the specified range, test the 5-volt reference circuit for a short to voltage. If all circuits and connections test normal, replace the TCCM.
   - If the voltage is less than the specified range, test the 5-volt reference circuit for an open/high resistance or short to ground. If all circuits and connections test normal, replace the TCCM.
4. Using the L-BU probes J-35616-64B, connect a test light between the 5-volt reference circuit, TCSCS harness X1 pin 11 and a good ground. The test light should illuminate dimly.
   - If the test light does not illuminate, obtain a different test light and repeat step 4.
5. Key OFF. Wait 30 seconds for the TCCM to shut down.

NOTE: **The TCCM must see the added resistance of the test light on the control circuit at key ON or the TCCM will shut the control circuit drivers OFF. Volt meters will not work for this test.**

6. Using the L-BU probes J-35616-64B, connect a test light between the TCSCS harness as specified below for the LED control circuit being tested.
7. Key ON, engine OFF.
8. Using the Special Function ability of the scan tool, command the affected LED ON and OFF. The test light should turn OFF and ON as

cardiagn.com

commanded.

- If the test light remains illuminated when commanded OFF, test the affected control circuit for a short to ground. If all circuits and connections test normal, replace the TCCM.
- If the test light remains OFF when commanded ON, test the affected control circuit for an open/high resistance or short to voltage. If all circuits and connections test normal, replace the TCCM.

Mode	2WD HI	4WD Auto	4WD HI	4WD LO	N
5-V Reference (pin)	11	11	11	11	11
Indicator Control Circuit (pin)	8	7	9	10	3

TCSCS

1. Using the L-BU probes J-35616-65B, connect the **EL-49741** 9 V+ power source harness to the TCSCS as specified below for the LED being tested. Connecting the harness in the opposite pins will not illuminate the LED.
2. Connect a 9 V battery to the **EL-49741** harness.
3. Verify that only the indicator being tested illuminates.
   - If the indicator does not illuminate when tested or the incorrect indicator illuminates, replace the TCSCS.

EL49741 Wire Color	2WD HI	4WD Auto	4WD HI	4WD LO	N
Red (pin)	4	4	4	4	2
Black (pin)	8	7	9	10	3

Repair Instructions

Perform the **Diagnostic Repair Verification** after completing the diagnostic procedure.

- Refer to **Transfer Case Selector Switch Replacement (Chevrolet / GMC)Transfer Case Selector Switch Replacement (Cadillac)**
- Refer to **Control Module References** for TCSCM replacement, setup, and programming
- Refer to **Transfer Case High/Low Clutch Reset**

DTC B2725, P0698, OR P0699: TRANSFER CASE RANGE SELECTION SWITCH CIRCUIT/5V REFERENCE 3 CIRCUIT VOLTAGE

Diagnostic Instructions

- Perform the **Diagnostic System Check - Vehicle** prior to using this diagnostic procedure.

cardiagn.com

- Review **Strategy Based Diagnosis** for an overview of the diagnostic approach.
- Refer to **Diagnostic Procedure Instructions** to provide an overview of each diagnostic category.

DTC Descriptor

DTC B2725 03

Transfer Case Range Selection Switch Circuit Low Voltage

DTC B2725 07

Transfer Case Range Selection Switch Circuit High Voltage

DTC B2725 08

Transfer Case Range Selection Switch Circuit Performance - Signal Invalid

DTC P0698

5V Reference 3 Circuit Low Voltage

DTC P0699

5V Reference 3 Circuit High Voltage

Diagnostic Fault Information

Circuit	Short to Ground	Open/High Resistance	Short to Voltage	Signal Invalid
5-Volt Reference	B2725 03, B2725 08, or P0698	B2725 03, B2725 08, or P0698	B2725 07, B2725 08, or P0699	B2725 08, P0698, or P0699
Four Wheel Drive	B2725 03 or B2725 08	B2725 03 or B2725 08	B2725 07 or B2725 08	B2725 08

Circuit/System Description

The transfer case shift control switch allows the driver to select between 5 ranges. The transfer case control module supplies a regulated 5 volts to the switch through the 5-volt reference circuit. The current travels through the specific resistor of the currently selected range - each range has its own resistor. The current is then returned to the transfer case control module through the four wheel drive switch signal circuit.

cardiagn.com

The transfer case control module continuously monitors the switch signal circuit to determine whether a range change has been requested by the driver.

The NQH transfer case has the following 5 ranges:

- 2WD
- 4WD/AWD Automatic
- 4WD High/Locked
- 4WD Low
- Neutral

Conditions for Running the DTC

- Ignition ON.
- System voltage 10.5-18 V.
- No DTC P0562 or P0563.

Conditions for Setting the DTC

The transfer case control module monitors the voltage on 5V reference and 4WD switch signal circuits every 10 ms.

B2725 03

When the low side driver is ON, the transfer case control module measures less than 0.3 volts on the Four Wheel Drive Switch Signal circuit.

B2725 07

When the low side driver is ON, the transfer case control module measures greater than 4.65 volts on the Four Wheel Drive Switch Signal circuit.

B2725 08

When the low side driver is ON, the transfer case control module measures an invalid voltage on the Four Wheel Drive Switch Signal circuit.

P0698

When the ignition is ON, the transfer case control module measures less than 4.75 volts on the Transfer Case Sensor Reference Voltage 3 circuit.

cardiagn.com

P0699

When the ignition is ON, the transfer case control module measures greater than 5.25 volts on the Transfer Case Sensor Reference Voltage 3 circuit.

Action Taken When the DTC Sets

- DTC P0698 and P0699 are type A DTC's.
- All shifting is disabled.
- The SERVICE 4WD indicator remains illuminated for the remainder of the current ignition cycle.

Conditions for Clearing the DTC

- DTC P0698 and P0699 are type A DTC's.
- The transfer case control module clears the DTC once the condition for setting the DTC is no longer present.
- A history DTC clears after 40 consecutive warm up cycles without a fault present.
- History DTCs can be cleared using a scan tool.

Diagnostic Aids

EL-49742 harness is a good source for B+ and ground.

Reference Information

Schematic Reference

Transfer Case Control Schematics

Connector End View Reference

COMPONENT CONNECTOR END VIEWS - INDEX

Electrical Information Reference

- **Circuit Testing**
- **Connector Repairs**
- **Testing for Intermittent Conditions and Poor Connections**
- **Wiring Repairs**

cardiagn.com

Scan Tool Reference

Control Module References for scan tool information.

Special Tools

- **EL-49742** Battery Voltage B+ and Ground Source Harness
- **J-35616** GM-Approved Terminal Test Kit

For equivalent regional tools, refer to **Special Tools**.

Circuit/System Verification

1. Verify that all range selections of the S77 transfer case shift control switch match the following parameters in the Data Display feature of the scan tool:
   - Transfer Case Commanded Position
   - Transfer Case Range
   - Transfer Case Range Selection Switch State
   - The corresponding Range Indicator light
   - ***If NOT all of the parameters match the S77 transfer case shift control switch position***

     Refer to Circuit/System Testing.

   - ***If ALL of the parameters match the S77 transfer case shift control switch position***
2. Verify that the sensor reference voltage 3 and transfer case range selection switch voltage fall within the below ranges for all range selections of the S77 transfer case shift control switch.
   - ***If NOT all voltages match the specified ranges***

     Refer to Circuit/System Testing.

   - ***If ALL voltages match the specified ranges***
3. Verify DTC B2725, P0698, or P0699 is only set as a history DTC.
   - ***If any of the DTCs are set as current***

     Refer to Circuit/System Testing.

cardiagn.com

- *If any of the DTCs are only set as history*

NOTE: **After inspection, apply Nyogel lubricant 760G to each connector terminal. Ensure each connector and CPA is correctly seated.**

4. Visually inspect each connector terminal of the K69 transfer case control module X1 connector and the S77 transfer case shift control switch connector for damage or corrosion. Repair as necessary.
5. Clear DTC 2725, P0698, or P0699 from history.
6. Operate the vehicle within the Conditions for Running the DTC. You may also operate the vehicle within the conditions that you observed from the Freeze Frame/Failure Records data. The DTC should not set.
   - *If any of the DTCs are set*

     Refer to Circuit/System Testing.

   - *If none of the DTCs set*
7. All OK.

Transfer Case Range	Transfer Case Sensor Reference Voltage 3	Transfer Case Range Selection Switch (V)		Range Actuator Position Sensor (Â°)	
		Range	Nominal	Range	Nominal
2WD	4.7-5.3 V	1.8-2.2 V	2.0 V	33-43Â°	38Â°
4WD/AWD Automatic	4.7-5.3 V	4.10-4.59 V	4.38 V	87-204Â°	146Â°
4WD High/Locked	4.7-5.3 V	2.8-3.2 V	3.0 V	110-204Â°	146Â°
4WD Low	4.7-5.3 V	1.3-1.7 V	1.5 V	-69Â° to -140Â°	-90Â°
Neutral	4.7-5.3 V	2.3-2.7 V	2.5 V Held 1.5 V Released	-5Â° to +5Â°	0Â°

Circuit/System Testing

1. Ignition OFF, disconnect the harness connector at the S77 transfer case shift control switch.
2. ON, engine OFF.

NOTE:

- **When test probing harness terminals, it is imperative to use the proper test probe from the most current version of the J-35616 GM terminal test kit. Use of an improper test probe may deform the**

cardiagn.com

terminal, resulting in intermittent open conditions.

- **Testing for steps 3-5 is performed on the S77 transfer case shift control switch harness connector using the L-BU probes J-35616-64B.**

3. Test for 4.75-5.25 V between the 5-Volt reference circuit, terminal 11 and a good ground, such as the ground terminal of the **EL-49742** harness, black terminal.
   - ***If less than the specified range***
   1. Ignition OFF, disconnect the X1 harness connector at the K69 transfer case control module.
   2. Test for less than 10 Ω in the 5-Volt reference circuit end to end.
      - If 10 Ω or greater, repair the open/high resistance in the circuit.
      - If less than 10 Ω
   3. Test for infinite resistance between 5-Volt reference circuit terminal 11 and a good ground.
      - If less than infinite resistance, repair the short to ground in the circuit.
      - If infinite resistance
   4. Test for greater than 10 Ω between the 5-Volt reference circuit terminal 11 and all other terminals of the S77 transfer case shift control switch harness connector.
      - If 10 Ω or less, repair the shorted together condition in the affected circuits.
      - If greater than 10 Ω, replace the K69 transfer case control module and perform the Range Actuator Learn procedure.

        Refer to **Transfer Case Control Module Replacement**, and **Transfer Case High/Low Clutch Reset**.

   - ***If greater than the specified range***
   1. Ignition OFF, disconnect the X1 harness connector at the K69 transfer case control module. Ignition ON, Engine OFF.
   2. Test for less than 1 V between the 5-Volt reference circuit terminal 11 and a good ground.
      - If 1 V or greater, repair the short to voltage in the circuit.
      - If less than 1 V
   3. Test for greater than 10 Ω between the 5-Volt reference circuit, terminal 11 and all other terminals of the S77 transfer case shift control switch harness connector.
      - If 10 Ω or less, repair the shorted together condition in the affected circuits.
      - If greater than 10 Ω, replace the K69 transfer case control module and perform the Range Actuator Learn procedure.

cardiagn.com

Refer to **Transfer Case Control Module Replacement**, and **Transfer Case High/Low Clutch Reset**.

- ***If within the specified range***

4. 5-Volt reference circuit and K69 transfer case control module OK.
5. Test for 4.75-5.25 V between the 5-Volt reference circuit, terminal 11, and the switch signal circuit, terminal 12.
   - ***If less than the specified range***
   1. Ignition OFF, disconnect the X1 harness connector at the K69 transfer case control module.
   2. Test for less than 10 Ω in the switch signal circuit end to end.
      - If 10 Ω or greater, repair the open/high resistance in the circuit.
      - If less than 10 Ω
   3. Test for infinite resistance between switch signal circuit and a good ground.
      - If less than infinite resistance, repair the short to ground in the circuit.
      - If infinite resistance
   4. Test for greater than 10 Ω between the switch signal circuit, terminal 12 and all other terminals of the S77 transfer case shift control switch harness connector.
      - If 10 Ω or less, repair the shorted together condition in the affected circuits.
      - If greater than 10 Ω, replace the K69 transfer case control module and perform the Range Actuator Learn procedure.

        Refer to **Transfer Case Control Module Replacement**, and **Transfer Case High/Low Clutch Reset**.

   - ***If greater than the specified range***
   1. Ignition OFF, disconnect the X1 harness connector at the K69 transfer case control module. Ignition ON, Engine OFF.
   2. Test for less than 1 V between the switch signal circuit, terminal 12 and a good ground.
      - If 1 V or greater, repair the short to voltage in the circuit.
      - If less than 1 V
   3. Test for greater than 10 Ω between the switch signal circuit, terminal 12 and all other terminals of the S77 transfer case shift control switch harness connector.
      - If 10 Ω or less, repair the shorted together condition in the affected circuits.
      - If greater than 10 Ω, replace the K69 transfer case control module and perform the Range Actuator Learn procedure.

        Refer to **Transfer Case Control Module Replacement**, and **Transfer Case High/Low Clutch Reset**.

cardiagn.com

- *If within the specified range*

6. Switch signal circuit and K69 transfer case control module OK.

Component Testing

S77 Transfer Case Shift Control Switch

1. Ignition OFF. Remove the S77 transfer case shift control switch. Refer to **Transfer Case Selector Switch Replacement (Chevrolet / GMC)Transfer Case Selector Switch Replacement (Cadillac)**.

NOTE: **Testing for Step 2 is performed on the component using the L-BU probe J-35616-65B.**

2. Measure the resistance for each of the range positions of the S77 transfer case shift control switch between the 5-volt reference circuit, terminal 11, and the switch signal circuit terminal 12.
   - *If the resistance is outside the specified ranges*

     Replace the S77 transfer case shift control switch. Refer to **Transfer Case Selector Switch Replacement (Chevrolet / GMC)Transfer Case Selector Switch Replacement (Cadillac)**.

   - *If the resistance is within the specified ranges*
3. S77 transfer case shift control switch OK.

S77 Transfer Case Range Selection Switch	Range	Nominal
2WD	1475-1550 Ω	1515 Ω
4WD/AWD Automatic	110-175 Ω	140 Ω
4WD High/Locked	625-700 Ω	665 Ω
4WD Low	2230-2400 Ω	2345 Ω
Neutral	990-1050 Ω	1020 Ω

Repair Instructions

Perform the **Diagnostic Repair Verification** after completing the diagnostic procedure.

- Refer to **Transfer Case Selector Switch Replacement (Chevrolet / GMC)Transfer Case Selector Switch Replacement (Cadillac)** for S77 transfer case shift control switch replacement
- Refer to **Control Module References** for K69 transfer case control module replacement, setup, and programming

cardiagn.com

- Refer to **Transfer Case High/Low Clutch Reset** for Range Actuator Learn procedure

DTC C0306 OR C0381: RANGE ACTUATOR CONTROL CIRCUIT/RANGE ACTUATOR SYSTEM PERFORMANCE HIGH TEMPERATURE

Diagnostic Instructions

- Perform the **Diagnostic System Check - Vehicle** prior to using this diagnostic procedure.
- Review **Strategy Based Diagnosis** for an overview of the diagnostic approach.
- Refer to **Diagnostic Procedure Instructions** to provide an overview of each diagnostic category.

DTC Descriptors

DTC C0306 01

Range Actuator Control Circuit Short to Battery

DTC C0306 02

Range Actuator Control Circuit Short to Ground

DTC C0306 04

Range Actuator Control Circuit Short to Open

DTC C0306 54

Range Actuator Control Circuit High Temperature

DTC C0381 54

Range Actuator System Performance High Temperature

Diagnostic Fault Information

Circuit	Short to Ground	Open/High Resistance	Short to Voltage	Performance
Transfer Case Motor Clockwise Control	C0306 02	C0306 04	C0306 01	C0306 54 or C0381 54

cardiagn.com

Circuit	Short to Ground	Open/High Resistance	Short to Voltage	Performance
Transfer Case Motor Counter-Clockwise Control	C0306 02	C0306 04	C0306 01	C0306 54 or C0381 54

Circuit/System Description

The A16 Transfer Case Motor, also known as the transfer case range actuator, is a bi-directional, permanent magnet, DC motor. When energized, through the transfer case clockwise circuit or transfer case counter-clockwise circuit, the ground is provided by the opposing motor control circuit which becomes grounded through the transfer case control module ground circuit. The transfer case range actuator, through a series of gears, rotates the transfer case control actuator shaft which moves the transfer case two/four wheel drive actuator cam and transfer case high/low shift fork in order to shift the transfer case between the following modes or ranges:

- 2WD
- 4WD/AWD Automatic
- 4WD High/Locked
- 4WD Low
- Neutral

Conditions for Running the DTC

- Ignition ON.
- System voltage 10.5-18 V.
- No DTC P0562 or P0563.
- Transfer case range actuator not performing a requested range change (C0306 01, C0306 02, and C0306 04 only).
- DTC C0306 and C0381 run continuously within the enabling conditions.

Conditions for Setting the DTC

C0306 01

Voltage on the transfer case clockwise circuit or the transfer case counter-clockwise circuit is greater than 5.60 V.

C0306 02

Voltage on the transfer case clockwise circuit or the transfer case counter-clockwise circuit is less than 1.9 V.

cardiagn.com

C0306 04

Voltage on the transfer case clockwise circuit is 2.7-4.5 V, and the voltage on the transfer case counter-clockwise circuit is 0.5-4.5 V.

C0306 54

The calculated temperature of the transfer case range actuator H-bridge in the transfer case control module is greater than a predetermined value.

C0381 54

The calculated temperature of the transfer case range actuator is greater than a predetermined value.

Action Taken When the DTC Sets

- All shifting disabled.
- Front axle disengages if thermal model exceeded.
- The SERVICE 4WD indicator remains illuminated for the remainder of the current ignition cycle.

Conditions for Clearing the DTC

- The transfer case control module clears the DTC once the conditions for setting the DTC are no longer present.
- A history DTC clears after 40 consecutive warm-up cycles without a fault present.
- History DTCs can be cleared using a scan tool.

Diagnostic Aids

- It is possible to have windings inside the motor shorted to the case resulting in a short to ground causing this DTC to set.
- The default actions for C0321 may set C0306.
- **EL-49741** harness is a good source for 9 V.
- **EL-49742** harness is a good source for B+ and ground.
- The transfer case drain plug is a good source for ground.

Reference Information

Schematic Reference

Transfer Case Control Schematics

cardiagn.com

Connector End View Reference

COMPONENT CONNECTOR END VIEWS - INDEX

Electrical Information Reference

- **Circuit Testing**
- **Connector Repairs**
- **Testing for Intermittent Conditions and Poor Connections**
- **Wiring Repairs**

Scan Tool Reference

Control Module References for scan tool information

Special Tools

- **EL-49741** 9 V+ Power Source Harness
- **EL-49742** Battery Voltage B+ and Ground Source Harness
- **J-35616** GM-Approved Terminal Test Kit

For equivalent regional tools, refer to **Special Tools**.

Circuit/System Verification

1. Verify DTC C0321 in NOT set.
    - **If DTC C0321 is set**

      diagnose it first. Refer to **DTC C0321 or C0326**.

    - ***If DTC C0321 is NOT set***
2. Verify that all of the following scan tool parameters display OK.
    - Range Actuator Control Circuit High Voltage Test Status
    - Range Actuator Control Circuit Low Voltage Test Status
    - Range Actuator Control Circuit Open Voltage Test Status

cardiagn.com

- Range Actuator Control Circuit Shorted Test Status
- ***If any of the parameters do NOT display OK***

  Refer to Circuit/System Testing.

- ***If all of the parameters display OK***

3. Verify that for all range selections of the S77 transfer case shift control switch, the Range Actuator Current parameter increases or decreases during the shift and then returns to 0.0 A after shifting.
   - ***If the Range Actuator Current parameter does NOT perform as described***

     Refer to Circuit/System Testing.

   - ***If the Range Actuator Current parameter DOES perform as described***
4. Verify DTC C0306 or C0381 is only set as a history DTC.
   - **If C0306 or C0381 is set as current**

     Refer to Circuit/System Testing.

   - **If C0306 or C0381 is only set as history**

NOTE: **After inspection, apply Nyogel lubricant 760G to each connector terminal. Ensure each connector and CPA is correctly seated.**

5. Visually inspect each connector terminal of the K69 transfer case control module X3 connector and the A16 transfer case motor connector for damage or corrosion. Repair as necessary.
6. Clear DTC C0306 or C0381 from history.
7. Operate the vehicle within the Conditions for Running the DTC. You may also operate the vehicle within the conditions that you observed from the Freeze Frame/Failure Records data. The DTC should not set.
   - **If DTC C0306 or C0381 sets**

     Refer to Circuit/System Testing.

   - **If DTC C0306 or C0381 does not set**
8. All OK.

cardiagn.com

Circuit/System Testing

1. Ignition OFF, disconnect the harness connector at the A16 transfer case motor, also known as the transfer case range actuator.
2. Ignition ON, engine OFF.

NOTE:

- **When test probing harness terminals, it is imperative to use the proper test probe from the most current version of the J-35616 GM-Approved Terminal Test Kit. Use of an improper test probe may deform the terminal, resulting in intermittent open conditions.**
- **Testing for steps 3-5 is performed on the A16 transfer case motor harness connector using the PU probes J-35616-4A.**

3. Test for 1.0-2.5 V between the transfer case motor counter-clockwise control circuit terminal D and a good ground, such as the ground terminal of the **EL-49742** harness, black terminal.
   - ***If less than the specified range***
   1. Ignition OFF, disconnect the X3 harness connector at the K69 transfer case control module.
   2. Test for less than 10 Ω in the transfer case motor counter-clockwise control circuit end to end.
      - If 10 Ω or greater, repair the open/high resistance in the circuit.
      - If less than 10 Ω
   3. Test for infinite resistance between transfer case motor counter-clockwise control circuit terminal D and a good ground.
      - If less than infinite resistance, repair the short to ground in the circuit.
      - If infinite resistance
   4. Test for greater than 10 Ω between the transfer case motor counter-clockwise control circuit terminal D and all other terminals of the A16 transfer case motor harness connector.
      - If 10 Ω or less, repair the shorted together condition in the affected circuits.
      - If greater than 10 Ω, replace the K69 transfer case control module and perform the Range Actuator Learn procedure.

        Refer to **Transfer Case Control Module Replacement**, and **Transfer Case High/Low Clutch Reset**.

   - ***If greater than the specified range***
   1. Ignition OFF, disconnect the X3 harness connector at the K69 transfer case control module. Ignition ON, Engine OFF.
   2. Test for less than 1 V between the transfer case motor counter-clockwise control circuit terminal D and a good ground.
      - If 1 V or greater, repair the short to voltage in the circuit.

cardiagn.com

- If less than 1 V

3. Test for greater than 10 Ω between the transfer case motor counter-clockwise control circuit, terminal D and all other terminals of the A16 transfer case motor harness connector.
   - If 10 Ω or less, repair the shorted together condition in the affected circuits.
   - If greater than 10 Ω, replace the K69 transfer case control module and perform the Range Actuator Learn procedure.

     Refer to **Transfer Case Control Module Replacement**, and **Transfer Case High/Low Clutch Reset**.

- ***If within the specified range***

4. Transfer case motor counter-clockwise control circuit and K69 transfer case control module OK.
5. Test for 3.0-4.5 V between the transfer case motor clockwise control circuit terminal A, and a good ground, such as the ground terminal of the **EL-49742** harness, black terminal.
   - **If less than the specified range**

   1. Ignition OFF, disconnect the X3 harness connector at the K69 transfer case control module.
   2. Test for less than 10 Ω in the transfer case motor clockwise control circuit end to end.
      - If 10 Ω or greater, repair the open/high resistance in the circuit.
      - If less than 10 Ω
   3. Test for infinite resistance between transfer case motor clockwise control circuit terminal A and a good ground.
      - If less than infinite resistance, repair the short to ground in the circuit.
      - If infinite resistance
   4. Test for greater than 10 Ω between the transfer case motor clockwise control circuit terminal A and all other terminals of the A16 transfer case motor harness connector.
      - If 10 Ω or less, repair the shorted together condition in the affected circuits.
      - If greater than 10, replace the K69 transfer case control module and perform the Range Actuator Learn procedure.

        Refer to **Transfer Case Control Module Replacement** , and **Transfer Case High/Low Clutch Reset** .

   - **If greater than the specified range**

   1. Ignition OFF, disconnect the X3 harness connector at the K69 transfer case control module. Ignition ON, Engine OFF.
   2. Test for less than 1 V between the transfer case motor clockwise control circuit terminal A and a good ground.
      - If 1 V or greater, repair the short to voltage in the circuit.

cardiagn.com

- If less than 1 V

3. Test for greater than 10 Ω between the transfer case motor clockwise control circuit, terminal A and all other terminals of the A16 transfer case motor harness connector.
   - If 10 Ω or less, repair the shorted together condition in the affected circuits.
   - If greater than 10 Ω, replace the K69 transfer case control module and perform the Range Actuator Learn procedure.

     Refer to **Transfer Case Control Module Replacement** , and **Transfer Case High/Low Clutch Reset** .

- **If within the specified range**

6. Transfer case motor counter-clockwise control circuit, transfer case motor clockwise control circuit and K69 transfer case control module OK.

Component Testing

A16 Transfer Case Motor (Transfer Case Range Actuator)

1. Remove the A16 transfer case motor from transfer case. Using a paint pen or marker, place indexing marks on the A16 transfer case motor drive gear and the mounting surface of the A16 transfer case motor.

NOTE:

- **When test probing harness terminals, it is imperative to use the proper test probe from the most current version of the J-35616 GM-Approved Terminal Test Kit. Use of an improper test probe may deform the terminal, resulting in intermittent open conditions.**
- **Testing for steps 2-11 is performed on the A16 transfer case motor harness connector using the PU probes J-35616-5.**

2. Attach the red lead from one of the **EL-49741** harnesses to the battery positive voltage terminal of the A16 transfer case motor, terminal B.
3. Attach the black lead from this same jumper harness to the transfer case lock solenoid control terminal of the A16 transfer case motor, terminal C.
4. Attach a 9-volt battery to this harness (not included). You should hear the A16 transfer case motor unlock.
   - ***If you do NOT hear the A16 transfer case motor unlock***

     replace the A16 transfer case motor and perform the Range Actuator Learn procedure. Refer to **Transfer Case Two/Four Wheel Drive Actuator Replacement**, and **Transfer Case High/Low Clutch Reset**.

   - ***If you DO hear the A16 transfer case motor unlock***
5. Attach the red lead from the other **EL-49741** jumper harness to the transfer case motor clockwise control circuit of the A16 transfer case

cardiagn.com

motor, terminal A.

6. Attach the black lead from this same jumper harness to the transfer case motor counter-clockwise control circuit of the A16 transfer case motor, terminal D.
7. Touch the battery terminals of the 9-volt battery to the battery terminals of the jumper harness. This should rotate the A16 transfer case motor drive gear in either a clockwise or counter-clockwise rotation depending on battery orientation.
   - If the A16 transfer case motor drive gear does not perform as described

     replace the A16 transfer case motor and perform the Range Actuator Learn Procedure. Refer to **Transfer Case Two/Four Wheel Drive Actuator Replacement**, and **Transfer Case High/Low Clutch Reset**.

   - ***If The A16 transfer case motor drive gear performs as described***
8. Verify 0.3-40 Ω resistance between the transfer case motor clockwise control circuit of the A16 transfer case motor, terminal A and the transfer case motor counter-clockwise control circuit of the A16 transfer case motor, terminal D.
   - ***If NOT 0.3-40 Ω***

     replace the A16 transfer case motor and perform the Range Actuator Learn Procedure. Refer to **Transfer Case Two/Four Wheel Drive Actuator Replacement**, and **Transfer Case High/Low Clutch Reset**.

   - ***If 0.3-40 Ω***
9. Test for infinite resistance between the following circuits and the A16 transfer case motor case:
   - Transfer case motor clockwise control circuit of the A16 transfer case motor, terminal A
   - Transfer case motor counter-clockwise control circuit of the A16 transfer case motor, terminal D
   - ***If less than infinite resistance***

     replace the A16 transfer case motor and perform the Range Actuator Learn Procedure. Refer to **Transfer Case Two/Four Wheel Drive Actuator Replacement**, and **Transfer Case High/Low Clutch Reset**.

   - ***If infinite resistance***
10. Test for infinite resistance between the transfer case motor clockwise control circuit of the A16 transfer case motor, terminal A and all other terminals on the A16 transfer case motor harness X1 except the transfer case motor counter-clockwise control circuit of the A16 transfer case motor, terminal D.
    - ***If less than infinite resistance***

      replace the A16 transfer case motor and perform the Range Actuator Learn Procedure. Refer to **Transfer Case Two/Four Wheel Drive**

cardiagn.com

Actuator Replacement, and **Transfer Case High/Low Clutch Reset**.

- ***If infinite resistance***

11. Test for infinite resistance between the transfer case motor counter-clockwise control circuit of the A16 Transfer Case Motor, terminal D. and all other terminals on the TCEM harness X1 except the transfer case motor clockwise control circuit of the A16 transfer case motor, terminal A.
    - ***If less than infinite resistance***

      replace the A16 transfer case motor and perform the Range Actuator Learn Procedure. Refer to **Transfer Case Two/Four Wheel Drive Actuator Replacement**, and **Transfer Case High/Low Clutch Reset**.

    - ***If infinite resistance***
12. A16 transfer case motor OK.

Repair Instructions

Perform the **Diagnostic Repair Verification** after completing the diagnostic procedure.

- Refer to **Control Module References** for K69 transfer case control module replacement, setup, and programming
- Refer to **Transfer Case High/Low Clutch Reset**
- Refer to **Transfer Case Two/Four Wheel Drive Actuator Replacement**

DTC C0321 OR C0326: RANGE ACTUATOR LOCK CONTROL CIRCUIT/RANGE ACTUATOR LOCK CONTROL SYSTEM PERFORMANCE

Diagnostic Instructions

- Perform the **Diagnostic System Check - Vehicle** prior to using this diagnostic procedure.
- Review **Strategy Based Diagnosis** for an overview of the diagnostic approach.
- Refer to **Diagnostic Procedure Instructions** to provide an overview of each diagnostic category.

DTC Descriptors

DTC C0321 01

Range Actuator Lock Control Circuit Short to Battery

cardiagn.com

DTC C0321 02

Range Actuator Lock Control Circuit Short to Ground

DTC C0321 04

Range Actuator Lock Control Circuit Open

DTC C0326 58

Range Actuator Lock Control System Performance

Diagnostic Fault Information

Circuit	Short to Ground	Open/High Resistance	Short to Voltage	Performance
Battery Positive Voltage	-	DTC C0321 04	-	-
Transfer Case Lock Solenoid Control	DTC C0321 02	DTC C0321 04	DTC C0321 01	DTC C0326 58

Circuit/System Description

The transfer case range actuator is also known as the transfer case motor, transfer case encoder motor, or transfer case two/four wheel drive actuator assembly.

The transfer case range actuator lock solenoid is part of the transfer case range actuator and cannot be serviced separately.

The transfer case control module controls the transfer case range actuator lock solenoid. The transfer case range actuator lock solenoid is released by being energized. This is accomplished by grounding the transfer case lock solenoid control circuit during range changes, and 4WD/AWD Automatic mode. Locking action is applied when power or ground are taken away from the lock solenoid, preventing the transfer case range actuator from moving. The system is capable of providing 2WD, 4WD High/Locked, 4WD Low, and Neutral without the need of additional vehicle power to hold the transfer case in these positions.

Conditions for Running the DTC

- Ignition ON.
- System voltage 10.5-18 V.
- A state change from lock solenoid engaged to lock solenoid disengaged, or lock solenoid disengaged to lock solenoid engaged, has occurred more than 10 times - DTC C0321 only.

cardiagn.com

- DTC C0321 and C0326 run continuously within the enabling conditions.

Conditions for Setting the DTC

C0321 01

When the low side driver is ON, the transfer case control module measures greater than 8.5 volts on the Transfer Case Lock Solenoid Control circuit.

C0321 02

When the low side driver is OFF, the transfer case control module measures less than 2.0 volts on the Transfer Case Lock Solenoid Control circuit.

C0321 04

When the low side driver is OFF, the transfer case control module measures between 2.5-5.5 volts on the Transfer Case Lock Solenoid Control circuit.

C0326 58

Transfer case range actuator position correction after a brake slipping event was unsuccessful 10 times. A slipping event is defined as a torque error between the torque requested and the actual torque calculated from motor position being greater than a predetermined amount.

Action Taken When the DTC Sets

C0321

- Lock does not disengage.
- All shifting disabled.
- The SERVICE 4WD indicator remains illuminated for the remainder of the current ignition cycle.

C0326 58

- Normal operation/slip correction unless thermal limits of transfer case four wheel drive clutch, transmission control module or transfer case range actuator have been exceeded.
- The SERVICE 4WD indicator remains illuminated for the remainder of the current ignition cycle.

Conditions for Clearing the DTC

cardiagn.com

- The transfer case control module clears the DTC once the conditions for setting the DTC are no longer present.
- A history DTC clears after 40 consecutive warm up cycles without a fault present.
- History DTCs can be cleared using a scan tool.

Diagnostic Aids

- The underhood fuse block supplies B+ on the battery positive voltage circuit and reads the voltage back on the transfer case lock solenoid control circuit.
- The system tests the transfer case lock solenoid circuits by checking for unwanted voltage. If the transfer case control module detects a low voltage return when a high voltage is expected, or a high voltage return when a low voltage is expected, the DTC is logged.
- The default actions for C0321 may set C0306.
- **EL-49741** harness is a good source for 9 V.
- **EL-49742** harness is a good source for B+ and ground.
- The transfer case drain plug is a good source for ground.

Reference Information

Schematic Reference

Transfer Case Control Schematics

Connector End View Reference

COMPONENT CONNECTOR END VIEWS - INDEX

Electrical Information Reference

- **Circuit Testing**
- **Connector Repairs**
- **Testing for Intermittent Conditions and Poor Connections**
- **Wiring Repairs**

Scan Tool Reference

Control Module References for scan tool information.

cardiagn.com

Special Tools

- **EL-49741** 9 V+ Power Source Harness
- **EL-49742** Battery Voltage B+ and Ground Source Harness
- **J-35616** GM-Approved Terminal Test Kit

For equivalent regional tools, refer to **Special Tools**.

Circuit/System Verification

1. Verify that all of the following scan tool parameters display OK.
   - Range Actuator Lock Control Circuit High Voltage Test Status
   - Range Actuator Lock Control Circuit Low Voltage Test Status
   - Range Actuator Lock Control Circuit Open Test Status
   - ***If any of the parameters do NOT display OK***

     Refer to Circuit/System Testing.

   - ***If all of the parameters display OK***
2. Using the transfer case Range Actuator Lock function of the Control Functions feature of the scan tool, command the transfer case range actuator lock ON and OFF. You should be able to hear the range actuator lock engage and disengage.
   - ***If you are unable to hear the range actuator lock engaging and disengaging***

     Refer to Circuit/System Testing.

   - ***If you are able to hear the range actuator lock engaging and disengaging***
3. Verify DTC P0321 or P0326 is only set as a history DTC.
   - ***If any of the DTCs are set as current***

     Refer to Circuit/System Testing.

   - ***If any of the DTCs are only set as history***

NOTE: **After inspection, apply Nyogel lubricant 760G to each connector terminal. Ensure each connector and CPA is correctly seated.**

cardiagn.com

4. Visually inspect each connector terminal of the K69 transfer case control module X1 connector and the A16 transfer case motor connector for damage or corrosion. Repair as necessary.
5. Clear DTC P0321 or P0326 from history.
6. Operate the vehicle within the Conditions for Running the DTC. You may also operate the vehicle within the conditions that you observed from the Freeze Frame/Failure Records data. The DTC should not set.
   - ***If any of the DTCs are set***

     Refer to Circuit/System Testing.

   - ***If none of the DTCs set***
7. All OK.

Circuit/System Testing

1. Verify that the 4WD TREC fuse, X50A Fuse Block - Underhood fuse 6, and the Accessory/Run Crank fuse, X51L Fuse Block - Instrument Panel Left - fuse 31, are not open.
   - ***If the 4WD TREC fuse is open***

     Test the battery positive voltage, K69 transfer case control module harness X3 terminal C, for a short to ground.

   - ***If the Accessory/Run Crank fuse is open***

     Test the Accessory/Run Crank voltage circuit, K69 transfer case control module harness X2 terminal 4, for a short to ground.

   - ***If neither fuse is open***
2. Ignition ON, engine OFF.
3. Disconnect the harness connector at the A16 transfer case range actuator.

NOTE:

- **When test probing harness terminals, it is imperative to use the proper test probe from the most current version of the J-35616 Kit. Use of an improper test probe may deform the terminal, resulting in intermittent open conditions.**
- **Testing for steps 3-5 is performed on the A16 transfer case motor harness connector using the PU probes J-35616-4A.**

4. Test for B+ (+0.0/-1.0 V) between the battery positive voltage circuit, A16 transfer case range actuator harness terminal B, and a good ground.

cardiagn.com

- ***If the voltage is less than B+ (+0.0/-1.0 V)***

1. Ignition OFF, disconnect the X2 harness connector at the X50A Fuse Block - Underhood.
2. Test for less than 10 Ω in battery positive voltage circuit end to end.
   - If 10 Ω or greater, repair the open/high resistance in the circuit.
   - ***If less than 10 Ω***
3. Test for infinite resistance between battery positive voltage circuit and a good ground.
   - If less than infinite resistance, repair the short to ground in the circuit.
   - If infinite resistance
4. Test for infinite resistance between the battery positive voltage circuit, A16 transfer case motor harness terminal B, and all other terminals of the A16 transfer case motor harness connector.
   - If less than infinite resistance, repair the shorted together condition in the affected circuits.
   - If infinite resistance, replace the K69 transfer case control module and perform the Range Actuator Learn procedure. The Range Actuator Learn procedure is also known as the Transfer Case High/Low Clutch Reset procedure.

     Refer to **Transfer Case Control Module Replacement**.

- ***If the voltage is B+ (+0.0/-1.0 V)***

5. Test for a 4.0-5.0 V diagnostic voltage between the transfer case lock solenoid control circuit, A16 Transfer Case Motor terminal C, and a good ground.
   - ***If the voltage is greater than the specified range***
   1. Ignition OFF, disconnect the X1 harness connector at the K69 transfer case control module.
   2. Ignition ON, engine OFF.
   3. Test for less than 1 V between the transfer case lock solenoid control circuit and a good ground.
      - If 1 V or greater, repair the short to voltage on the circuit.
      - If less than 1 V
   4. Test for infinite resistance between the transfer case lock solenoid control circuit, A16 transfer case motor harness connector terminal C and all other terminals of the A16 transfer case motor harness connector.
      - If less than infinite resistance, repair the shorted together condition in the affected circuits.
      - If infinite resistance, replace the K69 transfer case control module and perform the Range Actuator Learn procedure. The Range Actuator Learn procedure is also known as the Transfer Case High/Low Clutch Reset procedure.

cardiagn.com

Refer to **Transfer Case Control Module Replacement**.

- ***If the voltage is less than the specified range***

1. Ignition OFF, disconnect the X1 harness connector at the K69 transfer case control module.
2. Test for less than 10 Ω in the transfer case lock solenoid control circuit end to end.
   - If 10 Ω or greater, repair the open/high resistance in the circuit.
   - If less than 10 Ω
3. Test for infinite resistance transfer case lock solenoid control circuit, A16 transfer case motor harness connector terminal C and a good ground.
   - If less than infinite resistance, repair the short to ground in the circuit.
   - If infinite resistance
4. Test for infinite resistance between the transfer case lock solenoid control circuit, A16 transfer case motor harness connector terminal C and all other terminals of the A16 transfer case motor harness connector.
   - If less than infinite resistance, repair the shorted together condition in the affected circuits.
   - If infinite resistance, replace the K69 transfer case control module and perform the Range Actuator Learn procedure. The Range Actuator Learn procedure is also known as the Transfer Case High/Low Clutch Reset procedure.

     Refer to **Transfer Case Control Module Replacement**.

- ***If the voltage is within the specified range***

6. Battery Positive Voltage circuit and Transfer Case Lock Solenoid Control circuit OK.

Component Testing

A16 Transfer Case Motor (Transfer Case Range Actuator)

NOTE: **Circuit/System Testing must be performed first.**

1. Remove the A16 transfer case motor from transfer case. Using a paint pen or marker, place indexing marks on the A16 transfer case motor drive gear and the mounting surface of the A16 transfer case motor.
2. Install the **EL-49742** harness.
3. Using a PU probe J-35616-5, attach the red lead of the **EL-49742** jumper harness to the transfer case motor clockwise control circuit of the A16 transfer case motor, terminal A. The transfer case motor clockwise control circuit is also known as the motor control A circuit.

cardiagn.com

4. Using a PU probe J-35616-5, touch the black lead of the **EL-49742** jumper harness to the transfer case motor counter clockwise control circuit of the A16 transfer case motor, terminal D. The transfer case motor counter clockwise control circuit is also known as the motor control B circuit. The A16 transfer case motor drive gear should not rotate.
   - ***If the A16 transfer case motor drive gear rotates***

     Replace the A1 transfer case motor. Refer to **Transfer Case Two/Four Wheel Drive Actuator Replacement**.

   - ***If the A16 transfer case motor drive gear does NOT rotate***
5. Using a PU probe J-35616-5, attach the red lead of the **EL-49741** harness to the battery positive voltage terminal of the A16 transfer case motor, terminal B.
6. Using a PU probe J-35616-5, attach the black lead of the **EL-49741** jumper harness to the transfer case lock solenoid control terminal of the A16 transfer case motor, terminal C.
7. Attach a 9-volt battery to the **EL-49741** harness (not included). You should hear the A16 transfer case motor unlock.
   - ***If you do not hear the A16 transfer case motor unlock***

     Replace the A16 transfer case motor. Refer to **Transfer Case Two/Four Wheel Drive Actuator Replacement**.

   - ***If you do hear the A16 transfer case motor unlock***
8. Touch the black lead of the **EL-49742** jumper harness to the transfer case motor counter clockwise control circuit of the A16 transfer case motor, terminal D. The A16 transfer case motor drive gear should rotate.
   - ***If the A16 transfer case motor drive gear does NOT rotate***

     Replace the A16 transfer case motor. Refer to **Transfer Case Two/Four Wheel Drive Actuator Replacement**.

   - ***If the A16 transfer case motor drive gear does rotate***
9. Using the PU probes J 35616-5, test for between 10-30 Ω between the battery positive voltage circuit A16 transfer case motor, terminal B and the transfer case lock solenoid control circuit A16 transfer case motor terminal C.
   - ***If outside the specified range***

     Replace the A16 transfer case motor. Refer to **Transfer Case Two/Four Wheel Drive Actuator Replacement**.

   - ***If within the specified range***
10. Using the PU probes J-35616-5, test for infinite resistance between the following circuits and the A16 transfer case motor case.
    - Battery positive voltage circuit A16 transfer case motor, terminal B.

cardiagn.com

- Transfer case lock solenoid control circuit A16 transfer case motor, terminal C.
- ***If less than infinite resistance***

  Replace the A16 transfer case motor. Refer to **Transfer Case Two/Four Wheel Drive Actuator Replacement**.

- ***If infinite resistance***

11. Using the PU probes J-35616-5, test for infinite resistance between the battery positive voltage circuit A16 transfer case motor, terminal B and all other terminals on the A16 transfer case motor except the transfer case lock solenoid control circuit, terminal C.
    - ***If less than the infinite resistance***

      Replace the A16 transfer case motor. Refer to **Transfer Case Two/Four Wheel Drive Actuator Replacement**.

    - ***If infinite resistance***
12. Using the PU probes J-35616-5, test for infinite resistance between the transfer case lock solenoid control circuit A16 transfer case motor, terminal C and all other terminals of the TCEM X1 except the battery positive voltage circuit A16 transfer case motor, terminal B.
    - ***If less than infinite resistance***

      Replace the A16 transfer case motor. Refer to **Transfer Case Two/Four Wheel Drive Actuator Replacement**.

    - ***If infinite resistance***
13. A16 transfer case motor OK.

K69 Transfer Case Control Module

NOTE:

- **Circuit/System Testing must be performed first.**
- **Transfer case control module's need to be programmed when replaced. If after programming the K69 transfer case control module comes back as "NO COMM", try reprogramming again. (Internet/vehicle bandwidth load may cause the programming activity to fail.)**

1. Ignition OFF. Disconnect the harness connector at the A16 transfer case motor.
2. Ignition ON, engine OFF. Install **EL-49742** harness.
3. Block wheels. Parking brake engaged. Transmission in Neutral.
4. Using the PU probes J-35616-4A, connect a test lamp between the battery positive voltage circuit, A16 transfer case motor harness terminal B and the ground terminal of **EL-49742** harness, black terminal. The test light should illuminate.

cardiagn.com

- ***If the test light does not illuminate***

1. Ignition OFF, disconnect the X2 harness connector at the X50A Fuse Block - Underhood.
2. Test for less than 10 Ω in battery positive voltage circuit end to end.
    - If 10 Ω or greater, repair the open/high resistance in the circuit.
    - If less than 10 Ω
3. Test for infinite resistance between battery positive voltage circuit, A16 transfer case motor harness terminal B, and a good ground.
    - If less than infinite resistance, repair the short to ground in the circuit.
    - If infinite resistance
4. Test for infinite resistance between the battery positive voltage circuit, A16 transfer case motor harness terminal B, and all other terminals of the A16 transfer case motor harness connector.
    - If less than infinite resistance, repair the shorted together condition in the affected circuits.
    - If infinite resistance, replace the K69 transfer case control module and perform the Range Actuator Learn procedure. The Range Actuator Learn procedure is also known as the Transfer Case High/Low Clutch Reset procedure. Refer to **Transfer Case Control Module Replacement**.

- ***If the test light does illuminate***

5. Using the PU probes J-35616-4A, connect a test lamp between the battery positive voltage circuit, A16 transfer case motor harness terminal B and the transfer case lock solenoid control circuit, A16 transfer case motor harness terminal C. The test light should not illuminate.

- ***If the test light illuminates***

1. Ignition OFF, disconnect the X1 harness connector at the K69 transfer case control module.
2. Test for infinite resistance between the transfer case lock solenoid control circuit, A16 transfer case motor harness terminal C, and a good ground.
    - If less than infinite resistance, repair the short to ground in the circuit.
    - If infinite resistance
3. Test for infinite resistance between the transfer case lock solenoid control circuit, A16 transfer case motor harness terminal C, and all other terminals of the A16 transfer case motor harness connector.
    - If less than infinite resistance, repair the shorted together condition in the affected circuits.
    - If infinite resistance, replace the K69 transfer case control module and perform the Range Actuator Learn procedure. The Range Actuator Learn procedure is also known as the Transfer Case High/Low Clutch Reset procedure. Refer to **Transfer Case Control Module Replacement**.

- ***If the test light does not illuminate***

cardiagn.com

6. Using the Transfer Case Lock function of the Control Function feature of the scan tool, command the transfer case lock ON and OFF. When the lock is commanded ON, release solenoid de-energized, the test light should not illuminate. When the lock is commanded OFF, release solenoid energized, the test light should illuminate.
   - ***If the test light stays ON when the lock is commanded ON***
   1. Ignition OFF, disconnect the X1 harness connector at the K69 transfer case control module.
   2. Test for infinite resistance between the transfer case lock solenoid control circuit, A16 transfer case motor harness terminal C, and a good ground.
      - If less than infinite resistance, repair the short to ground in the circuit.
      - If infinite resistance
   3. Test for infinite resistance between the transfer case lock solenoid control circuit, A16 transfer case motor harness terminal C, and all other terminals of the A16 transfer case motor harness connector.
      - If less than infinite resistance, repair the shorted together condition in the affected circuits.
      - If infinite resistance, replace the K69 transfer case control module and perform the Range Actuator Learn procedure. The Range Actuator Learn procedure is also known as the Transfer Case High/Low Clutch Reset procedure. Refer to **Transfer Case Control Module Replacement**.
   - ***If the test light does not illuminate when the lock is commanded OFF***
   1. Ignition OFF, disconnect the X harness connector at the K69 transfer case control module.
   2. Test for less than 10 Ω in the transfer case lock solenoid control circuit, end to end.
      - If 10 Ω or greater, repair the open/high resistance in the circuit.
      - If less than 10 Ω, replace the K69 transfer case control module and perform the Range Actuator Learn procedure. The Range Actuator Learn procedure is also known as the Transfer Case High/Low Clutch Reset procedure. Refer to **Transfer Case Control Module Replacement**.
   - ***If the test light illuminates when the lock is commanded OFF and turns OFF when the lock is commended ON***
7. K69 transfer case motor OK.

Repair Instructions

Perform the **Diagnostic Repair Verification** after completing the diagnostic procedure.

- Refer to **Control Module References** for transfer case control module replacement, setup, and programming.
- Refer to **Transfer Case High/Low Clutch Reset** for Range Actuator Learn procedure.
- Refer to **Transfer Case Two/Four Wheel Drive Actuator Replacement** for transfer case motor/transfer case range actuator replacement.

cardiagn.com

DTC C0364 OR C0379: FRONT AXLE SYSTEM/FRONT AXLE SWITCH CIRCUIT

Diagnostic Instructions

- Perform the **Diagnostic System Check - Vehicle** prior to using this diagnostic procedure.
- Review **Strategy Based Diagnosis** for an overview of the diagnostic approach.
- Refer to **Diagnostic Procedure Instructions** to provide an overview of each diagnostic category.

DTC Descriptors

DTC C0364 01

Front Axle System Short to Battery

DTC C0364 02

Front Axle System Short to Ground

DTC C0364 04

Front Axle System Open Circuit

DTC C0379 08

Front Axle Switch Circuit Signal Invalid

DTC C0379 58

Front Axle Switch Circuit System Performance

Diagnostic Fault Information

Circuit	Short to Ground	Open/High Resistance	Short to Voltage	Signal Invalid
Run/Crank Ignition 1 Voltage	Trans Ign 1 fuse, underhood fuse block - Open	C0364 04 if set when in 2WD High or C0379 08 if set when in 4WD High	-	C0379 58

cardiagn.com

Circuit	Short to Ground	Open/High Resistance	Short to Voltage	Signal Invalid
Four Wheel Drive Wheel Lock Indicator	C0379 08 or C0379 58	C0364 04, C0379 08, or C0379 58	C0379 58	C0379 58
Front Axle Actuator Control	C0364 02	C0364 04 if set when in 2WD High or C0379 08 if set when in 4WD High	C0364 01	C0379 58
Ground	-	C0364 04 if set when in 2WD High or C0379 08 if set when in 4WD High	-	C0379 58

Circuit/System Description

The front axle control circuit consists of an electric motor actuator which engages and disengages the front axle. The front axle engagement actuator consists of a permanent magnetic motor, a worm gear controlled plunger, a front axle switch and an electronic control circuit within the actuator assembly.

The front axle engagement actuator contains the following circuits:

- A Run/Crank Ignition 1 Voltage circuit
- A Four Wheel Drive Wheel Lock Indicator circuit
- An Front Axle Actuator Control circuit
- A ground circuit

When a shift to 4WD Auto, 4WD High, or 4WD Low is requested, the transfer case control module engages the front axle by grounding the front axle actuator control circuit through a current limiting driver.

Conditions for Running the DTC

- Ignition ON.
- System voltage 10.5-18 V.
- No DTC P0562 or P0563.

cardiagn.com

- DTC C0364 and C0379 run continuously within the enabling conditions.

Conditions for Setting the DTC

C0364 01

Voltage on the front axle actuator control circuit is greater than 8.5 V.

C0364 02

Voltage on the front axle actuator control circuit is less than 0.2 V.

C0364 04

Voltage on the front axle actuator control circuit is between 2.5-5.5 V.

C0379 08

The transfer case control module detects a change in voltage on the four wheel drive wheel lock indicator circuit and no change in voltage on the front axle actuator control circuit.

C0379 58

5 s after a range change, the transfer case control module compares the commanded state of the front axle (Front Axle Engagement Actuator Command parameter) to the monitored state of the front axle (Front Axle Feedback Switch parameter). If the command state differs from the monitored state for more than a predetermined amount of time, the DTC sets.

Action Taken When the DTC Sets

C0364 01 and C0364 04

- The front axle remains disengaged at all times.
- Transfer case normal operation.
- The SERVICE 4WD indicator remains illuminated for the remainder of the current ignition cycle.
- The range indicator for the current range shall illuminate.

C0364 02

cardiagn.com

- The front axle remains engaged at all times.
- Transfer case normal operation.
- The SERVICE 4WD indicator remains illuminated for the remainder of the current ignition cycle.
- The range indicator for the current range shall illuminate.

C0379 08

- The front axle remains in current mode.
- Transfer case normal operation.
- The SERVICE 4WD indicator remains illuminated for the remainder of the current ignition cycle.
- The range indicator for the current range shall illuminate.

C0379 58

- The front axle remains in current mode.
- Transfer case normal operation.
- The SERVICE 4WD indicator remains illuminated for the remainder of the current ignition cycle.
- The range indicator for the current range shall illuminate.

Conditions for Clearing the DTC

- The K69 transfer case control module clears the DTC once the conditions for setting the DTC are no longer present.
- A history DTC clears after 40 consecutive warm up cycles without a fault present.
- History DTCs can be cleared using a scan tool.

Diagnostic Aids

- Other failures on the run/crank ignition 1 voltage circuit may cause erratic behavior on the front axle control signal circuit.
- The transfer case fill/drain plugs are good sources for ground.
- A TRUE B+ carries enough current to light a test light.
- A DIAGNOSTIC B+ is a low current circuit that DOES NOT carry.

Reference Information

Schematic Reference

cardiagn.com

Transfer Case Control Schematics

Connector End View Reference

COMPONENT CONNECTOR END VIEWS - INDEX

Electrical Information Reference

- **Circuit Testing**
- **Connector Repairs**
- **Testing for Intermittent Conditions and Poor Connections**
- **Wiring Repairs**

Scan Tool Reference

Control Module References for scan tool information.

Special Tools

- **EL-49741** 9 V+ Power Source Harness
- **EL-49742** Battery Voltage B+ and Ground Source Harness
- **J-35616** GM-Approved Terminal Test Kit

For equivalent regional tools, refer to **Special Tools**.

Circuit/System Verification

1. Verify that the F40UA, TCCM/HDLP fuse is NOT open (X50A underhood fuse block).
   - ***If the F40UA TCCM/HDLP fuse is OPEN***

     Refer to Circuit/System Testing.

   - ***If the F40UA TCCM/HDLP fuse is NOT OPEN***
2. Verify that the following parameters match each other for all range selections of the S77 transfer case shift control switch. You should also be able to hear the M26 front axle engagement actuator engaging and disengaging.
   - Front Axle Engagement Actuator Command

cardiagn.com

- Front Axle Feedback Switch
- ***If the parameters do NOT match each other***

  Refer to Circuit/System Testing.

- ***If the parameters DO match each other***

3. Verify that all of the following scan tool parameters display OK.
   - Front Axle Engagement Actuator Control Circuit High Voltage Test Status
   - Front Axle Engagement Actuator Control Circuit Low Voltage Test Status
   - Front Axle Engagement Actuator Control Circuit Open Voltage Test Status
   - ***If any of the parameters do NOT display OK***

     Refer to Circuit/System Testing.

   - ***If all of the parameters display OK***
4. Verify that for all range selections of the S77 transfer case shift control switch, the Range Actuator Current parameter increases or decreases during the shift and then returns to 0.0 A after shifting.
   - ***If the Range Actuator Current parameter does NOT perform as described***

     Refer to Circuit/System Testing.

   - ***If the Range Actuator Current parameter DOES perform as described***
5. Verify DTC C0364 or C0379 is only set as a history DTC.
   - ***If DTC C0364 or C0379 is as current***

     Refer to Circuit/System Testing.

   - ***If DTC C0364 or C0379 is only set as history***

NOTE: **After inspection, apply Nyogel lubricant 760G to each connector terminal. Ensure each connector and CPA is correctly seated.**

6. Visually inspect each connector terminal of the K69 transfer case control module X1 connector and the M26 front axle engagement actuator connector for damage or corrosion. Repair as necessary.
7. Clear DTC C0364 or C0379 from history.

cardiagn.com

8. Operate the vehicle within the Conditions for Running the DTC. You may also operate the vehicle within the conditions that you observed from the Freeze Frame/Failure Records data. The DTC should not set.
   - ***If DTC C0364 or C0379 sets***

     Refer to Circuit/System Testing.

   - ***If DTC C0364 or C0379 does not set***
9. All OK.

Circuit/System Testing

1. Ignition OFF, disconnect the harness connector at the M26 front axle engagement actuator.
2. Ignition ON, engine OFF.

NOTE:

- **When test probing harness terminals, it is imperative to use the proper test probe from the most current version of the J-35616 GM-Approved Terminal Test Kit. Use of an improper test probe may deform the terminal, resulting in intermittent open conditions.**
- **Testing for steps 3-11 is performed on the M26 front axle engagement actuator harness connector using the BL probes J-35616-64B.**

3. Test for a True B+ (+0.0/-1.0 V) between the ignition 1 voltage circuit terminal 1 and a good ground, such as the ground terminal of the **EL-49742** harness, black terminal.
   - ***If less than B+ (+0.0/-1.0 V)***

     1. Ignition OFF, remove the F40UA fuse, X50A fuse block - underhood.

        or

        Disconnect the X2 harness connector at the X50A fuse block - underhood.

     2. Test for less than 10 Ω in the run/crank ignition 1 voltage circuit end to end.
        - If 10 Ω or greater, repair the open/high resistance in the circuit.
        - If less than 10 Ω
     3. Test for infinite resistance between the run/crank ignition 1 voltage circuit, terminal 1 and a good ground, such as the ground terminal of the **EL-49742** harness, black terminal.

cardiagn.com

- If less than infinite resistance, repair the short to ground condition in the circuit.
- If greater than 10 Ω

4. Test for greater than 10 Ω between run/crank ignition 1 voltage circuit, terminal 1 and all other terminals of the M26 front axle engagement actuator.
   - If 10 Ω or less, repair the short together condition in the affected circuits.
   - If greater than 10 Ω
5. Ignition ON.
6. Test for a less than 1.0 V between the run/crank ignition 1 voltage circuit, terminal 1, and a good ground such as the ground terminal of the **EL-49742** harness, black terminal.
   - If 1.0 V or greater, repair the short to voltage in the circuit.
   - If less than 1 V, replace the KR73 ignition main relay. Refer to X50A fuse block - underhood label.

- ***If B+ (+0.0/-1.0 V)***

4. Ignition 1 voltage circuit OK.
5. Test for a true B+ (+0.0/-1.0 V) between the ground circuit, terminal 4, and the run/crank ignition 1 voltage circuit, terminal 1 or the B+ terminal of the **EL-49742** harness, red terminal.

- ***If less than the B+ (+0.0/-1.0 V)***

1. Ignition OFF, disconnect the grounding bolt G110. Refer to **Ground Views** .
2. Test for less than 10 Ω in the ground circuit end to end.
   - If 10 Ω or greater, repair the open/high resistance in the circuit.
   - If less than 10 Ω
3. Test for infinite resistance between the ground circuit, terminal 4 and a good ground such as the ground terminal of the **EL-49742** harness, black terminal.
   - If 10 Ω or less, repair the short to ground condition in the circuit.
   - If greater than 10 Ω
4. Test for infinite resistance between ground circuit, terminal 4 and all other terminals of the M26 front axle engagement actuator harness connector.
   - If 1 Ω or less, repair the short together condition in the affected circuits.
   - If greater than 1 Ω
5. Ignition ON.
6. Test for a less than 1.0 V between the ground circuit, terminal 4, and a good ground such as the ground terminal of the **EL-49742**

cardiagn.com

harness, black terminal.

- If 1.0 V or greater, repair the short to voltage in the circuit.
- If less than 1 V, clean the G110 grounding surface. Refer to **Testing for Intermittent Conditions and Poor Connections** .

- ***If B+***

6. Ground circuit OK.
7. Test for a diagnostic B+ (+0.0/-1.0 V) between the four wheel drive wheel lock indicator circuit, terminal 3, and the run/crank ignition 1 voltage circuit, terminal 1 or the B+ terminal of the **EL-49742** harness, red terminal.

- ***If less than B+ (+0.0/-1.0 V)***

1. Ignition OFF, disconnect the X1 harness connector at the K69 transfer case control module.
2. Test for less than 10 Ω in four wheel drive wheel lock indicator circuit end to end.
   - If 10 Ω or greater, repair the open/high resistance in the circuit.
   - If less than 10 Ω
3. Test for infinite resistance between the four wheel drive wheel lock indicator circuit, terminal 3 and a good ground such as the ground terminal of the **EL-49742** harness, black terminal.
   - If less than infinite resistance, repair the short to ground condition in the circuit.
   - If greater than 10 Ω
4. Test for infinite resistance between four wheel drive wheel lock indicator circuit, terminal 3 and all other terminals of the M26 front axle engagement actuator harness connector.
   - If less than infinite resistance, repair the short together condition in the affected circuits.
   - If greater than 10 Ω
5. Ignition ON.
6. Test for a less than 1.0 V between the four wheel drive wheel lock indicator circuit, terminal 3, and a good ground such as the ground terminal of the **EL-49742** harness, black terminal.
   - If 1.0 V or greater, repair the short to voltage in the circuit.
   - If less than 1 V, replace the K69 transfer case control module. Refer to **Transfer Case Control Module Replacement**.

- ***If B+***

8. Four wheel drive wheel lock indicator circuit OK.
9. Test for 2.8 to 4.8 V between the test points: Front Axle Actuator Control & Chassis Ground

- ***If less than 2.8 V***

cardiagn.com

1. Ignition OFF, disconnect the X1 harness connector at the K69 transfer case control module.
2. Test for less than 10 Ω in front axle actuator control circuit end to end.
   - If 10 Ω or greater, repair the open/high resistance in the circuit.
   - If less than 10 Ω
3. Test for greater than 10 Ω between the front axle actuator control circuit, terminal 2 and a good ground such as the ground terminal of the **EL-49742** harness, black terminal.
   - If 10 Ω or less, repair the short to ground condition in the circuit.
   - If greater than 10 Ω
4. Test for greater than 1 Ω between front axle actuator control circuit, terminal 2 and all other terminals of the M26 front axle engagement actuator harness connector.
   - If 1 Ω or less, repair the short together condition in the affected circuits.
   - If greater than 1 Ω

- ***If greater than 4.8 V***

1. Ignition OFF, disconnect the X1 harness connector at the K69 transfer case control module.
2. Test for greater than 5Ω between front axle actuator control circuit, terminal 2 and all other terminals of the M26 front axle engagement actuator harness connector.
   - If 5Ω or less, repair the short together condition in the affected circuits.
   - If greater than 5Ω
3. Ignition ON.
4. Test for a less than 1.0 V between the front axle actuator control circuit, terminal 2, and a good ground such as the ground terminal of the **EL-49742** harness, black terminal.
   - If 1.0 V or greater, repair the short to voltage in the circuit.
   - If less than 1 V, replace the K69 transfer case control module. Refer to **Transfer Case Control Module Replacement** .

- ***If between 2.8 and 4.8 V***

10. The run/crank ignition 1 voltage circuit, the front axle switch signal circuit, the front axle control circuit, the ground circuit, and the K69 transfer case control module are OK.

Component Testing

M26 Front Axle Engagement Actuator

cardiagn.com

NOTE:

- **Circuit/System Testing must be performed before Component Testing.**
- **When test probing harness terminals, it is imperative to use the proper test probe from the most current version of the J-35616 GM-Approved Terminal Test Kit. Use of an improper test probe may deform the terminal, resulting in intermittent open conditions.**
- **Testing for steps 3-4 is performed on the M26 front axle engagement actuator harness connector using the BL probes J-35616-65B.**

1. Ignition OFF. Disconnect the connector at the front axle engagement actuator.
2. Remove the M26 front axle engagement actuator.
3. Connect the M26 front axle engagement actuator connector. Position the M26 front axle engagement actuator so that it is visible from the side of the vehicle.
4. Using the Front Axle Engagement Actuator control function of the scan tool, command the front axle to engage and disengage. When commanded to engage, the plunger on the M26 front axle engagement actuator should extend. When commanded to disengage, the plunger should retract.
   - ***If the M26 front axle engagement actuator does NOT perform as described***

     replace the M26 front axle engagement actuator. Refer to **Front Drive Axle Actuator Replacement (8.25 Inch LD Axle)** **Front Drive Axle Actuator Replacement (9.25 Inch HD Axle)** .

   - ***If the M26 front axle engagement actuator DOES perform as described***
5. Refer to **Front Axle Will Not Engage**, or **Front Axle Will Not Disengage**.

Repair Instructions

Perform the **Diagnostic Repair Verification** after completing the diagnostic procedure.

- Refer to **Control Module References** for transfer case control module replacement, setup, and programming
- Refer to **Transfer Case Selector Switch Replacement (Chevrolet / GMC)Transfer Case Selector Switch Replacement (Cadillac)**
- Refer to **Four-Wheel Drive Does Not Engage**
- Refer to **Four-Wheel Drive Does Not Disengage**
- Refer to **Front Drive Axle Actuator Replacement (8.25 Inch LD Axle)** **Front Drive Axle Actuator Replacement (9.25 Inch HD Axle)**

DTC C0374: GENERAL SYSTEM PERFORMANCE TEMPERATURE HIGH

cardiagn.com

Diagnostic Instructions

- Perform the **Diagnostic System Check - Vehicle** prior to using this diagnostic procedure.
- Review **Strategy Based Diagnosis** for an overview of the diagnostic approach.
- Refer to **Diagnostic Procedure Instructions** to provide an overview of each diagnostic category.

DTC Descriptor

DTC C0374 54

General System Performance Temperature High

Diagnostic Fault Information

Transfer Case Encoder Motor Brake

Circuit	Short to Ground	Open/High Resistance	Short to Voltage	Signal Invalid
Battery Positive Voltage Pin B	-	C0321 04	-	-
Lock Solenoid Control Pin C	C0321 02	C0321 04	C0321 01	C0321 08

Wheel Speed Sensors

Circuit	Short to Ground	Open/High Resistance	Short to Voltage	Signal Performance
Left Front Wheel Speed Sensor 12 Volt Reference	C0035 00	C0035 00	-	C0035 5A
Left Front Wheel Speed Sensor Signal	C0035 00	C0035 00	C0035 00	C0035 5A
Right Front Wheel Speed Sensor 12 Volt Reference	C0040 00	C0040 00	-	C0040 5A
Right Front Wheel Speed Sensor Signal	C0040 00	C0040 00	C0040 00	C0040 5A
Left Rear Wheel Speed Sensor 12 Volt Reference	C0045 00	C0045 00	-	C0045 5A
Left Rear Wheel Speed Sensor Signal	C0045 00	C0045 00	C0045 00	C0045 5A
Right Rear Wheel Speed Sensor 12 Volt Reference	C0050 00	C0050 00	-	C0050 5A
Right Rear Wheel Speed Sensor Signal	C0050 00	C0050 00	C0050 00	C0050 5A

Circuit/System Description

cardiagn.com

The general system performance DTC sets based on a thermal module within the transfer case shift control module (TCCM) software. The components included in this thermal model are the motor driver within the TCCM, the transfer case shift motor, and the clutch inside the transfer case.

This fault occurs when one of the three components included in the thermal model surpass the upper limits of this model indicating possible damage to the transfer case or other driveline components. This DTC detects an over temperature condition base on a thermal model.

Conditions for Running the DTC

- Ignition ON.
- System voltage 10.5-18 V.
- DTC C0379 is not set.
- Vehicle speed > 5 kph (3 mph)

Conditions for Setting the DTC

This DTC sets if one of three components: motor driver inside the TCCM, transfer case clutch, or the shift motor, exceed the thermal model within the software for the module.

Action Taken When the DTC Sets

- All range and mode changes disabled until thermal model indicates temperature acceptable.
- The SERVICE 4WD indicator remains illuminated for the remainder of the current ignition cycle.

Conditions for Clearing the DTC

- The TCCM clears the DTC once the conditions for setting the DTC are no longer present.
- A history DTC clears after 40 consecutive warm-up cycles without a fault present.
- History and current DTCs can be cleared using a scan tool.

Diagnostic Aids

- The TCCM provides a reference voltage of 1.25-3.75 V on the motor B circuit for diagnostic purposes.
- It is possible to have windings inside the motor short to the case resulting in a short to ground.
- A problem where the front axle actuator is unable to mechanically engage can cause this DTC to set.
- A worn transfer case clutch can cause this DTC to set.

cardiagn.com

- A motor brake not holding can cause this DTC to set.
- Faulty wheel speed sensors can cause this DTC to set. When driving at a steady speed, the scan tool should display the same values for the following data parameters in the electronic brake control module (EBCM):
  - Left and right front wheel speed sensors
  - Left and right rear wheel speed sensors

Reference Information

Schematic Reference

Transfer Case Control Schematics

Connector End View Reference

COMPONENT CONNECTOR END VIEWS - INDEX

Description and Operation

Transfer Case Description and Operation

Electrical Information Reference

- **Circuit Testing**
- **Connector Repairs**
- **Testing for Intermittent Conditions and Poor Connections**
- **Wiring Repairs**

Scan Tool Reference

Control Module References for scan tool information.

Circuit/System Verification

1. Ignition ON, engine OFF.
2. Install a scan tool.
3. Ensure no other ECBM or TCCM codes are set.

cardiagn.com

- If any other EBCM or TCCM DTC's are set, diagnose them first.

Circuit/System Testing

1. Engage parking brake.
2. Block rear wheels.
3. Lift front wheels.
4. Key ON, engine OFF. Install scan tool.
5. Transfer case in 2WD HI. Transmission in Neutral.
6. Mechanical binding. - Using the Special Functions capability of the scan tool, engage the front axle. While holding one front tire stationary, spin the other tire. The front propshaft should turn.
   - If the front propshaft does not turn, inspect the front axle clutch fork for mechanical binding.
7. Wheel speed sensors. - Take the vehicle on a short test drive on a smooth and level road. Using the Data Display function of the ECBM feature of the scan tool, verify that the front and rear wheel speeds sensors display do not vary or become intermittent.
   - If while driving at a steady speed the RPM values vary or becomes intermittent, check the EBCM for wheel speed DTC's. Wheel speed DTC's diagnostics are in antilock brake systems.
8. Transfer case encoder motor brake. - Using a scan tool, clear DTC's. Shift the vehicle to 2WD HI. Monitor the transfer case motor amperage parameter in the Data Display feature of the scan tool. Using the transfer case shift control switch, command the transfer case to the 4WD HI mode. The transfer case motor amperage should increase while the motor is shifting and then return to 0 amps within 5 seconds or less.
   - If the amperage stays high longer than 5 seconds, this indicates the brake is not holding. Replace the transfer case motor.
9. Transfer case clutch integrity. - Shift the vehicle into 4WD HI and take it for a test drive. Clear the DTC if possible. Monitor front and rear wheel speeds using the EBCM data display. Under heavy acceleration the front and rear wheel speeds should be similar.
   - If the front wheel speeds are much lower, this indicates a weak clutch and a transfer case tear down and inspection will be required.
10. If all prior evaluations test normal, reprogram the TCCM and perform the ATC Motor Learn procedure in the Special Functions feature of the scan tool or the **Transfer Case High/Low Clutch Reset** procedure in the service manual.

Repair Instructions

Perform the **Diagnostic Repair Verification** after completing the diagnostic procedure.

- Refer to **Control Module References** for TCSCM replacement, setup, and programming
- Refer to **Transfer Case High/Low Clutch Reset** for Motor Learn Procedure
- Refer to **Four-Wheel Drive Does Not Engage**

cardiagn.com

- Refer to **Front Drive Axle Clutch Fork Inspection**
- Refer to **Transfer Case Assembly Replacement**

DTC C0387: UNABLE TO COMPLETE SHIFT

Diagnostic Instructions

- Perform the **Diagnostic System Check - Vehicle** prior to using this diagnostic procedure.
- Review **Strategy Based Diagnosis** for an overview of the diagnostic approach.
- Refer to **Diagnostic Procedure Instructions** to provide an overview of each diagnostic category.

DTC Descriptor

DTC C0387 00

Unable to Complete Shift

Diagnostic Fault Information

Circuit	Short to Ground	Open/High Resistance	Short to Voltage	Circuit/Component Timeout
Unable to Complete Shift	-	-	-	C0387 00
Transfer Case Motor Clockwise Control	C0306 02	C0306 04	C0306 01	C0306 54 or C0381 54
Transfer Case Motor Counter-Clockwise Control	C0306 02	C0306 04	C0306 01	C0306 54 or C0381 54

Circuit/System Description

The A16 Transfer Case Motor, also known as the transfer case range actuator, is a bi-directional, permanent magnet, DC motor. When energized, through the transfer case clockwise circuit or transfer case counter-clockwise circuit, the ground is provided by the opposing motor control circuit which becomes grounded through the transfer case control module ground circuit. The transfer case range actuator, through a series of gears, rotates the transfer case control actuator shaft which moves the transfer case two/four wheel drive actuator cam and transfer case high/low shift fork in order to shift the transfer case between the following modes or ranges:

- 2WD
- 4WD/AWD Automatic

cardiagn.com

- 4WD High/Locked
- 4WD Low
- Neutral

If the shift lever detent shaft were to bind, or there was a mechanical failure, or the transfer case clockwise circuit and the transfer case counter-clockwise circuit were shorted together, the shift would not be completed. This will cause the DTC to set in order to protect system components from damage.

Conditions for Running the DTC

- Ignition ON.
- System voltage 10.5-18 V.
- No DTC P0562 or P0563.
- DTC C0387 runs continuously.

Conditions for Setting the DTC

A shift request was received but could not be completed within 15 seconds.

Action Taken When the DTC Sets

- All shifting disabled.
- The SERVICE 4WD indicator remains illuminated for the remainder of the current ignition cycle.

Conditions for Clearing the DTC

- The transfer case control module clears the DTC once the conditions for setting the DTC no longer exist.
- A history DTC clears after 40 consecutive warm up cycles without a fault present.
- History DTCs can be cleared using a scan tool.

Diagnostic Aids

- The transfer case clockwise circuit shorting to the transfer case counter-clockwise circuit could cause this DTC to set.
- It is possible to have windings inside the transfer case motor shorted to the case resulting in a short to ground causing this DTC to set.
- The default actions for C0321 may set C0387.
- **EL-49741** harness is a good source for 9 V.

cardiagn.com

- **EL-49742** harness is a good source for B+ and ground.
- The transfer case fill and drain plugs are a good source for ground.

Reference Information

Schematic Reference

Transfer Case Control Schematics

Connector End View Reference

COMPONENT CONNECTOR END VIEWS - INDEX

Electrical Information Reference

- **Circuit Testing**
- **Connector Repairs**
- **Testing for Intermittent Conditions and Poor Connections**
- **Wiring Repairs**

Scan Tool Reference

Control Module References for scan tool information.

Special Tools

- **EL-49741** 9 V+ Power Source Harness
- **EL-49742** Battery Voltage B+ and Ground Source Harness
- **J-35616** GM-Approved Terminal Test Kit

For equivalent regional tools, refer to **Special Tools**.

Circuit/System Verification

1. Verify that the TREC fuse, and the Miscellaneous IGN fuse, underhood fuse block, are NOT open.
    - **If the TREC fuse is OPEN**

cardiagn.com

Test the battery positive voltage circuit, K69 transfer case control module harness X3, terminal C, for a short to ground. Refer to **Testing for Short to Ground** .

- **If the Miscellaneous IGN fuse is OPEN**

  Test the ignition 1 voltage circuit, K69 transfer case control module harness X2, terminal 6, for a short to ground. Refer to **Testing for Short to Ground** .

- **If the TREC fuse and the Miscellaneous IGN fuse are NOT open**

2. Ignition ON, engine OFF.
3. Verify no other DTC's are set. If any other DTC's are set, diagnose them first.
4. Verify DTC C0387 is only set as a history DTC.
   - **If DTC C0387 is set as current**

     Refer to Circuit/System Testing.

   - **If DTC C0387 is set as history**

NOTE: **After inspection, apply Nyogel lubricant 760G to each connector terminal. Ensure each connector and CPA is correctly seated.**

5. Visually inspect each connector terminal of the K69 transfer case control module and the A16 transfer case motor connector for damage or corrosion. Repair as necessary.
6. Clear DTC C0387 from history.
7. Operate the vehicle within the Conditions for Running the DTC. You may also operate the vehicle within the conditions that you observed from the Freeze Frame/Failure Records data. The DTC should not set.
   - **If DTC C0387 sets**

     Refer to Circuit/System Testing.

   - **If DTC C0387 does not set**
8. All OK.

Circuit/System Testing

1. Ignition OFF, disconnect the harness connector at the A16 transfer case motor, also known as the transfer case range actuator.

cardiagn.com

2. Ignition ON, engine OFF.

NOTE:

- **When test probing harness terminals, it is imperative to use the proper test probe from the most current version of the J-35616 GM-Approved Terminal Test Kit. Use of an improper test probe may deform the terminal, resulting in intermittent open conditions.**
- **Testing for steps 3-5 is performed on the A16 transfer case motor harness connector using the PU probes J 35616-4A.**

3. Test for 1.0-2.5 V between the transfer case motor counter-clockwise control circuit terminal D and a good ground, such as the ground terminal of the **EL-49742** harness, black terminal.
   - **If less than the specified range**
   1. Ignition OFF, disconnect the X3 harness connector at the K69 transfer case control module.
   2. Test for less than 10 Ω in the transfer case motor counter-clockwise control circuit end to end.
      - If 10 Ω or greater, repair the open/high resistance in the circuit.
      - If less than 10 Ω
   3. Test for infinite resistance between transfer case motor counter-clockwise control circuit terminal D and a good ground.
      - If less than infinite resistance, repair the short to ground in the circuit.
      - If infinite resistance
   4. Test for greater than 10 Ω between the transfer case motor counter-clockwise control circuit terminal D and all other terminals of the A16 transfer case motor harness connector.
      - If 10 Ω or less, repair the shorted together condition in the affected circuits.
      - If greater than 10 Ω, replace the K69 transfer case control module and perform the Range Actuator Learn procedure.
   - **If greater than the specified range**
   1. Ignition OFF, disconnect the X3 harness connector at the K69 transfer case control module. Ignition ON, Engine OFF.
   2. Test for less than 1 V between the transfer case motor counter-clockwise control circuit terminal D and a good ground.
      - If 1 V or greater, repair the short to voltage in the circuit.
      - If less than 1 V
   3. Test for greater than 10 Ω between the transfer case motor counter-clockwise control circuit, terminal D and all other terminals of the A16 transfer case motor harness connector.
      - If 10 Ω or less, repair the shorted together condition in the affected circuits.

cardiagn.com

- If greater than 10 Ω, replace the K69 transfer case control module and perform the Range Actuator Learn procedure.

- **If within the specified range**

4. Transfer case motor counter-clockwise control circuit and K69 transfer case control module OK.
5. Test for 3.0-4.5 V between the transfer case motor clockwise control circuit terminal A, and a good ground, such as the ground terminal of the **EL-49742** harness, black terminal.

- **If less than the specified range**

1. Ignition OFF, disconnect the X3 harness connector at the K69 transfer case control module.
2. Test for less than 10 Ω in the transfer case motor clockwise control circuit end to end.
   - If 10 Ω or greater, repair the open/high resistance in the circuit.
   - If less than 10 Ω
3. Test for infinite resistance between transfer case motor clockwise control circuit terminal A and a good ground.
   - If less than infinite resistance, repair the short to ground in the circuit.
   - If infinite resistance
4. Test for greater than 10 Ω between the transfer case motor clockwise control circuit terminal A and all other terminals of the A16 transfer case motor harness connector.
   - If 10 Ω or less, repair the shorted together condition in the affected circuits.
   - If greater than 10, replace the K69 transfer case control module and perform the Range Actuator Learn procedure.

     Refer to **Transfer Case Control Module Replacement** , and **Transfer Case High/Low Clutch Reset** .

- **If greater than the specified range**

1. Ignition OFF, disconnect the X3 harness connector at the K69 transfer case control module. Ignition ON, Engine OFF.
2. Test for less than 1 V between the transfer case motor clockwise control circuit terminal A and a good ground.
   - If 1 V or greater, repair the short to voltage in the circuit.
   - If less than 1 V
3. Test for greater than 10 Ω between the transfer case motor clockwise control circuit, terminal A and all other terminals of the A16 transfer case motor harness connector.
   - If 10 Ω or less, repair the shorted together condition in the affected circuits.
   - If greater than 10 Ω, replace the K69 transfer case control module and perform the Range Actuator Learn procedure.

     Refer to **Transfer Case Control Module Replacement** , and **Transfer Case High/Low Clutch Reset** .

cardiagn.com

- **If within the specified range**

6. Transfer case motor counter-clockwise control circuit, transfer case motor clockwise control circuit and K69 transfer case control module OK.

Component Testing

A16 Transfer Case Motor (Transfer Case Range Actuator)

1. Remove the A16 transfer case motor from transfer case. Using a paint pen or marker, place indexing marks on the A16 transfer case motor drive gear and the mounting surface of the A16 transfer case motor.

NOTE:

- **When test probing harness terminals, it is imperative to use the proper test probe from the most current version of the J-35616 GM-Approved Terminal Test Kit. Use of an improper test probe may deform the terminal, resulting in intermittent open conditions.**
- **Testing for steps 2-11 is performed on the A16 transfer case motor harness connector using the PU probes J 35616-5.**

2. Attach the red lead from one of the **EL-49741** harnesses to the battery positive voltage terminal of the A16 transfer case motor, terminal B.
3. Attach the black lead from this same jumper harness to the transfer case lock solenoid control terminal of the A16 transfer case motor, terminal C.
4. Attach a 9-volt battery to this harness (not included). You should hear the A16 transfer case motor unlock.
   - **If you do NOT hear the A16 transfer case motor unlock**

     Replace the A16 transfer case motor and perform the Range Actuator Learn procedure.

   - **If you DO hear the A16 transfer case motor unlock**
5. Attach the red lead from the other **EL-49741** jumper harness to the transfer case motor clockwise control circuit of the A16 transfer case motor, terminal A.
6. Attach the black lead from this same jumper harness to the transfer case motor counter-clockwise control circuit of the A16 transfer case motor, terminal D.
7. Touch the battery terminals of the 9-volt battery to the battery terminals of the jumper harness. This should rotate the A16 transfer case motor drive gear in either a clockwise or counter-clockwise rotation depending on battery orientation.
   - **If the A16 transfer case motor drive gear does not perform as described**

     Replace the A16 transfer case motor and perform the Range Actuator Learn Procedure.

cardiagn.com

- **If The A16 transfer case motor drive gear performs as described**

8. Verify 0.3-40 Ω resistance between the transfer case motor clockwise control circuit of the A16 transfer case motor, terminal A and the transfer case motor counter-clockwise control circuit of the A16 transfer case motor, terminal D.
   - **If NOT 0.3-40 Ω**

     Replace the A16 transfer case motor and perform the Range Actuator Learn Procedure.

   - **If 0.3-40 Ω**
9. Test for infinite resistance between the following circuits and the A16 transfer case motor case:
   - Transfer case motor clockwise control circuit of the A16 transfer case motor, terminal A
   - Transfer case motor counter-clockwise control circuit of the A16 transfer case motor, terminal D
   - **If less than infinite resistance**

     Replace the A16 transfer case motor and perform the Range Actuator Learn Procedure.

   - **If infinite resistance**
10. Test for infinite resistance between the transfer case motor clockwise control circuit of the A16 transfer case motor, terminal A and all other terminals on the A16 transfer case motor harness except the transfer case motor counter-clockwise control circuit of the A16 Transfer Case Motor, terminal D.
    - **If less than infinite resistance**

      Replace the A16 transfer case motor and perform the Range Actuator Learn Procedure.

    - **If infinite resistance**
11. Test for infinite resistance between the transfer case motor counter-clockwise control circuit of the A16 transfer case motor, terminal D. and all other terminals on the transfer case range actuator harness except the transfer case motor clockwise control circuit of the A16 transfer case motor, terminal A.
    - **If less than infinite resistance**

      Replace the A16 transfer case motor and perform the Range Actuator Learn Procedure.

    - **If infinite resistance**
12. A16 transfer case motor OK.
13. Inspect the transfer case shift detent lever shaft for a binding condition.

cardiagn.com

- **If binding**

  Remove the transfer case and repair the binding condition. Refer to **Transfer Case Shudder or Binding**.

- **If not binding**

14. Refer to **Symptoms - Transfer Case**, and **Front Axle Will Not Disengage**.

Repair Instructions

Perform the **Diagnostic Repair Verification** after completing the diagnostic procedure.

- Refer to **Transfer Case Disassemble**
- Refer to **Transfer Case Two/Four Wheel Drive Actuator Replacement**
- Refer to **Transfer Case High/Low Clutch Reset** .
- Refer to **Transfer Case Control Module Replacement**

DTC C038D: RANGE ACTUATOR - POSITION NOT LEARNED

Diagnostic Instructions

- Perform the **Diagnostic System Check - Vehicle** prior to using this diagnostic procedure.
- Review **Strategy Based Diagnosis** for an overview of the diagnostic approach.
- Refer to **Diagnostic Procedure Instructions** to provide an overview of each diagnostic category.

DTC Descriptor

DTC C038D 00

Range Actuator - Position Not Learned

Circuit/System Description

- This is an internal programing fault detection of the transfer case control module. No external circuits are involved.
- This DTC is set anytime a transfer case control module is replaced or reprogrammed.
- The Range Actuator Learn procedure must be performed in order for the transfer case control module to learn current clutch tolerance based on clutch stackup and accumulated clutch wear.

cardiagn.com

Conditions for Running the DTC

- Ignition ON.
- System voltage 10.5-18 V.
- DTC C038D runs at Engine ON.

Conditions for Setting the DTC

The Range Actuator Learn procedure for a new or reprogrammed transfer case control module has not been performed.

Action Taken When the DTC Sets

- All shifting disabled until the Range Actuator Learn procedure has been performed.
- The SERVICE 4WD indicator illuminates.
- No mode position LED's illuminated.

Conditions for Clearing the DTC

The transfer case control module only clears the DTC once the Range Actuator Learn procedure has been successfully performed.

Diagnostic Aids

The default actions for other transfer case DTC's can cause C038D to set.

Reference Information

Schematic Reference

Transfer Case Control Schematics

Connector End View Reference

COMPONENT CONNECTOR END VIEWS - INDEX 3

Description and Operation

Transfer Case Description and Operation

Electrical Information Reference

cardiagn.com

- **Circuit Testing**
- **Connector Repairs**
- **Testing for Intermittent Conditions and Poor Connections**
- **Wiring Repairs**

DTC Type Reference

Powertrain Diagnostic Trouble Code (DTC) Type Definitions

Scan Tool Reference

Control Module References for scan tool information.

Circuit/System Verification

1. Engine ON. Let engine run for at least 1 minute.
2. Ignition OFF for at least 30 seconds to allow for the complete shutdown of the K69 Transfer Case Control Module.
3. Engine ON.
4. Verify that no other transfer case DTC's are set.
   - ***If any other transfer case DTC's are set***

     Diagnose it first. Refer to **Diagnostic Trouble Code (DTC) List - Vehicle** .

   - ***If no other transfer case DTC's are set***
5. Verify that DTC C038D is not set.
   - ***If DTC C038D is set***

     Perform the Range Actuator Learn procedure. Refer to **Transfer Case High/Low Clutch Reset**.

   - ***If DTC C038D is NOT set***
6. All OK.

Repair Instructions

Perform the **Diagnostic Repair Verification** after completing the diagnostic procedure.

cardiagn.com

Refer to **Transfer Case High/Low Clutch Reset** for Range Actuator Learn Procedure

DTC C0392, P0642, OR P0643: TRANSFER CASE RANGE POSITION SENSOR CIRCUIT/5V REFERENCE 1 VOLTAGE

Diagnostic Instructions

- Perform the **Diagnostic System Check - Vehicle** prior to using this diagnostic procedure.
- Review **Strategy Based Diagnosis** for an overview of the diagnostic approach.
- Refer to **Diagnostic Procedure Instructions** to provide an overview of each diagnostic category.

DTC Descriptors

DTC C0392 08

Transfer Case Range Position Sensor Circuit Performance - Signal Invalid

DTC C0392 28

Transfer Case Range Position Sensor Circuit - Incorrect Frequency

DTC P0642 00

5V Reference 1 Low Voltage

DTC P0643 00

5V Reference 1 High Voltage

Diagnostic Fault Information

Circuit	Short to Ground	Open/High Resistance	Short to Voltage	Signal Invalid
Rotational Position Sensor Circuit (Rotary Position Sensor Signal)	C0392 08	C0392 08	C0392 08	C0392 08 or C0392 28
5-Volt Reference (Rotary Position Sensor Supply 5V/Sensor Reference Voltage 1)	P0642	P0643	P0643	C0392 08 or C0392 28
Low Reference (Rotary Position Sensor Return)	-	C0392 08	-	C0392 08 or C0392 28

cardiagn.com

Circuit/System Description

The transfer case control module receives input from the transfer case B227 Gear Position Sensor, also known as the range position sensor or the rotational position sensor. The gear position sensor receives a 5-volt reference signal from the transfer case control module. In return the gear position sensor sends the transfer case control module a variable pulse width modulated signal indicating the position of the transfer case. The gear position sensor works in conjunction with the range actuator position sensor, inside the A16 Transfer Case Motor, also known as the transfer case range actuator, to confirm transfer case position. The gear position sensor is more sensitive than the range actuator position sensor and is able to indicate to the transfer case control module the exact position of the transfer case between range changes. It is also able to show how much clutch activation is being commanded at any time.

Conditions for Running the DTC

- Ignition ON.
- System voltage 10.5-18 V.
- No DTC P0562 or P0563.
- No DTC P0652, P0653, or C0397 - C0392 only.
- DTC C0392, P0642 and P0643 run continuously within the enabling conditions.

Conditions for Setting the DTC

C0392 08

- The transfer case control module detects a transfer case range position sensor voltage that does not constantly change, but remains low, <0.25 V, indicating a short to ground.

  Or

- The transfer case control module detects a gear position sensor voltage that does not constantly change, but remains high, >6.0 V, indicating a short to voltage.

C0392 28

The transfer case control module does not receive a sensor reference voltage 1 circuit, also known as the 5V reference 1 circuit, of 4.8-5.2 volts.

P0642

The transfer case control module detects less than 4.8 V on the transfer case reference voltage 1 circuit, also known as the 5V reference 1 circuit.

cardiagn.com

P0643

The transfer case control module detects greater than 5.2 V on the transfer case sensor reference voltage 1 circuit, also known as the 5V reference 1 circuit.

Action Taken When the DTC Sets

- DTC C398 disabled.
- All shifting disabled.
- Clutch torque increased to maximum torque.
- The SERVICE 4WD indicator remains illuminated for the remainder of the current ignition cycle.

Conditions for Clearing the DTC

- The transfer case control module clears the DTC once the conditions for setting the DTC are no longer present.
- A history DTC clears after 40 consecutive warm up cycles without a fault present.
- History DTCs can be cleared using a scan tool.

Diagnostic Aids

- **EL-49742** harness is a good source for B+ and ground.
- The transfer case drain plug is a good source for ground.
- Typical Gear Position Sensor parameter values:
  - 2WD = 33-43Â°
  - 4WD/AWD Automatic = 87-204Â°
  - 4WD High/Locked = 110-204Â°
  - 4WD Low = -140Â° to -69Â°
  - Neutral = -5Â° to +5Â°

Reference Information

Schematic Reference

Transfer Case Control Schematics

cardiagn.com

Connector End View Reference

COMPONENT CONNECTOR END VIEWS - INDEX

Electrical Information Reference

- **Circuit Testing**
- **Connector Repairs**
- **Testing for Intermittent Conditions and Poor Connections**
- **Wiring Repairs**

Scan Tool Reference

Control Module References for scan tool information.

Special Tools

- **EL-49741** 9 V+ Power Source Harness
- **EL-49742** Battery Voltage B+ and Ground Source Harness
- **J-35616** GM-Approved Terminal Test Kit

For equivalent regional tools, refer to **Special Tools**.

Circuit/System Verification

1. Verify that all range selections of the S77 transfer case shift control switch match the following parameters in the Data Display feature of the scan tool:
    - Range Actuator Position
    - Transfer Case Commanded Position
    - Transfer Case Range
    - ***If NOT all of the parameters match the S77 transfer case shift control switch position***

      Refer to Circuit/System Testing.

    - ***If ALL of the parameters match the S77 transfer case shift control switch position***
2. Verify that for all range selections of the S77 transfer case shift control switch, the Transfer Case Range Position Sensor parameter and the

cardiagn.com

Range Actuator Position Sensor parameter track within 5 degrees of each other.

- ***If the parameters do NOT track within 5 degrees of each other***

  Refer to Circuit/System Testing.

- ***If the parameters DO track within 5 degrees of each other***

3. Verify DTC C0392, P0642, or P0643 is only set as a history DTC.
   - ***If any of the DTCs are set as current***

     Refer to Circuit/System Testing.

   - ***If any of the DTCs are only set as history***

NOTE: **After inspection, apply Nyogel lubricant 760G to each connector terminal. Ensure each connector and CPA is correctly seated.**

4. Visually inspect each connector terminal of the K69 transfer case control module X1 connector and the B227 gear position sensor connector for damage or corrosion. Repair as necessary.
5. Clear DTC C0392, P0642, or P0643 from history.
6. Operate the vehicle within the Conditions for Running the DTC. You may also operate the vehicle within the conditions that you observed from the Freeze Frame/Failure Records data. The DTC should not set.
   - ***If any of the DTCs are set***

     Refer to Circuit/System Testing.

   - ***If none of the DTCs set***
7. All OK.

Circuit/System Testing

1. Ignition OFF, disconnect the harness connector at the B227 gear position sensor, also known as the rotational position sensor.
2. Ignition ON, engine OFF.

NOTE:

- **When test probing harness terminals, it is imperative to use the proper test probe from the most current version of the J-35616 Kit. Use of an improper test probe may deform the terminal, resulting**

cardiagn.com

in intermittent open conditions.

- **Testing for steps 3-7 is performed on the B227 gear position sensor harness connector using the GY probes J-35616-2A.**

3. Test for 4.8-5.2 V between the 5-Volt reference circuit, terminal B and a good ground, such as the ground terminal of the **EL-49742** harness, black terminal.
   - ***If less than the specified range***
   1. Ignition OFF, disconnect the X1 harness connector at the K69 transfer case control module.
   2. Test for less than 10 Ω in the 5-Volt reference circuit end to end.
      - If 10 Ω or greater, repair the open/high resistance in the circuit.
      - If less than 10 Ω
   3. Test for infinite resistance between 5-Volt reference circuit terminal B and a good ground.
      - If less than infinite resistance, repair the short to ground in the circuit.
      - If infinite resistance
   4. Test for greater than 10 Ω between the 5-Volt reference circuit terminal B and all other terminals of the B227 gear position sensor harness connector.
      - If 10 Ω or less, repair the shorted together condition in the affected circuits.
      - If greater than 10 Ω, replace the K69 transfer case control module and perform the Range Actuator Learn procedure.

        Refer to **Transfer Case Control Module Replacement**, and **Transfer Case High/Low Clutch Reset**.

   - ***If greater than the specified range***
   1. Ignition OFF, disconnect the X1 harness connector at the K69 transfer case control module. Ignition ON, Engine OFF.
   2. Test for less than 1 V between the 5-Volt reference circuit terminal B and a good ground.
      - If 1 V or greater, repair the short to voltage in the circuit.
      - If less than 1 V
   3. Test for greater than 10 Ω between the 5-Volt reference circuit, terminal B and all other terminals of the B227 gear position sensor harness connector.
      - If 10 Ω or less, repair the shorted together condition in the affected circuits.
      - If greater than 10 Ω, replace the K69 transfer case control module and perform the Range Actuator Learn procedure.

cardiagn.com

Refer to **Transfer Case Control Module Replacement**, and **Transfer Case High/Low Clutch Reset**.

- ***If within the specified range***

4. 5-Volt reference circuit and K69 transfer case control module OK.
5. Test for 4.8-5.2 V between the 5-Volt reference circuit, terminal B, and the low reference circuit, terminal A.
   - ***If less than the specified range***
   1. Ignition OFF, disconnect the X1 harness connector at the K69 transfer case control module.
   2. Test for less than 10 Ω in the low reference circuit end to end.
      - If 10 Ω or greater, repair the open/high resistance in the circuit.
      - If less than 10 Ω
   3. Test for infinite resistance between low reference circuit and a good ground.
      - If less than infinite resistance, repair the short to ground in the circuit.
      - If infinite resistance
   4. Test for greater than 10 Ω between the low reference circuit, terminal A and all other terminals of the B227 gear position sensor harness connector.
      - If 10 Ω or less, repair the shorted together condition in the affected circuits.
      - If greater than 10 Ω, replace the K69 transfer case control module and perform the Range Actuator Learn procedure.

      Refer to **Transfer Case Control Module Replacement**, and **Transfer Case High/Low Clutch Reset**.

   - ***If greater than the specified range***
   1. Ignition OFF, disconnect the X1 harness connector at the K69 transfer case control module. Ignition ON, Engine OFF.
   2. Test for less than 1 V between the switch signal circuit, terminal A and a good ground.
      - If 1 V or greater, repair the short to voltage in the circuit.
      - If less than 1 V
   3. Test for greater than 10 Ω between the switch signal circuit, terminal A and all other terminals of the B227 gear position sensor harness connector.
      - If 10 Ω or less, repair the shorted together condition in the affected circuits.
      - If greater than 10 Ω, replace the K69 transfer case control module and perform the Range Actuator Learn procedure.

      Refer to **Transfer Case Control Module Replacement**, and **Transfer Case High/Low Clutch Reset**.

cardiagn.com

- ***If within the specified range***

6. Low reference circuit and K69 transfer case control module OK.
7. Test for 4.8-5.2 V between the rotational position sensor circuit, terminal C and a good ground, such as the ground terminal of the **EL-49742** harness, black terminal.
   - ***If less than the specified range***
   1. Ignition OFF, disconnect the X1 harness connector at the K69 transfer case control module.
   2. Test for less than 10 Ω in the rotational position sensor circuit end to end.
      - If 10 Ω or greater, repair the open/high resistance in the circuit.
      - If less than 10 Ω
   3. Test for infinite resistance between rotational position sensor circuit terminal C and a good ground.
      - If less than infinite resistance, repair the short to ground in the circuit.
      - If infinite resistance
   4. Test for greater than 10 Ω between the rotational position sensor circuit terminal C and all other terminals of the B227 gear position sensor harness connector.
      - If 10 Ω or less, repair the shorted together condition in the affected circuits.
      - If greater than 10 Ω, replace the K69 transfer case control module and perform the Range Actuator Learn procedure.

        Refer to **Transfer Case Control Module Replacement**, and **Transfer Case High/Low Clutch Reset**.

   - ***If greater than the specified range***
   1. Ignition OFF, disconnect the X1 harness connector at the K69 transfer case control module. Ignition ON, Engine OFF.
   2. Test for less than 1 V between the rotational position sensor circuit terminal C and a good ground.
      - If 1 V or greater, repair the short to voltage in the circuit.
      - If less than 1 V
   3. Test for greater than 10 Ω between the rotational position sensor circuit, terminal C and all other terminals of the B227 gear position sensor harness connector.
      - If 10 Ω or less, repair the shorted together condition in the affected circuits.
      - If greater than 10 Ω, replace the K69 transfer case control module and perform the Range Actuator Learn procedure.

        Refer to **Transfer Case Control Module Replacement**, and **Transfer Case High/Low Clutch Reset**.

cardiagn.com

- ***If within the specified range***

8. Rotational position sensor circuit and K69 transfer case control module OK.

Component Testing

B227 Gear Position Sensor

1. Key OFF. Disconnect the connector at the B227 gear position sensor.
2. Remove the B227 gear position sensor from the transfer case.
3. Connect the B227 gear position sensor.
4. Verify that the Transfer Case Range Position Sensor parameter sweeps between -146Â° and 204Â° while rotating the center locating tab of the B227 gear position sensor.
   - ***If the Transfer Case Range Position Sensor parameter does NOT sweep between -146Â° and 204Â°***

     Replace the B227 gear position sensor. Refer to **Transfer Case Two/Four Wheel Drive Actuator Position Sensor Replacement**.

   - ***If the Transfer Case Range Position Sensor parameter DOES sweep between -146Â° and 204Â°***
5. B227 gear position sensor OK.

Repair Instructions

Perform the **Diagnostic Repair Verification** after completing the diagnostic procedure.

- Refer to **Control Module References** for K69 transfer case control module replacement, setup, and programming
- Refer to **Transfer Case High/Low Clutch Reset**
- Refer to **Transfer Case Two/Four Wheel Drive Actuator Position Sensor Replacement**

DTC C0396, C039E, P0652, OR P0653: RANGE ACTUATOR POSITION SENSOR CIRCUIT VOLTAGE/RANGE ACTUATOR POSITION SENSOR DIRECTION SIGNAL CIRCUIT VOLTAGE/5V REFERENCE 2 CIRCUIT VOLTAGE

Diagnostic Instructions

- Perform the **Diagnostic System Check - Vehicle** prior to using this diagnostic procedure.
- Review **Strategy Based Diagnosis** for an overview of the diagnostic approach.
- Refer to **Diagnostic Procedure Instructions** to provide an overview of each diagnostic category.

cardiagn.com

DTC Descriptors

DTC C0396 03

Range Actuator Position Sensor Circuit Low Voltage

DTC C0396 07

Range Actuator Position Sensor Circuit High Voltage

DTC C039E 03

Range Actuator Position Sensor Direction Signal Circuit Low Voltage

DTC C039E 07

Range Actuator Position Sensor Direction Signal Circuit High Voltage

DTC P0652

5V Reference 2 Circuit Low Voltage

DTC P0653

5V Reference 2 Circuit Low Voltage

Diagnostic Fault Information

Circuit	Short to Ground	Open/High Resistance	Short to Voltage	Signal Invalid
Incremental Encoder Sensor (8 V) Supply	P0652	C0387 58 or C038D 00 (C0398 when shifting between ranges)	P0653	-
Incremental Encoder Impulse Signal	C0396 03	C0396 07	C0396 07	-
Incremental Encoder Direction Signal	C039E 03	C039E 07	C039E 07	-
Incremental Encoder Sensor Return/Low Reference	-	C0396 03	-	-

Circuit/System Description

cardiagn.com

The transfer case control module receives input from the range actuator position sensor and the transfer case range position sensor. Both sensors send this information as voltage signals which are converted to degrees and rotational direction by the transfer case control module software. If the two sensors disagree by greater than a predetermined amount the DTC will set.

The range actuator position sensor receives an 8 volt reference signal from the transfer case control module. In return the range actuator position sensor sends the transfer case control module a variable pulse width modulated signal indicating the position of the transfer case and a range actuator position direction signal. The range actuator position sensor, inside the A16 transfer case motor, also known as the transfer case range actuator, works in conjunction with the range position sensor to confirm transfer case position. The range actuator position sensor is more sensitive than the transfer case range position sensor and is able to indicate to the transfer case control module the exact position of the transfer case between range changes. It is also able to show how much clutch activation is being commanded at any time.

The transfer case range position sensor, also known as the transfer case two/four wheel drive actuator position sensor, receives a 5 volt reference signal from the K69 transfer case control module and sends back a continuously variable pulse width modulated signal to the K69 transfer case control module. This continuously variable signal indicates the position of the transfer case actuator.

The range actuator position sensor is more sensitive than the transfer case range position sensor, but needs to reference the transfer case range position sensor value at ignition ON and mode changes. The transfer case range position sensor is an absolute sensor. The K69 transfer case control module synchronizes the range actuator position sensor with the transfer case range position sensor at ignition ON and mode changes.

The range actuator position sensor is an integral part of the A16 Transfer Case Motor and cannot be replaced independently.

The transfer case range position sensor, also known as the B227 gear position sensor, is an independently replaceable part.

Conditions for Running the DTC

- Ignition ON.
- System voltage 10.5-18 V.
- No DTC P0562 or P0563.
- DTC C0396, C039E, P0652 and P0653 run continuously within the enabling conditions.

Conditions for Setting the DTC

C0396 03

Voltage on the sensor reference voltage 2 circuit, also known as the incremental encoder sensor (8 V) supply circuit, is 7.2-8.5 V, and voltage received by incremental encoder impulse signal circuit less than 0.35 V.

cardiagn.com

C0396 07

Voltage on the sensor reference voltage 2 circuit is 7.2-8.5 V, and voltage on incremental encoder impulse signal circuit greater than 4.6 V.

C039E 03

Voltage on the sensor reference voltage 2 circuit is 1.5-9.0 V, and voltage received by incremental encoder direction signal circuit less than 0.35 V.

C039E 07

Voltage on the sensor reference voltage 2 circuit is 1.5-9.0 V, and voltage on incremental encoder direction circuit greater than 4.5 V.

P0652

Voltage on sensor reference voltage 2 circuit less than 7.2 V.

P0653

Voltage on sensor reference voltage 2 circuit greater than 8.5 V.

Action Taken When the DTC Sets

The SERVICE 4WD indicator remains illuminated for the remainder of the current ignition cycle.

C0396 03 and C039E 03

- All shifting disabled.
- Clutch torque increased to maximum torque capacity during range shift from AWD, 4WD Low, and 4WD High only.
- The SERVICE 4WD indicator remains illuminated for the remainder of the current ignition cycle.

C0396 07 and C039E 07

- All shifting disabled.
- The SERVICE 4WD indicator remains illuminated for the remainder of the current ignition cycle.
- Sensor reference voltage 2 circuit shut OFF.

P0652

cardiagn.com

- All shifting disabled.
- Clutch torque increased to maximum torque capacity during range shift from AWD, 4WD Low, and 4WD High only.
- The SERVICE 4WD indicator remains illuminated for the remainder of the current ignition cycle.

P0653

- All shifting disabled.
- Clutch torque increased to maximum torque capacity during range shift from AWD, 4WD Low, and 4WD High only.
- The SERVICE 4WD indicator remains illuminated for the remainder of the current ignition cycle.

Conditions for Clearing the DTC

- The transfer case shift control module clears the DTC once the conditions for setting the DTC are no longer present.
- A history DTC clears after 40 consecutive warm up cycles without a fault present.
- History DTCs can be cleared using a scan tool.

Diagnostic Aids

- The range actuator position sensor and the transfer case range position sensor both show position in degrees, and should track each other. Monitor these sensors for erratic or unreasonable readings.
- If the range actuator position sensor is determined to be bad, the entire transfer case range actuator (transfer case motor) will have to be replaced as the range actuator position sensor is part of the transfer case range actuator and cannot be replaced independently.
- The transfer case fill and drain plugs are good sources for ground.
- Typical Gear Position Sensor parameter values:
  - 2WD = 33-43Â°
  - 4WD/AWD Automatic = 87-204Â°
  - 4WD High/Locked = 110-204Â°
  - 4WD Low = -140Â° to -69Â°
  - Neutral = -5Â° to +5Â°

Reference Information

Schematic Reference

cardiagn.com

Transfer Case Control Schematics

Connector End View Reference

COMPONENT CONNECTOR END VIEWS - INDEX

Electrical Information Reference

- **Circuit Testing**
- **Connector Repairs**
- **Testing for Intermittent Conditions and Poor Connections**
- **Wiring Repairs**

Scan Tool Reference

Control Module References for scan tool information.

Special Tools

- **EL-49741** 9 V+ Power Source Harness
- **EL-49742** Battery Voltage B+ and Ground Source Harness
- **J-35616** GM-Approved Terminal Test Kit

For equivalent regional tools, refer to **Special Tools**.

Circuit/System Verification

1. Verify that all range selections of the S77 transfer case shift control switch match the following parameters in the Data Display feature of the scan tool:
    - Range Actuator Position
    - Transfer Case Commanded Position
    - Transfer Case Range
    - ***If NOT all of the parameters match the S77 transfer case shift control switch position***

      Refer to Circuit/System Testing.

cardiagn.com

- ***If ALL of the parameters match the S77 transfer case shift control switch position***

2. Verify that for all range selections of the S77 transfer case shift control switch, the Transfer Case Range Position Sensor parameter and the Range Actuator Position Sensor parameter track within 5 degrees of each other.
   - ***If the parameters do NOT track within 5 degrees of each other***

     Refer to Circuit/System Testing.

   - ***If the parameters DO track within 5 degrees of each other***
3. Verify DTC C0396, C039E, P0652, or P0653 is only set as a history DTC.
   - ***If any of the DTCs are set as current***

     Refer to Circuit/System Testing.

   - ***If any of the DTCs are only set as history***

NOTE: **After inspection, apply Nyogel lubricant 760G to each connector terminal. Ensure each connector and CPA is correctly seated.**

4. Visually inspect each connector terminal of the K69 transfer case control module X1 connector and the A16 transfer case motor connector for damage or corrosion. Repair as necessary.
5. Clear DTC C0396, C039E, P0652, or P0653 from history.
6. Operate the vehicle within the Conditions for Running the DTC. You may also operate the vehicle within the conditions that you observed from the Freeze Frame/Failure Records data. The DTC should not set.
   - ***If any of the DTCs are set***

     Refer to Circuit/System Testing.

   - ***If none of the DTCs set***
7. All OK.

Circuit/System Testing

1. Ignition OFF, disconnect the harness connector at the A16 transfer case motor, also known as the transfer case range actuator.
2. Ignition ON, engine OFF.

cardiagn.com

NOTE:

- **When test probing harness terminals, it is imperative to use the proper test probe from the most current version of the J-35616 GM-Approved Terminal Test Kit. Use of an improper test probe may deform the terminal, resulting in intermittent open conditions.**
- **Testing for steps 3-9 is performed on the A16 transfer case motor harness connector using the PU probes J-35616-4A.**

3. Test for 7.2-8.5 V between the incremental encoder sensor (8 V) supply circuit terminal G and a good ground, such as the ground terminal of the **EL-49742** harness, black terminal.
   - ***If less than the specified range***
   1. Ignition OFF, disconnect the X1 harness connector at the K69 transfer case control module.
   2. Test for less than 10 Ω in the incremental encoder sensor (8 V) supply circuit end to end.
      - If 10 Ω or greater, repair the open/high resistance in the circuit.
      - If less than 10 Ω
   3. Test for infinite resistance between incremental encoder sensor (8 V) supply circuit terminal G and a good ground.
      - If less than infinite resistance, repair the short to ground in the circuit.
      - If infinite resistance
   4. Test for greater than 10 Ω between the incremental encoder sensor (8 V) supply circuit terminal G and all other terminals of the A16 transfer case motor harness connector.
      - If 10 Ω or less, repair the shorted together condition in the affected circuits.
      - If greater than 10 Ω, replace the K69 transfer case control module and perform the Range Actuator Learn procedure.

        Refer to **Transfer Case Control Module Replacement**, and **Transfer Case High/Low Clutch Reset**.

   - ***If greater than the specified range***
   1. Ignition OFF, disconnect the X1 harness connector at the K69 transfer case control module. Ignition ON, Engine OFF.
   2. Test for less than 1 V between the incremental encoder sensor (8 V) supply circuit terminal G and a good ground.
      - If 1 V or greater, repair the short to voltage in the circuit.
      - If less than 1 V
   3. Test for greater than 10 Ω between the incremental encoder sensor (8 V) supply circuit, terminal G and all other terminals of the A16 transfer case motor harness connector.
      - If 10 Ω or less, repair the shorted together condition in the affected circuits.

cardiagn.com

- If greater than 10 Ω, replace the K69 transfer case control module and perform the Range Actuator Learn procedure.

  Refer to **Transfer Case Control Module Replacement**, and **Transfer Case High/Low Clutch Reset**.

- ***If within the specified range***

4. Incremental encoder sensor (8 V) supply circuit and K69 transfer case control module OK.
5. Test for 7.2-8.5 V between the incremental encoder sensor (8 V) supply circuit, terminal G, and the low reference circuit, terminal H.
   - ***If less than the specified range***
   1. Ignition OFF, disconnect the X1 harness connector at the K69 transfer case control module.
   2. Test for less than 10 Ω in the low reference circuit end to end.
      - If 10 Ω or greater, repair the open/high resistance in the circuit.
      - If less than 10 Ω
   3. Test for infinite resistance between low reference circuit terminal H and a good ground.
      - If less than infinite resistance, repair the short to ground in the circuit.
      - If infinite resistance
   4. Test for greater than 10 Ω between the low reference circuit, terminal H and all other terminals of the A16 transfer case motor harness connector.
      - If 10 Ω or less, repair the shorted together condition in the affected circuits.
      - If greater than 10 Ω, replace the K69 transfer case control module and perform the Range Actuator Learn procedure.

        Refer to **Transfer Case Control Module Replacement**, and **Transfer Case High/Low Clutch Reset**.

   - ***If greater than the specified range***
   1. Ignition OFF, disconnect the X1 harness connector at the K69 transfer case control module. Ignition ON, Engine OFF.
   2. Test for less than 1 V between the low reference circuit, terminal H and a good ground.
      - If 1 V or greater, repair the short to voltage in the circuit.
      - If less than 1 V
   3. Test for greater than 10 Ω between the low reference circuit, terminal H and all other terminals of the A16 transfer case motor harness connector.
      - If 10 Ω or less, repair the shorted together condition in the affected circuits.
      - If greater than 10 Ω, replace the K69 transfer case control module and perform the Range Actuator Learn procedure.

cardiagn.com

Refer to **Transfer Case Control Module Replacement**, and **Transfer Case High/Low Clutch Reset**.

- ***If within the specified range***

6. Low reference circuit and K69 transfer case control module OK.
7. Test for 6.0-7.0 V between the incremental encoder impulse signal circuit, terminal E and a good ground, such as the ground terminal of the **EL-49742** harness, black terminal.
   - ***If less than the specified range***
   1. Ignition OFF, disconnect the X1 harness connector at the K69 transfer case control module.
   2. Test for less than 10 Ω in the incremental encoder impulse signal circuit end to end.
      - If 10 Ω or greater, repair the open/high resistance in the circuit.
      - If less than 10 Ω
   3. Test for infinite resistance between incremental encoder impulse signal circuit terminal E and a good ground.
      - If less than infinite resistance, repair the short to ground in the circuit.
      - If infinite resistance
   4. Test for greater than 10 Ω between the incremental encoder impulse signal circuit terminal E and all other terminals of the A16 transfer case motor harness connector.
      - If 10 Ω or less, repair the shorted together condition in the affected circuits.
      - If greater than 10 Ω, replace the K69 transfer case control module and perform the Range Actuator Learn procedure.

      Refer to **Transfer Case Control Module Replacement**, and **Transfer Case High/Low Clutch Reset**.

   - ***If greater than the specified range***
   1. Ignition OFF, disconnect the X1 harness connector at the K69 transfer case control module. Ignition ON, Engine OFF.
   2. Test for less than 1 V between the incremental encoder impulse signal circuit terminal E and a good ground.
      - If 1 V or greater, repair the short to voltage in the circuit.
      - If less than 1 V
   3. Test for greater than 10 Ω between the incremental encoder impulse signal circuit terminal E and all other terminals of the A16 transfer case motor harness connector.
      - If 10 Ω or less, repair the shorted together condition in the affected circuits.
      - If greater than 10 Ω, replace the K69 transfer case control module and perform the Range Actuator Learn procedure.

cardiagn.com

Refer to **Transfer Case Control Module Replacement**, and **Transfer Case High/Low Clutch Reset**.

- ***If within the specified range***

8. Incremental encoder impulse signal circuit and K69 transfer case control module OK.
9. Test for 6.0-7.0 V between the incremental direction signal circuit, terminal F and a good ground, such as the ground terminal of the **EL-49742** harness, black terminal.
   - ***If less than the specified range***
   1. Ignition OFF, disconnect the X1 harness connector at the K69 transfer case control module.
   2. Test for less than 10 Ω in the incremental direction impulse signal circuit end to end.
      - If 10 Ω or greater, repair the open/high resistance in the circuit.
      - If less than 10 Ω
   3. Test for infinite resistance between incremental encoder direction signal circuit terminal F and a good ground.
      - If less than infinite resistance, repair the short to ground in the circuit.
      - If infinite resistance
   4. Test for greater than 10 Ω between the incremental encoder direction signal circuit terminal F and all other terminals of the A16 transfer case motor harness connector.
      - If 10 Ω or less, repair the shorted together condition in the affected circuits.
      - If greater than 10 Ω, replace the K69 transfer case control module and perform the Range Actuator Learn procedure.

      Refer to **Transfer Case Control Module Replacement**, and **Transfer Case High/Low Clutch Reset**.

   - ***If greater than the specified range***
   1. Ignition OFF, disconnect the X1 harness connector at the K69 transfer case control module. Ignition ON, Engine OFF.
   2. Test for less than 1 V between the incremental encoder direction signal circuit terminal F and a good ground.
      - If 1 V or greater, repair the short to voltage in the circuit.
      - If less than 1 V
   3. Test for greater than 10 Ω between the incremental encoder direction signal circuit terminal F and all other terminals of the A16 transfer case motor harness connector.
      - If 10 Ω or less, repair the shorted together condition in the affected circuits.
      - If greater than 10 Ω, replace the K69 transfer case control module and perform the Range Actuator Learn procedure.

cardiagn.com

Refer to **Transfer Case Control Module Replacement**, and **Transfer Case High/Low Clutch Reset**.

- ***If within the specified range***

10. Incremental encoder direction signal circuit and K69 transfer case control module OK.
11. Replace the A16 transfer case motor.

    Refer to **Transfer Case Two/Four Wheel Drive Actuator Replacement**.

Repair Instructions

Perform the **Diagnostic Repair Verification** after completing the diagnostic procedure.

- Refer to **Control Module References** for K69 transfer case control module replacement, setup, and programming
- Refer to **Transfer Case High/Low Clutch Reset**
- Refer to **Transfer Case Two/Four Wheel Drive Actuator Replacement** for A16 transfer case motor replacement

DTC C0397: TRANSFER CASE CLUTCH/TRANSFER CASE RANGE POSITION SENSOR OVER TRAVEL

Diagnostic Instructions

- Perform the **Diagnostic System Check - Vehicle** prior to using this diagnostic procedure.
- Review **Strategy Based Diagnosis** for an overview of the diagnostic approach.
- Refer to **Diagnostic Procedure Instructions** to provide an overview of each diagnostic category.

DTC Descriptor

DTC C0397 54

Transfer Case Clutch High Temperature

DTC C0397 58

Transfer Case Clutch Performance

DTC C0397 4B (if equipped)

Transfer Case Clutch Calibration Not Learned

cardiagn.com

DTC C0397 F3

Transfer Case Clutch Worn Out Clutch

DTC C0397 F4

Transfer Case Range Position Sensor Over Travel

Diagnostic Fault Information

Circuit	Short to Ground	Open/High Resistance	Short to Voltage	Performance
Transfer Case Clutch Performance	-	-	-	C0397 54, C0397 58, C0397 4B, C0397 F3, or C0397 F4

Circuit/System Description

In 4WD/AWD Automatic range, the transfer case control module monitors the front and rear wheel speed sensors for slip. If the transfer case control module detects slip, and is unable to correct for a difference between the front and rear speed sensors, it will command the transfer case to apply the clutch. In addition, the transfer case control module tests for clutch pack wear by performing a high side kiss point check at power down and comparing it to the transfer case range actuator position sensor reading.

Conditions for Running the DTC

- Ignition ON.
- System voltage 10.5-8 V.
- No DTC P0562 or P0563.

C0397 54

- No C0379 01, C0379 04 or C0379 08 for thermal model.
- Vehicle speed greater than 5 km/h (3 MPH) and all wheel speeds at same speed.
- DTC C0397 54 runs continuously.

C0397 58

- Transfer case control module is NOT in shutdown mode due to thermal protection.
- DTC C0397 58 runs continuously.

cardiagn.com

C0397 4B

- Transfer case range: must begin in 4WD High/Locked and then be requested to shift to 4WD/AWD Automatic or 2WD.
- Only run during power down kiss point learn request.

C0397 F3

Only run during power down kiss point learn request.

C0397 F4

Only run during power down kiss point learn request.

Conditions for Setting the DTC

C0397 54

The transfer case control module has determined that the transfer case calculated clutch temperature model has exceeded the maximum allowable temperature for the second time.

C0397 58

The transfer case control module has detected that the transfer case clutch has failed to reach the desired output torque after three attempts.

C0397 4B

The transfer case control module has determined that the power down kiss point learn has failed 20 times in a row.

C0397 F3

The transfer case control module has determined that the maximum clutch wear out limit has been exceeded.

C0397 F4

The transfer case control module has detected that the transfer case range actuator position sensor, or the transfer case range position sensor has exceeded the upper/lower over travel limits.

Action Taken When the DTC Sets

cardiagn.com

- Shifting is still possible but in a reduced capacity which may cause undesirable slip correction events.
- The SERVICE 4WD indicator remains illuminated for the remainder of the current ignition cycle.

C0397 54

Front axle disengaged.

C0397 58

Shifting disabled.

C0397 4B

- Max torque commanded for 4WD/AWD Automatic.
- The default actions for C0397 4B will cause DTC C038D to set.

C0397 F3

- Shifting disabled.
- Front axle disengaged.

C0397 F4

- Shifting disabled.
- Front axle disengaged.

Conditions for Clearing the DTC

- The transfer case control module clears the DTC once the condition for setting the DTC no longer exists.
- A history DTC clears after 40 consecutive warm up cycles without a fault present.
- History DTCs can be cleared using a scan tool.
- Only cleared by a successful kiss point learn. (DTC C0397 F3).
- Only cleared by the successful execution of the **Transfer Case High/Low Clutch Reset** procedure. (DTC C0397 F4).

Diagnostic Aids

- A stuck transfer case motor lock can cause C0397 58 to set.

cardiagn.com

- Faulty wheel speed sensors can cause DTC C0397 58 or C0397 F3 to set. When driving at a steady speed, the scan tool should display the same values for the following data parameters in the electronic brake control module:
  - Left and right front wheel speed sensors
  - Left and right rear wheel speed sensors

Reference Information

Schematic Reference

Transfer Case Control Schematics

Connector End View Reference

COMPONENT CONNECTOR END VIEWS - INDEX

Electrical Information Reference

- **Circuit Testing**
- **Connector Repairs**
- **Testing for Intermittent Conditions and Poor Connections**
- **Wiring Repairs**

Scan Tool Reference

Control Module References for scan tool information.

Circuit/System Verification

1. Ignition ON, engine OFF.
2. Install a scan tool.
3. Verify no other K17 Electronic Brake Control Module or K69 Transfer Case Control Module DTCs are set.
   - ***If any other K17 Electronic Brake Control Module Or K69 Transfer Case Control Module DTC's are set***

     diagnose them first.

   - ***If no other K17 Electronic Brake Control Module Or K69 Transfer Case Control Module DTC's are set***

cardiagn.com

4. Verify DTC C0397 is only set as a history DTC.
   - ***If DTC C0397 is set as current***

     Refer to Circuit/System Testing.

   - ***If DTC C0397 is set as history***
5. Clear DTC C0397 from history.
6. Operate the vehicle within the Conditions for Running the DTC. You may also operate the vehicle within the conditions that you observed from the Freeze Frame/Failure Records data. The DTC should not set.
   - ***If DTC C0397 sets***

     Refer to Circuit/System Testing.

   - ***If DTC C0397 does not set***
7. All OK.

Circuit/System Testing

1. Install scan tool.
2. Wheel speed sensors:
   1. Take the vehicle on a short test drive on a smooth and level road.
   2. Verify that, when at a steady speed, all of the front and rear speed sensors parameters do not vary or become intermittent.
   - ***If while driving at a steady speed the RPM values vary or become intermittent***

     check the K17 Electronic Brake Control Module for wheel speed DTC's. Wheel speed DTC diagnostics are in antilock brake systems.

   - ***If all of the front and rear speed sensors parameters do not vary or become intermittent***
3. Transfer case clutch integrity:
   1. Shift the vehicle into 4WD High/Locked and take it for a test drive. Clear the DTC if possible.
   2. Verify that while under heavy acceleration that the front and rear wheel speeds are similar.
   - ***If the front wheel speeds are much lower***

     this indicates a weak clutch and a transfer case disassembly and inspection will be required. Refer to **Transfer Case Disassemble**.

cardiagn.com

- ***If the front and rear wheel speeds are similar***

4. A16 transfer case motor - brake/lock:
    1. Clear DTC's. Using the S77 Transfer Case Shift Control Switch function of the scan tool, shift the vehicle to 2WD range.
    2. Monitor the Transfer Case Motor Amperage parameter in the Data Display feature of the scan tool.
    3. Using the S77 Transfer Case Shift Control Switch function of the scan tool, command the transfer case to the 4WD High/Locked range.
    4. Verify that the Transfer Case Motor Amperage parameter increases while the motor is shifting, and then returns to 0 amps within 5 seconds or less.
    - ***If the amperage stays high longer than 5 seconds***

      this indicates the brake is not holding. Replace the A16 Transfer Case Motor. Refer to **Transfer Case Two/Four Wheel Drive Actuator Replacement**.

    - ***If the amperage increases while the motor is shifting, and then return to 0 amps within 5 seconds or less***
5. Mechanical binding:
    1. Engage parking brake.
    2. Block rear wheels.
    3. Lift front wheels.
    4. Ignition ON, engine OFF. Install scan tool.
    5. Transfer case in 2WD. Transmission in Neutral.
    6. Using the Front Axle Engagement Actuator control function, engage the front axle.
    7. Verify that the front prop shaft turns while holding one front tire stationary and spinning the other tire.
    - ***If the front prop shaft does not turn***

      inspect the front axle clutch fork for mechanical binding. Refer to **Four-Wheel Drive Does Not Disengage** .

    - ***If the front prop shaft turns***
6. If all prior evaluations test normal:
    1. Reprogram the K69 Transfer Case Control Module. Refer to **Control Module References** .
    2. Perform the Range Actuator Learn procedure in the Control Functions feature of the scan tool. Refer to **Transfer Case High/Low Clutch Reset**.
7. Operate the vehicle within the Conditions for Running the DTC. You may also operate the vehicle within the conditions that you observed from the Freeze Frame/Failure Records data. The DTC should not set.

cardiagn.com

- *If DTC C0397 sets*

  replace the K69 Transfer Case Control Module and perform the Range Actuator Learn procedure. Refer to **Transfer Case Control Module Replacement**, and **Transfer Case High/Low Clutch Reset**.

- *If DTC C0397 does not set*

8. All OK.

Repair Instructions

Perform the **Diagnostic Repair Verification** after completing the diagnostic procedure.

- Refer to **Control Module References** for K69 Transfer Case Control Module replacement, setup, and programming
- Refer to **Transfer Case High/Low Clutch Reset** for Range Actuator Learn Procedure
- Refer to **Four-Wheel Drive Does Not Engage**

DTC C0398: RANGE ACTUATOR POSITION - RANGE POSITION CORRELATION

Diagnostic Instructions

- Perform the **Diagnostic System Check - Vehicle** prior to using this diagnostic procedure.
- Review **Strategy Based Diagnosis** for an overview of the diagnostic approach.
- Refer to **Diagnostic Procedure Instructions** to provide an overview of each diagnostic category.

DTC Descriptor

DTC C0398 00

Range Actuator Position - Range Position Correlation

Typical Scan Tool Data

Range/Parameter	2WD	4WD/AWD Automatic	4WD High/Locked	4WD Low	Neutral
Range Actuator Position Sensor (Â°)	33Â° to 43Â°	87Â° to 204Â°	110Â° to 204Â°	-69Â° to -140Â°	-5Â° to +5Â°
Sensor Reference Voltage 2 (V)	7.75-8.25 V	7.75-8.25 V	7.75-8.25 V	7.75-8.25 V	7.75-8.25 V

cardiagn.com

Range/Parameter	2WD	4WD/AWD Automatic	4WD High/Locked	4WD Low	Neutral
Range Actuator Position Sensor (V)	0.6-0.8 V or 3.7-4.1 V	0.6-0.8 V or 3.7-4.1 V	3.7-4.1 V	3.7-4.1 V	0.6-0.8 V or 3.7-4.1 V
Transfer Case Range Position Sensor (Â°)	33Â° to 43Â°	87Â° to 204Â°	110Â° to 204Â°	-69Â° to -140Â°	-5Â° to +5Â°

Circuit/System Description

The transfer case range actuator position sensor is also known as the incremental position sensor. The transfer case range actuator position sensor is an integral part of the A16 Transfer Case Motor and cannot be replaced independently. The A16 Transfer Case Motor is also known as the transfer case range actuator.

The B227 Gear Position Sensor is also known as the transfer case range position sensor, the two/four wheel drive actuator position sensor, or the rotational position sensor. The B227 Gear Position Sensor is an absolute sensor and is an independently replaceable part.

Both sensors send transfer case range position information to the transfer case control module as voltage signals, which is then converted to degrees by the transfer case control module software. If the two sensors disagree by greater than a predetermined amount, the DTC will set.

The range actuator position sensor is more sensitive than the B227 Gear Position Sensor, but needs to reference the B227 Gear Position Sensor value at ignition ON and range changes.

Conditions for Running the DTC

- Ignition ON.
- System voltage 10.5-18 V.
- No P0562 or P0563.
- DTC C0398 runs continuously.

Conditions for Setting the DTC

The range actuator position sensor and the range position sensor are both showing valid positions, but differ by greater than a predetermined amount when NO range change is in progress.

Action Taken When the DTC Sets

- Shifting disabled.

cardiagn.com

- The SERVICE 4WD indicator remains illuminated for the remainder of the current ignition cycle.
- Maximum clutch torque commanded when in 4WD High/Locked, 4WD/AWD Automatic, or 4WD Low, and during range shifts.

Conditions for Clearing the DTC

DTC 0398 can only be cleared by using a scan tool to clear codes twice consecutively.

Diagnostic Aids

- The range actuator position sensor and the range position sensor both show position in degrees. Monitor these parameters for erratic or unreasonable readings.
- An ignition ON, engine OFF sequence with transfer case motor removed, but still attached to the harness, may cause C0398 00 to set.
- Repeatedly commanding the transfer case range actuator forward or reverse without pressing the exit button between commands, to return to the "none" state, can result in incorrect readings.
- DTC C0398 is a latching DTC. This means that it stays current even with cycling the ignition ON & OFF. DTC 0398 can only be cleared by using a scan tool to clear codes twice consecutively. The first command to clear codes unlatches the DTC. The second command to clear codes clears the DTC.

Reference Information

Schematic Reference

Transfer Case Control Schematics

Connector End View Reference

COMPONENT CONNECTOR END VIEWS - INDEX

Electrical Information Reference

- **Circuit Testing**
- **Connector Repairs**
- **Testing for Intermittent Conditions and Poor Connections**
- **Wiring Repairs**

Scan Tool Reference

cardiagn.com

Control Module References for scan tool information.

Circuit/System Verification

1. Ignition ON, engine OFF.
2. Connect a scan tool.
3. Monitor the Range Actuator Position Sensor and Range Position Sensor parameters on the scan tool. Using the S77 Transfer Case Shift Control Switch, shift the transfer case into all ranges. The Range Actuator Position Sensor parameter and Range Position Sensor parameter should track each other.
   - ***If the Range Actuator Position Sensor parameter and Range Position Sensor parameter do NOT track each other within 7 degrees***

     Refer to Circuit/System Testing.

   - ***If the Range Actuator Position Sensor parameter and Range Position Sensor parameter DO track each other within 7 degrees***
4. All OK.

Circuit/System Testing

1. Verify DTC C0392, P0642, P0643 (B227 Gear Position Sensor, also known as range position sensor), or C0396, C039E, P0652, P0653 (range actuator position sensor) is not set.
   - ***If any of the DTCs are set***

     Refer to **Diagnostic Trouble Code (DTC) List - Vehicle**

   - ***If none of the DTCs are set***
2. Go to Component Testing.

Component Testing

NOTE: **Order of component testing is important.**

1. B227 Gear Position Sensor (also known as Range Position Sensor)
   1. Ignition OFF. Disconnect the B227 Gear Position Sensor connector. Remove the B227 Gear Position Sensor. Inspect the mating surface for damage. Replace if damage is found.
   2. Rotate the B227 Gear Position Sensor tab to the lock position. Reconnect the B227 Gear Position Sensor.
   3. Ignition ON, engine OFF.

cardiagn.com

4. While monitoring the Range Position Sensor parameter on the scan tool, push in the locking tab and rotate the B227 Gear Position Sensor tab. In the lock position the Range Position Sensor parameter should read 33-43Â°. Upon rotating the range position sensor tab, the Range Position Sensor parameter should display a sweep from -146 to +204 degrees.
   - If the Range Position Sensor parameter does not display as described, replace the B227 Gear Position Sensor.

     Refer to **Transfer Case Two/Four Wheel Drive Actuator Position Sensor Replacement**.

   - If the Range Position Sensor parameter does display as described
5. Using a wide, flat blade screwdriver in the B227 Gear Position Sensor mounting slot, attempt to rotate the transfer case control actuator shaft. The shaft should not turn.
   - If the shaft can be turned, then internal damage has occurred to the transfer case control actuator shaft or mating gears. Refer to **Transfer Case Disassemble** and inspect and repair as necessary.
   - If the shaft can not be turned
6. B227 Gear Position Sensor OK.

2. A16 Transfer Case Motor - Range Actuator Position Sensor
   1. Remove the A16 Transfer Case Motor from transfer case. Using a paint pen or marker, place indexing marks on the A16 Transfer Case Motor drive gear and the mounting surface of the A16 Transfer Case Motor.
   2. Attach the A16 Transfer Case Motor to the A16 Transfer Case Motor connector.
   3. Ignition ON, engine OFF.

NOTE: **Pressing the exit button on the scan tool between commanding the Transfer Case Motor Control forward and reverse is critical to proper diagnosis. Pressing the exit button changes the commanded state to NONE. If you DO NOT press the exit button between changing directions, the Range Actuator Position Sensor parameter may not update. When this happens you have to command the new direction a second time in order for the scan tool to update. Repeatedly changing directions may cause the Range Actuator Position Sensor parameter to flip between the extremes, -150Â° and +360Â° or -360Â° and +360. Depending on software level the lower extreme is either -150Â° or -360Â°.**

   4. While monitoring the Range Actuator Position Sensor parameter, command the transfer case range actuator forward using the Transfer Case Motor Control function of the scan tool. After 10 seconds the Range Actuator Position Sensor parameter should read -150Â°, -360Â° or +360Â°. Push the exit button on the scan tool once to return the commanded state to NONE. Command the transfer case range actuator reverse. After 10 seconds the Range Actuator Position Sensor parameter should read +360Â°, -360Â° or -150Â°.
      - If the Range Actuator Position Sensor parameter does not display as described, repeat step 2. If the Range Actuator Position Sensor parameter continues to not display as described, replace the A16 Transfer Case Motor.

cardiagn.com

- If the Range Actuator Position Sensor parameter displays as described

5. Ignition OFF for at least 3 minutes. Install the A16 Transfer Case Motor.
6. Ignition ON, engine OFF. The K69 Transfer Case Control Module should relearn the transfer case range actuator position, and the Transfer Case Position parameter should display a valid range.
   - If the Transfer Case Position parameter displays Invalid, perform the Range Actuator Learn procedure. Refer to **Transfer Case High/Low Clutch Reset**.
   - If the Transfer Case Position parameter displays a valid range
7. A16 Transfer Case Motor - Range Actuator Position Sensor OK.

Repair Instructions

Perform the **Diagnostic Repair Verification** after completing the diagnostic procedure.

- Refer to **Transfer Case Disassemble (Light Duty)** **Transfer Case Disassemble (Heavy Duty)**
- Refer to **Transfer Case Two/Four Wheel Drive Actuator Replacement**
- Refer to **Transfer Case Two/Four Wheel Drive Actuator Position Sensor Replacement**
- Refer to **Transfer Case High/Low Clutch Reset** for Range Actuator Learn Procedure

DTC C0550: ELECTRONIC CONTROL UNIT (ECU) FAILURE

Diagnostic Instructions

- Perform the **Diagnostic System Check - Vehicle** prior to using this diagnostic procedure.
- Review **Strategy Based Diagnosis** for an overview of the diagnostic approach.
- Refer to **Diagnostic Procedure Instructions** to provide an overview of each diagnostic category.

DTC Descriptors

DTC C0550 37

Electronic Control Unit (ECU) Performance Watchdog Failure

DTC C0550 39

Electronic Control Unit (ECU) Internal Electronic Failure

cardiagn.com

Diagnostic Fault Information

Circuit	Watchdog/Safety Failure	Internal Electronic Failure
Electronic Control Unit Malfunction	DTC C0550 37	DTC C0550 39

Circuit/System Description

This is an internal fault detection of the transfer case shift control module (TCCM). This fault is handled inside the TCCM. No external circuits are involved.

At each power-up, the TCCM runs a self-test on the following:

- EEPROM Checksum
- ROM Checksum
- RAM Checksum
- RAM Malfunction

Conditions for Running the DTC

- The TCM runs the program to detect an internal condition at key ON. The only requirements are voltage and ground.
- Ignition ON.
- System voltage 10.5-18.0 V

Conditions for Setting the DTC

- The random access memory (RAM) of the TCCM has failed an operational test indicating that some portions of RAM are not functional.
- The read only memory (ROM) or the masked ROM of the TCCM has failed the Checksum test indicating that the data is not currently valid.
- The critical operational parameters stored in the EEPROM of the TCCM have failed the Checksum test indicating invalid data.

Action Taken When the DTC Sets

- The encoder motor will be deactivated for the remainder of the current ignition cycle.
- The transfer case shift control switch will illuminate the current mode position LED.
- No further mode changes shall be allowed.
- The TCCM will store freeze frame data.

cardiagn.com

- The SERVICE 4WD indicator remains illuminated for the remainder of the current ignition cycle.

Conditions for Clearing the DTC

- The TCCM will clear the DTC once the conditions for setting the DTC no longer exist.
- A history DTC will clear after 40 consecutive warm up cycles without a fault present.
- History DTCs can be cleared using a scan tool.

Diagnostic Aids

- DTC P0550 detects the wrong copy of non-volatile memory in RAM or a RAM read/write failure.
- DTC P0550 detects a non-volatile memory write error.
- DTC P0550 detects a corruption of the EPROM/Flash memory.
- When attempting to set TCCM internal DTCs, let the engine run for at least 1 minute and then shut the engine OFF for 30 seconds. Following this procedure will allow for a complete TCCM shutdown. Reprogram the TCCM and retest the DTC to see if the DTC resets.
- A low voltage condition can sometimes falsely set this DTC. Attempt to clear this DTC and retest.

Reference Information

Schematic Reference

Transfer Case Control Schematics

Connector End View Reference

COMPONENT CONNECTOR END VIEWS - INDEX

Description and Operation

Transfer Case Description and Operation

Electrical Information Reference

- **Circuit Testing**
- **Connector Repairs**
- **Testing for Intermittent Conditions and Poor Connections**

cardiagn.com

- **Wiring Repairs**

Scan Tool Reference

Control Module References for scan tool information.

Circuit/System Verification

1. Engine running. Let the engine run for at least 1 minute.
2. Ignition OFF for at least 30 seconds to allow for the complete shutdown of the TCCM.
3. Ignition ON, verify that DTC C0550 is not set.
    - If DTC C0550 sets, reprogram the TCCM. If the DTC resets, replace the TCCM. Perform the ATC motor learn procedure.

Repair Instructions

Perform the **Diagnostic Repair Verification** after completing the diagnostic procedure.

- Refer to **Control Module References** for TCSCM replacement, setup, and programming
- Refer to **Transfer Case High/Low Clutch Reset**

DTC C0569: SYSTEM CONFIGURATION ERROR CALIBRATION NOT LEARNED

Diagnostic Instructions

- Perform the **Diagnostic System Check - Vehicle** prior to using this diagnostic procedure.
- Review **Strategy Based Diagnosis** for an overview of the diagnostic approach.
- Refer to **Diagnostic Procedure Instructions** to provide an overview of each diagnostic category.

DTC Descriptor

DTC C0569 4B

System Configuration Error Calibration Not Learned

Circuit/System Description

- This is an internal fault detection of the transfer case control module. No external circuits are involved.
- This DTC is set anytime a transfer case control module is replaced or reprogrammed.

cardiagn.com

- The Range Actuator Learn procedure must be performed in order for the transfer case control module to learn current clutch tolerance based on clutch stack-up and accumulated clutch wear.

Conditions for Running the DTC

- Ignition ON.
- System voltage 10.5-18 V.

Conditions for Setting the DTC

The Range Actuator Learn procedure for a new or reprogrammed transfer case control module has not been performed.

Action Taken When the DTC Sets

- Range shifting is disabled until the Range Actuator Learn procedure has been performed.
- The SERVICE 4WD indicator illuminates.
- No Range position LED's illuminated.

Conditions for Clearing the DTC

The transfer case control module clears the DTC once the Range Actuator Learn procedure has been successfully performed.

Diagnostic Aids

The default actions for C0306, C0321, C0387, C0392, C0396, C0397 or C0398 may cause C0569 to set.

Reference Information

Schematic Reference

Transfer Case Control Schematics

Connector End View Reference

COMPONENT CONNECTOR END VIEWS - INDEX

Electrical Information Reference

- **Circuit Testing**

cardiagn.com

- **Connector Repairs**
- **Testing for Intermittent Conditions and Poor Connections**
- **Wiring Repairs**

Scan Tool Reference

Control Module References for scan tool information.

Circuit/System Verification

1. Ignition ON, engine ON. Let engine run for at least 1 minute.
2. Ignition OFF for at least 30 seconds to allow for the complete shutdown of the K69 Transfer Case Control Module.
3. Ignition ON, engine OFF.
4. Verify that no other transfer case DTC's are set.
   - ***If any other transfer case DTC's are set***

     diagnose them first.

   - ***If no other transfer case DTC's are set***
5. Verify that DTC C0569 is not set.
   - ***If DTC C0569 is set***

     perform the Range Actuator Learn procedure. Refer to **Transfer Case High/Low Clutch Reset**.

   - ***If DTC C0569 is not set***
6. All OK.

Repair Instructions

Perform the **Diagnostic Repair Verification** after completing the diagnostic procedure.

Refer to **Transfer Case High/Low Clutch Reset**

DTC C0896: DEVICE VOLTAGE RANGE THRESHOLD

Diagnostic Instructions

cardiagn.com

- Perform the **Diagnostic System Check - Vehicle** prior to using this diagnostic procedure.
- Review **Strategy Based Diagnosis** for an overview of the diagnostic approach.
- Refer to **Diagnostic Procedure Instructions** to provide an overview of each diagnostic category.

DTC Descriptors

DTC C0896 03

Device Voltage Range Below Threshold

DTC C0896 07

Device Voltage Range Above Threshold

Circuit/System Description

The transfer case shift control module (TCCM) monitors the battery voltage feed to the TCCM. This DTC detects if the battery voltage is out of range. This could indicate a vehicle wide issue in which all electrical components would be affected, or it could be TCCM specific due to poor power or ground connections.

Conditions for Running the DTC

- Ignition ON.
- System voltage 10.5-18.5 V.

Conditions for Setting the DTC

System voltage above 18.5 V or below 10.5 V and a mode shift is requested.

Action Taken When the DTC Sets

- Shifting disabled until battery voltage is within specification.
- Mode indicator will illuminate current mode.

Conditions for Clearing the DTC

- The TCCM clears the DTC once the conditions for setting the DTC are no longer present.
- A history DTC clears after 40 consecutive warm up cycles without a fault present.

cardiagn.com

- History DTCs can be cleared using a scan tool.

Diagnostic Aids

- Any mode shift requested when the battery voltage is below 12 V may set this DTC.
- Improperly connecting the cables during a jump start can cause C0896 07 to set.
- The **Transfer Case High/Low Clutch Reset** procedure may need to be performed after repair.
- **EL-49742** harness is a good source for B+ and ground.
- A key OFF, key ON cycle may be needed to enable mode shifting.

Reference Information

Schematic Reference

Transfer Case Control Schematics

Connector End View Reference

COMPONENT CONNECTOR END VIEWS - INDEX

Electrical Information Reference

- **Circuit Testing**
- **Connector Repairs**
- **Testing for Intermittent Conditions and Poor Connections**
- **Wiring Repairs**

Scan Tool Reference

Control Module References for scan tool information.

Special Tools

EL-49742 Battery Voltage B+ and Ground Source Harness

For equivalent regional tools, refer to **Special Tools**.

cardiagn.com

Circuit/System Verification

1. Verify that the TREC fuse, and the Miscellaneous IGN fuse, underhood fuse block, are NOT open.
   - If the TREC fuse is open, test the battery positive voltage circuit, TCCM harness X3 pin C, for a short to ground.
   - If the Miscellaneous IGN fuse is open, test the Ignition 1 voltage circuit, TCCM harness X2 pin 6, for a short to ground.
2. Ignition ON, engine OFF.
3. Using the Freeze Frame feature of the scan tool, review the Battery Voltage parameter when the DTC sets. The voltage should be above 12.0 V.
   - If the voltage is above 18.5 V, this is likely a vehicle issue such as an alternator problem, or the vehicle has been hooked up improperly during a jump start. Refer to **Symptoms - Engine Electrical** .
4. Using the Transfer Case Data Display feature of the scan tool, monitor the Battery Voltage parameter. The voltage should be above 12.0 V.
   - If the voltage is below 12.0 V, ensure that the battery is fully charged and working properly. Refer to **Battery Inspection/Test** , and **Battery Electrical Drain/Parasitic Load Test** .
5. While monitoring the Battery Voltage parameter, start the engine. Rev the engine to greater than 3000 RPM. The voltage should remain stable and below 18.5 V.
   - If the voltage is unstable or is greater than 18.5 V, ensure that the charging system is working properly. Refer to **Charging System Test** .

Circuit/System Testing

NOTE: **When test probing harness terminals, it is imperative to use the proper test probe from the most current version of the J-35616 GM-Approved Terminal Test Kit. Use of an improper test probe may deform the terminal, resulting in intermittent open conditions.**

1. Key OFF. Disconnect the X3 harness connector at the TCCM.
2. Measure the voltage at the battery. The voltage should be above 12.0 V.
   - If the voltage is below 12.0 V, ensure that the battery is fully charged and working properly. Refer to **Battery Inspection/Test** , and **Battery Electrical Drain/Parasitic Load Test** .
3. Install **EL-49742** harness. Test for B+ (+0.0/-0.5 V) between the 12 volt terminal (red) and the ground terminal (black) of **EL-49742** harness.
   - If the voltage is less than the specified value, a vehicle wide issue is indicated. Inspect the battery positive circuit wire routing for chafed wires or damaged inline harness connectors that could cause unexpected voltage drops.
4. Using the purple probe J-35616-4A, test for B+ (+0.0/-0.5 V) between the battery positive voltage circuit, TCCM X3 pin C, and the ground terminal of **EL-49742** harness, black terminal.
   - If the voltage is less than the specified range, test the battery positive voltage circuit for an open/high resistance or short to ground.

cardiagn.com

5. Using the purple probes J-35616-4A, test for B+ (+0.0/-0.5 V) between the battery positive voltage circuit, TCCM X3 pin C, and the ground circuit TCCM X3 pin D.
    - If the voltage is less than the specified range, test the ground circuit for an open/high resistance, short to ground or short together condition.

Repair Instructions

Perform the **Diagnostic Repair Verification** after completing the diagnostic procedure.

- Refer to **Transfer Case High/Low Clutch Reset**
- Refer to **Battery Inspection/Test**
- Refer to **Battery Electrical Drain/Parasitic Load Test**
- Refer to **Charging System Test**

DTC P0601, P0602, P0604, P0606, P062F, OR P064F: CONTROL MODULE

Diagnostic Instructions

- Perform the **Diagnostic System Check - Vehicle** prior to using this diagnostic procedure.
- Review **Strategy Based Diagnosis** for an overview of the diagnostic approach.
- Refer to **Diagnostic Procedure Instructions** to provide an overview of each diagnostic category.

DTC Descriptors

DTC P0601

Control Module Read Only Memory Performance

DTC P0602

Control Module Not Programed

DTC P0604

Control Module Random Access Memory Performance

DTC P0606 00

cardiagn.com

Control Module Processor Performance

DTC P0606 37 (if equipped)

Control Module Processor Performance Software Malfunction

DTC P062F

Control Module Long Term Memory Performance

DTC P064F

Control Module Long Term Memory Performance

Circuit/System Description

This is an internal fault detection of the transfer case control module. This fault is handled inside the transfer case control module. No external circuits are involved.

At each power-up, the transfer case control module runs a self-test on the following:

- EEPROM Checksum
- ROM Checksum
- RAM Checksum
- RAM Malfunction
- Missing, incorrect or invalid software

Conditions for Running the DTC

- Ignition ON.
- System voltage 10.5-18.0 V
- Diagnostic runs continuously

Conditions for Setting the DTC

The transmission control module has detected an internal malfunction.

P0601

cardiagn.com

The read only memory (ROM), or the masked ROM, of the transfer case control module has failed the Checksum test indicating that the data is not currently valid.

P0602

No application/calibration software found or calibration incompatible with application.

P0604

The random access memory (RAM) of the transfer case control module has failed an operational test indicating that some portions of RAM are non-functional.

P0606 00

The transfer case control module has failed an operational test indicating a processor performance failure.

P0606 37 (if equipped)

The transfer case control module has detected a software malfunction (Watchdog Failure).

P062F

The critical operational parameters stored in the EEPROM of the transfer case control module have failed the Checksum test indicating invalid data.

P064F

The transfer case control module has detected an invalid calibration.

Action Taken When the DTC Sets

- The encoder motor will be deactivated for the remainder of the current ignition cycle.
- The transfer case shift control switch will illuminate the current mode position LED.
- No further mode changes shall be allowed.
- The transfer case control module will store freeze frame data.
- The SERVICE 4WD indicator remains illuminated for the remainder of the current ignition cycle.
- The SERVICE AWD indicator will not illuminate - P062F only.
- Default Long Term Memory Values will be used - P062F only.

cardiagn.com

Conditions for Clearing the DTC

- DTCs P0601, P0602, P0604, P0606, P062F and P064F are Type C DTCs.
- The transfer case control module will clear the DTC once the conditions for setting the DTC no longer exist.
- A history DTC will clear after 40 consecutive warm up cycles without a fault present.
- History DTCs can be cleared using a scan tool.

Diagnostic Aids

- DTC P0601 detects a non-volatile memory write error (ROM).
- DTC P0602 indicates that the transmission control module is not programed.
- DTC P0604 detects the wrong copy of non-volatile memory in RAM or a RAM read/write failure.
- DTC P0606 00 detects a processor performance failure.
- DTC P0606 37 detects a software malfunction.
- DTC P062F detects a corruption of the EPROM/Flash memory.
- DTC P064F detects an invalid calibration.
- Low voltage or a momentary loss of power or ground to the transfer case control module may cause a DTC to set. Verify the following:
  - The battery cables are clean and tight, and the battery is fully charged. Refer to **Battery Inspection/Test** .
  - The transfer case control module ground circuits do not have an open or high resistance.
  - The transfer case control module power circuits do not have an open, short to ground, or high resistance.

Reference Information

Schematic Reference

Transfer Case Control Schematics

Connector End View Reference

COMPONENT CONNECTOR END VIEWS - INDEX

Description and Operation

Transfer Case Description and Operation

cardiagn.com

Electrical Information Reference

- **Circuit Testing**
- **Connector Repairs**
- **Testing for Intermittent Conditions and Poor Connections**
- **Wiring Repairs**

Scan Tool Reference

Control Module References for scan tool information.

Circuit/System Verification

1. Ignition OFF for at least 1 minute to allow for the complete shutdown of the K69 transfer case control module. Engine ON.
2. Verify that DTC P0601, DTC P0602, DTC P0604, DTC P0606, DTC P062F or DTC P064F is only set as a history DTC.
   - ***If any of the DTC's are set as current***
   1. Program the K69 transfer case control module. Refer to **Control Module References** .
   2. Verify none of the DTC's reset.
      - If any of the DTC's reset, replace the K69 transfer case control module. Refer to **Control Module References** .
      - If none of the DTC's reset
   3. All OK.
   - ***If any of the DTC's are set as history***

NOTE: **After inspection, apply Nyogel lubricant 760G to each connector terminal. Ensure each connector and CPA is correctly seated.**

3. Visually inspect each connector terminal of the K69 transfer case control module connector for damage or corrosion. Repair as necessary.
4. Clear DTC P0601, DTC P0602, DTC P0604, DTC P0606, DTC P062F, or DTC P064F from history.
5. Operate the vehicle within the Conditions for Running the DTC. You may also operate the vehicle within the conditions that you observed from the Freeze Frame/Failure Records data. The DTC should not set.
   - ***If any of the DTC's set***

     Replace the K69 Transfer Case Control Module and perform the Range Actuator Learn procedure. Refer to **Transfer Case Control Module Replacement**, and **Transfer Case High/Low Clutch Reset**

cardiagn.com

- *If none of the DTC's set*

6. All OK.

Repair Instructions

Perform the **Diagnostic Repair Verification** after completing the diagnostic procedure.

- Refer to **Control Module References** for K69 transfer case control module replacement, setup, and programming
- Refer to **Transfer Case High/Low Clutch Reset** for Range Actuator Learn Procedure

DTC P185F OR P279A-P279C: TRANSFER CASE/FOUR WHEEL DRIVE (4WD) NEUTRAL RANGE PERFORMANCE

Diagnostic Instructions

- Perform the Diagnostic System Check prior to using this diagnostic procedure: **Diagnostic System Check - Vehicle**
- Review the description of Strategy Based Diagnosis: **Strategy Based Diagnosis**
- An overview of each diagnostic category can be found here: **Diagnostic Procedure Instructions**

DTC Descriptor

NOTE: **This procedure may also diagnose malfunctions that are not detected by a DTC.**

DTC P185F

Transfer Case Shift Pending Signal Not Plausible - If equipped

DTC P279A

Transfer Case High Range Incorrect Ratio

DTC P279B

Transfer Case Low Range Incorrect Ratio - If equipped

DTC P279C

Four Wheel Drive (4WD) Neutral Range Performance - If equipped

cardiagn.com

Circuit/System Description

The ECM uses the following two ways to determine if the transfer case is in 4WD Low, 4WD High or Neutral.

1. Compare the transmission output speed sensor (Transmission OSS) to the transfer case output speed sensor (Transfer Case OSS - parameter name inside ECM) (B115 Vehicle Speed Sensor - component code name in Schematics) in order to calculate transfer case range.
2. Use a LAN message sent by the transfer case shift control module to the ECM.

The ECM uses this message to determine motor torque required and transmission shifting.

The internal fault detection is handled inside the control module. No external circuit diagnosis is involved.

Conditions for Running the DTC

- Engine = Running - For greater than 5 s
- Vehicle Speed = 10 to 200 km/h (6 to 124 MPH)

DTCs run continuously when the above condition is met.

Conditions for Setting the DTC

- If the first way and second way of determining transfer case range (see circuit/description above) do not match while in 4WD Low, 4WD High or Neutral, then the DTC is set.
- The ECM has detected 32 fail counts out of 400 samples.

Actions Taken When the DTC Sets

DTCs P17D4, P185F, P279A, P279B, P279C are Type B DTCs.

Conditions for Clearing the DTC

DTCs P17D4, P185F, P279A, P279B, P279C are Type B DTCs.

Diagnostic Aids

- Misalignment, debris or poor connections on the transmission output speed sensor or the transfer case vehicle speed sensor can cause this DTC to set.
- Verify that the following scan tool data can be obtained and is functioning properly while Operating the vehicle within the Conditions for Running the DTC. Data that is questionable may indicate a concern.

cardiagn.com

Refer to: **Control Module References** for typical data values.

- Transmission OSS
- Transmission Gear
- Transfer Case OSS (K20)/B115 Vehicle Speed Sensor (Transfer Case Control Schematics)

- The Actions Taken for P279A may set DTC P16F3.
- DTC P279A, P279B, or P279C may set before P0502, P0503, P0721, P0722, P0723, P077C, P077D, P2160, P2161.
- When attempting to set ECM internal DTCs, run the engine for at least 1 min, and then shut the engine off for 2 min. Following this procedure will allow for a complete ECM shutdown. Program the ECM with the latest software version and retest the DTC to see if the DTC resets.

Reference Information

Schematic Reference

Transfer Case Control Schematics

Connector End View Reference

COMPONENT CONNECTOR END VIEWS - INDEX

Electrical Information Reference

- **Circuit Testing**
- **Connector Repairs**
- **Testing for Intermittent Conditions and Poor Connections**
- **Wiring Repairs**

DTC Type Reference

Powertrain Diagnostic Trouble Code (DTC) Type Definitions

Scan Tool Reference

Control Module References

Circuit/System Verification

cardiagn.com

1. Ignition On / Vehicle In Service Mode & Engine Off
2. Verify DTC P0502, P0503, P0721, P0722, P0723, P077C, P077D, P2160, P2161 is not set.
   - **If any of the DTCs are set Refer to: Diagnostic Trouble Code (DTC) List - Vehicle**
   - **If none of the DTCs are set**
3. Ignition On - Engine Running - Greater than 1 min

   NOTE: **It may take up to 2 min for all vehicle systems to power down.**

4. Ignition/Vehicle Off, key out of the ignition/keyless start transmitter 1 m (3 ft) from the vehicle, and all vehicle systems Off.

   - Greater than 2 min

5. Ignition On / Vehicle In Service Mode & Engine Off
6. Verify DTC P17D4, P185F, P279A, P279B, P279C is only set as a history DTC.
   - **If any of the DTCs are set Refer to: Circuit/System Testing**
   - **If any of the DTCs are set as history Refer to Diagnostic Aids before proceeding with Circuit/System Testing.**
   - **If none of the DTCs are set**
7. Clear All Vehicle DTCs
8. Operate the vehicle within the Conditions for Running the DTC. You may also operate the vehicle within the conditions that you observed from the Freeze Frame/Failure Records data.
9. Verify DTC P17D4, P185F, P279A, P279B, P279C is not set.
   - **If the DTC is set**

     Refer to: Circuit/System Testing

   - **If the DTC is not set**
10. All OK.

Circuit/System Testing

1. Monitor the scan tool parameter: 4WD Low Signal - (K20)
2. Operate the component: S77 Transfer Case Shift Control Switch - 4WD Low
3. Verify the scan tool parameter: 4WD Low Signal = Enabled

cardiagn.com

- **If the parameter does not display the following: Enabled**

  Test or replace the component: Transfer Case Assembly

- **If the parameter displays the following: Enabled**

4. Operate the component: S77 Transfer Case Shift Control Switch - 2WD
5. Verify the scan tool parameter: 4WD Low Signal Disabled
   - **If the parameter does not display the following: Disabled**

     Test or replace the component: Transfer Case Assembly

   - **If the parameter displays the following: Disabled**
6. Program the ECM.
7. Operate the component: S77 Transfer Case Shift Control Switch - 4WD High/Locked
8. Operate the vehicle within the Conditions for Running the DTC.
9. Verify the DTC does not set.
   - **If the DTC sets**

     Replace the component: K20 Engine Control Module

   - **If the DTC does not set**
10. Operate the component: S77 Transfer Case Shift Control Switch - 4WD Low
11. Operate the vehicle within the Conditions for Running the DTC.
12. Verify the DTC does not set.
    - **If the DTC sets**

      Replace the component: K20 Engine Control Module

    - **If the DTC does not set**
13. Operate the component: S77 Transfer Case Shift Control Switch - Neutral
14. Operate the vehicle within the Conditions for Running the DTC.
15. Verify the DTC does not set.
    - **If the DTC sets**

cardiagn.com

Replace the component: K20 Engine Control Module

- **If the DTC does not set**

16. All OK.

Repair Instructions

Perform the Diagnostic Repair Verification after completing the repair: **Diagnostic Repair Verification**

For control module replacement, programming, and setup refer to: **Control Module References**

Refer to **Transfer Case Assembly Replacement**

DTC P17D4, P185F OR P279A-P279C: TRANSFER CASE/FOUR WHEEL DRIVE (4WD) NEUTRAL RANGE PERFORMANCE (L83)

Diagnostic Instructions

- Perform the Diagnostic System Check prior to using this diagnostic procedure: **Diagnostic System Check - Vehicle**
- Review the description of Strategy Based Diagnosis: **Strategy Based Diagnosis**
- An overview of each diagnostic category can be found here: **Diagnostic Procedure Instructions**

DTC Descriptor

NOTE: **This procedure may also diagnose malfunctions that are not detected by a DTC.**

DTC P17D4

Transfer Case Neutral Range Detected in High or Low Range - If equipped

DTC P185F

Transfer Case Shift Pending Signal Not Plausible - If equipped

DTC P279A

Transfer Case High Range Incorrect Ratio

DTC P279B

cardiagn.com

Transfer Case Low Range Incorrect Ratio - If equipped

DTC P279C

Four Wheel Drive (4WD) Neutral Range Performance - If equipped

Circuit/System Description

The ECM uses the following two ways to determine if the transfer case is in 4WD Low, 4WD High or Neutral.

1. Compare the transmission output speed sensor (Transmission OSS) to the transfer case output speed sensor (Transfer Case OSS - parameter name inside ECM) (B115 Vehicle Speed Sensor - component code name in Schematics) in order to calculate transfer case range.
2. Use a LAN message sent by the transfer case shift control module to the ECM.

The ECM uses this message to determine motor torque required and transmission shifting.

The internal fault detection is handled inside the control module. No external circuit diagnosis is involved.

Conditions for Running the DTC

- Engine = Running - For greater than 5 s
- Vehicle Speed = 10 to 200 km/h (6 to 124 MPH)

DTCs run continuously when the above condition is met.

Conditions for Setting the DTC

- If the first way and second way of determining transfer case range do not match while in 4WD Low, 4WD High or Neutral, then the DTC is set.
- The ECM has detected 32 fail counts out of 400 samples.

DTCs run continuously when the above condition is met.

Actions Taken When the DTC Sets

DTCs P17D4, P185F, P279A, P279B, P279C are Type B DTCs.

Conditions for Clearing the DTC

cardiagn.com

DTCs P17D4, P185F, P279A, P279B, P279C are Type B DTCs.

Diagnostic Aids

- Misalignment, debris or poor connections on the transmission output speed sensor or the transfer case vehicle speed sensor can cause this DTC to set.
- Verify that the following scan tool data can be obtained and is functioning properly while operating the vehicle within the Conditions for Running the DTC. Data that is questionable may indicate a concern.
  - Transmission OSS
  - Transfer Case OSS (K20)/B115 Vehicle Speed Sensor (Transfer Case Control Schematics)
- Internal transmission mechanical faults can set these DTC's
- The Actions Taken for P279A may set DTC P16F3.
- DTC P279A, P279B, or P279C may set before P0502, P0503, P0721, P0722, P0723, P077C, P077D, P2160, P2161.
- When attempting to set ECM internal DTCs, run the engine for at least 1 min, and then shut the engine off for 2 min. Following this procedure will allow for a complete ECM shutdown. Program the ECM with the latest software version and retest the DTC to see if the DTC resets.

Reference Information

Schematic Reference

Transfer Case Control Schematics

Connector End View Reference

COMPONENT CONNECTOR END VIEWS - INDEX

Electrical Information Reference

- **Circuit Testing**
- **Connector Repairs**
- **Testing for Intermittent Conditions and Poor Connections**
- **Wiring Repairs**

DTC Type Reference

Powertrain Diagnostic Trouble Code (DTC) Type Definitions

cardiagn.com

Scan Tool Reference

Control Module References

Circuit/System Verification

NOTE: **Please first be sure to review the Diagnostic Aids before continuing further.**

1. Ignition On / Vehicle In Service Mode - Engine Off
2. Verify DTC P0502, P0503, P0721, P0722, P0723, P077C, P077D, P2160, P2161 is not set.
   - **If any of the DTCs are set** Refer to: **Diagnostic Trouble Code (DTC) List - Vehicle**
   - **If none of the DTCs are set**
3. Ignition On - Engine Running - Greater than 1 min

   NOTE: **It may take up to 2 min for all vehicle systems to power down.**

4. Ignition/Vehicle Off, key out of the ignition/keyless start transmitter 1 m (3 ft) from the vehicle, and all vehicle systems Off.

   - Greater than 2 min

5. Ignition On / Vehicle In Service Mode & Engine Off
6. Verify DTC P17D4, P185F, P279A, P279B, P279C is only set as a history DTC.
   - **If any of the DTCs are set as current.** Refer to: Circuit/System Testing
   - **If any of the DTCs are only set as history.** Refer to Diagnostic Aids before proceeding with Circuit/System Testing.
   - **If none of the DTCs are set**
7. Clear All Vehicle DTCs
8. Operate the vehicle within the Conditions for Running the DTC. You may also operate the vehicle within the conditions that you observed from the Freeze Frame/Failure Records data.
9. When operating the vehicle within the Conditions for Running the DTC, monitor the following parameters (they should match each other and show a smooth/steady curve when viewed in graph form):
   - Transmission OSS
   - Transfer Case OSS (K20)/B115 Vehicle Speed Sensor (Transfer Case Control Schematics)
   - **If the above parameters do not match or are not smooth**

cardiagn.com

Refer to: **Diagnostic Trouble Code (DTC) List - Vehicle** DTC P0720/P722 for Transmission OSS or DTC P2160/P2161 for Transfer Case OSS (K20)/B115 Vehicle Speed Sensor (Transfer Case Control Schematics)

- **If the above parameters match and are smooth**

10. Verify DTC P17D4, P185F, P279A, P279B, P279C is not set.
    - **If the DTC is set**

      Refer to: Circuit/System Testing

    - **If the DTC is not set**
11. All OK.

Circuit/System Testing

1. Monitor the scan tool parameter: 4WD Low Range Indicator Command
2. Operate the component: S77 Transfer Case Shift Control Switch - 4WD Low
3. Verify the scan tool parameter: 4WD Low Range Indicator Command = On
    - **If the parameter does not display the following:** On

      Repair or replace the component: Transfer Case Assembly

      Refer to:**Transfer Case Assembly Replacement**

    - **If the parameter displays the following:** On
4. Operate the component: S77 Transfer Case Shift Control Switch - 2WD
5. Verify the scan tool parameter: 4WD Low Range Indicator Command = Off
    - **If the parameter does not display the following:** Off

      Repair or replace the component: Transfer Case Assembly

      Refer to:**Transfer Case Assembly Replacement** .

    - **If the parameter displays the following:** Off
6. Operate the component: S77 Transfer Case Shift Control Switch - 4WD High/Locked
7. Verify the scan tool parameter: 4WD Low Range Indicator Command = Off

cardiagn.com

- **If the parameter does not display the following:** Off

  Repair or replace the component: Transfer Case Assembly

  Refer to:**Transfer Case Assembly Replacement** .

- **If the parameter displays the following:** Off

8. Operate the component: S77 Transfer Case Shift Control Switch - Neutral
9. Verify the scan tool parameter: 4WD Low Range Indicator Command = Off
   - **If the parameter does not display the following:** Off

     Repair or replace the component: Transfer Case Assembly

     Refer to:**Transfer Case Assembly Replacement** .

   - **If the parameter displays the following:** Off
10. Clear DTCs
11. Operate the vehicle within the Conditions for Running the DTC.
12. Verify the DTC does not set.
    - **If the DTC sets**

    1. Program the ECM.
    2. Operate the vehicle within the Conditions for Running the DTC.
    3. Verify the DTC does not set.
       - **If the DTC sets**

       Replace the component: K20 Engine Control Module

       1. Program the ECM.
       2. Operate the vehicle within the Conditions for Running the DTC.

       NOTE: **Internal damaged components may cause this DTC to set.**

       3. Verify the DTC does not set.
          - **If the DTC sets**

cardiagn.com

Repair or replace as necessary - Transfer Case

- **If the DTC does not set**

13. All OK.

Repair Instructions

Perform the Diagnostic Repair Verification after completing the repair: **Diagnostic Repair Verification**

For control module replacement, programming, and setup refer to: **Control Module References**

DTC P2160 OR P2161: VEHICLE SPEED SENSOR (VSS) 2 CIRCUIT (2-WIRE)

Diagnostic Instructions

- Perform the **Diagnostic System Check - Vehicle** prior to using this diagnostic procedure.
- Review **Strategy Based Diagnosis** for an overview of the diagnostic approach.
- Refer to **Diagnostic Procedure Instructions** to provide an overview of each diagnostic category.

DTC Descriptors

DTC P2160

Vehicle Speed Sensor (VSS) 2 Circuit Low Voltage

DTC P2161

Vehicle Speed Sensor (VSS) 2 Circuit Intermittent

Diagnostic Fault Information

Circuit	Short to Ground	Open/High Resistance	Short to Voltage	Signal Performance
VSS Supply Voltage	P2160, P2161	P2160, P2161	P2160, P2161	P2161
VSS Signal	P2160, P2161	P2160, P2161	P2160, P2161	P2161

Circuit/System Description

The vehicle speed sensor (VSS) provides vehicle speed information to the engine control module (ECM). The VSS is a permanent magnet generator.

cardiagn.com

The sensor is mounted in the transfer case facing the rear internal gear which is splined to the output shaft assembly. As the output shaft and internal gear rotate, the toothed rotor of the internal gear produces AC voltage as the rotor teeth pass through the magnetic field of the sensor. The AC voltage level and the number of pulses increase as the speed of the vehicle increases. The ECM converts the voltage to vehicle speed. The ECM uses the output shaft speed signal to determine shift timing, as well as transfer case range.

Conditions for Running the DTC

P2160

- No input speed sensor (ISS) DTCs P0716 or P0717.
- No output speed sensor (OSS) DTCs P0722 or P0723.
- No vehicle speed sensor (VSS) DTCs P2160 or P2161.
- The throttle position is greater than 5 percent and less than 99 percent.
- The transmission is not in Reverse Inhibit state.
- The transmission is not in PARK or NEUTRAL.
- The transmission is not performing garage shifting.
- No engine torque, throttle position, and turbine speed DTCs.
- The engine torque is greater than 60 N.m (44 lb ft) and less than 8192 N.m (6042 lb ft).
- The input speed is greater than 1000 RPM and less than 7500 RPM.

P2161

- The transmission is not performing garage shifting.
- The transmission is not in Reverse Inhibit state.
- The transmission is not in PARK or NEUTRAL.
- The engine speed is 1000 RPM or greater.
- No crank sensor or P2160 DTCs.

Conditions for Setting the DTC

P2160

- No speed signal from the transfer case speed sensor.
- The transfer case output shaft speed is 50 RPM or less.

cardiagn.com

P2161

- Loss of speed signal from the transfer case speed sensor.
- Output speed signal is increasing: current transfer case speed signal - last valid output speed greater than 475 RPM.
- Output speed signal is decreasing: current transfer case speed signal - last valid output speed less than 255 RPM.

Action Taken When the DTC Sets

- DTCs P2160 and P2161 are Type B DTCs.
- The TCM commands maximum line pressure.
- The TCM freezes transmission adaptive functions.
- The TCM calculates vehicle speed from the automatic transmission input shaft speed sensor and commanded gear.
- The Actions Taken for DTC P2160 or P6161 may set DTC P16F3.

Conditions for Clearing the DTC

DTCs P2160 and P2161 are Type B DTCs.

Diagnostic Aids

- The transfer case drain plug provides a good ground point.
- The **EL-49742** harness provides a good source for 12 V and ground.
- Inspect the rear internal gear teeth for damage.
- Visually inspect the VSS for cracks or damage.
- Ensure the VSS is properly torqued to the transfer case housing.
- This diagnostic relates to the VSS located in the transfer case and not the OSS located within the transmission.

Reference Information

Schematic Reference

- **Transfer Case Control Schematics**
- **Engine Controls Schematics** for 5.3L (L83) or 6.2L (L86)

Connector End View Reference

cardiagn.com

COMPONENT CONNECTOR END VIEWS - INDEX

Description and Operation

Transfer Case Description and Operation

Electrical Information Reference

- **Circuit Testing**
- **Connector Repairs**
- **Testing for Intermittent Conditions and Poor Connections**
- **Wiring Repairs**

DTC Type Reference

Powertrain Diagnostic Trouble Code (DTC) Type Definitions

Scan Tool Reference

Control Module References for scan tool information

Special Tools

- **EL-49742** Battery Voltage B+ and Ground Source Harness
- **J-35616** GM-Approved Terminal Test Kit

For equivalent regional tools, refer to **Special Tools**.

Circuit/System Verification

1. Raise and support the drive wheels.
2. Start and idle the engine.
3. Place the transmission in DRIVE.
4. Monitor VSS on the scan tool under engine data.
5. The VSS on the scan tool should be greater than 100 RPM.

Circuit/System Testing

cardiagn.com

1. Key OFF. Let sit for 2 minutes to ensure that the ECM shuts down.
2. Disconnect the X1 connector from the VSS. Using the J 35616-2A GY probes, test for less than 0.1 V between the following circuits and a good ground.
   - VSS high signal circuit, VSS harness X1 pin A.
   - VSS low signal circuit, VSS harness X1 pin B.
     - If the voltage is greater than the specified value, test the affected circuit for a short to voltage. If all circuits and connections test normal, test the ECM for proper operation.
3. Key ON, engine OFF. Test for a diagnostic 2-3 V (low current) between the following circuits and a good ground.
   - VSS high signal circuit, VSS harness X1 pin A.
   - VSS low signal circuit, VSS harness X1 pin B.
     - If the voltage is less than the specified value, test the affected circuit for an open/high resistance, short to ground or short together. If all circuits and connections test normal, test the ECM for proper operation.
     - If the voltage is greater than the specified value, test the affected circuit for a short to voltage. If all circuits and connections test normal, test the ECM for proper operation.
4. Test the VSS for proper operation.

Component Testing

VSS

1. Key OFF.
2. Disconnect the X1 connector from the VSS. Using the J-35616-3 GY probes, test for 1200-2140 Ω between the VSS high signal circuit, VSS pin A, and the VSS low signal circuit, VSS pin B.
   - If the resistance is outside the specified value, replace the VSS.
3. Test for greater than 10 M Ω between the following circuits and a good ground.
   - VSS high signal circuit, VSS pin A.
   - VSS low signal circuit, VSS pin B.
     - If the resistance is below the specified value, Replace the VSS.
4. Block the front wheels. Raise and support the driver's side rear wheel. While rotating the raised wheel by hand, test for greater than 0.4 V AC between the VSS high signal circuit, VSS pin A, and the VSS low signal circuit, VSS harness pin B. The passenger side rear wheel takes more effort to turn. If both drive wheels are raised and unblocked, twice the effort will be required to reach 0.4 V AC. If the vehicle is sufficiently supported to safely place the transmission in neutral, less effort will be required to turn the raised wheel.

cardiagn.com

- If the AC voltage is below the specified value, replace the VSS.

ECM

1. Remove key from the ignition. Let sit for 2 minutes to ensure ECM shut down
2. Disconnect the X1 connector from the ECM. Using the J-35616-64B L-BU probes, test for 1200-2140 Ω between the VSS high signal circuit, ECM X1, pin 71 and the VSS low signal circuit, ECM X1, pin 72.
   - If the resistance is below the specified value, test the affected circuits for being shorted together. If all circuits and connections test normal, test the VSS for proper operation.
   - If the resistance is above the specified value, test the affected circuits for open/high resistance condition. If all circuits and connections test normal, test the VSS for proper operation.
3. Using the J-35616-64B L-BU probes, test for greater than 1 M Ω between the following circuits and a good ground.
   - VSS high signal circuit, ECM harness X1 pin 71.
   - VSS low signal circuit, ECM harness X1 pin 72.
     - If the resistance is below the specified value, test the affected circuit for being shorted to ground. If all circuits and connections test normal, test the VSS for proper operation.
4. Reprogram the ECM. If the DTC continues to set, replace the ECM.

Repair Instructions

Perform the **Diagnostic Repair Verification** after completing the diagnostic procedure.

- Ensure that the VSS is 500 RPM or greater for 3 seconds and does not change more than 500 RPM or greater for 3 seconds.
- Refer to **Vehicle Speed Sensor Replacement**
- Refer to **Control Module References** for ECM replacement, setup, and programming

SYMPTOMS - TRANSFER CASE

IMPORTANT:

- Perform the **Diagnostic System Check - Vehicle** before using the symptom tables in order to verify the following statements are true:
  - There are no diagnostic trouble codes (DTCs) set.
  - The control modules can communicate via the serial data link.
- Review the system operation in order to familiarize yourself with the system functions. Refer to **Transfer Case Description**

cardiagn.com

and Operation.

Visual/Physical Inspection

- Inspect for aftermarket devices which could affect the operation of the automatic transfer case system. Refer to **Checking Aftermarket Accessories** .
- Inspect the easily accessible or visible system components for obvious damage or conditions which could cause the symptom.
- Inspect the automatic transfer case for the proper fluid level.

Intermittent

Faulty electrical connections or wiring may cause intermittent conditions. Refer to **Testing for Intermittent Conditions and Poor Connections** .

Symptom List

Refer to a symptom diagnostic procedure from the following list in order to diagnose the symptom:

- **Front Axle Will Not Engage**
- **Front Axle Will Not Disengage**
- **Transfer Case Shift Control Switch Inoperative**
- **No Correction for Slip in All-Wheel Drive Mode**
- **Transfer Case Shift Control Switch Indicator Always On - Two or More**
- **Transfer Case Shift Control Switch Indicator Inoperative - One or More**
- **Service Indicator Always On**
- **Transfer Case Popping Noise**
- **Transfer Case Banging Noise**
- **Transfer Case Whine or Rumble Noise**
- **Transfer Case Growl or Grinding Noise**
- **Transfer Case Grating Noise**
- **Transfer Case Clunk in 2HI Only**
- **Transfer Case Clunk in 4HI**
- **Transfer Case Clunk During Acceleration and Deceleration**

cardiagn.com

- **Transfer Case Shudder or Binding**
- **Transfer Case Leak Diagnosis**

FRONT AXLE WILL NOT ENGAGE

Diagnostic Instructions

- Perform the **Diagnostic System Check - Vehicle** prior to using this diagnostic procedure.
- Review **Strategy Based Diagnosis** for an overview of the diagnostic approach.
- Refer to **Diagnostic Procedure Instructions** to provide an overview of each diagnostic category.

Circuit/System Description

The front axle control circuit consists of an electric motor actuator which engages and disengages the front axle. The front axle actuator motor consists of a permanent magnetic motor, a worm gear controlled plunger, a front axle switch and an electronic control circuit within the actuator assembly.

The front axle actuator consists of the following circuits:

- The front axle control circuit, which is also connected to the transfer case shift control module
- The front axle switch circuit, which is also connected to the transfer case shift control module
- An ignition 3 voltage circuit
- A ground circuit

When a shift to AUTO 4WD, 4HI, or 4LO is requested, the transfer case shift control module engages the front axle by grounding the front axle control circuit through a current limiting driver.

Reference Information

Schematic Reference

Transfer Case Control Schematics

Connector End View Reference

COMPONENT CONNECTOR END VIEWS - INDEX

cardiagn.com

Electrical Information Reference

- **Circuit Testing**
- **Connector Repairs**
- **Testing for Intermittent Conditions and Poor Connections**
- **Wiring Repairs**

Scan Tool Reference

Control Module References for scan tool information.

Circuit/System Testing

1. If this is occurring without DTC C0379 setting it is likely related to a mechanical issue. Refer to **Four-Wheel Drive Does Not Engage** .
2. If no mechanical issue is found replace the front axle actuator.

Repair Instructions

Perform the **Diagnostic Repair Verification** after completing the diagnostic procedure.

- Refer to **Control Module References** for TCSCM replacement, setup, and programming
- Refer to **Transfer Case High/Low Clutch Reset**
- Refer to **Four-Wheel Drive Does Not Engage**
- Refer to **Four-Wheel Drive Does Not Disengage**
- Refer to **Front Drive Axle Actuator Replacement (8.25 Inch LD Axle)** **Front Drive Axle Actuator Replacement (9.25 Inch HD Axle)**

FRONT AXLE WILL NOT DISENGAGE

Diagnostic Instructions

- Perform the **Diagnostic System Check - Vehicle** prior to using this diagnostic procedure.
- Review **Strategy Based Diagnosis** for an overview of the diagnostic approach.
- Refer to **Diagnostic Procedure Instructions** to provide an overview of each diagnostic category.

Circuit/System Description

cardiagn.com

The front axle control circuit consists of an electric motor actuator which engages and disengages the front axle. The front axle actuator motor consists of a permanent magnetic motor, a worm gear controlled plunger, a front axle switch and an electronic control circuit within the actuator assembly.

The front axle actuator consists of the following circuits:

- The front axle control circuit, which is also connected to the transfer case shift control module
- The front axle switch circuit, which is also connected to the transfer case shift control module
- An ignition 3 voltage circuit
- A ground circuit

When a shift to AUTO 4WD, 4HI, or 4LO is requested, the transfer case shift control module engages the front axle by grounding the front axle control circuit through a current limiting driver.

Reference Information

Schematic Reference

Transfer Case Control Schematics

Connector End View Reference

COMPONENT CONNECTOR END VIEWS - INDEX

Electrical Information Reference

- **Circuit Testing**
- **Connector Repairs**
- **Testing for Intermittent Conditions and Poor Connections**
- **Wiring Repairs**

Scan Tool Reference

Control Module References for scan tool information.

Circuit/System Testing

cardiagn.com

1. If this is occurring without DTC C0379 setting it is likely related to a mechanical issue. Refer to **Four-Wheel Drive Does Not Disengage** .
2. If no mechanical issue is found replace the front axle actuator.

Repair Instructions

Perform the **Diagnostic Repair Verification** after completing the diagnostic procedure.

- Refer to **Control Module References** for TCSCM replacement, setup, and programming
- Refer to **Transfer Case High/Low Clutch Reset**
- Refer to **Four-Wheel Drive Does Not Engage**
- Refer to **Four-Wheel Drive Does Not Disengage**
- Refer to **Front Drive Axle Actuator Replacement (8.25 Inch LD Axle)** **Front Drive Axle Actuator Replacement (9.25 Inch HD Axle)**

TRANSFER CASE SHIFT CONTROL SWITCH INOPERATIVE

Diagnostic Instructions

- Perform the **Diagnostic System Check - Vehicle** prior to using this diagnostic procedure.
- Review **Strategy Based Diagnosis** for an overview of the diagnostic approach.
- Refer to **Diagnostic Procedure Instructions** to provide an overview of each diagnostic category.

Circuit/System Description

The active transfer case mode switch circuit consists of 5 modes. The transfer case shift control module supplies 5 volts to the switch through the 5-volt reference circuit. The current travel through the resistor of the currently active mode. The current is then returned to the transfer case shift control module through the switch signal circuit.

The transfer case shift control module constantly monitors this signal voltage to determine the condition of the mode switch circuit.

When each of the modes are selected they complete a circuit through their own specific resistor. The transfer case shift control module continuously monitors the switch input to determine whether the Neutral, AWD, 2HI, 4HI, or 4LO mode was selected by the driver.

Reference Information

Schematic Reference

Transfer Case Control Schematics

cardiagn.com

Connector End View Reference

COMPONENT CONNECTOR END VIEWS - INDEX

Electrical Information Reference

- **Circuit Testing**
- **Connector Repairs**
- **Testing for Intermittent Conditions and Poor Connections**
- **Wiring Repairs**

Scan Tool Reference

Control Module References for scan tool information.

Diagnostic Aids

If the 5-volt reference or the switch signal wire are shorted to ground the scan tool can show up to 7.5 volts.

Circuit/System Testing

1. Review the scan tool data list mode switch selected and select difference mode with the transfer case shift control switch. Does the mode switch selected parameter on the scan tool change as you change modes on the switch?
2. If the modes change according to the scan tool replace the transfer case control module, reprogram, complete the motor learn procedure. If the modes on the scan tool not change replace the switch.

Repair Instructions

Perform the **Diagnostic Repair Verification** after completing the diagnostic procedure.

- Refer to **Transfer Case Selector Switch Replacement (Chevrolet / GMC)Transfer Case Selector Switch Replacement (Cadillac)**
- Refer to **Control Module References** for TCSCM replacement, setup, and programming
- Refer to **Transfer Case High/Low Clutch Reset**

NO CORRECTION FOR SLIP IN ALL-WHEEL DRIVE MODE

Diagnostic Instructions

cardiagn.com

- Perform the **Diagnostic System Check - Vehicle** prior to using this diagnostic procedure.
- Review **Strategy Based Diagnosis** for an overview of the diagnostic approach.
- Refer to **Diagnostic Procedure Instructions** to provide an overview of each diagnostic category.

Circuit/System Description

When transfer case is in auto 4WD mode the transfer case control module monitors the front wheel speeds and the rear wheel speeds. When a noticeable difference between the front and rear is seen the transfer case control module sends a PWM voltage to the motor so it can apply the clutch in order to correct a slip condition. The slip conditions is the difference in speed between the front and rear axles. The module has a thermal model based system so when the slip correction can not be made when a large percentage PWM signal has been sent, it will disable the system to prevent damage to the clutches.

Reference Information

Schematic Reference

Transfer Case Control Schematics

Connector End View Reference

COMPONENT CONNECTOR END VIEWS - INDEX

Electrical Information Reference

- **Circuit Testing**
- **Connector Repairs**
- **Testing for Intermittent Conditions and Poor Connections**
- **Wiring Repairs**

Scan Tool Reference

Control Module References for scan tool information.

Diagnostic Aids

Erratic wheel speed sensors can cause this condition to occur. Monitor the wheel speeds using the EBCM scan tool data list.

Circuit/System Testing

cardiagn.com

1. Monitor the wheel speed sensors using the EBCM scan tool data list. If the wheel speeds are erratic or there is a large difference between front and rear then diagnose and repair as necessary. Check for EBCM DTCs as they have likely set for wheel speed performance.
2. If nothing is found with wheel speed performance then the clutches may be excessively warn. Refer to **Transfer Case Disassemble (Light Duty)** **Transfer Case Disassemble (Heavy Duty)** .

Repair Instructions

Perform the **Diagnostic Repair Verification** after completing the diagnostic procedure.

Refer to **Transfer Case Disassemble (Light Duty)** **Transfer Case Disassemble (Heavy Duty)**

TRANSFER CASE SHIFT CONTROL SWITCH INDICATOR ALWAYS ON - TWO OR MORE

Diagnostic Instructions

- Perform the **Diagnostic System Check - Vehicle** prior to using this diagnostic procedure.
- Review **Strategy Based Diagnosis** for an overview of the diagnostic approach.
- Refer to **Diagnostic Procedure Instructions** to provide an overview of each diagnostic category.

Circuit/System Description

The indicator circuits consists of an interior lights dimming circuit and an indicator control circuit. When a mode has been selected, current is supplied to the indicator by the interior lights dimming circuit, traveling through the indicator LED, at which time the transfer case shift control module supplies the ground through the indicator lamp control circuit.

Reference Information

Schematic Reference

Transfer Case Control Schematics

Connector End View Reference

COMPONENT CONNECTOR END VIEWS - INDEX

Electrical Information Reference

- **Circuit Testing**

cardiagn.com

- Connector Repairs
- Testing for Intermittent Conditions and Poor Connections
- Wiring Repairs

Scan Tool Reference

Control Module References for scan tool information.

Diagnostic Aids

A short to ground on the indicator control circuit will cause the indicator to remain on at all times.

Circuit/System Testing

1. With in ignition off disconnect connector X1 at the transfer case control module and turn the ignition on. If the affected indicator goes out replace the transfer case control module, program, and perform the motor learn procedure.
2. If the affected indicator did not go out check for a short to ground on the affected indicator control circuit. If this checks as good then replace the transfer case shift control switch.

Repair Instructions

Perform the Diagnostic Repair Verification after completing the diagnostic procedure.

- Refer to Transfer Case Selector Switch Replacement (Chevrolet / GMC)Transfer Case Selector Switch Replacement (Cadillac)
- Refer to Control Module References for TCSCM replacement, setup, and programming
- Refer to Transfer Case High/Low Clutch Reset

TRANSFER CASE SHIFT CONTROL SWITCH INDICATOR INOPERATIVE - ONE OR MORE

Diagnostic Instructions

- Perform the Diagnostic System Check - Vehicle prior to using this diagnostic procedure.
- Review Strategy Based Diagnosis for an overview of the diagnostic approach.
- Refer to Diagnostic Procedure Instructions to provide an overview of each diagnostic category.

Circuit/System Description

The indicator circuits consists of an interior lights dimming circuit and an indicator control circuit. When a mode has been selected, current is

cardiagn.com

supplied to the indicator by the interior lights dimming circuit, traveling through the indicator LED, at which time the transfer case shift control module supplies the ground through the indicator lamp control circuit.

Reference Information

Schematic Reference

Transfer Case Control Schematics

Connector End View Reference

COMPONENT CONNECTOR END VIEWS - INDEX

Electrical Information Reference

- **Circuit Testing**
- **Connector Repairs**
- **Testing for Intermittent Conditions and Poor Connections**
- **Wiring Repairs**

Scan Tool Reference

Control Module References for scan tool information.

Diagnostic Aids

A short to ground on the indicator control circuit will cause the indicator to remain on at all times.

Circuit/System Testing

1. With in ignition off disconnect connector X1 at the transfer case control module and turn the ignition on. With a jumper wire probe the indicator control circuit of the affected indicator and take the other end of the jumper to ground. If the indicator comes on then replace the transfer case control module, program, and perform the motor learn procedure
2. If the affected indicator did not come on then check the indicator control circuit for an open or high resistance. If the circuit checks good then replace the transfer case shift control switch.

Repair Instructions

cardiagn.com

Perform the **Diagnostic Repair Verification** after completing the diagnostic procedure.

- Refer to **Transfer Case Selector Switch Replacement (Chevrolet / GMC)Transfer Case Selector Switch Replacement (Cadillac)**
- Refer to **Control Module References** for TCSCM replacement, setup, and programming
- Refer to **Transfer Case High/Low Clutch Reset**

SERVICE INDICATOR ALWAYS ON

Diagnostic Instructions

- Perform the **Diagnostic System Check - Vehicle** prior to using this diagnostic procedure.
- Review **Strategy Based Diagnosis** for an overview of the diagnostic approach.
- Refer to **Diagnostic Procedure Instructions** to provide an overview of each diagnostic category.

Circuit/System Description

If the service indicator needs to be turned on the transfer case shift control module sends a signal via LAN to the instrument panel asking the I/P to command the Service 4WD indicator.

Reference Information

Schematic Reference

Transfer Case Control Schematics

Connector End View Reference

COMPONENT CONNECTOR END VIEWS - INDEX

Electrical Information Reference

- **Circuit Testing**
- **Connector Repairs**
- **Testing for Intermittent Conditions and Poor Connections**
- **Wiring Repairs**

Scan Tool Reference

cardiagn.com

Control Module References for scan tool information.

Circuit/System Testing

1. If the Service 4WD indicator is on and there are no DTCs check the fuse for the transfer case as this would cause the transfer case control module to drop off the LAN causing a service indicator.
2. If the fuse is good check the module power and grounds for proper connections as this could cause the same thing as a blown fuse.
3. If this checks OK then check all other U codes that may be set against the transfer case shift control module such as I/P, BCM, PCM, and follow the proper U code diagnostic.

Repair Instructions

Perform the **Diagnostic Repair Verification** after completing the diagnostic procedure.

- Refer to **Control Module References** for TCSCM replacement, setup, and programming
- Refer to **Transfer Case High/Low Clutch Reset**

TRANSFER CASE HIGH/LOW CLUTCH RESET

Using a Scan Tool

1. Key ON, engine OFF.
2. Select the Module Setup heading on the scan tool, under transfer case control module.
3. Select the Range Actuator Learn procedure.
4. When the Range Actuator Learn procedure is initiated you should hear the motor engage, indicating a successful learn procedure.

Using The Transfer Case Shift Control Switch

NOTE: **The Learn procedure is performed with the ignition in the ACCESSORY position. The shift to transfer case NEUTRAL procedure uses this same procedure, but with the key in the RUN position.**

1. Key OFF for at least 30 s.
2. Engage parking brake.
3. Place transmission in Neutral.
4. Turn the S77 Transfer Case Shift Control Switch to the 2WD HI position for at least 5 s.
5. Turn the S77 Transfer Case Shift Control Switch clockwise past the 4WD HI position until it stops and hold for at least 30 s.

cardiagn.com

6. An audible noise from the A16 Transfer Case Encoder Motor should occur, indicating a successful learn procedure.

TRANSFER CASE POPPING NOISE

Cause	Correction
DEFINITION: a faulty internal transfer case component that causes a light popping noise in the transfer case. A light popping type noise that occurs when shifting, and quits after the shift is completed would be considered normal. When shifting out of 4HI in a mode shift, there may be a delay and a popping may be heard when the 4HI clutch disengages. 1. Compare the noise to a similar vehicle to see if a normal condition. 2. Identify the source of the noise using chassis ears and refer to the appropriate service manual section. 3. Note specifics such as when the noise is present (2HI, 4HI, or 4LO). 4. Note if the noise relative to vehicle speed, is noisy on turns, or other specifics. 5. If the source of the noise is the transfer case, inspect for the correct fluid level. 6. Inspect the drain plug for large metal deposits. Small metal flakes and fine metal dust on the plug magnet are to be considered normal. Review the **Symptoms - Transfer Case** and perform the necessary inspections.	
Transmission or transfer case mounts loose or damaged	Repair or replace the mounts as required
Propeller shaft center support bearing loose or damaged (as applicable)	Replace the center support bearing as required. Refer to **Symptoms - Propeller Shaft** .
Propeller shaft universal joints worn	Replace the universal joints as required. Refer to **Symptoms - Propeller Shaft** .
Suspension components worn	Replace the suspension components as required. Refer to **Noise Diagnosis - Front Suspension** , or **Noise Diagnosis - Rear Suspension** .
Front axle actuator shift noise	**NOTE:** **When shifting from 2WD-to-4WD or 4WD-to-2WD, the front axle actuator may be heard**

cardiagn.com

Cause	Correction
	engaging or disengaging and the axle internal components shifting. This is to be considered a normal condition. Shift from 2WD-to-4WD and from 4WD-to-2WD to determine if the noise source is the front axle to determine if this is a normal condition.
Transfer case drive and driven sprockets worn or a stretched chain causing a chain jump condition	**NOTE:** • **A chain jump condition may cause a banging noise and can only occur with the vehicle in 4WD.** • **A chain jump condition may be caused by water intrusion into the transfer case and**

cardiagn.com

Cause	Correction
	deterioration of the transfer case fluid. Water intrusion conditions may occur in extreme off road conditions or in situations where under-vehicle power washing occurs. 1. Inspect the oil for water intrusion and/or fluid discoloration and contamination. 2. Inspect the vent hose for proper routing and connection to the transfer case. 3. Inspect for damages internal components. Refer to **Drive Chain, Drive Sprocket, and Driven Sprocket Cleaning and Inspection**. 4. Replace the chain and sprockets as required. Refer to **Transfer Case Disassemble**, and **Transfer Case Assemble**.

TRANSFER CASE BANGING NOISE

Cause	Correction
A faulty internal transfer case component that causes a loud banging noise in the transfer case.	

cardiagn.com

Cause	Correction
1. Compare the noise to a similar vehicle to see if a normal condition. 2. Identify the source of the noise using chassis ears and refer to the appropriate service manual section. 3. Note specifics such as when the noise is present (2HI, 4HI, or 4LO). 4. Note if the noise is relative to vehicle speed, is noisy on turns, or other specifics. 5. If the source of the noise is the transfer case, inspect for the correct fluid level. 6. Inspect the drain plug for large metal deposits. Small metal flakes and fine metal dust on the plug magnet are to be considered normal. Review the **Symptoms - Transfer Case** and perform the necessary inspections.	
Transmission or transfer case mounts loose or damaged	Repair or replace the mounts as required
Propeller shaft center support bearing loose or damaged (as applicable)	Replace the center support bearing as required. Refer to **Symptoms - Propeller Shaft** .
Propeller shaft universal joints worn	Replace the universal joints as required. Refer to **Symptoms - Propeller Shaft** .
Suspension components worn	Replace the Suspension components as required. Refer to **Noise Diagnosis - Front Suspension** , or **Noise Diagnosis - Rear Suspension** .
Transfer case rear output shaft bushing worn	**NOTE:** **A worn bushing and or slip yoke may also create a clunk type noise and may be indicated by a leaking rear output shaft seal.** Replace the rear output shaft bushing and propeller shaft slip yoke as required.

cardiagn.com

Cause	Correction
Transfer case drive and driven sprockets worn or a stretched chain causing a chain jump condition	**NOTE:** • **A chain jump condition may cause a banging noise and can only occur with the vehicle in 4WD.** • **A chain jump condition may be caused by water intrusion into the transfer case and deterioration of the transfer case fluid. Water intrusion conditions may occur in extreme off road conditions or in situations**

cardiagn.com

Cause	Correction
	where under-vehicle power washing occurs. 1. Inspect the oil for water intrusion and/or fluid discoloration and contamination. 2. Inspect the vent hose for proper routing and connection to the transfer case. 3. Inspect for damaged internal components. Refer to **Drive Chain, Drive Sprocket, and Driven Sprocket Cleaning and Inspection**. 4. Replace the chain and sprockets as required. Refer to **Transfer Case Disassemble**, and **Transfer Case Assemble**.

TRANSFER CASE WHINE OR RUMBLE NOISE

Cause	Correction
DEFINITION: A faulty internal transfer case component that causes a whine or rumbling noise in the transfer case. 1. Compare the noise to a similar vehicle to see if a normal condition. 2. Identify the source of the noise using chassis ears and refer to the appropriate service manual section. 3. Note specifics such as when the noise is present (2HI, 4HI, or 4LO). 4. Note if the noise relative to vehicle speed, is noisy on turns, or other specifics. 5. If the source of the noise is the transfer case, inspect for the correct fluid level. 6. Inspect the drain plug for large metal deposits. Small metal flakes and fine metal dust on the plug magnet are to be considered normal. Review the **Symptoms - Transfer Case** and perform the necessary inspections.	
Tire noise	**NOTE:** **A high pitch**

cardiagn.com

Cause	Correction
	whine or low pitch rumble noise that increases as vehicle speed increases may be caused by tires that are, unevenly inflated, unevenly worn or have an aggressive tread pattern. Rotate or substitute tires and retest. Refer to **Tire and Wheel Inspection** .
Propeller shaft center support bearing worn (as applicable)	**NOTE:** **A high pitch whine or low pitch rumble noise that increases as vehicle speed increases may be caused by a worn center support**

cardiagn.com

Cause	Correction
	bearing. Replace the center support bearing as required. Refer to **Symptoms - Propeller Shaft** .
Propeller shaft universal joints worn	**NOTE:** **A high pitch whine or low pitch rumble noise that increases as vehicle speed increases may be caused by worn universal joints.** Replace the universal joints as required. Refer to **Symptoms - Propeller Shaft**
Front or rear axle bearings worn	**NOTE:** • **A high pitch whine or low pitch rumble noise that increases as vehicle speed increase may be caused by worn**

cardiagn.com

Cause	Correction
	axle bearings. • To determine if the noise is front axle related, remove the front propeller shaft and retest. Repair or replace the axle as required. Refer to **Symptoms - Front Drive Axle** , or **Symptoms - Rear Drive Axle** .
Transmission rear output shaft bearing worn	**NOTE:** A high pitch whine or low pitch rumble noise that increases as transmission output shaft speed increases may be caused by a worn transmission output shaft bearing.

cardiagn.com

Cause	Correction
	Repair or replace the transmission as required. Refer to **Symptoms - Automatic Transmission** .
Transfer case fluid level low	**NOTE:** **A high pitch whine or low pitch rumble noise that increases as transmission output shaft speed increases may be caused by a low transfer case fluid level.** Fill the transfer case to the correct fluid level and retest.

cardiagn.com

Cause	Correction
Transfer case input shaft bearing worn	**NOTE:** **A high pitch whine or low pitch rumble noise that increases as transmission output shaft speed increases may be caused by a worn transfer case input shaft bearing.** Replace the bearing as required. Refer to **Transfer Case Disassemble**, and **Transfer Case Assemble**.
Transfer case rear output shaft bushing worn	**NOTE:** • **An excessively worn bushing may be indicated by a leaking rear output shaft seal.** • **A high pitch whine or low pitch**

cardiagn.com

Cause	Correction
	rumble noise that increases as vehicle speed increases may be caused by a worn transfer case rear output shaft bushing. Replace the rear output shaft bushing and propeller shaft slip yoke as required. Refer to **Transfer Case Rear Extension Bushing Replacement**.
Transfer case front or rear output shaft bearings worn	**NOTE:** **A high pitch whine or low pitch rumble noise that increases with road speed may be caused by the front or rear output shaft bearing.** Replace the bearings as required. Refer to **Transfer Case Disassemble**, and **Transfer Case Assemble**.

cardiagn.com

TRANSFER CASE GROWL OR GRINDING NOISE

Cause	Correction
DEFINITION: A faulty internal transfer case component that causes a low pitch growl or grinding noise in the transfer case while the vehicle is turning left or right or in a four wheel drive mode. A low pitch growl noise with the vehicle in 4HI is to be considered normal. Heavy duty NQH transfer case applications are noisier by design in 4HI than are the light duty applications. Review the **Symptoms - Transfer Case** and perform the necessary inspections.	
Tire wear	**NOTE:** **A growl noise that increases as vehicle speed increases may be caused by tires that are unevenly worn, unevenly inflated, or have an aggressive tread pattern.** Rotate or substitute tires and retest. Refer to **Tire and Wheel Inspection** .
Propeller shaft center support bearing worn (as applicable)	**NOTE:** **A growl or grinding noise that increases as vehicle speed increase**

cardiagn.com

Cause	Correction
	may be caused by a worn center support bearing. Replace the center support bearing as required. Refer to **Symptoms - Propeller Shaft** .
Propeller shaft universal joints worn	**NOTE:** **A growl or grinding noise that increases as vehicle speed increase may be caused by worn universal joints.** Replace the universal joints as required. Refer to **Symptoms - Propeller Shaft**
Front or rear axle bearings worn	**NOTE:** • **A growl or grinding noise that increases as vehicle speed increase may be caused**

cardiagn.com

Cause	Correction
	by worn axle bearings. • To determine if the noise is front axle related, remove the front propeller shaft and retest. Repair or replace the axle as required. Refer to **Symptoms - Front Drive Axle** , or **Symptoms - Rear Drive Axle** .
Transmission rear output shaft bearing worn	**NOTE:** A growl or grinding noise that increases as transmission output shaft speed increases may be caused by a worn transmission output shaft bearing.

cardiagn.com

Cause	Correction
	Replace transmission components as required. Refer to **Symptoms - Automatic Transmission** .
Transfer case fluid level low	**NOTE:** **A growl or grinding noise that increases as transmission output shaft speed increases may be caused by a low transfer case fluid level.** Fill the transfer case to the correct fluid level and retest.
Transfer case input shaft bearing worn	**NOTE:** **A high pitch whine or low pitch rumble noise that increases as transmission output shaft speed increases may be caused by a worn transfer case input shaft bearing.**

cardiagn.com

Cause	Correction
	Replace the bearing as required. Refer to **Transfer Case Disassemble**, and **Transfer Case Assemble**.
Transfer case rear output shaft bushing worn	**NOTE:** • **An excessively worn bushing may be indicated by a leaking rear output shaft seal.** • **A growl or grinding noise that increases as vehicle speed increases may be caused by a worn transfer case rear output shaft bushing.** Replace the rear output shaft bushing and propeller shaft slip yoke as required. Refer to **Transfer Case Rear Extension Bushing Replacement**.
Transfer case front or rear output shaft bearings worn	**NOTE:**

cardiagn.com

Cause	Correction
	A high pitch whine or low pitch rumble noise that increases with road speed may be caused by the front or rear output shaft bearing. Replace the bearings as required. Refer to **Transfer Case Disassemble**, and **Transfer Case Assemble**.

TRANSFER CASE GRATING NOISE

Cause	Correction
DEFINITION: A faulty internal transfer case component that causes a grating noise in the transfer case while in the AWD or 4HI mode. Review the **Symptoms - Transfer Case** and perform the necessary inspections.	
Broken clutch apply plate	1. Inspect for a broken clutch apply plate. Refer to **Transfer Case Disassemble**, and **Transfer Case Assemble**. 2. Replace the apply plate and the transfer case components that are damaged from debris. Refer to **Transfer Case Disassemble**, and **Transfer Case Assemble**.
Faulty control actuator lever thrust bearings	1. Inspect for faulty control actuator lever thrust bearings. Refer to **Two/Four Wheel Drive Shift Components Cleaning and Inspection**. 2. Recondition the transfer case components that are damaged from debris. Refer to **Transfer Case Disassemble**, and **Transfer Case Assemble**.

TRANSFER CASE CLUNK IN 2HI ONLY

cardiagn.com

Cause	Correction
DEFINITION: A faulty internal transfer case component that causes a clunk that is heard or felt during acceleration or deceleration with the transfer case in 2HI mode only. 1. Compare the noise to a similar vehicle to see if a normal condition. 2. Identify the source of the noise using chassis ears and refer to the appropriate service manual section. 3. Note specifics such as when the noise is present (2HI, 4HI, or 4LO). 4. Note if the noise relative to vehicle speed, is noisy on turns, or other specifics. 5. If the source of the noise is the transfer case, inspect for the correct fluid level. 6. Inspect the drain plug for large metal deposits. Small metal flakes and fine metal dust on the plug magnet are to be considered normal. Review the **Symptoms - Transfer Case** and perform the necessary inspections.	
Transmission or transfer case mounts loose or damaged	Repair or replace the mounts as required
Rear propeller shaft center support bearing loose or damaged (as applicable)	Replace the center support bearing as required. Refer to **Symptoms - Propeller Shaft** .
Rear propeller shaft universal joints worn	Replace the universal joints as required. Refer to **Symptoms - Propeller Shaft** .
Transfer case rear output shaft bushing worn	**NOTE:** **An excessively worn bushing may be indicated by a leaking rear output shaft seal.** Replace the rear output shaft bushing and propeller shaft slip yoke as required
Suspension components worn	Replace the suspension components as required. Refer to **Noise Diagnosis - Front Suspension** , or **Noise Diagnosis - Rear Suspension** .
Front axle actuator shift noise	**NOTE:**

cardiagn.com

Cause	Correction
	When shifting from 2WD-to-4WD or 4WD-to-2WD, the front axle actuator may be heard engaging or disengaging and the axle internal components shifting. This is to be considered a normal condition. Shift from 2WD-to-4WD and from 4WD-to-2WD to determine if the noise source is the front axle to determine if this is a normal condition.
Rear output shaft spline-to-propeller shaft slip yoke spline - excessive clearance	**NOTE:** **A clunk condition in 2WD heard when the vehicle comes to a stop or from a stop-to-acceleration situation may be caused by**

cardiagn.com

Cause	Correction
	excessive clearance between of the splines of the rear output shaft and propeller shaft slip yoke. Replace the following components: • Rear output shaft. Refer to **Transfer Case Disassemble**, and **Transfer Case Assemble**. • Propeller shaft slip yoke. Refer to **Propeller Shaft Slip Yoke Replacement** .
Transfer case rear output shaft rear bearing retaining ring incorrectly installed	1. Inspect for the following: • Improperly installed rear output shaft rear bearing outer retaining ring. The snap ring is to be installed completely into the OD groove of the bearing. • Excessive wear or damaged retaining ring groove in the rear case half 2. Repair or replace the following components as required: • Properly install a new rear output shaft rear bearing outer retaining ring. • Replace the rear case half if the retaining ring groove is excessively worn. Refer to **Transfer Case Disassemble**, and **Transfer Case Assemble**.

TRANSFER CASE CLUNK IN 4HI

Cause	Action
DEFINITION: During acceleration or deceleration, a clunk is heard or felt in the transfer case while in the 4HI range only. 1. Compare the noise to a similar vehicle and see if a normal condition. 2. Identify the source of the noise using chassis ears and refer to the appropriate service manual section.	

cardiagn.com

Cause	Action
3. Note specifics such as when the noise is present (2HI or 4HI). 4. Note if the noise relative to vehicle speed, is noisy on turns, during acceleration, stops, or other specifics. 5. If the source of the noise is the transfer case, inspect for the correct fluid level. 6. Inspect the drain plug for large metal deposits. Small metal flakes and fine metal dust on the plug magnet are to be considered normal. Review the **Symptoms - Transfer Case** and perform the necessary inspections.	
Tire pressure uneven	**NOTE:** **A clunk condition that occurs when performing slow speed turns in 4WD may be caused by low or uneven tire pressure.** 1. Set the tires to the recommended vehicle tire pressure for evaluation to see if the noise goes away. 2. Upon completion of the test, reset the tire pressure to the correct pressure as recommended on the tire.
Transmission or transfer case mounts loose or damaged	Repair or replace the mounts as required
Propeller shaft center support bearing worn (as applicable)	Replace the center support bearing as required. Refer to **Symptoms - Propeller Shaft** .
Propeller shaft universal joints worn	Replace the universal joints as required. Refer to **Symptoms - Propeller Shaft** .
Front axle actuator shift noise	**NOTE:**

cardiagn.com

Cause	Action
	When shifting from 2WD-to-4WD or 4WD-to-2WD, the front axle actuator may be heard engaging or disengaging and the axle internal components shifting. This is to be considered a normal condition. Shift from 2WD-to-4WD and from 4WD-to-2WD to determine if the noise source is the front axle to determine if this is a normal condition.
Suspension components worn	Replace the suspension components as required. Refer to **Noise Diagnosis - Front Suspension** , or **Noise Diagnosis - Rear Suspension** .
4WD gear noise	**NOTE:** **A growl or clunk that occurs with vehicle in 4WD at low speed in a tight turning radius situation may be caused by**

cardiagn.com

Cause	Action
	the gears and chain and is to be considered a normal condition and an operating characteristic of a 4WD system. Operate the vehicle in 4WD performing low speed left or right turns to confirm a transfer case gear noise.
Transfer case rear output shaft rear bearing retaining ring - incorrectly installed	1. Inspect for the following: • Improperly installed rear output shaft rear bearing outer retaining ring. The snap ring is to be installed completely into the OD groove of the bearing. • Excessive wear or damaged retaining ring groove in the rear case half 2. Repair or replace the following components AS REQUIRED: • Properly install a new rear output shaft rear bearing outer retaining ring. • Replace the rear case half if the retaining ring groove is excessively worn. Refer to **Transfer Case Disassemble**, and **Transfer Case Assemble**.

TRANSFER CASE CLUNK DURING ACCELERATION AND DECELERATION

Cause	Correction
DEFINITION: During acceleration or deceleration, a clunk is heard or felt in the transfer case when it is in AWD mode. Review the **Symptoms - Transfer Case** and perform the necessary inspections.	
Incorrect fluid level or incorrect fluid	1. Inspect the transfer case for the correct fluid level. 2. Inspect the transfer case for the correct type of fluid. Refer to **Approximate Fluid Capacities**.

cardiagn.com

Cause	Correction
	3. Flush the transfer case and fill with the correct fluid, if required. Refer to **Transfer Case Fluid Replacement**.
Excessive clearance between the slip yoke and the rear output shaft	1. Inspect for the following conditions: • Worn slip yoke splines • Worn rear output shaft splines 2. Repair or replace the following components if faulty: • Replace the slip yoke, if required. Refer to **Propeller Shaft Slip Yoke Replacement**. • Replace the rear output shaft, if required. Refer to **Transfer Case Disassemble**, and **Transfer Case Assemble**.
Excessive clearance between the slip yoke and the rear bushing	1. Inspect for the following conditions: • Worn rear bushing • Worn slip yoke bushing journal 2. Repair or replace the following components if faulty: • Replace the slip yoke, if required. Refer to **Propeller Shaft Slip Yoke Replacement**. • Replace the rear bushing if worn. Refer to **Transfer Case Rear Extension Bushing Replacement**.

TRANSFER CASE SHUDDER OR BINDING

Cause	Correction
DEFINITION: When in the AWD mode, a shudder is felt during acceleration or a crow-hop or binding while turning, which may cause tire scuffing. Review the **Symptoms - Transfer Case** and perform the necessary inspections.	
Oil breakdown or contamination	Flush the transfer case and fill with the correct fluid. Refer to **Transfer Case Fluid Replacement**.

cardiagn.com

Cause	Correction
Incorrect transfer case fluid	Flush the transfer case and fill with the correct fluid. Refer to **Transfer Case Fluid Replacement**.
Burrs on the clutch hub slots	1. Inspect the clutch disc tab slots in the clutch hub for burrs or notches. Refer to **Two/Four Wheel Drive Shift Components Cleaning and Inspection**. 2. De-burr the hub slots. If the hub slots are excessively notched, replace the clutch hub. Refer to **Transfer Case Disassemble**, and **Transfer Case Assemble**.

TRANSFER CASE LEAK DIAGNOSIS

Cause	Correction
DEFINITION: A visible indication of an external fluid leak from the transfer case. Review the **Symptoms - Transfer Case** and perform the necessary inspections. See below for suggested diagnostic method(s).	

Special Tools

- **GE 28431-6** Fluorescent Oil Dye
- **GE 28428-E** High Intensity Black Light Kit

For equivalent regional tools, refer to **Special Tools**.

Fluorescent Dye Method

1. Add **GE 28431-6** Fluorescent dye to the transmission or transfer case to determine the source of the leak.
2. Operate the vehicle.
3. Inspect for the presence of dye within the oil leak using the **GE 28428-E** High Intensity Black Light Kit. A presence or non-presence of dye within the oil leak will indicate which component is the source of the leak.

Powder Method

CAUTION:
Do not clean using brake cleaner or other

cardiagn.com

Cause	Correction
reactive solvents as these solvents can damage rubber gaskets, seals and bushings. 1. Thoroughly clean the suspected leak area using a rag. 2. Apply an aerosol type leak tracing powder to the suspected leak area. **NOTE:** **Do not drive the vehicle on the freeway as this will splatter oil inhibiting leak diagnosis.** 3. Operate the vehicle for 15-20 minutes under city driving conditions until normal operating temperatures are reached. 4. Shut OFF the engine. 5. Inspect the suspected leak area. 6. Trace the leak path through the powder in order to find the source of the leak.	
Transfer case overfill condition (wet cavity applications)	**NOTE:** • **Wet cavity adapter applications**

cardiagn.com

Cause	Correction

	include transmission RPOs M99/M30/M70.
	• **Dry cavity adapter applications include transmission RPOs MYC/MYD.**
	• **If a transfer case overfill condition is present in a wet cavity adapter application, and the fluid level within the transmission is low, the source of the leak may be a faulty transfer case input shaft oil seal.**
	
	1. Inspect for a transfer case for an overfill condition
	  1. Add **j-28431-6** Fluorescent Dye to the transmission to determine if the transfer case input shaft oil seal is the cause of the overfill.
	  2. Operate the vehicle

cardiagn.com

Cause	Correction
	3. Inspect the transfer case fluid for presence of dye within the oil using the **j-28428-E** High Intensity Black Light Kit. 2. If fluorescent dye is present within the transfer case fluid, replace the transfer case input shaft oil seal. Refer to **Input Shaft Seal Replacement**.
Transfer case adapter leak - (dry cavity applications)	**NOTE:** • **Dry cavity adapter applications (transmission RPOs MYC/MYD) with a leak at the adapter weep hole location may caused by either a leaking transmission rear output shaft oil seal or a leaking transfer case input shaft oil seal. The adapter gasket is not the source of the leak.** • **Wet cavity adapter applications (transmission**

cardiagn.com

Cause	Correction
	RPOs M99/M30/M70) with a leak may be caused by a leaking adapter gasket, adapter damage, or porosity. 1. Inspect for a restricted vent hose assembly. Repair as required. 2. Add **J-28431-6** Fluorescent Dye to the transmission to determine the source of the leak. 3. Operate the vehicle 4. Inspect the adapter weep hole for a fluid leak and for traces of dye within the oil using the **J-28428-E** High Intensity Black Light Kit. 5. If fluorescent dye is present within the fluid leak, replace the transmission rear output shaft seal. 6. If fluorescent dye is not present within the fluid leak, replace the transfer case input shaft oil seal. Refer to **Input Shaft Seal Replacement**
Transfer case adapter leak and/or adapter gasket leak - (wet cavity applications)	**NOTE:** • **Wet cavity adapter applications (transmission RPOs M99/M30/M70) with a leak may be caused by a**

cardiagn.com

Cause	Correction
	leaking adapter gasket, adapter damage, or porosity. • **Dry cavity adapter applications (transmission RPOs MYC/MYD) with a leak at the adapter weep hole location may caused by either a leaking transmission rear output shaft oil seal or a leaking transfer case input shaft oil seal. Neither the adapter or the gasket is the source of the leak.** 1. Inspect for a restricted vent hose assembly. Repair as required. 2. Inspect for a leaking wet cavity adapter gasket, adapter damage, or porosity. Replace the adapter or gasket as required. Refer to **Transfer Case Adapter Replacement**.

cardiagn.com

REPAIR INSTRUCTIONS - ON VEHICLE

TRANSFER CASE SELECTOR SWITCH REPLACEMENT (CHEVROLET / GMC)

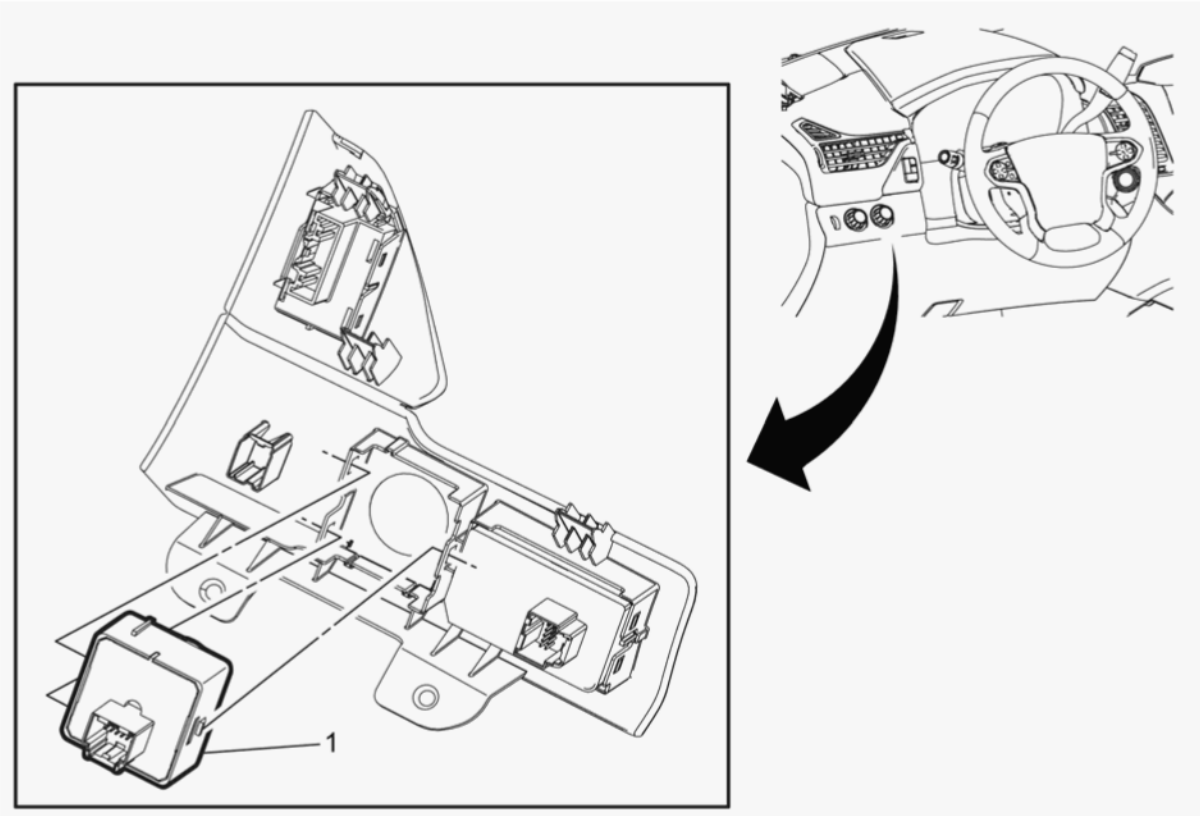

Fig. 7: Transfer Case Selector Switch (Chevrolet / GMC)
Courtesy of GENERAL MOTORS COMPANY

Callout	Component Name
Preliminary Procedure Remove instrument panel accessory bezel. Refer to **Instrument Panel Accessory Bezel Replacement (Chevrolet / GMC)** .	
1	Transfer Case Selector Switch **Procedure** Using the appropriate tool gently depress tabs to remove the switch from the bezel.

cardiagn.com

TRANSFER CASE SELECTOR SWITCH REPLACEMENT (CADILLAC)

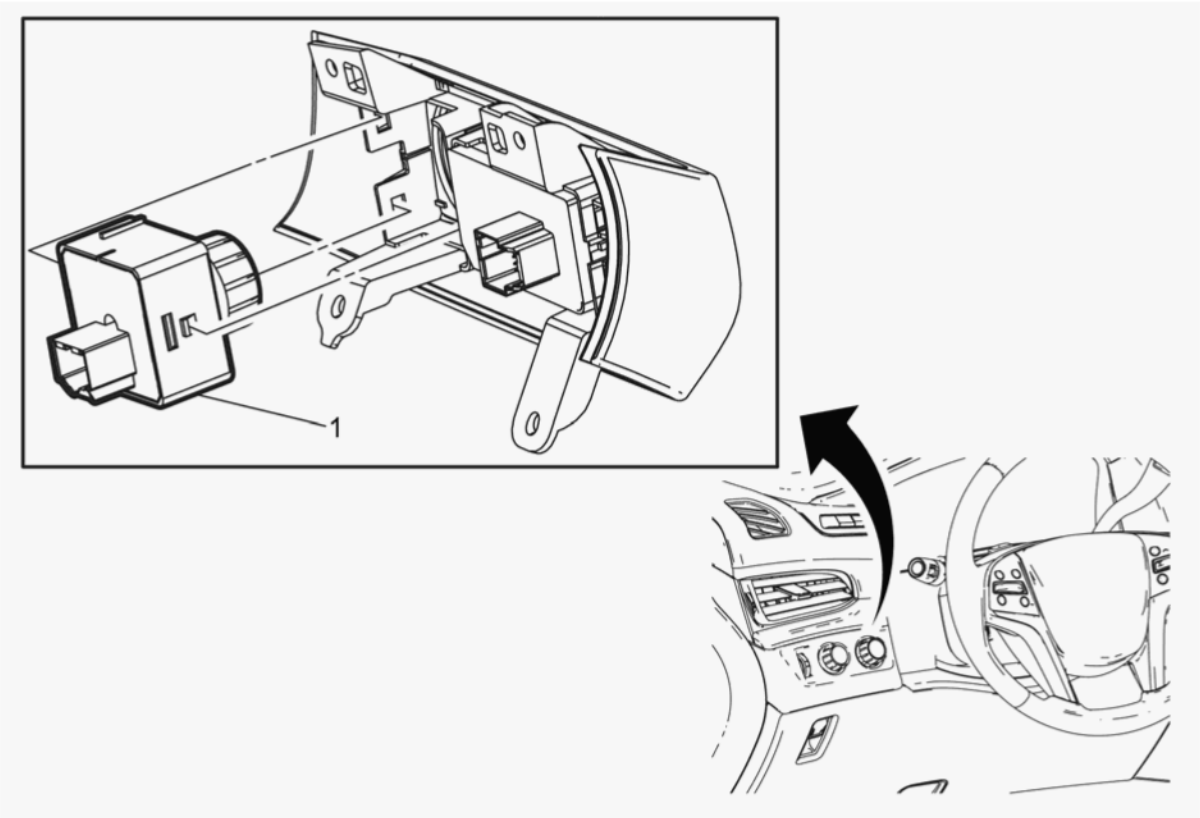

Fig. 8: Transfer Case Selector Switch (Cadillac)
Courtesy of GENERAL MOTORS COMPANY

Callout	Component Name
Preliminary Procedure Remove instrument panel accessory bezel. Refer to **Instrument Panel Accessory Bezel Replacement (Cadillac)** .	
1	Transfer Case Selector Switch **Procedure** Using the appropriate tool gently depress tabs to remove the switch from the bezel.

TRANSFER CASE CONTROL MODULE REPLACEMENT

cardiagn.com

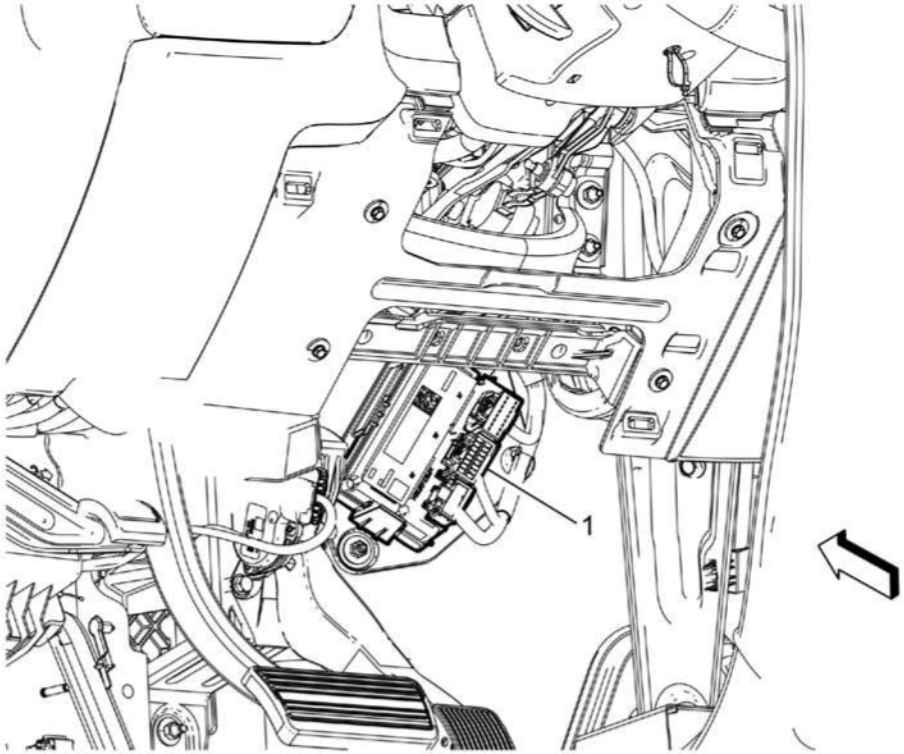

Fig. 9: Transfer Case Shift Control Module
Courtesy of GENERAL MOTORS COMPANY

Callout	Component Name
Preliminary Procedure Remove the knee bolster. Refer to **Instrument Panel Knee Bolster Replacement (Chevrolet / GMC)** **Instrument Panel Knee Bolster Replacement (Cadillac)** .	
1	Transfer Case Shift Control Module **Procedure** 1. Disconnect the electrical connector. 2. Remove the module from the module bracket by releasing the retaining tabs. 3. If installing a new module, perform the transfer case shift control module programing and setup. Refer to **Control**

cardiagn.com

Callout	Component Name
	Module References .

TRANSFER CASE SHIELD REPLACEMENT

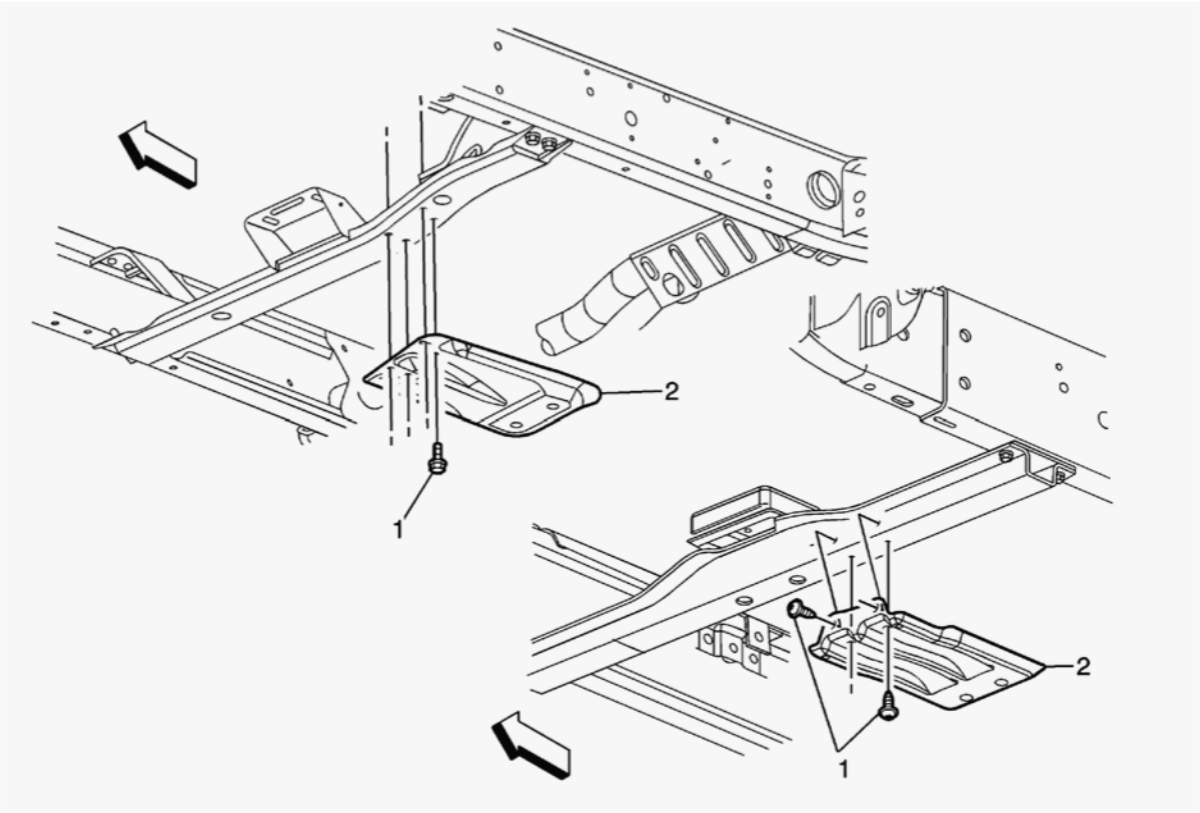

Fig. 10: Transfer Case Shield
Courtesy of GENERAL MOTORS COMPANY

Callout	Component Name
Preliminary Procedure Raise and support the vehicle. Refer to Lifting and Jacking the Vehicle .	
1	Transfer Case Shield Bolt

cardiagn.com

Callout	Component Name
	CAUTION: **Refer to Fastener Caution .** Tighten 20 N.m (15 lb ft)
2	Transfer Case Shield

TRANSFER CASE FLUID REPLACEMENT

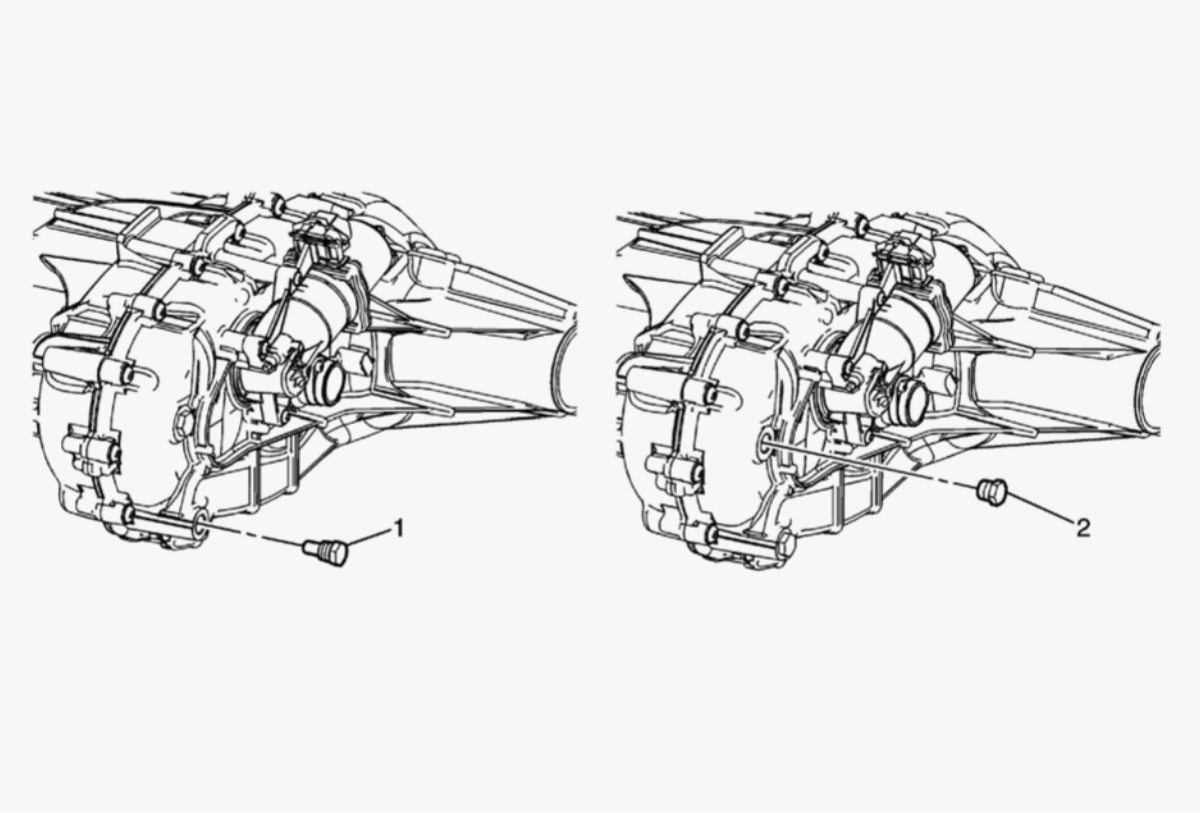

Fig. 11: Transfer Case Drain Plug And Fill Plug
Courtesy of GENERAL MOTORS COMPANY

Callout	Component Name

cardiagn.com

Callout	Component Name
Preliminary Procedures 1. Raise and support the vehicle. Refer to **Lifting and Jacking the Vehicle** . 2. Remove the transfer case shield, if equipped. Refer to **Transfer Case Shield Replacement** .	
1	Transfer Case Drain Plug **CAUTION:** **Refer to Component Fastener Tightening Caution .** **Procedure** 1. Allow the transfer case to drain completely. 2. Apply sealant to the plug threads. Refer to **Adhesives, Fluids, Lubricants, and Sealers**. **NOTE:** **Use only hand tools to remove and install the drain plug.** **Tighten** 18 N.m (13 lb ft)
2	Transfer Case Fill Plug **Procedure** 1. Fill the transfer case to the bottom of the fill plug hole with transfer case fluid. Refer to **Adhesives, Fluids,**

cardiagn.com

Callout	Component Name
	Lubricants, and Sealers. 2. Apply sealant to the plug threads. Refer to Adhesives, Fluids, Lubricants, and Sealers. **NOTE:** **Use only hand tools to remove and install the fill plug.** **Tighten** 18 N.m (13 lb ft)

DRAIN PLUG REPLACEMENT

cardiagn.com

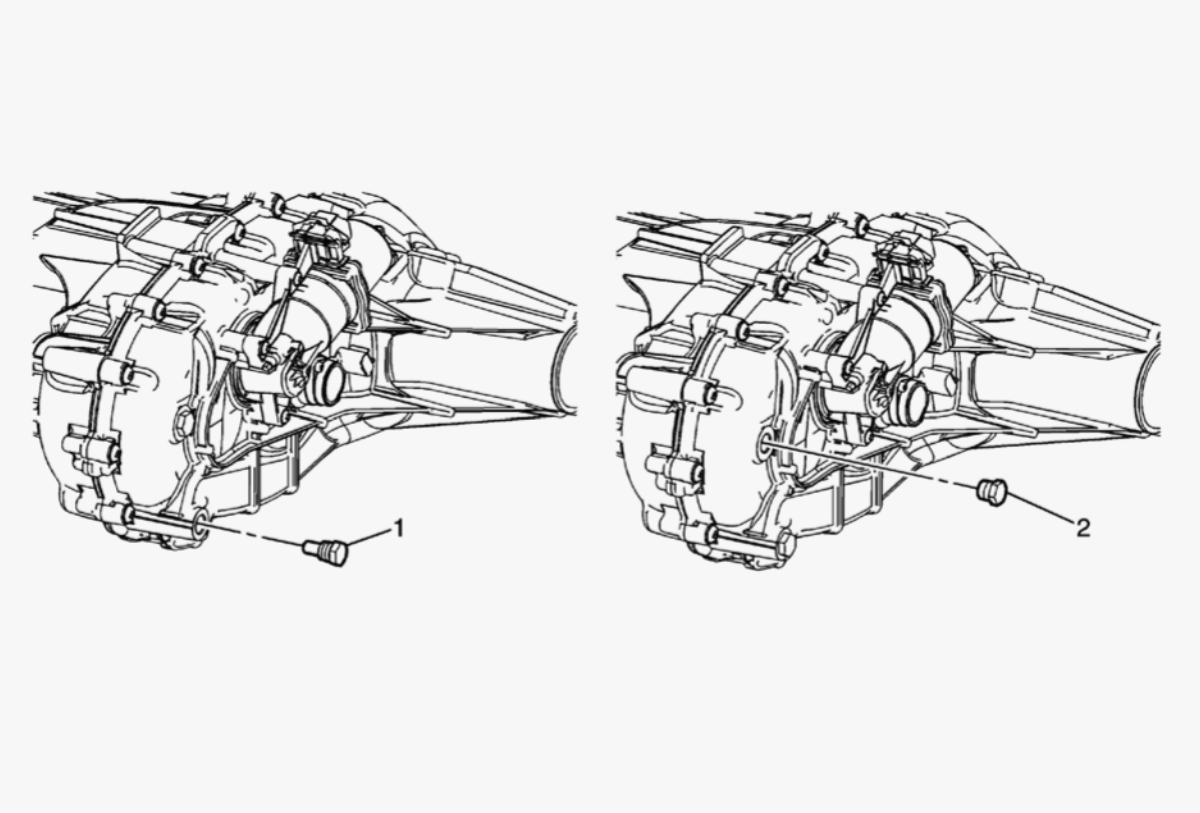

Fig. 12: Transfer Case Drain Plug And Fill Plug
Courtesy of GENERAL MOTORS COMPANY

Callout	Component Name
Preliminary Procedures 1. Raise and support the vehicle. Refer to **Lifting and Jacking the Vehicle** . 2. Remove the transfer case shield, if equipped. Refer to **Transfer Case Shield Replacement** .	
1	Transfer Case Drain Plug **CAUTION:** **Refer to** **Component**

cardiagn.com

Callout	Component Name
	Fastener Tightening Caution . **Procedure** 1. Allow the transfer case to drain completely. 2. Apply sealant to the plug threads. Refer to **Adhesives, Fluids, Lubricants, and Sealers**. **NOTE:** **Use only hand tools to remove and install the drain plug.** **Tighten** 18 N.m (13 lb ft)

cardiagn.com

Callout	Component Name
2	Transfer Case Fill Plug **Procedure** 1. Fill the transfer case to the bottom of the fill plug hole with transfer case fluid. Refer to **Adhesives, Fluids, Lubricants, and Sealers**. 2. Apply sealant to the plug threads. Refer to **Adhesives, Fluids, Lubricants, and Sealers**. **NOTE:** **Use only hand tools to remove and install the fill plug.** **Tighten** 18 N.m (13 lb ft)

FILL PLUG REPLACEMENT

Removal Procedure

1. Raise and support the vehicle. Refer to **Lifting and Jacking the Vehicle** .

cardiagn.com

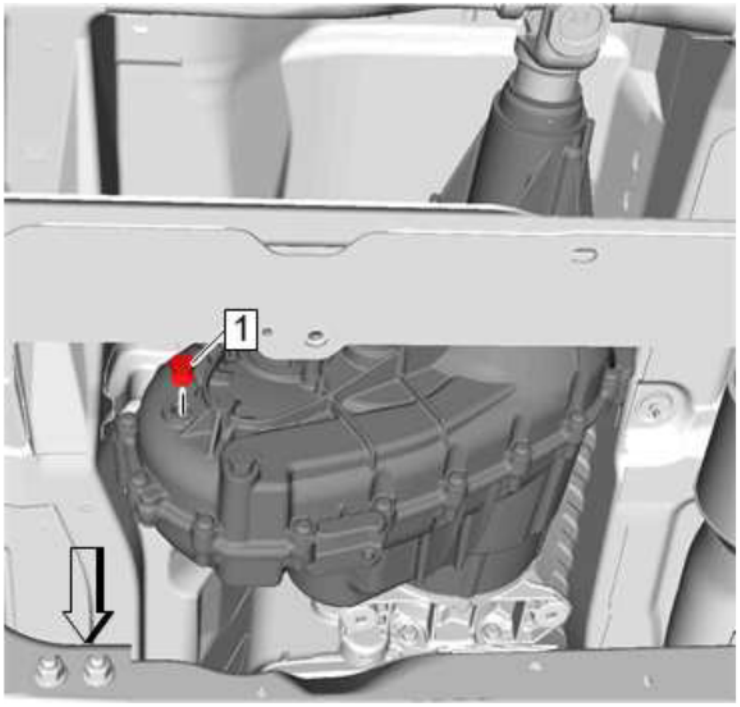

Fig. 13: Transfer Case Fill Plug
Courtesy of GENERAL MOTORS COMPANY

2. Remove the fill plug (1).

Installation Procedure

cardiagn.com

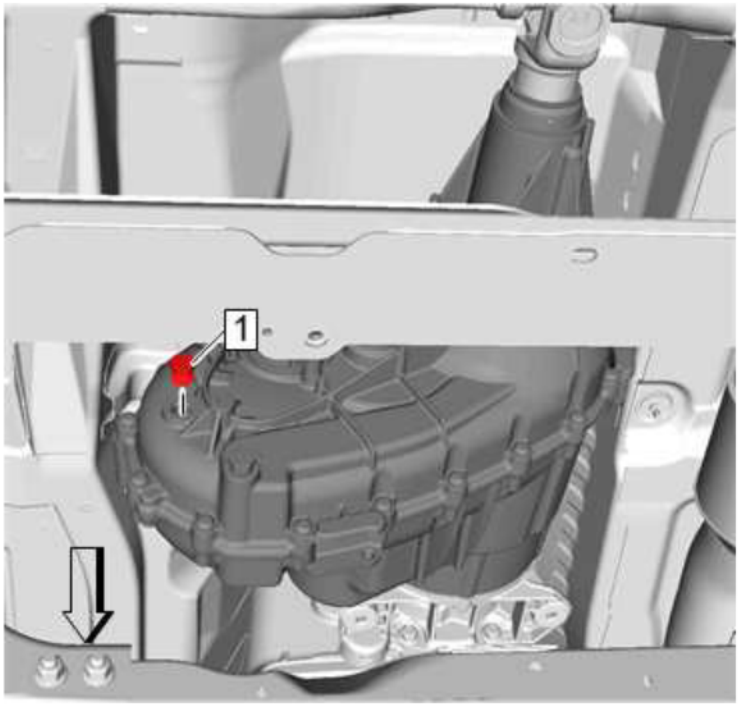

Fig. 14: Transfer Case Fill Plug
Courtesy of GENERAL MOTORS COMPANY

CAUTION: Refer to Component Fastener Tightening Caution .

1. Install the fill plug (1) and tighten to 18 N.m (13 lb ft).
2. Lower the vehicle.

TRANSFER CASE TWO/FOUR WHEEL DRIVE ACTUATOR POSITION SENSOR REPLACEMENT

cardiagn.com

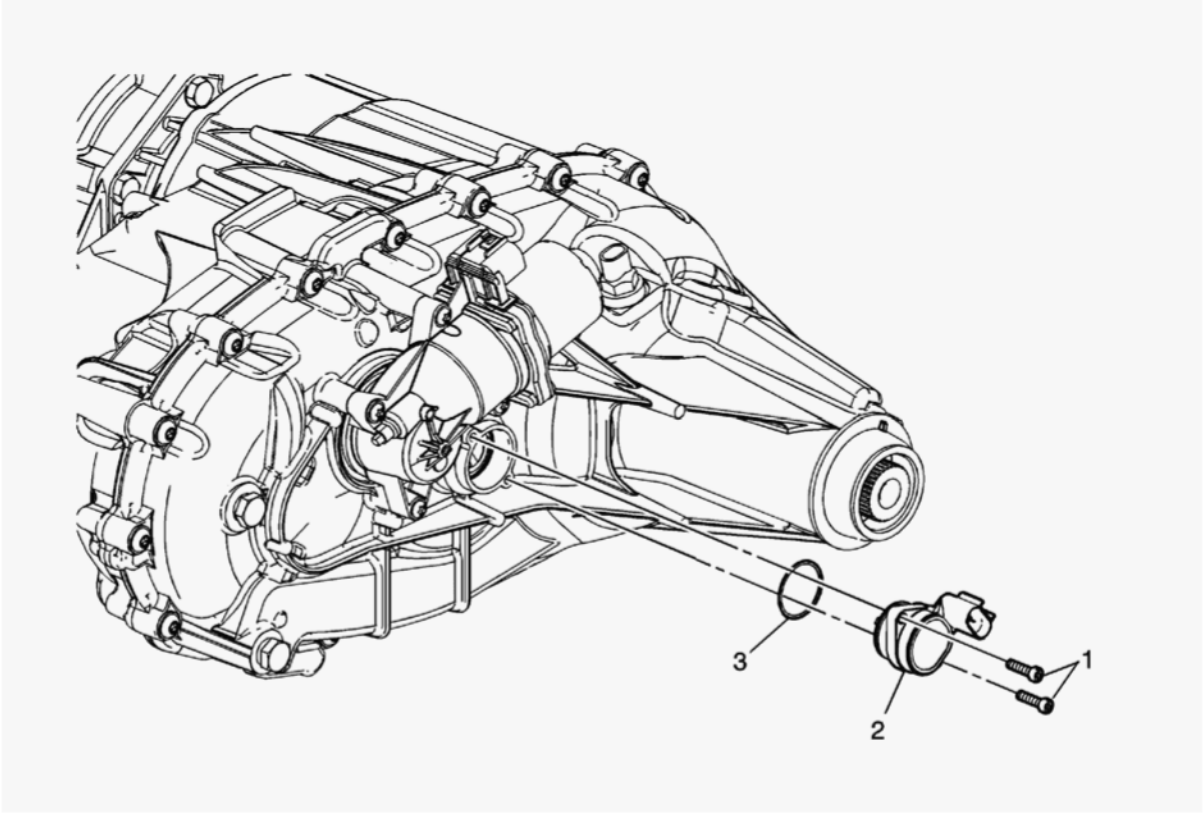

Fig. 15: Transfer Case Two/Four Wheel Drive Actuator Position Sensor
Courtesy of GENERAL MOTORS COMPANY

Callout	Component Name
Preliminary Procedure Raise and support the vehicle. Refer to **Lifting and Jacking the Vehicle** .	
1	Two/Four Wheel Drive Actuator Position Sensor Bolt (Qty: 2) **CAUTION:** **Refer to** **Fastener** **Caution** .

cardiagn.com

Callout	Component Name
	Tighten 9 N.m (80 lb in)
2	Two/Four Wheel Drive Actuator Position Sensor **Procedure** Disconnect the electrical connector.
3	Two/Four Wheel Drive Actuator Position Sensor O-Ring Seal **Procedure** Lightly lubricate the O-ring with clean. Refer to **Adhesives, Fluids, Lubricants, and Sealers**.

TRANSFER CASE TWO/FOUR WHEEL DRIVE ACTUATOR REPLACEMENT

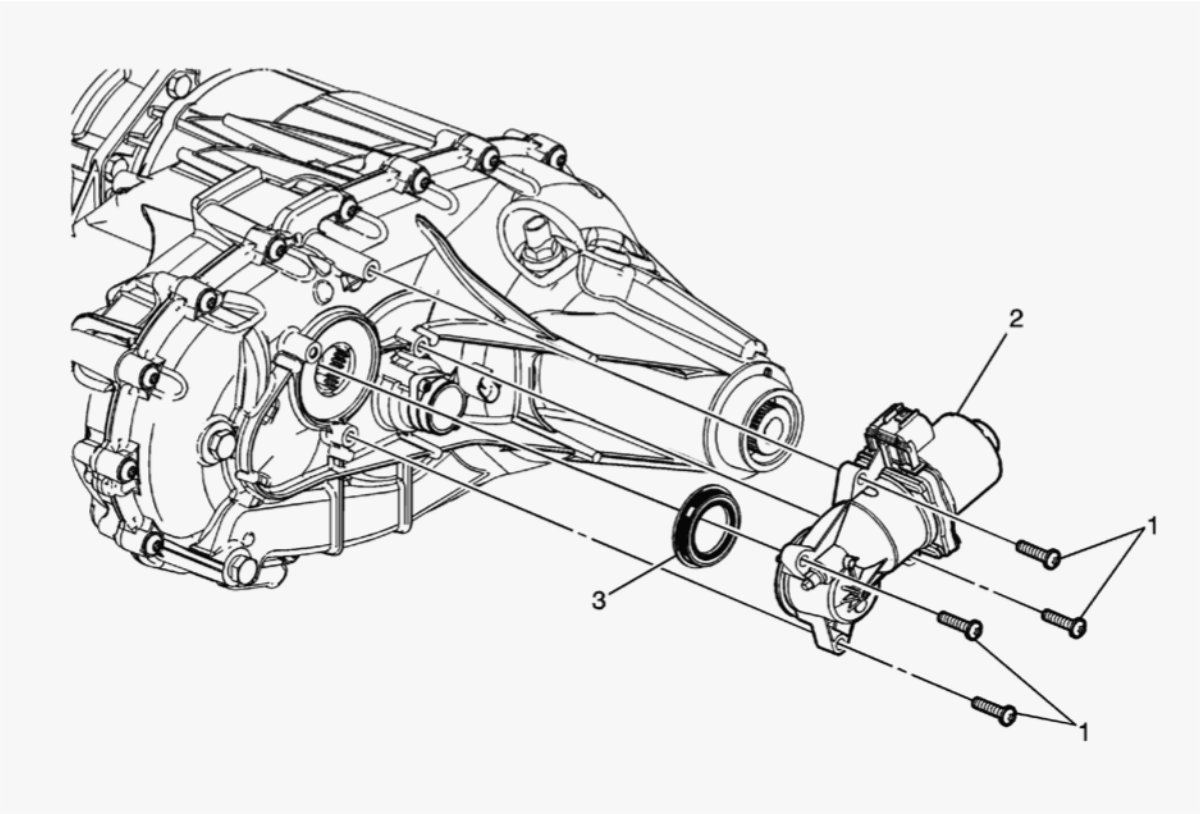

Fig. 16: Transfer Case Two/Four Wheel Drive Actuator
Courtesy of GENERAL MOTORS COMPANY

cardiagn.com

Callout	Component Name
Preliminary Procedure Raise and support the vehicle. Refer to **Lifting and Jacking the Vehicle** .	
1	Two/Four Wheel Drive Actuator Bolt (Qty: 4) **CAUTION:** **Refer to Fastener Caution .** **Tighten** 18 N.m (13 lb ft)
2	Two/Four Wheel Drive Actuator **Procedure** Disconnect the electrical connector.
3	Two/Four Wheel Drive Actuator Seal **Procedure** 1. Use **J-45278** seal remover and **J-23907** slide hammer to remove the seal from the actuator. 2. Use the **J-44907** bearing installer to install the seal to the actuator. **NOTE:** **Remove the seal from the actuator ONLY if seal replacement is necessary.** **Special Tools** • **J-23907** Slide Hammer • **J-44907** Bearing Installer

cardiagn.com

Callout	Component Name
	• **J-45278** Seal Remover For equivalent regional tools, refer to **Special Tools**.

VEHICLE SPEED SENSOR REPLACEMENT

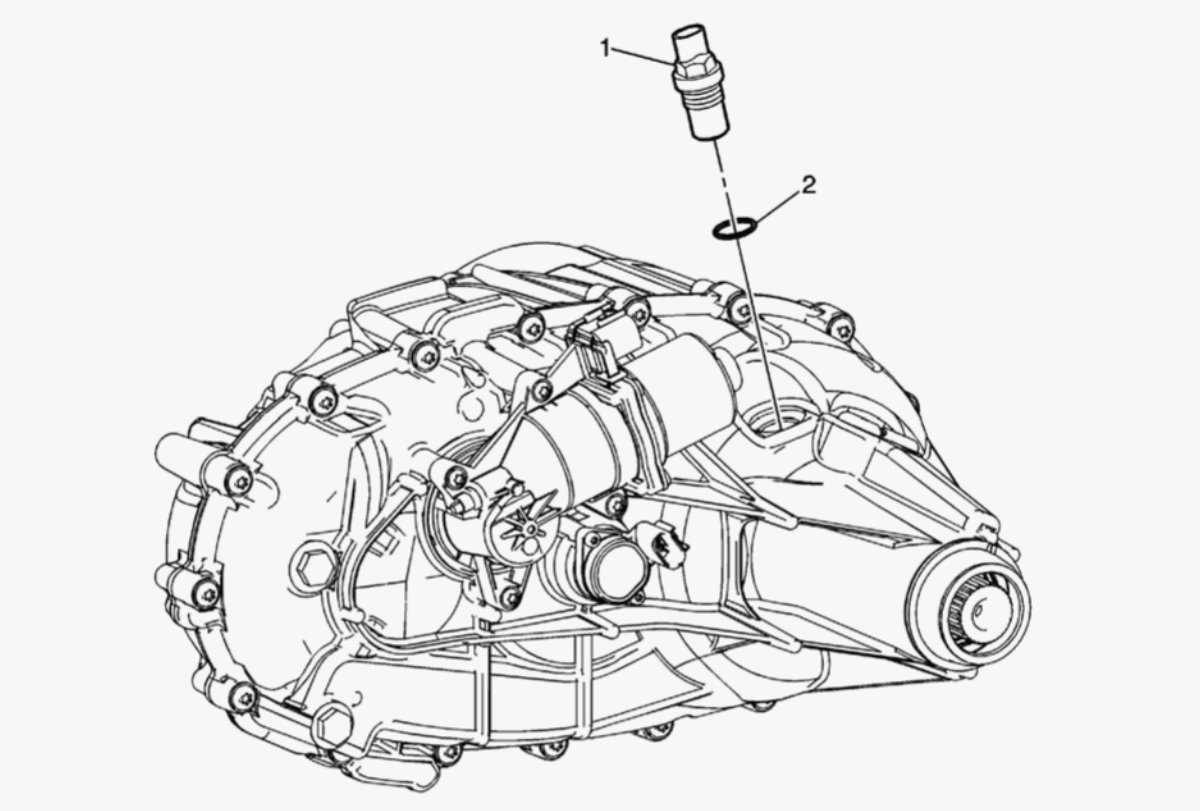

Fig. 17: Vehicle Speed Sensor
Courtesy of GENERAL MOTORS COMPANY

Callout	Component Name
Preliminary Procedures	
1. Raise and support the vehicle. Refer to **Lifting and Jacking the Vehicle** .	

cardiagn.com

Callout	Component Name
2. Remove the transfer case shield, if equipped. Refer to **Transfer Case Shield Replacement** .	
1	Vehicle Speed Sensor **CAUTION:** **Refer to Component Fastener Tightening Caution .** **Procedure** Disconnect vehicle speed sensor electrical connector. **Tighten** 17 N.m (13 lb ft)
2	Vehicle Speed Sensor O-Ring **Procedure** Lightly lubricate the O-ring with clean transfer case fluid. Refer to **Adhesives, Fluids, Lubricants, and Sealers**.

FRONT OUTPUT SHAFT SEAL REPLACEMENT

Special Tools

- **DT-50649** Seal Installer
- **J-8092** Driver Handle

For equivalent regional tools, refer to **Special Tools** .

Removal Procedure

1. Raise and support the vehicle. Refer to **Lifting and Jacking the Vehicle** .
2. Remove the transfer case shield, if equipped. Refer to **Transfer Case Shield Replacement** .
3. Remove the front propeller shaft. Refer to **Front Axle Propeller Shaft Replacement (NP0)** **Front Axle Propeller Shaft Replacement (Heavy Duty)** .

cardiagn.com

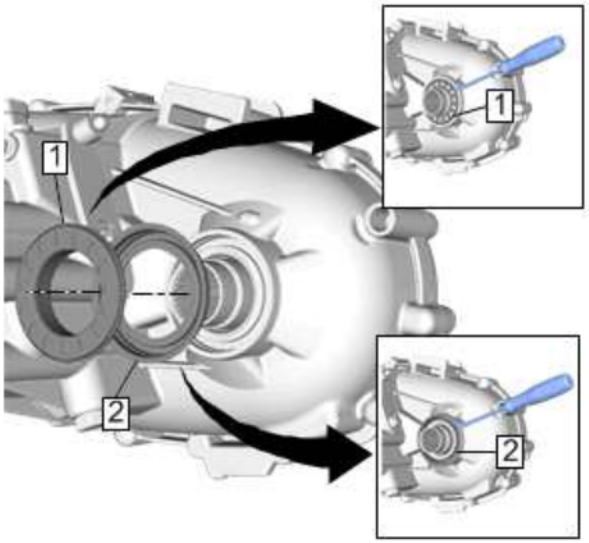

Fig. 18: Front Output Shaft Slinger And Oil Seal
Courtesy of GENERAL MOTORS COMPANY

NOTE: **Remove the front output shaft seal in two pieces using the following procedure.**

4. Insert a screwdriver between the metal inner and metal outer portions of the seal.
5. Pry upward in multiple locations working the metal inner portion of the seal off the shaft until removed.
6. Once the inner metal portion is removed, insert a screwdriver between the outer diameter metal flange of the seal and the housing.
7. Drive the screwdriver inward in multiple locations, the outer portion of the seal will be distorted and can easily be removed from the housing.

Installation Procedure

cardiagn.com

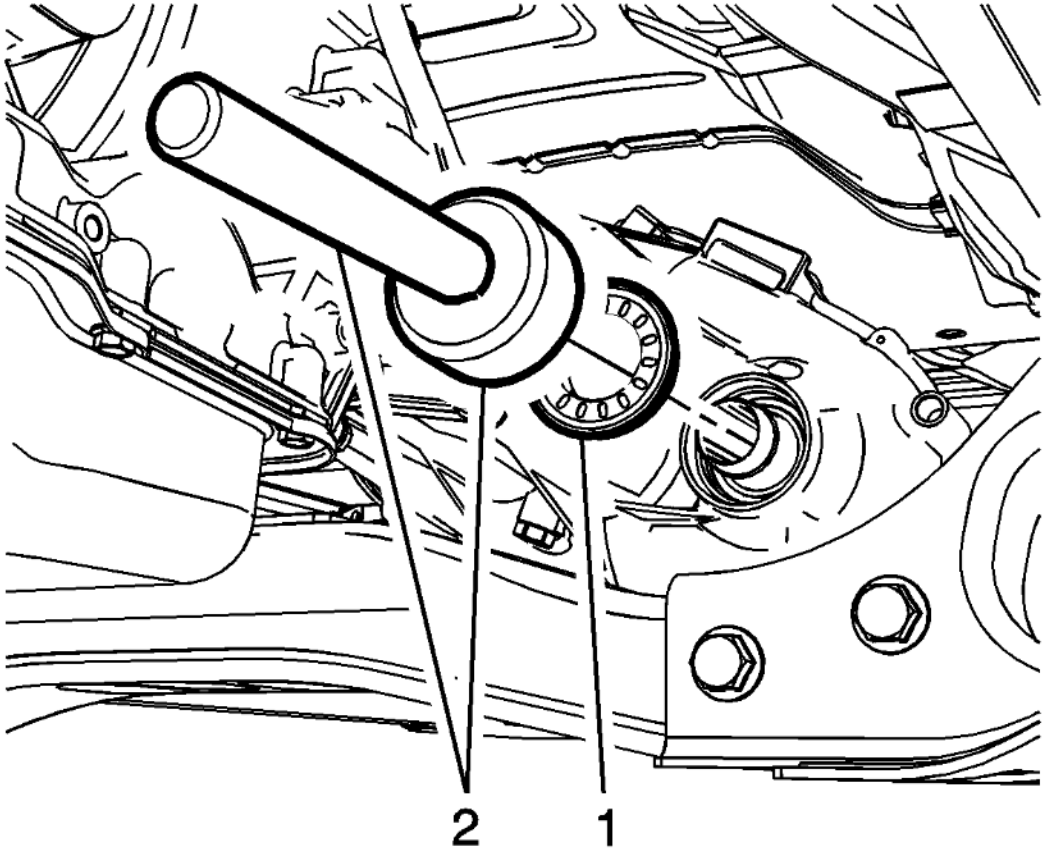

Fig. 19: Front Output Shaft Oil Seal And Installer
Courtesy of GENERAL MOTORS COMPANY

1. Using the **J-8092** driver handle and **DT-50649** installer (2) install the front output shaft oil seal (1) to the transfer case.

cardiagn.com

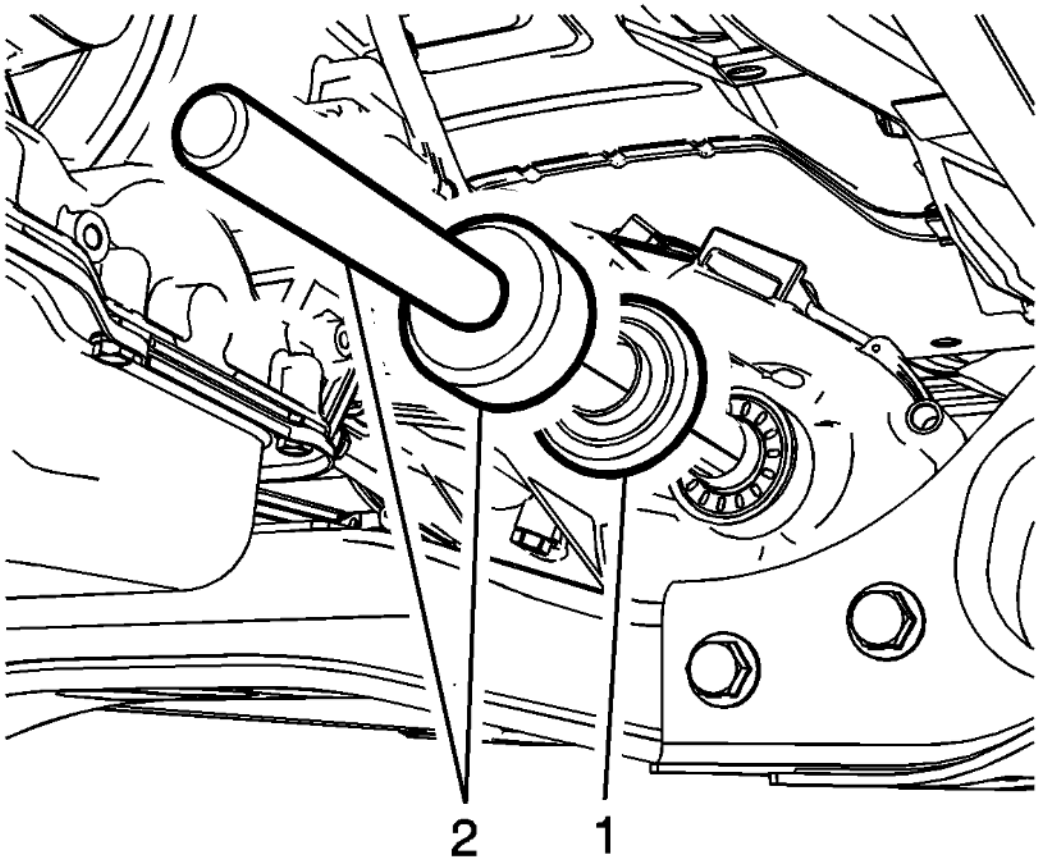

Fig. 20: Front Output Shaft Oil Slinger And Installer
Courtesy of GENERAL MOTORS COMPANY

NOTE: **The new design front output shaft oil slinger can be installed onto all current and prior model year applications, providing the new design front output shaft seal is also installed. Refer to Transfer Case Description and Operation .**

2. Using the **J-8092** driver handle and **DT-50649** installer (2) install the front output shaft oil slinger (1) to the transfer case.

cardiagn.com

3. Install the front propeller shaft. Refer to **Front Axle Propeller Shaft Replacement (NP0)** **Front Axle Propeller Shaft Replacement (Heavy Duty)** .
4. Install the transfer case shield, if equipped. Refer to **Transfer Case Shield Replacement** .
5. Lower the vehicle.

REAR OUTPUT SHAFT SEAL REPLACEMENT

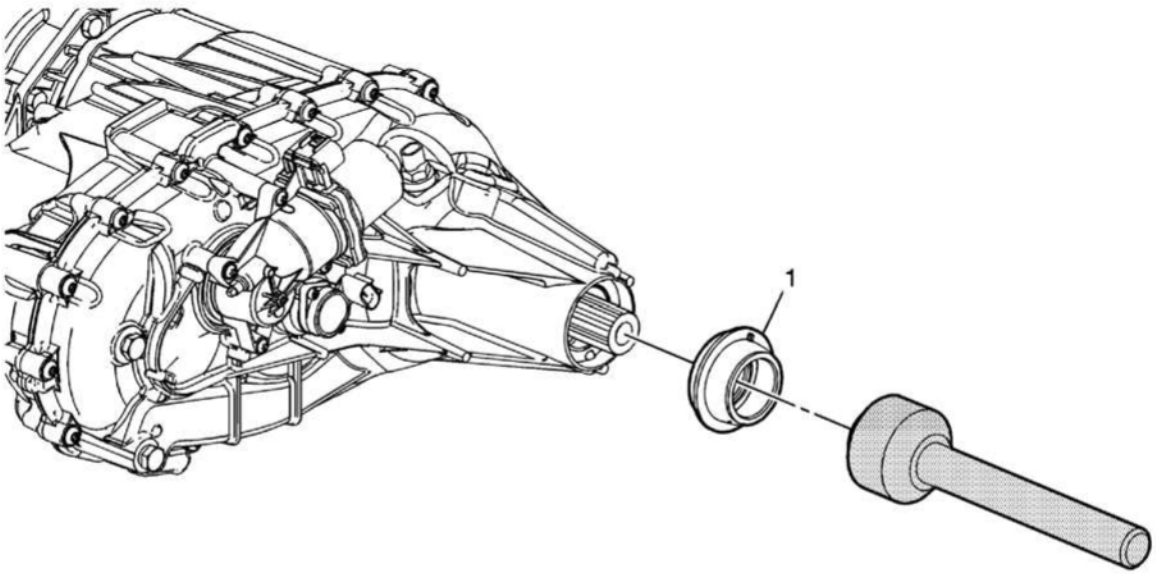

Fig. 21: Rear Output Shaft Seal
Courtesy of GENERAL MOTORS COMPANY

Callout	Component Name
CAUTION: **Do not damage the**	

cardiagn.com

Callout	Component Name
sealing surfaces of the transfer cases or the shafts when prying the seals for removal. Damaging the sealing surface may cause leakage or require replacement of the damaged component.	
Preliminary Procedure Remove the rear propeller shaft. Refer to **Rear Propeller Shaft Replacement (1500)** **Rear Propeller Shaft Replacement (Heavy Duty)** **Rear Propeller Shaft Replacement (M5U, 2WD)** .	
1	Transfer Case Output Shaft Seal **Procedure** 1. Remove the seal using an appropriate tool. 2. Install the seal with the notch at the top and the weep hole at the bottom. **NOTE:** **Use the appropriate seal installer depending on application.**

cardiagn.com

Callout	Component Name
	Special Tools • **DT-48210** Seal Installer • **GE-8092** Driver Handle For equivalent regional tools, refer to **Special Tools**.

TRANSFER CASE REAR EXTENSION BUSHING REPLACEMENT

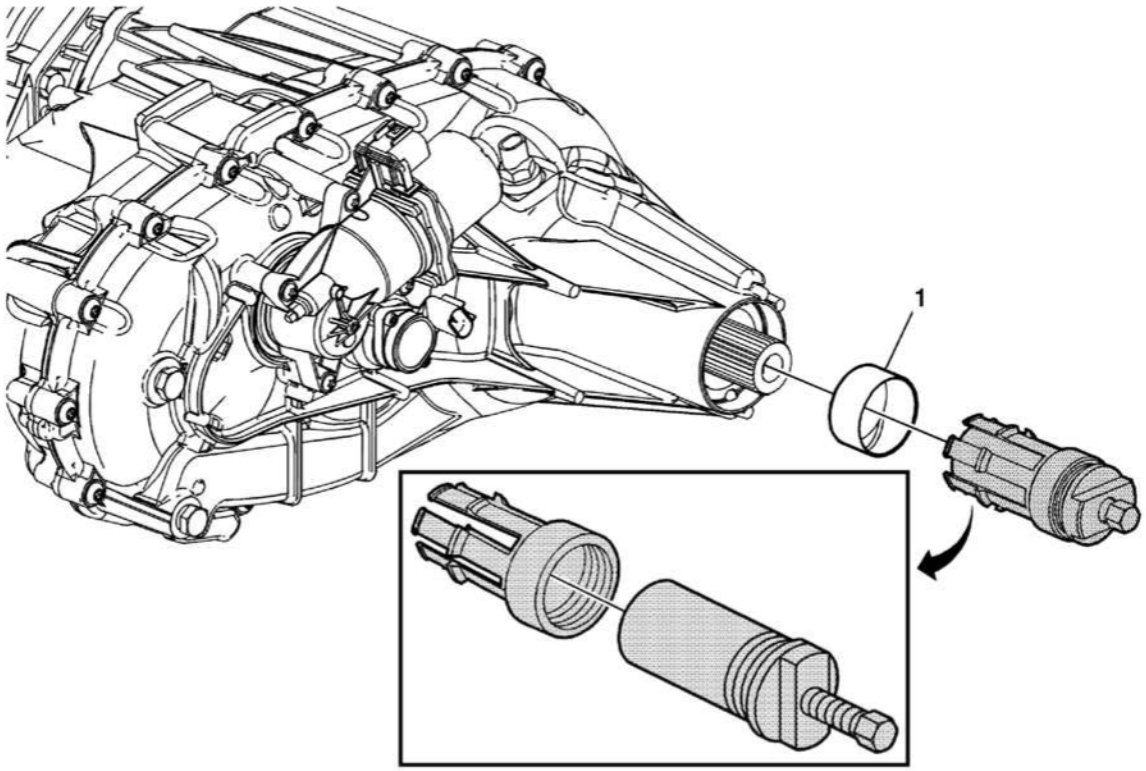

Fig. 22: Transfer Case Rear Extension Bushing
Courtesy of GENERAL MOTORS COMPANY

cardiagn.com

Callout	Component Name
CAUTION: **Refer to Transfer Case Seal Removal Caution .** **Preliminary Procedure** Remove the transfer case rear output shaft seal. Refer to **Rear Output Shaft Seal Replacement** .	
1	Transfer Case Rear Output Shaft Bushing **Procedure** 1. Install the finger section of the **J-45380** transfer case rear bushing remover and installer in front of the bushing. 2. Install the forcing tube assembly into the finger section. Ensure the forcing screw is backed out. 3. Using a wrench on the forcing screw, remove the bushing. 4. Remove the old bushing from the **J-45380** transfer case rear bushing remover and installer. 5. Install the NEW bushing on the finger section of the **J-45380** transfer case rear bushing remover and installer. 6. Install the finger section to the forcing tube assembly of the **J-45380** transfer case rear bushing remover and installer. 7. Position the bushing and tool to the rear case half. 8. Install the bushing until the tool bottoms on the rear case half. **NOTE:** • **Only remove the bushing if faulty.** • **If the bushing was removed,**

cardiagn.com

Callout	Component Name
	a new bushing must be installed. • Ensure the bushing is installed squarely into the bushing bore. **Special Tools** **J-45380** Transfer Case Rear Bushing Remover and Installer For equivalent regional tools, refer to **Special Tools**.

TRANSFER CASE ASSEMBLY REPLACEMENT

cardiagn.com

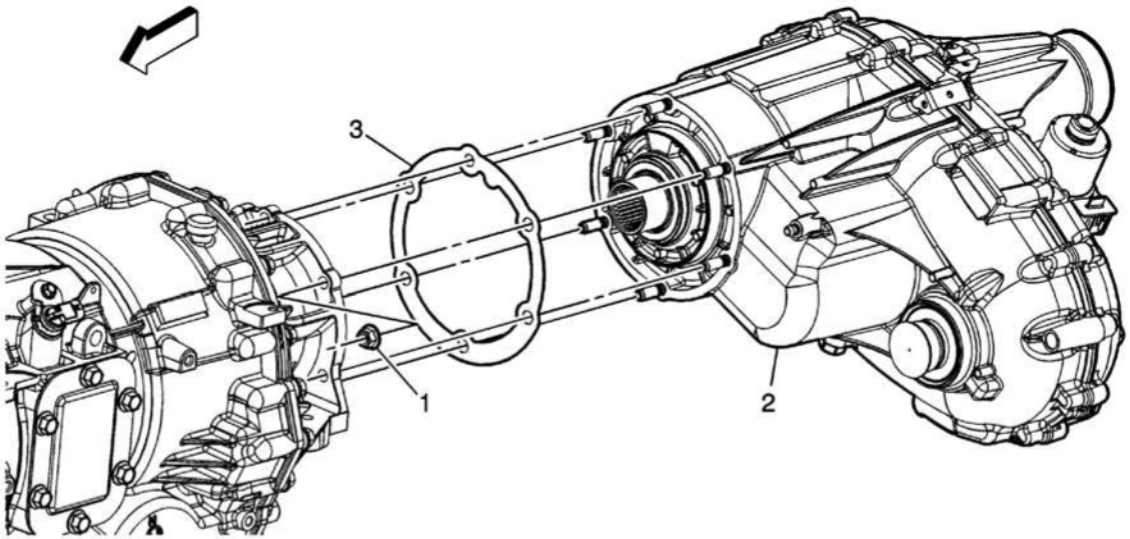

Fig. 23: Transfer Case Assembly
Courtesy of GENERAL MOTORS COMPANY

Callout	Component Name

Preliminary Procedures

1. Raise and support the vehicle. Refer to **Lifting and Jacking the Vehicle** .
2. Remove the transfer case shield, if equipped. Refer to **Transfer Case Shield Replacement** .
3. Remove the rear propeller shaft. Refer to **Rear Propeller Shaft Replacement (1500)** **Rear Propeller Shaft Replacement (Heavy Duty)** **Rear Propeller Shaft Replacement (M5U, 2WD)** .
4. Remove the front propeller shaft. Refer to **Front Axle Propeller Shaft Replacement (NP0)** **Front Axle Propeller Shaft Replacement (Heavy Duty)** .
5. Drain the fluid from the transfer case. Refer to **Transfer Case Fluid Replacement** .

cardiagn.com

Callout	Component Name
6. Disconnect the electrical connectors and remove the electrical harness from the transfer case. 7. Disconnect the vent hose at the transfer case. 8. Remove the crossmember. Refer to **Transmission Support Crossmember Replacement (4WD)** . 9. Remove the transmission mount. Refer to **Transmission Mount Replacement (Four Wheel Drive)** for the 6L45/6L50/6L80/6L90 transmission.	
1	Transfer Case Nut (Qty: 6) **CAUTION:** **Refer to Fastener Caution .** **Tighten** 50 N.m (37 lb ft)
2	Transfer Case **Procedure** 1. If installing a new or repaired transfer case, perform the Transfer Case High/Low Clutch reset. Refer to **Transfer Case High/Low Clutch Reset** . 2. Transfer parts as necessary.
3	Transfer Case Gasket **Procedure** 1. Install a NEW gasket without the use of any type of sealant or lubricant. 2. Apply lubricant meeting GM Specification 9985830 to the input shaft splines. Refer to **Adhesives, Fluids, Lubricants, and Sealers**.

TRANSFER CASE ADAPTER REPLACEMENT

cardiagn.com

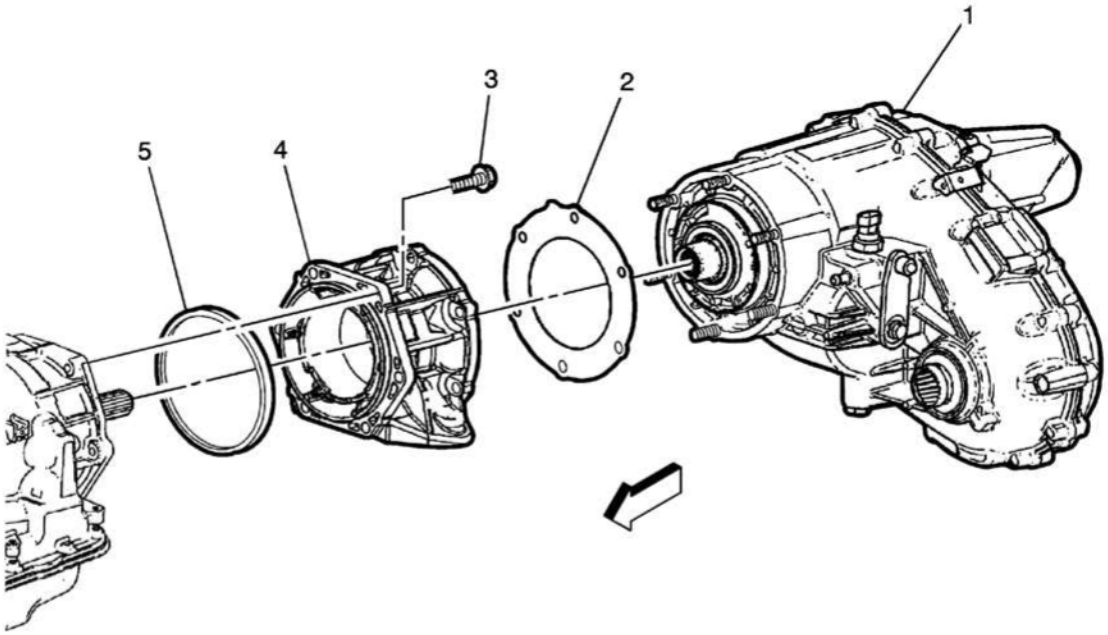

Fig. 24: Transfer Case Adapter
Courtesy of GENERAL MOTORS COMPANY

Callout	Component Name
Preliminary Procedure 1. Remove the transfer case. Refer to **Transfer Case Assembly Replacement**. 2. Remove the transmission mount. Refer to **Transmission Mount Replacement (Four Wheel Drive)** for the 6L45/6L50/6L80/6L90 transmission.	
1	Transfer Case
2	Gasket
3	Transfer Case Adapter Bolt (Qty: 6)

cardiagn.com

Callout	Component Name
	CAUTION: **Refer to Fastener Caution .** Tighten 50 N.m (37 lb ft)
4	Extension Housing
5	Seal **NOTE:** **Seal is only used for the 4L60-E transmission and should be replaced when the adapter is removed. Do Not use any type of sealant or adhesive in place of or with the seal.**

INPUT SHAFT SEAL REPLACEMENT

cardiagn.com

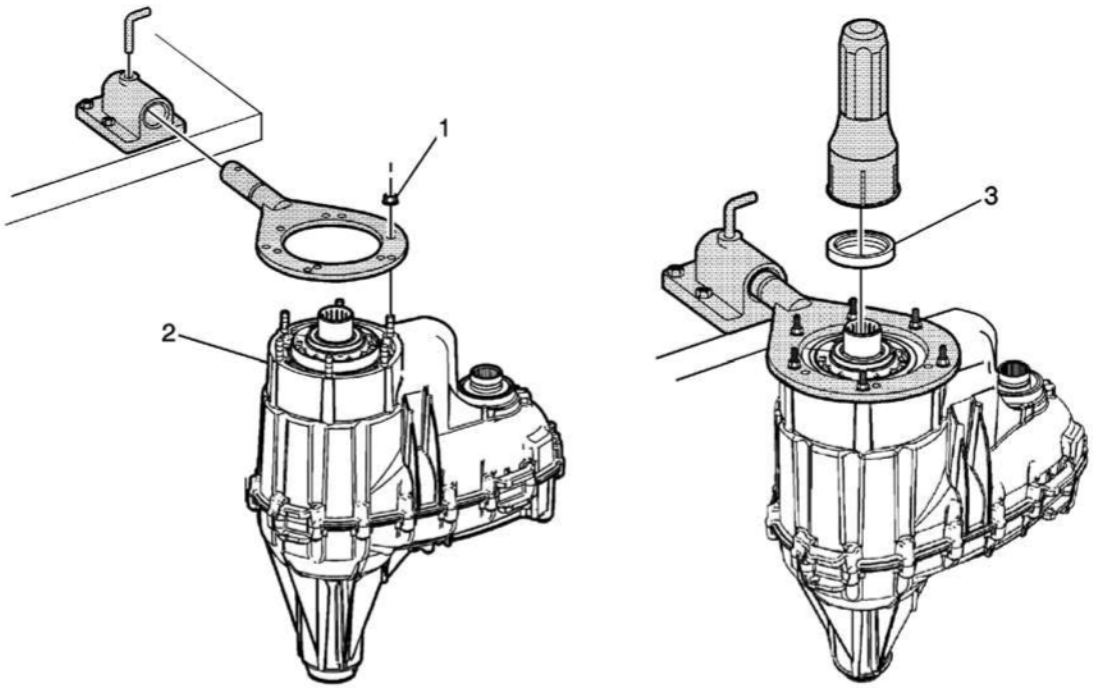

Fig. 25: Input Shaft Seal
Courtesy of GENERAL MOTORS COMPANY

Callout	Component Name
CAUTION: **Do not damage the sealing surfaces of the transfer cases or the shafts when prying the seals for**	

cardiagn.com

Callout	Component Name
removal. Damaging the sealing surface may cause leakage or require replacement of the damaged component. **Preliminary Procedure** Remove the transfer case. Refer to **Transfer Case Assembly Replacement** .	
1	Transfer Case Nut **Procedure** Use transfer case nuts to secure transfer case to assembly fixture **J-45759** assembly fixture. **Special Tools** **J-45759** Assembly Fixture For equivalent regional tools, refer to **Special Tools**.
2	Transfer Case **Procedure** Insert the transfer case and assembly fixture into the bench holding fixture **J-3289-20** holding fixture and secure with pivot pin. **Special Tools** **J-3289-20** Holding Fixture For equivalent regional tools, refer to **Special Tools**.
3	Transfer Case Input Shaft Seal **Procedure** 1. Remove the seal using an appropriate tool. Refer to **Transfer Case Disassemble (Light Duty)** **Transfer Case Disassemble (Heavy Duty)** . 2. Install the seal using **J 42738** seal installer.

cardiagn.com

Callout	Component Name
	NOTE: • Ensure the bore of the front case half is free of dirt, oil, and cleaning solvent. • Double lip input shaft oil seals are used on ap w ac ca • Si in oi us ap w ac ca w tr ar in w sp pc th facing inward towards the

Special Tools
J-42738 Seal Installer
For equivalent regional tools, refer to **Special Tools**.

REPAIR INSTRUCTIONS - OFF VEHICLE

TRANSFER CASE DISASSEMBLE

Transfer Case Holding Fixture Installation

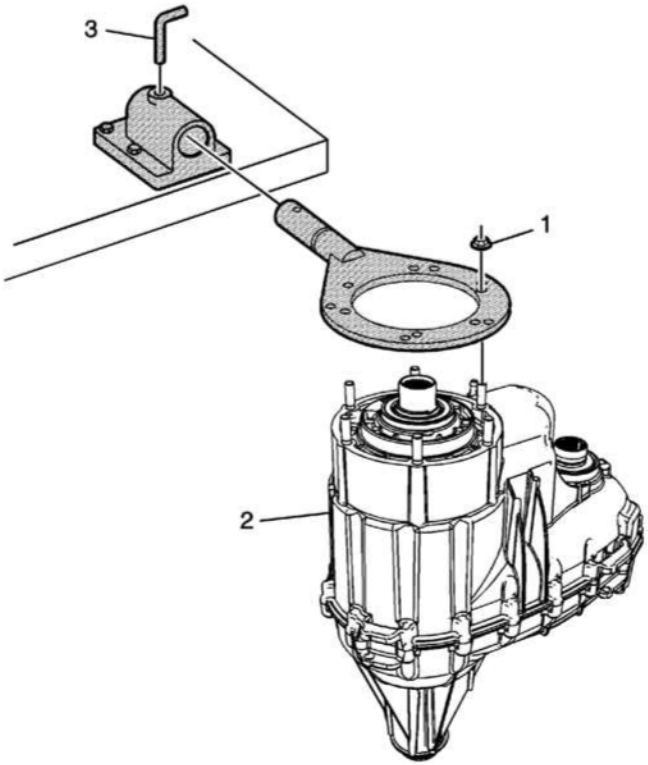

Fig. 26: Transfer Case Holding Fixture

cardiagn.com

Courtesy of GENERAL MOTORS COMPANY

Transfer Case Holding Fixture Installation

Callout	Component Name
1	Transfer Case Nuts **Special Tools** **J-45759** Assembly Fixture For equivalent regional tools, refer to **Special Tools**.
2	Transfer Case **Special Tools** **J-3289-20** Holding Fixture
3	Pivot Pin **NOTE:** • **Always secure with the pivot pin after rotating.** • **The transfer case can be rotated 360 degrees to facilitate repair.**

Access Hole Plugs, Fill and Drain Plug, Vent, 2/4 Wheel Drive Actuator, Actuator Shaft Position Sensor, and Vehicle Speed Sensor Removal

cardiagn.com

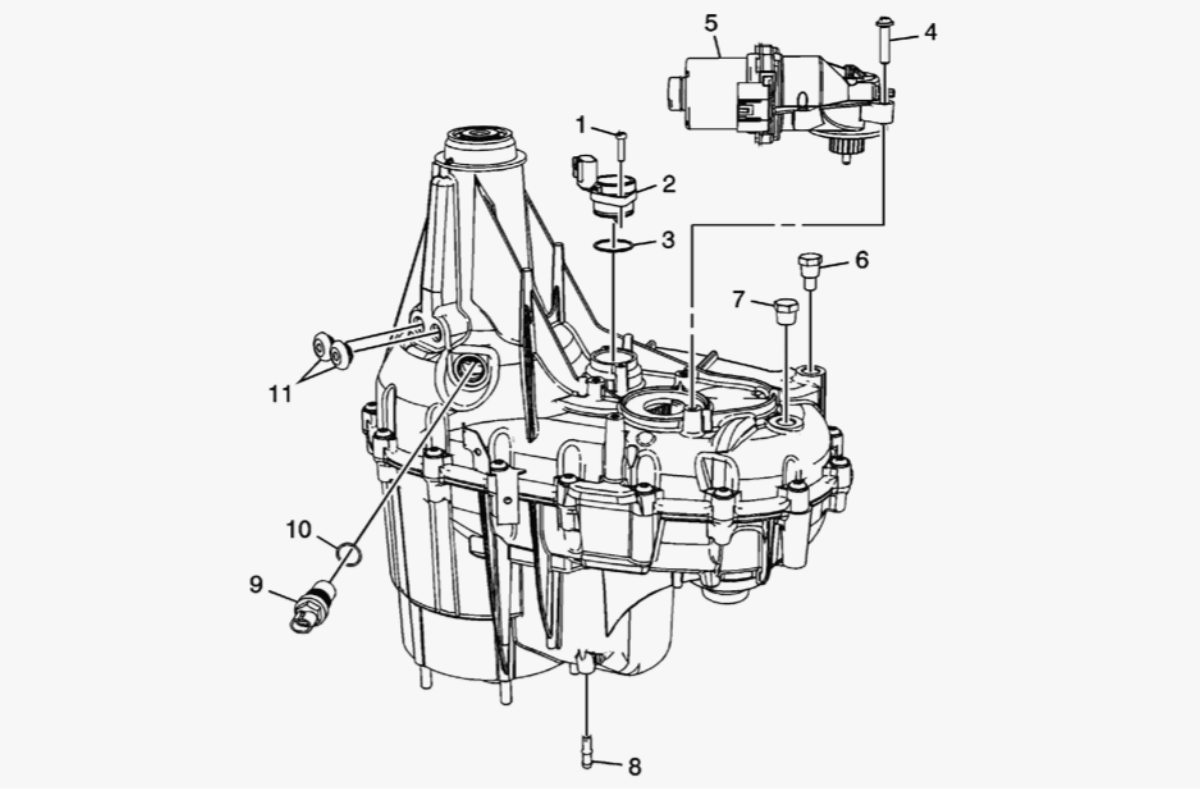

Fig. 27: Transfer Case Components
Courtesy of GENERAL MOTORS COMPANY

Access Hole Plugs, Fill and Drain Plug, Vent, 2/4 Wheel Drive Actuator, Actuator Shaft Position Sensor, and Vehicle Speed Sensor Removal

Callout	Component Name
1	Transfer Case Actuator Shaft Position Sensor Bolt/Screw
2	Transfer Case Actuator Shaft Position Sensor Assembly
3	Transfer Case Actuator Shaft Position Sensor O-ring Seal
4	Transfer Case Two/Four Wheel Drive Actuator Bolt/Screw
5	Transfer Case Two/Four Wheel Drive Actuator Assembly
6	Transfer Case Oil Drain Plug
7	Transfer Case Oil Fill Plug
8	Transfer Case Vent

cardiagn.com

Callout	Component Name
	NOTE:
9	Vehicle Speed Sensor Assembly
10	Vehicle Speed Sensor O-ring Seal
11	Transfer Case Access Hole Plugs (Qty: 2)

Remove ONLY if the vent pipe is damaged.

Rear Output Shaft Seal and Bushing Removal

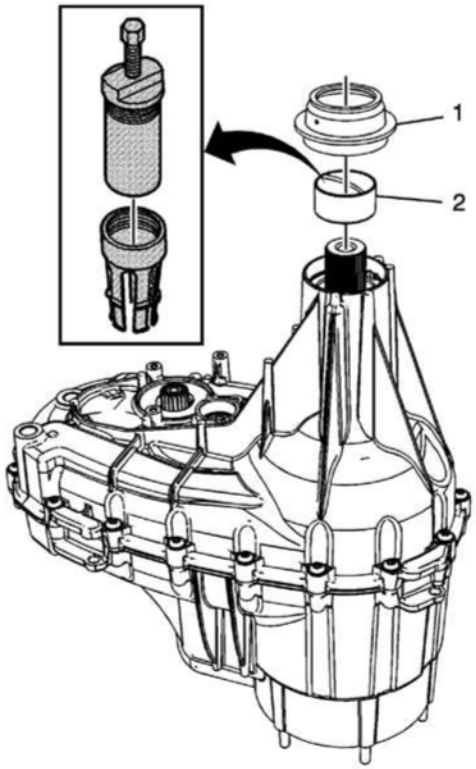

Fig. 28: Rear Output Shaft Seal And Bushing
Courtesy of GENERAL MOTORS COMPANY

Rear Output Shaft Seal and Bushing Removal

Callout	Component Name
1	Transfer Case Rear Output Shaft Seal

cardiagn.com

Callout	Component Name
	CAUTION: **Refer to Transfer Case Seal Removal Caution .**
2	Transfer Case Rear Output Shaft Bushing **NOTE:** **Follow the steps below for use of the J-45380 remover/installer.** **Procedure** 1. Only remove the bushing if faulty. Refer to **Transfer Case Rear Half Cleaning and Inspection**. 2. Install the finger section of the **J-45380** remover/installer in front of the bushing. 3. Install the tube and forcing screw assembly into the finger section. Ensure the forcing screw is backed out. 4. Using a wrench on the forcing screw, remove the bushing. **Special Tools** **J-45380** Transfer Case Rear Bushing Remover and Installer

Transfer Case Rear Case Half Removal

cardiagn.com

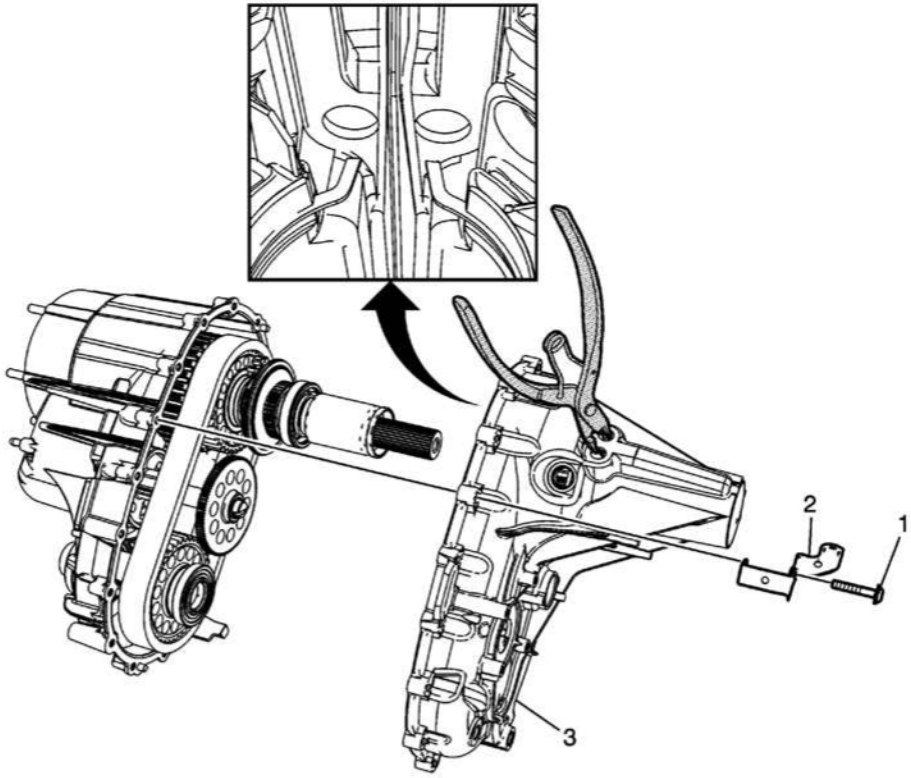

Fig. 29: Transfer Case Rear Case Half
Courtesy of GENERAL MOTORS COMPANY

Transfer Case Rear Case Half Removal

Callout	Component Name
1	Transfer Case Bolts (Qty: 17)
2	Transfer Case Bracket
3	Transfer Case Rear Case Half **CAUTION:** **Refer to Machined Surface Damage**

cardiagn.com

Callout	Component Name
	Caution . NOTE: • Use opposing pry bars at casting bosses to spread the case. • Use snap ring pliers to release the transfer case rear output shaft outer retaining ring from the transfer case rear output shaft rear bearing assembly.

Oil Pump Suction Pipe and Actuator Shaft Gear Removal

cardiagn.com

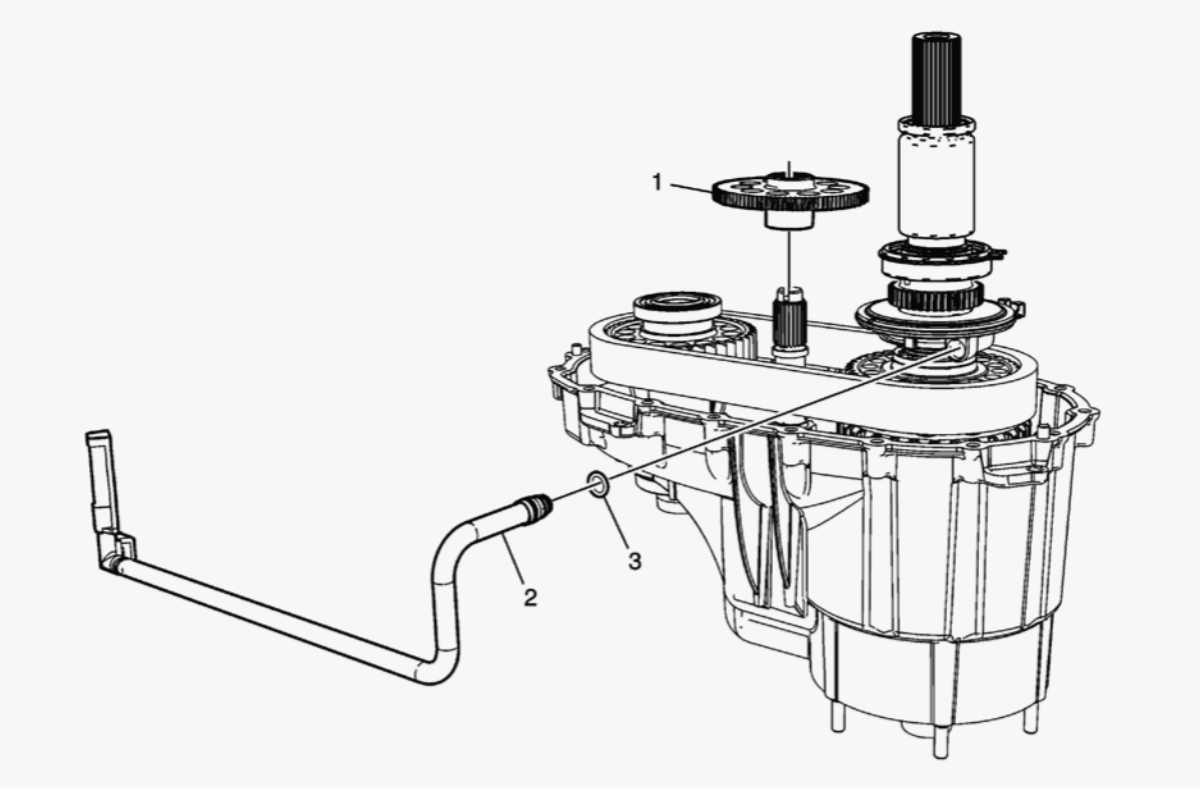

Fig. 30: Oil Pump Suction Pipe and Actuator Shaft Gear
Courtesy of GENERAL MOTORS COMPANY

Oil Pump Suction Pipe and Actuator Shaft Gear Removal

Callout	Component Name
1	Transfer Case Actuator Shaft Gear
2	Transfer Case Oil Pump Suction Pipe
3	Transfer Case Oil Pump Suction Pipe Seal

Propeller Shaft Oil Seal Sleeve Removal

cardiagn.com

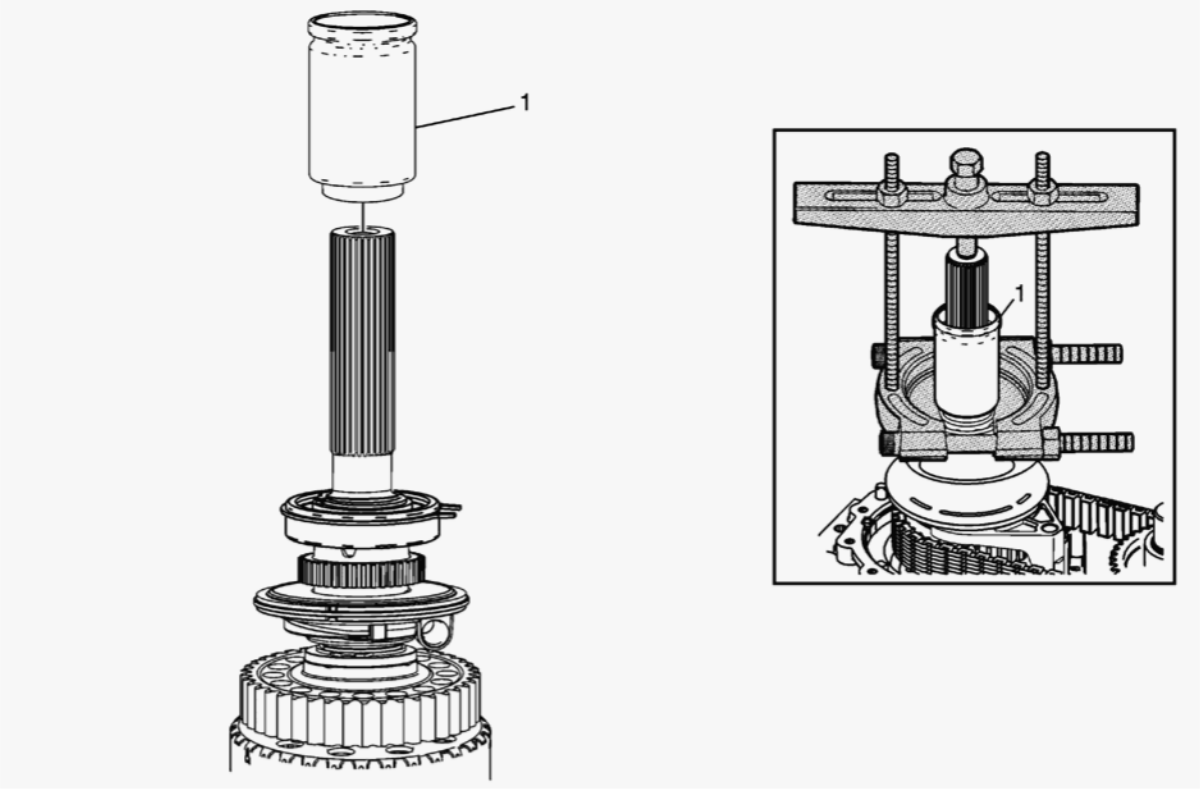

Fig. 31: Propeller Shaft Oil Seal Sleeve
Courtesy of GENERAL MOTORS COMPANY

Propeller Shaft Oil Seal Sleeve Removal

Callout	Component Name
1	Propeller Shaft Oil Seal Sleeve **NOTE:** • **Discard the propeller shaft oil seal sleeve.**

cardiagn.com

Callout	Component Name
	The sleeve cannot be reused and must be replaced. Install NEW during assembly. • **Use the 3/8 x 24 in threaded rods for propeller shaft oil seal sleeve removal.** **Special Tools** • **DT-22912-B** Split Plate Bearing Puller • **DT-50802** Threaded Rod Kit • **GE-8433-1** Puller Bar For equivalent regional tools, refer to **Special Tools**.

Actuator Shaft and Cam Assembly, Drive Chain, and Rear Output Shaft Assembly Removal

cardiagn.com

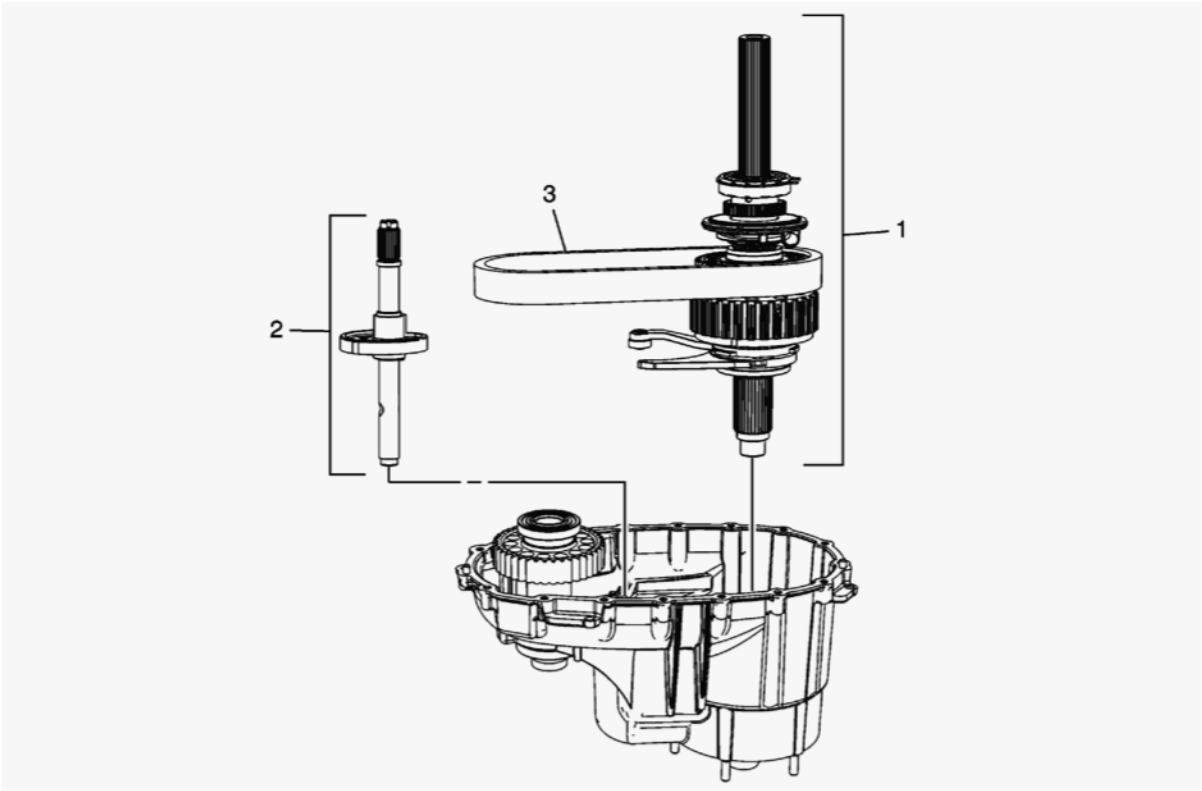

Fig. 32: Actuator Shaft and Cam Assembly, Drive Chain, and Rear Output Shaft Assembly
Courtesy of GENERAL MOTORS COMPANY

Actuator Shaft and Cam Assembly, Drive Chain, and Rear Output Shaft Assembly Removal

Callout	Component Name
1	Transfer Case Rear Output Shaft Assembly **NOTE:** **Mount the assembly into a soft-jaw vice or holding fixture for disassembly.**

cardiagn.com

Callout	Component Name
2	Transfer Case Actuator Shaft and Cam Assembly
3	Transfer Case Front Output Shaft Drive Chain Assembly

Rear Output Shaft Assembly Disassemble

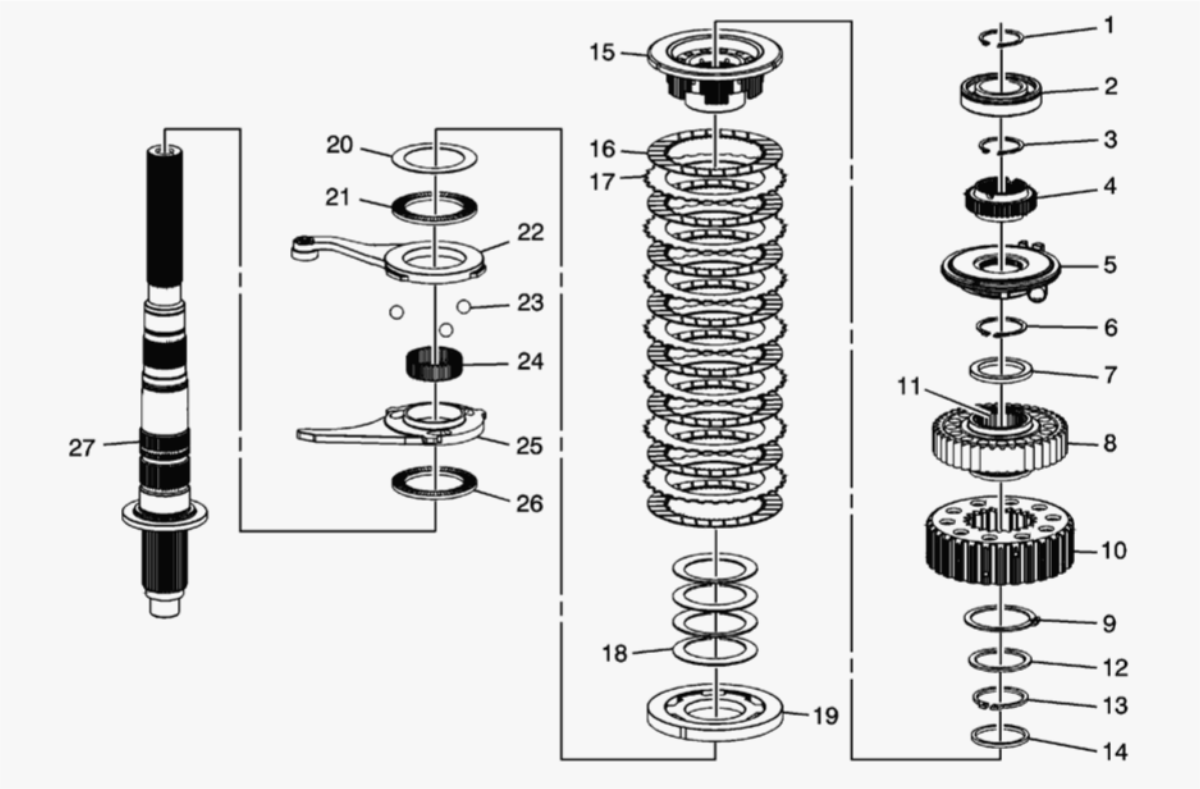

Fig. 33: Rear Output Shaft Assembly
Courtesy of GENERAL MOTORS COMPANY

Rear Output Shaft Assembly Disassemble

Callout	Component Name
1	Transfer Case Rear Output Shaft Rear Bearing Retaining Ring
2	Transfer Case Rear Output Shaft Rear Bearing Assembly **NOTE:**

cardiagn.com

Callout	Component Name
	Use an arbor press or suitable puller to remove the bearing from the rear output shaft.
3	Transfer Case Rear Output Shaft Rear Bearing Retaining Ring
4	Transfer Case Rear Output Shaft Speed Reluctor Wheel
5	Transfer Case Oil Pump Assembly
6	Transfer Case Front Output Shaft Drive Sprocket Retaining Ring
7	Transfer Case Front Output Shaft Drive Sprocket Spacer - Rear
8	Transfer Case Front Output Shaft Drive Sprocket
9	Transfer Case Four Wheel Drive Clutch Housing Retaining Ring
10	Transfer Case Four Wheel Drive Clutch Housing
11	Transfer Case Front Output Shaft Drive Sprocket Bearing Assembly (Qty: 2) **Procedure** Only remove the bearing if faulty. Refer to **Drive Chain, Drive Sprocket, and Driven Sprocket Cleaning and Inspection**.
12	Transfer Case Front Output Shaft Drive Sprocket Spacer - Front
13	Transfer Case Two/Four Wheel Drive Clutch Retaining Ring
14	Transfer Case Four Wheel Drive Clutch Shim
15	Transfer Case Four Wheel Drive Clutch Hub
16	Transfer Case Four Wheel Drive Clutch Pressure - Friction - Plate (Qty: 8)
17	Transfer Case Four Wheel Drive Clutch Pressure - Steel - Plate (Qty: 7)
18	Transfer Case Four Wheel Drive Clutch Pressure Plate Spring (Qty: 4)
19	Transfer Case Four Wheel Drive Clutch Pressure - Apply - Plate
20	Transfer Case Control Actuator Lever Washer
21	Transfer Case Control Actuator Lever Thrust Bearing Assembly

cardiagn.com

Callout	Component Name
22	Transfer Case Control Actuator Lever Assembly **NOTE:** **Refer to Service Parts Release Usage Change - NQH/NP0 Control Actuator Levers in the New Product Information**
23	Transfer Case Control Actuator Lever Ball (Qty: 3)
24	Transfer Case Control Actuator Lever Bearing Assembly
25	Transfer Case Control Lever
26	Transfer Case Control Actuator Lever Thrust Bearing Assembly
27	Transfer Case Rear Output Shaft

Input Shaft Oil Seal Removal

cardiagn.com

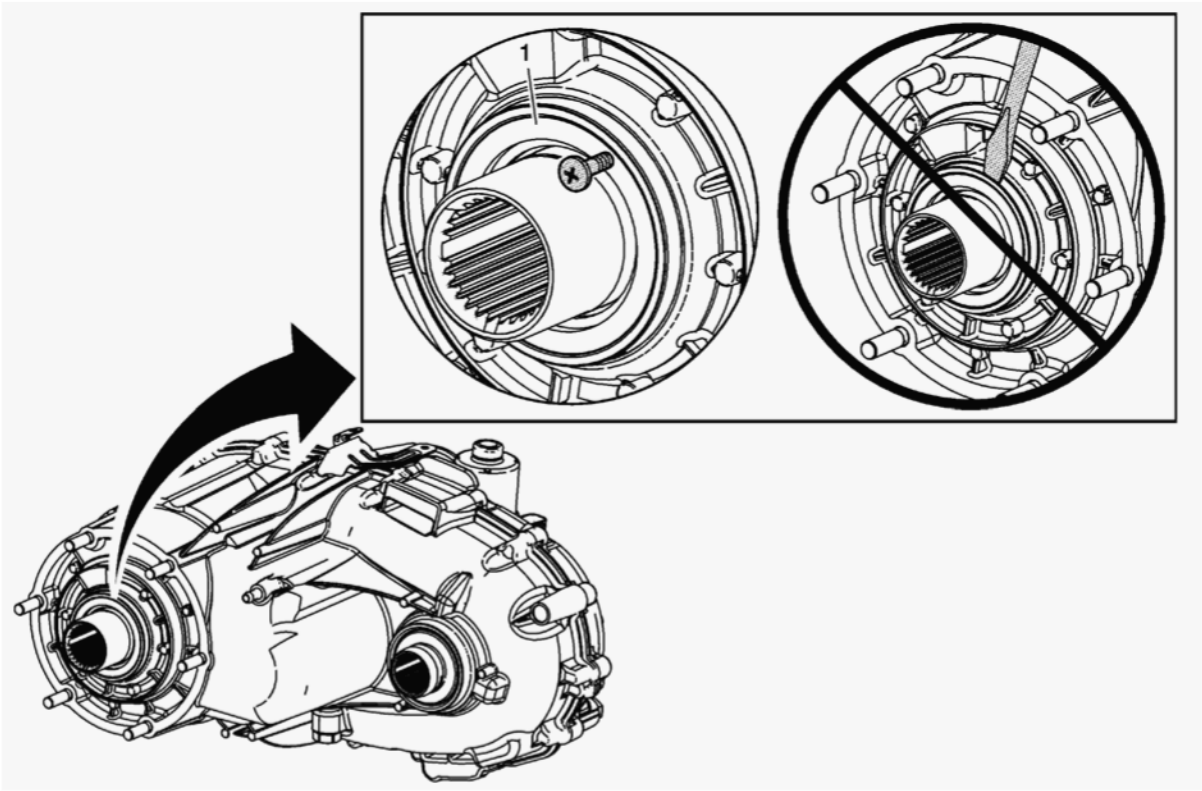

Fig. 34: Input Shaft Oil Seal
Courtesy of GENERAL MOTORS COMPANY

Input Shaft Oil Seal Removal

Callout	Component Name
1	Input Shaft Oil Seal **CAUTION:** **Refer to Machined Surface Damage Caution .** **Procedure**

cardiagn.com

Callout	Component Name
	1. Drill a pilot hole, as required, and insert a self-tapping screw into the body of the seal. 2. Use a plier or slide hammer type tool to remove the seal from the bore.

Input Shaft Assembly Removal

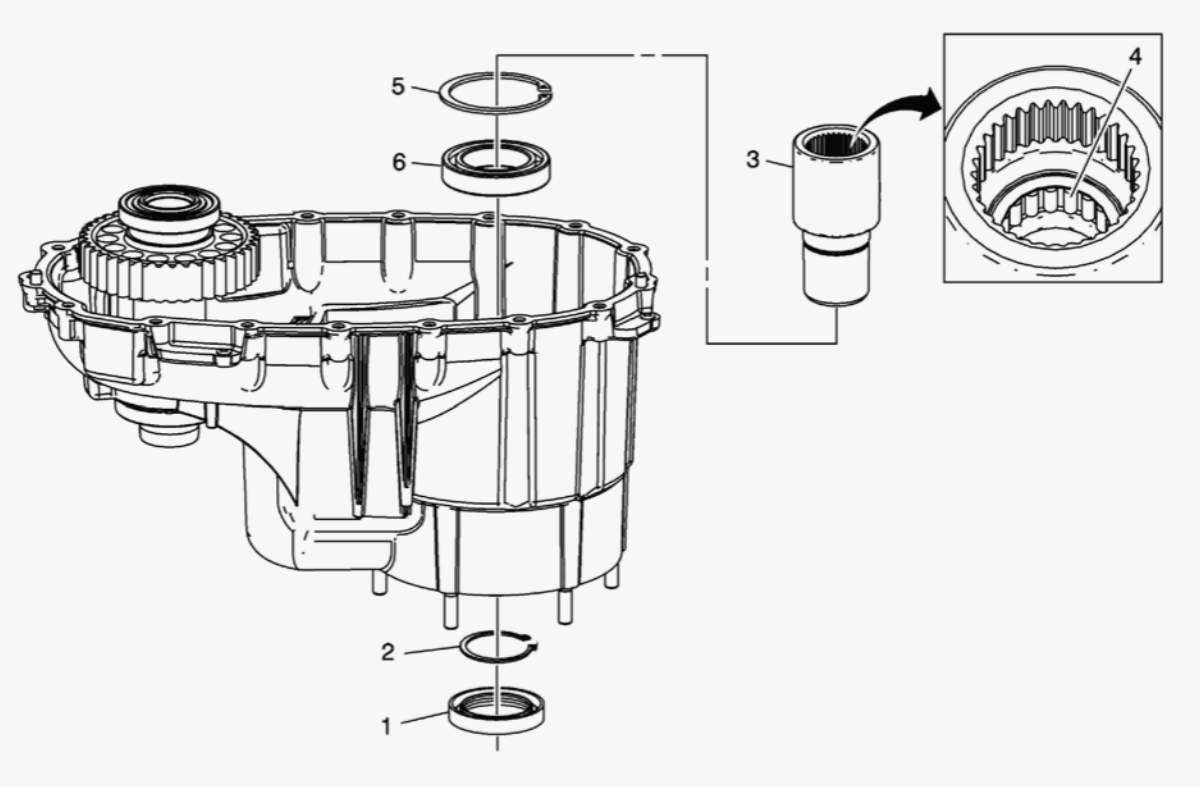

Fig. 35: Input Shaft Assembly
Courtesy of GENERAL MOTORS COMPANY

Input Shaft Assembly Removal

Callout	Component Name
1	Transfer Case Input Shaft Seal
2	Transfer Case Input Shaft Bearing Outer Retaining Ring
3	Transfer Case Input Shaft

cardiagn.com

Callout	Component Name
4	Transfer Case Input Shaft Pilot Bearing Assembly **Procedure** Only remove the bearing if faulty. Refer to **Front Output Shaft and Input Shaft Cleaning and Inspection**.
5	Transfer Case Input Shaft Inner Retaining Ring
6	Transfer Case Input Shaft Bearing Assembly

Front Output Shaft Assembly Removal

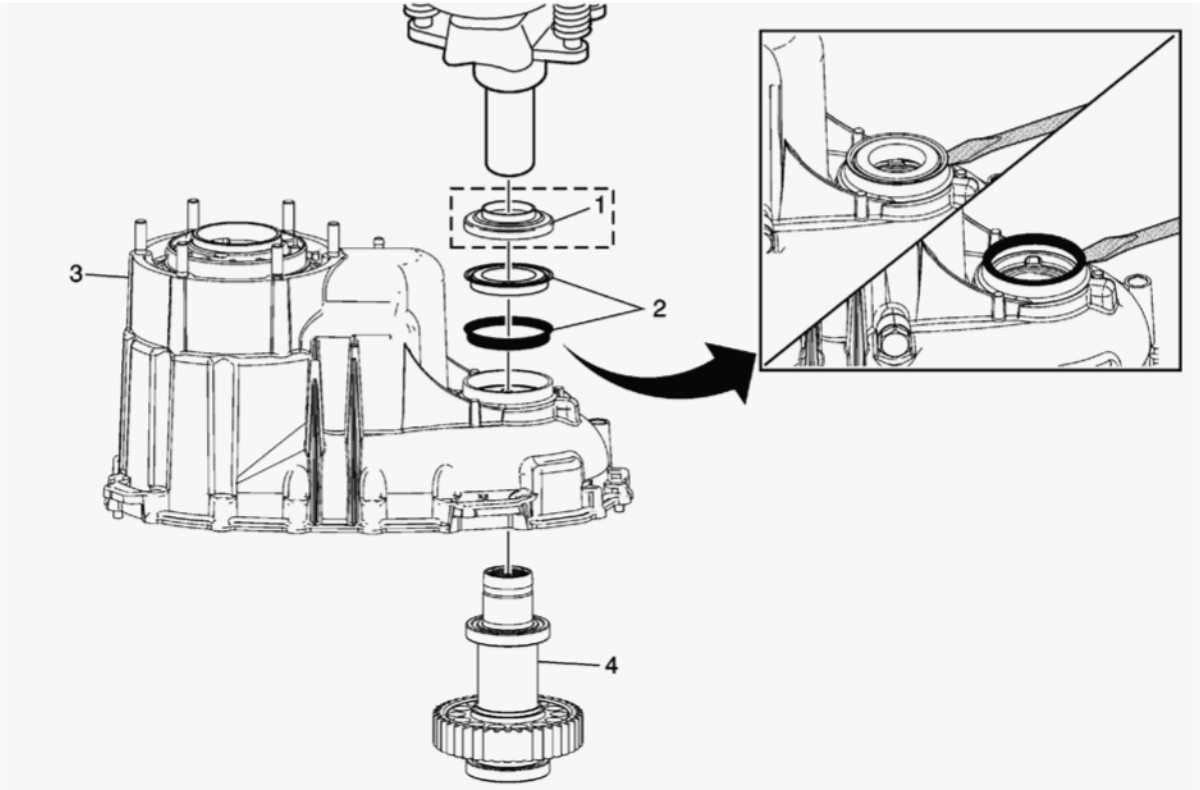

Fig. 36: Front Output Shaft Assembly
Courtesy of GENERAL MOTORS COMPANY

Front Output Shaft Assembly Removal

Callout	Component Name
1	Transfer Case Front Output Shaft Oil Slinger - Model Dependent

cardiagn.com

Callout	Component Name
	NOTE: **Refer to Interim Model Year Design Change - NQF/NQG /NQH/NP0 Front Output Shaft, Deflector, Seal in the New Product Information.**
2	Transfer Case Front Output Shaft Seal **Procedure** 1. Remove the front output shaft seal in two pieces using the following procedure. 2. Insert a screwdriver between the metal inner and metal outer portions of the seal. 3. Pry upward in multiple locations working the metal inner portion of the seal off the shaft until removed. 4. Once the inner metal portion is removed, insert a screwdriver between the outer diameter metal flange of the seal and the housing. 5. Drive the screwdriver inward in multiple locations, the outer portion of the seal will be distorted and can easily be removed from the housing.
3	Transfer Case Front Case Half **NOTE:** **Place the front case half on an arbor press.**

cardiagn.com

Callout	Component Name
4	Transfer Case Front Output Shaft Assembly **NOTE:** **Press the front output shaft assembly from the front case half using an arbor press or soft-face hammer.**

TRANSFER CASE FRONT HALF CLEANING AND INSPECTION

cardiagn.com

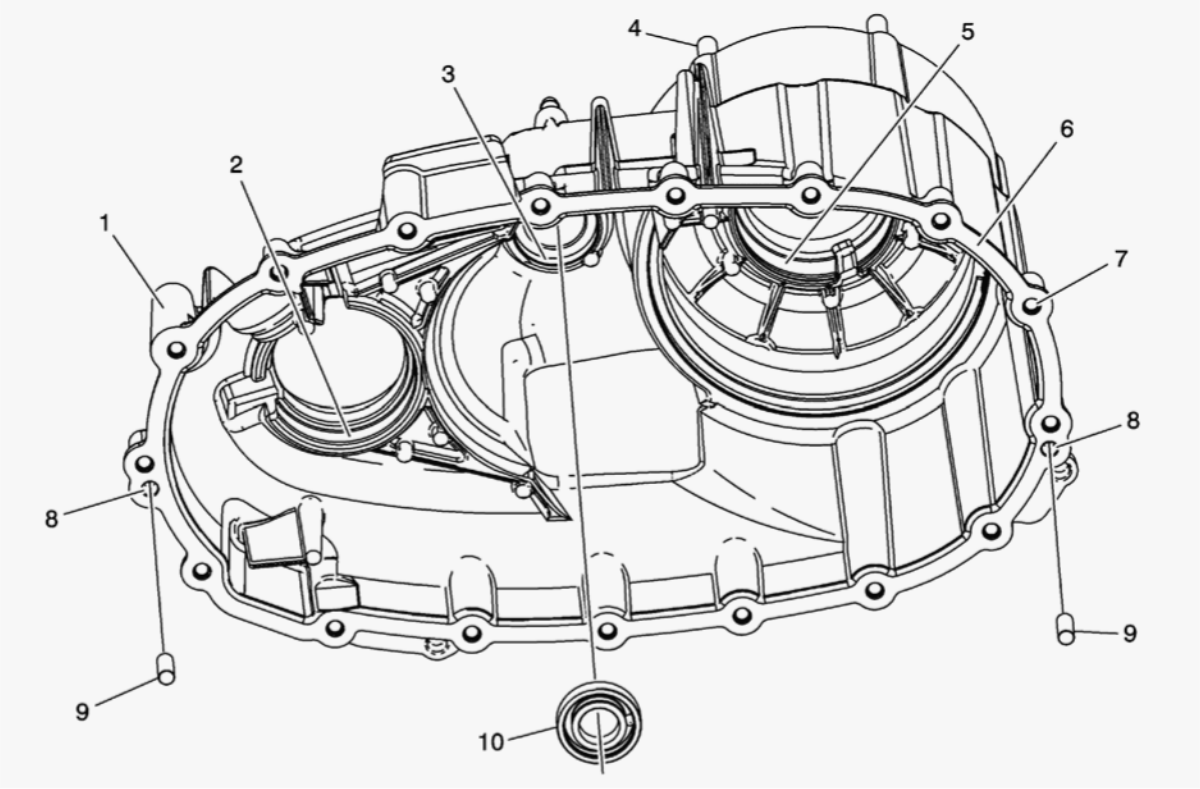

Fig. 37: Transfer Case Front Half Cleaning And Inspection Points
Courtesy of GENERAL MOTORS COMPANY

Callout	Component Name
CAUTION: Refer to Machined Surface Damage Caution .	
Preliminary Procedure	
1. Inspect all components or sub-components and perform any repair procedure necessary to fix the damage. If the damage cannot be repaired, replace the component or sub-component as indicated.	

cardiagn.com

Callout	Component Name
2. Clean the front case half in cleaning solvent and air dry. 3. Remove any sealant from the sealing surface.	
1	Transfer Case Front Half Assembly **NOTE:** **Inspect for cracks, broken areas, or other damage. The component must be replaced if damage is found.**
2	Transfer Case Front Output Shaft Front Bearing Bore **NOTE:** **Replace the front case half assembly if a bearing has spun or if cracks are detected.**
3	Transfer Case Four Wheel Drive Actuator Lever Shaft Bearing Bore **NOTE:** **Replace the front case half**

cardiagn.com

Callout	Component Name
	assembly if a bearing has spun or if cracks are detected.
4	Transfer Case Studs (Qty: 6) **NOTE:** **Replace any damaged studs**
5	Transfer Case Input Shaft Bearing Bore **NOTE:** **Replace the front case half assembly if a bearing has spun or if cracks are detected.**
6	Case Sealing Surface **NOTE:** **Repair small scratches or nicks with a soft stone.**
7	Transfer Case Thread Bolt Holes **NOTE:**

cardiagn.com

Callout	Component Name
	Repair any damaged threads.
8	Transfer Case Locating Pin Holes **NOTE:** **Replace the front case half assembly if the locating pin holes are out of round or damaged.**
9	Transfer Case Locating pins (Qty: 2) **NOTE:** **Repair or replace loose, missing, or damaged locating pins.**
10	Transfer Case Four Wheel Drive Actuator Lever Shaft Bearing Assembly **Procedure** Replace the bearing if roughness, brinelling, or pitting is detected. Refer to **Transfer Case Four Wheel Drive Actuator Lever Shaft Bearing Replacement - Front**.

TRANSFER CASE REAR HALF CLEANING AND INSPECTION

cardiagn.com

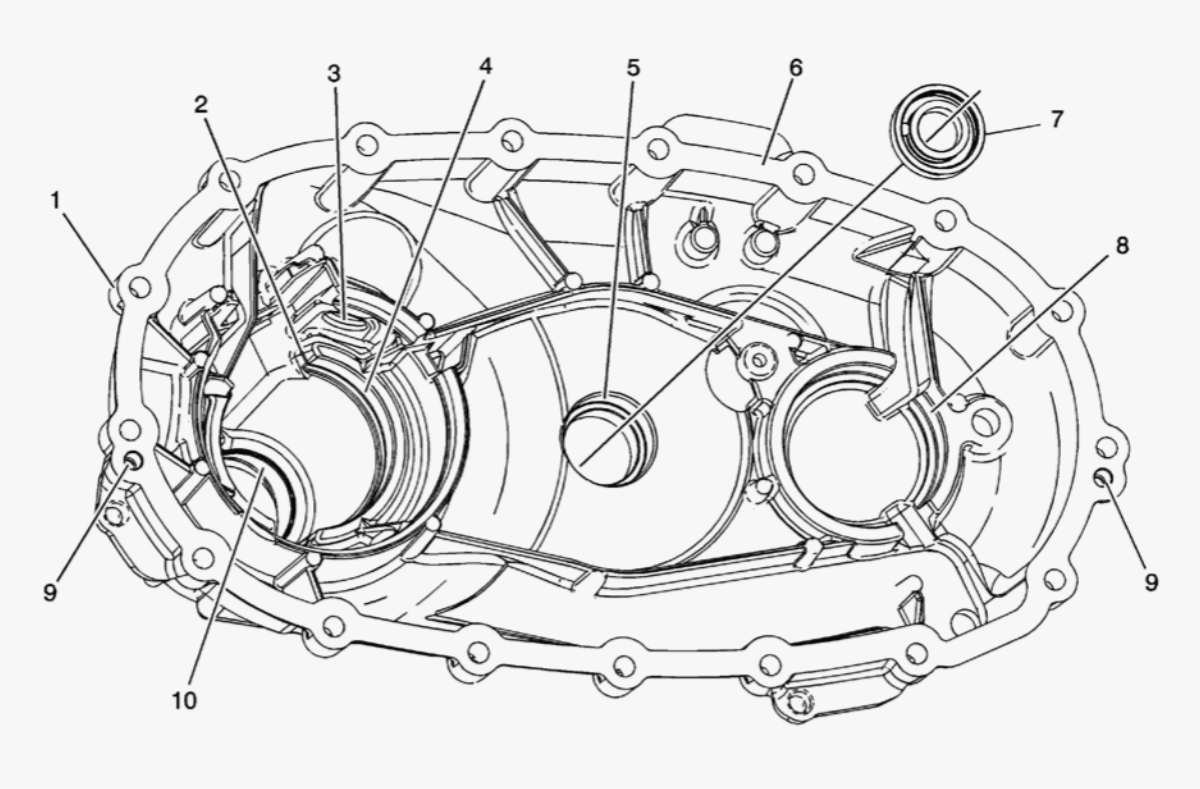

Fig. 38: Transfer Case Rear Half Cleaning And Inspection Points
Courtesy of GENERAL MOTORS COMPANY

Callout	Component Name
CAUTION: Refer to Machined Surface Damage Caution .	
Preliminary Procedure	
1. Inspect all components or sub-components and perform any repair procedure necessary to fix the damage. If the damage cannot be repaired, replace the component or sub-component as indicated.	

cardiagn.com

Callout	Component Name
2. Clean the rear case half in cleaning solvent and air dry. 3. Remove any sealant from the sealing surface.	
1	Transfer Case Rear Case Half Assembly **NOTE:** **Inspect for cracks, broken areas, or other damage. The component must be replaced if damage is found.**
2	Transfer Case Rear Output Shaft Rear Bearing Outer Retaining Ring Groove **NOTE:** **Replace the rear case half assembly if the groove is worn.**
3	Vehicle Speed Sensor Threads **NOTE:** **Replace the rear case half assembly if the speed**

cardiagn.com

Callout	Component Name
	sensor threads are damaged.
4	Transfer Case Rear Output Shaft Rear Bearing Bore **NOTE:** **Replace the rear case half assembly if a bearing has spun or if cracks are detected.**
5	Transfer Case Four Wheel Drive Actuator Lever Shaft Bearing Bore **NOTE:** **Replace the front case half assembly if a bearing has spun or if cracks are detected.**
6	Case Sealing Surface **NOTE:** **Repair small scratches or nicks with a soft stone.**

cardiagn.com

Callout	Component Name
7	Transfer Case Four Wheel Drive Actuator Lever Shaft Bearing Assembly **Procedure** Replace the bearing if roughness, brinelling, or pitting is detected. Refer to **Transfer Case Four Wheel Drive Actuator Lever Shaft Bearing Replacement - Rear**.
8	Transfer Case Front Output Shaft Rear Bearing Bore **NOTE:** **Replace the rear case half assembly if a bearing has spun or if cracks are detected.**
9	Transfer Case Locating Pin Holes **NOTE:** **Replace the rear case half assembly if the locating pin holes are out of round or damaged.**
10	Transfer Case Rear Output Shaft Bushing **Procedure** 1. Replace the bushing if it is damaged or worn. Refer to **Transfer Case Disassemble**, and **Transfer Case Assemble**. 2. If the bushing is removed, inspect the bushing bore for signs of spinning. Replace the rear case half assembly if the bushing has spun.

cardiagn.com

OIL PUMP CLEANING AND INSPECTION

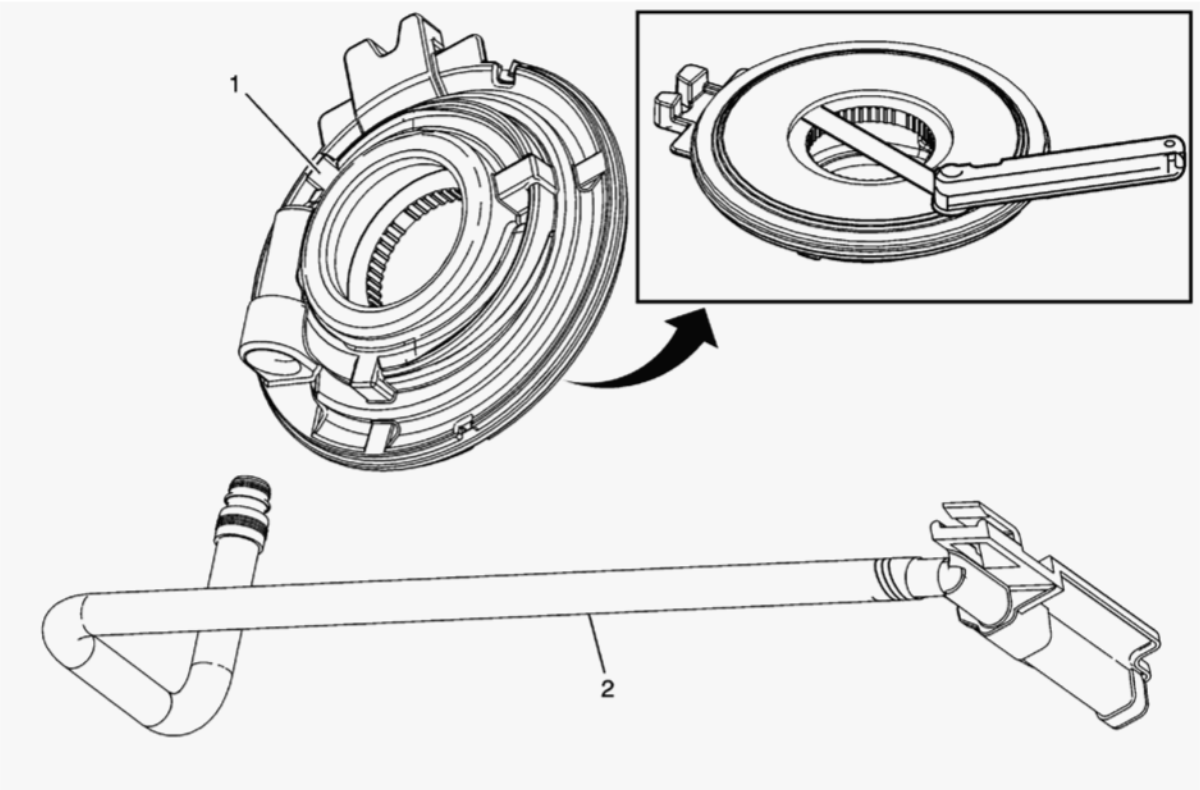

Fig. 39: Transfer Case Oil Pump Cleaning And Inspection Points
Courtesy of GENERAL MOTORS COMPANY

Callout	Component Name
Preliminary Procedure 1. Inspect all components or sub-components and perform any repair procedure necessary to fix the damage. If the damage cannot be repaired, replace the component or sub-component as indicated. 2. Clean all components in cleaning solvent and air dry.	
1	Transfer Case Oil Pump Assembly **NOTE:**

cardiagn.com

Callout	Component Name
	Replace the oil pump assembly if end play is evident or if there is any sign of binding. End play can be measured by inserting a feeler gauge between the outer rotor and housing. If the end play is greater than 0.1 mm (0.004 in), replace the oil pump assembly. Do not disassemble the oil pump. The oil pump is serviced as an assembly.
2	Transfer Case Oil Pump Suction Pipe **NOTE:** **Replace the**

cardiagn.com

Callout	Component Name
	oil pump suction pipe if the screen is embedded with debris.

REAR OUTPUT SHAFT CLEANING AND INSPECTION

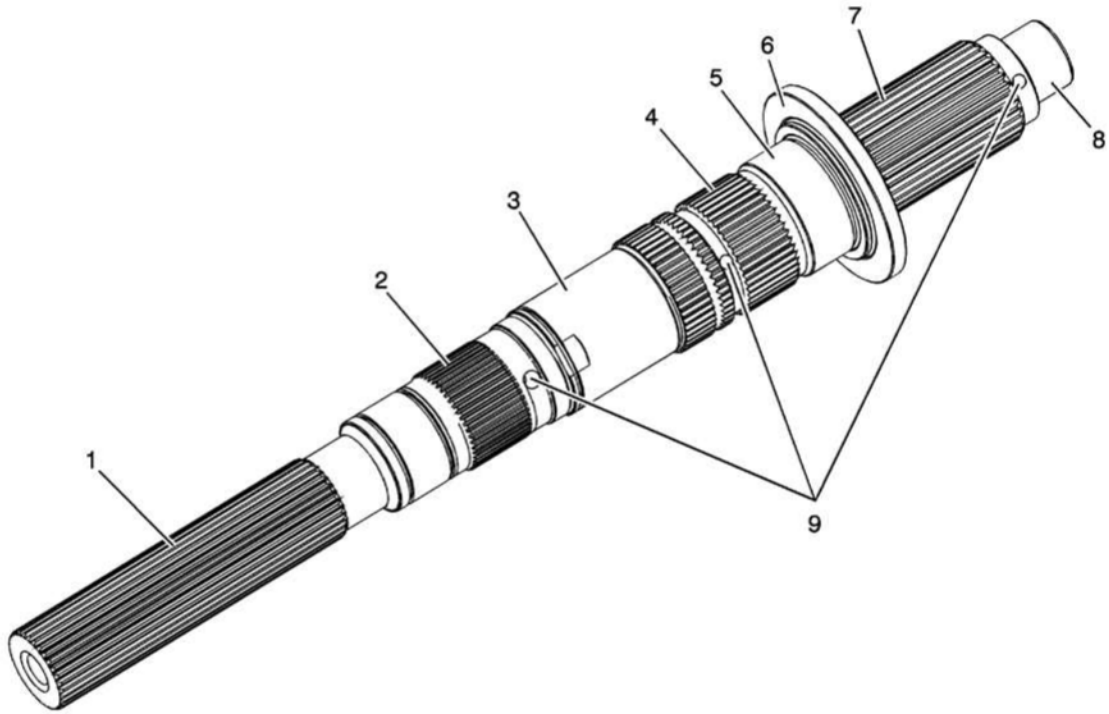

Fig. 40: Rear Output Shaft Cleaning And Inspection Points
Courtesy of GENERAL MOTORS COMPANY

Callout	Component Name
Preliminary Procedure	

cardiagn.com

Callout	Component Name
1. Inspect all components or sub-components and perform any repair procedure necessary to fix the damage. If the damage cannot be repaired, replace the component or sub-component as indicated. 2. Clean all components in cleaning solvent and air dry.	
1	Transfer Case Rear Output Shaft Splines **NOTE:** **Witness marks at the location of the yoke are normal.**
2	Transfer Case Oil Pump and Rear Output Shaft Speed Reluctor Wheel Engagement Splines **NOTE:** **Witness marks at the location of the components are normal.**
3	Transfer Case Front Output Shaft Drive Sprocket Bearing Surface **NOTE:** **Inspect for scoring, brinelling, pitting, or excessive wear.**
4	Transfer Case Two/Four Wheel Drive Clutch Hub Engagement Splines **NOTE:**

cardiagn.com

Callout	Component Name
	Witness marks at the location of the hub is normal.
5	Transfer Case Control Actuator Lever Bearing Surface **NOTE:** **Inspect for scoring, brinelling, pitting, or excessive wear.**
6	Transfer Case Control Actuator Lever Thrust Bearing Surface **NOTE:** **Inspect for scoring, brinelling, pitting, or excessive wear.**
7	Transfer Case Engagement Splines **NOTE:** **Witness marks at the location of the splines is normal.**
8	Transfer Case Input Shaft Pilot Bearing Surface

cardiagn.com

Callout	Component Name
	NOTE:
9	Oil galleries NOTE: Inspect for scoring, pitting, or excessive wear. Compressed air may be necessary to clean the oil galleries.

FRONT OUTPUT SHAFT AND INPUT SHAFT CLEANING AND INSPECTION

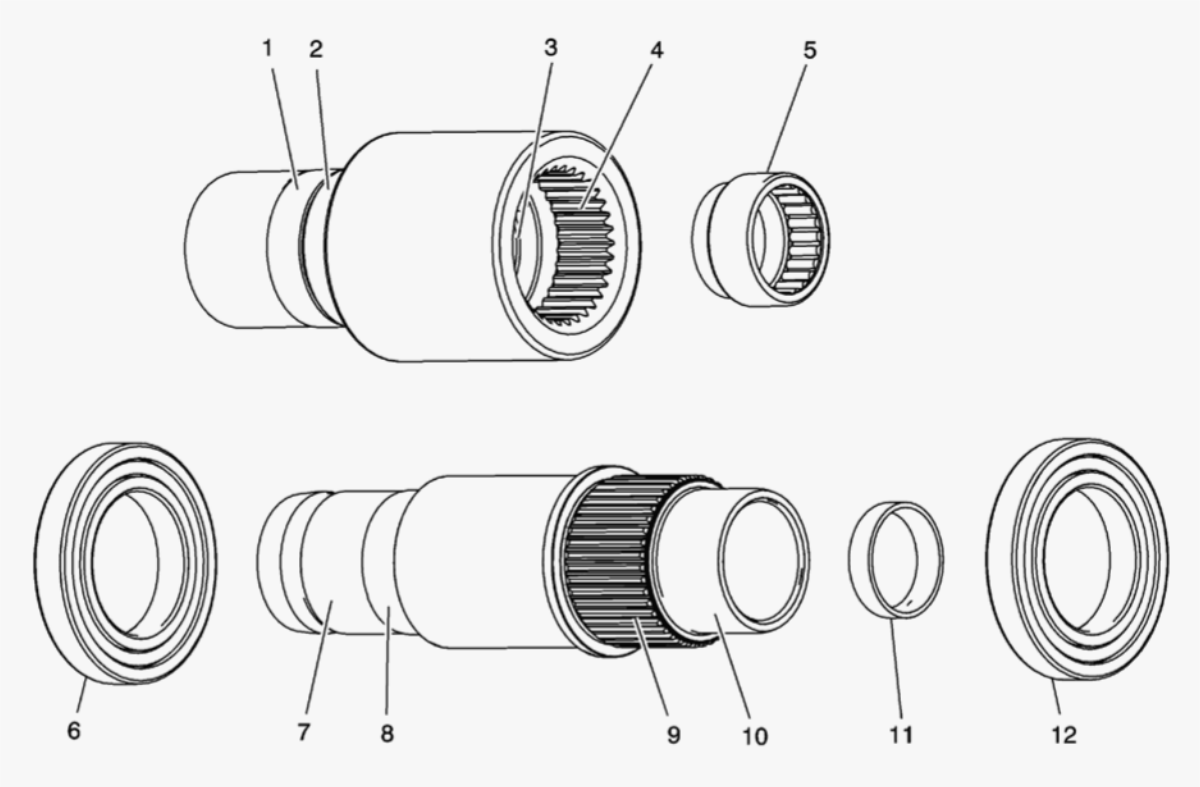

Fig. 41: Front Output Shaft And Input Shaft Cleaning And Inspection Points

cardiagn.com

Courtesy of GENERAL MOTORS COMPANY

Callout	Component Name
Preliminary Procedure 1. Inspect all components or sub-components and perform any repair procedure necessary to fix the damage. If the damage cannot be repaired, replace the component or sub-component as indicated. 2. Clean all components in cleaning solvent and air dry.	
1	Transfer Case Input Shaft Seal Surface **NOTE:** **Inspect for pitting, excessive wear, or damage.**
2	Transfer Case Input Shaft Bearing Surface **NOTE:** **Inspect for excessive wear, damage, or if the bearing has spun on the shaft.**
3	Transfer Case Input Shaft Pilot Bearing Surface **NOTE:** **If the bearing is removed, inspect for excessive**

cardiagn.com

Callout	Component Name
	wear, damage, or if the bearing has spun in the bore.
4	Transfer Case Input Shaft Splines **NOTE:** **Witness marks at the location of the splines are normal.**
5	Transfer Case Input Shaft Pilot Bearing Assembly **Procedure** Replace the bearing if roughness, brinelling, or pitting is detected. Refer to **Input Shaft Pilot Bearing Replacement**.
6	Transfer Case Front Output Shaft Front Bearing Assembly **Procedure** Replace the bearing if roughness, brinelling, or pitting is detected. Refer to **Front Output Shaft Front and Rear Bearing Replacement**.
7	Transfer Case Front Output Shaft Seal Surface **NOTE:** **Inspect for pitting, excessive wear, or damage.**
8	Transfer Case Front Output Shaft Front Bearing Surface **NOTE:** **If the bearing is**

cardiagn.com

Callout	Component Name
	removed, inspect for excessive wear, damage, or if the bearing has spun on the shaft.
9	Transfer Case Front Output Shaft Driven Sprocket Engagement Splines **NOTE:** **Witness marks at the location of the sprocket is normal.**
10	Transfer Case Front Output Shaft Rear Bearing Surface **NOTE:** **If the bearing is removed, inspect for excessive wear, damage, or if the bearing has spun on the shaft.**
11	Transfer Case Front Output Shaft Hole Plug **Procedure** Replace the plug if removed. Refer to **Front Output Shaft Front and Rear Bearing Replacement**.
12	Transfer Case Front Output Shaft Rear Bearing Assembly **Procedure**

cardiagn.com

Callout	Component Name
	Replace the bearing if roughness, brinelling, or pitting is detected. Refer to **Front Output Shaft Front and Rear Bearing Replacement**.

DRIVE CHAIN, DRIVE SPROCKET, AND DRIVEN SPROCKET CLEANING AND INSPECTION

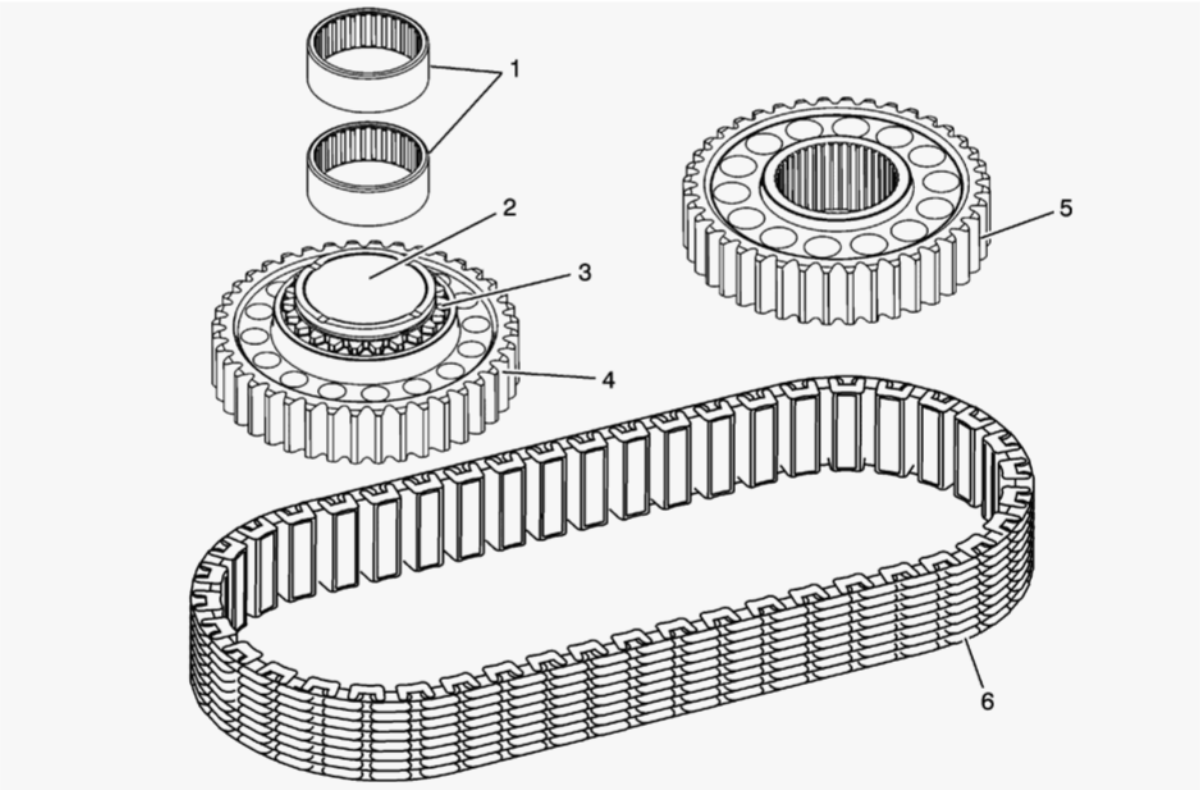

Fig. 42: Drive Chain, Drive Sprocket, And Driven Sprocket Cleaning And Inspection Points
Courtesy of GENERAL MOTORS COMPANY

Callout	Component Name
Preliminary Procedure	
1. Inspect all components or sub-components and perform any repair procedure necessary to fix the damage. If the damage cannot be repaired, replace the component or sub-component as indicated.	
2. Replace any components if damage is found in this procedure. The sprockets must be replaced as a pair.	

cardiagn.com

Callout	Component Name
3. Clean all components in cleaning solvent and air dry.	
1	Transfer Case Front Output Shaft Drive Sprocket Bearing Assembly **Procedure** Replace the bearings if roughness, brinelling, or pitting is detected. Refer to **Front Output Shaft Drive Sprocket Bearing Replacement**.
2	Transfer Case Front Output Shaft Drive Sprocket Bearing Bore **NOTE:** **If the bearing is removed, inspect for excessive wear, damage, or if the bearing has spun in the bore.**
3	Transfer Case Four Wheel Drive Clutch Housing Engagement Teeth **NOTE:** **Inspect the engagement teeth for chips or excessive wear.**
4	Transfer Case Front Output Shaft Drive Sprocket **NOTE:** • **Inspect for chipped**

cardiagn.com

Callout	Component Name
	teeth, excessively worn gear surfaces, and debris embedded in the root of the teeth. • Witness marks at the location of the chain is normal.
5	Transfer Case Front Output Shaft Driven Sprocket **NOTE:** • Inspect for chipped teeth, excessively worn gear surfaces, and debris embedded in the root of the teeth. • Witness marks at the location of

cardiagn.com

Callout	Component Name
	the chain is normal.
6	Transfer Case Front Output Shaft Drive Chain Assembly **NOTE:** **Inspect for loose link pins, binding or stiff links, debris embedded in the links, or worn teeth surfaces.**

HIGH/LOW SHIFT COMPONENTS CLEANING AND INSPECTION

cardiagn.com

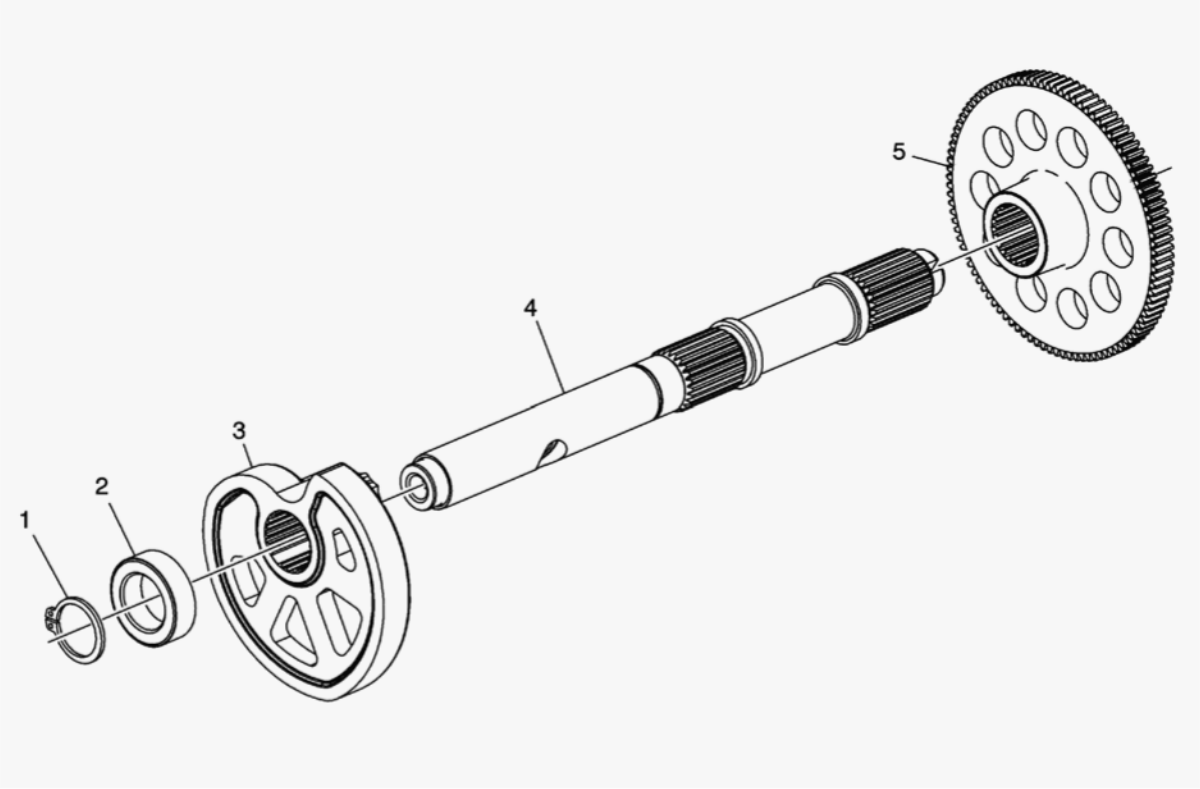

Fig. 43: High/Low Shift Components Cleaning And Inspection Points
Courtesy of GENERAL MOTORS COMPANY

Callout	Component Name
Preliminary Procedure 1. Inspect all components or sub-components and perform any repair procedure necessary to fix the damage. If the damage cannot be repaired, replace the component or sub-component as indicated. 2. Clean all components in cleaning solvent and air dry.	
1	Transfer Case Actuator Cam Retaining Ring **NOTE:** **Inspect the ring for wear**

cardiagn.com

Callout	Component Name
	or damage.
2	Transfer Case Actuator Cam Spacer **NOTE:** **Inspect the spacer for wear or damage.**
3	Transfer Case Actuator Cam **NOTE:** **Inspect the cam for wear on the roller surface and damage to the splines. Witness marks on the splines are normal.**
4	Transfer Case Control Actuator Shaft **NOTE:** **Inspect the shaft splines for excessive wear. The component must be replaced if damage is**

cardiagn.com

Callout	Component Name
	found.
5	Transfer Case Actuator Shaft Gear Teeth **NOTE:** • **Inspect for chipped teeth, excessively worn gear surfaces, and debris embedded in the root of the teeth.** • **Inspect the shaft splines for excessive wear. Witness marks on the splines are normal.**

TWO/FOUR WHEEL DRIVE SHIFT COMPONENTS CLEANING AND INSPECTION

cardiagn.com

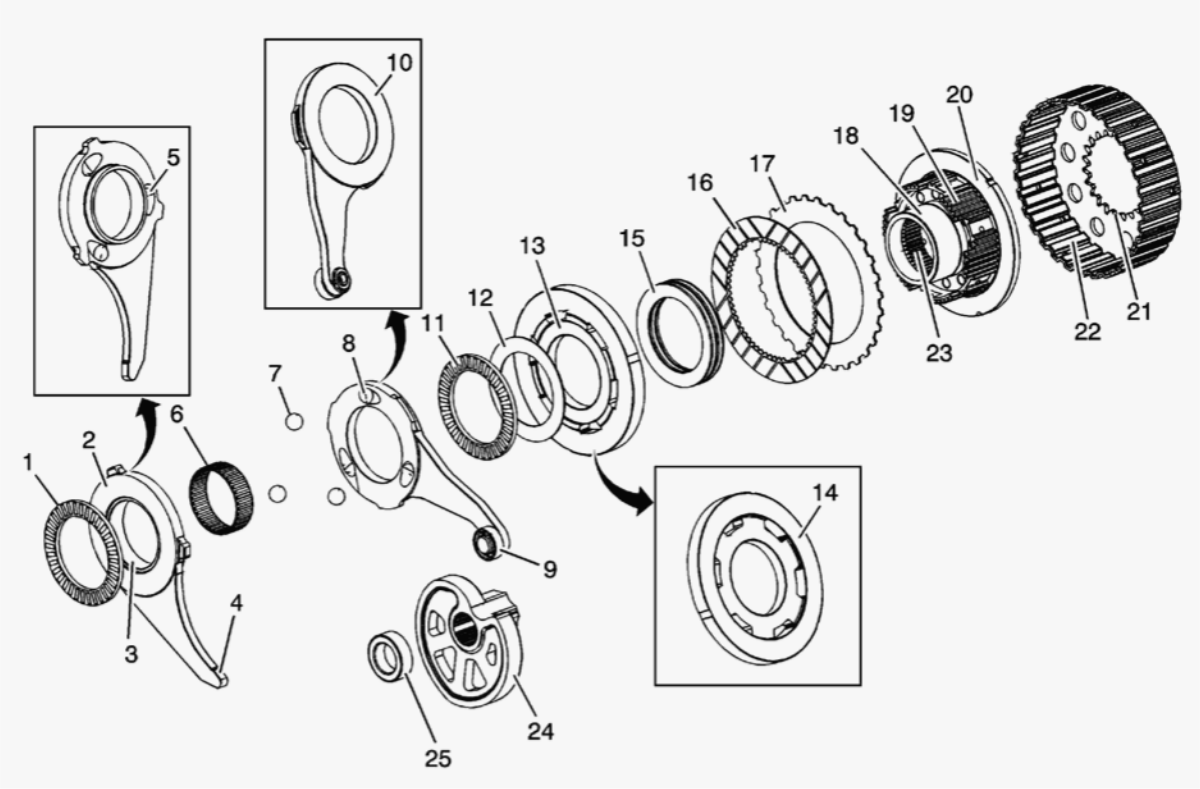

Fig. 44: Two/Four Wheel Drive Shift Components Cleaning And Inspection Points
Courtesy of GENERAL MOTORS COMPANY

Callout	Component Name
Preliminary Procedure 1. Inspect all components or sub-components and perform any repair procedure necessary to fix the damage. If the damage cannot be repaired, replace the component or sub-component as indicated. 2. Clean all components in cleaning solvent and air dry, except the clutch plates.	
1	Transfer Case Control Actuator Thrust Bearing **NOTE:** **Replace the bearing if**

cardiagn.com

Callout	Component Name
	roughness, brinelling, or pitting is detected.
2	Transfer Case Control Actuator Lever Thrust Bearing Surface **NOTE:** • **Refer to Service Parts Release Usage Change - NQH/NP0 Control Actuator Levers in the New Product Information** • **Inspect for pitting, excessive wear, or damage.**
3	Transfer Case Control Actuator Lever Bearing Surface **NOTE:** **Inspect for pitting, excessive wear, or damage.**

cardiagn.com

Callout	Component Name
4	Transfer Case Control Lever Arm **NOTE:** **Inspect for excessive wear or damage.**
5	Transfer Case Control Actuator Lever Ball Ramps **NOTE:** **Inspect for pitting, excessive wear, or damage.**
6	Transfer Case Control Actuator Lever Bearing **NOTE:** **Replace the bearing if roughness, brinelling, or pitting is detected.**
7	Transfer Case Control Actuator Lever Balls **NOTE:** **Replace the bearings if roughness or pitting is detected.**

cardiagn.com

Callout	Component Name
8	Transfer Case Control Actuator Lever Ball Ramps **NOTE:** **Inspect for pitting, excessive wear, or damage.**
9	Transfer Case Control Actuator Lever Bearing **NOTE:** **Replace the control actuator lever assembly if roughness, brinelling, or pitting is detected.**
10	Transfer Case Control Actuator Lever Bearing Surface **NOTE:** **Inspect for pitting, excessive wear, or damage.**
11	Transfer Case Control Actuator Thrust Bearing **NOTE:** **Replace the bearing if**

cardiagn.com

Callout	Component Name
	roughness, brinelling, or pitting is detected.
12	Transfer Case Control Actuator Lever Washer **NOTE:** **Inspect for pitting, excessive wear, or damage.**
13	Transfer Case Four Wheel Drive Clutch Pressure (Apply) Plate Washer Surface **NOTE:** **Inspect for pitting, excessive wear, or damage.**
14	Transfer Case Four Wheel Drive Clutch Pressure (Apply) Plate Surface **NOTE:** **Inspect for excessive wear, cracks, or damage.**
15	Transfer Case Four Wheel Drive Clutch Pressure Plate Springs **NOTE:** **Inspect the springs for cracks.**

cardiagn.com

Callout	Component Name
16	Transfer Case Four Wheel Drive Clutch Pressure (Friction) Plates **NOTE:** **Inspect for worn, grooved, burnt, or flaking friction material, or warped friction plates.**
17	Transfer Case Four Wheel Drive Clutch Pressure (Steel) Plates **NOTE:** **Inspect for worn or warped steel plates.**
18	Transfer Case Four Wheel Drive Clutch Hub Bearing Surface **NOTE:** **Inspect for pitting, excessive wear, or damage.**
19	Transfer Case Four Wheel Drive Clutch Hub Teeth **NOTE:** **Inspect for excessive**

cardiagn.com

Callout	Component Name
	wear or damage. Excessive wear can be identified by steps in the teeth.
20	Transfer Case Four Wheel Drive Clutch Hub Friction Plate Surface **NOTE:** **Inspect for excessive wear, cracks, or damage.**
21	Transfer Case Front Output Shaft Drive Sprocket Engagement Teeth **NOTE:** **Inspect the engagement teeth for excessive looseness on the front output shaft drive sprocket.**
22	Transfer Case Four Wheel Drive Clutch Housing Teeth **NOTE:** **Inspect for excessive wear or damage.**

cardiagn.com

Callout	Component Name
	Excessive wear can be identified by steps in the teeth.
23	Transfer Case Four Wheel Drive Clutch Hub Splines **NOTE:** **Inspect the splines for excessive looseness on the rear output shaft.**
24	Transfer Case Two/Four Wheel Drive Actuator Cam **NOTE:** **Inspect the cam lobes for wear or roughness.**
25	Transfer Case Two/Four Wheel Drive Actuator Cam Spacer **NOTE:** **Inspect the spacer for wear or roughness.**

TRANSFER CASE FOUR WHEEL DRIVE ACTUATOR LEVER SHAFT BEARING REPLACEMENT - FRONT

cardiagn.com

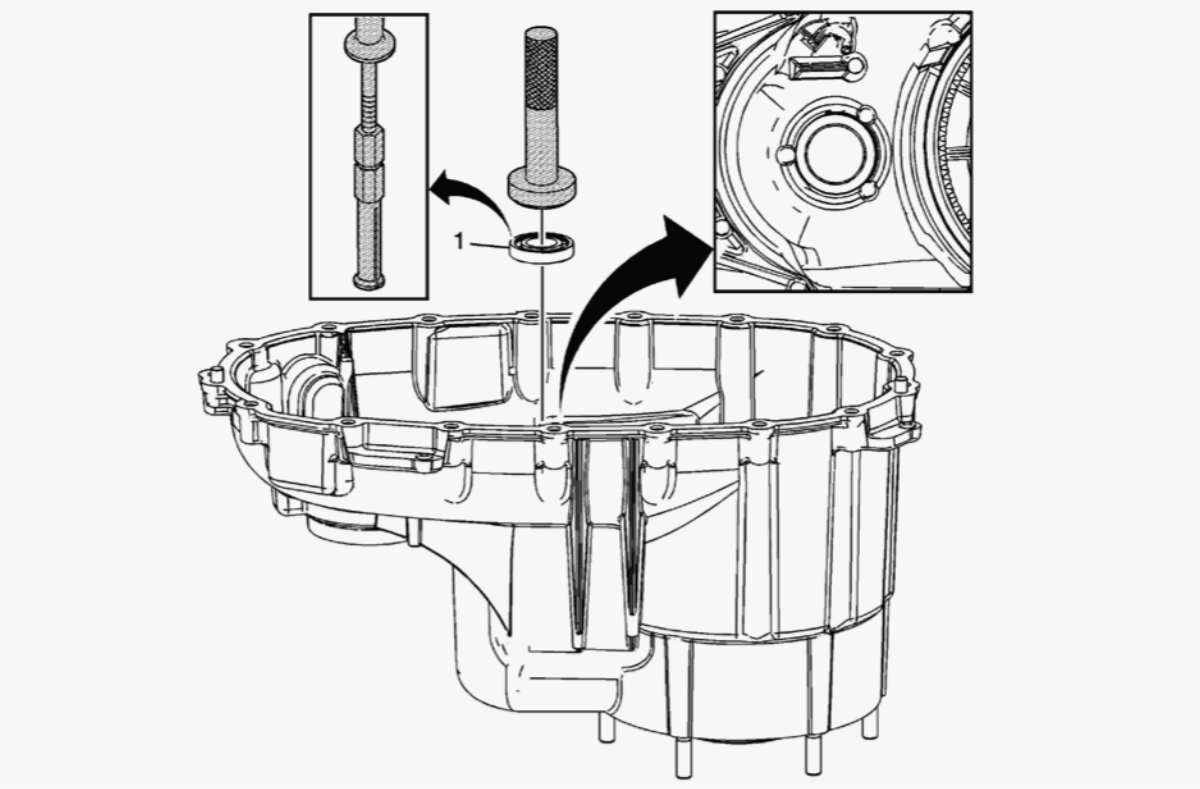

Fig. 45: Transfer Case Four Wheel Drive Actuator Lever Shaft Bearing - Front
Courtesy of GENERAL MOTORS COMPANY

Callout	Component Name
Preliminary Procedure Ensure the bearing is installed squarely into the bearing bore.	
1	Transfer Case Four Wheel Drive Actuator Lever Shaft Bearing Assembly **Procedure** 1. Ensure the printing on the bearing is facing upward. 2. A suitable adapter is required to use with the **J 8092** driver. 3. Press the bearing until the bearing bottoms on the front case half. **Special Tools**

cardiagn.com

Callout	Component Name
	• **J 2619-01** Slide Hammer • **J 8092** Universal Driver • **J 44737** Shift Rail Bearing Remover For equivalent regional tools, refer to **Special Tools**.

TRANSFER CASE FOUR WHEEL DRIVE ACTUATOR LEVER SHAFT BEARING REPLACEMENT - REAR

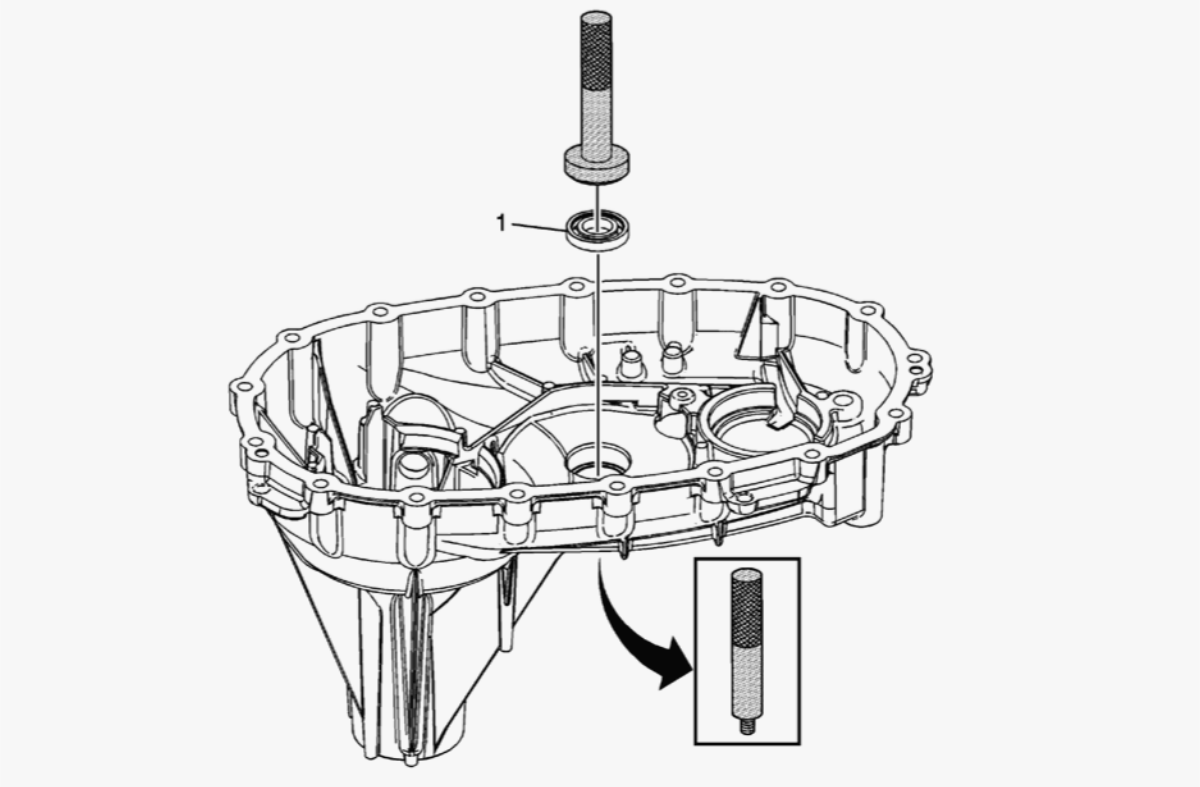

Fig. 46: Transfer Case Four Wheel Drive Actuator Lever Shaft Bearing - Rear
Courtesy of GENERAL MOTORS COMPANY

Callout	Component Name

cardiagn.com

Callout	Component Name
Preliminary Procedure Ensure the bearing is installed squarely into the bearing bore.	
1	Transfer Case Four Wheel Drive Actuator Lever Shaft Bearing Assembly **Procedure** 1. Ensure the printing on the bearing is facing upward. 2. A suitable adapter is required to use with the **J 8092** driver to install. 3. Press the bearing until the bearing bottoms on the rear case half. **Special Tools** **J 8092** Universal Driver For equivalent regional tools, refer to **Special Tools**.

INPUT SHAFT PILOT BEARING REPLACEMENT

cardiagn.com

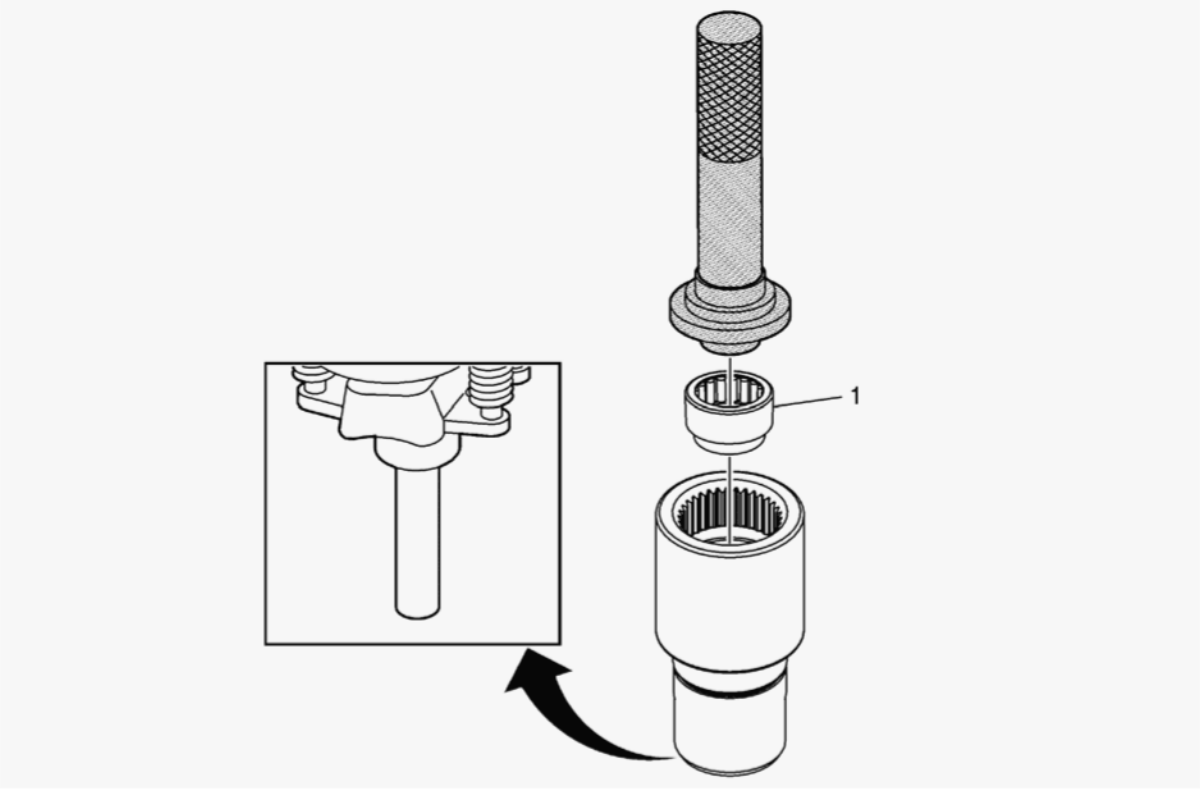

Fig. 47: Input Shaft Pilot Bearing
Courtesy of GENERAL MOTORS COMPANY

Callout	Component Name
Preliminary Procedure Ensure the bearing is installed squarely into the input shaft bore.	
1	Transfer Case Input Shaft Pilot Bearing **Procedure** 1. Using a suitable adapter and an arbor press, remove the input shaft pilot bearing by going through the front of the input gear. 2. Install the bearing using the small side of the **DT-48212** bearing installer. 3. Press the bearing until the tool bottoms on the input shaft.

cardiagn.com

Callout	Component Name
	Special Tools • **DT-48212** Input Shaft Pilot Bearing Installer • **J 8092** Universal Driver For equivalent regional tools, refer to **Special Tools**.

FRONT OUTPUT SHAFT FRONT AND REAR BEARING REPLACEMENT

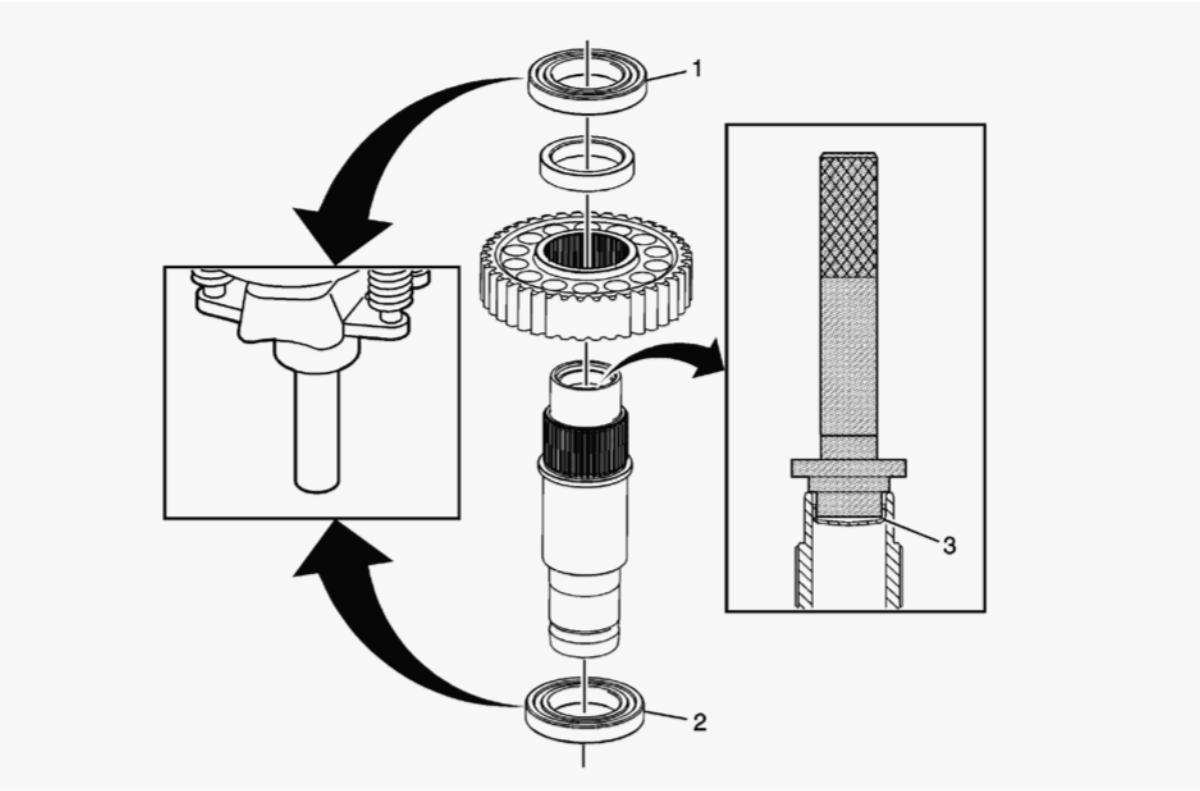

Fig. 48: Front Output Shaft Front And Rear Bearing
Courtesy of GENERAL MOTORS COMPANY

Callout	Component Name

cardiagn.com

Callout	Component Name
Preliminary Procedure 1. Ensure the bearings are installed squarely on the front output shaft. 2. Using a suitable adapter and an arbor press, remove the bearing assemblies from the front output shaft.	
1	Transfer Case Front Output Shaft Rear Bearing Assembly **NOTE:** **Using a suitable adapter and an arbor press, install the bearing until the bearing bottoms against the spacer.**
2	Transfer Case Front Output Shaft Front Bearing Assembly **NOTE:** **Using a suitable adapter and an arbor press, install the bearing until the bearing bottoms on the front output shaft.**

cardiagn.com

Callout	Component Name
3	Transfer Case Front Output Shaft Hole Plug **Procedure** 1. Using a suitable adapter and an arbor press, remove the front output shaft hole plug by going through the front of the front output shaft. 2. Install the plug using the large side of the **DT-48212** bearing installer. 3. Press the plug until the tool bottoms on the front output shaft. **Special Tools** • **DT-48212** Input Shaft Pilot Bearing Installer • **J 8092** Universal Driver For equivalent regional tools, refer to **Special Tools**.

FRONT OUTPUT SHAFT DRIVE SPROCKET BEARING REPLACEMENT

cardiagn.com

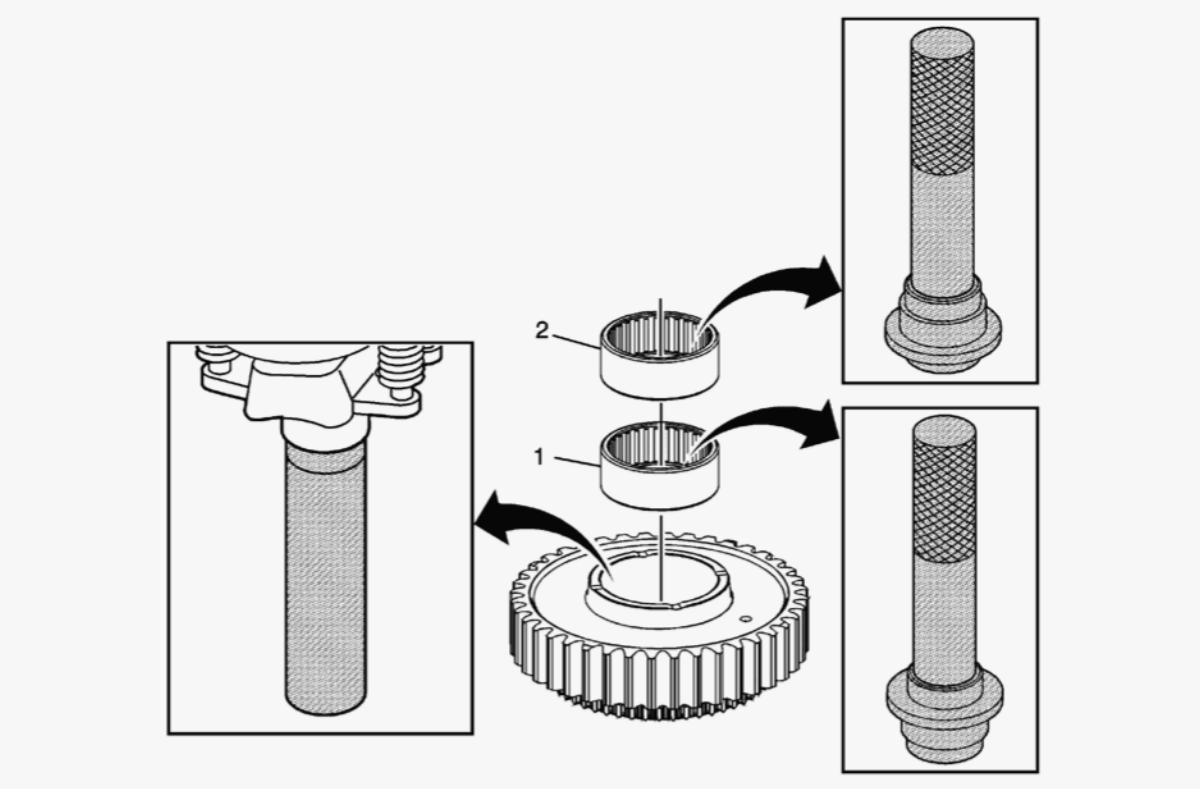

Fig. 49: Front Output Shaft Drive Sprocket Bearing
Courtesy of GENERAL MOTORS COMPANY

Callout	Component Name
Preliminary Procedure 1. Using the **J 35512** bearing installer and an arbor press, remove the bearing assemblies from the drive sprocket. 2. Ensure the bearings are installed squarely into the drive sprocket bore. 3. Install the bearings from the top with the clutch teeth facing down. **Special Tools J 35512** Inner Pinion Bearing Installer	
1	Transfer Case Front Output Shaft Drive Sprocket Bearing Assembly - Front **Procedure**

cardiagn.com

Callout	Component Name
	1. Install the bearing using the long side of the **DT-48211** bearing installer. 2. Ensure the flat edge of the bearing is facing upward. 3. Using an arbor press or hammer, install the bearing until the tool bottoms on the drive sprocket. **Special Tools** • **DT-48211** Drive Sprocket Bearing Installer • **J 8092** Universal Driver • **J 35512** Inner Pinion Bearing Installer For equivalent regional tools, refer to **Special Tools**.
2	Transfer Case Front Output Shaft Drive Sprocket Bearing Assembly - Rear **Procedure** 1. Install the bearing using the short side of the **DT-48211** bearing installer. 2. Ensure the flat edge of the bearing is facing upward. 3. Using an arbor press or hammer, install the bearing until the tool bottoms on the drive sprocket. **Special Tools** • **DT-48211** Drive Sprocket Bearing Installer • **J 8092** Universal Driver • **J 35512** Inner Pinion Bearing Installer For equivalent regional tools, refer to **Special Tools**.

TRANSFER CASE ASSEMBLE

Input Shaft Assembly Installation

cardiagn.com

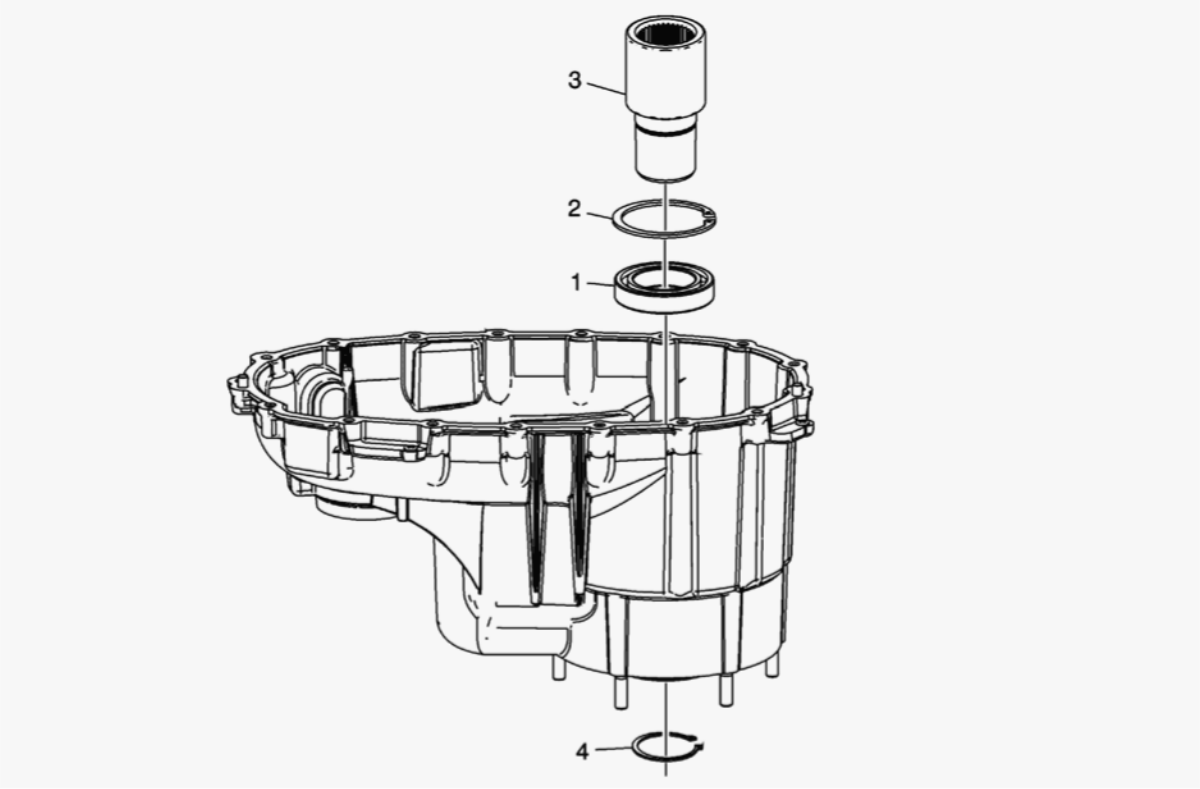

Fig. 50: Input Shaft Assembly
Courtesy of GENERAL MOTORS COMPANY

Input Shaft Assembly Installation

Callout	Component Name
1	Transfer Case Input Shaft Bearing Assembly
2	Transfer Case Input Shaft Inner Retaining Ring
3	Transfer Case Input Shaft
4	Transfer Case Input Shaft Bearing Outer Retaining Ring

Measuring Clutch Pack Height

cardiagn.com

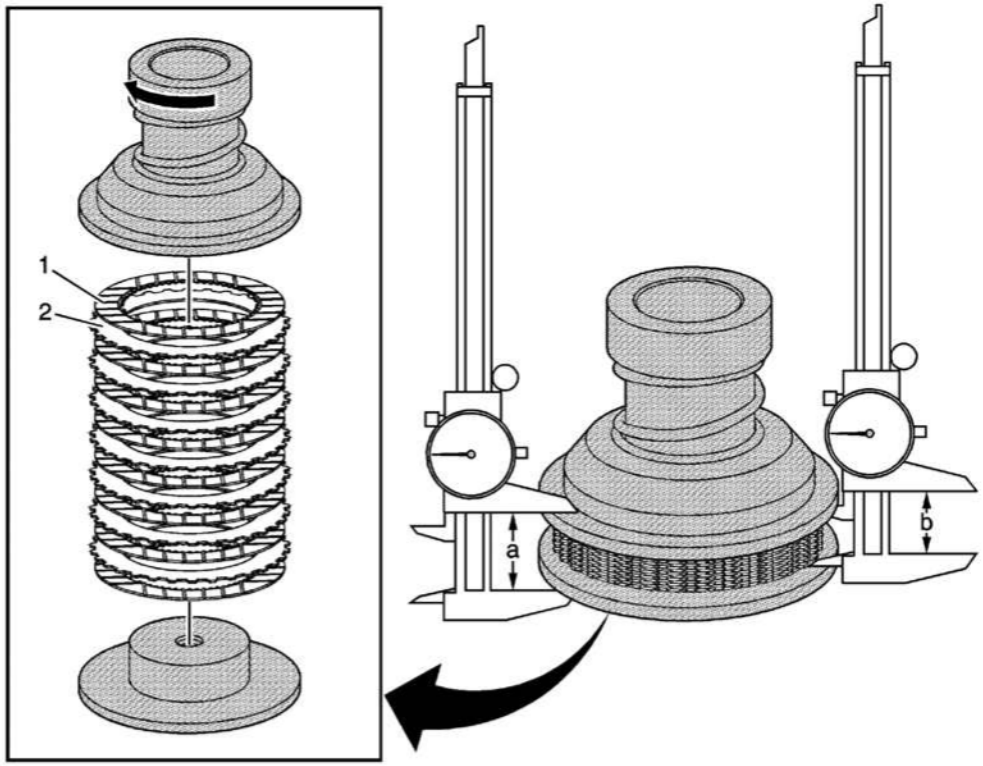

Fig. 51: Measuring Clutch Pack Height
Courtesy of GENERAL MOTORS COMPANY

Measuring Clutch Pack Height

Callout	Component Name
Preliminary Procedure 1. The **DT-48213** gauge applies a predetermined amount of pressure to the clutch pack in order to properly measure the clutch pack height. Do not use any other method than what is outlined below. 2. Micrometers or depth gauges may also be used in conjunction with the **DT-48213** gauge to measure the clutch pack height. 3. Two variations are available to measure clutch pack height, outside measurement or inside measurement. Either variation will determine the correct height.	
1	Transfer Case Four Wheel Drive Clutch Pressure - Friction - Plates (Qty: 8) **Procedure**

cardiagn.com

Callout	Component Name
	Install the friction and steel clutch plates into the **DT-48213** gauge, alternating until 8 friction plates and 7 steel plates are installed. **Special Tools** **DT-48213** Clutch Pack Height Gauge For equivalent regional tools, refer to **Special Tools**.
2	Transfer Case Four Wheel Drive Clutch Pressure - Steel - Plates (Qty: 7) **Procedure 1 - Outside Measurement:** 1. Tighten the **DT-48213** gauge until the upper portion of the tool contacts the lower portion of the tool. The screw will be flush with the bottom surface of the tool to indicate the tool has fully compressed the clutch plates. 2. Using an outside caliper, measure the total combined height of the clutch pack and the **DT-48213** gauge, dimension a. Subtract the thickness of both the upper and lower portion of the **DT-48213** gauge, 14 mm (0.551 in), and record the results. 3. Repeat the process in 2 additional locations, 120 degrees from each other. 4. The average of the 3 measurements is the clutch pack height. **Procedure 2 - Inside Measurement:** 1. Install the friction and steel clutch plates into the **DT-48213** gauge, alternating until 8 friction plates and 7 steel plates are installed. 2. Tighten the **DT-48213** gauge until the upper portion of the tool contacts the lower portion of the tool. The screw will be flush with the bottom surface of the tool to indicate the tool has fully compressed the clutch plates. 3. Using an inside caliper, measure the height of the clutch pack, dimension b, and record the results. 4. Repeat the process in 2 additional locations, 120 degrees from each other. 5. The average of the 3 measurements is the clutch pack height. **Special Tools** **DT-48213** Clutch Pack Height Gauge For equivalent regional tools, refer to **Special Tools**.

Clutch Assembly Installation

cardiagn.com

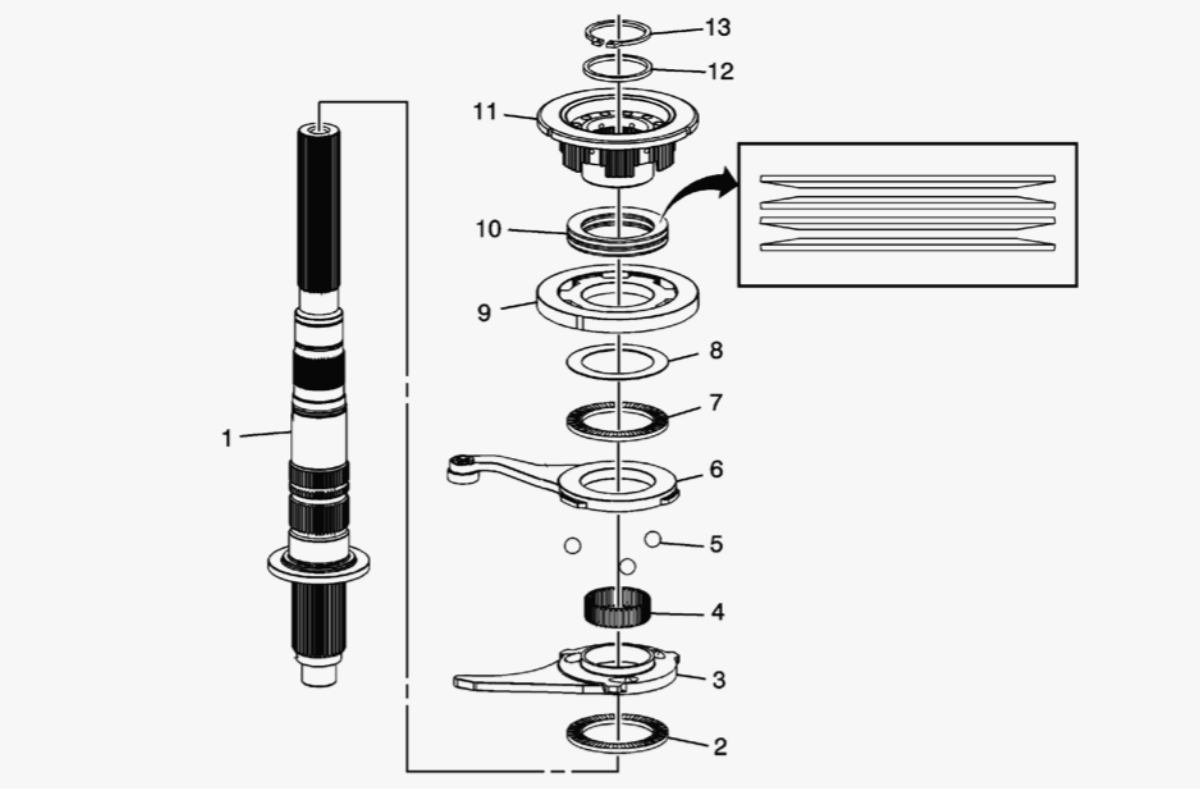

Fig. 52: Clutch Assembly
Courtesy of GENERAL MOTORS COMPANY

Clutch Assembly Installation

Callout	Component Name
1	Transfer Case Rear Output Shaft
2	Transfer Case Control Actuator Lever Thrust Bearing Assembly
3	Transfer Case Control Lever **NOTE:** **Refer to Service Parts Release**

cardiagn.com

Callout	Component Name
	Usage Change - NQH/NP0 Control Actuator Levers in the New Product Information
4	Transfer Case Control Actuator Lever Bearing Assembly
5	Transfer Case Control Actuator Lever Ball (Qty: 3)
6	Transfer Case Control Actuator Lever Assembly **NOTE:** **Refer to Service Parts Release Usage Change - NQH/NP0 Control Actuator Levers in the New Product Information**
7	Transfer Case Control Actuator Lever Thrust Bearing Assembly
8	Transfer Case Control Actuator Lever Washer
9	Transfer Case Four Wheel Drive Clutch Pressure - Apply - Plate **NOTE:** **Ensure the control actuator**

cardiagn.com

Callout	Component Name
	lever washer is seated into the apply plate groove.
10	Transfer Case Four Wheel Drive Clutch Pressure Plate Spring (Qty: 4)
11	Transfer Case Four Wheel Drive Clutch Hub
12	Transfer Case Four Wheel Drive Clutch Shim **Procedure** • Use a 3 mm (0.118 in) shim as a base to do the initial measurements with, this shim may be changed in the following steps depending on the results of the stack clearance. • Use the original shim if reassembling a transfer case. This shim may be changed in the following steps depending on the results of the stack clearance.
13	Transfer Case Two/Four Wheel Drive Clutch Retaining Ring **NOTE:** **If the clutch shim is not seated against the retaining ring, replace the clutch pressure plate springs.**

Measuring/Adjusting Clutch Assembly Height

cardiagn.com

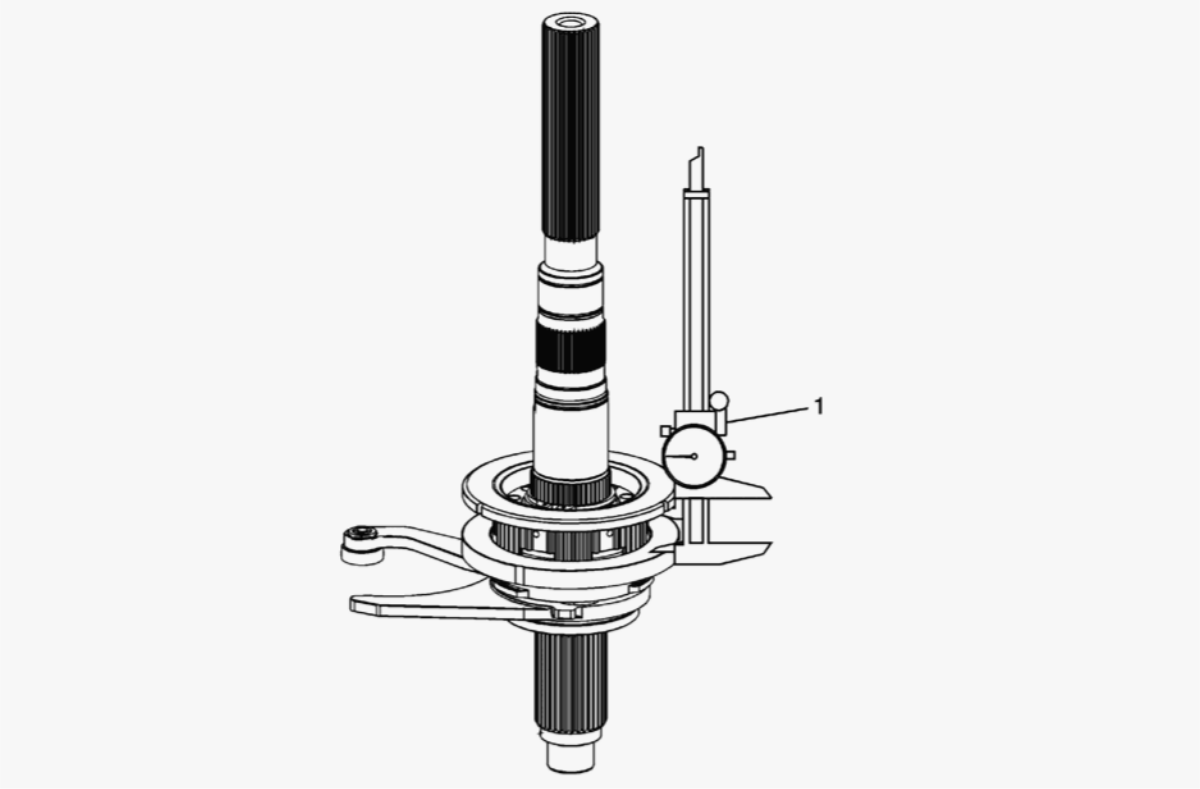

Fig. 53: Measuring/Adjusting Clutch Assembly Height
Courtesy of GENERAL MOTORS COMPANY

Measuring/Adjusting Clutch Assembly Height

Callout	Component Name
1	Clutch Assembly **Procedure:** 1. Using an inside caliper, measure the height of the clutch assembly in the location shown and record the results. 2. Repeat the process in 2 additional locations, 120 degrees from each other. 3. The average of the 3 measurements is the clutch assembly height. 4. A 3.1 mm (0.122 in) clearance +/- 0.1 mm (0.004 in) is necessary between the clutch pack height and the assembly height. It may be necessary to replace the clutch shim with a thicker shim or a thinner shim, to achieve the proper

cardiagn.com

Callout	Component Name
	clearance in the clutch. 5. Subtract the clutch pack height from the clutch assembly height. The difference should be between 3.0 mm (0.118 in) and 3.2 mm (0.126 in) clearance. **NOTE:** • **A variety of shims are available to properly adjust the clearance height of the clutch assembly.** • **An inside micrometer may also be used to measure the clutch assembly height.**

Clutch Pressure Plate Installation

cardiagn.com

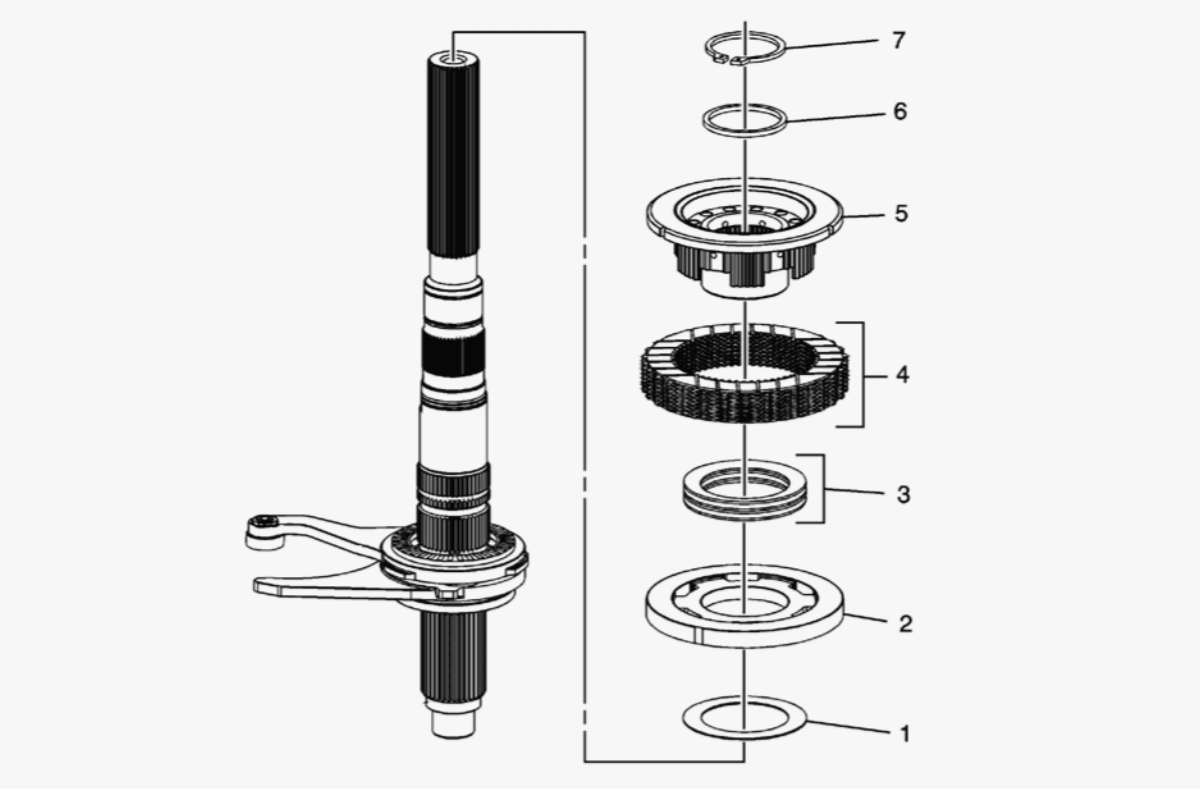

Fig. 54: Clutch Pressure Plate
Courtesy of GENERAL MOTORS COMPANY

Clutch Pressure Plate Installation

Callout	Component Name
1	Transfer Case Control Actuator Lever Washer
2	Transfer Case Four Wheel Drive Clutch Pressure - Apply - Plate
3	Transfer Case Four Wheel Drive Clutch Pressure Plate Spring (Qty: 4)
4	Transfer Case Four Wheel Drive Clutch Pressure Plate
5	Transfer Case Four Wheel Drive Clutch Hub
6	Transfer Case Four Wheel Drive Clutch Shim
7	Transfer Case Two/Four Wheel Drive Clutch Retaining Ring

Rear Output Shaft Assembly

cardiagn.com

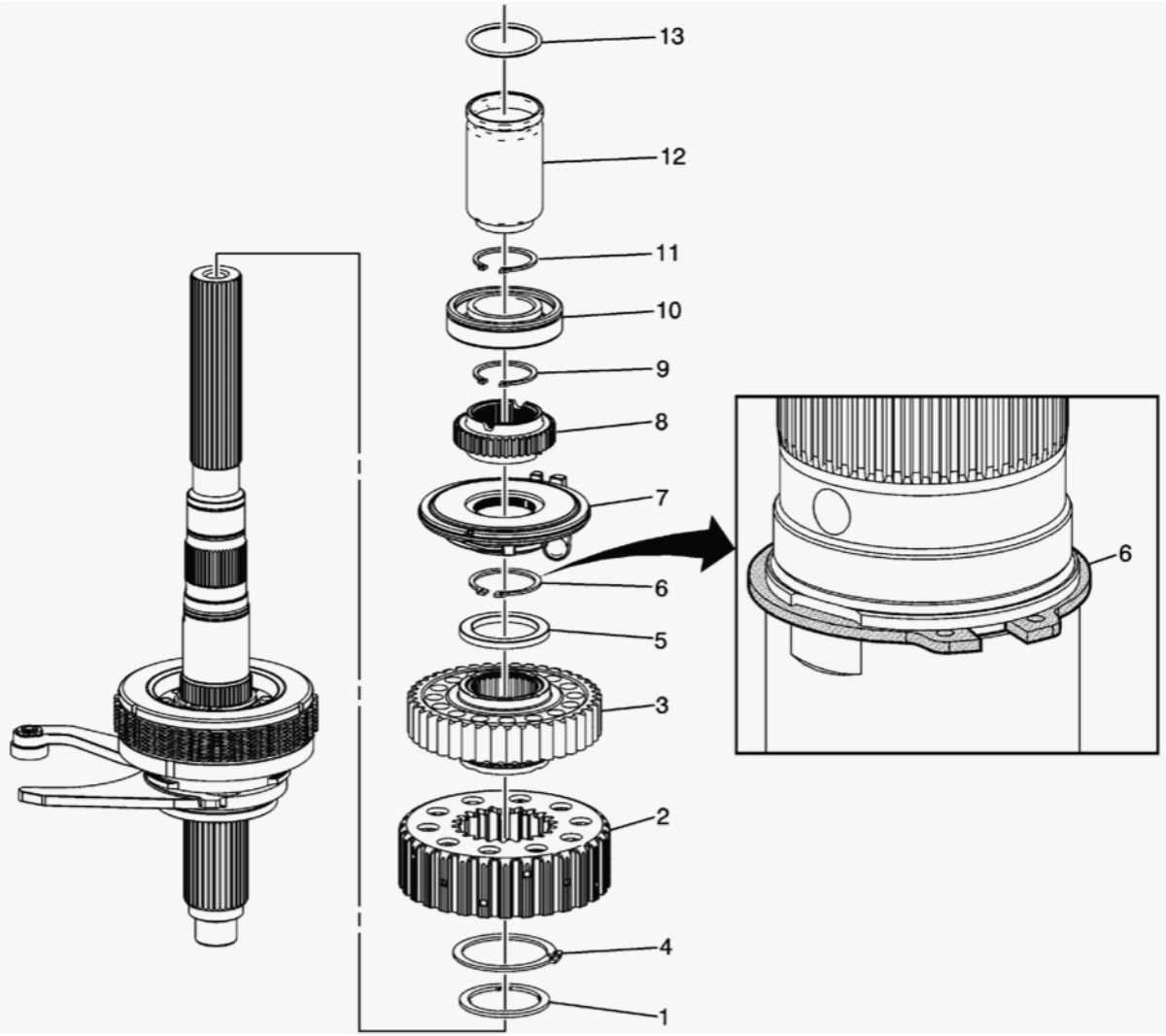

Fig. 55: Rear Output Shaft Assembly
Courtesy of GENERAL MOTORS COMPANY

Rear Output Shaft Assembly

Callout	Component Name
1	Transfer Case Front Output Shaft Drive Sprocket Spacer - Front
2	Transfer Case Four Wheel Drive Clutch Housing
3	Transfer Case Front Output Shaft Drive Sprocket

cardiagn.com

Callout	Component Name
4	Transfer Case Four Wheel Drive Clutch Housing Retaining Ring
5	Transfer Case Front Output Shaft Drive Sprocket Spacer - Rear
6	Transfer Case Front Output Shaft Drive Sprocket Retaining Ring **NOTE:** **Ensure the retaining ring is installed into the correct retaining ring groove on the rear output shaft.**
7	Transfer Case Oil Pump Assembly
8	Transfer Case Rear Output Shaft Speed Reluctor Wheel
9	Transfer Case Rear Output Shaft Rear Bearing Retaining Ring
10	Transfer Case Rear Output Shaft Rear Bearing Assembly **NOTE:** • **Use an arbor press or suitable installer to install the bearing to the rear output shaft.** • **Ensure the**

cardiagn.com

Callout	Component Name
	retaining ring groove in the outer race is positioned toward the rear.
11	Transfer Case Rear Output Shaft Rear Bearing Retaining Ring
12	Propeller Shaft Oil Seal Sleeve
13	Propeller Shaft Sleeve Seal

Propeller Shaft Oil Seal Sleeve Installation

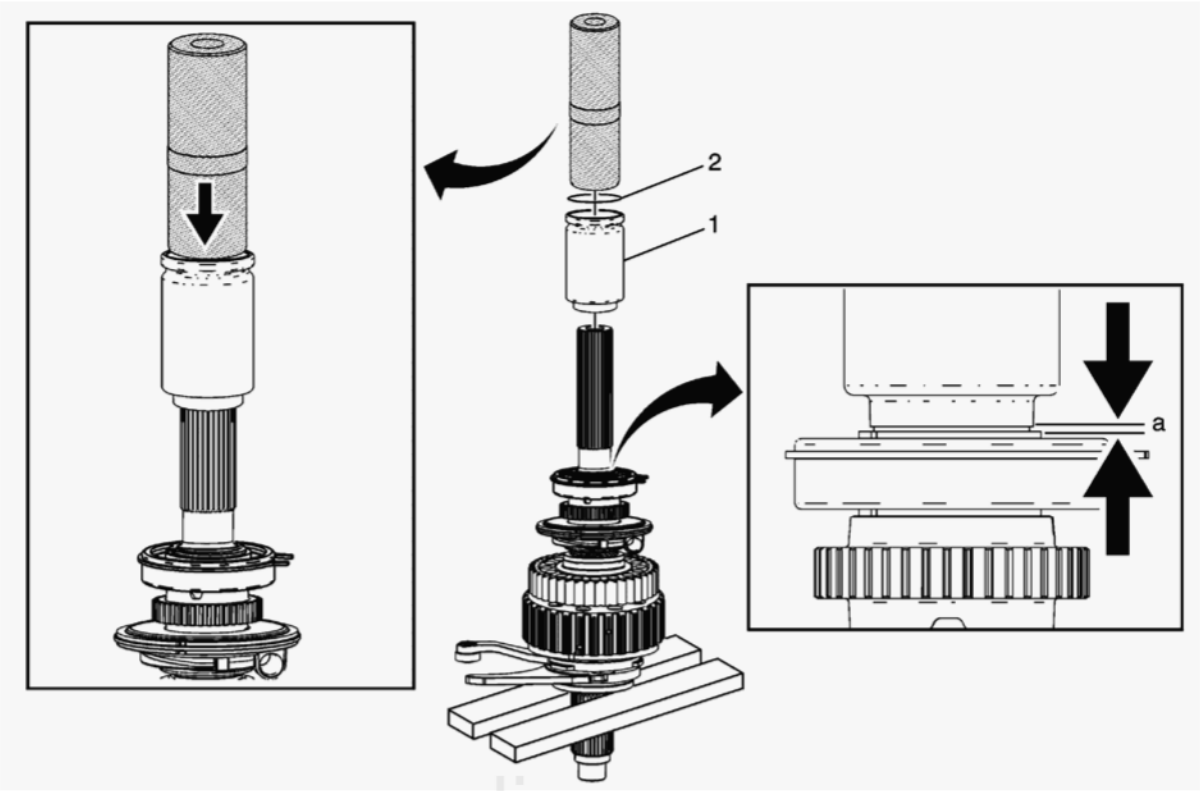

cardiagn.com

Fig. 56: Propeller Shaft Oil Seal Sleeve
Courtesy of GENERAL MOTORS COMPANY

Propeller Shaft Oil Seal Sleeve Installation

Callout	Component Name
1	Propeller Shaft Oil Seal Sleeve **NOTE:** • **Press the sleeve onto the shaft until the tool contacts the end of the rear output shaft. Install a NEW sleeve during assembly.** • **The sleeve is to be installed without the seal.** • **A properly installed sleeve**

cardiagn.com

Callout	Component Name
	should not contact the rear bearing snap ring. **Procedure** 1. Using **DT-51083** sleeve installer and a press install the propeller shaft oil seal sleeve. 2. Inspect for a 3.7-4.3 mm (0.14-0.17 in) gap (a) between the sleeve and the snap ring. **Special Tools** **DT-51083** Sleeve Installer For equivalent regional tools, refer to **Special Tools**.
2	Propeller Shaft Sleeve Seal

Actuator Shaft and Cam Assembly, and Rear Output Shaft Assembly Installation

cardiagn.com

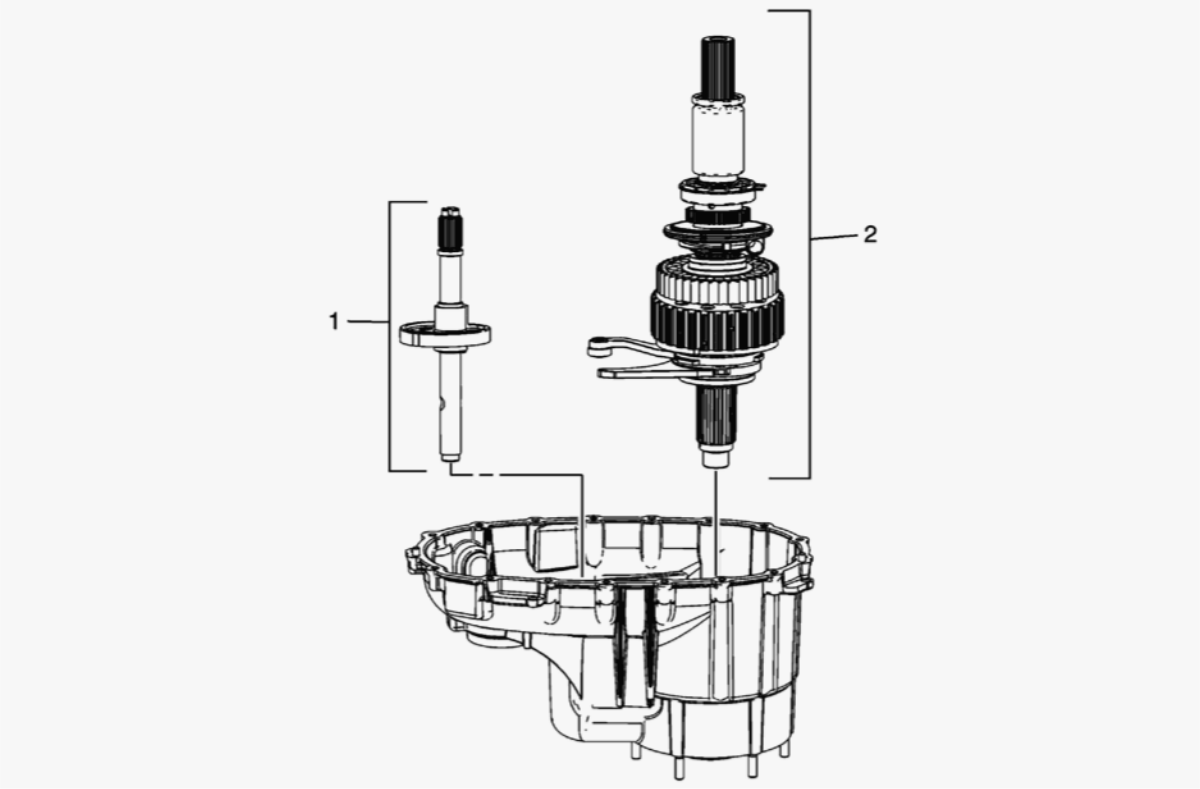

Fig. 57: Actuator Shaft and Cam Assembly, and Rear Output Shaft Assembly
Courtesy of GENERAL MOTORS COMPANY

Actuator Shaft and Cam Assembly, and Rear Output Shaft Assembly Installation

Callout	Component Name
Preliminary Procedure Load all 3 components simultaneously.	
1	Transfer Case Actuator Shaft and Cam Assembly
2	Transfer Case Rear Output Shaft Assembly

Front Output Shaft Assembly, Drive Chain, Actuator Shaft Gear, and Oil Pump Suction Pipe Installation

cardiagn.com

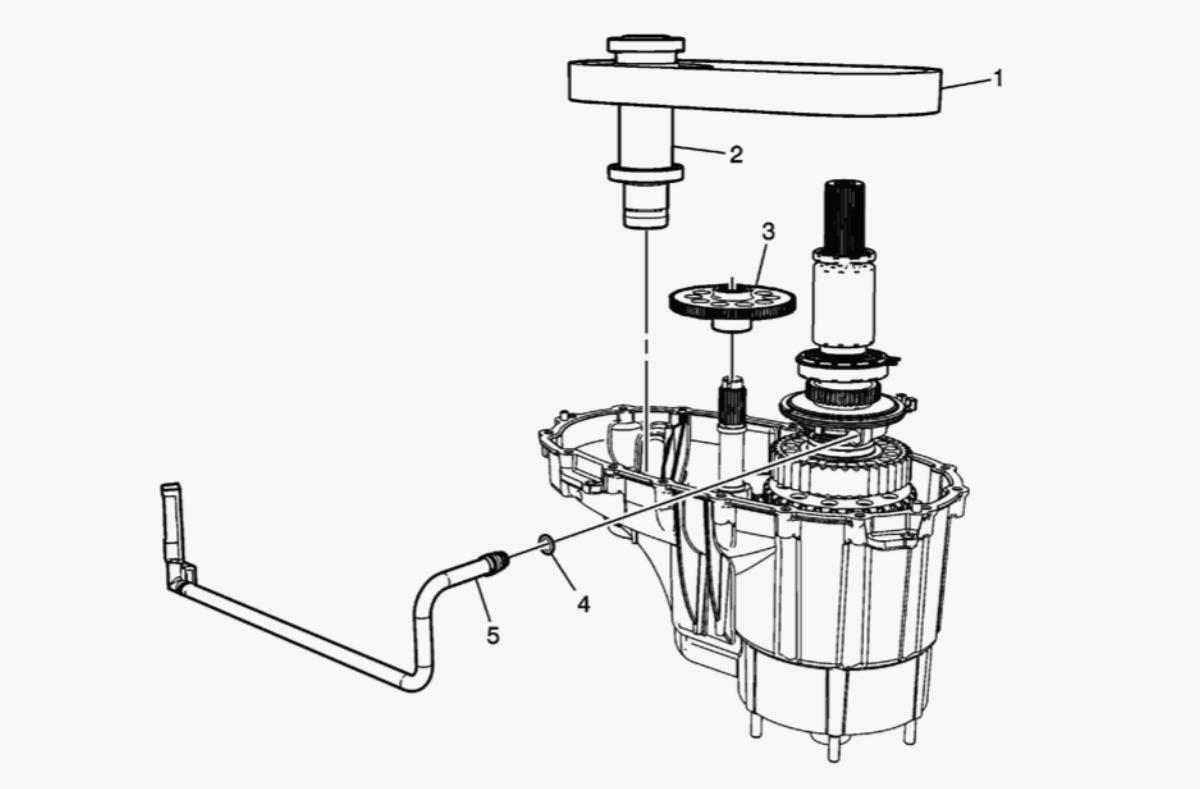

Fig. 58: Front Output Shaft Assembly, Drive Chain, Actuator Shaft Gear, and Oil Pump Suction Pipe
Courtesy of GENERAL MOTORS COMPANY

Front Output Shaft Assembly, Drive Chain, Actuator Shaft Gear, and Oil Pump Suction Pipe Installation

Callout	Component Name
1	Transfer Case Front Output Shaft Drive Chain Assembly **Procedure** Install the chain with darkened links up onto the shaft.
2	Transfer Case Front Output Shaft Assembly **Procedure** Install the front output shaft and chain assembly into the front case half while engaging the chain with the drive sprocket.
3	Transfer Case Actuator Shaft Gear
4	Transfer Case Oil Pump Suction Pipe Seal

cardiagn.com

Callout	Component Name
	NOTE:
5	Transfer Case Oil Pump Suction Pipe

- **Use a NEW seal.**
- **Lubricate th ea in**
- **In se pi to th in pu**

Transfer Case Rear Case Half Installation

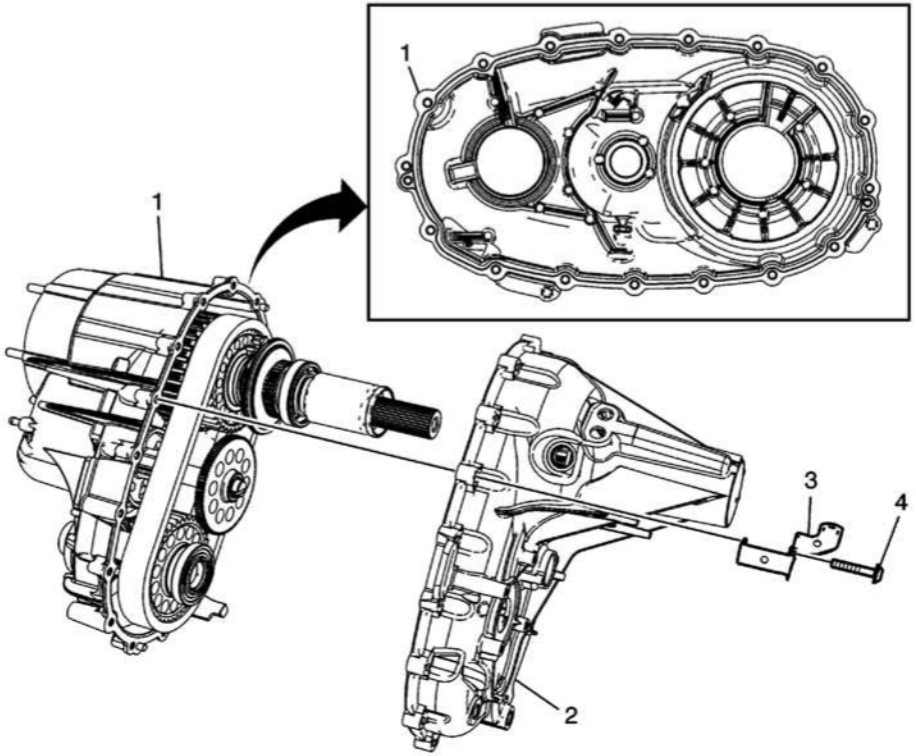

Fig. 59: Transfer Case Rear Case Half
Courtesy of GENERAL MOTORS COMPANY

Transfer Case Rear Case Half Installation

Callout	Component Name
1	Transfer Case Front Half **CAUTION:**

cardiagn.com

Callout	Component Name
	Apply the proper amount of sealant to the transfer case (front half) sealing surface when assembling the transfer case. Excessive amounts of sealant can plug the oil pump screen, resulting in internal component failure. **Procedure** 1. Ensure both sealing surfaces of the front and rear case halves are free of dirt, oil and cleaning solvent. 2. Apply a 2 mm (0.078 in) bead of sealant to the front case half. Use sealer GM P/N 88861417/12378521 (Canadian P/N 88861418), or equivalent.
2	Transfer Case Rear Case Half **NOTE:** • **Ensure the transfer**

cardiagn.com

Callout	Component Name
	case rear output shaft outer retaining ring is in place and aligned prior to mating case halves. • Use snap ring pliers to open the transfer case rear output shaft outer retaining ring for the transfer case rear output shaft rear bearing assembly. • Insert a rubber coated screwdriver into the speed sensor hole and lift up

cardiagn.com

Callout	Component Name
	on the reluctor wheel to engage the retaining ring with the rear bearing assembly.
3	Transfer Case Bracket
4	Transfer Case Bolt (Qty: 17) **CAUTION:** **Refer to Fastener Caution .** **NOTE:** **Tighten bolts by hand, do not use an air gun.** **Tighten** 25 N.m (18 lb ft)

Rear Output Shaft Seal and Bushing Installation

cardiagn.com

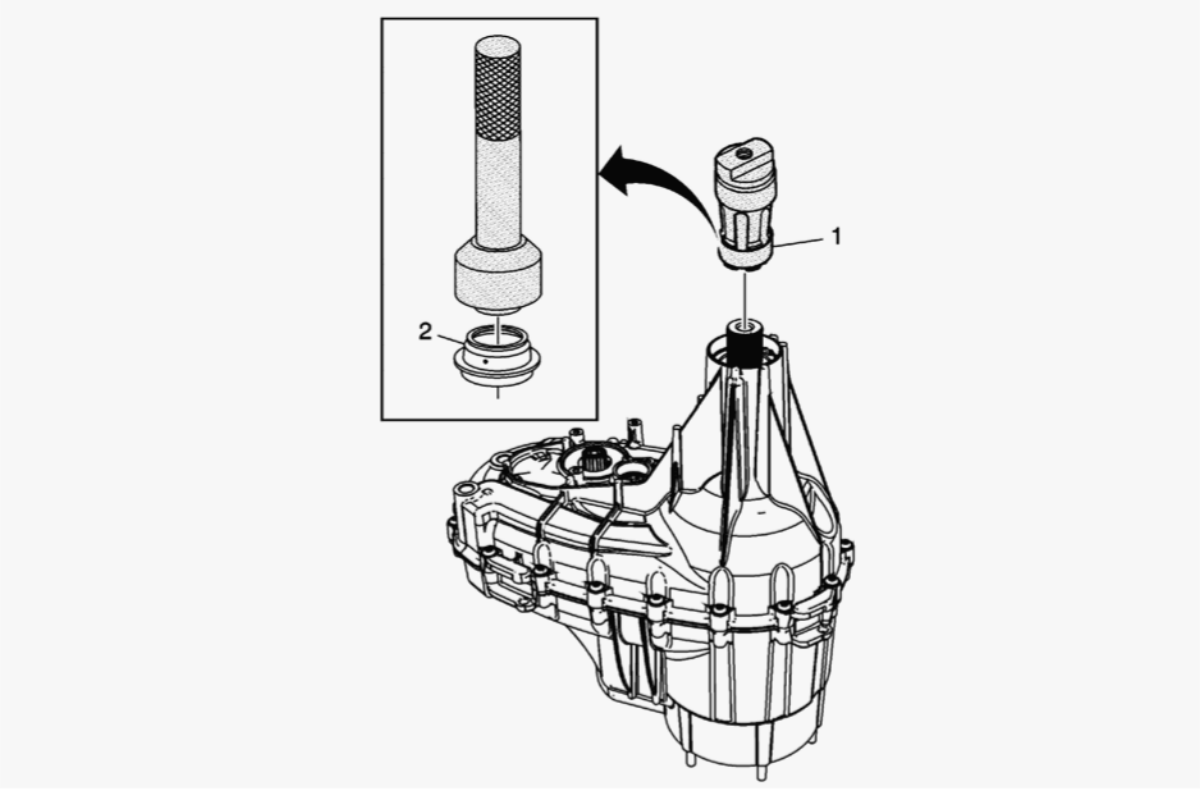

Fig. 60: Rear Output Shaft Seal And Bushing
Courtesy of GENERAL MOTORS COMPANY

Rear Output Shaft Seal and Bushing Installation

Callout	Component Name
1	Transfer Case Rear Output Shaft Bushing **Procedure** 1. Follow the steps for use of the **J-45380** remover/installer. 2. Install the bushing on the finger section of the **J-45380** remover/installer. 3. Install the finger section to the main body of the **J-45380** remover/installer. 4. Position the bushing and tool to the rear case half. 5. Press the bushing until the tool bottoms on the rear case half.

cardiagn.com

Callout	Component Name
	NOTE: • **If the bushing was removed, a new bushing must be installed.** • **Ensure the bushing is installed squarely into the bushing bore.** **Special Tools** **J-45380** Transfer Case Rear Bushing Remover and Installer
2	Transfer Case Rear Output Shaft Seal **NOTE:** **Align the notch on the seal between the rear output bearing retaining ring access**

cardiagn.com

Callout	Component Name
	holes, this will position the weep hole down. **Special Tools** • **DT-48210** Seal Installer • **J-8092** Driver Handle For equivalent regional tools, refer to **Special Tools**.

Access Hole Plugs, Fill and Drain Plug, Vent, 2/4 Wheel Drive Actuator, Actuator Shaft Position Sensor, and Vehicle Speed Sensor Installation

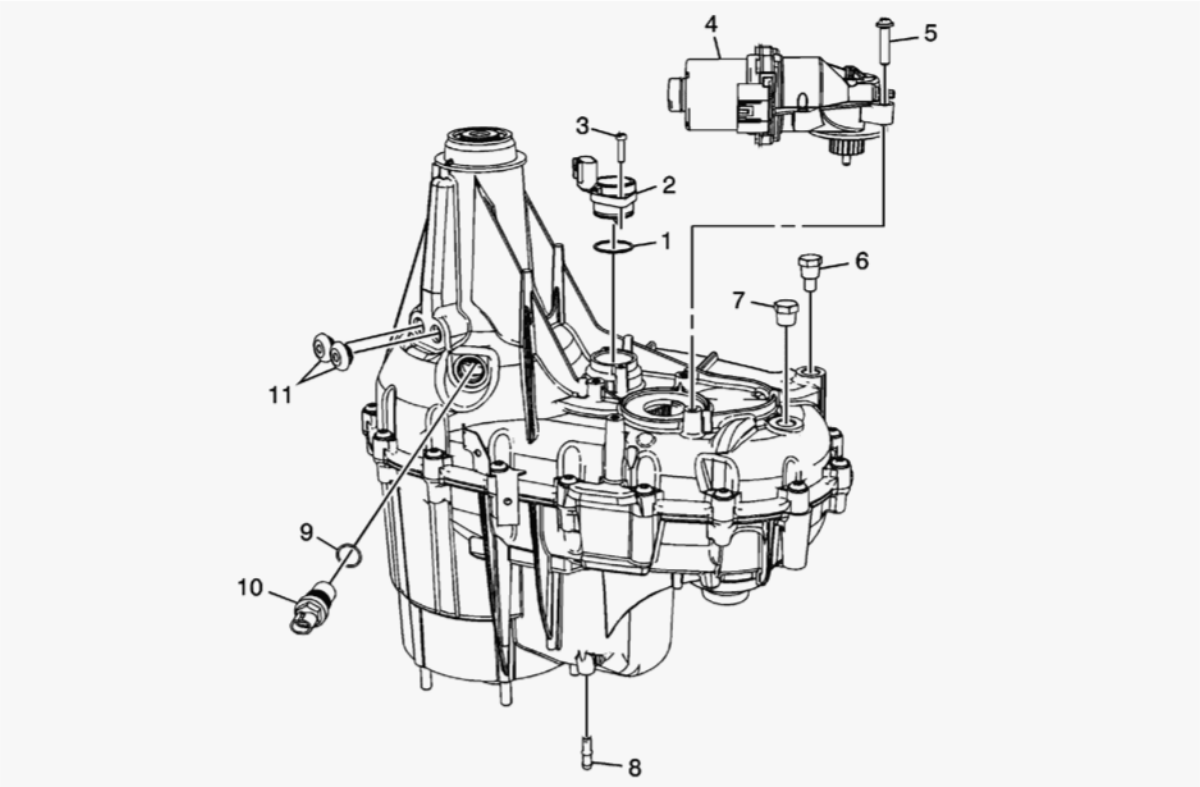

cardiagn.com

Fig. 61: Access Hole Plugs, Fill And Drain Plug, Vent, 2/4 Wheel Drive Actuator, Actuator Shaft Position Sensor And Vehicle Speed Sensor
Courtesy of GENERAL MOTORS COMPANY

Access Hole Plugs, Fill and Drain Plug, Vent, 2/4 Wheel Drive Actuator, Actuator Shaft Position Sensor, and Vehicle Speed Sensor Installation

Callout	Component Name
1	Transfer Case Actuator Shaft Position Sensor O-ring Seal **Procedure** Lightly lubricate the O-ring with clean DEXRONÂ®VI.
2	Transfer Case Actuator Shaft Position Sensor Assembly
3	Transfer Case Actuator Shaft Position Sensor Bolt/Screw **CAUTION:** **Refer to Fastener Caution .** **Tighten** 9 N.m (80 lb in)
4	Transfer Case Two/Four Wheel Drive Actuator Assembly
5	Transfer Case Two/Four Wheel Drive Actuator Bolt/Screw **Tighten** 18 N.m (13 lb ft)
6	Transfer Case Oil Drain Plug **CAUTION:** **Refer to Component Fastener Tightening Caution .** **Procedure**

cardiagn.com

Callout	Component Name
	Apply pipe sealant GM P/N 12346004 (Canadian P/N 10953480) to the oil drain plug before installation. **Tighten** 18 N.m (13 lb ft)
7	Transfer Case Oil Fill Plug **Procedure** Apply pipe sealant GM P/N 12346004 (Canadian P/N 10953480) to the oil fill plug before installation. **Tighten** 18 N.m (13 lb ft)
8	Transfer Case Vent **Procedure** Apply retaining compound GM P/N 12377901 (Canadian P/N 10953504) to the vent pipe before installation, if removed during disassembly.
9	Vehicle Speed Sensor O-ring Seal **Procedure** Lightly lubricate the O-ring with clean DEXRONÂ®VI.
10	Vehicle Speed Sensor Assembly **Tighten** 17 N.m (13 lb ft)
11	Transfer Case Access Hole Plug (Qty: 2)

Input Shaft Seal and Front Output Shaft Seal Installation

cardiagn.com

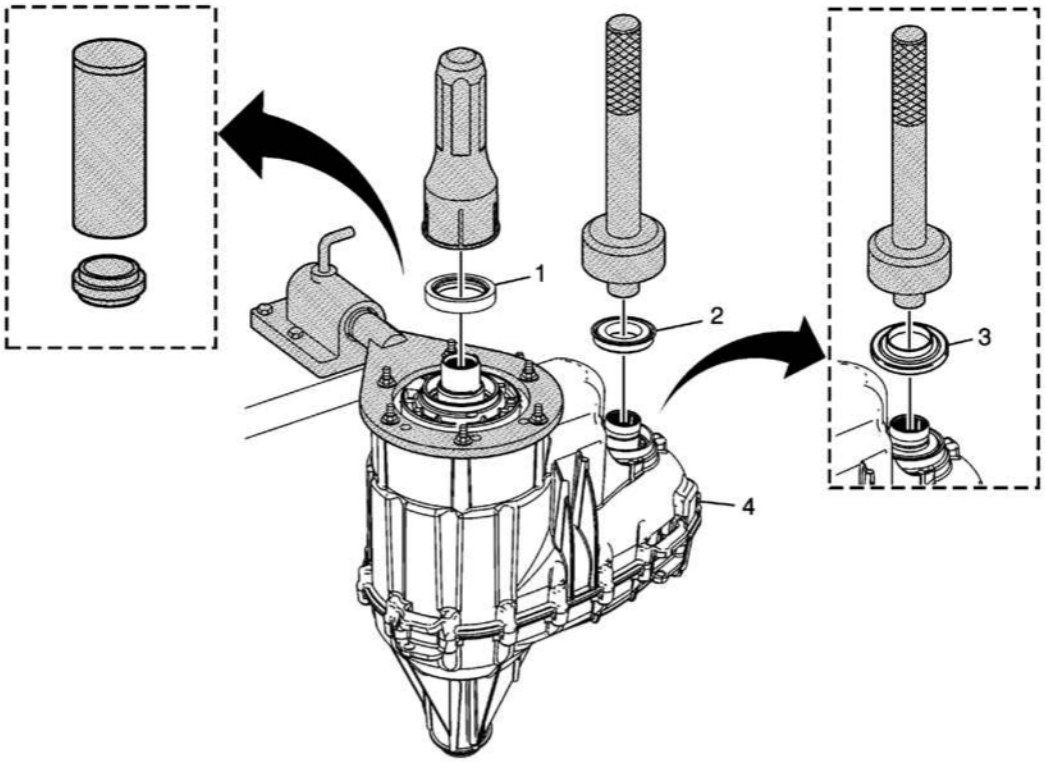

Fig. 62: Input Shaft Seal And Front Output Shaft Seal
Courtesy of GENERAL MOTORS COMPANY

Input Shaft Seal and Front Output Shaft Seal Installation

Callout	Component Name
1	Transfer Case Input Shaft Seal **Procedure** Use the **DT-50648-A** or **J-42738** . Refer to Input Shaft Seal Installer Revisions in **New Product Information** . **NOTE:** • **Ensure the bore of the front case half is free of dirt,**

cardiagn.com

Callout	Component Name
	oil, and cleaning solvent. • Double lip input shaft oil seals are used on applications with a WET adapter cavity and with 4 speed transmission RPOs M30/M70 /MW7/M99/ML9 only. • Single lip input shaft oil seals are used on applications with a DRY adapter cavity and with 6 speed transmission RPOs MYC/MYD only, and are to be installed with the spring portion of the seal facing

cardiagn.com

Callout	Component Name
	inward towards the internals of the transfer case. **Special Tools** • **DT-50648-A** Seal Installer • **J-36183** Input and Output Shaft Press Tube • **J-36184** Press Tube Reducer • **J-42738** Seal Installer For equivalent regional tools, refer to **Special Tools**.
2	Transfer Case Front Output Shaft Seal **Special Tools** • **J-8092** Driver Handle • **DT-50649** Seal Installer For equivalent regional tools, refer to **Special Tools**.
3	Transfer Case Front Output Shaft Oil Slinger - Model Dependent **Procedure** The new design front output shaft oil slinger can be installed onto all current and prior model year Magna NQF, NQG, NQH, and NP0 applications providing the new design front output shaft is also installed. Refer to **New Product Information**. **Special Tools** • **J-8092** Driver Handle

cardiagn.com

Callout	Component Name
	• **DT-50649** Seal Installer For equivalent regional tools, refer to **Special Tools**.
4	Transfer Case Assembly **Procedure** Remove from **J-3289-20** Holding Fixture and remove the **J-45759** Assembly Fixture from the transfer case. **Special Tools** • **J-3289-20** Holding Fixture • **J-45759** Assembly Fixture For equivalent regional tools, refer to **Special Tools**.

DESCRIPTION AND OPERATION

TRANSFER CASE IDENTIFICATION

cardiagn.com

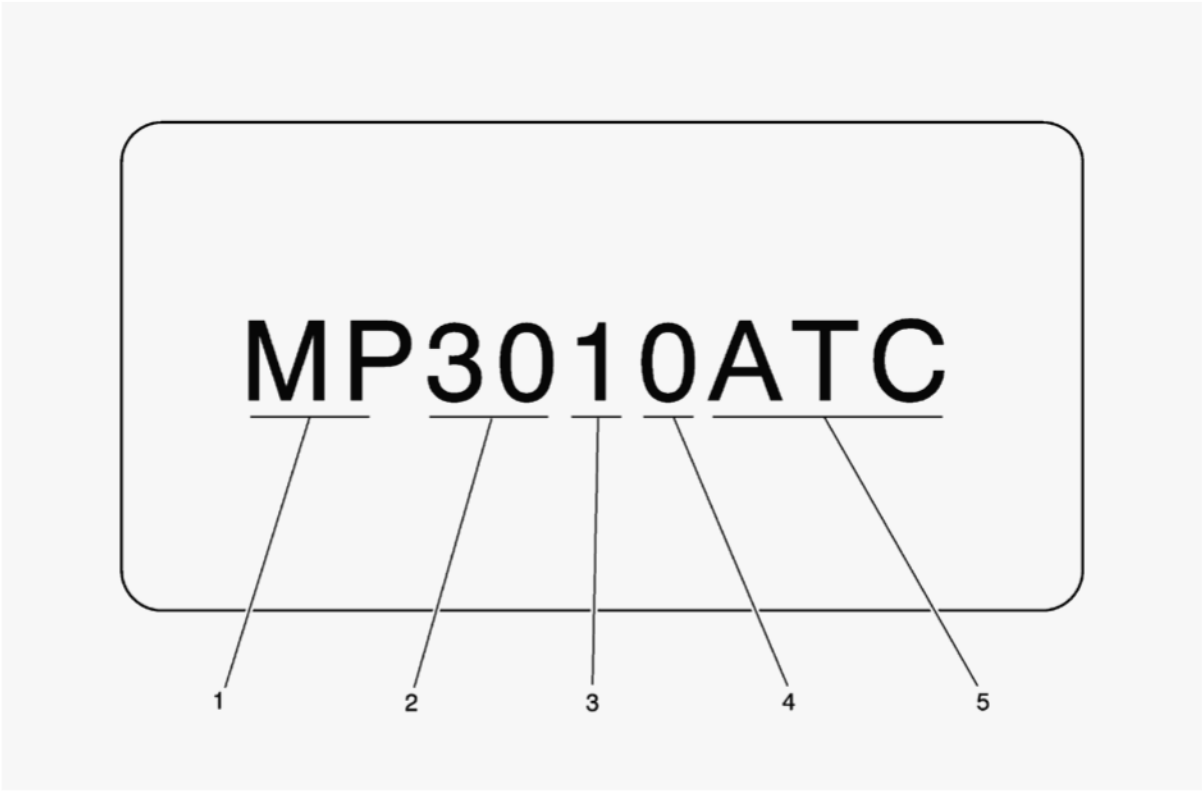

Fig. 63: Transfer Case Identification Label
Courtesy of GENERAL MOTORS COMPANY

The transfer case identification label information contains the following information:

1. Magna Powertrain (1)
2. Features: Code for Product Technology (2)
    - 12: Part time - manual - Synchronizer
    - 16: Part time - electric - Synchronizer
    - 30: Wet clutch - electro-mechanic actuation
3. Number of speeds (3)
4. Size - Low Range - Skid torque rating (4)
    - 0: N/A

cardiagn.com

- 1: 1-800 N.m (0.74-590 lb ft)
- 2: 800-1000 N.m (590-738 lb ft)
- 3: 1000-1200 N.m (738-885 lb ft)
- 4: 1200-1400 N.m (885-1033 lb ft)
- 5: 1400-1600 N.m (1033-1180 lb ft)
- 6: 1600-1800 N.m (1180-1328 lb ft)

5. Appendix (5) i.e. ATC

TRANSFER CASE DESCRIPTION AND OPERATION

The Magna Powertrain (MP) model 3010 RPO NP0 transfer case is a 1 speed automatic, active transfer case (ATC). The MP 3010 ATC provides 3 modes, Auto 4WD, 4HI, and 2HI. The Auto 4WD position allows the capability of an active transfer case, which provides the benefits of on-demand torque biasing wet clutch and easy vehicle tuning through software calibrations. The software calibrations allow more features, such as flexible adapt ready position and clutch preload torque levels. The technology allows for vehicle speed dependent clutch toque levels to enhance the performance of the system. For example, the system is calibrated to provide 0-6.78 N.m (0-5 lb ft) of clutch torque during low speed, low engine torque operation, and predetermined higher torque for 40 km/h (25 mph) and greater. This prevents crow-hop and binding at low speeds and provides higher torque biases at higher vehicle speeds, in order to enhance stability.

Transfer Case Shift Control Switch

cardiagn.com

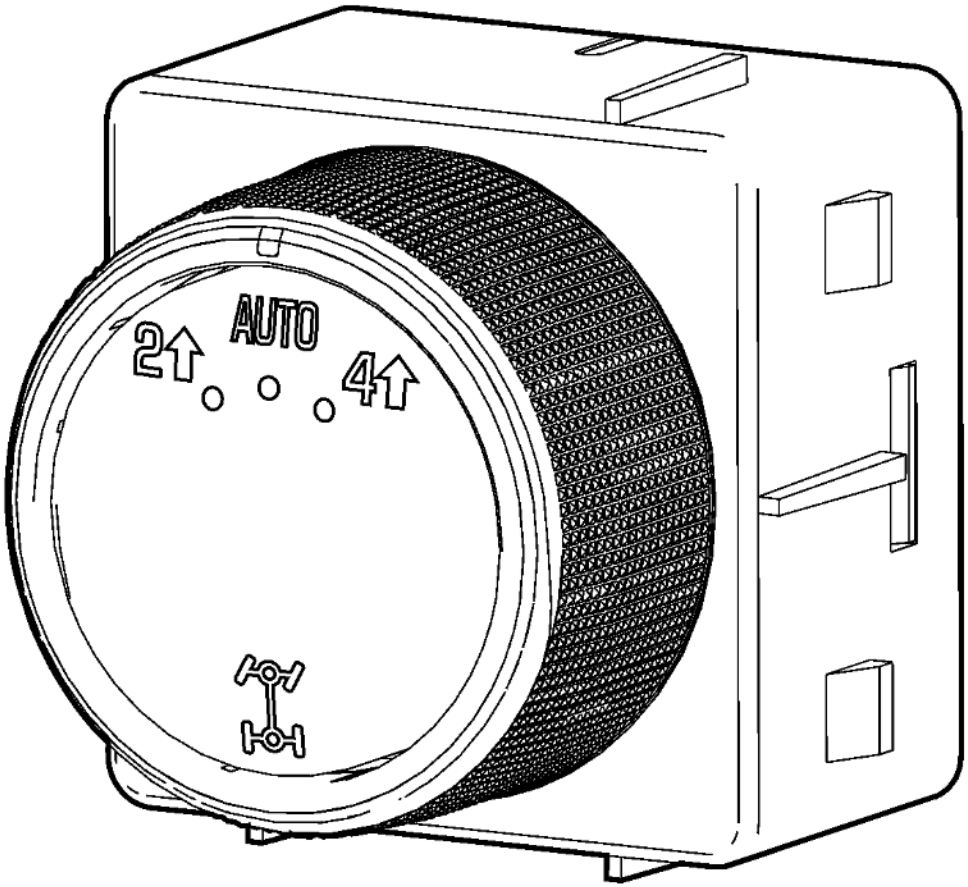

Fig. 64: Transfer Case Shift Control Switch
Courtesy of GENERAL MOTORS COMPANY

The MP 3010 ATC transfer case features a 3 mode shift control switch located on the instrument panel. When the ignition key is in the RUN position, the transfer case shift control module monitors the transfer case shift control switch to determine if the driver desires a new mode position. At a turn of the transfer case shift control switch, the lamp of the new desired position begins flashing to inform the driver that the transfer case shift control module has received the request for a new mode position. The lamp continues to flash until all shifting criteria has been met and the new mode position has been reached, or has been engaged. Once the mode position is fully active, the switch indicator lamp for the new position remains ON

cardiagn.com

constantly. During normal driving situations, the transfer case can operate in the Auto 4WD mode. In the Auto 4WD mode, the transfer case shift control module monitors rear wheel slip speed, based on the inputs from the wheel speed sensors and/or vehicle speed sensor. When the vehicle experiences a rear wheel slip condition, the transfer case shift control module sends a pulse width modulated (PWM) signal to an electronic motor, which is the transfer case 2/4 wheel drive actuator assembly. This actuator rotates the transfer case control actuator shaft, applying a clutch. The clutch is designed to deliver a variable amount of torque, normally delivered to the rear wheels, and transfers it to the front wheels. Torque is ramped up to the front wheels until the front wheels speed sensor values equals that of the rear wheel speed sensors and/or vehicle speed sensor. Torque is ramped down to the front wheels. The process would repeat if rear wheel slip is detected again.

The MP 3010 TC transfer case has the added feature of also providing the driver with 2 manual mode positions:

- 4HI - 4 Wheel Drive High Mode
- 2HI - 2 Wheel Drive High Mode

2WD Mode Power Flow

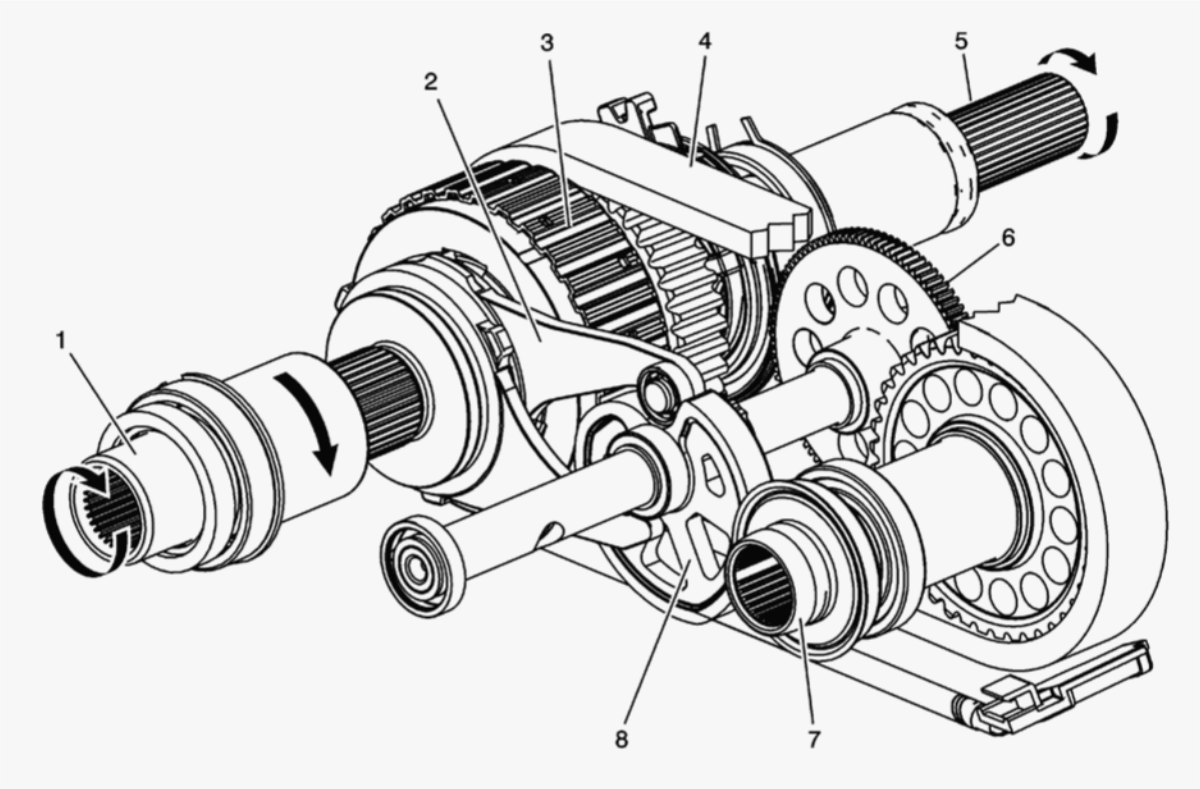

Fig. 65: 2WD Mode Power Flow

cardiagn.com

Courtesy of GENERAL MOTORS COMPANY

Callout	Component Name
1	Input Shaft
2	Control Actuator Lever
3	Clutch Pack
4	Drive Chain
5	Rear Output Shaft
6	Actuator Shaft Gear
7	Front Output Shaft
8	Actuator Cam

cardiagn.com

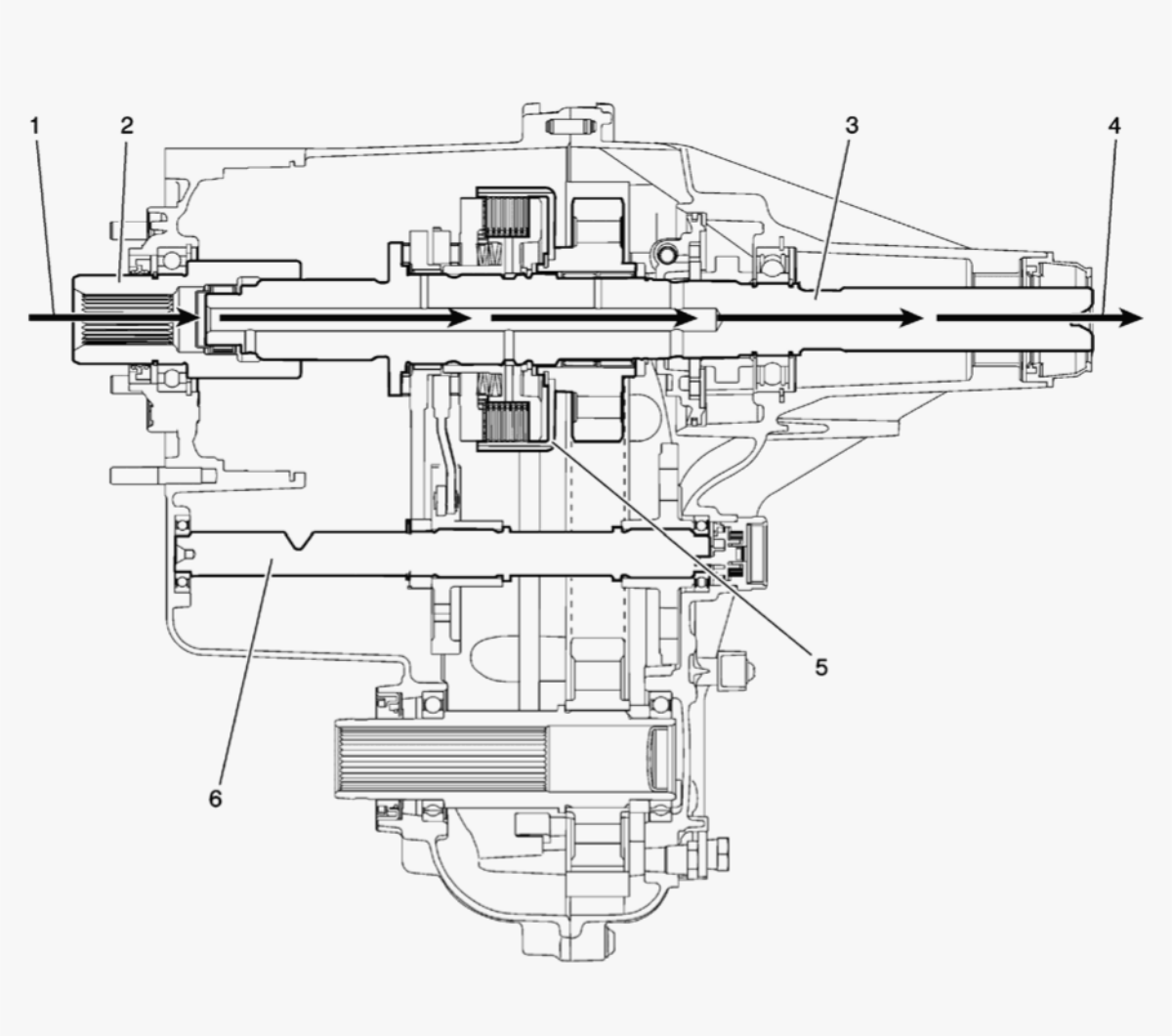

Fig. 66: 2WD Mode Power Flow Components
Courtesy of GENERAL MOTORS COMPANY

When the MP 3010 ATC is in the 2WD mode, the power flows from the transmission (1) to the input shaft (2). The input shaft (2) is splined to the rear output shaft (3). The rear output shaft (3) delivers the power flow to the rear propshaft (4). The position of the control actuator shaft (6) allows no clutch (5) engagement.

4HI Mode Power Flow

cardiagn.com

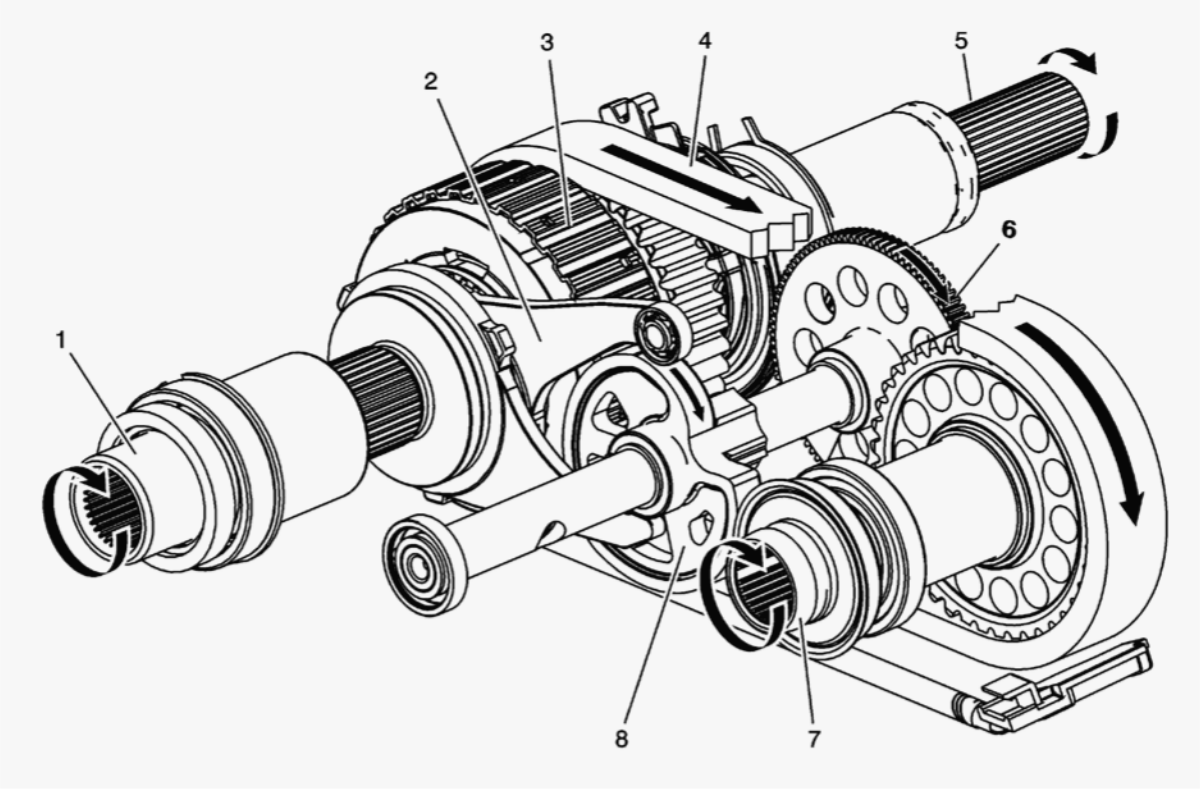

Fig. 67: 4HI Mode Power Flow
Courtesy of GENERAL MOTORS COMPANY

Callout	Component Name
1	Input Shaft
2	Control Actuator Lever
3	Clutch Pack
4	Drive Chain
5	Rear Output Shaft
6	Actuator Shaft Gear
7	Front Output Shaft
8	Actuator Cam

cardiagn.com

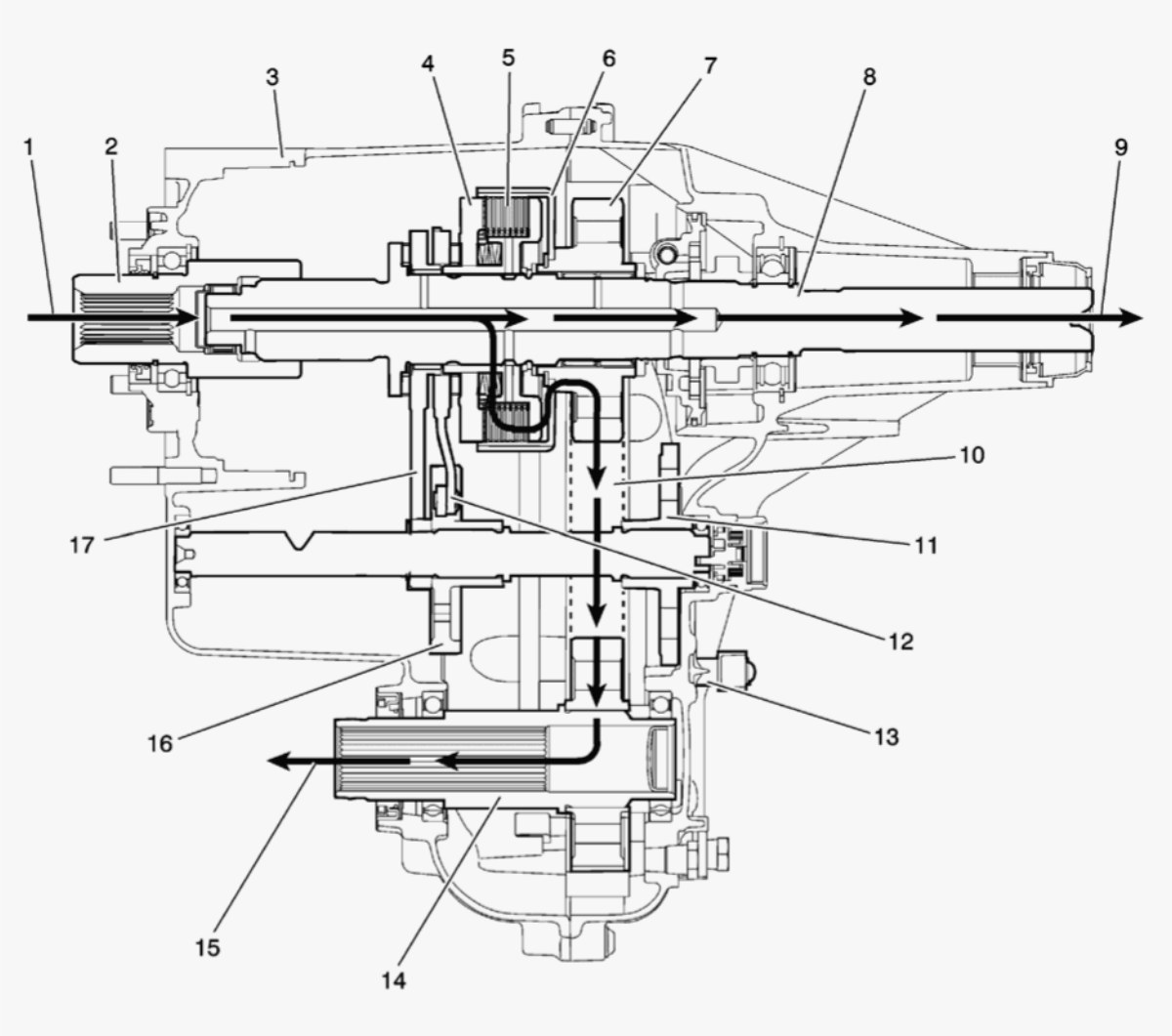

Fig. 68: 4HI Mode Power Flow Components
Courtesy of GENERAL MOTORS COMPANY

In the 4HI mode, the power flow to the rear propshaft (9) is the same as it is in the 2WD mode. To deliver power flow to the front propshaft (15) during the 4HI position, the transfer case control module commands the 2/4 wheel drive actuator assembly (13) to apply the clutch to a calibrated torque. The 2/4 wheel drive actuator assembly (13) turns the control actuator shaft. A brake in the 2/4 wheel drive actuator assembly (13) holds the control actuator shaft in the full clutch position. The control actuator shaft is cam designed and the cam action moves the control actuator lever (12). The control actuator lever (12) pivots against the control lever (17) and moves toward the clutch pressure plate (4), to engage the clutch (5). As more

cardiagn.com

pressure is applied to the clutch pressure plate (4), the clutch discs (5) are compressed. Using inner clutch discs, which are engaged with the clutch hub, and the outer clutch discs, which are engaged with the clutch housing (6), the power flow is delivered to the clutch housing (6). The clutch hub is splined to the rear output shaft (8), and the clutch housing (6) rotates on a needle bearing on the rear output shaft (8). The chain drive sprocket (7) is splined to the clutch housing (6). The power flows from the drive sprocket (7), through the chain (10), to the chain driven sprocket. The driven sprocket is splined to the front output shaft (14). The power flow is delivered to the front propshaft (15) through the front output shaft (14).

4HI Auto Mode Power Flow

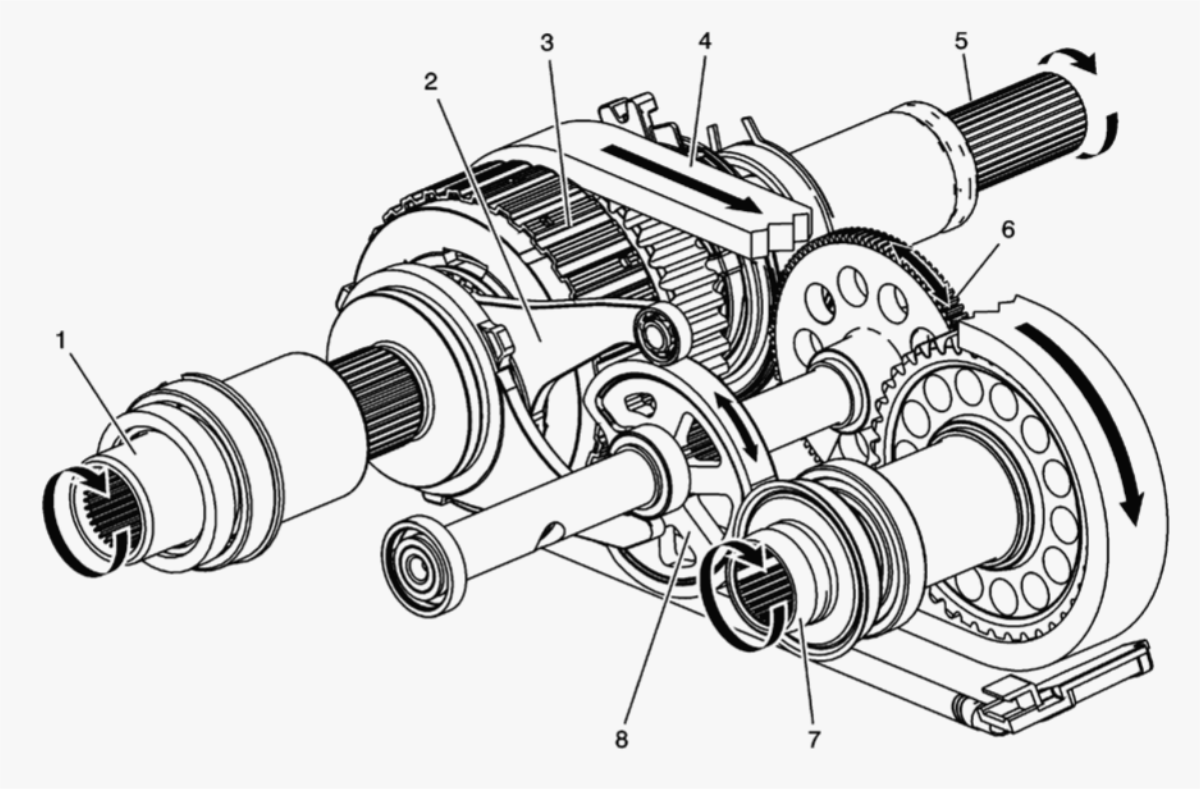

Fig. 69: 4HI Auto Mode Power Flow
Courtesy of GENERAL MOTORS COMPANY

Callout	Component Name
1	Input Shaft
2	Control Actuator Lever
3	Clutch Pack

cardiagn.com

Callout	Component Name
4	Drive Chain
5	Rear Output Shaft
6	Actuator Shaft Gear
7	Front Output Shaft
8	Actuator Cam

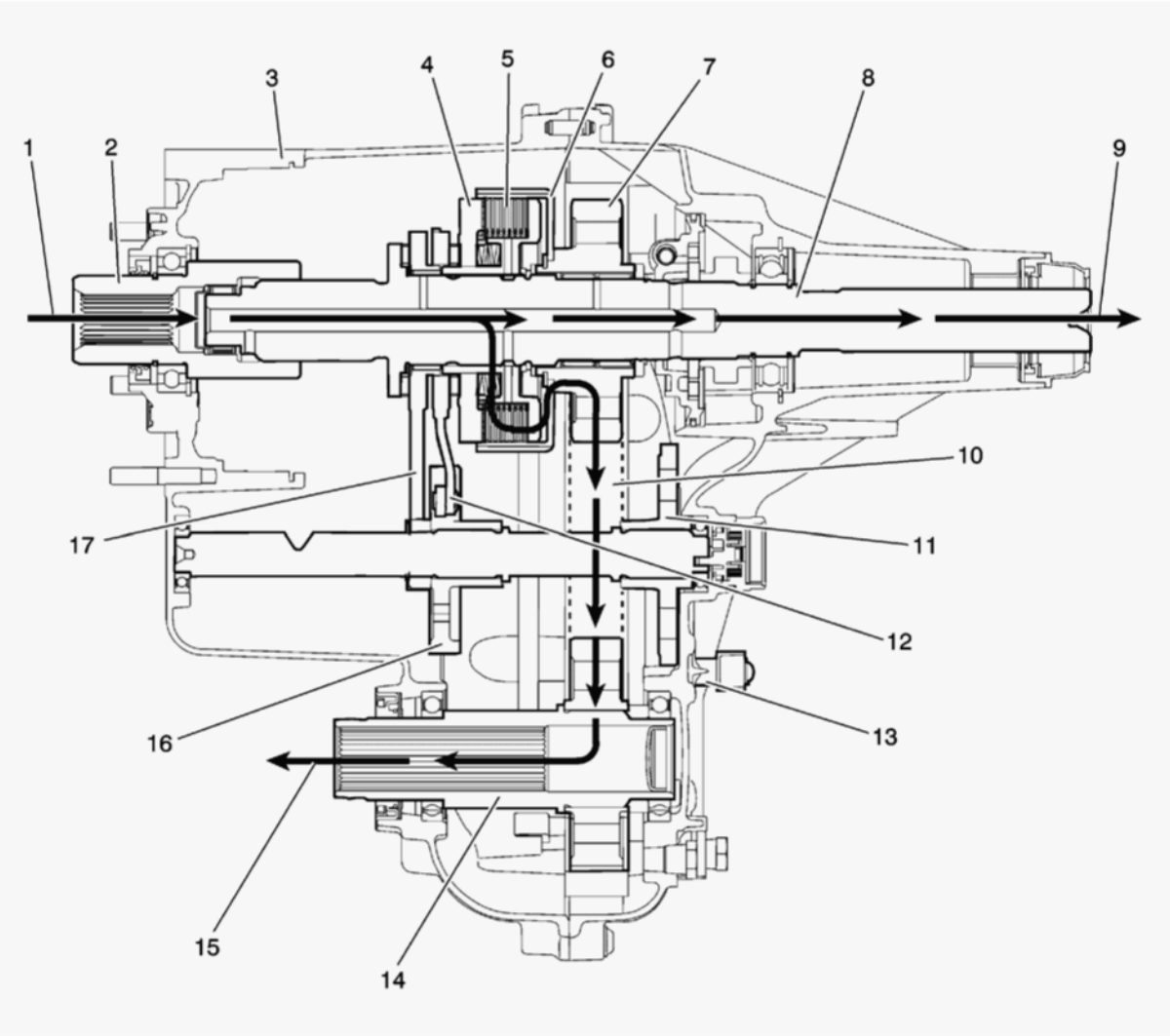

cardiagn.com

Fig. 70: 4HI Mode Power Flow Components
Courtesy of GENERAL MOTORS COMPANY

In the 4HI Auto mode, the power flow to the rear propshaft (9) is the same as it is in the 2WD mode. To deliver power flow to the front propshaft (15) during the 4HI position, the transfer case control module commands the 2/4 wheel drive actuator assembly (13) to apply the clutch to a calibrated torque. The 2/4 wheel drive actuator assembly (13) rotates the control actuator shaft to the correct torque level positions. Rotating the control actuator shaft to the various positions changes the clutch torque level. The control actuator shaft is cam designed and the cam action moves the control actuator lever (12). The control actuator lever (12) pivots against the control lever (17) and moves toward the clutch pressure plate (4), to engage the clutch (5). As more pressure is applied to the clutch pressure plate (4), the clutch discs (5) are compressed. Using inner clutch discs, which are engaged with the clutch hub, and the outer clutch discs, which are engaged with the clutch housing (6), the power flow is delivered to the clutch housing (6). The clutch hub is splined to the rear output shaft (8), and clutch housing (6) rotates on a needle bearing on the rear output shaft (8). The chain drive sprocket (7) is splined to the clutch housing (6). The power flows from the drive sprocket (7), through the chain (10), to the chain driven sprocket. The driven sprocket is splined to the front output shaft (14). The power flow is delivered to the front propshaft (15) through the front output shaft (14). When a difference of front wheel speed to rear wheel speed is recognized, the transfer case control module commands for more or less clutch torque.

Service 4 Wheel Drive Message

The Service 4 Wheel Drive Message is a display within the driver information center (DIC) and cannot be serviced separately. This message is used to inform the driver that a transfer case system condition has occurred. The Service 4 Wheel Drive Message is controlled by the transfer case shift control module via GMLAN.

Transfer Case Two/Four Wheel Drive Incremental Sensor

The incremental sensor is mounted within the transfer case actuator and is replaced as an assembly. The incremental sensor converts the shift detent lever shaft position, representing a mode, into an electrical signal input to the transfer case shift control module. The module detects what position the transfer case is in by monitoring the voltage returned on the incremental encoder impulse signal circuit. This voltage translates into AUTO 4WD, 2HI, and 4HI or in transition between gears.

Transfer Case Two/Four Wheel Drive Actuator Assembly

cardiagn.com

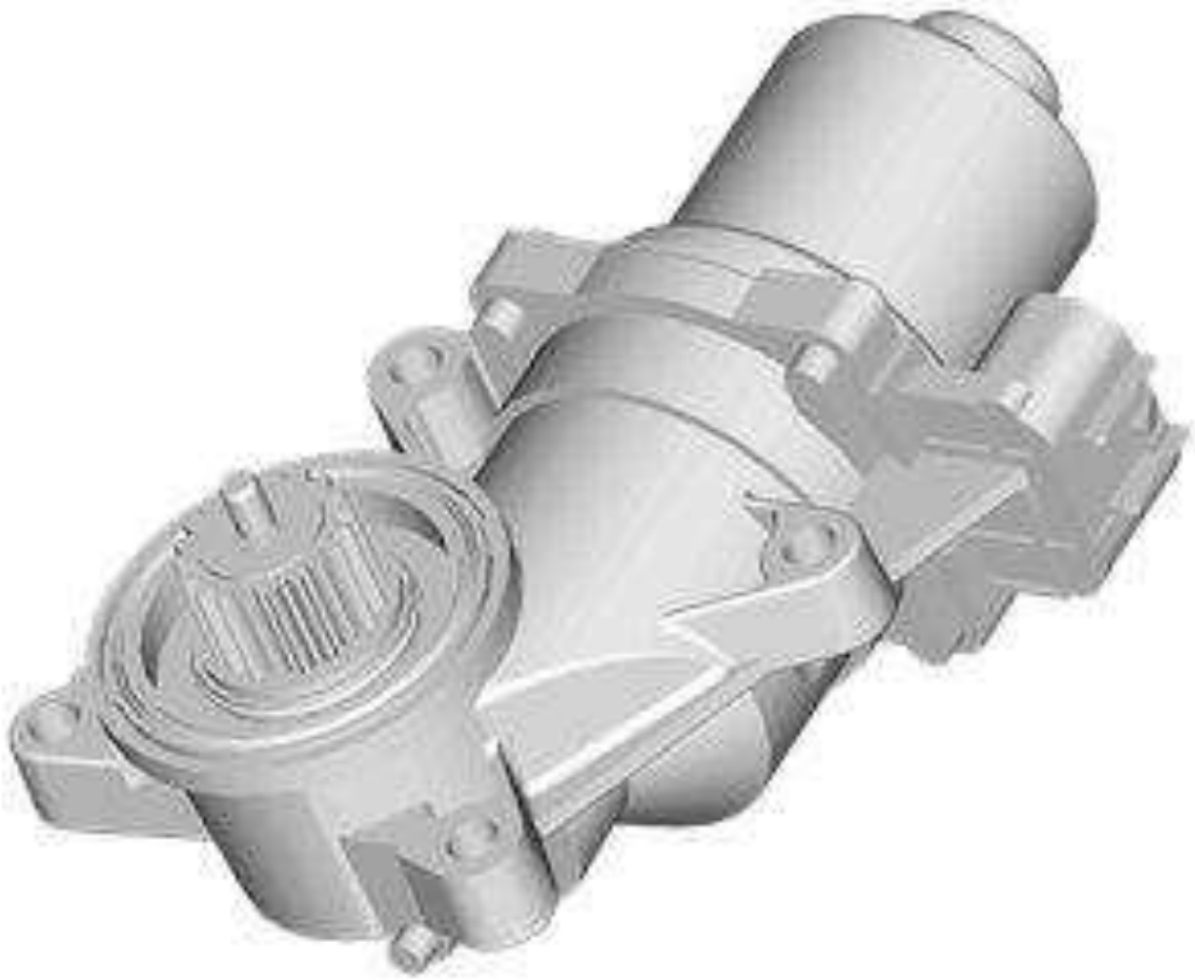

Fig. 71: Transfer Case Two/Four Wheel Drive Actuator Assembly
Courtesy of GENERAL MOTORS COMPANY

The transfer case two/four wheel drive actuator assembly consists of a permanent magnet DC motor and gear reduction assembly. It is located on the left hand side, driver's side, of the transfer case. When activated, it turns the shift detent lever shaft of the transfer case, clockwise or counterclockwise, to shift the transfer case. The motor/encoder is controlled with a PWM signal by the transfer case shift control module. This circuit

cardiagn.com

consists of a driver on both the Motor A and Motor B circuits. The encoder motor is bi-directional in order to allow the motor to shift the transfer case from 2HI to 4HI positions.

Transfer Case Actuator Shaft Position Sensor Assembly

Fig. 72: Transfer Case Actuator Shaft Position Sensor Assembly
Courtesy of GENERAL MOTORS COMPANY

cardiagn.com

This sensor works in conjunction with the incremental sensor and shows transfer case position in degrees.

Transfer Case Motor Lock

The transfer case motor lock is used to provide a 2HI and 4HI feature. When the lock circuit is energized, the transfer case encoder motor is allowed to turn. When the transfer case is placed 2HI or 4HI the motor lock circuit is de-energized and the lock is applied. This assures that the transfer case remains in the current gear position until a new gear position is requested. When AUTO 4WD is selected, the motor lock remains applied until an adaptive mode, torque being applied to the front propshaft, is required. During an adaptive mode the motor lock circuit is energized and the motor lock is released, enabling the encoder motor to turn and apply or release torque at the front propshaft.

Transfer Case Shift Control Module

cardiagn.com

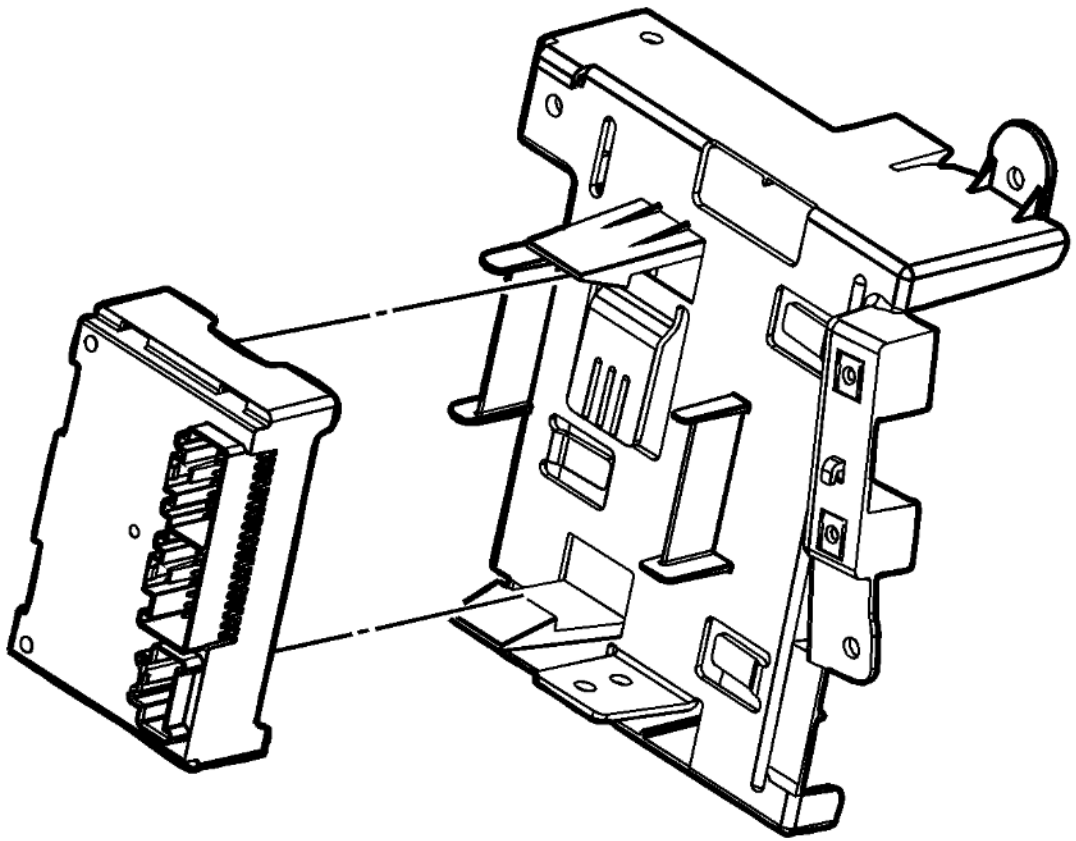

Fig. 73: Transfer Case Shift Control Module
Courtesy of GENERAL MOTORS COMPANY

The transfer case shift control module uses the vehicle identification number (VIN) for calculations based on axle ratio, transmission, tire size, and engine size. For StabiliTrak applications, when the vehicle is in AUTO 4WD mode, the transfer case shift control module monitors the wheel speed via the four wheel speed sensors in order to detect wheel slippage. For non-StabiliTrak applications, when the vehicle is in AUTO 4WD mode, the transfer case shift control module monitors the wheel speed via the two front wheel speed sensors and the vehicle speed sensor in order to detect slippage. When wheel slippage is detected, the module applies a clutch pack contained inside the transfer case. This clutch pack is used to lock-in and

cardiagn.com

apply the front propshaft, transferring torque to the front wheels. The clutch pack is applied by a motor/encoder assembly. When slip is no longer detected by the transfer case shift control module, the clutch is no longer applied.

Vehicle Speed Sensor (VSS)

There is a VSS mounted to the transfer case on the rear output shaft. The VSS is a PM generator. The PM generator produces a AC voltage. The AC voltage and frequency increases as speed increases. The VSS is an input to the powertrain control module (PCM). The PCM sends this information to the transfer case shift control module via the GM LAN serial data bus.

NEW PRODUCT INFORMATION

The purpose of New Product Information is to document, important product changes which occur either model year-to-model year or interim model year.

Changes may include one or more of the following items:

- Specification Changes
- New sealants and/or adhesives
- Disassembly and assembly procedure revisions
- Mechanical and diagnostic procedure revisions
- New special tools required
- Interim model year design changes
- A component comparison from the previous model year

2017 NQF/NQG - Interim Model Year Design Change - DT-51204 - New Design Case Separating Tool

cardiagn.com

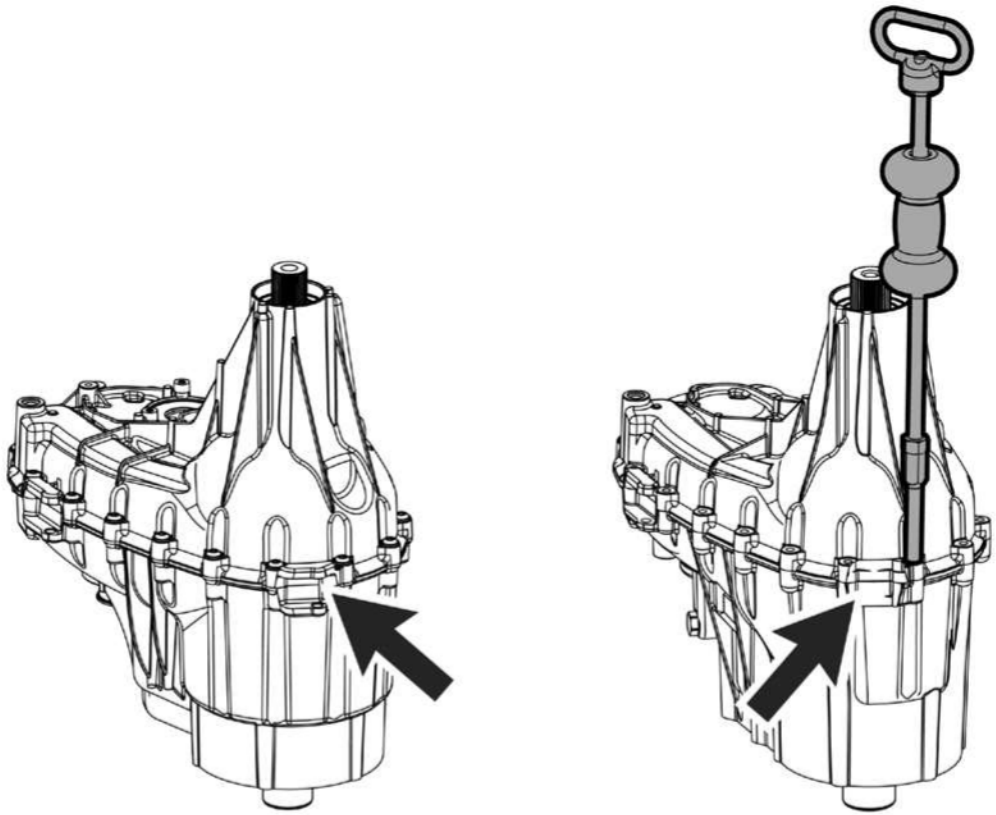

Fig. 74: 2017 NQF/NQG - Interim Model Year Design Change - DT-51204 - New Design Case Separating Tool
Courtesy of GENERAL MOTORS COMPANY

For 2017MY super heavy duty NQF/NQG transfer cases with diesel engine and Alison transmission, one pair of the transfer case case-half separating flanges have been removed to address in-vehicle packaging concerns.

With the removal of the case separating flanges, a new design tool has been developed. **DT-51204** Case Separating Tool has been created to assist the technician when performing disassembly of the transfer case. The new design tool is to be used in conjunction with **GE-02619-A** Slide Hammer when separating the case halve.

NQF/NQG with MW7 Transmission Interim Model Year Design Change - Front Case Half - Addition of Transmission Extension Housing Seal and New Design Gasket

cardiagn.com

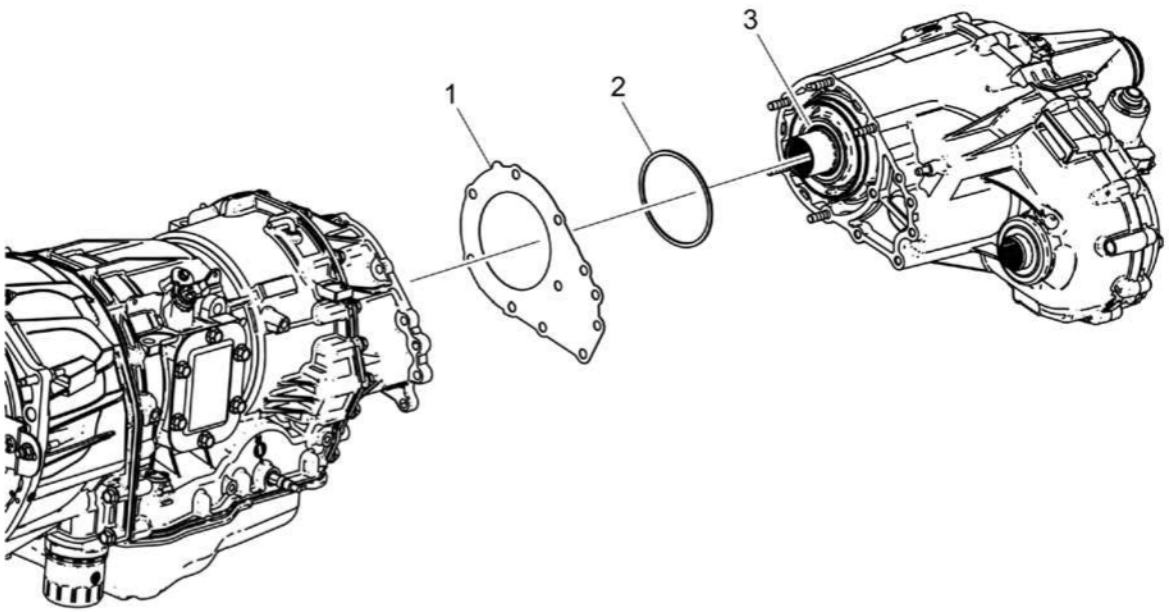

Fig. 75: NQF/NQG With MW7 Transmission Interim Model Year Design Change - Front Case Half
Courtesy of GENERAL MOTORS COMPANY

Interim MY, a new design seal (2) has been added to the rear of transmission extension housing and front of transfer case interface. A new design gasket (1) is to be used in conjunction with the new seal. The purpose of the seal is to control and limit the amount of transmission fluid that enters the wet-cavity area.

Earlier applications do not have the seal. When servicing an older application that does not have the seal, it is recommended to install the new seal and new design gasket prior to reassembly.

The new gasket is required when using the new seal. When installed, the seal should be fully seated against front of the Transfer case (3).

2015 NQF/NQG - Interim Model Year Design Change (RPO-AVF) - Digital Speed Sensor

cardiagn.com

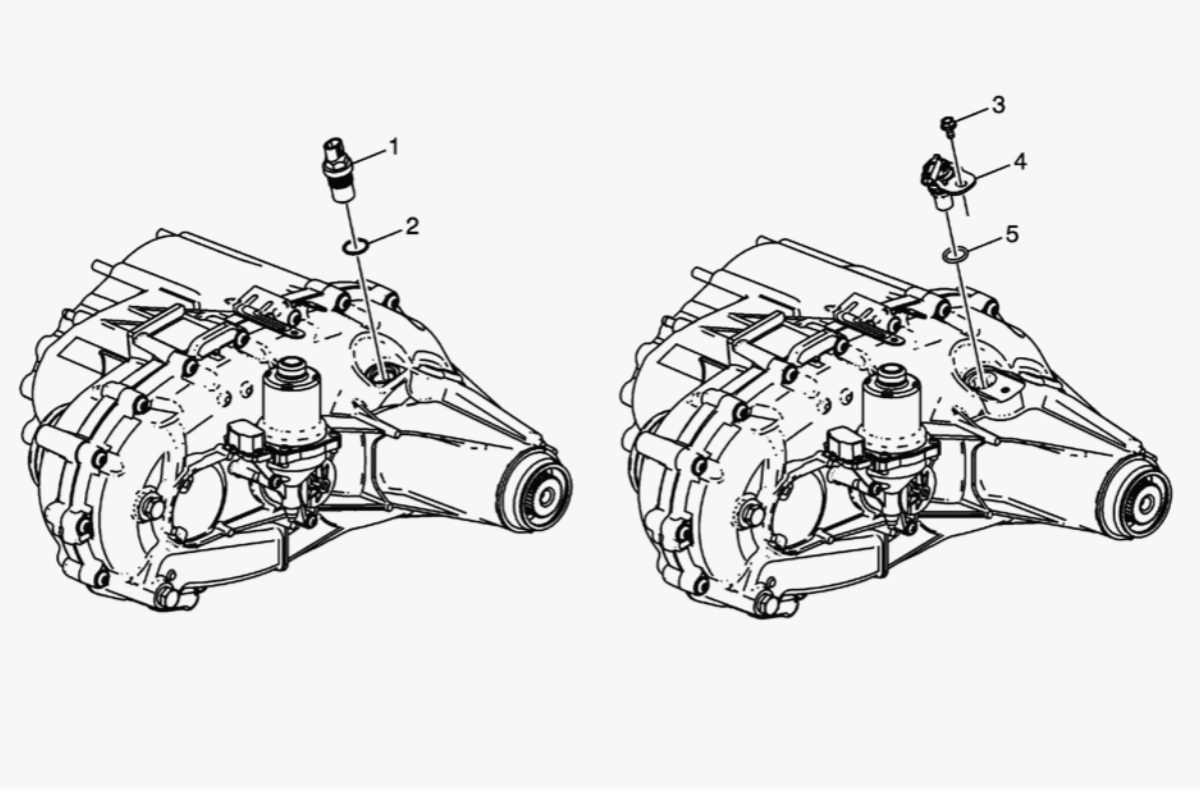

Fig. 76: 2015 NQF/NQG - Interim Model Year Design Change (RPO-AVF) - Digital Speed Sensor
Courtesy of GENERAL MOTORS COMPANY

1. Vehicle Speed Sensor - Non-Digital Assembly
2. Vehicle Speed Sensor - Non-Digital Assembly Seal (O-ring)
3. Vehicle Speed Sensor - Digital Assembly Bolt
4. Vehicle Speed Sensor - Digital Assembly
5. Vehicle Speed Sensor - Digital Assembly Seal (O-ring)

The RPO-AVF designation was used interim 2015 MY to provide a break-point for a variety of changes that occurred for K-truck applications. The transfer case digital speed sensor change is just one of many within the RPO-AVF designation. Refer to applicable service bulletins for additional information.

Interim 2015 model year for Magna HD NQF and NQG transfer case applications with Duramax engine and Allison transmission (RPO-MW7), a NEW design digital speed sensor (4) is to be implemented.

cardiagn.com

Non-AVF applications will continue to use the threaded-into-the-rear case design speed sensor (1). Applications with RPO AVF will include a non-threaded push-into-the-bore design speed sensor (4) that is retained by a bolt (3).

To differentiate between digital speed sensor (4) and non-digital speed sensor (1) applications, the RPO AVF is used to identify digital sensor applications.

2015 NQH-HD Model Year Design Change - Addition of a NQH Transfer Case with HD Internal Components

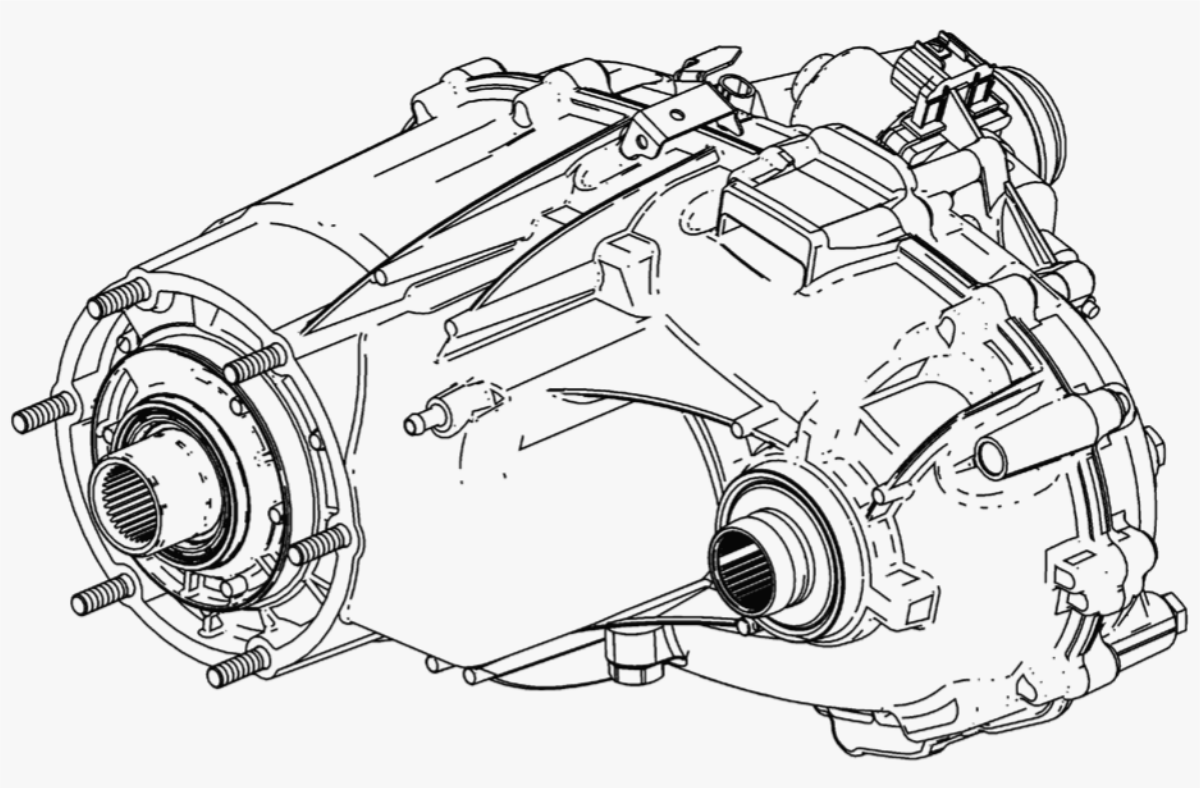

Fig. 77: 2015 NQH-HD Model Year Design Change - Addition Of NQH Transfer Case With HD Internal Components
Courtesy of GENERAL MOTORS COMPANY

Beginning in 2015 model year for 3500 series SUV only, a HD version of the NQH transfer case will be available. Changes include, but not limited to:

- Six pinion planetary carrier
- HD drive chain and sprockets

cardiagn.com

ade...

- HD rear output shaft

2014 NQH/NQG-LD Model Year Design Change - Addition of a Tuned Vibration Adapter (dampener) for V-6 Engine RPO LV3 Applications

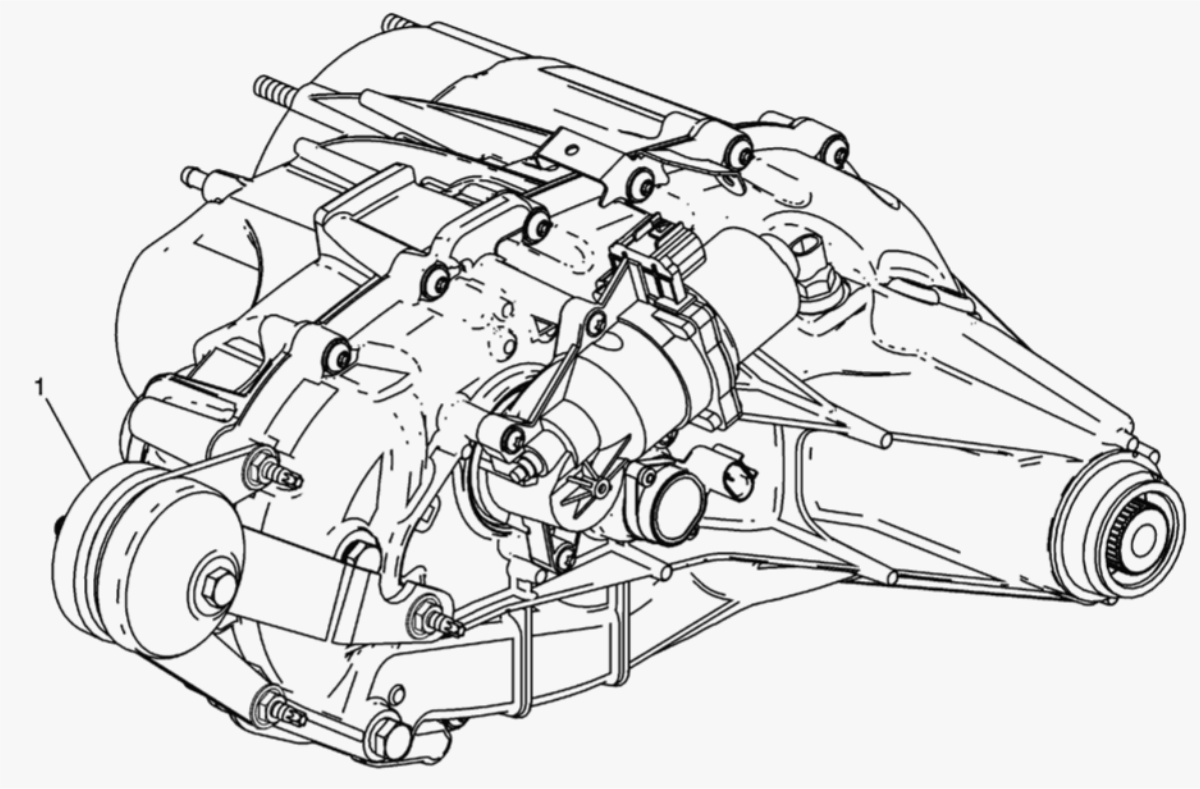

Fig. 78: Tuned Vibration Adapter (Dampener)
Courtesy of GENERAL MOTORS COMPANY

Beginning in 2014 model year for V-6 engine RPO LV3 applications, a dampener (1) has been added to the exterior of the NQH and NQG-LD transfer cases.

2013 Input Shaft Seal Installer Revisions

cardiagn.com

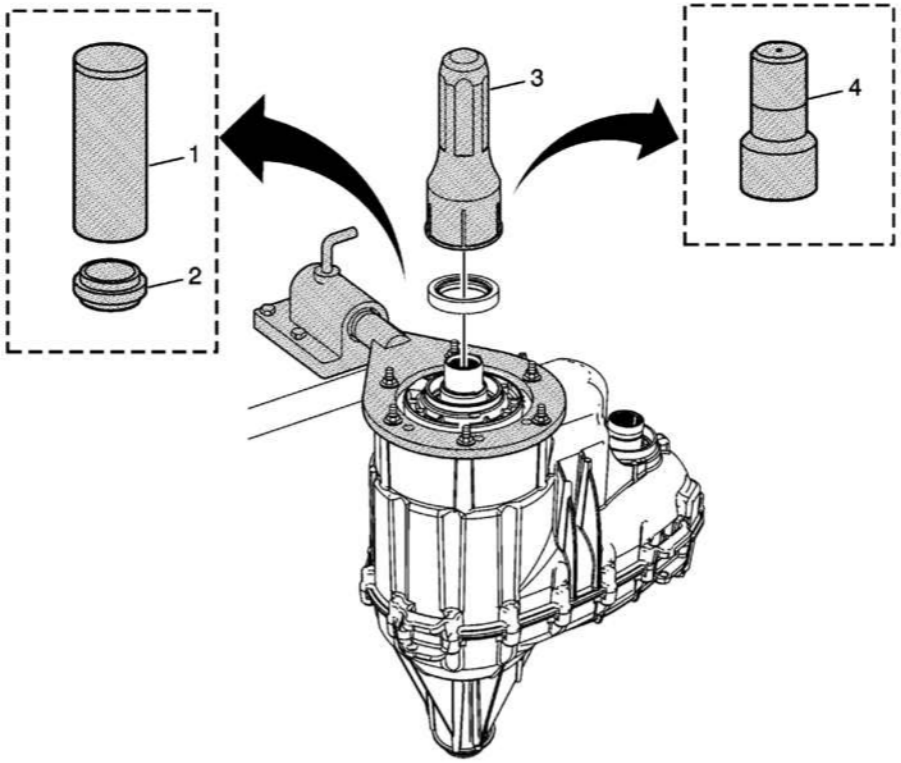

Fig. 79: 2013 Input Shaft Seal Installer Revisions
Courtesy of GENERAL MOTORS COMPANY

Beginning July 2013, a NEW input shaft seal installer has been identified for Magna transfer case applications (all model years and all RPOs). The new seal installer is identified as **DT-50648-A** Seal Installer (4). The **DT-50648-A** Seal Installer is to be used in place of **J-42738** Seal Installer (3), as well as **J-36183** Press Tube (1) and **J- 36184** Press Tube Reducer (2). **J-42738** Seal Installer is to be discontinued and no longer available.

2012 Interim Model Year Design Change - NQF/NQG/NQH Front Case Half Assembly, Input Shaft, Planetary Carrier High/Low Clutch

Interim 2012 model year for Magna light-duty and heavy-duty transfer case RPOs NQF/NQG/NQH, a second-design front case half assembly, planetary internal gear, gear retaining ring, locking plate, thrust washer-front, input shaft, pilot bearing, thrust washer-rear, high/low planetary carrier, and high/low clutch were implemented into second-design assemblies.

The second-design light duty (LD), heavy duty (HD), and super-heavy duty (SHD) applications have a reduced OD dimension carrier and the second-design planetary internal gear has a reduced ID dimension. The planetary internal gear is a press-fit non-serviceable component and must be serviced with the front case half assembly. In service it is possible that a new or remanufactured transfer case may contain first or second-design content.

cardiagn.com

If a second-design transfer case has been installed into a vehicle that originally contained a first-design assembly, TCCM reprogramming is not required.

Assembly and Component Identification

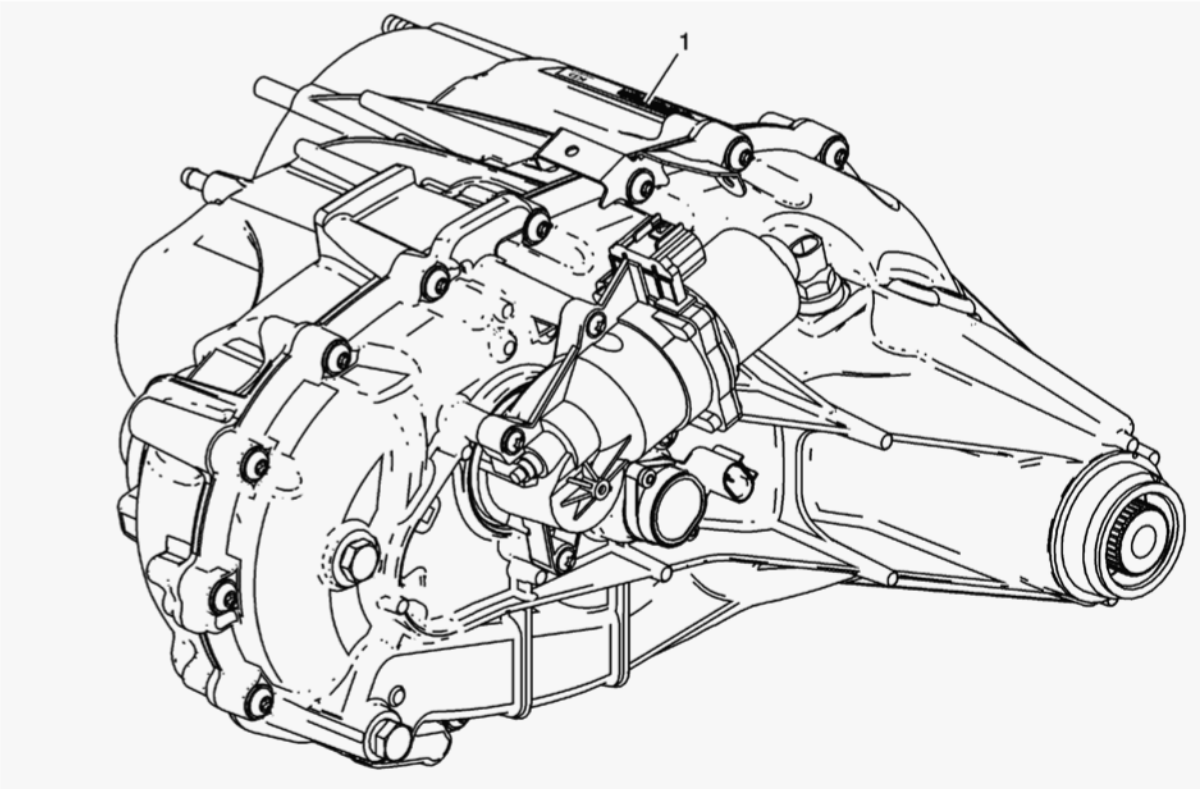

Fig. 80: Transfer Case Assembly Bar Code Label
Courtesy of GENERAL MOTORS COMPANY

1. Check the transfer case assembly bar code label (1) to determine if the assembly contains first or second design components. Refer to: Magna Transfer Case Bar Code Label and the Production Assembly Breakpoints Table.

cardiagn.com

ade...

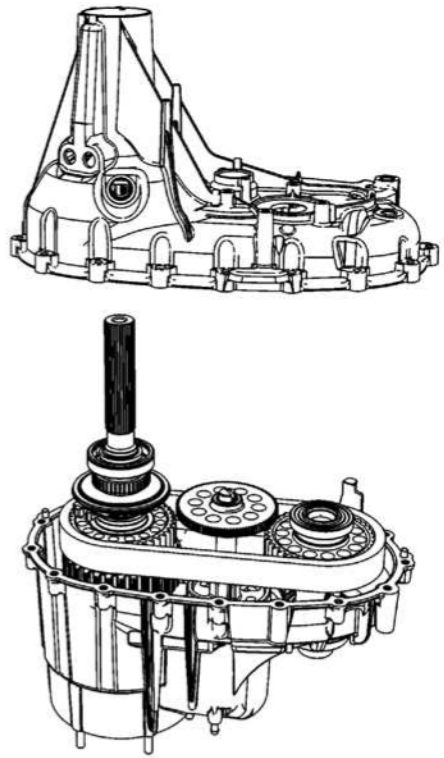

Fig. 81: Separated Case Halves
Courtesy of GENERAL MOTORS COMPANY

2. Separate the case halves. Refer to: **Transfer Case Disassemble (Light Duty)** **Transfer Case Disassemble (Heavy Duty)** .

cardiagn.com

ade...

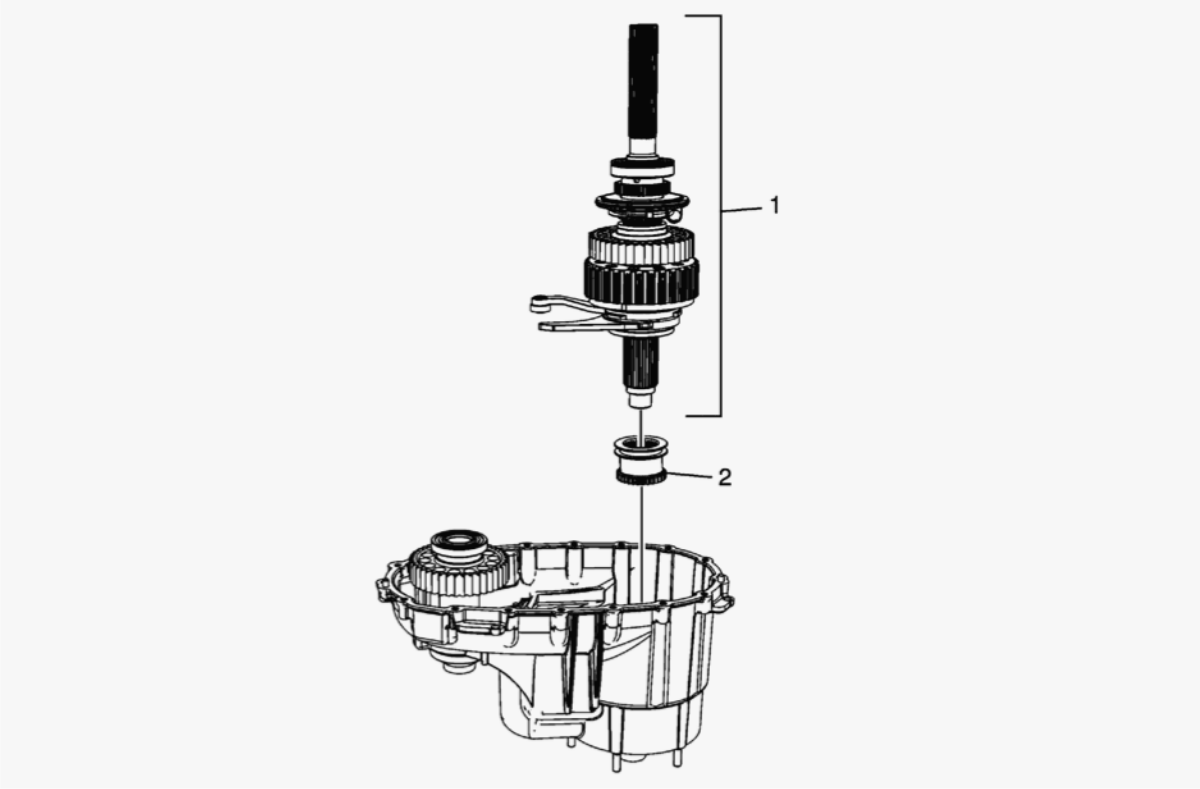

Fig. 82: Rear Output Shaft Assembly And High/Low Clutch
Courtesy of GENERAL MOTORS COMPANY

3. Remove the rear output shaft assembly (1) and the high/low clutch (2).

cardiagn.com

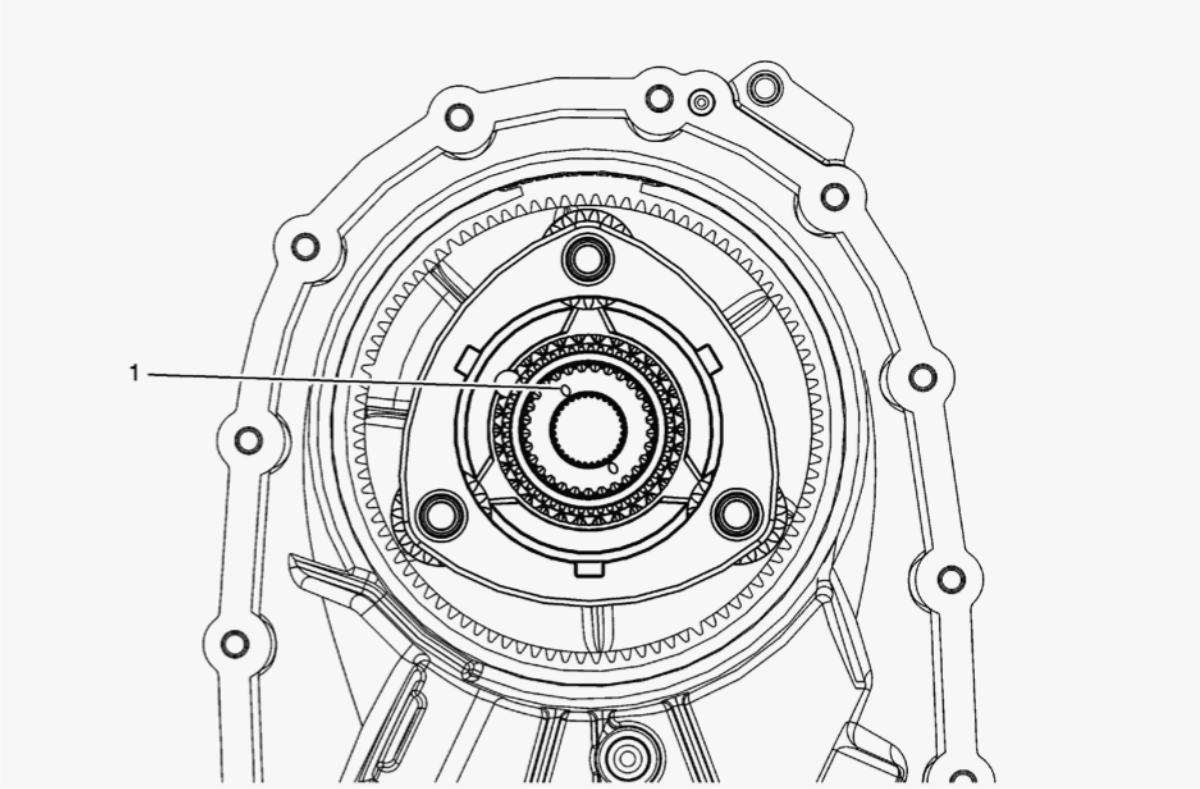

Fig. 83: Oil Drain Holes
Courtesy of GENERAL MOTORS COMPANY

4. Inspect the rear face of the input shaft. (LD)

   A light duty assembly with first design components can be identified by an input shaft with 2 oil drain holes (1) 180 degrees apart.

   A light duty assembly with second design components can be identified by an input shaft with 3 oil drain holes 120 degrees apart.

cardiagn.com

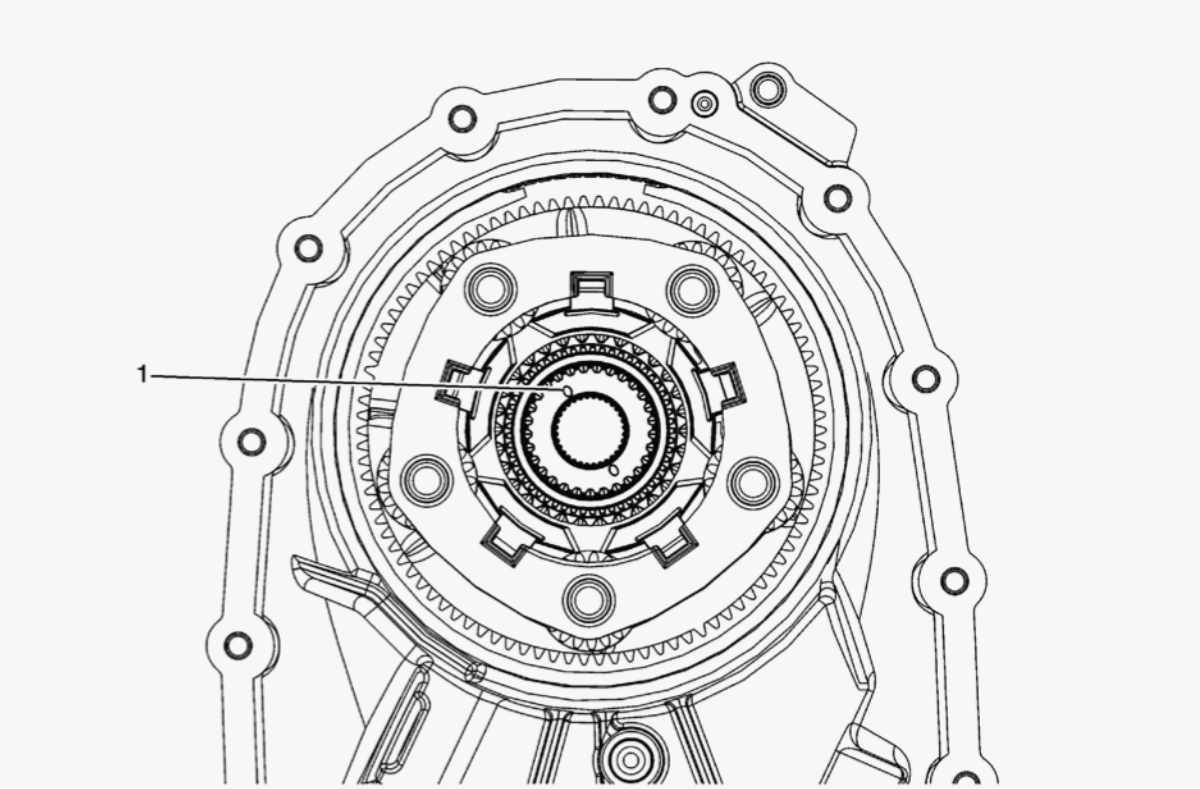

Fig. 84: Oil Drain Holes
Courtesy of GENERAL MOTORS COMPANY

5. Inspect the rear face of the input shaft. (HD)

   A heavy duty assembly with first design components can be identified by an input shaft with 2 oil drain holes (1) 180 degrees apart.

   A heavy duty assembly with second design components can be identified by an input shaft with 3 oil drain holes 120 degrees apart.

6. Refer to: Appropriate Parts Identification Table.

Magna Transfer Case Bar Code Label

The design level and component content of the transfer case can be determined by referencing the assembly part number located on the identification label.

cardiagn.com

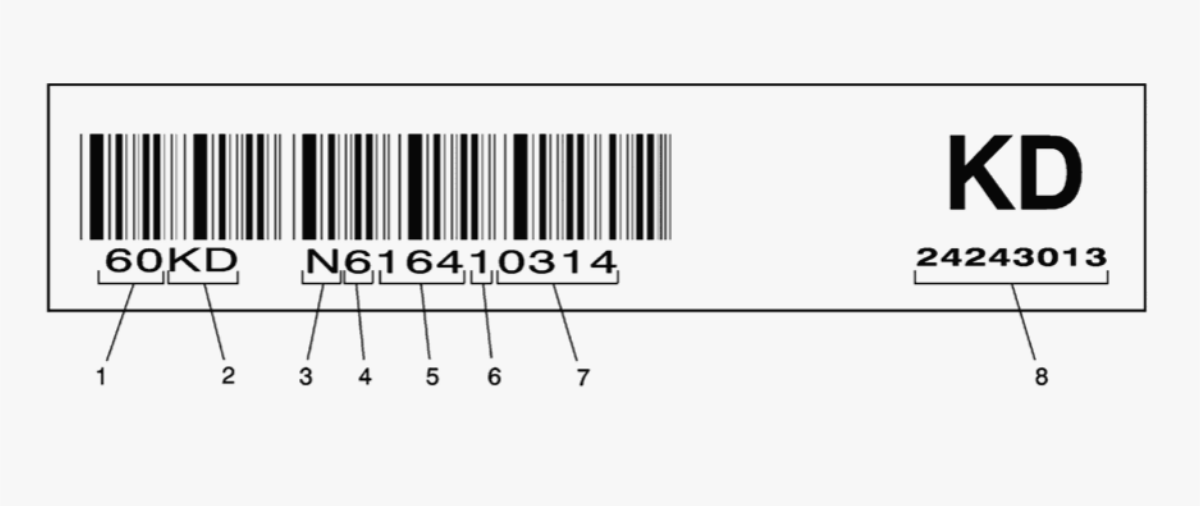

Fig. 85: Magna Transfer Case Bar Code Label
Courtesy of GENERAL MOTORS COMPANY

1. Component Identifier
2. GM Broadcast Code
3. Supplier Code
4. Production Year
5. Julian Date of the Year
6. Assembly Line Number
7. Sequential Number
8. GM Assembly Part Number

Production Assembly Breakpoints

First Design Assembly PN	Second Design Assembly PN	RPO	Approximate Production Breakpoint	Vehicle/Transmission RPO
24256476	24261560	NP0	March 2012	K100 / MYC
24256475	24261517	NQH	January 2012	K200 / MYD
24256474	24261516	NQH	January 2012	K100 / M99
24256473	24261515	NQH	January 2011	K100 / M30

cardiagn.com

First Design Assembly PN	Second Design Assembly PN	RPO	Approximate Production Breakpoint	Vehicle/Transmission RPO
24256472	24261514	NQH	December 2011	K100 / MYC
24257578	24261513	NQF	December 2011	K200 / MYD
24257577	24261512	NQF	January 2012	K200 / 300 / MW7
24257576	24261511	NQF	December 2011	K200 / 300 / MYD
24257581	24261510	NQG	January 2011	K200 / MYD / +Z49
24257580	24261509	NQG	January 2012	K200 / 300 / MW7
24257579	24261508	NQG	December 2011	K200 / 300 / MYD / -Z49
24252685	24261507	NQG	December 2011	K100 / M30
24252684	24261506	NQG	January 2011	K100 / MYC

Magna Light Duty NQG/NQH/NP0 - First Design

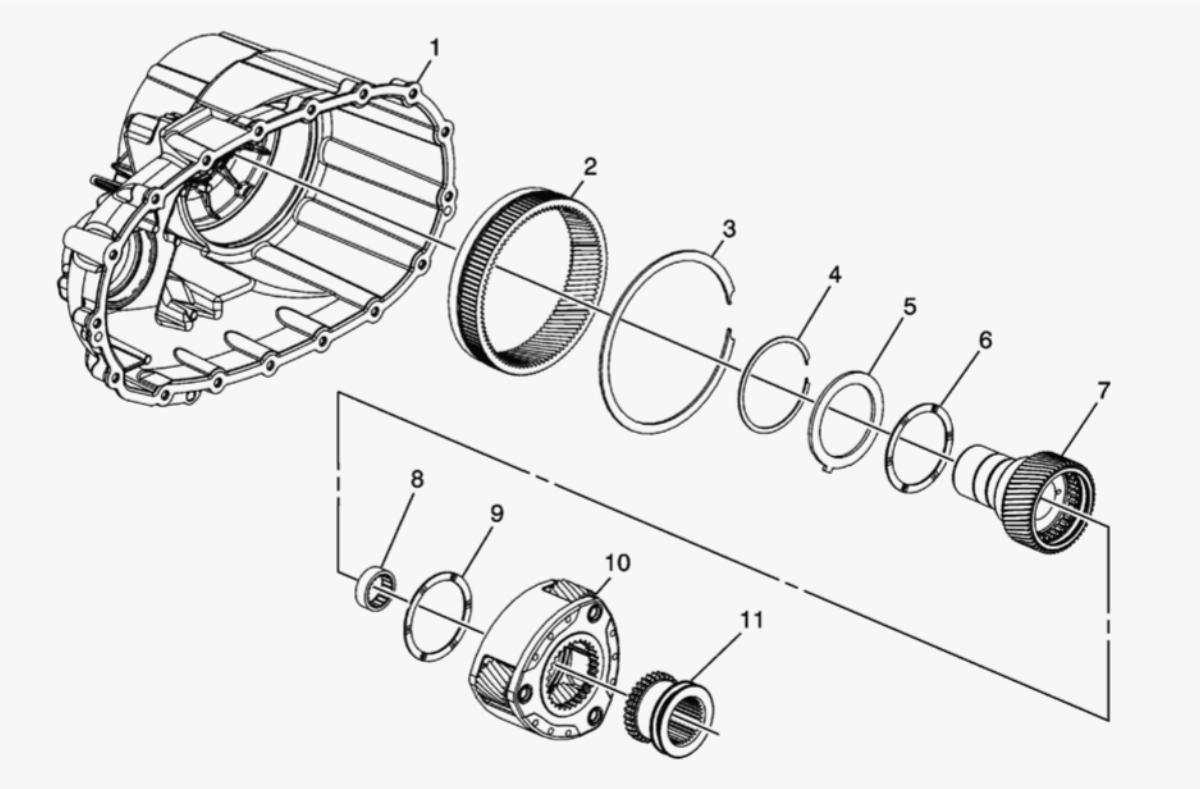

cardiagn.com

Fig. 86: Magna Light Duty NQG/NQH/NP0 - First Design
Courtesy of GENERAL MOTORS COMPANY

Magna Light Duty NQG/NQH/NP0 - First Design			
Callout	**Description**	**GM PN**	**Service Usage**
1	Front Case Half Assembly - w/gear (2) and ring 3)	19132998	NQH
1	Front Case Half Assembly - w/gear (2) and ring (3)	19133000	NQG
1	Front Case Half Assembly - w/o gear (2) and ring (3)	19255999	NP0
2	High/Low Internal Gear - Not serviceable - part of case assembly	NO/PN	NQG/NQH
3	High/Low Internal Gear Retaining Ring	19133009	NQG/NQH
4	High/Low Planetary Carrier Retaining Ring	19132997	NQG/NQH
5	High/Low Locking Plate - Single tab design	19132996	NQG/NQH
6	Thrust Washer - Front - No tab design	19132995	NQG/NQH
7	Input Shaft Assembly - w/pilot bearing	19132977	NQG/NQH - w/M30
7	Input Shaft Assembly - w/pilot bearing	19132978	NQH - w/M99
			NQG/ NQH - w/MYC
7	Input Shaft Assembly - w/pilot bearing	19255997	NP0 - w/MYC
8	Pilot Bearing	19132983	NQG/NQH/NP0
9	Thrust Washer - Rear - No tab design	19132995	NQG/NQH
10	High/Low Planetary Carrier Assembly - Three pinion design	19132986	NQG/NQH

cardiagn.com

Magna Light Duty NQG/NQH/NP0 - First Design			
Callout	**Description**	**GM PN**	**Service Usage**
11	High/Low Clutch	19260068	NQG/NQH - w/M30
11	High/Low Clutch	19260067	NQG/NQH w/MYC and NQH w/M99

Magna Light Duty NQG/NQH/NP0 - Second Design

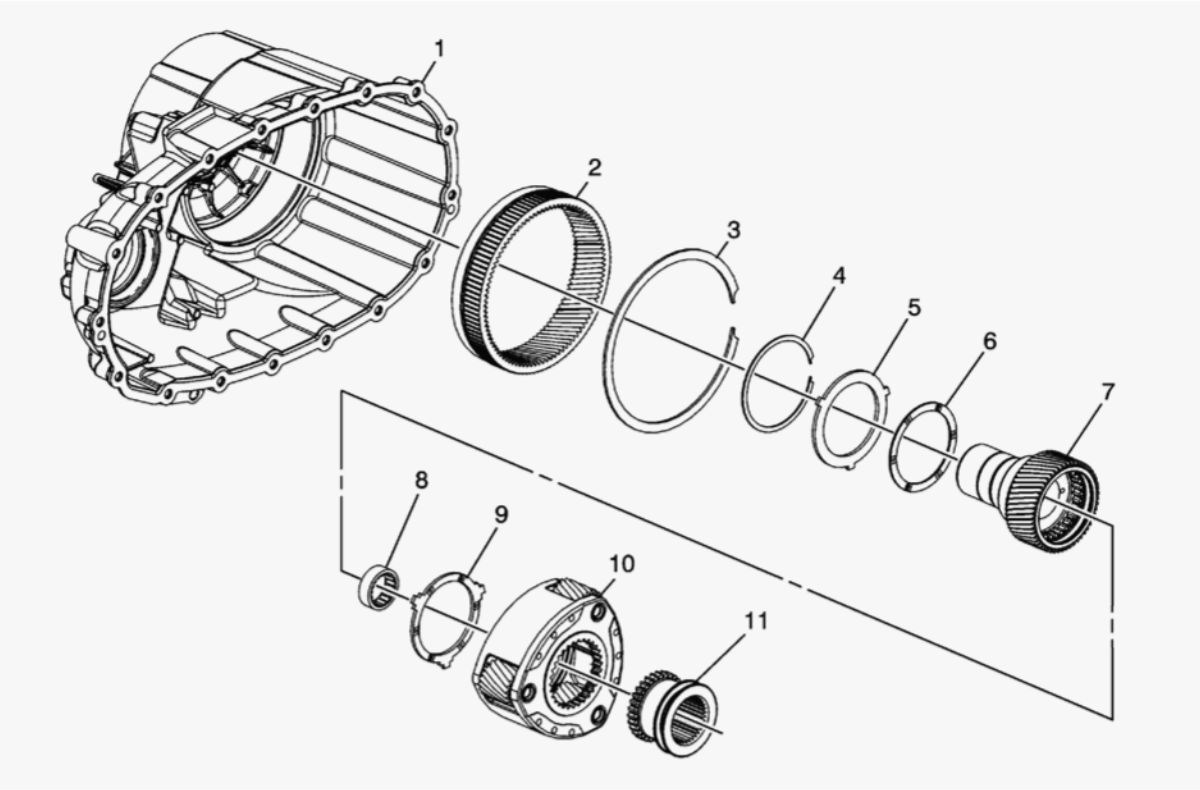

Fig. 87: Magna Light Duty NQG/NQH/NP0 - Second Design
Courtesy of GENERAL MOTORS COMPANY

Magna Light Duty NQG/NQH/NP0 - Second Design			
Callout	**Description**	**GM PN**	**Service Usage**
1	Front Case Half Assembly - w/gear (2) and ring (3)	19299077	NQH

cardiagn.com

Magna Light Duty NQG/NQH/NP0 - Second Design			
Callout	**Description**	**GM PN**	**Service Usage**
1	Front Case Half Assembly - w/gear (2) and ring (3)	19299078	NQG
1	Front Case Half Assembly - w/o gear (2) and ring (3)	19299076	NP0 **NOTE:** **The second design NP0 front case half assembly is interchangeable with first design**
2	High/Low Internal Gear - Not serviceable - part of case assembly	NO/PN	NQG/NQH
3	High/Low Internal Gear Retaining Ring	14037953	NQG/NQH
4	High/Low Planetary Carrier Retaining Ring	15547397	NQG/NQH
5	High/Low Locking Plate - three tab design	19300745	NQG/NQH
6	Thrust Washer - Front - No tab design	12470959	NQG/NQH
7	Input Shaft Assembly - w/pilot bearing	19299085	NQG/NQH - w/M30
7	Input Shaft Assembly - w/pilot bearing	19299088	NQH - w/M99
			NQG/NQH - w/MYC
7	Input Shaft Assembly - w/pilot bearing	19255997	NP0-w/MYC
8	Pilot Bearing	19132983	NQG/NQH/NP0
9	Thrust Washer - Rear - Three tab design	19300746	NQG/NQH

cardiagn.com

Magna Light Duty NQG/NQH/NP0 - Second Design			
Callout	**Description**	**GM PN**	**Service Usage**
10	High/Low Planetary Carrier Assembly - Three pinion design	19299090	NQG/NQH
11	High/Low Clutch	19299092	NQG/NQH - w/M30
11	High/Low Clutch	19299093	NQG/NQH w/MYC and NQH w/M99

Magna Heavy Duty NQF/NQG/NQH - First Design

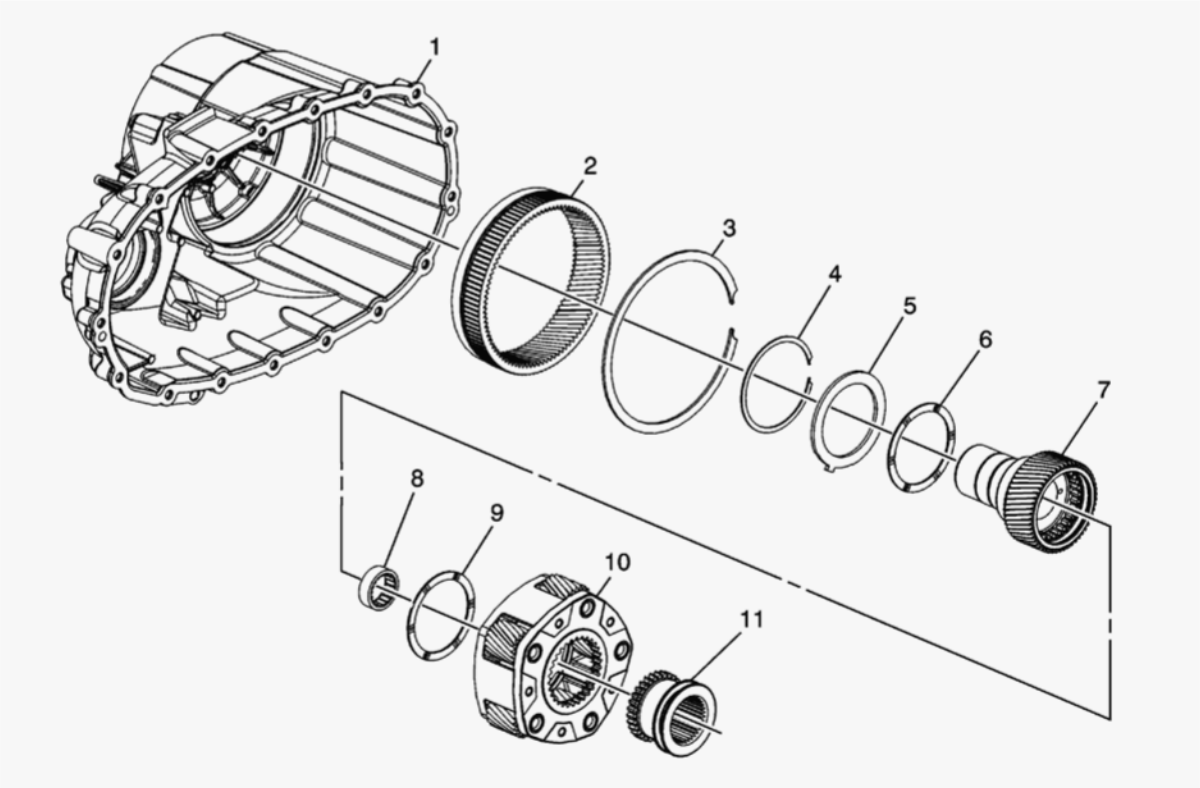

Fig. 88: Magna Heavy Duty NQF/NQG/NQH - First Design
Courtesy of GENERAL MOTORS COMPANY

NOTE: **2007-10MY Heavy Duty NQF transfer case assemblies were only produced with first-design content. Service 2007-10MY Heavy Duty NQG transfer case service assemblies may contain either first or second design content.**

cardiagn.com

Magna Heavy Duty NQF/NQG/NQH - First Design			
Callout	**Description**	**GM PN**	**Service Usage**
1	Front Case Half Assembly w/gear (2) and ring (3)	19257420	2011-13 NQF
1	Front Case Half Assembly w/gear (2) and ring (3)	19133000	2007-10 NQG
1	Front Case Half Assembly w/gear (2) and ring (3)	19259038	2011-13 NQG
1	Front Case Half Assembly w/gear (2) and ring (3)	19132998	2007-13 NQH
2	High/Low Internal Gear - Not serviceable - part of case assembly	NO/PN	NQF/NQG/NQH
3	High/Low Internal Gear Retaining Ring	19133009	NQF/NQG/NQH
4	High/Low Planetary Carrier Retaining Ring	19132997	NQF/NQG/NQH
5	High/Low Locking Plate - Single tab design	19132996	NQF/NQG/NQH
6	Thrust Washer - No tab design - Front	19132995	NQF/NQG/NQH
7	Input Shaft Assembly w/pilot bearing	19132979	NQH w/MYD
			07-10MY NQF/NQG w/MYD and MW7
7	Input Shaft Assembly - w/pilot bearing	19257419	2007-13 NQF/NQG w/MYD
7	Input Shaft Assembly - w/pilot bearing	19259039	2011-13 NQF/NQG w/MW7
8	Pilot Bearing	19259040	2011-13MY NQF/NQG w/MW7
8	Pilot Bearing	19132984	2007-10MY NQF/NQG/NQH - w/MW7 / MYD
			2007-13 NQH w/MYD
			2011-13 NQF/NQG w/MYD

cardiagn.com

Magna Heavy Duty NQF/NQG/NQH - First Design			
Callout	**Description**	**GM PN**	**Service Usage**
9	Thrust Washer - No tab design - Rear	19132995	NQG/NQH
			2011-13 NQF
10	High/Low Planetary Carrier Assembly - Five pinion design	19132987	NQG/NQH
			2011-13 NQF
11	High/Low Clutch	19260067	NQG/NQH
			2011-13 NQF

Magna Heavy Duty NQF/NQG/NQH - Second Design

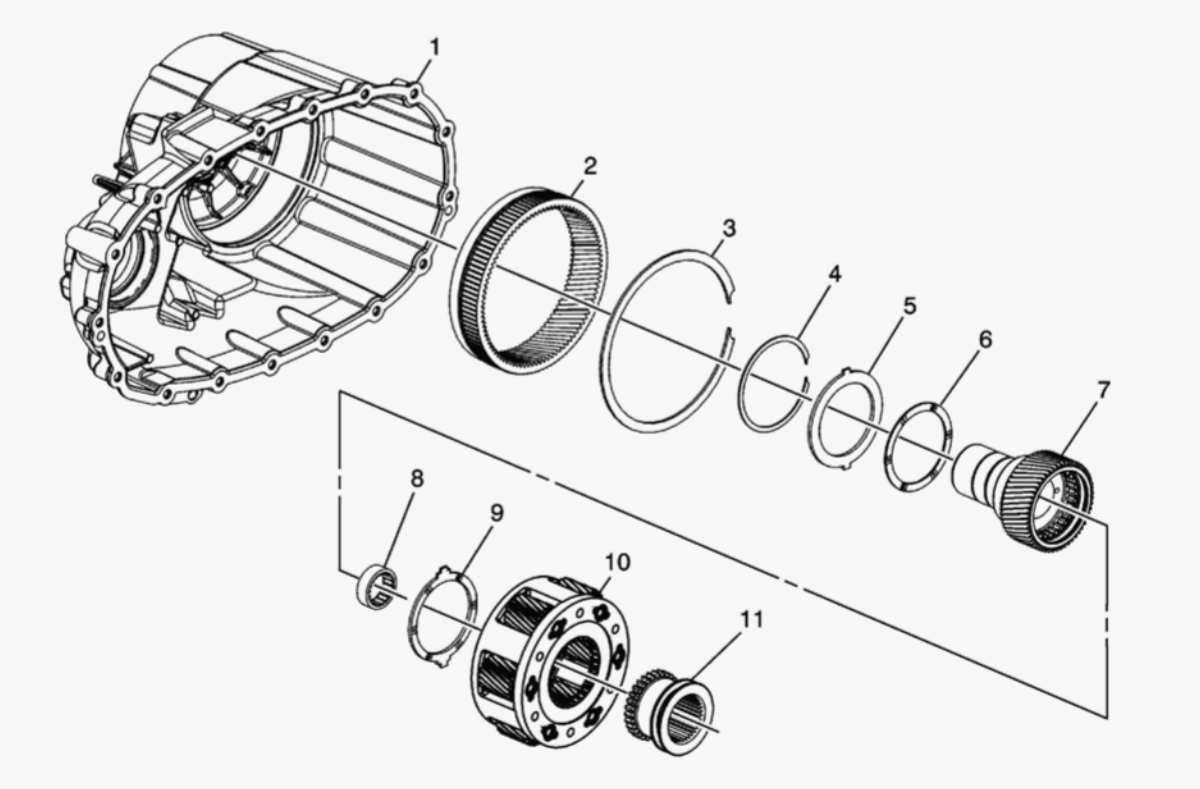

Fig. 89: Magna Heavy Duty NQF/NQG/NQH - Second Design
Courtesy of GENERAL MOTORS COMPANY

cardiagn.com

Magna Heavy Duty NQF/NQG/NQH - Second Design			
Callout	**Description**	**GM PN**	**Service Usage**
1	Front Case Half Assembly w/gear (2) and ring (3)	19299079	2011-13 NQF
1	Front Case Half Assembly w/gear (2) and ring (3)	19299078	2007-10 NQG
1	Front Case Half Assembly w/gear (2) and ring (3)	19299080	2011-13 NQG
1	Front Case Half Assembly w/gear (2) and ring (3)	19299077	2007-13 NQH
2	High/Low Internal Gear - Not serviceable - part of case assembly	NO/PN	NQF/NQG/NQH
3	High/Low Internal Gear Retaining Ring	14037953	NQF/NQG/NQH
4	High/Low Planetary Carrier Retaining Ring	15547397	NQF/NQG/NQH
5	High/Low Locking Plate - Two tab design	15664905	NQF/NQG/NQH
6	Thrust Washer - No tab design - Front	12470959	NQF/NQGF/NQH
7	Input Shaft Assembly - w/pilot bearing	19299086	NQH w/MYD
			07-10MY NQG w/MYD and MW7
7	Input Shaft Assembly - w/pilot bearing	19299087	2011-13 NQF/NQG w/MYD
7	Input Shaft Assembly - w/pilot bearing	19299089	2011-13 NQF/NQG w/MW7
8	Pilot Bearing	19259040	2011-13MY NQF/NQG w/MW7
8	Pilot Bearing	19132984	2007-10MY NQF/NQG/NQH - w/MW7 / MYD
			2007-13 NQH w/MYD
			2011-13 NQF/NQG w/MYD
9	Thrust Washer - Two tab design	15547390	NQG/NQH

cardiagn.com

Magna Heavy Duty NQF/NQG/NQH - Second Design			
Callout	**Description**	**GM PN**	**Service Usage**
	- Rear	19299091	2011-13 NQF
10	High/Low Planetary Carrier Assembly - Six pinion design		NQG/NQH
			2011-13 NQF
11	High/Low Clutch	19299093	NQG/NQH
			2011-13 NQF

Front Case Half Identification

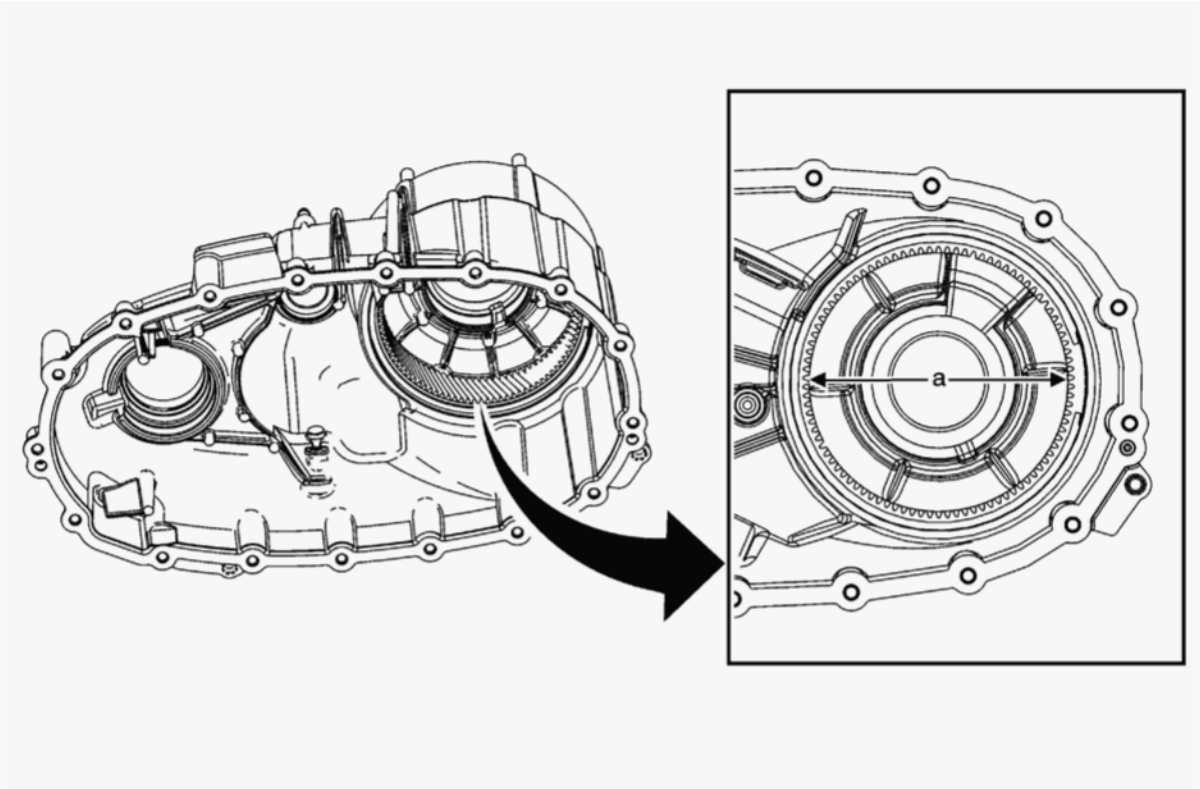

Fig. 90: Front Case Half
Courtesy of GENERAL MOTORS COMPANY

The first design front case half assembly can be identified as having an internal gear that is a 94 tooth design with an inside diameter (a) of 148.5 mm (5.85 in).

cardiagn.com

The second design front case half assembly can be identified as having an internal gear that is a 91 tooth design with an inside diameter (a) of 142 mm (5.59 in).

Input Shaft Identification

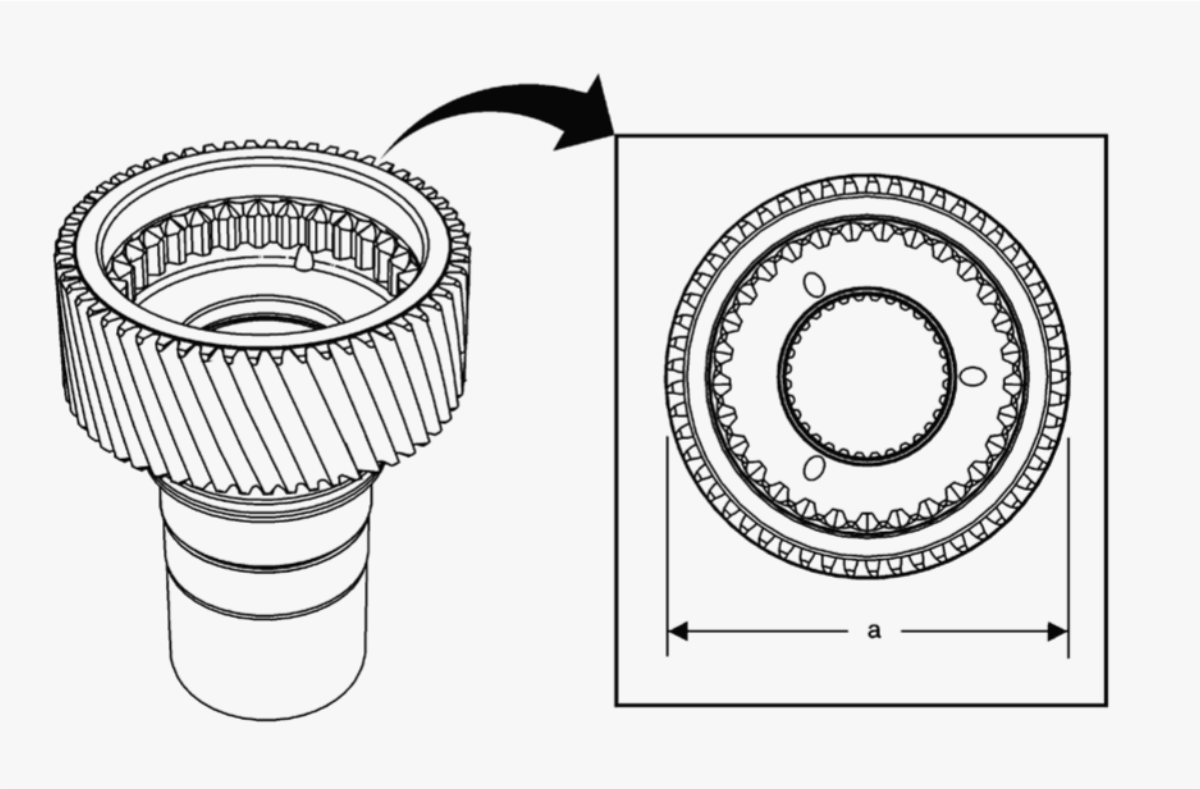

Fig. 91: Input Shaft
Courtesy of GENERAL MOTORS COMPANY

The first design input shaft can be identified as a 56 tooth design with an outside diameter (a) of 91.4 mm (3.60 in) and two oil drain holes 180 degrees apart.

The second design input shaft can be identified as a 53 tooth design with an outside diameter (a) of 87.50 mm (3.44 in) and three oil drain holes 120 degrees apart.

High/Low Planetary Carrier Assembly Identification

cardiagn.com

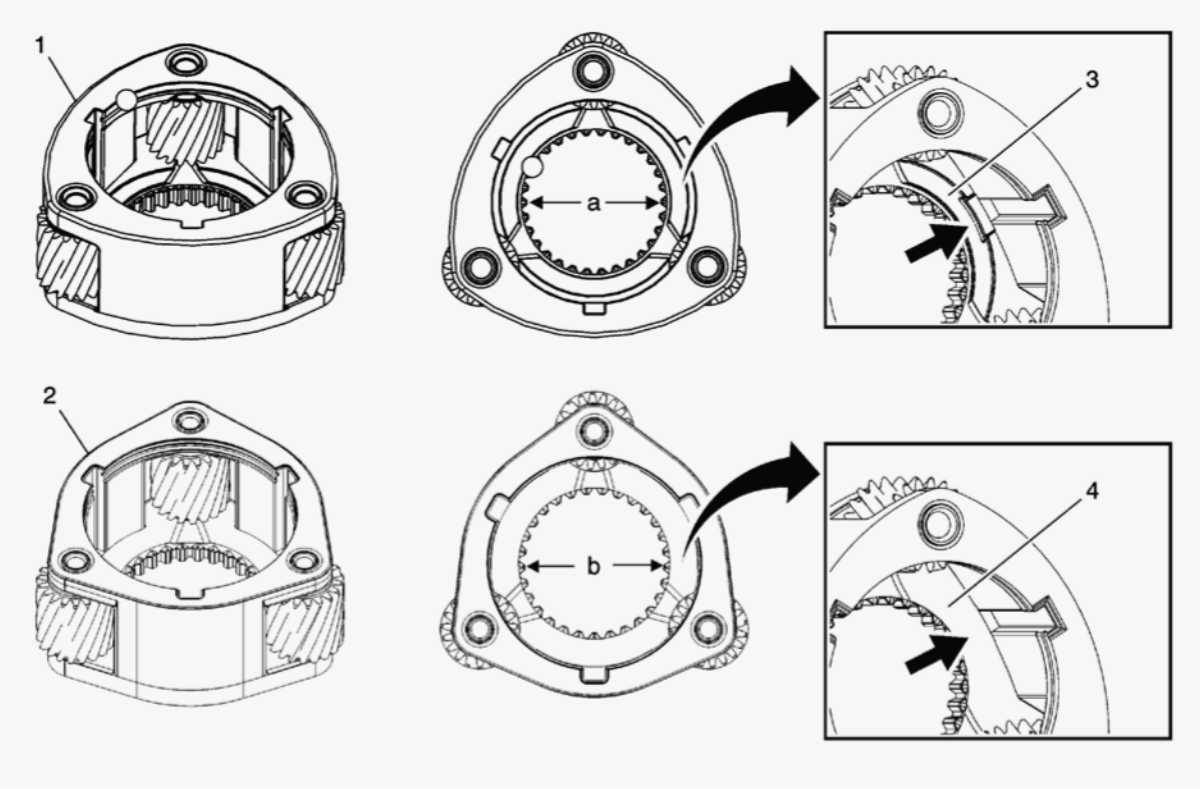

Fig. 92: Light-Duty 3-Pinion High/Low Planetary Carrier (First And Second Design)
Courtesy of GENERAL MOTORS COMPANY

The first-design light-duty 3-pinion high/low planetary carrier (1) can be identified as having a 30 tooth design with an inside diameter (a) of 61.3 mm (2.41 in). In addition, the first-design carrier can also be identified by the presence of a recessed washer pocket (3) at the rear thrust washer location.

The second-design light-duty 3-pinion high/low planetary carrier (2) can be identified as having a 29 tooth design with an inside diameter (b) of 60.2 mm (2.37 in). In addition, the second-design carrier can also be identified by the lack of a recessed washer pocket (4) at the rear thrust washer location.

cardiagn.com

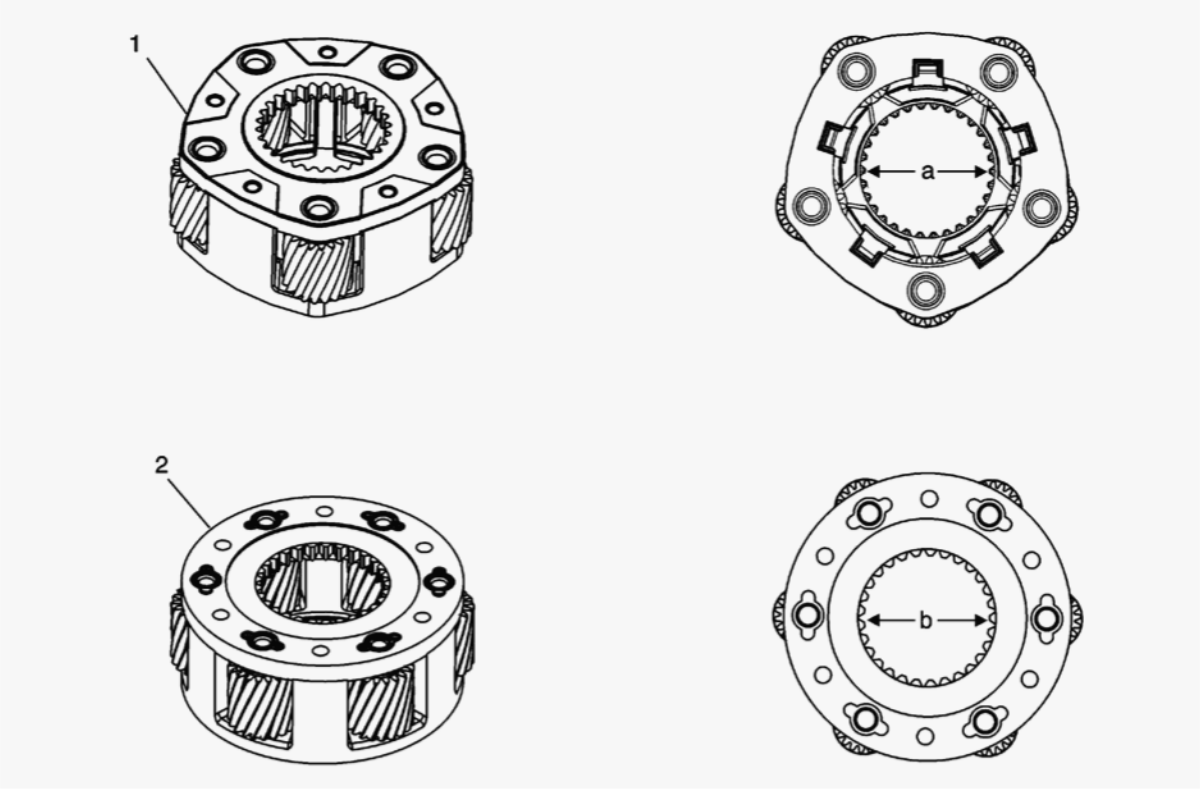

Fig. 93: Heavy-Duty 5-Pinion High/Low Planetary Carrier And Heavy-Duty 6-Pinion High/Low Planetary Carrier
Courtesy of GENERAL MOTORS COMPANY

The first-design heavy-duty 5-pinion high/low planetary carrier (1) can be identified as having 5 pinions and a 30 tooth design with an inside diameter (a) of 61.3 mm (2.41 in).

The second-design heavy-duty 6-pinion high/low planetary carrier (2) can be identified as having 6 pinions and a 29 tooth design with an inside diameter (b) of 60.2 mm (2.37 in).

High/Low Clutch

cardiagn.com

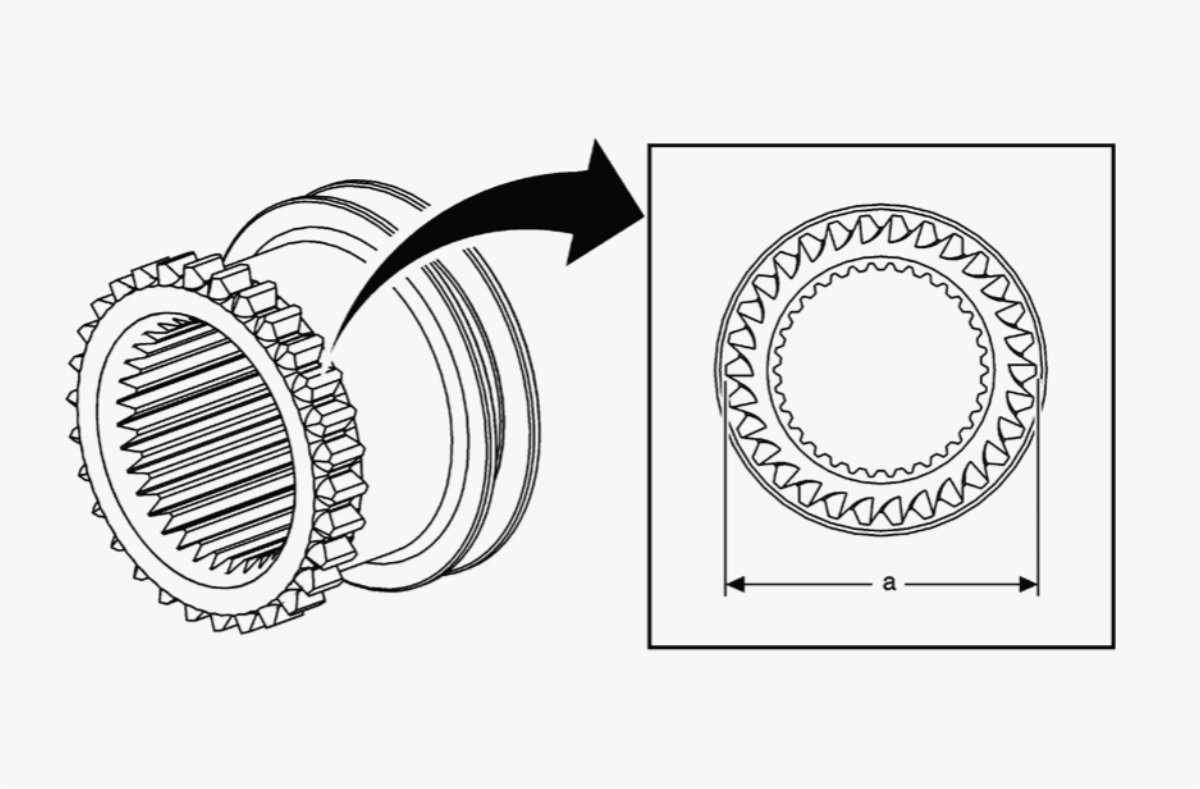

Fig. 94: High/Low Clutch
Courtesy of GENERAL MOTORS COMPANY

The first design high/low clutch can be identified as having a 30 tooth design with a gear tooth outside diameter (a) of 65.50 mm (2.58 in).

The second design high/low clutch can be identified as having a 29 tooth design with a gear tooth outside diameter (a) of 63.25 mm (2.49 in).

Component Replacement - Light Duty Conversion from First Design to Second Design

cardiagn.com

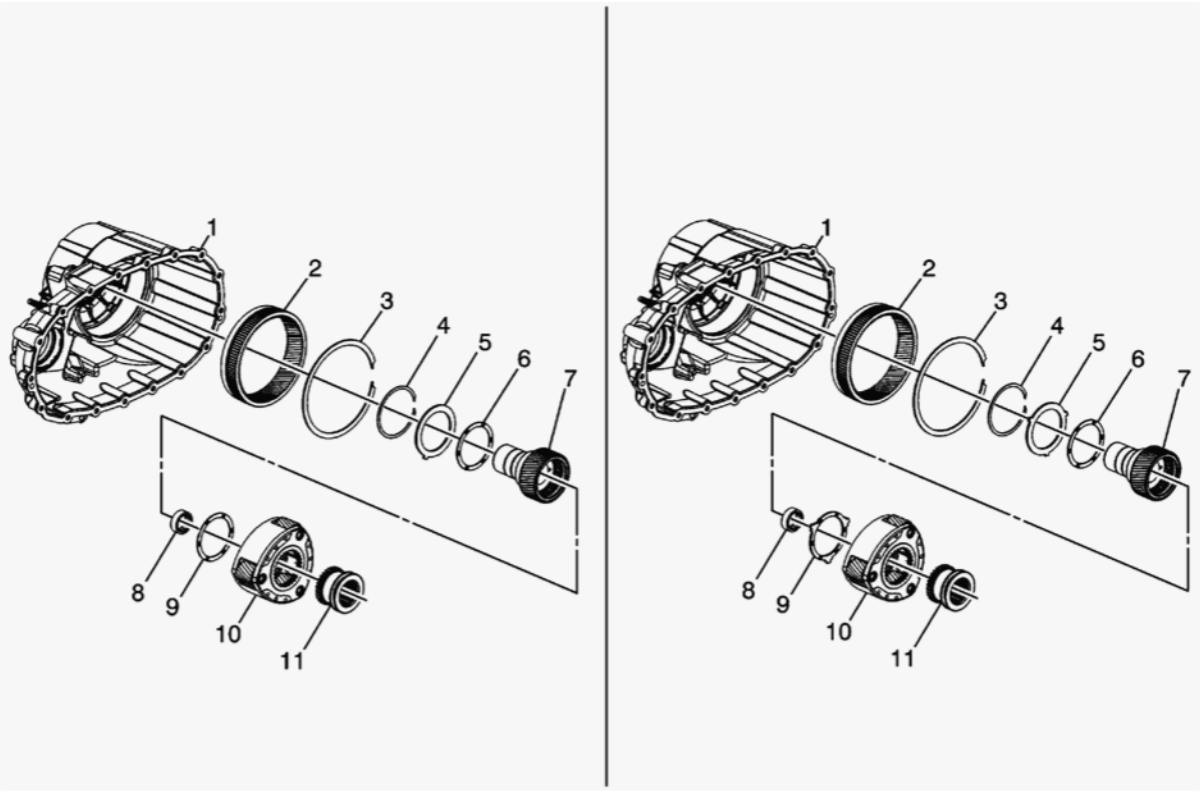

Fig. 95: Light Duty Conversion From First Design To Second Design
Courtesy of GENERAL MOTORS COMPANY

It is possible to repair a first-design assembly using second-design components. Refer to the parts catalog and the Parts Identification Tables above for component part number clarification.

When servicing a first-design LD assembly with LD second-design components, the following components MUST be replaced as a group:

1. Front Case Half Assembly - with internal gear and retaining ring
2. Locking Plate
3. Thrust Washer (front)
4. Input Shaft
5. Pilot Bearing
6. Thrust Washer (rear)

cardiagn.com

7. Planetary Carrier Assembly
8. High/Low Clutch

Component Replacement - Heavy Duty Conversion from First Design to Second Design

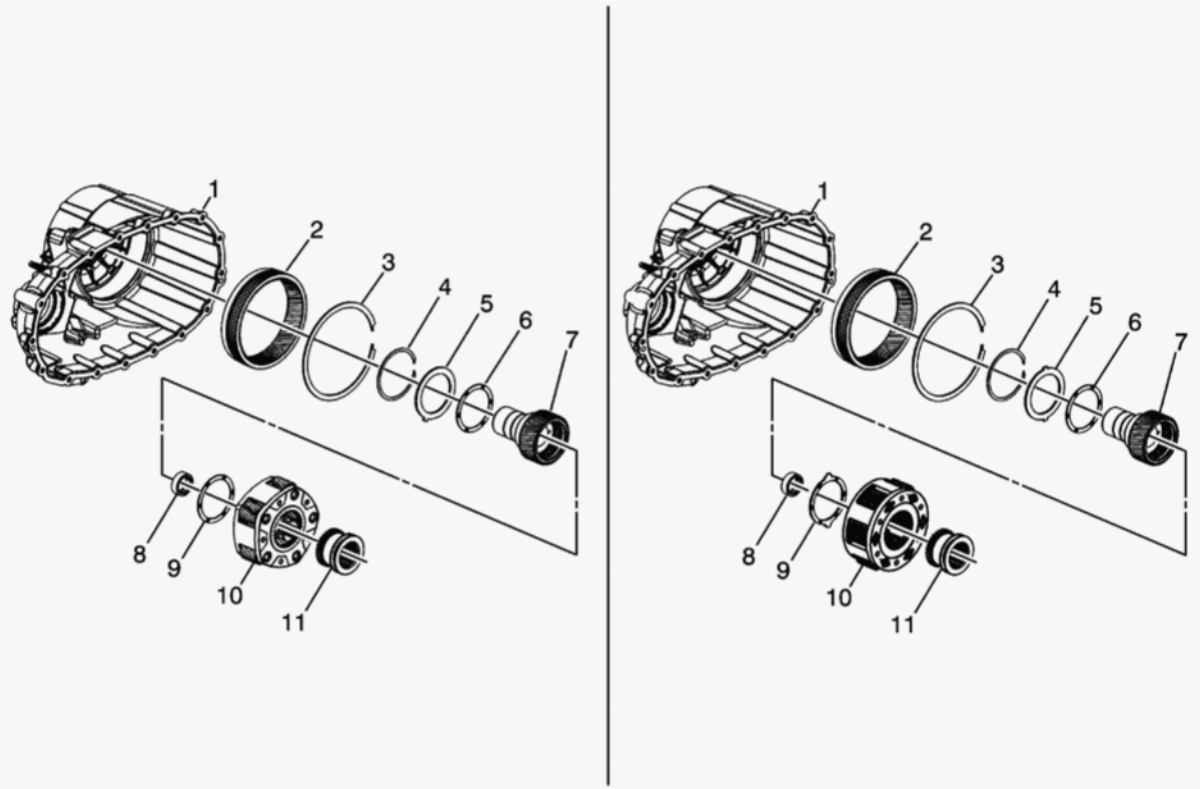

Fig. 96: Heavy Duty Conversion From First Design To Second Design
Courtesy of GENERAL MOTORS COMPANY

It is possible to repair a first-design HD assembly using second-design HD components. Refer to the parts catalog and the Parts Identification Tables above for component part number clarification.

When servicing a first-design HD assembly with HD second-design components, the following components MUST be replaced as a group:

1. Front Case Half Assembly - with internal gear and retaining ring
2. Locking Plate

cardiagn.com

3. Thrust Washer (front)
4. Input Shaft
5. Pilot Bearing
6. Thrust Washer (rear)
7. Planetary Carrier Assembly
8. High/Low Clutch

Production Changes Summary

For production the following transfer cases variations were produced:

- 2007-12i Magna LD NQG/NQH - produced with first-design content. First design service components are available. A second-design assembly may be used for back-service in a first-design application.
- 2007-10 Magna HD NQF - produced with only first-design content. Service components are available.
- 2007-10 Magna HD NQG - produced with only first-design content. Service assemblies may contain either first or second design content. Both first and second design service components are available.
- 2007-12i Magna HD NQH - produced with first-design content. First design service components are available. A second-design assembly may be used for back-service in a first-design application.
- 2011-12i Magna SHD NQF/NQG - produced with first design content. First design service components are available. A second-design assembly may be used for back-service in a first-design application.
- 2012i-13 Magna LD NQG/NQH - produced with second-design content. Second design service components are available.
- 2012i-13 Magna HD NQH - produced with second-design content. Second design service components are available
- 2012i-13 Magna SHD NQF/NQG - produced with second-design content. Second design service components are available

2012 Interim Model Year Design Change - NQG High/Low Shift Fork, Fork Pad, and High/Low Clutch

cardiagn.com

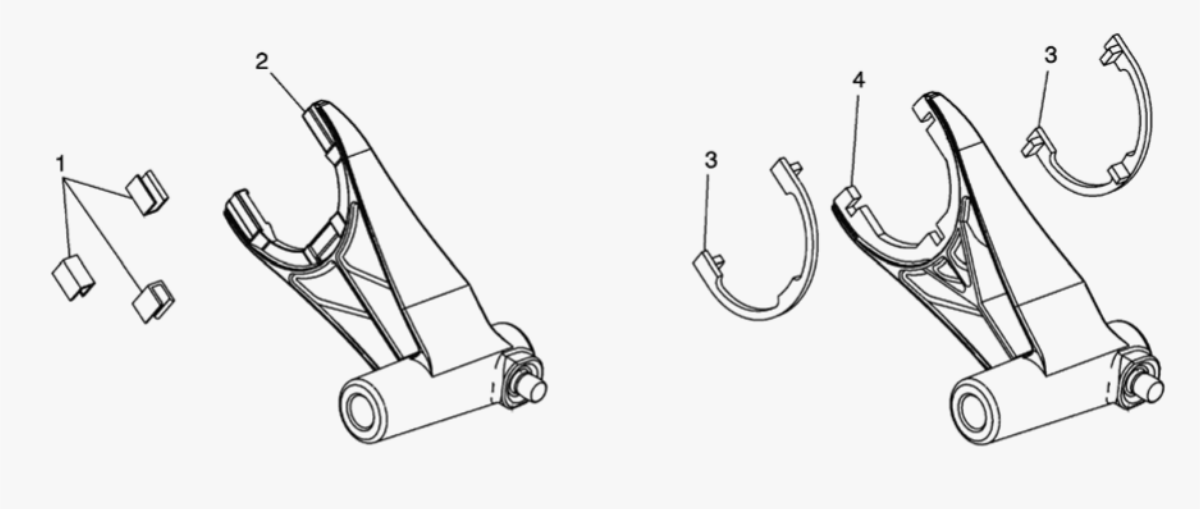

Fig. 97: High/Low Shift Fork, Fork Pad And High/Low Clutch (First And Second Designs)
Courtesy of GENERAL MOTORS COMPANY

Interim 2012 model year the High/Low shift fork, fork pad, and High/Low clutch design changed. The first design forks (2) can be identified as having three flat un-notched fork pad areas with three separate fork pads (1). The second design forks (4) can be identified as having a half-round shaped pad area with three notches for pad orientation and installation and upper and lower half-round fork pads (3). The second design shift fork (4) and pads (3) are the only design available for service and must be used with the second design High/Low clutch.

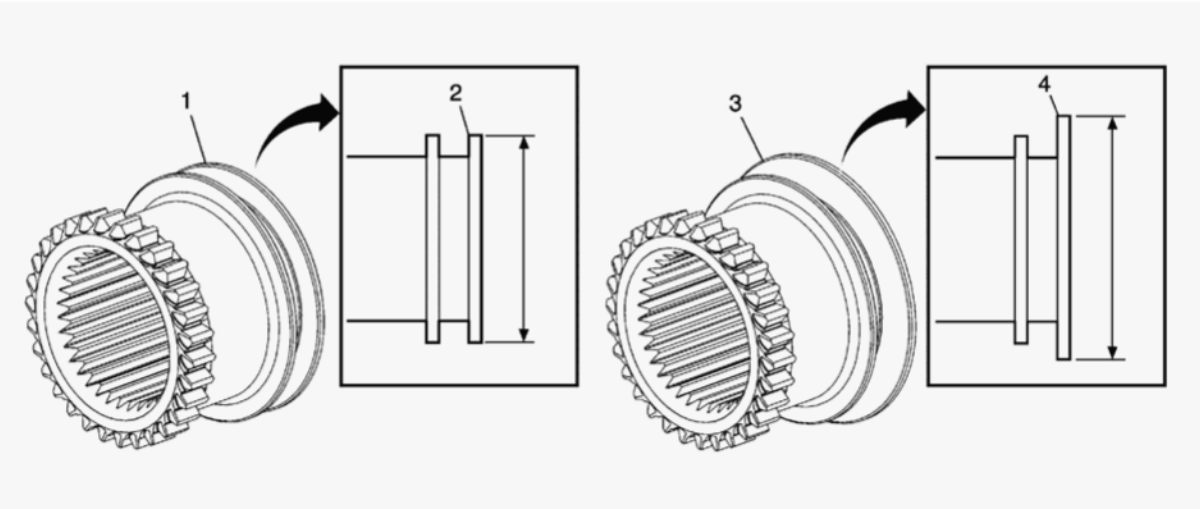

Fig. 98: OD Rear Flange (First And Second Designs)

cardiagn.com

Courtesy of GENERAL MOTORS COMPANY

Interim 2012 model year the High/Low shift fork, fork pad, and High/Low clutch design changed. The first design high/low clutch (1) can be identified by having a 73 mm (2.87 in) OD rear flange (2). The second design high/low clutch (3) can be identified by having a 76 mm (2.99 in) OD rear flange (4).

For service:

- The first design 73 mm (2.87 in) high/low clutch may NOT be used with the second design fork and pad.
- The second design 76 mm (2.99 in) high/low clutch must be used with the second design fork and fork pad.
- The second design 76 mm (2.99 in) high/low clutch may also be used with the first design fork and pad if first design fork replacement is not required.

2011 Interim Model Year Design Change - NQF/NQG HD and SHD Design Change - Main shaft, pin, and thrust washer

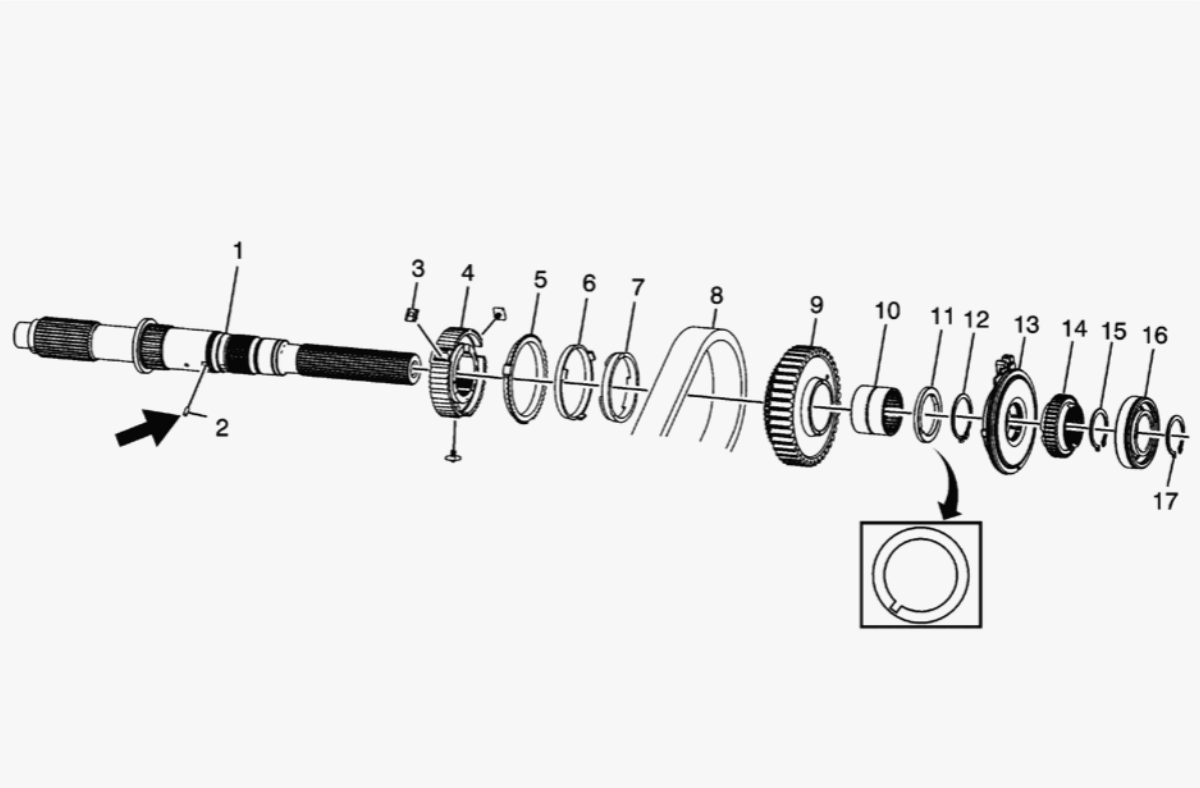

Fig. 99: NQF/NQG HD And SHD Design Change - Main Shaft, Pin, And Thrust Washer

cardiagn.com

Courtesy of GENERAL MOTORS COMPANY

Beginning in 2011 model year for NQF / NQG HD and SHD applications, an anti-rotation main-shaft pin (2) was added to the design as well as a design change to thrust washer (11). The new design is to prohibit the rotation of the thrust washer (11). Components of this design are not to be used for back service.

2011 Interim Model Year Design Change - NQF/NQG/NQH/NP0 Front Output Shaft, Deflector, Seal

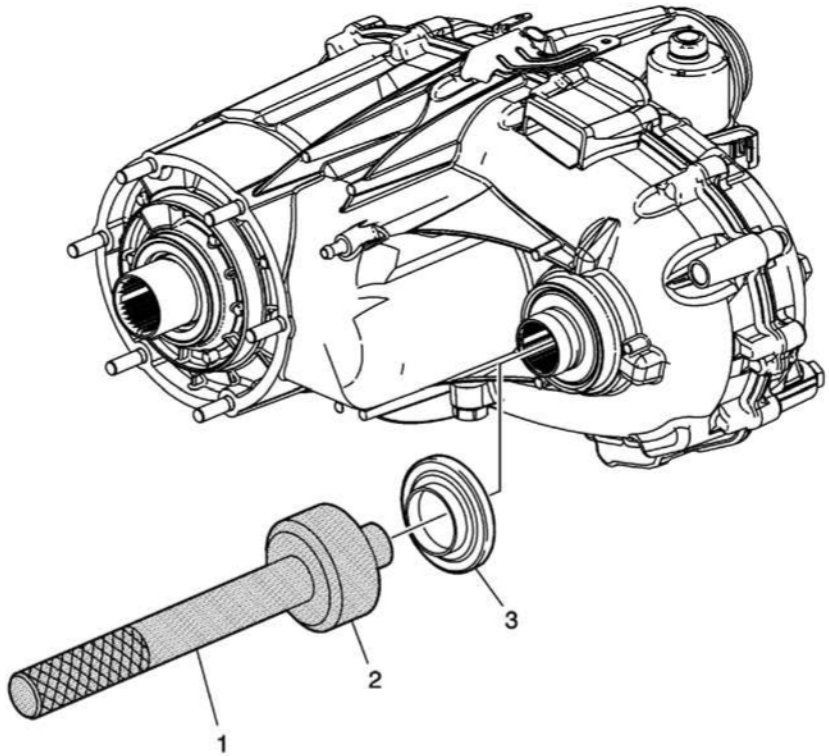

Fig. 100: NQF/NQG/NQH/NP0 Front Output Shaft, Deflector, Seal
Courtesy of GENERAL MOTORS COMPANY

Interim 2011 model year, a new design front output shaft deflector (3) was implemented into production for second design NQF-HD/SHD and NQG-HD applications. First design 2011 model year NQF and NQG applications can be identified as not having the deflector on the front output shaft.

For service, the new design front output shaft, deflector, and new design seal may be installed on current and prior model year Magna NQF-HD/SHD, NQG-LD/HD, NQH-LD/HD, and NP0 applications providing the new design front output shaft is also installed. The front output shaft

cardiagn.com

deflector is to be installed using **GE-8092** driver handle (1) and **DT-50649** seal installer (2).

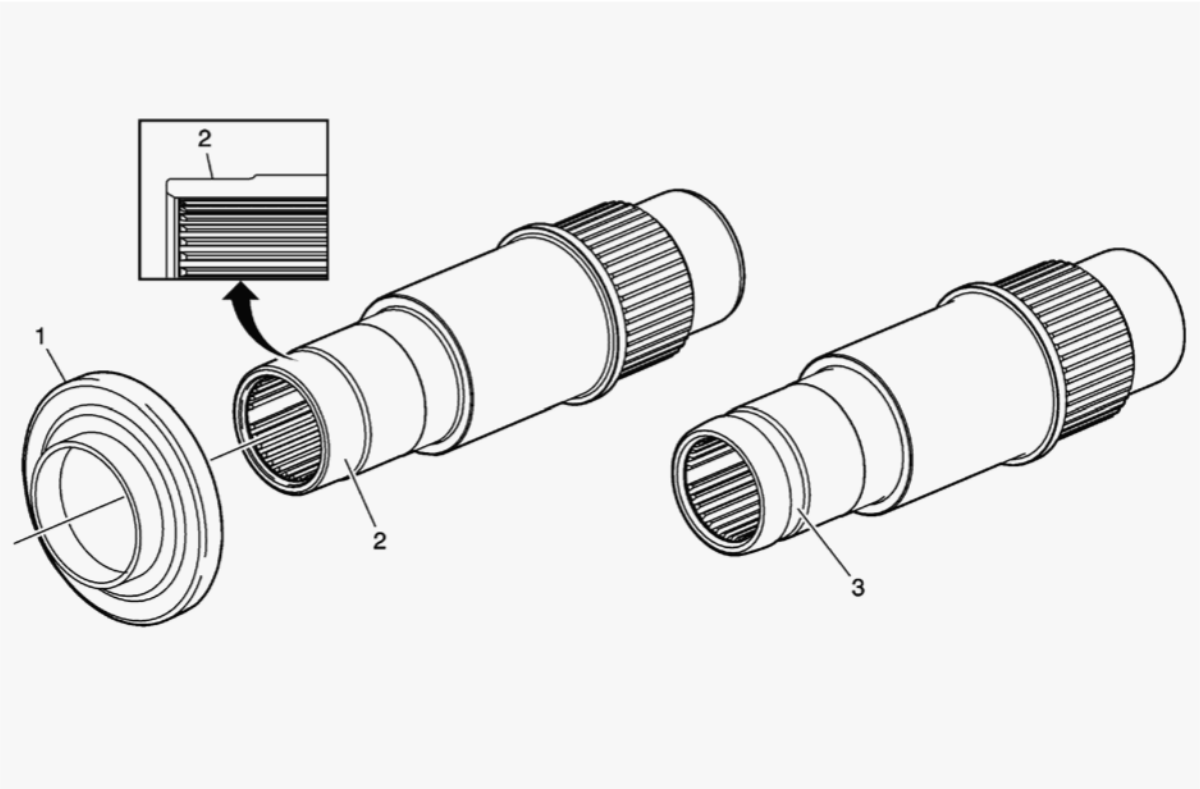

Fig. 101: New Design Deflector And Output Shaft
Courtesy of GENERAL MOTORS COMPANY

The NEW design deflector (1) can be installed onto all current and prior model year Magna RPOs NQF, NQG, NQH, and NP0 applications providing the NEW design front output shaft (2) is also installed. Second design front output shafts can be identified by the machined area on the OD output end of the shaft (2). First design front output shafts can be identified by the dust boot clamp groove located (3) at the OD output end of the shaft. The NEW design slinger will NOT install onto the first design shafts.

2010 Service Parts Release Usage Change - NQH/NP0 Control Actuator Levers

cardiagn.com

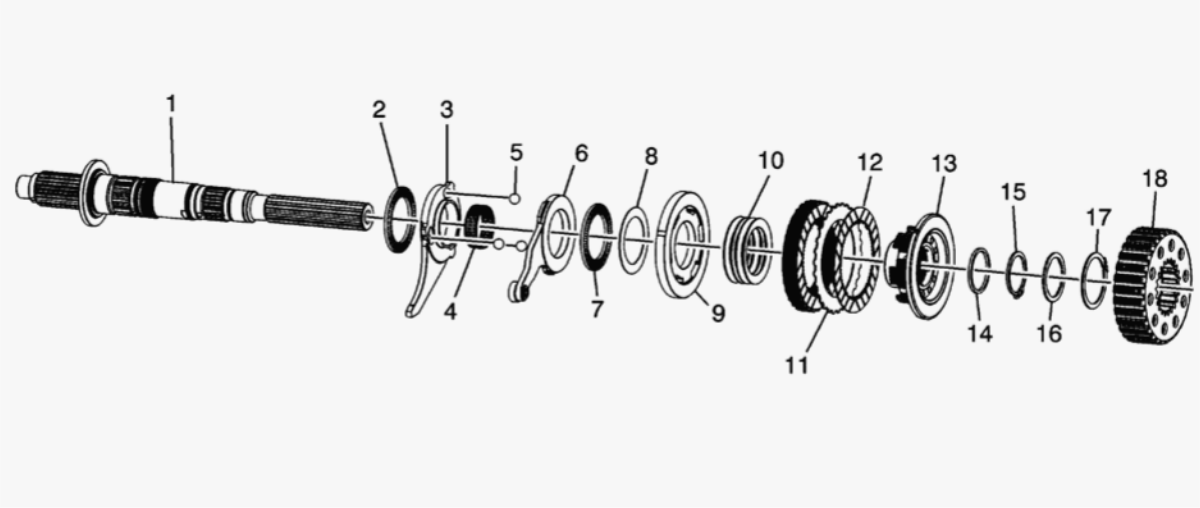

Fig. 102: NQH/NP0 Control Actuator Levers
Courtesy of GENERAL MOTORS COMPANY

Light Duty (LD) 2007-2010 MP3023-NQH and 2010 MP3010-NP0 production transfer cases are built with LD control actuator levers (3 and 6) and are used with 13 mm (0.52 in) diameter control actuator lever balls (5)

Heavy duty (HD) 2007-10 MP3024-NQH production transfer cases are built with HD control actuator levers (3 and 6) and are used with Heavy 10 mm (0.39 in) control actuator lever balls.

When replacement of one or both of the LD control actuator levers is required, it is necessary to replace both of the levers and all three balls with the HD components as a set. It is also necessary to re-measure and adjust clutch pack clearances as required and to perform the Transfer Case High/Low Clutch Reset. Refer to Measuring/Adjusting Clutch Assembly Height in Transfer Case Assemble, Transfer Case Description and Operation and Transfer Case High/Low Clutch Reset. Heavy duty (HD) components are the only parts available for service.

2009 Interim Model Year Design Change - NQF Two/Four Wheel Drive Actuator Cam and Shaft

cardiagn.com

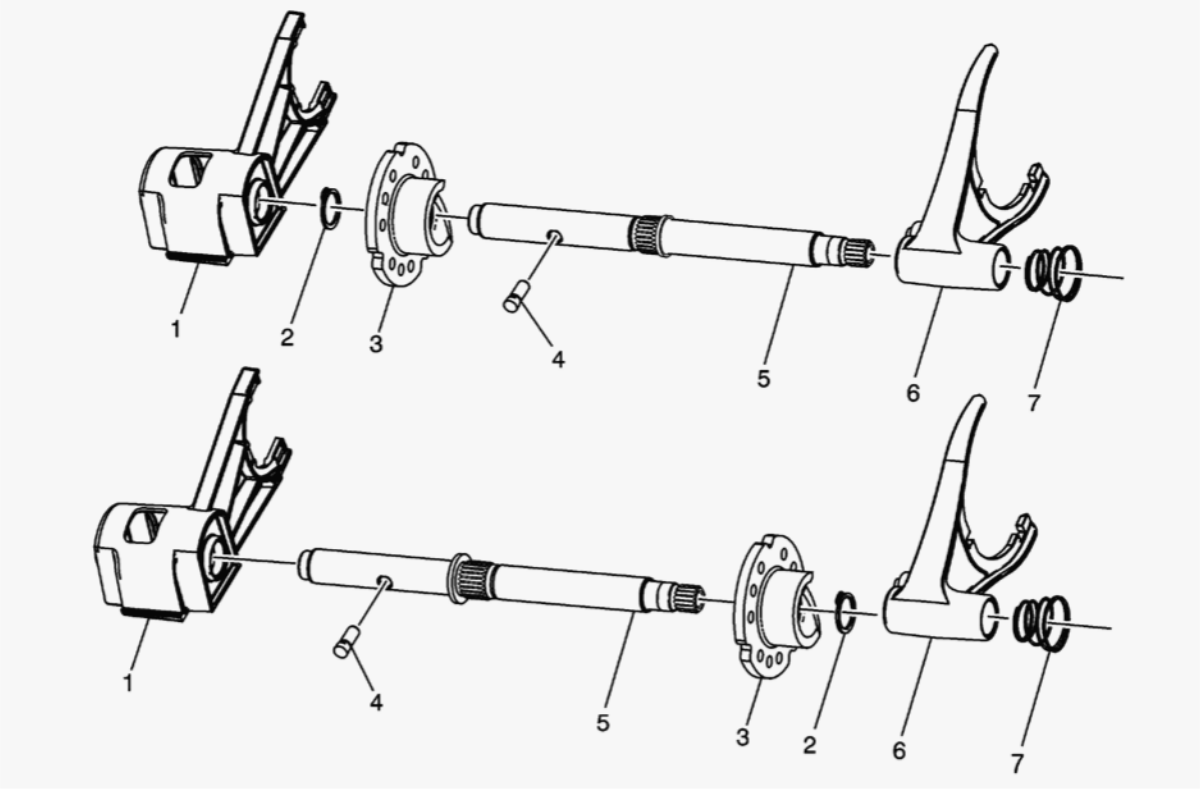

Fig. 103: NQF Two/Four Wheel Drive Actuator Cam And Shaft (First And Second Designs)
Courtesy of GENERAL MOTORS COMPANY

Interim 2009 model year, the high/low control actuator shaft and two/four wheel drive actuator cam designs were revised with a relocation of the shaft flange. First design 2009 transfer cases were built with first design high/low control actuator shaft (5) and cam (3). Second design 2009 transfer cases were built with second design high/low control actuator shaft (5) and cam (3). When replacing a first design control actuator shaft or cam, the second design shaft (5) and cam (3) must be installed. The second design parts are the only parts available for service.

SPECIAL TOOLS AND EQUIPMENT

SPECIAL TOOLS

Illustration	Tool Number/Description

cardiagn.com

Illustration	Tool Number/Description
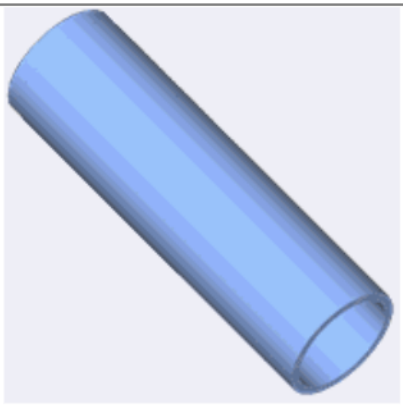	DT-35512 J-35512 Inner Pinion Bearing Installer
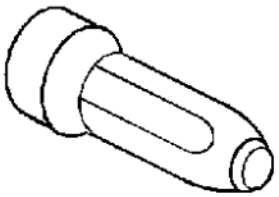	DT-42738 J-42738 Seal Installer
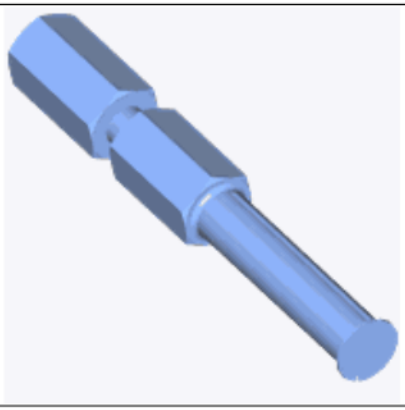	DT-44737 J-44737 Shift Rail Bearing Remover

cardiagn.com

Illustration	Tool Number/Description
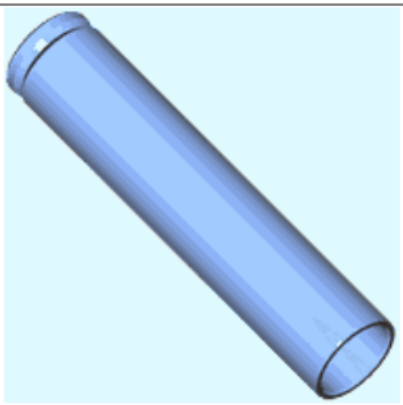	DT-44907 J-44907 Bearing Installer
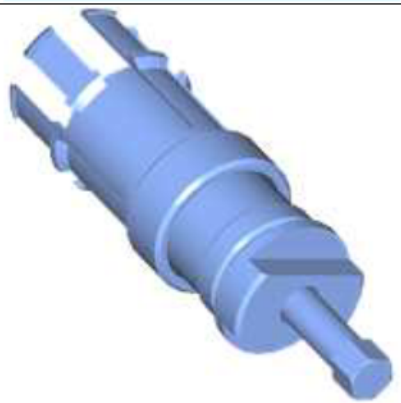	DT-45380 J-45380 Transfer Case Rear Bushing Remover and Installer
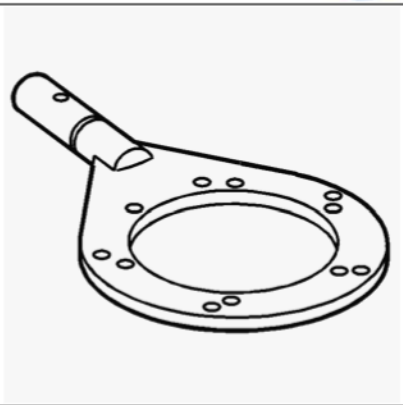	DT-45759 J-45759 Assembly Fixture

cardiagn.com

Illustration	Tool Number/Description
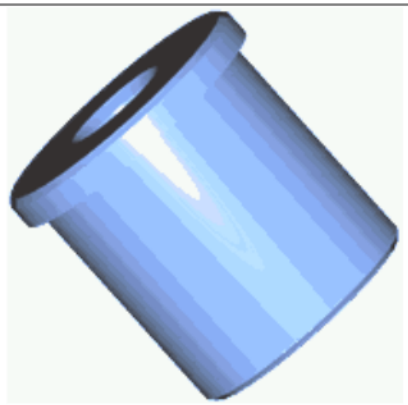	DT-48022 Output Bushing Installer
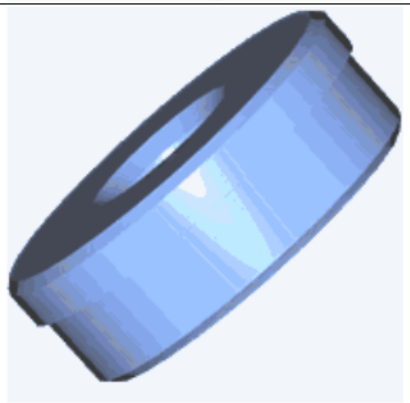	DT-48209 Bushing Remover
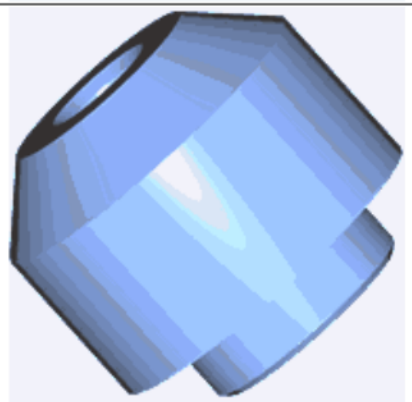	DT-48210 Seal Installer

cardiagn.com

Illustration	Tool Number/Description
	DT-48211 Drive Sprocket Bearing Installer
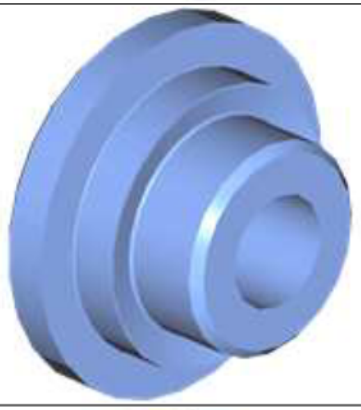	DT-48212 Input Shaft Pilot Bearing Installer
	DT-48213 Clutch Pack Height Gauge

cardiagn.com

Illustration	Tool Number/Description
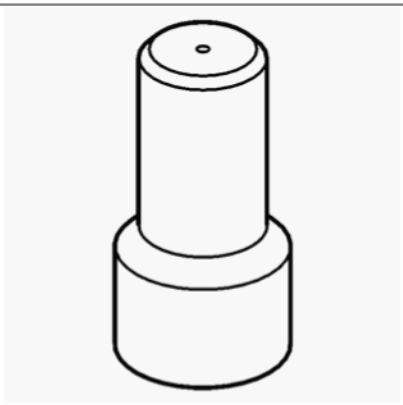	DT-50648-A Seal Installer
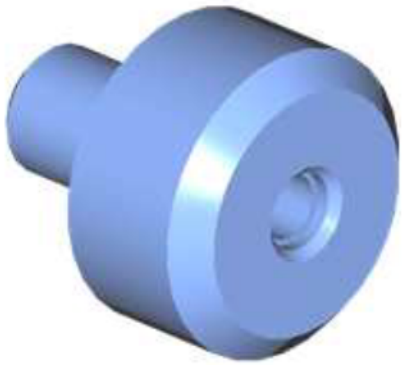	DT-50649 Seal Installer
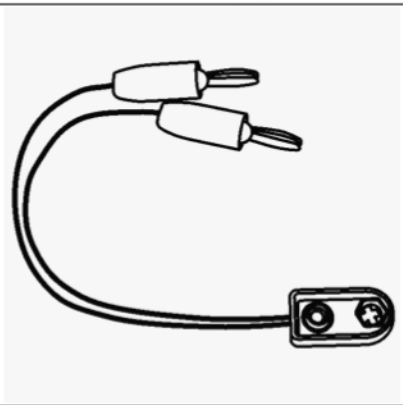	EL-49741 9V + Power Source Harness

cardiagn.com

Illustration	Tool Number/Description
	EL-49742 Battery Voltage B+ and Ground Source Harness
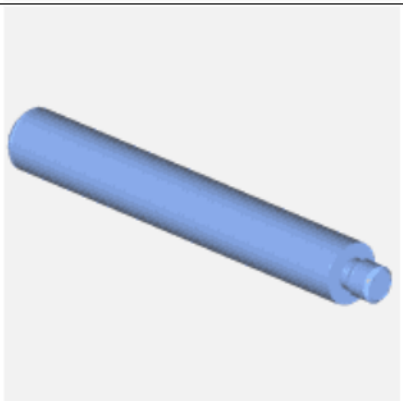	GE-8092 J-8092 Driver Handle
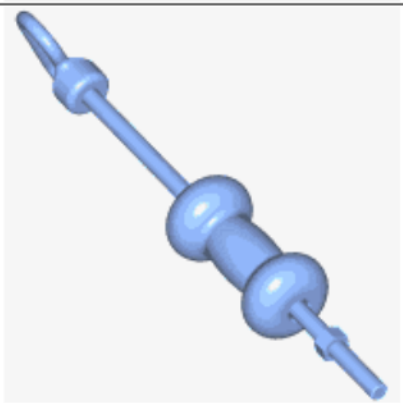	GE-02619-A J-02619-A Slide Hammer

cardiagn.com

Illustration	Tool Number/Description
	GE-3289-20 J-3289-20 Holding Fixture
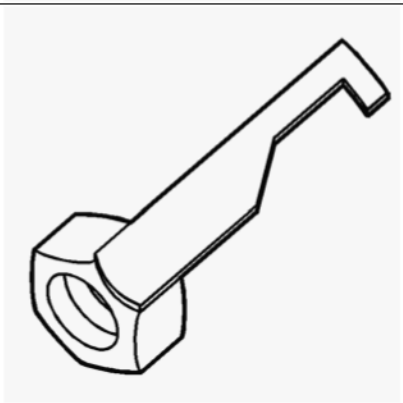	J-45278 Seal Remover

eserved.

cardiagn.com