Workshop Manual

Audi A1 2011 ➤ ,
Audi A1 Sportback 2018 ➤ ,
Audi A3 2013 ➤ ,
Audi A3 Cabriolet 2015 ➤ ,
Audi A3 Limousine 2014 ➤ ,
Audi A3 Limousine China 2014 ➤ ,
Audi A3 Sportback 2013 ➤ ,
Audi A3 Sportback China 2014 ➤ ,
Audi A4 2015 ➤ , Audi A4 Avant 2015 ➤ ,
Audi A4 China 2016 ➤ , Audi A5 2016 ➤ ,
Audi A5 Cabriolet 2009 ➤ ,
Audi A5 Coupé 2008 ➤ ,
Audi A5 Sportback 2010 ➤ ,
Audi A6 2011 ➤ , Audi A6 2019 ➤ ,
Audi A6 China 2012 ➤ ,
Audi A7 Sportback 2011 ➤ ,
Audi A7 Sportback 2018 ➤ ,
Audi A8 2010 ➤ , Audi A8 2018 ➤ ,
Audi Q2 2016 ➤ , Audi Q3 2012 ➤ ,
Audi Q3 2019 ➤ , Audi Q3 China 2013 ➤ ,
Audi Q5 2008 ➤ , Audi Q5 2017 ➤ ,
Audi Q5 China 2010 ➤ , Audi Q7 2016 ➤ ,
Audi Q8 2018 ➤ , Audi R8 2015 ➤ ,
Audi TT 2015 ➤ , Audi e-tron 2019 ➤

Protected by copyright. Copying for private or commercial purposes, in part or in whole, is not permitted unless authorised by AUDI AG. AUDI AG does not guarantee or accept any liability with respect to the correctness of information in this document. Copyright by AUDI AG.

Air conditioners with refrigerant R1234yf - General information

Edition 10.2018

List of Workshop Manual Repair Groups

Repair Group

00 - Technical data

87 - Air conditioning system

Protected by copyright. Copying for private or commercial purposes, in part or in whole, is not permitted unless authorised by AUDI AG. AUDI AG does not guarantee or accept any liability with respect to the correctness of information in this document. Copyright by AUDI AG.

Technical information should always be available to the foremen and mechanics, because their careful and constant adherence to the instructions is essential to ensure vehicle road-worthiness and safety. In addition, the normal basic safety precautions for working on motor vehicles must, as a matter of course, be observed.

All rights reserved.
No reproduction without prior agreement from publisher.

Copyright © 2018 Audi AG, Ingolstadt

D4B8063201D

Contents

00 - Technical data 1

1 Safety precautions 1
1.1 Safety precautions when working on air conditioners 1
1.2 Safety precautions when handling refrigerants 1
1.3 Safety precautions when working on vehicles with start/stop system 2
1.4 Safety precautions when handling air conditioner service stations 2
1.5 Safety precautions when working on vehicles with high-voltage system 3
1.6 Safety precautions when working in the vicinity of high-voltage components 4
1.7 Safety precautions when handling pressure vessels 4

2 Laws and regulations 5
2.1 Legal regulations and guidelines 5
2.2 Charging refrigerant circuit with other refrigerants 6
2.3 Occupational health & safety 6

3 Repair instructions 8
3.1 Rules for cleanliness 8
3.2 Refrigerant circuit seals 8
3.3 Refrigerant and refrigerant oil 9
3.4 Handling pressure vessels 11
3.5 Handling refrigerant 12

4 Identification 14
4.1 Label for refrigerant circuit 14

5 Technical data 15
5.1 Refrigerant capacities 15
5.2 Refrigerant oil capacities 15
5.3 Safety data sheets 16

6 Basic technical and physical principles 17
6.1 Principles of air conditioning systems 17
6.2 Physical properties 20
6.3 Product properties 27
6.4 Function of air conditioner 27
6.5 Other reference material 29

87 - Air conditioning system 30

1 Refrigerant circuit 30
1.1 System overview - refrigerant circuit 30
1.2 General description of refrigerant circuit components 36
1.3 Possible complaints 64
1.4 Locating leaks 68
1.5 Renewing components 79
1.6 Cleaning refrigerant circuit 95
1.7 Checking pressure values with a pressure gauge 139

2 Working with air conditioner service station 142
2.1 Working with air conditioner service station 142
2.2 Connecting air conditioner service station to refrigerant circuit 144
2.3 Performing gas analysis for refrigerant 147
2.4 Discharging refrigerant circuit 150
2.5 Evacuating refrigerant circuit 153
2.6 Charging refrigerant circuit 160
2.7 Starting up air conditioner after charging 163
2.8 Switching off air conditioner service station and disconnecting from refrigerant circuit 165
2.9 Filling reservoirs with refrigerant 167
2.10 Discharging air conditioner service station 168

Protected by copyright. Copying for private or commercial purposes, in part or in whole, is not permitted unless authorised by AUDI AG. AUDI AG does not guarantee or accept any liability with respect to the correctness of information in this document. Copyright by AUDI AG.

2.11 Cleaning electrically driven air conditioner compressor 168
2.12 Cleaning refrigerant circuit 171
2.13 Decanting contaminated refrigerant into recycling cylinder for analysis, treatment or disposal 175
2.14 Checking pressures 184
3 Test equipment and tools 271
3.1 Tools and materials available from your distribution centre or Importer 271
3.2 Commercially available tools and materials 272
3.3 Tools you can make yourself 272

Protected by copyright. Copying for private or commercial purposes, in part or in whole, is not permitted unless authorised by AUDI AG. AUDI AG does not guarantee or accept any liability with respect to the correctness of information in this document. Copyright by AUDI AG.

00 – Technical data

1 Safety precautions

(ARL006105; Edition 10.2018)

⇒ “1.1 Safety precautions when working on air conditioners”, page 1

⇒ “1.2 Safety precautions when handling refrigerants”, page 1

⇒ “1.3 Safety precautions when working on vehicles with start/stop system”, page 2

⇒ “1.4 Safety precautions when handling air conditioner service stations”, page 2

⇒ “1.5 Safety precautions when working on vehicles with high-voltage system”, page 3

⇒ “1.6 Safety precautions when working in the vicinity of high-voltage components”, page 4

⇒ “1.7 Safety precautions when handling pressure vessels”, page 4

1.1 Safety precautions when working on air conditioners

Danger to life and risk of explosion due to ignition sources

Danger to life and risk of explosion if ignition sources are close to air conditioners and refrigerant vessels. Escaping refrigerant may ignite and cause an explosion. Danger of severe or fatal injuries due to explosion.

– Always keep ignition sources away from air conditioners or refrigerant vessels.

– Avoid electrostatic discharge, sparks from the striking of tools and hot surfaces.

Protected by copyright. Copying for private or commercial purposes, in part or in whole, is not permitted unless authorised by AUDI AG. AUDI AG does not guarantee or accept any liability with respect to the correctness of information in this document. Copyright by AUDI AG.

Risk of irreparable damage to refrigerant lines

Risk of irreparable damage to refrigerant lines if the inside film is torn.

– Never bend refrigerant lines which have a radius smaller than r = 100 mm.

1.2 Safety precautions when handling refrigerants

Danger of asphyxiation and poisoning from refrigerant

Refrigerant vapour can cause dry coughs, nausea and even asphyxiation or poisoning.

– Never inhale refrigerant vapour.

– Always perform work on the refrigerant circuit and keep refrigerant vessels in well ventilated areas.

– Never work in cellars, near cellar entrances or in or near other underground areas.

– Switch on extraction systems.

Risk of frostbite from refrigerant

Pressurised refrigerant can escape during work on the air conditioner. Risk of frostbite on skin and other parts of the body

– Put on protective gloves.

– Put on safety goggles.

– Extract the refrigerant and then immediately open up the refrigerant circuit.

– Extract the refrigerant again if more than 10 minutes have passed since the initial extraction and the refrigerant circuit has not been opened up. Renewed evaporation leads to the build-up of pressure in the refrigerant circuit.

1.3 Safety precautions when working on vehicles with start/stop system

Risk of injury - engine may start unexpectedly

The engine can start unexpectedly if the vehicle's start/stop system is activated. A message in the instrument cluster indicates whether the start/stop system is activated.

– To deactivate the start/stop system, switch off the ignition.

Protected by copyright. Copying for private or commercial purposes, in part or in whole, is not permitted unless authorised by AUDI AG. AUDI AG does not guarantee or accept any liability with respect to the correctness of information in this document. Copyright by AUDI AG.

1.4 Safety precautions when handling air conditioner service stations

- Before connecting the charging system to the air conditioning system, ensure that the shut-off valves are closed.
- Before disconnecting the air conditioner service station from the air conditioner, make sure that the process has been completed so that as little refrigerant as technically possible is released into the atmosphere.
- Once the purified refrigerant from the air conditioner service station /extraction system has been transferred to an external compressed-gas cylinder, close the manual shut-off valves at the cylinder and charging system.
- Do not expose the air conditioner service station , extraction and charging system to moisture or use them in a wet environment.
- Disconnect the power supply before performing service work on the air conditioner service station , extraction and charging system.
- An extension cable should not normally be used because it can increase the fire hazard. If the use of an extension cable is unavoidable, the minimum cross-section should be 2.5 mm^2.
- In case of fire, remove external cylinder.
- If any oil from the air conditioner is drawn off by the suction unit of the air conditioner service station into the measuring container provided, it must subsequently be transferred to a

sealable container, as it contains a small quantity of refrigerant, which must not escape into the environment.

- When the air conditioner service station is switched off, secure it to stop it rolling away.

Always keep and use the air conditioner service station with refrigerant R1234yf in cool, well-ventilated locations.

- Protect from heat and direct sunlight and do not keep or use in areas with temperatures above 50 °C.
- Do not store or use in or near cellars or other underground areas.
- Only store and use in areas with adequate fresh air and ventilation (complete air exchange at least once an hour in the workshop area and three times an hour in low-lying areas, e.g. in assembly groups).

1.5 Safety precautions when working on vehicles with high-voltage system

High voltage! Danger to life!

The voltage levels in the high-voltage system constitute a safety hazard. Danger of severe or fatal injuries from electric shock.

– Persons with life-sustaining or other electronic medical devices in or on their body must not perform any work on the high-voltage system. Such medical devices include internal analgesic pumps, implanted defibrillators, pacemakers, insulin pumps and hearing aids.

– The high-voltage system must be de-energised by a suitably qualified person.

Risk of injury - engine may start unexpectedly

It is difficult to determine whether the drive system of an electric vehicle or hybrid vehicle is active. Moving parts can trap or draw in parts of the body.

– Switch off ignition.

– Place ignition key outside vehicle.

Risk of damage to high-voltage wiring

Incorrect handling may result in damage to the insulation for high-voltage wires or high-voltage connectors.

– Never use high-voltage wiring or high-voltage connectors as a support.

– Never prop tools against high-voltage wiring or high-voltage connectors.

– Never bend or kink high-voltage wiring.

– Pay attention to coding when connecting high-voltage connections.

Protected by copyright. Copying for private or commercial purposes, in part or in whole, is not permitted unless authorised by AUDI AG. AUDI AG does not guarantee or accept any liability with respect to the correctness of information in this document. Copyright by AUDI AG.

Risk of injury if auxiliary air conditioner is activated

On electric and hybrid vehicles, the auxiliary air conditioner can switch itself on if it has been activated. The radiator fans can start up automatically and trap or draw in parts of the body.

– Deactivate the auxiliary air conditioner.

Protected by copyright. Copying for private or commercial purposes, in part or in whole, is not permitted unless authorised by AUDI AG. AUDI AG does not guarantee or accept any liability with respect to the correctness of information in this document. Copyright by AUDI AG.

1.6 Safety precautions when working in the vicinity of high-voltage components

High voltage! Danger to life!

The voltage levels in the high-voltage system constitute a safety hazard. Danger of severe or fatal injuries from electric shock if high-voltage components or high-voltage wiring are damaged.

– Carry out visual check of high-voltage components and high-voltage wiring.

– Never use cutting/forming tools or other sharp-edged implements.

– Never perform work using welding, brazing, thermal bonding or hot air.

1.7 Safety precautions when handling pressure vessels

Danger to life and risk of explosion due to ignition sources

Danger to life and risk of explosion if ignition sources are close to air conditioners and refrigerant vessels. Escaping refrigerant may ignite and cause an explosion. Danger of severe or fatal injuries due to explosion.

– Always keep ignition sources away from air conditioners or refrigerant vessels.

– Avoid electrostatic discharge, sparks from the striking of tools and hot surfaces.

2 Laws and regulations

⇒ "2.1 Legal regulations and guidelines", page 5

⇒ "2.2 Charging refrigerant circuit with other refrigerants", page 6

⇒ "2.3 Occupational health & safety", page 6

2.1 Legal regulations and guidelines

Note

- *The laws and regulations listed below are applicable in Germany; different or additional laws or regulations may apply in other countries.*
- *By now the effects of climate change can be seen across the globe. For this reason, climate protection is one of humanity's most pressing issues – a problem that is a tremendous challenge for all involved.*
- *The Kyoto protocol defines, amongst other things, global climate-protection targets. This protocol contains reduction targets both for carbon dioxide and fluorinated greenhouse gases, e.g. for refrigerant R134a, due to their high global warming potential.*
- *Vehicles type-tested before 2011 may only be made available on the market with refrigerant R134a until 31/12/2016 (applicable to EU countries; other regulations may apply in countries outside the EU). From 01/01/2017, only vehicles whose refrigerant circuit is charged with a refrigerant with a GWP below 150 may be made available in EU markets. Refrigerant R1234yf satisfies the stipulations of Regulation (EC) no. 706/2007.*

A number of laws of relevance to the automotive industry have been passed at European level, for example. At national level, a new Chemicals Climate Protection Regulation also came into force in Germany, for example, on 1 August 2008 to further clarify the European legislation.

Various regulations for the handling of refrigerants have been issued in the European Community; some examples of these are:

- Regulation (EC) no. 1005/2009
- Regulation (EC) no. 2037/2000
- Regulation (EU) no. 517/2014
- Regulation (EC) no. 706/2007
- Regulation (EC) no. 307/2008
- Directive 2006/40/EC

Protected by copyright. Copying for private or commercial purposes, in part or in whole, is not permitted unless authorised by AUDI AG. AUDI AG does not guarantee or accept any liability with respect to the correctness of information in this document. Copyright by AUDI AG.

Additional regulations for refrigerants have been issued in Germany; some examples of these are:

- Chemicals Climate Protection Regulation, Closed Substance Cycle and Waste Management Act
- TRG (Technical Regulations for Compressed Gases)

Note

Currently, refrigerant R1234yf is not yet named in the various laws and regulations. However, due to its chemical composition, it will presumable be included when the relevant laws and regulations are revised. Therefore, the laws and regulations that apply to refrigerant R134a must also be observed and complied with when handling refrigerant 1234yf.

Maintenance and repair work on air conditioner refrigerant circuits

Only persons who have the relevant technical expertise in accordance with Regulation (EC) No. 307/2008 may carry out repairs and service work on the refrigerant circuit for the air conditioner (applies to countries in which this regulation is valid; different regulations or laws may apply in other countries).

However, the following is generally applicable:

Operation, maintenance, shut-down, take-back obligation

- With regard to the operation, repair and shut-down of products containing refrigerants (which do not comply with the state of the art), it is prohibited to allow the substances contained in these to escape into the atmosphere.
- A record should be kept of the quantity used during operation and maintenance work, so that proof of use can be submitted to the relevant authority on request. Due to a regulation introduced by the European Parliament in 2005, it is no longer necessary to keep a record sheet in the EC. Other regulations may apply in countries not belonging to the EC.
- Distributors of the substances and compounds specified in the regulations listed above are obliged to take back such substances and compounds after use or to ensure that these are taken back by a third party specified by the distributor.
- Maintenance work and the shut-down of products containing refrigerants listed in the specified regulations as well as the taking back of the substances and compounds specified in these regulations may only be performed by persons in possession of the necessary knowledge (expertise) and technical equipment.

The reproduction and distribution of this document as well as the use for commercial purposes, in part or in whole, is not permitted unless authorised by AUDI AG. AUDI AG does not guarantee or accept any liability with respect to the correctness of information in this document. Copyright by AUDI AG.

Closed Substance Cycle and Waste Management Act and processing and disposal of contaminated refrigerant and refrigerant oil

Please note the rules and regulations which apply in the country in question.

2.2 Charging refrigerant circuit with other refrigerants

Air conditioners that have been developed and designed for refrigerant R1234yf must not be charged with other refrigerants, e.g. R134a.

Note

According to current legislation, refrigerant R134a may not be used in vehicles type-tested with refrigerant R1234yf.

2.3 Occupational health & safety

- Regulations for general occupational health & safety according to the VBG (Federation of Commercial Trade Associa-

tions), e.g. VBG 20 Accident Prevention Regulations (UVV) for “Air Conditioners, Heat Pumps and Cooling Devices” and VBG 1 “General Regulations and Obligations for the Company” and “Obligations for Insured Parties”.

- Note the operating instructions relating to the workplace.
- Only persons who have the relevant technical expertise in accordance with Regulation (EC) No. 307/2008 may carry out repairs and service work on the refrigerant circuit for the air conditioner (applies to countries in which this regulation is valid; different regulations or laws may apply in other countries).

Protected by copyright. Copying for private or commercial purposes, in part or in whole, is not permitted unless authorised by AUDI AG. AUDI AG does not guarantee or accept any liability with respect to the correctness of information in this document. Copyright by AUDI AG.

3 Repair instructions

⇒ “3.1 Rules for cleanliness”, page 8

⇒ “3.2 Refrigerant circuit seals”, page 8

⇒ “3.3 Refrigerant and refrigerant oil”, page 9

⇒ “3.4 Handling pressure vessels”, page 11

⇒ “3.5 Handling refrigerant”, page 12

3.1 Rules for cleanliness

Even small amounts of dirt can lead to defects; therefore observe the following rules for cleanliness when working on the air conditioner:

- Immediately seal off open lines and connections with clean plugs, e.g. from engine bung set - VAS 6122- .
- Place removed parts on a clean surface and cover them. Use only lint-free cloths.
- Carefully cover or seal open components if repairs cannot be carried out immediately.
- Only install clean components; replacement parts should only be unpacked immediately prior to installation. Do not use parts that have been stored without their packaging (e.g. in toolboxes).
- Do not work with compressed air when the system is open.
- Protect unplugged electrical connectors against dirt and moisture and make sure connections are dry when attaching.

Protected by copyright. Copying for private or commercial purposes, in part or in whole, is not permitted unless authorised by AUDI AG. AUDI AG does not guarantee or accept any liability with respect to the correctness of information in this document. Copyright by AUDI AG.

3.2 Refrigerant circuit seals

- Use only seals which are resistant to refrigerant R1234yf and the corresponding refrigerant oils. The colour coding of the seals has been discontinued. Black and coloured seals are used; therefore only use seals that can be clearly assigned ⇒ Electronic parts catalogue .
- Seals that were developed for refrigerant R134a are not always suitable for refrigerant R1234yf; therefore only use seals that can be clearly assigned ⇒ Electronic parts catalogue .
- Seals may only be used once.
- Renew seals after removing.
- Lubricate seals lightly with refrigerant oil before fitting.
- Make sure seals are positioned correctly on pipe or in groove.
- Ensure cleanliness when working. Even the slightest contamination, e.g. a single hair, could cause leakage.
- Use only seals which are resistant to refrigerant R1234yf and the corresponding refrigerant oil. These seals may be colour-coded to prevent mix-ups ⇒ Electronic parts catalogue .

Dimensions -a- and -b- vary depending on fitting location of seal ⇒ Electronic parts catalogue .

Further information and notes ⇒ “1.2.15 Seals”, page 53

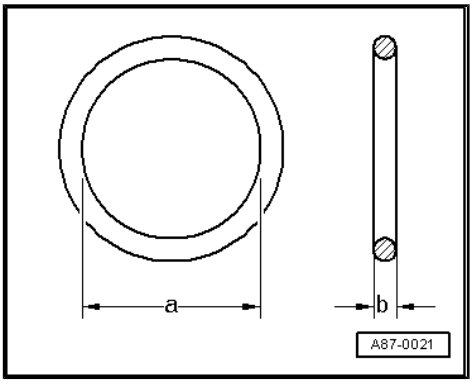

3.3 Refrigerant and refrigerant oil

⇒ “3.3.1 Important repair instructions for refrigerant and refrigerant oil”, page 9

⇒ “3.3.2 Refrigerant oil”, page 10

3.3.1 Important repair instructions for refrigerant and refrigerant oil

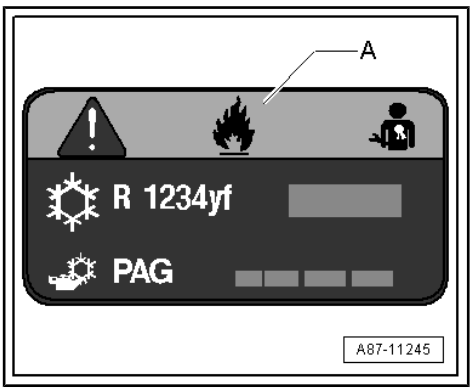

- Do not add refrigerant R134a to air conditioners for refrigerant R1234yf.
- Do not add refrigerant R1234yf to air conditioners for refrigerant R134a.
- The refrigerant oils which have been specially developed for refrigerant circuits with refrigerant R1234yf and R134a may only be used in a refrigerant circuit charged with an alternative refrigerant if a corresponding approval has been granted ⇒ Electronic parts catalogue , and ⇒ Heating, air conditioning; Rep. gr. 00 ; Technical data; Approved refrigerant oils and capacities for refrigerant oil (vehicle-specific Workshop Manual).
- Air conditioner service stations which come into contact with the refrigerant should only be used for the intended refrigerant.
- A label -A- indicating the refrigerant used is affixed to the lock carrier or in the plenum chamber in the engine compartment.
- Never mix different refrigerants.
- Depending on the version and production period, the GWP (global warming potential) value may be included for the refrigerant used.
- To make sure that only refrigerant R1234yf with a certain purity level is drawn into the R1234yf air conditioner service station , perform a gas analysis before discharging the refrigerant circuit
  ⇒ “2.3 Performing gas analysis for refrigerant”, page 147 .

Note

If the gas analysis reveals that the refrigerant R1234yf is contaminated with another gas, it must be extracted from the refrigerant circuit and analysed, treated or disposed of, as a gas of unknown composition, in accordance with legal provisions ⇒ VW/Audi ServiceNet ,
⇒ “2.3 Performing gas analysis for refrigerant”, page 147 *and*
⇒ “6.2.17 Returning contaminated refrigerant R1234yf for analysis, treatment or disposal”, page 26 .

Protected by copyright. Copying for private or commercial purposes, in part or in whole, is not permitted unless authorised by AUDI AG. AUDI AG does not guarantee or accept any liability with respect to the correctness of information in this document. Copyright by AUDI AG.

3.3.2 Refrigerant oil

CAUTION

Danger of acid burns from atomised refrigerant oil. Risk of injury to eyes and other parts of the body.

- **Put on protective gloves.**
- **Put on safety goggles.**
- **Never inhale atomised refrigerant oil.**

- Refrigerant oil mixes with the refrigerant (in a ratio of about 10 - 40 %, depending on compressor type and quantity of refrigerant) and circulates constantly in the system, lubricating the moving parts.
- In conjunction with R1234yf air conditioning systems, special synthetic refrigerant oils such as polyalkylene glycol (PAG) oil are used with certain additives specially adapted to the refrigerant. This is necessary because mineral oil, for example, does not mix with R1234yf, and unwanted reactions with the refrigerant or refrigerant circuit components may occur if this additive is missing. In addition, the components of the R1234yf air conditioning system could be corroded if the mixture flows through the refrigerant circuit under pressure at high temperatures or if the lubricating film in the air conditioner compressor breaks. The use of non-approved refrigerant oils can lead to the failure of the air conditioning system, so it is important to use only the approved types of oil ⇒ Electronic parts catalogue .
- Oil grade for refrigerant R1234yf in vehicles: polyalkylene glycol (PAG) oil with certain additives, which are specially adapted to refrigerant R1234yf.
- The most important properties are a high degree of solubility with refrigerant, good lubricity, absence of acid and minimal water content. It is therefore only permissible to use certain specified oils; see list of approved refrigerant oils and capacities ⇒ Electronic parts catalogue and ⇒ Heating, air conditioning; Rep. gr. 00 ; Technical data (vehicle-specific Workshop Manual).
- PAG oils for refrigerant R1234yf are highly hygroscopic and do not mix with other oils. It is therefore important to use only the approved types of refrigerant oil.
- Moisture and acids cause refrigerant oil to age, making it dark, viscous and corrosive to metals. Therefore, keep refrigerant oil containers closed to prevent moisture from entering. Opened containers should be closed again immediately.
- Due to its chemical properties, refrigerant oil must not be disposed of together with engine oil or gear oil. Refrigerant oil must be disposed of as used oil of unknown origin (observe local regulations) ⇒ VW/Audi ServiceNet .
- For refrigerant circuits with refrigerant R1234yf, only the oil approved for this refrigerant and the integrated air conditioner compressor may be used ⇒ Electronic parts catalogue and ⇒ Heating, air conditioning; Rep. gr. 00 ; Technical data; Approved refrigerant oils and capacities for refrigerant oil .
- Refrigerant oil that was developed for refrigerant R134a is unsuitable for refrigerant circuits with refrigerant R1234yf (certain additives are missing). Therefore it is important to ensure the correct type is used ⇒ Electronic parts catalogue and ⇒ Heating, air conditioning; Rep. gr. 00 ; Technical data; Approved refrigerant oils and capacities for refrigerant oil (vehicle-specific Workshop Manual).

Protected by copyright. Copying for private or commercial purposes, in part or in whole, is not permitted unless authorised by AUDI AG. AUDI AG does not guarantee or accept any liability with respect to the correctness of information in this document. Copyright by AUDI AG.

- Refrigerant oil that was developed for refrigerant R1234yf may also be suitable for refrigerant circuits with refrigerant R134a. Observe notes ⇒ Electronic parts catalogue and ⇒ Heating, air conditioning; Rep. gr. 00 ; Technical data (vehicle-specific Workshop Manual).
- Do not use ester oils (POE oils) as they are currently only intended for larger systems with different operating conditions (not for automotive air conditioners).
- Do not store refrigerant oil in open containers as it is extremely hygroscopic, i.e. it attracts water.
- Always keep the refrigerant circuit and refrigerant oil containers closed.

Note

- *A use-by date for the refrigerant oil is stated on the bottle in which the refrigerant oil is supplied.*
- *This date is not relevant if the bottle is sealed air-tight.*
- *If the bottle is sealed air-tight, the refrigerant oil can also be used after the date stated on the bottle.*

3.4 Handling pressure vessels

Keep containers hermetically sealed and in a cool, well-ventilated location.

Refrigerant is heavier than air. If gas escapes it will spread predominantly at floor level.

Protect from heat and direct sunlight, and do not store in areas with temperatures above 50 °C.

Do not store in or near cellars or other underground areas.

Only use in areas with an adequate supply of fresh air.

Protected by copyright. Copying for private or commercial purposes, in part or in whole, is not permitted unless authorised by AUDI AG. AUDI AG does not guarantee or accept any liability with respect to the correctness of information in this document. Copyright by AUDI AG.

Keep containers away from ignition sources!

Do not smoke in areas containing refrigerant R1234yf. Also take precautions against electrostatic charging.

Secure vessels to prevent them falling over.

Secure upright cylinders to stop them falling over and cylinders lying flat to stop them rolling away.

Pressure vessels must never be thrown.

If dropped, the vessels could be so severely deformed that they rupture. The refrigerant evaporates immediately, liberating considerable force. Flying fragments of cylinders can cause severe injuries.

To protect the valves, cylinders may only be transported with the protective cap screwed on.

Valves may break off if cylinders are not properly transported.

Never store in the vicinity of radiators.

High temperatures may occur in such areas. High temperatures are also accompanied by high pressures and the maximum permissible vessel pressure may be exceeded.

Do not heat to temperatures above 50 °C

To avoid possible risk, pressure vessel regulations specify that vessels with refrigerant must not be heated to temperatures exceeding 50 °C.

Do not heat in an uncontrolled manner

Do NOT heat with a naked flame. Local overheating can cause structural changes in the material of the vessel, which then reduce its ability to withstand pressure. There is also a danger of refrigerant decomposition due to localised overheating.

Sealing empty vessels

Empty refrigerant vessels must always be sealed to prevent moisture from entering. Moisture can cause steel vessels to rust. This weakens the vessel walls. In addition, rust particles from containers entering the refrigerant circuit can cause damage there.

3.5 Handling refrigerant

Note

- *Refrigerant has virtually no perceptible smell and can therefore usually not be noticed.*
- *Refrigerant gas is heavier than air and accumulates in low-level areas such as inspection pits, cellars and hollows, where it displaces the ambient air and thus the oxygen. Staying in areas where the air has a low oxygen content is potentially fatal.*
- *Liquid refrigerant escaping from a leak (or similar) evaporates at an ambient pressure of approx. 1 bar at around -29.4 °C. If the refrigerant evaporates on the skin, it will cause frostbite or cryogenic burns. Sensitive parts of the body such as the eyes and the mucous membranes are particularly at risk. Larger cold burns are potentially fatal.*
- *Refrigerant is a flammable gas; static electricity, sparks from tools (e.g. against a hard surface), hot surfaces and open flame can cause the mixture of refrigerant R1234yf and air to ignite. However, refrigerant only burns when there is a supporting flame or in proximity to a hot surface. The refrigerant flame goes out if the supporting flame or other triggers are no longer present.*
- *Refrigerant decomposes if it comes into contact with a flame or a hot surface. Danger of poisoning if toxic products of decomposition are inhaled. A pungent odour indicates that products of decomposition have already formed. Do NOT inhale these substances, otherwise the respiratory tract, lungs and other organs could be damaged.*
- *The specific hazards associated with refrigerant and the substance data etc. can be found in the safety data sheets. Safety data sheets on the refrigerant, refrigerant oil, etc. can be found in ⇒ VW/Audi ServiceNet .*

Protected by copyright. Copying for private or commercial purposes, in part or in whole, is not permitted unless authorised by AUDI AG. AUDI AG does not guarantee or accept any liability with respect to the correctness of information in this document. Copyright by AUDI AG.

- Welding, brazing and soldering work must not be performed on components of air conditioning system when charged. This also applies to welding and soldering work on the vehicle if there is a danger of air conditioner components becoming hot. When performing paintwork repairs, the temperature in the drying booth or preheating zone must not exceed 80 °C.

Reason:

Exposure to heat generates considerable pressure in the system, which could cause the high-pressure safety valve to open.

Remedy:

– Discharge refrigerant circuit with air conditioner service station ⇒ page 142 .

Note

Do not repair damaged or leaking parts of the air conditioner by welding or soldering; they should be renewed.

Refrigerant vessels (e.g. charging cylinders of air conditioner service station) must never be overfilled, subjected to excessive heat or exposed to direct sunlight.

Reason:

Refrigerant expands when it is heated.

Remedy:

– Observe existing regulations, technical rules and laws when charging and storing compressed gas cylinders (returnable cylinders, recycling cylinders, etc.).
– Vessels must never be completely filled with liquid refrigerant. Without sufficient room for expansion (gas cushion), vessels will rupture with explosive effect in the event of an increase in temperature ⇒ “6.2 Physical properties”, page 20 .

Refrigerant must NOT be transferred to systems or containers in which air is present.

Remedy:

– Evacuate systems and containers before charging with refrigerant ⇒ page 142 .

Protected by copyright. Copying for private or commercial purposes, in part or in whole, is not permitted unless authorised by AUDI AG. AUDI AG does not guarantee or accept any liability with respect to the correctness of information in this document. Copyright by AUDI AG.

4 Identification

⇒ “4.1 Label for refrigerant circuit”, page 14

Protected by copyright. Copying for private or commercial purposes, in part or in whole, is not permitted unless authorised by AUDI AG. AUDI AG does not guarantee or accept any liability with respect to the correctness of information in this document. Copyright by AUDI AG.

4.1 Label for refrigerant circuit

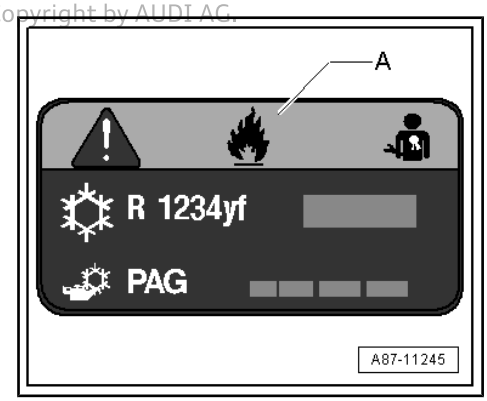

- The label -A- indicates the type of refrigerant used and the quantity of refrigerant and refrigerant oil with which the system was charged during production.
- Symbols on the label -A- indicate the hazards which may be encountered when handling the refrigerant or working on the refrigerant circuit.
- Standards and regulations may also be listed, such as certain SAE standards applicable in the USA. SAE J639 specifies the safety warnings for air conditioners in passenger cars. SAE J842 specifies that all components and materials must be approved for use with refrigerant R1234yf; SAE J2845 states that only trained and certified individuals may perform repairs and service on the refrigerant circuit of the air conditioner.
- Depending on the version and production period, the GWP (global warming potential) value may be included for the refrigerant used
  ⇒ “6.2.5 Environmental aspects of refrigerant R1234yf”, page 22 .
- Depending on the version and the production period, the label -A- may also include information on the CO_2 equivalent “CO_2 eq” of R1234yf. This value indicates the impact the quantity of R1234yf in this refrigerant circuit would have on the atmosphere should all of the refrigerant escape from the circuit (reference value: impact of carbon dioxide CO_2)
  ⇒ “6.2.5 Environmental aspects of refrigerant R1234yf”, page 22 .
- The capacities and type of refrigerant oil listed on the label -A- apply to the status at the time of the vehicle's production. Always refer to the relevant vehicle-specific Workshop Manual for the values which currently apply ⇒ Heating, air conditioning; Rep. gr. 00 ; Technical data (vehicle-specific Workshop Manual).

Note

The applicable national laws, regulations and standards must always be complied with, irrespective of the information on the label -A-. For example, the valid EC Regulations apply in the European Union *⇒ “2 Laws and regulations”, page 5* .

With information on the type of refrigerant and the specified capacity ⇒ Heating, air conditioning; Rep. gr. 00 ; Technical data (vehicle-specific Workshop Manual).

5 Technical data

⇒ “5.1 Refrigerant capacities”, page 15

⇒ “5.2 Refrigerant oil capacities”, page 15

⇒ “5.3 Safety data sheets”, page 16

5.1 Refrigerant capacities

The refrigerant R1234yf capacities can be found in the vehicle-specific Workshop Manual ⇒ Heating, air conditioning; Rep. gr. 00 ; Technical data; Capacities for refrigerant R1234yf .

Note

- *When charging the high-pressure side of refrigerant circuits, always fill to the upper tolerance limit (some liquid refrigerant will remain in the filler hoses).*
- *When charging a vehicle's refrigerant circuit, the air conditioner service station must be on the same level as the vehicle (maximum difference: 50 cm). Depending on the version of the air conditioner service station , having too great a height difference can cause the amount of refrigerant shown to differ from the actual amount poured in. The accuracy of the air conditioner service station may change.*

5.2 Refrigerant oil capacities

⇒ “5.2.1 Approved refrigerant oils”, page 15

⇒ “5.2.2 Refrigerant oil capacities”, page 16

5.2.1 Approved refrigerant oils

- The special refrigerant oil to be used exclusively for refrigerant circuits with refrigerant R1234yf is not available on the refrigerant oil market as in the past. Refrigerant oils intended specifically for refrigerant R1234yf and for the corresponding air conditioner compressor can therefore be obtained from the replacement parts range ⇒ Electronic parts catalogue .
- Using other refrigerant oils can lead to failure of the air conditioning system. The stability and chemical behaviour of other refrigerant oils that are not intended for use for refrigerant R1234yf and the air conditioner compressor (which have not been tested and approved) can result in damage to the refrigerant circuit. For example, unsuitable refrigerant oil can age prematurely during air conditioner operation, and unknown residues in the oil or missing additives can cause corrosion and damage to components of the refrigerant circuit. In addition, it may not mix or circulate properly with refrigerant R1234yf for lubricating the air conditioner compressor in the refrigerant circuit.
- Depending on the manufacturer of the air conditioner compressor, different refrigerant oils may be approved for the respective air conditioner compressor. Therefore, ensure the correct assignment ⇒ Electronic parts catalogue .
- Audi currently uses the following refrigerant oils: refrigerant oil with part number G 052 535 M2 (external designation SP A2) for vehicles with an air conditioner compressor from manufacturer “Sanden” or “Delphi/Mahle”, and refrigerant oil part number G 055 535 M2 (external designation ND 12) for vehicles with an air conditioning compressor from manufacturer “Denso” ⇒ Electronic parts catalogue .

Protected by copyright. Copying for private or commercial purposes, in part or in whole, is not permitted unless authorised by AUDI AG. AUDI AG does not guarantee or accept any liability with respect to the accuracy of the information in this document. Copyright by AUDI AG.

- Further information can be found in the vehicle-specific Workshop Manual ⇒ Heating, air conditioning; Rep. gr. 00 ; Technical data; Approved refrigerant oils and capacities for refrigerant oil (vehicle-specific Workshop Manual).

Note

- *A use-by date for the refrigerant oil is stated on the bottle in which the refrigerant oil is supplied.*
- *This date is not relevant if the bottle is sealed air-tight.*
- *If the bottle is sealed air-tight, the refrigerant oil can also be used after the date stated on the bottle.*

5.2.2 Refrigerant oil capacities

Refrigerant oil capacities can be found in the vehicle-specific Workshop Manual ⇒ Heating, air conditioning; Rep. gr. 00 ; Technical data; Approved refrigerant oils and capacities for refrigerant oil .

Protected by copyright. Copying for private or commercial purposes, in part or in whole, is not permitted unless authorised by AUDI AG. AUDI AG does not guarantee or accept any liability with respect to the correctness of information in this document. Copyright by AUDI AG.

5.3 Safety data sheets

Safety data sheets are currently stored in ⇒ VW/Audi ServiceNet .

6 Basic technical and physical principles

⇒ “6.1 Principles of air conditioning systems”, page 17

⇒ “6.2 Physical properties”, page 20

⇒ “6.3 Product properties”, page 27

⇒ “6.4 Function of air conditioner”, page 27

⇒ “6.5 Other reference material”, page 29

6.1 Principles of air conditioning systems

⇒ “6.1.1 Physical principles of air conditioning systems”, page 17

⇒ “6.1.2 Refrigerant pressure and boiling point”, page 18

⇒ “6.1.3 Vapour pressure table for refrigerant”, page 18

⇒ “6.2 Physical properties”, page 20

6.1.1 Physical principles of air conditioning systems

The four familiar states of water apply to air conditioning refrigerants, too.

1 - Gas (invisible)

2 - Vapour

3 - Liquid

4 - Solid

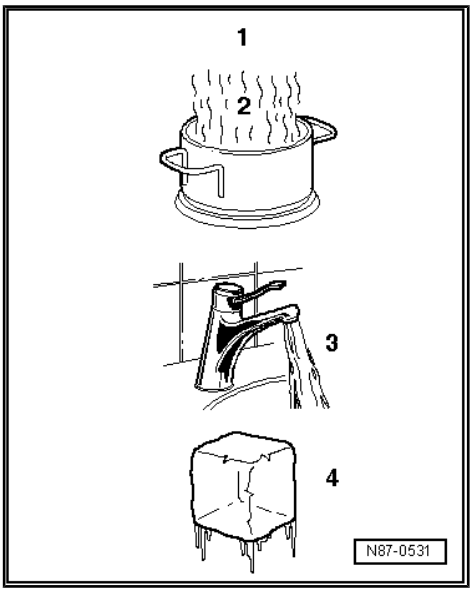

When water is heated in a vessel (heat absorption), water vapour can be seen to rise. If the vapour is further heated through heat absorption, the visible vapour turns into invisible gas. The process is reversible. If heat is extracted from gaseous water -A-, it changes first to vapour -B-, then to water and finally to ice.

A - Heat absorption

B - Heat emission

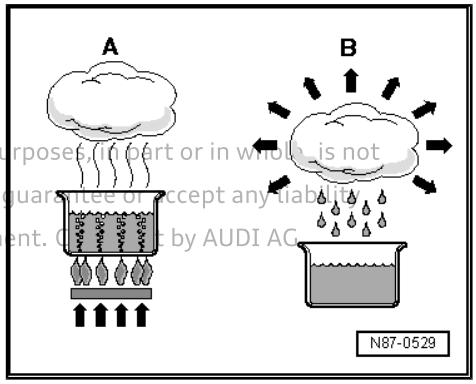

Protected by copyright. Copying for private or commercial purposes, in part or in whole, is not permitted unless authorised by AUDI AG. AUDI AG does not guarantee or accept any liability with respect to the correctness of information in this document. Copyright by AUDI AG.

Heat always flows from a warmer to a colder substance

Every substance consists of a mass of moving molecules. The fast-moving molecules of a warmer substance give off some of their energy to the cooler and thus slower molecules. As a result, the molecular motion of the warmer substance slows down and that of the colder substance is accelerated. This process continues until the molecules of both substances are moving at the same speed. They are then at the same temperature and no further heat exchange takes place.

6.1.2 Refrigerant pressure and boiling point

The boiling point given in tables for a liquid is always referenced to an atmospheric pressure of 1 bar. If the pressure acting on a liquid changes, its boiling point also changes.

Note

Pressure can be measured in various units: 1 MPa (megapascal) is equivalent to 10 bar gauge pressure, or 145 psi; 1 bar absolute pressure is the same as 0 bar gauge pressure, which is roughly equivalent to atmospheric pressure.

For example, water boils at a lower temperature the lower the pressure.

The vapour pressure curves for water and refrigerant R1234yf show, for example, that, at constant pressure, reducing the temperature changes vapour to liquid (in the condenser) or that, for instance, reducing the pressure causes the refrigerant to change from liquid to vapour (in the evaporator).

Vapour pressure curve for water

A - Liquid

B - Gaseous

C - Vapour pressure curve for water

1 - Pressure acting on liquid in bar (absolute)

2 - Temperature in °C

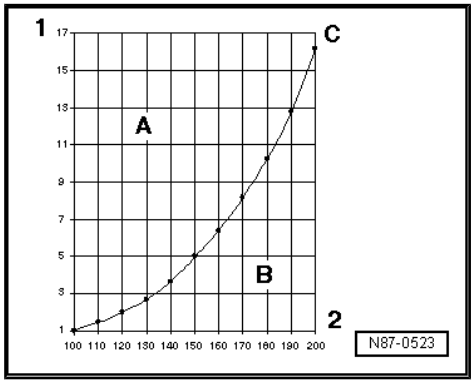

Vapour pressure curve for refrigerant R1234yf

A - Liquid

B - Gaseous

D - Vapour pressure curve for refrigerant R1234yf

1 - Pressure acting on liquid in bar (absolute)

2 - Temperature in °C

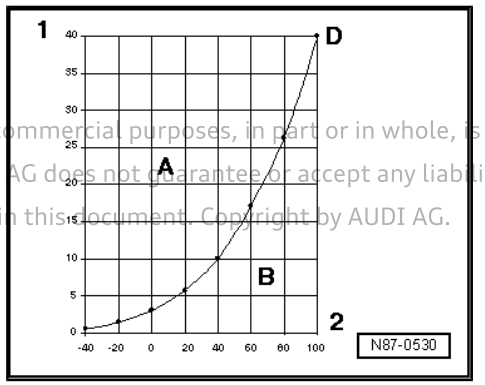

Protected by copyright. Copying for private or commercial purposes, in part or in whole, is not permitted unless authorised by AUDI AG. AUDI AG does not guarantee or accept any liability with respect to the correctness of information in this document. Copyright by AUDI AG.

Note

The vapour pressure curves of refrigerants R1234yf and R134a are very similar across a wide temperature range. The difference in pressure between the two refrigerants, for example, in the temperature range from 0 °C to +50 °C is only approx. 0.2 bar, so it is not possible to differentiate between the two refrigerants based on pressure
⇒ "6.1.3 Vapour pressure table for refrigerant", page 18 and ⇒ *Air conditioner with refrigerant R134a; Rep. gr. 87 ; General notes on air conditioning systems .* *It is only possible to differentiate by using corresponding sensors which can analyse the chemical structure of the refrigerants*
⇒ "6.2.16 Analysis of refrigerant R1234yf", page 25 .

6.1.3 Vapour pressure table for refrigerant

The vapour pressure table for every refrigerant is published in the literature for refrigeration system engineers. This table makes it

possible to determine the vapour pressure acting on the column of liquid in a vessel if the temperature of the vessel is known.

Since we have a unique, characteristic vapour pressure table for each refrigerant, we can use pressure and temperature measurements to determine which refrigerant we are dealing with for refrigerants with a vapour pressure that differs above a certain temperature range (does not apply to the distinction between R1234yf and R134a – their vapour pressure values are too close together
⇒ "6.1.2 Refrigerant pressure and boiling point", page 18).

Note

- *Differentiating between refrigerants in such a way is only possible for pure refrigerants with vapour pressures that differ to a sufficient extent. If different refrigerants are mixed to form a new one (e.g. refrigerant R407C made up of three different refrigerants), the resulting vapour pressure will reflect those of the pressures of the individual refrigerants and their proportion in this mixture.*
- *On the absolute pressure scale, 0 bar corresponds to an absolute vacuum. The normal ambient pressure (atmospheric pressure) corresponds to 1 bar absolute pressure. On the scales of most pressure gauges, 0 bar corresponds to an absolute pressure of 1 bar (this is also indicated e.g. by the value -1 bar appearing below 0).*
- *Pressure can be measured in various units: 1 MPa (megapascal) is equivalent to 10 bar gauge pressure, or 145 psi; 1 bar absolute pressure is the same as 0 bar gauge pressure, which is roughly equivalent to atmospheric pressure.*
- *The vapour pressures of the two refrigerants R1234yf and R134a are very similar over a wide temperature range, which is why this method cannot be used to distinguish the two refrigerants*
  ⇒ "6.1.3 Vapour pressure table for refrigerant", page 18 and
  ⇒ Air conditioner with refrigerant R134a; Rep. gr. 87 ; General notes on air conditioning systems . It is only possible to differentiate by using corresponding sensors which can analyse the chemical structure of the refrigerants
  ⇒ "6.2.16 Analysis of refrigerant R1234yf", page 25 .

Temperature in °C	Pressure in bar (gauge pressure), R1234yf
-40	-0.40
-30	-0.01
-25	0.12
-20	0.50
-15	0.83
-10	1.21
-5	1.65
0	2.15
5	2.72
10	3.36
15	4.09
20	4.90
25	5.81
30	6.82
35	7.93

Protected by copyright. Copying for private or commercial purposes, in part or in whole, is not permitted unless authorised by AUDI AG. AUDI AG does not guarantee or accept any liability with respect to the correctness of information in this document. Copyright by AUDI AG.

Temperature in °C	Pressure in bar (gauge pressure), R1234yf
40	9.17
45	10.52
50	12.01
55	13.64
60	15.41
65	17.35
70	19.46
75	21.75
80	24.24
85	26.94
90	29.09

6.2 Physical properties

Protected by copyright. Copying for private or commercial purposes, in part or in whole, is not permitted unless authorised by AUDI AG. AUDI AG does not guarantee or accept any liability with respect to the correctness of information in this document. Copyright by AUDI AG.

⇒ “6.2.1 Refrigerant R1234yf”, page 20

⇒ “6.2.2 Possible dangers of refrigerant R1234yf”, page 21

⇒ “6.2.3 Physical and chemical properties of refrigerant R1234yf”, page 21

⇒ “6.2.4 Critical point”, page 21

⇒ “6.2.5 Environmental aspects of refrigerant R1234yf”, page 22

⇒ “6.2.6 Trade names and designations of refrigerant R1234yf”, page 22

⇒ “6.2.7 Colour and odour of refrigerant R1234yf”, page 23

⇒ “6.2.8 Vapour pressure of refrigerant R1234yf”, page 23

⇒ “6.2.9 Physical properties of refrigerant R1234yf”, page 23

⇒ “6.2.10 Behaviour of refrigerant R1234yf with metal and plastic”, page 23

⇒ “6.2.11 Critical temperature/critical pressure of refrigerant R1234yf”, page 24

⇒ “6.2.12 Water content of refrigerant R1234yf”, page 24

⇒ “6.2.13 Flammability/decomposition of refrigerant R1234yf”, page 24

⇒ “6.2.14 Charge factor of refrigerant R1234yf”, page 24

⇒ “6.2.15 Checking refrigerant circuit with refrigerant R1234yf for leaks”, page 25

⇒ “6.2.16 Analysis of refrigerant R1234yf”, page 25

⇒ “6.2.17 Returning contaminated refrigerant R1234yf for analysis, treatment or disposal”, page 26

6.2.1 Refrigerant R1234yf

- Air conditioning systems in vehicles use a vaporisation and condensation process where a substance (refrigerant) moves in a circle in a closed system.
- These systems employ a substance with a low boiling point, referred to as refrigerant; in this case R1234yf.
- Refrigerant R1234yf is known by various trade names (e.g. HFO 1234yf, Opteon 1234yf, etc.).

- Only approved refrigerant with the required purity may be used for the air conditioner
⇒ “6.2.16 Analysis of refrigerant R1234yf”, page 25 .
- Refrigerant R1234yf is a halogenated hydrocarbon compound with the chemical designation “2,3,3,3-tetrafluoropropene”, which boils at -29.4 °C at a vapour pressure of “1 bar” (atmospheric pressure).

6.2.2 Possible dangers of refrigerant R1234yf

- Refrigerant is flammable in a certain mixture ratio with ambient air
⇒ “6.2.3 Physical and chemical properties of refrigerant R1234yf”, page 21 and
⇒ “6.2.13 Flammability/decomposition of refrigerant R1234yf”, page 24 .
- When the liquid form evaporates rapidly, it can cause frostbite.
- High vapour concentrations can trigger headaches, dizziness, light-headedness, drowsiness and nausea and even lead to a loss of consciousness.

6.2.3 Physical and chemical properties of refrigerant R1234yf

The most important properties of refrigerant R1234yf and the related safety precautions are described below. Full information is available in the corresponding safety data sheets ⇒ VW/Audi ServiceNet .

Chemical formula	CF3CF=CH2
Chemical designation	2,3,3,3-tetrafluoropropene, HFO-1234yf
Boiling point at 1 bar	-29.4°C
Solidification point	-152.2 °C
Critical temperature	94.7 °C
Critical pressure	32.82 bar (gauge pressure) 33.82 bar (absolute pressure)
Auto-ignition temperature	405 °C at 1.02 bar (absolute pressure)
Flammability	Flammable gas ◆ Lower flammability limit 6.2 % (volume) ◆ Upper flammability limit 12.3 % (volume)
Form	Compressed, liquefied gas
Colour	Colourless
Odour	Weak odour

6.2.4 Critical point

Protected by copyright. Copying for private or commercial purposes, in part or in whole, is not permitted unless authorised by AUDI AG. AUDI AG does not guarantee or accept any liability with respect to the correctness of information in this document. Copyright by AUDI AG.

The critical point (critical temperature and critical pressure) is the point above which there is no longer a boundary between liquid and gas.

A substance above its critical point is always in the gaseous state.

At temperatures below the critical point, all types of refrigerant in pressure vessels exhibit both a liquid and a gas phase, i.e. there is a layer of gas above the liquid.

As long as both liquid and gas are present in the vessel, the pressure depends on the ambient temperature
⇒ “6.1.3 Vapour pressure table for refrigerant”, page 18 .

Note

- *Refrigerants used in vehicles must not be mixed. The refrigerant specified for the respective air conditioning system must be used exclusively.*
- *The vapour pressures of the two refrigerants R1234yf and R134a are very similar over a wide temperature range, which is why this method cannot be used to distinguish the two refrigerants*
  ⇒ “6.1.3 Vapour pressure table for refrigerant”, page 18 and ⇒ Air conditioner with refrigerant R134a; Rep. gr. 87 ; General notes on air conditioning systems . It is only possible to differentiate by using corresponding sensors which can analyse the chemical structure of the refrigerants
  ⇒ “6.2.16 Analysis of refrigerant R1234yf”, page 25 .

6.2.5 Environmental aspects of refrigerant R1234yf

- R1234yf is a hydrofluorocarbon (HFC) and contains no chlorine.
- R1234yf has a lower atmospheric lifetime than refrigerants R12 and R134a and therefore a lower global warming potential.
- R1234yf does not attack the ozone layer; its ozone depletion potential is zero (as with R134a).
- The global warming potential (GWP) of R1234yf is 4 (GWP of carbon dioxide = 1).
- The global warming effect of R1234yf is approx. 350 times smaller than that of refrigerant R134a (GWP of R134a is approx. 1400).

Note

- *The global warming potential of a substance is calculated based on its effect over a period of 100 years using different methods; this results in different values (e.g. R134a has a GWP between 1300 and 1450).*
- *To make it possible to compare the impact of various greenhouse gases on the earth's atmosphere, the values are converted based on the carbon dioxide equivalent. Refrigerant R1234yf has a GWP value of 4; this means that 1 kg of refrigerant R1234yf has approx. the same impact on the atmosphere as 4 kg of carbon dioxide (CO_2).*

Protected by copyright. Copying for private or commercial purposes, in part or in whole, is not permitted unless authorised by AUDI AG. AUDI AG does not guarantee or accept any liability with respect to the correctness of information in this document. Copyright by AUDI AG.

6.2.6 Trade names and designations of refrigerant R1234yf

The refrigerant R1234yf is currently available under the following trade names:

- HCFC 1234yf
- HFO 1234yf
- “Opteon yf” or“ Solstice yf” (examples of company names)

Note

- *Different trade names may be used in other countries.*
- *Of the wide range of refrigerants available, this is the only one which may be used for vehicles. The designations Frigen and Freon are trade names. They also apply to refrigerants which should not be used in vehicles.*

6.2.7 Colour and odour of refrigerant R1234yf

- Like water, refrigerants are colourless in both vapour and liquid form. Gas is invisible. Only the boundary layer between gas and liquid is visible (liquid level in tube of charging cylinder or bubbles in a sight glass). Liquid refrigerant R1234yf may have a coloured (milky) appearance in a sight glass. This cloudiness is caused by partially dissolved refrigerant oil and does not indicate a fault.
- The refrigerant is almost odourless; if refrigerant R1234yf escapes, a slight smell of ether may be perceived, depending on the ambient conditions.

6.2.8 Vapour pressure of refrigerant R1234yf

In a partially filled, closed vessel, the quantity of refrigerant evaporating from the surface equals the quantity returning to the liquid state as vapour particles condense. This state of equilibrium occurs when the system is pressurised and is often called vapour pressure. The vapour pressure depends on the temperature ⇒ “6.1.3 Vapour pressure table for refrigerant”, page 18 .

6.2.9 Physical properties of refrigerant R1234yf

- The vapour pressure curves of the two refrigerants R1234yf and R134a are very similar over a wide temperature range, which is why this method cannot be used to distinguish the two refrigerants
  ⇒ “6.1.3 Vapour pressure table for refrigerant”, page 18 and
  ⇒ Air conditioner with refrigerant R134a; Rep. gr. 87 ; General notes on air conditioning systems . It is only possible to differentiate by using corresponding sensors which can analyse the chemical structure of the refrigerants
  ⇒ “6.2.16 Analysis of refrigerant R1234yf”, page 25 .
- With R1234yf, the air conditioner compressor is lubricated by special, synthetic refrigerant oils, e.g. PAG oils (polyalkylene glycol oils), with certain additives adapted for refrigerant R1234yf, the air conditioner compressor and the operating conditions.

6.2.10 Behaviour of refrigerant R1234yf with metal and plastic

- In its pure state, refrigerant R1234yf is chemically stable and does not corrode e.g. iron, aluminium or appropriately engineered and therefore suitable plastics.
- However, impurities in the refrigerant can cause components of the refrigerant circuit to corrode and be irreparably damaged.
- Unsuitable materials (e.g. seals/gaskets and hoses which were not developed for use with refrigerant R1234yf and the refrigerant oil used) can also be corroded and damaged by pure refrigerant R1234yf or by refrigerant oil.

Protected by copyright. Copying for private or commercial purposes, in part or in whole, is not permitted unless authorised by AUDI AG. AUDI AG does not guarantee or accept any liability with respect to the correctness of information in this document. Copyright by AUDI AG.

- Refrigerant impurities such as chlorine compounds or the impact of UV light cause corrosion of metals and additionally of the plastics developed and tested for use with this refrigerant and the associated refrigerant oil. This can cause blockages, leaks and deposits on the air conditioner compressor piston.
- Certain metals can be corroded by refrigerant R1234yf (e.g. finely dispersed aluminium, zinc, magnesium).

6.2.11 Critical temperature/critical pressure of refrigerant R1234yf

Up to a gas pressure of 32.82 bar (gauge pressure; equating to a temperature of 94.7 °C), the quantity of refrigerant evaporating from the surface equals the quantity returning to the liquid state as vapour particles condense. Above this temperature/pressure, there is no longer a boundary between the liquid and the gas.

Protected by copyright. Copying for private or commercial purposes, in part or in whole, is not permitted unless authorised by AUDI AG. AUDI AG does not guarantee or accept any liability with respect to the correctness of information in this document. Copyright by AUDI AG.

6.2.12 Water content of refrigerant R1234yf

- Only very small amounts of water are soluble in liquid refrigerant. In contrast, refrigerant vapour and water vapour mix in any ratio.
- Any water in the refrigerant circuit will be entrained in droplet form once the dryer in the receiver or reservoir is saturated (has absorbed approx. 7 g of water). This water flows as far as the expansion valve nozzle or the restrictor and turns to ice. The air conditioner will then no longer provide any cooling effect.
- For example, if the water turns to ice at the regulating valve of the air conditioner compressor, various problems may arise depending on the layout of the compressor (either the air conditioner no longer provides any cooling effect, or it cools down to such an extent that the evaporator ices up).
- Water causes irreparable damage to the air conditioner because at high pressures and temperatures it can combine with other impurities to form acids.

6.2.13 Flammability/decomposition of refrigerant R1234yf

- Refrigerant R1234yf is flammable in ambient air within a certain concentration range.
- Refrigerant R1234yf decomposes when exposed to flames or red-hot surfaces. Refrigerant is also split by UV light (which is a component of normal sunlight; it also occurs e.g. during electrical welding). This produces toxic decomposition products that must not be inhaled. However, these chemicals irritate the mucous membranes, giving adequate warning of their presence.
- Decomposition can produce certain hazardous products such as carbon monoxide, hydrogen fluoride and/or hydrogen halide.

6.2.14 Charge factor of refrigerant R1234yf

- Observe existing regulations, technical rules and laws when charging compressed gas cylinders (returnable cylinders, recycling cylinders, etc.).
- It is essential to ensure that compressed gas cylinders (returnable cylinders, recycling cylinders, etc.) are not overfilled. If compressed gas cylinders are overfilled, the gas cushion is too small to withstand the expansion of liquid caused by exposure to heat. There is a risk of bursting.

- For your own safety, only use compressed gas cylinders with a built-in safety valve.
- Returnable and recycling cylinders must be weighed on calibrated scales during the charging process, or charging must be measured by volume, to ensure that the permitted charging weight stated on the vessel is not exceeded. The maximum permitted capacity is 80 % of the maximum refrigerant capacity of the charging weight stated on the returnable or recycling cylinder, or 70 % of the maximum charging volume (charging factor: the lowest value always applies). Reason: It is impossible to exclude the possibility that refrigerant oil may be poured into the returnable or recycling cylinder along with refrigerant.
- A container must have space for vapour as well as liquid. As the temperature rises, the liquid expands. The vapour-filled space becomes smaller. At a certain point, there will only be liquid in the vessel. Beyond this, even a slight increase in temperature causes great pressure to build up in the vessel as the liquid attempts to continue expanding despite the absence of the necessary space. The resultant forces are sufficient to rupture the vessel. To stop containers being overfilled, regulations governing the storage of compressed gases specify the number of kilograms of refrigerant with which a container may be filled per litre of internal volume. The maximum permissible capacity is calculated by multiplying this "charge factor" by the internal volume of the vessel. The charge factor for refrigerant used in motor vehicles is 1.15 kg/litre.
- Since contaminated refrigerant can have a different density to that of pure refrigerant R1234yf, always observe the maximum permitted charging factor.

6.2.15 Checking refrigerant circuit with refrigerant R1234yf for leaks

- The refrigerant circuit can start leaking e.g. due to external damage, if unsuitable or contaminated refrigerant is used, or if non-approved materials are used in unsuitable components.
- Minor leaks where only a small amount of refrigerant is escaping can be detected using, for example, an electronic leak detector or by adding a leak detection additive to the refrigerant circuit. Electronic leak detectors are capable of registering leaks with refrigerant losses of less than 5 g per year.

Note

It is important to use leak detectors that are designed for the composition of the respective refrigerant type. Leak detectors for refrigerant R12, for example, are unsuitable for R1234yf, as they do not always respond. Leak detectors suitable only for refrigerant R134a are also unsuitable for R1234yf, because the latter has a different chemical composition to R134a, with the result that these leak detectors react only when there are higher concentrations of refrigerant in the air, or not at all ⇒ Electronic parts catalogue .

Reproduced by Copyright. Copying for private or commercial purposes, in part or in whole, is not permitted unless authorised by AUDI AG. AUDI AG does not guarantee or accept any liability with respect to the correctness of information in this document. Copyright by AUDI AG.

6.2.16 Analysis of refrigerant R1234yf

The refrigerant used must have a certain purity for air conditioner operation.

Note

- *Incorrect gas analysis is possible due to air in refrigerant hoses or non-compliance with the gas analysis procedure stated in the operating instructions.*
- *Pay close attention to the operating instructions for the gas analyser/ air conditioner service station .*
- *Evacuate coolant hoses of air conditioner service station with refrigerant R1234yf before connecting service couplings to refrigerant circuit/a gas cylinder (see operating instructions for gas analyser/ air conditioner service station* *⇒ "2.3 Performing gas analysis for refrigerant", page 147* .

Contamination with other refrigerants or gases can cause damage and therefore lead to the air conditioner and air conditioner service station malfunctioning.

Contaminated refrigerant must be analysed and then treated (or disposed of) as a gas of unknown composition, in accordance with legal provisions ⇒ "2.3 Performing gas analysis for refrigerant", page 147 .

Protected by copyright. Copying for private or commercial purposes, in part or in whole, is not permitted unless authorised by AUDI AG. AUDI AG does not guarantee or accept any liability with respect to the correctness of information in this document. Copyright by AUDI AG.

Note

Return contaminated refrigerant R1234yf to your refrigerant supplier for analysis. If you need to know exactly what contaminants the refrigerant contains due to damage to the refrigerant circuit (existing or expected), please make a request to this effect and ask for the results of the analysis *⇒ "6.2.17 Returning contaminated refrigerant R1234yf for analysis, treatment or disposal", page 26* .

During gas analysis, the following limit values apply for clean refrigerant R1234yf:

- The extracted refrigerant gas must consist of at least 95 % refrigerant R1234yf.
- The proportion of foreign gases (oxygen, nitrogen, water vapour, other refrigerants) must be below 5 %.

Note

To prevent liquid elements (e.g. drops of refrigerant oil) in the extracted refrigerant gas from leading to an incorrect gas analysis result, the gas analysis device contains separators (filters) that retains these droplets of liquid. Renew separators according to specifications in operating instructions of gas analyser or air conditioner service station ⇒ Operating instructions of gas analyser or ⇒ Operating instructions of air conditioner service station .

6.2.17 Returning contaminated refrigerant R1234yf for analysis, treatment or disposal

- Please note the legal provisions for returning contaminated refrigerant for analysis or treatment or for returning refrigerant that is no longer to be used for disposal ⇒ "2 Laws and regulations", page 5 and ⇒ VW/Audi ServiceNet .
- Please note the legal provisions for the disposal of refrigerant oil that is no longer suitable for use

⇒ “2 Laws and regulations”, page 5 and ⇒ VW/Audi ServiceNet .

- For environmental reasons, refrigerants must not be released into the atmosphere ⇒ “2 Laws and regulations”, page 5 .
- If the gas analysis reveals that refrigerant R1234yf is contaminated with another gas, it must be extracted from the refrigerant circuit and returned to your gas supplier for analysis, treatment or disposal as a gas of unknown composition, in accordance with legal provisions ⇒ VW/Audi ServiceNet and ⇒ “2.13 Decanting contaminated refrigerant into recycling cylinder for analysis, treatment or disposal”, page 175 .

Note

Return contaminated refrigerant R1234yf to your refrigerant supplier for analysis. If you need to know exactly what contaminants the refrigerant contains due to damage to the refrigerant circuit (existing or expected), please make a request to this effect and ask for the results of the analysis
⇒ “2.4 Discharging refrigerant circuit”, page 150 .

6.3 Product properties

Refrigerant R1234yf, which is used in motor vehicle air conditioning systems, belongs to the new generation of refrigerants based on chlorine-free, partially fluorinated hydrocarbons.

With regard to their physical properties, these are refrigerants which have been liquefied under pressure. They are subject to the regulations governing pressure vessels and may only be used in approved and appropriately marked containers.

Specific requirements must be observed to ensure safe and proper handling ⇒ “1 Safety precautions”, page 1 .

6.4 Function of air conditioner

⇒ “6.4.1 Method of operation”, page 27

⇒ “6.4.2 Comfort of vehicle occupants”, page 28

⇒ “6.4.3 Environmental aspects”, page 28

6.4.1 Method of operation

- The temperature in the passenger compartment depends on the amount of heat radiated into the vehicle through the windows and conducted by the metal parts of the body. In hot weather some of the heat must be pumped off to achieve a more comfortable temperature for the occupants.
- As heat is always transmitted away from warmer areas and into cooler areas, the passenger compartment is fitted with a unit for generating low temperatures in which refrigerant is constantly evaporated. The heat required for this is extracted from the air flowing through the evaporator.
- After absorbing heat, the refrigerant is pumped off by the air conditioner compressor. Thanks to the action of the compressor, the heat content and temperature of the refrigerant increases. It is then substantially higher than the temperature of the surrounding air.
- The hot refrigerant flows with its heat content to the condenser where the refrigerant dissipates its heat to the surrounding air via the condenser due to the temperature gradient between the refrigerant (surface of condenser) and the surrounding air.

Protected by copyright. Copying for private or commercial purposes, in part or in whole, is not permitted unless authorised by AUDI AG. AUDI AG does not guarantee or accept any liability with respect to the correctness of information in this document. Copyright by AUDI AG.

- The refrigerant thus acts as a heat transfer medium. As it will be needed again, the refrigerant is returned to the evaporator.
- For this reason all air conditioning systems are based on the refrigerant circulation principle. However, there are differences with regard to the units used
⇒ “1.1 System overview - refrigerant circuit”, page 30 .

6.4.2 Comfort of vehicle occupants

- A basic requirement for safety and concentration while driving is a feeling of comfort in the passenger compartment. Especially when conditions are hot and humid, a good level of comfort can only be achieved with air conditioning. Passenger comfort can of course also be improved by opening the windows or sun roof, or by increasing the air delivery. This, however, involves several drawbacks for the occupants, e.g. more noise, draughts, exhaust fumes and unfiltered pollen (unpleasant for allergy sufferers).
- Climate control together with a good heating and ventilation system can create a sense of well-being and comfort by regulating temperature, humidity and air circulation in the passenger compartment depending on ambient conditions, both when the vehicle is stationary and when it is moving.

Other important advantages of air conditioning:

- Drying of the air in the passenger compartment (the air humidity condenses on the cold evaporator and is discharged as condensate. The air is then reheated to a specified temperature on the heat exchanger, which lowers the proportion of water in the air and reduces absolute and relative air humidity).
- Additional filtration of the air supplied to the passenger compartment (any dust and pollen which has made its way through the dust and pollen filter, for example, is washed out by the moist fins of the evaporator and discharged with the condensate).
- Pleasant temperature levels (example: mid-size car after short travelling time, ambient temperature 30 °C in the shade and vehicle exposed to sunlight)

	With air conditioning	Without air conditioning
At head height	23 °C	42 °C
At chest level	24 °C	40 °C
In footwell	30 °C	35 °C

Protected by copyright. Copying for private or commercial purposes, in part or in whole, is not permitted unless authorised by AUDI AG. AUDI AG does not guarantee or accept any liability with respect to the correctness of information in this document. Copyright by AUDI AG.

6.4.3 Environmental aspects

- Up until roughly 1992, refrigerant R12 was used for air conditioning systems. Due to its chlorine atoms, this CFC had a high ozone depletion potential as well as a very high potential for intensifying the greenhouse effect.
- Since 1992, the air conditioning systems of newly manufactured cars have been gradually converted from refrigerant R12 to refrigerant R134a. This refrigerant contains no chlorine and therefore does not deplete the ozone layer. However, due to its high global warming potential (GWP) of approx. 1,400, since 2011 it has not been permissible for use in new, type-approved vehicles. Vehicles type-tested before 2011 may only be made available on the market with refrigerant R134a until 31/12/2016 (applicable to EU countries; other regulations may apply in countries outside the EU).
- Since 01/01/2011, vehicles have only been granted type approval if the air conditioner refrigerant circuit is charged with refrigerant with a GWP of less than 150. Refrigerant R1234yf

has a GWP of approx. 4 and is therefore considerably below the specified value.

- Since 2011, the air conditioning systems of newly manufactured cars have been gradually converted from refrigerant R134a to refrigerant R1234yf. This refrigerant has a global warming potential of approx. 4 (GWP of carbon dioxide = 1) which means it has a significantly smaller impact on the earth's atmosphere than refrigerant R134a.
- Conversion programmes have been developed and are available for old existing systems filled with the ozone-depleting substance R12 ⇒ Workshop Manual for air conditioners with refrigerant R12 (this Workshop Manual is available in hard-copy form only).
- According to current legislation, refrigerant R134a can continue to be used in vehicles type-tested with refrigerant R134a (or vehicles converted from refrigerant R12 to R134a) until they are taken off the road. For this reason, it is currently not planned to convert the air conditioner from refrigerant R134a to refrigerant R1234yf ⇒ Air conditioner with refrigerant R134a; Rep. gr. 87 ; Capacities for refrigerant R134a, refrigerant oil and approved refrigerant oils .
- For environmental reasons, refrigerants must not be released into the atmosphere ⇒ “2 Laws and regulations”, page 5 .
- Refrigerant R1234yf is chemically stable in closed systems. In the earth's atmosphere, however, it decomposes in a short time when exposed to UV light (within approx. 14 days) into compounds that are harmless to the earth's atmosphere (hence its GWP of 4).

Protected by copyright. Copying for private or commercial purposes, in part or in whole, is not permitted unless authorised by AUDI AG. AUDI AG does not guarantee or accept any liability with respect to the correctness of information in this document. Copyright by AUDI AG.

6.5 Other reference material

- Workshop Manual for model-specific maintenance work ⇒ Heating, air conditioning; Rep. gr. 87 ; Overview of fitting locations - air conditioner (vehicle-specific Workshop Manual) and ⇒ Current flow diagrams, Electrical fault finding and Fitting locations
- Technical Service Handbook outlining action to be taken to rectify current problems
- Self-study programmes, video programmes for company training and VW/Audi TV programmes on the air conditioner
- The specific hazards associated with refrigerant and the substance data etc. can be found in the safety data sheets. Safety data sheets on refrigerant, refrigerant oil, etc. ⇒ VW/Audi ServiceNet .
- List of special tools and workshop equipment required for repairing the air conditioner ⇒ Electronic parts catalogue (Tools; Workshop equipment/tools; Air conditioner/heater).
- Notes on the disposal of refrigerant oil and contaminated refrigerant can be found on ⇒ VW/Audi ServiceNet .
- For vehicles with a refrigerant circuit charged with refrigerant R134a (vehicles with a type approval that was granted before 31.12.2010 and which were made available on the market for the first time before 31.12.2016)
  ⇒ “2 Laws and regulations”, page 5

87 – Air conditioning system

Protected by copyright. Copying for private or commercial purposes, in part or in whole, is not permitted unless authorised by AUDI AG. AUDI AG does not guarantee or accept any liability with respect to the correctness of information in this document. Copyright by AUDI AG.

1 Refrigerant circuit

⇒ “1.1 System overview - refrigerant circuit”, page 30

⇒ “1.2 General description of refrigerant circuit components”, page 36

⇒ “1.3 Possible complaints”, page 64

⇒ “1.4 Locating leaks”, page 68

⇒ “1.5 Renewing components”, page 79

⇒ “1.6 Cleaning refrigerant circuit”, page 95

⇒ “1.7 Checking pressure values with a pressure gauge”, page 139

1.1 System overview - refrigerant circuit

⇒ “1.1.1 System overview - refrigerant circuit with expansion valve and receiver”, page 30

⇒ “1.1.2 System overview - refrigerant circuit with restrictor and receiver”, page 32

⇒ “1.1.3 System overview - refrigerant circuit with electrically driven air conditioner compressor (with and without battery cooling module)”, page 33

1.1.1 System overview - refrigerant circuit with expansion valve and receiver

Note

- *The arrows indicate the direction of refrigerant flow.*
- *The diagram below shows a refrigerant circuit with two evaporators and an internal heat exchanger as an example.*
- *The layout of the refrigerant circuit varies from vehicle to vehicle ⇒ Heating, air conditioning; Rep. gr. 87 ; Refrigerant circuit (vehicle-specific Workshop Manual).*

HD = High-pressure side

ND = Low-pressure side

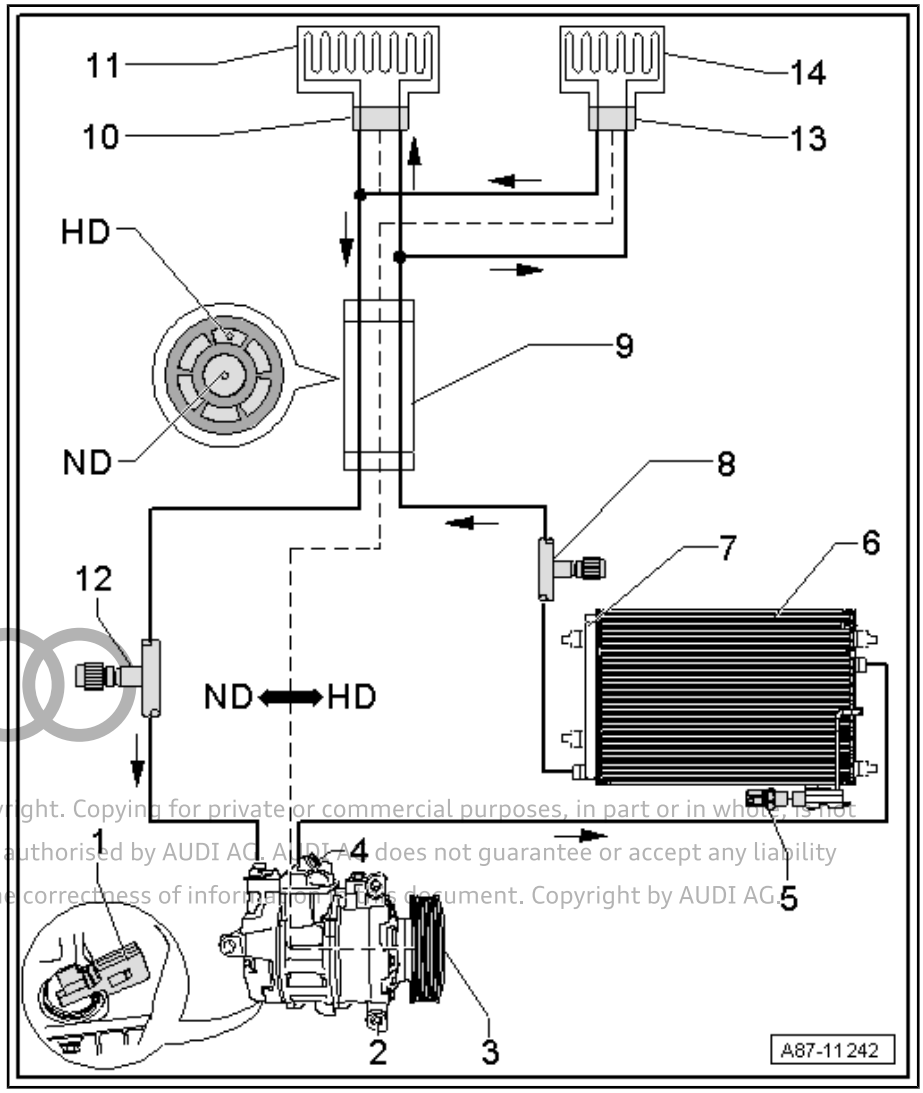

1 - Air conditioner compressor regulating valve - N280-

2 - Air conditioner compressor

3 - Pulley

- ❑ Depending on the version, an air conditioning system magnetic clutch - N25- may be installed in the pulley ⇒ Heating, air conditioning; Rep. gr. 87 ; Refrigerant circuit (vehicle-specific Workshop Manual).
- ❑ Depending on the version, a drive unit may be installed instead of the pulley ⇒ Heating, air conditioning; Rep. gr. 87 ; Refrigerant circuit (vehicle-specific Workshop Manual).

4 - High-pressure safety valve

5 - Refrigerant pressure sender

- ❑ Vehicle-specific versions ⇒ Heating, air conditioning; Rep. gr. 87 ; Refrigerant circuit

Copyright by AUDI AG. Copying for private or commercial purposes, in part or in whole, is not permitted unless authorised by AUDI AG. AUDI AG does not guarantee or accept any liability with respect to the correctness of information in this document. Copyright by AUDI AG.

6 - Condenser (with receiver)

7 - Receiver

- ❑ Installed on or in condenser ⇒ Heating, air conditioning; Rep. gr. 87 ; Refrigerant circuit (vehicle-specific Workshop Manual)
- ❑ With desiccant cartridge

8 - Service connection (high-pressure side)

- ❑ With cap

9 - Refrigerant line with internal heat exchanger

10 - Expansion valve (front)

11 - Evaporator (front)

- ❑ Evaporator in front heater and air conditioning unit (fitted beneath dash panel)

12 - Service connection (low-pressure side)

- ❑ With cap

13 - Expansion valve (rear)

- ❑ Only fitted on vehicles with rear air conditioning unit (optional extra)

14 - Evaporator (rear)

- ❑ Only fitted on vehicles with rear air conditioning unit (optional extra)

1.1.2 System overview - refrigerant circuit with restrictor and receiver

Note

- *The arrows indicate the direction of refrigerant flow.*
- *The diagram below shows a refrigerant circuit with one evaporator as an example.*
- *VW/Audi do not currently plan to use this design of the refrigerant circuit.*
- *The layout of the refrigerant circuit varies from vehicle to vehicle ⇒ Heating, air conditioning; Rep. gr. 87 ; Refrigerant circuit (vehicle-specific Workshop Manual).*

HD = High-pressure side

ND = Low-pressure side

Protected by copyright. Copying for private or commercial purposes, in part or in whole, is not permitted unless authorised by AUDI AG. AUDI AG does not guarantee or accept any liability with respect to the correctness of information in this document. Copyright by AUDI AG.

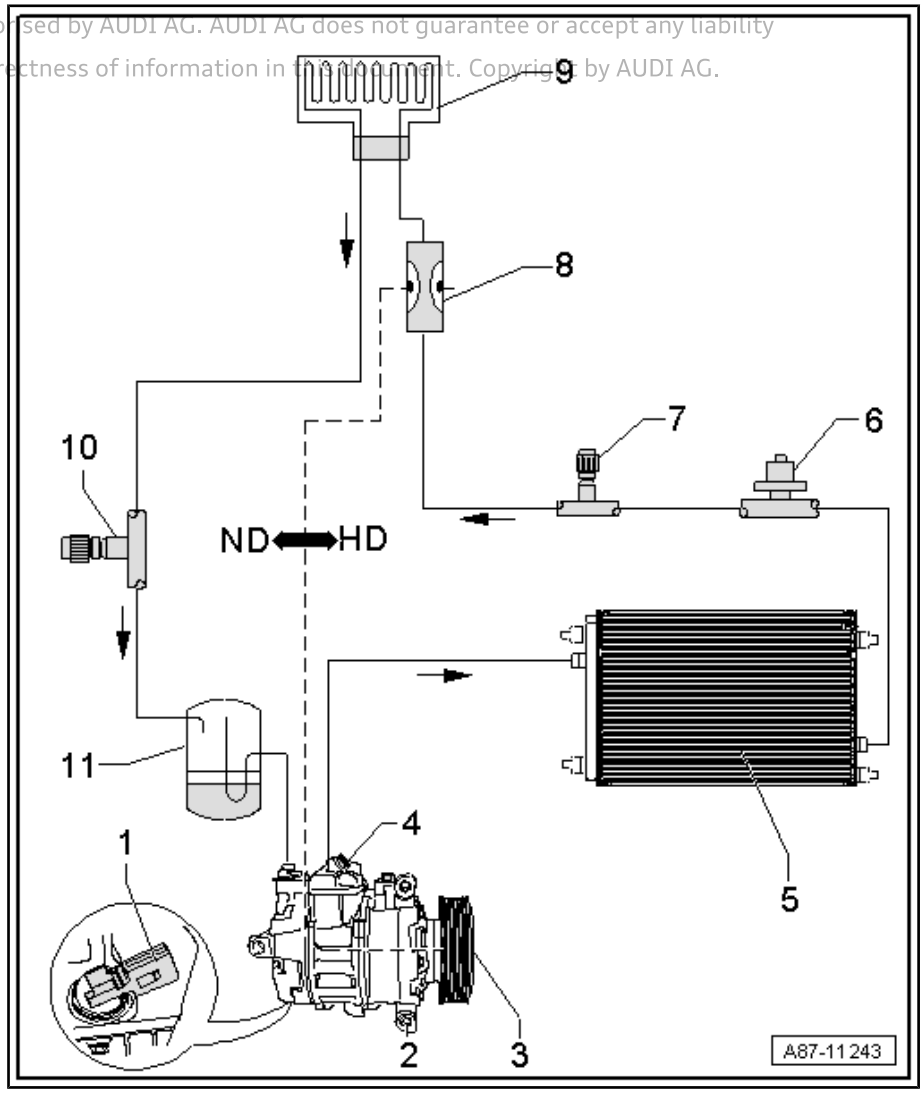

1 - Air conditioner compressor regulating valve - N280-

2 - Air conditioner compressor

3 - Pulley

- ❑ Depending on the version, an air conditioning system magnetic clutch - N25- may be installed in the pulley ⇒ Heating, air conditioning; Rep. gr. 87 ; Refrigerant circuit (vehicle-specific Workshop Manual).
- ❑ Depending on the version, a drive unit may be installed instead of the pulley ⇒ Heating, air conditioning; Rep. gr. 87 ; Refrigerant circuit (vehicle-specific Workshop Manual).

4 - High-pressure safety valve

5 - Condenser

6 - Refrigerant pressure sender

- ❑ Vehicle-specific versions ⇒ Heating, air conditioning; Rep. gr. 87 ; Refrigerant circuit (vehicle-specific Workshop Manual)

7 - Service connection (high-pressure side)

- ❑ With cap

8 - Restrictor

9 - Evaporator

- ❑ Evaporator in front heater and air conditioning unit (fitted beneath dash panel)

10 - Service connection (low-pressure side)

- ❑ With cap

11 - Reservoir

- ❑ With desiccant cartridge

1.1.3 System overview - refrigerant circuit with electrically driven air conditioner compressor (with and without battery cooling module)

Note

- *The arrows indicate the direction of refrigerant flow.*
- *The diagram below shows a refrigerant circuit with expansion valve, a second evaporator for battery cooling and an internal heat exchanger as an example.*
- *The layout of the refrigerant circuit varies from vehicle to vehicle ⇒ Heating, air conditioning; Rep. gr. 87 ; Refrigerant circuit (vehicle-specific Workshop Manual).*

HD = High-pressure side

ND = Low-pressure side

Protected by copyright. Copying for private or commercial purposes, in part or in whole, is not permitted unless authorised by AUDI AG. AUDI AG does not guarantee or accept any liability with respect to the correctness of information in this document. Copyright by AUDI AG.

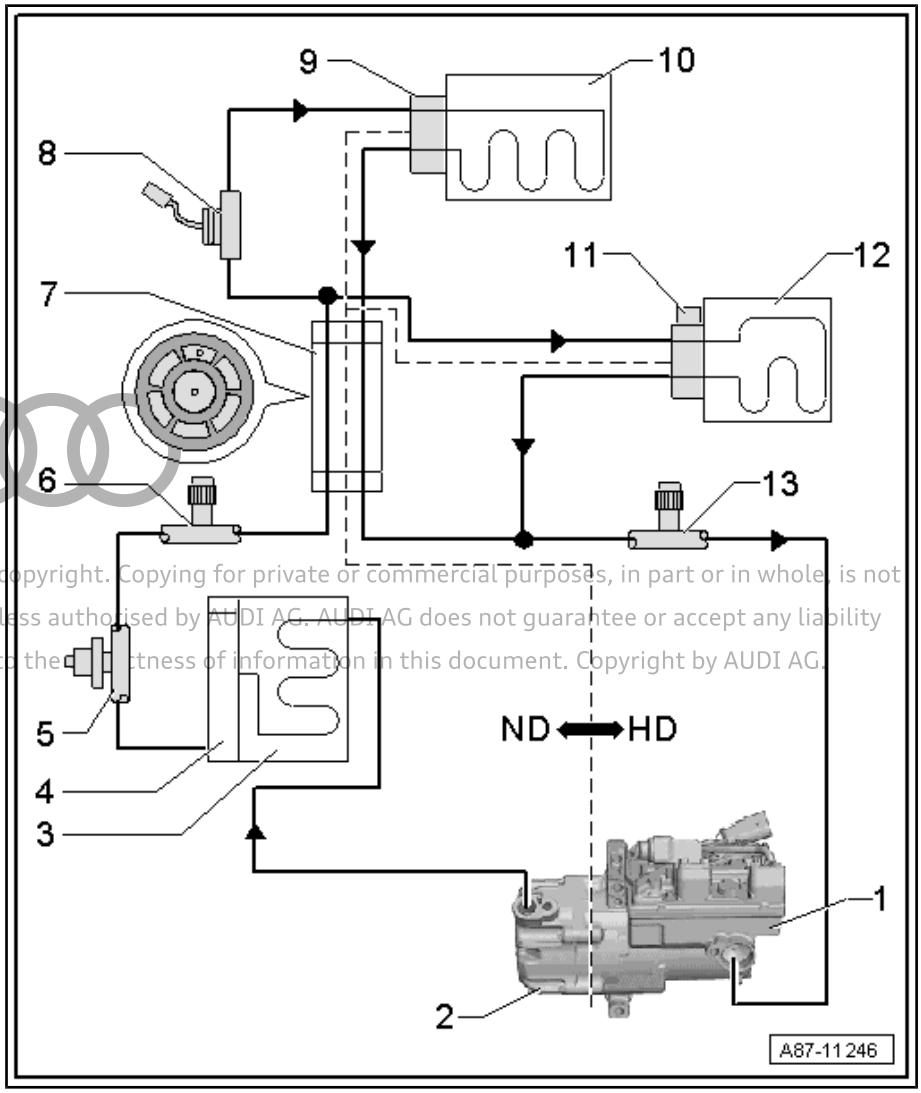

1 - Electrically driven air conditioner compressor

- ❑ With control unit for air conditioning compressor - J842- and electrical air conditioner compressor - V470- ⇒ Heating, air conditioning; Rep. gr. 87 ; Refrigerant circuit (vehicle-specific Workshop Manual)

2 - High-pressure safety valve

3 - Condenser

- ❑ With receiver and desiccant cartridge

4 - Receiver

- ❑ In this case part of condenser

Protected by copyright. Copying for private or commercial purposes, in part or in whole, is not permitted unless authorised by AUDI AG. AUDI AG does not guarantee or accept any liability with respect to the correctness of information in this document. Copyright by AUDI AG.

5 - Refrigerant pressure sender

- ❑ Vehicle-specific versions ⇒ Heating, air conditioning; Rep. gr. 87 ; Refrigerant circuit (vehicle-specific Workshop Manual)

6 - Service connection (high-pressure side)

- ❑ With cap

7 - Refrigerant line with internal heat exchanger

8 - Refrigerant shut-off valve

- ❑ Different designations ⇒ Heating, air conditioning; Rep. gr. 87 ; Refrigerant circuit (vehicle-specific Workshop Manual)
- ❑ Only on vehicles with battery cooling module for hybrid battery unit - AX1-

Note

The refrigerant shut-off valve is activated e.g. if battery cooling is necessary and passenger compartment cooling is not desired (open when not activated)

9 - Expansion valve

- ❑ On evaporator in heater and air conditioning unit

10 - Evaporator (front)

- ❑ Evaporator in heater and air conditioning unit

11 - -Expansion valve with shut-off valve-

- ❑ Different designations ⇒ Heating, air conditioning; Rep. gr. 87 ; Refrigerant circuit (vehicle-specific Workshop Manual)
- ❑ At evaporator in battery cooling module
- ❑ Only on vehicles with battery cooling module for hybrid battery unit - AX1-

Note

The expansion valve with shut-off valve is activated if the battery needs to be cooled (closed when not activated).

12 - Evaporator

- ❑ Evaporator in battery cooling module
- ❑ Only on vehicles with battery cooling module for hybrid battery unit - AX1-

13 - Service connection (low-pressure side)

- ❑ With cap

Protected by copyright. Copying for private or commercial purposes, in part or in whole, is not permitted unless authorised by AUDI AG. AUDI AG does not guarantee or accept any liability with respect to the correctness of information in this document. Copyright by AUDI AG.

1.2 General description of refrigerant circuit components

⇒ “1.2.1 Layout and function of refrigerant circuit”, page 36

⇒ “1.2.2 Mechanically driven air conditioner compressor”, page 38

⇒ “1.2.3 Electrically driven air conditioner compressor”, page 40

⇒ “1.2.4 Condenser”, page 43

⇒ “1.2.5 Evaporator”, page 43

⇒ “1.2.6 Reservoir”, page 44

⇒ “1.2.7 Heat exchanger for heat pump operation”, page 45

⇒ “1.2.8 Fluid collector”, page 45

⇒ “1.2.9 Restrictor”, page 46

⇒ “1.2.10 Receiver”, page 47

⇒ “1.2.11 Expansion valve (with and without shut-off valve)”, page 48

⇒ “1.2.12 Refrigerant shut-off valves”, page 50

⇒ “1.2.13 Refrigerant line with internal heat exchanger”, page 51

⇒ “1.2.14 Quick-release couplings on refrigerant line”, page 52

⇒ “1.2.15 Seals”, page 53

⇒ “1.2.16 Pipes and hoses of refrigerant circuit”, page 53

⇒ “1.2.17 High-pressure safety valve”, page 53

⇒ “1.2.18 Non-return valves”, page 54

⇒ “1.2.19 Connections for quick-release couplings in refrigerant circuit”, page 55

⇒ “1.2.20 Connections with valve for refrigerant circuit switches ”, page 59

⇒ “1.2.21 Refrigerant circuit pressure senders and switches”, page 59

⇒ “1.2.22 Refrigerant pressure and temperature sender”, page 60

⇒ “1.2.23 Air conditioner compressor regulating valve N280 ”, page 63

⇒ “1.2.24 Refrigerant temperature sender”, page 63

Protected by copyright. Copying for private or commercial purposes, in part or in whole, is not permitted unless authorised by AUDI AG. AUDI AG does not guarantee or accept any liability with respect to the correctness of information in this document. Copyright by AUDI AG.

1.2.1 Layout and function of refrigerant circuit

- The condenser and receiver are located on the high-pressure side; the restrictor or expansion valve separate the high-pressure side (HP liquid side) from the low-pressure side (LP liquid side).
- High pressure results from the restrictor or expansion valve forming a constriction and causing the refrigerant to build up, thus leading to an increase in pressure and temperature.
- Excessively high pressure occurs if too much refrigerant or refrigerant oil is added, if the condenser is dirty, the radiator fan is defective, if there is a blockage in the system or if there

is moisture in the refrigerant circuit (icing-up of restrictor or expansion valve).

- The evaporator and evaporator temperature sensor are located on the low-pressure side; the air conditioner compressor separates the low-pressure side (LP gas side) from the high-pressure side (HP gas side).
- The system can suffer a drop in pressure due to loss of refrigerant, a defective or clogged restrictor or expansion valve (constrictions), a defective air conditioner compressor or an iced-up evaporator.

Protected by copyright. Copying for private or commercial purposes, in part or in whole, is not permitted unless authorised by AUDI AG. AUDI AG does not guarantee or accept any liability with respect to the correctness of information in this document. Copyright by AUDI AG.

1.2.2 Mechanically driven air conditioner compressor

The air conditioner compressor is driven via a poly V-belt -B- (or a drive shaft) by the vehicle's engine.

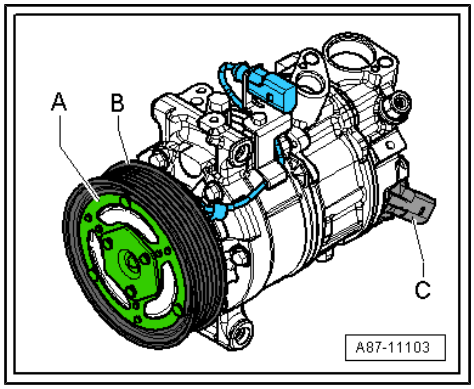

Air conditioner compressor with air conditioning system magnetic clutch - N25- :

An electromagnetic clutch -A- attached to the air conditioner compressor provides the power link between the pulley -B- and the compressor crankshaft when the air conditioning is switched on.

An overload protection device installed on the clutch plate or solenoid of the air conditioner compressor is triggered if the compressor does not run freely; this protects the belt drive or drive unit from overload.

Note

- *To ensure that the air conditioner compressor is not damaged if the refrigerant circuit is empty, the air conditioner compressor regulating valve - N280- and possibly the air conditioning system magnetic clutch - N25- are no longer activated (the air conditioner compressor only runs at idle with the engine if - N25- is activated).*
- *An air conditioner compressor with -N25- (without -N280-) is not activated and therefore not driven when the refrigerant circuit is empty.*

Protected by copyright. Copying for private or commercial purposes, in part or in whole, is not permitted unless authorised by AUDI AG. AUDI AG does not guarantee or accept any liability with respect to the correctness of information in this document. Copyright by AUDI AG.

Air conditioner compressor without air conditioning system magnetic clutch - N25- :

- An overload protection device installed on the pulley -B- or in the drive unit of the air conditioner compressor is triggered if the compressor does not run freely and protects the belt drive or drive unit from overload.
- A valve switches air conditioner compressors with air conditioner compressor regulating valve - N280- (without -N25-) to internal lubrication if the refrigerant circuit is empty.

Note

- *In air conditioner compressors without air conditioning system magnetic clutch - N25- , the engine should only be started when the refrigerant circuit has been fully assembled.*
- *To prevent damage to the air conditioner compressor if the refrigerant circuit is empty, the air conditioner compressor regulating valve - N280- is no longer activated (compressor idles with engine).*

All air conditioner compressors

The air conditioner compressor draws in refrigerant gas from the evaporator, compresses it and conveys it to the condenser.

Note

- *The air conditioner compressor contains refrigerant oil which can be mixed with refrigerant R1234yf at all temperatures.*
- *The type plate indicates the refrigerant for which the air conditioner compressor is designed. A regulating valve regulates the pressure on the low-pressure side within the specified tolerance range (control characteristic curve) ⇒ Heating, air conditioning; Rep. gr. 87 ; Refrigerant circuit (vehicle-specific Workshop Manual).*
- *The air conditioner compressor is charged with different refrigerant oils, depending on the compressor version. Refrigerant oils that were developed for refrigerant R134a only must not be used for refrigerant R1234yf ⇒ Heating, air conditioning; Rep. gr. 00 ; Technical data; Refrigerant oil .*
- *Air conditioner compressors with or without air conditioning system magnetic clutch - N25- are currently activated externally via an air conditioner compressor regulating valve - N280- -C- ⇒ Heating, air conditioning; Rep. gr. 87 ; Refrigerant circuit (vehicle-specific Workshop Manual).*
- *The type plate indicates the refrigerant for which the air conditioner compressor is designed. Air conditioner compressor regulating valve - N280- regulates the pressure on the low-pressure side within the specified tolerance range (control characteristic curve) ⇒ Heating, air conditioning; Rep. gr. 87 ; Refrigerant circuit (vehicle-specific Workshop Manual).*
- *The air conditioner compressor regulating valve - N280- is activated externally ⇒ Vehicle diagnostic tester ("Guided Fault Finding" mode for air conditioner).*
- *On vehicles with an air conditioner compressor without air conditioning system magnetic clutch - N25- , the engine must not be started if there is low pressure in the refrigerant circuit (e.g. during evacuation)* *⇒ page 142* *.*
- *On vehicles with an air conditioner compressor without air conditioning system magnetic clutch - N25- , the engine may only be started when the refrigerant circuit has been fully assembled.*
- *To prevent the air conditioner compressor from suffering damage if the refrigerant circuit is empty, the air conditioner compressor regulating valve - N280- is no longer activated (the air conditioner compressor runs at idle with the engine) if the pressure in the refrigerant circuit is too low (approx. 2 bar).*
- *A valve switches air conditioner compressors with air conditioner compressor regulating valve - N280- to internal lubrication if the refrigerant circuit is empty.*
- *Depending on the version of the air conditioner compressor, there may be a valve on the high-pressure side of the compressor which prevents liquid refrigerant from flowing back into the compressor after the air conditioner has been switched off. If an air conditioner compressor with such a valve is installed in a vehicle with a refrigerant circuit with an expansion valve, it may take a relatively long time before the pressure in the high-pressure side drops (the expansion valve is cold and the pressure in the low-pressure side increases rapidly after the compressor is switched off; the expansion valve is closed and the refrigerant can only flow slowly to the low-pressure side). If the air conditioner compressor is switched on, the pressure in the low-pressure side drops, the expansion valve is opened and the refrigerant can flow to the low-pressure side.*

Protected by copyright. Copying for private or commercial purposes, in part or in whole, is not permitted unless authorised by AUDI AG. AUDI AG does not guarantee or accept any liability with respect to the correctness of information in this document. Copyright by AUDI AG.

- *On air conditioner compressors with an electromagnetic clutch -A- and a regulating valve -C-, the electromagnetic clutch -A- is usually only activated in conjunction with regulating valve -C- ⇒ Heating, air conditioning; Rep. gr. 87 ; Refrigerant circuit (vehicle-specific Workshop Manual).*

1.2.3 Electrically driven air conditioner compressor

Vehicles with high-voltage system (hybrid vehicles)

Protected by copyright. Copying for private or commercial purposes, in part or in whole, is not permitted unless authorised by AUDI AG. AUDI AG does not guarantee or accept any liability with respect to the correctness of information in this document. Copyright by AUDI AG.

If work is necessary in the vicinity of high-voltage system components, perform a visual inspection of the high-voltage system components and wiring to check for damage ⇒ page 4 and ⇒ Electrical system; Rep. gr. 93 ; General warning instructions for work on the high-voltage system .

If work on high-voltage system components is necessary, de-energise high-voltage system ⇒ Rep. gr. 93 ; De-energising high-voltage system .

De-energising and re-energising high-voltage system ⇒ Rep. gr. 93 ; De-energising high-voltage system

– To minimise the number of automatic engine starts when the vehicle's drive system is active (READY) during test and measurement work, charge the vehicle batteries e.g. with the battery charger 60 A - VAS 5904- in battery standby mode ⇒ Electrical system; Rep. gr. 27 ; Battery; Charging battery and ⇒ Electrical system; Rep. gr. 93 ; General warning instructions for work on the high-voltage system .

– For test and measurement work that requires the vehicle's drive system to be active (READY) or the ignition to be switched on, move the selector lever to position “P”, activate the parking brake and take care to keep well clear of the engine when it is running. Set up any tools needed so that they cannot come into contact with moving parts.

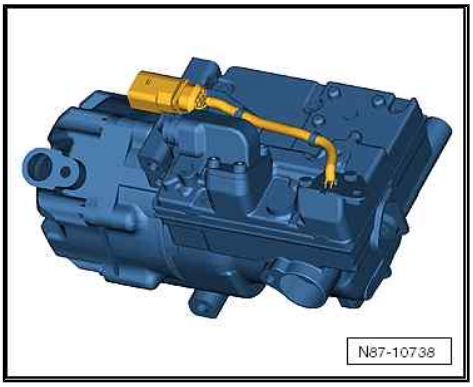

Electrically driven air conditioner compressor

NOTICE

A short circuit can cause irreparable damage to the electrically driven air conditioner compressor.

– **Never touch the air conditioner compressor when switching on the ignition or starting the drive units.**

Protected by copyright. Copying or printout for commercial purposes, in part or in whole, is not permitted unless authorised by AUDI AG. AUDI AG does not guarantee or accept any liability with respect to the correctness of information in this document. Copyright by AUDI AG.

- The air conditioner compressor draws in refrigerant gas from the evaporator, compresses it and conveys it to the condenser.
- The electric motor of the air conditioner compressor is supplied with power e.g. by the power and control electronics for electric drive - JX1- ⇒ Current flow diagrams, Electrical fault finding and Fitting locations.
- The control unit for air conditioning compressor - J842- integrated in the air conditioner compressor regulates the speed and thereby the output of the air conditioner compressor (electrical air conditioner compressor - V470-) based on the request received via the data bus ⇒ Vehicle diagnostic tester (“Guided Fault Finding” for air conditioner and battery regulation).
- Electrically driven air conditioner compressors are not fitted with air conditioner compressor regulating valve - N280- .
- Prior to installation, check the air conditioner compressor and bracket attachment points. The contact surfaces must be clean and free from rust and grease. If they are not, treat the contact surfaces with the contact surface cleaning set - VAS 6410- ⇒ Electrical system; General information; Rep. gr. 97 ; Repairing wiring harnesses and connectors and ⇒ Electrical system; General information; Rep. gr. 97 ; Contact surface cleaning set VAS 6410 .

Protected by copyright. Copying for private or commercial purposes, in part or in whole, is not permitted unless authorised by AUDI AG. AUDI AG does not guarantee or accept any liability with respect to the correctness of information in this document. Copyright by AUDI AG.

Note

- *If the control unit for air conditioning compressor - J842- is defective, the amount of refrigerant oil in the new air conditioner compressor must be adjusted. The refrigerant circuit does not always have to be cleaned (flushed) with R1234yf.*
- *The control unit for air conditioning compressor - J842- and the electrical air conditioner compressor - V470- form one component and cannot be separated at present.*
- *The electrically driven air conditioner compressor is not fitted with -N280- . The output of the air conditioner compressor is regulated externally via the air conditioner compressor speed ⇒ Current flow diagrams, Electrical fault finding and Fitting locations and ⇒ Vehicle diagnostic tester ("Guided Fault Finding" for air conditioner and battery regulation).*
- *At present, the electrically driven air conditioner compressor operates on the principle of a scroll-type supercharger (similar to the "G-Lader" supercharger).*
- *The air conditioner compressor contains refrigerant oil which can be mixed with refrigerant R1234yf at all temperatures.*
- *The type plate indicates the refrigerant for which the air conditioner compressor is designed.*
- *The integrated electronics regulate the air conditioner compressor output (and with it the pressure on the low-pressure side) via its speed within the set tolerance range (control characteristic curve).*
- *The engine should only be started after the refrigerant circuit has been assembled completely.*
- *The air conditioner compressor is fitted with a secured oil supply to prevent damage if the refrigerant circuit is empty. This means that approx. 40 to 50 cm^3 of refrigerant oil remains in the air conditioner compressor.*
- *Like the mechanically driven air conditioner compressor, the electrically driven air conditioner compressor has a pressure relief valve.*
- *Vehicles with battery cooling: Electric or hybrid drive is only possible with a full air conditioner without any stored faults ⇒ Vehicle diagnostic tester ("Guided Fault Finding" for air conditioner and battery regulation).*
- *After installing the electrically driven air conditioner compressor and then charging the refrigerant circuit, first start up the compressor via the "Compressor run-in" function of the basic setting routine. Otherwise, the air conditioner compressor may be damaged if refrigerant oil has accumulated in the compression chamber of the air conditioner compressor due to inappropriate storage prior to installation ⇒ Vehicle diagnostic tester ("Guided Fault Finding" for air conditioner and battery regulation).*
- *An electrically driven air conditioner compressor may only be activated when the refrigerant circuit is charged. Running the air conditioner compressor with the refrigerant circuit empty could lead to compressor damage ⇒ Vehicle diagnostic tester ("Guided Fault Finding").*

1.2.4 Condenser

- The condenser -A- transfers heat from the compressed refrigerant gas to the surrounding air.
- When this happens, the refrigerant gas condenses to liquid.

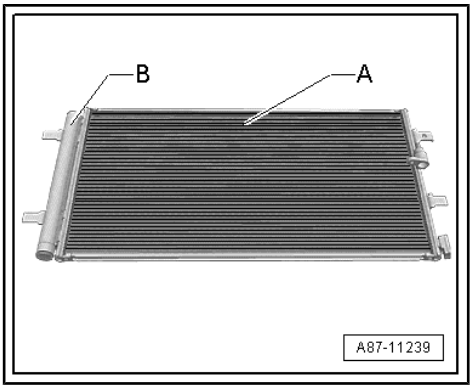

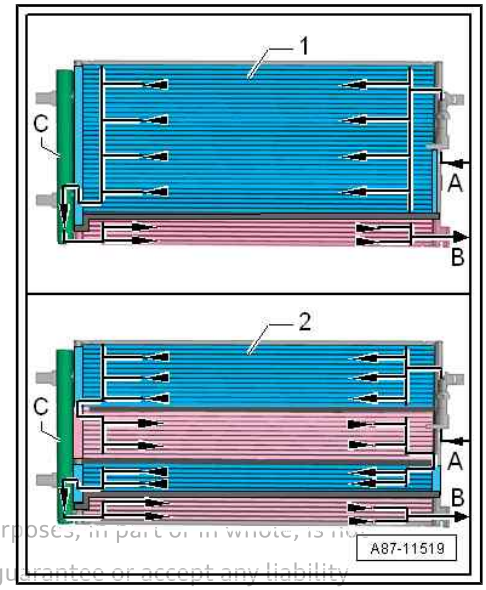

Note

- *Depending on the design of the refrigerant circuit, the receiver may be attached to the condenser or integrated in the condenser ⇒ Heating, air conditioning; Rep. gr. 87 ; Refrigerant circuit (vehicle-specific Workshop Manual) and ⇒ Electronic parts catalogue .*
- *There are different versions of the condenser; from the outside these versions can only be identified by their part number. Version -1- of the condenser is split into two sections ("two-pass condenser"). Version -2- of the condenser is split into four sections ("four-pass condenser").*
- *This illustration shows a condenser with the receiver -C- attached.*
- *The gaseous refrigerant enters the condenser at connection -A-; the refrigerant is then cooled down in the condenser and turns into liquid.*
- *The liquid refrigerant accumulates in receiver -C- (with dryer) and flows through the bottom cooling section to connection -B-.*
- *The refrigerant capacity in a refrigerant circuit may differ depending on the design of the condenser (internal volume, flow, etc.). Therefore always pay attention to the correct version and allocation of the condenser ⇒ Heating, air conditioning; Rep. gr. 00 ; Technical data (vehicle-specific Workshop Manual), and ⇒ Electronic parts catalogue .*

Protected by copyright. Copying for private or commercial purposes, in part or in whole, is not permitted unless authorised by AUDI AG. AUDI AG does not guarantee or accept any liability with respect to the correctness of information in this document. Copyright by AUDI AG.

1.2.5 Evaporator

Evaporators come in different versions. Depending on the layout and function, the thermal energy required to evaporate the refrigerant is taken from the air flowing through the evaporator (e.g. in the case of the evaporator in the heater and air conditioning unit or in the battery cooling module) or the coolant flowing through the evaporator (e.g. in the case of the heat exchanger for high-voltage battery) ⇒ Heating, air conditioning; Rep. gr. 87 ; Refrigerant circuit (vehicle-specific Workshop Manual).

Note

Two evaporator versions are described below.

Evaporator in heater and air conditioning unit (or in battery cooling module)

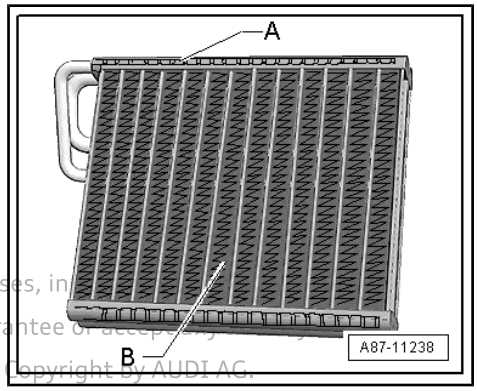

- The liquid refrigerant evaporates in the pipes of the evaporator -A-. The heat required for this is extracted from the air flowing past the evaporator fins -B-. The air cools down. The refrigerant evaporates and is drawn in by the air conditioner compressor with the absorbed heat.
- A defined quantity of refrigerant is supplied to the evaporator via an expansion valve (restrictor). In systems with an expansion valve, the flow rate is regulated so that only gaseous refrigerant emerges at the evaporator outlet.
- When refrigerant R1234yf was introduced, the evaporators were adapted accordingly; therefore it is important to make sure that the correct version is used ⇒ Electronic parts catalogue .

Protected by copyright. Copying for private or commercial purposes, in
part is not permitted unless authorised by AUDI AG. AUDI AG does not guarantee or accept any
with respect to the correctness of information in this document. Copyright by AUDI AG.

Evaporator/heat exchanger for high-voltage battery (chiller)

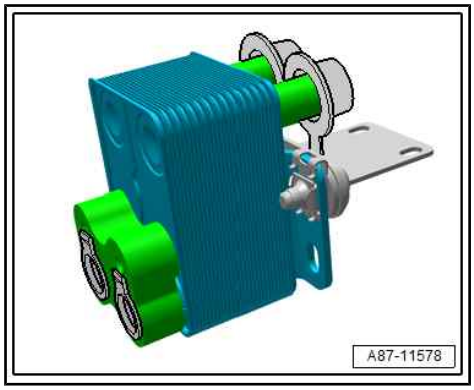

The liquid refrigerant evaporates in the evaporator (heat exchanger). The heat required for this is extracted from the coolant flowing through the evaporator. The coolant cools off, and the refrigerant evaporates and is drawn in by the air conditioner compressor with the absorbed heat.

A specified quantity of refrigerant is supplied to the evaporator via a restrictor (or an expansion valve) and a shut-off valve. The flow rate of the refrigerant (or coolant) is regulated so that the refrigerant emerging from the evaporator outlet is in gaseous form only ⇒ Heating, air conditioning; Rep. gr. 87 ; Refrigerant circuit (vehicle-specific Workshop Manual).

1.2.6 Reservoir

Note

Only installed in air conditioners with a restrictor; this type of air conditioner is currently not installed.

- The reservoir collects the vapour and gas mixture coming from the evaporator to ensure that the air conditioner compressor only receives gaseous refrigerant. The vapour turns into gaseous refrigerant.
- Refrigerant oil entrained in the circuit does not remain in the reservoir as there is an oil extraction hole.
- Any moisture which enters the refrigerant circuit during assembly is trapped by a filter (desiccant bag) in the reservoir.
- Gaseous refrigerant with oil is drawn in by the air conditioner compressor.

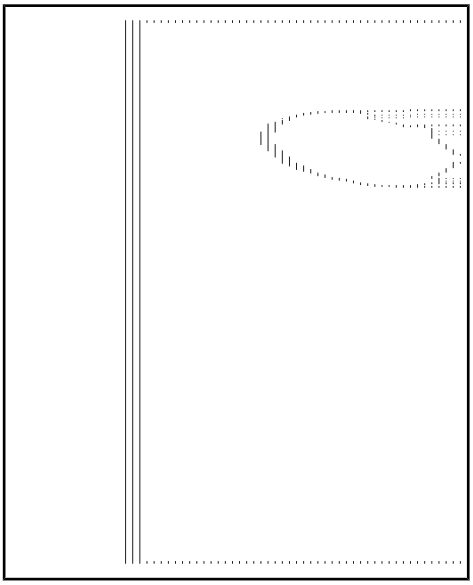

Note

- *Renew reservoir if refrigerant circuit has been open for a relatively long period and moisture has entered, or if renewal is stipulated due to a specific complaint* *⇒ page 79* *.*
- *Do not remove sealing plugs -A- and -B- until immediately prior to installation.*
- *If a reservoir is not sealed, the desiccant bag soon becomes saturated with moisture and can no longer be used.*
- *When installing, observe arrow indicating direction of flow (if applicable).*

1.2.7 Heat exchanger for heat pump operation

Protected by copyright. Copying for private or commercial purposes, in part or in whole, is not permitted unless authorised by AUDI AG. AUDI AG does not guarantee or accept any liability with respect to the correctness and completeness of this document. Copyright by AUDI AG.

The refrigerant (gaseous or vaporous) compressed by the air conditioner compressor is liquefied in the heat exchanger -A-; the released heat is transferred to the coolant flowing through ⇒ Heating, air conditioning; Rep. gr. 87 ; Refrigerant circuit (vehicle-specific Workshop Manual).

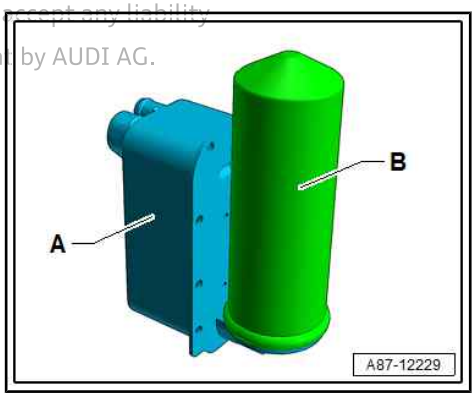

1.2.8 Fluid collector

In certain operating modes (e.g. in heat pump mode), the receiver (e.g. on the condenser). is not incorporated in the refrigerant circuit. The fluid collector -B- collects the refrigerant, stores a certain amount of it (if not required) and then transfers it as a continuous flow to the expansion valve (in front of the evaporator in the heater and air conditioning unit) or to the heat exchanger in the high-voltage system's coolant circuit ⇒ Heating, air conditioning; Rep. gr. 87 ; Refrigerant circuit (vehicle-specific Workshop Manual).

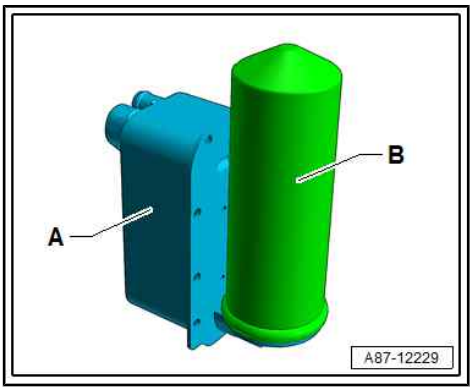

1.2.9 Restrictor

Restrictor upstream of evaporator

Note

Currently no air conditioner with a restrictor upstream of the evaporator is installed.

- The restrictor creates a restriction, which restricts the flow, thus separating the refrigerant circuit into high and low-pressure sides. Upstream of the restrictor, the refrigerant is warm due to the high pressure. Downstream of the restrictor, the refrigerant is cold due to the low pressure. A strainer is fitted upstream of the constriction to trap dirt. The strainer downstream of the constriction is designed to atomise the refrigerant before it enters the evaporator.

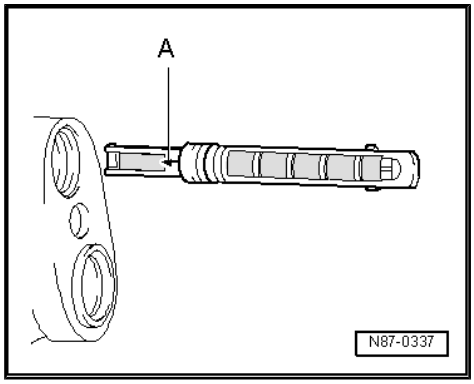

Note

- *Arrow -A- on restrictor faces evaporator.*
- *Always renew after opening refrigerant circuit.*
- *Different versions; refer to the various service information media available ⇒ Electronic parts catalogue .*

Protected by copyright. Copying for private or commercial purposes, in part or in whole, is not permitted unless authorised by AUDI AG. AUDI AG does not guarantee or accept any liability with respect to the correctness of information in this document. Copyright by AUDI AG.

Restrictor upstream of heat exchanger for high-voltage battery (chiller)

The restrictor creates a restriction, which restricts the flow, thus separating the refrigerant circuit into high and low-pressure sides. Upstream of the restrictor, the refrigerant is warm due to the high pressure. Downstream of the restrictor, the refrigerant is cold due to the low pressure.

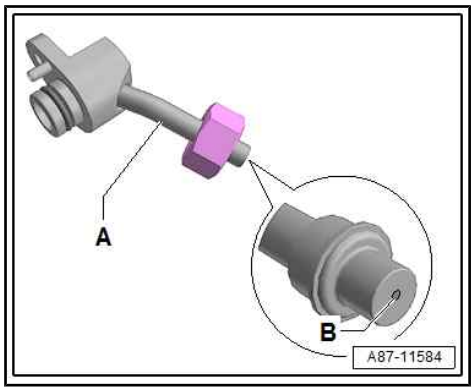

Note

- *The illustration shows a refrigerant line -A- with a permanently installed restrictor -B- (without strainer).*
- *The diameter of the restrictor hole -B- is approx. 0.7 mm. Depending on the version of the refrigerant line, the restrictor is either only inserted or fixed in position in the refrigerant line. If it is inserted, there may be a strainer for separating float elements, which may block off the restrictor hole.*
- *Prior to installation, check for dirt, and clean or renew the component as necessary.*
- *Pay attention to different versions ⇒ Heating, air conditioning; Rep. gr. 87 ; Refrigerant circuit (vehicle-specific Workshop Manual) and ⇒ Electronic parts catalogue .*

1.2.10 Receiver

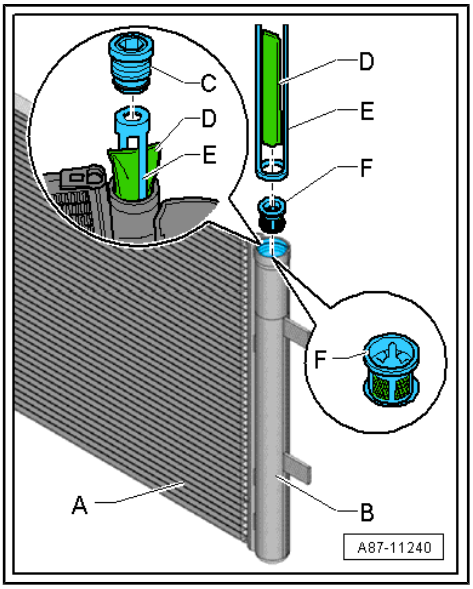

- The receiver -B- collects the droplets of liquid and transfers them in a continuous stream to the expansion valve. Any moisture that has entered into the refrigerant circuit during assembly is trapped by a dryer -D- in the receiver -B-.
- Depending on the design of the refrigerant circuit and the version of the condenser -A-, the receiver -B- may be attached to or integrated in the condenser -A- ⇒ Heating, air conditioning; Rep. gr. 87 ; Refrigerant circuit (vehicle-specific Workshop Manual), and ⇒ Electronic parts catalogue .
- The receiver -B- contains a dryer (e.g. a desiccant bag -D-) and a strainer -F- (which retains smaller impurities).

Note

- *The receiver -B- is available in different versions and designs ⇒ Heating, air conditioning; Rep. gr. 87 ; Refrigerant circuit (vehicle-specific Workshop Manual), and ⇒ Electronic parts catalogue .*
- *Renew receiver -B- or plastic bolt (with seals) -C-, desiccant cartridge -D-, filter carrier -E- and strainer -F- if the refrigerant circuit was open for a lengthy period and moisture has entered, or if stipulated in response to a particular problem ⇒ page 79 .*
- *Only remove plugs of the receiver shortly before installation; in an unsealed receiver the desiccant bag becomes saturated with moisture and unusable after just a short time.*
- *Keep bag with air-tight seal containing desiccant cartridge closed as long as possible. Only open bag immediately before inserting desiccant cartridge -D- in receiver -B- of condenser. After opening bag, desiccant cartridge soon becomes saturated with moisture from ambient air and becomes unusable.*
- *When installing, observe arrow indicating direction of flow (if applicable).*
- *The procedure for dealing with problems differs depending on the version of the receiver/desiccant cartridge. If, for example, the receiver is attached to the condenser, it can be renewed together with the desiccant cartridge. If, for example, the receiver is integrated into the condenser, it is usually possible to renew the desiccant cartridge and any additional filter element separately. If the receiver is integrated into the condenser and it is not possible to renew the receiver/desiccant cartridge separately, it may be necessary to renew the entire condenser ⇒ Heating, air conditioning; Rep. gr. 87 ; Refrigerant circuit (vehicle-specific Workshop Manual) and ⇒ Electronic parts catalogue .*
- *Depending on the design of the refrigerant circuit, the receiver (with desiccant bag/desiccant cartridge) may also be integrated in the refrigerant circuit (it does not always have to be attached to or fitted in the condenser) ⇒ Heating, air conditioning; Rep. gr. 87 ; Refrigerant circuit (vehicle-specific Workshop Manual), and ⇒ Electronic parts catalogue .*

Protected by copyright. Copying for private or commercial purposes, in part or in whole, is not permitted unless authorised by AUDI AG. AUDI AG does not guarantee or accept any liability with respect to the correctness of information in this document. Copyright by AUDI AG.

1.2.11 Expansion valve (with and without shut-off valve)

Expansion valve without shut-off function

The expansion valve -A- atomises the refrigerant flowing in and regulates the flow rate in such a way that the vapour only becomes gaseous at the evaporator outlet.

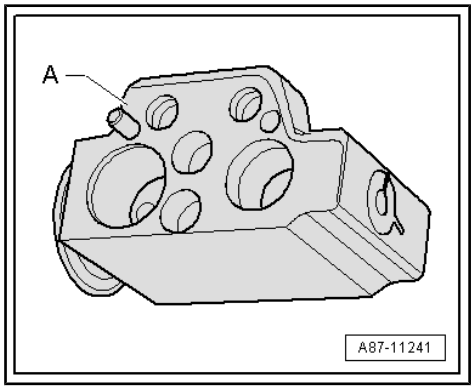

Note

- *When refrigerant R1234yf was introduced, the expansion valves were adapted accordingly (different characteristic curves); therefore it is important to make sure that the correct version is used ⇒ Electronic parts catalogue .*
- *Different versions for the expansion valve due to different characteristic curves, which are adapted to the corresponding refrigerant circuit ⇒ Heating, air conditioning; Rep. gr. 87 ; Refrigerant circuit (vehicle-specific Workshop Manual), and ⇒ Electronic parts catalogue .*
- *Pay attention to correct part number when renewing expansion valve ⇒ Electronic parts catalogue .*
- *Depending on the version of the air conditioner compressor, there may be a valve on the high-pressure side of the compressor which prevents liquid refrigerant from flowing back into the compressor after the air conditioner has been switched off. If an air conditioner compressor with such a valve is installed in a vehicle with a refrigerant circuit with an expansion valve, it may take a relatively long time before the pressure in the high-pressure side drops (the expansion valve is cold and the pressure in the low-pressure side increases rapidly after the compressor is switched off; the expansion valve is closed and the refrigerant can only flow slowly to the low-pressure side). If the air conditioner compressor is switched on, the pressure in the low-pressure side drops, the expansion valve is opened and the refrigerant can flow to the low-pressure side.*

Expansion valve with refrigerant shut-off valve

Note

There are different versions of shut-off valves (with different functions and designations) ⇒ Heating, air conditioning; Rep. gr. 87 ; Refrigerant circuit (vehicle-specific Workshop Manual).

Protected by copyright. Copying for private or commercial purposes, in part or in whole, is not permitted unless authorised by AUDI AG. AUDI AG does not guarantee or accept any liability with respect to the correctness of information in this document. Copyright by AUDI AG.

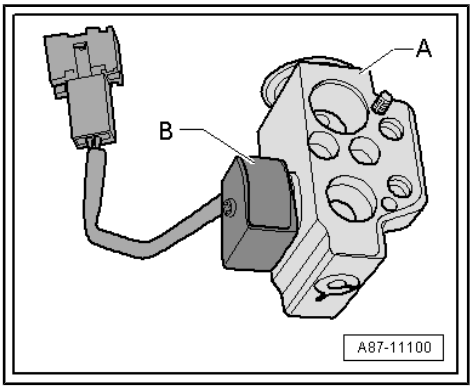

- The expansion valve -A- with shut-off valve -B- atomises the refrigerant flowing through and regulates the flow of refrigerant to the evaporator in the battery cooling module (e.g. of the hybrid battery unit) so that - depending on the heat transferred - the vapour only turns into gas at the outlet of the evaporator.
- When the shut-off valve -B- is activated by the electronics, it is open and allows refrigerant to flow to the expansion valve -A-.
- When the shut-off valve -B- is open and the expansion valve -A- allows refrigerant to flow to the evaporator or heat exchanger according to its characteristic curve ⇒ Heating, air conditioning; Rep. gr. 87 ; Refrigerant circuit (vehicle-specific Workshop Manual).
- The solenoid -C- fitted to the expansion valve -A- is activated by different control units, depending on the vehicle ⇒ Current flow diagrams, Electrical fault finding and Fitting locations and ⇒ Vehicle diagnostic tester (“Guided Fault Finding”).
- If, on a vehicle with two evaporators (one each in the heater and air conditioning unit and battery cooling module, e.g. on Audi Q5 hybrid), the measured temperature corresponds to or is below the specified value at one evaporator but the required specified value is not attained at the other evaporator, the system is controlled as follows: the corresponding control unit (e.g. battery regulation control unit - J840-) activates the electric air conditioner compressor at a higher speed (e.g. via power and control electronics for electric drive - JX1- and control unit for air conditioner compressor - J842-). This causes the cooling output of the air conditioner to increase and the pressure on the low-pressure side and the evaporator temperature to drop. If the required temperature is then not reached at one evaporator, the corresponding control unit activates the corresponding shut-off valve (e.g. -J840- activates refrigerant shut-off valve 1 - N516- or refrigerant shut-off valve 2 - N517-) so that refrigerant no longer flows through the evaporator which is too cold ⇒ Heating, air conditioning; Rep. gr. 87 ; Refrigerant circuit (vehicle-specific Workshop Manual) and ⇒ Vehicle diagnostic tester (“Guided Fault Finding”).

Protected by copyright. Copying for private or commercial purposes, in part or in whole, is not permitted unless authorised by AUDI AG. AUDI AG does not guarantee or accept any liability with respect to the correctness of information in this document. Copyright by AUDI AG.

1.2.12 Refrigerant shut-off valves

Shut-off valve with two switch statuses (open and closed)

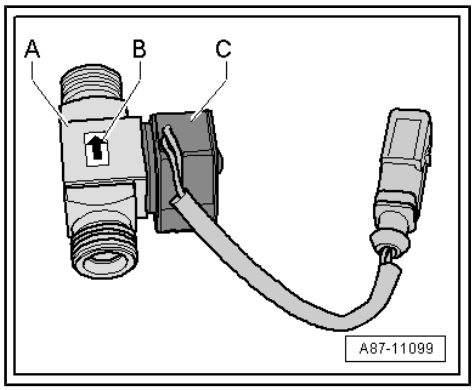

- There are different versions of shut-off valves (with different functions and designations) ⇒ Heating, air conditioning; Rep. gr. 87 ; Refrigerant circuit (vehicle-specific Workshop Manual).
- When the shut-off valve -B- is not activated by the electronics, it is open and allows refrigerant to flow through.
- The shut-off valve -A- is installed e.g. on vehicles with high-voltage system. It is activated if the air conditioner is not set to cooling mode for the passenger compartment, but the hybrid battery unit - AX1- needs to be cooled.
- Observe arrow -B- on shut-off valve -A-; it shows the flow direction of the refrigerant (from condenser to evaporator in heater and air conditioning unit).
- The solenoid -C- fitted to the shut-off valve -A- is activated by different control units, depending on the vehicle ⇒ Current flow diagrams, Electrical fault finding and Fitting locations and ⇒ Vehicle diagnostic tester (“Guided Fault Finding” for air conditioner and battery regulation).
- If, on a vehicle with two evaporators (one in the heater and air conditioning unit and one in the battery cooling module, e.g. on Audi Q5 hybrid), the measured temperature corresponds to or is below the specified value at one evaporator, but the required specified value is not reached at the other evaporator, the system is controlled as follows: the corresponding control unit activates the electric air conditioner compressor at a higher speed. This causes the cooling output of the air conditioner to increase and the pressure on the low-pressure side and the evaporator temperature to drop. If the temperature at one evaporator then falls below the specified temperature, the corresponding control unit activates the corresponding shut-off valve so that refrigerant no longer flows through the evaporator which is too cold ⇒ Heating, air conditioning; Rep. gr. 87 ; Refrigerant circuit (vehicle-specific Workshop Manual) and ⇒ Vehicle diagnostic tester (“Guided Fault Finding”).

Shut-off valves controlled via characteristic curves

Protected by copyright. Copying for private or commercial purposes, in part or in whole, is not permitted unless authorised by AUDI AG. AUDI AG does not guarantee or accept any liability with respect to the correctness of information in this document. Copyright by AUDI AG.

- Shut-off valve -A- is activated using a stepper motor -B- of the corresponding control unit via characteristic curves (open or closed).
- If the shut-off valve is operating as a control valve (e.g. as the refrigerant expansion valve 1 - N636- on the Audi Q7) it is only opened as far as necessary until the specified temperature for the heat exchanger is reached ⇒ Heating, air conditioning; Rep. gr. 87 ; Refrigerant circuit (vehicle-specific Workshop Manual).
- The shut-off valves activated by stepper motors have no specified rest position. They must therefore be moved to a specific position (open or closed) before any work is performed on the refrigerant circuit ⇒ Heating, air conditioning; Rep. gr. 87 ; Refrigerant circuit (vehicle-specific Workshop Manual).
- Depending on the layout of the refrigerant circuit, several shut-off valves may be combined in one valve block (e.g. on the e-Golf or the Audi Q7 e-tron) ⇒ Heating, air conditioning; Rep. gr. 87 ; Refrigerant circuit (vehicle-specific Workshop Manual).
- The stepper motor is adapted and activated via data lines (LIN bus) by the corresponding control unit according to their fitting location ⇒ Heating, air conditioning; Rep. gr. 87 ; Refrigerant circuit (vehicle-specific Workshop Manual) and ⇒ Vehicle diagnostic tester (“Guided Fault Finding”).

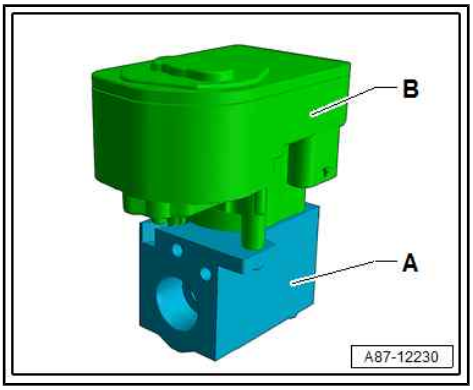

1.2.13 Refrigerant line with internal heat exchanger

- In this refrigerant line, the hot refrigerant (liquid) flowing through the high-pressure side gives off energy to the cold refrigerant (gaseous or vaporous) flowing through the low-pressure side, thus enhancing the efficiency of the air conditioner.

Protected by copyright. Copying for private or commercial purposes, in part or in whole, is not permitted unless authorised by AUDI AG. AUDI AG does not guarantee or accept any liability with respect to the correctness and completeness of this document. Copyright by AUDI AG.

Note

This illustration shows a refrigerant line with internal heat exchanger as fitted e.g. on the Golf 7, the Audi A4 2008> and the Audi A5 Coupé 2008> ⇒ Heating, air conditioning; Rep. gr. 87 ; Refrigerant circuit (vehicle-specific Workshop Manual).

A - Refrigerant line with internal heat exchanger

B - Passages in refrigerant line, in which hot liquid refrigerant flows to evaporator (high-pressure side of refrigerant circuit)

C - Passage in refrigerant line, in which cold gaseous or vaporous refrigerant flows to air conditioner compressor (low-pressure side of refrigerant circuit)

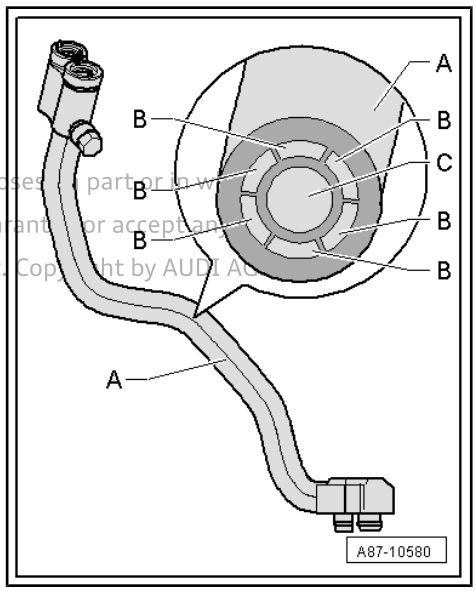

1.2.14 Quick-release couplings on refrigerant line

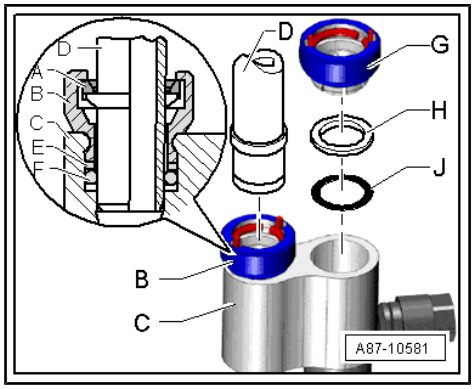

Note

- *This illustration shows the quick-release couplings with a refrigerant line with internal heat exchanger as fitted e.g. on the Audi A4 2008> and the Audi A5 Coupé 2008> ⇒ Heating, air conditioning; Rep. gr. 87 ; Refrigerant circuit (vehicle-specific Workshop Manual).*
- *Removing the refrigerant line -D- involves opening the retaining ring -A- using e.g. the refrigerant line release tool (release tool - T40149- or removal tool - T40232-) ⇒ Heating, air conditioning; Rep. gr. 87 ; Refrigerant circuit (vehicle-specific Workshop Manual).*
- *After removing refrigerant line, renew quick-release couplings -B- and -G- together with corresponding support ring -E- or -H- and seal -F- or -J- ⇒ Heating, air conditioning; Rep. gr. 87 ; Refrigerant circuit (vehicle-specific Workshop Manual) and ⇒ Electronic parts catalogue .*

A - Retaining ring (in quick-release coupling, high-pressure side)

B - Quick-release coupling with retaining ring (high-pressure side)

C - Refrigerant line with internal heat exchanger

D - Refrigerant line (high-pressure side)

Protected by copyright. Copying for private or commercial purposes, in part or in whole, is not permitted unless authorised by AUDI AG. AUDI AG does not guarantee or accept any liability with respect to the correctness of information in this document. Copyright by AUDI AG.

E - Support ring (high-pressure side)

F - Seal (high-pressure side)

G - Quick-release coupling with retaining ring (low-pressure side)

H - Support ring (low-pressure side)

J - Seal (low-pressure side)

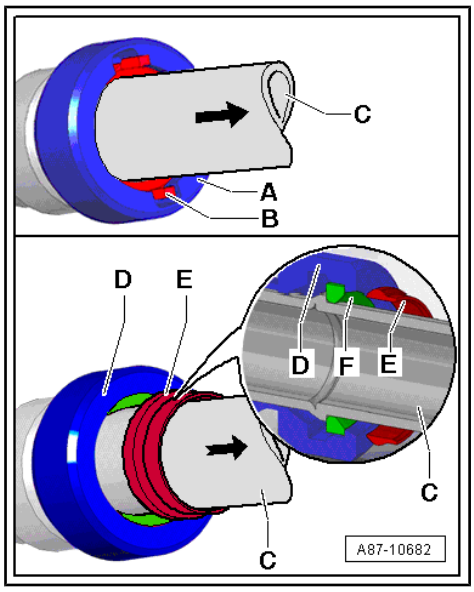

Note

- *There are different versions of the quick-release couplings -A- and -D-. The refrigerant lines -C- can be released and removed, e.g. with the refrigerant line release tool -T40149/1- in the same way for both versions of these quick-release couplings ⇒ Heating, air conditioning; Rep. gr. 87 ; Refrigerant circuit (vehicle-specific Workshop Manual).*
- *With quick-release coupling version -A-, the pins -B- become visible after the refrigerant line -C- has been installed if you pull the locked refrigerant line -C- in the direction of the -arrow-.*
- *With quick-release coupling version -D-, the refrigerant line -C- is installed in the same way as with quick-release coupling version -A-. If, on this version, the refrigerant line -C- is pulled in the direction of the arrow after it is assembled, the snap ring -E- emerges from the quick-release coupling -D-, showing that the retaining ring -F- is completely locked onto the refrigerant line -C-. Subsequently the snap ring -E- must be detached from the refrigerant line -C-.*

1.2.15 Seals

- These seals seal the joints between the individual components of the refrigerant circuit
  ⇒ “3.2 Refrigerant circuit seals”, page 8 .

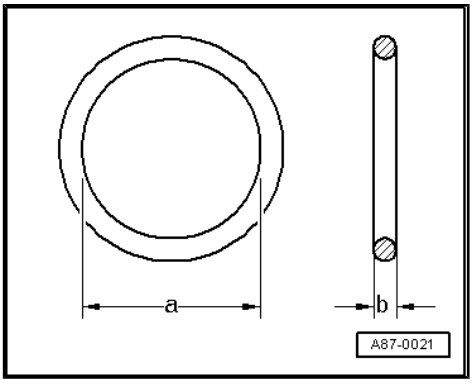

1.2.16 Pipes and hoses of refrigerant circuit

- In its pure state, refrigerant R1234yf is chemically stable and does not corrode e.g. iron, aluminium or appropriately engineered and therefore suitable plastics. The mixture of refrigerant oil and refrigerant R1234yf can corrode certain metals (e.g. alloys with copper) and corrode or dissolve certain hose materials and plastics. Therefore, only use genuine replacement parts ⇒ Electronic parts catalogue .
- Use only components which are resistant to refrigerant R1234yf and the corresponding refrigerant oils. Do not use components (e.g. seals and hoses as these are made of plastic), which cannot be clearly assigned ⇒ Electronic parts catalogue .
- Pipes and hoses are held together by threaded connections and/or special connections ⇒ Heating, air conditioning; Rep. gr. 87 ; Refrigerant circuit (vehicle-specific Workshop Manual).
- Renew sealing elements (e.g. seals) between components ⇒ Electronic parts catalogue .
- Pay attention to specified torques for threaded connections and use specified release tools for connections ⇒ Heating, air conditioning; Rep. gr. 87 ; Refrigerant circuit (vehicle-specific Workshop Manual).

1.2.17 High-pressure safety valve

Protected by copyright. Copying for private or commercial purposes, in part or in whole, is not permitted unless authorised by AUDI AG. AUDI AG does not guarantee or accept any liability with respect to the correctness of information in this document. Copyright by AUDI AG.

The high-pressure safety valve is attached to the air conditioner compressor or the receiver.

The valve opens at a pressure of approx. 38 bar and closes again when the pressure drops (at approx. 35 bar).

Not all the refrigerant escapes.

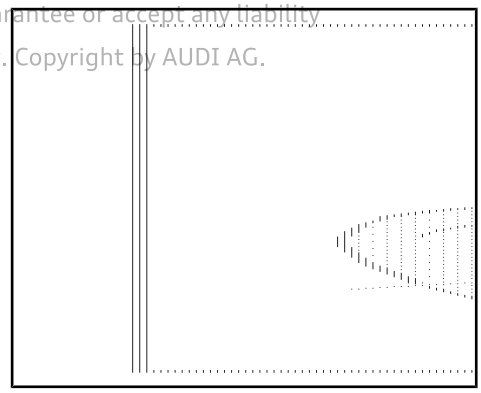

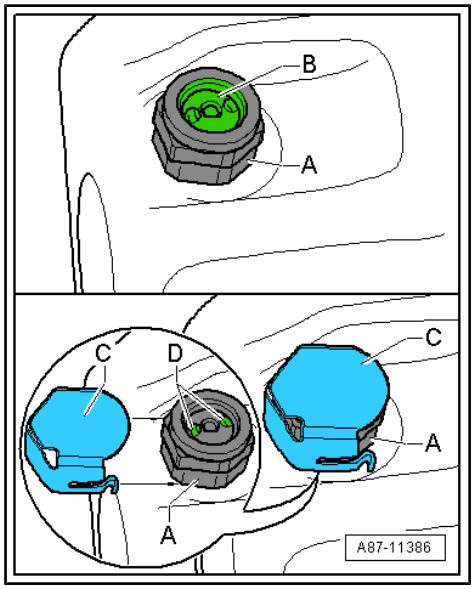

Note

- *Depending on the version, a transparent plastic disc -B- may be fitted to the high-pressure safety valve -A-, which breaks as soon as the valve is triggered.*
- *Depending on the version of the high-pressure safety valve -A-, there may also be a cover -C- on the high-pressure safety valve -A-. Should the pressure in the refrigerant circuit ever exceed the opening pressure of the high-pressure safety valve -A-, causing the high-pressure safety valve to open, the refrigerant does not emerge in one direction but is distributed through the openings -D- under the cover -C-.*
- *Should it be necessary to renew a high-pressure safety valve -A-, please observe the correct tightening torque when installing (dependent on air conditioner compressor manufacturer and version). On air conditioner compressors manufactured by Denso, Sanden or Valeo, an O-ring is fitted (tightening torque: currently 10 Nm for Denso and Zexel/Valeo; 15 Nm for Sanden). On Delphi air conditioner compressors, a seal is fitted (tightening torque: currently 15 Nm).*
- *Renew seal/O-ring ⇒ Electronic parts catalogue .*
- *If the seal/O-ring fitted at the high-pressure safety valve cannot be supplied as a replacement part, the removed component can be re-installed as an exception; it must be checked for damage before being re-installed. If the removed seal/O-ring is damaged or deformed, it must be replaced by a commercially available component ⇒ Electronic parts catalogue .*
- *After charging the refrigerant circuit, check the installed high-pressure safety valve for leaks, e.g. with an electronic leak detector.*

Protected by copyright. Copying for private or commercial purposes, in part or in whole, is not permitted unless authorised by AUDI AG. AUDI AG does not guarantee or accept any liability with respect to the correctness of information in this document. Copyright by AUDI AG.

1.2.18 Non-return valves

Non-return valves divide the refrigerant circuit into different sections ⇒ Heating, air conditioning; Rep. gr. 87 ; Refrigerant circuit (vehicle-specific Workshop Manual).

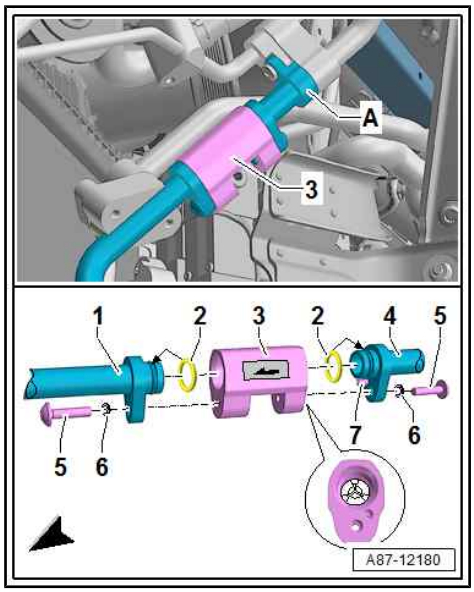

Note

- *The non-return valve -3- shown in the illustration is installed e.g in the Audi Q7 e-tron ⇒ Heating, air conditioning; Rep. gr. 87 ; Refrigerant circuit (vehicle-specific Workshop Manual).*
- *Non-return valves in the refrigerant circuit have a specific holding pressure (approx. 0.1 bar or 100 mbar) in the forward direction. All electrically activated valves must therefore be open so that the refrigerant circuit can be evacuated fully (residual pressure less than 5 mbar).*
- *Depending on the version, there may be a sticker indicating the direction of flow.*

1.2.19 Connections for quick-release couplings in refrigerant circuit

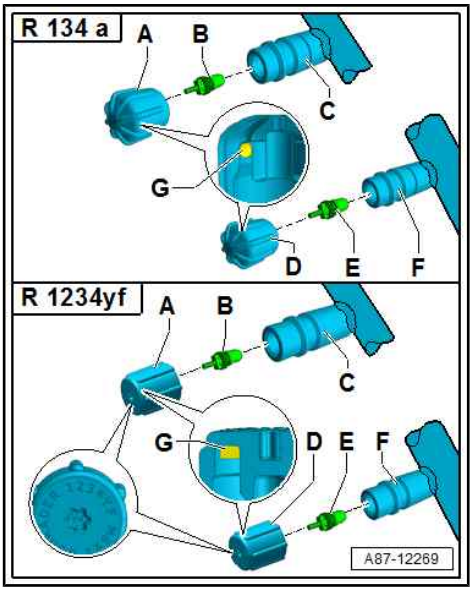

Service connections with Schrader valve (needle or push-pin valve)

- Only use valves and connections that are resistant to R1234yf refrigerant and related refrigerant oils.
- Service connections -C- and -F- on an R1234yf refrigerant circuit are designed so that the service couplings designed for the service connections of an R134a refrigerant circuit cannot be connected.
- There are different connections (outer diameter) for the high-pressure and low-pressure sides -C- and -F-.
- Discharge refrigerant circuit before removing valves or valve cores -B- and -E-.
- Always screw on caps -A- and -D- with seal -G-.

Layout in vehicle ⇒ Heating, air conditioning; Rep. gr. 87 ; Refrigerant circuit (vehicle-specific Workshop Manual)

– Extract refrigerant before unscrewing valves.

- Service connection on low-pressure side -F-
- Service connection on high-pressure side -C-
- Valve core (designation: Schrader or needle valve)
- Cap (service connection on low-pressure side) with seal -A-
- Cap (service connection on high-pressure side) with seal -D-

Protected by copyright. Copying for private or commercial purposes, in part or in whole, is not permitted unless authorised by AUDI AG. AUDI AG does not guarantee or accept any liability with respect to the correctness of information in this document. Copyright by AUDI AG.

Note

- *After connecting, carefully screw handwheel of service coupling into quick-release coupling adapter only to the extent required to reliably open valve in service connection (observe pressure gauge; do not open valve too far).*
- *The service connections on an R1234yf refrigerant circuit are designed so that the service couplings designed for the service connections of an R134a refrigerant circuit cannot be connected.*
- *Service connections, for example, are soldered into a refrigerant line and therefore cannot be renewed separately.*
- *When removing and installing valve core with refrigerant circuit discharged, use a socket - T10364- or similar.*
- *Take care when tightening valve core (low torque).*
- *There are different versions of these valves; therefore tightening torques vary. For a valve core -C- with a VG5 thread (5.2 x 0.7 mm, tyre valve) the tightening torque is 0.4 Nm ± 0.1 Nm; for a valve core with an M6 x 0.75 mm thread the tightening torque is 0.9 Nm ± 0.1 Nm, and for a valve core with an M8 x 1.0 mm thread the tightening torque is 2.0 Nm ± 0.2 Nm.*
- *There are different versions of valve caps; therefore tightening torques vary. Tightening torque for valve cap with M8 x 1 mm or M10 x 1 mm thread: 0.4 Nm ± 0.1 Nm.*
- *There are different versions of these valves, valve cores and the corresponding sealing caps. Note the correct version of the valve core and correct assignment of the caps ⇒ Electronic parts catalogue .*

Protected by copyright. Copying for private or commercial purposes, in part or in whole, is not permitted unless authorised by AUDI AG. AUDI AG does not guarantee or accept any liability with respect to the correctness of information in this document. Copyright by AUDI AG.

Dimensions of service connections

- Valve core -A- (different versions)
- Service connection -B- (different versions on high-pressure and low-pressure side depending on refrigerant)

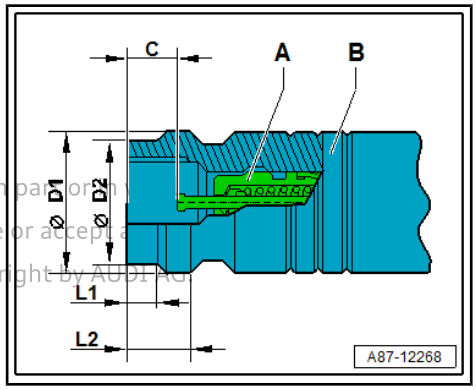

Dimensions of service connections -B-	Service connection (refrigerant R134a)		Service connection (refrigerant R1234yf)	
	High-pressure side	Low-pressure side	High-pressure side	Low-pressure side
Outer diameter -D1-	16.0 mm	13.0 mm	17.0 mm	14.0 mm
Outer diameter -D2-	14.0 mm	11.0 mm	13.0 mm	12.0 mm
Offset -L1-	4.6 mm	6.15 mm	9.0 mm	4.75 mm
Offset -L2-	8.16 mm	9.16 mm	12.5 mm	7.2 mm
Installation position of valve (not actuated) -C-	6.1 - 7.1 mm	6.1 - 7.1 mm	8.3 - 9.3 mm	8.3 - 9.3 mm

Protected by copyright. Copying for private or commercial purposes, in part or in whole, is not permitted unless authorised by AUDI AG. Audi AG does not guarantee or accept any liability with respect to the correctness of information in this document. Copyright by AUDI AG.

Service connections with primary sealing valve (ball valve)

- This type of service connection is currently not used in VW/ Audi refrigerant circuits.
- Only use valves and connections that are resistant to R1234yf refrigerant and related refrigerant oils.
- The service connections on an R1234yf refrigerant circuit are designed so that the service couplings designed for the service connections of an R134a refrigerant circuit cannot be connected.
- There are different connections (outer diameter) for high and low-pressure sides.
- Discharge refrigerant circuit before removing valves or valve cores.
- Always screw on sealing caps with seal.

Layout in vehicle ⇒ Heating, air conditioning; Rep. gr. 87 ; Refrigerant circuit (vehicle-specific Workshop Manual)

Connection with high-pressure valve

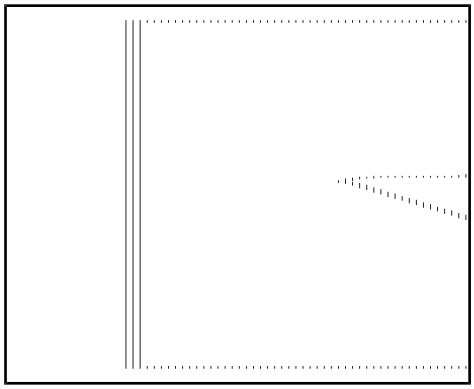

1 - Connection with internal thread (soldered in)

2 - Seal (version and identification: black or coloured ⇒ Electronic parts catalogue)

3 - Valve with outer thread and groove for seal (designation: ball valve)

4 - Seal for cap

5 - Cap

Note

Protected by copyright. Copying for private or commercial purposes, in part or in whole, is not permitted unless authorised by AUDI AG. AUDI AG does not guarantee or accept any liability with respect to correctness of information in this document. Copyright by AUDI AG.

- *After connecting, carefully screw handwheel of service coupling into quick-release coupling adapter only to the extent required to reliably open valve in service connection (observe pressure gauge; do not open valve too far).*
- *When removing and installing valve -3- with refrigerant circuit discharged, use e.g. an adapter from socket - T10364- .*
- *There are different versions of these valves (with internal or external thread); therefore the tightening torques may vary. For the valves -3- currently in use (external thread M12 x 1.5 mm) the tightening torque is 9 Nm ± 1 Nm.*
- *There are different versions of these valves and the corresponding sealing caps. Note the correct version of the valve and correct assignment of the cap ⇒ Electronic parts catalogue .*

Connection with low-pressure valve

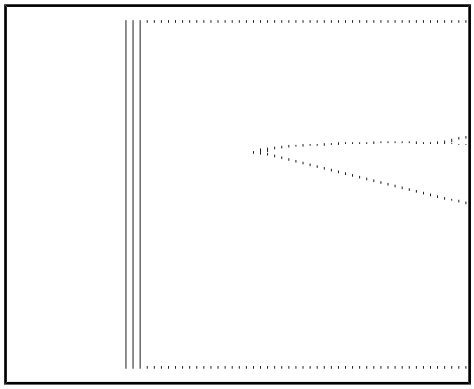

1 - Connection with external thread and groove for seal (soldered in)

2 - Seal (version and identification: black or coloured ⇒ Electronic parts catalogue)

3 - Valve with internal thread

4 - Seal for cap

5 - Cap

Note

- *Screw handwheel of service coupling into quick-release coupling adapter carefully and only to the extent required to reliably open valve in service connection (observe pressure gauge; do not open valve too far).*
- *When removing and installing valve -3- with refrigerant circuit discharged, use e.g. an adapter from socket - T10364- .*
- *There are different versions of these valves (with internal or external thread); therefore the tightening torques may vary. For the valves -3- currently in use (internal thread M10 x 1.25 mm) the tightening torque is 9 Nm ± 1 Nm.*
- *There are different versions of these valves and the corresponding sealing caps. Note the correct version of the valve and correct assignment of the cap ⇒ Electronic parts catalogue .*

1.2.20 Connections with valve for refrigerant circuit switches

Protected by copyright. Copying for private or commercial purposes, in part or in whole, is not permitted unless authorised by AUDI AG. AUDI AG does not guarantee or accept any liability with respect to the correctness of information in this document. Copyright by AUDI AG.

Note

Refer to vehicle-specific refrigerant circuit for switching pressures, removing and installing switches and location/design of switches ⇒ Heating, air conditioning; Rep. gr. 87 ; Refrigerant circuit (vehicle-specific Workshop Manual).

- Different threads for switches on high- and low pressure sides.
- Only use valves and seals that are resistant to refrigerant R1234yf and related refrigerant oils ⇒ Electronic parts catalogue .

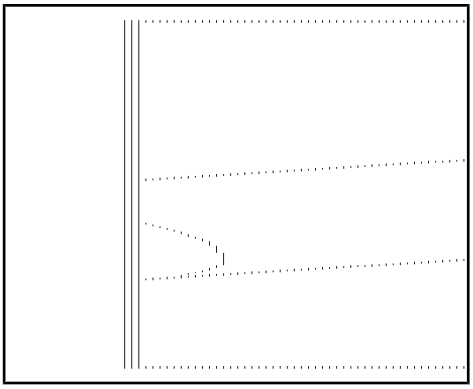

A - Connection (soldered in)

B - Seal

C - Valve (with seal)

Note

- *When removing and installing the valve core -C- with refrigerant circuit discharged, use e.g. adapter from socket - T10364- (tightening torque ⇒ page 55).*
- *There are different versions of these valves; therefore tightening torques vary. For a valve core -C- with a VG5 thread (5.2 x 0.7 mm, tyre valve) the tightening torque is 0.4 Nm ± 0.1 Nm; for a valve core with an M6 x 0.75 mm thread the tightening torque is 0.9 Nm ± 0.1 Nm, and for a valve core with an M8 x 1.0 mm thread the tightening torque is 2.0 Nm ± 0.2 Nm.*

1.2.21 Refrigerant circuit pressure senders and switches

Note

- *There are different versions of pressure senders and switches (with different functions and designations) ⇒ Heating, air conditioning; Rep. gr. 87 ; Refrigerant circuit (vehicle-specific Workshop Manual).*
- *Switching pressures, removing and installing switches and location/version of switches ⇒ Heating, air conditioning; Rep. gr. 87 ; Refrigerant circuit (vehicle-specific Workshop Manual).*

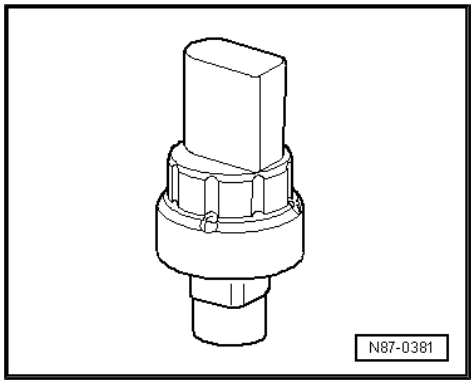

- The high-pressure sender shown is installed e.g. in the Golf 7 and Audi A3 ⇒ Heating, air conditioning; Rep. gr. 87 ; Refrigerant circuit (vehicle-specific Workshop Manual).
- One version of the pressure sender generates a square-wave signal when voltage is applied. This signal changes with the pressure in the system. The other pressure sender version exchanges information via the data bus (e.g. via “LIN bus”) with the corresponding control unit when voltage is applied ⇒ Current flow diagrams, Electrical fault finding and Fitting locations and ⇒ Vehicle diagnostic tester (“Guided Fault Finding” for air conditioner). Therefore it is important to make sure that the correct pressure sender version is used.
- The pressure sender is available in different versions. From the outside, the different versions can be identified only by the part number; therefore it is important to observe the correct assignment when renewing the component (part number ⇒ Electronic parts catalogue). Reason: These senders emit different signals, and the relevant control units can only evaluate the signal to which they have been matched ⇒ Vehicle diagnostic tester (“Guided Fault Finding” for air conditioner) and ⇒ Heating, air conditioning; Rep. gr. 87 ; Refrigerant circuit (vehicle-specific Workshop Manual).
- One version of the pressure sender transmits only the measured value for the pressure in the refrigerant circuit to the connected control unit. The other version transmits the measured value for the pressure in the refrigerant circuit and the measured temperature to the connected control unit; it is therefore important to make sure the correct version is used ⇒ Electronic parts catalogue .
- With this signal, the control units downstream calculate the pressure in the refrigerant circuit and activate the radiator fans and the motor, the air conditioning system magnetic clutch - N25- , or change the activation of the air conditioner compressor regulating valve - N280- ⇒ Vehicle diagnostic tester (“Guided Fault Finding” for air conditioner) and ⇒ Heating, air conditioning; Rep. gr. 87 ; Refrigerant circuit (vehicle-specific Workshop Manual).

Protected by copyright. Copying for private or commercial purposes, in part or in whole, is not permitted unless authorised by AUDI AG. AUDI AG does not guarantee or accept any liability with respect to the correctness of information in this document. Copyright by AUDI AG.

1.2.22 Refrigerant pressure and temperature sender

⚠ CAUTION

Risk of frostbite from escaping pressurised refrigerant

Risk of frostbite on skin and other parts of the body

- **Put on protective gloves.**
- **Put on safety goggles.**
- **Extract the refrigerant and then immediately open up the refrigerant circuit.**
- **Extract the refrigerant again if more than 10 minutes have passed since the initial extraction and the refrigerant circuit has not been opened up. Renewed evaporation leads to the build-up of pressure in the refrigerant circuit.**

Senders for a connection with valve at refrigerant circuit

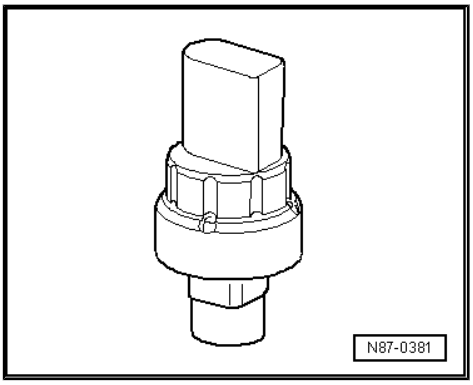

Note

- *Refer to vehicle-specific refrigerant circuit for switching pressures, removing and installing switches and location/design of switches ⇒ Heating, air conditioning; Rep. gr. 87 ; Refrigerant circuit (vehicle-specific Workshop Manual).*
- *There are different versions of these senders with different functions and designations. For example, the refrigerant pressure and temperature sender - G395- (as illustrated below) is installed in the Golf GTE, Audi A4, Audi Q5 and Audi Q5 hybrid ⇒ Heating, air conditioning; Rep. gr. 87 ; Refrigerant circuit (vehicle-specific Workshop Manual).*
- *Before loosening the bolt securing the sender, check the version of the sender ⇒ Heating, air conditioning; Rep. gr. 87 ; Refrigerant circuit (vehicle-specific Workshop Manual).*
- *On a sender for a connection to the refrigerant circuit without a valve: Extract refrigerant before loosening the bolt. Renewed evaporation may create pressure in the refrigerant circuit if the sender is not removed within 10 minutes following extraction. Extract refrigerant again.*
- *Different designations, depending on the function and vehicle ⇒ Heating, air conditioning; Rep. gr. 87 ; Refrigerant circuit (vehicle-specific Workshop Manual).*

This document is copyright protected. Any use for private or commercial purposes, in part or in whole, is not permitted unless authorised by AUDI AG. AUDI AG does not guarantee or accept any liability with respect to the correctness of information in this document. Copyright by AUDI AG.

- The refrigerant pressure and temperature sender is installed e.g. instead of the high-pressure sender or pressure sender for refrigerant circuit ⇒ Heating, air conditioning; Rep. gr. 87 ; Refrigerant circuit (vehicle-specific Workshop Manual)
- There are different versions of the refrigerant pressure and temperature sender, the pressure sender for refrigerant circuit and the high-pressure sender. From the outside, the different versions can be identified only by their part numbers; therefore it is important to observe the correct assignment when renewing (part number ⇒ Electronic parts catalogue). Reason: These senders emit different signals, and the relevant control units can only evaluate the signal to which they have been matched ⇒ Vehicle diagnostic tester (“Guided Fault Finding” for air conditioner) or ⇒ Heating, air conditioning; Rep. gr. 87 ; Refrigerant circuit (vehicle-specific Workshop Manual).
- When voltage is applied, the refrigerant pressure and temperature sender (and pressure sender for refrigerant circuit) exchange information with the corresponding control unit via the data bus (e.g. “LIN bus”). The corresponding control unit uses this information to calculate the pressure (and temperature) in the refrigerant circuit; any faults detected are signalled to the control unit ⇒ Vehicle diagnostic tester (“Guided Fault Finding”).
- The refrigerant pressure and temperature sender transmits the measured value for the pressure in the refrigerant circuit and the measured temperature to the connected control unit. The refrigerant circuit pressure sender transmits only the measured value for the pressure in the refrigerant circuit to the connected control unit. Even if only the pressure signal is evaluated on most vehicles, a vehicle in which a refrigerant pressure and temperature sender is intended to be installed must not be fitted with another pressure sender ⇒ Electronic parts catalogue .

- The temperature measured by the refrigerant pressure and temperature sender differs from the actual temperature of the refrigerant in the refrigerant circuit due to the version of the sender and the fitting location. Therefore it is currently not evaluated by all control units and used for air conditioner control ⇒ Heating, air conditioning; Rep. gr. 87 ; Refrigerant circuit (vehicle-specific Workshop Manual).
- The control units use this information to calculate the pressure in the refrigerant circuit and activate the downstream control units (radiator fan control unit, engine control unit, etc.) via the data bus. These control units then activate e.g. the air conditioning system magnetic clutch - N25- , radiator fans and motor accordingly ⇒ Vehicle diagnostic tester (“Guided Fault Finding” mode for air conditioner) and ⇒ Heating, air conditioning; Rep. gr. 87 ; Refrigerant circuit (vehicle-specific Workshop Manual).

Protected by copyright. Copyright by AUDI AG. Distribution and/or commercial purposes, in part or in whole, is not permitted unless authorised by AUDI AG. AUDI AG does not guarantee or accept any liability with respect to the correctness of information in this document. Copyright by AUDI AG.

Senders for a connection without valve at refrigerant circuit

Note

- *There are different versions of these senders with different functions and designations. For example, the refrigerant pressure and temperature sender (as illustrated below) is installed in the Audi Q7 e-tron ⇒ Heating, air conditioning; Rep. gr. 87 ; Refrigerant circuit (vehicle-specific Workshop Manual).*
- *Different designations, depending on the function and vehicle ⇒ Heating, air conditioning; Rep. gr. 87 ; Refrigerant circuit (vehicle-specific Workshop Manual).*

Possible designations for these senders

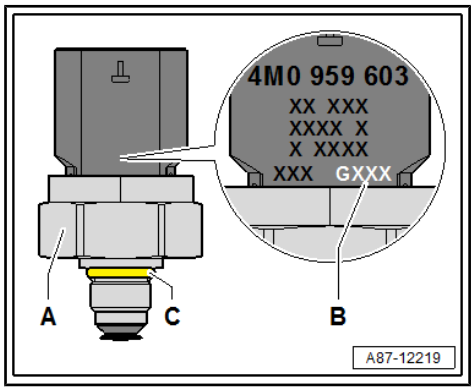

- Refrigerant pressure and temperature sender - G395- (e.g. in e-Golf, Audi Q7 e-tron)
- Refrigerant pressure and temperature sender 2 - G826- (e.g. in Audi Q7 e-tron)
- Refrigerant pressure and temperature sender 3 - G827- (e.g. in Audi Q7 e-tron)

There are different versions of these senders -A-; depending on the version, they can currently only be distinguished by the part number or by the printed designation -B- if the part number is the same. Therefore pay attention to the correct assignment when renewing the components; for part number and designation, refer to ⇒ Electronic parts catalogue and ⇒ Heating, air conditioning; Rep. gr. 87 ; Refrigerant circuit (vehicle-specific Workshop Manual).

When voltage is applied, these senders exchange information with the corresponding control unit via the data bus (e.g. via the “LIN bus”). The corresponding control unit uses this information to calculate the pressure (and temperature) in the refrigerant circuit; any faults detected are signalled to the control unit ⇒ Vehicle diagnostic tester (“Guided Fault Finding”).

The corresponding control unit uses this information to calculate the pressure in the refrigerant circuit and activates downstream control units or components (control unit for radiator fan, pumps, valves etc.) via the data bus according to requirements ⇒ Vehicle diagnostic tester (“Guided Fault Finding”) and ⇒ Heating, air conditioning; Rep. gr. 87 ; Refrigerant circuit (vehicle-specific Workshop Manual).

1.2.23 Air conditioner compressor regulating valve - N280-

Note

Refer to vehicle-specific refrigerant circuit for switching pressures, removing and installing switches and location/design of switches ⇒ Heating, air conditioning; Rep. gr. 87 ; Refrigerant circuit (vehicle-specific Workshop Manual).

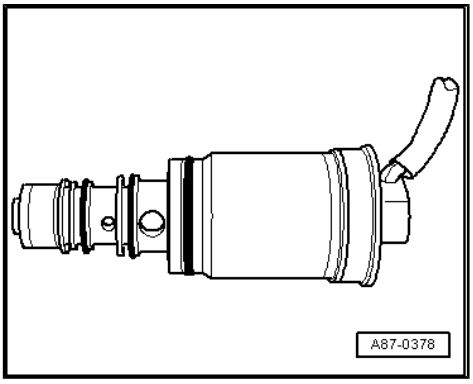

- The regulating valve is installed in the air conditioner compressor. It is activated e.g. by the air conditioning system control unit - J301- , the air conditioner operating and display unit - E87- or the Climatronic control unit - J255- (possibly via the data bus and an additional control unit, depending on the vehicle) ⇒ Vehicle diagnostic tester ("Guided Fault finding" for air conditioner) and ⇒ Heating, air conditioning; Rep. gr. 87 ; Refrigerant circuit (vehicle-specific Workshop Manual).
- The regulating valve influences the pressure on the low-pressure side and thus regulates the temperature in the evaporator.

Note

The air conditioner compressor regulating valve - N280- is part of the air conditioner compressor and cannot be renewed separately on all air conditioner compressors ⇒ Electronic parts catalogue and
⇒ "1.5.9 Removing/installing and renewing air conditioner compressor regulating valve N280 ", page 91 .

Protected by copyright. Copying for private or commercial purposes, in part or in whole, is not permitted unless authorised by AUDI AG. AUDI AG does not guarantee or accept any liability with respect to the correctness of information in this document. Copyright by AUDI AG.

1.2.24 Refrigerant temperature sender

Note

- *Currently Volkswagen/Audi does not install a refrigerant temperature sender (temperature sender without pressure evaluation).*
- *For switching pressures, removing and installing switches, switch position and version, refer to ⇒ Vehicle diagnostic tester ("Guided Fault Finding" for air conditioner) and ⇒ Heating, air conditioning; Rep. gr. 87 ; Refrigerant circuit (vehicle-specific Workshop Manual).*

- The refrigerant temperature sender (with temperature-sensitive resistor) is installed e.g. in the high-pressure pipe next to the air conditioner compressor.
- There is a direct relationship between temperature and pressure in the refrigerant circuit. If there is too little refrigerant in the refrigerant circuit during air conditioner operation, the temperature in the circuit rises to a higher value than the specification for this pressure on the high-pressure side.

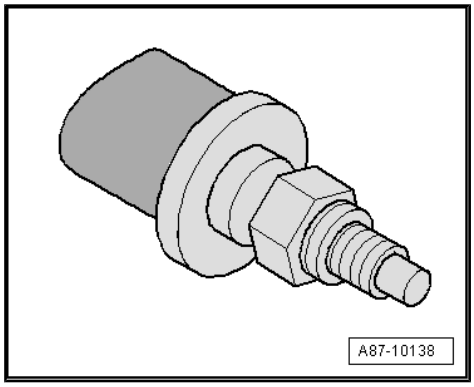

Note

The corresponding control units, e.g. the air conditioner operating and display unit - E87- or the Climatronic control unit - J255- , evaluate the pressure and temperature in the refrigerant circuit and switch off the air conditioner compressor if the temperature rises above the value specified for this pressure ⇒ Vehicle diagnostic tester ("Guided Fault Finding" for air conditioner) and ⇒ Heating, air conditioning; Rep. gr. 87 ; Refrigerant circuit (vehicle-specific Workshop Manual).

1.3 Possible complaints

⇒ "1.3.1 Requirements for determining the cause of a problem", page 64

⇒ "1.3.2 Possible complaints", page 64

⇒ "1.3.3 Odour from heater and air conditioning unit", page 66

1.3.1 Requirements for determining the cause of a problem

- Fault finding in the electrical system, vacuum system and air ducts does not reveal any faults ⇒ Vehicle diagnostic tester ("Guided Fault Finding" for air conditioner and battery regulation), ⇒ Current flow diagrams, Electrical fault finding and Fitting locations and ⇒ Heating, air conditioning; Rep. gr. 00 ; Repair instructions; Checking cooling output (vehicle-specific Workshop Manual).
- Self-diagnosis in "Guided Fault Finding" function for air conditioner (e.g. with ⇒ Vehicle diagnostic tester, "Guided Fault Finding" for air conditioner) does not reveal any events which could have caused a problem.
- No cut-off criteria are shown for air conditioner compressor in measured values of air conditioner control unit ⇒ Vehicle diagnostic tester ("Guided Fault Finding" function for air conditioner).

1.3.2 Possible complaints

Note

- *For all complaints marked * refer to ⇒ "2.14 Checking pressures", page 184 .*
- *If a problem occurs in only one of the evaporators (on vehicles fitted with two evaporators), also check the refrigerant circuit pressure values ⇒ "2.14 Checking pressures", page 184 .*
- The cooling system has failed completely.*
- Insufficient cooling output at all vehicle speeds/engine speeds.*

Protected by copyright. Copying for private or commercial purposes, in part or in whole, is not permitted unless authorised by AUDI AG. AUDI AG does not guarantee or accept any liability with respect to the correctness of information in this document. Copyright by AUDI AG.

- No or insufficient cooling after driving a few miles. *
- No or insufficient cooling in one or both evaporators (on vehicles with two heater and air conditioning unit/evaporators). *
- Activation of the air conditioner compressor (via air conditioning system magnetic clutch - N25- or air conditioner compressor regulating valve - N280-) is switched off by the corresponding control unit (e.g. air conditioner operating and display unit - E87- , air conditioner control unit - J301- or Climatronic control unit - J255-) due to the pressure in the refrigerant circuit being too high or too low * ⇒ Vehicle diagnostic tester ("Guided Fault Finding" mode for air conditioner).
- The electrical air conditioner compressor - V470- is not activated by the control unit for air conditioning compressor - J842- due to excessively high or low pressure* ⇒ Vehicle diagnostic tester ("Guided Fault Finding" for air conditioner and battery regulation).
- Fresh air supply is not available or is reduced significantly after driving several miles (evaporator iced up) * ⇒ Vehicle diagnostic tester ("Guided Fault Finding" function for air conditioner).

In addition, the following problems may occur:

Noise from air conditioner compressor:

– Tighten bolts for air conditioner compressor and air conditioner compressor bracket using a torque wrench ⇒ Heating, air conditioning; Rep. gr. 87 ; Refrigerant circuit (vehicle-specific Workshop Manual).

– Check routing of refrigerant lines; they must not make contact with other components and must be installed so they are free of stress (align if necessary) ⇒ Heating, air conditioning; Rep. gr. 87 ; Refrigerant circuit (vehicle-specific Workshop Manual).

Noise (refrigerant hammering) occurring immediately after switching on air conditioning system and/or when cornering or braking:

– Discharge, evacuate and recharge refrigerant circuit (too much refrigerant or refrigerant oil in circuit) ⇒ page 142 and ⇒ "2.14 Checking pressures", page 184 .

Note

Too much refrigerant oil in the circuit may also result in this problem (no adjustment of refrigerant oil quantity, for example, when renewing air conditioner compressor) *⇒ page 79* *.*

Water sprays out of vents (in dash panel or footwell) although air conditioning system is otherwise functioning properly:

– Check that condensation drain is correctly routed; it must not be crushed or kinked ⇒ Heating, air conditioning; Rep. gr. 87 ; Front heater and air conditioning unit (vehicle-specific Workshop Manual).

– Check condensation drain valve; it must not be clogged with wax or underseal and it must close properly ⇒ Heating, air conditioning; Rep. gr. 87 ; Front heater and air conditioning unit (vehicle-specific Workshop Manual).

Protected by copyright. Copying for private or commercial purposes, in part or in whole, is not permitted unless authorised by AUDI AG. AUDI AG does not guarantee or accept any liability with respect to the correctness of information in this document. Copyright by AUDI AG.

– Check plenum chamber cover; it must not be damaged and must be installed correctly (no water may run into the evaporator) ⇒ Heating, air conditioning; Rep. gr. 87 ; Overview of

fitting locations - air conditioner (vehicle-specific Workshop Manual).

– Check plenum chamber water drains, they must not be blocked (e.g. by leaves) ⇒ Heating, air conditioning; Rep. gr. 87 ; Overview of fitting locations - air conditioner (vehicle-specific Workshop Manual).

Protected by copyright. Copying for private or commercial purposes, in part or in whole, is not permitted unless authorised by AUDI AG. AUDI AG does not guarantee or accept any liability with respect to the correctness of information in this document. Copyright by AUDI AG.

Note

For the fitting location and further notes on these components, refer to ⇒ Heating, air conditioning; Rep. gr. 87 ; Overview of fitting locations - air conditioner (vehicle-specific Workshop Manual).

1.3.3 Odour from heater and air conditioning unit

⇒ page 66

⇒ page 67

⇒ page 67

Is the smell coming from the evaporator or heat exchanger?

- ♦ Fishy smell
- – Caused by leak(s) in engine cooling system or heat exchanger in heater and air conditioning unit

Note

If the fishy smell becomes less noticeable when the temperature selected is “cold” or more noticeable when it is “hot”, check the heat exchanger for leaks.

- ♦ Scorched clutch smell
- ♦ Odour given off by floor coverings, retrofitted loose seat covers, etc.
- ♦ Mouldy smell
- – Caused by accumulation and deposits of leaves, fir needles etc. in plenum chamber

Note

Clean plenum chamber.

- – Caused by water not able to drain out of plenum chamber

Note

Check plenum chamber water drains.

- ♦ Odour from heater and air conditioning unit

Note

Odours originating in the heater and air conditioning unit are usually perceptible in both fresh air mode and air recirculation mode.

– Caused by too much condensation in heater and air conditioning unit

Note

Check condensation drain.

– Caused by old or severely contaminated dust and pollen filter

Note

Check dust and pollen filter.

– Caused by deposits on evaporator fins

Note

Clean evaporator using ultrasonic A/C cleaner *⇒ page 67* *or pressure-feed spray gun and suitable spray lance* *⇒ page 67* *.*

Ultrasonic A/C cleaner

– The ultrasonic A/C cleaner is placed in the front passenger's footwell; it atomises the Aero-Clean agent and neutralises microbes and bacterial contamination in the heater and air conditioning unit ⇒ Heating, air conditioning; Rep. gr. 87 ; Heater and air conditioning unit (front) (vehicle-specific Workshop Manual).

Instructions for use are supplied.

Current units ⇒ Electronic parts catalogue

Spray-washing evaporator with pressure-feed spray gun and spray lance

Spray-wash evaporator directly with cleaning agent using spray lance (approx. 10 bar). This cleaning agent neutralises microbes and bacterial contamination directly on the evaporator.

Preparatory work and different spray lances are required to enable access to the evaporator ⇒ Heating, air conditioning; Rep. gr. 00 ; General information (vehicle-specific Workshop Manual), and ⇒ Heating, air conditioning; Rep. gr. 87 ; Front heater and air conditioning unit (vehicle-specific Workshop Manual).

Instructions for use are supplied with the evaporator cleaning solution ⇒ Electronic parts catalogue .

Protected by copyright. Copying for private or commercial purposes, in part or in whole, is not permitted unless authorised by AUDI AG. AUDI AG does not guarantee or accept any liability with respect to the correctness of information in this document. Copyright by AUDI AG.

1.4 Locating leaks

⇒ “1.4.1 General notes on locating leaks in refrigerant circuit”, page 68

⇒ “1.4.2 Locating leaks in refrigerant circuit using electronic leak detector”, page 69

⇒ “1.4.3 Locating leaks using UV leak detection system”, page 71

⇒ “1.4.4 Locating leaks with vacuum test using air conditioner service station ”, page 76

1.4.1 General notes on locating leaks in refrigerant circuit

Note

- *Minor leaks can be detected with e.g. an electronic leak detector or UV leak detection lamp.*
- *This Workshop Manual describes two ways of tracing leaks in refrigerant circuits. These procedures have been tested and lead to a reliable result under the different usage conditions if they are performed correctly and in accordance with the specific complaint.*
- *Numerous systems are available on the market for the detection of refrigerant circuit leaks. Not all of these yield unequivocal results and, if not employed exactly in the specified manner, may indicate leaks at various refrigerant circuit components although these are actually intact. In addition, certain procedures can lead to damage to components of refrigerant circuits.*

Protected by copyright. Copying for private or commercial purposes, in part or in whole, is not permitted unless authorised by AUDI AG. AUDI AG does not guarantee or accept any liability with respect to the correctness of information in this document. Copyright by AUDI AG.

- Do not service components that have been identified as leaking; they must always be renewed.
- A leaking refrigerant circuit must not be charged with refrigerant. Therefore, evacuate discharged refrigerant circuits and also check for leaks before charging with refrigerant ⇒ “2.5 Evacuating refrigerant circuit”, page 153 .

Note

- *Volkswagen/Audi refrains from using chemicals (sealing additives) to seal leaks in the refrigerant circuit.*
- *Chemical substances used to seal leaks build up deposits in the refrigerant circuit which impair the function of the air conditioner and lead to malfunction of the air conditioner (and the air conditioner service station).*
- *Chemical substances (sealing additives) used to seal leaks in refrigerant circuits usually react with the ambient air or the humidity in the ambient air; the deposits built up by chemical substances in refrigerant circuits (and the air conditioner service station) cause malfunctions at valves and other components if they come into contact with them. These deposits cannot be completely removed from the components affected (even by cleaning/flushing). Therefore the refrigerant circuit can only be serviced by renewing all components that have come into contact with the chemical substances.*

1.4.2 Locating leaks in refrigerant circuit using electronic leak detector

Special tools and workshop equipment required

- Electronic leak detector (or commercially available detector)

Note

- *Leaks in an R1234yf refrigerant circuit can only be located using electronic leak detectors that are designed for refrigerant R1234yf.*
- *The various refrigerants have a different molecular structure. The sensors of the electronic leak detectors are matched to these molecules. If use is made of an electronic leak detector not specially designed for refrigerant R1234yf, this will not respond to refrigerant R1234yf or only in the event of a high refrigerant concentration in the vicinity of the leak. Therefore, electronic leak detectors that are designed only for refrigerant R134a cannot be used to find leaks in an R1234yf refrigerant circuit.*
- *Depending on the version of heater and air conditioning unit, a leak in the evaporator can also be located by holding the probe tip of the leak detector in the heater and air conditioning unit via the glove box cooling connection, or holding the probe tip in the open condensate drain connection of the heater and air conditioning unit with the condensate drain hose removed.*

Dedicated to contact@ - Distribution for private or commercial purposes, in part or in whole, is not permitted unless authorized by AUDI AG. AUDI AG does not guarantee or accept any liability with respect to the correctness of information in this document. Copyright by AUDI AG.

Leak detection procedure for a refrigerant circuit completely empty as a result of leakage:

Note

To prevent more refrigerant than absolutely necessary for locating the leak in a completely empty refrigerant circuit from getting into the environment, proceed as follows:

– Evacuate refrigerant circuit with air conditioner service station ⇒ "2.5 Evacuating refrigerant circuit", page 153 .

Note

- *If major leakage has already been discovered during evacuation, locate and eliminate this as described here* *⇒ "2.5 Evacuating refrigerant circuit", page 153* .
- *If no leaks are found during evacuation, or a leak is discovered that is so minor that it cannot be located by means of a vacuum test, proceed as described below.*

– If the refrigerant circuit is completely empty, fill with approx. 10 % of the refrigerant capacity and perform a leak test as for a refrigerant circuit filled with refrigerant ⇒ page 69 .

Performing a leak test on a refrigerant circuit charged with refrigerant:

– On vehicles with high-voltage system, switch off (deactivate) auxiliary air conditioner function ⇒ Owner's Manual and ⇒ Infotainment/MMI Operating Manual .

– Switch off ignition.

– Start up leak detector in line with relevant operating instructions.

– Always hold tip of test probe beneath suspected leak.

If the number of clicking noises increases or a wailing noise occurs, depending on the design, the leak has been found ⇒ Leak detector operating instructions .

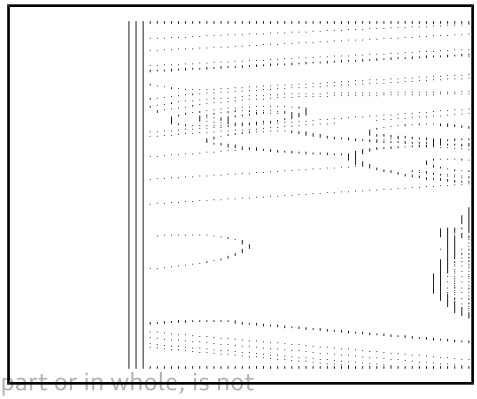

Note

- *Refrigerant gas is quickly dispersed by movement of air. Draughts must therefore be avoided during leak detection.*
- *Refrigerant gas is heavier than air and therefore sinks to a lower level at the exit location.*

Protected by copyright. Copying for private or commercial purposes, in part or in whole, is not permitted unless authorised by AUDI AG. AUDI AG does not guarantee or accept any liability with respect to the correctness of information in this document. Copyright by AUDI AG.

1.4.3 Locating leaks using UV leak detection system

Note

- *Certain leaks are difficult or even impossible to find using an electronic leak detector. To locate such leaks, the leak test can be performed with the leak detection system ⇒ Electronic parts catalogue .*
- *Refrigerant circuit leaks result in a loss of refrigerant oil together with the refrigerant. This oil generally remains in the vicinity of the leak location. Adding a small quantity of fluorescent fluid to the refrigerant circuit makes this oil visible under UV light. The fluid (PAG oil containing an additive which shows up under UV light) is poured into the refrigerant circuit and is distributed with the refrigerant oil when the air conditioner is switched on.*
- *The air conditioner must be operated for at least 60 min. to distribute the additive through the entire refrigerant circuit (the air conditioner compressor must be running). Depending on the extent of the leak, the leakage location may already become visible under UV light within this period.*
- *The refrigerant oil with the additive that glows in UV light can be poured directly into an open refrigerant circuit, or added via the service connection after the circuit has been discharged with the air conditioner service station .*
- *If the leak detection additive is added to the refrigerant circuit via the service connection, a small quantity remains in the service connection. Remove this residue with care to ensure that this location is not erroneously identified as a leak in any subsequent tests.*
- *If a component forming part of a circuit, into which the leak detection additive has been poured, has to be renewed, clean joints with other components thoroughly after assembling refrigerant circuit. Otherwise, the residues of the leak detection additive on the joint could lead to the section being identified erroneously as a leak if leak tests are required at a later date.*
- *When a refrigerant circuit is discharged, refrigerant oil and therefore leak detection additive also enter the air conditioner service station . The refrigerant oil is separated from the refrigerant in the oil separator of the air conditioner service station and removed from the air conditioner service station via the discharge device. Do not pour the refrigerant oil drained off back in. It must be replaced with fresh refrigerant oil.*
- *Observe the following if leak detection fluid has already been poured into a refrigerant circuit in the course of previous repair work: Only add new leak detection fluid if refrigerant oil is renewed. If only some of the refrigerant oil has been renewed, just add the corresponding quantity of leak detection fluid. For example, if 100 ml of refrigerant oil was replaced in a vehicle with 250 ml, only add 1 ml (cm^3) of leak detection additive.*
- *Certain materials and their compounds (e.g. oxidation products on aluminium components, anti-corrosion waxes) also show up under UV light.*
- *Depending on the version of the air conditioner service station , leak detection additive can also be added directly via the station. When doing so, please observe the notes in the operating instructions for your air conditioner service station ⇒ Operating instructions for air conditioner service station .*

Protected by copyright. Copying for private or commercial purposes, in part or in whole, is not permitted unless authorised by AUDI AG. AUDI AG does not guarantee or accept any liability with respect to the correctness of information in this document. Copyright by AUDI AG.

Leak test on an empty, leaking refrigerant circuit

– To prevent more refrigerant than is necessary for locating the leak from getting into the environment, proceed as follows with a completely empty refrigerant circuit:

– Evacuate refrigerant circuit with air conditioner service station ⇒ “2.5 Evacuating refrigerant circuit”, page 153 .

Protected by copyright. Copying for private or commercial purposes, in part or in whole, is not permitted unless authorised by AUDI AG. AUDI AG does not guarantee or accept any liability with respect to the correctness of information in this document. Copyright by AUDI AG.

Note

If a large leak has already been discovered during evacuation, locate and eliminate the leak as described
⇒ “1.4.4 Locating leaks with vacuum test using air conditioner service station ”, page 76 ,
⇒ “2.5 Evacuating refrigerant circuit”, page 153 and
⇒ “1.4.5 Locating leaks with pressure test (using nitrogen or compressed air)”, page 77 .

If no leaks are found during evacuation, or a leak is discovered that is so minor that it cannot be located during evacuation, proceed as follows:

Note

- *Only use UV leak detection additive that has been approved for refrigerant R1234yf ⇒ Electronic parts catalogue .*
- *UV leak detection additive consists predominantly of refrigerant oil. Since special refrigerant oils are required for refrigerant R1234yf, only use UV leak detection additives that use this oil as the carrier fluid. UV leak detection additives developed for refrigerant R134a are therefore not suitable.*
- *Different refrigerant oils (PAG oils) are used for refrigerant circuits with refrigerants R1234yf and R134a. Therefore ensure correct assignment of the leak detection additive (look out for PAG oil with an additive that glows in UV light).*
- *Add UV leak detection additive to the refrigerant circuit via the air conditioner service station ⇒ page 72 .*

Adding UV leak detection additive to the refrigerant circuit via the air conditioner service station

– Pour UV leak detection additive and specified quantity of refrigerant into refrigerant circuit using air conditioner service station ⇒ “2.6 Charging refrigerant circuit”, page 160 and ⇒ Heating, air conditioning; Rep. gr. 00 ; Technical data (vehicle-specific Workshop Manual).

Note

- *The quantity of UV leak detection additive to be added to a refrigerant circuit with a refrigerant oil quantity of up to 150 cm³ is 3.0+/- 0.5 ml (cm³). If there is a greater quantity of refrigerant oil in the refrigerant circuit, more UV leak detection additive must therefore be added, e.g. 5.0 ± 0.5 ml (cm³) for a refrigerant circuit with a refrigerant oil quantity of 250 cm³. When adding UV leak detection additive using an air conditioner service station , the quantity to be set in your air conditioner service station may differ. Therefore, pay attention to the relevant operating instructions ⇒ Operating instructions for air conditioner service station .*
- *The appropriate quantity of refrigerant oil in the refrigerant circuit can be found in the vehicle-specific manual ⇒ Heating, air conditioning; Rep. gr. 00 ; Technical data (vehicle-specific Workshop Manual).*
- *Observe the following if UV leak detection fluid has already been poured into a refrigerant circuit in the course of previous repair work: Only add new UV leak detection fluid if refrigerant oil is renewed. If only some of the refrigerant oil has been renewed, only add the corresponding quantity of UV leak detection additive. For example, if 50 ml of refrigerant oil was replaced in a vehicle with 150 ml, only add 1.0 ml (cm³) of UV leak detection additive.*

The leak detection system comprises the following components:

- Cleaning agent -3-
- UV leak detection lamp -4-
- UV-absorbing safety goggles -5-
- Sticker -6-
- Protective gloves -8-

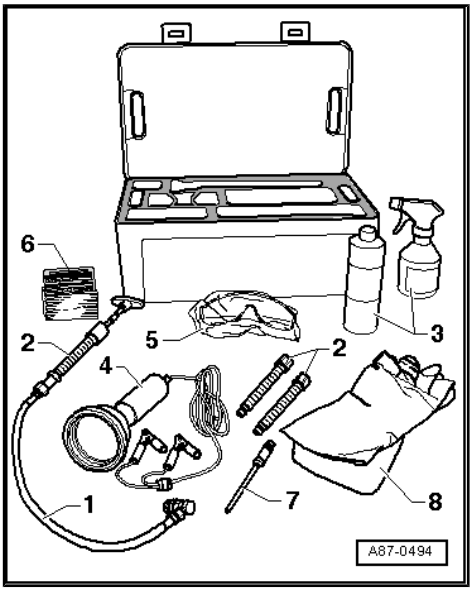

Note

Items -1-, -2- and -7- in the illustration can be disregarded.

Special tools and workshop equipment required

- Leak detection system ⇒ Electronic parts catalogue
- Air conditioner service station with a facility for adding UV leak detection additive to the refrigerant circuit ⇒ Electronic parts catalogue
- Approved leak detection additive ⇒ Electronic parts catalogue

Protected by copyright. Copying for private or commercial purposes, in part or in whole, is not permitted unless authorised by AUDI AG. AUDI AG does not guarantee or accept any liability with respect to the correctness of information in this document. Copyright by AUDI AG.

– Evacuate refrigerant circuit as specified and fill with UV leak detection additive and refrigerant
⇒ “2.5 Evacuating refrigerant circuit”, page 153 and
⇒ “2.6 Charging refrigerant circuit”, page 160 .

– Wait for pressure on high-pressure and low-pressure sides to even out.

– Disconnect air conditioner service station from refrigerant circuit and switch off
⇒ “2.8 Switching off air conditioner service station and disconnecting from refrigerant circuit”, page 165 .

Protected by copyright. Copying for private or commercial purposes, in part or in whole, is not permitted unless authorised by AUDI AG. AUDI AG does not guarantee or accept any liability with respect to the correctness of information in this document. Copyright by AUDI AG.

- Attach sticker near service connections indicating that UV leak detection additive has been added to this refrigerant circuit.
- Remove residues of UV leak detection additive from service connection e.g. with absorbent paper, and clean surrounding area with cleaning agent - VAS 6201/3- .
- Close service connection with cap.
- Start up air conditioner.
- Run air conditioner for at least 60 minutes with air conditioner compressor switched on.
- Search for leaks in refrigerant circuit using UV lamp ⇒ page 75 .

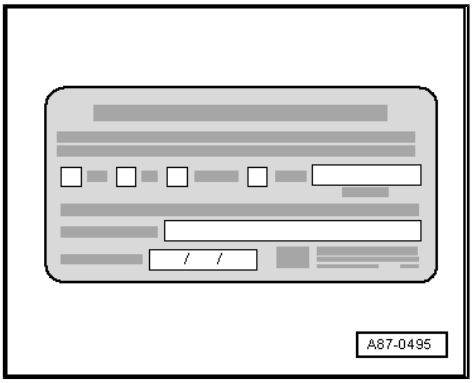

Searching for leaks in refrigerant circuit using UV lamp

CAUTION

Danger of serious damage to eyes from UV light.
- **Put on safety goggles.**
- **Never look into the UV lamp.**
- **Never direct the UV lamp at other persons.**

- On vehicles with high-voltage system, switch off (deactivate) auxiliary air conditioner function ⇒ Owner's Manual and ⇒ Infotainment/MMI Operating Manual .
- Switch off ignition.

Protected by copyright. Copying for private or commercial purposes, in part or in whole, is not permitted unless authorised by AUDI AG. AUDI AG does not guarantee or accept any liability with respect to the correctness of information in this document. Copyright by AUDI AG.

Note

- *The air conditioner must be operated for at least 60 min. to distribute the additive through the entire refrigerant circuit (the air conditioner compressor must be running). Depending on the extent of the leak, the leakage location may already become visible under UV light within this period.*
- *Depending on its size and location, it may now take several days for sufficient refrigerant oil with UV leak detection additive to emerge to identify the leakage point clearly.*
- *In the event of leaks at the evaporator, the additive may be washed out with the condensation and emerge via the condensation drain. As considerable work is required on most vehicles to gain access to the evaporator, a check e.g. at the condensation drain can provide an indication of evaporator leakage. However, this requires the additive to have been in the refrigerant circuit for a lengthy period (several days).*
- *The safety goggles are not only designed to provide eye protection. They also make the UV leak detection additive more readily visible under UV light.*
- *Depending on the accessibility of various refrigerant circuit components, it may be necessary to remove certain vehicle components (e.g. the bumper or air cleaner).*
- *During air conditioner operation, only a small quantity of refrigerant oil reaches certain points of the refrigerant circuit (e.g. a cap on top of a receiver mounted on the condenser). In the event of leakage at such locations, it may take longer for a sufficient amount of refrigerant with refrigerant oil and additive which shows up under ultraviolet light to emerge for leak detection. It may therefore be advisable to use an electronic leak detector to search for leaks in these areas*
  ⇒ "1.4.2 Locating leaks in refrigerant circuit using electronic leak detector", page 69 .

Protected by copyright. Copying for private or commercial purposes, in part or in whole, is not permitted unless authorised by AUDI AG. AUDI AG does not guarantee or accept any liability with respect to the correctness and completeness of this document. Copyright by AUDI AG.

- Position vehicle in a slightly darker area of workshop (the effect of the UV light is reduced in daylight or in strong lighting).
- Check that various refrigerant circuit components are accessible and remove parts in vicinity of refrigerant circuit that prevent you from seeing refrigerant circuit components (e.g. noise insulation and bumpers).
- Put on safety goggles to protect your eyes.
- Connect UV lamp to a 12 V battery (vehicle battery). Ensure connections have correct polarity.
- Switch on UV lamp and shine light on refrigerant circuit components. Locations at which leakage has caused refrigerant, refrigerant oil and therefore also UV leak detection additive to emerge are lit up under UV light (fluorescent).

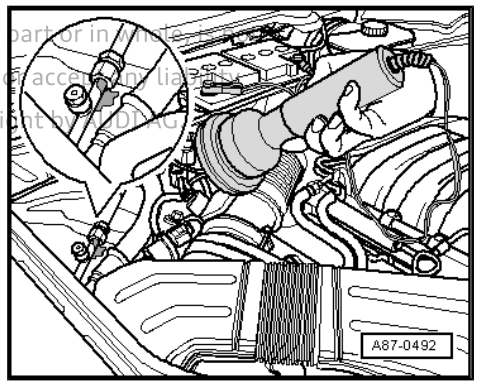

1.4.4 Locating leaks with vacuum test using air conditioner service station

- Locate leaks with vacuum test using air conditioner service station ⇒ "2.5 Evacuating refrigerant circuit", page 153 .

Note

- *Minor leaks in the refrigerant circuit (less than 100 g of refrigerant loss per year) can generally not be located using the vacuum test or pressure test. The quantity of air entering or the quantity of nitrogen escaping is not sufficient to produce any noise which would help to identify the location of the leak.*
- *In addition, leaks in the refrigerant circuit with a refrigerant loss of more than 100 g of refrigerant per year cannot always be detected with the vacuum test or pressure test, depending on the ambient conditions (ambient noises, location of leaks, etc.). The quantity of air entering or the quantity of air or nitrogen escaping may not be sufficient to produce any noise which would make it possible to identify the location of the leak.*
- *Depending on the ambient conditions, large leaks in the refrigerant circuit (e.g. stone chipping on condenser, loss of more than 100 g of refrigerant per day) can be detected with the vacuum test or pressure test, e.g. due to noises occurring at the locations of the leaks during these tests* *⇒ "2.5 Evacuating refrigerant circuit", page 153* *.*

– Perform vacuum test ⇒ page 157 .

1.4.5 Locating leaks with pressure test (using nitrogen or compressed air)

- Locate leaks with vacuum test using air conditioner service station ⇒ "2.5 Evacuating refrigerant circuit", page 153 . If a leak is detected during this test, but the location cannot be identified, a pressure test with nitrogen or compressed air can be performed additionally ⇒ page 157 .

Note

- *Minor leaks in the refrigerant circuit (less than 100 g of refrigerant loss per year) can generally not be located using the vacuum test or pressure test. The quantity of air entering or the quantity of nitrogen escaping is not sufficient to produce any noise which would help to identify the location of the leak.*
- *In addition, leaks in the refrigerant circuit with a refrigerant loss of more than 100 g of refrigerant per year cannot always be detected with the vacuum test or pressure test, depending on the ambient conditions (ambient noises, location of leaks, etc.). The quantity of air entering or the quantity of nitrogen escaping may not be sufficient to produce any noise which would make it possible to identify the location of the leak.*
- *Depending on the ambient conditions, large leaks in the refrigerant circuit (e.g. stone chipping on condenser, loss of more than 100 g of refrigerant per day) can be detected with the vacuum test or pressure test, e.g. due to noises occurring at the locations of the leaks during these tests* *⇒ "2.5 Evacuating refrigerant circuit", page 153* *.*
- *A large leak can be determined e.g. by building up a pressure of max. 15 bar in the refrigerant circuit with pure, dry compressed air or with nitrogen* *⇒ page 137* *. If the leak is of large enough, the location of the leak can be found due to the noise of the gas escaping.*

Protected by copyright. Copying for private or commercial purposes, in part or in whole, is not permitted unless authorised by AUDI AG. AUDI AG does not guarantee or accept any liability with respect to the correctness of information in this document. Copyright by AUDI AG.

Tools required:

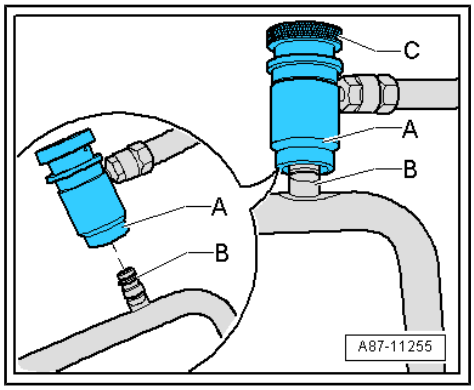

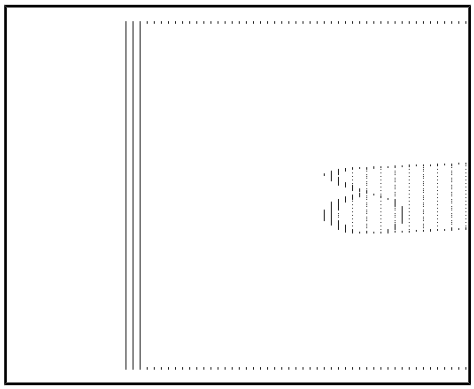

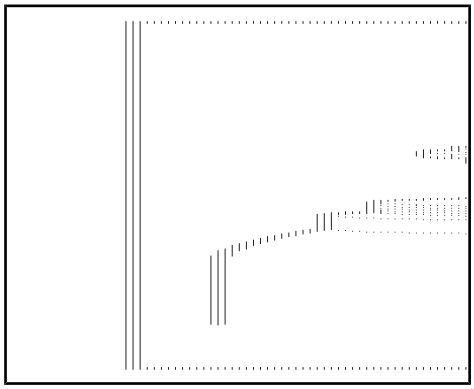

- Quick-release coupling adapter -A- (e.g. use coupling adapter removed from air conditioner service station)
- Filler hose -A- (e.g. with M12 x 1.5 6G thread acc. to SAE J639), depending on thread on quick-release coupling adapter (cut off) with corresponding adapter -B- (for connecting up to compressed air system or nitrogen pressure reducer)
- Locating leaks using compressed air: combined fine filter unit for compressed air system with oil, dirt and water separator (to ensure that pressure in refrigerant circuit is only built up with clean and dry compressed air free of oil)
- Locating leaks using nitrogen: gauge manifold with nitrogen pressure reducer (max. reducing pressure: 15 bar) -1-, compressed gas cylinder filled with nitrogen -3- and filler hose -2- (e.g. with M12 x 1.5 6G thread acc. to SAE J639; with connected quick-release coupling adapter for service connections)

– Perform pressure test ⇒ page 157 .

Protected by copyright. Copying for private or commercial purposes, in part or in whole, is not permitted unless authorised by AUDI AG. AUDI AG does not guarantee or accept any liability with respect to the correctness of information in this document. Copyright by AUDI AG.

1.5 Renewing components

⇒ "1.5.1 General notes on renewing components", page 79

⇒ "1.5.2 Renewing leaking or damaged components - empty refrigerant circuit (except for air conditioner compressor and receiver)", page 81

⇒ "1.5.3 Renewing leaking or damaged components - charged refrigerant circuit (except for air conditioner compressor and receiver)", page 83

⇒ "1.5.4 Renewing air conditioner compressor without having to clean refrigerant circuit", page 84

⇒ "1.5.5 Renewing air conditioner compressor due to leakage or internal damage", page 86

⇒ "1.5.6 Renewing desiccant cartridge/receiver after cleaning refrigerant circuit", page 87

⇒ "1.5.7 Renewing receiver without having to clean refrigerant circuit", page 89

⇒ "1.5.8 Renewing desiccant cartridge/desiccant bag without having to clean refrigerant circuit", page 90

⇒ "1.5.9 Removing/installing and renewing air conditioner compressor regulating valve N280 ", page 91

1.5.1 General notes on renewing components

- All components of the refrigerant circuit submitted for quality analysis should be sealed (use original sealing caps of replacement part).
- Renew damaged or leaking components of refrigerant circuit ⇒ page 79 .
- The following replacement parts were previously filled with nitrogen gas: air conditioner compressor, receiver, evaporator and condenser. This filling is being gradually discontinued/the pressure of the nitrogen filling is now so low that it is no longer possible to perceive gas escaping upon initial opening.
- On vehicles fitted with an air conditioner compressor without a magnetic clutch, the engine should only be started following the complete assembly of the refrigerant circuit (with compressor always in operation).
- When the refrigerant circuit is empty, the air conditioner compressor with air conditioner compressor regulating valve -N280- (without air conditioning system magnetic clutch -N25-) is switched to internal lubrication with the result that only a minimal amount of oil is pumped from the compressor into the circuit.

Protected by copyright. Copying for private or commercial purposes, in part or in whole, is not permitted unless authorised by AUDI AG. AUDI AG does not guarantee or accept any liability with respect to the correctness of information in this document. Copyright by AUDI AG.

Note

Protected by copyright. Copying for private or commercial purposes, in part or in whole, is not permitted unless authorised by AUDI AG. AUDI AG does not guarantee or accept any liability with respect to the correctness of information in this document. Copyright by AUDI AG.

- *The following replacement parts may be filled with nitrogen gas (not in all cases): air conditioner compressor, reservoir, evaporator and condenser) Therefore, little or no pressure equalisation may be perceived when the sealing plugs of the replacement part are unscrewed.*
- *Depending on the fitting location and storage time, no or only very minimal pressure compensation may be perceivable when unscrewing the plugs for the first time even in the case of components that were filled with nitrogen by the manufacturer. Consequently, it is impossible to determine at this stage whether or not a component is leaking. For example, the filled nitrogen gas may escape via the shaft seal of a replacement air conditioner compressor over time even though the air conditioner compressor is not leaking.*
- *As parts are sometimes stored for lengthy periods and at different locations within the spare parts organisation, it is entirely possible that gas will escape from some parts and not from others on initial opening (even in the case of identical spare part numbers). Sealing caps at replacement part connections must therefore be detached carefully and the nitrogen gas allowed to escape slowly.*
- *The refrigerant circuit contains one or two expansion valves and a receiver or dryer vessel ⇒ Heating, air conditioning; Rep. gr. 87 ; Refrigerant circuit (vehicle-specific Workshop Manual).*
- *Renew desiccant cartridge or components with desiccant bag (receiver) after cleaning refrigerant circuit (flushing with refrigerant R1234yf*
  ⇒ "1.6 Cleaning refrigerant circuit", page 95); when doing so, leave sealed for as long as possible to minimise absorption of moisture.
- *Renew desiccant cartridge or components with desiccant bag (receiver) if required for certain repair operations or if the refrigerant circuit has been open for a relatively long period and moisture has entered (e.g. following an accident)*
  ⇒ "1.5.2 Renewing leaking or damaged components - empty refrigerant circuit (except for air conditioner compressor and receiver)", page 81 .
- *The period of time for which a refrigerant circuit may be left open without having to renew a component with desiccant bag (receiver) depends strongly on ambient influences. At high ambient temperatures and high humidity levels, or if the vehicle has been standing e.g. in the open or driven (in wet, foggy weather conditions), this period of time will be considerably shorter than for a vehicle which has been standing in a heated, dry area. The size of the opening through which moisture may enter into the circuit also influences the period for which a refrigerant circuit can be left open without having to renew components with desiccant bag*
  ⇒ "1.5.2 Renewing leaking or damaged components - empty refrigerant circuit (except for air conditioner compressor and receiver)", page 81 .
- *Seal open connections and lines (to prevent absorption of moisture).*

Note

Dirty refrigerant oil must be disposed of as used oil of unknown origin (observe local regulations) ⇒ VW/Audi ServiceNet .

1.5.2 Renewing leaking or damaged components - empty refrigerant circuit (except for air conditioner compressor and receiver)

Refrigerant circuit completely empty (e.g. in the event of major leakage or a burst hose)

- Observe general notes on renewing components
⇒ “1.5.1 General notes on renewing components”, page 79 .

Note

- *If there is only a small leak and refrigerant has only escaped slowly (e.g. via a point with a small leak), the amount of refrigerant oil lost and the amount of moisture entering is not sufficient to influence air conditioner operation after repair.*
- *The work marked * must only be performed if there is a major leak (e.g. following an accident).*

– Remove faulty component * ⇒ Heating, air conditioning; Rep. gr. 87 ; Refrigerant circuit (vehicle-specific Workshop Manual).

– Clean refrigerant circuit (flush with refrigerant R1234yf)*
⇒ “1.6 Cleaning refrigerant circuit”, page 95 .

Electrically driven air conditioner compressor

– Remove and clean electrically driven air conditioner compressor (flush with refrigerant R1234yf) *
⇒ “1.6 Cleaning refrigerant circuit”, page 95 and ⇒ Heating, air conditioning; Rep. gr. 87 ; Air conditioner compressor (vehicle-specific Workshop Manual).

Mechanically driven air conditioner compressor

– Remove air conditioner compressor.* ⇒ Heating, air conditioning; Rep. gr. 87 ; Air conditioner compressor (vehicle-specific Workshop Manual).

Protected by copyright. Copying for private or commercial purposes, in part or in whole, is not permitted unless authorised by AUDI AG. AUDI AG does not guarantee or accept any liability with respect to the correctness of information in this document. Copyright by AUDI AG.

– Remove oil drain plug -B-/-D- from air conditioner compressor -A-.*

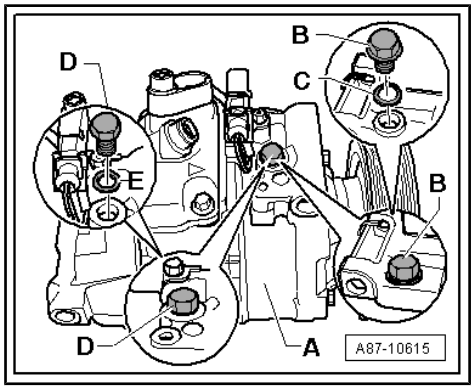

Note

- *The versions of the oil drain plug -B-/-D- and seal -C-/-E- differ depending on the manufacturer of the air conditioner compressor ⇒ Heating, air conditioning; Rep. gr. 87 ; Air conditioner compressor (vehicle-specific Workshop Manual).*
- *When installing oil drain plug -B-/-D-, observe tightening torque (dependent on manufacturer of air conditioner compressor and version of oil drain plug). On Denso and Delphi air conditioner compressors, for example, a seal is fitted at the oil drain plug (tightening torque: currently 30 Nm for Denso and 15 Nm for Delphi). On air conditioner compressors manufactured by Sanden or Zexel/Valeo, an O-ring or a seal is fitted at the oil drain plug depending on the version (tightening torque: currently 10 Nm for O-ring and seal).*
- *On Denso air conditioner compressors, for example, a seal -E- is fitted at the oil drain plug -D-; it must be renewed ⇒ Heating, air conditioning; Rep. gr. 87 ; Air conditioner compressor (vehicle-specific Workshop Manual) and ⇒ Electronic parts catalogue .*
- *On Sanden air conditioner compressors, for example, a seal -C- is fitted at the oil drain plug -B-; it must be renewed ⇒ Heating, air conditioning; Rep. gr. 87 ; Air conditioner compressor (vehicle-specific Workshop Manual) and ⇒ Electronic parts catalogue .*
- *If the seal/O-ring fitted at the oil drain plug cannot be supplied as a replacement part, the removed component can be re-installed as an exception; it must be checked for damage before being re-installed. If the removed seal/O-ring is damaged or deformed, it must be replaced by a commercially available component.*
- *After charging the refrigerant circuit, check the installed oil drain plug for leaks, e.g. with an electronic leak detector.*
- *To accelerate discharging of refrigerant oil, rotate air conditioner compressor e.g. via pulley or clutch plate of magnetic clutch.*

– Tip old refrigerant out of air conditioner compressor*
⇒ “1.5.4 Renewing air conditioner compressor without having to clean refrigerant circuit”, page 84 (disposal ⇒ VW/Audi ServiceNet).

All vehicles

– Pour full specified quantity of oil into air conditioner compressor or refrigerant circuit
⇒ “1.5.4 Renewing air conditioner compressor without having to clean refrigerant circuit”, page 84 and ⇒ Heating, air conditioning; Rep. gr. 00 ; Technical data (Approved refrigerant oils and capacities for refrigerant oil in vehicle-specific Workshop Manual).

Protected by copyright. Copying for private or commercial purposes, in part or in whole, is not permitted unless authorised by AUDI AG. AUDI AG does not guarantee or accept any liability with respect to the correctness of information in this document. Copyright by AUDI AG.

Note

- *Next, pour quantity of new refrigerant oil into air conditioner compressor that corresponds to quantity of refrigerant oil in replacement compressor ⇒ Heating, air conditioning; Rep. gr. 00 ; Technical data; Approved refrigerant oils and capacities for refrigerant oil (vehicle-specific Workshop Manual).*
- *Use different refrigerant oils and quantities for different air conditioner compressors ⇒ Heating, air conditioning; Rep. gr. 00 ; Technical data; Approved refrigerant oils and capacities for refrigerant oil (vehicle-specific Workshop Manual).*
- *To ensure lubrication of air conditioner compressor when it is started, pour at least 40 cm³ of refrigerant oil into air conditioner compressor. The rest can be poured e.g. into the new reservoir/receiver or a refrigerant line ⇒ Heating, air conditioning; Rep. gr. 00 ; Technical data; Approved refrigerant oils and capacities for refrigerant oil (vehicle-specific Workshop Manual).*
- *If dirt entered the air conditioner compressor when the refrigerant circuit was open (e.g. in an accident), renew air conditioner compressor ⇒ Heating, air conditioning; Rep. gr. 87 ; Air conditioner compressor (vehicle-specific Workshop Manual).*
- *Clean refrigerant circuit (flush with refrigerant R1234yf)**
  ⇒ "1.6 Cleaning refrigerant circuit", page 95 .

– Renew desiccant cartridge, receiver * ⇒ Heating, air conditioning; Rep. gr. 87 ; Refrigerant circuit (vehicle-specific Workshop Manual).

– Assemble, evacuate and re-charge refrigerant circuit
⇒ page 142 .

1.5.3 Renewing leaking or damaged components - charged refrigerant circuit (except for air conditioner compressor and receiver)

ected by copyright. Copying for private or commercial purposes, in part or in whole, is not permitted unless authorised by AUDI AG. AUDI AG does not guarantee or accept any liability with respect to the correctness of information in this document. Copyright by AUDI AG.

Refrigerant circuit still contains refrigerant (e.g. in the event of a minor leak)

- Observe general notes on renewing components
  ⇒ "1.5.1 General notes on renewing components", page 79 .

– Discharge refrigerant circuit ⇒ page 142 .

– Remove defective component, flush with compressed air and collect escaping refrigerant oil.

– Charge new component with amount of refrigerant oil blown out (plus 20 cm³ for evaporator, plus 10 cm³ for condenser, refrigerant lines and refrigerant hoses) as fresh refrigerant oil fill.

Note

Dispose of old refrigerant oil (observe local regulations) ⇒ VW/Audi ServiceNet .

– Assemble, evacuate and charge refrigerant circuit
⇒ page 142 .

1.5.4 Renewing air conditioner compressor without having to clean refrigerant circuit

Note

Cleaning the refrigerant circuit means flushing it with refrigerant R1234yf *⇒ "1.6 Cleaning refrigerant circuit", page 95* *.*

Protected by copyright. Copying for private or commercial purposes, in part or in whole, is not permitted unless authorised by AUDI AG. AUDI AG does not guarantee or accept any liability with respect to the correctness of information in this document. Copyright by AUDI AG.

- Observe general notes on renewing components ⇒ "1.5.1 General notes on renewing components", page 79 .

In the event of external damage following an accident (example)

– Discharge refrigerant circuit ⇒ "1.6 Cleaning refrigerant circuit", page 95 .

– Remove air conditioner compressor ⇒ Heating, air conditioning; Rep. gr. 87 ; Air conditioner compressor (vehicle-specific Workshop Manual).

Electrically driven air conditioner compressor

– Flush defective electrically driven air conditioner compressor to remove refrigerant oil (note down quantity of oil flushed out) ⇒ "2.11 Cleaning electrically driven air conditioner compressor", page 168 .

Note

- *If more than 75 % of the amount of the refrigerant oil in the replacement air conditioner compressor was flushed out of the defective air conditioner compressor, do not flush the replacement air conditioner compressor (a small residual quantity always remains in the air conditioner compressor; the quantity of refrigerant oil in the refrigerant circuit can be ignored).*
- *If less than 75 % of the specified refrigerant oil quantity is flushed out of the defective air conditioner compressor, the remaining oil is located in the refrigerant circuit components. To prevent overfilling with refrigerant oil, flush the refrigerant circuit or the electrically driven air conditioner compressor.*

– Flush refrigerant circuit or a new electrical driven air conditioner compressor to remove refrigerant oil ⇒ "1.6 Cleaning refrigerant circuit", page 95 and ⇒ "2.11 Cleaning electrically driven air conditioner compressor", page 168 .

– Dispose of refrigerant oil flushed out of the defective and new air conditioner compressor/refrigerant circuit ⇒ VW/Audi ServiceNet (observe local regulations).

Note

The electrically driven air conditioner compressor is designed so that it must be flushed to remove refrigerant oil (the refrigerant oil cannot be tipped out as it can in the case of mechanically driven air conditioner compressors with an oil drain plug *⇒ "1.5.2 Renewing leaking or damaged components - empty refrigerant circuit (except for air conditioner compressor and receiver)", page 81* *).*

– Only fill the replacement air conditioner compressor with the same amount of fresh refrigerant oil that was flushed out of the defective air conditioner compressor.

Note

- *For example, if 70 cm^3 of refrigerant oil has been flushed out of the defective air conditioner compressor and 140 cm^3 out of the replacement compressor (a small quantity of refrigerant oil remains in the air conditioner compressor and perhaps in the air conditioner service station), charge the compressor to be installed with 70 cm^3 of refrigerant oil (do not re-use oil flushed out of replacement compressor as it may have become contaminated in the air conditioner service station).*
- *Use different refrigerant oils and quantities for different air conditioner compressors ⇒ Heating, air conditioning; Rep. gr. 00 ; Technical data; Approved refrigerant oils and capacities for refrigerant oil (vehicle-specific Workshop Manual).*
- *If a larger quantity of refrigerant oil (more than approx. 40 cm^3) was flushed out of the defective air conditioner compressor, the remaining refrigerant oil can be poured into the evaporator, a refrigerant line or the reservoir/receiver/internal heat exchanger ⇒ Heating, air conditioning; Rep. gr. 87 ; Refrigerant circuit (vehicle-specific Workshop Manual) and ⇒ Heating, air conditioning; Rep. gr. 00 ; Technical data; Approved refrigerant oils and capacities for refrigerant oil (vehicle-specific Workshop Manual).*

Protected by copyright. Copying for private or commercial purposes, in part or in whole, is not permitted unless authorised by AUDI AG. AUDI AG does not guarantee or accept any liability with respect to the correctness of information in this document. Copyright by AUDI AG.

Mechanically driven air conditioner compressor

– Remove oil drain plug from air conditioner compressor ⇒ Heating, air conditioning; Rep. gr. 87 ; Refrigerant circuit (vehicle-specific Workshop Manual).

Note

There are different versions of the oil drain plug and the corresponding seal (a seal or an O-ring may be fitted; renew)
⇒ "1.5.2 Renewing leaking or damaged components - empty refrigerant circuit (except for air conditioner compressor and receiver)", page 81 *and ⇒ Electronic parts catalogue .*

– To accelerate discharging of refrigerant oil, rotate air conditioner compressor e.g. via clutch plate of magnetic clutch.

– Tip old refrigerant oil out of air conditioner compressor and dispose of it (observe local regulations) ⇒ VW/Audi ServiceNet .

– Remove oil drain plug from replacement air conditioner compressor, tip out refrigerant oil and only add same quantity of refrigerant oil as you have just tipped out of faulty air conditioner compressor
⇒ "1.5.2 Renewing leaking or damaged components - empty refrigerant circuit (except for air conditioner compressor and receiver)", page 81 .

Note

- *For example, if 50 cm^3 of refrigerant oil has been poured out of the defective air conditioner compressor and 100 cm^3 out of the replacement compressor (a small quantity of refrigerant oil remains in the air conditioner compressor), charge the compressor to be installed with 50 cm^3 of refrigerant oil (oil poured out of replacement compressor can be used).*
- *Use different refrigerant oils and quantities for different air conditioner compressors ⇒ Heating, air conditioning; Rep. gr. 00 ; Technical data; Approved refrigerant oils and capacities for refrigerant oil (vehicle-specific Workshop Manual).*
- *If a larger quantity of refrigerant oil (more than approx. 50 cm^3) was poured out of the defective air conditioner compressor, the remaining refrigerant oil can be poured into the evaporator or the reservoir/receiver/internal heat exchanger ⇒ Heating, air conditioning; Rep. gr. 87 ; Refrigerant circuit (vehicle-specific Workshop Manual) and ⇒ Heating, air conditioning; Rep. gr. 00 ; Technical data; Approved refrigerant oils and capacities for refrigerant oil (vehicle-specific Workshop Manual).*

Both versions

– Renew restrictor (only if installed in this refrigerant circuit).

– Assemble, evacuate and charge refrigerant circuit ⇒ page 142 .

1.5.5 Renewing air conditioner compressor due to leakage or internal damage

- Observe general notes on renewing components ⇒ “1.5.1 General notes on renewing components”, page 79 .

Vehicles with high-voltage system (hybrid vehicles)

– Note assessment of risk level of high-voltage system ⇒ Rep. gr. 00 ; Assessing high-voltage system risk level .

– Observe safety precautions when working on high-voltage system ⇒ “1.5 Safety precautions when working on vehicles with high-voltage system”, page 3 .

– Observe safety precautions when working in the vicinity of high-voltage components ⇒ “1.6 Safety precautions when working in the vicinity of high-voltage components”, page 4 .

All vehicles

Renewing air conditioner compressor, e.g. due to noise from compressor or no compressor output:

– Discharge refrigerant circuit ⇒ page 142 .

– Remove air conditioner compressor ⇒ Heating, air conditioning; Rep. gr. 87 ; Air conditioner compressor (vehicle-specific Workshop Manual).

– Clean refrigerant circuit (flush with refrigerant R1234yf) ⇒ “1.6 Cleaning refrigerant circuit”, page 95 .

Protected by copyright. Copying for private or commercial purposes, in part or in whole, is not permitted unless authorised by AUDI AG. AUDI AG does not guarantee or accept any liability with respect to the correctness of information in this document. Copyright by AUDI AG.

Note

- *In the event of internal (air conditioner compressor) damage, check refrigerant hoses and condenser. If e.g. swarf has entered, clean refrigerant hoses and condenser (flush with refrigerant R1234yf ⇒ "1.6 Cleaning refrigerant circuit", page 95) and renew refrigerant hoses if necessary.*
- *On certain vehicles (e.g. those with two evaporators), there may be a larger quantity of refrigerant oil in the refrigerant circuit than in the replacement compressor. If necessary, pour the residual quantity of refrigerant oil into the refrigerant circuit ⇒ Heating, air conditioning; Rep. gr. 87 ; Refrigerant circuit (vehicle-specific Workshop Manual), and ⇒ Heating, air conditioning; Rep. gr. 00 ; Technical data; Approved refrigerant oils and capacities for refrigerant oil (vehicle-specific Workshop Manual).*
- *In the event of a fault in the electronics of an electrically driven air conditioner compressor (e.g. control unit for air conditioner compressor - J842- faulty), do not flush the refrigerant circuit. In this case, the air conditioner compressor can be renewed without having to clean the refrigerant circuit ⇒ "1.5.4 Renewing air conditioner compressor without having to clean refrigerant circuit", page 84 .*

– Renew desiccant bag/desiccant cartridge (or reservoir/receiver) ⇒ Heating, air conditioning; Rep. gr. 87 ; Refrigerant circuit (vehicle-specific Workshop Manual).
– Check expansion valve for dirt and corrosion, and renew if necessary ⇒ Heating, air conditioning; Rep. gr. 87 ; Refrigerant circuit (vehicle-specific Workshop Manual).
– Assemble, evacuate and charge refrigerant circuit ⇒ page 142 .

1.5.6 Renewing desiccant cartridge/receiver after cleaning refrigerant circuit

Note

The receiver usually contains a desiccant cartridge or desiccant bag (depending on design of refrigerant circuit) ⇒ Heating, air conditioning; Rep. gr. 87 ; Refrigerant circuit (vehicle-specific Workshop Manual).

- Observe general notes on renewing components ⇒ "1.5.1 General notes on renewing components", page 79 .

Note

Cleaning the refrigerant circuit means flushing it with refrigerant R1234yf ⇒ "1.6 Cleaning refrigerant circuit", page 95 .

Due to moisture entering (refrigerant circuit open for lengthy period) or contamination (example)

– Discharge refrigerant circuit ⇒ page 150 .
– Remove air conditioner compressor ⇒ Heating, air conditioning; Rep. gr. 87 ; Air conditioner compressor (vehicle-specific Workshop Manual).

Protected by copyright. Copying for private or commercial purposes, in part or in whole, is not permitted unless authorised by AUDI AG. AUDI AG does not guarantee or accept any liability with respect to the correctness of information in this document. Copyright by AUDI AG.

– Eliminate cause of fault ⇒ Heating, air conditioning; Rep. gr. 87 ; Refrigerant circuit (vehicle-specific Workshop Manual).

– Clean refrigerant circuit (flush with refrigerant R1234yf) ⇒ “1.6 Cleaning refrigerant circuit”, page 95 .

Electrically driven air conditioner compressor

– Flush old refrigerant oil out of air conditioner compressor ⇒ “2.11 Cleaning electrically driven air conditioner compressor”, page 168 .

Mechanically driven air conditioner compressor

– Remove oil drain plug from air conditioner compressor ⇒ Heating, air conditioning; Rep. gr. 87 ; Air conditioner compressor (vehicle-specific Workshop Manual).

Note

Different versions of oil drain plug and corresponding seal; renewing
⇒ “1.5.2 Renewing leaking or damaged components - empty refrigerant circuit (except for air conditioner compressor and receiver)”, page 81 , ⇒ Heating, air conditioning; Rep. gr. 87 ; Refrigerant circuit (vehicle-specific Workshop Manual) and ⇒ Electronic parts catalogue

Protected by copyright. Copying for private or commercial purposes, in part or in whole, is not permitted unless authorised by AUDI AG. AUDI AG does not guarantee or accept any liability with respect to the correctness of information in this document. Copyright by AUDI AG.

– To accelerate discharging of refrigerant oil, rotate air conditioner compressor e.g. via pulley or clutch plate of magnetic clutch ⇒ Heating, air conditioning; Rep. gr. 87 ; Air conditioner compressor (vehicle-specific Workshop Manual).

– Pour old refrigerant oil out of air conditioner compressor ⇒ “1.5.4 Renewing air conditioner compressor without having to clean refrigerant circuit”, page 84 .

Note

Dispose of old refrigerant oil (observe local regulations) ⇒ VW/ Audi ServiceNet .

All air conditioner compressors

– Check expansion valve for dirt and corrosion, and renew if necessary ⇒ Heating, air conditioning; Rep. gr. 87 ; Refrigerant circuit (vehicle-specific Workshop Manual).

– Next, pour quantity of new refrigerant oil into air conditioner compressor that corresponds to quantity of refrigerant oil in replacement compressor (or specified quantity of refrigerant oil on vehicles with two evaporators) ⇒ Heating, air conditioning; Rep. gr. 00 ; Technical data; Approved refrigerant oils and capacities for refrigerant oil (vehicle-specific Workshop Manual).

Protected by copyright. Copying for private or commercial purposes, in part or in whole, is not permitted unless authorised by AUDI AG. AUDI AG does not guarantee or accept any liability with respect to the correctness of information in this document. Copyright by AUDI AG.

Note

- *Use different refrigerant oils and quantities for different air conditioner compressors ⇒ Heating, air conditioning; Rep. gr. 00 ; Technical data; Approved refrigerant oils and capacities for refrigerant oil (vehicle-specific Workshop Manual).*
- *To ensure lubrication of the air conditioner compressor when it is started, pour at least 40 cm^3 of refrigerant oil into the air conditioner compressor. The rest can be poured e.g. into a refrigerant line or a new reservoir/receiver/internal heat exchanger ⇒ Heating, air conditioning; Rep. gr. 87 ; Refrigerant circuit (vehicle-specific Workshop Manual) and ⇒ Heating, air conditioning; Rep. gr. 00 ; Technical data (vehicle-specific Workshop Manual).*
- *If dirt entered the air conditioner compressor when refrigerant circuit was open (e.g. in an accident), clean the refrigerant circuit and renew air conditioner compressor ⇒ "1.6 Cleaning refrigerant circuit", page 95 and ⇒ Heating, air conditioning; Rep. gr. 87 ; Air conditioner compressor (vehicle-specific Workshop Manual).*
- *In vehicles with two evaporators, there may be a larger quantity of refrigerant oil in the refrigerant circuit than in the replacement compressor. If necessary, pour the residual quantity of refrigerant oil into the refrigerant circuit ⇒ Heating, air conditioning; Rep. gr. 00 ; Technical data (vehicle-specific Workshop Manual).*

– Renew desiccant bag/desiccant cartridge (or receiver) ⇒ Heating, air conditioning; Rep. gr. 87 ; Refrigerant circuit (vehicle-specific Workshop Manual).

– Assemble, evacuate and charge refrigerant circuit ⇒ page 142 .

1.5.7 Renewing receiver without having to clean refrigerant circuit

Note

A desiccant cartridge or desiccant bag is usually installed in the receiver (depending on the design of the refrigerant circuit) ⇒ Heating, air conditioning; Rep. gr. 87 ; Refrigerant circuit (vehicle-specific Workshop Manual), and ⇒ Heating, air conditioning; Rep. gr. 00 ; Technical data; Approved refrigerant oils and capacities for refrigerant oil (vehicle-specific Workshop Manual).

- Observe general notes on renewing components ⇒ "1.5.1 General notes on renewing components", page 79 .

Note

Cleaning the refrigerant circuit means flushing it with refrigerant R1234yf ⇒ "1.6 Cleaning refrigerant circuit", page 95 .

- In the event of a leak, refrigerant has escaped but no dirt has entered the circuit (example)
- If a gas analysis reveals that there was contaminated refrigerant in the circuit, but there are no problems with the operation of the air conditioner ⇒ "2.3 Performing gas analysis for refrigerant", page 147

– Discharge refrigerant circuit ⇒ page 142 .

– Remove receiver ⇒ Heating, air conditioning; Rep. gr. 87 ; Refrigerant circuit (vehicle-specific Workshop Manual).

– Remove dirt from receiver.

– Weigh receiver (after removing it).

– Pour refrigerant oil into new receiver until it has reached weight of removed accumulator.

Protected by copyright. Copying for private or commercial purposes, in part or in whole, is not permitted unless authorised by AUDI AG. AUDI AG does not guarantee or accept any liability with respect to the correctness of information in this document. Copyright by AUDI AG.

– Install new receiver ⇒ Heating, air conditioning; Rep. gr. 87 ; Refrigerant circuit (vehicle-specific Workshop Manual).

– Assemble, evacuate and charge refrigerant circuit ⇒ page 142 .

1.5.8 Renewing desiccant cartridge/desiccant bag without having to clean refrigerant circuit

Note

A desiccant cartridge/desiccant bag is usually installed in the receiver (depending on the design of the refrigerant circuit) ⇒ Heating, air conditioning; Rep. gr. 87 ; Refrigerant circuit (vehicle-specific Workshop Manual).

♦ Observe general notes on renewing components ⇒ “1.5.1 General notes on renewing components”, page 79 .

Note

Cleaning the refrigerant circuit means flushing it with refrigerant R1234yf ⇒ “1.6 Cleaning refrigerant circuit”, page 95 .

♦ In the event of a leak, refrigerant has escaped but no dirt has entered the circuit (example)

♦ If a gas analysis reveals that there was contaminated refrigerant in the circuit, but there are no problems with the operation of the air conditioner ⇒ “2.3 Performing gas analysis for refrigerant”, page 147

– Discharge refrigerant circuit ⇒ page 142 .

– Renew desiccant cartridge/desiccant bag (or reservoir/receiver) ⇒ Heating, air conditioning; Rep. gr. 87 ; Refrigerant circuit (vehicle-specific Workshop Manual).

Note

If the desiccant cartridge/desiccant bag is permanently installed in a component (e.g. in condenser/receiver) and cannot be renewed separately, renew receiver or condenser ⇒ Heating, air conditioning; Rep. gr. 87 ; Refrigerant circuit (vehicle-specific Workshop Manual).

– Assemble, evacuate and charge refrigerant circuit ⇒ page 142 .

1.5.9 Removing/installing and renewing air conditioner compressor regulating valve - N280-

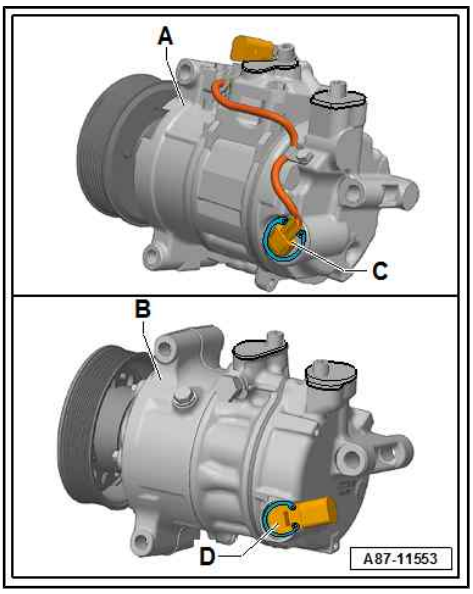

Note

- *Certain malfunctions of -N280- (e.g. sticking valve or open circuit in coil) can lead to problems with the air conditioner compressor (no cooling output from air conditioner, evaporator icing up etc.). If -N280- is the cause (and not the actual air conditioner compressor), the air conditioner compressor can be repaired by renewing -N280- -C, D-.*
- *-N280- -C, D- is not available as a replacement part for all air conditioner compressors. If -N280- cannot be obtained separately for a particular air conditioner compressor, the entire air conditioner compressor must be renewed ⇒ Electronic parts catalogue .*
- *-N280- is available in different versions and with different settings ⇒ Electronic parts catalogue . On the air conditioner compressor -A- (in this case a "Denso" air conditioner compressor), the connector for connection to the vehicle wiring harness is attached to -N280- -C- via a short wiring harness. On the air conditioner compressor -B- (in this case a "Sanden" air conditioner compressor), the connector for connection to the vehicle wiring harness is attached directly to -N280- -C-. The procedures for removing and installing versions -C and D - of -N280- for other air conditioner compressors (different version, different manufacturer) are essentially the same and usually only differ slightly from the procedure described below.*
- *If, after removing -N280- , the cause of the problem at -N280- is found to be dirt, swarf or some other form of air conditioner compressor abrasion, clean the refrigerant circuit and renew the air conditioner compressor*
  ⇒ "1.5.5 Renewing air conditioner compressor due to leakage or internal damage", page 86 and
  ⇒ "1.6 Cleaning refrigerant circuit", page 95

Removing

– Discharge refrigerant circuit
  ⇒ "2.1 Working with air conditioner service station", page 142 .

NOTICE

Risk of damage to air conditioner compressor when refrigerant circuit is empty

– **Never start the engine when the refrigerant circuit is empty.**

– Depending on vehicle and fitting location of air conditioner compressor, remove components impeding access to -N280- ⇒ Heating, air conditioning; Rep. gr. 87 ; Refrigerant circuit (vehicle-specific Workshop Manual).

Vehicles where it is not possible to detach or remove at least one of the two refrigerant lines and -N280- with the air conditioner compressor attached to the engine

– Remove air conditioner compressor ⇒ Heating, air conditioning; Rep. gr. 87 ; Air conditioner compressor (vehicle-specific Workshop Manual).

Protected by copyright. Copying for private or commercial purposes, in part or in whole, is not permitted unless authorised by AUDI AG. AUDI AG does not guarantee or accept any liability with respect to the correctness of information in this document. Copyright by AUDI AG.

Vehicles where it is possible to detach or remove at least one of the two refrigerant lines and -N280- with the air conditioner compressor attached to the engine (air conditioner compressor is not removed)

– Extract refrigerant.

CAUTION

Risk of frostbite from escaping pressurised refrigerant

Risk of frostbite on skin and other parts of the body

- **Put on protective gloves.**
- **Put on safety goggles.**
- **Extract the refrigerant and then immediately open up the refrigerant circuit.**
- **Extract the refrigerant again if more than 10 minutes have passed since the initial extraction and the refrigerant circuit has not been opened up. Renewed evaporation leads to the build-up of pressure in the refrigerant circuit.**

– Check pressure in refrigerant circuit again using pressure gauge of air conditioner service station .

♦ If the displayed pressure is above the ambient pressure (above approx. 1 bar absolute pressure), switch on the air conditioner service station again and extract the refrigerant that is causing pressure to build up.

– Detach one of the two refrigerant lines from air conditioner compressor ⇒ Heating, air conditioning; Rep. gr. 87 ; Air conditioner compressor (vehicle-specific Workshop Manual).

All vehicles

Protected by copyright. Copying for private or commercial purposes, in part or in whole, is not permitted unless authorised by AUDI AG. AUDI AG does not guarantee or accept any liability with respect to the correctness of information in this document. Copyright by AUDI AG.

Note

This and the following illustrations show -N280- -B- with a "Sanden" air conditioner compressor (type "6 SEU 14"). On these air conditioner compressors, the connector for connection to the vehicle wiring harness is attached directly to -N280- -B-. The removal and installation procedures for -N280- -B- may differ for other air conditioner compressors (different type, different manufacturer, e.g. "Denso": -N280- e.g. with short wiring harness to connector). However, the procedure is the same as the one described below for "Sanden" air conditioner compressors (type "6 SEU 14").

Protected by copyright. Copying for private or commercial purposes, in part or in whole, is not permitted unless authorised by AUDI AG. AUDI AG does not guarantee or accept any liability with respect to the correctness of information in this document. Copyright by AUDI AG

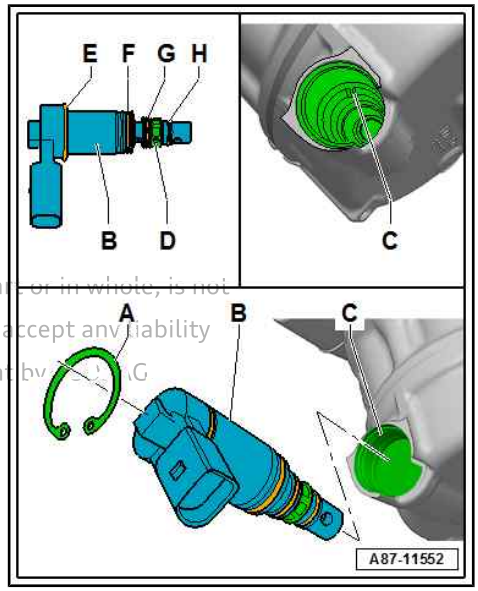

– If fitted, unfasten wiring connecting -N280- -B- to vehicle wiring harness connector from air conditioner compressor.

Note

On air conditioner compressors with air conditioning system magnetic clutch - N25- on which -N25- is activated via the same connector as -N280- -B-, eject the corresponding wires from the connector ⇒ Heating, air conditioning; Rep. gr. 87 ; Air conditioner compressor (vehicle-specific Workshop Manual).

– Clean air conditioner compressor in vicinity of -N280- -B-.
– Remove circlip -A-.
– Carefully pull -N280- -B- out of air conditioner compressor mounting -C-.
– After removal, check -N280- -B- and mounting on air conditioner compressor -C- for dirt.

Note

- *If strainer -D- on -N280- -B- or air conditioner compressor mounting -C- is very dirty (e.g. with swarf or dark, sticky abrasion), this indicates damage to air conditioner compressor. In this case, clean the refrigerant circuit and renew air conditioner compressor*
  ⇒ "1.5.5 Renewing air conditioner compressor due to leakage or internal damage", page 86 and
  ⇒ "1.6 Cleaning refrigerant circuit", page 95
- *If strainer -D- on -N280- -B- and air conditioner compressor mounting -C- is only slightly dirty (e.g. grey deposits from normal air conditioner compressor operation), a fault in -N280- -B- may be the cause of the malfunctioning air conditioner compressor.*

Installing

– Check air conditioner compressor mounting -C- for dirt and clean carefully and thoroughly with a clean, lint-free cloth if necessary.

NOTICE

Contamination of open air conditioner compressor or damage to sealing surfaces in mounting

Risk of repeated failure of regulating valve or air conditioner compressor

- **Always clean the air conditioner compressor carefully with a clean, lint-free cloth (do not use compressed air).**
- **When cleaning the mounting, make sure no dirt enters into the area beneath the sealing surface for the seal or into the ducts provided and that none of the sealing surfaces of the mounting are damaged.**

- Check air conditioner compressor mounting -C- for damage (also check for small scratches on surface; renew air conditioner compressor if damage is found).
- Check seals -E-, -F-, -G- and -H- on -N280- -B- for damage.
- Coat seals -E-, -F-, -G- and -H- on -N280- -B- with a little refrigerant oil and check they are correctly seated.
- Insert -N280- -B- as far as it will go in air conditioner compressor mounting -C-.
- Fit circlip -A-.
- Re-install all parts removed in reverse order.
- Assemble, evacuate and re-charge refrigerant circuit ⇒ page 142 .
- Check operation of air conditioner ⇒ Heating, air conditioning; Rep. gr. 87 ; Refrigerant circuit (vehicle-specific Workshop Manual).

Protected by copyright. Copying for private or commercial purposes, in part or in whole, is not permitted unless authorised by AUDI AG. AUDI AG does not guarantee or accept any liability with respect to the correctness of information in this document. Copyright by AUDI AG.

1.6 Cleaning refrigerant circuit

⇒ “1.6.1 General notes on cleaning refrigerant circuit ”, page 95

⇒ “1.6.2 Preparations for cleaning refrigerant circuit (flushing with refrigerant R1234yf)”, page 97

⇒ “1.6.3 Procedure for cleaning refrigerant circuit”, page 99

⇒ “1.6.4 Block diagrams for cleaning (flushing circuits) - refrigerant circuit with expansion valve and receiver”, page 100

⇒ “1.6.5 Block diagrams for cleaning (flushing circuits) - refrigerant circuit with restrictor and reservoir, vehicles without high-voltage system”, page 105

⇒ “1.6.6 Block diagrams for cleaning (flushing circuits) - vehicles with high-voltage system (without additional air conditioner functions)”, page 108

⇒ “1.6.7 Block diagrams for cleaning (flushing circuits) - vehicles with high-voltage system (with additional air conditioner functions such as heat pump operation)”, page 108

⇒ “1.6.8 Adapters for connecting flushing circuits”, page 108

⇒ “1.6.9 General notes on blowing out with compressed air or nitrogen”, page 134

⇒ “1.6.10 Blowing out refrigerant circuit with compressed air or nitrogen”, page 137

1.6.1 General notes on cleaning refrigerant circuit

Note

- *When working on the refrigerant circuit using the air conditioner service station , the high-voltage system does not usually have to be de-energised.*
- *As certain components need to be removed in order to clean (flush) the refrigerant circuit, the high-voltage system must be de-energised prior to beginning work ⇒ Electrical system, hybrid; Rep. gr. 93 ; De-energising high-voltage system .*
- *If there is reason to suspect that chemical substances (sealing additives) have been used to seal leaks in the refrigerant circuit which you intend to flush, do not connect the air conditioner service station to this refrigerant circuit and do not flush this refrigerant circuit.*
- *Chemical substances (sealing additives) used to seal leaks build up deposits in the refrigerant circuit which impair the function of the air conditioner and lead to malfunction of the air conditioner (and the air conditioner service station).*
- *Point out to customers that there are substances in their vehicle's air conditioner that have not been approved by Volkswagen/Audi and that you therefore cannot flush and service this air conditioner.*

Protected by copyright. Copying for private or commercial purposes, in part or in whole, is not permitted unless authorised by AUDI AG. AUDI AG does not guarantee or accept any liability with respect to the correctness of information in this document. Copyright by AUDI AG.

All vehicles

Note

- *Volkswagen/Audi objects to the use of chemical substances (sealing additives) for sealing leaks in refrigerant circuits.*
- *Chemical substances (sealing additives) used to seal leaks in refrigerant circuits usually react with the ambient air or the humidity in the ambient air; the deposits built up by chemical substances in refrigerant circuits (and the air conditioner service station) cause malfunctions at valves and other components if they come into contact with them. These deposits cannot be completely removed from the components affected (even by flushing). Therefore the refrigerant circuit can only be serviced by renewing all components that have come into contact with the chemical substances.*
- *Chemical substances (sealing additives) used to seal leaks in refrigerant circuits usually cannot be detected from the outside; mostly the stickers that are supposed to be attached to identify these chemical substances are missing. Therefore, act with caution when working on a vehicle whose past you are not familiar with.*
- *If no suitable air conditioner service station for refrigerant R1234yf is available, the refrigerant circuit may also be flushed with the air conditioner service station for refrigerant R134a and with refrigerant R134a. It is currently permitted to use refrigerant R134a for cleaning the refrigerant circuit ⇒ Air conditioner with refrigerant R134a; Rep. gr. 87 ; Refrigerant circuit (Working with the air conditioner service station).*
- *If the gas analysis reveals that the refrigerant R1234yf is contaminated with another gas, it must be extracted from the refrigerant circuit and disposed of as a gas of unknown composition, in accordance with legal provisions ⇒ VW/Audi ServiceNet and*
  ⇒ "2.13 Decanting contaminated refrigerant into recycling cylinder for analysis, treatment or disposal", page 175 .
- *Contaminated refrigerant can lead to the generation of breakdown products that accumulate in the refrigerant oil and cannot be extracted with the refrigerant. In this case, remove the contaminated refrigerant oil by flushing it out of the refrigerant circuit with refrigerant.*

- The cleanest, most environmentally responsible method of removing moisture, contaminants (e.g. abraded material from a defective air conditioner compressor) and old refrigerant oil is to clean (flush) the refrigerant circuit with refrigerant R1234yf. This conserves refrigerant and does not require extensive repair work.

Clean (flush) the refrigerant circuit with refrigerant R1234yf:

– If there is any dirt or similar in the circuit.

– If the vacuum reading does not remain constant during evacuation of a refrigerant circuit where there are no leaks (there is moisture in the refrigerant circuit which is building up pressure).

– If the refrigerant circuit has been left open for longer than the normal assembly time (e.g. following an accident).

– If pressure and temperature measurements in the refrigerant circuit indicate that there is moisture in the circuit.

– If it is uncertain how much refrigerant oil is in the refrigerant circuit.

Reproduced by copyright. Copying for private or commercial purposes, in part or in whole, is not permitted unless authorised by AUDI AG. AUDI AG does not guarantee or accept any liability with respect to the correctness of information in this document. Copyright by AUDI AG.

Protected by copyright. Copying for private or commercial purposes, in part or in whole, is not permitted unless authorised by AUDI AG. AUDI AG does not guarantee or accept any liability with respect to the correctness of information in this document. Copyright by AUDI AG.

– In certain circumstances, if contaminated refrigerant R1234yf has been poured into the refrigerant circuit
⇒ “1.5 Renewing components”, page 79 and
⇒ “2.3 Performing gas analysis for refrigerant”, page 147 .

Note

If contaminated refrigerant has been detected and internal damage to refrigerant circuit components has been found (e.g. corrosion on inside of refrigerant lines or detached inner layer in refrigerant hoses), it might not be enough to flush the refrigerant circuit. In this case, all components of the refrigerant circuit must be renewed (added gas caused severe damage to components).

– If the air conditioner compressor had to be renewed due to internal damage (e.g. noise or no output)
⇒ “1.5 Renewing components”, page 79

– If stipulated by the vehicle-specific Workshop Manual after renewing certain components

Tools required

♦ Air conditioner service station with flushing kit (these air conditioner service stations have the additional function “Flush refrigerant circuit” and the necessary refrigerant circuit flushing kit) ⇒ Electronic parts catalogue .

♦ Adapter set for refrigerant circuits ⇒ page 108 and ⇒ Electronic parts catalogue

Note

♦ *If no air conditioner service station with flushing kit is available in your workshop (⇒ Electronic parts catalogue) and depending on the version of your air conditioner service station , the refrigerant circuit can also be flushed using the refrigerant circuit flushing kit (⇒ Electronic parts catalogue); however, flushing must then be performed manually* *⇒ page 173* *.*

♦ *The adapter set for refrigerant circuits also contains a short filler hose with 5/8 -18 UNF connections and a large inside diameter (commercially available).*

1.6.2 Preparations for cleaning refrigerant circuit (flushing with refrigerant R1234yf)

– Discharge refrigerant circuit
⇒ “2.4 Discharging refrigerant circuit”, page 150 .

– Remove air conditioner compressor ⇒ Heating, air conditioning; Rep. gr. 87 ; Refrigerant circuit (vehicle-specific Workshop Manual).

Vehicle with restrictor and reservoir

– Remove restrictor (certain vehicles only) and re-connect lines ⇒ Heating, air conditioning; Rep. gr. 87 ; Refrigerant circuit (vehicle-specific Workshop Manual).

– Remove reservoir (certain vehicles only) and re-connect lines (to do so, use adapter and filler hose from adapter set for refrigerant circuits)
⇒ “1.6.8 Adapters for connecting flushing circuits”, page 108
and ⇒ Heating, air conditioning; Rep. gr. 87 ; Refrigerant circuit (vehicle-specific Workshop Manual).

Note

Although it is possible to flush the reservoir, its large internal volume means that it may hold too much liquid refrigerant. When this refrigerant is extracted, the reservoir ices up severely, the refrigerant only evaporates very slowly and the extraction process takes too long.

Vehicle with expansion valve and receiver

– If it is possible and necessary with this refrigerant circuit (see notes), remove receiver or desiccant cartridge from receiver (certain vehicles only) and re-connect lines (to do so, use adapter and filler hose from adapter set for refrigerant circuits) ⇒ "1.6.8 Adapters for connecting flushing circuits", page 108 and ⇒ Heating, air conditioning; Rep. gr. 87 ; Refrigerant circuit (vehicle-specific Workshop Manual).

Protected by copyright. Copying for private or commercial purposes, in part or in whole, is not permitted unless authorised by AUDI AG. AUDI AG does not guarantee or accept any liability with respect to the correctness of information in this document. Copyright by AUDI AG.

Note

- *Depending on the design, the receiver can be flushed (if necessary, remove desiccant cartridge installed in receiver)* *⇒ "1.6.8 Adapters for connecting flushing circuits", page 108* *and ⇒ Heating, air conditioning; Rep. gr. 87 ; Refrigerant circuit (vehicle-specific Workshop Manual).*
- *If the receiver is attached to the condenser, it must not be removed for flushing (its design makes it suitable for flushing, and it is only renewed after flushing)* *⇒ "1.6.8 Adapters for connecting flushing circuits", page 108* *and ⇒ Heating, air conditioning; Rep. gr. 87 ; Refrigerant circuit (vehicle-specific Workshop Manual).*
- *For condensers with an integrated receiver/desiccant cartridge that cannot be renewed separately or are not available as separate replacement parts, the condenser must be renewed after it has been flushed. On these vehicles, renew the condenser together with the receiver ⇒ Heating, air conditioning; Rep. gr. 87 ; Refrigerant circuit (vehicle-specific Workshop Manual) and ⇒ Electronic parts catalogue .*
- *Depending on the version, receivers on which the desiccant cartridge can be renewed separately may be provided with an additional filter element which may have to be renewed together with the desiccant cartridge.*

– Vehicles with desiccant cartridge in receiver at condenser (certain vehicles only): Remove desiccant cartridge and reseal opening at receiver ⇒ Heating, air conditioning; Rep. gr. 87 ; Refrigerant circuit (vehicle-specific Workshop Manual).

– Remove expansion valve (certain vehicles only) and install adapter from adapter set for refrigerant circuits instead ⇒ "1.6.8 Adapters for connecting flushing circuits", page 108 and ⇒ Heating, air conditioning; Rep. gr. 87 ; Refrigerant circuit (vehicle-specific Workshop Manual).

Note

If there is no suitable adapter for the expansion valve in the adapter set for refrigerant circuits , the expansion valve removed can also be drilled open (the old expansion valve generally has to be renewed and is therefore no longer needed).

– Take care not to damage sealing surfaces of expansion valve. Damaged sealing surfaces can lead to escaping refrigerant.

– Drill open expansion valve.

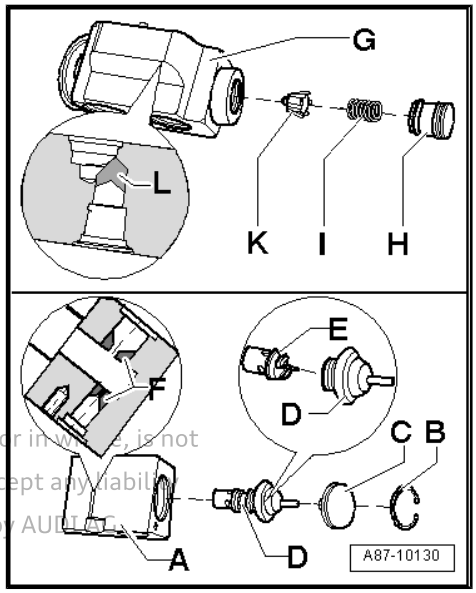

Note

- *Before drilling open, remove control element and drill open expansion valve e.g. with a suitable drill bit (diameter e.g. 6.0 mm).*
- *Depending on version, some parts may need to be removed from expansion valve before drilling.*
- *There are different expansion valve versions with different designs. On version -A-, for example, parts -B-, -C- and -D- must be removed. Part -E- (control element) must then be removed from part -D-. Then drill open expansion valve in area -F- using a suitable drill bit.*
- *On version -G-, for example, parts -H-, -I- and -K- must be removed; then drill out area -L- using a suitable drill bit.*

Protected by copyright. Copies or extracts may not be made in part or in whole, is not permitted unless authorised by AUDI AG. AUDI AG does not guarantee or accept any liability with respect to the correctness of information in this document. Copyright by AUDI AG.

– Remove swarf and chips from drilled expansion valve.

– Re-install parts -B-, -C- and -D- (version -A-) or part -H- (version -G-).

Note

On vehicles with two evaporators, the circuit to the second evaporator must be separated from the circuit of the first evaporator and flushed in a separate operation
⇒ "1.6.8 Adapters for connecting flushing circuits", page 108 *and*
⇒ Heating, air conditioning; Rep. gr. 87 ; Refrigerant circuit (vehicle-specific Workshop Manual).

- Clean (flush) refrigerant circuit
⇒ "2.12 Cleaning refrigerant circuit", page 171 .

1.6.3 Procedure for cleaning refrigerant circuit

Note

The procedure is performed automatically according to the programme on the air conditioner service station ⇒ Operating instructions for air conditioner service station .

- After it is switched on, first evacuate the flushing circuit (refrigerant circuit with connecting hoses and refrigerant circuit flushing kit) and check the refrigerant circuit for leaks (depending on the version of the air conditioner service station , you may need to switch to the next step manually).
- After the refrigerant circuit has been evacuated to check for leaks, a specific small amount of refrigerant is now added to check that the flushing/refrigerant circuit is assembled correctly (pressure test).
- After the pressure test, extract the refrigerant, evacuate the refrigerant circuit again if necessary and start the cleaning (flushing) process.
- A specified quantity of refrigerant (e.g. 3 kg, depending on interior volume of flushing circuit) is added to the refrigerant circuit via the high-pressure side of the air conditioner service

station (against the normal direction of flow during air conditioner operation and therefore on the low-pressure side of the vehicle refrigerant circuit). Alternatively, pour in sufficient refrigerant until the refrigerant circuit and sight glasses of the refrigerant circuit flushing kit are completely full of liquid refrigerant (depending on the version of the R1234yf or R134a air conditioner service station , the system detects e.g. that no more refrigerant is being supplied over a certain time).

- Once the specified quantity of refrigerant has been added, the heater of the refrigerant circuit flushing kit may be switched on, for example, depending on the version of the air conditioner service station and the refrigerant circuit flushing kit (only if the refrigerant is extracted in gaseous form from the refrigerant circuit flushing kit).
- After the refrigerant has been extracted, the heater of the refrigerant circuit flushing kit is switched off (if fitted). Depending on the version, the refrigerant circuit may be briefly evacuated again and, following evacuation, the refrigerant oil extracted from the refrigerant circuit is separated by the air conditioner service station .
- The refrigerant charging, extraction (and evacuation) process is repeated three times (i.e. it is performed a total of four times).
- The flushing circuit is evacuated after the fourth extraction procedure, depending on the version of the air conditioner service station .

1.6.4 Block diagrams for cleaning (flushing circuits) - refrigerant circuit with expansion valve and receiver

- With one or two evaporators
- With or without high-voltage system

Protected by copyright. Copying for private or commercial purposes, in part or in whole, is not permitted unless authorised by AUDI AG. AUDI AG does not guarantee or accept any liability with respect to the correctness of information in this document. Copyright by AUDI AG.

Note

- *The arrows in the diagrams below indicate the direction of flow of refrigerant during flushing (during flushing, the refrigerant flows in the opposite direction to air conditioner operation; the high-pressure side of the air conditioner service station is therefore connected to the low-pressure connection of the refrigerant circuit to the air conditioner compressor).*
- *This block diagram shows a refrigerant circuit with expansion valve, receiver and a second evaporator (optional extra for certain vehicles).*
- *On vehicles with expansion valve and receiver, the expansion valve is removed and replaced with an adapter. Depending on the vehicle, the receiver is also removed and the pipe connections to the receiver are connected using two adapters and a filler hose.*
- *On vehicles with only one evaporator, the components from item "16" onwards are not fitted / are not required.*
- *Depending on the design of the air conditioner service station , non-return valves may be fitted between the refrigerant circuit and the air conditioner service station (to guarantee the correct direction of refrigerant flow when flushing).*
- *The adapters from the adapter set for refrigerant circuits have a 5/8 -18 UNF thread; to enable the filler hoses of the R1234yf air conditioner service station to be connected, use additional adapters from the adapter set for refrigerant circuits ⇒ Electronic parts catalogue .*
- *On vehicles with high-voltage system, electrically operated valves are installed in the refrigerant circuit; they must be removed for cleaning (flushing) and replaced with manual shut-off valves or adapters ⇒ Heating, air conditioning; Rep. gr. 87 ; Refrigerant circuit (vehicle-specific Workshop Manual).*

Protected by copyright. Copying for private or commercial purposes, in part or in whole, is not permitted unless authorised by AUDI AG. AUDI AG does not guarantee or accept any liability with respect to the correctness of information in this document. Copyright by AUDI AG.

Protected by copyright. Copying for private or commercial purposes, in part or in whole, is not permitted unless authorised by AUDI AG. AUDI AG does not guarantee or accept any liability with respect to the correctness of information in this document. Copyright by AUDI AG.

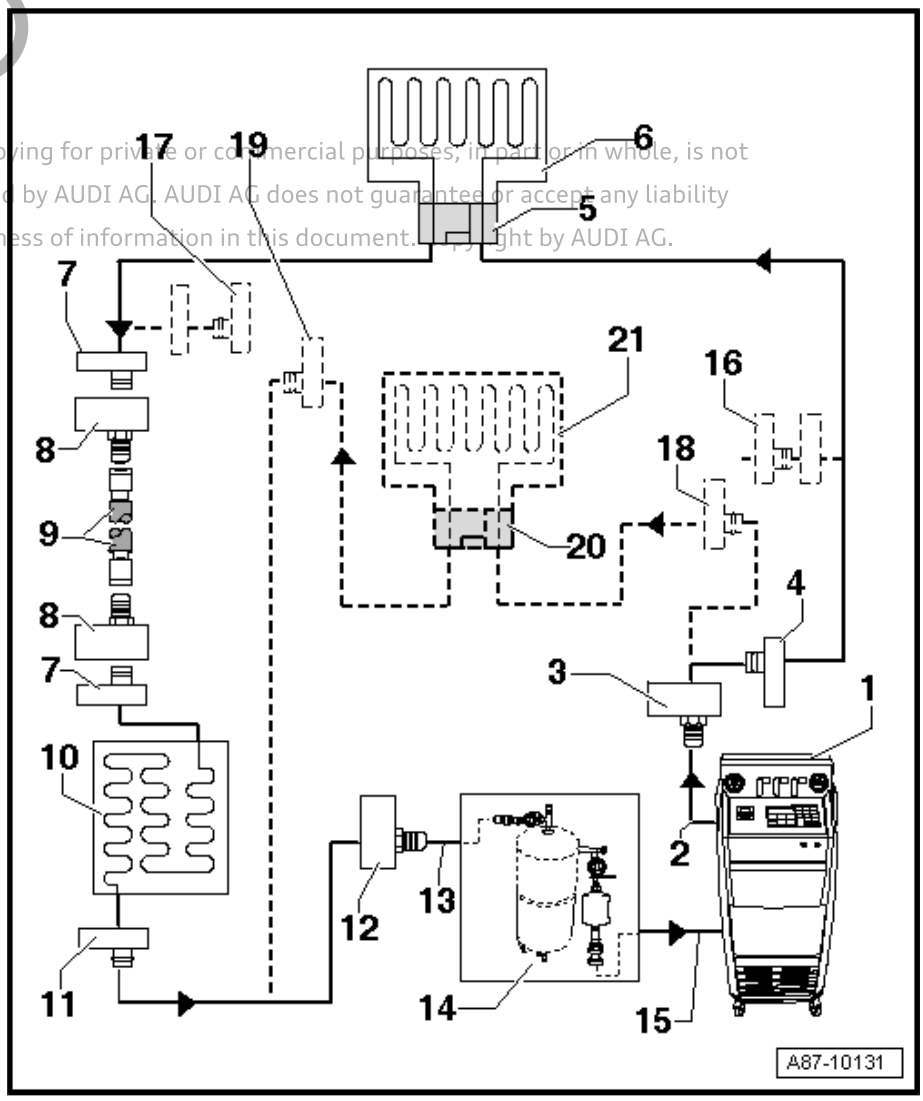

1 - Air conditioner service station

- With electronics and a flushing program, air conditioner service station with flushing kit ⇒ Electronic parts catalogue (Tools; Workshop equipment/tools; Air conditioner/heater)
- If an air conditioner service station without a flushing programme is used, perform the process manually (evacuation, 4x flushing with at least 3 kg of refrigerant each time, extraction of refrigerant again, evacuation)

2 - Refrigerant hose of air conditioner service station

- From high-pressure side of air conditioner service station (generally red coloured) to connection for low-pressure side of air conditioner compressor at refrigerant circuit (larger diameter)

3 - Adapter for connection (low-pressure side) at refrigerant circuit

- Different versions depending on vehicle ⇒ “1.6.8 Adapters for connecting flushing circuits”, page 108
- Use adapter - VAS 6338/48- between refrigerant hose -2- and adapter -3-.
- From adapter set for refrigerant circuits
- Depending on version of adapter, an additional adapter may be required for connecting filler hose of air conditioner service station .

Note

- *The filler hose for the air conditioner service station has an M12 x 1.5 6G outer thread according to SAE J639. The adapter for the connection on the low-pressure side has a 5/8 -18 UNF outer thread. Therefore, in order to connect the two components an additional adapter is required ⇒ Electronic parts catalogue (Tools; Workshop equipment/ tools; Air conditioner/heater)*

- *In order to achieve the highest possible flow speed, the service coupling for the filler hose is removed for flushing (there are constrictions in the service coupling that would greatly reduce the flow speed).*

4 - Connection (low-pressure side) at refrigerant circuit

- ❑ Different versions depending on vehicle ⇒ "1.6.8 Adapters for connecting flushing circuits", page 108

5 - Adapter for removed expansion valve

- ❑ Different versions depending on vehicle ⇒ "1.6.8 Adapters for connecting flushing circuits", page 108
- ❑ From adapter set for refrigerant circuits ⇒ Electronic parts catalogue (Tools; Workshop equipment/tools; Air conditioner/heater)

6 - Evaporator

7 - Connection to receiver

- ❑ Different versions depending on vehicle ⇒ "1.6.8 Adapters for connecting flushing circuits", page 108
- ❑ Not fitted on vehicles with a desiccant cartridge in the receiver at the condenser or with a receiver installed in the condenser ⇒ Heating, air conditioning; Rep. gr. 87 ; Refrigerant circuit (vehicle-specific Workshop Manual).

8 - Adapter for bridging removed receiver

- ❑ Not necessary on all vehicles
- ❑ Different versions depending on vehicle ⇒ "1.6.8 Adapters for connecting flushing circuits", page 108
- ❑ From adapter set for refrigerant circuits

9 - Filler hose for refrigerant

- ❑ E.g. filler hose from adapter set for refrigerant circuits ⇒ "1.6.8 Adapters for connecting flushing circuits", page 108

10 - Condenser

- ❑ If the receiver is attached directly to the condenser, flush the system before removing and renewing the receiver ⇒ Heating, air conditioning; Rep. gr. 87 ; Refrigerant circuit (vehicle-specific Workshop Manual).
- ❑ If a receiver with desiccant cartridge is fitted at the condenser, the desiccant cartridge must be removed (seal receiver at or in condenser again following removal) ⇒ Heating, air conditioning; Rep. gr. 87 ; Refrigerant circuit (vehicle-specific Workshop Manual).

Note

On certain vehicles, the receiver is integrated into the condenser, and the desiccant cartridge cannot be renewed separately or is not available separately. On these vehicles, renew the condenser together with the receiver / desiccant cartridge after flushing ⇒ Heating, air conditioning; Rep. gr. 87 ; Refrigerant circuit (vehicle-specific Workshop Manual) and ⇒ Electronic parts catalogue .

11 - Connection (high-pressure side) at refrigerant circuit

- ❑ Different versions depending on vehicle ⇒ "1.6.8 Adapters for connecting flushing circuits", page 108

12 - Adapter for connection (high-pressure side) at refrigerant circuit

- ❑ Different versions depending on vehicle ⇒ "1.6.8 Adapters for connecting flushing circuits", page 108
- ❑ From adapter set for refrigerant circuits

Protected by copyright. Copying for private or commercial purposes, in part or in whole, is not permitted unless authorised by AUDI AG. AUDI AG does not guarantee or accept any liability with respect to the correctness of information in this document. Copyright by AUDI AG.

13 - Filler hose to refrigerant circuit flushing kit

- ❑ From connection (high-pressure side) of air conditioner compressor at refrigerant circuit (smaller diameter) to inlet of flushing kit for refrigerant circuits

14 - Refrigerant circuit flushing kit

- ❑ Different versions and different design of refrigerant circuit flushing kit ⇒ Electronic parts catalogue (Tools; Workshop equipment/tools; Air conditioner/heater)
- ❑ With filter, sight glass, safety valve, heater, refrigerant vessel etc. (depending on version)
- ❑ Depending on the design of the air conditioner service station and the refrigerant circuit flushing kit, a non-return valve may be fitted at the outlet of the refrigerant circuit flushing kit (to guarantee the correct direction of refrigerant flow when flushing)
- ❑ Depending on the flushing kit, the outlet to the air conditioner service station may have a 5/8 -18 UNF external thread or a connection for an R134a or R1234yf high-pressure service coupling.

Note

Protected by copyright. Copying, for private or commercial purposes, in part or in whole, is not permitted unless authorised by AUDI AG. AUDI AG does not guarantee or accept any liability with respect to the correctness of information in this document. Copyright by AUDI AG.

- ♦ *To enable the flushing kit to be connected to the air conditioner service station , additional adapters are required for flushing kits with a 5/8 -18 UNF external thread or a connection for an R134a low-pressure service coupling, in order to connect the R1234yf low-pressure service coupling or the filler hose to the air conditioner service station (with M12 x 1.5 6G external thread according to SAE J639) to the outlet of the flushing kit.*
- ♦ *The filler hose of the air conditioner service station has an M12 x 1.5 6G external thread according to SAE J639. Depending on the version, the refrigerant circuit flushing kit may have a service connection for a low-pressure service coupling according to SAE J639 for refrigerant R1234yf, an M12 x 1.5 6G internal thread according to SAE J639, a service connection for an R134a low-pressure service coupling, or a 5/8 -18 UNF external thread. Therefore, an additional adapter may be required in order for both components to be connected ⇒ Electronic parts catalogue .*
- ♦ *As the air conditioner service station only extracts the refrigerant at a low flow speed, the low-pressure service coupling can be used here.*

15 - Refrigerant hose of air conditioner service station

- ❑ From low-pressure side of air conditioner service station (usually blue) to outlet of refrigerant circuit flushing kit

16 - Adapter for sealing outlet to second evaporator

- ❑ Only required for certain vehicles with “second evaporator” as optional extra
- ❑ From adapter set for refrigerant circuits

17 - Adapter for sealing outlet to second evaporator

- ❑ Only required for certain vehicles with “second evaporator” as optional extra
- ❑ From adapter set for refrigerant circuits

18 - Connection (low-pressure side) at refrigerant circuit to second evaporator

- ❑ Different versions depending on vehicle ⇒ “1.6.8 Adapters for connecting flushing circuits”, page 108
- ❑ Only fitted on certain vehicles with “second evaporator” as optional extra

19 - Connection (high-pressure side) at refrigerant circuit to second evaporator

- ❑ Different versions depending on vehicle ⇒ “1.6.8 Adapters for connecting flushing circuits”, page 108
- ❑ Only fitted on certain vehicles with “second evaporator” as optional extra

20 - Adapter for expansion valve (removed) at second evaporator

- ❑ Different versions depending on vehicle ⇒ “1.6.8 Adapters for connecting flushing circuits”, page 108
- ❑ Only required for certain vehicles with “second evaporator” as optional extra
- ❑ From adapter set for refrigerant circuits

21 - Second evaporator

- ❑ Only fitted on certain vehicles with “second evaporator” as optional extra

Protected by copyright. Copying for private or commercial purposes, in part or in whole, is not permitted unless authorised by AUDI AG. AUDI AG does not guarantee or accept any liability with respect to the correctness of information in this document. Copyright by AUDI AG.

1.6.5 Block diagrams for cleaning (flushing circuits) - refrigerant circuit with restrictor and reservoir, vehicles without high-voltage system

Note

- *On vehicles with a restrictor and reservoir, the restrictor and reservoir are removed, and the lines unfastened to remove the restrictor are assembled again. The line connections to the reservoir removed are connected together with two adapters and the filler hose (from adapter set for refrigerant circuits).*
- *Volkswagen/Audi do not currently plan to use this design of the refrigerant circuit (with restrictor and reservoir).*
- *The arrows in the diagrams below indicate the direction of flow of refrigerant during flushing (during flushing, the refrigerant flows in the opposite direction to air conditioner operation; the high-pressure side of the air conditioner service station is therefore connected to the low-pressure connection of the refrigerant circuit to the air conditioner compressor).*
- *Depending on the design of the air conditioner service station , non-return valves may be fitted between the refrigerant circuit and the air conditioner service station (to guarantee the correct direction of refrigerant flow when flushing).*
- *The adapters from the adapter set for refrigerant circuits have a 5/8 -18 UNF thread; to enable the filler hoses of the R1234yf air conditioner service station to be connected, use additional adapters from the adapter set for refrigerant circuits .*

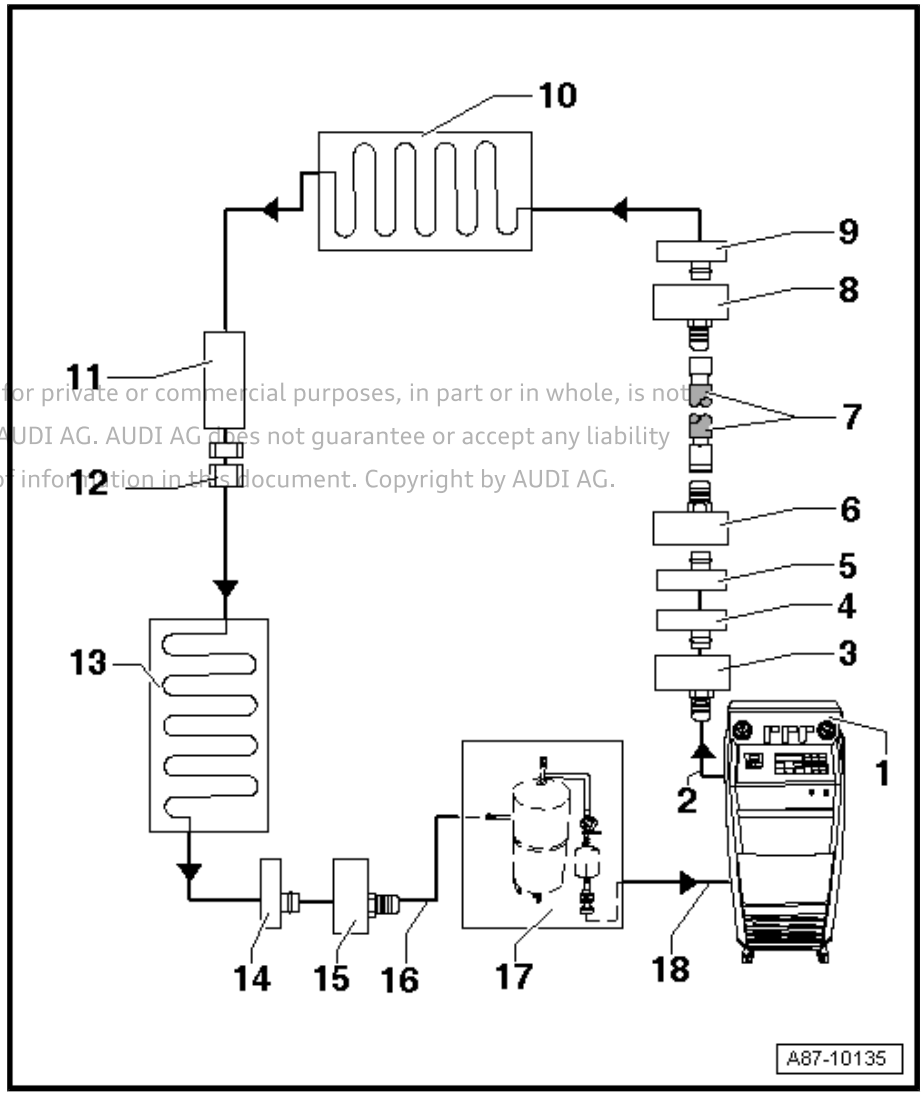

1 - Air conditioner service station

- With electronics and a flushing program, e.g. air conditioner service station with flushing kit ⇒ Electronic parts catalogue (Tools; Workshop equipment/tools; Air conditioner/heater)
- If an air conditioner service station without a flushing programme is used, perform the process manually (evacuation, 4x flushing with at least 3 kg of refrigerant each time, extraction of refrigerant again, evacuation)

Protected by copyright. Copying for private or commercial purposes, in part or in whole, is not permitted unless authorised by AUDI AG. AUDI AG does not guarantee or accept any liability with respect to the correctness of information in this document. Copyright by AUDI AG.

2 - Refrigerant hose of air conditioner service station

- From high-pressure side of air conditioner service station (generally red coloured) to connection for low-pressure side of air conditioner compressor at refrigerant circuit (larger diameter)

3 - Adapter for connection (low-pressure side) at refrigerant circuit

- Different versions depending on vehicle ⇒ “1.6.8 Adapters for connecting flushing circuits”, page 108
- Use adapter - VAS 6338/48- between refrigerant hose -2- and adapter -3-.
- From adapter set for refrigerant circuits

Note

- *The filler hose for the air conditioner service station has an M12 x 1.5 6G outer thread according to SAE J639. The adapter for the connection on the low-pressure side has a 5/8 -18 UNF outer thread. Therefore, an additional adapter is required in order for both components to be connected ⇒ Electronic parts catalogue .*
- *In order to achieve the highest possible flow speed, the service coupling for the filler hose is removed for flushing (there are constrictions in the service coupling that would greatly reduce the flow speed).*

4 - Connection (low-pressure side) at refrigerant circuit

- ❑ Different versions depending on vehicle ⇒ “1.6.8 Adapters for connecting flushing circuits”, page 108
- ❑ At refrigerant line from air conditioner compressor to reservoir

5 - Connection to reservoir

- ❑ Different versions depending on vehicle ⇒ “1.6.8 Adapters for connecting flushing circuits”, page 108
- ❑ At refrigerant line from air conditioner compressor to reservoir

6 - Adapter for bridging reservoir after removal

- ❑ Different versions depending on vehicle ⇒ “1.6.8 Adapters for connecting flushing circuits”, page 108
- ❑ From adapter set for refrigerant circuits

7 - Filler hose for refrigerant

- ❑ E.g. filler hose from adapter set for refrigerant circuits
  ⇒ “1.6.8 Adapters for connecting flushing circuits”, page 108

8 - Adapter for bridging reservoir after removal

- ❑ Different versions depending on vehicle ⇒ “1.6.8 Adapters for connecting flushing circuits”, page 108
- ❑ From adapter set for refrigerant circuits

9 - Connection to reservoir

- ❑ Different versions depending on vehicle ⇒ “1.6.8 Adapters for connecting flushing circuits”, page 108

10 - Evaporator

11 - Fitting location for restrictor

- ❑ Restrictor removed.
- ❑ Removing restrictor ⇒ Heating, air conditioning; Rep. gr. 87 ; Refrigerant circuit (vehicle-specific Workshop Manual)

12 - Bolt connection in refrigerant line

- ❑ Screw back together after removing restrictor ⇒ Heating, air conditioning; Rep. gr. 87 ; Refrigerant circuit (vehicle-specific Workshop Manual).

13 - Condenser

14 - Connection (high-pressure side) at refrigerant circuit

- ❑ Different versions depending on vehicle ⇒ “1.6.8 Adapters for connecting flushing circuits”, page 108

15 - Adapter for connection (high-pressure side) at refrigerant circuit

- ❑ Different versions depending on vehicle ⇒ “1.6.8 Adapters for connecting flushing circuits”, page 108
- ❑ From adapter set for refrigerant circuits

Protected by copyright. Copying for private or commercial purposes, in part or in whole, is not permitted unless authorised by AUDI AG. AUDI AG does not guarantee or accept any liability with respect to the correctness of information in this document. Copyright by AUDI AG.

16 - Filler hose to refrigerant circuit flushing kit

- ❑ From connection (high-pressure side) of air conditioner compressor at refrigerant circuit (smaller diameter) to inlet of flushing kit for refrigerant circuits

17 - Refrigerant circuit flushing kit

- ❑ Different versions and different design of refrigerant circuit flushing kit ⇒ Electronic parts catalogue (Tools; Workshop equipment/tools; Air conditioner/heater)
- ❑ With filter, sight glass, safety valve, heater, refrigerant vessel etc. (depending on version)
- ❑ Depending on the design of the air conditioner service station and the refrigerant circuit flushing kit, a non-return valve may be fitted at the outlet of the refrigerant circuit flushing kit (to guarantee the correct direction of refrigerant flow when flushing)
- ❑ Depending on the design of the refrigerant circuit flushing kit, a connection for a service coupling for refrigerant circuits may be fitted at the outlet (and possibly also at the inlet) of the flushing kit (instead of a 5/8-18 UNF external thread). If a service connection with valve is fitted at the outlet of the flushing kit, this valve must be fully open when the service connection is connected (if the valve is not fully open this creates a constriction). If a service connection with valve is fitted at the inlet of the flushing kit, the inlet must be modified so that the refrigerant hose from the vehicle can be connected directly (a service coupling and a valve in the inlet of the flushing kit create a constriction; this obstructs the flow of refrigerant into the flushing kit and therefore impairs the flushing process).

18 - Refrigerant hose of air conditioner service station

- ❑ From low-pressure side of air conditioner service station (usually blue) to outlet of refrigerant circuit flushing kit

1.6.6 Block diagrams for cleaning (flushing circuits) - vehicles with high-voltage system (without additional air conditioner functions)

Note

- *The refrigerant circuit is cleaned in two flushing cycles (first the section with the evaporator in the front heater and air conditioning unit and then the section with the heat exchanger for high-voltage battery / evaporator in the battery cooling module) ⇒ page 108 .*
- *On vehicles with two evaporators or with an evaporator and a heat exchanger, the circuit to the second evaporator or to the heat exchanger must be separated from the circuit of the first evaporator using manual shut-off valves and flushed in a separate operation ⇒ page 108 and ⇒ Heating, air conditioning; Rep. gr. 87 ; Refrigerant circuit (vehicle-specific Workshop Manual).*
- *The layout of the different flushing circuits for these vehicles is similar to the layout on a vehicle with two evaporators.*

1.6.7 Block diagrams for cleaning (flushing circuits) - vehicles with high-voltage system (with additional air conditioner functions such as heat pump operation)

Protected by copyright. Copying for private or commercial purposes, in part or in whole, is not permitted unless authorised by AUDI AG. AUDI AG does not guarantee or accept any liability with respect to the correctness of information in this document. Copyright by AUDI AG.

Note

- *The refrigerant circuit is cleaned in multiple flushing cycles ⇒ page 108 and ⇒ Heating, air conditioning; Rep. gr. 87 ; Refrigerant circuit; Cleaning air conditioner refrigerant circuit .*
- *To perform the flushing procedure, the circuit is separated into multiple sections, which are then flushed in one flushing cycle each. The circuit is separated by activation of the installed electrically activated valves and via the installed manual shut-off valves (must be activated manually) ⇒ Heating, air conditioning; Rep. gr. 87 ; Refrigerant circuit; Cleaning air conditioner refrigerant circuit .*
- *The layout of the different flushing circuits for these vehicles is described in the corresponding vehicle-specific Workshop Manual ⇒ Heating, air conditioning; Rep. gr. 87 ; Refrigerant circuit; Cleaning air conditioner refrigerant circuit ⇒ "1.6.4 Block diagrams for cleaning (flushing circuits) - refrigerant circuit with expansion valve and receiver", page 100 .*

1.6.8 Adapters for connecting flushing circuits

- The following table lists the various adapters required for connecting the air conditioner service station to the refrigerant circuit for flushing and for bridging the removed receiver or reservoir and expansion valve (vehicle-specific).

Protected by copyright. Copying for private or commercial purposes, in part or in whole, is not permitted unless authorised by AUDI AG. AUDI AG does not guarantee or accept any liability with respect to the correctness of information in this document. Copyright by AUDI AG.

- The adapters from the adapter set for refrigerant circuits have a 5/8 -18 UNF thread; to enable the filler hoses of the R1234yf air conditioner service station to be connected (M12 x 1.5 6G thread according to SAE J639), use additional adapters from the set (e.g. adapter - VAS 6338/48-).
- Use a filler hose with 5/8 -18 UNF connections (short version e.g. filler hose) to connect the two adapters fitted instead of the reservoir or receiver removed earlier (contained in adapter set for refrigerant circuits).
- If not re-assembling a flushed refrigerant circuit immediately after flushing, leave the adapters in place at the connections and seal the connections at the adapters with the sealing caps - VAS 6338/30- (from the adapter set for refrigerant circuits).
- Depending on the version of the air conditioner compressor and the production period, different connection and sealing methods may have been used for the refrigerant circuit ⇒ Heating, air conditioning; Rep. gr. 87 ; Refrigerant circuit (vehicle-specific Workshop Manual).

Block or screw connections

– Screw connection -A-

– Block connection -B-

Block connections with different types of seal

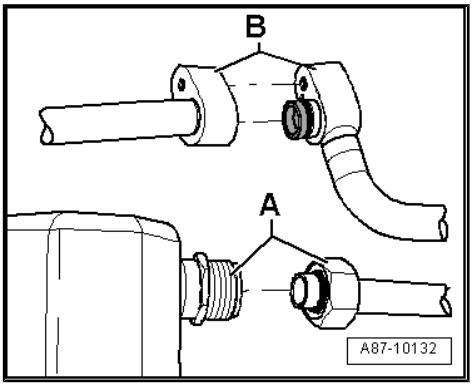

– Block connection with radial seal -A- (with plastic or metal guide -B-)
– Block connection with axial seal -C-

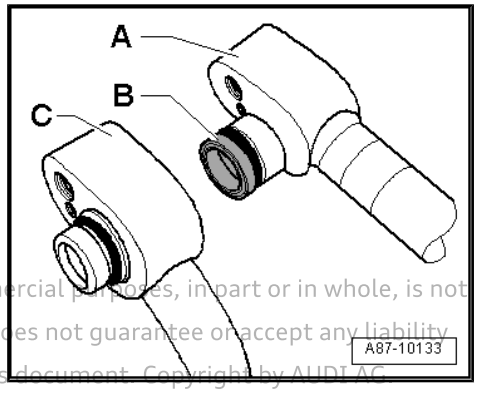

Assembling flushing circuit	
Audi A1 (8X_) 2011 ▸	⇒ page 111
Audi A1 (GB) 2019 ▸	⇒ page 113
Audi A3 (8V_/85_) 2013 ▸	⇒ page 113
Audi A3 e-tron 2013 ▸	⇒ page 114
Audi A4 (8K_) 2017 ▸	⇒ page 117
Audi A4 (8W_) 2017 ▸	⇒ page 118
Audi A5 Coupé (8T_), Sportback (8T_) and Cabriolet (8F_) 2016 ▸	⇒ page 119
Audi A5 (F5_) 2016 ▸	⇒ page 118
Audi A6 (4G_ or 4X_ for China) 2017 ▸	⇒ page 120
Audi A6 (4A) 2019 ▸	⇒ page 121
Audi A7 (4G_ or 4X_ for China) 2017 ▸	⇒ page 120
Audi A7 (4K) 2018 ▸	⇒ page 121
Audi A8 2010 (4H) ▸	⇒ page 122
Audi A8 2018 (4N) ▸	⇒ page 124
Audi Q2 (GA_) 2017 ▸	⇒ page 113
Audi Q3 (8U_/84_) 2017 ▸	⇒ page 112
Audi Q3 (F3_) 2019 ▸	⇒ page 113
Audi Q5 (8R_/83_) 2017 ▸	⇒ page 119
Audi Q5 (FY_) 2017 ▸	⇒ page 118
Audi Q7 (4M_) 2016 ▸	⇒ page 127
Audi Q7 e-tron (4M_) 2017 ▸	⇒ page 129
Audi Q8 (4M_) 2018 ▸	⇒ page 127
Audi R8 (4S_) 2017 ▸	⇒ page 131
Audi TT (FV_) 2017 ▸	⇒ page 113
Audi e-tron (GE_) 2019 ▸	⇒ page 133

Protected by copyright. Copying for private or commercial purposes, in part or in whole, is not permitted unless authorised by AUDI AG. AUDI AG does not guarantee or accept any liability with respect to the correctness of information in this document. Copyright by AUDI AG.

Audi A1 2017 ►

Vehicle	Adapters required for connections to air conditioner compressor	Adapters required for connections to reservoir/receiver	Other requirements
Audi A1 (8X_) 2017 ►	– Compressor manufacturer “Denso”, “Sanden” or “Delphi/ Mahle” ♦ Low-pressure side: adapter - VAS 6338/12- connected to air conditioner service station and adapter - VAS 6338/48- ♦ High-pressure side: adapter - VAS 6338/3- or adapter - VAS 6338/2- (depending on layout of air conditioner compressor and corresponding refrigerant line)	Different versions – Version 1 (receiver integrated in condenser): No adapter required; the desiccant bag is removed from the receiver at the condenser and the opening is sealed again for flushing. – Version 2 (receiver attached to condenser): No adapter required; the receiver is left installed (renewed after flushing).	Expansion valve removed and adapter - VAS 6338/34- or adapter - VAS 6338/39- (see notes below) fitted (or old removed expansion valve drilled open for flushing and re-installed) ⇒ page 98

Note

♦ *Depending on the version of the condenser, the receiver may be attached to or integrated into the condenser on the Audi A1/S1. The integrated receiver is fitted with a desiccant cartridge which can be renewed separately. If an attached receiver (introduction not yet finalised) is fitted, it must be renewed after flushing ⇒ Electronic parts catalogue and ⇒ Heating, air conditioning; Rep. gr. 87 ; Refrigerant circuit (vehicle-specific Workshop Manual).*

♦ *Different versions of air conditioning unit (different heat exchanger, seals, expansion valve etc.), depending on production period and vehicle identification number of Audi A1/S1 ⇒ Electronic parts catalogue . Vehicles with type codes “8X1” and “8XA” in the vehicle identification number are fitted with an expansion valve on which the two refrigerant lines are secured at top (adapter - VAS 6338/34- is compatible). Vehicles with the type codes “8XF” and “8XK” in the vehicle identification number are fitted with an expansion valve with the two refrigerant lines bolted on at the bottom; the adapter - VAS 6338/39- is compatible here ⇒ Heating, air conditioner; Rep. gr. 87 ; Refrigerant circuit; Removing and installing expansion valve (vehicle-specific Workshop Manual).*

Protected by copyright. Copying for private or commercial purposes, in part or in whole, is not permitted unless authorised by AUDI AG. AUDI AG does not guarantee or accept any liability with respect to the correctness of information. Copyright by AUDI AG.

Audi Q3 2017 ►

Vehicle	Adapters required for connections to air conditioner compressor	Adapters required for connections to reservoir/receiver	Other requirements
Audi Q3 (8U_/ 84_) 2017 ►	– Compressor manufacturer for Audi Q3: “Sanden”, “Denso”, “Delphi/ Mahle” or “Zexel/Valeo” ◆ Low-pressure side: adapter - VAS 6338/12- connected to air conditioner service station and adapter - VAS 6338/48- ◆ High-pressure side: adapter - VAS 6338/3-	Receiver (different versions) – Adapter not required, receiver remains in position – Depending on the version of the condenser, it may be necessary to remove the desiccant cartridge from the receiver on the condenser before flushing and to seal the opening again (see note).	Expansion valve removed and adapter - VAS 6338/18- (or drilled-out expansion valve e.g. 1K0 820 6 79 X) installed ⇒ page 98

Note

Protected by copyright. Copying for private or commercial purposes, in part or in whole, is not permitted unless authorised by AUDI AG. AUDI AG does not guarantee or accept any liability with respect to the correctness of information in this document. Copyright by AUDI AG.

- *The design of the receiver on the Audi Q3 differs depending on the manufacturer of the condenser. On certain versions, e.g. the receiver may be installed in this condenser. The integrated receiver contains a desiccant cartridge which is currently not always available as a replacement part. Therefore it may be necessary to renew the complete condenser with integrated receiver after eliminating any faults on vehicles fitted with this condenser ⇒ Electronic parts catalogue and ⇒ Heating, air conditioning; Rep. gr. 87 ; Refrigerant circuit (vehicle-specific Workshop Manual).*
- *On vehicles with condensers with an integrated receiver / desiccant cartridge which cannot be renewed separately or which are not available as separate replacement parts, the condenser must be renewed (together with integrated desiccant cartridge) after flushing ⇒ Heating, air conditioning; Rep. gr. 87 ; Refrigerant circuit (vehicle-specific Workshop Manual) and ⇒ Electronic parts catalogue .*

Audi Q2 2017 ►, Audi A3 2017 ►, Audi Q3 2019 ►, Audi TT 2017 ►, Audi A1 (GB) 2019 ►

Vehicle	Adapters required for connections to air conditioner compressor	Adapters required for connections to reservoir/receiver	Other requirements
Audi Q2 (GA_) 2017 ► Audi A3 (8V_/85_) 2017 ► Audi TT (FV_) 2017 ► Audi Q3 (F3_) 2019 ► Audi A1 (GB) 2019 ►	– Compressor manufacturer: "Denso", "Delphi/Mahle" or "Sanden" ♦ Low-pressure side: adapter - VAS 6338/12- connected to air conditioner service station and adapter - VAS 6338/48- ♦ High-pressure side: adapter - VAS 6338/3-	Receiver (different versions) – No adapter required; receiver is not removed (or is integrated in condenser). – Depending on the version of the condenser, it may be necessary to remove the desiccant cartridge from the receiver on the condenser before flushing and to seal the opening again (see note).	Expansion valve removed and adapter - VAS 6338/38- (or drilled-out expansion valve e.g. 5Q0 820 6 79 X) installed ⇒ page 98

Protected by copyright. Copying for private or commercial purposes, in part or in whole, is not permitted unless authorised by AUDI AG. AUDI AG does not guarantee or accept any liability with respect to the correctness of information in this document. Copyright by AUDI AG.

Note

- *The design of the receiver on the Audi Q2, Audi A3, Audi Q3 and Audi TT differs depending on the manufacturer of the condenser. On certain versions, e.g. the receiver may be installed in this condenser. The integrated receiver contains a desiccant cartridge which is currently not always available as a replacement part. Therefore it may be necessary to renew the complete condenser with integrated receiver after eliminating any faults on vehicles fitted with this condenser ⇒ Electronic parts catalogue and ⇒ Heating, air conditioning; Rep. gr. 87 ; Refrigerant circuit (vehicle-specific Workshop Manual).*
- *On vehicles with condensers with an integrated receiver / desiccant cartridge which cannot be renewed separately or which are not available as separate replacement parts, the condenser must be renewed (together with integrated desiccant cartridge) after flushing ⇒ Heating, air conditioning; Rep. gr. 87 ; Refrigerant circuit (vehicle-specific Workshop Manual) and ⇒ Electronic parts catalogue .*

Audi A3 e-tron

Vehicle	Adapters required for connections to air conditioner compressor	Adapters required for connections to reservoir/receiver	Other requirements
Audi A3 (8V_/85_) 2017 ▸	– Compressor manufacturer: “Denso”, “Delphi/Mahle” or “Sanden” ◆ Low-pressure side: adapter - VAS 6338/12- connected to air conditioner service station and adapter - VAS 6338/48- ◆ High-pressure side: adapter - VAS 6338/3-	Receiver (different versions) – No adapter required; receiver is not removed (or is integrated in condenser). – Depending on the version of the condenser, it may be necessary to remove the desiccant cartridge from the receiver on the condenser before flushing and to seal the opening again (see note). ◆ Shut-off valve - VAS 6338/42-	◆ Expansion valve removed and adapter - VAS 6338/38- (or drilled-out expansion valve e.g. 5Q0 820 679 X) installed ⇒ page 98 ◆ Shut-off valves - N541- and - N542- removed and two shut-off valves - VAS 6338/42- installed instead (see notes below) Renew shut-off valves -N541- and -N542- after flushing. ◆ Restrictor in refrigerant line to heat exchanger for high-voltage battery removed or refrigerant line drilled open (see notes below) Renew after flushing

Protected by copyright. Copying for private or commercial purposes, in part or in whole, is not permitted unless authorised by AUDI AG. AUDI AG does not guarantee or accept any liability with respect to the correctness of information in this document. Copyright by AUDI AG.

Vehicle	Adapters required for connections to air conditioner compressor	Adapters required for connections to reservoir/receiver	Other requirements
	Adapters/lines required for connections on electrically driven air conditioner compressor (for flushing air conditioner compressor) Flushing electrically driven air conditioner compressor ⇒ page 168		♦ On the electrically driven air conditioner compressor, the refrigerant oil is to be removed by flushing in the direction of flow (it is not possible to flush in the opposite direction due to the valves installed) ♦ For the flushing procedure, position the air conditioner compressor so that the connection for the refrigerant line on the high-pressure side is as low down as possible

Protected by copyright. Copying for private or commercial purposes, in part or in whole, is not permitted unless authorised by AUDI AG. AUDI AG does not guarantee or accept any liability with respect to the correctness of information in this document. Copyright by AUDI AG.

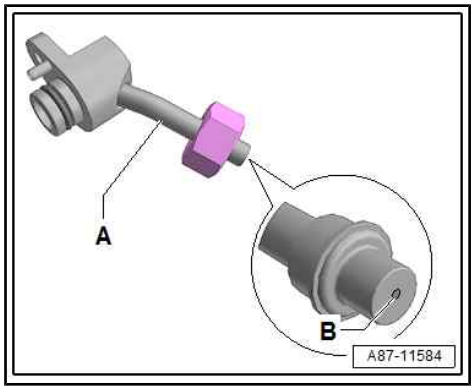

Note

- *The refrigerant circuit on the Audi A3 e-tron is flushed in 2 sections. In the first flushing cycle, the adapter installed for shut-off valve -N541- is opened and the adapter installed for shut-off valve -N542- is closed. The refrigerant circuit is flushed with the evaporator in the conditioning unit. In the second flushing cycle, the adapter installed for shut-off valve -N541- is closed and the adapter installed for shut-off valve -N542- is opened. The refrigerant circuit is flushed with the evaporator in the heat exchanger for high-voltage battery ⇒ Heating, air conditioning; Rep. gr. 87 ; Refrigerant circuit (vehicle-specific Workshop Manual).*
- *The refrigerant shut-off valve for heater and air conditioner unit - N541- and refrigerant shut-off valve for high-voltage battery heat exchanger - N542- must be renewed after flushing.*
- *The illustration shows a refrigerant line -A- with a permanently installed restrictor -B- (without strainer). This refrigerant line must be drilled open (5.0 mm) with a suitable drill bit in order to flush the refrigerant circuit (remove restrictor if fitted) and must be cleaned before it is installed in the flushing circuit. After flushing, refrigerant line/inserted restrictor must be renewed ⇒ Electronic parts catalogue .*
- *The diameter of the restrictor hole -B- is approx. 0.7 mm. Depending on the version of the refrigerant line, the restrictor is either only inserted or fixed in position in the refrigerant line. If it is inserted, there may be a strainer for separating float elements, which may block off the restrictor hole.*
- *The design of the receiver on the Audi A3 differs depending on the manufacturer of the condenser. This condenser e.g. has an integrated receiver. The integrated receiver contains a desiccant cartridge which is currently not always available as a replacement part. Therefore it may be necessary to renew the complete condenser after eliminating any faults on vehicles fitted with this condenser ⇒ Electronic parts catalogue and ⇒ Heating, air conditioning; Rep. gr. 87 ; Refrigerant circuit (vehicle-specific Workshop Manual).*
- *On vehicles with condensers with an integrated receiver / desiccant cartridge which cannot be renewed separately or which are not available as separate replacement parts, the condenser must be renewed (together with integrated desiccant cartridge) after flushing ⇒ Heating, air conditioning; Rep. gr. 87 ; Refrigerant circuit (vehicle-specific Workshop Manual) and ⇒ Electronic parts catalogue .*

Protected by copyright. Copying for private or commercial purposes, in part or in whole, is not permitted unless authorised by AUDI AG. AUDI AG does not guarantee or accept any liability with respect to the correctness of information in this document. Copyright by AUDI AG.

Audi A4 (8K_) 2017 ►

Vehicle	Adapters required for connections to air conditioner compressor	Adapters required for connections to reservoir/receiver	Other requirements
Audi A4 (8K_) 2017 ►	– Compressor manufacturer “Denso” ◆ Low-pressure side: adapter - VAS 6338/12- connected to air conditioner service station and adapter - VAS 6338/48- ◆ High-pressure side: adapter - VAS 6338/3-	Receiver (different versions) – Adapter not required, receiver remains in position – Depending on the version of the condenser, it may be necessary to remove the desiccant cartridge from the receiver on the condenser before flushing and to seal the opening again (see note).	Expansion valve removed and adapter - VAS 6338/36- (or drilled-open expansion valve e.g. 8K0 820 679 A) fitted ⇒ page 98 – Refrigerant line with internal heat exchanger is not removed or is reinstalled after installation of adapter.

Protected by copyright. Copying for private or commercial purposes, in part or in whole, is not permitted unless authorised by AUDI AG. AUDI AG does not guarantee or accept any liability with respect to the correctness of information in this document. Copyright by AUDI AG.

Protected by copyright. Copyright for private or commercial purposes, in part or in whole, is not permitted unless authorised by AUDI AG. AUDI AG does not guarantee or accept any liability with respect to the correctness of information in this document. Copyright by AUDI AG.

Note

- *The design of the receiver on the Audi A4 (8K_) 2017 > differs depending on the condenser manufacturer ⇒ Heating, air conditioning; Rep. gr. 87 ; Refrigerant circuit (vehicle-specific Workshop Manual) and ⇒ Electronic parts catalogue . Depending on the version of the condenser, the receiver may be attached to or integrated into the condenser. The integrated receiver contains a desiccant cartridge which is currently not always available as a replacement part. Therefore it may be necessary to renew the condenser after eliminating any faults on vehicles fitted with this condenser ⇒ Electronic parts catalogue .*
- *On vehicles with condensers with an integrated receiver / desiccant cartridge which cannot be renewed separately or which are not available as separate replacement parts, the condenser must be renewed (together with integrated desiccant cartridge) after flushing ⇒ Heating, air conditioning; Rep. gr. 87 ; Refrigerant circuit (vehicle-specific Workshop Manual) and ⇒ Electronic parts catalogue .*
- *Until further notice, the Audi A4 (86_ for China) 2017 ► will only be available with refrigerant R134a. If necessary, the refrigerant circuit can also be flushed with refrigerant R1234yf as described for the Audi A4 (8W_) 2017 ► using the adapters specified for this vehicle ⇒ Heating, air conditioning; Rep. gr. 87 ; Refrigerant circuit (vehicle-specific Workshop Manual).*

Audi A5 (F5_) 2016 ►, Audi Q5 (FY_) 2017 ►, Audi A4 (8W_) 2017 ►

Vehicle	Adapters required for connections to air conditioner compressor	Adapters required for connections to reservoir/receiver	Other requirements
Audi A5 (F5_) 2016 ► Audi Q5 (FY_) 2017 ► Audi A4 (8W_) 2017 ►	– Compressor manufacturer: “Denso”, “Delphi/ Mahle” or “Sanden” ◆ Low-pressure side: adapter - VAS 6338/12- connected to air conditioner service station and adapter - VAS 6338/48- ◆ High-pressure side: adapter - VAS 6338/3-	– No adapter required; the dryer is removed from the receiver at the condenser and the opening is sealed off again.	Expansion valve removed and adapter - VAS 6338/44- installed (or an old expansion valve is drilled open and installed as an adapter ⇒ page 98) ⇒ Electronic parts catalogue .

Note

On vehicles with condensers with an integrated receiver / desiccant cartridge which cannot be renewed separately or which are not available as separate replacement parts, the condenser must be renewed (together with integrated desiccant cartridge) after flushing ⇒ Heating, air conditioning; Rep. gr. 87 ; Refrigerant circuit (vehicle-specific Workshop Manual) and ⇒ Electronic parts catalogue .

Audi A5 Coupé and Sportback 2017 ►, Audi Q5 2017 ►, Audi A5 Cabriolet 2016 ►

Vehicle	Adapters required for connections to air conditioner compressor	Adapters required for receiver connections	Other requirements
Audi A5 Coupé and Sportback (8T_) 2017 ► Audi Q5 (8R_/83_) 2017 ► Audi A5 Cabriolet (8F_) 2016 ►	– Compressor manufacturer "Denso" ◆ Low-pressure side: adapter - VAS 6338/12- connected to air conditioner service station and adapter - VAS 6338/48- ◆ High-pressure side: adapter - VAS 6338/3-	Receiver (different versions) – Adapter not required, receiver remains in position – Depending on the version of the condenser, it may be necessary to remove the desiccant cartridge from the receiver on the condenser before flushing and to seal the opening again (see note).	Expansion valve removed and adapter - VAS 6338/36- (or drilled-open expansion valve e.g. 8K0 820 679 A) fitted ⇒ page 98 – Refrigerant line with internal heat exchanger is not removed or is reinstalled after installation of adapter.

Protected by copyright. Copying for private or commercial purposes, in part or in whole, is not permitted unless authorised by AUDI AG. AUDI AG does not guarantee or accept any liability with respect to the correctness of information in this document. Copyright by AUDI AG.

Note

- *The receiver version varies on these vehicles depending on the manufacturer of the condenser ⇒ Heating, air conditioning; Rep. gr. 87 ; Refrigerant circuit (vehicle-specific Workshop Manual). Depending on the version of the condenser, the receiver may be attached to or integrated into the condenser. The integrated receiver contains a desiccant cartridge which is currently not always available as a replacement part. Therefore it may be necessary to renew the condenser after eliminating any faults on vehicles fitted with this condenser ⇒ Electronic parts catalogue .*
- *On vehicles with condensers with an integrated receiver / desiccant cartridge which cannot be renewed separately or which are not available as separate replacement parts, the condenser must be renewed (together with integrated desiccant cartridge) after flushing ⇒ Heating, air conditioning; Rep. gr. 87 ; Refrigerant circuit (vehicle-specific Workshop Manual) and ⇒ Electronic parts catalogue .*

Audi A6 (4G_ or 4X_ for China) 2017 ►, Audi A7 (4G_ or 4X_ for China) 2017 ►

Vehicle	Adapters required for connections to air conditioner compressor	Adapters required for receiver connections	Other requirements
Audi A6 (4G_/ 4X_) 2017 ► Audi A7 (4G_/ 4X_) 2017 ►	– Compressor manufacturer “Denso” ◆ Low-pressure side: adapter - VAS 6338/12- connected to air conditioner service station and adapter - VAS 6338/48- ◆ High-pressure side: adapter - VAS 6338/3-	Receiver (different versions) – Adapter not required, receiver remains in position – Depending on the version of the condenser, it may be necessary to remove the desiccant cartridge from the receiver on the condenser before flushing and to seal the opening again (see note).	Expansion valve removed and adapter - VAS 6338/18- fitted (or old expansion valve removed, drilled open for flushing and re-installed ⇒ page 98).

Protected by copyright. Copying for private or commercial purposes, in part or in whole, is not permitted unless authorised by AUDI AG. AUDI AG does not guarantee or accept any liability with respect to the correctness of information in this document. Copyright by AUDI AG.

Note

- *On certain versions for China the type designation 4X_ is used instead of 4G_.*
- *The receiver version varies on these vehicles depending on the manufacturer of the condenser ⇒ Heating, air conditioning; Rep. gr. 87 ; Refrigerant circuit (vehicle-specific Workshop Manual) and ⇒ Electronic parts catalogue .*
- *On vehicles with condensers with an integrated receiver / desiccant cartridge which cannot be renewed separately or which are not available as separate replacement parts, the condenser must be renewed (together with integrated desiccant cartridge) after flushing ⇒ Heating, air conditioning; Rep. gr. 87 ; Refrigerant circuit (vehicle-specific Workshop Manual) and ⇒ Electronic parts catalogue .*
- *Until further notice, the Audi A6 e-tron will only be manufactured in China and will not be charged with refrigerant R1234yf there (refrigerant R134a will continue to be used) ⇒ Heating, air conditioning; Rep. gr. 87 ; Refrigerant circuit (vehicle-specific Workshop Manual).*

Audi A6 (4A) 2019 ►, Audi A7 (4K) 2018 ►

Vehicle	Adapters required for connections to air conditioner compressor	Adapters required for receiver connections	Other requirements
Audi A6 (4A) 2019 ► Audi A7 (4K) 2018 ►	– Compressor manufacturer “Denso” ♦ Low-pressure side: adapter - VAS 6338/12- connected to air conditioner service station and adapter - VAS 6338/48- ♦ High-pressure side: adapter - VAS 6338/3-	– No adapter required; the dryer is removed from the receiver at the condenser and the opening is sealed off again.	Expansion valve removed and adapter - VAS 6338/44- installed (or an old expansion valve is drilled open and installed as an adapter ⇒ page 98) ⇒ Electronic parts catalogue .

Note

On vehicles with condensers with an integrated receiver / desiccant cartridge which cannot be renewed separately or which are not available as separate replacement parts, the condenser must be renewed (together with integrated desiccant cartridge) after flushing ⇒ Heating, air conditioning; Rep. gr. 87 ; Refrigerant circuit (vehicle-specific Workshop Manual) and ⇒ Electronic parts catalogue .

Protected by copyright. Copying for private or commercial purposes, in part or in whole, is not permitted unless authorised by AUDI AG. AUDI AG does not guarantee or accept any liability with respect to the correctness of information in this document. Copyright by AUDI AG.

Audi A8 2010 (4H_) ▸

Vehicle	Adapters required for connections to air conditioner compressor	Adapters required for connections to reservoir/receiver	Other requirements
Audi A8 (4H_) 2010 ▸	– Compressor manufacturer “Denso” (block connections with radial seal) ◆ Low-pressure side: adapter - VAS 6338/12- connected to air conditioner service station and adapter - VAS 6338/48- ◆ High-pressure side: adapter - VAS 6338/3-	– No adapter required, the desiccant bag is removed from the receiver at the condenser and the opening sealed off again for flushing.	Expansion valve removed and adapter - VAS 6338/18- fitted (or old expansion valve removed, drilled open for flushing and re-installed ⇒ page 98).
◆ Additionally for vehicles with two evaporators (4-zone air conditioner)		For flushing circuit with evaporator in front air conditioning unit ◆ Adapter - VAS 6338/5- for sealing connection (“low-pressure side”) to second evaporator ◆ Adapter - VAS 6338/11- for sealing connection (“high-pressure side”) to second evaporator • An additional hole may have to be drilled in the adapters (see below) to be able to seal the refrigerant lines with adapters - VAS 6338/5- and -VAS 6338/11- .	

Protected by copyright. Copying for private or commercial purposes, in part or in whole, is not permitted unless authorised by AUDI AG. AUDI AG does not guarantee or accept any liability with respect to the correctness of information in this document. Copyright by AUDI AG.

Vehicle	Adapters required for connections to air conditioner compressor	Adapters required for connections to reservoir/receiver	Other requirements
		For flushing second evaporator and corresponding pipes ♦ Adapter - VAS 6338/3- for connecting air conditioner service station to connection on low-pressure side (to second evaporator). ♦ Adapter - VAS 6338/4- for connecting air conditioner service station to connection on high-pressure side (to second evaporator). • The adapter may have to be reworked (see below) to be able to connect the refrigerant line to adapter - VAS 6338/3- .	Expansion valve in refrigerant lines to second evaporator removed and adapter - VAS 6338/18- installed (or old expansion valve removed, drilled open for flushing and re-installed ⇒ page 98).

Protected by copyright. Copying for private or commercial purposes, in part or in whole, is not permitted unless authorised by AUDI AG. AUDI AG does not guarantee or accept any liability with respect to the correctness of information in this document. Copyright by AUDI AG.

Note

♦ *On vehicles with two evaporators, the refrigerant circuit is flushed in two steps.*

♦ *Currently, the front and rear expansion valves have identical connections (only the control characteristic curves differ).*

Drilling additional hole in adapters - VAS 6338/5- and -VAS 6338/11- .

– Drill hole -A- in addition to hole provided (dimensions in illustration are given in mm).

Reworking adapter - VAS 6338/3-

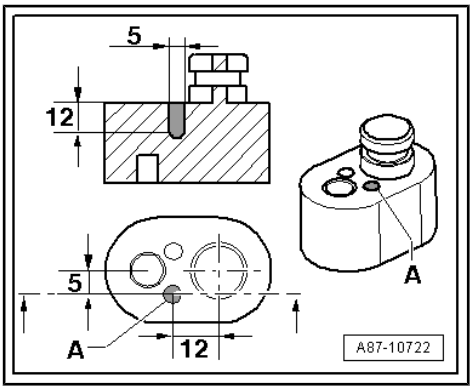

– By grinding or filing off material in area -A-, rework the adapter - VAS 6338/3- such that it can be connected without bending the refrigerant line (the dimensions in the illustration are given in mm).

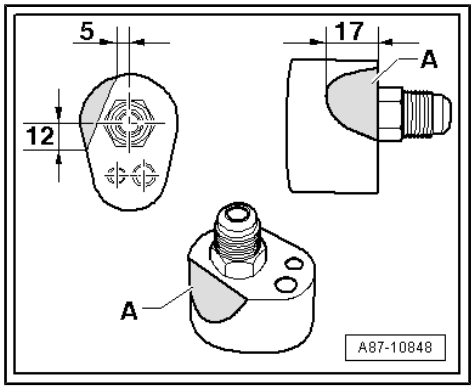

Protected by copyright. Copying for private or commercial purposes, in part or in whole, is not permitted unless authorised by AUDI AG. AUDI AG does not guarantee or accept any liability with respect to the correctness of information in this document. Copyright by AUDI AG.

Audi A8 2018 (4N) ►

Vehicle	Adapters required for connections to air conditioner compressor	Adapters required for connections to receiver / to second evaporator	Other requirements
Audi A8 (4N) 2018 ► ♦ Vehicle with one evaporator	– Compressor manufacturer “Denso” (block connections with radial seal) ♦ Low-pressure side: adapter - VAS 6338/12- connected to air conditioner service station and adapter - VAS 6338/48- ♦ High-pressure side: adapter - VAS 6338/3-	– No adapter required; the dryer is removed from the receiver at the condenser and the opening is sealed off again.	Expansion valve removed and adapter - VAS 6338/44- installed (or an old expansion valve is drilled open and installed as an adapter ⇒ page 98) ⇒ Electronic parts catalogue .
♦ Additionally for vehicles with 2 evaporators (4-zone air conditioner)		For flushing circuit with evaporator in front air conditioning unit ♦ Adapter - VAS 6338/44- and adapter - VAS 6338/43- (for sealing refrigerant circuit off from second evaporator)	Expansion valve to evaporator in front air conditioning unit removed and adapter - VAS 6338/44- installed. Expansion valve in refrigerant lines to evaporator in rear air conditioning unit removed and adapter - VAS 6338/43- installed.

Protected by copyright. Copying for private or commercial purposes, in part or in whole, is not permitted unless authorised by AUDI AG. AUDI AG does not guarantee or accept any liability with respect to the correctness of information in this document. Copyright by AUDI AG.

Vehicle	Adapters required for connections to air conditioner compressor	Adapters required for connections to receiver / to second evaporator	Other requirements
		For flushing second evaporator and corresponding pipes ♦ Adapter - VAS 6338/44- and adapter - VAS 6338/43- (for sealing refrigerant circuit off from evaporator in front air conditioning unit)	Expansion valve to evaporator in front air conditioning unit removed and adapter - VAS 6338/43- installed. Expansion valve in refrigerant lines to evaporator in rear air conditioning unit removed and adapter - VAS 6338/44- installed.

Note

- *On vehicles with two evaporators, the refrigerant circuit is flushed in two steps.*
- *On vehicles with two evaporators, the refrigerant circuit with the evaporator in the front air conditioning unit is flushed first. The refrigerant circuit to the second evaporator (in the rear air conditioning unit) must be separated so that the refrigerant flows in the specified direction when the circuit is flushed. This is done by removing the expansion valve in the refrigerant lines to the second evaporator and installing the adapter - VAS 6338/43- (closed adapter). After the refrigerant circuit with the evaporator in the air conditioning unit has been flushed, the two adapters -VAS 6338/43- and -VAS 6338/44- are renewed and the refrigerant circuit with the evaporator in the rear air conditioning unit is flushed.*

Protected by copyright. Copying for private or commercial purposes, in part or in whole, is not permitted unless authorised by AUDI AG. AUDI AG does not guarantee or accept any liability with respect to the correctness of information in this document. Copyright by AUDI AG.

Audi Q7 (4M_) 2016 ►, Audi Q8 (4M_) 2018 ►

Vehicle	Adapters required for connections to air conditioner compressor	Adapters required for connections to receiver / to second evaporator	Other requirements
Audi Q7 (4M_) 2016 ► Audi Q8 (4M_) 2018 ► ♦ Vehicle with one evaporator	– Compressor manufacturer “Denso” (block connections with radial seal) ♦ Low-pressure side: adapter - VAS 6338/12- connected to air conditioner service station and adapter - VAS 6338/48- ♦ High-pressure side: adapter - VAS 6338/3-	– No adapter required; the dryer is removed from the receiver at the condenser and the opening is sealed off again.	Expansion valve removed and adapter - VAS 6338/44- installed (or an old expansion valve is drilled open and installed as an adapter ⇒ page 98) ⇒ Electronic parts catalogue .
♦ Additionally for vehicles with 2 evaporators (4-zone air conditioner)		For flushing circuit with evaporator in front air conditioning unit ♦ Adapter - VAS 6338/44- and adapter - VAS 6338/43- (for sealing refrigerant circuit off from second evaporator)	Expansion valve to evaporator in front air conditioning unit removed and adapter - VAS 6338/44- installed. Expansion valve in refrigerant lines to evaporator in rear air conditioning unit removed and adapter - VAS 6338/43- installed.

Protected by copyright. Copying for private or commercial purposes, in part or in whole, is not permitted unless authorised by AUDI AG. AUDI AG does not guarantee or accept any liability with respect to the correctness of information in this document. Copyright by AUDI AG.

Vehicle	Adapters required for connections to air conditioner compressor	Adapters required for connections to receiver / to second evaporator	Other requirements
		For flushing second evaporator and corresponding pipes ♦ Adapter - VAS 6338/44- and adapter - VAS 6338/43- (for sealing refrigerant circuit off from evaporator in front air conditioning unit)	Expansion valve to evaporator in front air conditioning unit removed and adapter - VAS 6338/43- installed. Expansion valve in refrigerant lines to evaporator in rear air conditioning unit removed and adapter - VAS 6338/44- installed.

Protected by copyright. Copying for private or commercial purposes, in part or in whole, is not permitted unless authorised by AUDI AG. AUDI AG does not guarantee or accept any liability with respect to the correctness of information in this document. Copyright by AUDI AG.

Note

- *On vehicles with two evaporators, the refrigerant circuit is flushed in two steps.*
- *On vehicles with two evaporators, the refrigerant circuit with the evaporator in the front air conditioning unit is flushed first. The refrigerant circuit to the second evaporator (in the rear air conditioning unit) must be separated so that the refrigerant flows in the specified direction when the circuit is flushed. This is done by removing the expansion valve in the refrigerant lines to the second evaporator and installing the adapter - VAS 6338/43- (closed adapter). After the refrigerant circuit with the evaporator in the air conditioning unit has been flushed, the two adapters -VAS 6338/43- and -VAS 6338/44- are renewed and the refrigerant circuit with the evaporator in the rear air conditioning unit is flushed.*

Protected by copyright. Copying for private or commercial purposes, in part or in whole, is not permitted unless authorised by AUDI AG. AUDI AG does not guarantee or accept any liability with respect to the correctness of information in this document. Copyright by AUDI AG.

Audi Q7 (4M_) e-tron 2017 ►

Vehicle	Adapters required for connections to air conditioner compressor	Adapters required for connections to receiver / for non-return and shut-off valves	Other requirements
Audi Q7 e-tron (4M_) 2017 ► ◆ Vehicle with one evaporator	– Compressor manufacturer "Sanden" (block connections with radial seal) ◆ Low-pressure side: adapter - VAS 6338/12- connected to air conditioner service station and adapter - VAS 6338/48- ◆ High-pressure side: adapter - VAS 6338/3-	Receiver – No adapter required; the dryer is removed from the receiver at the condenser and the opening is sealed off again.	Expansion valve removed and adapter - VAS 6338/44- installed (or an old expansion valve is drilled open and installed as an adapter ⇒ page 98) ⇒ Electronic parts catalogue .
		Non-return valves – 4 non-return valves removed, and shut-off valves (-6338/47-1- and -6338/47-2-) from shut-off valve set - 6338/47- installed	Open or close the shut-off valves (installed in place of the non-return valves) according to the area to be cleaned ⇒ Heating, air conditioning; Rep. gr. 87 ; Refrigerant circuit (vehicle-specific Workshop Manual).
		Shut-off valve – Fitted shut-off valve -V424- removed and shut-off valve - VAS 6338/42- fitted instead	Open or close the shut-off valve (installed in place of the shut-off valve) according to the area to be cleaned. Renew refrigerant shut-off valve - V424- after flushing.

Note

- *The refrigerant circuit is flushed in 4 operations (flushing cycles) on the Audi Q7 e-tron ⇒ Heating, air conditioning; Rep. gr. 87 ; Refrigerant circuit; Cleaning air conditioner refrigerant circuit .*
- *To flush the entire refrigerant circuit on the Audi Q7 e-tron, it is not merely sufficient for the installed shut-off valves to be in the correct position (open or closed); the electrically activated valves (in the valve block) must also be in the correct position. The electrical valves are activated via different routines stored in the corresponding control unit (e.g. in the thermal management control unit - J1024-) ⇒ Heating, air conditioning; Rep. gr. 87 ; Refrigerant circuit; Cleaning air conditioner refrigerant circuit .*
- *To perform the flushing procedure on the Audi Q7 e-tron, the circuit is separated into multiple sections, which are then flushed in one flushing cycle each. The circuit is separated by activation of the electrically activated valves and via the manual shut-off valves (must be activated manually) ⇒ Heating, air conditioning; Rep. gr. 87 ; Refrigerant circuit; Cleaning air conditioner refrigerant circuit , ⇒ Vehicle diagnostic tester ("Guided Fault Finding").*
- *The layout of the different flushing circuits for the Audi Q7 e-tron is described in the vehicle-specific Workshop Manual ⇒ Heating, air conditioning; Rep. gr. 87 ; Refrigerant circuit; Cleaning air conditioner refrigerant circuit .*
- *On vehicles with condensers with an integrated receiver / desiccant cartridge which cannot be renewed separately or which are not available as separate replacement parts, the condenser must be renewed (together with integrated desiccant cartridge) after flushing ⇒ Heating, air conditioning; Rep. gr. 87 ; Refrigerant circuit (vehicle-specific Workshop Manual) and ⇒ Electronic parts catalogue .*
- *After flushing, the refrigerant receiver at the heat exchanger for heat pump operation must be renewed ⇒ Heating, air conditioning; Rep. gr. 87 ; Refrigerant circuit .*
- *After flushing, the refrigerant shut-off valve - V424- must be renewed ⇒ Heating, air conditioning; Rep. gr. 87 ; Refrigerant circuit .*

Protected by copyright. Copying for private or commercial purposes, in part or in whole, is not permitted unless authorised by AUDI AG. AUDI AG does not guarantee or accept any liability with respect to the correctness of information in this document. Copyright by AUDI AG.

Audi R8 (4S_) 2017 ►

Vehicle	Adapters required for connections to air conditioner compressor	Adapters required for connections to receiver (with dryer)	Other requirements
Audi R8 (4S_) 2017 ►	– Compressor manufacturer “Denso” (block connections with radial seal) ♦ Low-pressure side: adapter - VAS 6338/12- connected to air conditioner service station and adapter - VAS 6338/48- ♦ High-pressure side: adapter - VAS 6338/3-	Receiver – Block connections with radial seal at inlet and outlet ♦ Adapter - VAS 6338/45- (2x required)	Expansion valve removed and adapter - VAS 6338/36- installed (or an old expansion valve is drilled open and installed as an adapter ⇒ page 98) ⇒ Electronic parts catalogue . Receiver removed and both refrigerant line connections connected to each other with two adapters - VAS 6338/45- and a commercially available filler hose (short version with 5/8" thread on both sides)

Protected by copyright. Copying for private or commercial purposes, in part or in whole, is not permitted unless authorised by AUDI AG. AUDI AG does not guarantee or accept any liability with respect to the correctness of information in this document. Copyright by AUDI AG.

Note

- *On the Audi R8, the engine may have to be removed before renewing the air conditioner compressor (depending on engine version). However, to flush the refrigerant circuit the refrigerant lines can be detached with the air conditioner compressor installed ⇒ Heating, air conditioning; Rep. gr. 87 ; Refrigerant circuit (vehicle-specific Workshop Manual). However, it is not advisable to flush the refrigerant circuit with the air conditioner compressor installed because the quantity of refrigerant oil cannot be measured while the air conditioner compressor is installed.*
- *The two condensers are flushed while installed and in the direction opposite to that of the refrigerant flow.*
- *A short filler hose is also included in the adapter set for refrigerant circuits - VAS 6338/1- .*
- *Although it may be possible to flush the receiver, its large internal volume means that it may hold too much liquid refrigerant. When this refrigerant is extracted the reservoir ices up severely, the refrigerant only evaporates very slowly and the extraction process takes too long.*

Protected by copyright. Copying for private or commercial purposes, in part or in whole, is not permitted unless authorised by AUDI AG. AUDI AG does not guarantee or accept any liability with respect to the correctness of information in this document. Copyright by AUDI AG.

Audi e-tron (GE_) 2019 ▸

Vehicle	Adapters required for connections to air conditioner compressor	Adapters required for connections to receiver / for non-return and shut-off valves	Other requirements
Audi e-tron (GE_) 2019 ▸	– Compressor manufacturer “Sanden” (block connections with radial seal) ♦ Low-pressure side: adapter - VAS 6338/12- connected to air conditioner service station and adapter - VAS 6338/48- ♦ High-pressure side: adapter - VAS 6338/3-	Receiver – No adapter required; the dryer is removed from the receiver at the condenser and the opening is sealed off again.	Expansion valve removed and adapter - VAS 6338/44- installed (or an old expansion valve is drilled open and installed as an adapter ⇒ page 98) ⇒ Electronic parts catalogue .
		Non-return valves – 4 non-return valves removed, and shut-off valves (-6338/47-1- and -6338/47-2-) from shut-off valve set - 6338/47- installed	Open or close the shut-off valves (installed in place of the non-return valves) according to the area to be cleaned ⇒ Heating, air conditioning; Rep. gr. 87 ; Refrigerant circuit (vehicle-specific Workshop Manual).
		Shut-off valve – Fitted shut-off valve -V424- removed and shut-off valve - VAS 6338/42- fitted instead	Open or close the shut-off valve (installed in place of the shut-off valve) according to the area to be cleaned. Renew refrigerant shut-off valve - V424- after flushing.

Protected by copyright. Copying for private or commercial purposes, in part or in whole, is not permitted unless authorised by AUDI AG. AUDI AG does not guarantee or accept any liability with respect to the correctness of information in this document. Copyright by AUDI AG.

Protected by copyright. Copying for private or commercial purposes, in part or in whole, is not permitted unless authorised by AUDI AG. AUDI AG does not guarantee or accept any liability with respect to the correctness of information in this document. Copyright by AUDI AG.

Note

- *The refrigerant circuit is flushed in 4 operations (flushing cycles) on the Audi e-tron ⇒ Heating, air conditioning; Rep. gr. 87 ; Refrigerant circuit; Cleaning air conditioner refrigerant circuit .*
- *To flush the entire refrigerant circuit on the Audi e-tron, it is not merely sufficient for the installed shut-off valves to be in the correct position (open or closed); the electrically activated valves (in the valve block) must also be in the correct position. The electrical valves are activated via different routines stored in the corresponding control unit (e.g. in the thermal management control unit - J1024-) ⇒ Heating, air conditioning; Rep. gr. 87 ; Refrigerant circuit; Cleaning air conditioner refrigerant circuit .*
- *To perform the flushing procedure on the Audi e-tron, the circuit is separated into multiple sections, which are then flushed in one flushing cycle each. The circuit is separated by activation of the electrically activated valves and via the manual shut-off valves (must be activated manually) ⇒ Heating, air conditioning; Rep. gr. 87 ; Refrigerant circuit; Cleaning air conditioner refrigerant circuit , ⇒ Vehicle diagnostic tester ("Guided Fault Finding").*
- *The layout of the different flushing circuits for the Audi e-tron is described in the vehicle-specific Workshop Manual ⇒ Heating, air conditioning; Rep. gr. 87 ; Refrigerant circuit; Cleaning air conditioner refrigerant circuit .*
- *On vehicles with condensers with an integrated receiver / desiccant cartridge which cannot be renewed separately or which are not available as separate replacement parts, the condenser must be renewed (together with integrated desiccant cartridge) after flushing ⇒ Heating, air conditioning; Rep. gr. 87 ; Refrigerant circuit (vehicle-specific Workshop Manual) and ⇒ Electronic parts catalogue .*
- *After flushing, the refrigerant receiver at the heat exchanger for heat pump operation must be renewed ⇒ Heating, air conditioning; Rep. gr. 87 ; Refrigerant circuit .*
- *After flushing, the refrigerant shut-off valve - V424- must be renewed ⇒ Heating, air conditioning; Rep. gr. 87 ; Refrigerant circuit .*

1.6.9 General notes on blowing out with compressed air or nitrogen

The cleanest, most environmentally responsible method of removing moisture, all contaminants and old refrigerant oil from the refrigerant circuit is to clean (flush) the refrigerant circuit with refrigerant R1234yf. This conserves refrigerant and does not require extensive repair work
⇒ "1.6 Cleaning refrigerant circuit", page 95 .

The refrigerant circuit should be blown out with compressed air and nitrogen e.g. if only individual components need cleaning.

Note

- *Only blow out the refrigerant circuit with compressed air and then nitrogen if it is not possible to flush the refrigerant circuit or if there is excessive work involved in flushing individual components (e.g. minor impurities and moisture can also be blown out of removed refrigerant lines in a fairly short time).*
- *Blowing out the entire refrigerant circuit with compressed air and nitrogen usually takes considerably longer than cleaning (flushing) with refrigerant R1234yf. When flushing with refrigerant R1234yf, the components are also cleaned far better. Therefore, the system should always be flushed if there is a problem (the system should be blown out only for certain problems and components).*
- *In certain conditions, it may be sufficient to blow out certain components (e.g. individual refrigerant lines or hoses) with compressed air (e.g. for forcing old refrigerant oil out of individual components which have been removed) or with nitrogen (for drying individual components).*
- *Certain impurities are impossible or difficult to remove properly from the refrigerant circuit using compressed air; these can be removed e.g. by cleaning (flushing) with refrigerant R1234yf* *⇒ "1.6 Cleaning refrigerant circuit", page 95* *.*
- *When blowing out (with compressed air or nitrogen), a maximum working pressure of 15 bar must not be exceeded (this corresponds to the pressure that occurs in a charged refrigerant circuit at an ambient temperature of approx. 60 °C). If necessary, use a pressure reducer for compressed air.*
- *If the gas analysis reveals that the refrigerant R1234yf is contaminated with another gas, it must be extracted from the refrigerant circuit and disposed of as a gas of unknown composition, in accordance with legal provisions ⇒ VW/Audi ServiceNet and* *⇒ page 175* *.*
- *Contaminated refrigerant can lead to the generation of breakdown products that accumulate in the refrigerant oil and cannot be extracted with the refrigerant. In this case, remove the contaminated refrigerant oil by flushing it out of the refrigerant circuit with refrigerant*
  ⇒ "1.6 Cleaning refrigerant circuit", page 95 *.*
- *If no suitable air conditioner service station for refrigerant R1234yf is available, the refrigerant circuit may also be cleaned (flushed) with the air conditioner service station for refrigerant R134a and with refrigerant R134a. It is currently permitted to use refrigerant R134a for cleaning the refrigerant circuit ⇒ Air conditioner with refrigerant R134a; Rep. gr. 87 ; Refrigerant circuit (Working with the air conditioner service station).*

CAUTION

Risk of injury from nitrogen flowing out under high pressure.

– Use pressure reducer for nitrogen containers.

– Always clean (flush with refrigerant R1234yf) or blow out components against the direction of refrigerant flow.

– Extract the mixture of refrigerant, refrigerant oil, compressed air or nitrogen emerging from the components using an extraction system.

Protected by copyright. Copying for private or commercial purposes, in part or in whole, is not permitted unless authorised by AUDI AG. AUDI AG does not guarantee or accept any liability with respect to the accuracy of information in this document. Copyright by AUDI AG.

Note

Compressed air and nitrogen cannot be blown through the restrictor, expansion valve, air conditioner compressor, receiver or reservoir.

– In the case of condensers fitted with a desiccant cartridge in the integrated receiver, this cartridge must be removed.

Note

- *On vehicles with condensers with an integrated receiver/desiccant cartridge which cannot be renewed separately, the condenser must be renewed after it has been cleaned (flushed).*
- *Depending on the version, receivers on which the desiccant cartridge can be renewed separately may be provided with an additional filter element which may have to be renewed together with the desiccant cartridge.*

– First blow out old refrigerant oil and dirt with compressed air, then blow out components with nitrogen (clean, blow out or dehumidify old refrigerant oil).

– Adapter for connecting pressure hose to refrigerant circuit adapter set for refrigerant circuits ⇒ Electronic parts catalogue

Observe the following to prevent oil and moisture from the compressed-air system from entering the refrigerant circuit.

- The compressed air must be passed through a compressed-air purifier to clean and dry it. Therefore use filter and dryer for compressed air (included in scope of delivery as tool for painting work) ⇒ Electronic parts catalogue .
- For refrigerant lines with thread or union nut at connection, use adapters from adapter set for refrigerant circuits - V.A.G 1785- (adapter - V.A.G 1785/1- to adapter - V.A.G 1785/8-) for connecting 5/8" -18 UNF filler hoses (some of these adapters are also contained in the adapter set for refrigerant circuits).
- For refrigerant lines with no thread or union nut at connection (for connecting adapters), use adapters from adapter set for refrigerant circuits or commercially available blow-out gun with rubber mouthpiece.

Protected by copyright. Copying for private or commercial purposes, in part or in whole, is not permitted unless authorised by AUDI AG. AUDI AG does not guarantee or accept any liability with respect to the correctness of information in this document. Copyright by AUDI AG.

Note

Compressed air/nitrogen emerging from components must be drawn off using an appropriate system (e.g. workshop extractor).

The refrigerant circuit (or individual components) must be blown out if flushing is not possible or does not appear to be a sensible option

– If there is dirt (or other impurities) in individual components of the circuit.

– If the vacuum reading does not remain constant during evacuation of a refrigerant circuit where there are no leaks (there is moisture in the refrigerant circuit which is building up pressure).

– If the refrigerant circuit has been left open for longer than the normal assembly time (e.g. following an accident).

– If pressure and temperature measurements in the refrigerant circuit indicate that there is moisture in the circuit.

– If stipulated in the vehicle-specific Workshop Manual after renewing certain components ⇒ Heating, air conditioning; Rep. gr. 87 ; Refrigerant circuit .

Note

Certain impurities and old refrigerant oil are impossible or difficult to remove properly from the refrigerant circuit using compressed air or nitrogen; they can be removed e.g. by flushing with refrigerant R1234yf ⇒ *"1.6 Cleaning refrigerant circuit", page 95* .

♦ Blowing out refrigerant circuit with compressed air or nitrogen ⇒ "1.6.10 Blowing out refrigerant circuit with compressed air or nitrogen", page 137

1.6.10 Blowing out refrigerant circuit with compressed air or nitrogen

Note

♦ *For vehicles that do not have a thread on the refrigerant lines for connecting adapter V.A.G - 1785- , use e.g. an air pistol with a rubber end piece to blow out individual components, or use an adapter from the adapter set for refrigerant circuits . Take special care not to damage the connections by crushing or scratching them when using an air pistol with a rubber end piece.*

♦ *The evaporator must be blown out via the connection for the low-pressure line (large diameter) after removing the expansion valve or restrictor.*

♦ *Always blow out components (or flush with refrigerant R1234yf) against the direction of refrigerant flow.*

♦ *Check expansion valve and renew if dirty or corroded.*

♦ *If dark, sticky deposits cannot be removed with compressed air, flush the components concerned with refrigerant R1234yf or renew.*

♦ *Thin, light grey deposits on the insides of pipes do not impair the function of the components.*

♦ *After blowing out, renew receiver (desiccant cartridge) or reservoir and restrictor. In the case of condensers fitted with a desiccant cartridge in the integrated receiver, this cartridge must be renewed.*

♦ *On vehicles with condensers with an integrated receiver/desiccant cartridge which cannot be renewed separately or which are not available as a replacement part, the condenser must be renewed after the refrigerant circuit has been flushed ⇒ Electronic parts catalogue and ⇒ Heating, air conditioning; Rep. gr. 87 ; Refrigerant circuit (vehicle-specific Workshop Manual).*

♦ *Depending on the version, receivers on which the desiccant cartridge can be renewed separately may be provided with an additional filter element which may have to be renewed together with the desiccant cartridge.*

Protected by copyright. Copying for private or commercial purposes, in part or in whole, is not permitted unless authorised by AUDI AG. AUDI AG does not guarantee or accept any liability with respect to the correctness of information in this document. Copyright by AUDI AG.

After blowing out refrigerant circuit:

– Renew the following components (vehicle-specific): restrictor and reservoir, expansion valve and receiver or desiccant car-

tridge ⇒ Heating, air conditioning; Rep. gr. 87 ; Refrigerant circuit (vehicle-specific Workshop Manual) and ⇒ Electronic parts catalogue .

– Renew air conditioner compressor depending on problem (⇒ Heating, air conditioning; Rep. gr. 87 ; Refrigerant circuit (vehicle-specific Workshop Manual) and ⇒ Electronic parts catalogue), or drain off remaining refrigerant oil from air conditioner compressor (removed earlier) ⇒ “1.5 Renewing components”, page 79 and add specified quantity of fresh refrigerant oil ⇒ Heating, air conditioning; Rep. gr. 00 ; Technical data (vehicle-specific Workshop Manual), and ⇒ Heating, air conditioning; Rep. gr. 00 ; Technical data; Approved refrigerant oils and capacities for refrigerant oil (vehicle-specific Workshop Manual).

Note

- *Replacement compressors contain a certain specified quantity of refrigerant oil. On vehicles with two evaporators, it may be necessary to add a certain additional quantity of refrigerant oil to the circuit ⇒ Heating, air conditioning; Rep. gr. 00 ; Technical data , and ⇒ Heating, air conditioning; Rep. gr. 87 ; Refrigerant circuit (vehicle-specific Workshop Manual).*
- *If the air conditioner compressor is not renewed, add specified amount of refrigerant oil to the air conditioner compressor (tip out refrigerant oil and pour specified quantity into air conditioner compressor or refrigerant circuit) ⇒ page 79 , ⇒ Heating, air conditioning; Rep. gr. 00 ; Technical data; Approved refrigerant oils and capacities for refrigerant oil (vehicle-specific Workshop Manual) and ⇒ Heating, air conditioning; Rep. gr. 87 ; Refrigerant circuit (vehicle-specific Workshop Manual).*

– Completely re-assemble refrigerant circuit ⇒ Heating, air conditioning; Rep. gr. 87 ; Refrigerant circuit (vehicle-specific Workshop Manual).

– Evacuate and charge refrigerant circuit as specified ⇒ “2.5 Evacuating refrigerant circuit”, page 153 and ⇒ “2.6 Charging refrigerant circuit”, page 160 .

– Start up air conditioner as specified ⇒ Heating, air conditioning; Rep. gr. 87 ; Refrigerant circuit (vehicle-specific Workshop Manual) and ⇒ “2.7 Starting up air conditioner after charging”, page 163 .

Protected by copyright. Copying for private or commercial purposes, in part or in whole, is not permitted unless authorised by AUDI AG. AUDI AG does not guarantee or accept any liability with respect to the correctness of information in this document. Copyright by AUDI AG.

1.7 Checking pressure values with a pressure gauge

⇒ “1.7.1 Display on pressure gauges”, page 139

⇒ “1.7.2 Tests and measurements which can be performed using pressure gauges”, page 139

1.7.1 Display on pressure gauges

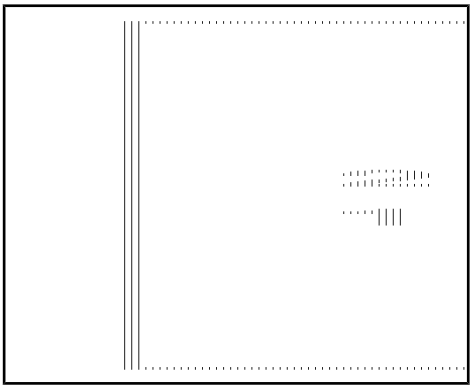

1 - Temperature scale for refrigerant R1234yf ($CF_3CF = CH_2$) in °C

2 - Pressure scale in bar

Note

- *Pressure can be measured in various units: 1 MPa (megapascal) is equivalent to 10 bar gauge pressure, or 145 psi; 1 bar absolute pressure is the same as 0 bar gauge pressure, which is roughly equivalent to atmospheric pressure.*
- *This illustration shows a pressure gauge indicating the pressure on the low-pressure side. Here, the display is in bar (see display “-1”).*

Protected by copyright. Copying for private or commercial purposes, in part or in whole, is not permitted unless authorised by AUDI AG. AUDI AG does not guarantee or accept any liability with respect to the correctness of information in this document. Copyright by AUDI AG.

Pressure gauges may have one or more temperature scales in addition to the pressure scale. The scale values for R1234yf are assigned according to the vapour pressure table. As different refrigerants develop different vapour pressures at the same temperature, there is a temperature scale for each refrigerant.

- Pressure gauges can be used for the following tests and measurements
  ⇒ “1.7.2 Tests and measurements which can be performed using pressure gauges”, page 139 .

1.7.2 Tests and measurements which can be performed using pressure gauges

Refrigerant circuit pressure and temperature measurements

- The high-pressure gauge measures the pressure (and temperature) distributed evenly from the air conditioner compressor outlet via the condenser to the constriction (restrictor or expansion valve) when the air conditioning system is switched on.
- The low-pressure gauge measures the pressure (and temperature) distributed evenly from the constriction (restrictor or expansion valve) via the evaporator to the air conditioner compressor inlet when the air conditioner is switched on.

Note

The relationship between pressure and temperature indicated on the pressure gauges only applies in a refrigerant circuit containing liquid or vapour, but not gas. In gaseous form, the temperature is approx. 10 °C to 30 °C higher than the pressure gauge reading.

Detection of refrigerant in a closed vessel

In a closed vessel or in the refrigerant circuit, refrigerant R1234yf is present if the temperature indicated on the pressure gauge corresponds to the temperature of the refrigerant (standing liquid assumes ambient temperature).

A closed vessel or a deactivated refrigerant circuit is empty if the temperature indicated on the pressure gauge is below the temperature of the refrigerant.

Note

- *The relationship between pressure and temperature no longer applies if no liquid is present and f the pressure is only built up by gas.*
- *Since the pressures of refrigerants R1234yf and R134a are very close together over a broad temperature range, they cannot be distinguished using pressure measurements; instead, e.g. a gas analysis must be performed*
  ⇒ "6.2.16 Analysis of refrigerant R1234yf", page 25 .

Protected by copyright. Copying for private or commercial purposes, in part or in whole, is not permitted without the prior written consent of AUDI AG. AUDI AG does not guarantee or accept any liability with respect to the correctness of information in this document. Copyright by AUDI AG.

Protected by copyright. Copying for private or commercial purposes, in part or in whole, is not permitted unless authorised by AUDI AG. AUDI AG does not guarantee or accept any liability with respect to the correctness of information in this document. Copyright by AUDI AG.

2 Working with air conditioner service station

⇒ “2.1 Working with air conditioner service station”, page 142

⇒ “2.2 Connecting air conditioner service station to refrigerant circuit”, page 144

⇒ “2.3 Performing gas analysis for refrigerant”, page 147

⇒ “2.4 Discharging refrigerant circuit”, page 150

⇒ “2.5 Evacuating refrigerant circuit”, page 153

⇒ “2.6 Charging refrigerant circuit”, page 160

⇒ “2.7 Starting up air conditioner after charging”, page 163

⇒ “2.8 Switching off air conditioner service station and disconnecting from refrigerant circuit”, page 165

⇒ “2.9 Filling reservoirs with refrigerant”, page 167

⇒ “2.10 Discharging air conditioner service station”, page 168

⇒ “2.11 Cleaning electrically driven air conditioner compressor”, page 168

⇒ “2.12 Cleaning refrigerant circuit”, page 171

⇒ “2.13 Decanting contaminated refrigerant into recycling cylinder for analysis, treatment or disposal”, page 175

⇒ “2.14 Checking pressures”, page 184

2.1 Working with air conditioner service station

Note

- *If there is reason to suspect that chemical substances (sealing additives) have been used to seal leaks in the refrigerant circuit from which you intend to extract refrigerant, do not connect the air conditioner service station to this refrigerant circuit and do not extract refrigerant.*
- *Chemical substances (sealing additives) used to seal leaks build up deposits in the refrigerant circuit which impair the function of the air conditioner and lead to malfunction of the air conditioner (and the air conditioner service station).*
- *Point out to customers that there are substances in their vehicle's air conditioner that have not been approved by Volkswagen/Audi and that you therefore cannot discharge and service this air conditioner.*
- *Chemical substances (sealing additives) freely available on the market for sealing leaks in the refrigerant circuit are not approved by Volkswagen/Audi. Damage to or malfunctioning of the air conditioner or air conditioner service station cannot be precluded as no tests have been performed to establish long-term action, effectiveness and material compatibility.*
- *Stop leak additives freely available on the market have different physical and chemical properties. These can permanently impair the function of the air conditioner and the air conditioner service station and even result in complete failure. Volkswagen/Audi objects to the use of chemical substances (sealing additives) for sealing leaks in refrigerant circuits.*

Protected by copyright. Copying for private or commercial purposes, in part or in whole, is not permitted unless authorised by AUDI AG. AUDI AG does not guarantee or accept any liability with respect to the correctness of information in this document. Copyright by AUDI AG.

- *Chemical substances (sealing additives) used to seal leaks in refrigerant circuits usually react with the ambient air or the humidity in the ambient air; the deposits built up by chemical substances in refrigerant circuits (and the air conditioner service station) cause malfunctions at valves and other components if they come into contact with them. These deposits cannot be completely removed from the components affected (even by flushing).*
- *Chemical substances (sealing additives) used to seal leaks in refrigerant circuits usually cannot be detected from the outside; mostly the stickers that are supposed to be attached to identify these chemical substances are missing. Therefore, act with caution when working on a vehicle whose past you are not familiar with.*
- *On the accessories market, vessels with integrated filters are available which are supposed to intercept these chemical substances (additives used to seal leaks). Since Volkswagen/Audi does not know the composition and therefore the physical and chemical properties of these substances, we are unable to comment here on the effectiveness and deposition rate of these filters.*

If air conditioner refrigerant circuit repair work has to be performed on a vehicle on which chemical substances (sealing additives) have been added to the refrigerant circuit to seal leaking components (or if you have good reason to believe that such substances have been added), the customer (vehicle owner) must be notified of the following:

- Because of the substances (sealing additives) added to the circuit, which damage your air conditioner service station , the air conditioner refrigerant cannot be extracted. To extract the refrigerant, it can be poured into a recycling cylinder, as in the case of contaminated refrigerant ⇒ “2.13 Decanting contaminated refrigerant into recycling cylinder for analysis, treatment or disposal”, page 175 . If this is not possible, a company may need to be contracted, for example, which can extract the contaminated refrigerant using suitable equipment and then extract it from the refrigerant circuit for treatment (or disposal) (e.g. a local waste disposal company that specialises in the disposal of refrigerants).
- The air conditioning system can only be properly repaired by renewing all the refrigerant circuit components which have come into contact with the sealing additive. The sealing additive may already have damaged certain refrigerant circuit components (e.g. the air conditioner compressor regulating valve - N280-) or may be damaged when started up again and fail after a short time. Furthermore, sealing additive deposits may subsequently come loose in the refrigerant circuit components and then cause the air conditioner to fail again (full cleaning of these components with workshop equipment is currently not possible).
- Contaminated refrigerant can render all refrigerant in your air conditioner service station unusable.
- Check the composition of the refrigerant in the refrigerant circuit with a suitable tester before extraction ⇒ “2.3 Performing gas analysis for refrigerant”, page 147 .
- Extract contaminated refrigerant into a recycling cylinder and return this to your gas supplier for analysis, treatment or disposal ⇒ “6.2.17 Returning contaminated refrigerant R1234yf for analysis, treatment or disposal”, page 26 .

Protected by copyright. Copying for private or commercial purposes, in part or in whole, is not permitted unless authorised by AUDI AG. AUDI AG does not guarantee or accept any liability with respect to the contents of this document. Copyright by AUDI AG.

Note

- *Contaminated refrigerant can alter the function of the air conditioner and/or irreparably damage refrigerant circuit components.*
- *Mixtures of different refrigerants (e.g. refrigerant R1234yf with an uncertain proportion of refrigerant R134a) must not be added to a vehicle that was type tested with refrigerant R1234yf.*

Protected by copyright. Copying for private or commercial purposes, in part or in whole, is not permitted unless authorised by AUDI AG. AUDI AG does not guarantee or accept any liability with respect to the correctness of information in this document. Copyright by AUDI AG.

Further notes on working with air conditioner service station

When working with the air conditioner service station (for currently available air conditioner service stations , refer to ⇒ Workshop equipment and special tools catalogue), please note the following:

- The fitted filter and dryer must be renewed by no later than when the operational time specified in the related operating instructions has been reached.
- If an air conditioner service station is also used to clean (flush) the refrigerant circuit, the dryers and filters installed must be renewed more frequently ⇒ page 137 .
- Only fill reservoirs with refrigerant oils which are also approved for the vehicle-specific refrigerant circuit (if applicable, add refrigerant oil directly to refrigerant circuit) ⇒ Electronic parts catalogue .
- Depending on the version of the air conditioner service station and the work to be performed, a specific minimum quantity of refrigerant, refrigerant oil and UV leak detection additive must be in the corresponding reservoirs of the air conditioner service station ⇒ Operating instructions for air conditioner service station .

If there is any doubt about the composition of the refrigerant extracted from the refrigerant circuit, do not re-use it even after it has been cleaned in the air conditioner service station ⇒ “2.3 Performing gas analysis for refrigerant”, page 147 .

- If the wrong refrigerant is inadvertently added to the air conditioner service station , drain it ⇒ “2.4 Discharging refrigerant circuit”, page 150 and ⇒ “2.2 Connecting air conditioner service station to refrigerant circuit”, page 144 , clean the system (if necessary) and renew the filters, dryers and the added refrigerant oil.
- In Germany, for example, contaminated refrigerant can be returned to the refrigerant supplier in so-called recycling cylinders for analysis, treatment or environmentally friendly disposal (different or additional regulations may apply in individual countries) ⇒ “6.2.17 Returning contaminated refrigerant R1234yf for analysis, treatment or disposal”, page 26 .

2.2 Connecting air conditioner service station to refrigerant circuit

Connecting

- Work procedure may vary depending on the type of tools selected; therefore it is important to observe the tool-specific operating instructions.

Note

Perform this procedure as described in the operating instructions for your air conditioner service station ⇒ Operating instructions for air conditioner service station .

The filler hoses should be connected as follows to prevent air or moisture from entering into the refrigerant circuit:

- On vehicles with high-voltage system, switch off (deactivate) auxiliary air conditioner function ⇒ Owner's Manual and ⇒ Infotainment/MMI Operating Manual .
- Switch off ignition.
- Connect air conditioner service station to power supply.
- Switch on air conditioner service station and start it up in accordance with corresponding operating instructions ⇒ Operating instructions for air conditioner service station .
- Unscrew caps on service connections (see vehicle-specific refrigerant circuit) ⇒ Heating, air conditioning; Rep. gr. 87 ; Refrigerant circuit (vehicle-specific Workshop Manual).
- Evacuate filler hoses if necessary.
- Check service connections of refrigerant circuit for dirt or corrosion and clean if necessary.

Note

Dirt or a rough surface on service connections due to corrosion can damage the seals and therefore cause premature failure of the quick-release couplings.

- Connect quick-release couplings to service connections of refrigerant circuit.

NOTICE

Risk of damage to air conditioner compressor or air conditioner service station.

If the air conditioner is switched on, there is a risk of a short circuit between the high-pressure and low-pressure sides when the valves open.

- **Never open valves on the high-pressure or low-pressure side when the air conditioner is switched on.**

- Screw in handwheel of quick-release coupling adapter on low-pressure side only to extent required to open valve in service connection reliably (observe pressure gauge, do not open valve too far).
- Perform a gas analysis with the air conditioner service station (only necessary if refrigerant is to be extracted, or you wish to check the pressure values in the refrigerant circuit) ⇒ “2.3 Performing gas analysis for refrigerant”, page 147 .

Protected by copyright. Copying for private or commercial purposes, in part or in whole, is not permitted unless authorised by AUDI AG. AUDI AG does not guarantee or accept any liability with respect to the correctness of information in this document. Copyright by AUDI AG.

Note

- *Connect the gas analyser or air conditioner service station to the refrigerant circuit and start up in accordance with the relevant operating instructions ⇒ Gas analyser operating instructions , ⇒ page 144 and/or ⇒ Operating instructions for air conditioner service station .*
- *A certain pressure is required in the refrigerant circuit (e.g. higher than 2.5 bar with ambient temperature of 20 °C) for the gas analysis. If there is not enough refrigerant in the refrigerant circuit to build up sufficient pressure (e.g. less than 30 g of refrigerant which builds up a pressure of only approx. 1 bar), it may no longer be possible to perform a gas analysis (depending on version of air conditioner service station). However, it is not permissible to extract refrigerant from the air conditioner service station without performing a gas analysis first. In this case, please refer to the ⇒ operating instructions of the air conditioner service station for a description of how to remove the remaining refrigerant from the refrigerant circuit.*

If the gas analysis reveals that refrigerant in the circuit does not conform to specifications.

– Screw in handwheel of quick-release coupling adapter on high-pressure side only to extent required to open valve in service connection reliably (observe pressure gauge, do not open valve too far).

– Perform required work on refrigerant circuit using air conditioner service station .

Note

- *If the gas analysis shows that refrigerant R1234yf is contaminated, extract refrigerant from refrigerant circuit and return e.g. to your gas supplier for treatment (or disposal)*
  ⇒ "2.13 Decanting contaminated refrigerant into recycling cylinder for analysis, treatment or disposal", page 175 ,
  ⇒ "6.2.17 Returning contaminated refrigerant R1234yf for analysis, treatment or disposal", page 26 and
  ⇒ "6.1 Principles of air conditioning systems", page 17 .

Protected by copyright. Copying for private or commercial purposes, in part or in whole, is not permitted unless authorised by AUDI AG. AUDI AG does not guarantee or accept any liability with respect to the correctness of information in this document. Copyright by AUDI AG.

- *If it is not possible to extract the contaminated refrigerant from the vehicle refrigerant circuit and pour it into a recycling cylinder immediately. Unscrew (close) handwheel of quick release coupling adapter (low-pressure side), switch off air conditioner service station (and disconnect from the power supply if necessary). Next, disconnect the quick release coupling adapter on the low-pressure side from the vehicle. Then disconnect the quick release coupling adapter (low-pressure side) from the filler hose to the air conditioner service station , e.g. upstream of an extraction hose of the workshop extraction system, and allow the contaminated refrigerant to flow out of the filler hose into the extraction hose of the workshop extraction system. To get the air conditioner service station ready for operation again, reconnect the quick release coupling adapter (low-pressure side) to the filler hose to the air conditioner service station and evacuate using air conditioner service station in accordance with the operating instructions ⇒ Operating instructions for air conditioner service station .*

– Perform the work with the air conditioner service station .

- ⇒ "2.3 Performing gas analysis for refrigerant", page 147
- ⇒ "2.4 Discharging refrigerant circuit", page 150

- ⇒ “2.5 Evacuating refrigerant circuit”, page 153
- ⇒ “2.6 Charging refrigerant circuit”, page 160
- ⇒ “2.8 Switching off air conditioner service station and disconnecting from refrigerant circuit”, page 165
- ⇒ “2.9 Filling reservoirs with refrigerant”, page 167
- ⇒ “2.10 Discharging air conditioner service station”, page 168
- ⇒ “2.14 Checking pressures”, page 184

2.3 Performing gas analysis for refrigerant

Note

- *The refrigerant used must have a certain purity for air conditioner operation.*
- *Contamination with other refrigerants or gases can cause damage and therefore lead to the air conditioner malfunctioning.*
- *Contaminated refrigerant must be returned e.g. to your gas supplier for treatment (or disposal) as a gas of unknown composition, in accordance with legal provisions ⇒ VW/Audi ServiceNet .*
- *To prevent liquid elements (e.g. drops of refrigerant oil) in the extracted refrigerant gas from leading to an incorrect gas analysis result, the gas analysis device contains separators (filters) that retains these droplets of liquid. Renew separators according to specifications in operating instructions of gas analyser or air conditioner service station ⇒ Operating instructions of gas analyser or ⇒ Operating instructions of air conditioner service station .*

All vehicles

– Connect the gas analyser or air conditioner service station to the refrigerant circuit and start up in accordance with the relevant operating instructions ⇒ Gas analyser operating instructions , ⇒ “2.2 Connecting air conditioner service station to refrigerant circuit”, page 144 and/or ⇒ Operating instructions for air conditioner service station .

– Perform gas analysis in accordance with operating instructions ⇒ Operating instructions for air conditioner service station .

Protected by copyright. Copying for private or commercial purposes, in part or in whole, is not permitted unless authorised by AUDI AG. AUDI AG does not guarantee or accept any liability with respect to the correctness of information in this document. Copyright by AUDI AG.

Note

- *Incorrect gas analysis is possible due to air in refrigerant hoses or non-compliance with the gas analysis procedure stated in the operating instructions.*
- *A certain pressure is required in the refrigerant circuit (e.g. higher than 2.5 bar with ambient temperature of 20 °C) for the gas analysis. If there is not enough refrigerant in the refrigerant circuit to build up sufficient pressure (e.g. less than 30 g of refrigerant which builds up a pressure of only approx. 1 bar), it may no longer be possible to perform a gas analysis (depending on version of air conditioner service station). However, it is not permissible to extract refrigerant from the air conditioner service station without performing a gas analysis first. In this case, please refer to the ⇒ operating instructions of the air conditioner service station for a description of how to remove the remaining refrigerant from the refrigerant circuit.*
- *Pay close attention to the operating instructions for the gas analyser/ air conditioner service station .*
- *Evacuate refrigerant hoses of air conditioner service station with refrigerant R1234yf before connecting service couplings to refrigerant circuit/a gas cylinder (see operating instructions for gas analyser/ air conditioner service station .*

Protected by copyright. Copying for private or commercial purposes, in part or in whole, is not permitted unless authorised by AUDI AG. AUDI AG does not guarantee or accept any liability with respect to the correctness of information in this document. Copyright by AUDI AG.

The gas analysis may indicate the following results:

- The analysed refrigerant R1234yf conforms to the specifications, the planned work can be performed with the air conditioner service station .
- A fault occurred during the gas analysis. Locate and remedy the fault, then perform the gas analysis again ⇒ Operating instructions for air conditioner service station .
- The analysed refrigerant R1234yf does not conform to the specifications. The analysed refrigerant must be extracted as refrigerant of unknown composition and returned e.g. to your gas supplier for analysis, treatment or disposal
  ⇒ “6.2.17 Returning contaminated refrigerant R1234yf for analysis, treatment or disposal”, page 26

Note

- *If contamination is detected during the analysis of refrigerant that is to be extracted e.g. from a vehicle refrigerant circuit. If you wish to be sure about the result of analysis, your gas supplier can also perform a gas analysis e.g. with refrigerant from a delivery cylinder.*
- *Due to the required purity of refrigerant R1234yf, even small residues of ambient air in the filler hoses of the air conditioner service station can lead to an incorrect result. Therefore, a routine is stored in most air conditioner service stations that repeat the gas analysis up to two times, before a not OK result is displayed ⇒ Operating instructions for air conditioner service station .*
- *You can perform a simple function test of your gas analyser e.g. with ambient air (unscrew the service coupling from the refrigerant hose used to perform the gas analysis and conduct the gas analysis with the refrigerant hose open). This test must then indicate that the analysed gas is not OK.*
- *The gas analysis procedure employed here was developed for automotive workshops; it does not deliver any information on the exact composition of the refrigerant. This gas analysis can therefore only provide information on the proportion of refrigerant R1234yf in the analysed refrigerant. If the proportion of R1234yf is below 95 %, the refrigerant no longer conforms to specifications and can cause damage to refrigerant circuit components. A gas analysis that provides information on the exact composition of the analysed refrigerant is currently not available for workshops. Gas analyses that can determine the exact composition of gases require sophisticated, expensive equipment and procedures and can mostly only be conducted in test facilities specially designed for this purpose.*

Protected by copyright. Copying for private or commercial purposes, in part or in whole, is not permitted unless authorised by AUDI AG. AUDI AG does not guarantee or accept any liability with respect to the correctness of information in this document. Copyright by AUDI AG.

If the gas analysis detects contaminated refrigerant, talk to the customer before continuing with the work and make them aware of the following:

The refrigerant circuit of his vehicle contains contaminated refrigerant or refrigerant of an unknown composition, which does not conform to the specifications of the vehicle manufacturer. This refrigerant:

- Must be returned e.g. to your gas supplier for analysis, treatment (or disposal) as a refrigerant of unknown composition ⇒ “6.2.17 Returning contaminated refrigerant R1234yf for analysis, treatment or disposal”, page 26 .
- Can be the cause of a malfunction or already have caused preliminary damage to the refrigerant circuit, so that malfunctions may occur in the near future.
- Depending on its composition, the use of contaminated refrigerant may cause the vehicle's type approval to become void.
- If the contaminated refrigerant has caused internal damage to the refrigerant circuit (e.g. if refrigerant circuit components have been attacked by breakdown products of the contaminated refrigerant ⇒ “1.5 Renewing components”, page 79), the refrigerant circuit can only be repaired completely by renewing all components that came into contact with the contaminated refrigerant. You can assess the internal condition of the refrigerant circuit e.g. by visually inspecting certain refrigerant circuit components (e.g. from the condition of the inner surface of removed refrigerant lines and hoses, the inner surface of the receiver and the condition of the removed desiccant cartridge).

- If the contaminated refrigerant has caused internal damage to the refrigerant circuit (e.g. failure of air conditioner compressor due to damaged control elements or overheating, refrigerant oil more strongly coloured than usual, but parts through which refrigerant flows not damaged ⇒ “1.5 Renewing components”, page 79), the refrigerant circuit can be recharged again after it has been flushed (renew air conditioner compressor, dryer and expansion valve). However, since it is impossible to know the long-term effect of the contaminated refrigerant on the refrigerant oil and refrigerant circuit components, in this case the future function of the refrigerant circuit components cannot be guaranteed.
- If the contaminated refrigerant has not caused internal damage to the refrigerant circuit (e.g. the refrigerant oil is not more coloured than usual, the refrigerant circuit components have not been damaged), after replacing the dryer and evacuating the refrigerant circuit for a longer time (at least one hour), the refrigerant circuit can be recharged. However, since it is impossible to know the long-term effect of the contaminated refrigerant on the refrigerant oil and refrigerant circuit components, in this case the future function of the refrigerant circuit components cannot be guaranteed ⇒ “1.5 Renewing components”, page 79 .

Protected by copyright. Copying for private or commercial purposes, in part or in whole, is not permitted unless authorised by AUDI AG. AUDI AG does not guarantee or accept any liability with respect to the correctness of information in this document. Copyright by AUDI AG.

Note

- *If there is a problem that was caused by contaminated refrigerant (e.g. leaking seals or hoses, damage to air conditioner compressor, contaminated refrigerant oil), flush the refrigerant circuit; then renew all components that were damaged by the contaminated refrigerant (seals, hoses, receiver/desiccant cartridge, expansion valve and air conditioner compressor). If it becomes clear that the contaminated refrigerant has also damaged other components (e.g. inner surfaces of refrigerant pipes and hoses, seals), the entire refrigerant circuit must be renewed. Subsequently the refrigerant circuit must be charged with clean refrigerant. Next, check the operation of the air conditioner. For customers and to cover yourself, make a note of the fact that the refrigerant circuit was charged with contaminated refrigerant.*
- *If a problem is present that was caused by contaminated refrigerant (e.g. no or insufficient cooling output) and no other problems with the refrigerant circuit are detected, or the refrigerant has to be extracted due to work in the vicinity of the refrigerant circuit, proceed as follows after extraction. Remove the dryer and check for contamination, as there is also refrigerant oil on or in the dryer; check this as well. If the refrigerant oil is contaminated, dark or viscous, or if there are dirt deposits on the dryer, flush the refrigerant circuit and renew the parts as described above (previous damage may have already occurred, which could cause air conditioner to fail in near future). If the refrigerant oil is OK and the dryer is also not more contaminated than in normal operation, renew the dryer. Evacuate the refrigerant circuit for longer than usual (at least one hour); then recharge it with clean refrigerant. Check operation of air conditioner. For customers and to cover yourself, make a note of the fact that the refrigerant circuit was charged with contaminated refrigerant.*

2.4 Discharging refrigerant circuit

- Work procedure may vary depending on the type of tools selected; it is therefore important to observe the tool-specific operating instructions ⇒ Operating instructions for air conditioner service station .

- The refrigerant circuit must be discharged if you intend to remove parts of the refrigerant circuit, if there is any doubt about the quantity of refrigerant in the circuit, if contaminated refrigerant is detected during the gas analysis, or if the safety precautions require you to do so.
- All important user information for work with the air conditioner service station for refrigerant can be found in the operating instructions for the air conditioner service station ⇒ Operating instructions for air conditioner service station .

Discharging:

– On vehicles with high-voltage system, switch off (deactivate) auxiliary air conditioner function ⇒ Owner's Manual and ⇒ Infotainment/MMI Operating Manual .

Protected by copyright. Copying for private or commercial purposes, in part or in whole, is not permitted unless authorised by AUDI AG. AUDI AG does not guarantee or accept any liability with respect to the correctness of information in this document. Copyright by AUDI AG.

– Switch off ignition.

– Connect air conditioner service station to power supply.

Additionally on vehicles with electrically operated valves in the refrigerant circuit which are not open when the system is de-energised:

Note

On vehicles with high-voltage system and additional air conditioner functions ("heat pump operation" or "high-voltage battery cooling"), valves which are not open when the system is de-energised may be fitted in the refrigerant circuit. These valves are opened and closed e.g. via stepper motors and are not activated after the ignition is switched off. However, for the refrigerant circuit to be discharged fully, evacuated correctly and filled there must be no separated areas; these valves must therefore be opened before performing such work ⇒ Heating, air conditioning; Rep. gr. 87 ; Refrigerant circuit (vehicle-specific Workshop Manual), and ⇒ Vehicle diagnostic tester ("Guided Fault Finding").

– Use the vehicle diagnostic tester to open the electrically activated valves which are not open when the system is de-energised ⇒ Vehicle diagnostic tester ("Guided Fault Finding").

All vehicles

– Start up air conditioner service station in accordance with corresponding operating instructions.

– Remove caps from refrigerant circuit service connections (see vehicle-specific refrigerant circuit) ⇒ Heating, air conditioning; Rep. gr. 87 ; Refrigerant circuit (vehicle-specific Workshop Manual).

– Connect air conditioner service station to refrigerant circuit ⇒ "2.2 Connecting air conditioner service station to refrigerant circuit", page 144 .

– Perform gas analysis using air conditioner service station ⇒ "2.3 Performing gas analysis for refrigerant", page 147 .

Note

If the gas analysis shows that refrigerant R1234yf is contaminated, extract refrigerant from refrigerant circuit (pour into a recycling cylinder) and return e.g. to your gas supplier for analysis, treatment or disposal
⇒ "6.2.17 Returning contaminated refrigerant R1234yf for analysis, treatment or disposal", page 26 .

– Discharge refrigerant circuit with air conditioner service station in accordance with corresponding operating instructions.

NOTICE

Risk of damage to air conditioner compressor if there is vacuum in the refrigerant circuit.

– **Never start the engine if there is vacuum in the refrigerant circuit.**

Note

- *It is impossible to exclude the possibility that refrigerant oil may be extracted from the refrigerant circuit along with the refrigerant. To ensure lubrication of the air conditioner compressor, top up the refrigerant oil in the circuit with fresh refrigerant oil* ⇒ *"2.6 Charging refrigerant circuit", page 160* .
- *Depending on the version of the air conditioner service station , this may produce a vacuum in the refrigerant circuit when extracting refrigerant (residual pressure below approx. 300 mbar).*
- *On vehicles fitted with an air conditioner compressor without magnetic clutch (with air conditioner compressor regulating valve - N280-), the engine should not be run for longer than absolutely necessary with the refrigerant circuit empty; avoid high engine speeds (with air conditioner compressor always in operation).*
- *On vehicles with an air conditioner compressor without a magnetic clutch, the engine should only be started following the complete assembly of the refrigerant circuit (avoid high engine speeds).*
- *Depending on the version of the air conditioner compressor, there may be a valve on the high-pressure side of the compressor which prevents liquid refrigerant from flowing back into the compressor after the air conditioner has been switched off. If an air conditioner compressor with such a valve is installed in a vehicle with a refrigerant circuit with an expansion valve, it may take a relatively long time before the pressure in the high-pressure side drops (the expansion valve is cold and the pressure in the low-pressure side increases rapidly after the compressor is switched off; the expansion valve is closed and the refrigerant can only flow slowly to the low-pressure side). If the air conditioner compressor is switched on (or the refrigerant circuit is discharged via the low-pressure side), the pressure on the low-pressure side drops, the expansion valve is opened and the refrigerant can flow to the low-pressure side.*

Protected by copyright. Copying for private or commercial purposes, in part or in whole, is not permitted unless authorised by AUDI AG. AUDI AG does not guarantee or accept any liability with respect to the correctness of information contained in this document. Copyright by AUDI AG.

If performing work on the vehicle after discharging for which the air conditioner service station is not required:

– Disconnect air conditioner service station from refrigerant circuit and switch off
⇒ "2.8 Switching off air conditioner service station and disconnecting from refrigerant circuit", page 165 .

– Open refrigerant circuit at a connection point.

CAUTION

Risk of frostbite from escaping pressurised refrigerant

Risk of frostbite on skin and other parts of the body

- **Put on protective gloves.**
- **Put on safety goggles.**
- **Extract the refrigerant and then immediately open up the refrigerant circuit.**
- **Extract the refrigerant again if more than 10 minutes have passed since the initial extraction and the refrigerant circuit has not been opened up. Renewed evaporation leads to the build-up of pressure in the refrigerant circuit.**

– Perform required work on refrigerant circuit.

If evacuating and re-charging refrigerant circuit after it is discharged, refer to
⇒ “2.5 Evacuating refrigerant circuit”, page 153 .

Note

- *After opening connection points in the refrigerant circuit, close the open lines and component connections (to prevent moisture and dirt from penetrating these components).*
- *It is impossible to exclude the possibility that refrigerant oil may be extracted from the refrigerant circuit along with the refrigerant. To ensure lubrication of the air conditioner compressor, top up the refrigerant oil in the circuit with fresh oil.*
- *On vehicles fitted with an air conditioner compressor with air conditioner compressor regulating valve - N280- , the engine should not be run for longer than absolutely necessary with the refrigerant circuit empty; avoid high engine speeds (with air conditioner compressor always in operation).*
- *On vehicles fitted with an air conditioner compressor with air conditioner compressor regulating valve - N280- , the engine should only be started once the refrigerant circuit has been assembled fully (avoid high engine speeds).*

2.5 Evacuating refrigerant circuit

- Perform this procedure as described in the operating instructions for your air conditioner service station ⇒ Operating instructions for air conditioner service station .
- The quantity of refrigerant oil in the air conditioner service station must have been checked and corrected if necessary ⇒ Operating instructions for air conditioner service station .
- The quantity of refrigerant in the air conditioner service station must have been checked and corrected if necessary ⇒ Operating instructions for air conditioner service station .

The reproduction of this document for commercial purposes, in part or in whole, is not permitted unless authorised by AUDI AG. AUDI AG does not guarantee or accept any liability with respect to the correctness of information in this document. Copyright by AUDI AG.

The refrigerant circuit must be evacuated (emptied of air) before it is charged with refrigerant. Performing this procedure also removes moisture from the circuit.

Leaks can be detected when evacuating the refrigerant circuit
⇒ “1.4 Locating leaks”, page 68 .

NOTICE

Risk of damage to air conditioner compressor if there is vacuum in the refrigerant circuit.

– **Never start the engine if there is vacuum in the refrigerant circuit.**

Evacuating:

- The refrigerant circuit must be assembled completely.

– On vehicles with high-voltage system, switch off (deactivate) auxiliary air conditioner function ⇒ Owner's Manual and ⇒ Infotainment/MMI Operating Manual .

– Switch off ignition.

– Connect air conditioner service station to power supply.

Additionally on vehicles with electrically operated valves in the refrigerant circuit which are not open when the system is de-energised:

Note

Protected by copyright. Copying for private or commercial purposes, in part or in whole, is not permitted unless authorised by AUDI AG. AUDI AG does not guarantee or accept any liability with respect to the correctness of information in this document. Copyright by AUDI AG.

♦ *On vehicles with high-voltage system and additional air conditioner functions ("heat pump operation" or "high-voltage battery cooling"), valves which are not open when the system is de-energised may be fitted in the refrigerant circuit. These valves are opened and closed e.g. via stepper motors and are not activated after the ignition is switched off. However, for the refrigerant circuit to be discharged fully, evacuated correctly and filled there must be no separated areas; these valves must therefore be opened before performing such work ⇒ Heating, air conditioning; Rep. gr. 87 ; Refrigerant circuit (vehicle-specific Workshop Manual), and ⇒ Vehicle diagnostic tester ("Guided Fault Finding").*

♦ *Non-return valves in the refrigerant circuit have a specific holding pressure (approx. 0.1 bar or 100 mbar) in the forward direction. All electrically activated valves must therefore be open so that the refrigerant circuit can be evacuated fully (residual pressure less than 5 mbar).*

– Use the vehicle diagnostic tester to open the electrically activated valves which are not open when the system is de-energised ⇒ Vehicle diagnostic tester ("Guided Fault Finding").

All vehicles

– Start up air conditioner service station in accordance with corresponding operating instructions ⇒ Operating instructions for air conditioner service station .

– Remove caps from refrigerant circuit service connections (see vehicle-specific refrigerant circuit) ⇒ Heating, air conditioning; Rep. gr. 87 ; Refrigerant circuit (vehicle-specific Workshop Manual).

– Check service connections of refrigerant circuit for dirt or corrosion and clean if necessary.

Note

Protected by copyright. Copying for private or commercial purposes, in part or in whole, is not permitted without the prior written consent of AUDI AG. We do not guarantee or accept any liability with respect to the correctness of information in this document. Copyright by AUDI AG.

Dirt or a rough surface on service connections due to corrosion can damage the seals and therefore cause premature failure of the quick-release couplings.

– Connect air conditioner service station to refrigerant circuit ⇒ “2.2 Connecting air conditioner service station to refrigerant circuit”, page 144 .

– Switch on the air conditioner service station , evacuate the refrigerant circuit and perform a vacuum test (duration e.g. 10 minutes vacuum pump on, to remove air, refrigerant residues and moisture and 20 minutes vacuum/pressure rise test).

Note

- *The vacuum at the end of the evacuation process (operation of vacuum pump of air conditioner service station) must have an absolute pressure of less than 5 mbar. There are various reasons why the pressure in the refrigerant circuit may not drop below 5 mbar during evacuation. Some examples: leaks in refrigerant circuit or in connection to air conditioner service station , time set for evacuation too short, vacuum pump of air conditioner service station not generating required vacuum, or vacuum sensor of air conditioner service station not correctly calibrated ⇒ Operating instructions for air conditioner service station .*
- *At an ambient pressure of 980 mbar, for example, an absolute pressure of 5 mbar corresponds to a vacuum of 975 mbar.*
- *The pressure in the refrigerant circuit must not exceed 20 mbar absolute pressure at the end of the vacuum test/pressure build-up test. If the pressure in the refrigerant circuit exceeds 20 mbar during the vacuum test/pressure build-up test, switch on the vacuum pump and the process starts again from the beginning ⇒ Operating instructions for air conditioner service station . There are various reasons why the pressure in the refrigerant circuit may not remain below 20 mbar even after the process has been repeated twice. Some examples: leaks in refrigerant circuit, leaks in connection from refrigerant circuit to air conditioner service station or in air conditioner service station itself, time set for evacuation too short, time set for vacuum test/pressure build-up test too long.*
- *If you suspect that there is a leak in the refrigerant circuit, switch off the air conditioner service station if applicable and leave at standstill for as long as possible (e.g. at least one hour for checking that the refrigerant circuit is not leaking ⇒ Operating instructions for air conditioner service station .*
- *Depending on the version of the air conditioner service station , the pressure in the refrigerant circuit may be displayed directly; however, the current pressure may only be displayed when the vacuum pump is running ⇒ Operating instructions for air conditioner service station . If an air conditioner service station only displays the ambient pressure, the display of the pressure in the refrigerant circuit depends on the ambient pressure when switched on (if the ambient pressure is 980 mbar, a vacuum of 975 mbar corresponds to a residual pressure of 5 mbar absolute).*
- *If the refrigerant circuit was open, small quantities of moisture may have penetrated the refrigerant circuit with the ambient air. In this case, evacuate the refrigerant circuit for at least 30 minutes (pressure in refrigerant circuit less than 20 mbar before charging).*
- *If the refrigerant has been extracted (to check the capacity) and if you are only evacuating the refrigerant in order to then refill it (the refrigerant circuit was not opened and is not leaking), it suffices to evacuate the refrigerant circuit for 5 minutes and to set no or just a short time (e.g. 1 minute) for the vacuum/pressure rise test (no air or moisture has penetrated the refrigerant circuit).*

Protected by copyright. Copying for private or commercial purposes, in part or in whole, is not permitted unless AUDI AG grants its consent. AUDI AG does not guarantee or accept any liability with respect to the correctness of information in this document. Copyright by AUDI AG.

- *Depending on factors such as the quantity of refrigerant oil in the refrigerant circuit, the vehicle's age and mileage, and the layout of the refrigerant circuit, the specified absolute pressure in the refrigerant circuit may rise above the specified 20 mbar during the vacuum test even if the refrigerant circuit has no leaks, due to refrigerant (or possibly moisture) evaporating out of the refrigerant oil. If this is the case, it may be necessary to repeat the process and/or adapt the preset times accordingly.*

If the vacuum display does not change (and the pressure remains at less than 20 mbar), the system is tight and can be recharged.

Protected by copyright. Copying for private or commercial purposes, in part or in whole, is not permitted unless authorised by AUDI AG. AUDI AG does not guarantee or accept any liability with respect to the correctness of information in this document. Copyright by AUDI AG.

Note

- *Depending on the version of air conditioner service station , the current pressure in the refrigerant circuit is displayed either continuously or only each time e.g. the "Evacuation" function is switched on ⇒ Operating instructions for air conditioner service station .*
- *Due to the high rate of evacuation, it is possible that refrigerant evaporating out of the refrigerant oil during the vacuum test causes the pressure in the refrigerant circuit to rise to 20 to 40 mbar (absolute pressure). This does not indicate leaks in the refrigerant circuit but, depending on the version of the air conditioner service station , may lead to a fault being displayed. If necessary, evacuate the refrigerant circuit again and observe the vacuum display over a longer period. Only charge the system once vacuum remains and you are sure that there are no leaks in the refrigerant circuit.*

– Charge refrigerant circuit with air conditioner service station ⇒ "2.6 Charging refrigerant circuit", page 160 .

Proceed as follows if the vacuum is not maintained or an adequate vacuum cannot be generated:

- If the pressure in the refrigerant circuit only rises slowly after evacuation, e.g. due to refrigerant (or moisture) evaporating out of the refrigerant oil, evacuate the refrigerant circuit again and observe the vacuum display over a longer period.

– If it is not certain whether the refrigerant circuit is really leakproof, repeat evacuation and observe the vacuum display over a lengthy period. Only charge circuit if vacuum is maintained.

– Only charge refrigerant circuit if you are absolutely sure that there are no leaks ⇒ "2.6 Charging refrigerant circuit", page 160 .

Further procedure if a leak is discovered during evacuation:

- If there is a leak which allows so much air to enter during evacuation that the air conditioner service station cannot generate sufficient vacuum, or the vacuum display indicates that air is entering and the vacuum is being lost immediately after the air conditioner service station is switched off:

– Locate leaks in the refrigerant circuit as follows:

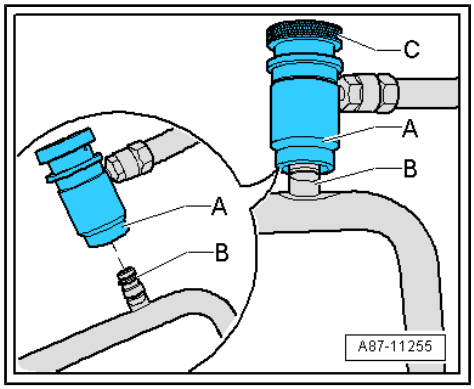

Protected by copyright. Copying for private or commercial purposes, in part or in whole, is not permitted unless authorised by AUDI AG. AUDI AG does not guarantee or accept any liability with respect to the correctness of information in this document. Copyright by AUDI AG.

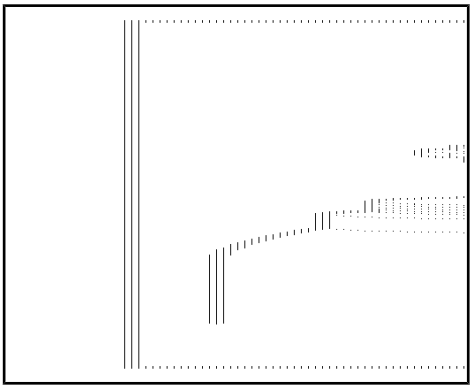

Note

- *A large leak can be determined e.g. by building up a pressure of max. 15 bar in the refrigerant circuit with pure, dry compressed air or with nitrogen* *⇒ page 137* *. If the leak is of large enough, the location of the leak can be found due to the noise of the gas escaping.*
- *Introduce compressed air or nitrogen into the closed, empty refrigerant circuit via the service connection -B- to which you connected a quick release coupling adapter -A-.*
- *Screw handwheel -C- into quick release coupling adapter -A- until you are certain valve in service connection -B- is open; do not press valve too far.*
- *The quick-release coupling adapter for service connections can be connected to the workshop compressed air system using e.g. a modified filler hose -A- (e.g. with M12 x 1.5 -6G thread acc. to SAE J639, depending on thread on quick-release coupling adapter) and an appropriate adapter -B-* *⇒ page 272* *. To prevent moisture, oil and dirt from the workshop compressed air system from entering the air conditioner refrigerant circuit, also use a combination fine filter unit for the compressed air system, with an oil, dirt and water separator, as commonly used for painting systems. Install this unit between the compressed air system and the filler hose -A- ⇒ Electronic parts catalogue .*
- *Using a pressure gauge set with nitrogen pressure reducer -1- (max. reducing pressure: 15 bar), a compressed-gas cylinder -3- filled with nitrogen can be connected to the service connection (quick-release coupling adapter for service connections attached) at the closed refrigerant circuit* *⇒ page 272* *with a charging hose -2- (e.g. with M12 x 1.5 -6G thread acc. to SAE J639).*

– Increase pressure in refrigerant circuit slowly to no more than 15 bar.

CAUTION

Risk of injury from nitrogen flowing out under high pressure.

– Use pressure reducer for nitrogen containers.

– Locate leak based on noise produced by gas escaping at this point.

– Eliminate leak.

– Evacuate refrigerant circuit and observe vacuum display again over a period of hours. Only charge circuit if vacuum is maintained.

- If a leak is found of a size that causes no or just very little air to enter when the refrigerant circuit is evacuated and the air conditioner service station is unable to generate sufficient vacuum. The vacuum display increase only very slowly or not at all after the air conditioner service station is switched off, thereby indicating that air is penetrating and vacuum being lost via just a small leak.

Protected by copyright. Copying for private or commercial purposes, in part or in whole, is not permitted unless authorised by AUDI AG. AUDI AG does not guarantee or accept any liability with respect to the correctness of information in this document. Copyright by AUDI AG.

– Add 100 grams of refrigerant to the circuit and locate the possible leak using an electronic leak detector
⇒ “1.4.2 Locating leaks in refrigerant circuit using electronic leak detector”, page 69 , or add refrigerant with UV contrasting agent and search for the leak in the refrigerant circuit using the leak detection system
⇒ “1.4.3 Locating leaks using UV leak detection system”, page 71 .

– If necessary, discharge refrigerant circuit
⇒ “2.4 Discharging refrigerant circuit”, page 150 .

– Repair refrigerant circuit ⇒ Heating, air conditioning; Rep. gr. 87 ; Refrigerant circuit (vehicle-specific Workshop Manual).

– Evacuate refrigerant circuit and again observe vacuum display over a longer period. Only charge circuit if vacuum is maintained ⇒ “2.5 Evacuating refrigerant circuit”, page 153 .

If performing work on the vehicle after evacuation for which the air conditioner service station is not required:

– Disconnect air conditioner service station from refrigerant circuit and switch off
⇒ “2.8 Switching off air conditioner service station and disconnecting from refrigerant circuit”, page 165 .

NOTICE

Risk of damage to air conditioner compressor if there is vacuum in the refrigerant circuit.

– **Never start the engine if there is vacuum in the refrigerant circuit.**

– Make sure that engine cannot be started before refrigerant circuit has been charged.

If re-charging refrigerant circuit after discharging and evacuation, refer to ⇒ “2.6 Charging refrigerant circuit”, page 160 .

2.6 Charging refrigerant circuit

Protected by copyright. Copying for private or commercial purposes, in part or in whole, is not permitted unless authorised by AUDI AG. AUDI AG does not guarantee or accept any liability with respect to the correctness of information in this document. Copyright by AUDI AG.

Note

- *The entire quantity of refrigerant can be poured into either the high or the low-pressure side. Below we describe charging the refrigerant circuit via the high-pressure side.*
- *Observe refrigerant and refrigerant oil capacities ⇒ Heating, air conditioning; Rep. gr. 00 ; Technical data (vehicle-specific Workshop Manual).*

- Perform this procedure as described in the operating instructions for the air conditioner service station ⇒ Operating instructions for air conditioner service station .
- Correct the quantity of refrigerant oil before charging the circuit with refrigerant ⇒ Heating, air conditioning; Rep. gr. 00 ; Technical data (vehicle-specific Workshop Manual).
- When charging a vehicle's refrigerant circuit, the air conditioner service station must be on the same level as the vehicle (maximum difference 50 cm). Depending on the version of the air conditioner service station , having too great a height difference can cause the amount of refrigerant shown to differ from the actual amount poured in. The accuracy of the air conditioner service station may change.

- The refrigerant circuit must have been fully re-assembled ⇒ Heating, air conditioning; Rep. gr. 87 ; Refrigerant circuit (vehicle-specific Workshop Manual).

– On vehicles with high-voltage system, switch off (deactivate) auxiliary air conditioner function ⇒ Owner's Manual and ⇒ Infotainment/MMI Operating Manual .

– Switch off ignition.

– Connect air conditioner service station to power supply.

– Check the quantity of refrigerant, refrigerant oil and UV leak detection additive in the air conditioner service station and top up if necessary ⇒ Operating instructions for air conditioner service station .

Additionally on vehicles with electrically operated valves in the refrigerant circuit which are not open when the system is de-energised:

Protected by copyright. Copying for private or commercial purposes, in part or in whole, is not permitted unless authorised by AUDI AG. AUDI AG does not guarantee or accept any liability with respect to the correctness of information in this document. Copyright by AUDI AG.

Note

On vehicles with high-voltage system and additional air conditioner functions (“heat pump operation” or “high-voltage battery cooling”), valves which are not open when the system is de-energised may be fitted in the refrigerant circuit. These valves are opened and closed e.g. via stepper motors and are not activated after the ignition is switched off. However, for the refrigerant circuit to be discharged fully, evacuated correctly and filled there must be no separated areas; these valves must therefore be opened before performing such work ⇒ Heating, air conditioning; Rep. gr. 87 ; Refrigerant circuit (vehicle-specific Workshop Manual), and ⇒ Vehicle diagnostic tester (“Guided Fault Finding”).

– Use the vehicle diagnostic tester to open the electrically activated valves which are not open when the system is de-energised ⇒ Vehicle diagnostic tester (“Guided Fault Finding”).

All vehicles

– Start up air conditioner service station in accordance with corresponding operating instructions ⇒ Operating instructions for air conditioner service station .

– Remove caps from refrigerant circuit service connections (see vehicle-specific refrigerant circuit) ⇒ Heating, air conditioning; Rep. gr. 87 ; Refrigerant circuit (vehicle-specific Workshop Manual).

– Connect quick-release couplings to service connections of refrigerant circuit
⇒ “2.2 Connecting air conditioner service station to refrigerant circuit”, page 144 .

– Evacuate refrigerant circuit with air conditioner service station
⇒ “2.5 Evacuating refrigerant circuit”, page 153 .

– Select specified quantity of refrigerant and, if applicable, quantity of refrigerant oil to be topped up and quantity of UV leak detection additive on air conditioner service station ⇒ Operating instructions for air conditioner service station , ⇒ Heating, air conditioning; Rep. gr. 00 ; Technical data (vehicle-specific Workshop Manual).

– Set the air conditioner service station so that refrigerant is added via the high-pressure side ⇒ Operating instructions for air conditioner service station .

When charging the refrigerant circuit via the low-pressure side, liquid refrigerant may accumulate in the compression chamber of the air conditioner compressor.

– If the refrigerant circuit has to be charged via the low-pressure side, turn the air conditioner compressor 10 turns by hand after charging before using the air conditioner (remove e.g. drive belt if necessary).

Note

- *The refrigerant and refrigerant oil are added to the refrigerant circuit via the high-pressure side.*
- *If a vehicle does not have a service connection on the high-pressure side of the refrigerant circuit, refrigerant may also be introduced via the service connection on the low-pressure side. However, always note the settings and operating instructions for the air conditioner service station .*
- *If the charging direction cannot be set on air conditioner service station , unscrew (close) handwheel on quick release coupling adapter (low-pressure side), if necessary.*

Protected by copyright. Copying for private or commercial purposes, in part or in whole, is not permitted unless authorised by AUDI AG. AUDI AG does not guarantee or accept any liability with respect to the correctness of information in this document. Copyright by AUDI AG.

– Charge the refrigerant circuit with the intended quantity of refrigerant and if necessary, the required top-up quantity of refrigerant oil and the correct quantity of UV additive.

– After charging, start up the air conditioner ⇒ Heating, air conditioner; Rep. gr. 87 ; Refrigerant circuit; Starting up air conditioner after charging the refrigerant circuit (vehicle-specific Workshop Manual) and
⇒ “2.7 Starting up air conditioner after charging”, page 163

Starting up air conditioner with electrically driven air conditioner compressor

– Start up air conditioner compressor via “Basic setting, Compressor run-in” function of Guided Fault Finding ⇒ Vehicle diagnostic tester.

Additionally on vehicles with electrically operated valves in the refrigerant circuit which are not open when the system is de-energised:

– Via respective control unit, enable activation of electrically operated valves (for opening or closing) which are not open without current for air conditioner operation ⇒ Vehicle diagnostic tester (“Guided Fault Finding”).

Note

On vehicles with high-voltage system and additional air conditioner functions (“heat pump operation” or “high-voltage battery cooling”), valves which are not open when the system is de-energised may be fitted in the refrigerant circuit. These valves are opened and closed e.g. via stepper motors and are not activated after the ignition is switched off. However, for the refrigerant circuit to be discharged fully, evacuated correctly and filled there must be no separated areas; these valves must therefore be opened before performing such work. On completion of the work, the respective control unit enables actuation of these valves once again ⇒ Heating, air conditioner; Rep. gr. 87 ; Refrigerant circuit (vehicle-specific Workshop Manual) and ⇒ Vehicle diagnostic tester (“Guided Fault Finding”).

All vehicles

Should a function check be performed after charging the refrigerant circuit?

– Check pressure values in refrigerant circuit ⇒ page 184 .

Should no function check be performed after charging the refrigerant circuit?

– Disconnect air conditioner service station from refrigerant circuit and switch off
⇒ “2.8 Switching off air conditioner service station and disconnecting from refrigerant circuit”, page 165 .

2.7 Starting up air conditioner after charging

Note

- *If the mechanically driven air conditioner compressor was removed, it must be cranked manually approx. 10 revolutions before being started up for the first time (during or after installation, e.g. before putting on the belt). This ensures that it does not sustain any damage from fluid hammer when first switched on (if there is refrigerant oil in the cylinder of the air conditioner compressor, this is forced out during cranking) ⇒ Heating, air conditioner; Rep. gr. 87 ; Air conditioner compressor; Removing and installing air conditioner compressor (vehicle-specific Workshop Manual).*
- *Before starting up the air conditioner for the first time after charging, if the electrically driven air conditioner compressor was removed, start up the air conditioner compressor via the function “Basic setting, Compressor run-in” in Guided Fault Finding ⇒ Vehicle diagnostic tester (“Guided Fault Finding” for air conditioner and battery regulation). This prevents the air conditioner compressor from sustaining damage e.g. due to fluid hammer when first switched on (if there is refrigerant oil in the compression chamber of the air conditioner compressor, it is forced out).*
- *The mechanically driven air conditioner compressor is driven via a belt or shaft by the engine. The electrically driven air conditioner compressor is driven by an electric motor mounted directly on the compressor (e.g. in vehicles with hybrid drive) ⇒ Heating, air conditioner; Rep. gr. 87 ; Air conditioner compressor; Removing and installing air conditioner compressor (vehicle-specific Workshop Manual).*

Protected by copyright. Copying for private or commercial purposes, in part or in whole, is not permitted unless authorised by AUDI AG. AUDI AG does not guarantee or accept any liability with respect to the correctness of information in this document. Copyright by AUDI AG.

Starting up air conditioner with mechanically driven air conditioner compressor

– Switch on ignition.

– Set the air conditioner to the lowest possible output (e.g. select “A/C off” mode).

– Switch off air conditioner compressor actuation (e.g. select “A/C off” mode).

– Start the engine with the air conditioner compressor switched off (e.g. “A/C off” mode selected).

– Wait for idling speed to stabilise.

– Switch on air conditioner compressor and operate system for at least two minutes at idling speed.

– If necessary, check pressures in refrigerant circuit using air conditioner service station ⇒ page 142 .

– Switch off engine.

– Disconnect air conditioner service station from refrigerant circuit and switch off
⇒ “2.8 Switching off air conditioner service station and disconnecting from refrigerant circuit”, page 165 .

Starting up air conditioner with electrically driven air conditioner compressor

– Switch on ignition.

– Start up air conditioner compressor via “Basic setting, compressor run-in” function ⇒ Vehicle diagnostic tester (Guided Fault Finding for air conditioner and battery regulation).

Additionally on vehicles with electrically operated valves in the refrigerant circuit which are not open when the system is de-energised:

– Via respective control unit, enable activation of electrically operated valves (for opening or closing) which are not open without current for air conditioner operation ⇒ Vehicle diagnostic tester (“Guided Fault Finding”).

Note

On vehicles with high-voltage system and additional air conditioner functions (“heat pump operation” or “high-voltage battery cooling”), valves which are not open when the system is de-energised may be fitted in the refrigerant circuit. These valves are opened and closed e.g. via stepper motors and are not activated after the ignition is switched off. However, for the refrigerant circuit to be discharged fully, evacuated correctly and filled there must be no separated areas; these valves must therefore be opened before performing such work. On completion of the work, enable actuation of these valves once again via the respective control unit ⇒ Heating, air conditioner; Rep. gr. 87 ; Refrigerant circuit (vehicle-specific Workshop Manual) and ⇒ Vehicle diagnostic tester (“Guided Fault Finding”).

Protected by copyright. Copying for private or commercial purposes, in part or in whole, is not permitted unless authorised by AUDI AG. AUDI AG does not guarantee or accept any liability with respect to the correctness of information in this document. Copyright by AUDI AG.

All the respective control units with an electrically driven the respective control unit compressor

– After performing basic settings, if necessary check the pressure values in the refrigerant circuit with the air conditioner service station .

– On vehicles with high-voltage system, switch off (deactivate) auxiliary air conditioner function ⇒ Owner's Manual and ⇒ Infotainment/MMI Operating Manual .

– Switch off ignition.

– Disconnect air conditioner service station from refrigerant circuit and switch off
⇒ “2.8 Switching off air conditioner service station and disconnecting from refrigerant circuit”, page 165 .

Vehicles with electrically driven air conditioner compressor

- The engine should only be started after the refrigerant circuit has been assembled completely.
- Vehicles with battery cooling: Hybrid drive is only possible with a full air conditioner without any stored faults ⇒ Vehicle diagnostic tester (“Guided Fault Finding” for air conditioner and battery regulation).
- After installing the electrically driven air conditioner compressor and then charging the refrigerant circuit, first start up the compressor via the “Compressor run-in” function of the basic setting routine. Otherwise, the air conditioner compressor may be damaged if refrigerant oil has accumulated in the compres-

sion chamber of the air conditioner compressor due to inappropriate storage prior to installation ⇒ Vehicle diagnostic tester (“Guided Fault Finding” for air conditioner and battery regulation).

- An electrically driven air conditioner compressor may only be activated when the refrigerant circuit is charged. Running the air conditioner compressor with the refrigerant circuit empty could lead to compressor damage ⇒ Vehicle diagnostic tester (“Guided Fault Finding” for air conditioner and battery regulation).

Protected by copyright. Copying for private or commercial purposes, in part or in whole, is not permitted unless authorised by AUDI AG. AUDI AG does not guarantee or accept any liability with respect to the correctness of information in this document. Copyright by AUDI AG.

– To minimise the number of automatic engine starts when the vehicle's drive system is active during test and measurement work, charge the vehicle batteries e.g. with the battery charger 60 A - VAS 5904- in battery standby mode ⇒ Electrical system; General information; Rep. gr. 27 ; Charging battery and ⇒ Electrical system; Rep. gr. 93 ; General warning instructions for work on the high-voltage system .

– For test and measurement work that requires the vehicle's drive system to be active (READY) or the ignition to be switched on, move the selector lever to position “P”, activate the parking brake and take care to keep well clear of the engine when it is running. Set up any tools needed so that they cannot come into contact with moving parts.

2.8 Switching off air conditioner service station and disconnecting from refrigerant circuit

– Complete specified work with air conditioner service station .

– Switch off ignition.

– Unscrew (close) handwheels of both service couplings.

⚠ CAUTION

Risk of frostbite from escaping pressurised refrigerant

Risk of frostbite on skin and other parts of the body

- **Put on protective gloves.**
- **Put on safety goggles.**
- **If refrigerant escapes from the refrigerant line for more than 1 sec. when the handwheel of the service coupling is unfastened, screw in handwheel and renew defective valve.**
- **Extract the refrigerant and then immediately open up the refrigerant circuit.**
- **Extract the refrigerant again if more than 10 minutes have passed since the initial extraction and the refrigerant circuit has not been opened up. Renewed evaporation leads to the build-up of pressure in the refrigerant circuit.**

Different versions of service couplings

◆ In one service coupling version, the chamber between the valve in the refrigerant circuit service connection and the valve in the service coupling is ventilated outwards when the handwheel is unscrewed. When the handwheel for these service couplings is unscrewed, first the valve in the vehicle service connection closes, followed by the valve in the service coupling to the filler hose to the air conditioner service station . As the handwheel is unscrewed further, the pressure in the chamber between the two valves is allowed to escape via a further valve (approx. 2 cm^3 of refrigerant). If one of these two valves (the valve on the vehicle service connection or the one in the service coupling to the filler hose) does not close properly, all

refrigerant can escape from the vehicle refrigerant circuit or the filler hose.

- In the other service coupling version, the chamber between the valve in the refrigerant circuit service connection and the valve in the service coupling is not ventilated outwards when the handwheel is unscrewed. This version contains a valve that is open when the service coupling is connected, so that pressure can be compensated between the chamber to the valve in the refrigerant circuit service connection and the filler hose connected to the service coupling. On this version, no refrigerant escapes when the handwheel for the service coupling is screwed back in. The refrigerant must therefore be extracted from the filler hoses back into the air conditioner service station before the service couplings are disconnected. If a larger quantity of refrigerant (more than approx. 50 g) is recovered e.g. after a pressure test or after charging the refrigerant circuit, this indicates that there may be a leak in a valve in one of the refrigerant circuit service connections and that refrigerant is escaping from the vehicle's refrigerant circuit (extract refrigerant and renew defective valve).

Protected by copyright. Copying for private or commercial purposes, in part or in whole, is not permitted unless authorised by AUDI AG. AUDI AG does not guarantee or accept any liability with respect to the correctness of information in this document. Copyright by AUDI AG.

Before drawing refrigerant from filler hoses back into to air conditioner service station , unscrew handwheels for both service couplings as far as stop.

Note

- *The air conditioner service station features a stored function that brings it into a defined operating state when switched off. This function sucks all the refrigerant out of the filler hoses into the air conditioner service station .*
- *If the handwheels for both service couplings are not unscrewed when this function is activated, refrigerant may be extracted from the vehicle refrigerant circuit.*

– Extract refrigerant from both filler hoses using air conditioner service station in accordance with corresponding operating instructions ⇒ Operating instructions for air conditioner service station .

Note

- *If this process takes longer than approx. 2 minutes or a larger quantity of refrigerant is extracted when using an air conditioner service station with a service coupling in which pressure is not released to the outside, this indicates a fault in one of the valves in a service connection.*
- *If this process takes longer than approx. 2 min when using an air conditioner service station with a service coupling in which pressure is vented to the outside, this indicates a fault in one of the valves in a service coupling.*

– First unscrew (close) handwheels on quick release coupling adapters.

– Next extract refrigerant out of the two filler hoses with the air conditioner service station.

– Switch off the air conditioner service station (and disconnect from the power supply if necessary) ⇒ Operating instructions for air conditioner service station .

– Disconnect quick-release couplings from service connections of refrigerant circuit.

– Screw caps onto service connections (see vehicle-specific refrigerant circuit) ⇒ Heating, air conditioning; Rep. gr. 87 ; Refrigerant circuit (vehicle-specific Workshop Manual).

2.9 Filling reservoirs with refrigerant

– Connect a delivery cylinder of fresh refrigerant R1234yf to the low-pressure side service coupling to the air conditioner service station ⇒ Operating instructions for air conditioner service station .

– Perform a gas analysis on the refrigerant to be filled (out of the delivery cylinder) with the air conditioner service station ⇒ “2.3 Performing gas analysis for refrigerant”, page 147 .

• Perform this procedure as described in the operating instructions for your air conditioner service station ⇒ Operating instructions for air conditioner service station .

CAUTION

Risk of explosion due to overfilled refrigerant vessels.

Refrigerant can expand and refrigerant vessel can explode if it is overfilled.

– **Use refrigerant vessels with a safety valve.**
– **Never exceed the permitted capacity of the refrigerant vessel.**

Protected by copyright. Copying for private or commercial purposes, in part or in whole, is not permitted unless authorised by AUDI AG. AUDI AG does not guarantee or accept any liability with respect to the correctness of information in this document. Copyright by AUDI AG.

Note

Depending on the version of the air conditioner service station and the work to be performed, a specific minimum quantity of refrigerant, refrigerant oil and UV leak detection additive must be in the corresponding reservoirs of the air conditioner service station ⇒ Operating instructions for air conditioner service station .

2.10 Discharging air conditioner service station

Note

- *If it is necessary to discharge the air conditioner service station (e.g. due to extraction of contaminated refrigerant), renew all filters and dryers (do not remove filter and dryer from the air-tight packaging until immediately before installation to minimise absorption of moisture).*
- *If you need to drain the air conditioner service station (e.g. because certain work needs to be performed on the air conditioner service station and the refrigerant that has been or will be extracted from the air conditioner service station conforms to the specifications (it is not contaminated), it may be filled into a recycling cylinder and then reused ⇒ Operating instructions for air conditioner service station .*
- *Refrigerant cylinders filled with contaminated or used refrigerant are termed "recycling cylinders" or "R-cylinders".*
- *Always evacuate recycling cylinders before initial filling with refrigerant (if there is air in a refrigerant vessel it must not be filled with refrigerant).*
- *Do not mix various types of refrigerant (refrigerant mixtures cannot be recycled and must be disposed of). If there is uncertainty regarding the composition of a cylinder's content, please inform the gas treatment/gas disposal firm ⇒ "2.13 Decanting contaminated refrigerant into recycling cylinder for analysis, treatment or disposal", page 175 and ⇒ "6.2.17 Returning contaminated refrigerant R1234yf for analysis, treatment or disposal", page 26 .*

Copyright

CAUTION

Risk of explosion due to overfilled refrigerant vessels.

Refrigerant can expand and refrigerant vessel can explode if it is overfilled.

- **Use refrigerant vessels with a safety valve.**
- **Never exceed the permitted capacity of the refrigerant vessel.**

ial purposes, in part or in whole, is not
DI AG does not guarantee or accept any liability
with respect to the correctness of information in this document. Copyright by AUDI AG.

There are various options for draining an air conditioner service station see operating instructions for air conditioner service station ⇒ Operating instructions for air conditioner service station .

- Fill refrigerant from the drained air conditioner service station into another air conditioner service station , note the operating instructions for air conditioner service station ⇒ Operating instructions for air conditioner service station and ⇒ "2.13 Decanting contaminated refrigerant into recycling cylinder for analysis, treatment or disposal", page 175 .

2.11 Cleaning electrically driven air conditioner compressor

Vehicles with high-voltage system

For all work on vehicles with high-voltage system, note the additional warning instructions for these vehicles ⇒ Electrical system; Rep. gr. 93 ; General warning instructions for work on the high-voltage system .

If work is required in proximity to components of the high-voltage system, "visually inspect the high-voltage components and lines

for damage ” “Note general warning instructions for work on the high-voltage system” ⇒ Electrical system; Rep. gr. 93 ; General warning instructions for work on the high-voltage system .

If work is necessary on components of the high-voltage system, de-energise the high-voltage system ⇒ Electrical system; Rep. gr. 93 ; De-energising high-voltage system and note ⇒ Electrical system; Rep. gr. 93 ; General warning instructions for work on the high-voltage system .

Flushing air conditioner compressor

Note

- *The design of the electrically driven air conditioner compressor is such that the refrigerant oil cannot be poured out (there is no oil drain plug).*
- *On the electrically driven air conditioner compressor, the refrigerant oil must be removed by flushing in the direction of flow (it is not possible to flush in the opposite direction due to the valves installed).*
- *For the flushing procedure, position the air conditioner compressor so that t.he connection for the refrigerant line on the high-pressure side is as low down as possible.*
- *Before flushing new air conditioner compressors filled with more than 100 cm^3, pour out as much refrigerant oil as possible* *⇒ Item 5 (page 170)* .

Protected by copyright. Copying for private or commercial purposes, in part or in whole, is not permitted unless authorised by AUDI AG. AUDI AG does not guarantee or accept any liability with respect to the correctness of information in this document. Copyright by AUDI AG.

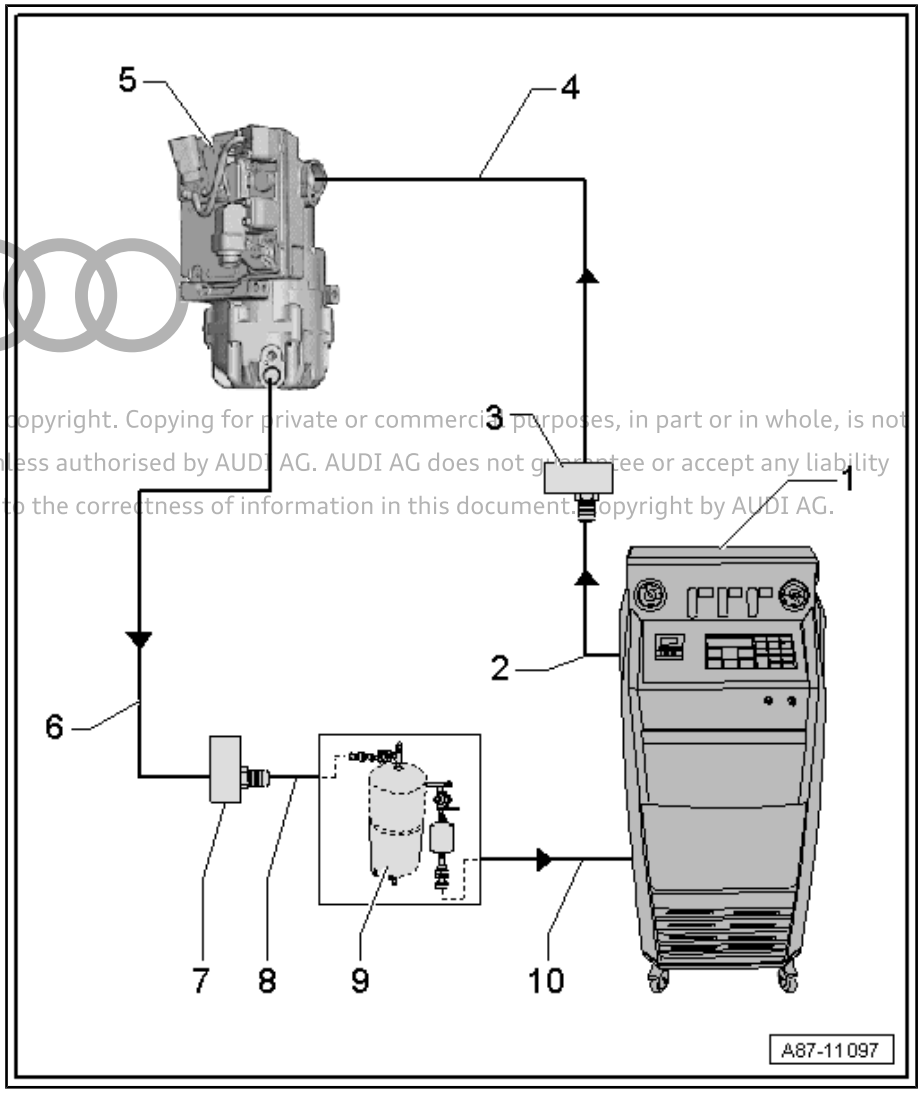

Protected by copyright. Copying for private or commercial purposes, in part or in whole, is not permitted unless authorised by AUDI AG. AUDI AG does not guarantee or accept any liability with respect to the correctness of information in this document. Copyright by AUDI AG.

1 - Air conditioner service station

- With electronics and a flushing program, air conditioner service station with flushing kit ⇒ Electronic parts catalogue
- If an air conditioner service station without a flushing programme is used, perform the process manually (evacuation, 4x flushing with at least 2 kg of refrigerant each time, extraction of refrigerant again, evacuation)

2 - Refrigerant hose of air conditioner service station

- From high-pressure side of air conditioner service station (generally red coloured) to connection for low-pressure side of air conditioner compressor at refrigerant circuit (larger diameter)

3 - Adapter for connection (low-pressure side) to air conditioner compressor

- Different versions depending on vehicle ⇒ "1.6.8 Adapters for connecting flushing circuits", page 108
- Use adapter - VAS 6338/48- between refrigerant hose -2- and adapter -3-.
- From adapter set for refrigerant circuits (e.g. adapter - VAS 6338/41-)

4 - Refrigerant line

- For connecting air conditioner compressor to adapter ⇒ Item 3 (page 170)

5 - Electrically driven air conditioner compressor

- The air conditioner compressor is flushed in flow direction (from the low-pressure end inlet to the high-pressure end outlet)
- To flush as much refrigerant oil as possible out of the air conditioner compressor, the compressor should be positioned with the high-pressure end outlet as low down as possible when flushing

Note

- *Depending on the air conditioner compressor, a new compressor may be filled with a larger quantity of refrigerant oil (see manufacturer's sign on air conditioner compressor and* *⇒ "5.2 Refrigerant oil capacities", page 15* *).*

- *With a new air conditioner compressor that is filled with more than 100 cm³, tip out as much refrigerant oil as possible before flushing.*
- *Reason: Depending on the version of air conditioner service station , the quantity of oil that can be extracted in one work step may be limited.*

Note

If you are tipping clean refrigerant oil out of a new air conditioner compressor into a clean vessel, which is then hermetically sealed, this can be reused to make up the quantity of refrigerant oil in the circuit.

6 - Refrigerant line

- ❑ For connecting air conditioner compressor to adapter ⇒ Item 7 (page 171)
- ❑ To set up flushing circuit, use e.g. a refrigerant line with part number 7L6 820 721 BF ⇒ Electronic parts catalogue .

7 - Adapter for connecting (high-pressure side) to air conditioner compressor

- ❑ Different versions depending on vehicle ⇒ “1.6.8 Adapters for connecting flushing circuits”, page 108
- ❑ From adapter set for refrigerant circuits (e.g. adapter - VAS 6338/40-)

8 - Filler hose to refrigerant circuit flushing kit

- ❑ From connection (high-pressure side) of air conditioner compressor at refrigerant circuit (smaller diameter) to inlet of flushing kit for refrigerant circuits

9 - Refrigerant circuit flushing kit

- ❑ Different versions and different design of refrigerant circuit flushing kit ⇒ Electronic parts catalogue (Tools; Workshop equipment/tools; Air conditioner/heater)
- ❑ With filter, sight glass, safety valve, heater, refrigerant vessel etc. (depending on version)
- ❑ Depending on the design of the air conditioner service station and refrigerant circuit flushing kit, a connection for a service coupling for refrigerant circuits may be installed at the outlet and possibly the inlet of the flushing kit. If there is a service connection with valve at the outlet of the flushing kit, this valve must be fully open when the service coupling is connected. If the valve is only partially, this results in a constriction.
- ❑ If there is a connection for a service coupling at the inlet of the flushing kit, modify the inlet so that the refrigerant hose from the vehicle can be connected directly.

Note

A service coupling and a valve in the inlet of the flushing kit create a constriction; this obstructs the flow of refrigerant from the vehicle into the flushing kit.

10 - Refrigerant hose of air conditioner service station

- ❑ From low-pressure side of air conditioner service station (usually blue) to outlet of refrigerant circuit flushing kit

Protected by copyright. Copying for private or commercial purposes, in part or in whole, is not permitted unless authorised by AUDI AG. AUDI AG does not guarantee or accept any liability with respect to the correctness of information in this document. Copyright by AUDI AG.

2.12 Cleaning refrigerant circuit

– Perform preparations for cleaning (flushing with refrigerant R1234yf)

⇒ “1.6.2 Preparations for cleaning refrigerant circuit (flushing with refrigerant R1234yf)”, page 97 .

– Check quantity of refrigerant in air conditioner service station ; it must contain at least 6 kg of refrigerant R1234yf ⇒ Operating instructions for air conditioner service station .

– Discharge used oil container of air conditioner service station ⇒ Operating instructions for air conditioner service station .

– With the aid of an adapter, connect the feed hose (high-pressure side) of the air conditioner service station to the low-pressure line to the air conditioner compressor (line with the largest diameter)
⇒ “1.6.8 Adapters for connecting flushing circuits”, page 108 .

– Connect return hose (low-pressure or intake side) of air conditioner service station to outlet of refrigerant circuit flushing kit.

– Connect the inlet of the refrigerant circuit flushing kit with an adapter to the high-pressure pipe to the air conditioner compressor (pipe with smaller diameter)
⇒ “1.6.8 Adapters for connecting flushing circuits”, page 108 .

◆ Block diagrams for various flushing circuits
⇒ “1.6 Cleaning refrigerant circuit”, page 95

◆ Adapters for connecting flushing circuits
⇒ “1.6.8 Adapters for connecting flushing circuits”, page 108

Protected by copyright. Copying for private or commercial purposes, in part or in whole, is not permitted unless authorised by AUDI AG. AUDI AG does not guarantee or accept any liability with respect to the correctness of information in this document. Copyright by AUDI AG.

Note

- *The components are nearly always flushed against the direction of flow of refrigerant in air conditioner operation. (Exception: the electrically driven air conditioner compressor)* *⇒ page 95* .
- *When flushing, impurities from the refrigerant circuit enter the refrigerant circuit flushing kit and the air conditioner service station , where they are retained in the integrated filters and dryer. Depending on these impurities, these components may need to be renewed at shorter intervals than stated in the operating instructions of the air conditioner service station or the refrigerant circuit flushing kit, but otherwise in accordance with these instructions ⇒ Operating instructions for air conditioner service station .*
- *Depending on the nature and severity of the contamination of the flushed refrigerant circuits, the filter in the refrigerant circuit flushing kit should be renewed at the latest after 5 to 10 flushing cycles (flushed vehicles). After flushing a severely contaminated refrigerant circuit (the refrigerant oil from the refrigerant circuit is black and viscous or there is a lot of swarf in the refrigerant circuit), renew the filter. In the case of such severely contaminated refrigerant circuits it is also appropriate to flush the circuit again after renewing the filter.*
- *Depending on the nature of the impurities, dirt (used refrigerant oil and abrasion from air conditioner compressor) accumulates at the sight glass of the refrigerant circuit flushing kit. If applicable, clean this sight glass after flushing and flush the refrigerant circuit again in one operation as a check (one operation is sufficient).*
- *Liquid refrigerant cannot be routed through the expansion valve, restrictor and desiccant bag of certain receivers at the necessary rate. Therefore remove these components and replace them with adapters if applicable* *⇒ page 95* *and ⇒ Heating, air conditioning; Rep. gr. 87 ; Refrigerant circuit (vehicle-specific Workshop Manual).*
- *Adapters for connecting the air conditioner service station and for bypassing certain refrigerant circuit components* *⇒ "1.6.8 Adapters for connecting flushing circuits", page 108* .

Powered by VW of America, Inc. and licensed to ALLDATA. Reproduction for private or commercial purposes, in part or in whole, is not permitted unless authorised by AUDI AG. AUDI AG does not guarantee or accept any liability with respect to the correctness of information in this document. Copyright by AUDI AG.

Perform the flushing process (the procedure is automated using the program of the air conditioner service station ⇒ Operating instructions for air conditioner service station)

– Switch on the air conditioner service station ⇒ Operating instructions for air conditioner service station .
– Select the flushing program on your air conditioner service station ⇒ Operating instructions for air conditioner service station .
– Flush the refrigerant circuit (duration approx. 1 to 1.5 hours for one flushing cycle with 4 flushes) ⇒ Operating instructions for air conditioner service station .

Note

- *Flushing process routine*
  ⇒ “1.6.3 Procedure for cleaning refrigerant circuit”, page 99 .
- *Perform the flushing process as described in the operating instructions of the air conditioner service station ⇒ Operating instructions for air conditioner service station .*
- *Depending on the version of air conditioner service station , the old oil vessel may only hold approx. 125 cm ^{3} of refrigerant oil. If a system with a larger quantity of refrigerant oil needs to be flushed, you may need to drain the old oil vessel after the first flush of a flushing cycle.*
- *Observe the refrigerant flowing back out of the refrigerant circuit into the air conditioner service station . Refrigerant circuit cleaning has not been completed until the refrigerant flowing through the inspection port of the refrigerant circuit flushing kit into the air conditioner service station is clear and completely colourless.*
- *During flushing, the entire refrigerant oil is rinsed out of the refrigerant circuit (with the exception of slight residue in the evaporator, for example; this can however be ignored).*
- *If there is severe contamination, you may need to perform the flush process twice (two flushing cycles each with four flushes).*

– On completion of the flushing process, check the sightglass (es) of the refrigerant circuit flushing device. If it is dirty, clean it in accordance with the operating instructions of the refrigerant circuit flushing device or the air conditioner service station and perform the flushing process again as a check (one process is sufficient, duration approx. 30 min.) ⇒ Operating instructions for air conditioner service station .

– Check pressure in refrigerant circuit; there must be no excess pressure in refrigerant circuit (briefly evacuate again if necessary).

– Detach connections to air conditioner service station from vehicle’s refrigerant circuit (there must be no excess pressure in refrigerant circuit).

– Renew the following components (vehicle-specific): restrictor and reservoir, expansion valve and receiver or desiccant cartridge in receiver ⇒ Heating, air conditioning; Rep. gr. 87 ; Refrigerant circuit (vehicle-specific Workshop Manual) and ⇒ Electronic parts catalogue .

protected by copyright. Copying for private or commercial purposes, in part or in whole, is not permitted unless authorised by AUDI AG. AUDI AG does not guarantee or accept any liability with respect to the correctness of information in this document. Copyright by AUDI AG.

– Renew air conditioner compressor depending on problem (⇒ Heating, air conditioning; Rep. gr. 87 ; Refrigerant circuit (vehicle-specific Workshop Manual) and ⇒ Electronic parts catalogue) or drain off remaining refrigerant oil from air conditioner compressor (removed earlier)
  ⇒ “1.5 Renewing components”, page 79 and add specified quantity of fresh refrigerant oil ⇒ Heating, air conditioning; Rep. gr. 00 ; Technical data (vehicle-specific Workshop Manual) and ⇒ Heating, air conditioning; Rep. gr. 00 ; Technical data; Approved refrigerant oils and capacities for refrigerant oil (vehicle-specific Workshop Manual).

Note

- *Replacement compressors contain a certain specified quantity of refrigerant oil. In vehicles with two evaporators, it may be necessary to add a certain additional quantity of refrigerant oil to the circuit ⇒ Heating, air conditioning; Rep. gr. 00 ; Technical data; Approved refrigerant oils and capacities for refrigerant oil (vehicle-specific Workshop Manual).*
- *If the air conditioner compressor is not renewed, add specified amount of refrigerant oil to the air conditioner compressor (flush or tip out refrigerant oil and pour specified quantity into air conditioner compressor or refrigerant circuit) ⇒ "1.5 Renewing components", page 79 and ⇒ Heating, air conditioning; Rep. gr. 00 ; Technical data; Approved refrigerant oils and capacities for refrigerant oil (vehicle-specific Workshop Manual).*

– Completely re-assemble refrigerant circuit ⇒ Heating, air conditioning; Rep. gr. 87 ; Refrigerant circuit (vehicle-specific Workshop Manual).
– Evacuate and charge refrigerant circuit as specified ⇒ "2.5 Evacuating refrigerant circuit", page 153 , ⇒ "2.6 Charging refrigerant circuit", page 160 and ⇒ Heating, air conditioning; Rep. gr. 00 ; Technical data; Approved refrigerant oils and capacities for refrigerant oil (vehicle-specific Workshop Manual).
– Start up air conditioner as specified ⇒ Heating, air conditioning; Rep. gr. 87 ; Refrigerant circuit (vehicle-specific Workshop Manual) and ⇒ "2.7 Starting up air conditioner after charging", page 163 .

2.13 Decanting contaminated refrigerant into recycling cylinder for analysis, treatment or disposal

⇒ "2.13.1 Decanting contaminated refrigerant into recycling cylinder using technical devices", page 175

⇒ "2.13.2 Decanting contaminated refrigerant into recycling cylinder by subcooling", page 178

2.13.1 Decanting contaminated refrigerant into recycling cylinder using technical devices

Note

- *Accessories dealers offer devices such as extraction or disposal units that, according to their manufacturers, have been approved for extracting gases of unknown composition. These devices have not been tested or approved by us; for this reason we cannot make a statement about their suitability and function.*
- *For the contaminated refrigerant to be decanted into an evacuated recycling cylinder without any corresponding devices, the refrigerant must be subcooled; this procedure has been checked and described by us ⇒ "2.13.2 Decanting contaminated refrigerant into recycling cylinder by subcooling", page 178 .*

Protected by copyright. Copying for private or commercial purposes, in part or in whole, is not permitted unless authorised by AUDI AG. AUDI AG does not guarantee or accept any liability with respect to the correctness of information in this document. Copyright by AUDI AG.

CAUTION

Risk of explosion if unsuitable devices are used

Refrigerant of unknown composition can expand due to a chemical reaction or overheating, and the device in use could burst.

- **Only use devices and accessories that have been certified and approved by the manufacturer in accordance with the laws and regulations for use with gases of unknown composition.**
- **Read the operating instructions before using these devices.**
- **When using these devices, the specifications in the corresponding operating instructions must be strictly observed.**

CAUTION

Risk of explosion due to overfilled refrigerant vessels.

Refrigerant can expand and refrigerant vessel can explode if it is overfilled.

- **Use refrigerant vessels with a safety valve.**
- **Never exceed the permitted capacity of the refrigerant vessel.**

CAUTION

Chemical reactions due to contaminated refrigerant. If mixing gases of unknown composition, different chemical reactions can occur.

Injuries are possible.

- **Never mix refrigerants of different origins.**

Decanting refrigerant of unknown composition from refrigerant circuit into recycling cylinder

- Connect device for decanting refrigerant to refrigerant circuit of vehicle and to a recycling cylinder in accordance with corresponding operating instructions.
- Start up decanting device in accordance with corresponding operating instructions.
- Observe discharging of refrigerant circuit using suitable pressure gauges.

Protected by copyright. Copying for private or commercial purposes, in part or in whole, is not permitted unless authorised by AUDI AG. AUDI AG does not guarantee or accept any liability with respect to the correctness of information in this document. Copyright by AUDI AG.

Note

- *When discharging a refrigerant circuit, you can use e.g. a suitable pressure gauge or the pressure display of the air conditioner service station .*
- *It takes a certain time to completely decant the contaminated refrigerant from the refrigerant circuit. Do not switch off the device that you are using to decant the refrigerant until all the refrigerant has been extracted from the circuit. Observe the pressure gauges and the corresponding operating instructions.*

When the contaminated refrigerant has been decanted completely:

- Switch off device.
- Close manual shut-off valve of recycling cylinder.

– Wait e.g. 20 minutes and then check whether pressure is building up again in vehicle's refrigerant circuit.

Note

If pressure has built up in refrigerant circuit due to evaporation of refrigerant, decant refrigerant that is creating pressure into recycling cylinder.

– Detach filler hose and connection piece from recycling cylinder and close recycling cylinder connection with cap.

– Completely fill in the necessary papers (disposal certificate, removal order etc.) for analysis and treatment (or disposal) of contaminated refrigerant.

Note

- *You will receive all the necessary information and documents for analysis, treatment (or disposal) from your gas treatment/ gas disposal company.*
- *A form is supplied with the recycling cylinder. Fill this out and attach it to the cylinder.*
- *If it is not possible to weigh the recycling cylinder before and after filling with contaminated refrigerant, the specified quantity for the vehicle in question can be stated as the amount of refrigerant that was transferred to the recycling cylinder. This is permitted because a recycling cylinder only ever contains the amount of refrigerant that was in a vehicle.*

– Store recycling cylinder in a suitable place until it can be collected by gas treatment/gas disposal company.

– Fill in form supplied with recycling cylinder (R-cylinder) for contaminated refrigerant and attach securely to cylinder.

Note

- *In field for "Other comments", you can state e.g. whom the results of the analysis should be sent to and in what form.*
- *Example of form supplied with recycling cylinder (R-cylinder)* ⇒ page 183

Protected by copyright. Copying for private or commercial purposes, in part or in whole, is not permitted unless authorised by AUDI AG. AUDI AG does not guarantee or accept any liability with respect to the correctness of information in this document. Copyright by AUDI AG.

– Evacuate refrigerant circuit using air conditioner service station for at least one hour
⇒ "2.5 Evacuating refrigerant circuit", page 153 .

Note

- *Through subsequent evacuation, the last residues of contaminated refrigerant, which could still be bound in the refrigerant oil, are removed at an absolute pressure of less than 10 mbar.*
- *If pressure higher than permissible pressure for start of evacuation with air conditioner service station has built up again in refrigerant circuit after decanting device has been switched off, extract this refrigerant using e.g. workshop extraction system.*
- *The work steps below depend on the problem with the refrigerant circuit*
  ⇒ "2.3 Performing gas analysis for refrigerant", page 147 .

2.13.2 Decanting contaminated refrigerant into recycling cylinder by subcooling

Note

- *The recycling cylinder has to be heavily subcooled in order for the contaminated refrigerant to be refilled into it without the use of appropriate equipment.*
- *To cool the evacuated recycling cylinder, use an insulated vessel and dry ice ⇒ Electronic parts catalogue .*
- *Dry ice is solid carbon dioxide (CO_2), which changes straight from a solid to a gaseous state at -78 °C.*
- *Most gases used as refrigerants only have very low vapour pressure (less than 0.6 bar absolute pressure at -50 °C) at very low temperatures. If a subcooled recycling cylinder is connected to a refrigerant circuit, the refrigerant liquefies in the cold cylinder and the pressure in the refrigerant circuit drops to below ambient pressure*
  ⇒ "6.1.3 Vapour pressure table for refrigerant", page 18 .
- *Commercially available recycling cylinders are usually made of general structural steel and are not always designed for low temperatures (in this case down to -78 °C). Only use recycling cylinders approved specifically for this use; slowly warm them up to ambient temperature (e.g. by placing insulated container with recycling cylinder in a secured, well ventilated area where dry ice can evaporate safely).*

Protected by copyright. Copying for private or commercial purposes, in part or in whole, is not permitted unless authorised by AUDI AG. AUDI AG does not guarantee or accept any liability with respect to the correctness of information in this document. Copyright by AUDI AG.

Special tools and workshop equipment required

- At least 10 kg of dry ice (as pellets or granulate) - commercially available
- Evacuated recycling cylinder for contaminated R1234yf, which is suitable for low temperatures (e.g. with a permitted capacity of more than 3.0 kg). Commercially available from gas suppliers
- Extractor device (for refrigerant R1234yf) - Dry ice box ⇒ Electronic parts catalogue - or commercially available
- Flange connection piece with seal (for connecting the filler hose to the recycling cylinder, internal thread W 21.8 x 1/14 LH left and M 12 x 1.5-6G to SAE J639) ⇒ Electronic parts catalogue - or commercially available

- Filler hose for refrigerant R1234yf with seals (filler hose 2 m with outer thread M12 x 1.5-6G to SAE J639) ⇒ Electronic parts catalogue - or commercially available.
- Service coupling on LP side to SAE J639 ⇒ Electronic parts catalogue - or commercially available

Note

Dry ice also evaporates from the insulating container at ambient temperature (approx. 20 to 30 % a day, depending on ambient conditions). Therefore, only order the dry ice once all other necessary tools are to hand and you can perform the work immediately on receipt of the dry ice (for example, do not order dry ice for a Friday afternoon, unless you are working at the weekend).

CAUTION

Risk of frostbite and asphyxiation from dry ice.

The skin and other parts of the body may suffer frostbite and asphyxiation is possible when in the gaseous state.

- **Put on protective gloves.**
- **Put on safety goggles.**
- **Only work with dry ice in well ventilated rooms.**
- **Never work in cellars, near cellar entrances or in or near other underground areas.**

CAUTION

Risk of explosion from incorrectly stored dry ice.

When dry ice evaporates, pressure builds up in vessel. Unsuitable vessels may burst.

- **Only transport and store dry ice in containers specially intended for this purpose.**

Refilling refrigerant with a subcooled recycling cylinder

- Sufficient quantities of all the necessary tools, equipment and dry ice are available

– Remove the seal of the recycling cylinder and unscrew the cap from the connection.

Protected by copyright. Copying for private or commercial purposes, in part or in whole, is not permitted unless authorised by AUDI AG. AUDI AG does not guarantee or accept any liability with respect to the correctness of information in this document. Copyright by AUDI AG.

Note

- *Recycling cylinders from your gas supplier are mostly evacuated before being sealed.*
- *If a recycling cylinder is not evacuated, evacuate it if necessary using a vacuum pump or an air conditioner service station .*
- *Recycling cylinders are clearly marked as such. Unlike refrigerant delivery cylinders, they do not have a non-return valve and can therefore be filled.*
- *Recycling cylinders are intended for international use; "O" on handwheel means "Open" (for cylinder valve open), not "0" (zero for closed).*
- *If you measure an absolute pressure of more than 100 mbar but less than 900 mbar in the recycling cylinder, evacuate the recycling cylinder with a vacuum pump) or air conditioner service station) (residual pressure less than 50 mbar)* *⇒ "2.5 Evacuating refrigerant circuit", page 153* .
- *If you measure an absolute pressure of more than 900 mbar in the recycling cylinder, this could have various reasons. The manual shut-off valve was opened and not closed again properly, or the recycling cylinder was already used to temporarily store refrigerant and then not properly evacuated* *⇒ "2.10 Discharging air conditioner service station", page 168* *(evacuate recycling cylinder). The recycling cylinder is leaking (return recycling cylinder to supplier).*

Protected by copyright. Copying for private or commercial purposes, in part or in whole, is not permitted unless authorised by AUDI AG. AUDI AG does not guarantee or accept any liability with respect to the correctness of information in this document. Copyright by AUDI AG.

– Connect the vacuum meter (or air conditioner service station to the recycling cylinder.
– Open the manual shut-off valve of the recycling cylinder carefully to check the vacuum in the cylinder.
– If necessary, evacuate the recycling cylinder with the air conditioner service station .

Note

- *If there is air in the recycling cylinder, it can be evacuated with an R1234yf air conditioner service station . To do so, unscrew the low-pressure service coupling from the filler hose of the air conditioner service station and connect the filler hose directly to the recycling cylinder using the adapter belonging to the extractor device (for refrigerant R1234yf) - dry ice box .*
- *If the recycling cylinder contains air and the R1234yf air conditioner service station is not available, the cylinder can also be evacuated with an R134a air conditioner service station via the associated flushing tank, by using an adapter -VAS 6338/38- and the filler hose belonging to the extraction unit (for refrigerant R1234yf) - Dry ice box .*

- Residual pressure in recycling cylinder less than 10 mbar absolute pressure.

Note

- *Recycling cylinders are already evacuated by the supplier. However, it is not always possible to guarantee that vacuum is retained during storage.*
- *During the analysis of the contaminated refrigerant filled into a recycling cylinder, in order to clearly tell the type and extent of contamination, the cylinder must be evacuated to a residual pressure of less than 50 mbar before the refilling process begins.*

Protected by copyright. Copying for private or commercial purposes, in part or in whole, is not permitted unless authorised by AUDI AG. AUDI AG does not guarantee or accept any liability with respect to the correctness of information in this document. Copyright by AUDI AG.

- Switch off ignition.
- Make sure the workplace is well ventilated. Switch on additional workshop ventilation systems, if available.
- Connect the filler hose to the evacuated recycling cylinder using a suitable adapter.

CAUTION

Risk of explosion due to overfilled refrigerant vessels.

Refrigerant can expand and refrigerant vessel can explode if it is overfilled.

- **Use refrigerant vessels with a safety valve.**
- **Never exceed the permitted capacity of the refrigerant vessel.**

Note

- *Since the operation below only concerns the transfer of contaminated refrigerant from a vehicle into a recycling cylinder, the possibility of overfilling a recycling cylinder with a capacity of over 3.0 kg can be excluded.*
- *If contaminated refrigerant is transferred e.g. from an air conditioner service station into a recycling cylinder, care must be taken to prevent overfilling of the cylinder, because here the quantity is usually large. Use a recycling cylinder with a sufficiently large permitted capacity and weigh it during the transfer process to ensure that the maximum permitted capacity is not exceeded.*

CAUTION

Chemical reactions due to contaminated refrigerant. If mixing gases of unknown composition, different chemical reactions can occur.

Injuries are possible.

- **Never mix refrigerants of different origins.**

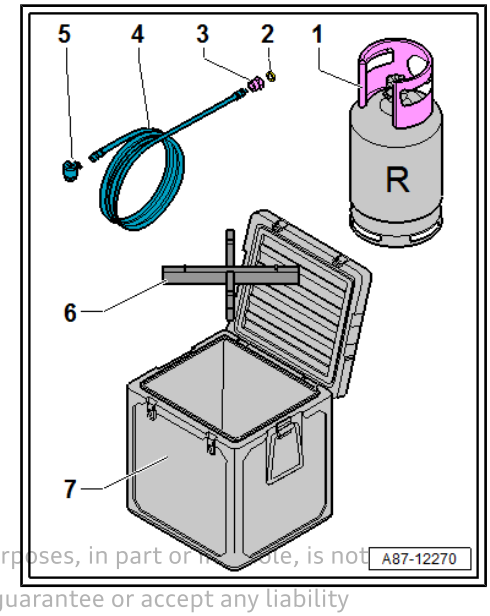

– Connect service coupling for refrigerant R1234yf -5- to filler hose -4-.
– Connect filler hose -4- to recycling cylinder -1- using flanged connection piece -3- (and seal -2-).
– Place a spacer -6- in insulating container -7-.
– Cover floor of insulating container -7- with dry ice.
– Place recycling cylinder -1- in insulating container -7- (extraction unit (for refrigerant R1234yf) - dry ice box).
– Fill insulating container -7- with rest of dry ice.
– Cool recycling cylinder -1- with dry ice (approx. 15 min).
– Connect recycling cylinder -1- to connection of air conditioner service station (or vehicle refrigerant circuit) via service coupling -5-.
– Open manual shut-off valve of recycling cylinder -1-.

Protected by copyright. Copying for private or commercial purposes, in part or in whole, is not permitted unless authorised by AUDI AG. AUDI AG does not guarantee or accept any liability with respect to the correctness of information in this document. Copyright by AUDI AG.

Note

Recycling cylinders are intended for international use; "O" on handwheel means "Open" (for cylinder valve open), not "0" (zero for closed).

– Connect pressure gauge to refrigerant circuit (or use pressure display of air conditioner service station) and check pressure in refrigerant circuit.
– Carefully open service coupling -5- on filler hose to recycling cylinder and allow refrigerant to flow slowly into recycling cylinder -1-.
– Wait until refrigerant in recycling cylinder -1- has liquefied (observe pressure display of connected pressure gauge).

Note

- *When discharging a refrigerant circuit, you can use e.g. a suitable pressure gauge or the pressure display of the air conditioner service station .*
- *If the displayed pressure is below 0.3 bar (absolute pressure) after approx. 60 minutes, you can assume that all the refrigerant in the recycling cylinder has liquefied.*
- *It takes a certain time for the contaminated refrigerant to evaporate completely out of the refrigerant circuit. After 60 min you can assume that this has now taken place.*

– Close service coupling -5- and manual shut-off valve of recycling cylinder -1-.
– Detach filler hose -4- and connection piece -3- from recycling cylinder -1- and close recycling cylinder connection with cap.
– Completely fill in the necessary papers (disposal certificate, removal order etc.) for analysis and treatment (or disposal) of contaminated refrigerant.

Note

- *You will receive all the necessary information and documents for analysis, treatment (or disposal) from your gas treatment/ gas disposal company.*
- *A form is supplied with the recycling cylinder. Fill this out and attach it to the cylinder.*
- *If it is not possible to weigh the recycling cylinder before and after filling with contaminated refrigerant, the specified quantity for the vehicle in question can be stated as the amount of refrigerant that was transferred to the recycling cylinder. This is permitted because a recycling cylinder only ever contains the amount of refrigerant that was in a vehicle.*

– Place insulating container -7- with recycling cylinder -1- and dry ice in a secure, well ventilated area outside a building.

– Open or remove lid of insulating container -7- and allow dry ice to evaporate.

Note

Only take recycling cylinder -1- out of insulating container -7- when the dry ice has evaporated and recycling cylinder has risen to ambient temperature.

– Take recycling cylinder -1- out of insulating container -7-.

– Store recycling cylinder -1- in a suitable place until it is collected by gas treatment/gas disposal company.

– Evacuate refrigerant circuit using air conditioner service station for at least one hour
⇒ “2.5 Evacuating refrigerant circuit”, page 153 .

Note

Protected by copyright. Copying for private or commercial purposes, in part or in whole, is not permitted unless authorised by AUDI AG. AUDI AG does not guarantee or accept any liability with respect to the correctness of information in this document. Copyright by AUDI AG.

- *Through subsequent evacuation, the last residues of contaminated refrigerant, which could still be bound in the refrigerant oil, are removed at an absolute pressure of less than 10 mbar.*
- *The work steps below depend on the problem with the refrigerant circuit*
⇒ “2.3 Performing gas analysis for refrigerant”, page 147 .

– Fill in form supplied with recycling cylinder (R-cylinder) for contaminated refrigerant and attach securely to cylinder -1-.

Note

In field for “Other comments”, you can state e.g. whom the results of the analysis should be sent to and in what form.

Example of a form supplied with a recycling cylinder (R-cylinder)

Protected by copyright. Copying for private or commercial purposes, in part or in whole, is not permitted unless authorised by AUDI AG. AUDI AG does not guarantee or accept any liability with respect to the correctness of information in this document. Copyright by AUDI AG.

Form supplied with an R-cylinder for contaminated refrigerant	
Service contact person	
Dealership contact person:	
e-mail address:	
Customer information:	
Surname, first name:	
Address:	
Town/city:	
Vehicle model	
Registration number	
Vehicle identification number:	
Mileage:	
Gas analysis performed on:	
R-cylinder information	
Cylinder number:	
Cylinder weight with contents: gross weight)	
Capacity (net weight)	
Other remarks	

2.14 Checking pressures

⇒ “2.14.1 General notes on checking pressure values in refrigerant circuit”, page 184

⇒ “2.14.2 Pressures and temperatures in refrigerant circuit”, page 187

⇒ “2.14.3 Checking pressures in refrigerant circuit with ignition switched off”, page 190

⇒ “2.14.4 Checking pressures with air conditioner switched on - vehicles with mechanically driven air conditioner compressor”, page 197

⇒ “2.14.5 Checking pressures with air conditioner switched on - vehicles with electrically driven air conditioner compressor”, page 219

2.14.1 General notes on checking pressure values in refrigerant circuit

Note

When working on the refrigerant circuit using the air conditioner service station , the high-voltage system does not usually have to be de-energised.

Vehicles with electrically operated valves in the refrigerant circuit which are not open when the system is de-energised:

Note

On vehicles with high-voltage system and additional air conditioner functions ("heat pump operation" or "high-voltage battery cooling"), valves which are not open when the system is de-energised may be fitted in the refrigerant circuit. These valves are opened and closed e.g. via stepper motors and are not activated after the ignition is switched off. However, for the pressure in the refrigerant circuit to be checked when the air conditioner is switched off, no part of the circuit may be closed off; these valves must therefore be opened before performing such work ⇒ Heating, air conditioning; Rep. gr. 87 ; Refrigerant circuit (vehicle-specific Workshop Manual) and ⇒ Vehicle diagnostic tester ("Guided Fault Finding").

– Use the vehicle diagnostic tester to open the electrically activated valves which are not open when the system is de-energised ⇒ Vehicle diagnostic tester ("Guided Fault Finding").

All vehicles

NOTICE

Risk of damage to air conditioner compressor or air conditioner service station.

If the air conditioner is switched on, there is a risk of a short circuit between the high-pressure and low-pressure sides when the valves open.

– **Never open valves on the high-pressure or low-pressure side when the air conditioner is switched on.**

Protected by copyright. Copying or publication for commercial purposes, in part or in whole, is not permitted unless authorised by AUDI AG. AUDI AG does not guarantee or accept any liability with respect to the correctness of information in this document. Copyright by AUDI AG.

Note

- *Certain test requirements are vehicle-specific and are described in the Workshop Manual for the specific vehicle ⇒ Heating, air conditioning; Rep. gr. 00 ; Repair instructions; Checking cooling output (vehicle-specific Workshop Manual).*
- *Check cooling output ⇒ Heating, air conditioning; Rep. gr. 00 ; Repair instructions; Checking cooling output (vehicle-specific Workshop Manual).*
- *Connections with valve and service connections for measuring and testing ⇒ Heating, air conditioning; Rep. gr. 87 ; Refrigerant circuit (vehicle-specific Workshop Manual).*
- *Depending on the version of the air conditioner compressor, there may be a valve on the high-pressure side of the compressor which prevents liquid refrigerant from flowing back into the compressor after the air conditioner has been switched off. If an air conditioner compressor with such a valve is installed in a vehicle with a refrigerant circuit with an expansion valve, it may take a relatively long time before the pressure in the high-pressure side drops (the expansion valve is cold and the pressure in the low-pressure side increases rapidly after the compressor is switched off; the expansion valve is closed and the refrigerant can only flow slowly to the low-pressure side). If the air conditioner compressor is switched on, the pressure in the low-pressure side drops, the expansion valve is opened and the refrigerant can flow to the low-pressure side.*

Under certain operating conditions, residual moisture in the coolant circuit may lead to the formation of ice at the air conditioner compressor regulating valve. Such ice formation impedes the control of the air conditioner compressor. The evaporator is cooled down too much and ices up. An iced-up evaporator may cause the following problems:

- The air conditioner fails repeatedly or sporadically (no cooling/heating output) after long journeys; after the ignition is switched off and waiting a short while, the air conditioner functions properly again.
- Misting up of the vehicle windows on the inside after a long journey; the windows are initially not cleared even by pressing the Defrost button; the air conditioning system functions properly again after a short delay following engine shut-off.

Protected by copyright. Copying for private or commercial purposes, in part or in whole, is not permitted unless authorised by AUDI AG. AUDI AG does not guarantee or accept any liability with respect to the correctness of information in this document. Copyright by AUDI AG.

Remedy:

– On vehicles with an air conditioner compressor with air conditioner compressor regulating valve - N280- , check measured value of evaporator output temperature sender - G263- (in “Read measured values” mode). If the measured value of the sender is too low under the usage conditions outlined by the customer (at ambient temperatures above 0 °C, below 0 °C for a lengthy period although -N280- is not being activated) or too high (above approx. 10 °C although air conditioner is operating properly), evaporator can ice up due to incorrect activation of -N280- or an incorrect measured value from -G263- ⇒ Vehicle diagnostic tester (“Guided Fault Finding” for air conditioner) and ⇒ Heating, air conditioning; Rep. gr. 00 ; Repair instructions; Checking cooling output (vehicle-specific Workshop Manual).

– On vehicles without an evaporator output temperature sender - G263- , use for example footwell vent temperature sender - G192- to check outflow temperature under operating conditions described by customer in the following settings: “Lo” temperature or “cold” for driver's and passenger's side, lowest setting (4 or 5 bars) for fresh air blower speed, air outlet to footwell and fresh-air mode. If the measured value for the sender is too low (at an ambient temperature above 0 °C, colder than 0 °C for an extended period), the evaporator may ice up due to the incorrect measured value ⇒ Vehicle diagnostic tester (“Guided Fault Finding” function for air conditioner).

– On vehicles with shut-off valves in refrigerant circuit, check operation and actuation of these valves ⇒ Vehicle diagnostic tester (“Guided Fault Finding” for air conditioner), and ⇒ Heating, air conditioning; Rep. gr. 87 ; Refrigerant circuit (vehicle-specific Workshop Manual).

– Check the refrigerant line from the evaporator (or the internal heat exchanger) to the air conditioner compressor (thick pipe, low-pressure side) with the engine running. If this line is severely iced up when the problem occurs (thin layer of ice is permissible), this also indicates that the evaporator temperature is too low ⇒ Heating, air conditioning; Rep. gr. 87 ; Refrigerant circuit (vehicle-specific Workshop Manual).

– Discharge refrigerant circuit, renew receiver with dryer, renew reservoir with dryer or desiccant cartridge, then evacuate refrigerant circuit for at least three hours ⇒ Heating, air conditioning; Rep. gr. 87 ; Refrigerant circuit (vehicle-specific Workshop Manual) and ⇒ page 142 .

- ⇒ “2.14.3 Checking pressures in refrigerant circuit with ignition switched off”, page 190

- ⇒ “2.14.4 Checking pressures with air conditioner switched on - vehicles with mechanically driven air conditioner compressor”, page 197
- ⇒ “2.14.5 Checking pressures with air conditioner switched on - vehicles with electrically driven air conditioner compressor”, page 219

Protected by copyright. Copying for private or commercial purposes, in part or in whole, is not permitted unless authorised by AUDI AG. AUDI AG does not guarantee or accept any liability with respect to the correctness of information in this document. Copyright by AUDI AG.

2.14.2 Pressures and temperatures in refrigerant circuit

General notes on pressures and temperatures in refrigerant circuit ⇒ page 187

Pressures and temperatures in refrigerant circuits with expansion valve ⇒ page 188

General notes on pressures and temperatures in refrigerant circuit

- The pressures and temperatures in the refrigerant circuit depend on the current operating conditions (e.g. engine speed, radiator fan on level 1, 2 or 3, engine temperature, air conditioner compressor activation on or off) and ambient influences (e.g. ambient temperature, air humidity, required cooling output).
- On vehicles with air conditioner compressor regulating valve -N280- the pressure on the low-pressure side is altered by actuating -N280- .
- For this reason, the values given in the following table are for reference only. They are attained at an engine speed of 1500 to 2000 rpm and an ambient temperature of 20 °C after about 20 minutes.
- Refer to the vehicle-specific description of the refrigerant circuit for the locations of the pressure gauge connections ⇒ Heating, air conditioning; Rep. gr. 87 ; Refrigerant circuit (vehicle-specific Workshop Manual).
- At 20 °C with the engine not running, the pressure in the refrigerant circuit is 4.7 bar
  ⇒ “6.1.3 Vapour pressure table for refrigerant”, page 18 (vapour pressure table).

Note

- *Pressure can be measured in various units: 1 MPa (megapascal) is equivalent to 10 bar gauge pressure, or 145 psi; 1 bar absolute pressure is the same as 0 bar gauge pressure, which is roughly equivalent to atmospheric pressure.*
- *The pressures and temperatures of refrigerant circuits with restrictor and reservoir are approximately the same as those in circuits with an expansion valve. Since Volkswagen/Audi currently only installs refrigerant circuits with an expansion valve, only this type of refrigerant circuit is described here.*

Pressures and temperatures in refrigerant circuits with expansion valve

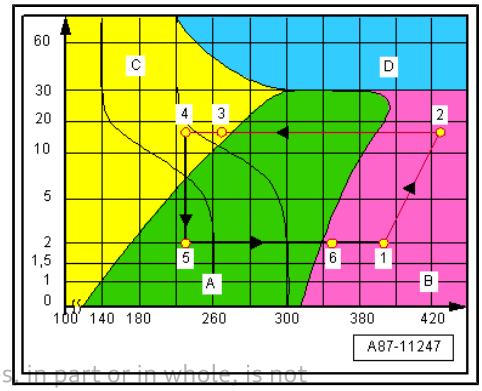

Note

- *The log p/h diagram (logarithmic pressure/energy diagram) below illustrates the processes taking place in a refrigerant circuit in specific operating conditions. These values change depending on the ambient conditions (engine speed, ambient temperature, required cooling output, etc.).*
- *The log P/h diagram shows the pressure (0 to 60 in bar absolute pressure and energy content (100 to 420, specific enthalpy in kilojoules per kg of refrigerant R1234yf) in the cycle of a refrigerant circuit.*
- *The arrows indicate the direction of refrigerant flow in the refrigerant circuit.*

Protected by copyright. Copying for private or commercial purposes, in part or in whole, is not permitted unless authorised by AUDI AG. AUDI AG does not guarantee or accept any liability with respect to the correctness of information in this document. Copyright by AUDI AG.

A - Range with vaporous refrigerant

B - Range with gaseous refrigerant

C - Range with liquid refrigerant

D - Supercritical pressure and temperature range; the refrigerant has an indeterminate state (there is no longer any separation between liquid and gaseous refrigerant)

1 - Low-pressure side: internal heat exchanger outlet, air conditioner compressor inlet, refrigerant has evaporated fully and is gaseous, refrigerant temperature is approx. -4 °C

2 - High-pressure side: Air conditioner outlet, condenser inlet, the refrigerant has compressed and is gaseous, the refrigerant temperature is up to approx. 80°C

3 - High-pressure side: Condenser (receiver) outlet, internal heat exchanger inlet, the refrigerant has cooled and is liquid, the refrigerant temperature is approx. 55°C

4 - High-pressure side: Internal heat exchanger outlet, expansion valve inlet, the liquid refrigerant cools further, the refrigerant temperature is approx. 50°C

5 - Low-pressure side: Expansion valve on evaporator side, evaporator inlet, the liquid refrigerant decompresses and begins to evaporate, the refrigerant temperature is approx. -7°C

6 - Low-pressure side: Evaporator outlet, expansions valve, internal heat exchanger inlet, the refrigerant has largely evaporated, but a small proportion is still vaporous, the refrigerant temperature is approx. -6°C

Note

- *The specified temperatures refer to the refrigerant in the refrigerant circuit. Due to heat absorption and emission, the temperatures on the surface of the components through which refrigerant flows differ from these.*
- *In refrigerant circuits with regulating air conditioner compressor, the pressure (and hence the temperature) is maintained at approx. 3 bar absolute pressure (equivalent to approx. 2 bar overpressure) despite the fluctuating heat transport and different engine speeds. However, this only applies within the output range of the air conditioner compressor. If the output limits of the air conditioner compressor are exceeded, the pressure (and therefore the temperature) rises* *⇒ "2.14 Checking pressures", page 184* .
- *With air conditioner compressors that do not regulate their own output, the corresponding control unit regulates the pressure on the low-pressure side and therefore the evaporator temperature via the air conditioner compressor regulating valve -N280- . Depending on the version and settings, the air conditioner compressor output is reduced if the air downstream of the evaporator has a measured temperature of below approx. 2 °C, and actuation of -N280- is switched off under 0 °C. This prevents the evaporator from cooling down too much and icing up.*
- *In vehicles with two evaporators and two expansion valves, the temperature and pressure in the refrigerant circuit are the same for the second evaporator as in vehicles with just one evaporator and one expansion valve (parallel connection).*
- *Depending on the version of the refrigerant circuit, a component with internal heat exchanger may be installed. In the internal heat exchanger, the hot refrigerant (liquid) flowing through the high-pressure side gives off energy to the cold refrigerant (gaseous or vaporous) flowing through the low-pressure side, thus enhancing the efficiency of the air conditioner* *⇒ "1.2.13 Refrigerant line with internal heat exchanger", page 51* .
- *Depending on the version of control unit (e.g. the air conditioner operating and display unit - E87- or the Climatronic control unit - J255-), the measured ambient temperatures (outside temperature, humidity in the passenger compartment, etc.) and on the settings in the control unit (passenger compartment temperature, operating mode, etc.), the pressure and hence the temperature at the evaporator outlet may also be increased to a higher value ⇒ Vehicle diagnostic tester in "Guided Fault Finding" mode of the air conditioner.*

Copyright by AUDI AG. Any use for commercial purposes, in part or in whole, is not permitted unless authorized by AUDI AG. AUDI AG does not guarantee or accept any liability with respect to the correctness of information in this document. Copyright by AUDI AG.

2.14.3 Checking pressures in refrigerant circuit with ignition switched off

Test requirements ⇒ page 190

Checking pressures with ignition switched off ⇒ page 193

Test requirements

Note

- *Work on the refrigerant circuit (in this case, checking pressures) using the air conditioner service station can be performed without disconnecting the high-voltage system from mains voltage.*
- *Only disconnect the high-voltage system from mains voltage if you need to work on the high-voltage system ⇒ page 3*

All vehicles

Note

- *Certain test requirements are vehicle-specific and are described in the Workshop Manual for the specific vehicle ⇒ Heating, air conditioning; Rep. gr. 00 ; Repair instructions; Checking cooling output (vehicle-specific Workshop Manual).*
- *Depending on the version of the air conditioner compressor, there may be a valve on the high-pressure side of the compressor which prevents liquid refrigerant from flowing back into the compressor after the air conditioner has been switched off. If an air conditioner compressor with such a valve is installed in a vehicle with a refrigerant circuit with an expansion valve, it may take a relatively long time before the pressure in the high-pressure side drops (the expansion valve is cold and the pressure in the low-pressure side increases rapidly after the compressor is switched off; the expansion valve is closed and the refrigerant can only flow slowly to the low-pressure side). If the air conditioner compressor is switched on, the pressure in the low-pressure side drops, the expansion valve is opened and the refrigerant can flow to the low-pressure side.*

- Check cooling output ⇒ Heating, air conditioning; Rep. gr. 00 ; Repair instructions; Checking cooling output (vehicle-specific Workshop Manual).
- Connections with valve and service connections for measuring and testing ⇒ Heating, air conditioning; Rep. gr. 87 ; Refrigerant circuit (vehicle-specific Workshop Manual).
- Connecting air conditioner service station ⇒ “2.2 Connecting air conditioner service station to refrigerant circuit”, page 144

Under certain operating conditions, residual moisture in the coolant circuit may lead to the formation of ice at the air conditioner compressor regulating valve. Such ice formation impedes the control of the air conditioner compressor. The evaporator is cooled down too much and ices up. An iced-up evaporator may cause the following problems:

- The air conditioner fails repeatedly or sporadically (no cooling/heating output) after long journeys; after the ignition is switched off and waiting a short while, the air conditioner functions properly again.

Protected by copyright. Copying for private or commercial purposes, in part or in whole, is not permitted unless authorised by AUDI AG. AUDI AG does not guarantee or accept any liability with respect to the correctness of information in this document. Copyright by AUDI AG.

- Misting up of the vehicle windows on the inside after a long journey; the windows are initially not cleared even by pressing the Defrost button; the air conditioning system functions properly again after a short delay following engine shut-off.

Remedy:

– On vehicles with an air conditioner compressor with air conditioner compressor regulating valve - N280- , check measured value of evaporator output temperature sender - G263- (in “Read measured values” mode). If the measured value of the sender is too low under the usage conditions outlined by the customer (at ambient temperatures above 0 °C, below 0 ° C for a lengthy period although -N280- is not being activated) or too high (above approx. 10 °C although air conditioner is operating properly), evaporator can ice up due to incorrect activation of -N280- or an incorrect measured value from -G263- ⇒ Vehicle diagnostic tester (“Guided Fault Finding” for air conditioner) and ⇒ Heating, air conditioning; Rep. gr. 00 ; Repair instructions; Checking cooling output (vehicle-specific Workshop Manual).

– On vehicles without an evaporator output temperature sender - G263- , use for example footwell vent temperature sender - G192- to check outflow temperature under operating conditions described by customer in the following settings: “Lo” temperature or “cold” for driver's and passenger's side, lowest setting (4 or 5 bars) for fresh air blower speed, air outlet to footwell and fresh-air mode. If the measured value for the sender is too low (at an ambient temperature above 0 °C, colder than 0 °C for an extended period), the evaporator may ice up due to the incorrect measured value ⇒ Vehicle diagnostic tester (“Guided Fault Finding” function for air conditioner).

– On vehicles with shut-off valves in the refrigerant circuit, check function and actuation of these valves ⇒ Vehicle diagnostic tester (“Guided Fault Finding” function for air conditioner), ⇒ Heating, air conditioning; Rep. gr. 87 ; Refrigerant circuit (vehicle-specific Workshop Manual), and ⇒ Heating, air conditioning; Rep. gr. 00 ; Repair instructions; Checking cooling output (vehicle-specific Workshop Manual).

– Check the refrigerant line from the evaporator (or the internal heat exchanger) to the air conditioner compressor (thick pipe, low-pressure side) with the engine running. If this line is severely iced up when the problem occurs (thin layer of ice is permissible), this also indicates that the evaporator temperature is too low ⇒ Heating, air conditioning; Rep. gr. 87 ; Refrigerant circuit (vehicle-specific Workshop Manual).

– Discharge refrigerant circuit, renew each reservoir/receiver with dryer or renew desiccant cartridge, then evacuate refrigerant circuit for at least three hours ⇒ Heating, air conditioning; Rep. gr. 87 ; Refrigerant circuit (vehicle-specific Workshop Manual) and
⇒ “2 Working with air conditioner service station”, page 142 .

Test requirements

- General notes on checking pressures in refrigerant circuit
⇒ “2.14.1 General notes on checking pressure values in refrigerant circuit”, page 184

Note

*All test requirements marked with * are vehicle-specific and are described in the Workshop Manual for the specific vehicle ⇒ Heating, air conditioning; Rep. gr. 00 ; Repair instructions; Checking cooling output (vehicle-specific Workshop Manual).*

Protected by copyright. Copying for private or commercial purposes, in part or in whole, is not permitted unless authorised by AUDI AG. AUDI AG does not guarantee or accept any liability with respect to the correctness of information in this document. Copyright by AUDI AG.

General test requirements (these only have an influence on the pressure gauge display during this measurement when the air conditioner is switched on)

- Radiator and condenser clean (clean if necessary)*
- Thermal insulation at expansion valve OK and properly installed*
- Poly V-belt OK and properly tensioned / belts for air conditioner compressor and alternator OK and properly tensioned*
- Drive unit for air conditioner compressor OK and properly installed*
- All air ducts, covers and seals OK and properly installed*
- No fault detected during air conditioner diagnosis (with engine running and air conditioning system switched on), no compressor shut-off criteria displayed in measured value block (vehicles with “air conditioning system” diagnosis only)* ⇒ Vehicle diagnostic tester (“Guided Fault Finding” for air conditioner)
- Air flow through dust and pollen filter not impeded by dirt*
- All dash panel vents open*

Note

♦ *Depending on the engine, the air conditioner compressor is driven by different components (belt or drive shaft). To protect these components and the engine, the pulley or drive unit of the air conditioner compressor is fitted with an overload protection device, which is triggered if the air conditioner compressor is not operating smoothly ⇒ Heating, air conditioning; Rep. gr. 00 ; Repair instructions; Checking cooling output (vehicle-specific Workshop Manual), and ⇒ Heating, air conditioning; Rep. gr. 87 ; Air conditioner compressor (vehicle-specific Workshop Manual).*

♦ *On specific versions, the fan is only switched on once the pressure in the refrigerant circuit has exceeded a specified value ⇒ Vehicle diagnostic tester (“Guided Fault Finding” function for air conditioner).*

Protected by copyright. Copying for private or commercial purposes, in part or in whole, is not permitted unless authorised by AUDI AG. AUDI AG does not guarantee or accept any liability with respect to the correctness of information in this document. Copyright by AUDI AG.

Further test requirements (these have an influence on the pressure gauge display during this measurement)

- Vehicle not exposed to sunlight ⇒ Heating, air conditioning; Rep. gr. 00 ; Repair instructions; Checking cooling output (vehicle-specific Workshop Manual)
- Ambient temperature above 15 °C
- Ignition switched off
- Air conditioner service station connected to refrigerant circuit ⇒ “2.2 Connecting air conditioner service station to refrigerant circuit”, page 144

♦ ⇒ “2.14.4 Checking pressures with air conditioner switched on - vehicles with mechanically driven air conditioner compressor”, page 197

♦ ⇒ “2.14.5 Checking pressures with air conditioner switched on - vehicles with electrically driven air conditioner compressor”, page 219

Checking pressures with ignition switched off

Note

Protected by copyright. Copying for private or commercial purposes, in part or in whole, is not permitted unless authorised by AUDI AG. AUDI AG does not guarantee or accept any liability with respect to the correctness of information in this document. Copyright by AUDI AG.

- *The switching pressures for actuating the air conditioner compressor regulating valve - N280- , the air conditioning system magnetic clutch - N25- (if fitted) and the radiator fans (e.g. radiator fan - V7- / radiator fan 2 - V177-) are vehicle-specific ⇒ Vehicle diagnostic tester ("Guided Fault Finding" function for air conditioner).*
- *Measure the pressures at the service connections; the fitting locations of these connections are vehicle-specific ⇒ Heating, air conditioning; Rep. gr. 87 ; Refrigerant circuit (vehicle-specific Workshop Manual).*
- *After finishing the planned work, disconnect the air conditioner service station from the refrigerant circuit and switch off* *⇒ "2.8 Switching off air conditioner service station and disconnecting from refrigerant circuit", page 165* .

- The engine must be warm (at an ambient temperature of less than 25 °C).

Note

- *If the engine is not warm, it may be necessary to perform a road test.*
- *The engine does not have to be warm for the cooling output to be checked, but it does need to be warm if a specific cooling output from the air conditioner is required at low ambient temperatures of less than 25 °C.*

- Observe test requirements ⇒ page 190 .

– On vehicles with high-voltage system, switch off (deactivate) auxiliary air conditioner function ⇒ Owner's Manual and ⇒ Infotainment/MMI Operating Manual .

– Switch off ignition.

– Connecting air conditioner service station ⇒ "2.2 Connecting air conditioner service station to refrigerant circuit", page 144

– Check pressures in refrigerant circuit with engine running.

– Read pressures off pressure gauges of air conditioner service station ; there are two possible results:

- The pressure in the refrigerant circuit is lower than indicated in the following table ⇒ page 196 .
- The pressure in the refrigerant circuit is equal to or higher than indicated in the following table ⇒ page 197 .

Note

- *Vapour pressure table for refrigerant R1234yf*
  ⇒ "6.1.3 Vapour pressure table for refrigerant", page 18
- *On vehicles with high-voltage system and additional air conditioner functions ("heat pump operation" or "high-voltage battery cooling"), valves which are not open when the system is de-energised may be fitted in the refrigerant circuit. These valves are opened and closed e.g. via stepper motors and are not activated after the ignition is switched off. Depending on the last operating state of the air conditioner, certain areas of the circuit may be shut off by these valves. Depending on the position of the service connections in the refrigerant circuit, they may be in an area that is shut off (e.g. the area with the high-pressure side service connection in the Audi Q7 e-tron). If necessary, these valves must be opened before the pressure is checked ⇒ Heating, air conditioning; Rep. gr. 87 ; Refrigerant circuit (vehicle-specific Workshop Manual), and ⇒ Vehicle diagnostic tester ("Guided Fault Finding").*
- *The pressures specified in the table below are somewhat lower than in the vapour pressure table for refrigerant R1234yf. The vapour pressure of the refrigerant in the refrigerant circuit is based on the coldest component and may therefore be slightly lower than stated in the vapour pressure table for refrigerant R1234yf, even if the refrigerant circuit is charged correctly.*

Ambient temperature (in degrees centigrade)	Pressure in refrigerant circuit in bar
+15 °C	3.5
+20 °C	4.4
+25 °C	5.3
+30 °C	6.3
+35 °C	7.4
+40 °C	8.6
+45 °C	10.0

Protected by copyright. Copying for private or commercial purposes, in part or in whole, is not permitted unless authorised by AUDI AG. AUDI AG does not guarantee or accept any liability with respect to the correctness of information in this document. Copyright by AUDI AG.

Note

- *The temperature of the refrigerant circuit components should be the same as the ambient temperature. If individual refrigerant circuit components are hotter or colder, the pressure deviates from the values in the table.*
- *On the absolute pressure scale, 0 bar corresponds to an absolute vacuum. The normal ambient pressure (atmospheric pressure) corresponds to 1 bar absolute pressure. On the scales of most pressure gauges, 0 bar corresponds to an absolute pressure of 1 bar (can be seen e.g. from -1 mark below 0).*
- *In vehicles with pressure senders (high-pressure sender - G65- , refrigerant circuit pressure sender - G805- , refrigerant pressure and refrigerant temperature sender - G395- , etc.), for which the measured pressure is indicated in the measured values of diagnosis, the measured pressure should match the values in the table (or be somewhat higher)⇒ Vehicle diagnostic tester in "Guided Fault Finding" mode of the air conditioner and ⇒ Heating, air conditioner; Rep. gr. 00 ; Repair instructions; Checking cooling output (vehicle-specific Workshop Manual).*
- *Pressure can be measured in various units: 1 MPa (megapascal) is equivalent to 10 bar gauge pressure, or 145 psi; 1 bar absolute pressure is the same as 0 bar gauge pressure, which is roughly equivalent to atmospheric pressure.*

If measured values are OK and there are no problems:

– Unscrew (close) handwheels on quick-release coupling adapter ⇒ Operating instructions for air conditioner service station .

– Extract refrigerant from both filler hoses using air conditioner service station in accordance with corresponding operating instructions ⇒ Operating instructions for air conditioner service station .

– Switch off air conditioner service station (and disconnect from power supply if necessary) ⇒ "2.8 Switching off air conditioner service station and disconnecting from refrigerant circuit", page 165 .

Protected by copyright. Copying for private or commercial purposes, in part or in whole, is not permitted unless authorised by AUDI AG. AUDI AG does not guarantee or accept any liability with respect to the correctness of information in this document. Copyright by AUDI AG.

If measured values are OK and there is a problem:

– Check cooling output of air conditioner ⇒ Heating, air conditioning; Rep. gr. 00 ; Repair instructions; Checking cooling output (vehicle-specific Workshop Manual), and observe pressures in refrigerant circuit.

- ⇒ "2.14.4 Checking pressures with air conditioner switched on - vehicles with mechanically driven air conditioner compressor", page 197
- ⇒ "2.14.5 Checking pressures with air conditioner switched on - vehicles with electrically driven air conditioner compressor", page 219

If measured values are not OK:

– Determine and eliminate the cause of the deviation.

Note

- *If the pressures are too low, there may be too little refrigerant in the circuit ⇒ Heating, air conditioning; Rep. gr. 00 ; Technical data (vehicle-specific Workshop Manual) and ⇒ "2.4 Discharging refrigerant circuit", page 150 .*
- *If the pressures are too high, there may be too much refrigerant or refrigerant oil in the circuit. Discharge the refrigerant circuit with the air conditioner service station ⇒ "2.4 Discharging refrigerant circuit", page 150 ; if the quantity of refrigerant extracted is larger than the specified capacity for refrigerant R1234yf ⇒ Heating, air conditioning; Rep. gr. 00 ; Technical data (vehicle-specific Workshop Manual), evacuate the refrigerant circuit and charge with the correct quantity of new refrigerant R1234yf. Then repeat the test. If the extracted quantity of refrigerant roughly corresponds to the specified capacity for refrigerant R1234yf or is less, clean the refrigerant circuit with refrigerant ⇒ "1.6 Cleaning refrigerant circuit", page 95 . Then add the specified quantity of refrigerant oil, evacuate the refrigerant circuit, charge with the correct quantity of new refrigerant R1234yf and repeat the test once more.*
- *If the pressures are too low or too high and contaminated refrigerant is detected during the gas analysis, this may be the cause of the deviation (different refrigerants have different vapour pressures). Discharge the refrigerant circuit and then clean with refrigerant R1234yf ⇒ "2.3 Performing gas analysis for refrigerant", page 147 , ⇒ "2.4 Discharging refrigerant circuit", page 150 and ⇒ "1.6 Cleaning refrigerant circuit", page 95*

Pressure in refrigerant circuit lower than value indicated in table

Not enough refrigerant in circuit

- Locate leaks in refrigerant circuit ⇒ "1.4 Locating leaks", page 68 .
- Check the high-pressure safety valve ⇒ "1.2.17 High-pressure safety valve", page 53 .

Has the high-pressure safety valve been triggered (check ⇒ "1.2.17 High-pressure safety valve", page 53):

- Check actuation of radiator fan(s) ⇒ Vehicle diagnostic tester ("Guided Fault Finding" function for air conditioner).
- On vehicles with shut-off valves for refrigerant circuit, check actuation and operation of these shut-off valves ⇒ Vehicle diagnostic tester ("Guided Fault Finding" function for air conditioner (and battery regulation)) and ⇒ Heating, air conditioning; Rep. gr. 87 ; Refrigerant circuit (vehicle-specific Workshop Manual).
- Check refrigerant lines and hoses for cross-sectional constrictions, external damage and excessively small bending radiuses ⇒ Heating, air conditioning; Rep. gr. 87 ; Refrigerant circuit (vehicle-specific Workshop Manual) and ⇒ Heating, air conditioning; Rep. gr. 87 ; Coolant circuit (vehicle-specific Workshop Manual).
- If no faults are detected, clean refrigerant circuit ⇒ "1.6 Cleaning refrigerant circuit", page 95

Protected by copyright. Copying for private or commercial purposes, in part or in whole, is not permitted unless authorised by AUDI AG. AUDI AG does not guarantee or accept any liability with respect to the correctness of information in this document. Copyright by AUDI AG.

Pressure in refrigerant circuit equal to or higher than value indicated in table

- ⇒ "2.14.4 Checking pressures with air conditioner switched on - vehicles with mechanically driven air conditioner compressor", page 197
- ⇒ "2.14.5 Checking pressures with air conditioner switched on - vehicles with electrically driven air conditioner compressor", page 219

2.14.4 Checking pressures with air conditioner switched on - vehicles with mechanically driven air conditioner compressor

Checking pressures ⇒ page 197

Specifications for pressures in refrigerant circuit ⇒ page 201

Checking pressures

Refrigerant circuit with expansion valve, receiver with or without air conditioning system magnetic clutch - N25- and air conditioner compressor regulating valve - N280- (with externally regulated air conditioner compressor)

Note

- *Connecting air conditioner service station*
  ⇒ "2.2 Connecting air conditioner service station to refrigerant circuit", page 144
- *If only one evaporator has a problem in vehicles with two evaporators, check the pressures in the refrigerant circuit. If these are OK, check the line connection between the faulty evaporator and the outlet of the line connection at the distribution point of the refrigerant lines (for cross-sectional constrictions or blockages). If no fault can be identified, discharge the refrigerant circuit and charge it with the specified quantity of new refrigerant. Then check the pressures and the cooling output of the air conditioner again. If the problem persists, renew the expansion valve upstream of the faulty evaporator ⇒ Heating, air conditioning; Rep. gr. 87 ; Refrigerant circuit (vehicle-specific Workshop Manual).*
- *⇒ "2.14.3 Checking pressures in refrigerant circuit with ignition switched off", page 190*

Test requirements

- Air conditioner service station connected to refrigerant circuit
  ⇒ "2.2 Connecting air conditioner service station to refrigerant circuit", page 144
- Note test requirements for checking pressures in refrigerant circuit with ignition switched off ⇒ page 190 .
- Pressures in refrigerant circuit correspond to specifications (with ignition switched off)
  ⇒ "2.14.3 Checking pressures in refrigerant circuit with ignition switched off", page 190 .
- Note test requirements for checking cooling output ⇒ Heating, air conditioning; Rep. gr. 00 ; Repair instructions; Checking cooling output (vehicle-specific Workshop Manual).

Protected by copyright. Copying for private or commercial purposes, in part or in whole, is not permitted unless authorised by AUDI AG. AUDI AG does not guarantee or accept any liability with respect to the correctness of information in this document. Copyright by AUDI AG.

Note

- *The switching pressures for activating the air conditioner compressor regulating valve - N280- , the air conditioning system magnetic clutch - N25- (if fitted) and the radiator fans - V7- are vehicle-specific ⇒ Vehicle diagnostic tester ("Guided Fault Finding" mode for air conditioner).*
- *Measure the pressures at the service connections; the fitting locations of these connections are vehicle-specific ⇒ Heating, air conditioning; Rep. gr. 87 ; Refrigerant circuit (vehicle-specific Workshop Manual).*

- The engine must be warm (at an ambient temperature of less than 25 °C).

Note

- *If the engine is not warm, it may be necessary to perform a road test.*
- *The engine does not have to be warm for the cooling output to be checked, but it does need to be warm if a specific cooling output from the air conditioner is required at low ambient temperatures of less than 25 °C.*

Protected by copyright. Copying for private or commercial purposes, in part or in whole, is not permitted unless authorised by AUDI AG. AUDI AG does not guarantee or accept any liability with respect to the correctness of information in this document. Copyright by AUDI AG.

– Start engine.

– Set air conditioner to maximum cooling output ⇒ Heating, air conditioning; Rep. gr. 00 ; Repair instructions; Checking cooling output (vehicle-specific Workshop Manual).

- The air conditioner compressor is actually being driven with the engine running; for visual inspection refer to ⇒ Heating, air conditioning; Rep. gr. 87 ; Refrigerant circuit (vehicle-specific Workshop Manual).
- The air conditioner compressor regulating valve - N280- is actuated ⇒ Vehicle diagnostic tester ("Guided Fault Finding" function for air conditioner).

Note

- *Depending on the engine, the air conditioner compressor is driven by different components (belt or drive shaft). To protect these components and the engine, the pulley or the drive unit of the air conditioner compressor are fitted with an overload protection device, which is triggered if the air conditioner compressor is not operating smoothly ⇒ Heating, air conditioning; Rep. gr. 87 ; Air conditioner compressor (vehicle-specific Workshop Manual).*
- *On vehicles with air conditioner compressor regulating valve - N280- , the control current can be read in the measured values ⇒ Vehicle diagnostic tester ("Guided Fault Finding" function for air conditioner).*

If air conditioner compressor is not driven with engine running or regulating valve is not actuated:

– Locate and eliminate cause, e.g. by interrogating event memory of air conditioner ⇒ Vehicle diagnostic tester ("Guided Fault Finding" function for air conditioner).

– Check power supply for air conditioning system magnetic clutch - N25- (if fitted). If this is OK, repair magnetic clutch ⇒

Heating, air conditioning; Rep. gr. 87 ; Refrigerant circuit (vehicle-specific Workshop Manual).

– Check actuation of air conditioner compressor regulating valve - N280- ⇒ Vehicle diagnostic tester ("Guided Fault Finding" function for air conditioner).

Protected by copyright. Copying for private or commercial purposes, in part or in whole, is not permitted unless authorised by AUDI AG. AUDI AG does not guarantee or accept any liability with respect to the correctness of information in this document. Copyright by AUDI AG.

Note

- *On air conditioner compressors with an air conditioning system magnetic clutch - N25- , the air conditioner compressor only works (supplies refrigerant) if -N25- is activated in addition to the air conditioner compressor regulating valve - N280- ⇒ Vehicle diagnostic tester ("Guided Fault Finding" function for air conditioner).*
- *-N280- (and -N25-) are activated by air conditioning system control unit - J301- , air conditioner operating and display unit - E87- , Climatronic control unit - J255- or a downstream control unit ⇒ Vehicle diagnostic tester ("Guided Fault Finding" for air conditioner) and ⇒ Heating, air conditioning; Rep. gr. 87 ; Refrigerant circuit (vehicle-specific Workshop Manual).*
- *All test requirements marked with * are vehicle-specific and are described in the Workshop Manual for the corresponding vehicle ⇒ Heating, air conditioning; Rep. gr. 00 ; Repair instructions; Checking cooling output (vehicle-specific Workshop Manual) and ⇒ Heating, air conditioning; Rep. gr. 87 ; Refrigerant circuit (vehicle-specific Workshop Manual).*

- Radiator and condenser clean (clean if necessary)* ⇒ Heating, air conditioning; Rep. gr. 87 ; Refrigerant circuit (vehicle-specific Workshop Manual)
- Thermal insulation on expansion valve OK and fitted correctly* ⇒ Heating, air conditioning; Rep. gr. 87 ; Refrigerant circuit (vehicle-specific Workshop Manual)
- Poly V-belt OK and properly tensioned / belts for air conditioner compressor and alternator OK and properly tensioned* ⇒ Heating, air conditioning; Rep. gr. 87 ; Air conditioner compressor (vehicle-specific Workshop Manual) and ⇒ Heating, air conditioning; Rep. gr. 87 ; Refrigerant circuit (vehicle-specific Workshop Manual)
- Drive unit for air conditioner compressor OK and correctly fitted* ⇒ Heating, air conditioning; Rep. gr. 87 ; Refrigerant circuit (vehicle-specific Workshop Manual) and ⇒ Heating, air conditioning; Rep. gr. 87 ; Air conditioner compressor (vehicle-specific Workshop Manual)
- All air ducts, covers and seals OK and correctly fitted* ⇒ Heating, air conditioning; Rep. gr. 87 ; Overview of fitting locations - air conditioner (vehicle-specific Workshop Manual)
- No fault is detected during air conditioner diagnosis (with engine running and air conditioning system switched on); no compressor shut-off criteria are displayed in measured values of corresponding control unit (vehicles with "air conditioning system" diagnosis only)*. ⇒ Vehicle diagnostic tester ("Guided Fault Finding" for air conditioner)
- Air flow through dust and pollen filter not impeded by dirt* ⇒ Heating, air conditioning; Rep. gr. 87 ; Overview of fitting locations - Air conditioning system (vehicle-specific Workshop Manual)
- The heater and air conditioning unit does not draw any secondary air at maximum fresh air blower speed. The evaporator and heater do not draw any secondary air at maximum fresh air blower speed * ⇒ Heating, air conditioner; Rep. gr. 87 ;

Overview of fitting locations - Air conditioner (vehicle-specific Workshop Manual).

- Air duct flaps in heater and air conditioning unit and in heater and evaporator reach their end position* ⇒ Heating, air conditioning; Rep. gr. 00 ; Repair instructions; Checking cooling output (vehicle-specific Workshop Manual) and ⇒ Heating, air conditioning; Rep. gr. 87 ; Overview of fitting locations - air conditioner (vehicle-specific Workshop Manual)
- Fresh air intake ducts under bonnet and in passenger compartment and corresponding water drain valves OK* ⇒ Heating, air conditioning; Rep. gr. 00 ; Repair instructions; Checking cooling output (vehicle-specific Workshop Manual) and ⇒ Heating, air conditioning; Rep. gr. 87 ; Overview of fitting locations - air conditioner (vehicle-specific Workshop Manual)
- Engine at operating temperature
- Vehicle not exposed to sunlight ⇒ Heating, air conditioning; Rep. gr. 00 ; Repair instructions; Checking cooling output (vehicle-specific Workshop Manual)
- Ambient temperature above 15 °C
- All dash panel vents open* ⇒ Heating, air conditioning; Rep. gr. 87 ; Air duct system (vehicle-specific Workshop Manual)

Setting e.g. on the air conditioner operating and display unit - E87- or the Climatronic control unit - J255- or the air conditioner control unit - J301- (and the rear Climatronic operating and display unit - E265- in vehicles with two heater and air conditioning units) * ⇒ Heating, air conditioning; Rep. gr. 00 ; Repair instructions; Checking cooling output (vehicle-specific Workshop Manual) and ⇒ Heating, air conditioning; Rep. gr. 87 ; Overview of fitting locations - Air conditioner (vehicle-specific Workshop Manual).

Setting on the -E87- / -J255- *: ⇒ Heating, air conditioner; Rep. gr. 00 ; Repair instructions; Checking cooling output (vehicle-specific Workshop Manual) and ⇒ Heating, air conditioner; Rep. gr. 87 ; Overview of fitting locations - Air conditioner (vehicle-specific Workshop Manual).

– Select “Auto” mode (air conditioner compressor switched on).
– Preset temperature to “cold” or “LO” for driver and front passenger side (and rear passenger compartment on left and right in vehicles with two heater and air conditioning units).

Settings on the -J301- *:

Protected by copyright. Copying for private or commercial purposes, in part or in whole, is not permitted unless authorised by AUDI AG. AUDI AG does not guarantee or accept any liability with respect to the correctness of information in this document. Copyright by AUDI AG.

– Press A/C button and "Rec" or recirculated air button.
– Turn the rotary temperature control towards the “cold” stop.
– Set the rotary switch for the fresh air blower to setting “4” (maximum fresh air blower speed).

Subsequently, the following system test requirements should be met:

- Radiator fan - V7- running, or radiator fan - V7- and radiator fan 2 - V177- running (at least on level 1) * ⇒ Heating, air conditioning; Rep. gr. 00 ; Repair instructions; Checking cooling output (vehicle-specific Workshop Manual) and ⇒ Heating, air conditioning; Rep. gr. 87 ; Overview of fitting locations - air conditioner (vehicle-specific Workshop Manual)

Note

On specific versions, the fan is only switched on once the pressure in the refrigerant circuit has exceeded a specified value ⇒ Vehicle diagnostic tester ("Guided Fault Finding" function for air conditioner).

- Fresh air blower - V2- (and rear fresh air blower - V80- on vehicles with two heater and air conditioning units) running at maximum speed
- Coolant shut-off valve closed* ⇒ Heating, air conditioning; Rep. gr. 00 ; Repair instructions; Checking cooling output (vehicle-specific Workshop Manual) ⇒ Heating, air conditioning; Rep. gr. 87 ; Overview of fitting locations - air conditioner (vehicle-specific Workshop Manual)
- The valves of the pump/valve unit are closed and the coolant circulation pump is not pumping * ⇒ Heating, air conditioner; Rep. gr. 00 ; Repair instructions; Checking cooling output (vehicle-specific Workshop Manual) and ⇒ Heating, air conditioner; Rep. gr. 87 ; Overview of fitting locations - Air conditioner (vehicle-specific Workshop Manual).
- Fresh air blower - V2- (and rear fresh air blower - V80- on vehicles with two heater and air conditioning units) running at maximum speed
- The fresh/recirculated air flap is in "recirculation mode" (the air flow flap closes and the recirculated air flap opens within 1 min of the vehicle being started).*
- The coolant shut-off valve is closed *.
- The valves of the pump/valve unit are closed and the coolant circulation pump is not pumping *.

Specifications for pressures in refrigerant circuit

◆ Observe test requirements and check pressures ⇒ page 197 .

Checking:

– Set engine speed to 2000 rpm.

– Observe pressure display (e.g. pressure gauge) of air conditioner service station ⇒ Operating instructions for air conditioner service station .

Protected by copyright. Copying for private or commercial purposes, in part or in whole, is not permitted unless authorised by AUDI AG. AUDI AG does not guarantee or accept any liability with respect to the correctness of information in this document. Copyright by AUDI AG.

Note

◆ *The switching pressures for actuating the air conditioner compressor regulating valve - N280- and the coolant fan are vehicle-specific ⇒ Vehicle diagnostic tester ("Guided Fault Finding" function for air conditioner).*

◆ *Measure the pressures at the service connections; the fitting locations of these connections are vehicle-specific ⇒ Heating, air conditioning; Rep. gr. 87 ; Refrigerant circuit (vehicle-specific Workshop Manual).*

High-pressure side:

Increasing from initial pressure (when connecting pressure gauges) up to max. 20 bar

Low-pressure side:

Dropping from initial pressure (when connecting pressure gauges) to a value between 1.5 and 2.3 bar absolute (depending on cooling output required).

Protected by copyright. Copying for private or commercial purposes, in part or in whole, is not permitted unless authorised by AUDI AG. AUDI AG does not guarantee or accept any liability with respect to the correctness of information in this document. Copyright by AUDI AG.

Note

- *If a very high cooling output is required (e.g. high ambient temperature and high fresh air blower speed at a low engine speed), the air conditioner compressor cannot initially set the pressure on the low-pressure side to the specification (e.g. for a certain time after switching on the air conditioner). The air conditioner compressor is activated with the maximum control current specified. However, under these operating conditions and at this engine speed, the delivery volume of the air conditioner compressor is no longer high enough to lower the pressure on the low-pressure side to the specification. One way of checking the control action of the air conditioner compressor under these conditions is to actuate the fresh air blower with only approx. 40 % of the maximum output (voltage) and to check the pressures at reduced fresh air blower speed ⇒ Vehicle diagnostic tester ("Guided Fault Finding" function for air conditioner), and ⇒ Heating, air conditioning; Rep. gr. 00 ; Repair instructions; Checking cooling output (vehicle-specific Workshop Manual).*
- *If low cooling output is required (e.g. at an outside temperature of 20 °C and a low fresh air blower speed), the pressure on the high-pressure side may rise to a value of only 6 to 7 bar (the energy turnover is low, the refrigerant cools down quickly in the condenser). One way to check the control action of the air conditioner compressor and the pressures in the refrigerant circuit under these conditions is to activate the fresh air blower at maximum voltage and to set the air conditioner to maximum heating output and recirculating mode ⇒ Vehicle diagnostic tester in "Guided Fault Finding" mode of the air conditioner and ⇒ Heating, air conditioner; Rep. gr. 00 ; Repair instructions; Checking cooling output (vehicle-specific Workshop Manual).*
- *Under unfavourable conditions (very high ambient temperatures, high humidity), the pressure on the high-pressure side may increase to max. 29 bar.*
- *The specified working current for the air conditioner compressor regulating valve - N280- is displayed as the measured value by the air conditioner operating and display unit - E87- , the air conditioner control unit - J301- or the Climatronic control unit - J255- ⇒ Vehicle diagnostic tester in "Guided Fault Finding" mode of the air conditioner.*
- *The high pressure measured by the high-pressure sender - G65- , the refrigerant circuit pressure sender - G805- or the refrigerant pressure and refrigerant temperature sender - G395- is displayed as a measured value of the -E87- , the - J301- or the -J255- ⇒ Vehicle diagnostic tester in "Guided Fault Finding" mode of the air conditioner.*
- *The low pressure is set, based on the control current for the air conditioner compressor regulating valve - N280- and the regulatory curve of the expansion valve within the power output range of the air conditioner compressor in the tolerance range ⇒ Vehicle diagnostic tester in "Guided Fault Finding " mode of the air conditioner.*
- *In unfavourable conditions (very high ambient temperatures, high air humidity), the air conditioner compressor output may not always be sufficient to reach the specified pressure value within the specified time (depending on the engine speed, it may take slightly longer until the specified low pressure is reached).*

Protected by copyright. Copying for private or commercial purposes, in part or in whole, is not permitted unless authorised by AUDI AG. AUDI AG does not guarantee or accept any liability with respect to the correctness of information in this document. Copyright by AUDI AG.

- *If utilisation of the air conditioner compressor capacity exceeds 90 %, the pressure on the low-pressure side may be greater than the stated tolerance range. In the prevailing ambient conditions (ambient temperature, air humidity, air conditioner settings, engine speed, etc.), the air conditioner compressor output is no longer sufficient for reducing the pressure on the low-pressure side to a value of approx. 2 bar.*
- *The specified working current for the air conditioner compressor regulating valve - N280- must be greater than 0.3 A in order to reliably actuate the -N280- ⇒ Vehicle diagnostic tester in "Guided Fault Finding" mode of the air conditioner.*
- *In the "maximum cooling output" setting, the control current for the air conditioner compressor regulating valve - N280- is regulated to approx. 0.65 A (up to 0.85 A). This measured value is vehicle-specific and is displayed in the ⇒ Vehicle diagnostic tester in "Guided Fault Finding" mode of the air conditioner.*
- *On the absolute pressure scale, 0 bar corresponds to an absolute vacuum. Normal ambient pressure corresponds to an absolute pressure of 1 bar. On the scales of most pressure gauges, 0 bar corresponds to an absolute pressure of 1 bar (can be seen e.g. from -1 mark below 0). Depending on the version of the corresponding control unit, the measured value may be displayed as an absolute or relative pressure (difference between the displays 1 bar) ⇒ Vehicle diagnostic tester ("Guided Fault Finding" function for air conditioner), and ⇒ Heating, air conditioning; Rep. gr. 00 ; Repair instructions; Checking cooling output (vehicle-specific Workshop Manual).*
- *The temperature of the air to the evaporator, the current air conditioner compressor speed and the refrigerant pressure on the high-pressure side, as well as the specified working current for the air conditioner compressor regulating valve - N280- are used e.g. as the measured value by the operating and display unit and the Climatronic control unit - J255- ⇒ Vehicle diagnostic tester in "Guided Fault Finding" mode of the air conditioner.*

Protected by copyright. Copying for private or commercial purposes, in part or in whole, is not permitted unless authorised by AUDI AG. AUDI AG does not guarantee or accept any liability with respect to the correctness of information in this document. Copyright by AUDI AG.

Possible deviations from specification, causes and how to rectify them	
♦ Required cooling output is not attained. ♦ High pressure remains constant or only increases slightly (above pressure with engine stopped). ♦ Low pressure drops quickly to specified value or below.	⇒ page 205
♦ Required cooling output is not attained. ♦ High pressure corresponds to specification. ♦ Low pressure corresponds to specification or is too low.	⇒ page 206
♦ Required cooling output is not attained. ♦ High pressure does not rise or only rises slightly above the pressure with the engine stopped. ♦ Low pressure does not drop or only drops slightly.	⇒ page 207

Protected by copyright. Copying for private or commercial purposes, in part or in whole, is not permitted unless authorised by AUDI AG. AUDI AG does not guarantee or accept any liability with respect to the correctness of information in this document. Copyright by AUDI AG.

Possible deviations from specification, causes and how to rectify them	
♦ Required cooling output is not attained. ♦ High pressure increases above specification. ♦ Low pressure drops quickly to specification or below.	⇒ page 209
♦ Required cooling output is attained at first, but cooling output is no longer sufficient after some time or an extended period of operation. ♦ High pressure and low pressure are normal at first. ♦ High pressure rises above specification after some time; low pressure continues to correspond to specification or drops below it.	⇒ page 210
♦ Required cooling output is attained at first, but is no longer attained after a short or extended period of time. ♦ High pressure and low pressure are normal at first; high pressure rises above specification after some time and low pressure drops to specification or below it. ♦ High pressure and low pressure are normal at first; after vehicle has been driven for a while, low pressure drops to specification or below and evaporator ices up.	⇒ page 212
♦ Required cooling output is attained. ♦ High pressure corresponds to specification. ♦ Low pressure is too low (below specification).	⇒ page 213
♦ Noise from air conditioner compressor (particularly after being switched on). ♦ Required cooling output is attained. ♦ High pressure normal or too high ♦ Low pressure is normal or too high (specification not always attained).	⇒ page 215
♦ Required cooling output is not attained. ♦ High pressure and low pressure correspond to specification.	⇒ page 217

Possible deviation from specification during the pressure test
♦ Required cooling output is not attained. ♦ High pressure remains constant or only increases slightly (above pressure with engine stopped). ♦ Low pressure does not drop or only drops slightly.
Possible reasons for deviation from specification and how to rectify them

Possible deviation from specification during the pressure test
♦ Problem with activation of air conditioner compressor regulating valve - N280- – Check actuation of air conditioner compressor regulating valve - N280- and repair if necessary ⇒ Vehicle diagnostic tester (“Guided Fault Finding” function for air conditioner). ♦ Air conditioner compressor regulating valve - N280- or air conditioner compressor faulty – Check operation of -N280- , remove -N280- if necessary and check for dirt ⇒ Vehicle diagnostic tester (“Guided Fault Finding” function for air conditioner) and ⇒ page 79 . – Renew -N280- or air conditioner compressor ⇒ page 79 . – If there is dirt in the refrigerant circuit, clean the circuit (flush with refrigerant R1234yf) and renew the expansion valve and desiccant bag/desiccant cartridge (or reservoir/receiver) ⇒ page 79 , ⇒ Heating, air conditioning; Rep. gr. 87 ; Refrigerant circuit (vehicle-specific Workshop Manual) and ⇒ “1.6 Cleaning refrigerant circuit”, page 95 .
Final steps
– Re-charge refrigerant circuit ⇒ “2.6 Charging refrigerant circuit”, page 160 . – Repeat test ⇒ “2.14.4 Checking pressures with air conditioner switched on - vehicles with mechanically driven air conditioner compressor”, page 197 .

Note

- *Make sure that air conditioner compressor (compressor shaft) is actually being driven by pulley/drive unit if this problem arises ⇒ Heating, air conditioning; Rep. gr. 87 ; Air conditioner compressor (vehicle-specific Workshop Manual), and ⇒ Heating, air conditioning; Rep. gr. 87 ; Refrigerant circuit (vehicle-specific Workshop Manual).*
- *If no faults are detected when this problem arises, clean the refrigerant circuit (flush with refrigerant R1234yf) ⇒ “1.6 Cleaning refrigerant circuit”, page 95 .*
- *Check measured values of evaporator output temperature sender - G263- and activation of -N280- . If the measured value of -G263- is incorrect, the evaporator may ice up or the cooling output will not be attained ⇒ Vehicle diagnostic tester (“Guided Fault Finding” function for air conditioner).*
- *If the test is repeated and operation of the air conditioner is not OK, e.g. after renewing the expansion valve, clean the refrigerant circuit (flush with refrigerant R1234yf ⇒ “1.6 Cleaning refrigerant circuit”, page 95). Next, renew air conditioner compressor and desiccant cartridge (or reservoir/receiver) ⇒ Heating, air conditioning; Rep. gr. 87 ; Refrigerant circuit (vehicle-specific Workshop Manual).*
- *In this case, the evaporator may ice up although the amount of refrigerant in the refrigerant circuit is OK.*
- *If the expansion valve is faulty (continuously closed or does not open far enough), -N280- is set to maximum power and the low pressure falls to the diagram value or lower (the air conditioner compressor extracts refrigerant out of the low-pressure side)⇒ Vehicle diagnostic tester (“Guided Fault Finding” for air conditioner). As refrigerant cannot however flow via expansion valve, cooling output is not attained and high pressure may either not increase or only slightly due to the absence of energy conversion.*

Protected by copyright. Copying for private or commercial purposes, in part or in whole, is not permitted unless authorised by AUDI AG. AUDI AG does not guarantee or accept any liability with respect to the correctness of information in this document. Copyright by AUDI AG.

Possible deviation from specification during the pressure test
♦ Required cooling output is not attained. ♦ High pressure corresponds to specification. ♦ Low pressure corresponds to specification or is too low.
Possible reasons for deviation from specification and how to rectify them
♦ There is not enough refrigerant in the refrigerant circuit. ♦ The expansion valve is defective. – Extract refrigerant from refrigerant circuit ⇒ “2.4 Discharging refrigerant circuit”, page 150 . – If quantity of refrigerant extracted is significantly less than specified capacity (more than 100 g less) ⇒ Heating, air conditioning; Rep. gr. 00 ; Technical data (vehicle-specific Workshop Manual), locate and eliminate leak ⇒ “1.4 Locating leaks”, page 68 . – If quantity of refrigerant extracted approximately corresponds to specified capacity, renew restrictor or expansion valve for evaporator in heater and air conditioning unit ⇒ Heating, air conditioning; Rep. gr. 87 ; Refrigerant circuit (vehicle-specific Workshop Manual).
Final steps
– Re-charge refrigerant circuit ⇒ “2.6 Charging refrigerant circuit”, page 160 . – Repeat test ⇒ “2.14.4 Checking pressures with air conditioner switched on - vehicles with mechanically driven air conditioner compressor”, page 197 .

Note

♦ *Check measured values of evaporator output temperature sender - G263- and activation of -N280- . If the measured value of -G263- is incorrect, the evaporator may ice up or the cooling output will not be attained ⇒ Vehicle diagnostic tester (“Guided Fault Finding” function for air conditioner).*

♦ *If the test is repeated and operation of the air conditioner is not OK, e.g. after renewing the expansion valve, clean the refrigerant circuit (flush with refrigerant R1234yf ⇒ “1.6 Cleaning refrigerant circuit”, page 95). Next, renew air conditioner compressor and reservoir/receiver (or desiccant cartridge) ⇒ Heating, air conditioning; Rep. gr. 87 ; Refrigerant circuit (vehicle-specific Workshop Manual).*

Protected by copyright. Copying for private or commercial purposes, in part or in whole, is not permitted unless authorised by AUDI AG. AUDI AG does not guarantee or accept any liability with respect to the correctness of information in this document. Copyright by AUDI AG.

Possible deviation from specification during the pressure test
♦ Required cooling output is not attained. ♦ High pressure does not rise or only rises slightly above the pressure with the engine stopped. ♦ Low pressure does not drop or only drops slightly.
Possible reasons for deviation from specification and how to rectify them

Possible deviation from specification during the pressure test
♦ Air conditioner compressor is not driven at all or not driven at specified speed. – Check air conditioner compressor drive (via belt or drive unit) ⇒ Heating, air conditioning; Rep. gr. 87 ; Air conditioner compressor (vehicle-specific Workshop Manual). ♦ Problems with actuation of air conditioner compressor regulating valve - N280- (and air conditioning system magnetic clutch - N25-) – Check actuation of air conditioner compressor regulating valve - N280- (and air conditioning system magnetic clutch - N25-) and repair if necessary ⇒ Vehicle diagnostic tester (“Guided Fault Finding” function for air conditioner). ♦ Air conditioner compressor regulating valve - N280- or air conditioner compressor faulty – Check operation of -N280- , remove -N280- if necessary and check for dirt ⇒ Vehicle diagnostic tester (“Guided Fault Finding” function for air conditioner) and ⇒ page 79 . – Renew -N280- or air conditioner compressor ⇒ page 79 . – If there is dirt in the refrigerant circuit, clean the circuit (flush with refrigerant R1234yf), renew the expansion valve and desiccant bag/desiccant cartridge (or reservoir/receiver) ⇒ page 79 and ⇒ Heating, air conditioning; Rep. gr. 87 ; Refrigerant circuit (vehicle-specific Workshop Manual) and ⇒ “1.6 Cleaning refrigerant circuit”, page 95 . ♦ Constriction or blockage in refrigerant circuit (e.g. in refrigerant line between service connection on low-pressure side and air conditioner compressor). – Run hand over refrigerant circuit to check for differences in temperature ⇒ Heating, air conditioning; Rep. gr. 87 ; Refrigerant circuit (vehicle-specific Workshop Manual). If you detect that the temperature of a component differs and the hose or pipe is kinked or constricted, renew this component. If there is a blockage or if no faults are detected, clean refrigerant circuit (flush with refrigerant R1234yf) ⇒ “1.6 Cleaning refrigerant circuit”, page 95 . – Renew expansion valve and desiccant bag/desiccant cartridge (or reservoir/receiver) ⇒ page 79 and ⇒ Heating, air conditioning; Rep. gr. 87 ; Refrigerant circuit (vehicle-specific Workshop Manual).
Final steps
– Re-charge refrigerant circuit ⇒ “2.6 Charging refrigerant circuit”, page 160 . – Repeat test ⇒ “2.14.4 Checking pressures with air conditioner switched on - vehicles with mechanically driven air conditioner compressor”, page 197 .

Protected by copyright. Copying for private or commercial purposes, in part or in whole, is not permitted unless authorised by AUDI AG. AUDI AG does not guarantee or accept any liability with respect to the correctness of information in this document. Copyright by AUDI AG.

Note

- *Make sure that the air conditioner compressor (the compressor shaft) is actually driven by the pulley/drive unit if this problem arises (pay attention to overload protection) ⇒ Heating, air conditioning; Rep. gr. 87 ; Air conditioner compressor (vehicle-specific Workshop Manual).*
- *On certain engines, air conditioner compressors are used which in addition to -N280- also have an air conditioning system magnetic clutch - N25- on the pulley. In the event of this problem, make sure -N25- is actually being actuated and that the air conditioner compressor (air conditioner compressor shaft) is being driven via the pulley ⇒ Heating, air conditioning; Rep. gr. 87 ; Refrigerant circuit (vehicle-specific Workshop Manual) and ⇒ Electronic parts catalogue .*
- *If no faults are detected when this problem arises, clean the refrigerant circuit (flush with refrigerant R1234yf) ⇒ "1.6 Cleaning refrigerant circuit", page 95 .*
- *Check measured values of evaporator output temperature sender - G263- and activation of -N280- . If the measured value of -G263- is incorrect, the evaporator may ice up or the cooling output will not be attained ⇒ Vehicle diagnostic tester ("Guided Fault Finding" function for air conditioner).*
- *If the test is repeated and operation of the air conditioner is not OK, e.g. after renewing the expansion valve, clean the refrigerant circuit (flush with refrigerant R1234yf ⇒ "1.6 Cleaning refrigerant circuit", page 95). Next, renew air conditioner compressor and reservoir/receiver (or desiccant cartridge) ⇒ Heating, air conditioning; Rep. gr. 87 ; Refrigerant circuit (vehicle-specific Workshop Manual).*
- *If the expansion valve is faulty (continuously closed or does not open far enough), -N280- is set to maximum power and the low pressure falls to the diagram value or lower (the air conditioner compressor extracts refrigerant out of the low-pressure side)⇒ Vehicle diagnostic tester ("Guided Fault Finding" for air conditioner). As refrigerant cannot however flow via expansion valve, cooling output is not attained and high pressure may either not increase or only slightly due to the absence of energy conversion.*

Protected by copyright. Copying for private or commercial purposes, in part or in whole, is not permitted unless authorised by AUDI AG. AUDI AG does not guarantee or accept any liability with respect to the correctness of information in this document. Copyright by AUDI AG.

Possible deviation from specification during the pressure test
♦ Required cooling output is not attained. ♦ High pressure increases above specification. ♦ Low pressure drops quickly to specification or below.
Possible reasons for deviation from specification and how to rectify them

Possible deviation from specification during the pressure test
♦ Problem with activation of air conditioner compressor regulating valve - N280-
– Check activation of -N280- and repair if necessary ⇒ Vehicle diagnostic tester (“Guided Fault Finding” function for air conditioner).
♦ Constriction or blockage in refrigerant circuit
♦ Expansion valve defective
♦ A shut-off valve may be installed in the refrigerant circuit which does not open properly or at all ⇒ Heating, air conditioning; Rep. gr. 87 ; Refrigerant circuit (vehicle-specific Workshop Manual).
– Check function of shut-off valve (if fitted) ⇒ Heating, air conditioning; Rep. gr. 87 ; Refrigerant circuit (vehicle-specific Workshop Manual).
– Run hand over refrigerant circuit to check for differences in temperature ⇒ Heating, air conditioning; Rep. gr. 87 ; Refrigerant circuit (vehicle-specific Workshop Manual). If you detect that the temperature of a component differs and the hose or pipe is kinked or constricted, renew this component. If there is a blockage or if no faults are detected, clean refrigerant circuit (flush with refrigerant R1234yf) ⇒ “1.6 Cleaning refrigerant circuit”, page 95 .
– Renew expansion valve and desiccant bag/desiccant cartridge (or reservoir/receiver) ⇒ page 79 and ⇒ Heating, air conditioning; Rep. gr. 87 ; Refrigerant circuit (vehicle-specific Workshop Manual).
Final steps
– Re-charge refrigerant circuit ⇒ “2.6 Charging refrigerant circuit”, page 160 .
– Repeat test ⇒ “2.14.4 Checking pressures with air conditioner switched on - vehicles with mechanically driven air conditioner compressor”, page 197 .

Note

- *In this case, the evaporator may ice up although the amount of refrigerant in the refrigerant circuit is OK.*
- *If expansion valve is defective (permanently closed or does not open sufficiently), air conditioner compressor regulating valve - N280- is actuated to maximum output and low pressure drops to value in graph or below (air conditioner compressor draws off refrigerant from low-pressure side). However, as no refrigerant can flow via the expansion valve, the cooling output is not attained and the high pressure may also not increase or only increase slightly since there is no energy exchange ⇒ Vehicle diagnostic tester (“Guided Fault Finding”) and ⇒ Heating, air conditioning; Rep. gr. 87 ; Refrigerant circuit (vehicle-specific Workshop Manual).*
- *If there is too much refrigerant oil in circuit, air conditioner compressor must be discharged and desiccant bag (desiccant cartridge) or reservoir/receiver must be renewed. After cleaning the refrigerant circuit (flushing it with refrigerant R1234yf) ⇒ “1.6 Cleaning refrigerant circuit”, page 95 , charge the circuit with the correct quantity of refrigerant oil ⇒ Heating, air conditioning; Rep. gr. 00 ; Technical data; Approved refrigerant oils and capacities for refrigerant oil (vehicle-specific Workshop Manual), and ⇒ Heating, air conditioning; Rep. gr. 87 ; Refrigerant circuit (vehicle-specific Workshop Manual).*
- *If the specified value is again not reached when the test is repeated, but no faults can be detected in the refrigerant circuit, clean the circuit (flush with refrigerant R1234yf) ⇒ “1.6 Cleaning refrigerant circuit”, page 95 .*

Protected by copyright. Copying or distribution of this document or its contents to other persons, in part or in whole, is not permitted unless authorised by AUDI AG. AUDI AG does not guarantee or accept any liability with respect to the accuracy of information in this document. Copyright by AUDI AG.

Possible deviation from specification during the pressure test
♦ Required cooling output is attained at first, but cooling output is no longer sufficient after some time or an extended period of operation. ♦ High pressure and low pressure are normal at first. ♦ High pressure rises above specification after some time; low pressure continues to correspond to specification or drops below it.
Possible reasons for deviation from specification and how to rectify them
♦ Radiator or condenser dirty or coolant fan activation not OK – Check activation of coolant fans and repair if necessary ⇒ Vehicle diagnostic tester (“Guided Fault Finding” function for air conditioner). – Check condenser and radiator for dirt, and clean if necessary ⇒ Heating, air conditioning; Rep. gr. 87 ; Refrigerant circuit (vehicle-specific Workshop Manual), and ⇒ Engine, mechanics; Rep. gr. 19 ; Radiator/radiator fans . ♦ Problem with activation of air conditioner compressor regulating valve - N280- – Check actuation of -N280- and measured value of evaporator output temperature sender - G263- , and repair if necessary ⇒ Vehicle diagnostic tester (“Guided Fault Finding” function for air conditioner). ♦ Too much refrigerant in refrigerant circuit – Extract refrigerant from refrigerant circuit ⇒ “2.4 Discharging refrigerant circuit”, page 150 . – If quantity of refrigerant extracted is considerably greater (by more than 100 g) than specified capacity ⇒ Heating, air conditioning; Rep. gr. 00 ; Technical data (vehicle-specific Workshop Manual), there was too much refrigerant in the circuit. Charge refrigerant circuit with the correct quantity of R1234yf and repeat test. ♦ Air conditioner compressor regulating valve - N280- or air conditioner compressor faulty – Check operation of -N280- , remove -N280- if necessary and check for dirt ⇒ Vehicle diagnostic tester (“Guided Fault Finding” function for air conditioner) and ⇒ “1.5 Renewing components”, page 79 . – Renew -N280- or air conditioner compressor ⇒ “1.5 Renewing components”, page 79 . – If there is dirt in the refrigerant circuit, clean the circuit (flush with refrigerant R1234yf), renew the expansion valve and desiccant bag/desiccant cartridge (or reservoir/receiver) ⇒ “1.5 Renewing components”, page 79 and ⇒ Heating, air conditioning; Rep. gr. 87 ; Refrigerant circuit (vehicle-specific Workshop Manual) and ⇒ “1.6 Cleaning refrigerant circuit”, page 95 . ♦ Too much refrigerant oil in refrigerant circuit ♦ Moisture in refrigerant circuit – Extract refrigerant from refrigerant circuit ⇒ “2.4 Discharging refrigerant circuit”, page 150 . – If the quantity of refrigerant extracted corresponds to the specified capacity or is only slightly lower (by less than 100 g) ⇒ Heating, air conditioning; Rep. gr. 00 ; Technical data (vehicle-specific Workshop Manual), there is too much refrigerant oil in the refrigerant circuit. – Clean refrigerant circuit (flush with refrigerant R1234yf) ⇒ “1.6 Cleaning refrigerant circuit”, page 95 . – Renew expansion valve and desiccant bag/desiccant cartridge (or reservoir/receiver) ⇒ “1.5 Renewing components”, page 79 and ⇒ Heating, air conditioning; Rep. gr. 87 ; Refrigerant circuit (vehicle-specific Workshop Manual).
Final steps
– Re-charge refrigerant circuit ⇒ “2.6 Charging refrigerant circuit”, page 160 . – Repeat test ⇒ “2.14.4 Checking pressures with air conditioner switched on - vehicles with mechanically driven air conditioner compressor”, page 197 .

Protected by copyright. Copying or distribution of this document is not permitted unless authorised by AUDI AG. AUDI AG does not guarantee or accept any liability with respect to the correctness of information in this document. Copyright by AUDI AG.

Note

- *If there is too much refrigerant oil in circuit, air conditioner compressor must be discharged and desiccant bag (desiccant cartridge) or reservoir/receiver must be renewed. After cleaning the refrigerant circuit (flushing it with refrigerant R1234yf) ⇒ "1.6 Cleaning refrigerant circuit", page 95 , charge the circuit with the correct quantity of refrigerant oil ⇒ Heating, air conditioning; Rep. gr. 00 ; Technical data; Approved refrigerant oils and capacities for refrigerant oil (vehicle-specific Workshop Manual), and ⇒ Heating, air conditioning; Rep. gr. 87 ; Refrigerant circuit (vehicle-specific Workshop Manual).*
- *In this case, the evaporator may ice up although the amount of refrigerant in the refrigerant circuit is OK.*
- *A problem with evaporator output temperature sender - G263- can also cause icing-up of refrigerant circuit. If this problem occurs, also note the measured value of -G263- ⇒ Vehicle diagnostic tester ("Guided Fault Finding" function for air conditioner), and ⇒ Heating, air conditioning; Rep. gr. 87 ; Overview of fitting locations - air conditioner (vehicle-specific Workshop Manual).*

Possible deviation from specification during the pressure test
♦ Required cooling output is attained at first, but is no longer attained after a short or extended period of time. ♦ High pressure and low pressure are normal at first; high pressure rises above specification after some time and low pressure drops to specification or below it. ♦ High pressure and low pressure are normal at first; after vehicle has been driven for a while, low pressure drops to specification or below and evaporator ices up.
Possible reasons for deviation from specification and how to rectify them

Protected by copyright. Copying for private or commercial purposes, in part or in whole, is not permitted unless authorised by AUDI AG. AUDI AG does not guarantee or accept any liability with respect to the correctness of information in this document. Copyright by AUDI AG.

Possible deviation from specification during the pressure test
♦ Radiator or condenser dirty or coolant fan activation not OK
– Check activation of coolant fans and repair if necessary ⇒ Vehicle diagnostic tester (“Guided Fault Finding” function for air conditioner). – Check condenser and radiator for dirt, and clean if necessary ⇒ Heating, air conditioning; Rep. gr. 87 ; Refrigerant circuit (vehicle-specific Workshop Manual), and ⇒ Engine, mechanics; Rep. gr. 19 ; Radiator/ radiator fans .
♦ Measured value of evaporator output temperature sender - G263- incorrect
– Check measured value and installation of -G263- ⇒ Vehicle diagnostic tester (“Guided Fault Finding” function for air conditioner) and ⇒ Heating, air conditioning; Rep. gr. 87 ; Overview of fitting locations - air conditioner .
♦ Problem with activation of air conditioner compressor regulating valve - N280-
– Check actuation of air conditioner compressor regulating valve - N280- and repair if necessary ⇒ Vehicle diagnostic tester (“Guided Fault Finding” function for air conditioner).
♦ Air conditioner compressor regulating valve - N280- or air conditioner compressor faulty
– Check operation of -N280- , remove -N280- if necessary and check for dirt ⇒ Vehicle diagnostic tester (“Guided Fault Finding” function for air conditioner) and ⇒ “1.5 Renewing components”, page 79 . – Renew -N280- or air conditioner compressor ⇒ “1.5 Renewing components”, page 79 . – If there is dirt in the refrigerant circuit, clean the circuit (flush with refrigerant R1234yf) and renew the expansion valve and desiccant bag/desiccant cartridge (or reservoir/receiver) ⇒ “1.6 Cleaning refrigerant circuit”, page 95 , ⇒ “1.5 Renewing components”, page 79 and ⇒ Heating, air conditioning; Rep. gr. 87 ; Refrigerant circuit (vehicle-specific Workshop Manual).
♦ Moisture in refrigerant circuit
– Extract refrigerant from refrigerant circuit ⇒ “2.4 Discharging refrigerant circuit”, page 150 . – Clean refrigerant circuit (flush with refrigerant R1234yf) ⇒ “1.6 Cleaning refrigerant circuit”, page 95 . – Renew expansion valve and desiccant bag/desiccant cartridge (or reservoir/receiver) ⇒ “1.5 Renewing components”, page 79 and ⇒ Heating, air conditioning; Rep. gr. 87 ; Refrigerant circuit (vehicle-specific Workshop Manual).
Final steps
– Re-charge refrigerant circuit ⇒ “2.6 Charging refrigerant circuit”, page 160 . – Repeat test ⇒ “2.14.4 Checking pressures with air conditioner switched on - vehicles with mechanically driven air conditioner compressor”, page 197 .

Protected by copyright - copying for private or commercial purposes, in part or in whole, is not permitted unless authorised by AUDI AG. AUDI AG does not guarantee or assume any liability with respect to the correctness and completeness of this document. Copyright by AUDI AG.

Note

- *In this case, the evaporator may ice up although the amount of refrigerant in the refrigerant circuit is OK.*
- *A problem with evaporator output temperature sender - G263- can cause icing-up of refrigerant circuit. If this problem occurs, also note the measured value of -G263- .*
- *If there is moisture in the circuit, the air conditioner compressor must be discharged and the desiccant bag/desiccant cartridge (or reservoir/receiver) must be renewed. After cleaning the refrigerant circuit (flushing it with refrigerant R1234yf) ⇒ “1.6 Cleaning refrigerant circuit”, page 95 , charge the circuit with the correct quantity of refrigerant oil ⇒ Heating, air conditioning; Rep. gr. 00 ; Technical data (vehicle-specific Workshop Manual), and ⇒ Heating, air conditioning; Rep. gr. 87 ; Refrigerant circuit (vehicle-specific Workshop Manual).*

Possible deviation from specification during the pressure test
♦ Required cooling output is attained. ♦ High pressure corresponds to specification. ♦ Low pressure is too low (below specification).
Possible reasons for deviation from specification and how to rectify them
♦ Measured value of evaporator output temperature sender - G263- incorrect – Check measured value and installation of -G263- ⇒ Vehicle diagnostic tester (“Guided Fault Finding” function for air conditioner) and ⇒ Heating, air conditioning; Rep. gr. 87 ; Overview of fitting locations - air conditioner (vehicle-specific Workshop Manual). ♦ Problem with activation of air conditioner compressor regulating valve - N280- ♦ A shut-off valve may be installed in the refrigerant circuit which does not open properly or at all ⇒ Heating, air conditioning; Rep. gr. 87 ; Overview of fitting locations - air conditioner (vehicle-specific Workshop Manual), and ⇒ Heating, air conditioning; Rep. gr. 87 ; Refrigerant circuit (vehicle-specific Workshop Manual). – Check actuation of air conditioner compressor regulating valve - N280- and repair if necessary ⇒ Vehicle diagnostic tester (“Guided Fault Finding” function for air conditioner). – Check operation of shut-off valve (if fitted) ⇒ Heating, air conditioning; Rep. gr. 87 ; Overview of fitting locations - air conditioner , and ⇒ Heating, air conditioning; Rep. gr. 87 ; Refrigerant circuit . ♦ Air conditioner compressor regulating valve - N280- or air conditioner compressor faulty – Check operation of -N280- , remove -N280- if necessary and check for dirt ⇒ Vehicle diagnostic tester (“Guided Fault Finding” function for air conditioner) and ⇒ “1.5 Renewing components”, page 79 . – Renew -N280- or air conditioner compressor ⇒ “1.5 Renewing components”, page 79 . – If there is dirt in the refrigerant circuit, clean the circuit (flush with refrigerant R1234yf) and renew the expansion valve and desiccant bag/desiccant cartridge (or reservoir/receiver) ⇒ “1.6 Cleaning refrigerant circuit”, page 95 , ⇒ “1.5 Renewing components”, page 79 and ⇒ Heating, air conditioning; Rep. gr. 87 ; Refrigerant circuit (vehicle-specific Workshop Manual).
Final steps
– Re-charge refrigerant circuit ⇒ “2.6 Charging refrigerant circuit”, page 160 . – Repeat test ⇒ “2.14.4 Checking pressures with air conditioner switched on - vehicles with mechanically driven air conditioner compressor”, page 197 .

Protected by copyright. Copying for private or commercial purposes, in part or in whole, is not permitted unless authorised by AUDI AG. AUDI AG does not guarantee or accept any liability with respect to the correctness of information in this document. Copyright by AUDI AG.

Note

- *Observe the following regarding fault "High pressure normal, low pressure too low": This fault may cause the evaporator to ice up although the amount of refrigerant in the circuit is OK.*
- *If the fault is due to a shut-off valve (shut-off valve does not open), it is not necessary to clean the refrigerant circuit (flush with refrigerant R1234yf ⇒ "1.6 Cleaning refrigerant circuit", page 95). If this fault occurs, it is sufficient to check the actuation of the shut-off valve: if OK, renew the shut-off valve.*
- *If the error is due to the air conditioner compressor regulating valve - N280- (the regulating valve is not actuated and the air conditioner compressor works nevertheless), you must clean the refrigerant circuit (flush with refrigerant R1234yf ⇒ "1.6 Cleaning refrigerant circuit", page 95). In this case it is sufficient to renew the air conditioner compressor (observe quantity of refrigerant oil in compressor).*
- *If expansion valve is defective (permanently closed or does not open sufficiently), air conditioner compressor regulating valve - N280- is actuated to maximum output and low pressure drops to value in graph or below (air conditioner compressor draws off refrigerant from low-pressure side). However, since no refrigerant can flow through the expansion valve, the cooling output is not achieved, the high pressure may also not rise - or only slightly - as there is no energy turnover. If this error occurs, it is not necessary to clean the refrigerant circuit (flush with refrigerant R1234yf ⇒ "1.6 Cleaning refrigerant circuit", page 95); it suffices to renew the expansion valve.*
- *Check measured values of evaporator output temperature sender - G263- and actuation of air conditioner compressor regulating valve - N280- . If the measured value of -G263- is incorrect, the evaporator may ice up or the cooling output will not be attained ⇒ Vehicle diagnostic tester ("Guided Fault Finding" function for air conditioner).*

Protected by copyright. Copying for private or commercial purposes, in part or in whole, is not permitted unless authorised by AUDI AG. AUDI AG does not guarantee or accept any liability with respect to the correctness of information in this document. Copyright by AUDI AG.

Possible deviation from specification during the pressure test
♦ Noise from air conditioner compressor (particularly after being switched on). ♦ Required cooling output is attained. ♦ High pressure normal or too high ♦ Low pressure is normal or too high (specification not always attained).
Possible reasons for deviation from specification and how to rectify them

Possible deviation from specification during the pressure test
♦ Problem with activation of air conditioner compressor regulating valve - N280-
– Check actuation of air conditioner compressor regulating valve - N280- and repair if necessary ⇒ Vehicle diagnostic tester (“Guided Fault Finding” function for air conditioner). ♦ Check operation of -N280- , remove -N280- if necessary and check for dirt ⇒ Vehicle diagnostic tester (“Guided Fault Finding” function for air conditioner), ⇒ “1.5 Renewing components”, page 79 and ⇒ Heating, air conditioning; Rep. gr. 87 ; Refrigerant circuit (vehicle-specific Workshop Manual).
♦ Renew -N280- or air conditioner compressor ⇒ “1.5 Renewing components”, page 79 and ⇒ Heating, air conditioning; Rep. gr. 87 ; Air conditioner compressor (vehicle-specific Workshop Manual).
♦ If there is dirt in the refrigerant circuit, clean the circuit (flush with refrigerant R1234yf) and renew the expansion valve and desiccant bag/desiccant cartridge (or reservoir/receiver) ⇒ “1.6 Cleaning refrigerant circuit”, page 95 , ⇒ “1.5 Renewing components”, page 79 and ⇒ Heating, air conditioning; Rep. gr. 87 ; Refrigerant circuit (vehicle-specific Workshop Manual).
♦ Too much refrigerant or refrigerant oil in refrigerant circuit
– Extract refrigerant from refrigerant circuit ⇒ “2.4 Discharging refrigerant circuit”, page 150 . – If quantity of refrigerant extracted is considerably greater (by more than 100 g) than specified capacity ⇒ Heating, air conditioning; Rep. gr. 00 ; Technical data (vehicle-specific Workshop Manual), there was too much refrigerant in the circuit. Charge refrigerant circuit again and repeat test. – If the quantity of refrigerant extracted corresponds to the specified capacity or is only slightly higher than specified capacity (by less than 100 g) ⇒ Heating, air conditioning; Rep. gr. 00 ; Technical data (vehicle-specific Workshop Manual), there is too much refrigerant oil in the refrigerant circuit. Clean the refrigerant circuit (flush with refrigerant R1234yf) ⇒ “1.6 Cleaning refrigerant circuit”, page 95 , charge with the correct quantity of new refrigerant and refrigerant oil and repeat the test. ♦ Expansion valve defective
♦ A shut-off valve may be installed in the refrigerant circuit which does not open properly or at all ⇒ Heating, air conditioning; Rep. gr. 87 ; Refrigerant circuit (vehicle-specific Workshop Manual).
– Check operation of shut-off valve (if fitted) ⇒ Heating, air conditioning; Rep. gr. 87 ; Refrigerant circuit (vehicle-specific Workshop Manual). – Renew expansion valve and desiccant bag/desiccant cartridge (or reservoir/receiver) ⇒ “1.5 Renewing components”, page 79 and ⇒ Heating, air conditioning; Rep. gr. 87 ; Refrigerant circuit (vehicle-specific Workshop Manual). ♦ Air conditioner compressor defective
– If a fault cannot be detected in any component and the extracted quantity of refrigerant conforms to the specifications, clean the refrigerant circuit (flush with refrigerant R1234yf) ⇒ “1.6 Cleaning refrigerant circuit”, page 95 . If an excessive quantity of refrigerant oil is not found while cleaning the refrigerant circuit, renew the air conditioner compressor ⇒ “1.5 Renewing components”, page 79 , ⇒ Heating, air conditioning; Rep. gr. 00 ; Repair instructions; Checking cooling output (vehicle-specific Workshop Manual), and ⇒ Heating, air conditioning; Rep. gr. 87 ; Air conditioner compressor (vehicle-specific Workshop Manual).
Final steps
– Re-charge refrigerant circuit ⇒ “2.6 Charging refrigerant circuit”, page 160 .
– Repeat test ⇒ “2.14.4 Checking pressures with air conditioner switched on - vehicles with mechanically driven air conditioner compressor”, page 197 .

Protected by copyright. Copying for private or commercial purposes, in part or in whole, is not permitted unless authorised by AUDI AG. AUDI AG does not guarantee or accept any liability with respect to the correctness and completeness of this document. Copyright by AUDI AG.

Note

- *This fault may also be caused by too much refrigerant oil in the refrigerant circuit. Overfilling with refrigerant oil may occur if, for example, the air conditioner compressor has been renewed without adjusting the quantity of refrigerant oil. If there is too much refrigerant oil in the refrigerant circuit, clean the circuit (flush with refrigerant R1234yf).*
  ⇒ "1.6 Cleaning refrigerant circuit", page 95
- *If the expansion valve (or a shut-off valve, if installed) is faulty (continuously closed or does not open far enough), the air conditioner compressor regulating valve - N280- is set to maximum power and the low pressure falls to the diagram value or lower (the air conditioner compressor extracts refrigerant out of the low-pressure side). However, as no refrigerant can flow via the expansion valve, the cooling output is not attained and the high pressure may also not increase or only increase slightly since there is no energy exchange ⇒ Vehicle diagnostic tester ("Guided Fault Finding") and ⇒ Heating, air conditioning; Rep. gr. 87 ; Refrigerant circuit (vehicle-specific Workshop Manual).*

Protected by copyright. Copying for private or commercial purposes, in part or in whole, is not permitted unless authorised by AUDI AG. AUDI AG does not guarantee or accept any liability with respect to the correctness of information in this document. Copyright by AUDI AG.

Possible deviation from specification during the pressure test
♦ Required cooling output is not attained. ♦ High pressure and low pressure correspond to specification.
Possible reasons for deviation from specification and how to rectify them

Possible deviation from specification during the pressure test
♦ There is not enough refrigerant in the refrigerant circuit.
– Extract refrigerant from refrigerant circuit ⇒ “2.4 Discharging refrigerant circuit”, page 150 . – If quantity of refrigerant extracted is significantly less than specified capacity (more than 100 g less) ⇒ Heating, air conditioning; Rep. gr. 00 ; Technical data (vehicle-specific Workshop Manual), locate and eliminate leak ⇒ “1.4 Locating leaks”, page 68 . – The extracted quantity of refrigerant roughly conforms to the specified capacity, measured value from the evaporator output temperature sender - G263- , actuation of the air conditioner compressor regulating valve in the air conditioning system - N280- , incorrect expansion valve function, or fault in another component (see below).
♦ Measured value of evaporator output temperature sender - G263- incorrect
– Check measured value and installation of -G263- ⇒ Vehicle diagnostic tester (“Guided Fault Finding” function for air conditioner) and ⇒ Heating, air conditioning; Rep. gr. 87 ; Overview of fitting locations - air conditioner , and ⇒ Heating, air conditioning; Rep. gr. 87 ; Air conditioner compressor (vehicle-specific Workshop Manual).
♦ Problem with activation of air conditioner compressor regulating valve - N280-
– Check activation of -N280- and repair if necessary ⇒ Vehicle diagnostic tester (“Guided Fault Finding” function for air conditioner).
♦ Expansion valve defective
♦ A shut-off valve may be installed in the refrigerant circuit which does not open properly or at all ⇒ Heating, air conditioning; Rep. gr. 87 ; Refrigerant circuit (vehicle-specific Workshop Manual).
– Run hand over refrigerant circuit to check for differences in temperature ⇒ Heating, air conditioning; Rep. gr. 87 ; Refrigerant circuit (vehicle-specific Workshop Manual). If you detect that the temperature of a component differs and the hose or pipe is kinked or constricted, renew this component. If there is a blockage or if no faults are detected, clean refrigerant circuit (flush with refrigerant R1234yf) ⇒ “1.6 Cleaning refrigerant circuit”, page 95 . – Check operation of shut-off valve (if fitted) ⇒ Heating, air conditioning; Rep. gr. 87 ; Refrigerant circuit (vehicle-specific Workshop Manual). – Renew expansion valve and desiccant bag/desiccant cartridge (or reservoir/receiver) ⇒ “1.5 Renewing components”, page 79 and ⇒ Heating, air conditioning; Rep. gr. 87 ; Refrigerant circuit (vehicle-specific Workshop Manual).
♦ Too much refrigerant oil in refrigerant circuit
– If the extracted quantity of refrigerant conforms to the specified capacity or is only slightly less than this (less than 100 g) ⇒ Heating, air conditioner; Rep. gr. 00 ; Technical data (vehicle-specific Workshop Manual), there is too much refrigerant oil in the refrigerant circuit. Clean the refrigerant circuit (flush with refrigerant R1234yf) ⇒ “1.6 Cleaning refrigerant circuit”, page 95 , charge with the correct quantity of new refrigerant and refrigerant oil and repeat the test.
♦ Expansion valve defective
♦ A shut-off valve may be installed in the refrigerant circuit which does not open properly or at all ⇒ Heating, air conditioning; Rep. gr. 87 ; Refrigerant circuit (vehicle-specific Workshop Manual).
– Check operation of shut-off valve (if fitted) ⇒ Heating, air conditioning; Rep. gr. 87 ; Refrigerant circuit (vehicle-specific Workshop Manual).
– Renew expansion valve and desiccant bag/desiccant cartridge (or reservoir/receiver) ⇒ “1.5 Renewing components”, page 79 and ⇒ Heating, air conditioning; Rep. gr. 87 ; Refrigerant circuit (vehicle-specific Workshop Manual).
Final steps
– Re-charge refrigerant circuit ⇒ “2.6 Charging refrigerant circuit”, page 160 . – Repeat test ⇒ “2.14.4 Checking pressures with air conditioner switched on - vehicles with mechanically driven air conditioner compressor”, page 197 .

Protected by copyright. Copying for private or commercial purposes, in part or in whole, is not permitted unless authorised by AUDI AG. AUDI AG does not guarantee or accept any liability with respect to the correctness of information in this document. Copyright by AUDI AG.

Note

- *Check the measured values of the evaporator output temperature sender - G263- and the actuation of the -N280- . If the measured value of -G263- is incorrect, the evaporator may ice up or the cooling output is not achieved ⇒ Vehicle diagnostic tester ("Guided Fault Finding" function for air conditioner) and ⇒ Heating, air conditioning; Rep. gr. 87 ; Overview of fitting locations - air conditioner (vehicle-specific Workshop Manual).*
- *Overfilling with refrigerant oil may occur if, for example, the air conditioner compressor has been renewed without adjusting the quantity of refrigerant oil.*
- *If the expansion valve is faulty (continuously open), the evaporator temperature is no longer regulated so as to ensure that only gaseous refrigerant exits the evaporator. Under certain usage conditions, liquid droplets may then be drawn in by the air conditioner compressor and result in noise (liquid cannot be compressed).*
- *If there is too much refrigerant oil in the circuit, the air conditioner compressor must be discharged and, if installed, the reservoir/receiver (or desiccant cartridge) must be renewed ⇒ Heating, air conditioning; Rep. gr. 87 ; Refrigerant circuit (vehicle-specific Workshop Manual). After cleaning (flushing with refrigerant R1234yf) ⇒ "1.6 Cleaning refrigerant circuit", page 95 the refrigerant circuit, charge the circuit with the correct quantity of refrigerant oil ⇒ Heating, air conditioner; Rep. gr. 00 ; Technical data (vehicle-specific Workshop Manual).*

Protected by copyright. Copying for private or commercial purposes, in part or in whole, is not permitted unless authorised by AUDI AG. AUDI AG does not guarantee or accept any liability with respect to the correctness of information in this document. Copyright by AUDI AG.

2.14.5 Checking pressures with air conditioner switched on - vehicles with electrically driven air conditioner compressor

Checking pressures ⇒ page 219

Specified values for refrigerant circuit pressures in vehicles without heat pump ⇒ page 224

Specified values for refrigerant circuit pressures in vehicles with heat pump ⇒ page 247

Checking pressures

Note

Work on the refrigerant circuit (in this case, checking pressures) using the air conditioner service station can be performed without disconnecting the high-voltage system from mains voltage.

– To minimise the number of automatic engine starts when the vehicle's drive system is active during test and measurement work, charge the vehicle batteries e.g. with the battery charger 60A - VAS 5904- in battery standby mode ⇒ Electrical system; General information; Rep. gr. 27 ; Charging battery and ⇒ Electrical system; Rep. gr. 93 ; General warning instructions for work on the high-voltage system .
– For test and measurement work that requires the vehicle's drive system to be active (READY) or the ignition to be switched on, move the selector lever to position "P", activate the parking brake and take care to keep well clear of the engine

when it is running. Set up any tools needed so that they cannot come into contact with moving parts.

Note

- *Move the selector lever to position "P" and activate the parking brake before performing test and measurement work for which the ignition must be switched on but where the vehicle's drive system does not need to be active.*
- *The status of the drive system (READY) is shown by the control unit in dash panel insert - J285- via the "power meter" ⇒ Owner's Manual .*
- *Activating and deactivating drive system ⇒ Owner's Manual (note display of control unit in dash panel insert - J285-).*

– On vehicles with high-voltage system, switch off (deactivate) auxiliary air conditioner function ⇒ Owner's Manual and ⇒ Infotainment/MMI Operating Manual .

– Switch off ignition.

– Connecting air conditioner service station
⇒ "2.2 Connecting air conditioner service station to refrigerant circuit", page 144

Note

If only one evaporator has a problem in vehicles with two evaporators (one evaporator in the heater and air conditioning unit, one on the heat exchanger for high-voltage battery), check refrigerant circuit pressures, are they OK? Check for cross-sectional restriction or blockage of line connection between faulty evaporator and outgoing line connection at refrigerant line distribution point. If no fault is found, discharge the refrigerant circuit and re-fill it with the specified quantity of refrigerant. Then check the pressures and cooling output of the air conditioner again. If the problem persists, check/renew the following components (if the problem only occurs with the evaporator in the heater and air conditioning unit, check the shut-off valve upstream of the evaporator in the heater and air conditioning unit; it is open when not actuated and allows refrigerant through): If no faults are detected at the shut-off valve, renew the expansion valve on the evaporator in the heater and air conditioning unit. If the problem only occurs at the evaporator on the heat exchanger for high-voltage battery, check the actuation of the shut-off valve on the evaporator expansion valve on the heat exchanger for high-voltage battery (it is closed when not actuated and does not allow refrigerant through) ⇒ Heating, air conditioning; Rep. gr. 87 ; Refrigerant circuit (vehicle-specific Workshop Manual).

Test requirements

Protected by copyright. Copying for private or commercial purposes, in part or in whole, is not permitted unless authorised by AUDI AG. AUDI AG does not guarantee or accept any liability with respect to the correctness of information in this document. Copyright by AUDI AG.

- Air conditioner service station connected to refrigerant circuit
⇒ "2.2 Connecting air conditioner service station to refrigerant circuit", page 144
- Note test requirements for checking pressures in refrigerant circuit with ignition switched off ⇒ page 190 .
- Pressures in refrigerant circuit correspond to specifications (with ignition switched off)
⇒ "2.14.3 Checking pressures in refrigerant circuit with ignition switched off", page 190 .

- Note test requirements for checking cooling output ⇒ Heating, air conditioning; Rep. gr. 00 ; Repair instructions; Checking cooling output (vehicle-specific Workshop Manual).

Note

- *The switching pressures for actuating the electric air conditioner compressor - V470- and the radiator fan - V7- are vehicle-specific ⇒ Vehicle diagnostic tester in "Guided Fault Finding" mode of the air conditioner and battery regulation.*
- *Measure the pressures at the service connections; the fitting locations of these connections are vehicle-specific ⇒ Heating, air conditioning; Rep. gr. 87 ; Refrigerant circuit (vehicle-specific Workshop Manual).*

- The engine must be warm (at an ambient temperature of less than 25 °C).

Note

- *If the engine is not warm, it may be necessary to perform a road test.*
- *The engine does not have to be warm for the cooling output to be checked, but it does need to be warm if a specific cooling output from the air conditioner is required at low ambient temperatures of less than 25 °C.*

- To minimise the number of automatic engine starts when the vehicle's drive system is active during test and measurement work, charge the vehicle batteries e.g. with the battery charger 60A - VAS 5904- in battery standby mode ⇒ Electrical system; General information; Rep. gr. 27 ; Charging battery and ⇒ Electrical system; Rep. gr. 93 ; General warning instructions for work on the high-voltage system .

– Activate drive system (READY) (the engine must not be running) ⇒ Owner's Manual .

– Set air conditioner to maximum cooling output ⇒ Heating, air conditioning; Rep. gr. 00 ; Repair instructions; Checking cooling output (vehicle-specific Workshop Manual).

- The electric air conditioner compressor - V470- is actuated and running ⇒ Vehicle diagnostic tester in "Guided Fault Finding" mode of the air conditioner and battery regulation and ⇒ Heating, air conditioner; Rep. gr. 87 ; Refrigerant circuit (vehicle-specific Workshop Manual).

Protected by copyright. Copying for private or commercial purposes, in part or in whole, is not permitted unless authorised by AUDI AG. AUDI AG does not guarantee or accept any liability with respect to the correctness of information in this document. Copyright by AUDI AG.

Note

- *The electrically driven air conditioner compressor is actuated by the vehicle electronics. The engine speed has no influence on the cooling output of the air conditioner.*
- *When the vehicle is stationary or only moving slowly (up to a speed of approx. 45 km/h), the air conditioner compressor is currently not activated at the maximum specified speed (of approx. 8500 rpm); the air conditioner compressor speed is limited to approx. 5000 rpm.*
- *Actuation of the electrically driven air conditioner compressor can be monitored in Guided Fault Finding ⇒ Vehicle diagnostic tester in "Guided Fault Finding" mode of the air conditioner and battery regulations.*
- *All test requirements marked with * are vehicle-specific and are described in the Workshop Manual for the specific vehicle ⇒ Heating, air conditioning; Rep. gr. 00 ; Repair instructions; Checking cooling output (vehicle-specific Workshop Manual).*

If the air conditioner compressor is not actuated with READY active:

– Determine and eliminate cause, e.g. by interrogating event memory of air conditioner ⇒ Vehicle diagnostic tester ("Guided Fault Finding" for air conditioner and battery regulation).

- Radiator and condenser are clean (clean if necessary) * ⇒ Heating, air conditioner; Rep. gr. 87 ; Refrigerant circuit (vehicle-specific Workshop Manual) and ⇒ Engine, mechanics; Rep. gr. 19 ; Radiator/radiator fan .
- Thermal insulation on expansion valve OK and fitted correctly* ⇒ Heating, air conditioning; Rep. gr. 87 ; Refrigerant circuit (vehicle-specific Workshop Manual)
- All air ducts, covers and seals are OK and correctly fitted * ⇒ Heating, air conditioner; Rep. gr. 87 ; Overview of fitting locations - Air conditioner (vehicle-specific Workshop Manual).
- The air conditioner diagnosis does not detect any faults (with READY active and air conditioner switched on). No air conditioner compressor shut-off condition is displayed in the measured value block ⇒ Vehicle diagnostic tester in "Guided Fault Finding" mode of the air conditioner and battery regulation.
- Check whether the various pressure/temperature senders and temperature sensors installed in the refrigerant circuit deliver plausible measured values during operation of the air conditioner ⇒ Vehicle diagnostic tester ("Guided Fault Finding") and ⇒ Heating, air conditioning; Rep. gr. 87 ; Overview of fitting locations - air conditioner . If no fault is found, extract refrigerant.
- The air throughput through the dust and pollen filter is not impaired by impurities * ⇒ Heating, air conditioner; Rep. gr. 87 ; Overview of fitting locations - Air conditioner (vehicle-specific Workshop Manual).
- The heater and air conditioning unit does not draw any secondary air at maximum fresh air blower speed. evaporator and heater not drawing in secondary air at maximum fresh air blower speed ⇒ Heating, air conditioning; Rep. gr. 00 ; Repair instructions; Checking cooling output (vehicle-specific Workshop Manual).
- The air duct flaps in the heater and air conditioning unit, in the heater and evaporator reach their end position * ⇒ Heating,

Protected by copyright. Copying for private or commercial purposes, in part or in whole, is not permitted unless authorised by AUDI AG. AUDI AG does not guarantee or accept any liability with respect to the correctness of information in this document. Copyright by AUDI AG.

air conditioner; Rep. gr. 00 ; Repair instructions; Checking cooling output (vehicle-specific Workshop Manual).

- The fresh air intake ducts under the bonnet and in the passenger compartment and the associated water drain valves are OK * ⇒ Heating, air conditioner; Rep. gr. 87 ; Overview of fitting locations - Air conditioner (vehicle-specific Workshop Manual).
- Vehicle not exposed to sunlight ⇒ Heating, air conditioning; Rep. gr. 00 ; Repair instructions; Checking cooling output (vehicle-specific Workshop Manual)
- Ambient temperature above 15 °C
- All dash panel vents open*

Setting, e.g. on the air conditioner operating and display unit - E87- (and the rear Climatronic operating and display unit - E265- in vehicles with two heater and air conditioning units) * ⇒ Heating, air conditioner; Rep. gr. 00 ; Repair instructions; Checking cooling output (vehicle-specific Workshop Manual) and ⇒ Heating, air conditioner; Rep. gr. 87 ; Overview of fitting locations - Air conditioner .

Copyright by AUDI AG. Copying for private or commercial purposes, in part or in whole, is not permitted unless authorised by AUDI AG. AUDI AG does not guarantee or accept any liability with respect to the correctness of information in this document. Copyright by AUDI AG.

Setting, e.g. on the -E87- *:

– Select “Auto” mode (air conditioner compressor switched on).
– Preset the temperature to “Cold” or “LO” for the driver and passenger side (and the left and right rear passenger compartment in vehicles with two heater and air conditioning units) *.

Settings on the -J301- *:

– Press A/C button and Rec (Recirculated) button *.
– Turn the temperature rotary know towards the “Cold” stop *.
– Set the rotary switch for the fresh air blower to setting “4” (maximum fresh air blower speed) *.

Subsequently, the following system test requirements should be met:

- The radiator fan - V7- is running, or radiator fan - V7- and radiator fan 2 - V177- are running (at least on level 1) * ⇒ Heating, air conditioner; Rep. gr. 00 ; Repair instructions; Checking cooling output (vehicle-specific Workshop Manual) and ⇒ Engine, mechanics; Rep. gr. 19 ; Radiator/radiator fan .

Note

In certain versions, the fan is only switched on after the pressure in the refrigerant circuit has exceeded a preset value, ⇒ Vehicle diagnostic tester in “Guided Fault Finding” mode of the air conditioner and battery regulations.

- Fresh air blower - V2- (and rear fresh air blower - V80- on vehicles with two heater and air conditioning units) running at maximum speed
- The fresh/recirculated air flap is in “recirculation mode” (the air flow flap closes and the recirculated air flap opens within 1 min of the vehicle being started).*
- Coolant shut-off valve closed* ⇒ Heating, air conditioning; Rep. gr. 00 ; Repair instructions; Checking cooling output (vehicle-specific Workshop Manual) ⇒ Heating, air conditioning; Rep. gr. 87 ; Overview of fitting locations - air conditioner (vehicle-specific Workshop Manual)

- The valves of the pump/valve unit are closed and the coolant circulation pump is not pumping * ⇒ Heating, air conditioner; Rep. gr. 00 ; Repair instructions; Checking cooling output (vehicle-specific Workshop Manual) and ⇒ Heating, air conditioner; Rep. gr. 87 ; Overview of fitting locations - Air conditioner (vehicle-specific Workshop Manual).

Note

- *The electrically driven air conditioner compressor is actuated by the vehicle electronics; the engine speed has no influence on the air conditioner's cooling output ⇒ Vehicle diagnostic tester ("Guided Fault Finding" for air conditioner and battery regulation).*
- *When the vehicle is stationary or only moving slowly (up to a speed of approx. 45 km/h), the air conditioner compressor is currently not activated at the maximum specified speed (of approx. 8500 rpm); the air conditioner compressor speed is limited to approx. 5000 rpm.*
- *Actuation of the electrically driven air conditioner compressor can be monitored in Guided Fault Finding ⇒ Vehicle diagnostic tester in "Guided Fault Finding" mode of the air conditioner and battery regulations.*
- *Measure the pressures at the service connections; the fitting locations of these connections are vehicle-specific ⇒ Heating, air conditioning; Rep. gr. 87 ; Refrigerant circuit (vehicle-specific Workshop Manual).*

Specifications for pressures in refrigerant circuit

- Specified values for refrigerant circuit pressures in vehicles without heat pump ⇒ page 224
- Specified values for refrigerant circuit pressures in vehicles with heat pump ⇒ page 247

Protected by copyright. Copying for private or commercial purposes, in part or in whole, is not permitted unless authorised by AUDI AG. AUDI AG does not guarantee or accept any liability with respect to the correctness of information in this document. Copyright by AUDI AG.

Note

- *The specified and actual speeds for actuating the electric air conditioner compressor - V470- and the radiator fan - V7- are vehicle-specific ⇒ Vehicle diagnostic tester in "Guided Fault Finding" mode of the air conditioner and battery regulation.*
- *Measure the pressures at the service connections; the fitting locations of these connections are vehicle-specific ⇒ Heating, air conditioning; Rep. gr. 87 ; Refrigerant circuit (vehicle-specific Workshop Manual).*

Specifications for pressures in refrigerant circuit on vehicles without heat pump

- Observe test requirements ⇒ page 219 .

– Observe the pressure display (e.g. pressure gauge) of the air conditioner service station .

Note

- *The switching pressures for actuating the electric air conditioner compressor - V470- and the coolant fan -V7- / -V177- are vehicle-specific ⇒ Vehicle diagnostic tester in "Guided Fault Finding" mode of the air conditioner and battery regulation.*
- *Measure the pressures at the service connections; the fitting locations of these connections are vehicle-specific ⇒ Heating, air conditioning; Rep. gr. 87 ; Refrigerant circuit (vehicle-specific Workshop Manual).*

High-pressure side:

Rising from initial pressure (when connecting pressure gauges) to a maximum gauge pressure of 20 bar (depending on ambient temperature and operating conditions of air conditioner)

Low-pressure side:

Dropping from initial pressure (when connecting pressure gauges) to a value between 1.5 and 2.3 bar absolute (depending on cooling output required).

Air conditioner compressor speed:

Between 800 and 8500 rpm depending on cooling output required (currently max. 5000 rpm with vehicle stationary)

Protected by copyright. Copying for private or commercial purposes, in part or in whole, is not permitted unless authorised by AUDI AG. AUDI AG does not guarantee or accept any liability with respect to the correctness of information in this document. Copyright by AUDI AG.

Note

- *The temperature of the air after the evaporator, the current air conditioner compressor speed and the refrigerant pressure on the high-pressure side are displayed as a measured value by different controls depending on the vehicle (e.g. by the operating and display unit, the -E87- , the -J255- , the thermal management control unit - J1024- or the air conditioner control unit - J301-) ⇒ Vehicle diagnostic tester in "Guided Fault Finding" mode of the air conditioner and battery regulation.*
- *If a very high cooling output is required (e.g. high ambient temperature and high fresh air blower speed), the air conditioner compressor cannot initially set the pressure on the low-pressure side to the necessary value (e.g. for a certain time after switching on the air conditioner). When the vehicle is stationary or only moving slowly (up to a speed of approx. 45 km/h), the air conditioner compressor is not activated at the maximum specified speed (of approx. 8500 rpm); the air conditioner compressor speed is limited to approx. 5000 rpm. Limitation of the maximum permissible air conditioner compressor speed is only cancelled at vehicle speeds above approx. 45 km/h. At an air conditioner compressor speed of 5000 rpm, with a high ambient temperature and a high fresh air blower speed (unfavourable ambient conditions), the output (delivery volume) of the air conditioner compressor is not initially sufficient to reduce the pressure on the low-pressure side to the specified value. One way to check the control action of the air conditioner compressor under these conditions is to activate the fresh air blower at only approx. 40 % of the maximum voltage and to check the pressures at reduced fresh air blower speed ⇒ Vehicle diagnostic tester in "Guided Fault Finding" mode of the air conditioner and battery regulation and ⇒ Heating, air conditioner; Rep. gr. 00 ; Repair instructions; Checking cooling output (vehicle-specific Workshop Manual).*
- *If low cooling output is required (e.g. at an outside temperature of 20 °C and a low fresh air blower speed), the pressure on the high-pressure side may rise to a value of only 6 to 7 bar (the energy turnover is low, the refrigerant cools down quickly in the condenser). One way to check the control action of the air conditioner compressor and the pressures in the refrigerant circuit under these conditions is to activate the fresh air blower at maximum voltage and to set the air conditioner to maximum heating output and recirculating mode ⇒ Vehicle diagnostic tester in "Guided Fault Finding" mode of the air conditioner and ⇒ Heating, air conditioner; Rep. gr. 00 ; Repair instructions; Checking cooling output (vehicle-specific Workshop Manual).*
- *Under unfavourable conditions (very high ambient temperatures, high humidity), the pressure on the high-pressure side may increase to max. 29 bar.*
- *The specified speed of the air conditioner compressor is displayed by different control units depending on the vehicle (e.g. by the operating and display unit, the -E87- , -J255- or the air conditioner control unit - J301-) ⇒ Vehicle diagnostic tester in "Guided Fault Finding" mode of the air conditioner.*
- *Depending on the vehicle, the high pressure measured by various senders (e.g. by the high-pressure sender - G65- , the refrigerant circuit pressure sender - G805- or the refrigerant pressure and refrigerant temperature sender - G395- is displayed as a measured value (e.g. of the -E87- , -J301- , the thermal management control unit - J1024- or the -J255- ⇒ Vehicle diagnostic tester in "Guided Fault Finding" of the air conditioner.*

Protected by copyright. Copying for private or commercial purposes, in part or in whole, is not permitted unless authorised by AUDI AG. AUDI AG does not guarantee or accept any liability with respect to the correctness of information in this document. Copyright by AUDI AG.

- *Depending on the air conditioner compressor speed and the characteristic curve of the expansion valve, the low pressure settles within the air conditioner compressor output range in the tolerance band (1.5 to 2.3 bar).*
- *For this test, the specified speed of the air conditioner compressor must be higher than 1500 rpm ⇒ Vehicle diagnostic tester in "Guided Fault Finding" mode of the air conditioner.*
- *In the "maximum cooling output" setting, the specified speed of the air conditioner compressor is set to approx. 4000 to 5000 rpm. This value is vehicle-specific and is displayed as a measured value by the control unit (e.g. by the operating and display unit, the -E87- , -J255- or the thermal management control unit - J1024-) ⇒ Vehicle diagnostic tester in "Guided Fault Finding" mode of the air conditioner and battery regulation.*
- *On the absolute pressure scale, 0 bar corresponds to an absolute vacuum. Normal ambient pressure corresponds to an absolute pressure of 1 bar. On the scales of most pressure gauges, 0 bar equals an absolute pressure of 1 bar (identifiable by the figure -1 bar below 0) ⇒ Vehicle diagnostic tester in "Guided Fault Finding" mode of the air conditioner.*
- *In a vehicle with two evaporators (one in the heater and air conditioning unit and one for battery cooling), the measured temperature matches or is below the specified value on one evaporator, while on the other the required value is not reached, the control system behaves as follows: The control unit in question (e.g. the battery regulation control unit or the thermal management control unit) actuates the electric air conditioner compressor via other control units (e.g. the power and control electronics for electrical system and the air conditioner compressor control unit) at a higher speed (this increases the cooling output of the air conditioner and the pressure on the low-pressure side and the evaporator temperature fall). If an evaporator drops below the specified temperature, the relevant control unit (e.g. the battery regulation control unit) actuates the shut-off valves (e.g. refrigerant shut-off valve 1 or refrigerant shut-off valve 2) in such a way that refrigerant no longer flows through the evaporator that is running too cold ⇒ Vehicle diagnostic tester in "Guided Fault Finding" mode of the air conditioner and battery regulation and ⇒ Heating, air conditioner; Rep. gr. 00 ; Repair instructions; Checking cooling output (vehicle-specific Workshop Manual) and ⇒ Heating, air conditioner; Rep. gr. 87 ; Overview of fitting locations - Air conditioner (vehicle-specific Workshop Manual).*
- *Since the output of the evaporator in the battery cooling module is considerably lower than that of the evaporator in the heater and air conditioning unit, when there is too little refrigerant in the circuit the required specified temperature may be reached in the battery cooling module, but it will not be reached at the evaporator in the heater and air conditioning unit (even though the air conditioner compressor is actuated at a higher speed) ⇒ Heating, air conditioner; Rep. gr. 00 ; Repair instructions; Checking cooling output (vehicle-specific Workshop Manual) and ⇒ Heating, air conditioner; Rep. gr. 87 ; Refrigerant circuit (vehicle-specific Workshop Manual).*

Copyright by AUDI AG. Reproduction or copying of this publication for commercial purposes, in part or in whole, is not permitted without the prior consent of AUDI AG. AUDI AG does not guarantee or accept any liability with respect to the correctness of information in this document. Copyright by AUDI AG.

Possible deviations from specification, causes and how to rectify them	
◆ The evaporator in the heater and air conditioning unit (and in the evaporator for the battery cooling module) do not achieve the required cooling output. ◆ The high pressure remains constant or rises only slightly (above the pressure when the engine is stopped). ◆ Low pressure drops quickly to specified value or below.	⇒ page 229
◆ The evaporator in the heater and air conditioning unit (and in the battery cooling evaporator) initially do not reach the required cooling capacity. After some time or a longer period of operation, the cooling output is no longer adequate. ◆ High pressure and low pressure are normal at first. ◆ High pressure rises above specification after some time; low pressure continues to correspond to specification or drops below it.	⇒ page 232
◆ The evaporator in the heater and air conditioning unit (and the battery cooling evaporator) do not achieve the required cooling output. ◆ High pressure corresponds to specification. ◆ Low pressure is too low (below specification).	⇒ page 233
◆ Noise from air conditioner compressor (particularly after being switched on). ◆ The evaporator in the heater and air conditioning unit and/or in the battery cooling evaporator do not achieve the required cooling output. ◆ High pressure normal or too high ◆ Low pressure too high (the specified value is not achieved),	⇒ page 235
◆ The evaporator in the heater and air conditioning unit (and the battery cooling evaporator) do not achieve the required cooling output. ◆ High pressure and low pressure normal (conforms to the specified value)	⇒ page 237
◆ The evaporator in the heater and air conditioning unit (and the battery cooling evaporator) do not achieve the required cooling output. ◆ High pressure corresponds to specification. ◆ Low pressure corresponds to specification or is too low.	⇒ page 239

Protected by copyright. Copying for private or commercial purposes, in part or in whole, is not permitted unless authorised by AUDI AG. AUDI AG does not guarantee or accept any liability with respect to the correctness of information in this document. Copyright by AUDI AG.

Possible deviations from specification, causes and how to rectify them	
♦ The evaporator in the heater and air conditioning unit (and the battery cooling evaporator) do not achieve the required cooling output. ♦ High pressure corresponds to specification. ♦ Low pressure quickly drops to specified value or lower.	⇒ page 240
♦ The evaporator in the heater and air conditioning unit (and the battery cooling evaporator) do not achieve the required cooling output. ♦ Only the evaporator in the heater and air conditioning unit does not achieve the required cooling output (the cooling output of the evaporator in the battery cooling module is OK). ♦ High pressure rises only slightly (above the pressure with the engine stationary), or is at the specified value. ♦ Low pressure falls (possibly rapidly) to the specified value or lower.	⇒ page 241
♦ The evaporator in the heater and air conditioning unit (and the battery cooling evaporator) do not achieve the required cooling output. ♦ High pressure increases above specification. ♦ Low pressure quickly drops to specified value or lower.	⇒ page 242
♦ Only the battery cooling evaporator does not achieve the required cooling output (the cooling output of the evaporator in the heater and air conditioning unit is OK). ♦ The high pressure is at the specified value or rises only slightly (above the pressure when the engine is stopped). ♦ Low pressure falls to the specified value or lower.	⇒ page 245
♦ The evaporator in the heater and air conditioning unit (and the battery cooling evaporator) do not achieve the required cooling output. ♦ The high pressure does not rise or rises only slightly above the pressure when the engine is stationary. ♦ Low pressure does not drop or only drops slightly.	⇒ page 246

Protected by copyright. Copying for private or commercial purposes, in part or in whole, is not permitted unless authorised by AUDI AG. AUDI AG does not guarantee or accept any liability with respect to the correctness of information in this document. Copyright by AUDI AG.

Possible deviation from specification during the pressure test
♦ The evaporator in the heater and air conditioning unit (and in the evaporator for the battery cooling module) do not achieve the required cooling output. ♦ High pressure remains constant or rises only slightly (above the pressure when the air conditioner compressor is not running). ♦ Low pressure drops quickly to specified value or below.
Possible reasons for deviation from specification and how to rectify them
♦ There is not enough refrigerant in the refrigerant circuit. – Extract refrigerant from refrigerant circuit ⇒ “2.4 Discharging refrigerant circuit”, page 150 . – If quantity of refrigerant extracted is significantly less than specified capacity (more than 100 g less) ⇒ Heating, air conditioning; Rep. gr. 00 ; Technical data (vehicle-specific Workshop Manual), locate and eliminate leak ⇒ “1.4 Locating leaks”, page 68 . – If the extracted quantity of refrigerant corresponds approx. to the specified capacity, check the activation of the air conditioner compressor and the installed shut-off valves. If no faults are detected, renew the expansion valve for the evaporator in the heater and air conditioning unit ⇒ Heating, air conditioning; Rep. gr. 87 ; Refrigerant circuit (vehicle-specific Workshop Manual). ♦ Actuation of the air conditioner compressor (and, if installed, refrigerant shut-off valve 1 and refrigerant shut-off valve 2) faulty ⇒ Vehicle diagnostic tester in “Guided Fault Finding” mode of the air conditioner and battery regulation, ⇒ Heating, air conditioner; Rep. gr. 00 ; Repair instructions; Checking cooling output (vehicle-specific Workshop Manual), ⇒ Heating, air conditioner; Rep. gr. 87 ; Overview of fitting locations - Air conditioner (vehicle-specific Workshop Manual) and ⇒ Heating, air conditioner; Rep. gr. 87 ; Air conditioner compressor (vehicle-specific Workshop Manual). – Check actuation and function of air conditioner compressor (and, if installed the shut-off valves, e.g. refrigerant shut-off valve 1 , refrigerant shut-off valve 2) and repair if necessary ⇒ Vehicle diagnostic tester in “Guided Fault Finding” mode of the air conditioner and battery regulation. If they are OK, extract refrigerant from refrigerant circuit ⇒ “2.4 Discharging refrigerant circuit”, page 150 . ♦ The expansion valve for the evaporator in the heater and air conditioning unit is defective and must be renewed ⇒ Heating, air conditioning; Rep. gr. 87 ; Refrigerant circuit (vehicle-specific Workshop Manual). ♦ One of the refrigerant shut-off valves (if installed) is defective (closed), check its operation and renew it if necessary ⇒ Vehicle diagnostic tester (“Guided Fault Finding” function for air conditioner and battery regulation) and ⇒ Heating, air conditioning; Rep. gr. 87 ; Refrigerant circuit (vehicle-specific Workshop Manual). ♦ Constriction or blockage in refrigerant circuit (e.g. in refrigerant line between service connection on low-pressure side and the air conditioner compressor) ⇒ Heating, air conditioning; Rep. gr. 87 ; Refrigerant circuit (vehicle-specific Workshop Manual). – If there is a blockage, clean refrigerant circuit (flush with refrigerant R1234yf) ⇒ “1.6 Cleaning refrigerant circuit”, page 95 . – If a hose or pipe is kinked or constricted, renew this component ⇒ Heating, air conditioning; Rep. gr. 87 ; Refrigerant circuit (vehicle-specific Workshop Manual). ♦ The expansion valve for the evaporator in the heater and air conditioning unit is defective and must be renewed ⇒ Heating, air conditioning; Rep. gr. 87 ; Refrigerant circuit (vehicle-specific Workshop Manual). ♦ A refrigerant shut-off valve is defective (closed); renew ⇒ Vehicle diagnostic tester (“Guided Fault Finding” function of air conditioner and battery regulation) and ⇒ Heating, air conditioning; Rep. gr. 87 ; Refrigerant circuit (vehicle-specific Workshop Manual).
Final steps
– Re-charge refrigerant circuit ⇒ “2.6 Charging refrigerant circuit”, page 160 . – Repeat test ⇒ “2.14.5 Checking pressures with air conditioner switched on - vehicles with electrically driven air conditioner compressor”, page 219 .

Protected by copyright. Copying for private or commercial purposes, in part or in whole, is not permitted unless authorised by AUDI AG. AUDI AG does not guarantee or accept any liability with respect to the correctness of information in this document. Copyright by AUDI AG.

Note

- *If no fault is detected by diagnosis on the occurrence of this problem, inspect the refrigerant circuit for a constriction or blockage (a constriction or blockage in the refrigerant circuit may also lead to one of these problems). If no faults are detected here either, clean the refrigerant circuit (flush with refrigerant R1234yf)*
  ⇒ "1.6 Cleaning refrigerant circuit", page 95 .
- *Using the relevant control unit, check the measured values of the evaporator output temperature sender - G263- and, if installed, the temperature sensor upstream of the hybrid battery evaporator and the temperature sensor downstream of the hybrid battery evaporator and the actuation of the air conditioner compressor ⇒ Vehicle diagnostic tester in "Guided Fault Finding" mode of the air conditioner and the battery regulation.*
- *If there is a fault in the measured value of the -G263- , the temperature sensor upstream of the hybrid battery evaporator or the temperature sensor downstream of the hybrid battery evaporator (depending on the vehicle ⇒ Vehicle diagnostic tester in "Guided Fault Finding" mode of the air conditioner and battery regulation), this can also lead to problems with cooling output or the evaporator may ice up.*
- *In the event of a temperature sensor fault, the evaporator may ice up even through the quantity of refrigerant in the circuit is OK.*
- *If the test is repeated and operation of the air conditioner is not OK after renewing the expansion valve, clean the refrigerant circuit (flush with refrigerant R1234yf*
  ⇒ "1.6 Cleaning refrigerant circuit", page 95). *Next, renew the air conditioner compressor and desiccant cartridge (or reservoir/receiver) ⇒ Heating, air conditioning; Rep. gr. 87 ; Refrigerant circuit (vehicle-specific Workshop Manual).*
- *If the expansion valve on the evaporator in the heater and air conditioning unit or the shut-off valve is faulty (continuously closed or does not open far enough), the air conditioner compressor is actuated at maximum output and the low pressure falls to the specified value or lower (the air conditioner compressor extracts refrigerant out of the low-pressure side). However, since no refrigerant can flow through the expansion valve, the cooling output is not achieved and the high pressure may not rise, or only a little, as no energy turnover is available ⇒ Vehicle diagnostic tester in "Guided Fault Finding" mode of the air conditioner and battery regulation and ⇒ Heating, air conditioner; Rep. gr. 87 ; Refrigerant circuit (vehicle-specific Workshop Manual).*
- *The evaporator in the heater and air conditioning unit has a much higher output than the battery cooling evaporator. Depending on the type of cooling of the vehicle battery - A2- (depending on the vehicle ⇒ Vehicle diagnostic tester in "Guided Fault Finding" mode of the air conditioner and battery regulation), refrigerant shut-off valve 2 on the expansion valve in the battery cooling module is only actuated by the respective control unit (e.g. by the battery regulation control unit) above a certain battery temperature, so that the energy turnover via the battery cooling evaporator increases only slightly or not at all, ⇒ Vehicle diagnostic tester in "Guided Fault Finding" mode of the air conditioner and battery regulation and ⇒ Heating, air conditioner; Rep. gr. 87 ; Refrigerant circuit (vehicle-specific Workshop Manual).*

Protected by copyright. Copying for private or commercial purposes, in part or in whole, is not permitted unless authorised by AUDI AG. AUDI AG does not guarantee or accept any liability with respect to the correctness of information in this document. Copyright by AUDI AG.

Possible deviation from specification during the pressure test
♦ The evaporator in the heater and air conditioning unit (and in the battery cooling evaporator) initially do not reach the required cooling capacity. After some time or a longer period of operation, the cooling output is no longer adequate. ♦ High pressure and low pressure are normal at first. ♦ High pressure rises above specification after some time; low pressure continues to correspond to specification or drops below it.
Possible reasons for deviation from specification and how to rectify them
♦ Radiator or condenser dirty or coolant fan activation not OK – Check activation of coolant fans and repair if necessary ⇒ Vehicle diagnostic tester (“Guided Fault Finding” function for air conditioner). – Check condenser and radiator for dirt, and clean if necessary ⇒ Heating, air conditioning; Rep. gr. 87 ; Refrigerant circuit (vehicle-specific Workshop Manual), and ⇒ Engine, mechanics; Rep. gr. 19 ; Radiator/radiator fans . ♦ Faulty actuation or function of air conditioner compressor (or refrigerant shut-off valve 1 or refrigerant shut-off valve 2 , if installed). ♦ Moisture in refrigerant circuit – Check actuation of air conditioner compressor (and refrigerant shut-off valve 1 and refrigerant shut-off valve 2 , if installed) and measured value of the evaporator output temperature sender - G263- ⇒ Vehicle diagnostic tester in “Guided Fault Finding” mode. – If actuation of the air conditioner compressor (and of refrigerant shut-off valve 1 and refrigerant shut-off valve 2 , if installed) and the measured value of the -G263- are OK, extract refrigerant from the refrigerant circuit ⇒ “2.4 Discharging refrigerant circuit”, page 150 . ♦ Too much refrigerant in refrigerant circuit ♦ Expansion valve defective ♦ A shut-off valve may be installed in the refrigerant circuit which does not open properly or at all ⇒ Heating, air conditioning; Rep. gr. 87 ; Refrigerant circuit (vehicle-specific Workshop Manual). ♦ Moisture in refrigerant circuit – Extract refrigerant from refrigerant circuit ⇒ “2.4 Discharging refrigerant circuit”, page 150 . – If quantity of refrigerant extracted is considerably greater (by more than 100 g) than specified capacity ⇒ Heating, air conditioning; Rep. gr. 00 ; Technical data (vehicle-specific Workshop Manual), there was too much refrigerant in the circuit. Charge refrigerant circuit again and repeat test. – If the quantity of refrigerant extracted corresponds to the specified capacity or is only slightly higher than specified capacity (by less than 100 g) ⇒ Heating, air conditioning; Rep. gr. 00 ; Technical data (vehicle-specific Workshop Manual), there is too much refrigerant oil in the refrigerant circuit. Clean the refrigerant circuit (flush with refrigerant R1234yf) ⇒ “1.6 Cleaning refrigerant circuit”, page 95 , charge with the correct quantity of new refrigerant and refrigerant oil and repeat the test. – Check operation of shut-off valve (if fitted) ⇒ Heating, air conditioning; Rep. gr. 87 ; Refrigerant circuit (vehicle-specific Workshop Manual). – Renew expansion valve and desiccant bag/desiccant cartridge (or reservoir/receiver) ⇒ “1.5 Renewing components”, page 79 and ⇒ Heating, air conditioning; Rep. gr. 87 ; Refrigerant circuit (vehicle-specific Workshop Manual).
Final steps
– Re-charge refrigerant circuit ⇒ “2.6 Charging refrigerant circuit”, page 160 . – Repeat test ⇒ “2.14.5 Checking pressures with air conditioner switched on - vehicles with electrically driven air conditioner compressor”, page 219 .

This page is protected by copyright. Copying for private or commercial purposes, in part or in whole, is not permitted unless authorised by AUDI AG. AUDI AG does not guarantee or accept any liability with respect to the correctness of information in this document. Copyright by AUDI AG.

Protected by copyright. Copying for private or commercial purposes, in part or in whole, is not permitted unless authorised by AUDI AG. AUDI AG does not guarantee or accept any liability with respect to the correctness of information in this document. Copyright by AUDI AG.

Note

- *If there is too much refrigerant oil in the circuit, the air conditioner compressor must be discharged, and the reservoir/receiver (or desiccant cartridge) must be renewed ⇒ Heating, air conditioning; Rep. gr. 87 ; Refrigerant circuit (vehicle-specific Workshop Manual). After cleaning the refrigerant circuit (flushing with refrigerant R1234yf)* *⇒ "1.6 Cleaning refrigerant circuit", page 95* *, charge the circuit with the correct quantity of refrigerant oil ⇒ Heating, air conditioner; Rep. gr. 00 ; Technical data (vehicle-specific Workshop Manual).*
- *Check the measured values of the evaporator output temperature sender - G263- and the actuation of the air conditioner compressor. If the measured value of the -G263- or actuation of the air conditioner compressor is incorrect, the evaporator may ice up or the cooling output is not achieved ⇒ Vehicle diagnostic tester in "Guided Fault Finding" mode of the air conditioner and battery regulation and ⇒ Heating, air conditioner; Rep. gr. 87 ; Overview of fitting locations - Air conditioner ⇒ Heating, air conditioner; Rep. gr. 87 ; Air conditioner compressor (vehicle-specific Workshop Manual).*
- *In this case, the evaporator may ice up although the amount of refrigerant in the refrigerant circuit is OK.*
- *The refrigerant circuit may also ice up due to a fault in the -G263- and/or the temperature sensor downstream of the hybrid battery evaporator . In the event of this problem, also pay attention to the measured value of the -G263- and the temperature sensor downstream of the hybrid battery evaporator (in vehicles with a battery cooling module) ⇒ Vehicle diagnostic tester in "Guided Fault Finding" mode of the air conditioner and battery regulation and ⇒ Heating, air conditioner; Rep. gr. 87 ; Overview of fitting locations - Air conditioner (vehicle-specific Workshop Manual).*

Possible deviation from specification during the pressure test
♦ The evaporator in the heater and air conditioning unit (and the battery cooling evaporator) do not achieve the required cooling output. ♦ High pressure corresponds to specification. ♦ Low pressure is too low (below specification).
Possible reasons for deviation from specification and how to rectify them

Possible deviation from specification during the pressure test
♦ There is not enough refrigerant in the refrigerant circuit. – Extract refrigerant from refrigerant circuit ⇒ “2.4 Discharging refrigerant circuit”, page 150 . – If quantity of refrigerant extracted is significantly less than specified capacity (more than 100 g less) ⇒ Heating, air conditioning; Rep. gr. 00 ; Technical data (vehicle-specific Workshop Manual), locate and eliminate leak ⇒ “1.4 Locating leaks”, page 68 . – If the extracted quantity of refrigerant corresponds approx. to the specified capacity, check the activation of the air conditioner compressor and the installed shut-off valves. If no faults are detected, renew the expansion valve for the evaporator in the heater and air conditioning unit ⇒ Heating, air conditioning; Rep. gr. 87 ; Refrigerant circuit (vehicle-specific Workshop Manual). ♦ Faulty actuation or function of air conditioner compressor or refrigerant shut-off valve 1 / refrigerant shut-off valve 2 , if installed). – Check actuation and function of the air conditioner compressor and refrigerant shut-off valve 1 / refrigerant shut-off valve 2 , if installed ⇒ Vehicle diagnostic tester in “Guided Fault Finding” mode of the air conditioner and battery regulation, no fault can be detected. – Clean refrigerant circuit (flush with refrigerant R1234yf) ⇒ “1.6 Cleaning refrigerant circuit”, page 95 . ♦ Faulty expansion valve in heater and air conditioning unit or battery cooling evaporator, if installed. – Renew expansion valve for evaporator in heater and air conditioning unit (and for battery cooling evaporator) and desiccant bag/desiccant cartridge (or reservoir/receiver). ♦ Air conditioner compressor defective – Renew air conditioner compressor ⇒ “1.5 Renewing components”, page 79 and ⇒ Heating, air conditioning; Rep. gr. 87 ; Air conditioner compressor (vehicle-specific Workshop Manual). – If there is dirt in the refrigerant circuit, clean the circuit (flush with refrigerant R1234yf) and renew the expansion valve and desiccant bag/desiccant cartridge (or reservoir/receiver) ⇒ “1.5 Renewing components”, page 79 and ⇒ “1.6 Cleaning refrigerant circuit”, page 95 .
Final steps
– Re-charge refrigerant circuit ⇒ “2.6 Charging refrigerant circuit”, page 160 . – Repeat test ⇒ “2.14.5 Checking pressures with air conditioner switched on - vehicles with electrically driven air conditioner compressor”, page 219 .

Protected by copyright. Copying for private or commercial purposes, in part or in whole, is not permitted unless authorised by AUDI AG. AUDI AG does not guarantee or accept any liability with respect to the correctness of information in this document. Copyright by AUDI AG.

Note

- *Observe the following regarding fault "High pressure normal, low pressure too low": This fault may cause the evaporator to ice up although the amount of refrigerant in the circuit is OK.*
- *If the error is due to the air conditioner compressor, it is not actuated but works nevertheless, it is not necessary to clean the refrigerant circuit (flush with refrigerant R1234yf) ⇒ "1.6 Cleaning refrigerant circuit", page 95 . If this error occurs, it suffices to renew the air conditioner compressor (note quantity of refrigerant oil in air conditioner compressor) ⇒ "1.5 Renewing components", page 79 and ⇒ Heating, air conditioning; Rep. gr. 87 ; Air conditioner compressor (vehicle-specific Workshop Manual).*
- *If the fault is caused by the air conditioner compressor (the air conditioner compressor is activated at excessively high speed by the control unit for air conditioning compressor), it is not necessary to clean the refrigerant circuit (to flush it with refrigerant R1234yf ⇒ "1.6 Cleaning refrigerant circuit", page 95). If this error occurs, it suffices to renew the air conditioner compressor (note quantity of refrigerant oil in air conditioner compressor) ⇒ Heating, air conditioning; Rep. gr. 00 ; Technical data (vehicle-specific Workshop Manual), and ⇒ Heating, air conditioning; Rep. gr. 87 ; Air conditioner compressor (vehicle-specific Workshop Manual).*
- *If the expansion valve (or one of the two expansion valves) is faulty (continuously closed or does not open far enough), the air conditioner compressor is also actuated at maximum output and the pressure on the low-pressure side falls to the specified value or lower (the air conditioner compressor extracts refrigerant out of the low-pressure side). As refrigerant cannot however flow via the defective expansion valve, the cooling output is not attained in the downstream evaporator and the high pressure may either not increase or only increase slightly due to the absence of energy conversion. However, the air conditioner compressor may be activated at a higher speed, as the required cooling output is not attained in one evaporator. The same also applies if the function of actuation of refrigerant shut-off valve 1 or refrigerant shut-off valve 2 is faulty ⇒ Vehicle diagnostic tester in "Guided Fault Finding" mode of the air conditioner and battery regulation and ⇒ Heating, air conditioner; Rep. gr. 87 ; Refrigerant circuit (vehicle-specific Workshop Manual).*
- *Check the measured values of the evaporator output temperature sender - G263- (and, if fitted, the measured values of the temperature sensor before evaporator for hybrid battery - G756- and the temperature sensor after evaporator for hybrid battery - G757-) and the actuation of the air conditioner compressor by the air conditioner compressor control unit . If the measured value of -G263- (temperature sensor before evaporator for hybrid battery - G756- , temperature sensor after evaporator for hybrid battery - G757-) is incorrect or the activation of the air conditioner compressor is faulty, the evaporator may ice up or not reach the required cooling output ⇒ Vehicle diagnostic tester ("Guided Fault Finding" for air conditioner and battery regulation) and ⇒ Heating, air conditioning; Rep. gr. 87 ; Overview of fitting locations - Air conditioner (vehicle-specific Workshop Manual).*

Protected by copyright. Copying for private or commercial purposes, in part or in whole, is not permitted unless authorised by AUDI AG. AUDI AG does not guarantee or accept any liability with respect to the correctness of information in this document. Copyright by AUDI AG.

Possible deviation from specification during the pressure test
♦ Noise from air conditioner compressor (particularly after being switched on). ♦ The evaporator in the heater and air conditioning unit and/or in the battery cooling evaporator do not achieve the required cooling output. ♦ High pressure normal or too high ♦ Low pressure too high (the specified value is not achieved),
Possible reasons for deviation from specification and how to rectify them
♦ Faulty actuation or function of air conditioner compressor or refrigerant shut-off valve 1 / refrigerant shut-off valve 2 , if installed). ♦ Too much refrigerant or refrigerant oil in refrigerant circuit – Check activation and operation of air conditioner compressor and refrigerant shut-off valve 1 / refrigerant shut-off valve 2 (if installed) ⇒ Vehicle diagnostic tester (“Guided Fault Finding” mode of air conditioner and battery regulation) and renew if necessary. If no faults can be detected, extract refrigerant from refrigerant circuit ⇒ “2.4 Discharging refrigerant circuit”, page 150 . – Extract refrigerant from refrigerant circuit ⇒ “2.4 Discharging refrigerant circuit”, page 150 . – If quantity of refrigerant extracted is considerably greater (by more than 100 g) than specified capacity ⇒ Heating, air conditioning; Rep. gr. 00 ; Technical data (vehicle-specific Workshop Manual), there was too much refrigerant in the circuit. Charge refrigerant circuit again and repeat test. – If the quantity of refrigerant extracted corresponds to the specified capacity or is only slightly higher than specified capacity (by less than 100 g) ⇒ Heating, air conditioning; Rep. gr. 00 ; Technical data (vehicle-specific Workshop Manual), there is too much refrigerant oil in the refrigerant circuit. Clean the refrigerant circuit (flush with refrigerant R1234yf) ⇒ “1.6 Cleaning refrigerant circuit”, page 95 , charge with the correct quantity of new refrigerant and refrigerant oil and repeat the test. ♦ Expansion valve defective – Renew expansion valve for evaporator in air conditioning unit (and for battery cooling evaporator) and desiccant bag/desiccant cartridge (or reservoir/receiver) ⇒ “1.5 Renewing components”, page 79 and ⇒ Heating, air conditioning; Rep. gr. 87 ; Refrigerant circuit (vehicle-specific Workshop Manual). ♦ Air conditioner compressor defective – Renew air conditioner compressor ⇒ “1.5 Renewing components”, page 79 and ⇒ Heating, air conditioning; Rep. gr. 87 ; Air conditioner compressor (vehicle-specific Workshop Manual). – If there is dirt in the refrigerant circuit, clean the circuit (flush with refrigerant R1234yf) and renew the expansion valve and desiccant bag/desiccant cartridge (or reservoir/receiver) ⇒ “1.5 Renewing components”, page 79 and ⇒ “1.6 Cleaning refrigerant circuit”, page 95 .
Final steps
– Re-charge refrigerant circuit ⇒ “2.6 Charging refrigerant circuit”, page 160 . – Repeat test ⇒ “2.14.5 Checking pressures with air conditioner switched on - vehicles with electrically driven air conditioner compressor”, page 219 .

Printed copy and copy of extracts from the online version of the Workshop Manual are not permitted unless authorised by AUDI AG. AUDI AG does not guarantee or accept any liability with respect to the correctness of information in this document. Copyright by AUDI AG.

Note

- *This fault may also be caused by too much refrigerant oil in the refrigerant circuit. Overfilling with refrigerant oil can occur e.g. if the air conditioner compressor was renewed without adjusting the quantity of refrigerant oil accordingly ⇒ "1.5 Renewing components", page 79 and ⇒ Heating, air conditioning; Rep. gr. 00 ; Technical data (vehicle-specific Workshop Manual). If there is too much refrigerant oil in the refrigerant circuit, clean the circuit (flush with refrigerant R1234yf) ⇒ "1.6 Cleaning refrigerant circuit", page 95 .*
- *If the expansion valve at the evaporator in the heater and air conditioning unit (or for the battery cooling evaporator) is defective (permanently closed or does not open sufficiently), the air conditioner compressor is activated at maximum output and the low pressure falls to the specified value or lower (air conditioner compressor draws off refrigerant from low-pressure side). However, as refrigerant cannot flow via the expansion valve, cooling output is not attained and high pressure may either not increase or only increase slightly since there is no energy exchange. The same also applies if the function of actuation of refrigerant shut-off valve 1 or refrigerant shut-off valve 2 is faulty ⇒ Vehicle diagnostic tester in "Guided Fault Finding" mode of the air conditioner and battery regulation and ⇒ Heating, air conditioner; Rep. gr. 87 ; Refrigerant circuit (vehicle-specific Workshop Manual).*

Protected by copyright. Copying or distribution of this document, or any part thereof, in part or in whole, is not permitted unless authorised by AUDI AG. AUDI AG does not guarantee or accept any liability with respect to the correctness and completeness of this document. Copyright by AUDI AG.

Possible deviation from specification during the pressure test
♦ The evaporator in the heater and air conditioning unit (and the battery cooling evaporator) do not achieve the required cooling output. ♦ High pressure and low pressure normal (conforms to the specified value)
Possible reasons for deviation from specification and how to rectify them

Possible deviation from specification during the pressure test
♦ Faulty actuation or function of air conditioner compressor and refrigerant shut-off valve 1 or refrigerant shut-off valve 2 , if installed). ♦ Not enough refrigerant in refrigerant circuit – Check activation and operation of air conditioner compressor and/or refrigerant shut-off valve 1 / refrigerant shut-off valve 2 (if fitted) ⇒ Vehicle diagnostic tester (“Guided Fault Finding” mode of air conditioner and battery regulation) and renew if necessary ⇒ Heating, air conditioning; Rep. gr. 87 ; Refrigerant circuit (vehicle-specific Workshop Manual). If no faults can be detected, extract refrigerant from refrigerant circuit. – Extract refrigerant from refrigerant circuit ⇒ “2.4 Discharging refrigerant circuit”, page 150 . – If quantity of refrigerant extracted is significantly less than specified capacity (more than 100 g less) ⇒ Heating, air conditioning; Rep. gr. 00 ; Technical data (vehicle-specific Workshop Manual), locate and eliminate leak ⇒ “1.4 Locating leaks”, page 68 . – If the extracted quantity of refrigerant corresponds to the specified capacity or is only slightly less (max. 100 g) (⇒ Heating, air conditioning; Rep. gr. 00 ; Technical data , vehicle-specific Workshop Manual), the expansion valve for the evaporator or a shut-off valve installed in the heater and air conditioning unit is defective. ♦ The expansion valve for the evaporator in the heater and air conditioning unit is defective ⇒ Heating, air conditioning; Rep. gr. 87 ; Refrigerant circuit (vehicle-specific Workshop Manual). ♦ One of the refrigerant shut-off valves (if installed) is defective (closed), check its operation and renew it if necessary ⇒ Vehicle diagnostic tester (“Guided Fault Finding” function for air conditioner and battery regulation) and ⇒ Heating, air conditioning; Rep. gr. 87 ; Refrigerant circuit (vehicle-specific Workshop Manual). – Check operation of shut-off valve (if fitted) ⇒ Heating, air conditioning; Rep. gr. 87 ; Refrigerant circuit (vehicle-specific Workshop Manual). – Renew expansion valve for evaporator in heater and air conditioning unit ⇒ Heating, air conditioning; Rep. gr. 87 ; Refrigerant circuit (vehicle-specific Workshop Manual). ♦ Too much refrigerant oil in refrigerant circuit – Clean refrigerant circuit (flush with refrigerant R1234yf) ⇒ “1.6 Cleaning refrigerant circuit”, page 95 . – Renew expansion valve for evaporator in air conditioning unit (and for battery cooling evaporator) and desiccant bag/desiccant cartridge (or reservoir/receiver) ⇒ “1.5 Renewing components”, page 79 and ⇒ Heating, air conditioning; Rep. gr. 87 ; Refrigerant circuit (vehicle-specific Workshop Manual).
Final steps
– Re-charge refrigerant circuit ⇒ “2.6 Charging refrigerant circuit”, page 160 . – Repeat test ⇒ “2.14.5 Checking pressures with air conditioner switched on - vehicles with electrically driven air conditioner compressor”, page 219 .

Protected by copyright. Copying for private or commercial purposes, in part or in whole, is not permitted unless authorised by AUDI AG. AUDI AG does not guarantee or accept any liability with respect to the correctness of information in this document. Copyright by AUDI AG.

Note

- *This fault may also be caused by too much refrigerant oil in the refrigerant circuit. Overfilling with refrigerant oil can occur e.g. if the air conditioner compressor was renewed without adjusting the quantity of refrigerant oil accordingly ⇒ "1.5 Renewing components", page 79 and ⇒ Heating, air conditioning; Rep. gr. 00 ; Technical data (vehicle-specific Workshop Manual). If there is too much refrigerant oil in the refrigerant circuit, clean the circuit (flush with refrigerant R1234yf) ⇒ "1.6 Cleaning refrigerant circuit", page 95 .*
- *If the expansion valve at the evaporator in the heater and air conditioning unit (or for the battery cooling evaporator) is defective (permanently closed or does not open sufficiently), the air conditioner compressor is activated at maximum output and the low pressure falls to the specified value or lower (air conditioner compressor draws off refrigerant from low-pressure side). However, as refrigerant cannot flow via the expansion valve, cooling output is not attained and high pressure may either not increase or only increase slightly since there is no energy exchange. The same also applies if the function of actuation of refrigerant shut-off valve 1 or refrigerant shut-off valve 2 is faulty ⇒ Vehicle diagnostic tester in "Guided Fault Finding" mode of the air conditioner and battery regulation and ⇒ Heating, air conditioner; Rep. gr. 87 ; Refrigerant circuit (vehicle-specific Workshop Manual).*

Protected by copyright. Copying for private or commercial purposes, in part or in whole, is not permitted unless authorised by AUDI AG. AUDI AG does not guarantee or accept any liability with respect to the correctness of information in this document. Copyright by AUDI AG.

Possible deviation from specification during the pressure test
♦ The evaporator in the heater and air conditioning unit (and the battery cooling evaporator) do not achieve the required cooling output. ♦ High pressure corresponds to specification. ♦ Low pressure corresponds to specification or is too low.
Possible reasons for deviation from specification and how to rectify them

Possible deviation from specification during the pressure test
♦ Check actuation and function of the air conditioner compressor (and/or refrigerant shut-off valve 1 , refrigerant shut-off valve 2 , if installed) ⇒ Vehicle diagnostic tester in “Guided Fault Finding” mode of the air conditioner and battery regulation. – Check actuation and function of air conditioner compressor (and refrigerant shut-off valve 1 and refrigerant shut-off valve 2 , if installed) and repair if necessary ⇒ Vehicle diagnostic tester in “Guided Fault Finding” mode of the air conditioner and battery regulation. If they are OK, extract refrigerant from the refrigerant circuit. ♦ There is not enough refrigerant in the refrigerant circuit. – Extract refrigerant from refrigerant circuit ⇒ “2.4 Discharging refrigerant circuit”, page 150 . – If quantity of refrigerant extracted is significantly less than specified capacity (more than 100 g less) ⇒ Heating, air conditioning; Rep. gr. 00 ; Technical data (vehicle-specific Workshop Manual), locate and eliminate leak ⇒ “1.4 Locating leaks”, page 68 . – If the extracted quantity of refrigerant conforms to the specified capacity or is only slightly less (less than 100 g) ⇒ Heating, air conditioner; Rep. gr. 00 ; Technical data (vehicle-specific Workshop Manual) ⇒ Heating, air conditioner; Rep. gr. 00 ; Technical data . Check operation of refrigerant shut-off valves ⇒ Heating, air conditioning; Rep. gr. 87 ; Refrigerant circuit (vehicle-specific Workshop Manual). ♦ The expansion valve for the evaporator in the heater and air conditioning unit is defective ⇒ Heating, air conditioning; Rep. gr. 87 ; Refrigerant circuit (vehicle-specific Workshop Manual). ♦ A refrigerant shut-off valve is defective (closed) ⇒ Vehicle diagnostic tester (“Guided Fault Finding” function of air conditioner and battery regulation) and ⇒ Heating, air conditioning; Rep. gr. 87 ; Refrigerant circuit (vehicle-specific Workshop Manual). – Check operation of shut-off valve (if fitted) ⇒ Heating, air conditioning; Rep. gr. 87 ; Refrigerant circuit (vehicle-specific Workshop Manual). – Renew expansion valve for evaporator in heater and air conditioning unit ⇒ Heating, air conditioning; Rep. gr. 87 ; Refrigerant circuit (vehicle-specific Workshop Manual). ♦ Too much refrigerant oil in refrigerant circuit – Clean refrigerant circuit (flush with refrigerant R1234yf) ⇒ “1.6 Cleaning refrigerant circuit”, page 95 . – Renew expansion valve for evaporator in air conditioning unit (and for battery cooling evaporator) and desiccant bag/desiccant cartridge (or reservoir/receiver) ⇒ “1.5 Renewing components”, page 79 and ⇒ Heating, air conditioning; Rep. gr. 87 ; Refrigerant circuit (vehicle-specific Workshop Manual).
Final steps
– Re-charge refrigerant circuit ⇒ “2.6 Charging refrigerant circuit”, page 160 . – Repeat test ⇒ “2.14.5 Checking pressures with air conditioner switched on - vehicles with electrically driven air conditioner compressor”, page 219 .

Note

Observe notes ⇒ page 231 and ⇒ page 239 .

Possible deviation from specification during the pressure test
♦ The evaporator in the heater and air conditioning unit (and the battery cooling evaporator) do not achieve the required cooling output. ♦ High pressure corresponds to specification. ♦ Low pressure quickly drops to specified value or lower.
Possible reasons for deviation from specification and how to rectify them

Protected by copyright. Copying for private or commercial purposes, in part or in whole, is not permitted unless authorised by AUDI AG. AUDI AG does not guarantee or accept any liability with respect to correctness of information in this document. Copyright by AUDI AG.

Possible deviation from specification during the pressure test
♦ Activation or operation of air conditioner compressor not OK ♦ Constriction or blockage in refrigerant circuit – Check actuation and function of air conditioner compressor and repair ⇒ Vehicle diagnostic tester in “Guided Fault Finding” mode of the air conditioner and battery regulation. If no faults can be detected, feel the refrigerant circuit for a drop in temperature with your hand ⇒ Heating, air conditioner; Rep. gr. 87 ; Refrigerant circuit (vehicle-specific Workshop Manual). – If a drop in temperature is detected on a component. If a hose or pipe is kinked or constricted, renew this component ⇒ Heating, air conditioning; Rep. gr. 87 ; Refrigerant circuit (vehicle-specific Workshop Manual). If there is a blockage, clean refrigerant circuit (flush with refrigerant R1234yf) ⇒ “1.6 Cleaning refrigerant circuit”, page 95 . ♦ There is not enough refrigerant in the refrigerant circuit. – Extract refrigerant from refrigerant circuit ⇒ “2.4 Discharging refrigerant circuit”, page 150 . – If quantity of refrigerant extracted is significantly less than specified capacity (more than 100 g less) ⇒ Heating, air conditioning; Rep. gr. 00 ; Technical data (vehicle-specific Workshop Manual), locate and eliminate leak ⇒ “1.4 Locating leaks”, page 68 . – If the extracted quantity of refrigerant conforms to the specified capacity or is only slightly less (max. 100 g) ⇒ Heating, air conditioner; Rep. gr. 00 ; Technical data (vehicle-specific Workshop Manual), check the function of the expansion valve and shut-off valves ⇒ Heating, air conditioner; Rep. gr. 87 ; Refrigerant circuit (vehicle-specific Workshop Manual). ♦ The expansion valve for the evaporator in the heater and air conditioning unit is defective ⇒ Heating, air conditioning; Rep. gr. 87 ; Refrigerant circuit (vehicle-specific Workshop Manual). ♦ A refrigerant shut-off valve is defective (closed) ⇒ Vehicle diagnostic tester (“Guided Fault Finding” function of air conditioner and battery regulation) and ⇒ Heating, air conditioning; Rep. gr. 87 ; Refrigerant circuit (vehicle-specific Workshop Manual). – Check operation of shut-off valve (if fitted) ⇒ Heating, air conditioning; Rep. gr. 87 ; Refrigerant circuit (vehicle-specific Workshop Manual). – Renew expansion valve for evaporator in heater and air conditioning unit ⇒ Heating, air conditioning; Rep. gr. 87 ; Refrigerant circuit (vehicle-specific Workshop Manual).
Final steps
– Re-charge refrigerant circuit ⇒ “2.6 Charging refrigerant circuit”, page 160 . – Repeat test ⇒ “2.14.5 Checking pressures with air conditioner switched on - vehicles with electrically driven air conditioner compressor”, page 219 .

Protected by copyright. Copying for private or commercial purposes, in part or in whole, is not permitted unless authorised by AUDI AG. AUDI AG does not guarantee or accept any liability with respect to the correctness of information. Copyright AUDI AG.

Note

Observe notes ⇒ page 231 and ⇒ page 239 .

Possible deviation from specification during the pressure test
♦ The evaporator in the heater and air conditioning unit (and the battery cooling evaporator) do not achieve the required cooling output. ♦ Only the evaporator in the heater and air conditioning unit does not achieve the required cooling output (the cooling output of the evaporator in the battery cooling module is OK). ♦ High pressure rises only slightly (above the pressure when the air conditioner is not running), or is at the specified value. ♦ Low pressure falls (possibly rapidly) to the specified value or lower.
Possible reasons for deviation from specification and how to rectify them

Possible deviation from specification during the pressure test
♦ There is not enough refrigerant in the refrigerant circuit. – Extract refrigerant from refrigerant circuit ⇒ “2.4 Discharging refrigerant circuit”, page 150 . – If the quantity of extracted refrigerant is considerably less (more than 100 g) than the defined capacity ⇒ Heating, air conditioner; Rep. gr. 00 ; Technical data (vehicle-specific Workshop Manual), search for and eliminate the leak ⇒ “1.4 Locating leaks”, page 68 – If the extracted quantity of refrigerant conforms to the specified capacity or is only slightly less (max. 100 g) ⇒ Heating, air conditioner; Rep. gr. 00 ; Technical data (vehicle-specific Workshop Manual), check the function of the expansion valve and shut-off valves ⇒ Heating, air conditioner; Rep. gr. 87 ; Refrigerant circuit (vehicle-specific Workshop Manual). ♦ Expansion valve for the evaporator in the heater and air conditioning unit faulty ⇒ Heating, air conditioner; Rep. gr. 87 ; Refrigerant circuit (vehicle-specific Workshop Manual). ♦ One of the refrigerant shut-off valves is defective (closed), check its operation and renew it if necessary ⇒ Vehicle diagnostic tester (“Guided Fault Finding” function for air conditioner and battery regulation) and ⇒ Heating, air conditioning; Rep. gr. 87 ; Refrigerant circuit (vehicle-specific Workshop Manual). – Check operation of shut-off valve (if fitted) ⇒ Heating, air conditioning; Rep. gr. 87 ; Refrigerant circuit (vehicle-specific Workshop Manual). – Renew expansion valve for evaporator in heater and air conditioning unit ⇒ Heating, air conditioning; Rep. gr. 87 ; Refrigerant circuit (vehicle-specific Workshop Manual). ♦ Constriction or blockage in refrigerant circuit (e.g. in refrigerant line between service connection on low-pressure side and the air conditioner compressor) ⇒ Heating, air conditioning; Rep. gr. 87 ; Refrigerant circuit (vehicle-specific Workshop Manual). ♦ Actuation of than the defined capacity compressor faulty ⇒ Vehicle diagnostic tester in “Guided Fault Finding” mode of the than the defined capacity and battery regulation. – Check actuation and function of air conditioner compressor and repair ⇒ Vehicle diagnostic tester in “Guided Fault Finding” mode of the air conditioner and battery regulation. If no faults can be detected, feel the refrigerant circuit for a drop in temperature with your hand ⇒ Heating, air conditioner; Rep. gr. 87 ; Refrigerant circuit (vehicle-specific Workshop Manual). – If a drop in temperature is detected on a component. If a hose or pipe is kinked or constricted, renew this component; renew expansion valve if defective ⇒ Heating, air conditioning; Rep. gr. 87 ; Refrigerant circuit (vehicle-specific Workshop Manual). If there is a blockage, clean refrigerant circuit (flush with refrigerant R1234yf) ⇒ “1.6 Cleaning refrigerant circuit”, page 95 . – If there is a blockage, clean refrigerant circuit (flush with refrigerant R1234yf) ⇒ “1.6 Cleaning refrigerant circuit”, page 95 . Renew expansion valve for evaporator in air conditioning unit (and for battery cooling evaporator) and desiccant bag/desiccant cartridge (or reservoir/receiver) ⇒ “1.5 Renewing components”, page 79 and ⇒ Heating, air conditioning; Rep. gr. 87 ; Refrigerant circuit (vehicle-specific Workshop Manual).
Final steps
– Re-charge refrigerant circuit ⇒ “2.6 Charging refrigerant circuit”, page 160 . – Repeat test ⇒ “2.14.5 Checking pressures with air conditioner switched on - vehicles with electrically driven air conditioner compressor”, page 219 .

Note

Observe notes ⇒ page 231 .

Protected by copyright. Copying for private or commercial purposes, in part or in whole, is not permitted unless authorised by AUDI AG. AUDI AG does not guarantee or accept any liability with respect to the correctness of information in this document. Copyright by AUDI AG.

Possible deviation from specification during the pressure test
♦ The evaporator in the heater and air conditioning unit (and the battery cooling evaporator) do not achieve the required cooling output. ♦ High pressure increases above specification. ♦ Low pressure quickly drops to specified value or lower.

Possible deviation from specification during the pressure test
Possible reasons for deviation from specification and how to rectify them
♦ Activation or operation of air conditioner compressor not OK ♦ Constriction or blockage in refrigerant circuit ♦ Expansion valve defective – Check actuation and function of air conditioner compressor and repair ⇒ Vehicle diagnostic tester in “Guided Fault Finding” mode of the air conditioner and battery regulation. If no faults can be detected, feel the refrigerant circuit for a drop in temperature with your hand ⇒ Heating, air conditioner; Rep. gr. 87 ; Refrigerant circuit (vehicle-specific Workshop Manual). – If a drop in temperature is detected on a component. If a hose or pipe is kinked or constricted, renew this component; renew expansion valve if defective ⇒ Heating, air conditioning; Rep. gr. 87 ; Refrigerant circuit (vehicle-specific Workshop Manual). – If there is a blockage, clean refrigerant circuit (flush with refrigerant R1234yf) ⇒ “1.6 Cleaning refrigerant circuit”, page 95 . Renew expansion valve for evaporator in air conditioning unit (and for battery cooling evaporator) and desiccant bag/desiccant cartridge (or reservoir/receiver) ⇒ “1.5 Renewing components”, page 79 and ⇒ Heating, air conditioning; Rep. gr. 87 ; Refrigerant circuit (vehicle-specific Workshop Manual). ♦ There is not enough refrigerant in the refrigerant circuit. – Extract refrigerant from refrigerant circuit ⇒ “2.4 Discharging refrigerant circuit”, page 150 . – If quantity of refrigerant extracted is significantly less than specified capacity (more than 100 g less) ⇒ Heating, air conditioning; Rep. gr. 00 ; Technical data (vehicle-specific Workshop Manual), locate and eliminate leak ⇒ “1.4 Locating leaks”, page 68 . – If the extracted quantity of refrigerant conforms to the specified capacity or is only slightly less (max. 100 g) ⇒ Heating, air conditioner; Rep. gr. 00 ; Technical data (vehicle-specific Workshop Manual), check the function of the refrigerant shut-off valve ⇒ Heating, air conditioner; Rep. gr. 87 ; Refrigerant circuit (vehicle-specific Workshop Manual).
Final steps
– Re-charge refrigerant circuit ⇒ “2.6 Charging refrigerant circuit”, page 160 . – Repeat test ⇒ “2.14.5 Checking pressures with air conditioner switched on - vehicles with electrically driven air conditioner compressor”, page 219 .

Protected by copyright. Copying for private or commercial purposes, in part or in whole, is not permitted unless authorised by AUDI AG. AUDI AG does not guarantee or assume any liability with respect to the correctness of information in this document. Copyright by AUDI AG.

Note

- *If the operation of the air conditioner is not OK when the test is repeated, renew the expansion valve and desiccant bag/ desiccant cartridge (or reservoir/receiver) and the refrigerant shut-off valve (if fitted) ⇒ Heating, air conditioning; Rep. gr. 87 ; Refrigerant circuit (vehicle-specific Workshop Manual).*
- *In this case, the evaporator may ice up although the amount of refrigerant in the refrigerant circuit is OK.*
- *If the expansion valve on the evaporator in the heater and air conditioning unit or refrigerant shut-off valve 1 is faulty (continuously closed or does not open far enough), the air conditioner compressor is actuated at maximum output and the low pressure falls to the specified value or lower (the air conditioner compressor extracts refrigerant out of the low-pressure side). However, since no refrigerant can flow through the expansion valve (the refrigerant shut-off valve), the cooling output is not achieved and in addition the high pressure may not rise, or only a little, as no energy turnover is available ⇒ Vehicle diagnostic tester in "Guided Fault Finding" mode of the air conditioner and battery regulation and ⇒ Heating, air conditioner; Rep. gr. 87 ; Refrigerant circuit (vehicle-specific Workshop Manual).*
- *If the expansion valve on the battery cooling evaporator is faulty (or the function of actuation of refrigerant shut-off valve 2 is faulty), continuously closed or does not open far enough, here too the than the defined capacity compressor is actuated at maximum output (the required temperatures in the battery cooling module are not achieved). If, at the same time, no cooling output is required in the heater and air conditioning unit (refrigerant shut-off valve 1 is actuated and is closed), the pressure on the low-pressure side then drops to the specified value or lower. The air conditioner compressor draws off the refrigerant from the low-pressure side of both evaporators. However, since no refrigerant can flow through the expansion valve in the heater and air conditioning unit (refrigerant shut-off valve 1) and the cooling output for battery cooling is no longer achieved (there is a fault in the area of the battery cooling), the electric air conditioner compressor is actuated at a higher speed. However, since no refrigerant can be supplied, the pressure on the low-pressure side falls below the specified value. In addition, the high pressure may not rise, or only a little, as no energy turnover is available ⇒ Vehicle diagnostic tester in "Guided Fault Finding" mode of the air conditioner and battery regulation and ⇒ Heating, air conditioner; Rep. gr. 87 ; Refrigerant circuit (vehicle-specific Workshop Manual).*
- *Since the output of the battery cooling evaporator is considerably lower than that of the evaporator in the heater and air conditioning unit, when there is too little refrigerant in the circuit the required specified temperature may be reached in the battery cooling module, but it will not be reached at the evaporator in the heater and air conditioning unit (even though the air conditioner compressor is actuated at a higher speed).*
- *If there is too much refrigerant oil in circuit, air conditioner compressor must be discharged and desiccant bag (desiccant cartridge) or reservoir/receiver must be renewed. After cleaning the refrigerant circuit (flushing it with refrigerant R1234yf) ⇒ "1.6 Cleaning refrigerant circuit", page 95 , charge the circuit with the correct quantity of refrigerant oil ⇒ Heating, air conditioning; Rep. gr. 00 ; Technical data; Approved refrigerant oils and capacities for refrigerant oil (vehicle-specific Workshop Manual), and ⇒ Heating, air conditioning; Rep. gr. 87 ; Refrigerant circuit (vehicle-specific Workshop Manual).*

Protected by copyright. Copying for private or commercial purposes, in part or in whole, is not permitted unless authorised by AUDI AG. AUDI AG does not guarantee or accept any liability with respect to the correctness of information in this document. Copyright by AUDI AG.

♦ *Observe the further notes ⇒ page 231 .*

Possible deviation from specification during the pressure test
♦ Only the battery cooling evaporator does not achieve the required cooling output (the cooling output of the evaporator in the heater and air conditioning unit is OK). ♦ The high pressure is at the specified value or rises only slightly (above the pressure when the engine is stopped). ♦ Low pressure falls to the specified value or lower.
Possible reasons for deviation from specification and how to rectify them
♦ Actuation or function of refrigerant shut-off valve 2 , a control motor, the fan or a temperature sensor in or on the battery cooling module faulty, check and repair if necessary⇒ Vehicle diagnostic tester in “Guided Fault Finding” mode of the air conditioner and battery regulation and ⇒ Heating, air conditioner; Rep. gr. 87 ; Refrigerant circuit (vehicle-specific Workshop Manual). ♦ The expansion valve for the evaporator in the battery cooling module is faulty. – Renew expansion valve for battery cooling evaporator ⇒ Heating, air conditioning; Rep. gr. 87 ; Refrigerant circuit (vehicle-specific Workshop Manual). – Check the function and actuation of the battery cooling components⇒ Vehicle diagnostic tester in “Guided Fault Finding” mode of the air conditioner and battery regulation and check the refrigerant lines if no further faults can be found. ♦ Constriction or blockage in the refrigerant line to or from the expansion valve on the battery cooling evaporator. – If there is a blockage, clean refrigerant circuit (flush with refrigerant R1234yf) ⇒ “1.6 Cleaning refrigerant circuit”, page 95 . Renew expansion valve for evaporator in air conditioning unit (and for battery cooling evaporator) and desiccant bag/desiccant cartridge (or reservoir/receiver) ⇒ “1.5 Renewing components”, page 79 and ⇒ Heating, air conditioning; Rep. gr. 87 ; Refrigerant circuit (vehicle-specific Workshop Manual). – If a hose or pipe is kinked or constricted, renew this component ⇒ Heating, air conditioning; Rep. gr. 87 ; Refrigerant circuit (vehicle-specific Workshop Manual). ♦ Not enough refrigerant in circuit ♦ Extract refrigerant from refrigerant circuit ⇒ “2.4 Discharging refrigerant circuit”, page 150 . ♦ If quantity of refrigerant extracted is significantly less than specified capacity (more than 100 g less) ⇒ Heating, air conditioning; Rep. gr. 00 ; Technical data (vehicle-specific Workshop Manual), locate and eliminate leak ⇒ “1.4 Locating leaks”, page 68 . ♦ If the extracted quantity of refrigerant conforms to the specified capacity or is only slightly less (max. 100 g) ⇒ Heating, air conditioner; Rep. gr. 00 ; Technical data (vehicle-specific Workshop Manual), check the function of refrigerant shut-off valve 1 ⇒ Vehicle diagnostic tester in “Guided Fault Finding” mode of the air conditioner and battery regulation and ⇒ Heating, air conditioner; Rep. gr. 87 ; Refrigerant circuit (vehicle-specific Workshop Manual).
Final steps
– Re-charge refrigerant circuit ⇒ “2.6 Charging refrigerant circuit”, page 160 . – Repeat test ⇒ “2.14.5 Checking pressures with air conditioner switched on - vehicles with electrically driven air conditioner compressor”, page 219 .

Protected by copyright. Copying for private or commercial purposes, in part or in whole, is not permitted unless authorised by AUDI AG. AUDI AG does not guarantee or accept any liability with respect to the correctness of information in this document. Copyright by AUDI AG.

Note

- *To cool the vehicle battery - A2- (hybrid battery), refrigerant shut-off valve 1 is currently only actuated above a certain battery temperature, e.g. by the battery regulation control unit . If air conditioner operation is not yet activated at this time, the electric air conditioner compressor - V470- is actuated via the air conditioner compressor control unit - J842- e.g. by the battery regulation control unit . The temperature of the air (or coolant) upstream and downstream of the battery cooling evaporator is determined by the relevant control unit (e.g. the battery regulation control unit). If it becomes clear that cooling is inadequate, this is stored e.g. in the battery regulation control unit ⇒ Vehicle diagnostic tester in "Guided Fault Finding" mode of the air conditioner and the battery regulation.*
- *The temperature of the air (or coolant) and therefore the cooling output of the battery cooling evaporator is determined by the built-in temperature sensors (currently it cannot be measured with a thermometer during operation). Therefore, it can only be checked using Guided Fault Finding ⇒ Vehicle diagnostic tester in "Guided Fault Finding" mode of the air conditioning system and battery regulation.*
- *Observe the further notes ⇒ page 231 .*

Possible deviation from specification during the pressure test
♦ The evaporator in the heater and air conditioning unit (and the battery cooling evaporator) do not achieve the required cooling output. ♦ The high pressure does not rise or rises only slightly above the pressure when the engine is stationary. ♦ Low pressure does not drop or only drops slightly.
Possible reasons for deviation from specification and how to rectify them
♦ No air conditioner compressor actuation ⇒ Vehicle diagnostic tester in "Guided Fault Finding" mode. ♦ Refrigerant shut-off valve 1 faulty (closed), if installed – Check activation and operation of air conditioner compressor (and refrigerant shut-off valve 1 , refrigerant shut-off valve 2 if fitted) ⇒ Vehicle diagnostic tester ("Guided Fault Finding" mode for air conditioner and battery regulation). If no faults can be detected, renew expansion valve at evaporator in heater and air conditioning unit ⇒ Heating, air conditioning; Rep. gr. 87 ; Refrigerant circuit (vehicle-specific Workshop Manual). ♦ Constriction or blockage in refrigerant circuit (e.g. in refrigerant line between service connection on low-pressure side and air conditioner compressor). – If there is a blockage, clean refrigerant circuit (flush with refrigerant R1234yf) ⇒ "1.6 Cleaning refrigerant circuit", page 95 . Renew expansion valve for evaporator in air conditioning unit (and for battery cooling evaporator) and desiccant bag/desiccant cartridge (or reservoir/receiver) ⇒ "1.5 Renewing components", page 79 and ⇒ Heating, air conditioning; Rep. gr. 87 ; Refrigerant circuit (vehicle-specific Workshop Manual). – If a hose or pipe is kinked or constricted, renew this component ⇒ Heating, air conditioning; Rep. gr. 87 ; Refrigerant circuit (vehicle-specific Workshop Manual). ♦ Air conditioner compressor defective – Renew air conditioner compressor ⇒ "1.5 Renewing components", page 79 and ⇒ Heating, air conditioning; Rep. gr. 87 ; Air conditioner compressor (vehicle-specific Workshop Manual).
Final steps

Protected by copyright. Copying for private or commercial purposes, in part or in whole, is not permitted unless authorised by AUDI AG. AUDI AG does not guarantee or accept any liability with respect to the correctness of information in this document. Copyright by AUDI AG.

Possible deviation from specification during the pressure test
– Re-charge refrigerant circuit ⇒ “2.6 Charging refrigerant circuit”, page 160 . – Repeat test ⇒ “2.14.5 Checking pressures with air conditioner switched on - vehicles with electrically driven air conditioner compressor”, page 219 .

Protected by copyright. Copying for private or commercial purposes, in part or in whole, is not permitted unless authorised by AUDI AG. AUDI AG does not guarantee or accept any liability with respect to the correctness of information in this document. Copyright by AUDI AG.

Specifications for pressures in refrigerant circuit on vehicles with heat pump

Note

- *In vehicles with high-voltage system and heat pump, non-return valves and electrically actuated valves are installed in the refrigerant circuit, which regulate the flow of refrigerant in the circuit based on the current operating state. There are different versions of these valves ⇒ Heating, air conditioning; Rep. gr. 87 ; Refrigerant circuit (vehicle-specific Workshop Manual) and ⇒ Vehicle diagnostic tester in “Guided Fault Finding” mode.*
- *On vehicles with the “heat pump” and/or “high-voltage battery cooling” function, high pressure is not available at the service connection on the high-pressure side in all air conditioning system operating modes. On these vehicles, the pressure in the refrigerant circuit on the high-pressure side can only be measured via the pressure/temperature senders installed in the refrigerant circuit (depending on the air conditioning system operating mode) ⇒ Heating, air conditioning; Rep. gr. 87 ; Refrigerant circuit (vehicle-specific Workshop Manual) and ⇒ Vehicle diagnostic tester in “Guided Fault Finding” mode.*
- *On these vehicles, the air conditioning system's refrigerant circuit is used not only to cool the passenger compartment but also to cool the hybrid battery unit (via the high-voltage system's coolant circuit) and heat the passenger compartment via the heat pump function when ambient temperatures are low. In order to operate these functions, various valves, pressure and temperature senders and pumps must be correctly installed in the refrigerant circuit and coolant circuit of the high-voltage system and work without problem ⇒ Heating, air conditioner; Rep. gr. 87 ; Refrigerant circuit (vehicle-specific Workshop Manual), ⇒ Vehicle diagnostic tester in “Guided Fault Finding” and ⇒ Engine, mechanics; Rep. gr. 19 ; Cooling system/coolant .*
- *To narrow down the cause of a malfunction, various routines were stored in the basic settings of the thermal management control unit , which activate the functions “Cooling air conditioning system”, “Heat pump” and “Cooling high-voltage system components” ⇒ Vehicle diagnostic tester in “Guided Fault Finding” mode.*

High-pressure side:

Increasing from initial pressure (when connecting pressure gauges) up to max. 20 bar

Note

Depending on the layout of the service connection (high-pressure side) and on the operating mode, it may only be possible to measure the high pressure via the pressure/temperature senders installed in the refrigerant circuit ⇒ Heating, air conditioning; Rep. gr. 87 ; Refrigerant circuit (vehicle-specific Workshop Manual).

Protected by copyright. Copying for private or commercial purposes, in part or in whole, is not permitted unless authorised by AUDI AG. AUDI AG does not guarantee or accept any liability with respect to the correctness of information in this document. Copyright by AUDI AG.

Low-pressure side:

Dropping from initial pressure (when connecting pressure gauges) to a value between 1.5 and 2.3 bar absolute (depending on cooling output required).

Air conditioner compressor speed:

Between 800 and 8500 rpm depending on cooling output required (currently max. 5000 rpm with vehicle stationary)

Note

- *The temperature of the air downstream of the evaporator, the current air conditioner compressor speed and the refrigerant pressure on the high-pressure side are displayed as a measured value by different control units depending on the vehicle (e.g. by the thermal management control unit , the front air conditioner operating and display unit or the Climatronic control unit) ⇒ Heating, air conditioner; Rep. gr. 87 ; Overview of fitting locations - Air conditioner (vehicle-specific Workshop Manual) and ⇒ Vehicle diagnostic tester in "Guided Fault Finding" mode.*
- *If a very high cooling output is required (e.g. high ambient temperature and high fresh air blower speed), the air conditioner compressor cannot initially set the pressure on the low-pressure side to the necessary value (e.g. for a certain time after switching on the air conditioner). When the vehicle is stationary or only moving slowly (up to a speed of approx. 45 km/h), the air conditioner compressor is not activated at the maximum specified speed (of approx. 8500 rpm); the air conditioner compressor speed is limited to approx. 5000 rpm. Limitation of the maximum permissible air conditioner compressor speed is only cancelled at vehicle speeds above approx. 45 km/h. At an air conditioner compressor speed of 5000 rpm, with a high ambient temperature and a high fresh air blower speed (unfavourable ambient conditions), the output (delivery volume) of the air conditioner compressor is not initially sufficient to reduce the pressure on the low-pressure side to the specified value. One way of checking the control action of the air conditioner compressor under these conditions is to activate the fresh air blower with only approx. 40 % of the maximum voltage and to check the pressures at reduced fresh air blower speed ⇒ Vehicle diagnostic tester in "Guided Fault Finding" mode for air conditioner and battery regulation, and ⇒ Heating, air conditioning; Rep. gr. 00 ; Repair instructions; Checking cooling output (vehicle-specific Workshop Manual).*
- *Under unfavourable conditions (very high ambient temperatures, high humidity), the pressure on the high-pressure side may increase to max. 29 bar.*
- *The specified speed of the air conditioner compressor is displayed as a measured value, e.g. by the thermal management control unit ⇒ Vehicle diagnostic tester in "Guided Fault Finding" mode.*

Protected by copyright. Copying for private or commercial purposes, in part or in whole, is not permitted unless authorised by AUDI AG. AUDI AG does not guarantee or accept any liability with respect to the correctness of information in this document. Copyright by AUDI AG.

- *The refrigerant pressure (low or high pressure) measured in the refrigerant circuit by various pressure/temperature senders based on the current operating state is displayed as a measured value by the relevant control unit ⇒ Vehicle diagnostic tester in "Guided Fault Finding" mode and ⇒ Heating, air conditioner; Rep. gr. 87 ; Refrigerant circuit (vehicle-specific Workshop Manual).*
- *Depending on the air conditioner compressor speed and the characteristic curve of the expansion valve (on the evaporator for the front heater and air conditioning unit), the low pressure settles within the air conditioner compressor output range in the tolerance band (1.5 to 2.3 bar).*
- *The specified air conditioner compressor speed must be higher than 1500 rpm for this test.*
- *In the "maximum cooling output" setting, the specified speed is regulated to approx. 4000 to 5000 rpm. This value is vehicle-specific and is displayed as a measured value by the corresponding control unit ⇒ Vehicle diagnostic tester in "Guided Fault Finding" mode.*

- *On the absolute pressure scale, 0 bar corresponds to an absolute vacuum. Normal ambient pressure corresponds to an absolute pressure of 1 bar. On the scales of most pressure gauges, 0 bar corresponds to an absolute pressure of one bar (can be seen from -1 mark below 0).*
- *In a vehicle with two evaporators (one in the heater and air conditioning unit and one for the high-voltage battery cooling, e.g. the high-voltage battery heat exchanger) and two condensers (one at the front end for the air conditioner and one as a heat exchanger for the heat pump function), if the temperatures or pressures measured on a component conform to the specified value but this is not the case for the other component, depending on the selected function, check the actuation of the electrically actuated values installed in the refrigerant circuit. Also observe the pressure distribution in the refrigerant circuit (depending on the non-return valves installed) ⇒ Vehicle diagnostic tester in "Guided Fault Finding" mode and ⇒ Heating, air conditioning; Rep. gr. 87 ; Refrigerant circuit (vehicle-specific Workshop Manual).*
- *For correct operation of the air conditioner, it is also necessary for sufficient heat to be supplied to or discharged from the corresponding heat exchangers (depending on the selected function). You should therefore also pay attention to the incorporation of the heat exchanger into the corresponding coolant circuits for the engine and for the high-voltage system, and to the operation of the pumps and valves installed in these ⇒ Vehicle diagnostic tester in "Guided Fault Finding" mode and ⇒ Heating, air conditioning; Rep. gr. 87 ; Refrigerant circuit (vehicle-specific Workshop Manual).*
- *As the output of the evaporator for cooling the high-voltage components (in the battery cooling module and in the high-voltage battery heat exchanger) is less than that of the evaporator in the heater and air conditioning unit, the required temperature may still be reached in the evaporator for cooling the high-voltage components when there is insufficient refrigerant in the circuit, but the required temperature will no longer be reached at the evaporator in the heater and air conditioning unit (although the air conditioner compressor is being activated at a higher speed).*

Copyright
Copyright by AUDI AG. Reproduction of any kind or any other use for commercial purposes, in part or in whole, is not permitted unless authorised by AUDI AG. AUDI AG does not guarantee or accept any liability with respect to the correctness of information in this document. Copyright by AUDI AG.

Possible deviations from specification, causes and how to rectify them	
• High pressure remains constant or only increases slightly (above pressure with engine stopped) • Low pressure drops quickly to specified value or below. • The evaporator in the heater and air conditioning unit and the evaporator for cooling the high-voltage components do not achieve the required cooling output.	⇒ page 252
• High pressure normal • Low pressure corresponds to specified value • Required cooling output is not attained.	⇒ page 255

Possible deviations from specification, causes and how to rectify them	
• High pressure normal • Low pressure normal or too low (below specified value) • Only the evaporator in the heater and air conditioning unit does not achieve the required cooling output (the cooling output of the evaporator for cooling the high-voltage components is OK).	⇒ page 256
• High pressure normal • Low pressure normal or too low (below specified value) • Only the evaporator for cooling the high-voltage components does not achieve the required cooling output (the cooling output of the evaporator in the front heater and air conditioning unit is OK).	⇒ page 257
• High pressure does not rise or only rises slightly above the pressure with the engine stopped. • Low pressure does not drop or only drops slightly. • The evaporator in the heater and air conditioning unit (and the evaporator for cooling the high-voltage components) do not achieve the required cooling output.	⇒ page 258
• High pressure increases above specification • Low pressure drops quickly to specified value • Required cooling output is not attained in evaporator in front heater and air conditioning unit and/or in evaporator for cooling high-voltage components	⇒ page 259
• High pressure and low pressure initially normal. After some time the high pressure rises above the specified value and the low pressure drops to the specified value or lower • The evaporator in the heater and air conditioning unit (and/or the evaporator for cooling the high-voltage components) do not or no longer achieve the required cooling output.	⇒ page 261
• High pressure and low pressure initially normal. After a longer driving time, the low pressure drops below the specified value (the evaporator in the heater and air conditioning unit ices up).	⇒ page 262

Protected by copyright. Copying for private or commercial purposes, in part or in whole, is not permitted unless authorised by AUDI AG. AUDI AG does not guarantee or accept any liability with respect to the correctness of information in this document. Copyright by AUDI AG.

Possible deviations from specification, causes and how to rectify them	
• High pressure normal • Low pressure too low • The evaporator in the heater and air conditioning unit (and/or the evaporator for cooling the high-voltage components) do not achieve the required cooling output.	⇒ page 264
• High pressure normal or too high • Low pressure too high • Noise from air conditioner compressor (particularly after being switched on) • Required cooling output is not attained in evaporator in front heater and air conditioning unit and/or in evaporator for cooling high-voltage components	⇒ page 265
• High and low pressure normal • The evaporator in the heater and air conditioning unit (and the evaporator for cooling the high-voltage components) do not achieve the required cooling output. Or • High and low pressure normal • Noise from air conditioner compressor (particularly after being switched on) • Required cooling output is not attained in evaporator in heater and air conditioning unit and/or in evaporator for cooling high-voltage components	⇒ page 267
• High and low pressure normal • Required cooling output is not attained in evaporator at front heater and air conditioning unit (and at evaporator for cooling high-voltage components) • Required cooling output is not attained at evaporator for heat pump operation	⇒ page 268

Protected by copyright. Copying for private or commercial purposes, in part or in whole, is not permitted unless authorised by AUDI AG. AUDI AG does not guarantee or accept any liability with respect to the correctness of information in this document. Copyright by AUDI AG.

Possible deviation from specification during the pressure test
• High pressure remains constant or only increases slightly (above pressure with engine stopped) • Low pressure drops quickly to specified value or below. • The evaporator in the heater and air conditioning unit and the evaporator for cooling the high-voltage components do not achieve the required cooling output.
Possible reasons for deviation from specification and how to rectify them

Possible deviation from specification during the pressure test
♦ A pressure/temperature sender or temperature sensors mounted on or in the refrigerant circuit delivers incorrect values⇒ Vehicle diagnostic tester in “Guided Fault Finding” mode and ⇒ Heating, air conditioner; Rep. gr. 87 ; Overview of fitting locations - Air conditioner . ♦ Not enough refrigerant in circuit ♦ Faulty actuation of air conditioner compressor or one of the valves in the refrigerant circuit. – Check the measured values of the various pressure/temperature senders and temperature sensors when the air conditioner is in operation, renew components with incorrect measured values ⇒ Vehicle diagnostic tester (“Guided Fault Finding”) and ⇒ Heating, air conditioning; Rep. gr. 87 ; Overview of fitting locations - Air conditioner . If no fault is found, extract refrigerant. – Extract refrigerant from refrigerant circuit ⇒ “2.4 Discharging refrigerant circuit”, page 150 . – If quantity of refrigerant extracted is significantly less than specified capacity (more than 100 g less) ⇒ Heating, air conditioning; Rep. gr. 00 ; Technical data (vehicle-specific Workshop Manual), locate and eliminate leak ⇒ “1.4 Locating leaks”, page 68 . – If the extracted quantity of refrigerant corresponds approx. to the specified capacity, check the activation of the air conditioner compressor and the installed shut-off valves. If no faults are detected, renew the expansion valve for the evaporator in the heater and air conditioning unit ⇒ Heating, air conditioning; Rep. gr. 87 ; Refrigerant circuit (vehicle-specific Workshop Manual). – Depending on the result, repair the activation or renew the defective component (air conditioner compressor, shut-off valve, expansion valve) ⇒ Heating, air conditioning; Rep. gr. 87 ; Refrigerant circuit (vehicle-specific Workshop Manual).
Final steps
– Re-charge refrigerant circuit ⇒ “2.6 Charging refrigerant circuit”, page 160 . – Repeat test ⇒ “2.14.5 Checking pressures with air conditioner switched on - vehicles with electrically driven air conditioner compressor”, page 219 .

Protected by copyright. Copying for private or commercial purposes, in part or in whole, is not permitted unless authorised by AUDI AG. AUDI AG does not guarantee or accept any liability with respect to the correctness of information in this document. Copyright by AUDI AG.

Note

- *To narrow down the cause of a malfunction, various routines were stored in the basic settings of the respective control unit (e.g. in the thermal management control unit), which activate the functions "Cooling air conditioning system", "Heat pump" and "Cooling high-voltage system components" ⇒ Vehicle diagnostic tester in "Guided Fault Finding" mode and ⇒ Heating, air conditioning; Rep. gr. 87 ; Refrigerant circuit (vehicle-specific Workshop Manual).*
- *If no fault is detected for this issue, first check the activation of the electrically activated valves installed in the refrigerant circuit. If you do not detect any faults here, remove and check the non-return valves installed in the refrigerant circuit. If no faults are found here either, clean the refrigerant circuit (flush with refrigerant R1234yf). A constriction or blockage in the refrigerant circuit can also lead to one of these problems ⇒ Heating, air conditioner; Rep. gr. 87 ; Refrigerant circuit (vehicle-specific Workshop Manual) and*
  ⇒ "1.6 Cleaning refrigerant circuit", page 95
- *On vehicles with the "heat pump" and/or "high-voltage battery cooling" function, high pressure is not available at the service connection on the high-pressure side in all air conditioning system operating modes. On these vehicles, the pressure in the refrigerant circuit on the high-pressure side can only be measured via the pressure/temperature senders installed in the refrigerant circuit (depending on the air conditioning system operating mode) ⇒ Heating, air conditioning; Rep. gr. 87 ; Refrigerant circuit (vehicle-specific Workshop Manual) and ⇒ Vehicle diagnostic tester in "Guided Fault Finding" mode.*
- *Before starting repair work, also check the measured values of the various pressure/temperature senders installed in the refrigerant circuit. An incorrect measured value from a pressure/temperature sender can also cause problems with the cooling output, or the evaporator in the front heater and air conditioning unit may ice up ⇒ Heating, air conditioning; Rep. gr. 87 ; Refrigerant circuit (vehicle-specific Workshop Manual), ⇒ Vehicle diagnostic tester in "Guided Fault Finding" mode and ⇒ Current flow diagrams, Electrical fault finding and Fitting locations.*
- *When checking the various functions (heat pump or high-voltage battery cooling), also observe the activation and operation of the coolant circuit components associated with these functions ⇒ Heating, air conditioning; Rep. gr. 87 ; Coolant circuit (vehicle-specific Workshop Manual).*
- *If the function of the air conditioner is not OK when the test is repeated, e.g. after replacing the expansion valve, clean the refrigerant circuit (flush with refrigerant R134a)*
  ⇒ "1.6 Cleaning refrigerant circuit", page 95 *. Then renew the air conditioner compressor and receiver/desiccant cartridge.*
- *If a temperature sensor is faulty, the evaporator may ice up although the quantity of refrigerant in the circuit is OK.*

Protected by copyright. Copying for private or commercial purposes, in part or in whole, is not permitted unless authorised by AUDI AG. AUDI AG does not guarantee or accept any liability with respect to the correctness of information in this document. Copyright by AUDI AG.

- *If the expansion valve at the evaporator in the heater and air conditioning unit is defective (is permanently closed or does not open far enough), the air conditioner compressor is activated to maximum output and the low pressure drops to the value in the graph or below (air conditioner compressor draws off refrigerant from low-pressure side). However, as refrigerant cannot flow via the expansion valve, the cooling output is not attained and the high pressure may also not increase or only increase slightly since there is no energy exchange ⇒ Vehicle diagnostic tester in "Guided Fault Finding" mode and ⇒ Heating, air conditioning; Rep. gr. 00 ; Repair instructions; Checking cooling output (vehicle-specific Workshop Manual).*
- *The evaporator in the heater and air conditioning unit has a higher output than the evaporator for cooling the high-voltage components. Depending on the version, the expansion valve upstream of this evaporator (the heat exchanger for cooling the high-voltage system components) is currently activated by the corresponding control unit in order to cool the drive battery / hybrid battery unit (hybrid battery) only above/below a certain battery temperature, which means that energy exchange via this evaporator does not rise or only rises slightly ⇒ Vehicle diagnostic tester in "Guided Fault Finding" mode and ⇒ Heating, air conditioning; Rep. gr. 00 ; Repair instructions; Checking cooling output (vehicle-specific Workshop Manual).*
- *If there is too much refrigerant oil in the circuit, also discharge (flush) the air conditioner compressor and renew the receiver/desiccant cartridge. After cleaning (flushing with refrigerant R134a) ⇒ "1.6 Cleaning refrigerant circuit", page 95 the refrigerant circuit, charge the circuit (the air conditioner compressor) with the correct quantity of refrigerant oil ⇒ Heating, air conditioner; Rep. gr. 00 ; Technical data (vehicle-specific Workshop Manual).*

Possible deviation from specification during the pressure test
• High pressure normal • Low pressure corresponds to specified value • Required cooling output is not attained.
Possible reasons for deviation from specification and how to rectify them

Protected by copyright. Copying for private or commercial purposes, in part or in whole, is not permitted unless authorised by AUDI AG. AUDI AG does not guarantee or accept any liability with respect to the correctness of information in this document. Copyright by AUDI AG.

Possible deviation from specification during the pressure test
♦ A pressure/temperature sender or temperature sensors mounted on or in the refrigerant circuit delivers incorrect values⇒ Vehicle diagnostic tester in “Guided Fault Finding” mode and ⇒ Heating, air conditioner; Rep. gr. 87 ; Overview of fitting locations - Air conditioner . ♦ Not enough refrigerant in circuit ♦ Shut-off valve upstream of expansion valve for evaporator in front heater and air conditioning unit defective ♦ One of the other valves installed in the refrigerant circuit is faulty or does not work properly ⇒ Heating, air conditioner; Rep. gr. 87 ; Refrigerant circuit (vehicle-specific Workshop Manual). ♦ Expansion valve for evaporator in front heater and air conditioning unit defective – Check the measured values of the various pressure/temperature senders and temperature sensors when the air conditioner is in operation, renew components with incorrect measured values ⇒ Vehicle diagnostic tester (“Guided Fault Finding”) and ⇒ Heating, air conditioning; Rep. gr. 87 ; Overview of fitting locations - Air conditioner . If no fault is found, extract refrigerant. – Extract refrigerant from refrigerant circuit ⇒ “2.4 Discharging refrigerant circuit”, page 150 . – If quantity of refrigerant extracted is significantly less than specified capacity (more than 100 g less) ⇒ Heating, air conditioning; Rep. gr. 00 ; Technical data (vehicle-specific Workshop Manual), locate and eliminate leak ⇒ “1.4 Locating leaks”, page 68 . – If quantity of refrigerant extracted corresponds approx. to the specified capacity, check the activation of the air conditioner compressor and the installed shut-off valves. If no faults are detected ⇒ Heating, air conditioning; Rep. gr. 87 ; Refrigerant circuit (vehicle-specific Workshop Manual). – Re-charge refrigerant circuit ⇒ “2.6 Charging refrigerant circuit”, page 160 . – Repeat test ⇒ “2.14.5 Checking pressures with air conditioner switched on - vehicles with electrically driven air conditioner compressor”, page 219 . – Check operation and activation of the various valves installed in refrigerant circuit by observing pressure distribution in refrigerant circuit ⇒ Vehicle diagnostic tester in “Guided Fault Finding” mode and ⇒ Heating, air conditioning; Rep. gr. 87 ; Refrigerant circuit (vehicle-specific Workshop Manual). – Depending on the result, repair the activation or renew the defective component (shut-off valve/expansion valve) ⇒ Heating, air conditioning; Rep. gr. 87 ; Refrigerant circuit (vehicle-specific Workshop Manual).
Final steps
– Re-charge refrigerant circuit ⇒ “2.6 Charging refrigerant circuit”, page 160 . – Repeat test ⇒ “2.14.5 Checking pressures with air conditioner switched on - vehicles with electrically driven air conditioner compressor”, page 219 .

Protected by copyright. Copying for private or commercial purposes, in part or in whole, is not permitted unless authorised by AUDI AG. AUDI AG does not guarantee or assume any liability with respect to the correctness of information in this document. Copyright by AUDI AG.

Note

Observe notes ⇒ page 254 .

Possible deviation from specification during the pressure test
• High pressure normal • Low pressure normal or too low (below specified value) • Only the evaporator in the heater and air conditioning unit does not achieve the required cooling output (the cooling output of the evaporator for cooling the high-voltage components is OK).
Possible reasons for deviation from specification and how to rectify them

Possible deviation from specification during the pressure test
♦ A pressure/temperature sender or temperature sensors mounted on or in the refrigerant circuit delivers incorrect values⇒ Vehicle diagnostic tester in “Guided Fault Finding” mode and ⇒ Heating, air conditioner; Rep. gr. 87 ; Overview of fitting locations - Air conditioner . ♦ Not enough refrigerant in circuit ♦ Activation of air conditioner compressor not OK ♦ Expansion valve for evaporator in front heater and air conditioning unit defective ♦ Shut-off valve upstream of expansion valve for evaporator in front heater and air conditioning unit defective ♦ One of the other valves installed in the refrigerant circuit is faulty or not working properly. – Check the measured values of the various pressure/temperature senders and temperature sensors when the air conditioner is in operation, renew components with incorrect measured values ⇒ Vehicle diagnostic tester (“Guided Fault Finding”) and ⇒ Heating, air conditioning; Rep. gr. 87 ; Overview of fitting locations - Air conditioner . If no fault is found, extract refrigerant. – Extract refrigerant from refrigerant circuit ⇒ “2.4 Discharging refrigerant circuit”, page 150 . – If quantity of refrigerant extracted is significantly less than specified capacity (more than 100 g less) ⇒ Heating, air conditioning; Rep. gr. 00 ; Technical data (vehicle-specific Workshop Manual), locate and eliminate leak ⇒ “1.4 Locating leaks”, page 68 . – If quantity of refrigerant extracted corresponds approx. to the specified capacity, check the activation of the air conditioner compressor and the installed shut-off valves. If no faults are detected ⇒ Heating, air conditioning; Rep. gr. 87 ; Refrigerant circuit (vehicle-specific Workshop Manual). – Re-charge refrigerant circuit ⇒ “2.6 Charging refrigerant circuit”, page 160 . – Repeat test ⇒ “2.14.5 Checking pressures with air conditioner switched on - vehicles with electrically driven air conditioner compressor”, page 219 . – Check operation and activation of the various valves installed in refrigerant circuit by observing pressure distribution in refrigerant circuit ⇒ Vehicle diagnostic tester in “Guided Fault Finding” mode and ⇒ Heating, air conditioning; Rep. gr. 87 ; Refrigerant circuit (vehicle-specific Workshop Manual). – Depending on the result, repair the activation or renew the defective component (shut-off valve/expansion valve) ⇒ Heating, air conditioning; Rep. gr. 87 ; Refrigerant circuit (vehicle-specific Workshop Manual).
Final steps
– Re-charge refrigerant circuit ⇒ “2.6 Charging refrigerant circuit”, page 160 . – Repeat test ⇒ “2.14.5 Checking pressures with air conditioner switched on - vehicles with electrically driven air conditioner compressor”, page 219 .

Protected by copyright. Copying for private or commercial purposes, in part or in whole, is not permitted without the authorised by AUDI AG. AUDI AG does not guarantee or accept any liability with respect to the correctness of information in this document. Copyright by AUDI AG.

Note

Observe notes ⇒ page 254 .

Possible deviation from specification during the pressure test
• High pressure normal • Low pressure normal or too low (below specified value) • Only the evaporator for cooling the high-voltage components does not achieve the required cooling output (the cooling output of the evaporator in the front heater and air conditioning unit is OK).
Possible reasons for deviation from specification and how to rectify them

Possible deviation from specification during the pressure test
♦ One of the valves installed in the refrigerant circuit is defective or does not function properly ⇒ Heating, air conditioning; Rep. gr. 87 ; Refrigerant circuit (vehicle-specific Workshop Manual). ♦ One of the pumps or valves in the high-voltage system's coolant circuit is defective or does not function properly ⇒ Heating, air conditioning; Rep. gr. 87 ; Coolant circuit (vehicle-specific Workshop Manual). ♦ A pressure/temperature sender or temperature sensors mounted on or in the refrigerant circuit delivers incorrect values⇒ Vehicle diagnostic tester in “Guided Fault Finding” mode and ⇒ Heating, air conditioner; Rep. gr. 87 ; Overview of fitting locations - Air conditioner . ♦ Constriction or blockage in refrigerant line to or from expansion valve at evaporator for cooling high-voltage components – Check the measured values of the various pressure/temperature senders and temperature sensors when the air conditioner is in operation, renew components with incorrect measured values ⇒ Vehicle diagnostic tester (“Guided Fault Finding”) and ⇒ Heating, air conditioning; Rep. gr. 87 ; Overview of fitting locations - Air conditioner . – Check operation and activation of the various valves installed in refrigerant circuit by observing pressure distribution in refrigerant circuit ⇒ Vehicle diagnostic tester in “Guided Fault Finding” mode and ⇒ Heating, air conditioning; Rep. gr. 87 ; Refrigerant circuit (vehicle-specific Workshop Manual). – Check operation and activation of the components for cooling the high-voltage components ⇒ Vehicle diagnostic tester in “Guided Fault Finding” mode for air conditioner, air conditioner compressor and battery regulation – Depending on result, repair activation or renew defective component (shut-off valve, expansion valve, coolant pump, coolant shut-off valve) ⇒ Heating, air conditioning; Rep. gr. 87 ; Refrigerant circuit (vehicle-specific Workshop Manual), and ⇒ Heating, air conditioning; Rep. gr. 87 ; Coolant circuit (vehicle-specific Workshop Manual). – Check lines of refrigerant circuit; renew kinked or constricted hoses or pipes. – If no faults can be detected, clean refrigerant circuit (flush with refrigerant R1234yf) ⇒ “1.6 Cleaning refrigerant circuit”, page 95 .
Final steps
– Re-charge refrigerant circuit ⇒ “2.6 Charging refrigerant circuit”, page 160 . – Repeat test ⇒ “2.14.5 Checking pressures with air conditioner switched on - vehicles with electrically driven air conditioner compressor”, page 219 .

Note

Observe notes ⇒ page 254 .

Possible deviation from specification during the pressure test
• High pressure does not rise or only rises slightly above the pressure with the engine stopped. • Low pressure does not drop or only drops slightly. • The evaporator in the heater and air conditioning unit (and the evaporator for cooling the high-voltage components) do not achieve the required cooling output.
Possible reasons for deviation from specification and how to rectify them

Protected by copyright. Copying for private or commercial purposes, in part or in whole, is not permitted unless authorised by AUDI AG. AUDI AG does not guarantee or accept any liability with respect to the correctness of information in this document. Copyright by AUDI AG.

Possible deviation from specification during the pressure test
♦ Air conditioner compressor is not activated or driven. ♦ One of the valves installed in the refrigerant circuit is defective or does not function properly ⇒ Heating, air conditioning; Rep. gr. 87 ; Refrigerant circuit (vehicle-specific Workshop Manual). ♦ Constriction or blockage in refrigerant circuit (e.g. in refrigerant line between service connection on low-pressure side and air conditioner compressor). – Check actuation and function of air conditioner compressor and repair ⇒ Vehicle diagnostic tester in “Guided Fault Finding” – Check operation and activation of the various valves installed in refrigerant circuit by observing pressure distribution in refrigerant circuit ⇒ Vehicle diagnostic tester in “Guided Fault Finding” mode and ⇒ Heating, air conditioning; Rep. gr. 87 ; Refrigerant circuit (vehicle-specific Workshop Manual). – Depending on the result, repair the activation or renew the defective component (air conditioner compressor, shut-off valve, expansion valve) ⇒ Heating, air conditioning; Rep. gr. 87 ; Refrigerant circuit (vehicle-specific Workshop Manual). – Check lines of the refrigerant circuit. If a hose or pipe is kinked or constricted, renew this component ⇒ Heating, air conditioning; Rep. gr. 87 ; Refrigerant circuit (vehicle-specific Workshop Manual). – Feel the refrigerant circuit with your hand for a drop in temperature (location of a constriction). If there is a blockage, clean the refrigerant circuit (flush with refrigerant R1234yf) ⇒ “1.6 Cleaning refrigerant circuit”, page 95 – If you detect a fault in the air conditioner compressor, renew the compressor ⇒ “1.5 Renewing components”, page 79 – If no faults can be detected, clean refrigerant circuit (flush with refrigerant R1234yf) ⇒ “1.6 Cleaning refrigerant circuit”, page 95 .
Final steps
– Re-charge refrigerant circuit ⇒ “2.6 Charging refrigerant circuit”, page 160 . – Repeat test ⇒ “2.14.5 Checking pressures with air conditioner switched on - vehicles with electrically driven air conditioner compressor”, page 219 .

Protected by copyright. Copying for private or commercial purposes, in part or in whole, is not permitted unless authorised by AUDI AG. AUDI AG does not guarantee or accept any liability with respect to the correctness of information in this document. Copyright by AUDI AG.

Note

Observe notes ⇒ page 254 .

Possible deviation from specification during the pressure test
• High pressure increases above specification • Low pressure drops quickly to specified value • Required cooling output is not attained in evaporator in front heater and air conditioning unit and/or in evaporator for cooling high-voltage components
Possible reasons for deviation from specification and how to rectify them

Possible deviation from specification during the pressure test
♦ Activation or operation of air conditioner compressor not OK ♦ One of the valves installed in the refrigerant circuit is faulty or not working properly ⇒ Heating, air conditioner; Rep. gr. 87 ; Refrigerant circuit (vehicle-specific Workshop Manual) ♦ Constriction or blockage in refrigerant circuit ♦ Expansion valve defective – Check activation and operation of air conditioner compressor and perform servicing ⇒ Vehicle diagnostic tester in “Guided Fault Finding” mode. – Check operation and activation of the various valves installed in refrigerant circuit by observing pressure distribution in refrigerant circuit ⇒ Vehicle diagnostic tester in “Guided Fault Finding” mode and ⇒ Heating, air conditioning; Rep. gr. 87 ; Refrigerant circuit (vehicle-specific Workshop Manual). – Check lines of the refrigerant circuit. If a hose or pipe is kinked or constricted, renew this component ⇒ Heating, air conditioning; Rep. gr. 87 ; Refrigerant circuit (vehicle-specific Workshop Manual). – Feel the refrigerant circuit with your hand for a drop in temperature (location of a constriction). If there is a blockage, clean the refrigerant circuit (flush with refrigerant R1234yf) ⇒ “1.6 Cleaning refrigerant circuit”, page 95
Final steps
– Re-charge refrigerant circuit ⇒ “2.6 Charging refrigerant circuit”, page 160 . – Repeat test ⇒ “2.14.5 Checking pressures with air conditioner switched on - vehicles with electrically driven air conditioner compressor”, page 219 .

Protected by copyright. Copying for private or commercial purposes, in part or in whole, is not permitted unless authorised by AUDI AG. AUDI AG does not guarantee or assume any liability with respect to the correctness of information in this document. Copyright by AUDI AG.

Note

- *In this case, the evaporator may ice up although the amount of refrigerant in the refrigerant circuit is OK.*
- *If the expansion valve at the evaporator in the heater and air conditioning unit or the shut-off valve installed upstream is defective (is permanently closed or does not open sufficiently), the air conditioner compressor is activated to maximum output and the low pressure drops to the specified value or below (air conditioner compressor draws off refrigerant from low-pressure side). However, as no refrigerant (or an insufficient amount) can flow via the expansion valve, the cooling output is not attained and the high pressure may also not increase or only increase slightly since there is no energy exchange ⇒ Vehicle diagnostic tester in "Guided Fault Finding" mode and ⇒ Heating, air conditioning; Rep. gr. 00 ; Repair instructions; Checking cooling output (vehicle-specific Workshop Manual).*
- *If the expansion valve upstream of the evaporator for cooling the high-voltage components is defective (or its operation or activation is faulty), permanently closed or does not open sufficiently, the air conditioner compressor is also activated to maximum output (the required temperatures in the heat exchanger are not reached). The pressure on the low-pressure side then only drops to or below the specified value if no cooling output is requested in the front heater and air conditioning unit at the same time. The air conditioner compressor draws off the refrigerant from the low-pressure side of both evaporators. However, as no refrigerant can flow via the expansion valve in the front heater and air conditioning unit, and the cooling output is not reached in the evaporator for cooling the high-voltage components (there is a fault in the area of the evaporator for cooling the high-voltage components), the electric air conditioner compressor is activated at a higher speed. However, since no refrigerant can be supplied, the pressure on the low-pressure side falls below the specified value. In addition, the high pressure may not rise, or only a little, as no energy turnover is available. The same applies if a valve in the refrigerant circuit is not OK, if there is a fault in the incorporation of the evaporator for cooling the high-voltage components in the high-voltage system's coolant circuit, or if a pump installed there or a valve is not OK. Although the heat exchanger for high-voltage battery is cooled, the coolant does not reach the high-voltage components which need to be cooled ⇒ Vehicle diagnostic tester in "Guided Fault Finding" mode and ⇒ Heating, air conditioning; Rep. gr. 87 ; Coolant circuit (vehicle-specific Workshop Manual).*
- *For further information, refer to* *⇒ page 254* *.*

Possible deviation from specification during the pressure test
• High pressure and low pressure initially normal. After some time the high pressure rises above the specified value and the low pressure drops to the specified value or lower • The evaporator in the heater and air conditioning unit (and/or the evaporator for cooling the high-voltage components) do not or no longer achieve the required cooling output.
Possible reasons for deviation from specification and how to rectify them

Copyright by AUDI AG.
No part of this publication may be reproduced or transmitted in any form or by any means, including photocopying and microfilm, without the prior written permission of AUDI AG. Translation rights are reserved. The reproduction of this publication for commercial purposes, in part or in whole, is not permitted. The information contained in this publication is subject to technical modifications. We do not assume any liability with respect to the correctness of information in this document. Copyright by AUDI AG.

Possible deviation from specification during the pressure test
♦ A pressure/temperature sender or temperature sensors mounted on or in the refrigerant circuit delivers incorrect values⇒ Vehicle diagnostic tester in “Guided Fault Finding” mode and ⇒ Heating, air conditioner; Rep. gr. 87 ; Overview of fitting locations - Air conditioner . ♦ Activation of air conditioner compressor faulty ⇒ Vehicle diagnostic tester in “Guided Fault Finding” mode ♦ One of the valves installed in the refrigerant circuit is defective or does not function properly ⇒ Heating, air conditioning; Rep. gr. 87 ; Refrigerant circuit (vehicle-specific Workshop Manual). ♦ Moisture in refrigerant circuit – Check the measured values of the various pressure/temperature senders and temperature sensors when the air conditioner is in operation, renew components with incorrect measured values ⇒ Vehicle diagnostic tester (“Guided Fault Finding”) and ⇒ Heating, air conditioning; Rep. gr. 87 ; Overview of fitting locations - Air conditioner . – Check activation and operation of air conditioner compressor and perform servicing ⇒ Vehicle diagnostic tester in “Guided Fault Finding” mode. – Check operation and activation of the various valves installed in refrigerant circuit by observing pressure distribution in refrigerant circuit ⇒ Vehicle diagnostic tester in “Guided Fault Finding” mode and ⇒ Heating, air conditioning; Rep. gr. 87 ; Refrigerant circuit (vehicle-specific Workshop Manual). – If no faults can be detected, clean refrigerant circuit (flush with refrigerant R1234yf) ⇒ “1.6 Cleaning refrigerant circuit”, page 95 .
Final steps
– Re-charge refrigerant circuit ⇒ “2.6 Charging refrigerant circuit”, page 160 . – Repeat test ⇒ “2.14.5 Checking pressures with air conditioner switched on - vehicles with electrically driven air conditioner compressor”, page 219 .

Unauthorised copy, distribution or private or commercial purposes, in part or in whole, is not permitted unless authorised by AUDI AG. AUDI AG does not guarantee or accept any liability with respect to the correctness of information in this document. Copyright by AUDI AG.

Note

Observe notes ⇒ page 254 .

Possible deviation from specification during the pressure test
• High pressure and low pressure initially normal. After a longer driving time, the low pressure drops below the specified value (the evaporator in the heater and air conditioning unit ices up).
Possible reasons for deviation from specification and how to rectify them

Possible deviation from specification during the pressure test
♦ A pressure/temperature sender or temperature sensors mounted on or in the refrigerant circuit delivers incorrect values⇒ Vehicle diagnostic tester in “Guided Fault Finding” mode and ⇒ Heating, air conditioner; Rep. gr. 87 ; Overview of fitting locations - Air conditioner .
♦ Activation of air conditioner compressor faulty ⇒ Vehicle diagnostic tester in “Guided Fault Finding” mode
♦ One of the valves installed in the refrigerant circuit is defective or does not function properly ⇒ Heating, air conditioning; Rep. gr. 87 ; Refrigerant circuit (vehicle-specific Workshop Manual).
♦ A pressure/temperature sender or temperature sensors mounted on or in the refrigerant circuit delivers incorrect values⇒ Vehicle diagnostic tester in “Guided Fault Finding” mode and ⇒ Heating, air conditioner; Rep. gr. 87 ; Overview of fitting locations - Air conditioner .
♦ Moisture in refrigerant circuit
– Check the measured values of the various pressure/temperature senders and temperature sensors when the air conditioner is in operation, renew components with incorrect measured values ⇒ Vehicle diagnostic tester (“Guided Fault Finding”) and ⇒ Heating, air conditioning; Rep. gr. 87 ; Overview of fitting locations - Air conditioner .
– Check activation and operation of air conditioner compressor and perform servicing ⇒ Vehicle diagnostic tester in “Guided Fault Finding” mode.
– Check operation and activation of the various valves installed in refrigerant circuit by observing pressure distribution in refrigerant circuit ⇒ Vehicle diagnostic tester in “Guided Fault Finding” mode and ⇒ Heating, air conditioning; Rep. gr. 87 ; Refrigerant circuit (vehicle-specific Workshop Manual).
– If no faults can be detected, renew the desiccant bag/desiccant cartridge (or reservoir/receiver) and evacuate the refrigerant circuit for at least three hours.
Final steps
– Re-charge refrigerant circuit ⇒ “2.6 Charging refrigerant circuit”, page 160 .
– Repeat test ⇒ “2.14.5 Checking pressures with air conditioner switched on - vehicles with electrically driven air conditioner compressor”, page 219 .

Note

- *It is not necessary at first to clean the refrigerant circuit (to flush it with refrigerant R1234yf ⇒ “1.6 Cleaning refrigerant circuit”, page 95) when this issue occurs as there is usually only a small quantity of moisture in the system which can be removed by lengthy evacuation.*
- *If an issue involving moisture in the refrigerant circuit only occurs after a lengthy operating period or only infrequently (low pressure drops below specified value and evaporator ices up), it is sufficient to renew the dryer in the receiver (adjust quantity of refrigerant oil). Subsequently, evacuate refrigerant circuit for at least 3 hours.*
- *In this case, the evaporator may ice up although the amount of refrigerant in the refrigerant circuit is OK.*
- *A faulty evaporator output temperature sender - G263- or pressure/temperature sender can also cause the refrigerant circuit to ice up. If this issue occurs, you should therefore also check the measured valves of the various pressure/temperature senders in the refrigerant circuit ⇒ Vehicle diagnostic tester in “Guided Fault Finding” mode and ⇒ Heating, air conditioning; Rep. gr. 00 ; Repair instructions; Checking cooling output (vehicle-specific Workshop Manual).*
- *For further information, refer to ⇒ page 254 .*

Protected by copyright. Copying for private or commercial purposes, in part or in whole, is not permitted unless authorised by AUDI AG. AUDI AG does not guarantee or accept any liability with respect to the correctness of information in this document. Copyright by AUDI AG.

Possible deviation from specification during the pressure test
• High pressure normal • Low pressure too low • The evaporator in the heater and air conditioning unit (and/or the evaporator for cooling the high-voltage components) do not achieve the required cooling output.
Possible reasons for deviation from specification and how to rectify them
♦ Not enough refrigerant in circuit ♦ Faulty actuation or function of air conditioner compressor ⇒ Vehicle diagnostic tester in “Guided Fault Finding” mode. ♦ One of the valves installed in the refrigerant circuit is defective or does not function properly ⇒ Heating, air conditioning; Rep. gr. 87 ; Refrigerant circuit (vehicle-specific Workshop Manual). ♦ A pressure/temperature sender or temperature sensors mounted on or in the refrigerant circuit delivers incorrect values⇒ Vehicle diagnostic tester in “Guided Fault Finding” mode and ⇒ Heating, air conditioner; Rep. gr. 87 ; Overview of fitting locations - Air conditioner . – Check the measured values of the various pressure/temperature senders and temperature sensors when the air conditioner is in operation, renew components with incorrect measured values ⇒ Vehicle diagnostic tester (“Guided Fault Finding”) and ⇒ Heating, air conditioning; Rep. gr. 87 ; Overview of fitting locations - Air conditioner . If no fault is found, extract refrigerant. – Extract refrigerant from refrigerant circuit ⇒ “2.4 Discharging refrigerant circuit”, page 150 . – If quantity of refrigerant extracted is significantly less than specified capacity (more than 100 g less) ⇒ Heating, air conditioning; Rep. gr. 00 ; Technical data (vehicle-specific Workshop Manual), locate and eliminate leak ⇒ “1.4 Locating leaks”, page 68 . – If quantity of refrigerant extracted corresponds approx. to the specified capacity, check the activation of the air conditioner compressor and the installed shut-off valves. If no faults are detected ⇒ Heating, air conditioning; Rep. gr. 87 ; Refrigerant circuit (vehicle-specific Workshop Manual). – Re-charge refrigerant circuit ⇒ “2.6 Charging refrigerant circuit”, page 160 . – Repeat test ⇒ “2.14.5 Checking pressures with air conditioner switched on - vehicles with electrically driven air conditioner compressor”, page 219 . – Check activation and operation of air conditioner compressor and perform servicing ⇒ Vehicle diagnostic tester in “Guided Fault Finding” mode. – Check operation and activation of the various valves installed in refrigerant circuit by observing pressure distribution in refrigerant circuit ⇒ Vehicle diagnostic tester in “Guided Fault Finding” mode and ⇒ Heating, air conditioning; Rep. gr. 87 ; Refrigerant circuit (vehicle-specific Workshop Manual). – Depending on the result, repair the activation or renew the defective component (air conditioner compressor, shut-off valve, expansion valve, pressure/temperature senders) ⇒ Heating, air conditioning; Rep. gr. 87 ; Refrigerant circuit (vehicle-specific Workshop Manual). – If no faults can be detected, clean refrigerant circuit (flush with refrigerant R1234yf) ⇒ “1.6 Cleaning refrigerant circuit”, page 95 .
Final steps
– Re-charge refrigerant circuit ⇒ “2.6 Charging refrigerant circuit”, page 160 . – Repeat test ⇒ “2.14.5 Checking pressures with air conditioner switched on - vehicles with electrically driven air conditioner compressor”, page 219 .

Protected by copyright. Copying for private or commercial purposes, in part or in whole, is not permitted unless authorised by AUDI AG. AUDI AG does not guarantee or accept any liability with respect to the correctness of information in this document. Copyright by AUDI AG.

Note

- *If the error "High pressure normal, low pressure too low" appears, please note the following: When this error occurs, the evaporator in the heater and air conditioning unit may ice up even if the quantity of refrigerant in the circuit is OK.*
- *If the fault is caused by the air conditioner compressor (the air conditioner compressor is activated at excessively high speed by the control unit for air conditioning compressor), it is not necessary to clean the refrigerant circuit (to flush it with refrigerant R1234yf ⇒ "1.6 Cleaning refrigerant circuit", page 95). In this case it is sufficient to renew the air conditioner compressor (observe quantity of refrigerant oil in compressor and adjust if necessary).*
- *If the expansion valve upstream of the evaporator for cooling the high-voltage components is defective (or its operation or activation is faulty), permanently closed or does not open sufficiently, the air conditioner compressor is also activated to maximum output (the required temperatures in the heat exchanger are not reached). The pressure on the low-pressure side then only drops to or below the specified value if no cooling output is requested in the front heater and air conditioning unit at the same time. The air conditioner compressor draws off the refrigerant from the low-pressure side of both evaporators. However, as no refrigerant can flow via the expansion valve in the front heater and air conditioning unit, and the cooling output is not reached in the evaporator for cooling the high-voltage components (there is a fault in the area of the evaporator for cooling the high-voltage components), the electric air conditioner compressor is activated at a higher speed. However, since no refrigerant can be supplied, the pressure on the low-pressure side falls below the specified value. In addition, the high pressure may not rise, or only a little, as no energy turnover is available. The same applies if a valve in the refrigerant circuit is not OK, if there is a fault in the incorporation of the evaporator for cooling the high-voltage components in the high-voltage system's coolant circuit, or if a pump installed there or a valve is not OK. Although the heat exchanger for high-voltage battery is cooled, the coolant does not reach the high-voltage components which need to be cooled ⇒ Vehicle diagnostic tester in "Guided Fault Finding" mode and ⇒ Heating, air conditioning; Rep. gr. 87 ; Coolant circuit (vehicle-specific Workshop Manual).*
- *A faulty evaporator output temperature sender - G263- and/or pressure/temperature sender can also cause this issue. You should therefore also check the measured valves of the various pressure/temperature senders in the refrigerant circuit ⇒ Vehicle diagnostic tester in "Guided Fault Finding" mode and ⇒ Heating, air conditioning; Rep. gr. 00 ; Repair instructions; Checking cooling output (vehicle-specific Workshop Manual).*
- *For further information, refer to ⇒ page 254 .*

Protected by copyright. Copying for private or commercial purposes, in part or in whole, is not permitted unless authorised by AUDI AG. AUDI AG does not guarantee or accept any liability with respect to the correctness of information in this document. Copyright by AUDI AG.

Possible deviation from specification during the pressure test
• High pressure normal or too high • Low pressure too high • Noise from air conditioner compressor (particularly after being switched on) • Required cooling output is not attained in evaporator in front heater and air conditioning unit and/or in evaporator for cooling high-voltage components
Possible reasons for deviation from specification and how to rectify them
♦ Activation of air conditioner compressor faulty ⇒ Vehicle diagnostic tester in “Guided Fault Finding” mode ♦ One of the valves installed in the refrigerant circuit is defective or does not function properly ⇒ Heating, air conditioning; Rep. gr. 87 ; Refrigerant circuit (vehicle-specific Workshop Manual). ♦ A pressure/temperature sender or temperature sensors mounted on or in the refrigerant circuit delivers incorrect values⇒ Vehicle diagnostic tester in “Guided Fault Finding” mode and ⇒ Heating, air conditioner; Rep. gr. 87 ; Overview of fitting locations - Air conditioner . ♦ Too much refrigerant in circuit ♦ Too much refrigerant oil in circuit – Check the measured values of the various pressure/temperature senders and temperature sensors when the air conditioner is in operation, renew components with incorrect measured values ⇒ Vehicle diagnostic tester (“Guided Fault Finding”) and ⇒ Heating, air conditioning; Rep. gr. 87 ; Overview of fitting locations - Air conditioner . – Check activation and operation of air conditioner compressor and perform servicing ⇒ Vehicle diagnostic tester in “Guided Fault Finding” mode. – Check operation and activation of the various valves and pressure/temperature senders installed in refrigerant circuit by observing pressure distribution in refrigerant circuit ⇒ Vehicle diagnostic tester in “Guided Fault Finding” mode and ⇒ Heating, air conditioning; Rep. gr. 87 ; Refrigerant circuit (vehicle-specific Workshop Manual). – If no faults can be detected, extract refrigerant from refrigerant circuit. • If quantity of refrigerant extracted is significantly greater than specified capacity: – Charge the refrigerant circuit, repeat the test. • If amount of refrigerant extracted roughly corresponds to specified capacity: – Check actuation and function of air conditioner compressor and valves installed in the refrigerant circuit (shut-off valves and expansion valves) ⇒ Vehicle diagnostic tester in “Guided Fault Finding” mode – Depending on the result, repair the activation or renew the defective component (shut-off valve, expansion valve or air conditioner compressor and receiver/dryer) ⇒ Heating, air conditioning; Rep. gr. 87 ; Refrigerant circuit (vehicle-specific Workshop Manual). – If no faults can be detected, there may be too much refrigerant oil in the circuit, clean the refrigerant circuit (flush with refrigerant R1234yf ⇒ “1.6 Cleaning refrigerant circuit”, page 95).
Final steps
– Re-charge refrigerant circuit ⇒ “2.6 Charging refrigerant circuit”, page 160 . – Repeat test ⇒ “2.14.5 Checking pressures with air conditioner switched on - vehicles with electrically driven air conditioner compressor”, page 219 .

Protected by copyright. Copying for private or commercial purposes, in part or in whole, is not
permitted unless authorised by AUDI AG. AUDI AG does not guarantee or assume any liability
with respect to the correctness of information in this document. Copyright by AUDI AG.

Note

- *This fault may also be caused by too much refrigerant oil in the circuit. Overfilling with refrigerant oil may occur if, for example, the air conditioner compressor has been renewed without adjusting the quantity of refrigerant oil.*
- *For further information, refer to ⇒ page 254 .*

Protected by copyright. Copying for private or commercial purposes, in part or in whole, is not permitted unless authorised by AUDI AG. AUDI AG does not guarantee or accept any liability with respect to the correctness of information in this document. Copyright by AUDI AG.

Possible deviation from specification during the pressure test
• High and low pressure normal • The evaporator in the heater and air conditioning unit (and the evaporator for cooling the high-voltage components) do not achieve the required cooling output. Or • High and low pressure normal • Noise from air conditioner compressor (particularly after being switched on) • Required cooling output is not attained in evaporator in heater and air conditioning unit and/or in evaporator for cooling high-voltage components
Possible reasons for deviation from specification and how to rectify them
♦ A pressure/temperature sender or temperature sensors mounted on or in the refrigerant circuit delivers incorrect values⇒ Vehicle diagnostic tester in “Guided Fault Finding” mode and ⇒ Heating, air conditioner; Rep. gr. 87 ; Overview of fitting locations - Air conditioner . ♦ Activation of air conditioner compressor faulty ⇒ Vehicle diagnostic tester in “Guided Fault Finding” mode ♦ One of the valves installed in the refrigerant circuit is defective or does not function properly ⇒ Heating, air conditioning; Rep. gr. 87 ; Refrigerant circuit (vehicle-specific Workshop Manual). ♦ Too much refrigerant in circuit ♦ Expansion valve for evaporator in front heater and air conditioning unit defective ♦ Too much refrigerant oil in circuit – Check the measured values of the various pressure/temperature senders and temperature sensors when the air conditioner is in operation, renew components with incorrect measured values ⇒ Vehicle diagnostic tester (“Guided Fault Finding”) and ⇒ Heating, air conditioning; Rep. gr. 87 ; Overview of fitting locations - Air conditioner . – Check actuation and function of air conditioner compressor and repair ⇒ Vehicle diagnostic tester in “Guided Fault Finding”. – Check operation and activation of the various valves and pressure/temperature senders installed in refrigerant circuit by observing pressure distribution in refrigerant circuit ⇒ Vehicle diagnostic tester in “Guided Fault Finding” mode and ⇒ Heating, air conditioning; Rep. gr. 87 ; Refrigerant circuit (vehicle-specific Workshop Manual). – If no faults can be detected, extract refrigerant from refrigerant circuit. • If quantity of refrigerant extracted is significantly greater than specified capacity: – Charge the refrigerant circuit, repeat the test. • If amount of refrigerant extracted roughly corresponds to specified capacity: – Clean refrigerant circuit (flush with refrigerant R1234yf ⇒ “1.6 Cleaning refrigerant circuit”, page 95). – Add correct quantity of refrigerant oil to circuit (refer to note).
Final steps

Possible deviation from specification during the pressure test
– Re-charge refrigerant circuit ⇒ “2.6 Charging refrigerant circuit”, page 160 . – Repeat test ⇒ “2.14.5 Checking pressures with air conditioner switched on - vehicles with electrically driven air conditioner compressor”, page 219 .

Note

- *Overfilling with refrigerant oil may occur if, for example, the air conditioner compressor has been renewed without adjusting the quantity of refrigerant oil.*
- *If the expansion valve for the evaporator in the heater and air conditioning unit or the evaporator for cooling the high-voltage battery is faulty (continuously open), the evaporator temperature (in the front heater or air conditioning unit) is no longer regulated such that only gaseous refrigerant exits the evaporator. Under certain usage conditions, liquid droplets may then be drawn in by the air conditioner compressor and result in noise (liquid cannot be compressed).*
- *If there is too much refrigerant oil in the circuit, discharge the air conditioner compressor and renew the receiver. After cleaning (flushing with refrigerant R1234yf ⇒ “1.6 Cleaning refrigerant circuit”, page 95) the refrigerant circuit, charge the circuit with the correct quantity of refrigerant oil ⇒ Heating, air conditioner; Rep. gr. 00 ; Technical data (vehicle-specific Workshop Manual).*
- *For further information, refer to ⇒ page 254 .*

Possible deviation from specification during the pressure test
• High and low pressure normal • Required cooling output is not attained in evaporator at front heater and air conditioning unit (and at evaporator for cooling high-voltage components) • Required cooling output is not attained at evaporator for heat pump operation
Possible reasons for deviation from specification and how to rectify them

Protected by copyright. Copying for private or commercial purposes, in part or in whole, is not permitted unless authorised by AUDI AG. AUDI AG does not guarantee or accept any liability with respect to the correctness of information in this document. Copyright by AUDI AG.

Possible deviation from specification during the pressure test
♦ A pressure/temperature sender or temperature sensors mounted on or in the refrigerant circuit delivers incorrect values⇒ Vehicle diagnostic tester in “Guided Fault Finding” mode and ⇒ Heating, air conditioner; Rep. gr. 87 ; Overview of fitting locations - Air conditioner . ♦ One of the pumps or valves in the high-voltage system's coolant circuit or the engine coolant circuit is defective or does not function properly ⇒ Heating, air conditioning; Rep. gr. 87 ; Coolant circuit (vehicle-specific Workshop Manual). ♦ Activation of air conditioner compressor faulty ⇒ Vehicle diagnostic tester in “Guided Fault Finding” mode ♦ One of the valves installed in the refrigerant circuit is defective or does not function properly ⇒ Heating, air conditioning; Rep. gr. 87 ; Refrigerant circuit (vehicle-specific Workshop Manual). – Check the measured values of the various pressure/temperature senders and temperature sensors when the air conditioner is in operation, renew components with incorrect measured values ⇒ Vehicle diagnostic tester (“Guided Fault Finding”) and ⇒ Heating, air conditioning; Rep. gr. 87 ; Overview of fitting locations - Air conditioner . – Check the integration of the heat exchanger in the engine coolant circuit and the function and actuation of various pumps and valves ⇒ Heating, air conditioner; Rep. gr. 87 ; Coolant circuit (vehicle-specific Workshop Manual). – Check activation and operation of air conditioner compressor and perform servicing ⇒ Vehicle diagnostic tester in “Guided Fault Finding” mode. – Check operation and activation of the various valves and pressure/temperature senders installed in refrigerant circuit by observing pressure distribution in refrigerant circuit ⇒ Vehicle diagnostic tester in “Guided Fault Finding” mode and ⇒ Heating, air conditioning; Rep. gr. 87 ; Refrigerant circuit (vehicle-specific Workshop Manual). – Check operation and activation of the components for cooling the high-voltage components ⇒ Vehicle diagnostic tester in “Guided Fault Finding” mode for air conditioner, air conditioner compressor and battery regulation – If no faults can be detected, extract refrigerant from refrigerant circuit. – Extract refrigerant from refrigerant circuit ⇒ “2.4 Discharging refrigerant circuit”, page 150 . – If quantity of refrigerant extracted is significantly less than specified capacity (more than 100 g less) ⇒ Heating, air conditioning; Rep. gr. 00 ; Technical data (vehicle-specific Workshop Manual), locate and eliminate leak ⇒ “1.4 Locating leaks”, page 68 . – The extracted quantity of refrigerant roughly corresponds to the specified capacity. Check the actuation of the air conditioner compressor and installed shut-off valves again, if no faults are detected ⇒ Heating, air conditioner; Rep. gr. 87 ; Refrigerant circuit (vehicle-specific Workshop Manual) – Re-charge refrigerant circuit ⇒ “2.6 Charging refrigerant circuit”, page 160 . – Repeat test ⇒ “2.14.5 Checking pressures with air conditioner switched on - vehicles with electrically driven air conditioner compressor”, page 219 .
Final steps
– Re-charge refrigerant circuit ⇒ “2.6 Charging refrigerant circuit”, page 160 . – Repeat test ⇒ “2.14.5 Checking pressures with air conditioner switched on - vehicles with electrically driven air conditioner compressor”, page 219 .

Protected by copyright. Copying for private or commercial purposes, in part or in whole, is not permitted unless authorised by AUDI AG. AUDI AG does not guarantee or accept any liability with respect to the correctness of information in this document. Copyright by AUDI AG.

Note

- *If the required cooling output of the evaporator in the front heater and air conditioning unit (and the evaporator for cooling the high-voltage components) is OK and there is a problem due to a lack of heating output at the heat exchanger for heat pump operation. The cause may lie in the coolant circuit of the high-voltage system or the engine coolant circuit. If the pumps and valves in the coolant circuit of the high-voltage system are not actuated correctly or are not functioning properly, the evaporator (heat exchanger) for the components of the high-voltage system cannot draw sufficient heat energy from the coolant. If the pumps and valves in the engine coolant circuit are not activated correctly or if their operation is not OK, the absorbed heat energy cannot be transferred via the heat exchanger for heat pump function to the coolant flowing to the heat exchanger in the heater and air conditioning unit ⇒ Vehicle diagnostic tester in "Guided Fault Finding" mode and ⇒ Heating, air conditioning; Rep. gr. 87 ; Coolant circuit (vehicle-specific Workshop Manual).*
- *For further information, refer to* *⇒ page 254* .

Protected by copyright. Copying for private or commercial purposes, in part or in whole, is not permitted unless authorised by AUDI AG. AUDI AG does not guarantee or accept any liability with respect to the accuracy of the information in this document. Copyright by AUDI AG.

3 Test equipment and tools

⇒ “3.1 Tools and materials available from your distribution centre or Importer”, page 271

⇒ “3.2 Commercially available tools and materials”, page 272

⇒ “3.3 Tools you can make yourself”, page 272

3.1 Tools and materials available from your distribution centre or Importer

Tools and materials can be purchased via the “Electronic parts catalogue (ETKA)” ⇒ Electronic parts catalogue .

Overview
Air conditioner service station with flushing device – With integrated program for flushing refrigerant circuit with refrigerant R1234yf as well as the corresponding flushing kit – With integrated analyser for detecting impurities in refrigerant R1234yf
Refrigerant R1234yf ⇒ Electronic parts catalogue
Extractor device (for refrigerant R1234yf) - Dry ice box ⇒ Electronic parts catalogue
Adapter set for refrigerant circuits ⇒ Electronic parts catalogue – For connecting the air conditioner service station to the refrigerant circuit for flushing and for bypassing removed components during flushing – For connecting specific components to a pressure hose for blowing through with compressed air or nitrogen
Leak detector for R1234yf/R134a ⇒ Electronic parts catalogue
Combined fine filter unit for compressed air system with oil, dirt and water separator (as commonly used for painting systems) ⇒ Electronic parts catalogue
Seals (different versions; pay attention to correct version) ⇒ Electronic parts catalogue
Refrigerant oil (different versions; pay attention to correct version) ⇒ Electronic parts catalogue
Leak detection system containing the following items ⇒ Electronic parts catalogue : ♦ Cleaning solution ♦ UV leak detection lamp ♦ Replacement bulb for leak detection lamp ♦ Safety goggles ♦ Sticker(s) ♦ Protective gloves ♦ System case
Tracer refill cartridge ⇒ Electronic parts catalogue
Refrigerant line release tools with quick-release couplings ⇒ Electronic parts catalogue
Removal tool for refrigerant line quick-release couplings ⇒ Electronic parts catalogue
Socket attachments for removing and installing valves ⇒ Electronic parts catalogue

Protected by copyright. Copying for private or commercial purposes, in part or in whole, is not permitted unless authorised by AUDI AG. AUDI AG does not guarantee or accept any liability with respect to the correctness of information in this document. Copyright by AUDI AG.

3.2 Commercially available tools and materials

Note

This list provides an overview of the test equipment, tools and materials required for proper repair of the refrigerant circuit.

Overview
Fin comb
Filler hoses, thread 5/8"-18 UNF
Filler hoses, external thread M12x1.5-6G acc. to SAE J639 (included with air conditioner service station)
Cylinder connection piece for refrigerant pressure cylinder and seal with quick release coupling connection or threaded connection (supplied with air conditioner service station)
Valve caps 5/8"-18 UNF
Pressure gauge set with pressure reducer for nitrogen
Quick-release coupling adapters for service connections (included with air conditioner service station)
Open-ring spanner, size according to bolted joints at refrigerant lines
Connecting nipples for conical seal 5/8"-18 UNF
Compressed air gun with rubber end piece
Manual shut-off valve 5/8"-18 UNF
Recycling cylinder for contaminated refrigerant R1234yf (from your gas supplier)
Digital thermometer
Protective gloves
Safety goggles
Dry ice as pellets (available from gas supplier or online)

Protected by copyright. Copying for private or commercial purposes, in part or in whole, is not permitted unless authorised by AUDI AG. AUDI AG does not guarantee or accept any liability with respect to the correctness of information in this document. Copyright by AUDI AG.

3.3 Tools you can make yourself

Note

This list provides an overview of the test equipment, tools and materials required for proper repair of the refrigerant circuit.

Filler hose with connection to compressed-air system for workshop

A - Filler hose 5/8" - 18 UNF** (version with large internal diameter)

B - Connection for workshop compressed air system** (always use filter)
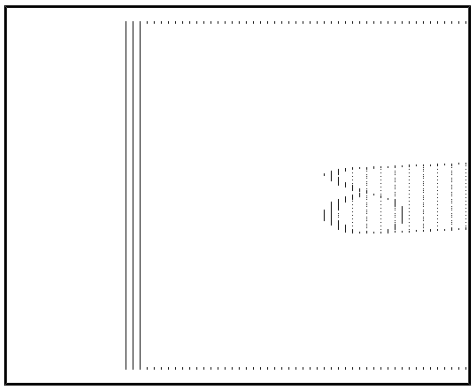
** Commercially available tools and materials