2001 SYSTEM WIRING DIAGRAMS CHEVROLET

Corvette

AIR CONDITIONING

2001 Chevrolet Corvette

2001 SYSTEM WIRING DIAGRAMS CHEVROLET Corvette

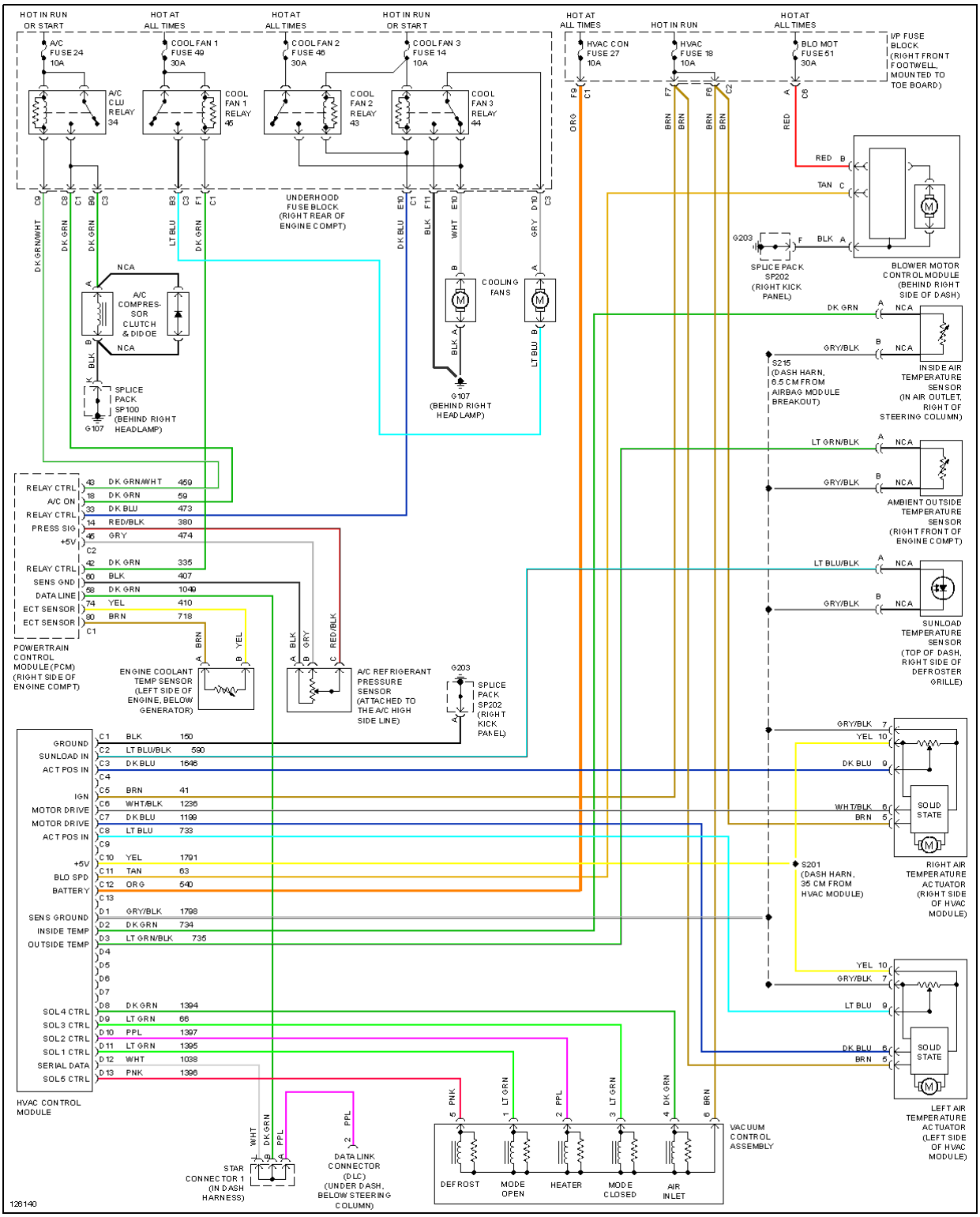

Fig. 1: Automatic A/C Circuit

2001 Chevrolet Corvette

2001 SYSTEM WIRING DIAGRAMS CHEVROLET Corvette

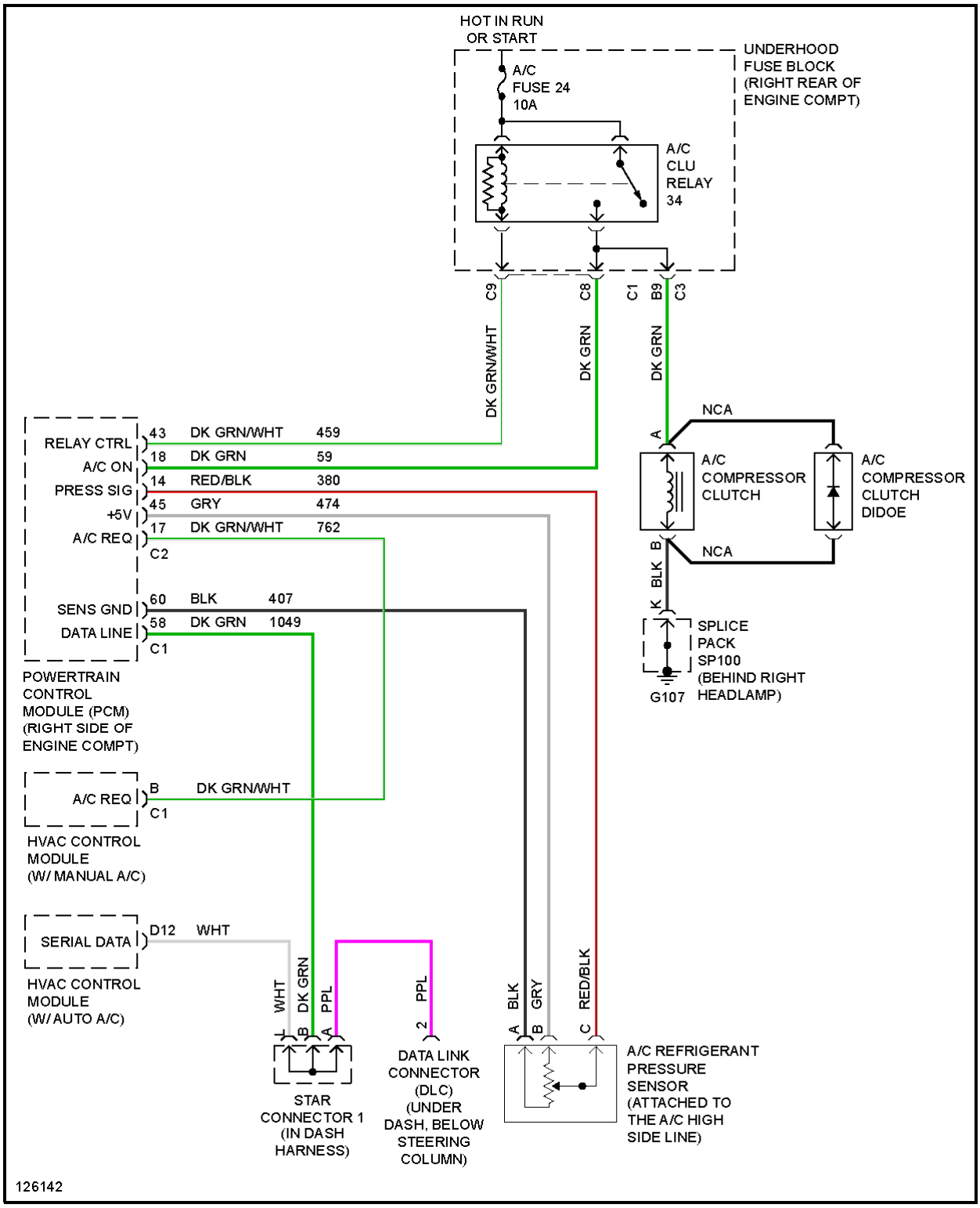

Fig. 2: Compressor Circuit

2001 Chevrolet Corvette

2001 SYSTEM WIRING DIAGRAMS CHEVROLET Corvette

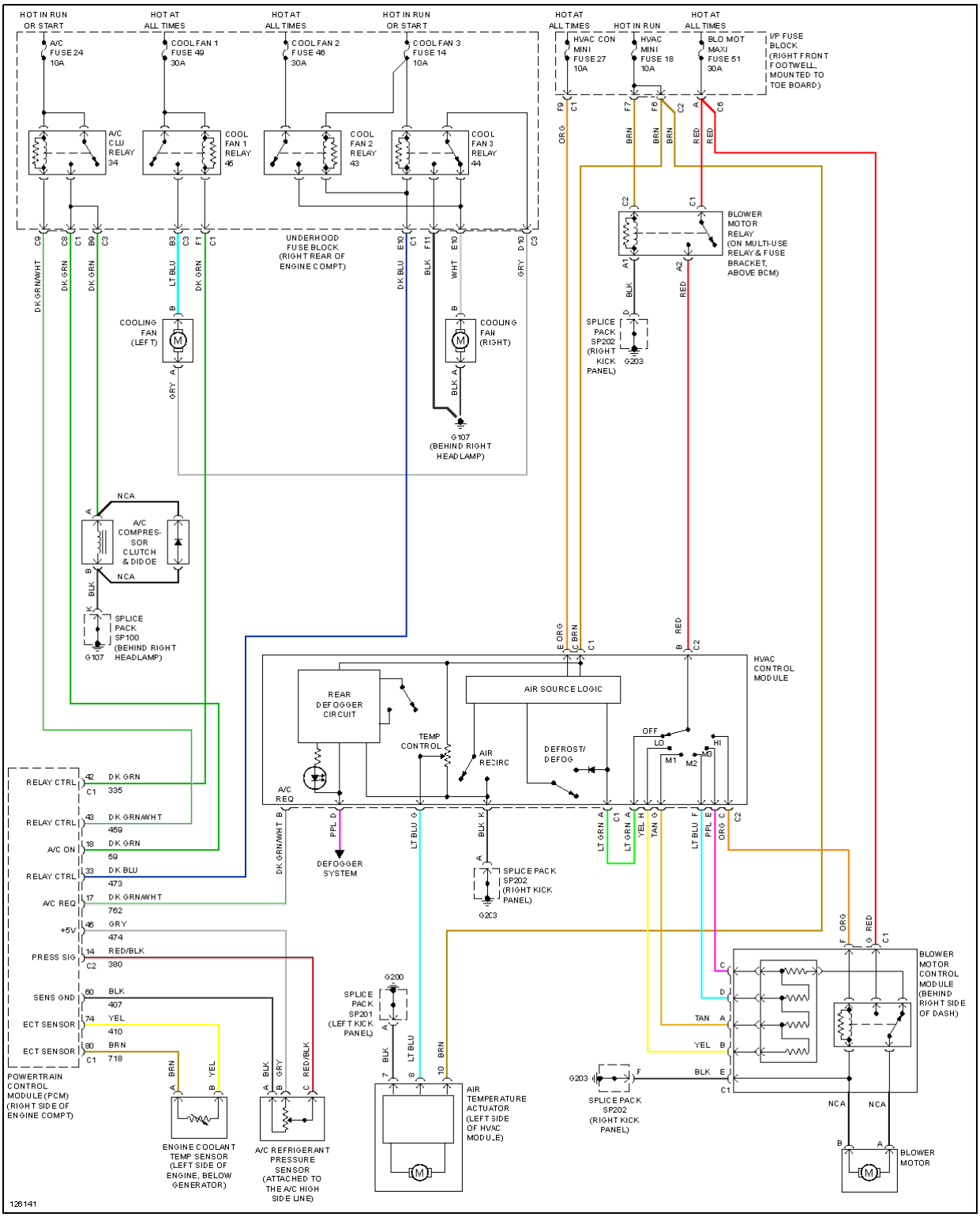

Fig. 3: Manual A/C Circuit

ANTI-LOCK BRAKES

2001 Chevrolet Corvette

2001 SYSTEM WIRING DIAGRAMS CHEVROLET Corvette

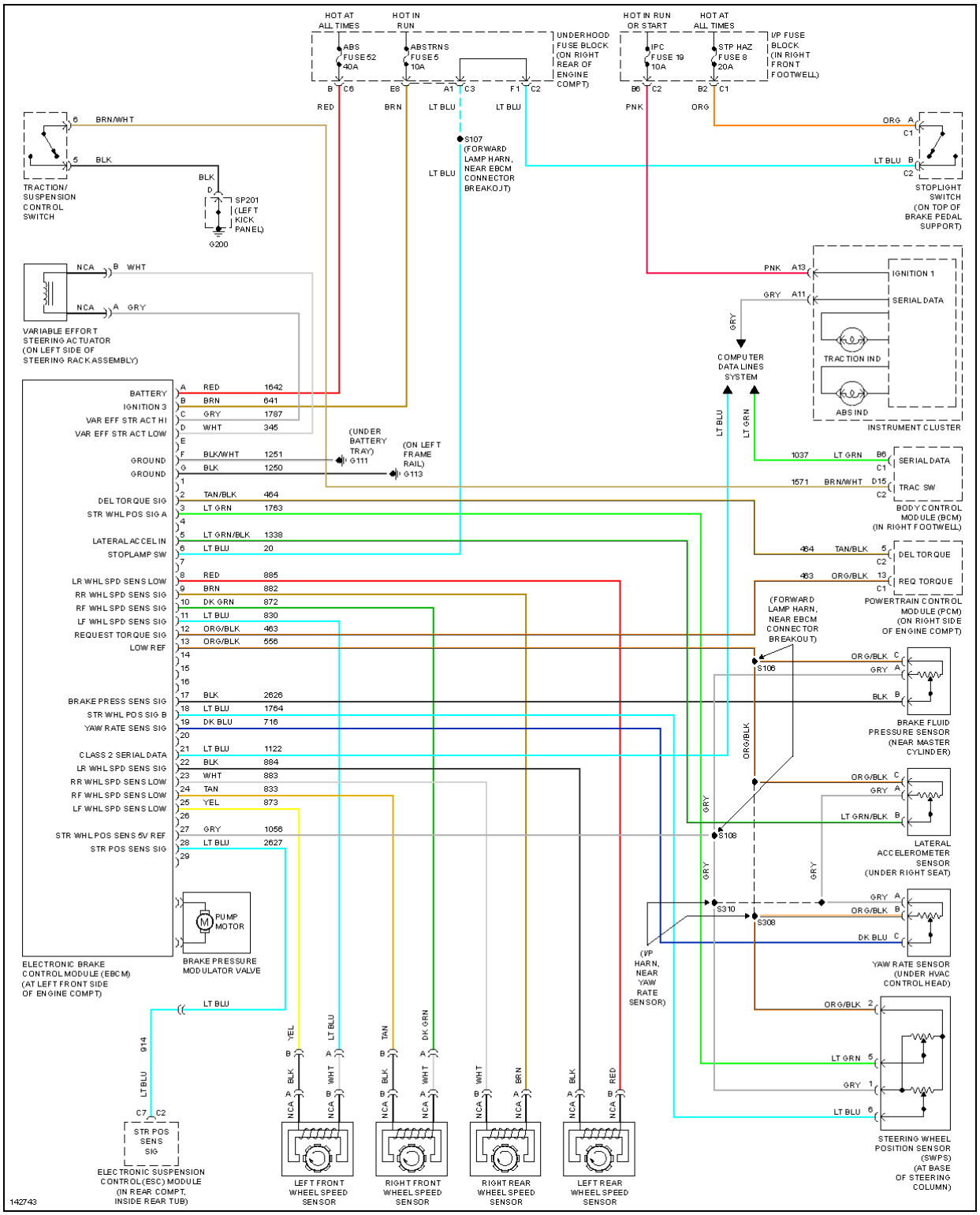

Fig. 4: Anti-lock Brake Circuits

ANTI-THEFT

2001 Chevrolet Corvette

2001 SYSTEM WIRING DIAGRAMS CHEVROLET Corvette

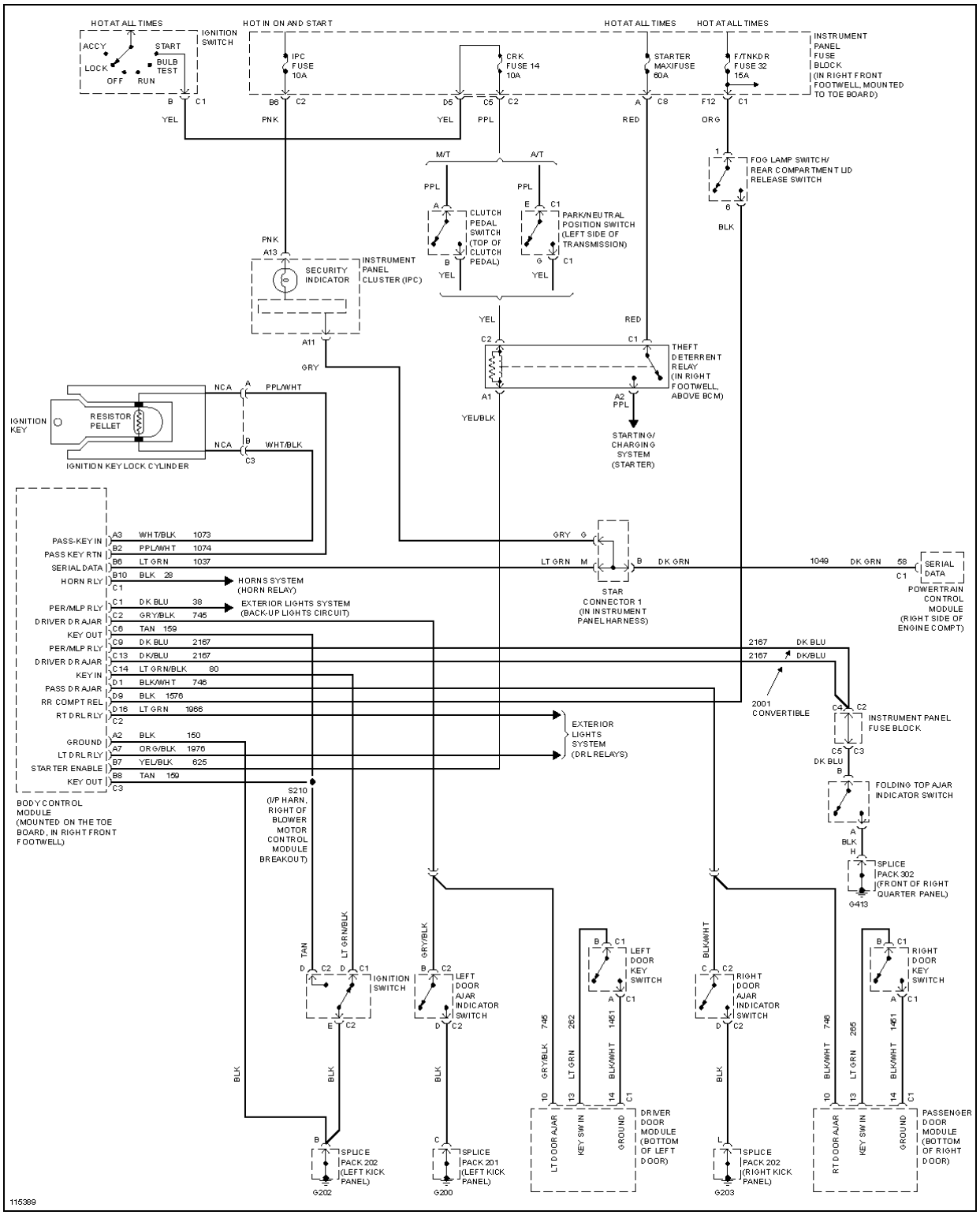

Fig. 5: Anti-theft Circuit

BODY COMPUTER

2001 Chevrolet Corvette

2001 SYSTEM WIRING DIAGRAMS CHEVROLET Corvette

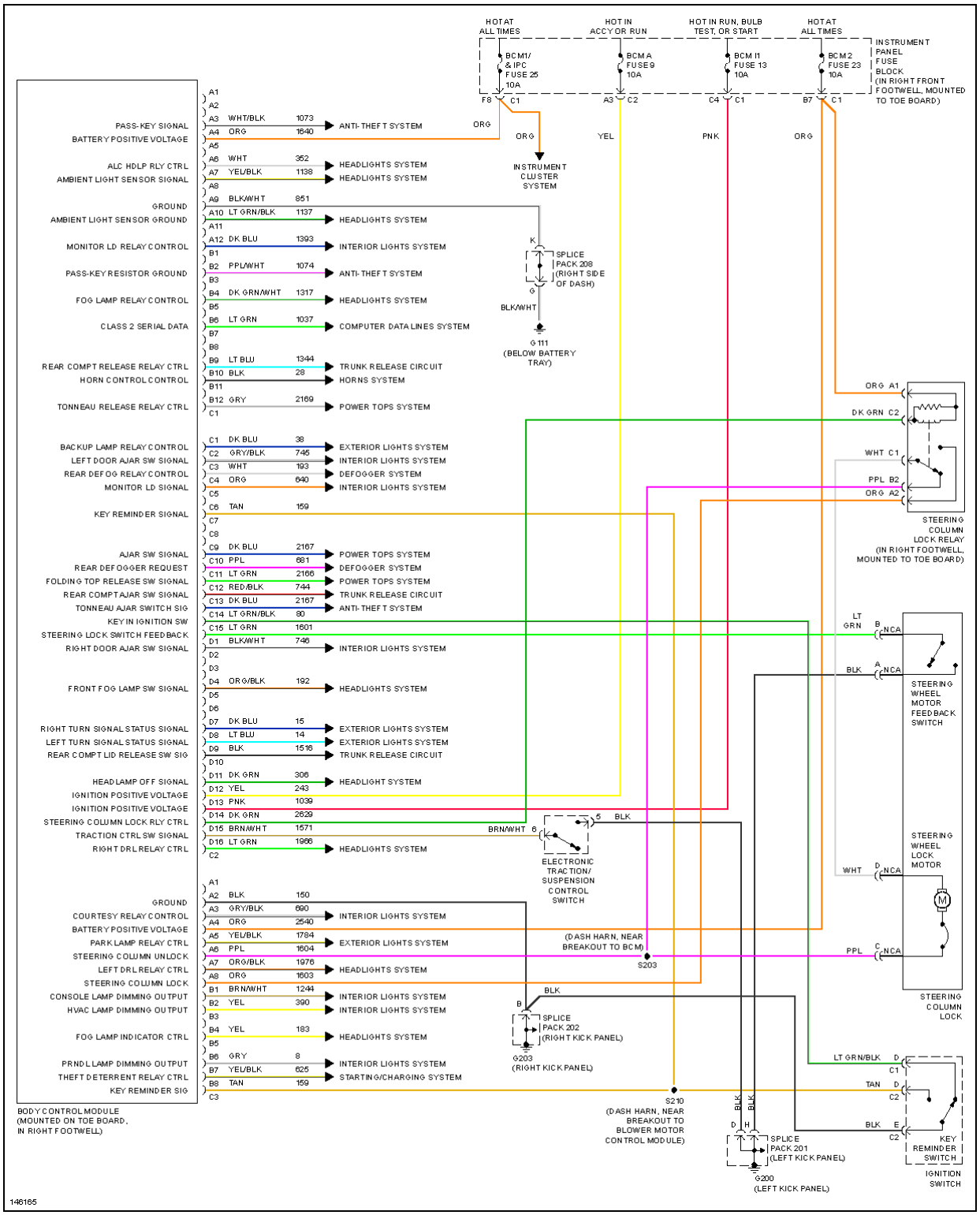

Fig. 6: Body Computer Circuits

COMPUTER DATA LINES

2001 Chevrolet Corvette

2001 SYSTEM WIRING DIAGRAMS CHEVROLET Corvette

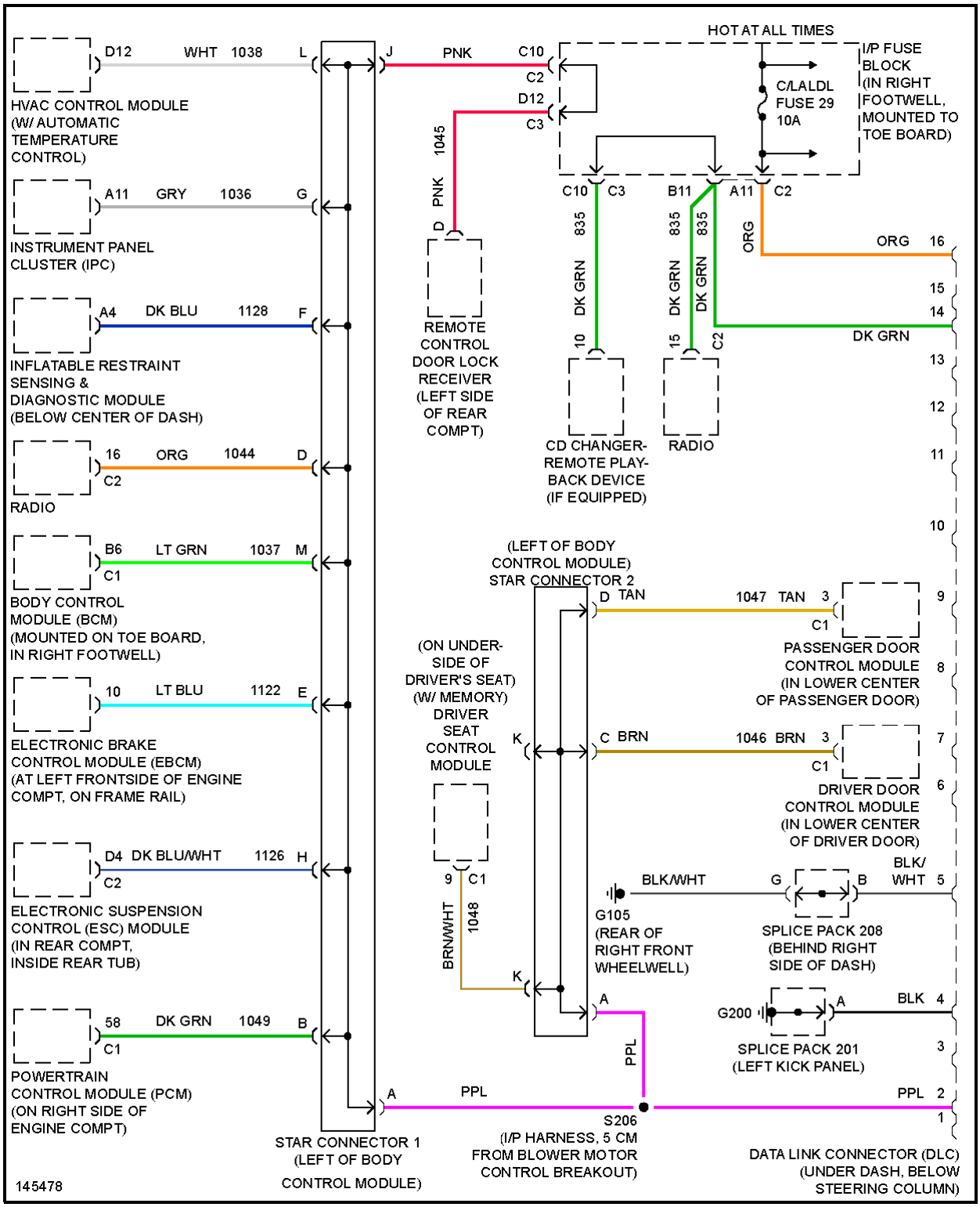

Fig. 7: Computer Data Lines

COOLING FAN

2001 Chevrolet Corvette

2001 SYSTEM WIRING DIAGRAMS CHEVROLET Corvette

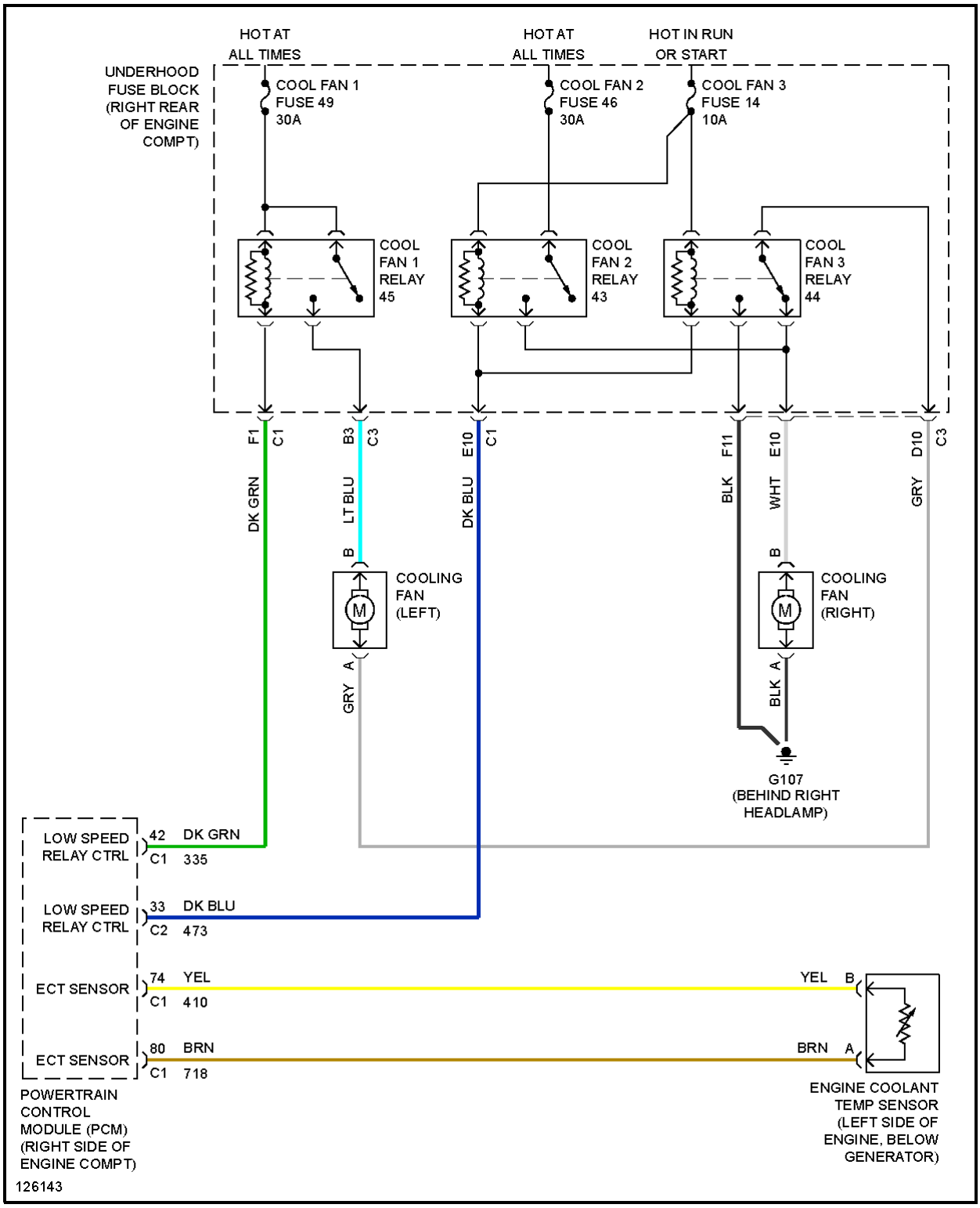

Fig. 8: Cooling Fan Circuit

CRUISE CONTROL

2001 Chevrolet Corvette

2001 SYSTEM WIRING DIAGRAMS CHEVROLET Corvette

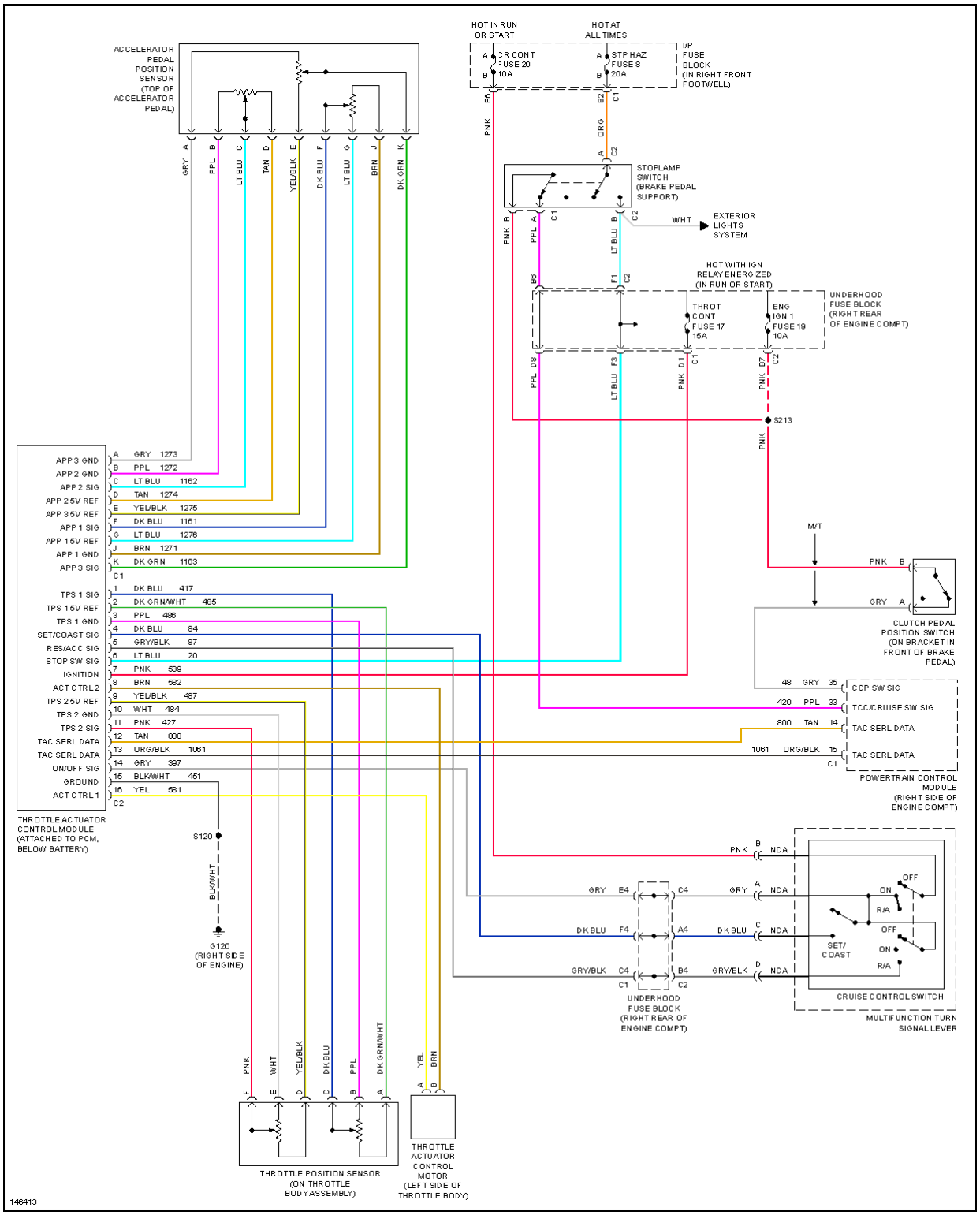

Fig. 9: Cruise Control Circuit

DEFOGGERS

2001 Chevrolet Corvette

2001 SYSTEM WIRING DIAGRAMS CHEVROLET Corvette

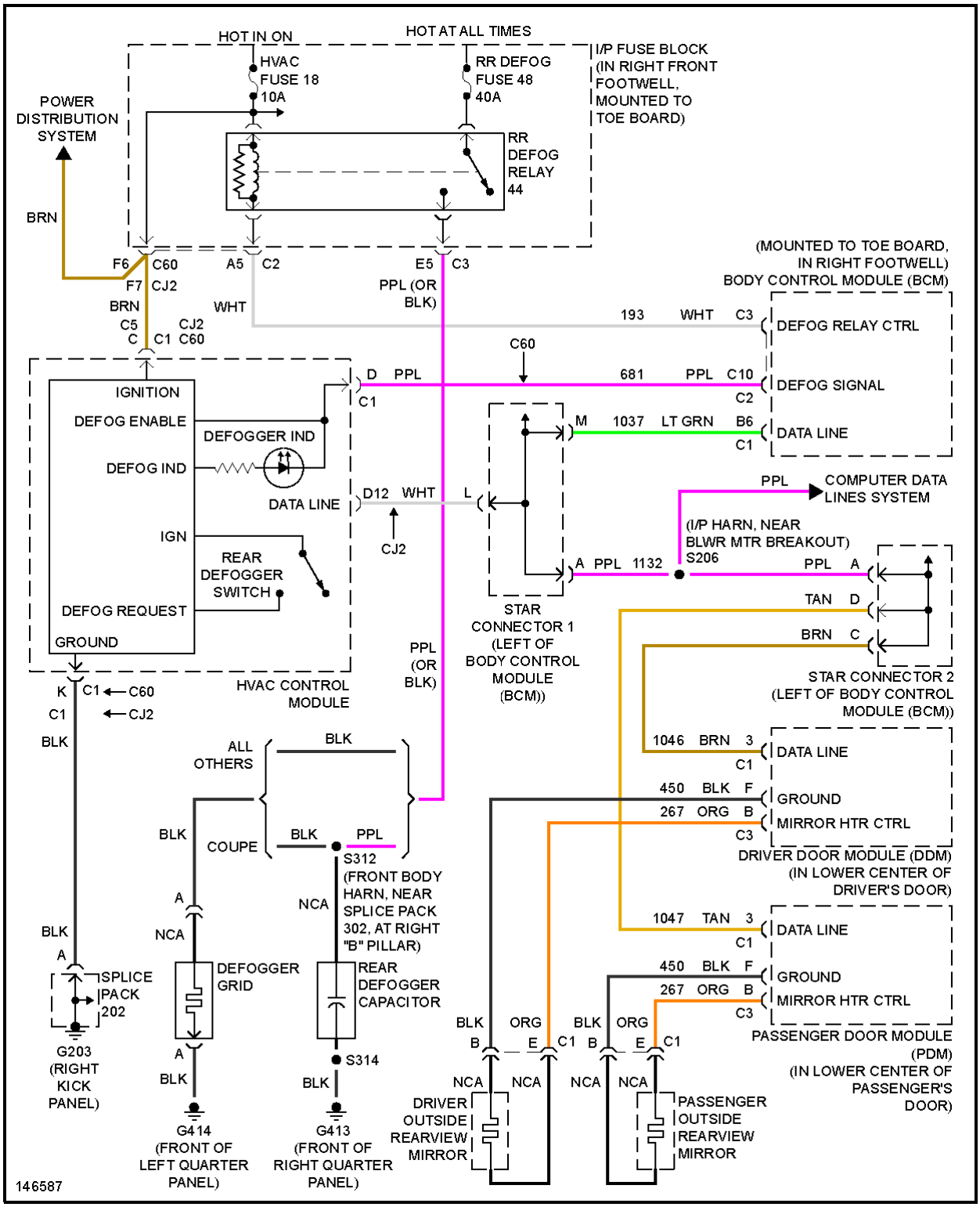

Fig. 10: Defogger Circuit

ELECTRONIC POWER STEERING

2001 Chevrolet Corvette

2001 SYSTEM WIRING DIAGRAMS CHEVROLET Corvette

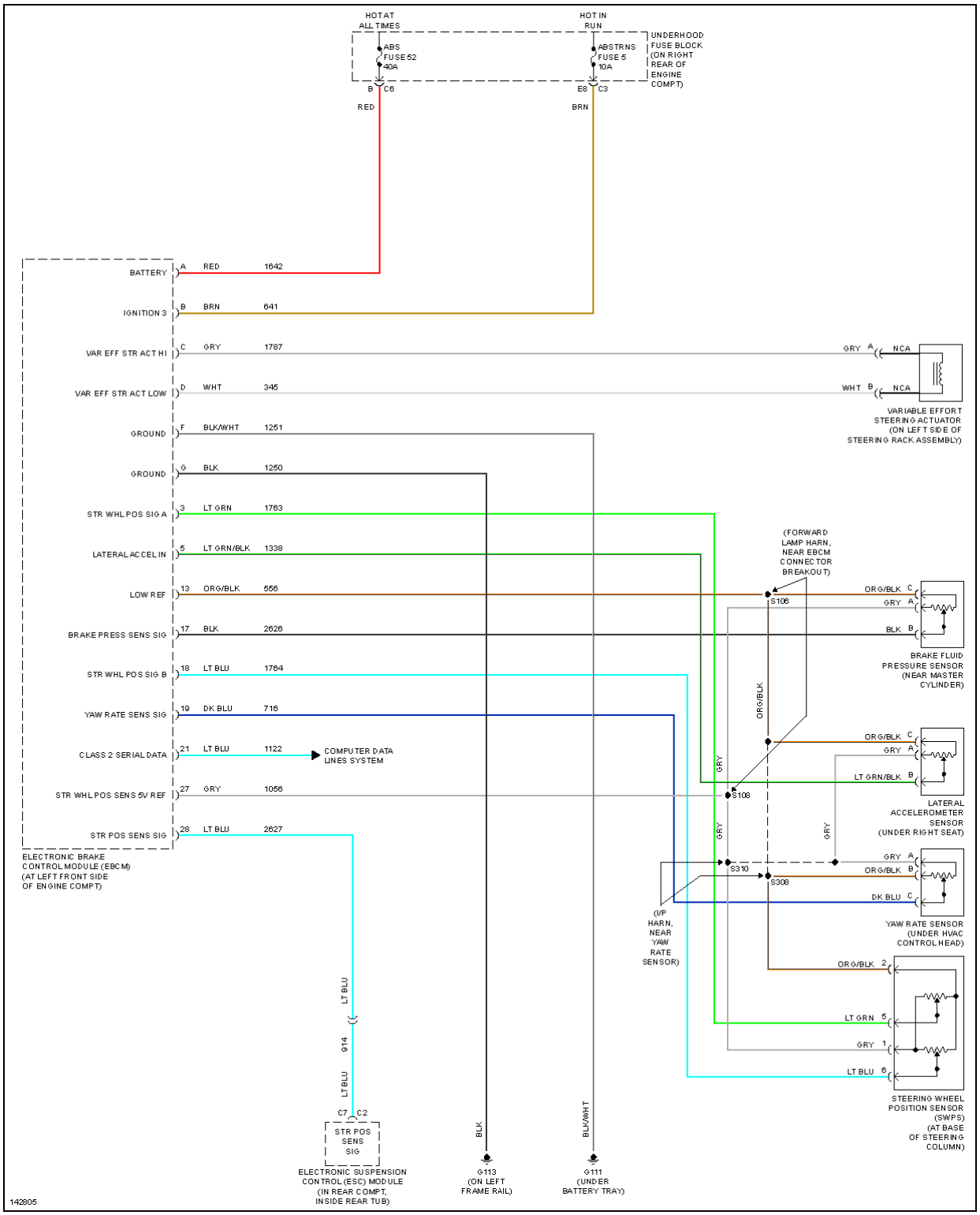

Fig. 11: Electronic Power Steering Circuit

ELECTRONIC SUSPENSION

2001 Chevrolet Corvette

2001 SYSTEM WIRING DIAGRAMS CHEVROLET Corvette

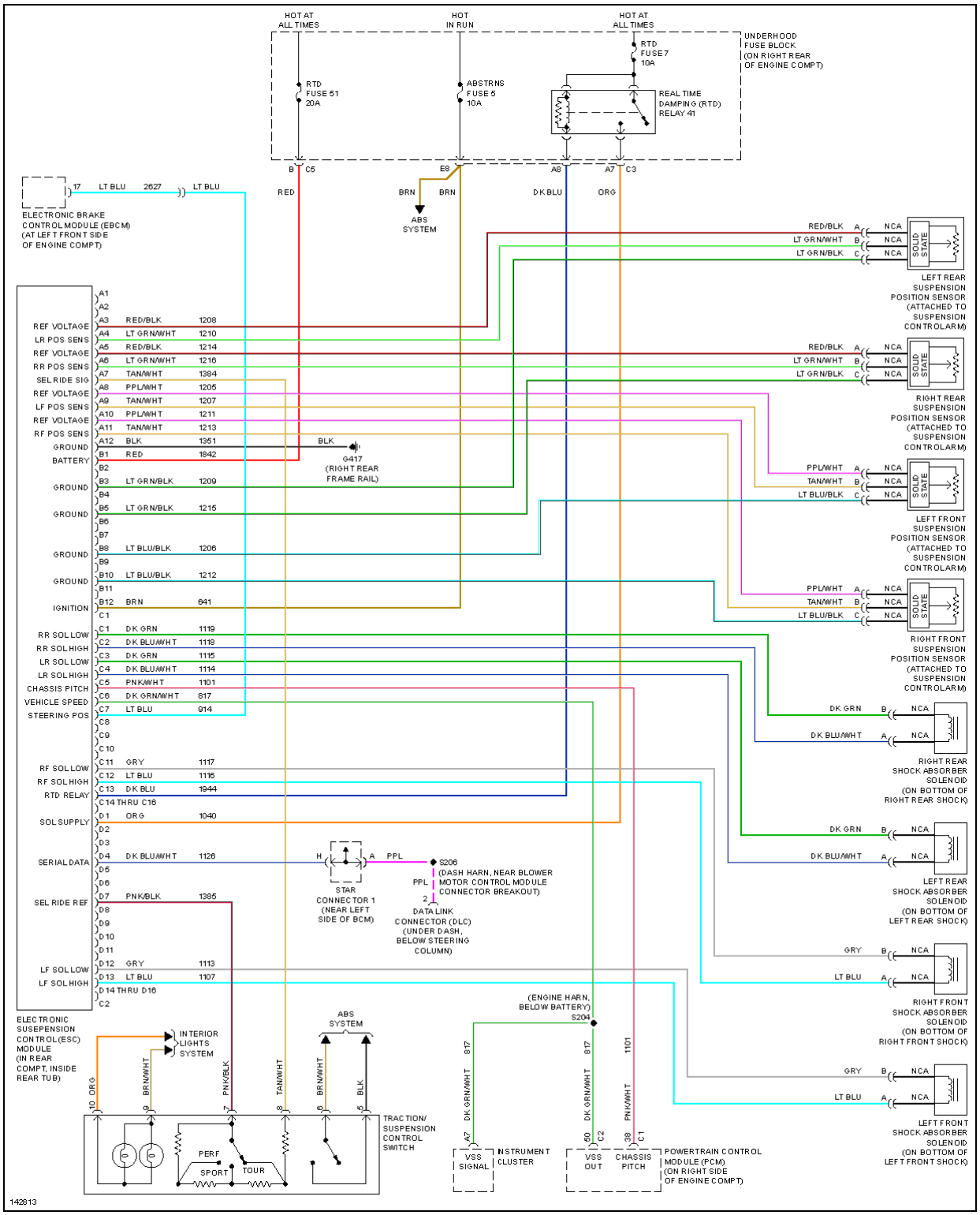

Fig. 12: Electronic Suspension Circuit

ENGINE PERFORMANCE

5.7L

2001 Chevrolet Corvette

2001 SYSTEM WIRING DIAGRAMS CHEVROLET Corvette

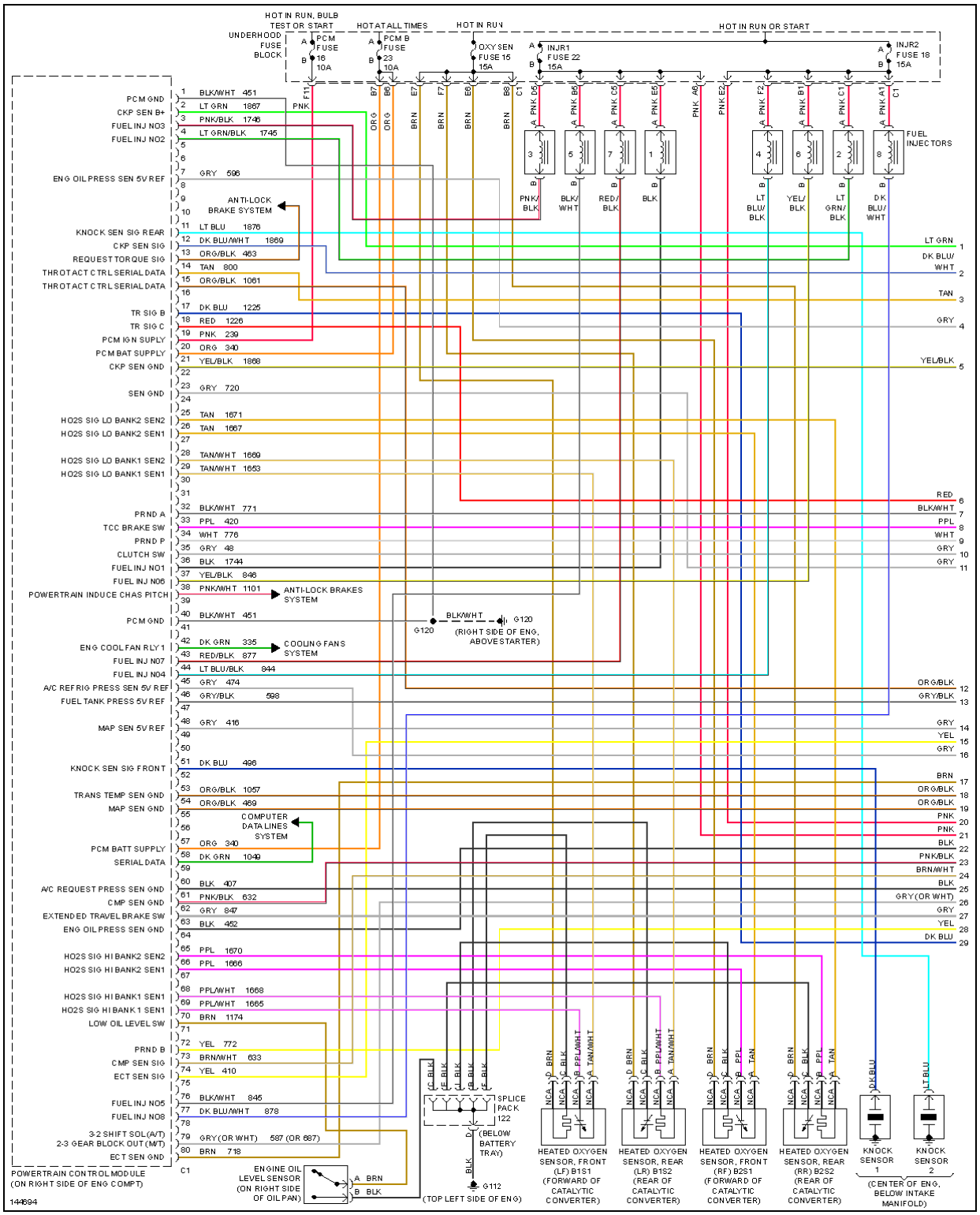

Fig. 13: 5.7L VIN G, Engine Performance Circuits (1 of 4)

2001 Chevrolet Corvette

2001 SYSTEM WIRING DIAGRAMS CHEVROLET Corvette

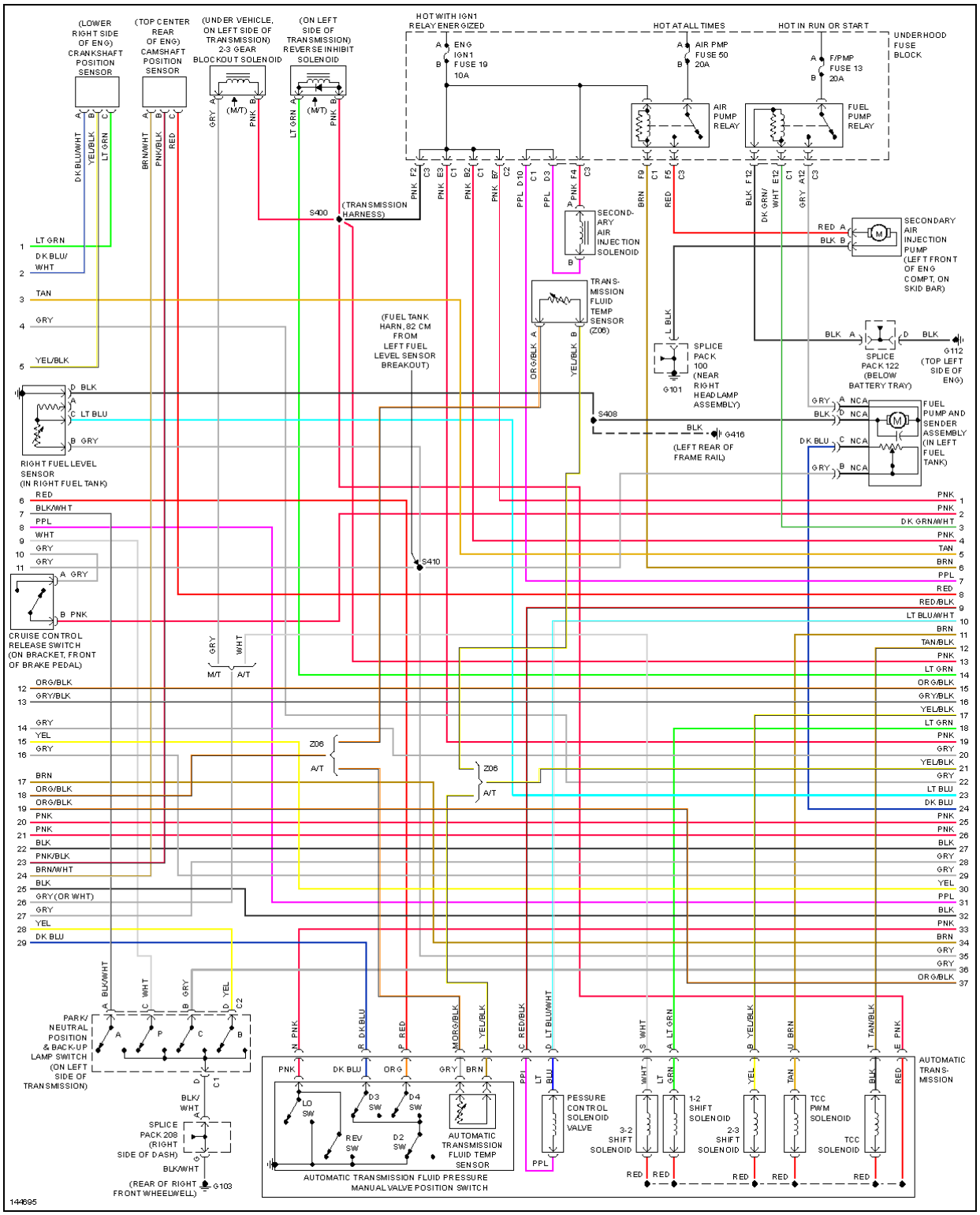

Fig. 14: 5.7L VIN G, Engine Performance Circuits (2 of 4)

2001 Chevrolet Corvette

2001 SYSTEM WIRING DIAGRAMS CHEVROLET Corvette

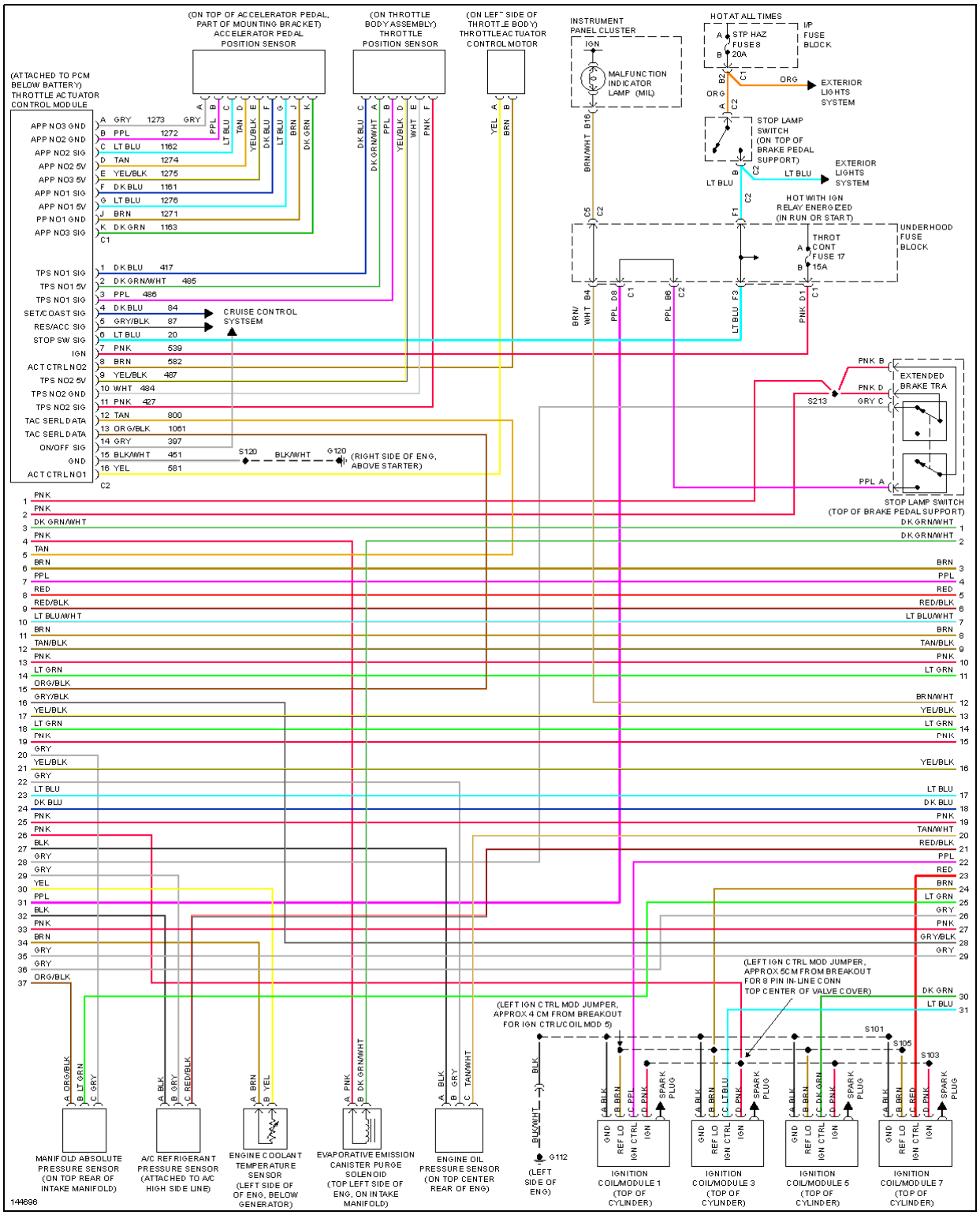

Fig. 15: 5.7L VIN G, Engine Performance Circuits (3 of 4)

2001 Chevrolet Corvette

2001 SYSTEM WIRING DIAGRAMS CHEVROLET Corvette

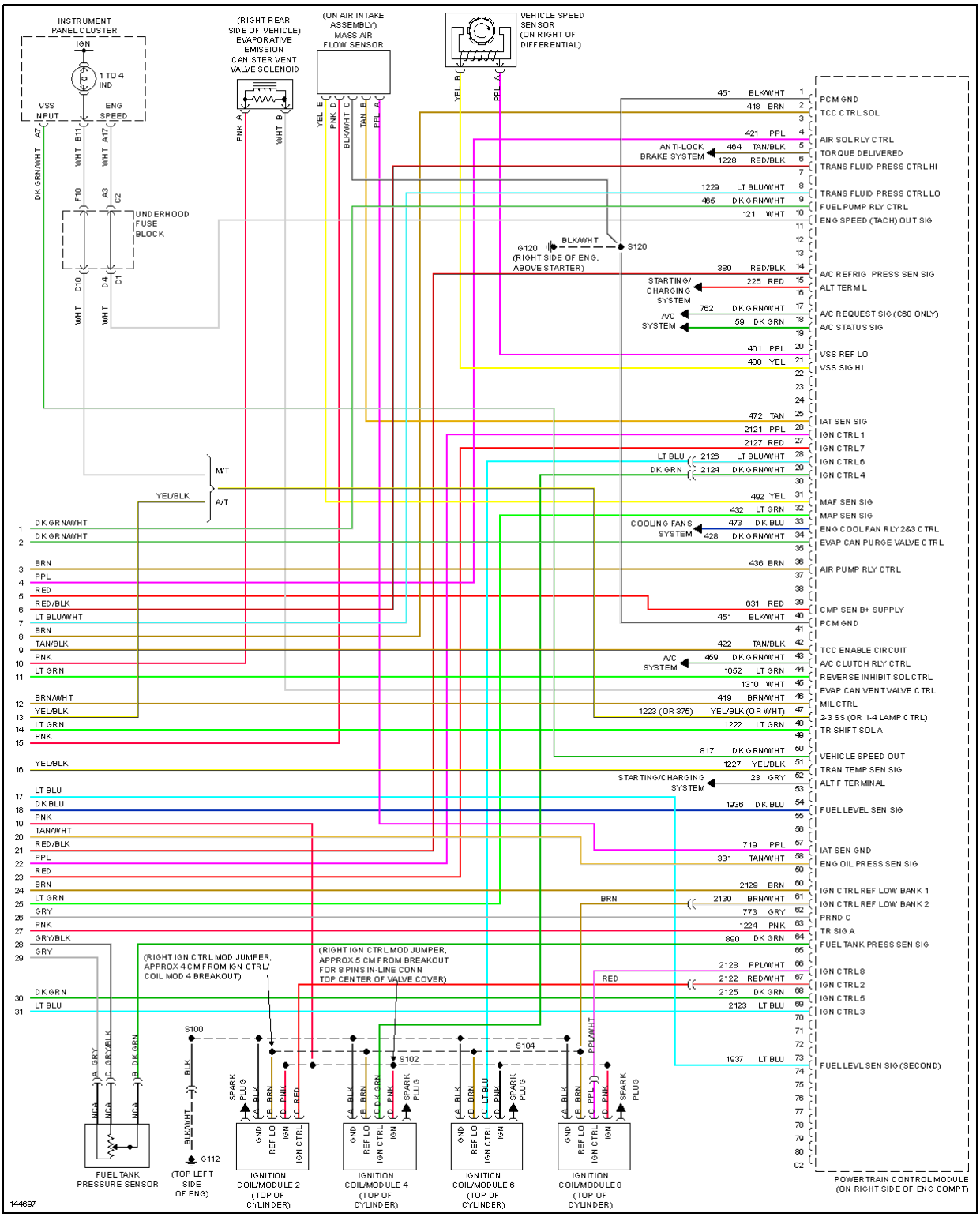

Fig. 16: 5.7L VIN G, Engine Performance Circuits (4 of 4)

EXTERIOR LIGHTS

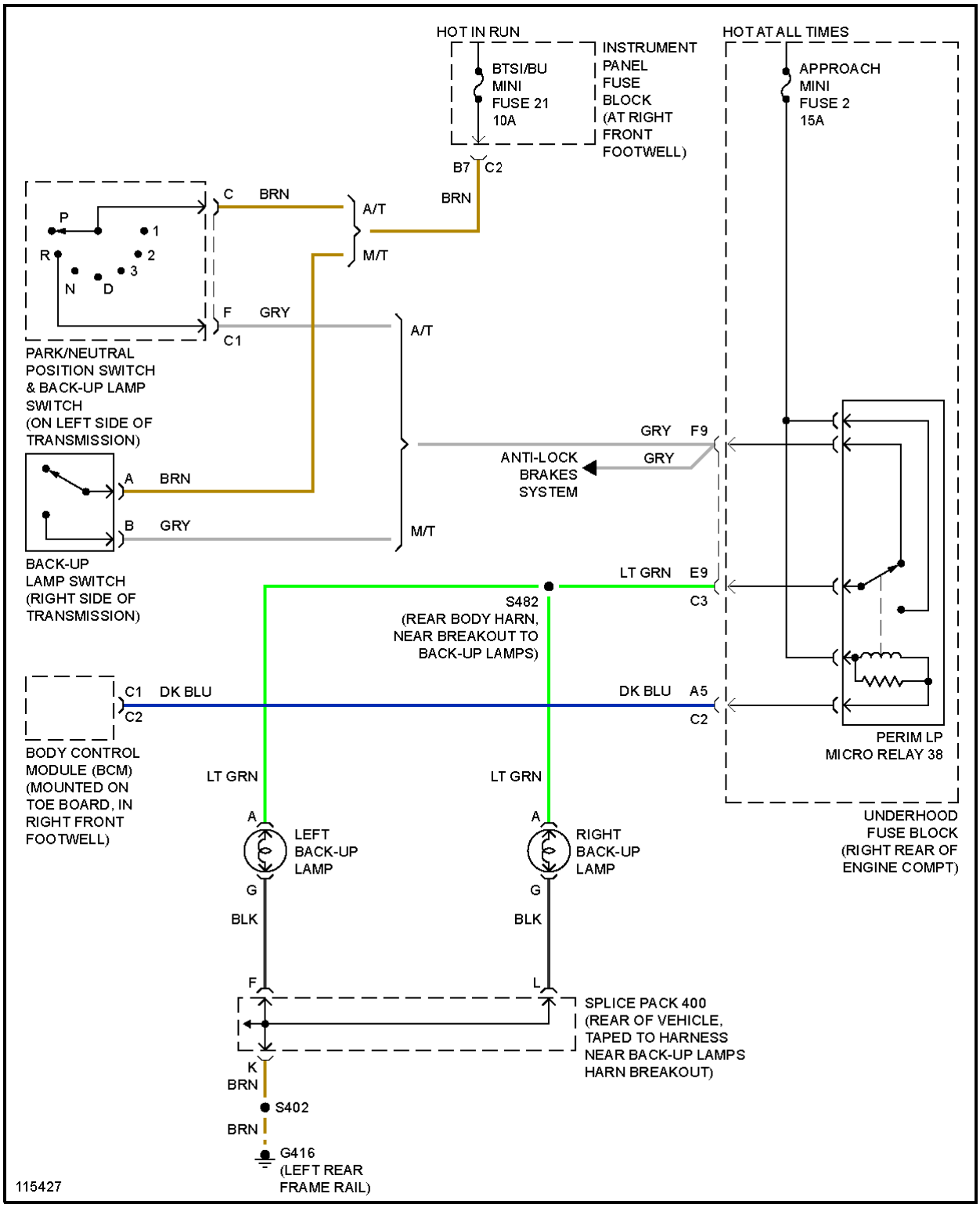
HOT IN RUN
BTSI/BU MINI FUSE 21 10A
INSTRUMENT PANEL FUSE BLOCK (AT RIGHT FRONT FOOTWELL)
HOT AT ALL TIMES
APPROACH MINI FUSE 2 15A
B7
C2
BRN
C
BRN
A/T
M/T
P
R
N
D
1
2
3
F
GRY
C1
A/T
PARK/NEUTRAL POSITION SWITCH & BACK-UP LAMP SWITCH (ON LEFT SIDE OF TRANSMISSION)
GRY
F9
ANTI-LOCK BRAKES SYSTEM
GRY
A
BRN
B
GRY
M/T
BACK-UP LAMP SWITCH (RIGHT SIDE OF TRANSMISSION)
LT GRN
E9
C3
S482 (REAR BODY HARN, NEAR BREAKOUT TO BACK-UP LAMPS)
C1
DK BLU
C2
DK BLU
A5
C2
BODY CONTROL MODULE (BCM) (MOUNTED ON TOE BOARD, IN RIGHT FRONT FOOTWELL)
PERIM LP MICRO RELAY 38
LT GRN
LT GRN
A
LEFT BACK-UP LAMP
G
BLK
A
RIGHT BACK-UP LAMP
G
BLK
UNDERHOOD FUSE BLOCK (RIGHT REAR OF ENGINE COMPT)
F
L
SPLICE PACK 400 (REAR OF VEHICLE, TAPED TO HARNESS NEAR BACK-UP LAMPS HARN BREAKOUT)
K
BRN
S402
BRN
G416 (LEFT REAR FRAME RAIL)
115427

Fig. 17: Back-up Lamps Circuit

2001 Chevrolet Corvette

2001 SYSTEM WIRING DIAGRAMS CHEVROLET Corvette

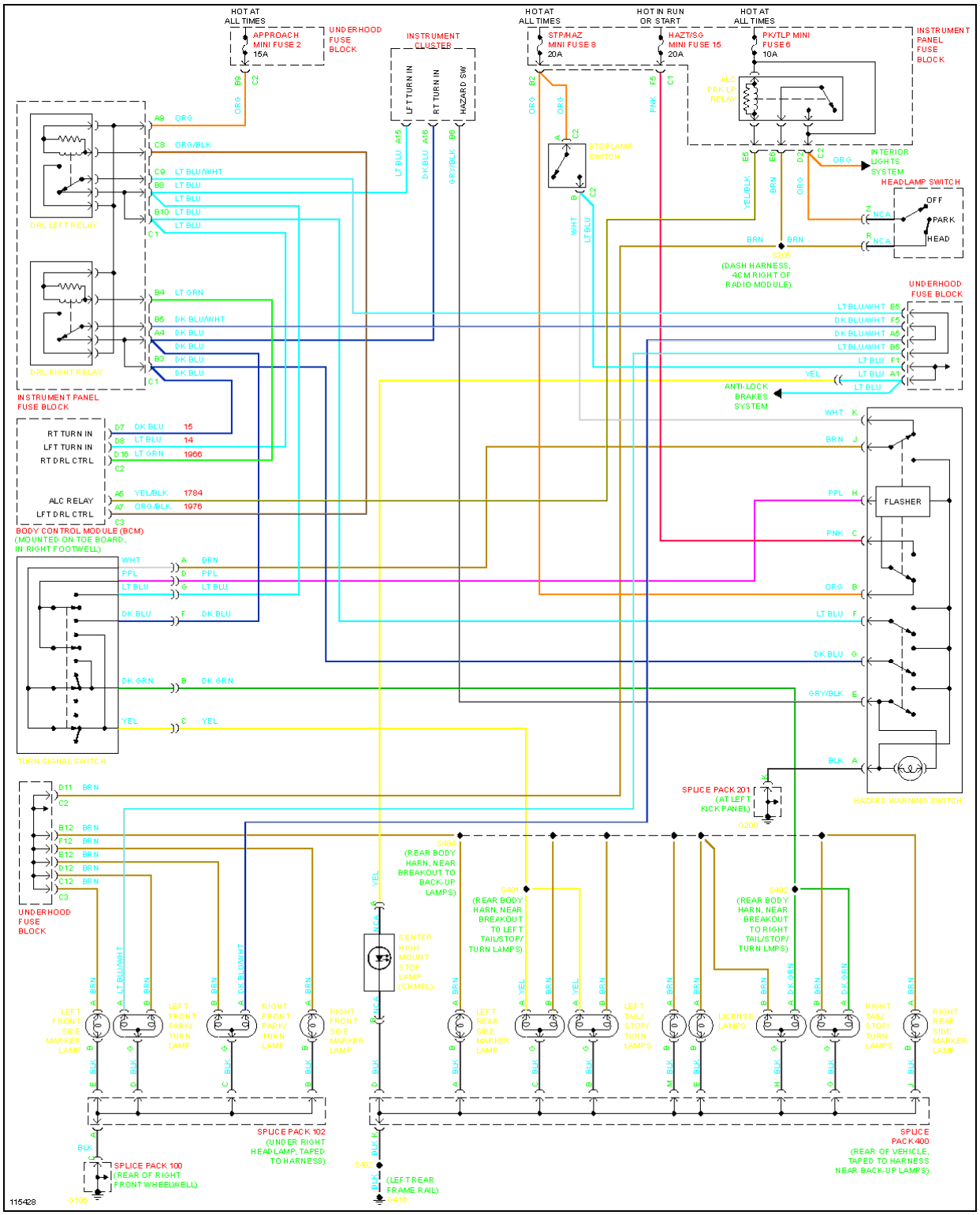

Fig. 18: Exterior Lamps Circuit

GROUND DISTRIBUTION

2001 Chevrolet Corvette

2001 SYSTEM WIRING DIAGRAMS CHEVROLET Corvette

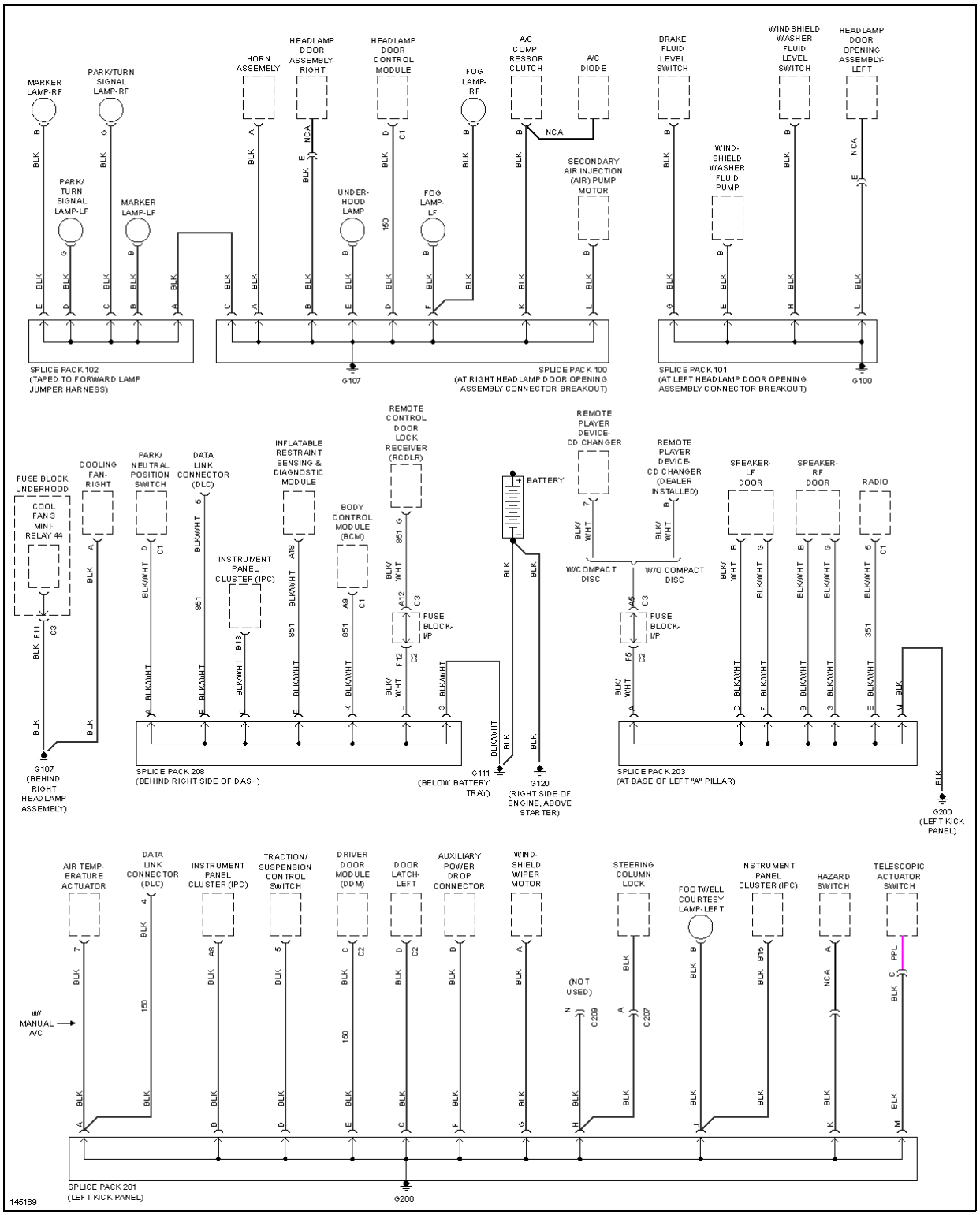

Fig. 19: Ground Distribution Circuit (1 of 3)

2001 Chevrolet Corvette

2001 SYSTEM WIRING DIAGRAMS CHEVROLET Corvette

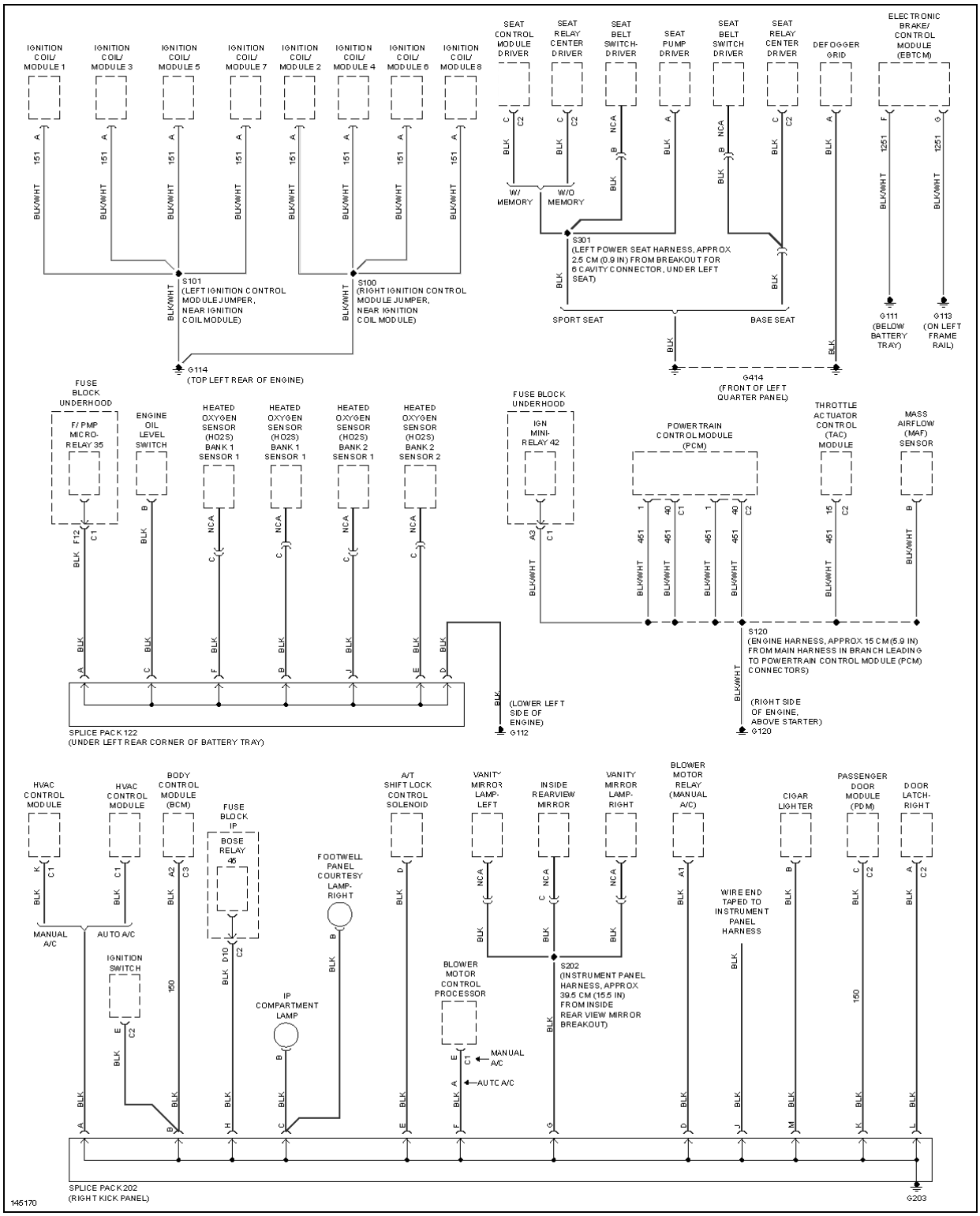

Fig. 20: Ground Distribution Circuit (2 of 3)

2001 Chevrolet Corvette

2001 SYSTEM WIRING DIAGRAMS CHEVROLET Corvette

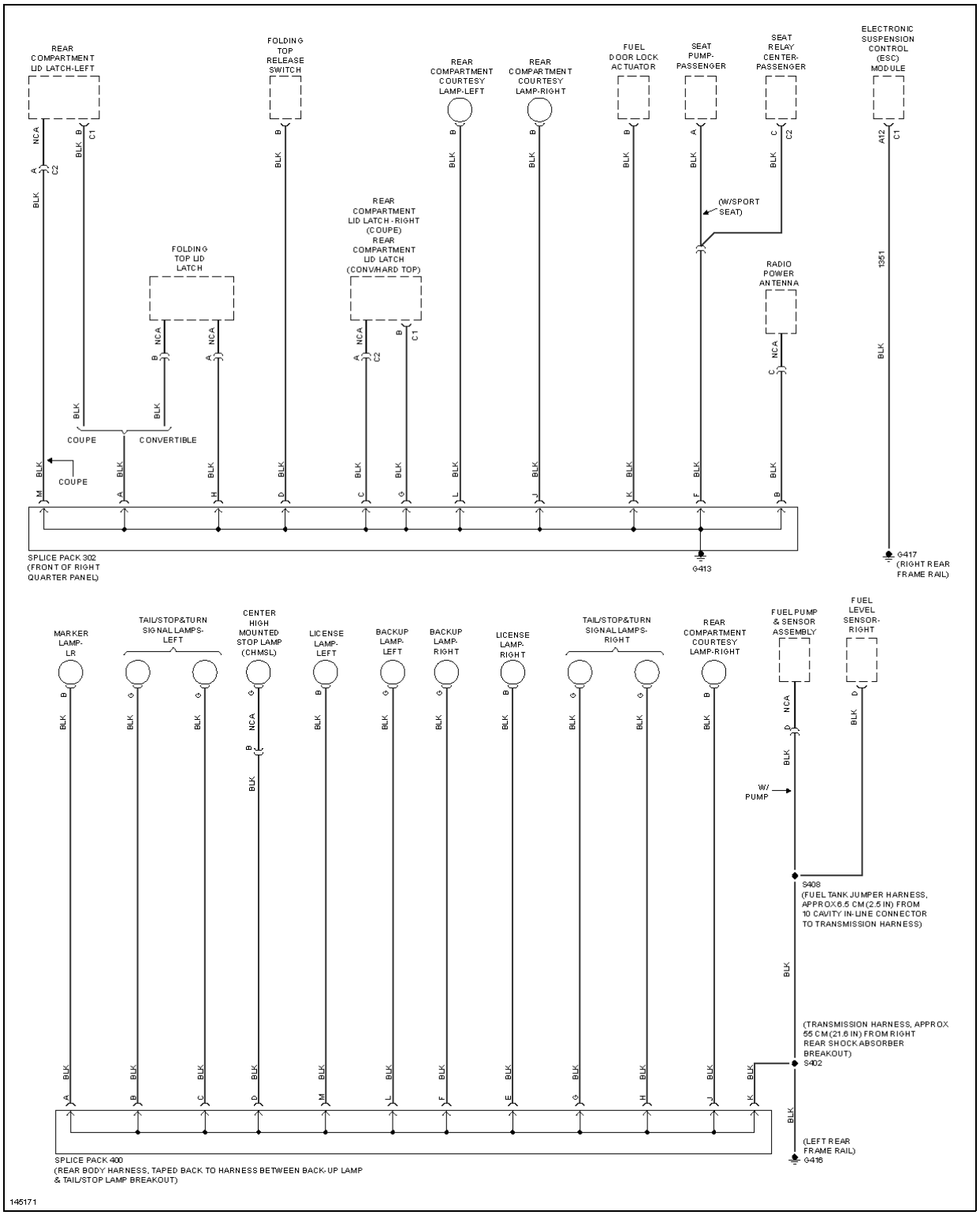

Fig. 21: Ground Distribution Circuit (3 of 3)

HEADLIGHTS

2001 Chevrolet Corvette

2001 SYSTEM WIRING DIAGRAMS CHEVROLET Corvette

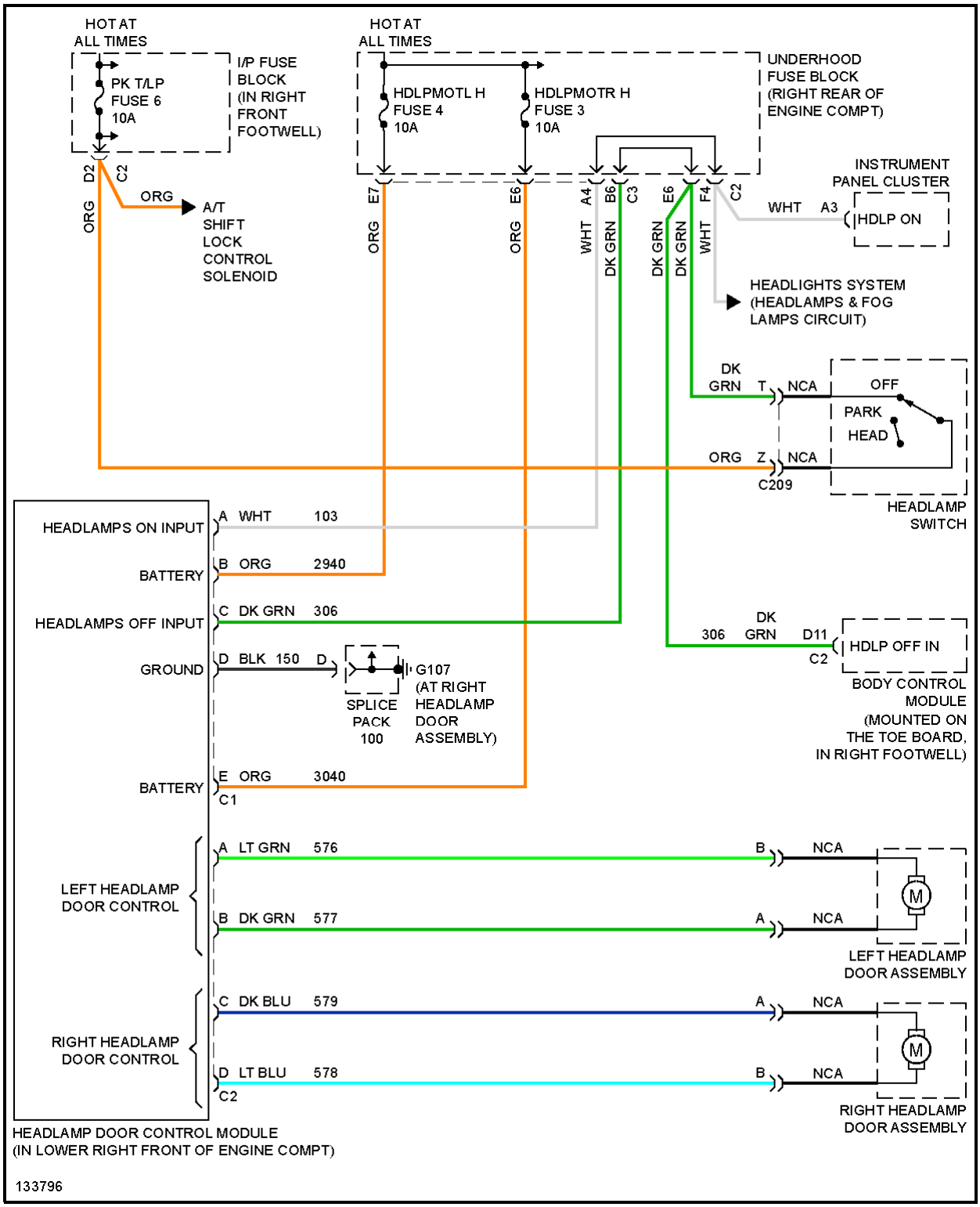

Fig. 22: Headlamp Doors Circuit

2001 Chevrolet Corvette

2001 SYSTEM WIRING DIAGRAMS CHEVROLET Corvette

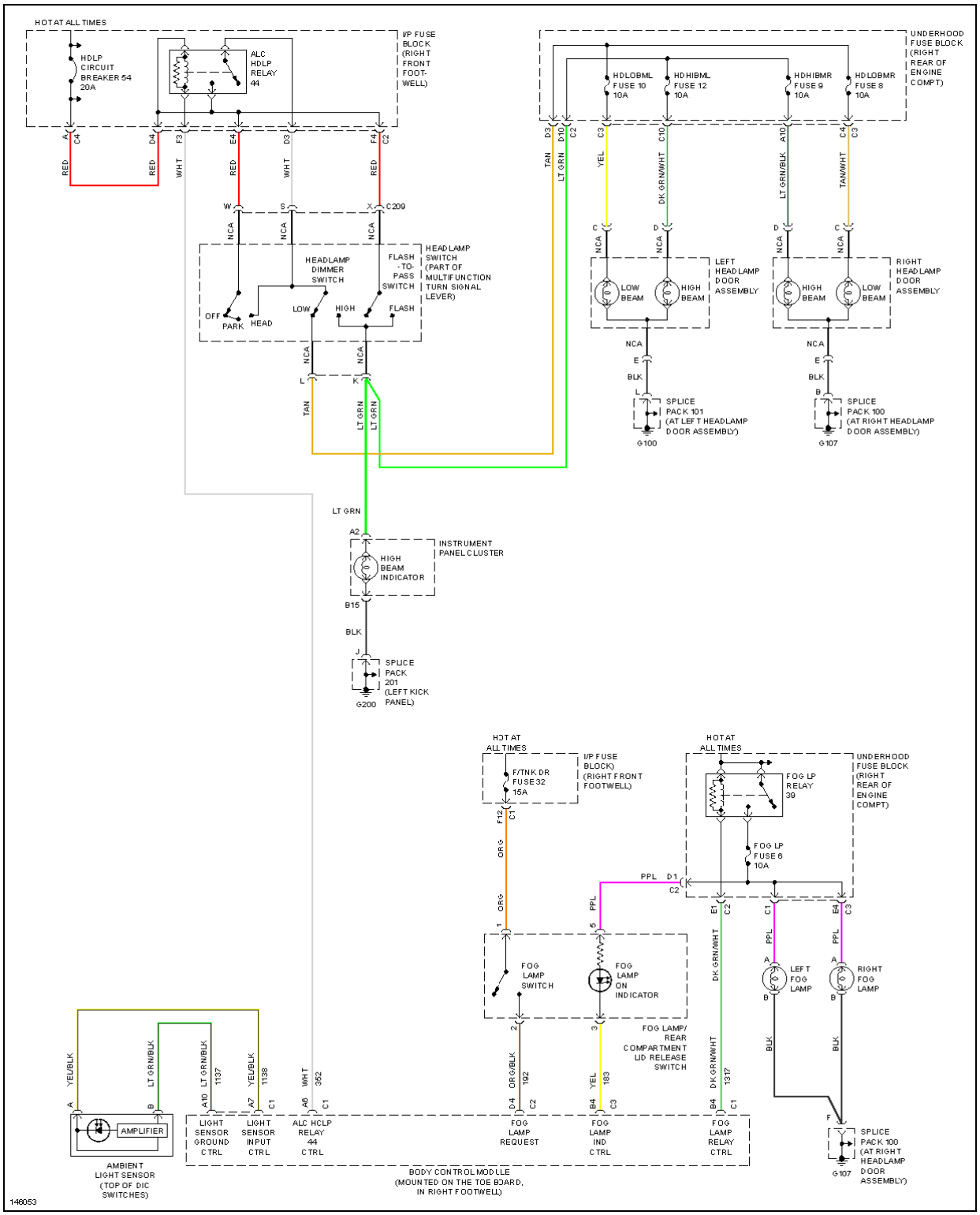

Fig. 23: Headlight Circuit

HORN

2001 Chevrolet Corvette

2001 SYSTEM WIRING DIAGRAMS CHEVROLET Corvette

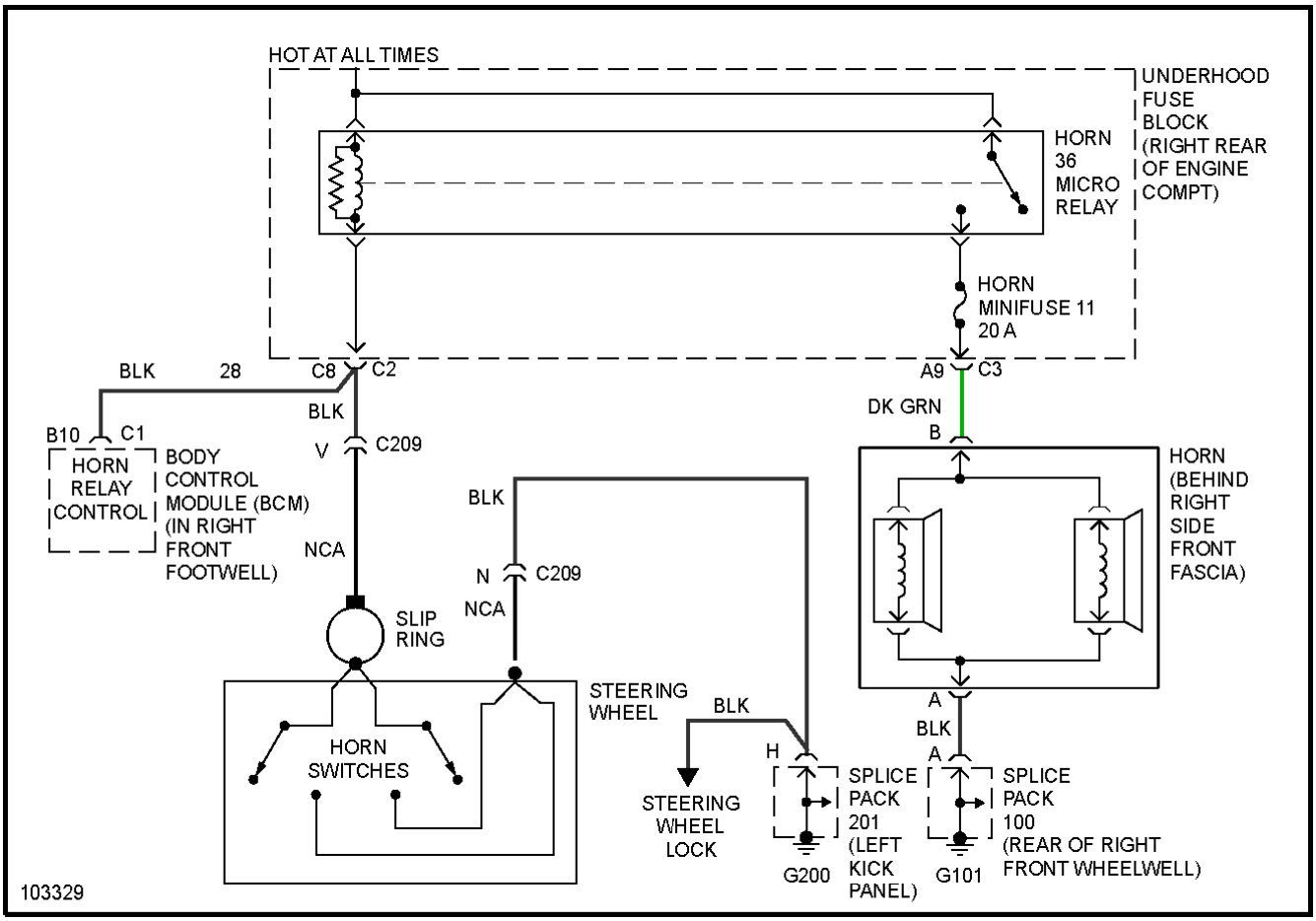

Fig. 24: Horn Circuit

INSTRUMENT CLUSTER

2001 Chevrolet Corvette

2001 SYSTEM WIRING DIAGRAMS CHEVROLET Corvette

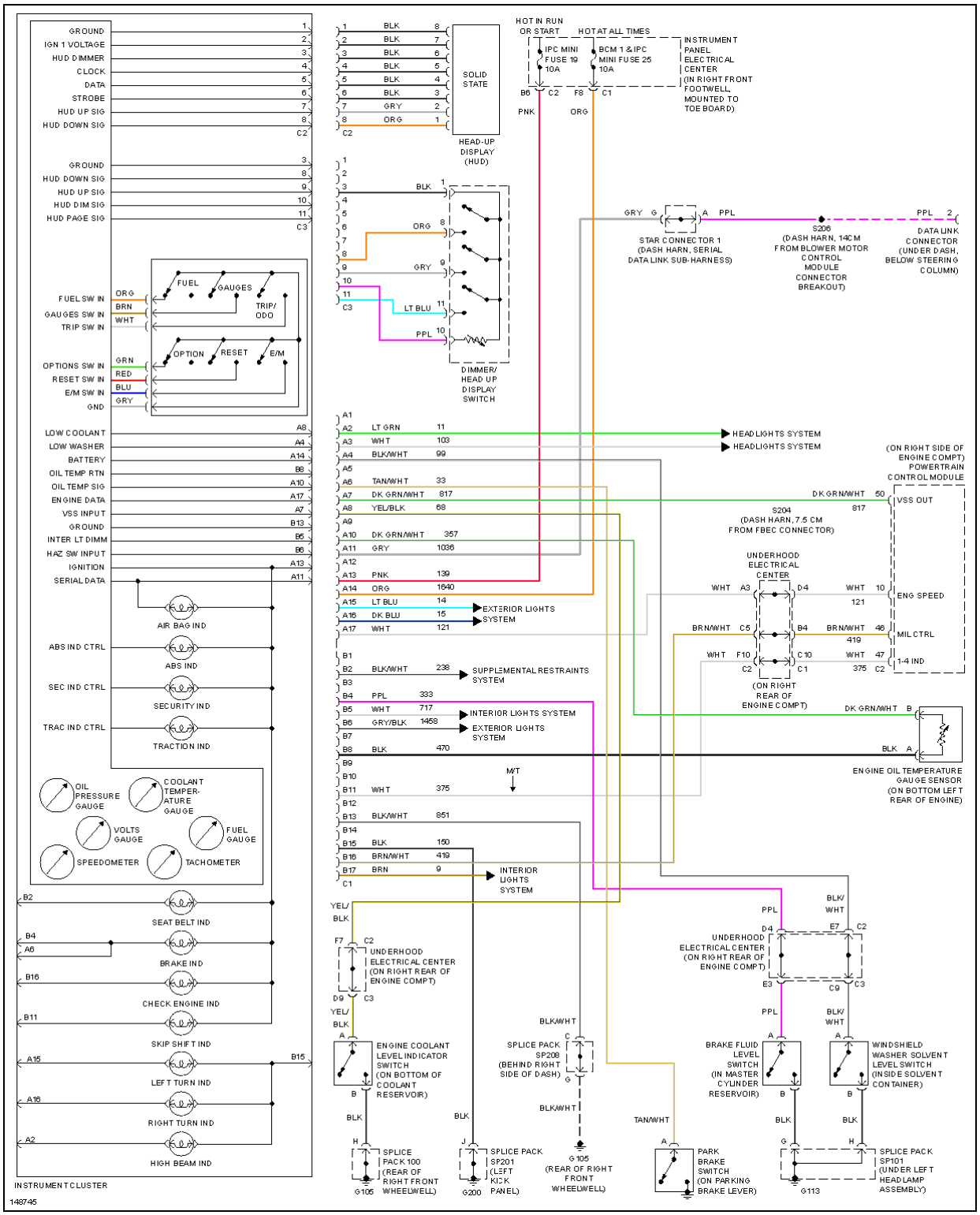

Fig. 25: Instrument Cluster Circuit

INTERIOR LIGHTS

2001 Chevrolet Corvette

2001 SYSTEM WIRING DIAGRAMS CHEVROLET Corvette

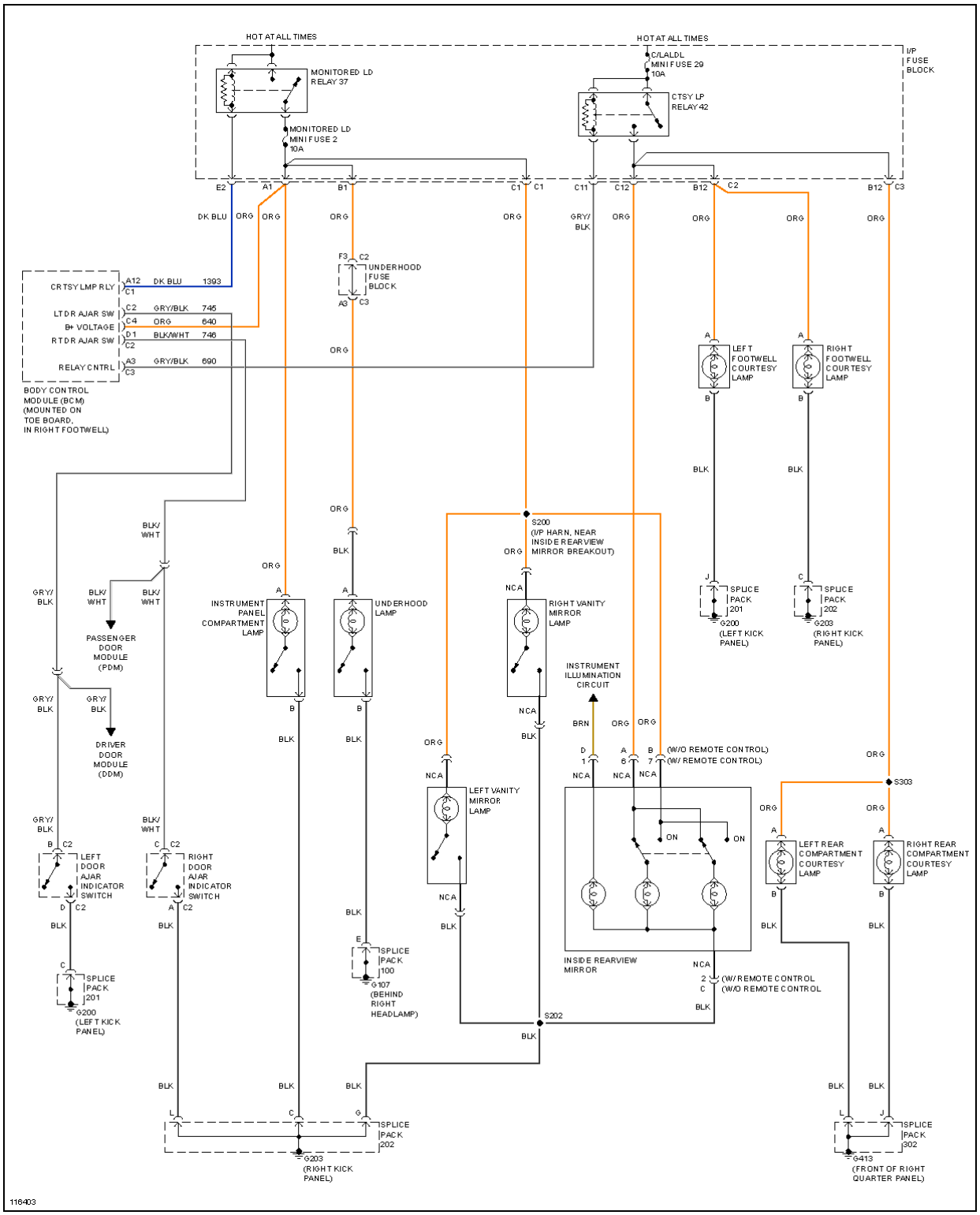

Fig. 26: Courtesy Lamps Circuit

2001 Chevrolet Corvette

2001 SYSTEM WIRING DIAGRAMS CHEVROLET Corvette

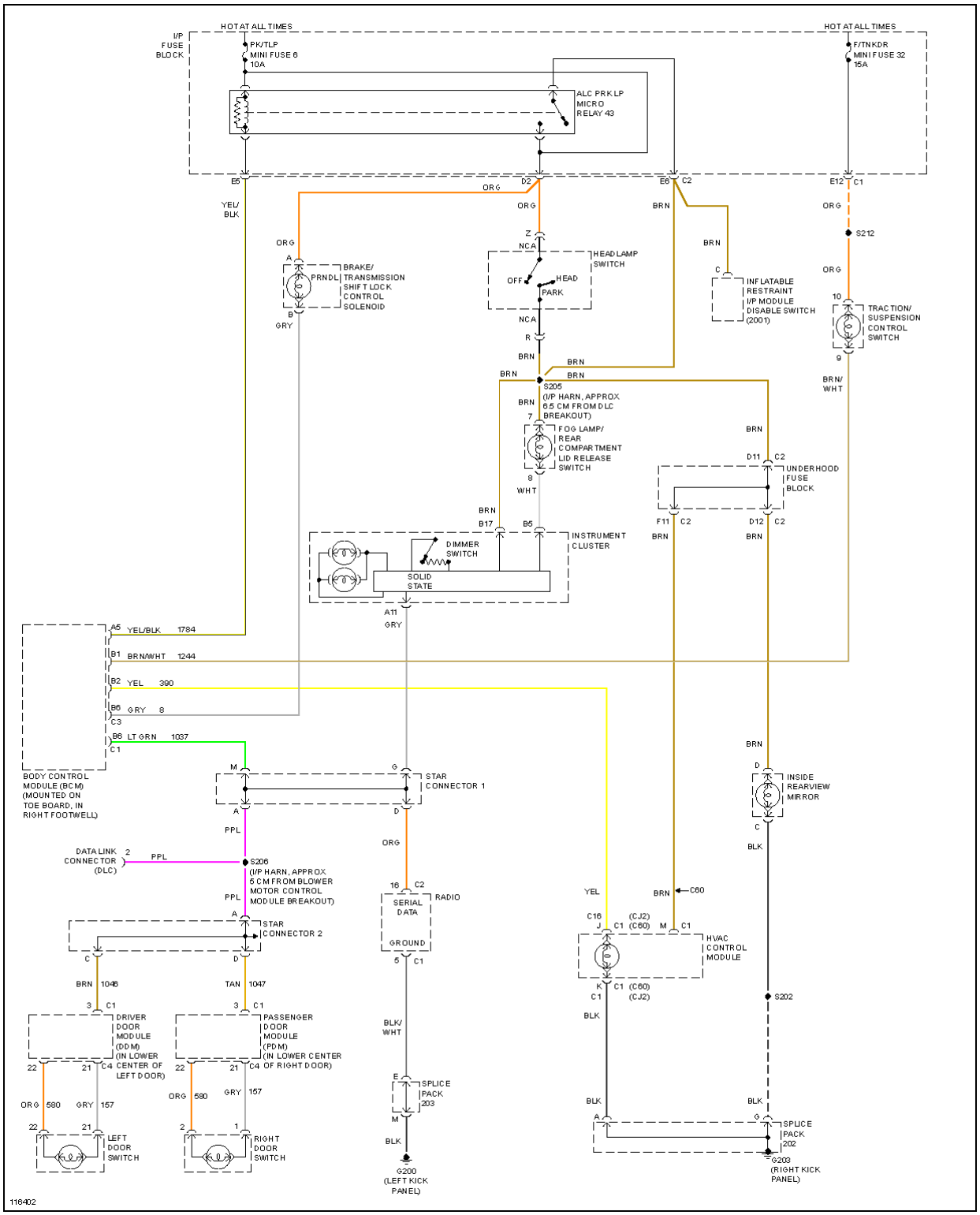

Fig. 27: Instrument Illumination Circuit

MEMORY SYSTEMS

2001 Chevrolet Corvette

2001 SYSTEM WIRING DIAGRAMS CHEVROLET Corvette

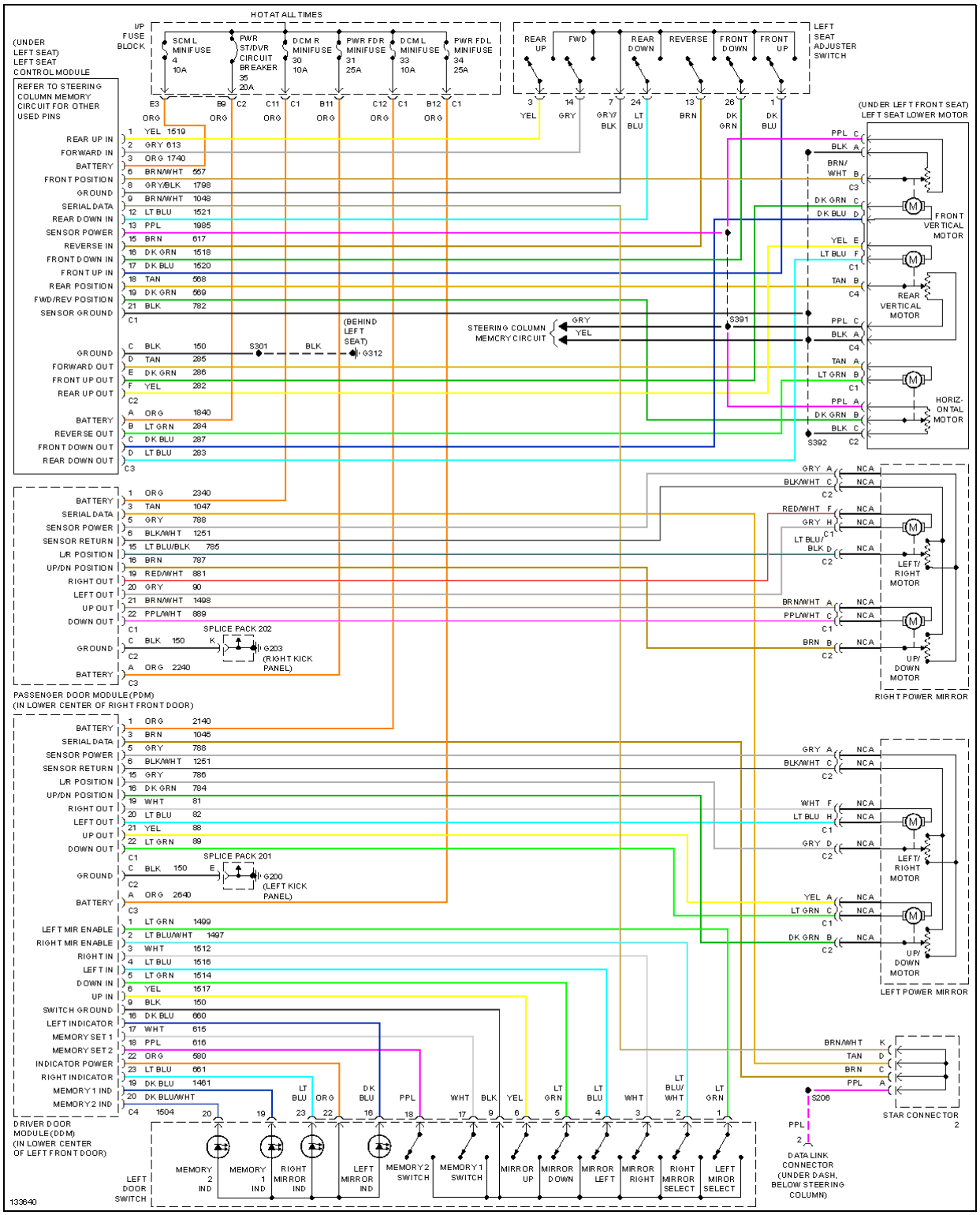

Fig. 28: Memory Seat & Mirrors Circuit

2001 Chevrolet Corvette

2001 SYSTEM WIRING DIAGRAMS CHEVROLET Corvette

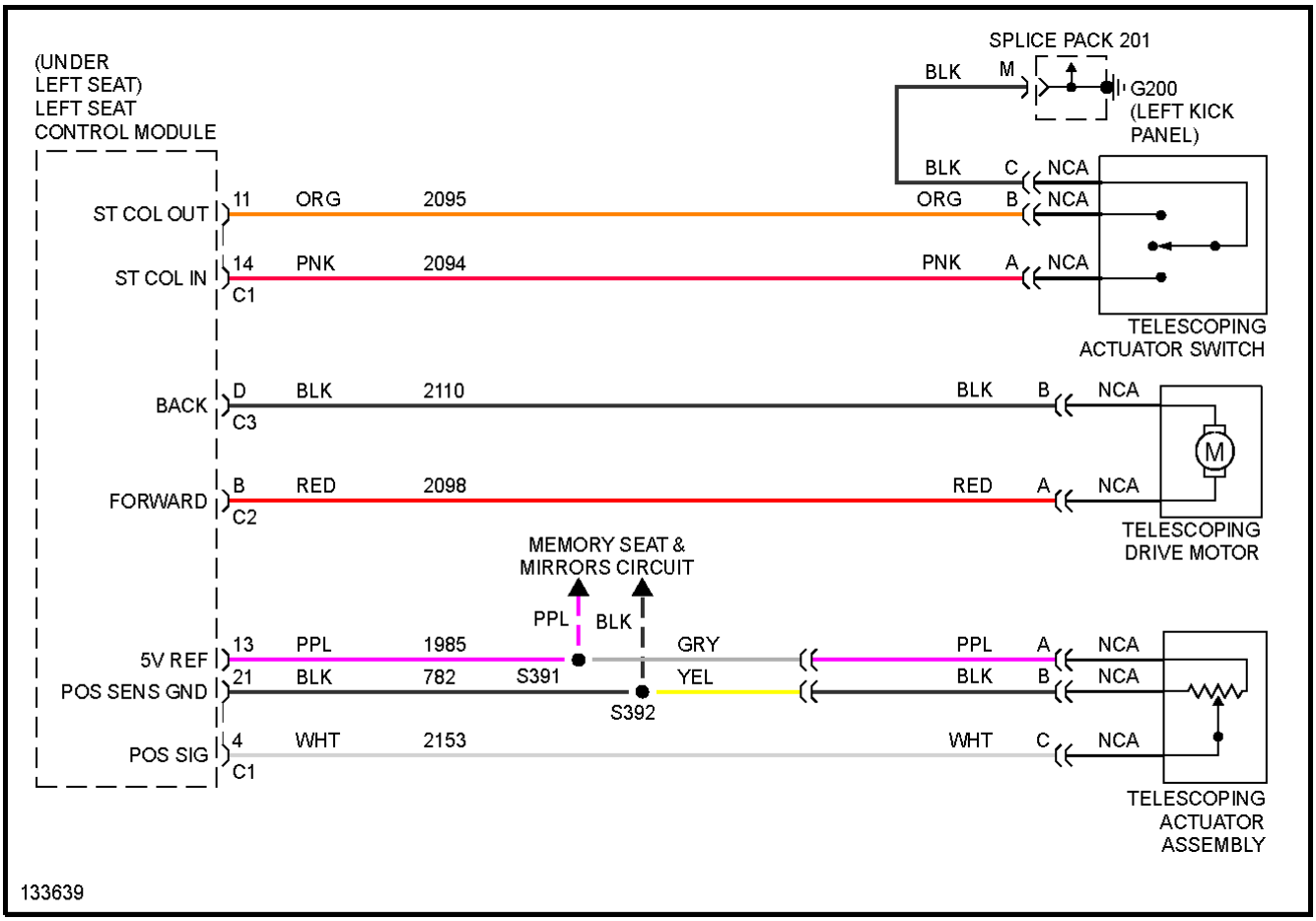

Fig. 29: Steering Column Memory Circuit

POWER ANTENNA

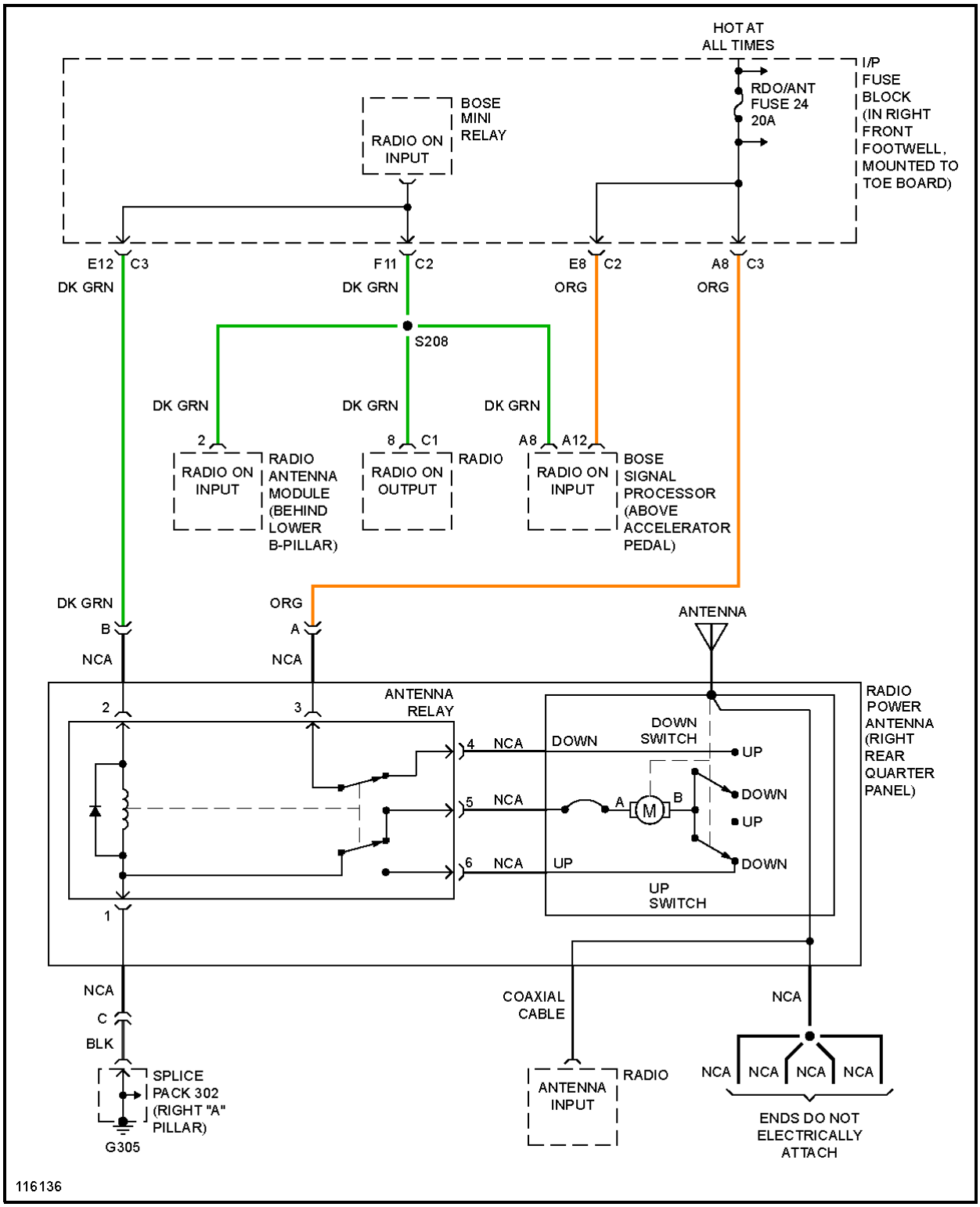
HOT AT ALL TIMES
I/P FUSE BLOCK (IN RIGHT FRONT FOOTWELL, MOUNTED TO TOE BOARD)
RDO/ANT FUSE 24 20A
BOSE MINI RELAY
RADIO ON INPUT
E12 C3
DK GRN
F11 C2
DK GRN
E8 C2
ORG
A8 C3
ORG
S208
DK GRN
DK GRN
DK GRN
2
RADIO ON INPUT
RADIO ANTENNA MODULE (BEHIND LOWER B-PILLAR)
8 C1
RADIO ON OUTPUT
RADIO
A8 A12
RADIO ON INPUT
BOSE SIGNAL PROCESSOR (ABOVE ACCELERATOR PEDAL)
DK GRN
B
NCA
ORG
A
NCA
ANTENNA
ANTENNA RELAY
2
3
1
4 NCA
5 NCA
6 NCA
DOWN
UP
DOWN SWITCH
UP SWITCH
A
B
M
UP
DOWN
UP
DOWN
RADIO POWER ANTENNA (RIGHT REAR QUARTER PANEL)
NCA
C
BLK
SPLICE PACK 302 (RIGHT "A" PILLAR)
G305
COAXIAL CABLE
ANTENNA INPUT
RADIO
NCA
NCA NCA NCA NCA
ENDS DO NOT ELECTRICALLY ATTACH
116136

Fig. 30: Power Antenna Circuit

POWER DISTRIBUTION

2001 Chevrolet Corvette

2001 SYSTEM WIRING DIAGRAMS CHEVROLET Corvette

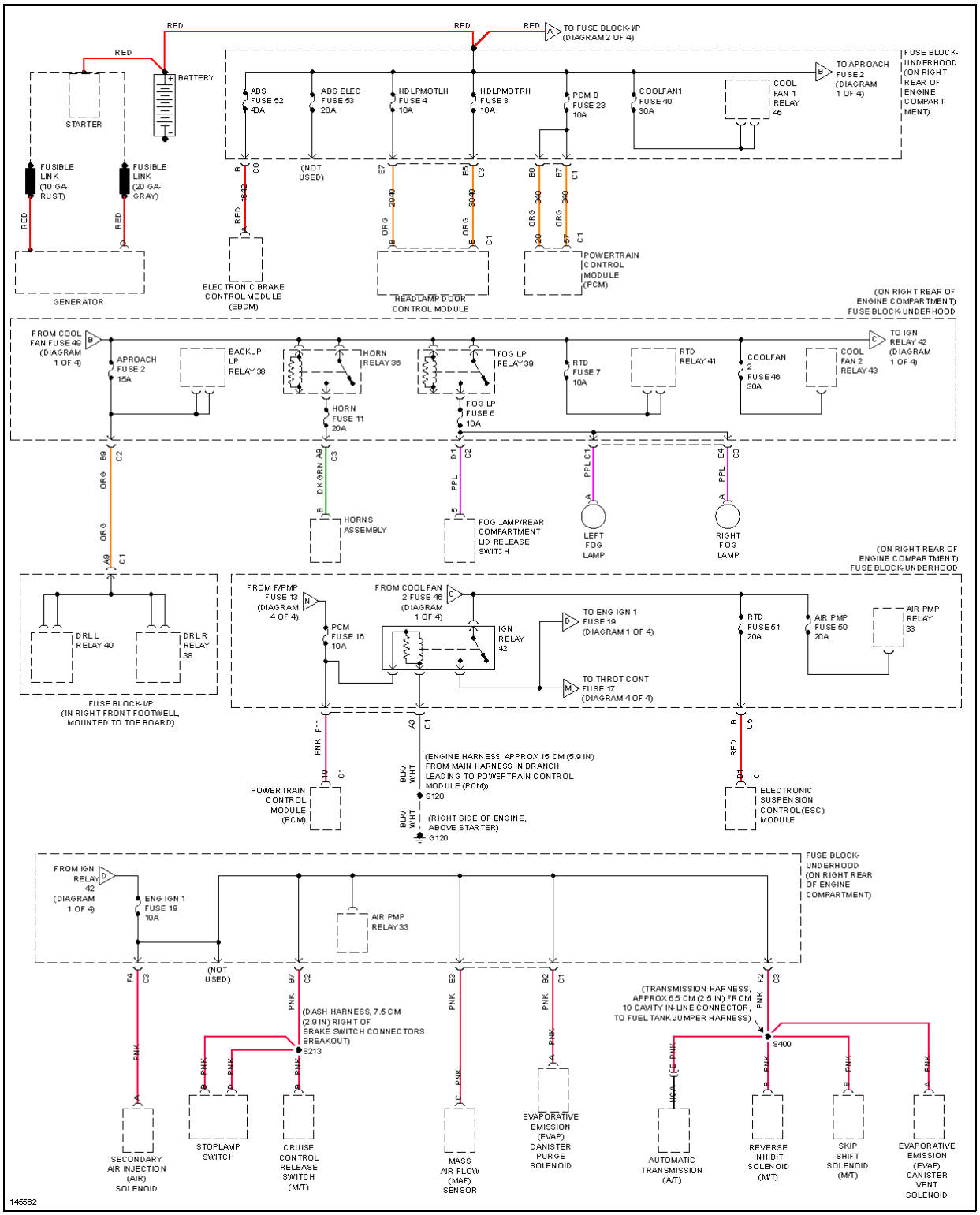

Fig. 31: Power Distribution Circuit (1 of 4)

2001 Chevrolet Corvette

2001 SYSTEM WIRING DIAGRAMS CHEVROLET Corvette

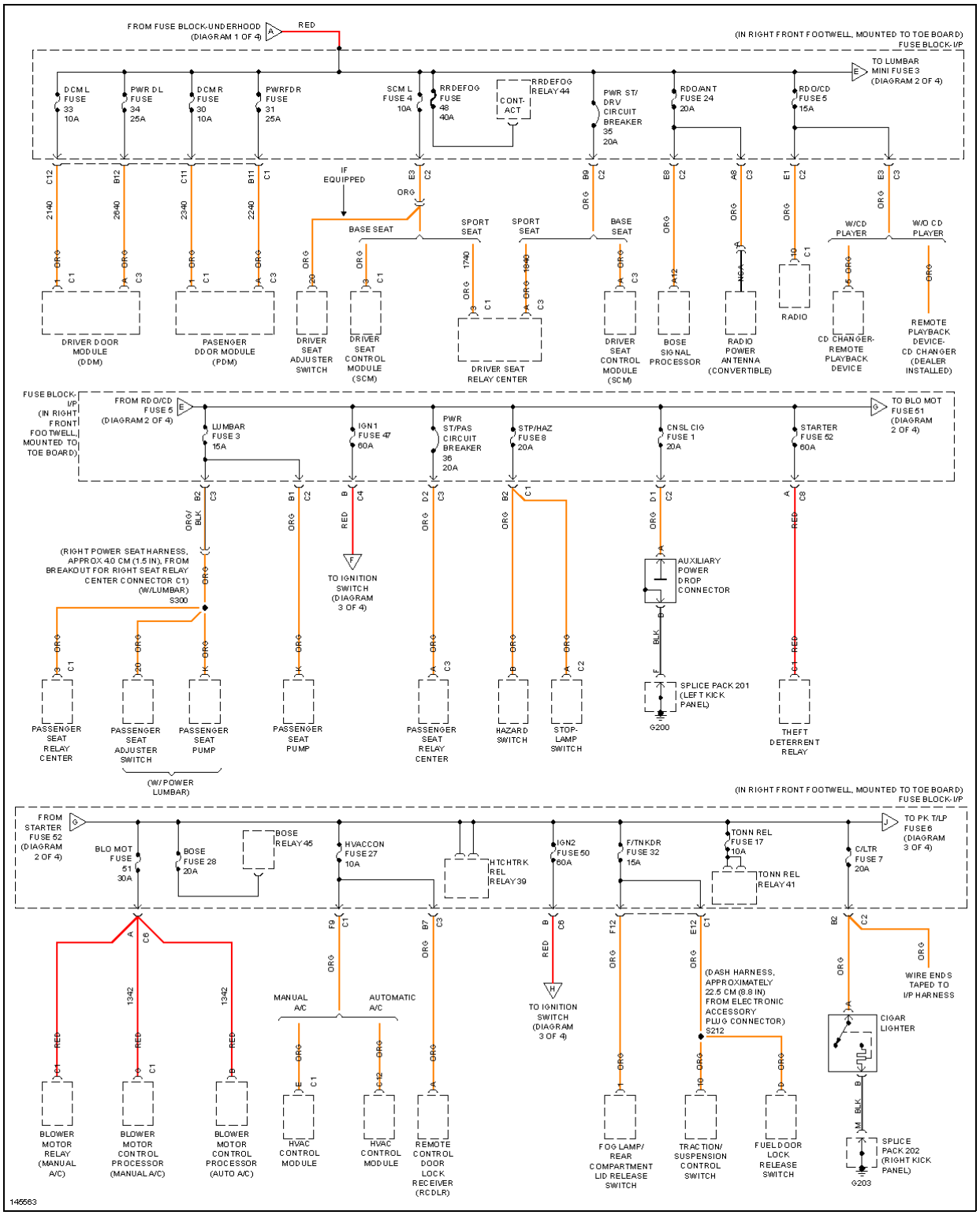

Fig. 32: Power Distribution Circuit (2 of 4)

2001 Chevrolet Corvette

2001 SYSTEM WIRING DIAGRAMS CHEVROLET Corvette

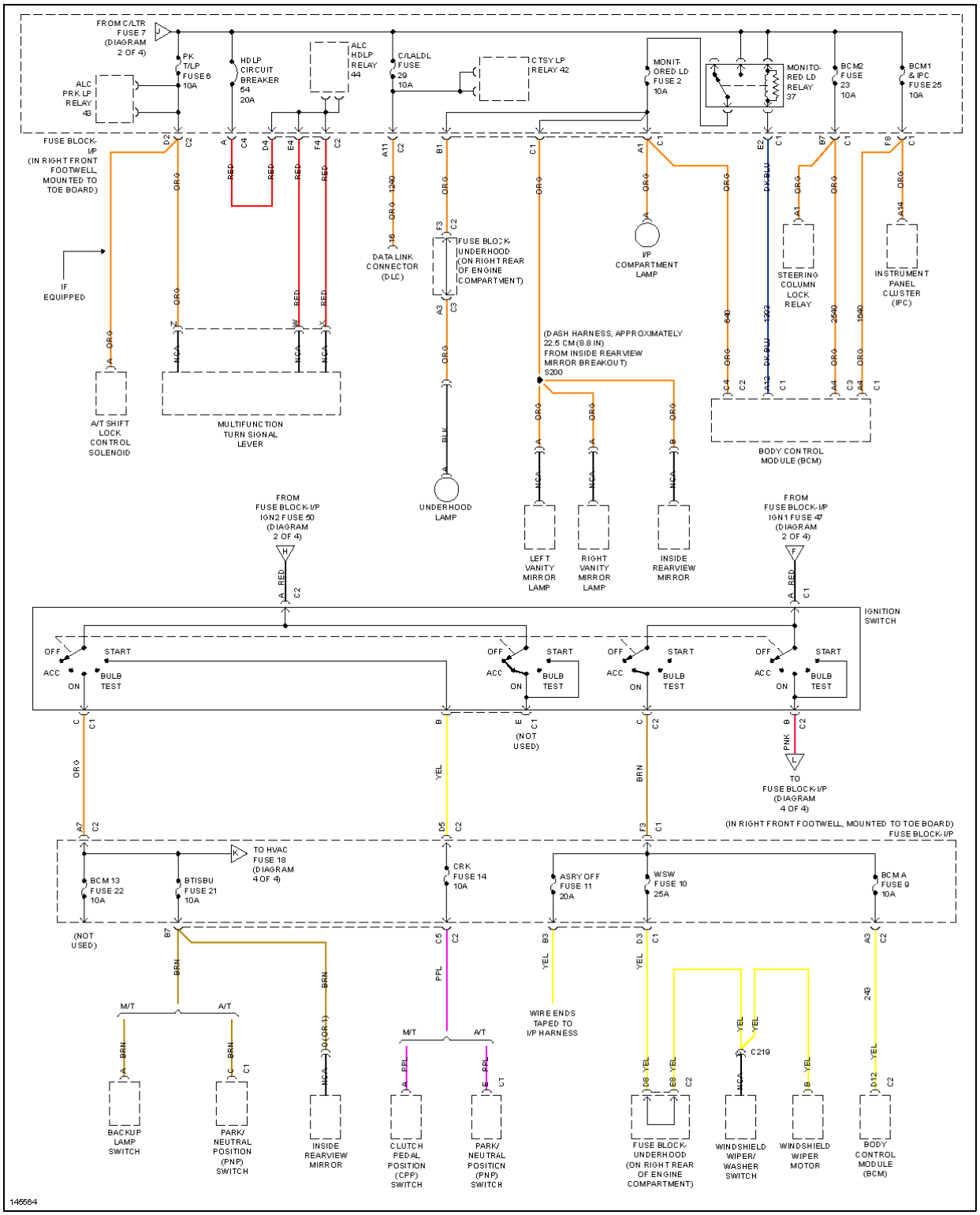

Fig. 33: Power Distribution Circuit (3 of 4)

2001 Chevrolet Corvette

2001 SYSTEM WIRING DIAGRAMS CHEVROLET Corvette

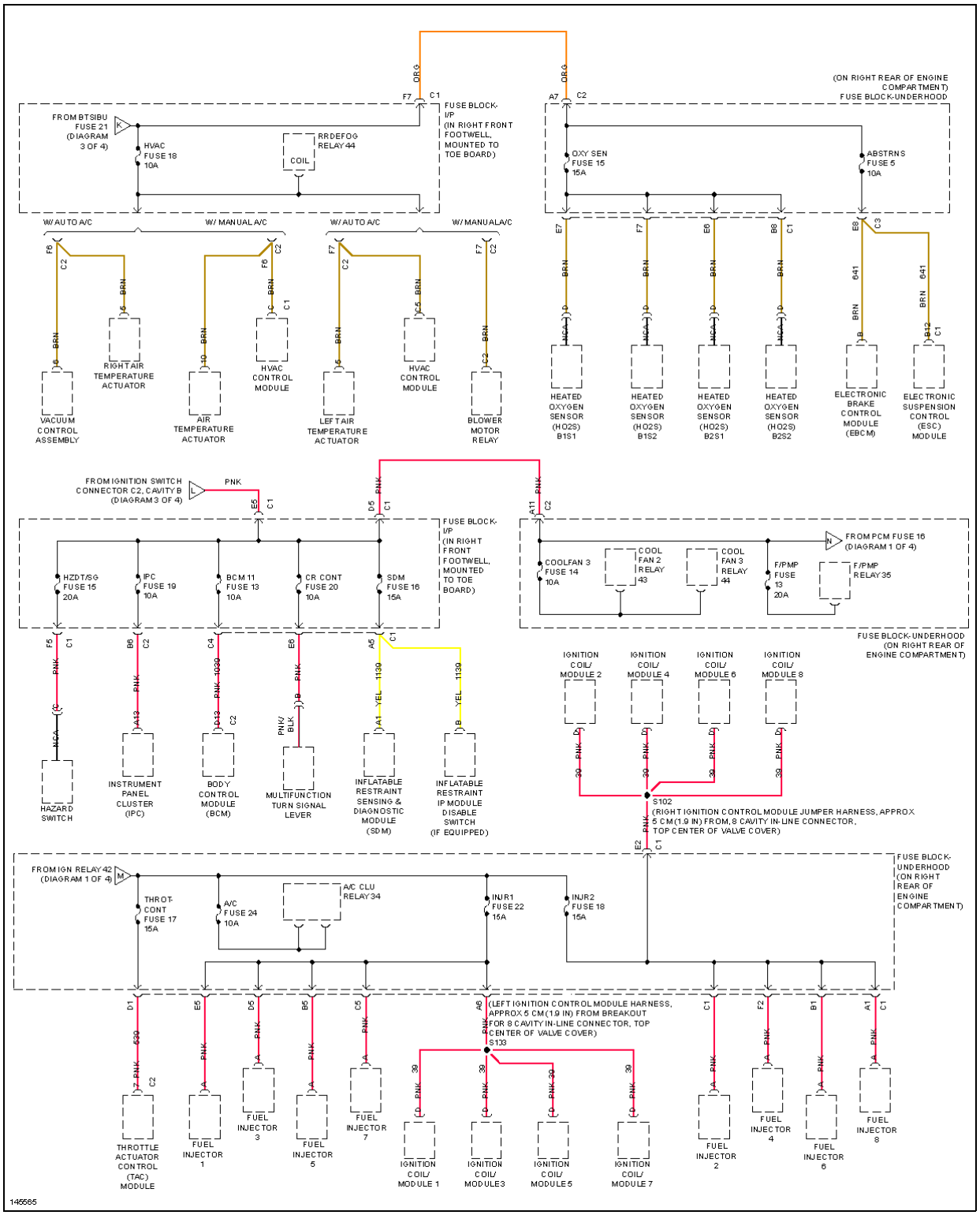

Fig. 34: Power Distribution Circuit (4 of 4)

POWER DOOR LOCKS

2001 Chevrolet Corvette

2001 SYSTEM WIRING DIAGRAMS CHEVROLET Corvette

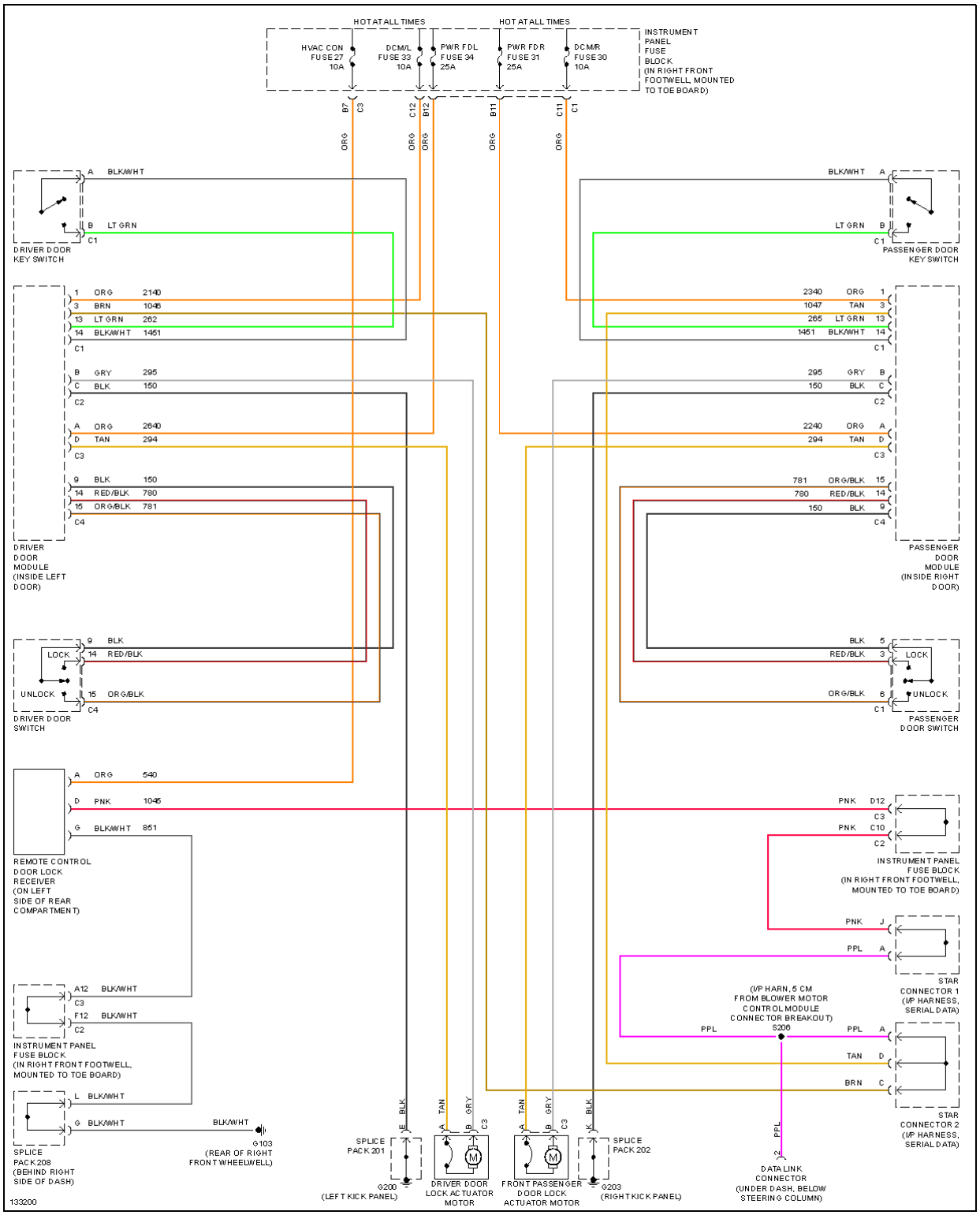

Fig. 35: Power Door Lock Circuit

POWER MIRRORS

2001 Chevrolet Corvette

2001 SYSTEM WIRING DIAGRAMS CHEVROLET Corvette

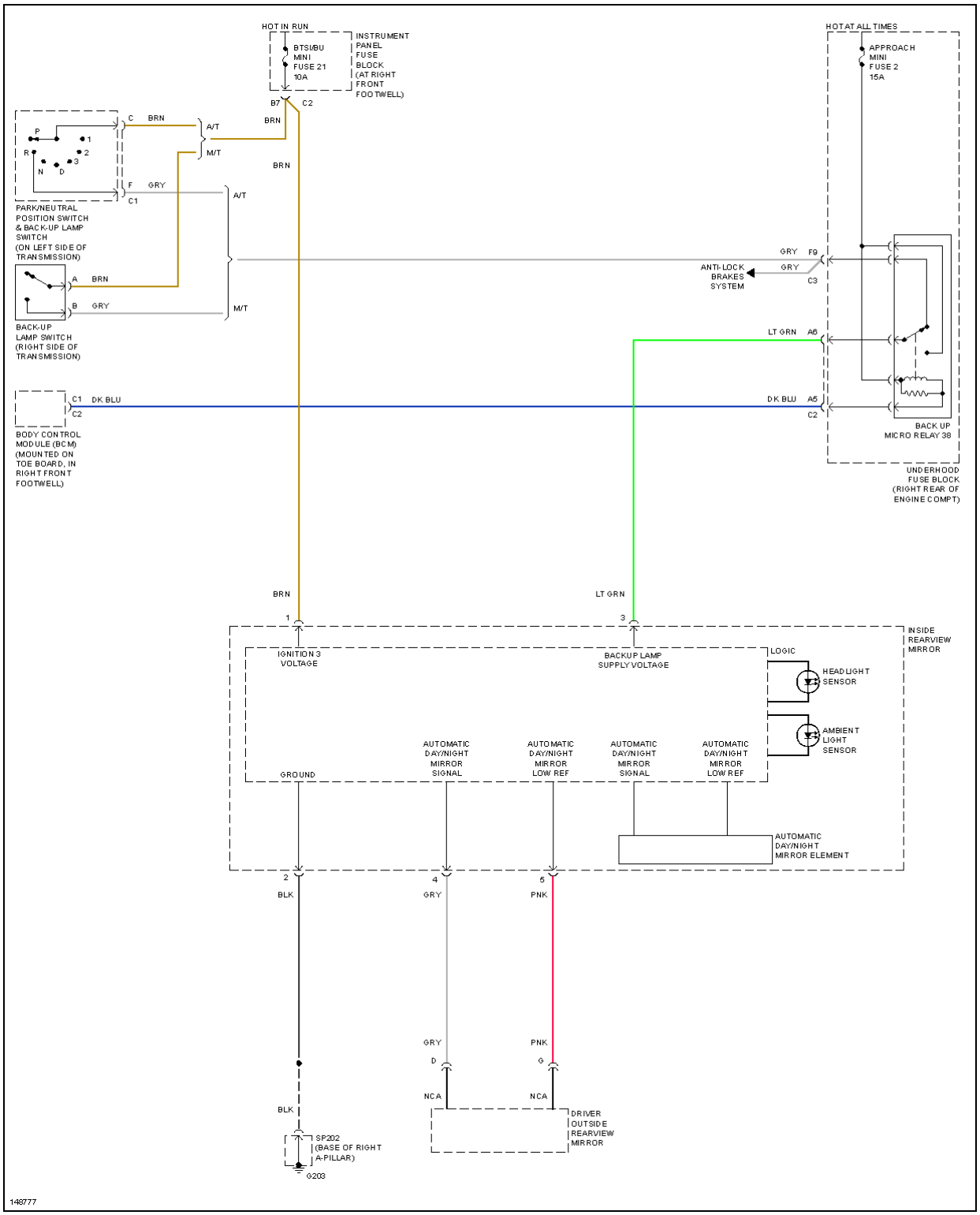

Fig. 36: Electronic Day/Night Mirror Circuit

2001 Chevrolet Corvette

2001 SYSTEM WIRING DIAGRAMS CHEVROLET Corvette

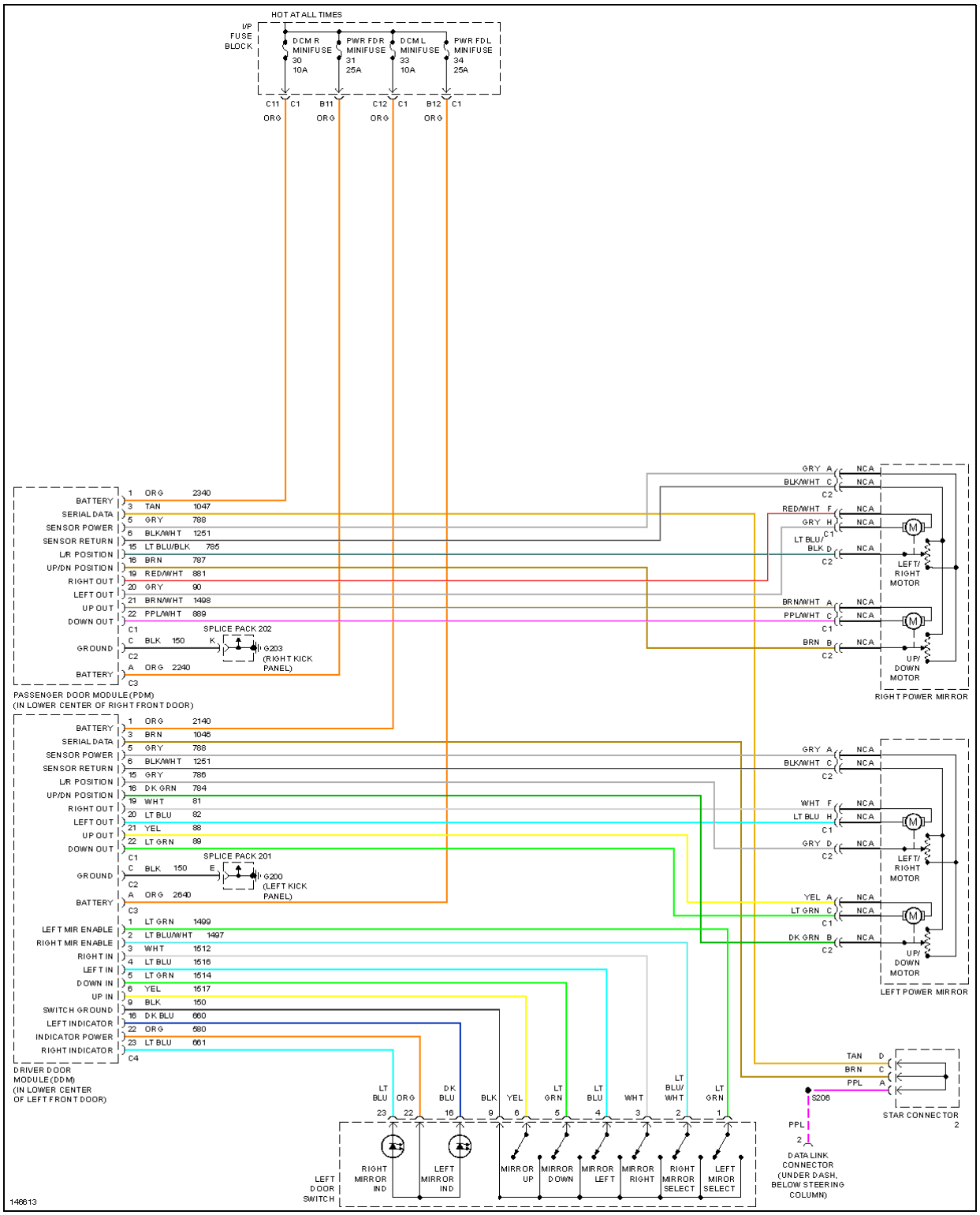

Fig. 37: Power Mirror Circuit

POWER SEATS

2001 Chevrolet Corvette

2001 SYSTEM WIRING DIAGRAMS CHEVROLET Corvette

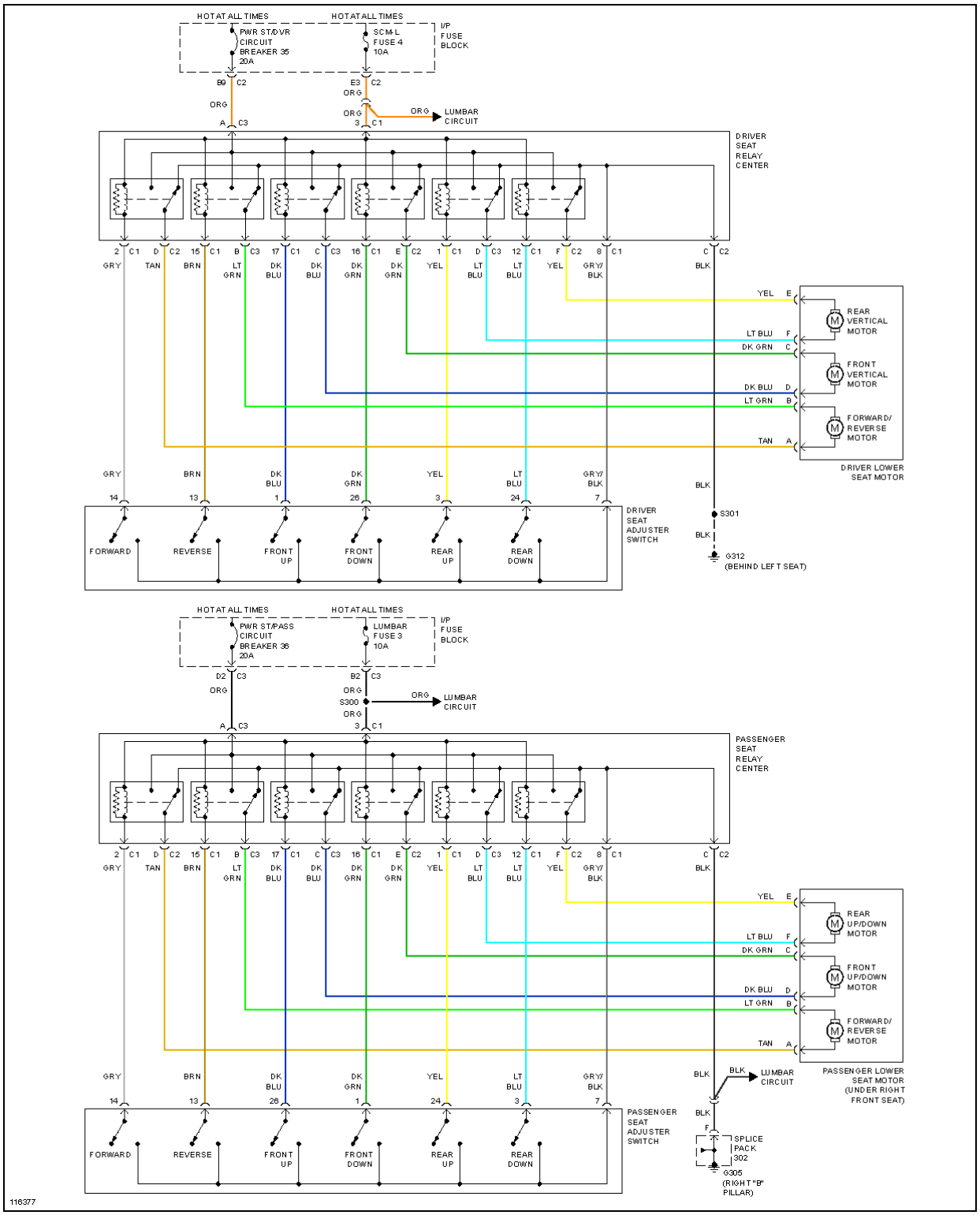

Fig. 38: 6-Way Power Seat Circuit

2001 Chevrolet Corvette

2001 SYSTEM WIRING DIAGRAMS CHEVROLET Corvette

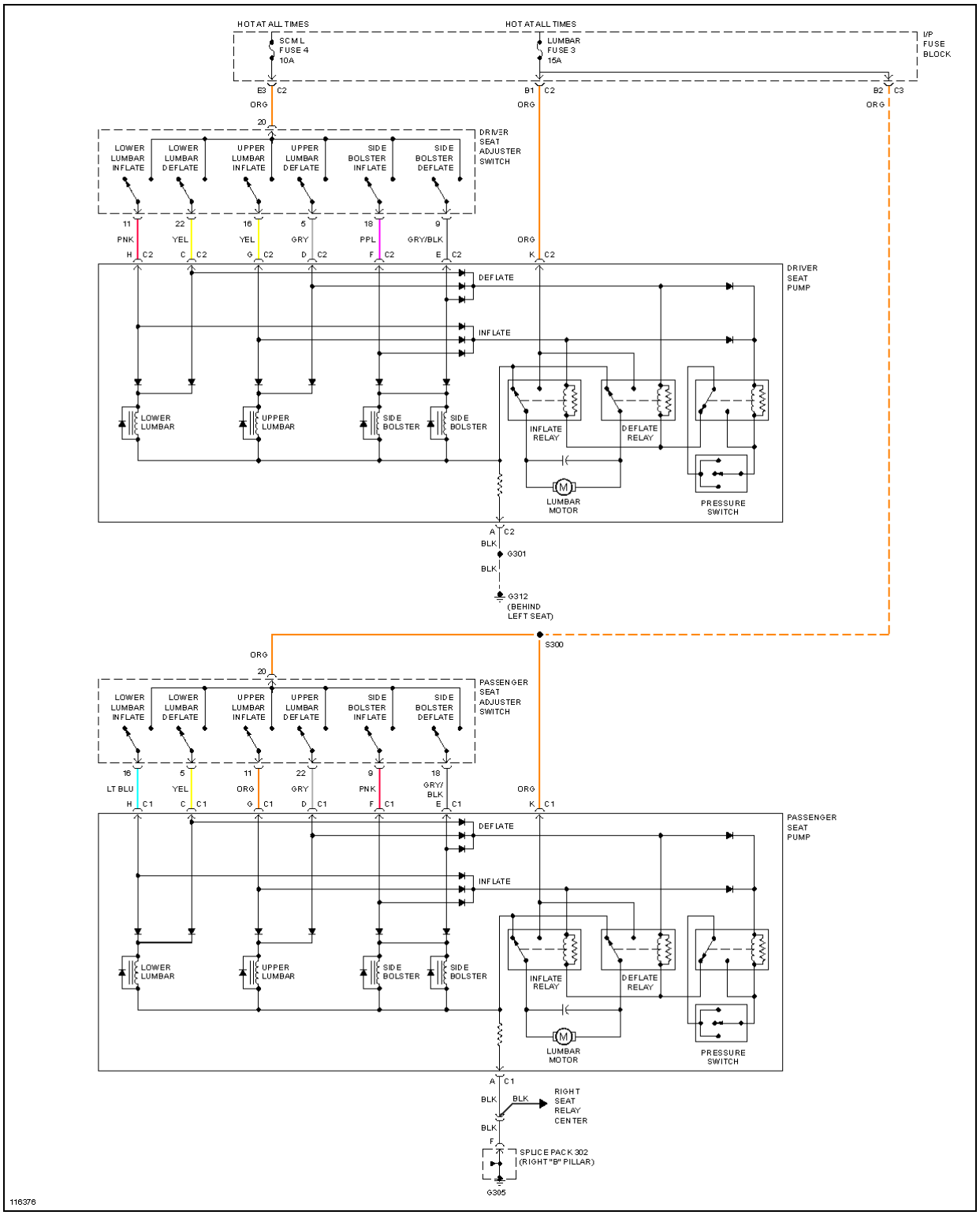

Fig. 39: Lumbar Circuit

POWER WINDOWS

2001 Chevrolet Corvette

2001 SYSTEM WIRING DIAGRAMS CHEVROLET Corvette

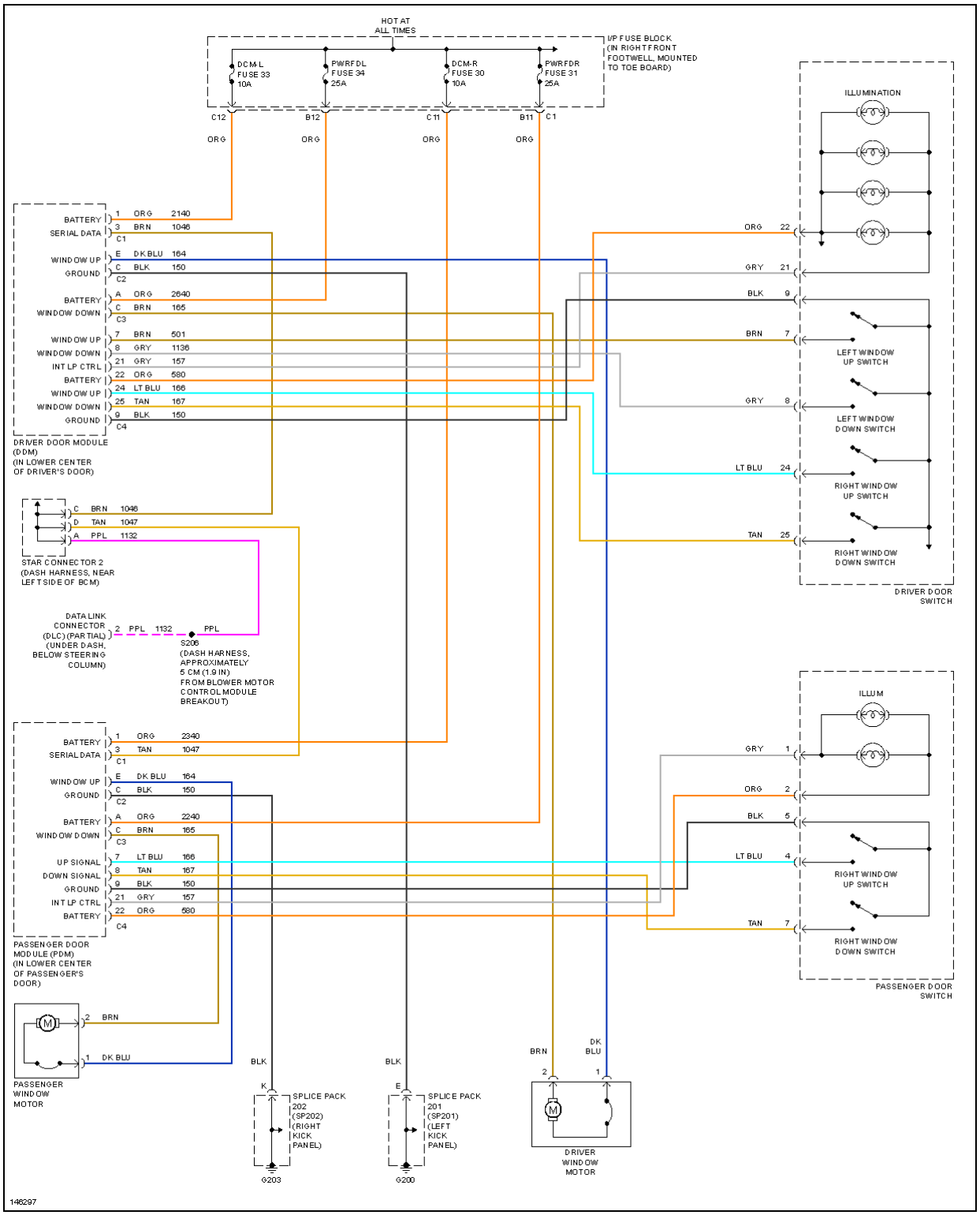

Fig. 40: Power Window Circuit

RADIO

2001 Chevrolet Corvette

2001 SYSTEM WIRING DIAGRAMS CHEVROLET Corvette

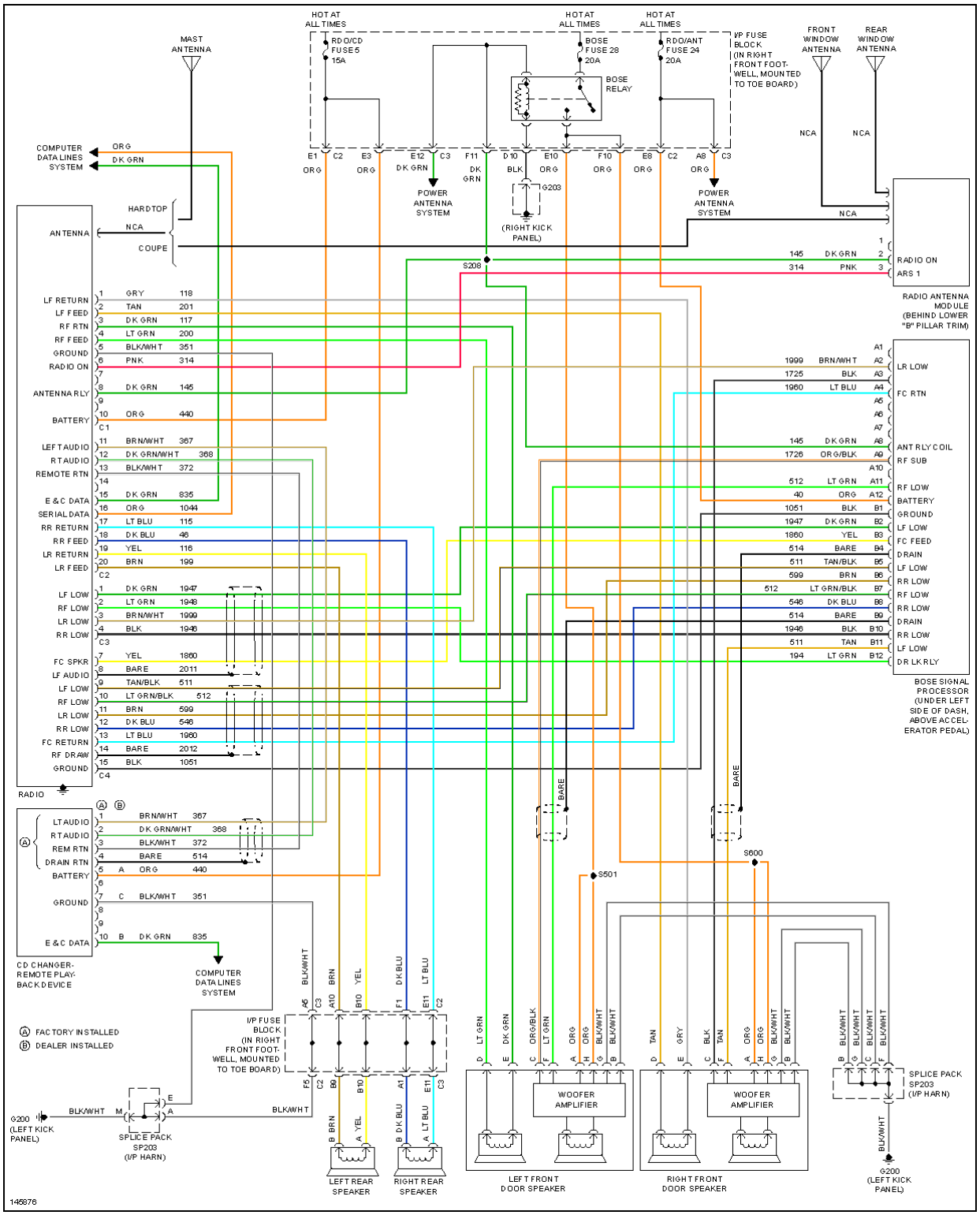

Fig. 41: Radio Circuits

SHIFT INTERLOCKS

2001 Chevrolet Corvette

2001 SYSTEM WIRING DIAGRAMS CHEVROLET Corvette

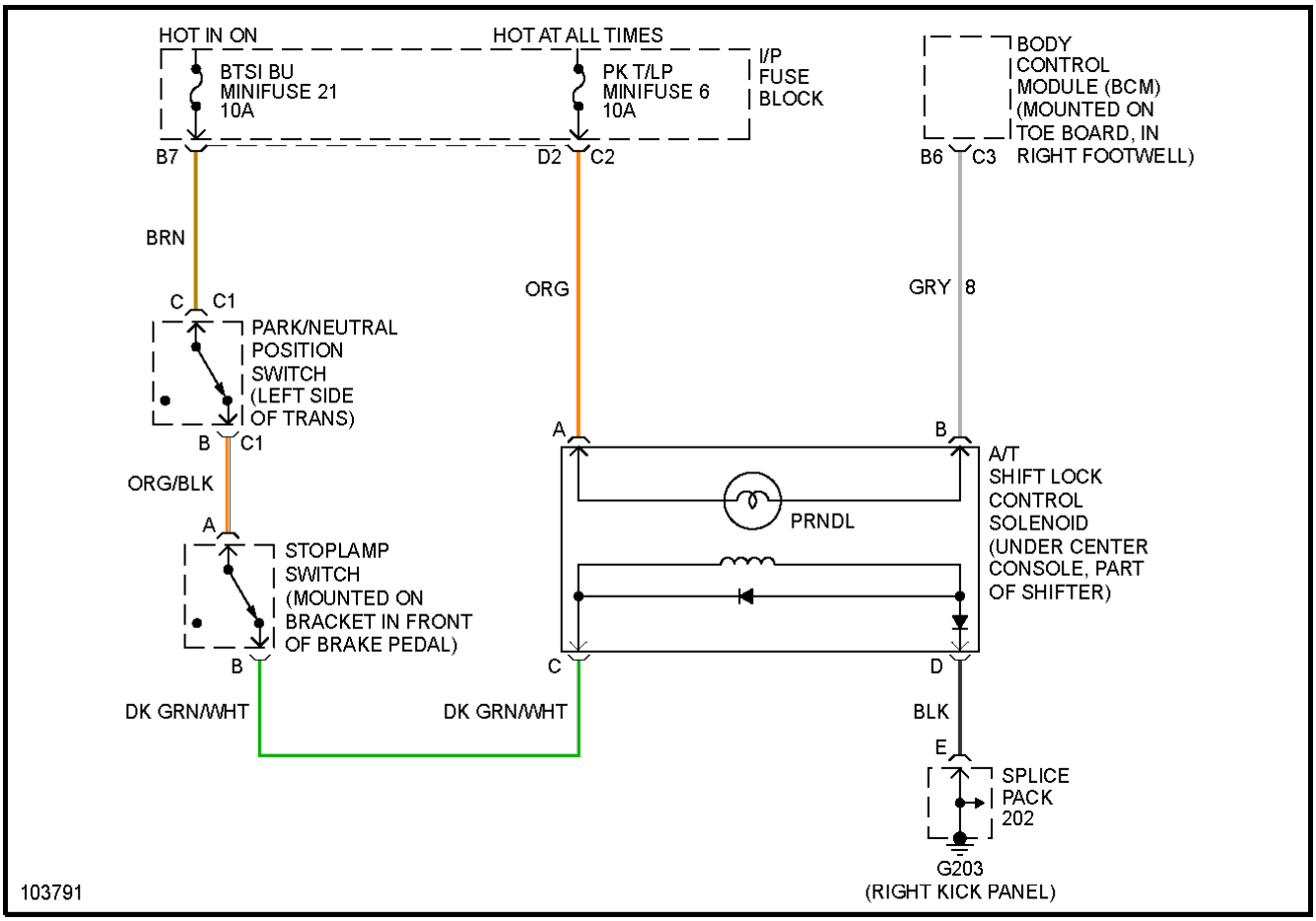

Fig. 42: Shift Interlock Circuit

STARTING/CHARGING

2001 Chevrolet Corvette

2001 SYSTEM WIRING DIAGRAMS CHEVROLET Corvette

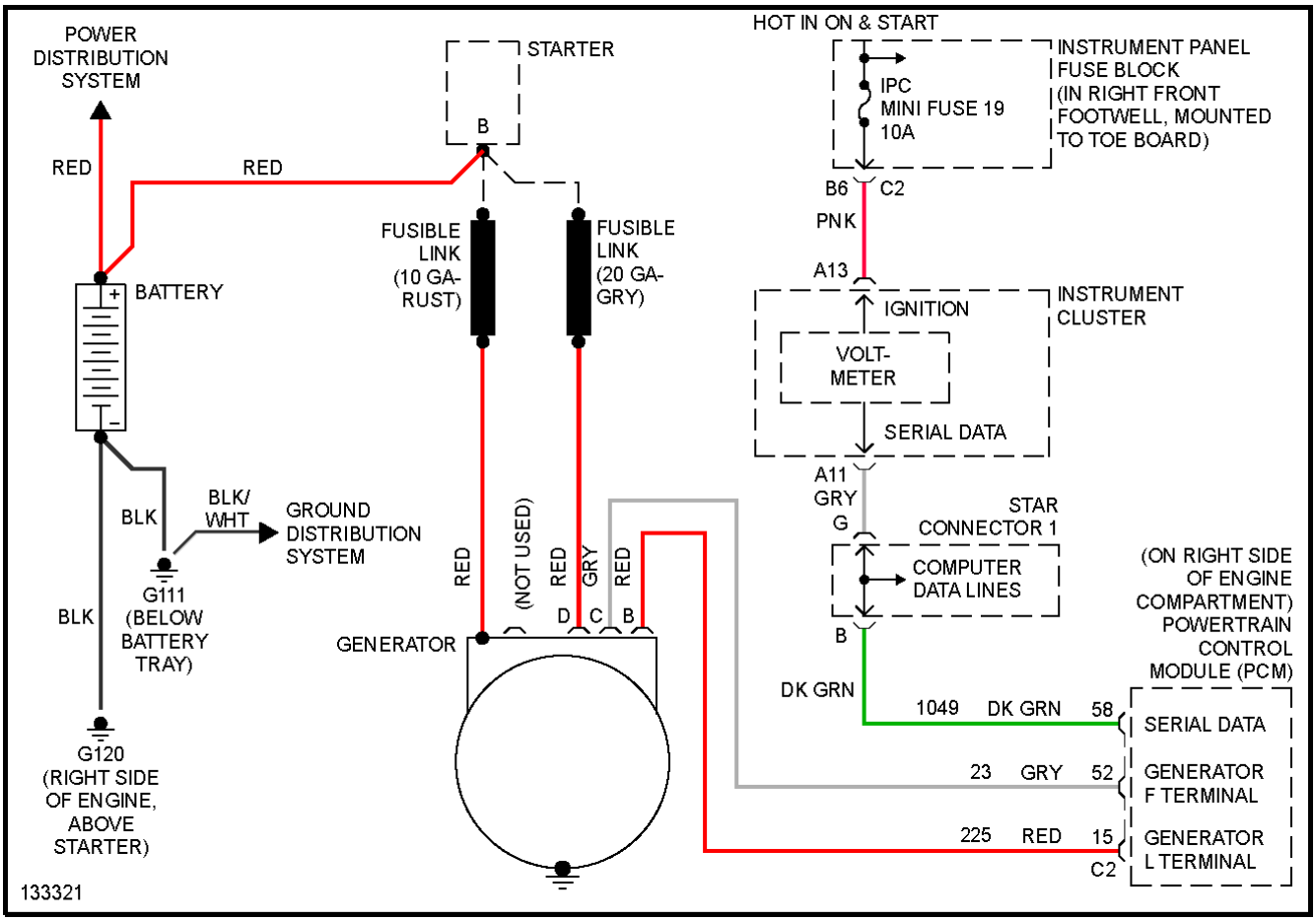

Fig. 43: Charging Circuit

2001 Chevrolet Corvette

2001 SYSTEM WIRING DIAGRAMS CHEVROLET Corvette

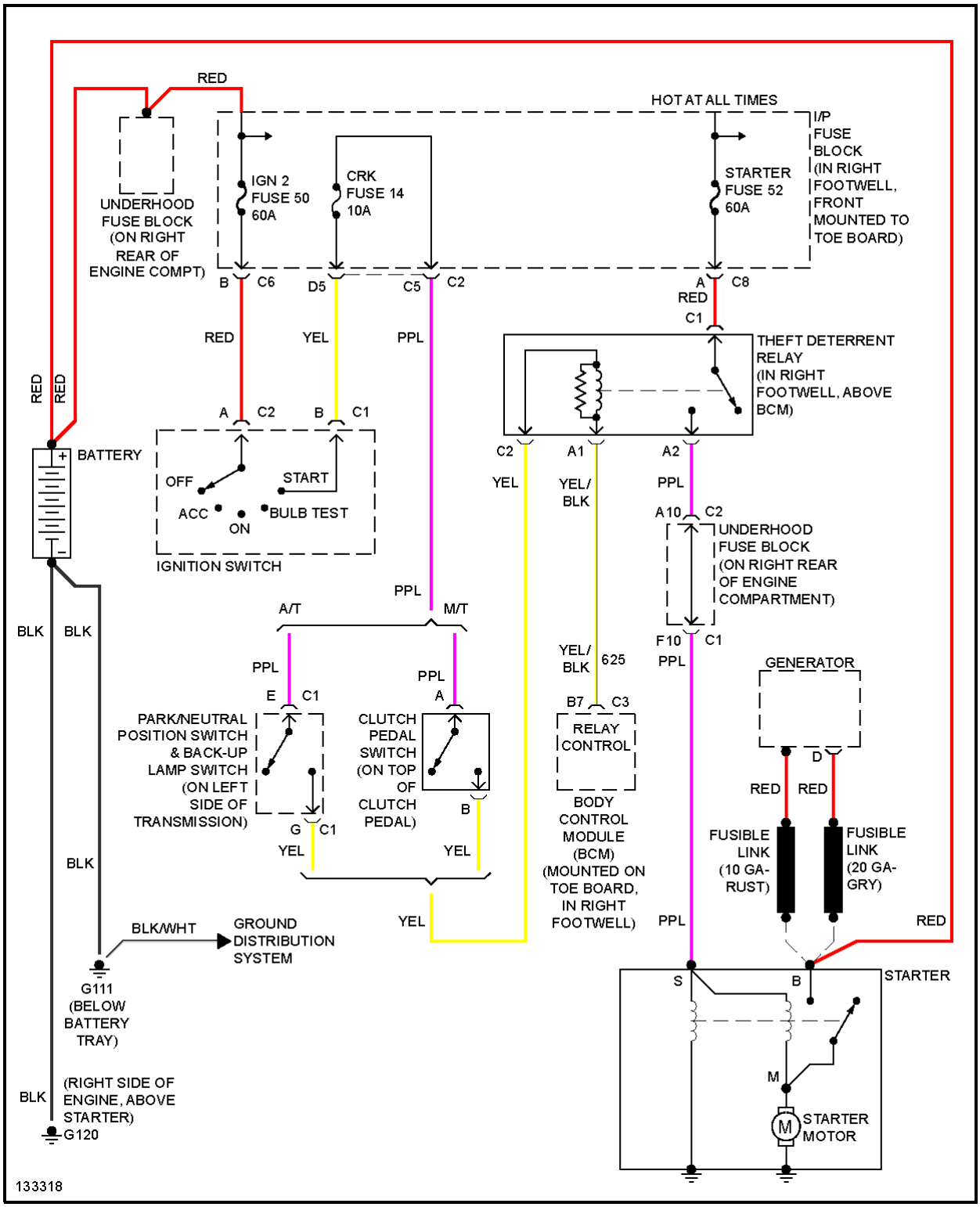

Fig. 44: Starting Circuit

SUPPLEMENTAL RESTRAINTS

2001 Chevrolet Corvette

2001 SYSTEM WIRING DIAGRAMS CHEVROLET Corvette

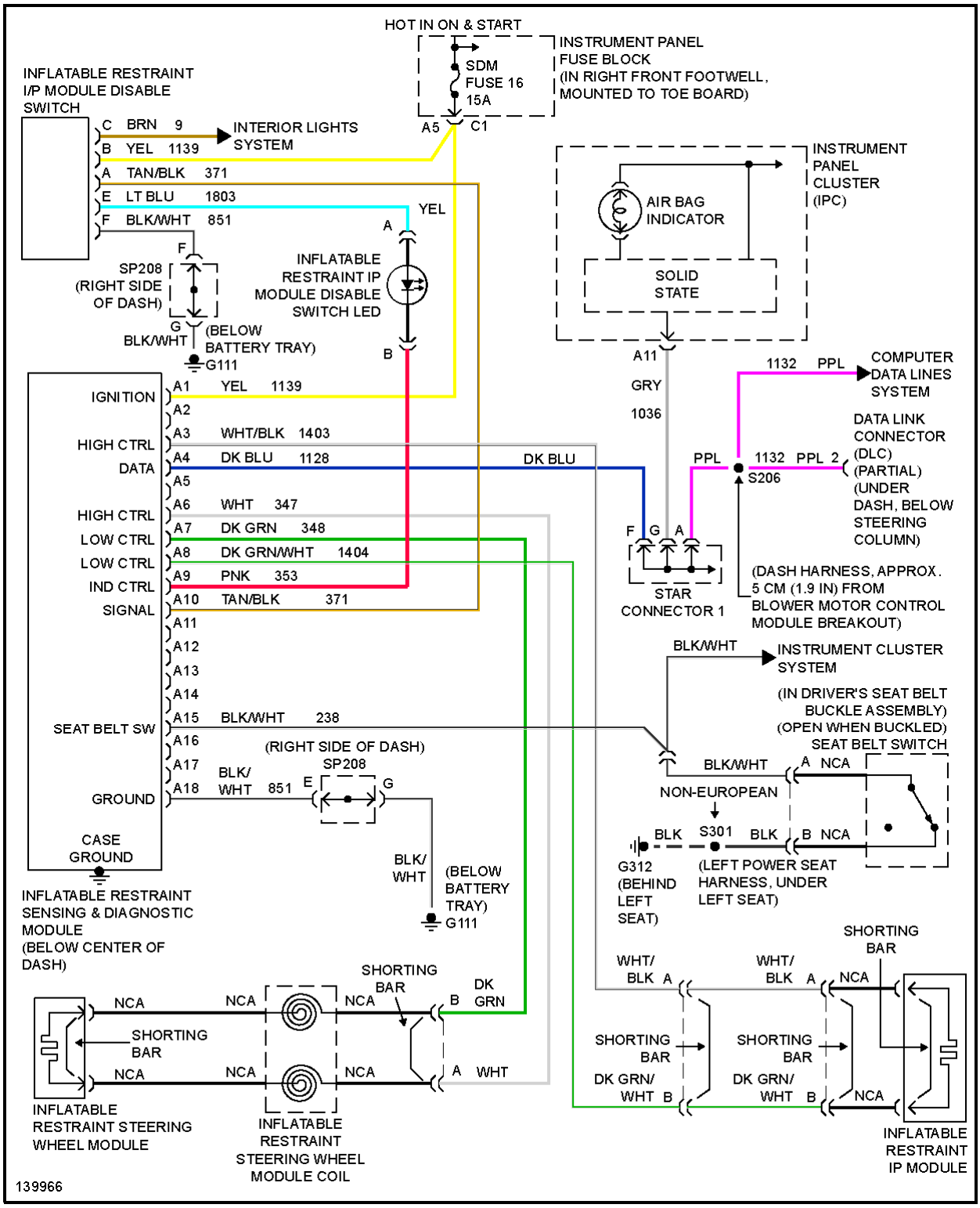

Fig. 45: Supplemental Restraint Circuit

TRANSMISSION

5.7L

2001 Chevrolet Corvette

2001 SYSTEM WIRING DIAGRAMS CHEVROLET Corvette

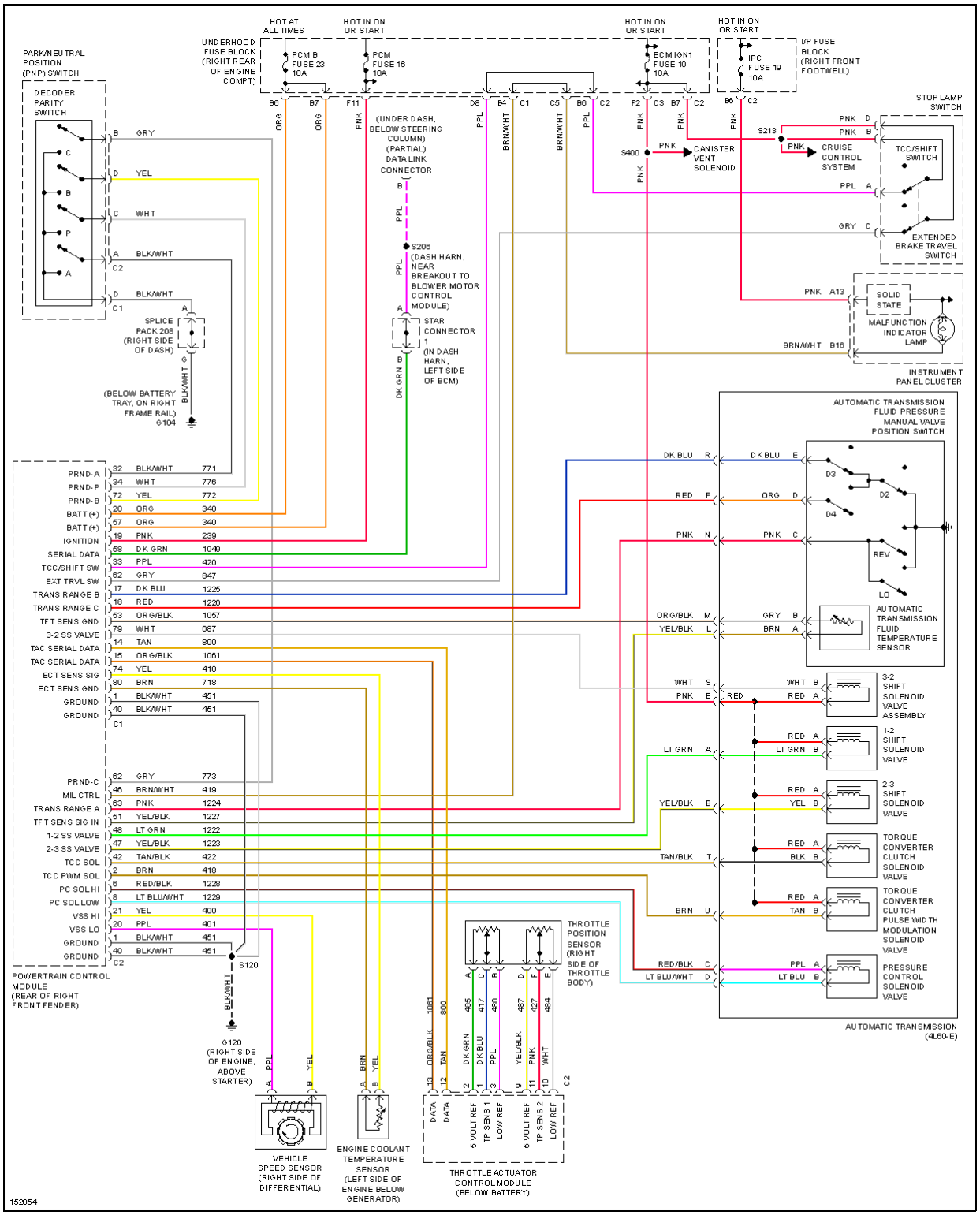

Fig. 46: 5.7L VIN G, A/T Circuit

2001 Chevrolet Corvette

2001 SYSTEM WIRING DIAGRAMS CHEVROLET Corvette

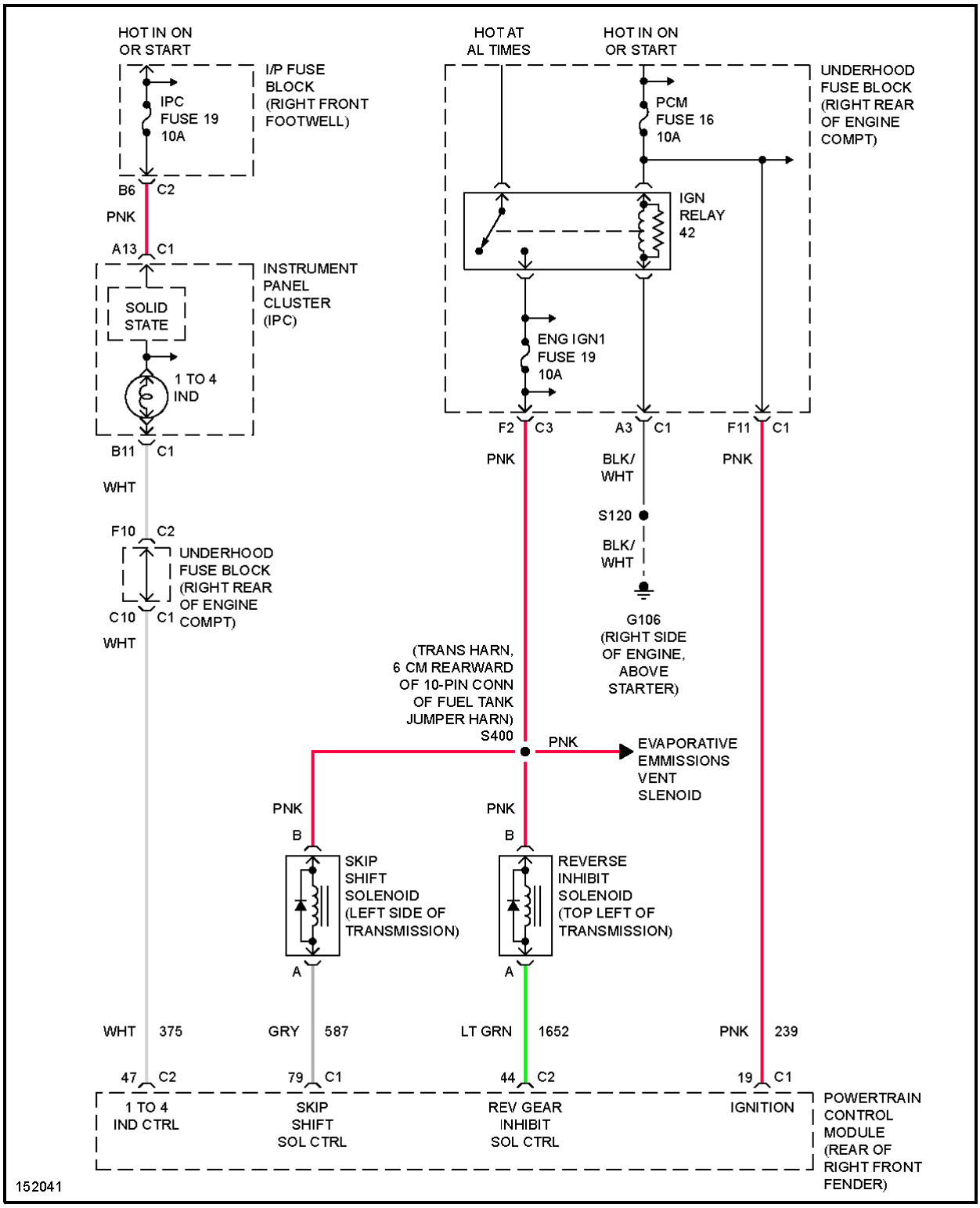

Fig. 47: 5.7L VIN G, M/T Circuit

TRUNK, TAILGATE, FUEL DOOR

2001 Chevrolet Corvette

2001 SYSTEM WIRING DIAGRAMS CHEVROLET Corvette

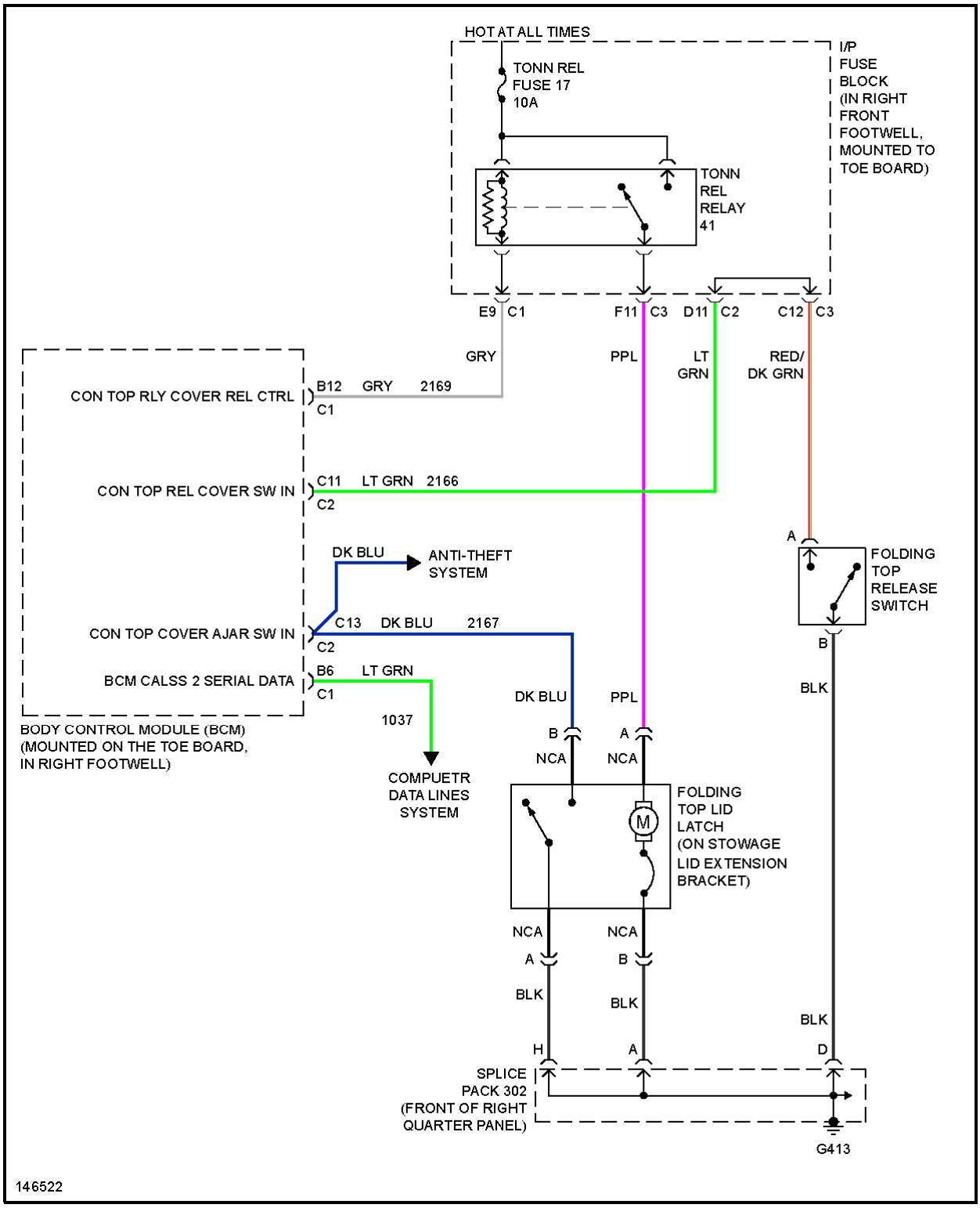

Fig. 48: Folding Top Lid Release Circuit

2001 Chevrolet Corvette

2001 SYSTEM WIRING DIAGRAMS CHEVROLET Corvette

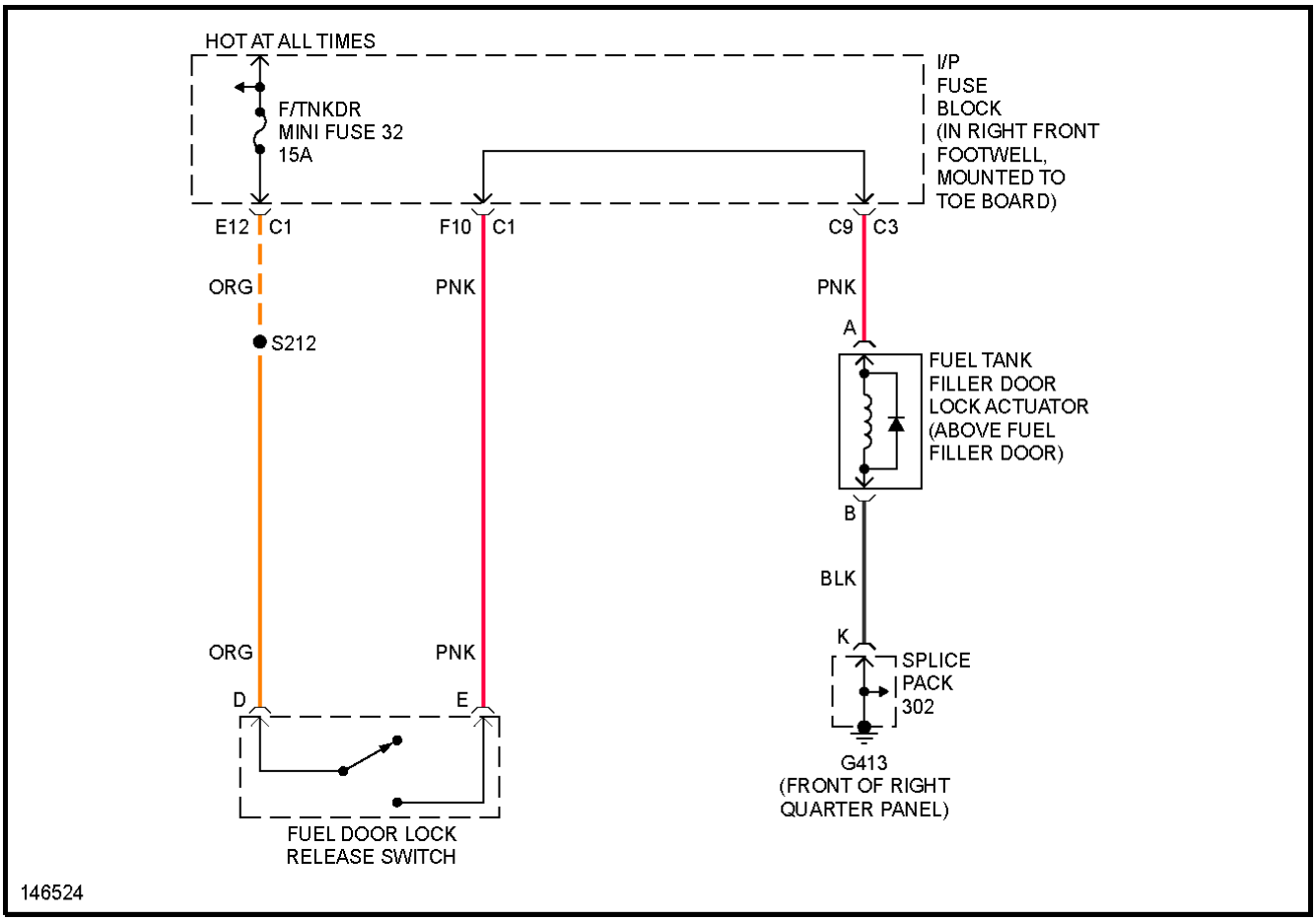

Fig. 49: Fuel Door Release Circuit

2001 Chevrolet Corvette

2001 SYSTEM WIRING DIAGRAMS CHEVROLET Corvette

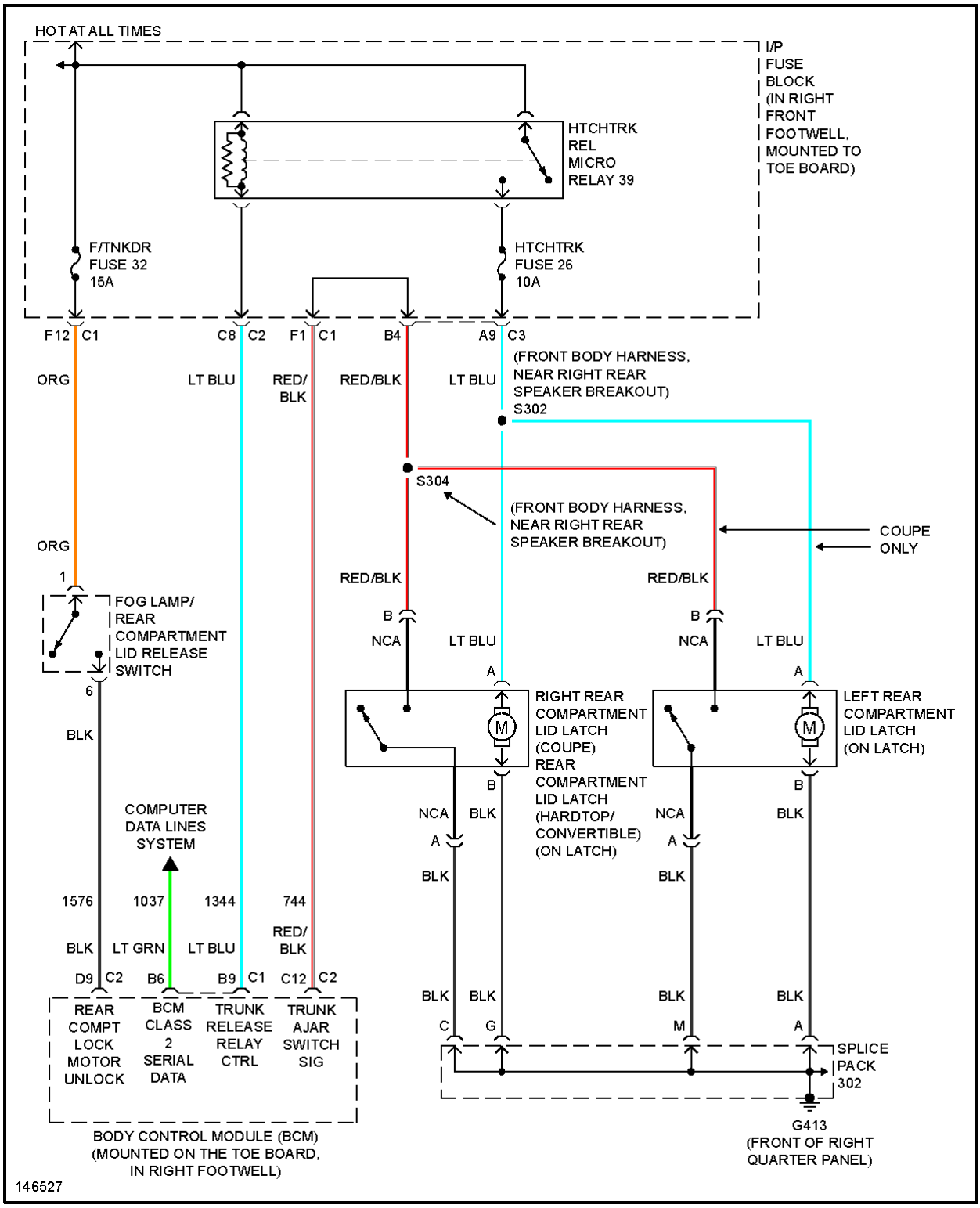

Fig. 50: Hatch Release Circuit

WARNING SYSTEMS

2001 Chevrolet Corvette

2001 SYSTEM WIRING DIAGRAMS CHEVROLET Corvette

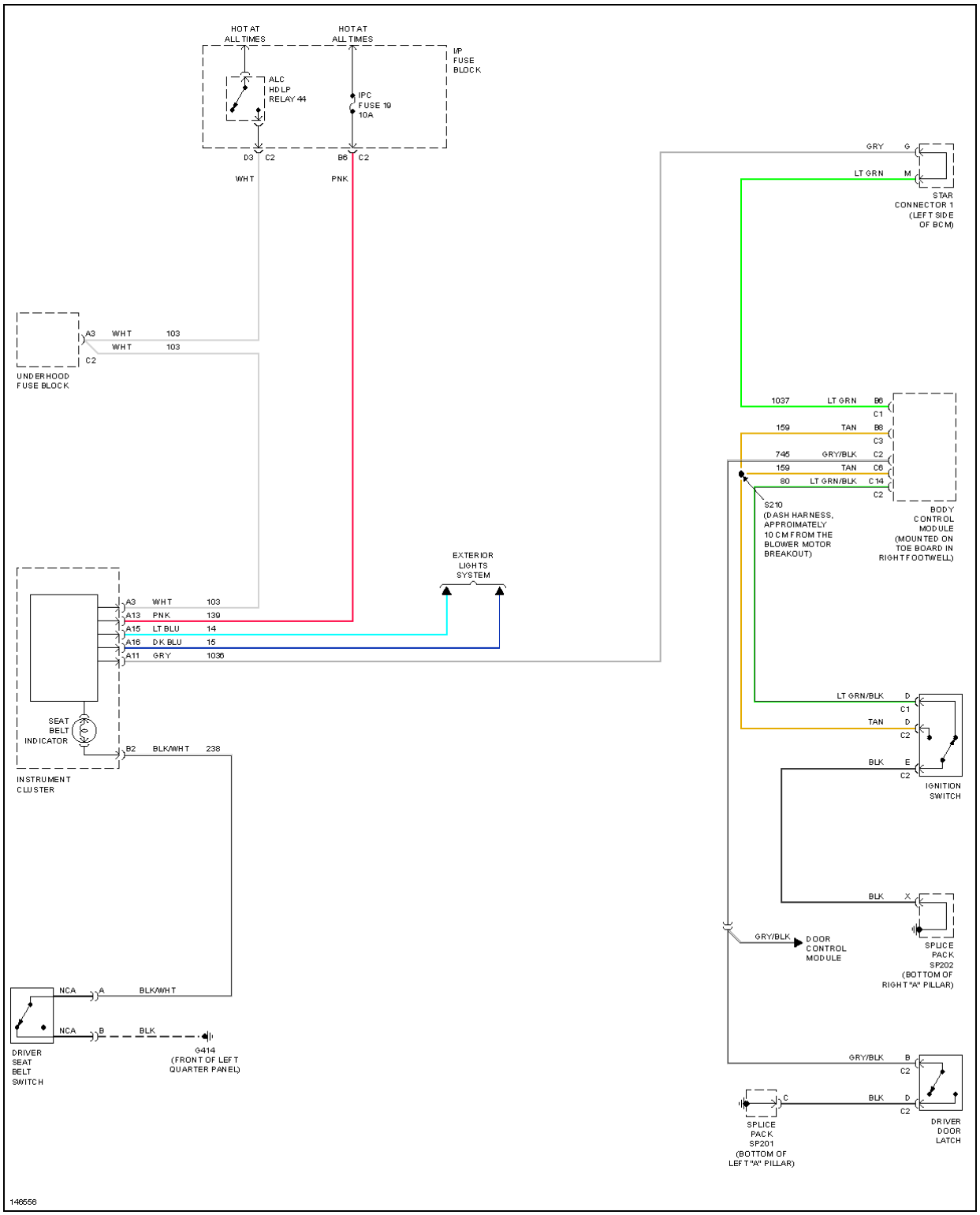

Fig. 51: Warning System Circuits

WIPER/WASHER

2001 Chevrolet Corvette

2001 SYSTEM WIRING DIAGRAMS CHEVROLET Corvette

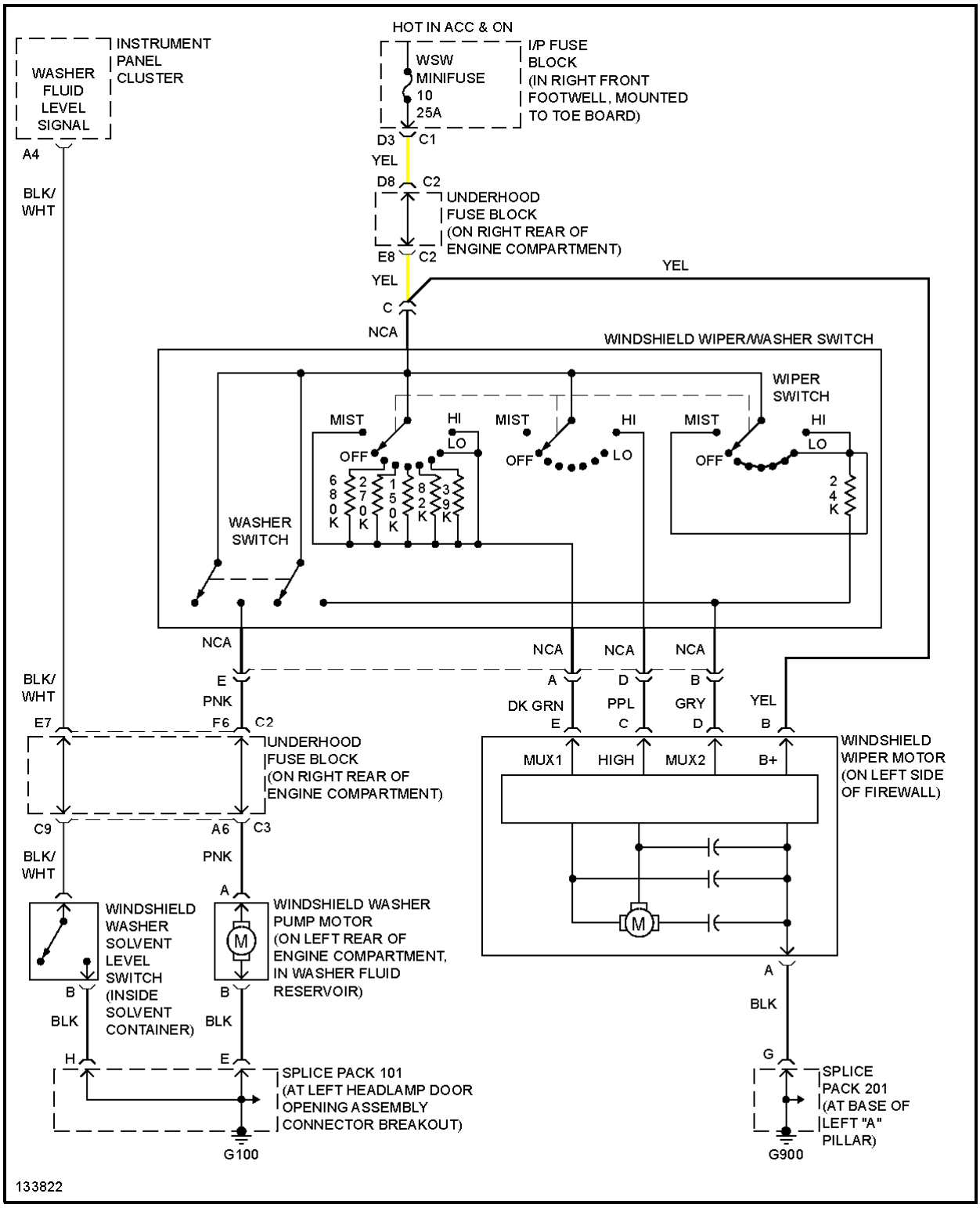

Fig. 52: Wiper/Washer Circuit