Workshop Manual

Audi A2 2001 ➤ , Audi A3 1997 ➤ , Audi A3 2004 ➤ , Audi A3 Cabriolet 2008 ➤ , Audi A4 1995 ➤ , Audi A4 2001 ➤ , Audi A4 Cabriolet 2003 ➤ , Audi A6 1998 ➤ , Audi A6 2005 ➤ , Audi A8 1994 ➤ , Audi A8 2003 ➤ , Audi TT 1999 ➤

Fitting instructions: retrofitting key-operated switch to deactivate airbag on front passenger side

Edition 08.2008

Protected by copyright. Copying for private or commercial purposes, in part or in whole, is not permitted unless authorised by AUDI AG. AUDI AG does not guarantee or accept any liability with respect to the correctness of information in this document. Copyright by AUDI AG.

List of Workshop Manual Repair Groups

Repair Group

69 - Passenger protection

Protected by copyright. Copying for private or commercial purposes, in part or in whole, is not permitted unless authorised by AUDI AG. AUDI AG does not guarantee or accept any liability with respect to the correctness of information in this document. Copyright by AUDI AG.

Technical information should always be available to the foremen and mechanics, because their careful and constant adherence to the instructions is essential to ensure vehicle road-worthiness and safety. In addition, the normal basic safety precautions for working on motor vehicles must, as a matter of course, be observed.

All rights reserved.
No reproduction without prior agreement from publisher.

Copyright © 2015 Audi AG, Ingolstadt

Contents

69 - Passenger protection 1

1 Overview of retrofitting options 1

2 Notes and overview of components 2

2.1 General information 2

2.2 Overview of components 3

3 Deactivating/activating airbag on front passenger side (Audi A2 2001 ▸) 8

4 Retrofitting key-operated switch (Audi A3 1997 ▸ from week 27/1999 onwards) 9

4.1 Removing glove box 9

4.2 Installing key-operated switch 10

4.3 Installing new glove box 11

4.4 Installing warning lamp for airbag deactivated on front passenger side 12

5 Retrofitting key-operated switch (Audi A3 2004 ▸ including Audi A3 Sportback and Audi A3 Cabriolet 2008 ▸) 14

5.1 Removing and installing glove box 14

5.2 Converting glove box 16

5.3 Routing and securing glove box wiring harness 17

5.4 Installing key-operated switch 17

5.5 Installing warning lamp for airbag deactivated on front passenger side 18

6 Retrofitting key-operated switch (Audi A4 1995 ▸ from chassis no. 8DXA 200 001 onwards) 24

6.1 Removing glove box 24

6.2 Converting glove box 25

6.3 Installing key-operated switch 26

6.4 Installing glove box 26

6.5 Installing warning lamp for airbag deactivated on front passenger side 27

7 Retrofitting key-operated switch (Audi A4 2001 ▸ up to week 35/2004 including Audi S4 and Audi S4 Cabriolet) 29

7.1 Removing glove box 29

7.2 Converting glove box 31

7.3 Installing key-operated switch 31

7.4 Retrofitting wiring harness 32

7.5 Installing glove box 32

7.6 Installing warning lamp for airbag deactivated on front passenger side 33

8 Retrofitting key-operated switch (Audi A4 2001 ▸ from week 36/2004 onwards including Audi S4 and Audi S4 Cabriolet) 39

8.1 Removing glove box 39

8.2 Converting glove box 41

8.3 Installing key-operated switch 41

8.4 Retrofitting wiring harness 41

8.5 Installing glove box 41

8.6 Installing warning lamp for airbag deactivated on front passenger side 43

9 Retrofitting wiring harnesses 8E1 970 XXX (Audi A4 2001 ▸) 45

9.1 Notes on and preparation for retrofitting wiring harnesses (8E1 970 XXX) 45

9.2 Routing wiring harnesses (8E1 970 XXX) 46

9.3 Connecting wiring harnesses 8E1 970 XXX to multi-pin connector for airbag control unit J234 50

9.4 Assembly work, coding airbag control unit J234 and interrogating fault memories of control units 55

10 Retrofitting key-operated switch (Audi A4 Cabriolet 2003 ▸) 57

11 Retrofitting key-operated switch (Audi A6 1998 ▸ from week 36/1998 onwards including Audi Allroad, except vehicles with V8 engine) 58

11.1 Removing glove box 58

Copyright by AUDI AG. All rights reserved. Distribution, copyright and other rights reserved. Any reproduction or distribution is permitted unless authorised by AUDI AG. AUDI AG does not guarantee or accept any liability with respect to the correctness of information in this document. Copyright by AUDI AG.

11.2 Converting glove box . . . 59
11.3 Installing key-operated switch . . . 60
11.4 Installing glove box . . . 60
11.5 Installing warning lamp for airbag deactivated on front passenger side . . . 62

12 Retrofitting key-operated switch (Audi A6 2005 ▸) . . . 64
12.1 Removing glove box . . . 64
12.2 Converting glove box . . . 66
12.3 Installing glove box . . . 68
12.4 Installing warning lamp for airbag deactivated on front passenger side . . . 69

13 Retrofitting key-operated switch (Audi A8 1994 ▸, gradual introduction from approx. week 41/1998 onwards, with front and side or front and curtain airbag) . . . 73
13.1 Removing glove box . . . 73
13.2 Converting glove box . . . 74
13.3 Installing key-operated switch . . . 75
13.4 Installing glove box . . . 76
13.5 Installing warning lamp for airbag deactivated on front passenger side . . . 77

14 Retrofitting key-operated switch (Audi A8 2003 ▸) . . . 79
14.1 Removing glove box . . . 79
14.2 Converting glove box . . . 82
14.3 Installing key-operated switch . . . 82
14.4 Installing glove box . . . 82
14.5 Installing warning lamp for airbag deactivated on front passenger side . . . 83
14.6 Installing trim panel with switch module (right-side) with warning lamp for airbag deactivated on front passenger side . . . 84

15 Retrofitting key-operated switch (Audi TT 1999 ▸, Coupé/Roadster) . . . 85

16 Coding airbag control unit J234 . . . 86

17 Adapting airbag control unit J234 (Audi A6 2005 ▸) . . . 87

Protected by copyright. Copying for private or commercial purposes, in part or in whole, is not permitted unless authorised by AUDI AG. AUDI AG does not guarantee or accept any liability with respect to the correctness of information in this document. Copyright by AUDI AG.

69 – Passenger protection

1 Overview of retrofitting options

Model	Vehicle no.	Retrofitting possible	
		yes	no
Audi A2 2001 ▸	8Z		Deactivation/activation of airbag on front passenger side ⇒ page 8
Audi A3 1997 ▸ from week 27/1999 onwards	8L	⇒ page 9	
Audi A3 2004 ▸	8P	⇒ page 14	
Audi A3 Sportback	8P	⇒ page 14	
Audi A3 Cabriolet	8P	⇒ page 14	
Audi A4 1995 ▸ from chassis no.: 8DXA 200 001	8D	⇒ page 24	
Audi A4 2001 ▸ up to week 35/2004	8E	⇒ page 29	
Audi S4	8E	⇒ page 29	
Audi A4 2001 ▸ from week 36/2004 onwards	8E	⇒ page 39	
Audi S4	8E	⇒ page 39	
Audi A4 Cabriolet 2003 ▸	8H		⇒ page 57
Audi S4 Cabriolet ▸ up to week 35/2004	QB	⇒ page 29	
Audi S4 Cabriolet ▸ from week 36/2004 onwards	QB	⇒ page 39	
Audi A6 1998 ▸ from week 36/1998 onwards	4B	⇒ page 58	
Audi A6 with V8 engine	4B		⇒ page 58
Audi Allroad	4B	⇒ page 58	
Audi Allroad with V8 engine	4B		⇒ page 58
Audi S6	4B		⇒ page 58
Audi RS 6	4B		⇒ page 58
Audi A6 2005 ▸	4F	⇒ page 64	
Audi A8 1994 ▸ from approx. week 41/1998 onwards	4D	⇒ page 73	
Audi A8 2003 ▸	4E	⇒ page 79	
Audi TT 1999 ▸ (Coupé/Roadster)	8N		⇒ page 85

Protected by copyright. Copying for private or commercial purposes, in part or in whole, is not permitted unless authorised by AUDI AG. AUDI AG does not guarantee or accept any liability with respect to the correctness of information in this document. Copyright by AUDI AG.

2 Notes and overview of components

2.1 General information

WARNING

When retrofitting key-operated switch to deactivate airbag on front passenger side -E224- and warning lamp for airbag deactivated on front passenger side -K145- , observe safety precautions for working on airbags ⇒ General body repairs, interior; Rep. Gr. 69 .

WARNING

Before handling the airbag units (e.g. unplugging the electrical connector) the mechanic must discharge static electricity by briefly touching the door striker plate, or similar.

Protected by copyright. Copying for private or commercial purposes, in part or in whole, is not permitted unless authorised by AUDI AG. AUDI AG does not guarantee or accept any liability with respect to the correctness and completeness of this document.

- It should be noted that retrofitting the key-operated switch to deactivate airbag on front passenger side -E224- is not possible/necessary for all vehicle models ⇒ page 1 .
- After retrofitting key-operated switch to deactivate airbag on front passenger side -E224- , airbag control unit -J234- must be re-coded ⇒ page 86 . On Audi A6 2005 ‣, airbag control unit -J234- must be adapted ⇒ page 87 .
- A functional test must be performed after retrofitting the key-operated switch to deactivate airbag on front passenger side -E224- and the warning lamp for airbag deactivated on front passenger side -K145- . Deactivate the airbag (front passenger side); warning lamp for airbag deactivated on front passenger side -K145- must light constantly.Then activate the airbag (front passenger side); warning lamp for airbag deactivated on front passenger side -K145- must go out.
- After retrofitting the key-operated switch to deactivate airbag on front passenger side -E224- and the warning lamp for airbag deactivated on front passenger side -K145- , interrogate and erase the fault memories of all control units. To do so, use a suitable vehicle diagnostic, testing and information system, e.g. vehicle diagnostic, testing and information system -VAS 5051B- .
- After airbag or belt tensioner has been triggered, it is only possible to retrofit the key-operated switch to deactivate airbag on front passenger side -E224- after the airbag control unit -J234- has been renewed.

2.2 Overview of components

2.2.1 Notes on overview of components

Note

- *Only the first 6 positions in the part number are given in the list of "Components required". The other positions are marked "XXX". No information on component and/or colour versions is given.*
- *The full part number can be found in the ⇒ Electronic parts catalogue "ETKA" . Attention is to be paid to the information contained in the part numbers relating to component and/or colour versions, e.g. indices or the combination of indices and numbers.*
- *Refer to the ⇒ Electronic parts catalogue "ETKA" to check that the part numbers given are for components suitable for installation in the vehicle.*
- *Note that the warning lamp for airbag deactivated on front passenger side -K145- is also referred to as "PASSENGER AIRBAG OFF" lamp.*
- *Most of the components required have two different designations in the following list:*

  Designation without brackets ⇒ Electronic parts catalogue "ETKA" .

  Designation with brackets ⇒ Current flow diagrams, Electrical fault finding and Fitting locations

2.2.2 Audi A3 1997 ▸ from week 27/1999 onwards

Notes on overview of components ⇒ page 3

Components required

- 4B0 919 XXX Key-operated switch for deactivation of front passenger's airbag (key-operated switch to deactivate airbag on front passenger side -E224-)
- 107 857 XXX Lock cylinder without key
- 8L0 947 XXX Interior and reading light for vehicles with front passenger's airbag deactivation option (front interior light -W1- with warning lamp for airbag deactivated on front passenger side -K145-)
- 8L1 857 XXX Glove box (passenger side) for vehicles with front passenger's airbag deactivation option

Protected by copyright. Copying for private or commercial purposes, in part or in whole, is not permitted unless authorised by AUDI AG. AUDI AG does not guarantee or assume liability with respect to the correctness of information in this document. ©Copyright by AUDI AG.

2.2.3 Audi A3 2004 ▸ (including Audi A3 Sportback)

Notes on overview of components ⇒ page 3

Components required

- 4B0 919 XXX Key-operated switch for deactivation of front passenger's airbag (key-operated switch to deactivate airbag on front passenger side -E224-)

- 5P0 919 XXX Key-operated switch for deactivation of front passenger's airbag (key-operated switch to deactivate airbag on front passenger side -E224-)
- 8E0 947 XXX Interior and reading light for vehicles with front passenger's airbag deactivation option (front interior light -W1- with warning lamp for airbag deactivated on front passenger side -K145-)
- 8P0 919 XXX Airbag warning lamp (warning lamp for airbag deactivated on front passenger side -K145-)
- 8P0 919 XXX Airbag warning lamp for vehicles with double DIN radio cut-out 182 x 112 mm (warning lamp for airbag deactivated on front passenger side -K145-)
- 8P0 971 XXX Wiring harness for glove box light

2.2.4 Audi A4 1995 ▸ from chassis no. 8DXA 200 001 onwards

Notes on overview of components ⇒ page 3

Components required

- 4B0 919 XXX Key-operated switch for deactivation of front passenger's airbag (key-operated switch to deactivate airbag on front passenger side -E224-)
- 107 857 XXX Lock cylinder without key
- 8D1 857 XXX Cover only for: key-operated switch for deactivating airbag on front passenger side (left-hand-drive vehicles)
- 8D0 947 XXX Interior and reading light for vehicles with front passenger's airbag deactivation option (front interior light -W1- with warning lamp for airbag deactivated on front passenger side -K145-)

2.2.5 Audi A4 2001 ▸ up to week 35/2004 (including Audi S4)

Notes on overview of components ⇒ page 3

Components required

- 8E0 919 XXX Key-operated switch for deactivation of front passenger's airbag (key-operated switch to deactivate airbag on front passenger side -E224-)
- 4B0 919 XXX Key-operated switch for deactivation of front passenger's airbag (key-operated switch to deactivate airbag on front passenger side -E224-)
- 5P0 919 XXX Key-operated switch for deactivation of front passenger's airbag (key-operated switch to deactivate airbag on front passenger side -E224-)
- 107 857 XXX Lock cylinder without key
- 8E0 947 XXX Interior and reading light for vehicles with front passenger's airbag deactivation option (front interior light -W1- with warning lamp for airbag deactivated on front passenger side -K145-)
- 8E1 919 XXX Airbag warning lamp (warning lamp for airbag deactivated on front passenger side -K145-), left-hand-drive vehicles
- 8E2 919 XXX Airbag warning lamp (warning lamp for airbag deactivated on front passenger side -K145-), right-hand-drive vehicles

Protected by copyright. Copying for private or commercial purposes, in part or in whole, is not permitted unless authorised by AUDI AG. AUDI AG does not guarantee or accept any liability with respect to the correctness of information in this document. Copyright by AUDI AG.

- 8E0 971 XXX Wiring harness for glove box light
- 8E1 970 XXX Wiring harness (between airbag control unit -J234- and warning lamp for airbag deactivated on front passenger side -K145-)

2.2.6 Audi A4 2001 ▸ from week 36/2004 onwards (including Audi S4)

Notes on overview of components ⇒ page 3

Components required

- 5P0 919 XXX Key-operated switch for deactivation of front passenger's airbag (key-operated switch to deactivate airbag on front passenger side -E224-)
- 8E1 919 XXX Airbag warning lamp (warning lamp for airbag deactivated on front passenger side -K145-), left-hand-drive vehicles
- 8E2 919 XXX Airbag warning lamp (warning lamp for airbag deactivated on front passenger side -K145-), right-hand-drive vehicles
- 8E0 971 XXX Wiring harness for glove box light
- 8E1 970 XXX Wiring harness (from airbag control unit -J234- to warning lamp for airbag deactivated on front passenger side -K145- and connector of supply lead/wiring harness for glove box)

Protected by copyright. Copying for private or commercial purposes, in part or in whole, is not permitted unless authorised by AUDI AG. AUDI AG does not guarantee or accept any liability with respect to the correctness of information in this document. Copyright by AUDI AG.

2.2.7 Audi A6 1998 ▸ from week 36/1998 onwards (including Audi Allroad, except vehicles with V8 engine)

WARNING

There is no provision for retrofitting the key-operated switch to deactivate airbag on front passenger side -E224- on vehicles with V8 engine (Audi A6, Audi Allroad, Audi S6 and Audi RS 6).

Notes on overview of components ⇒ page 3

Components required

- 4B0 919 XXX Key-operated switch for deactivation of front passenger's airbag (key-operated switch to deactivate airbag on front passenger side -E224-)
- 8E0 919 XXX Key-operated switch for deactivation of front passenger's airbag (key-operated switch to deactivate airbag on front passenger side -E224-)
- 4B0 919 XXX Key-operated switch for deactivation of front passenger's airbag (key-operated switch to deactivate airbag on front passenger side -E224-)
- 107 857 XXX Lock cylinder without key for vehicles with front passenger's airbag deactivation option
- 4B1 857 XXX Cover (left-hand-drive vehicles)
- 4B2 857 XXX Cover (right-hand-drive vehicles)
- N 904 997 02 Oval head bolt with double thread 3x10 (2x)
- 4B0 947 XXX Interior light for vehicles with front passenger's airbag deactivation option (front interior light -W1- with warn-

ing lamp for airbag deactivated on front passenger side - K145-)

- 4B1 971 XXX Wiring harness for glove box light

2.2.8 Audi A6 2005 ▸

Notes on overview of components ⇒ page 3

Components required

- 1K0 919 XXX Key-operated switch for deactivation of front passenger's airbag (key-operated switch to deactivate airbag on front passenger side -E224-)
- 4F1 857 XXX Mounting for vehicles with front passenger's airbag deactivation option (left-hand-drive vehicles)
- 4F2 857 XXX Mounting for key-operated switch to deactivate airbag on front passenger side (right-hand-drive vehicles)
- N 909 365 01 Torx socket self-tapping screw 3x12 (2x)
- 4F0 919 XXX Airbag warning lamp (warning lamp for airbag deactivated on front passenger side -K145-)
- 4F1 820 XXX Fresh-air vent (centre), left-hand-drive vehicles
- 4F2 820 XXX Fresh-air vent (centre), right-hand-drive vehicles
- 4F0 971 XXX Wiring harness for glove box light

2.2.9 Audi A8 1994 ▸, gradual introduction from approx. week 41/1998 onwards (with front and side or front and curtain airbag)

Notes on overview of components ⇒ page 3

Components required

- 4D0 919 XXX Key-operated switch for deactivation of front passenger's airbag (key-operated switch to deactivate airbag on front passenger side -E224-)
- 107 857 XXX Lock cylinder without key for vehicles with front passenger's airbag deactivation option
- 4D1 857 XXX Trim for key-operated switch to deactivate airbag on front passenger side (left-hand-drive vehicles)
- 4D2 857 XXX Trim for key-operated switch to deactivate airbag on front passenger side (right-hand-drive vehicles)
- 4B0 947 XXX Interior light for vehicles with front passenger's airbag deactivation option (front interior light -W1- with warning lamp for airbag deactivated on front passenger side - K145-)
- 4D0 971 XXX Wiring harness for glove box light
- 4D0 857 XXX Cover for vehicles with front passenger's airbag deactivation option (hinge trim)
- 4D1 857 XXX Cover for vehicles with front passenger's airbag deactivation option (cable duct cover), left-hand-drive vehicles
- 4D0 857 XXX Cover for vehicles with front passenger's airbag deactivation option (cable duct cover), right-hand-drive vehicles
- N 903 474 02 Oval head self-tapping screw 4x12 (2x)

This document is protected by copyright. Reproduction, publication or distribution of this document in part or in whole, is not permitted without the express consent of AUDI AG. AUDI AG does not accept any liability with regard to the correctness of information in this document. Copyright by AUDI AG.

2.2.10 Audi A8 2003 ▸

Notes on overview of components ⇒ page 3

Components required

- 4B0 919 XXX Key-operated switch for deactivation of front passenger's airbag (key-operated switch to deactivate airbag on front passenger side -E224-)
- 5P0 919 XXX Key-operated switch for deactivation of front passenger's airbag (key-operated switch to deactivate airbag on front passenger side -E224-)
- 4E1 927 XXX Multiple switch for warning light, … and front passenger's airbag deactivation (operating unit in front of centre console -E461- with warning lamp for airbag deactivated on front passenger side -K145-), left-hand-drive vehicles
- 4E2 027 XXX Multiple switch for warning light, … and front passenger's airbag deactivation (operating unit in front of centre console -E461- with warning lamp for airbag deactivated on front passenger side -K145-), right-hand-drive vehicles
- 4E0 971 XXX Wiring harness for glove box

Protected by copyright. Copying for private or commercial purposes, in part or in whole, is not permitted unless authorised by AUDI AG. AUDI AG does not guarantee or accept any liability with respect to the correctness of information in this document. Copyright by AUDI AG.

3 Deactivating/activating airbag on front passenger side (Audi A2 2001 ▸)

The airbag on front passenger side can only be deactivated/activated via the “Guided Fault Finding” function.

This involves using the “Guided Fault Finding” function to call up the appropriate program.

Protected by copyright. Copying for private or commercial purposes, in part or in whole, is not permitted unless authorised by AUDI AG. AUDI AG does not guarantee or accept any liability with respect to the correctness of information in this document. Copyright by AUDI AG.

4 Retrofitting key-operated switch (Audi A3 1997 ‣ from week 27/1999 onwards)

WARNING

When retrofitting key-operated switch to deactivate airbag on front passenger side -E224- and warning lamp for airbag deactivated on front passenger side -K145- , observe safety precautions for working on airbags ⇒ General body repairs, interior; Rep. Gr. 69 .

WARNING

Before handling the airbag units (e.g. unplugging the electrical connector) the mechanic must discharge static electricity by briefly touching the door striker plate, or similar.

Components required for retrofitting ⇒ page 3

4.1 Removing glove box

– Switch off ignition and remove ignition key.
– With ignition switched off, disconnect earth wire at battery ⇒ Electrical system; Rep. Gr. 27 .
– Unclip dash panel end trim.

WARNING

Before unplugging the connectors, discharge static by briefly touching door striker plate for example.

– Unplug connector -4- for glove box light.
– Unscrew bolts -1- (4x).
– Remove bolt -2-.
– Open glove box lid and unscrew bolts -3- (3x).
– Pull retaining plate -5- approx. 1 cm to side in direction of -arrow- and release catch.
– Take out glove box.

Protected by copyright. Copying for private or commercial purposes, in part or in whole, is not permitted unless authorised by AUDI AG. AUDI AG does not guarantee or accept any liability with respect to the correctness of information in this document. Copyright by AUDI AG.

1 - Bolts (4x)
- ❑ Tightening torque: 4 Nm

2 - Bolt (1x)
- ❑ Tightening torque: 4 Nm

3 - Bolts (3x)
- ❑ Tightening torque: 4 Nm

4 - Connector
- ❑ For glove box light

5 - Retaining plate

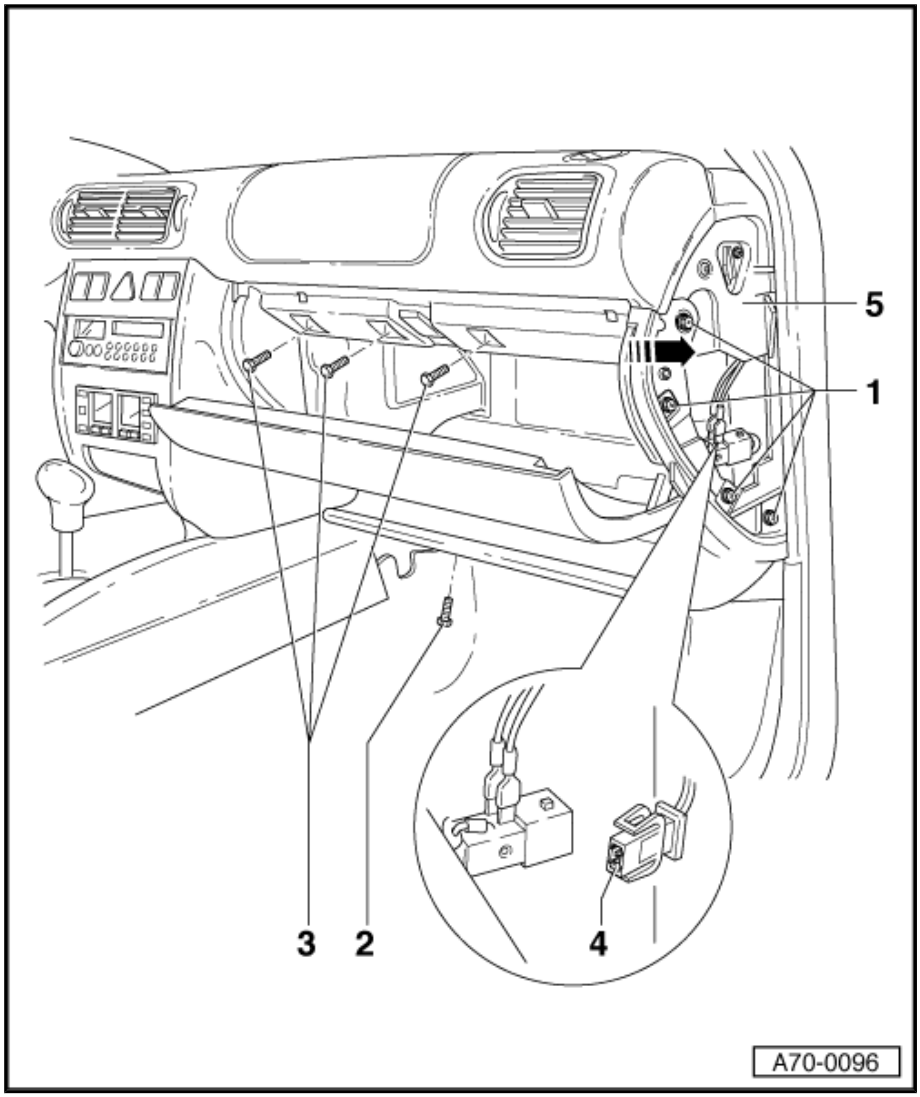

4.2 Installing key-operated switch

– With key -3- inserted, press lock cylinder -2- into key-operated switch to deactivate airbag on front passenger side -E224- -1- until lock cylinder -2- engages.

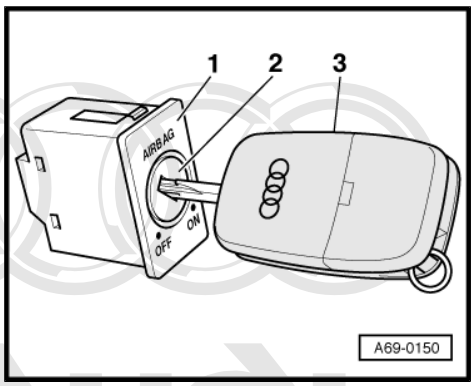

Protected by copyright. Copying for private or commercial purposes, in part or in whole, is not permitted unless authorised by AUDI AG. AUDI AG does not guarantee or accept any liability with respect to the correctness of information in this document. Copyright by AUDI AG.

– Press key-operated switch to deactivate airbag on front passenger side -E224- -1- into new glove box until retaining clips -arrows- engage.

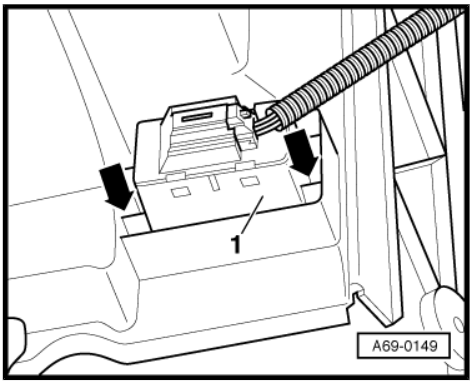

4.3 Installing new glove box

Special tools and workshop equipment required

♦ Torque wrench -V.A.G 1783-

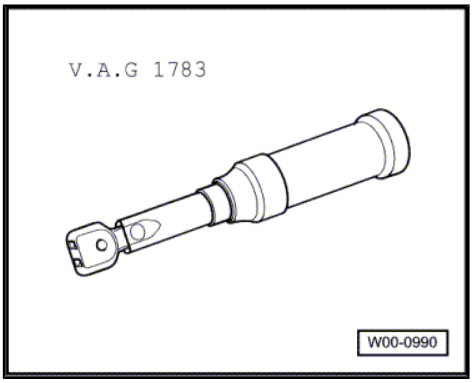

– Place new glove box in position.

– Plug in connector for glove box light -4- and connector for key-operated switch to deactivate airbag on front passenger side -E224- .

– Make sure connectors engage properly (audibly).

– Perform remaining installation in reverse order of removal.

Protected by copyright. Copying for private or commercial purposes, in part or in whole, is not permitted unless authorised by AUDI AG. AUDI AG does not guarantee or accept any liability with respect to the correctness of information in this document. Copyright by AUDI AG.

1 - Bolts (4x)
- ❑ Tightening torque: 4 Nm

2 - Bolt (1x)
- ❑ Tightening torque: 4 Nm

3 - Bolts (3x)
- ❑ Tightening torque: 4 Nm

4 - Connector
- ❑ For glove box light

5 - Retaining plate

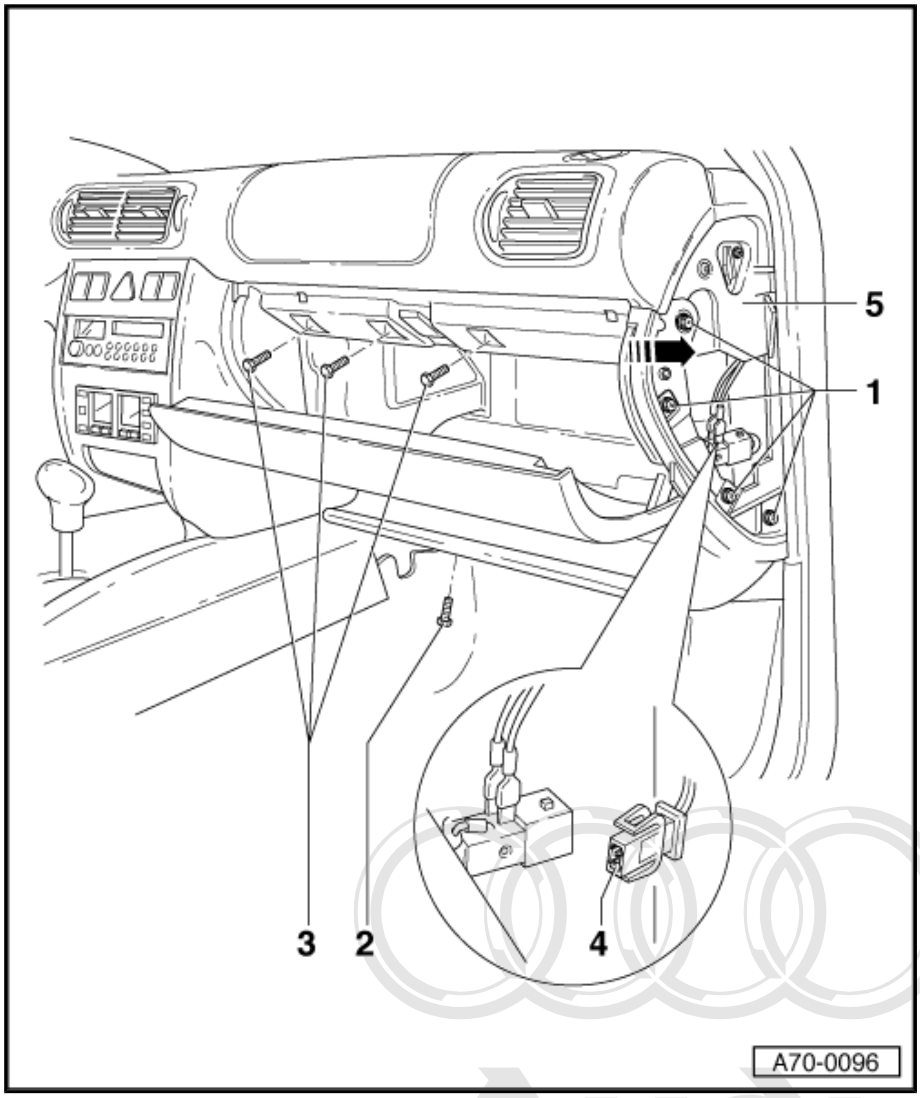

4.4 Installing warning lamp for airbag deactivated on front passenger side

Protected by copyright. Copying for private or commercial purposes, in part or in whole, is not permitted unless authorised by AUDI AG. AUDI AG does not guarantee or accept any liability with respect to the correctness of information in this document. Copyright by AUDI AG.

4.4.1 Removing front interior light -W1- without warning lamp for airbag deactivated on front passenger side

– Unclip cover panels, starting at front.
– Unscrew bolts -2- (2x).
– Detach cover panel -1- at front.
– Unplug electrical connectors.

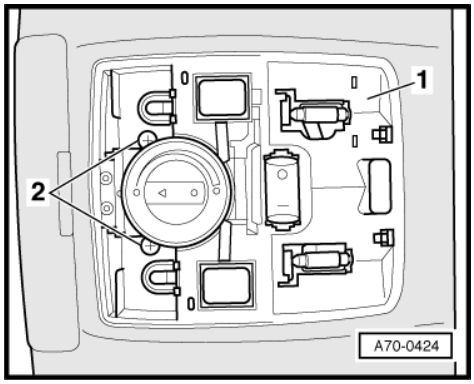

4.4.2 Installing front interior light -W1- with warning lamp for airbag deactivated on front passenger side

Note

The wiring to the warning lamp for airbag deactivated on front passenger side -K145- ("PASSENGER AIRBAG OFF" lamp) is part of the front interior light -W1- wiring harness.

Protected by copyright. Copying for private or commercial purposes, in part or in whole, is not permitted unless authorised by AUDI AG. AUDI AG does not guarantee or accept any liability with respect to the correctness of information in this document. Copyright by AUDI AG.

- Plug in connectors to front interior light -W1- and warning lamp for airbag deactivated on front passenger side -K145- .
- Install front interior light -W1- with warning lamp for airbag deactivated on front passenger side -K145- .
- Switch on ignition.

WARNING

Make sure nobody is in the vehicle when the battery is being connected.

- Connect battery earth strap ⇒ Electrical system; Rep. Gr. 27 .
- Observe measures to be taken after connecting the battery ⇒ Electrical system; Rep. Gr. 27 .
- Re-code airbag control unit -J234- ⇒ page 86 .
- Perform functional test.
- Deactivate airbag on front passenger side with key-operated switch to deactivate airbag on front passenger side -E224- .

  Warning lamp for airbag deactivated on front passenger side -K145- must light up constantly.
- Activate airbag on front passenger side with key-operated switch to deactivate airbag on front passenger side -E224- .

  Warning lamp for airbag deactivated on front passenger side -K145- must go out.
- Interrogate and erase fault memories of all control units. To do so, use a suitable vehicle diagnostic, testing and information system, e.g. vehicle diagnostic, testing and information system -VAS 5051B- .

5 Retrofitting key-operated switch (Audi A3 2004 ▸ including Audi A3 Sportback and Audi A3 Cabriolet 2008 ▸)

WARNING

When retrofitting key-operated switch to deactivate airbag on front passenger side -E224- and warning lamp for airbag deactivated on front passenger side -K145- , observe safety precautions for working on airbags ⇒ General body repairs, interior; Rep. Gr. 69 .

WARNING

Before handling the airbag units (e.g. unplugging the electrical connector) the mechanic must discharge static electricity by briefly touching the door striker plate, or similar.

Components required for retrofitting ⇒ page 3

5.1 Removing and installing glove box

Special tools and workshop equipment required

- Torque wrench -V.A.G 1783-

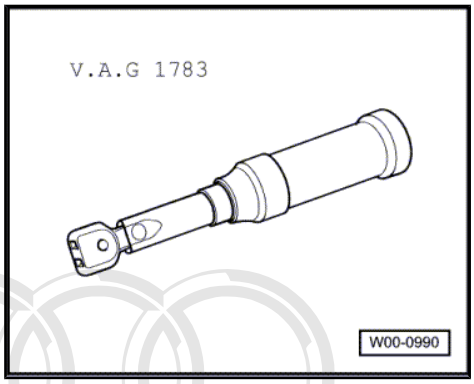

Protected by copyright. Copying for private or commercial purposes, in part or in whole, is not permitted unless authorised by AUDI AG. AUDI AG does not guarantee or accept any liability with respect to the correctness of information in this document. Copyright by AUDI AG.

1 - Glove box

❑ Equipment versions:

- ♦ Without compartment for maps
- ♦ With compartment for maps
- ♦ With CD changer

❑ Removal and installation are identical for all versions

♦ Removing

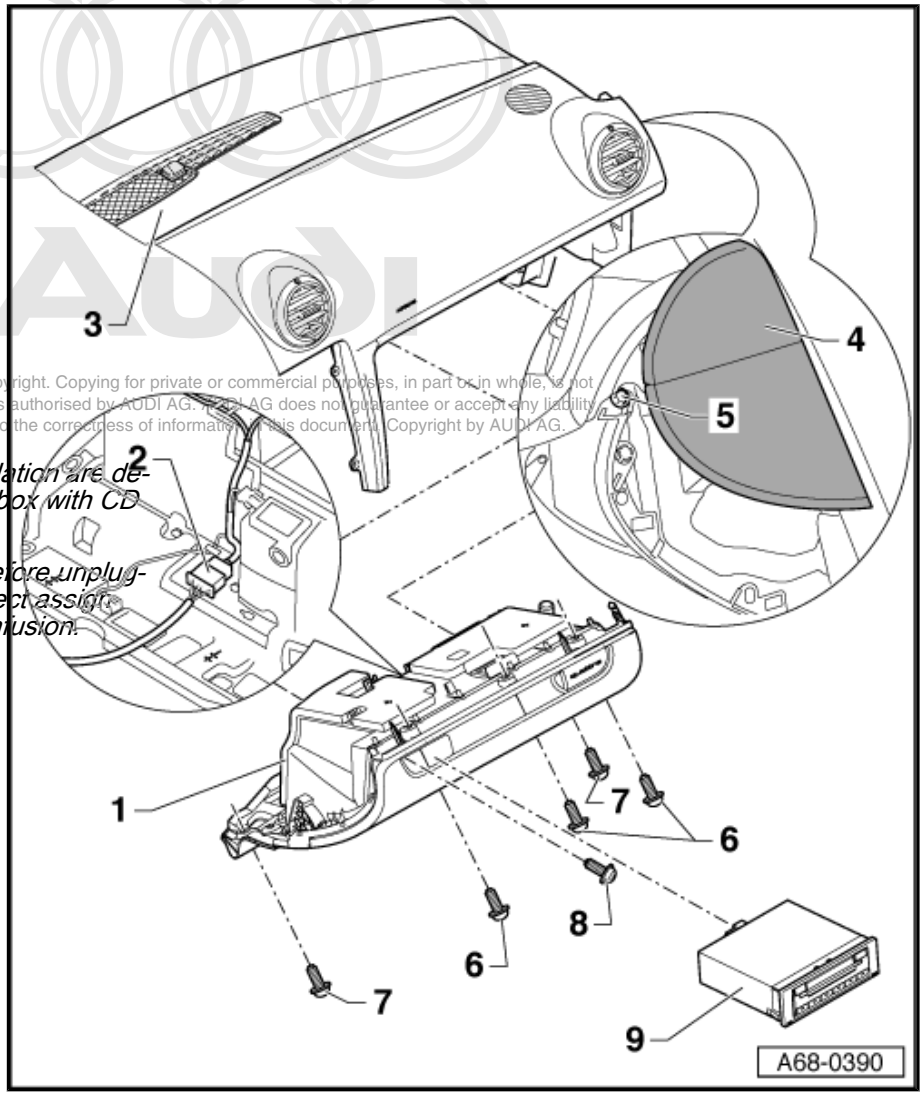

Protected by copyright. Copying for private or commercial purposes, in part or in whole, is not permitted unless authorised by AUDI AG. AUDI AG does not guarantee or accept any liability with respect to the correctness of information in this document. Copyright by AUDI AG.

Note

- ♦ *Removal and installation are described for a glove box with CD changer.*
- ♦ *Mark connectors before unplugging to ensure correct assignment and avoid confusion.*

– Switch off ignition and remove ignition key.
– With ignition switched off, disconnect earth wire at battery ⇒ Electrical system; Rep. Gr. 27 .
– Remove dash panel end trim (right-side) -4- ⇒ General body repairs, interior; Rep. Gr. 70 .
– Open glove box lid.
– Remove CD changer -9- ⇒ Communication; Rep. Gr. 91 .
– Remove bolt -5-.
– From underneath, remove bolts -6- (3x) at front edge of glove box.
– Support glove box.
– Remove bolts -7- (2x) at rear edge of glove box.

Right-hand-drive vehicles

– Remove bolt -8-.

All vehicles (continued)

WARNING

Before unplugging the connectors, discharge static by briefly touching door striker plate for example.

– Unplug connector -2- between supply lead/wiring harness for glove box.
– Take out glove box.
– Make a sketch or take a photograph as a guide for routing the wiring harness on the glove box.
– Remove glove box wiring harness.
– Re-work glove box for mounting key-operated switch to deactivate airbag on front passenger side -E224- ⇒ page 16 .

♦ Installing

Install in reverse order of removal. Observe the following:

– Route and secure wiring harness on glove box according to sketch or photograph.

– Secure glove box wiring harness in clips provided ⇒ page 17 .

– Make sure connectors engage correctly (audibly).

2 - Connector for supply lead/wiring harness

❑ Routing and securing glove box wiring harness ⇒ page 17

3 - Dash panel

4 - Dash panel end trim (right-side)

❑ Removing and installing ⇒ General body repairs, interior; Rep. Gr. 70

5 - Bolt

❑ Tightening torque: 3.5 Nm

6 - Bolts (3x)

❑ Tightening torque: 3.5 Nm

7 - Bolts (2x)

❑ Tightening torque: 3.5 Nm

8 - Bolt

❑ Right-hand-drive vehicles only

❑ Tightening torque: 3.5 Nm

9 - CD changer

❑ Removing and installing ⇒ Communication; Rep. Gr. 91

5.2 Converting glove box

– On back of glove box -1-, cut out cover panel -arrow B- within peripheral groove (perforation) -arrow A-.

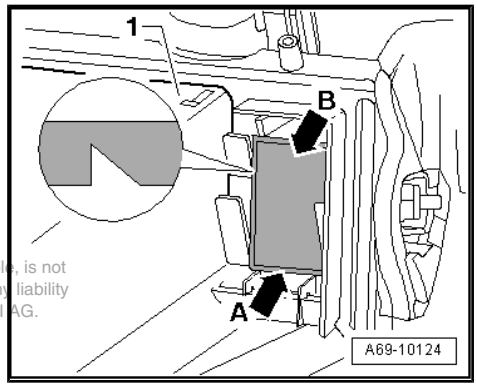

Protected by copyright. Copying for private or commercial purposes, in part or in whole, is not permitted unless authorised by AUDI AG. AUDI AG does not guarantee or accept any liability with respect to the correctness of information in this document. Copyright by AUDI AG.

5.3 Routing and securing glove box wiring harness

1 - Glove box with CD changer

2 - Key-operated switch to deactivate airbag on front passenger side -E224-

3 - Glove box light

- ❑ Removing and installing ⇒ Electrical system; Rep. Gr. 96

4 - Connector of supply lead/ wiring harness for glove box

5 - Footwell light

- ❑ Removing and installing ⇒ Electrical system; Rep. Gr. 96

6 - Wiring harness for glove box with CD changer

- ❑ Secure wiring harness for glove box -1- with clips -arrows-

7 - Switch for light

8 - Glove box with compartment for maps

9 - Glove box wiring harness

- ❑ Secure wiring harness for glove box -8- with clips -arrows-

10 - Glove box without compartment for maps

11 - Glove box wiring harness

- ❑ Secure wiring harness for glove box -10- with clips -arrows-

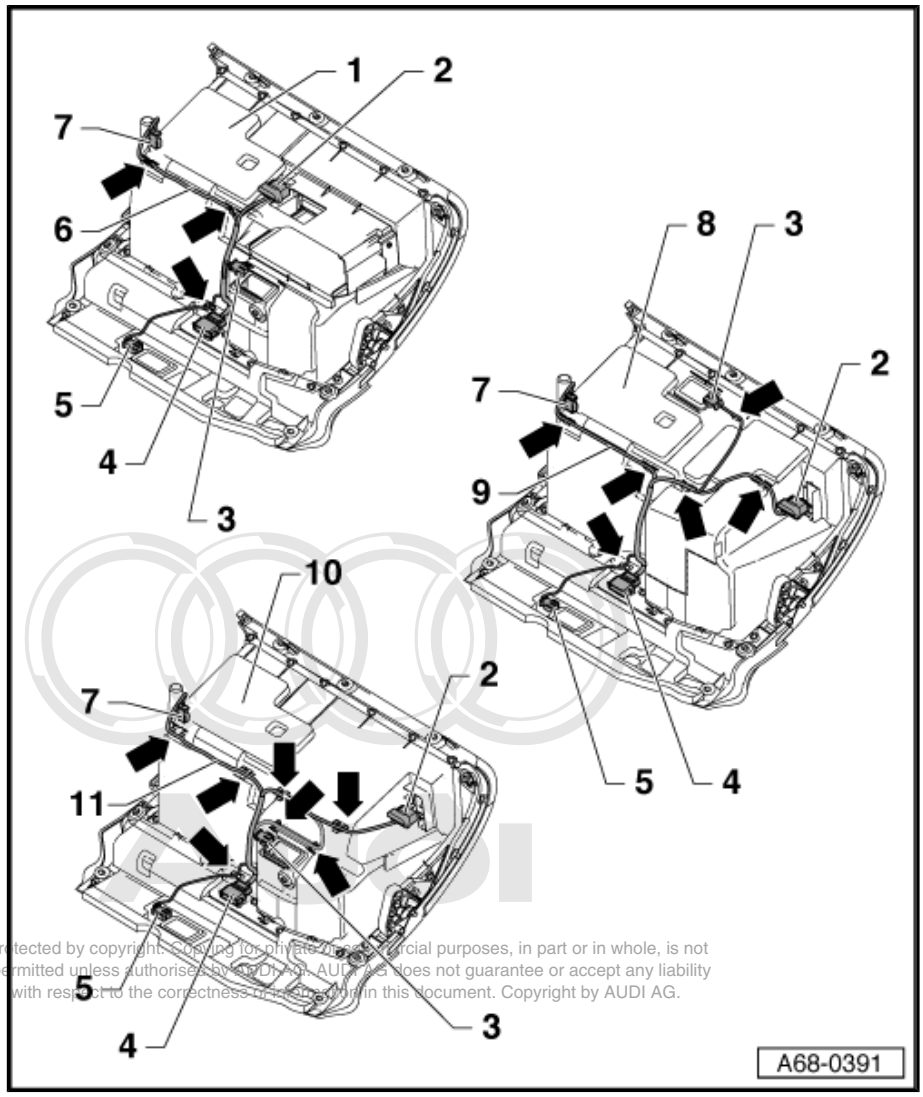

Protected by copyright. Copying for private and commercial purposes, in part or in whole, is not permitted unless authorised by AUDI AG. AUDI AG does not guarantee or accept any liability with respect to the correctness of information in this document. Copyright by AUDI AG.

5.4 Installing key-operated switch

– Press key-operated switch to deactivate airbag on front passenger side -E224- -2- into re-worked glove box opening until retaining clips -arrow- engage.

The illustration shows attachment of the key-operated switch to deactivate airbag on front passenger side -E224- to a glove box with CD changer -R41- .

On glove boxes with/without compartment for maps, mounting for key-operated switch to deactivate airbag on front passenger side -E224- is located on left in direction of travel. Attachment of the key-operated switch is performed as for the version with CD changer -R41- .

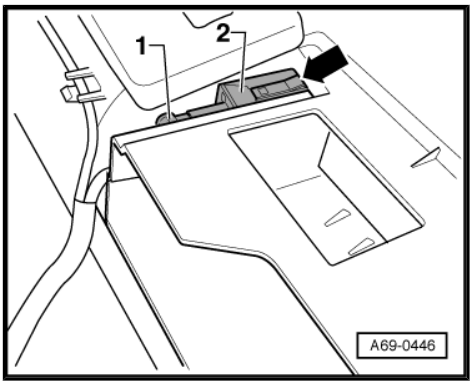

– Plug in connector -1- at key-operated switch to deactivate airbag on front passenger side -E224- .

– Make sure connector engages properly (audibly).

– Install glove box ⇒ page 14 .

5.5 Installing warning lamp for airbag deactivated on front passenger side

5.5.1 Removing front interior light -W1- without warning lamp for airbag deactivated on front passenger side

Special tools and workshop equipment required

♦ Front-end hook -3370-

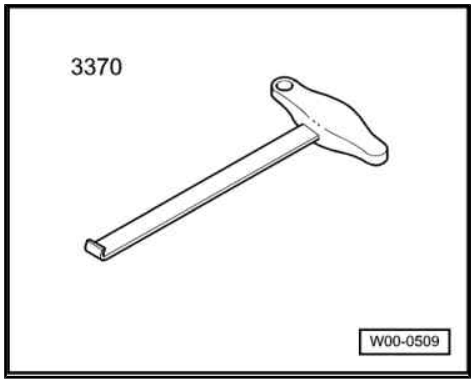

– Use front-end hook -3370- to carefully detach cover panel for reading light in direction of -arrow-.

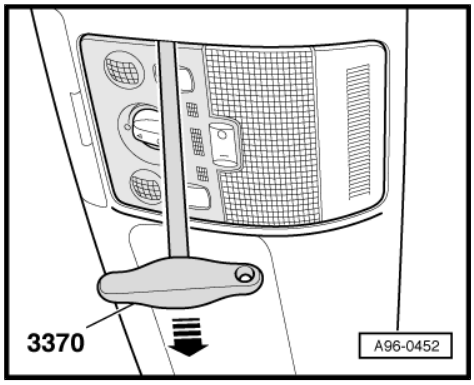

– If applicable, unplug connector -1- of hands-free microphone -3-.

2 - Cover panel for reading light

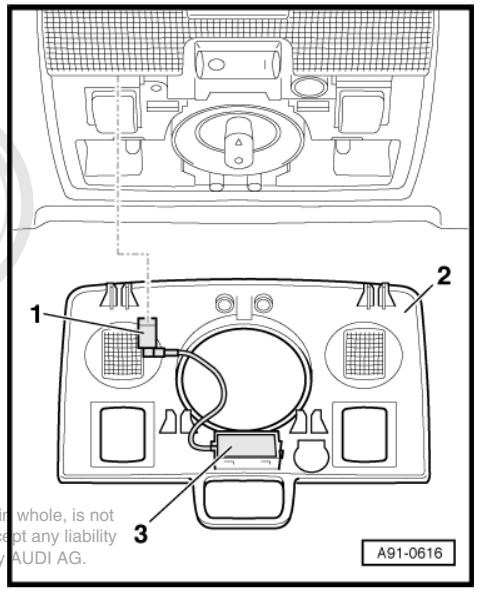

Protected by copyright. Copying for private or commercial purposes, in part or in whole, is not permitted unless authorised by AUDI AG. AUDI AG does not guarantee or accept any liability with respect to the correctness of information in this document. Copyright by AUDI AG.

– Remove bolts -arrows-.
– Swivel down front interior light -W1- and remove from headliner opening.
– Unplug electrical connectors.

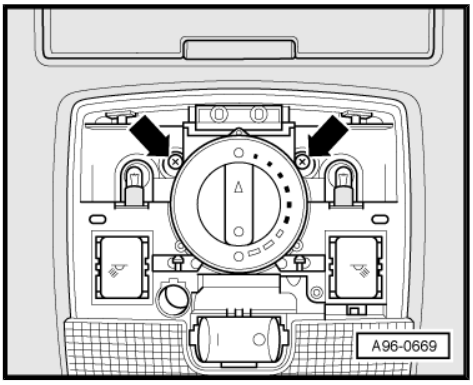

5.5.2 Installing front interior light -W1- with warning lamp for airbag deactivated on front passenger side (up to approx. week 22/2004)

Special tools and workshop equipment required

♦ Torque wrench -V.A.G 1783-

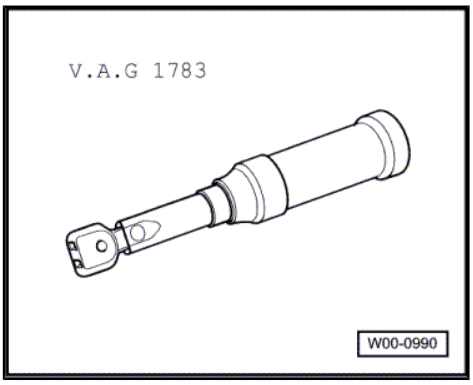

Note

The wiring to the warning lamp for airbag deactivated on front passenger side -K145- ("PASSENGER AIRBAG OFF" lamp) is part of the front interior light -W1- wiring harness.

Installation is carried out in reverse order; note the following:

– Plug in connectors for front interior light -W1- and, if applicable, for hands-free microphone.
– Plug in connector for warning lamp for airbag deactivated on front passenger side -K145- ("PASSENGER AIRBAG OFF" lamp).

Protected by copyright. Copying for private or commercial purposes, in part or in whole, is not permitted unless authorised by AUDI AG. AUDI AG does not guarantee or accept any liability with respect to the correctness of information in this document. Copyright by AUDI AG.

– Engage front interior light -W1- and secure -arrows-.
– Press on reading light cover panel until it engages.
– Switch on ignition.

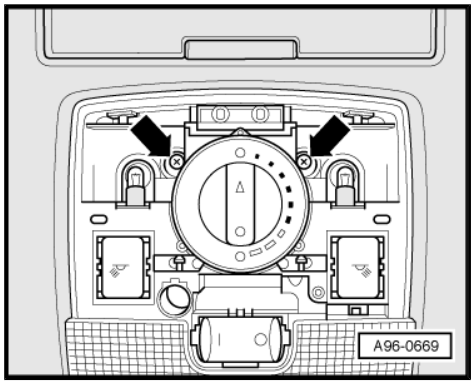

> ⚠ **WARNING**
>
> *Make sure nobody is in the vehicle when the battery is being connected.*

– Connect battery earth strap ⇒ Electrical system; Rep. Gr. 27 .
– Observe measures to be taken after connecting the battery ⇒ Electrical system; Rep. Gr. 27 .
– Re-code airbag control unit -J234- ⇒ page 86 .
– Perform functional test.
– Deactivate airbag on front passenger side with key-operated switch to deactivate airbag on front passenger side -E224- .

  Warning lamp for airbag deactivated on front passenger side -K145- must light up constantly.
– Activate airbag on front passenger side with key-operated switch to deactivate airbag on front passenger side -E224- .

  Warning lamp for airbag deactivated on front passenger side -K145- must go out.
– Interrogate and erase fault memories of all control units. To do so, use a suitable vehicle diagnostic, testing and information system, e.g. vehicle diagnostic, testing and information system -VAS 5051B- .

Tightening torque

Component	Nm
Front interior light -W1- to roof	3

5.5.3 Installing warning lamp for airbag deactivated on front passenger side -K145- (from approx. week 23/2004 onwards)

Special tools and workshop equipment required

♦ Front-end hook -3370-

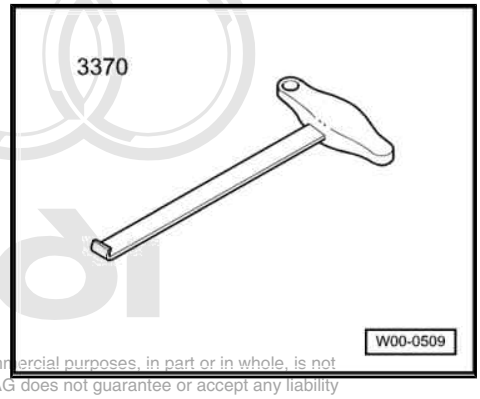

Protected by copyright. Copying for private or commercial purposes, in part or in whole, is not permitted unless authorised by AUDI AG. AUDI AG does not guarantee or accept any liability with respect to the correctness of information in this document. Copyright by AUDI AG.

Note

The wiring to the warning lamp for airbag deactivated on front passenger side -K145- ("PASSENGER AIRBAG OFF" lamp) is part of the passenger compartment wiring harness.

Vehicles with small radio slot

– Remove radio ⇒ Communication; Rep. Gr. 91 .
– Unclip trim for switch module at top with front-end hook -3370- in direction of -arrow 1-.
– Unclip trim for switch module at top with front-end hook -3370- in direction of -arrow 2-.
– Detach trim for switch module at top.

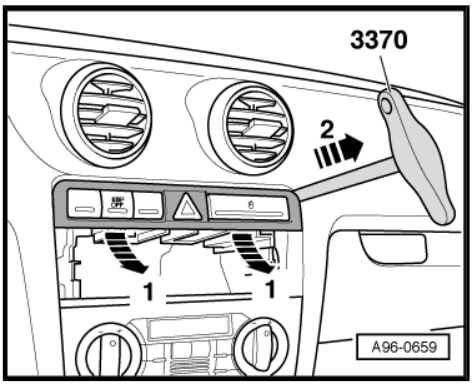

– Carefully pull dummy cover -1- in direction of -arrow- out of switch insert using front-end hook -3370- .

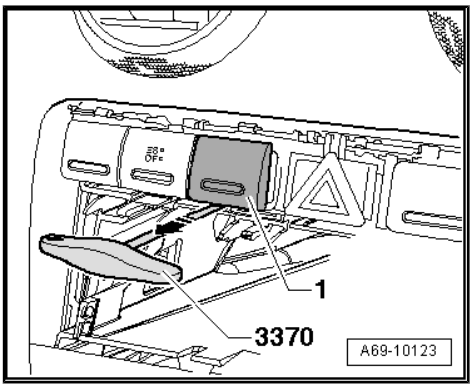

Protected by copyright. Copying for private or commercial purposes, in part or in whole, is not permitted unless authorised by AUDI AG. AUDI AG does not guarantee or accept any liability with respect to the correctness of information in this document. Copyright by AUDI AG.

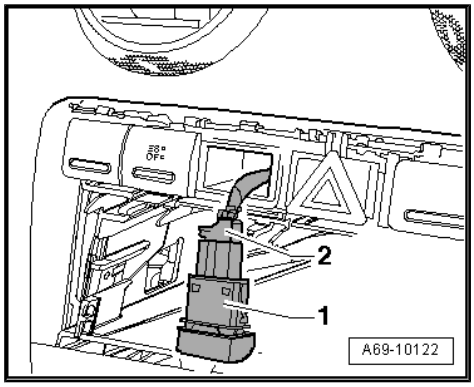

- Guide free connector -2- (blue) at wiring harness through free chamber of switch insert from rear.
- Plug in connector -2- at warning lamp for airbag deactivated on front passenger side -K145- -1-.
- Make sure connector -2- and warning lamp for airbag deactivated on front passenger side -K145- -1- engage properly (audibly).
- Insert warning lamp for airbag deactivated on front passenger side -K145- -1- in dash panel switch mounting and engage.
- Clip in trim for switch module at top.
- Install radio ⇒ Communication; Rep. Gr. 91 .
- Switch on ignition.

> ⚠ **WARNING**
>
> ***Make sure nobody is in the vehicle when the battery is being connected.***

- Connect battery earth strap ⇒ Electrical system; Rep. Gr. 27 .
- Observe measures to be taken after connecting the battery ⇒ Electrical system; Rep. Gr. 27 .
- Re-code airbag control unit -J234- ⇒ page 86 .
- Perform functional test.
- Deactivate airbag on front passenger side with key-operated switch to deactivate airbag on front passenger side -E224- .

  Warning lamp for airbag deactivated on front passenger side -K145- must light up constantly.
- Activate airbag on front passenger side with key-operated switch to deactivate airbag on front passenger side -E224- .

  Warning lamp for airbag deactivated on front passenger side -K145- must go out.
- Interrogate and erase fault memories of all control units. To do so, use a suitable vehicle diagnostic, testing and information system, e.g. vehicle diagnostic, testing and information system -VAS 5051B- .

Vehicles with large radio slot

Protected by copyright. Copying for private or commercial purposes, in part or in whole, is not permitted unless authorised by AUDI AG. AUDI AG does not guarantee or accept any liability with respect to the correctness of information in this document. Copyright by AUDI AG.

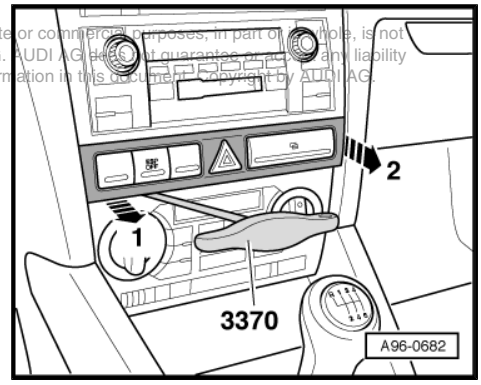

- Unclip trim for switch module at bottom with front-end hook -3370- in direction of -arrow 1-.
- Unclip bottom trim for switch module at side in direction of -arrow 2- using front-end hook -3370- .
- Detach trim for switch module at bottom.
- Remove radio ⇒ Communication; Rep. Gr. 91 .

– Carefully pull dummy cover -1- in direction of -arrow- out of switch insert using front-end hook -3370- .

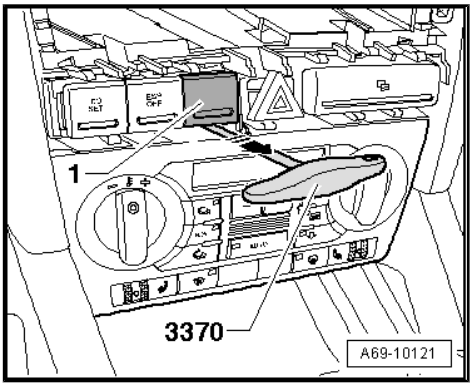

– Guide free connector -2- (blue) at wiring harness through free chamber of switch insert from rear.
– Plug in connector -2- at warning lamp for airbag deactivated on front passenger side -K145- -1-.
– Make sure connector -2- and warning lamp for airbag deactivated on front passenger side -K145- -1- engage properly (audibly).
– Insert warning lamp for airbag deactivated on front passenger side -K145- -1- in dash panel switch mounting and engage.
– Install radio ⇒ Communication; Rep. Gr. 91 .
– Clip in trim for switch module at bottom.
– Switch on ignition.

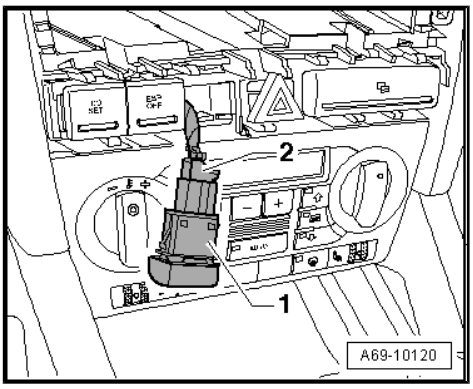

> ⚠ **WARNING**
>
> ***Make sure nobody is in the vehicle when the battery is being connected.***

– Connect battery earth strap ⇒ Electrical system; Rep. Gr. 27 .
– Observe measures to be taken after connecting the battery ⇒ Electrical system; Rep. Gr. 27 .
– Re-code airbag control unit -J234- ⇒ page 86 .
– Perform functional test.
– Deactivate airbag on front passenger side with key-operated switch to deactivate airbag on front passenger side -E224- .

  Warning lamp for airbag deactivated on front passenger side -K145- must light up constantly.
– Activate airbag on front passenger side with key-operated switch to deactivate airbag on front passenger side -E224- .

  Warning lamp for airbag deactivated on front passenger side -K145- must go out.
– Interrogate and erase fault memories of all control units. To do so, use a suitable vehicle diagnostic, testing and information system, e.g. vehicle diagnostic, testing and information system -VAS 5051B- .

Protected by copyright. Copying for private or commercial purposes, in part or in whole, is not permitted unless authorised by AUDI AG. AUDI AG does not guarantee or accept any liability with respect to the correctness of information in this document. Copyright by AUDI AG.

6 Retrofitting key-operated switch (Audi A4 1995 ▸ from chassis no. 8DXA 200 001 onwards)

WARNING

When retrofitting key-operated switch to deactivate airbag on front passenger side -E224- and warning lamp for airbag deactivated on front passenger side -K145- , observe safety precautions for working on airbags ⇒ General body repairs, interior; Rep. Gr. 69 .

Protected by copyright. Copying for private or commercial purposes, in part or in whole, is not permitted unless authorised by AUDI AG. AUDI AG does not guarantee or accept any liability with respect to the correctness of information in this document. Copyright by AUDI AG.

WARNING

Before handling the airbag units (e.g. unplugging the electrical connector) the mechanic must discharge static electricity by briefly touching the door striker plate, or similar.

Components required for retrofitting ⇒ page 4

6.1 Removing glove box

1 - Bolts (2x)

- ❑ Tightening torque: 5 Nm

2 - Glove box

♦ Removing

- – Switch off ignition and remove ignition key.
- – With ignition switched off, disconnect earth wire at battery ⇒ Electrical system; Rep. Gr. 27 .
- – Unclip dash panel end trim.
- – Unscrew bolts -1- (2x).
- – Remove bolt -3- (1x).
- – Open glove box.
- – Unscrew bolts -4- (2x).
- – Pull out glove box slightly

> ⚠ WARNING
> *Before unplugging the connectors, discharge static by briefly touching door striker plate for example.*

- – Unplug connector for glove box light.

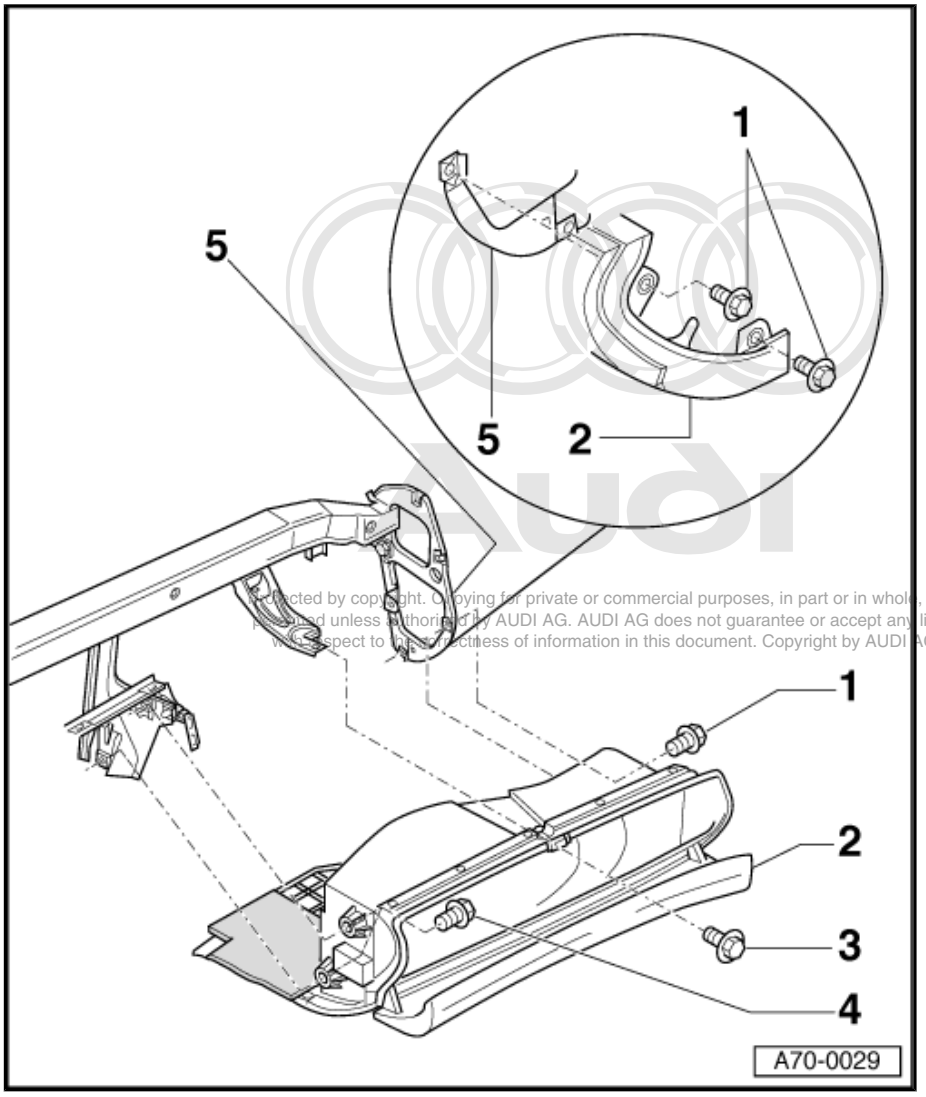

Protected by copyright. Copying for private or commercial purposes, in part or in whole, is not permitted unless authorised by AUDI AG. AUDI AG does not guarantee or accept any liability with respect to the correctness of information in this document. Copyright by AUDI AG.

3 - Bolt (1x)

- ❑ Tightening torque: 5 Nm

4 - Bolts (2x)

- ❑ Tightening torque: 5 Nm

5 - Dash panel cross member

6.2 Converting glove box

– Drill a hole with a diameter of 4 mm at both points marked -1- (2x).

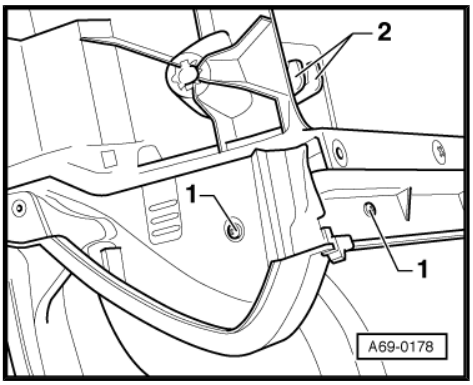

– Mark cut-out dimensions -A- 4 mm, -B- 30 mm and -C- 30 mm.
– Drill a hole with a diameter of 10 mm at edge of mark.
– Use commercially available compass saw to make glove box cut-out along mark.

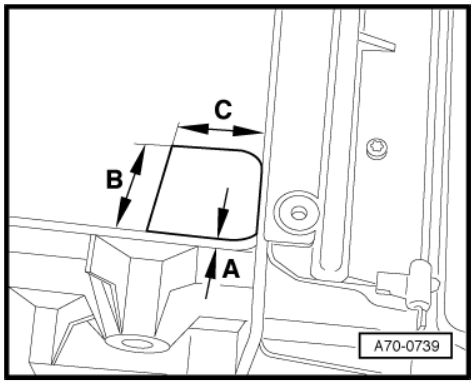

6.3 Installing key-operated switch

– With key -3- inserted, press lock cylinder -2- into key-operated switch to deactivate airbag on front passenger side -E224- -1- until lock cylinder -2- engages.
– Insert key-operated switch to deactivate airbag on front passenger side -E224- in mounting for key-operated switch.

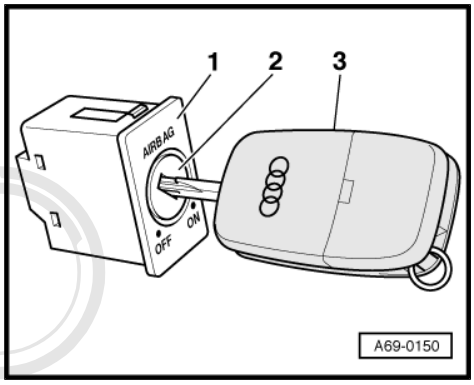

– Engage mounting bracket for key-operated switch at lugs -2- (2x) and secure with bolts -1- (2x).

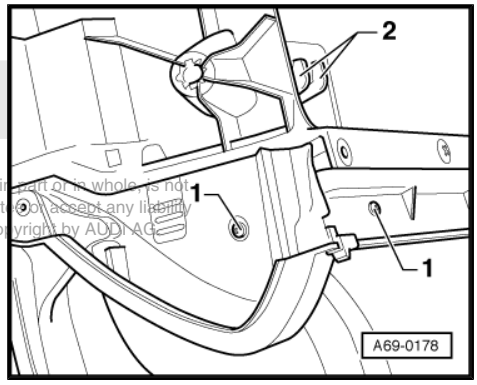

Note

The wire with connector for the key-operated switch to deactivate airbag on front passenger side -E224- is attached to the wiring harness.

Editorial Copyright. Reproduction or transmission for commercial purposes, in part or in whole, is not permitted unless authorised by AUDI AG. AUDI AG does not guarantee or accept any liability with respect to the correctness of information in this document. Copyright by AUDI AG.

– Unplug connector for key-operated switch to deactivate airbag on front passenger side -E224- from wiring harness.

6.4 Installing glove box

Special tools and workshop equipment required

♦ Torque wrench -V.A.G 1410-

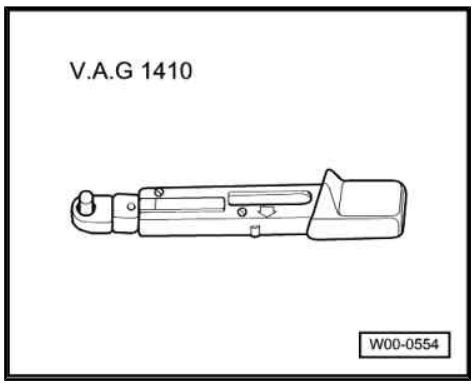

1 - Bolts (2x)

- ❑ Tightening torque: 5 Nm

2 - Glove box

♦ Installing

- – Place glove box -2- in correct position.
- – Plug in connectors for glove box light and key-operated switch to deactivate airbag on front passenger side -E224- .
- – Make sure connectors engage properly (audibly).
- – Perform remaining installation in reverse order of removal.

3 - Bolt (1x)

- ❑ Tightening torque: 5 Nm

4 - Bolts (2x)

- ❑ Tightening torque: 5 Nm

5 - Dash panel cross member

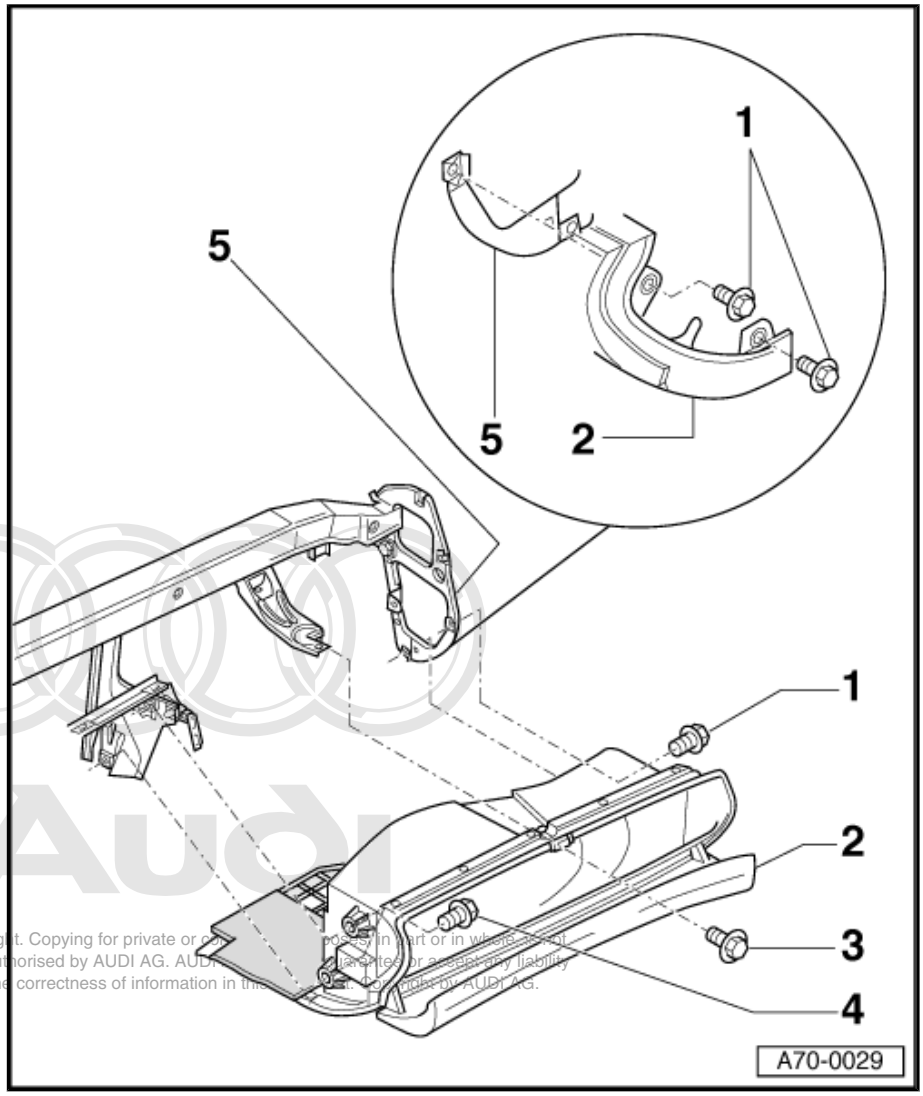

Protected by copyright. Copying for private or commercial purposes, in part or in whole, is not permitted unless authorised by AUDI AG. AUDI AG does not guarantee or assume any liability with respect to the correctness of information in this document. Copyright by AUDI AG.

6.5 Installing warning lamp for airbag deactivated on front passenger side

6.5.1 Removing front interior light -W1- without warning lamp for airbag deactivated on front passenger side

- – Unclip cover panels, starting at front.
- – Unscrew bolts -2- (2x).
- – Detach cover panel -1- at front.
- – Unplug connectors.

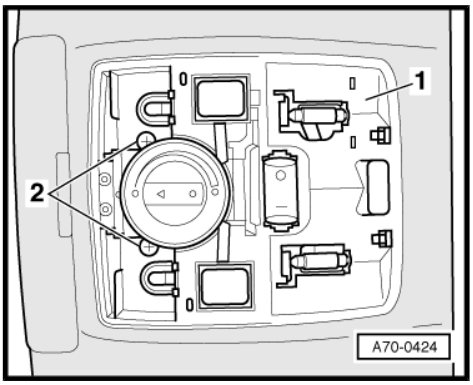

6.5.2 Installing front interior light -W1- with warning lamp for airbag deactivated on front passenger side

Note

The wiring to the warning lamp for airbag deactivated on front passenger side -K145- ("PASSENGER AIRBAG OFF" lamp) is part of the front interior light -W1- wiring harness.

Reproduction of this document or any part of its contents in any form or by any means, for any purpose of any kind, without the express written consent of AUDI AG, is not permitted unless authorised by AUDI AG. AUDI AG does not guarantee or accept any liability whatsoever in the content or in the use of this document. Copyright by AUDI AG.

- Plug in connectors to front interior light -W1- and warning lamp for airbag deactivated on front passenger side -K145- .
- Install front interior light -W1- with warning lamp for airbag deactivated on front passenger side -K145- .
- Clip in cover panels.
- Switch on ignition.

WARNING

Make sure nobody is in the vehicle when the battery is being connected.

- Connect battery earth strap ⇒ Electrical system; Rep. Gr. 27 .
- Observe measures to be taken after connecting the battery ⇒ Electrical system; Rep. Gr. 27 .
- Re-code airbag control unit -J234- ⇒ page 86 .
- Perform functional test.
- Deactivate airbag on front passenger side with key-operated switch to deactivate airbag on front passenger side -E224- .

  Warning lamp for airbag deactivated on front passenger side -K145- must light up constantly.
- Activate airbag on front passenger side with key-operated switch to deactivate airbag on front passenger side -E224- .

  Warning lamp for airbag deactivated on front passenger side -K145- must go out.
- Interrogate and erase fault memories of all control units. To do so, use a suitable vehicle diagnostic, testing and information system, e.g. vehicle diagnostic, testing and information system -VAS 5051B- .

7 Retrofitting key-operated switch (Audi A4 2001 ‣ up to week 35/2004 including Audi S4 and Audi S4 Cabriolet)

> **WARNING**
>
> *When retrofitting key-operated switch to deactivate airbag on front passenger side -E224- and warning lamp for airbag deactivated on front passenger side -K145- , observe safety precautions for working on airbags ⇒ General body repairs, interior; Rep. Gr. 69 .*

> **WARNING**
>
> *Before handling the airbag units (e.g. unplugging the electrical connector) the mechanic must discharge static electricity by briefly touching the door striker plate, or similar.*

Reproduction or copyright. Copyright protected or commercial purposes, in part or in whole, is not permitted unless authorised by AUDI AG. AUDI AG does not guarantee or accept any liability with respect to the correctness of information in this document. Copyright by AUDI AG.

Components required for retrofitting ⇒ page 4

7.1 Removing glove box

Special tools and workshop equipment required

- Front-end hook -3370-

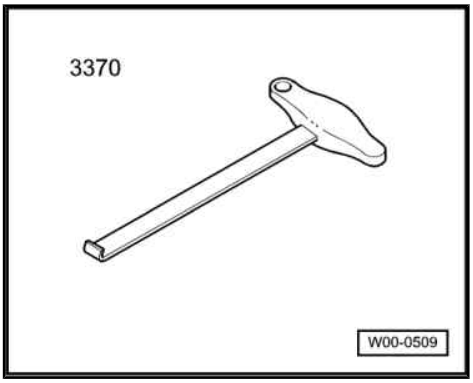

1 - Glove box

♦ Removing

– Switch off ignition and remove ignition key.

– With ignition switched off, disconnect earth wire at battery ⇒ Electrical system; Rep. Gr. 27 .

– Remove dash panel end trim (right-side) -2- ⇒ page 31 .

– Open glove box lid.

– Loosen the three bolts -3- at top in recesses of glove box -1-.

– Working from the side, loosen bolts -5- (2x).

– Working from footwell, loosen bolts -4- (2x) from underneath.

– Take out glove box downwards.

> ⚠ **WARNING**
> *Before unplugging the connectors, discharge static by briefly touching door striker plate for example.*

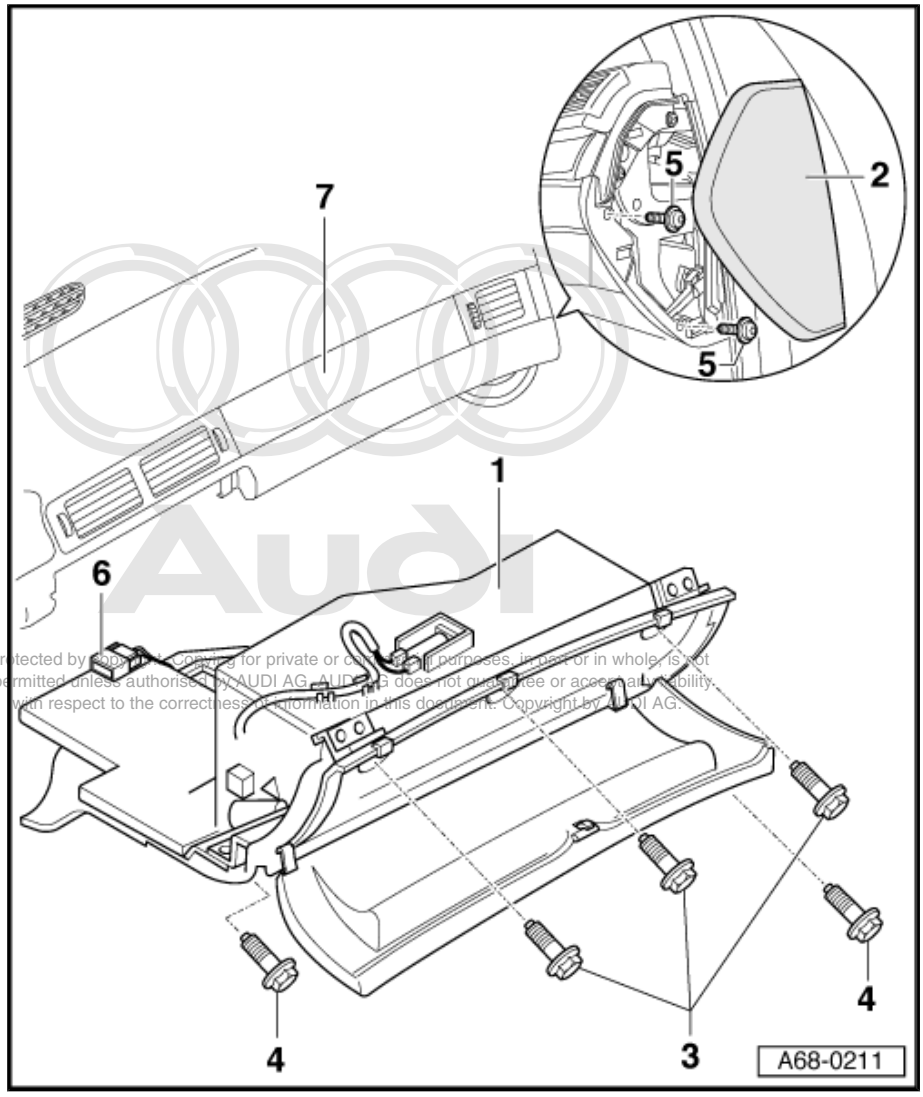

Protected by copyright. Copies for private or commercial purposes, in part or in whole, is not permitted unless authorised by AUDI AG. AUDI AG does not guarantee or accept any liability with respect to the correctness of information in this document. Copyright by AUDI AG.

– Unplug connector of supply lead/wiring harness for glove box -6-.

2 - Dash panel end trim (right-side)

❑ Removing ⇒ page 31

3 - Bolts (3x)

❑ Tightening torque: 5 Nm

4 - Bolts (2x)

❑ Tightening torque: 5 Nm

5 - Bolts (2x)

❑ Tightening torque: 5 Nm

6 - Connector

❑ Of supply lead/wiring harness for glove box

7 - Dash panel

Removing dash panel end trim (right-side)

– Pull off dash panel end trim (right-side) with front-end hook -3370- in direction of -arrow-.

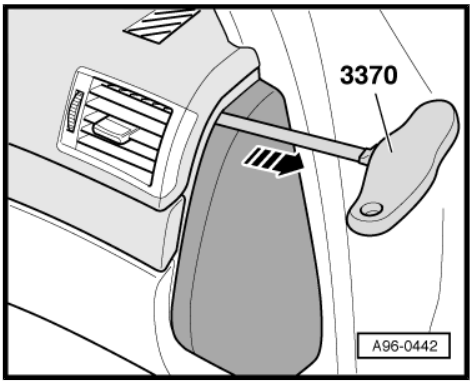

7.2 Converting glove box

– Make a sketch or take a photograph as a guide for routing the wiring harness on the glove box.

– Remove glove box wiring harness.

– On back of glove box -1-, cut out cover panel -arrow B- within peripheral groove (perforation) -arrow A-.

– Install new glove box wiring harness.

– Route and secure wiring harness on glove box according to sketch or photograph.

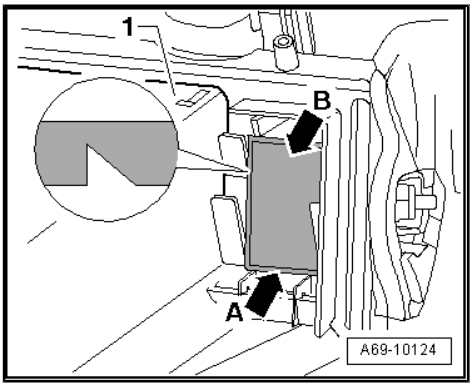

Protected by copyright. Copying for private or commercial purposes, in part or in whole, is not permitted unless authorised by AUDI AG. AUDI AG does not guarantee or accept any liability with respect to the correctness of information in this document. Copyright by AUDI AG.

7.3 Installing key-operated switch

Installing key-operated switch to deactivate airbag on front passenger side -E224- (8E0 919 XXX)

– With key -3- inserted, press lock cylinder -2- into key-operated switch to deactivate airbag on front passenger side -E224- -1- until lock cylinder -2- engages.

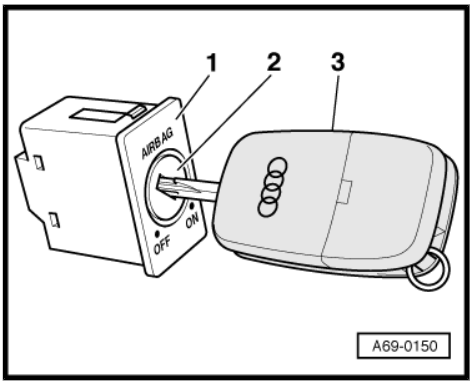

– Press key-operated switch to deactivate airbag on front passenger side -E224- -1- into mounting for key-operated switch in glove box until retaining clips -arrows- engage.

– Plug in connector of glove box wiring harness at key-operated switch.

– Make sure connector engages properly (audibly).

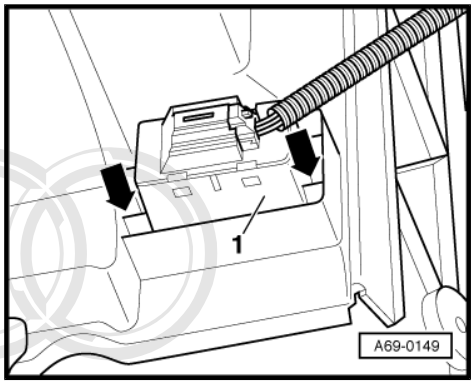

Installing key-operated switch to deactivate airbag on front passenger side -E224- (4B0 919 XXX or 5P0 919 XXX)

– Press key-operated switch to deactivate airbag on front passenger side -E224- into mounting for key-operated switch in glove box until retaining clips engage.

– Plug in connector of glove box wiring harness at key-operated switch.

– Make sure connector engages properly (audibly).

7.4 Retrofitting wiring harness

Protected by copyright. Copying for private or commercial purposes, in part or in whole, is not permitted unless authorised by AUDI AG. AUDI AG does not guarantee or accept any liability with respect to the correctness of information in this document. Copyright by AUDI AG.

– Remove front interior light -W1- without warning lamp for airbag deactivated on front passenger side ⇒ page 33 .

– Unplug connector from front interior light -W1- .

– Check whether connector contacts 4 and 7 are assigned.

  If this is the case, the wiring for front interior light -W1- / warning lamp for airbag deactivated on front passenger side -K145- has been fitted.

– Install new front interior light -W1- with warning lamp for airbag deactivated on front passenger side ⇒ page 35 .

  If the corresponding wiring is not provided in the front interior light -W1- wiring harness, the warning lamp for airbag deactivated on front passenger side -K145- must be retrofitted in the centre section of the dash panel ⇒ page 36 .

7.5 Installing glove box

Special tools and workshop equipment required

♦ Torque wrench -V.A.G 1410-

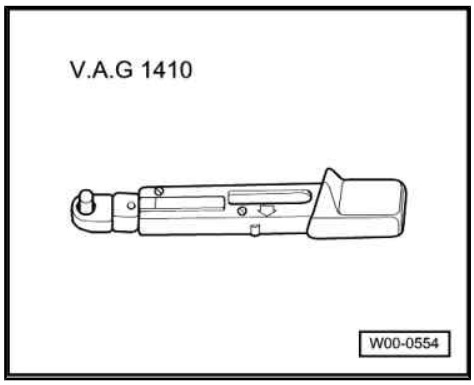

1 - Glove box

♦ Installing

– Place glove box -1- in correct position.

– Plug in connector of supply lead/wiring harness for glove box -6-.

– Make sure connector engages properly (audibly).

– Perform remaining installation in reverse order of removal.

2 - Dash panel end trim (right-side)

3 - Bolts (3x)

❑ Tightening torque: 5 Nm

4 - Bolts (2x)

❑ Tightening torque: 5 Nm

5 - Bolts (2x)

❑ Tightening torque: 5 Nm

6 - Connector

❑ Of supply lead/wiring harness for glove box

7 - Dash panel

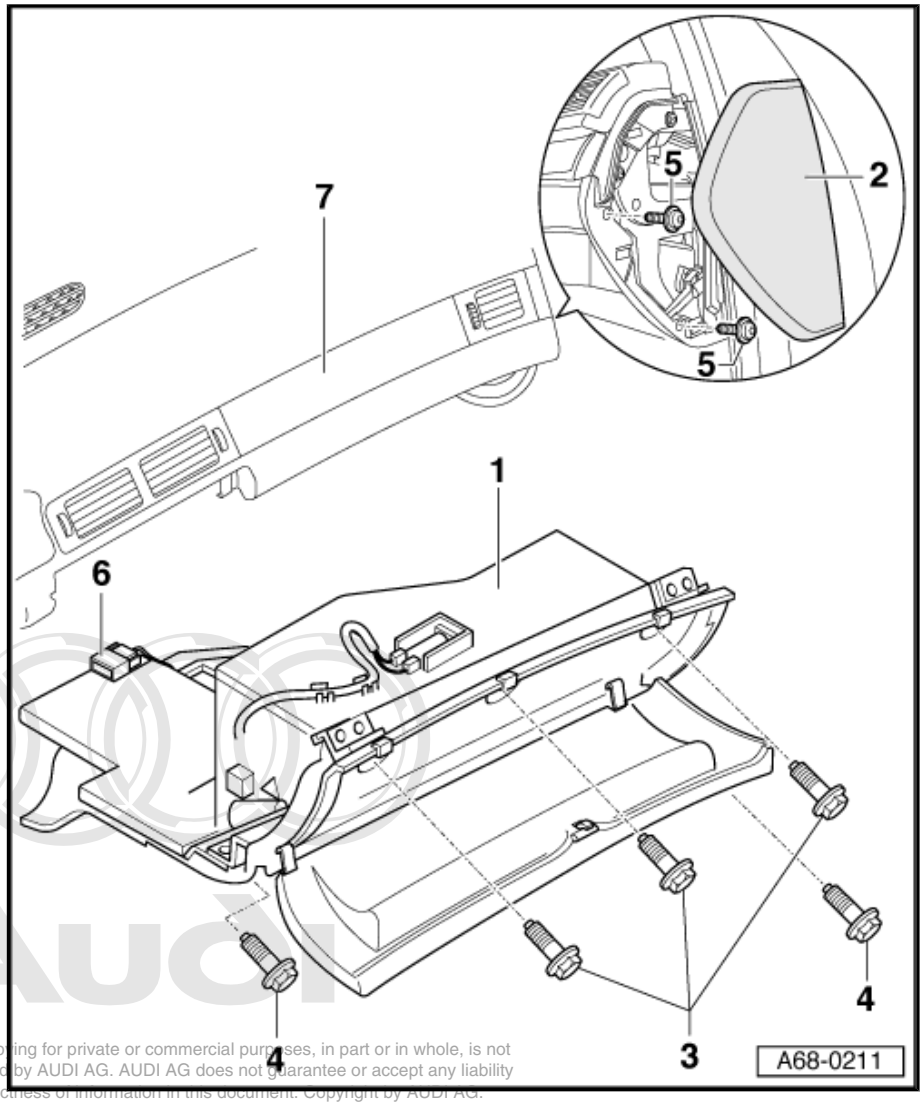

Protected by copyright. Copying for private or commercial purposes, in part or in whole, is not permitted unless authorised by AUDI AG. AUDI AG does not guarantee or accept any liability with respect to the correctness of information in this document. Copyright by AUDI AG.

7.6 Installing warning lamp for airbag deactivated on front passenger side

7.6.1 Removing front interior light -W1- without warning lamp for airbag deactivated on front passenger side (up to approx. week 44/2003)

Special tools and workshop equipment required

♦ Front-end hook -3370-

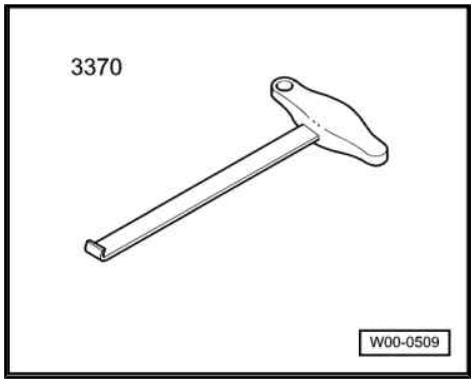

– Use front-end hook -3370- to carefully detach cover panel for reading light in direction of -arrow-.

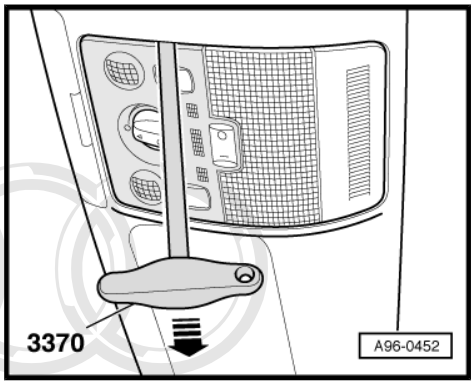

– If fitted, unplug electrical connector -1- of hands-free microphone -3-.

2 - Cover panel for reading light

Protected by copyright. Copying for private or commercial purposes, in part or in whole, is not permitted unless authorised by AUDI AG. AUDI AG does not guarantee or accept any liability with respect to the correctness of information in this document. Copyright by AUDI AG.

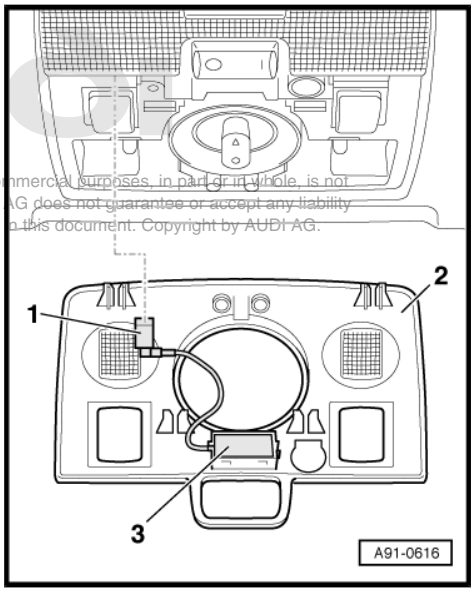

– Remove bolts -arrows-.

– Swivel down front interior light -W1- and remove from opening in headliner.

– Unplug electrical connectors.

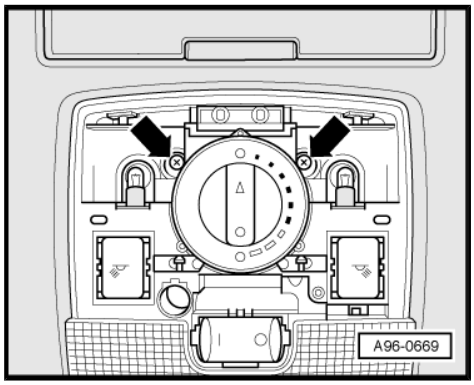

7.6.2 Installing front interior light -W1- with warning lamp for airbag deactivated on front passenger side (up to approx. week 44/2003)

Special tools and workshop equipment required

- Torque wrench -V.A.G 1783-

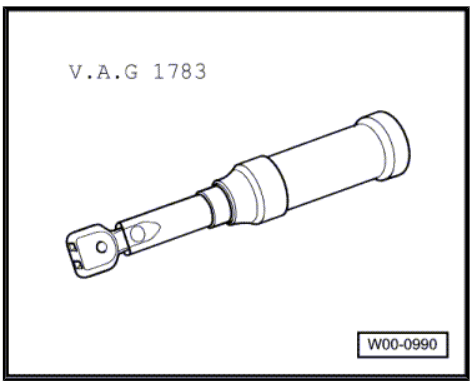

Note

The wiring to the warning lamp for airbag deactivated on front passenger side -K145- ("PASSENGER AIRBAG OFF" lamp) is part of the front interior light -W1- wiring harness.

– Locate the wiring harness for the warning lamp for airbag deactivated on front passenger side -K145- ("PASSENGER AIRBAG OFF" lamp) in the area of the headliner opening.

– Plug in connectors for front interior light -W1- with warning lamp for airbag deactivated on front passenger side -K145- and, if fitted, for hands-free microphone.

Protected by copyright. Copying for private or commercial purposes, in part or in whole, is not permitted unless authorised by AUDI AG. AUDI AG does not guarantee or accept any liability with respect to the correctness of information in this document. Copyright by AUDI AG.

– Engage front interior light -W1- and secure -arrows-.

– Press on reading light cover panel until it engages.

– Switch on ignition.

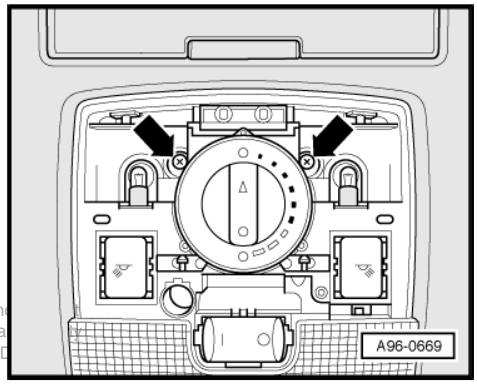

> **WARNING**
>
> *Make sure nobody is in the vehicle when the battery is being connected.*

Protected by copyright. Copying for private or commercial purposes, in part or in whole, is not permitted unless authorised by AUDI AG. AUDI AG does not guarantee or accept any liability with respect to the correctness of information. Copyright by AUDI AG.

– Connect battery earth strap ⇒ Electrical system; Rep. Gr. 27 .

– Observe measures to be taken after connecting the battery ⇒ Electrical system; Rep. Gr. 27 .

– Re-code airbag control unit -J234- ⇒ page 86 .

– Perform functional test.

– Deactivate airbag on front passenger side with key-operated switch to deactivate airbag on front passenger side -E224- .

  Warning lamp for airbag deactivated on front passenger side -K145- must light up constantly.

– Activate airbag on front passenger side with key-operated switch to deactivate airbag on front passenger side -E224- .

  Warning lamp for airbag deactivated on front passenger side -K145- must go out.

– Interrogate and erase fault memories of all control units. To do so, use a suitable vehicle diagnostic, testing and information system, e.g. vehicle diagnostic, testing and information system -VAS 5051B- .

Tightening torque

Component	Nm
Front interior light -W1- to roof	3

7.6.3 Installing warning lamp for airbag deactivated on front passenger side -K145- (from approx. week 45/2003 onwards)

Special tools and workshop equipment required

♦ Front-end hook -3370-

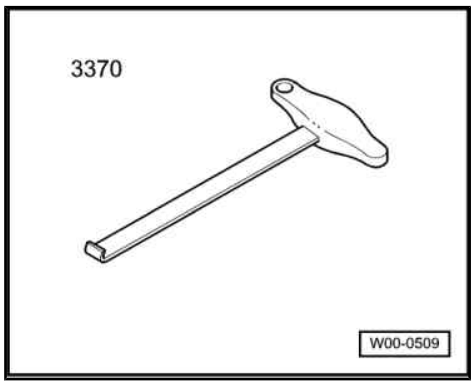

– Remove radio ⇒ Communication; Rep. Gr. 91 .

– Open glove box.

– Carefully detach trim -1- in direction of -arrow- with front-end hook -3370- .

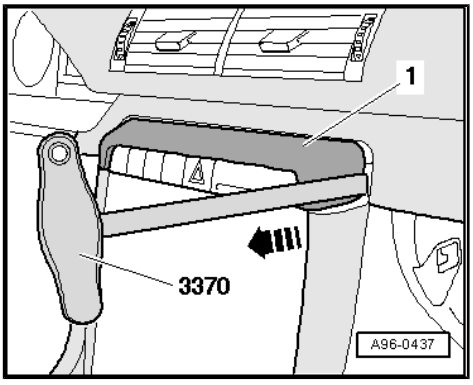

– Use a commercially available flat screwdriver to carefully prise dummy cover -1- out of switch mounting -2- in direction of -arrow-.

– Check whether wiring harness for warning lamp for airbag deactivated on front passenger side -K145- (“PASSENGER AIRBAG OFF” lamp) has been fitted in area of opening for radio (blue 6-pin connector).

  If there is no wiring harness fitted for the warning lamp for airbag deactivated on front passenger side -K145- , the wiring harness 8E1 970 XXX must be retrofitted ⇒ page 45 .

  Perform the following work steps if the wiring harness for the warning lamp for airbag deactivated on front passenger side -K145- is installed.

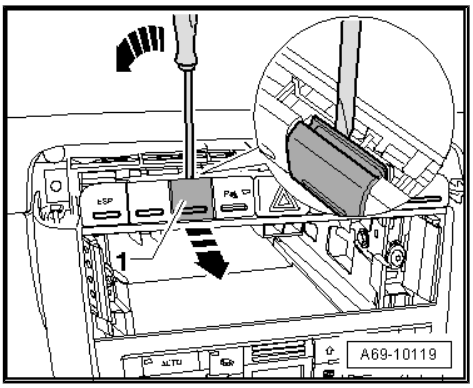

Protected by copyright. Copying for private or commercial purposes, in part or in whole, is not permitted unless authorised by AUDI AG. AUDI AG does not guarantee or accept any liability with respect to the correctness of information in this document. Copyright by AUDI AG.

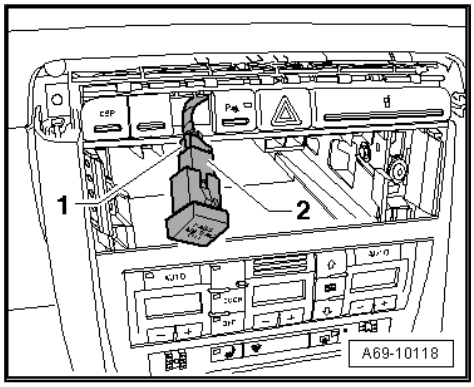

- Guide free connector -1- (blue) at wiring harness through free chamber of switch insert from rear.
- Plug in connector -1- at warning lamp for airbag deactivated on front passenger side -K145- -2-.
- Make sure connector -1- and warning lamp for airbag deactivated on front passenger side -K145- -2- engage properly (audibly).
- Insert warning lamp for airbag deactivated on front passenger side -K145- -2- in dash panel switch mounting and engage.
- Clip in trim for switch module at top.
- Close glove box.
- Install radio ⇒ Communication; Rep. Gr. 91 .
- Switch on ignition.

> ⚠ **WARNING**
>
> ***Make sure nobody is in the vehicle when the battery is being connected.***

- Connect battery earth strap ⇒ Electrical system; Rep. Gr. 27 .
- Observe measures to be taken after connecting the battery ⇒ Electrical system; Rep. Gr. 27 .
- Re-code airbag control unit -J234- ⇒ page 86 .
- Perform functional test.
- Deactivate airbag on front passenger side with key-operated switch to deactivate airbag on front passenger side -E224- .

  Warning lamp for airbag deactivated on front passenger side -K145- must light up constantly.
- Activate airbag on front passenger side with key-operated switch to deactivate airbag on front passenger side -E224- .

  Warning lamp for airbag deactivated on front passenger side -K145- must go out.
- Interrogate and erase fault memories of all control units. To do so, use a suitable vehicle diagnostic, testing and information system, e.g. vehicle diagnostic, testing and information system -VAS 5051B- .

Protected by copyright. Copying for private or commercial purposes, in part or in whole, is not permitted unless authorised by AUDI AG. AUDI AG does not guarantee or accept any liability with respect to the correctness of information in this document. Copyright by AUDI AG.

8 Retrofitting key-operated switch (Audi A4 2001 ‣ from week 36/2004 onwards including Audi S4 and Audi S4 Cabriolet)

WARNING

When retrofitting key-operated switch to deactivate airbag on front passenger side -E224- and warning lamp for airbag deactivated on front passenger side -K145- , observe safety precautions for working on airbags ⇒ General body repairs, interior; Rep. Gr. 69 .

WARNING

Before handling the airbag units (e.g. unplugging the electrical connector) the mechanic must discharge static electricity by briefly touching the door striker plate, or similar.

Components required for retrofitting ⇒ page 5

8.1 Removing glove box

Special tools and workshop equipment required

- Front-end hook -3370-

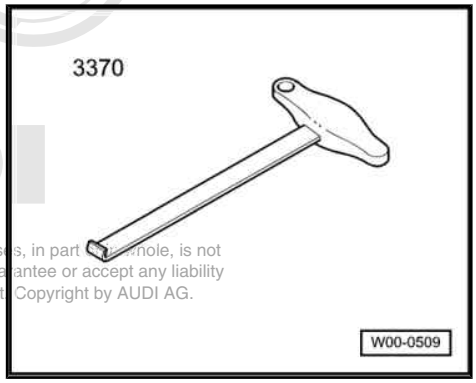

Protected by copyright. Copying for private or commercial purposes, in part or whole, is not permitted unless authorised by AUDI AG. AUDI AG does not guarantee or accept any liability with respect to the correctness of information in this document. Copyright by AUDI AG.

1 - Glove box

♦ Removing

– Switch off ignition and remove ignition key.

– With ignition switched off, disconnect earth wire at battery ⇒ Electrical system; Rep. Gr. 27 .

– Remove dash panel end trim (right-side) -2- ⇒ page 41 .

– Open glove box lid.

– Loosen the three bolts -3- at top in recesses of glove box -1-.

– Working from the side, loosen bolts -5- (2x).

– Working from footwell, loosen bolts -4- (2x) from underneath.

– Take out glove box downwards.

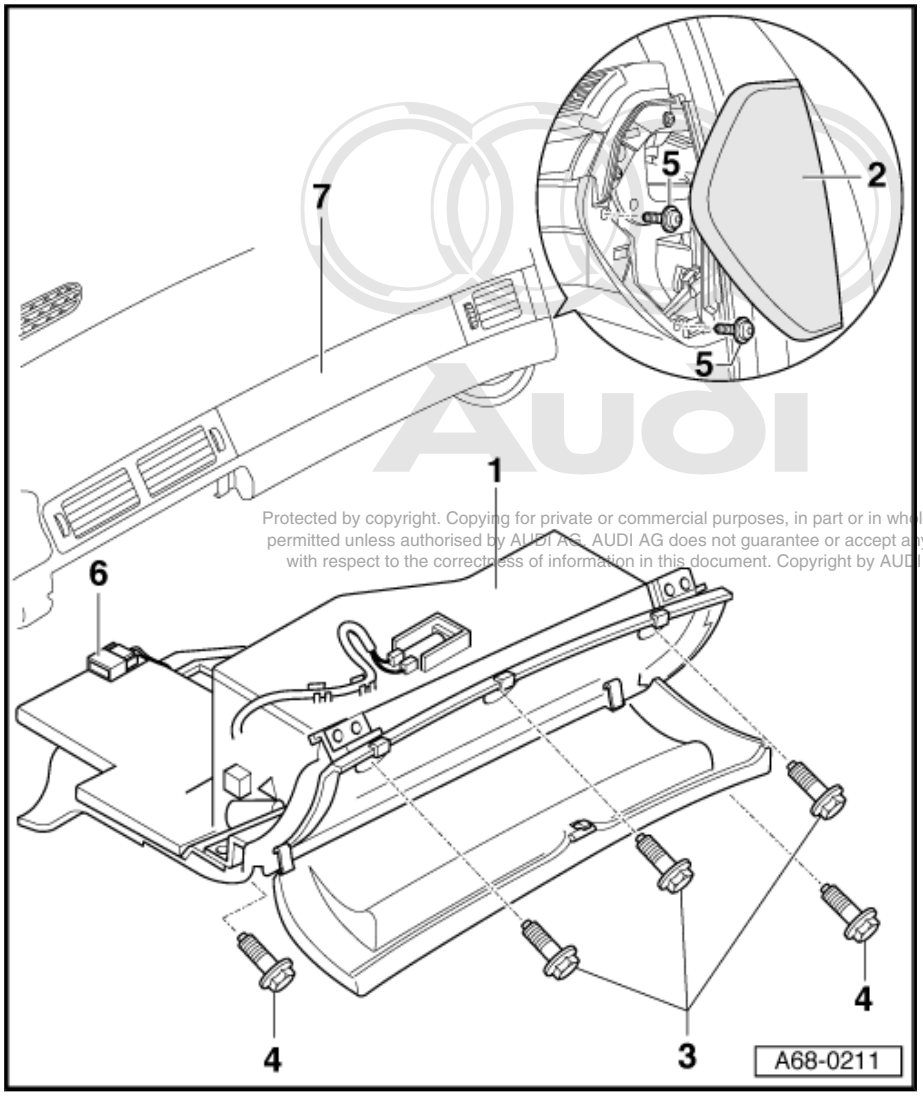

Protected by copyright. Copying for private or commercial purposes, in part or in whole, is not permitted unless authorised by AUDI AG. AUDI AG does not guarantee or accept any liability with respect to the correctness of information in this document. Copyright by AUDI AG.

WARNING

Before unplugging the connectors, discharge static by briefly touching door striker plate for example.

– Unplug connector of supply lead/wiring harness for glove box -6-.

2 - Dash panel end trim (right-side)

❑ Removing ⇒ page 41

3 - Bolts (3x)

❑ Tightening torque: 5 Nm

4 - Bolts (2x)

❑ Tightening torque: 5 Nm

5 - Bolts (2x)

❑ Tightening torque: 5 Nm

6 - Connector

❑ Of supply lead/wiring harness for glove box

7 - Dash panel

Removing dash panel end trim (right-side)

– Pull off dash panel end trim (right-side) with front-end hook -3370- in direction of -arrow-.

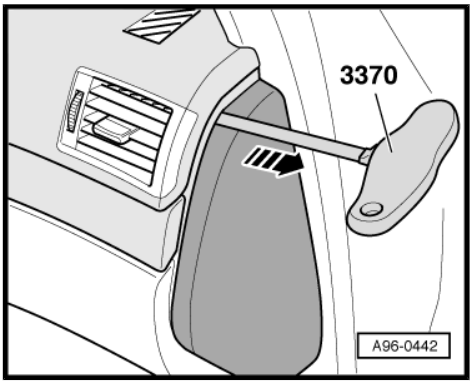

8.2 Converting glove box

– Make a sketch or take a photograph as a guide for routing the wiring harness on the glove box.

– Remove glove box wiring harness.

– On back of glove box -1-, cut out cover panel -arrow B- within peripheral groove (perforation) -arrow A-.

– Install new glove box wiring harness.

– Route and secure wiring harness on glove box according to sketch or photograph.

Protected by copyright. Copying for private or commercial purposes, in part or in whole, is not permitted unless authorised by AUDI AG. AUDI AG does not guarantee or accept any liability with respect to the correctness of information in this document. Copyright by AUDI AG.

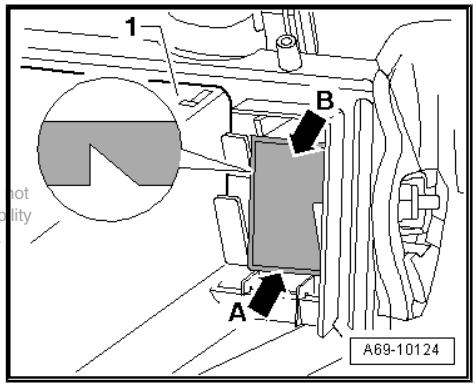

8.3 Installing key-operated switch

– Press key-operated switch to deactivate airbag on front passenger side -E224- into mounting for key-operated switch in glove box until retaining clips engage.

– Attach connector for key-operated switch to deactivate airbag on front passenger side -E224- of glove box wiring harness at key-operated switch to deactivate airbag on front passenger side -E224- .

8.4 Retrofitting wiring harness

– Check whether contacts 3, 5 and 6 at connector of supply lead/ wiring harness for glove box (12-pin, brown) are assigned.

  If this is the case, the supply lead/wiring harness for glove box and the wire for the warning lamp for airbag deactivated on front passenger side -K145- /multi-pin connector for airbag control unit -J234- have been fitted.

  If these contacts are not assigned, the wiring harness 8E1 970 XXX must be retrofitted ⇒ page 45 .

8.5 Installing glove box

Special tools and workshop equipment required

♦ Torque wrench -V.A.G 1410-

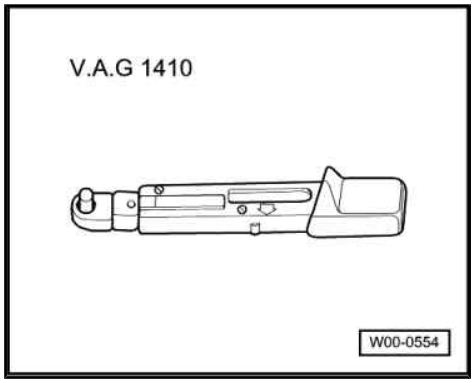

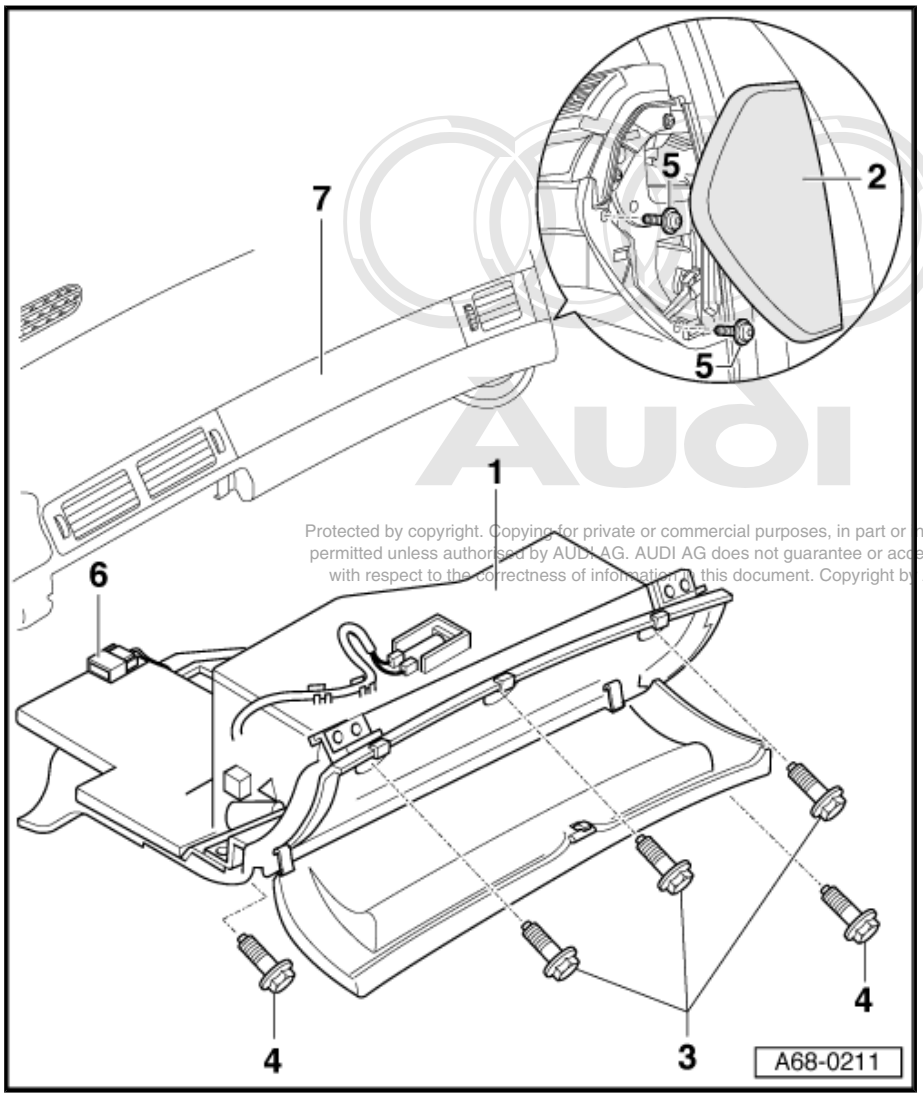

Protected by copyright. Copying for private or commercial purposes, in part or in whole, is not permitted unless authorised by AUDI AG. AUDI AG does not guarantee or accept any liability with respect to the correctness of information in this document. Copyright by AUDI AG.

1 - Glove box

♦ Installing

- Place glove box -1- in correct position.
- Plug in connector of supply lead/wiring harness for glove box -6-.
- Plug in connector at key-operated switch to deactivate airbag on front passenger side - E224- .
- Make sure all connectors engage properly (audibly).
- Perform remaining installation in reverse order of removal.

2 - Dash panel end trim (right-side)

3 - Bolts (3x)

❑ Tightening torque: 5 Nm

4 - Bolts (2x)

❑ Tightening torque: 5 Nm

5 - Bolts (2x)

❑ Tightening torque: 5 Nm

6 - Connector

❑ Of supply lead/wiring harness for glove box

7 - Dash panel

8.6 Installing warning lamp for airbag deactivated on front passenger side

8.6.1 Installing warning lamp for airbag deactivated on front passenger side -K145-

Special tools and workshop equipment required

- Front-end hook -3370-

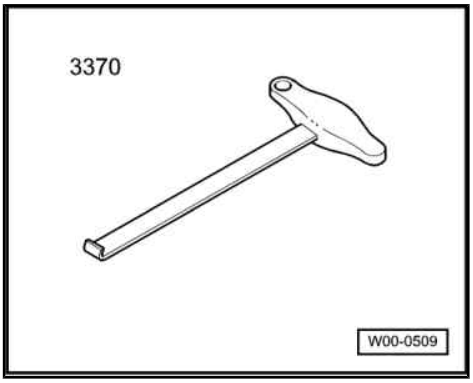

– Remove radio ⇒ Communication; Rep. Gr. 91 .

– Open glove box.

– Carefully detach trim -1- in direction of -arrow- with front-end hook -3370- .

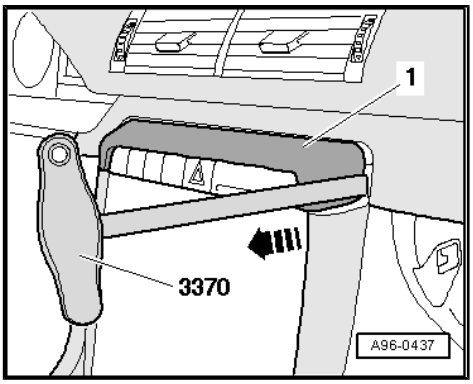

Protected by copyright. Copying for private or commercial purposes, in part or in whole, is not permitted unless authorised by AUDI AG. AUDI AG does not guarantee or assume any liability with respect to the correctness of information in this document. Copyright by AUDI AG.

– Use a commercially available flat screwdriver to carefully prise dummy cover -1- out of switch mounting -2- in direction of -arrow-.

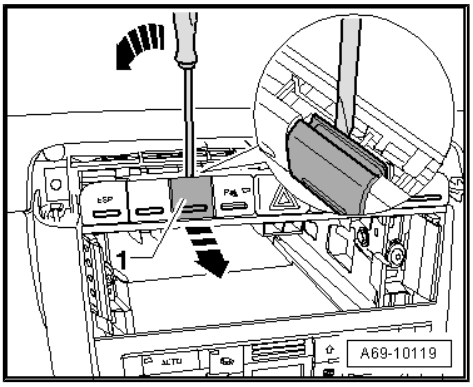

– Check whether wiring harness for warning lamp for airbag deactivated on front passenger side -K145- (“PASSENGER AIRBAG OFF” lamp) has been installed in area of radio opening (wire with blue 6-pin connector).

  If there is no wiring harness fitted for the warning lamp for airbag deactivated on front passenger side -K145- , the wiring harness 8E1 970 XXX must be retrofitted ⇒ page 45 .

  Perform the following work steps if the wiring harness for the warning lamp for airbag deactivated on front passenger side -K145- is installed.

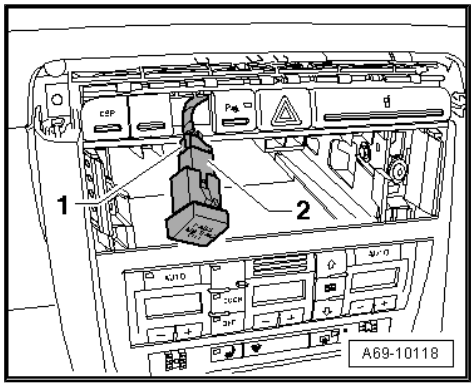

- Guide free connector -1- (blue) at wiring harness through free chamber of switch insert from rear.
- Plug in connector -1- at warning lamp for airbag deactivated on front passenger side -K145- -2-.
- Make sure connector -1- and warning lamp for airbag deactivated on front passenger side -K145- -2- engage properly (audibly).
- Insert warning lamp for airbag deactivated on front passenger side -K145- -2- in dash panel switch mounting and engage.
- Clip in trim for switch module at top.
- Close glove box.
- Install radio ⇒ Communication; Rep. Gr. 91 .
- Switch on ignition.

> ⚠ **WARNING**
>
> ***Make sure nobody is in the vehicle when the battery is being connected.***

- Connect battery earth strap ⇒ Electrical system; Rep. Gr. 27 .
- Observe measures to be taken after connecting the battery ⇒ Electrical system; Rep. Gr. 27 .
- Re-code airbag control unit -J234- ⇒ page 86 .
- Perform functional test.
- Deactivate airbag on front passenger side with key-operated switch to deactivate airbag on front passenger side -E224- .

  Warning lamp for airbag deactivated on front passenger side -K145- must light up constantly.
- Activate airbag on front passenger side with key-operated switch to deactivate airbag on front passenger side -E224- .

  Warning lamp for airbag deactivated on front passenger side -K145- must go out.
- Interrogate and erase fault memories of all control units. To do so, use a suitable vehicle diagnostic, testing and information system, e.g. vehicle diagnostic, testing and information system -VAS 5051B- .

Protected by copyright. Copying for private or commercial purposes, in part or in whole, is not permitted unless authorised by AUDI AG. AUDI AG does not guarantee or accept any liability with respect to the correctness of information in this document. Copyright by AUDI AG.

9 Retrofitting wiring harnesses 8E1 970 XXX (Audi A4 2001 ▸)

Audi A4 2001 ▸ up to week 35/2004 (including Audi S4)

Audi A4 2001 ▸ from week 36/2004 onwards (including Audi S4)

General information on retrofitting wiring harnesses

- Notes on and preparation for retrofitting wiring harnesses 8E1 970 XXX ⇒ page 45
- Routing wiring harnesses 8E1 970 XXX ⇒ page 46
- Connecting wiring harnesses 8E1 970 XXX to multi-pin connector for airbag control unit -J234- ⇒ page 50
- Assembly work, coding airbag control unit -J234- and interrogating fault memories of control units ⇒ page 55

Protected by copyright. Copying for private or commercial purposes, in part or in whole, is not permitted unless authorised by AUDI AG. AUDI AG does not guarantee or accept any liability with respect to the correctness of information in this document. Copyright by AUDI AG.

Special tools and workshop equipment required

- Wiring harness repair set -VAS 1978-

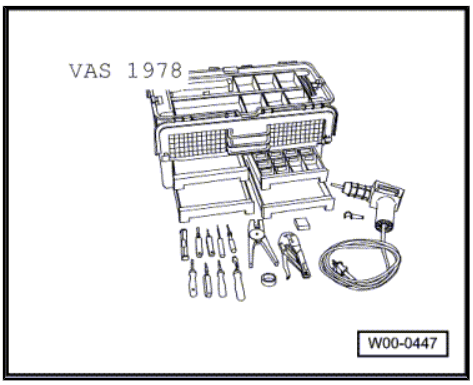

- Current flow diagrams
- Fabric tape (for wrapping wiring harnesses), commercially available

> ⚠ **WARNING**
>
> - *When retrofitting wiring harness, observe safety precautions for working on airbags ⇒ General body repairs, interior; Rep. Gr. 69 .*
> - *Observe general instructions for repair work on vehicle electrical system, as well as notes on repairing wiring harnesses, connectors and wiring ⇒ Electrical system; Rep. Gr. 97 .*

> ⚠ **WARNING**
>
> *Before handling the airbag units (e.g. unplugging the electrical connector) the mechanic must discharge static electricity by briefly touching the door striker plate, or similar.*

9.1 Notes on and preparation for retrofitting wiring harnesses (8E1 970 XXX)

- Ignition switched off and ignition key removed
- Earth strap at battery disconnected with ignition switched off

- Glove box removed
- Radio removed

– Check whether wiring for retrofitting key-operated switch to deactivate airbag on front passenger side -E224- has already been fitted or whether a wiring harness has to be retrofitted:

◆ Audi A4 2001 ‣ up to week 35/2004 (including Audi S4) ⇒ page 32

◆ Audi A4 2001 ‣ from week 36/2004 onwards (including Audi S4) ⇒ page 41

Audi A4 2001 ‣ up to week 35/2004 (including Audi S4)

If there is no wiring harness installed for the warning lamp for airbag deactivated on front passenger side -K145- (blue 6-pin connector), the wiring harness 8E1 970 XXX (2 wires) must be retrofitted.

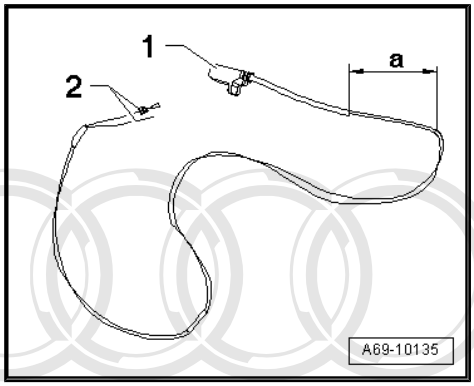

1 - Connector (6-pin, blue) for warning lamp for airbag deactivated on front passenger side -K145-

2 - Plug contact and wire for multi-pin connector for airbag control unit -J234-

– Before fitting, additionally wrap fabric tape (dimension -a- = 150 mm) around wiring harness 8E1 970 XXX (2 wires).

Note

The wires for the connector of the supply lead/wiring harness for glove box (12-pin, brown) are included as standard in the passenger compartment wiring harness (area: inside front).

Audi A4 2001 ‣ from week 36/2004 onwards (including Audi S4)

Protected by copyright. Copying for private or commercial purposes, in part or in whole, is not permitted unless authorised by AUDI AG. AUDI AG does not guarantee or accept any liability with respect to the correctness of information in this document. Copyright by AUDI AG.

If there is no wiring harness installed for the warning lamp for airbag deactivated on front passenger side -K145- (blue 6-pin connector), the wiring harness 8E1 970 XXX (5 wires) must be retrofitted.

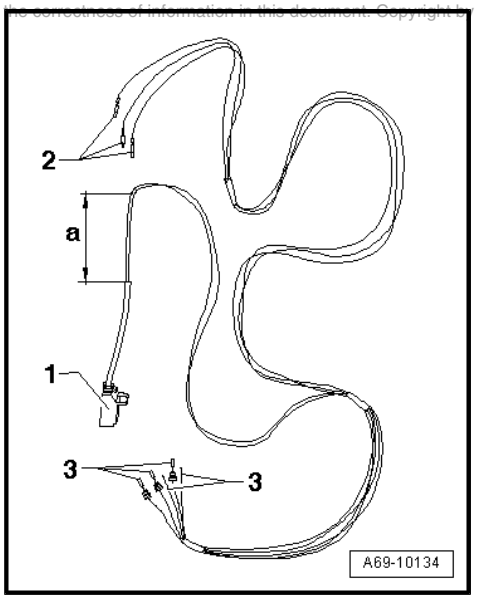

1 - Connector (6-pin, blue) for warning lamp for airbag deactivated on front passenger side -K145-

2 - Plug contacts for connector of supply lead/wiring harness for glove box (12-pin, brown)

3 - Plug contacts and wires for multi-pin connector for airbag control unit -J234-

– Before fitting, additionally wrap fabric tape (dimension -a- = 150 mm) around wiring harness 8E1 970 XXX (5 wires).

All vehicles (continued)

– Remove ashtray (front) ⇒ General body repairs, interior; Rep. Gr. 68 .

– Remove air conditioner operating element/heater controls ⇒ Heating, air conditioning; Rep. Gr. 87 .

– Remove centre console ⇒ General body repairs, interior; Rep. Gr. 68 .

9.2 Routing wiring harnesses (8E1 970 XXX)

Routing wiring harnesses from airbag control unit -J234- to warning lamp for airbag deactivated on front passenger side -K145-

(Audi A4 2001 ‣ up to week 35/2004 including Audi S4, and Audi A4 2001 ‣ from week 36/2004 onwards including Audi S4)

Note

- *This section describes how to route wiring harness 8E1 970 XXX (5 wires) on Audi A4 2001 ‣ from week 36/2004 onwards (including Audi S4).*
- *The procedure for routing wiring harness 8E1 970 XXX (2 wires) on Audi A4 2001 ‣ up to week 35/2004 (including Audi S4) is the same (as far as warning lamp for airbag deactivated on front passenger side -K145-) as for Audi A4 2001 ‣ from week 36/2004 onwards (including Audi S4).*
- *It is not necessary to retrofit the wires to the connector of the supply lead/wiring harness for glove box (12-pin, brown) on the Audi A4 2001 ‣ up to week 35/2004 including Audi S4, as these wires are already installed as standard in the passenger compartment wiring harness on all vehicles (area: inside front).*

– Route the wiring harness -1- to be retrofitted along the wiring harness -3- at the centre tunnel on the passenger side.

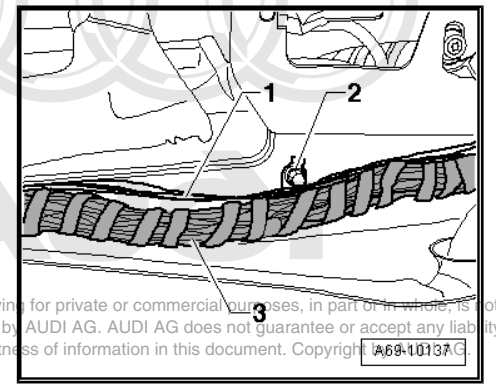

Note

Leave cable retainer -2- at centre tunnel (passenger side). It is incorporated into the wrapping of the wiring harness -3- and thus forms part of the wiring harness.

– Route the wiring harness -1- to be retrofitted along the wiring harness until it is behind the centre section of the dash panel.

Copyright by AUDI AG. Copying for private or commercial purposes, in part or in whole, is not permitted unless authorised by AUDI AG. AUDI AG does not guarantee or accept any liability with respect to the correctness of information in this document. Copyright by AUDI AG.

– Guide the wiring harness -1- to be retrofitted along the wiring harness -2- in the area behind the air conditioner operating element/heater controls.

3 - Centre section of dash panel

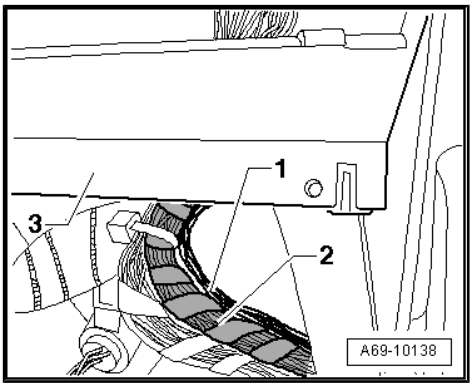

– Use a commercially available flat screwdriver to carefully prise dummy cover -1- out of switch mounting in direction of -arrow-.

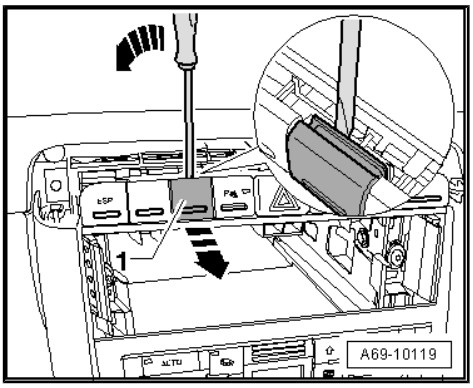

– Route the wiring harness -1- to be retrofitted with the connector for the warning lamp for airbag deactivated on front passenger side -K145- at the wiring harness -2-.

– Guide the wiring harness -1- with the connector -4- for the warning lamp for airbag deactivated on front passenger side -K145- -3- over the cross member of the dash panel centre section -6-.

– Thread the wiring harness -1- with the connector -4- for the warning lamp for airbag deactivated on front passenger side -K145- -3- through the empty section of the switch mounting -5-.

– Plug in connector -4- at warning lamp for airbag deactivated on front passenger side -K145- -3-.

– Make sure connector -4- and warning lamp for airbag deactivated on front passenger side -K145- -3- engage properly (audibly).

– Insert warning lamp for airbag deactivated on front passenger side -K145- -3- in switch mounting -5- and engage.

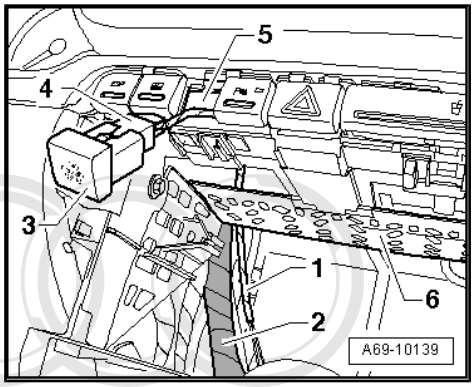

Protected by copyright. Copying for private or commercial purposes, in part or in whole, is not permitted unless authorised by AUDI AG. AUDI AG does not guarantee or accept any liability with respect to the correctness of information in this document. Copyright by AUDI AG.

– Unfasten cable tie -3-.

– Route wiring harness -1- to be retrofitted along wiring harness -2- in direction of airbag control unit -J234- .

– Allow the ends of the wiring harness -1- to project sufficiently to permit easy incorporation of the individual wires -4- and -5- into the wiring harness -2- and connection of the plug contacts -6- to the multi-pin connector of the airbag control unit -J234- .

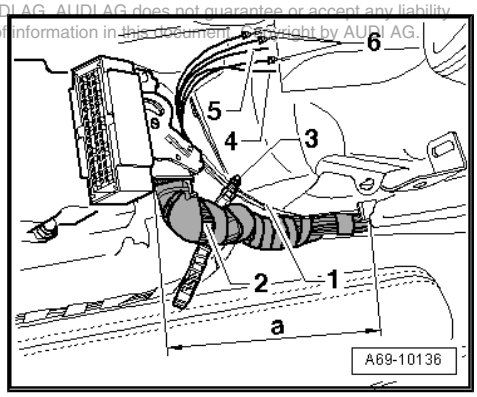

– Use fabric tape to provisionally secure wiring harness -1- to wiring harness -3- at a maximum of 4 locations in area of centre tunnel (passenger side) as far as centre section of dash panel.

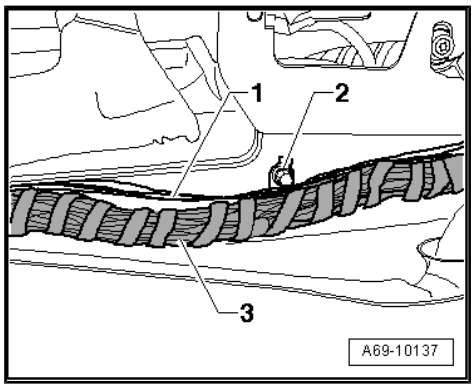

– Loop the excess lengths of wire to the warning lamp for airbag deactivated on front passenger side -K145- from the wiring harness -1- behind the centre section of the dash panel.

– Use fabric tape to attach the loop to the wiring harness -2-.

Routing wiring harness to connector of supply lead/wiring harness for glove box (Audi A4 2001 ▸ from week 36/2004 onwards including Audi S4)

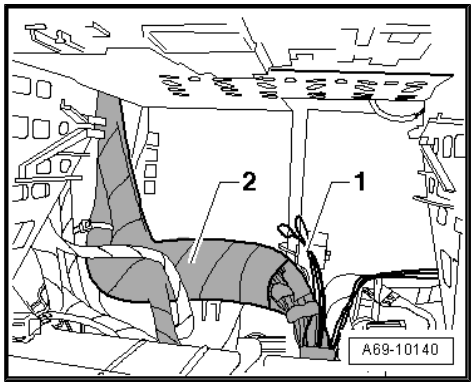

– Route wiring harness -1- (wire to connector of supply lead/ wiring harness for glove box) at wiring harness -2- in direction of central tube support.

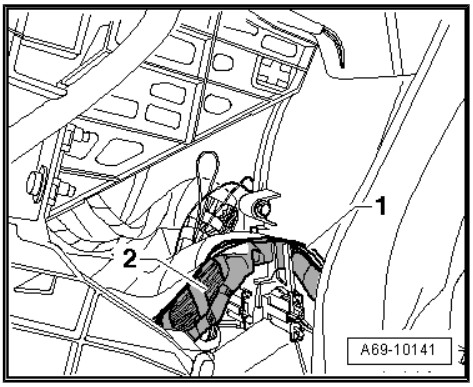

– Route wiring harness -1- behind support for central tube -7-.
– Use fabric tape to secure wiring harness -1- at several locations along wiring harnesses -6-, -2-, -3- and -5-.
– Route wiring harness -1- behind control unit for headlight range control -J431- -4-.
– Make sure wiring harness -1- does not come into contact with air conditioner connecting rods and that it cannot become abraded or trapped.

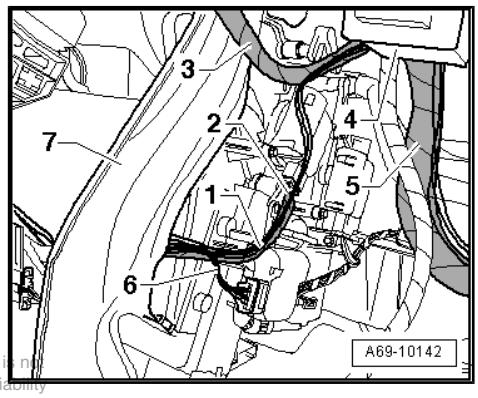

Protected by copyright. Copying for private or commercial purposes, in part or in whole, is not permitted unless authorised by AUDI AG. AUDI AG does not guarantee or accept any liability with respect to the correctness of information in this document. Copyright by AUDI AG

– Route wiring harness -1- along wiring harness -4- with connector -2- (12-pin, brown).
– Allow ends of wiring harness -1- to project sufficiently to permit easy connection of the plug contacts -3- to the connector of the supply lead/wiring harness for glove box -2- (12-pin, brown).
– Use fabric tape to secure the wiring harness -1- at several locations along the wiring harness -4-.

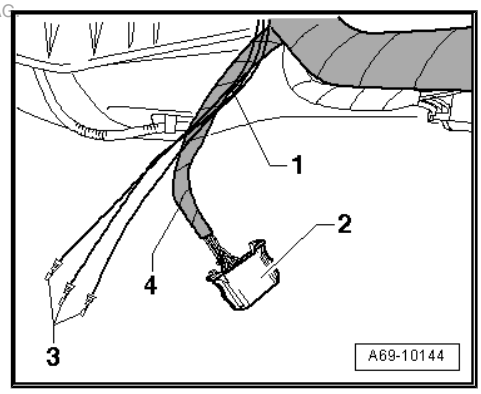

– Loop the excess lengths of wire (to the connector of the supply lead/wiring harness for glove box) from the wiring harness -1- in the area of the control motors.
– Use fabric tape to attach the loop to the wiring harness -2-.

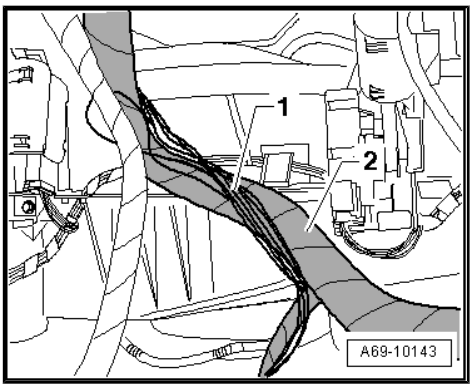

– Connect the plug contacts -3- to the connector of the supply lead/wiring harness for glove box -2-.

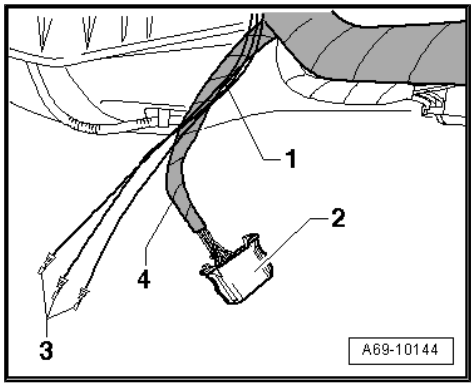

Pin assignment on Audi A4 2001 ‣ from week 36/2004 onwards (including Audi S4) ⇒ Current flow diagrams, Electrical fault finding and Fitting locations

Assignment	Pin
Connector for airbag control unit -J234- : pin 61	3
Earth connection in airbag wiring harness (109)	5
Connector for airbag control unit -J234- : pin 59	6

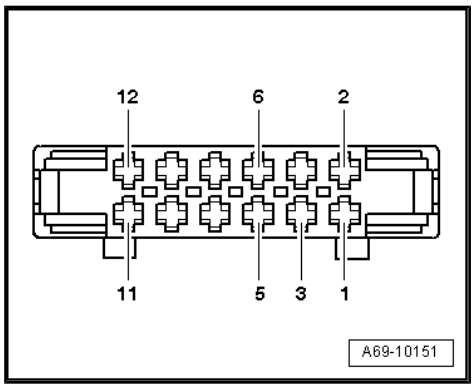

Pin assignment on Audi A4 2001 ‣ up to week 35/2004 (including Audi S4)

Information on the pin assignment for the connector of the supply lead/wiring harness for glove box (12-pin, brown) is not required as these wires are installed as standard in the passenger compartment wiring harness on all vehicles (area: inside front).

9.3 Connecting wiring harnesses 8E1 970 XXX to multi-pin connector for airbag control unit -J234-

WARNING

Before handling the airbag units (e.g. unplugging the electrical connector) the mechanic must discharge static electricity by briefly touching the door striker plate, or similar.

Audi A4 2001 ‣ from week 36/2004 onwards (including Audi S4)

Note

For ease of illustration, unplugging of the multi-pin connector from the airbag control unit -J234- and opening of the multi-pin connector for connecting the wires from the retrofitted wiring harness are described on the basis of a single multi-pin connector.

Protected by copyright. Copying for private or commercial purposes, in part or in whole, is not permitted unless authorised by AUDI AG. AUDI AG does not guarantee or accept any liability with respect to the correctness of information in this document. Copyright by AUDI AG.

WARNING

Before unplugging the connector, discharge static by briefly touching door striker plate for example.

– Move fastener -1- in direction of -arrow- until it engages.
– Turn retaining clip -2- until it engages (“OPEN” position).
– Unplug multi-pin connector -3- from airbag control unit -J234- .

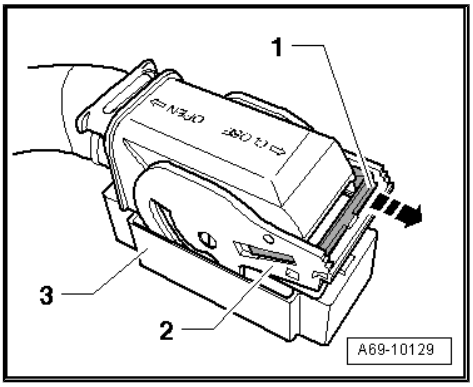

– Unfasten cable tie -1-.
– Insert a small screwdriver in U-shaped lug at multi-pin connector.
– Prise top part of multi-pin connector -2- over detents -arrows- at bottom part -3-. At the same time, slide top part -2- as far as it will go in direction of -arrow-.
– Lift top part -2- off bottom part -3-.

Protected by copyright. Copying for private or commercial purposes, in part or in whole, is not permitted unless authorised by AUDI AG. AUDI AG does not guarantee or accept any liability with respect to the correctness of information in this document. Copyright by AUDI AG.

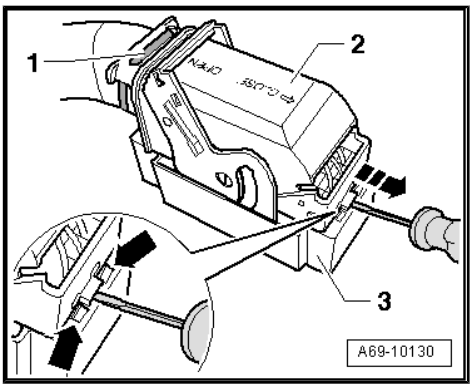

– Remove fabric tape in area -a-, starting from multi-pin connector.
– Connect plug contacts -6- to multi-pin connector for airbag control unit -J234- .

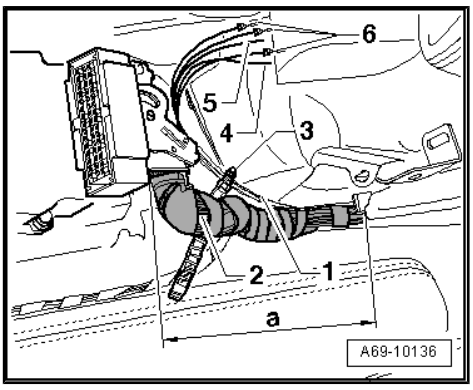

Pin assignment on Audi A4 2001 ‣ from week 36/2004 onwards (including Audi S4) ⇒ Current flow diagrams, Electrical fault finding and Fitting locations

Assignment	Pin
Connector of supply lead/wiring harness for glove box: pin 6	59
Warning lamp for airbag deactivated on front passenger side -K145- : pin 3	60
Connector of supply lead/wiring harness for glove box: pin 3	61

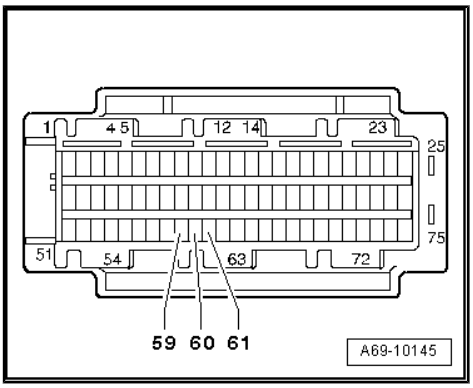

– In area -a- locate earth connector -109- (connector with brown wires) -4-.

– Separate one brown wire with 0.35 mm^2 cross section leading out of earth connector -109- -4-.

– Join separated brown wire and brown wire -1- from wiring harness to be retrofitted using wiring harness repair set -VAS 1978- ⇒ Electrical system; Rep. Gr. 97 .

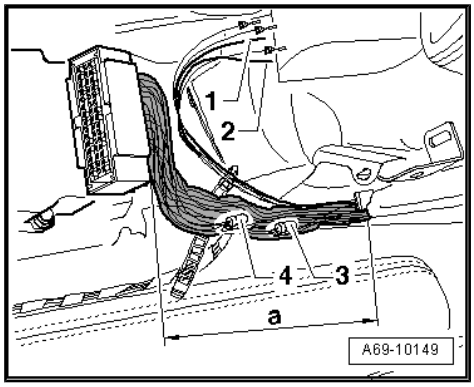

WARNING

Observe general instructions for repair work on vehicle electrical system, as well as notes on repairing wiring harnesses, connectors and wiring ⇒ Electrical system; Rep. Gr. 97 .

– In area -a- locate connector -A 139-, terminal 15 (connector with black wires) -3-.

– Separate one black wire leading out of connector -A 139- -3-.

– Join separated black wire and black wire -2- from wiring harness to be retrofitted using wiring harness repair set -VAS 1978- ⇒ Electrical system; Rep. Gr. 97 .

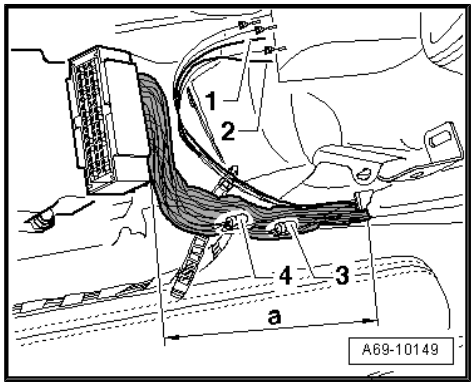

WARNING

Observe general instructions for repair work on vehicle electrical system, as well as notes on repairing wiring harnesses, connectors and wiring ⇒ Electrical system; Rep. Gr. 97 .

Note

For ease of illustration, closing and plugging-in of the multi-pin connector at the airbag control unit -J234- are described on the basis of a single multi-pin connector.

– Position top part -1- of multi-pin connector for airbag control unit -J234- on bottom part -2-.

This involves aligning the tabs -arrows A- with the recesses -arrows B-.

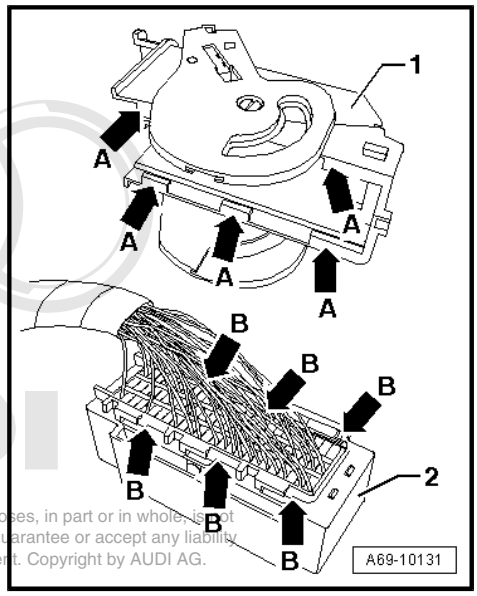

Protected by copyright. Copying for private or commercial purposes, in part or in whole, is not permitted unless authorised by AUDI AG. AUDI AG does not guarantee or accept any liability with respect to the correctness of information in this document. Copyright by AUDI AG.

– Slide top part -1- of multi-pin connector as far as it will go in direction of -arrow-.

  When the top part -1- is in the end position, two detents -arrows- must be visible on the bottom part -2-.

– Attach a new cable tie -3- to the top part of the multi-pin connector -2- and the wiring harness.

– Plug in multi-pin connector at airbag control unit -J234- .

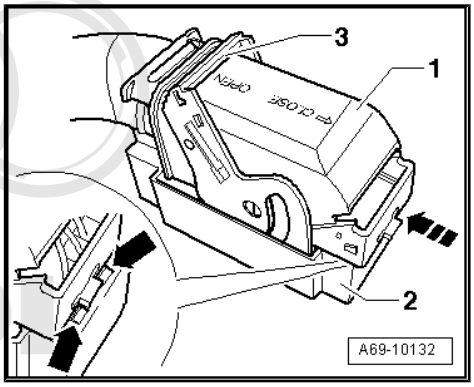

Protected by copyright. Copying for private or commercial purposes, in part or in whole, is not permitted unless authorised by AUDI AG. AUDI AG does not guarantee or accept any liability with respect to the correctness of information in this document. Copyright by AUDI AG.

– Turn retaining clip -2- until it engages ("CLOSE" position).

– Move fastener -1- in direction of -arrow- until it engages.

– Make sure the multi-pin connector is properly engaged with the airbag control unit -J234- .

– Attach the retrofitted wiring harness 8E1 970 XXX to the existing wiring harnesses by wrapping completely with fabric tape.

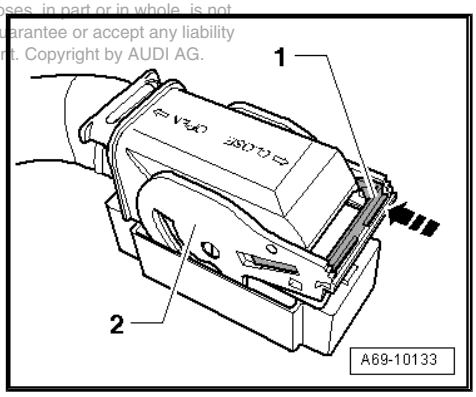

– Fasten cable tie -3-.

– Make sure the retrofitted wiring harness 8E1 970 XXX cannot become abraded and/or rattle.

Audi A4 2001 ▸ up to week 35/2004 (including Audi S4)

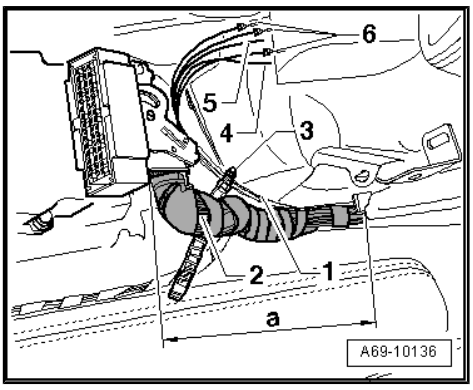

Note

For ease of illustration, unplugging of the multi-pin connector from the airbag control unit -J234- and opening of the multi-pin connector for connecting the wire from the retrofitted wiring harness are described on the basis of a single multi-pin connector.

WARNING

Before unplugging the connector, discharge static by briefly touching door striker plate for example.

– Press fastener -1- in direction of -arrow- and at the same time swivel retaining clip -3- to front until it engages.

– Unplug multi-pin connector -2- from airbag control unit -J234- .

– Unfasten cable tie -4-.

– Use small screwdriver to release retaining tabs -arrows A-.

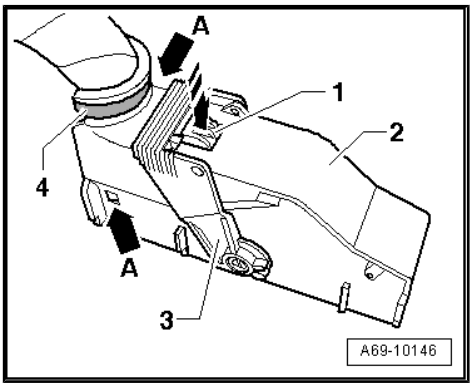

– Use small screwdriver to press socket housing -2- out of cap -1- through slits on front of multi-pin connector.

– Pull socket housing -2- completely out of cap -1-.

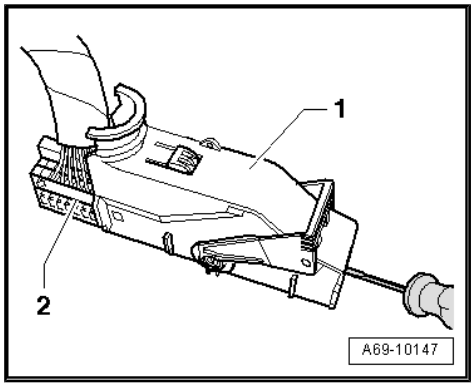

– Remove fabric tape in area -a-, starting from socket housing -3-.

– Connect plug contact -1- to socket housing -3-.

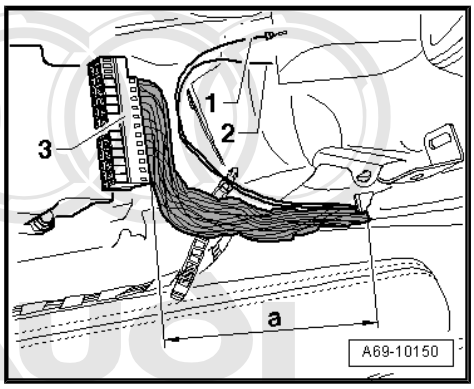

Pin assignment on Audi A4 2001 ‣ up to week 35/2004 (including Audi S4) ⇒ Current flow diagrams, Electrical fault finding and Fitting locations

Copyright by AUDI AG. Copying for private or commercial purposes, in part or in whole, is not permitted unless authorised by AUDI AG. AUDI AG does not guarantee or accept any liability with respect to the correctness of information in this document. Copyright by AUDI AG.

Assignment	Pin
Airbag control unit -J234- : pin 70	4

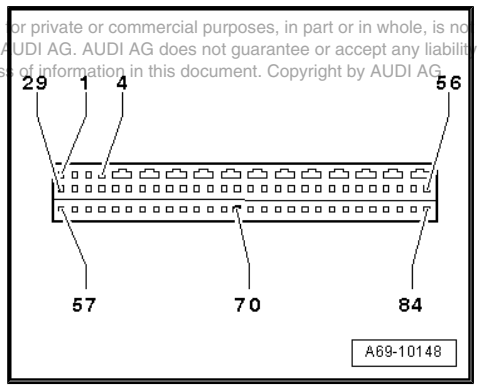

– Separate black wire leading out of pin 65 (terminal 15) of socket housing -3- at a suitable location.

– Join separated black wire and black wire -2- from wiring harness to be retrofitted using wiring harness repair set -VAS 1978- ⇒ Electrical system; Rep. Gr. 97 .

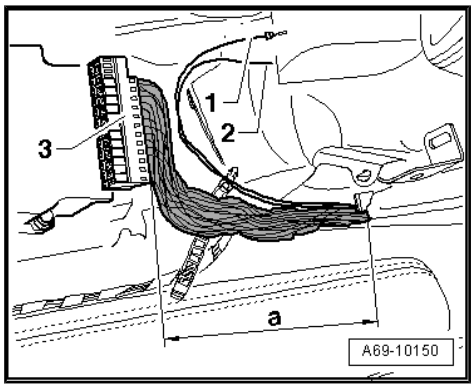

WARNING

Observe general instructions for repair work on vehicle electrical system, as well as notes on repairing wiring harnesses, connectors and wiring ⇒ Electrical system; Rep. Gr. 97 .

Note

For ease of illustration, closing and plugging-in of the multi-pin connector at the airbag control unit -J234- are described on the basis of a single multi-pin connector.

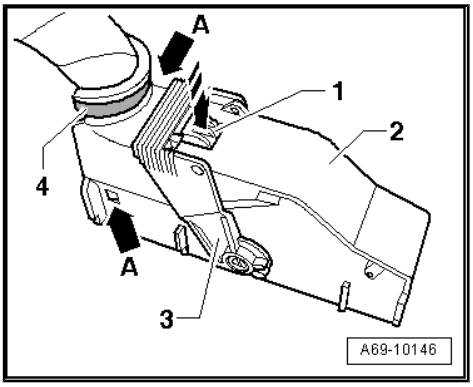

– Slide home socket housing in cap -2-.
– Make sure retaining tabs of socket housing are properly engaged in openings of cap -arrows A-.
– Fit a new cable tie -4- at cap and wiring harness.
– Plug in multi-pin connector -2- at airbag control unit -J234- .
– Swivel retaining clip -3- to rear until it engages with fastener -1-.
– Make sure multi-pin connector is properly engaged with airbag control unit -J234- .
– Attach the retrofitted wiring harness 8E1 970 XXX to the existing wiring harnesses by wrapping completely with fabric tape.
– Fasten cable tie on centre tunnel.
– Make sure the retrofitted wiring harness 8E1 970 XXX cannot become abraded and/or rattle.

9.4 Assembly work, coding airbag control unit -J234- and interrogating fault memories of control units

– Install centre console ⇒ General body repairs, interior; Rep. Gr. 68 .
– Install ashtray (front) ⇒ General body repairs, interior; Rep. Gr. 68 .
– Install air conditioner operating element/heater controls ⇒ Heating, air conditioning; Rep. Gr. 87 .
– Clip in trim for switch module at top.
– Install radio ⇒ Communication; Rep. Gr. 91 .
– Install glove box:

Protected by copyright. Copying for private or commercial purposes, in part or in whole, is not permitted unless authorised by AUDI AG. AUDI AG does not guarantee or accept any liability with respect to the correctness of information in this document. Copyright by AUDI AG.

♦ Audi A4 2001 ‣ up to week 35/2004 (including Audi S4) ⇒ page 32
♦ Audi A4 2001 ‣ from week 36/2004 onwards (including Audi S4) ⇒ page 41
– Switch on ignition.

> ⚠ **WARNING**
>
> ***Make sure nobody is in the vehicle when the battery is being connected.***

– Connect battery earth strap ⇒ Electrical system; Rep. Gr. 27 .
– Observe measures to be taken after connecting the battery ⇒ Electrical system; Rep. Gr. 27 .
– Re-code airbag control unit -J234- ⇒ page 86 .
– Perform functional test.
– Deactivate airbag on front passenger side with key-operated switch to deactivate airbag on front passenger side -E224- .

  Warning lamp for airbag deactivated on front passenger side -K145- must light up constantly.

– Activate airbag on front passenger side with key-operated switch to deactivate airbag on front passenger side -E224- .

  Warning lamp for airbag deactivated on front passenger side -K145- must go out.

– Interrogate and erase fault memories of all control units. To do so, use a suitable vehicle diagnostic, testing and information system, e.g. vehicle diagnostic, testing and information system -VAS 5051B- .

Protected by copyright. Copying for private or commercial purposes, in part or in whole, is not permitted unless authorised by AUDI AG. AUDI AG does not guarantee or accept any liability with respect to the correctness of information in this document. Copyright by AUDI AG.

10 Retrofitting key-operated switch (Audi A4 Cabriolet 2003 ▸)

It is not necessary to retrofit the key-operated switch to deactivate airbag on front passenger side -E224- and the warning lamp for airbag deactivated on front passenger side -K145- on the Audi A4 Cabriolet 2003 ▸.

Protected by copyright. Copying for private or commercial purposes, in part or in whole, is not permitted unless authorised by AUDI AG. AUDI AG does not guarantee or accept any liability with respect to the correctness of information in this document. Copyright by AUDI AG.

11 Retrofitting key-operated switch (Audi A6 1998 ▸ from week 36/1998 onwards including Audi Allroad, except vehicles with V8 engine)

WARNING

There is no provision for retrofitting the key-operated switch to deactivate airbag on front passenger side -E224- on vehicles with V8 engine (Audi A6, Audi Allroad, Audi S6 and Audi RS 6).

WARNING

When retrofitting key-operated switch to deactivate airbag on front passenger side -E224- and warning lamp for airbag deactivated on front passenger side -K145- , observe safety precautions for working on airbags ⇒ General body repairs, interior; Rep. Gr. 69 .

WARNING

Before handling the airbag units (e.g. unplugging the electrical connector) the mechanic must discharge static electricity by briefly touching the door striker plate, or similar.

Components required for retrofitting ⇒ page 5

11.1 Removing glove box

Protected by copyright. Copying for private or commercial purposes, in part or in whole, is not permitted unless authorised by AUDI AG. AUDI AG does not guarantee or accept any liability with respect to the correctness of information in this document. Copyright by AUDI AG.

1 - Glove box

♦ Removing

– Switch off ignition and remove ignition key.

– With ignition switched off, disconnect earth wire at battery ⇒ Electrical system; Rep. Gr. 27 .

– Open glove box lid and unscrew bolts -3- (3x).

– Unscrew bolts -4- (2x).

– Take out glove box downwards.

> ⚠ **WARNING**
>
> *Before unplugging the connectors, discharge static by briefly touching door striker plate for example.*

– Unplug connector of supply lead/wiring harness for glove box -2-.

2 - Connector

❑ Of supply lead/wiring harness for glove box

3 - Bolts (3x)

❑ Tightening torque: 5 Nm

4 - Bolts (2x)

❑ Tightening torque: 5 Nm

5 - Strip

6 - Rubber stops

7 - Dash panel

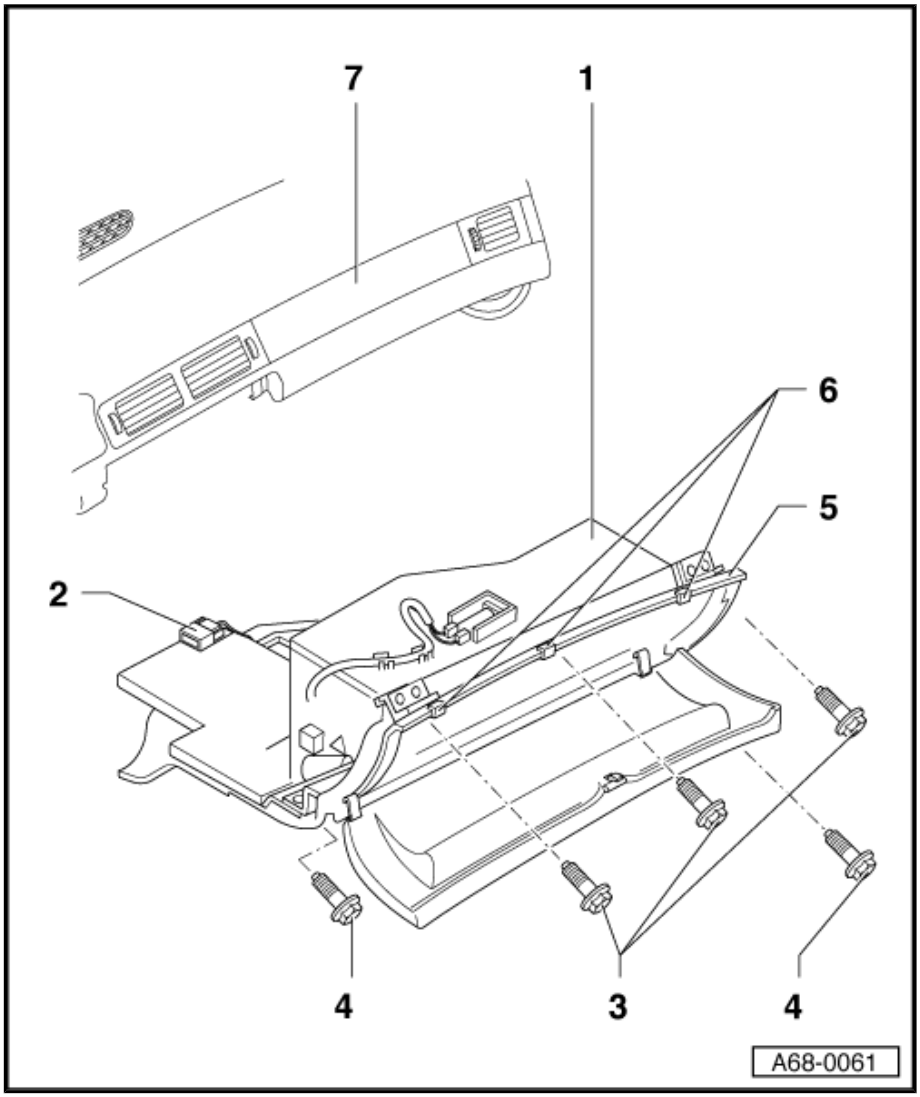

11.2 Converting glove box

– Make a sketch or take a photograph as a guide for routing the wiring harness on the glove box.

– Remove glove box wiring harness.

– If there are no cut-outs, the glove box will have to be converted.

Protected by copyright. Copying for private or commercial purposes, in part or in whole, is not permitted unless authorised by AUDI AG. AUDI AG does not guarantee or accept any liability with respect to the correctness of information in this document. Copyright by AUDI AG.

– Drill a hole with a diameter of 10 mm at edge of mark -1-.
– Use commercially available compass saw to cut along mark -1- to a depth of approx. 80 mm, dimension -A-.
– Drill a hole with a diameter of 3 mm, dimension -B- 39 mm and dimension -C- 16 mm.

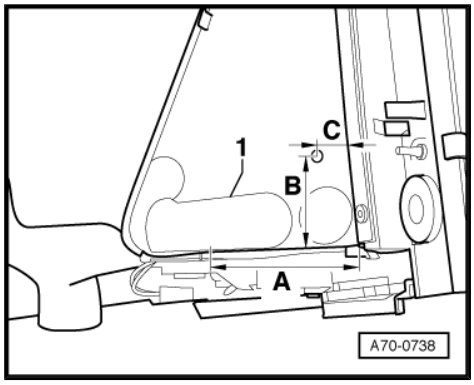

– Mark projection line -2- with dimension -E- 15 mm.
– Drill a hole with a diameter of 3 mm at dimension -D- 45 mm.
– Cut a hole 38 mm (dimension -A-) from edge -1- at glove box, with dimensions -B- 11 mm and -C- 11 mm.
– Install new glove box wiring harness.
– Route and secure wiring harness on glove box according to sketch or photograph.

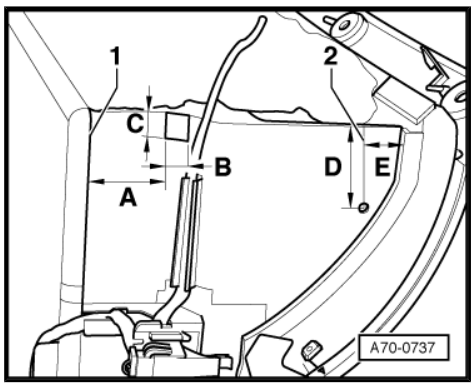

11.3 Installing key-operated switch

– With key -3- inserted, press lock cylinder -2- into key-operated switch to deactivate airbag on front passenger side -E224- -1- until lock cylinder -2- engages.
– Insert key-operated switch to deactivate airbag on front passenger side -E224- in mounting for key-operated switch in glove box.

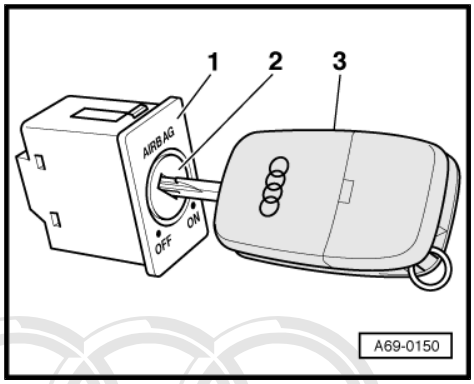

– Engage mounting bracket for key-operated switch at lug -1- and secure with bolts -2- (2x).
– Connect wiring harness -3- to key-operated switch to deactivate airbag on front passenger side -E224- .
– Make sure connector engages properly (audibly).

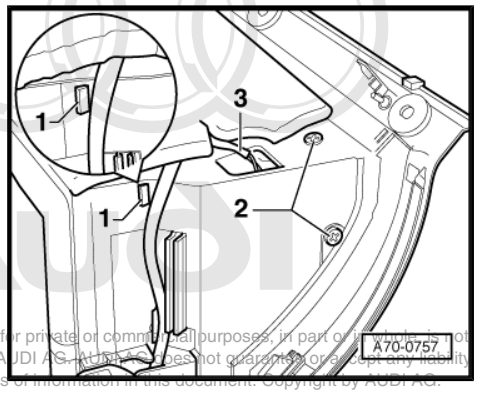

Protected by copyright. Copying for private or commercial purposes, in part or in whole, is not permitted unless authorised by AUDI AG. AUDI AG does not guarantee or accept any liability with respect to the correctness of information in this document. Copyright by AUDI AG.

11.4 Installing glove box

Special tools and workshop equipment required

- Torque wrench -V.A.G 1410-

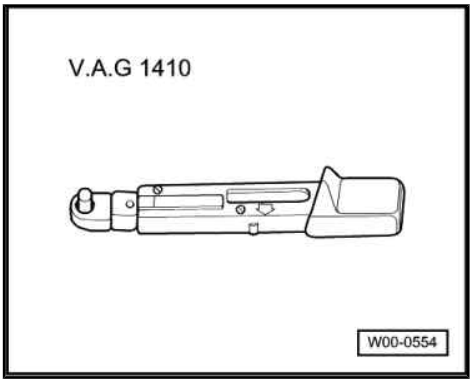

1 - Glove box

- Installing
  - Plug in connector of supply lead/wiring harness for glove box -2-.
  - Working from underneath, guide strip -5- with rubber stops -6- towards dash panel -7- and engage glove box.
  - Screw in bolts -3- and -4-.

2 - Connector

- Of supply lead/wiring harness for glove box

3 - Bolts (3x)

- Tightening torque: 5 Nm

4 - Bolts (2x)

- Tightening torque: 5 Nm

5 - Strip

6 - Rubber stops

7 - Dash panel

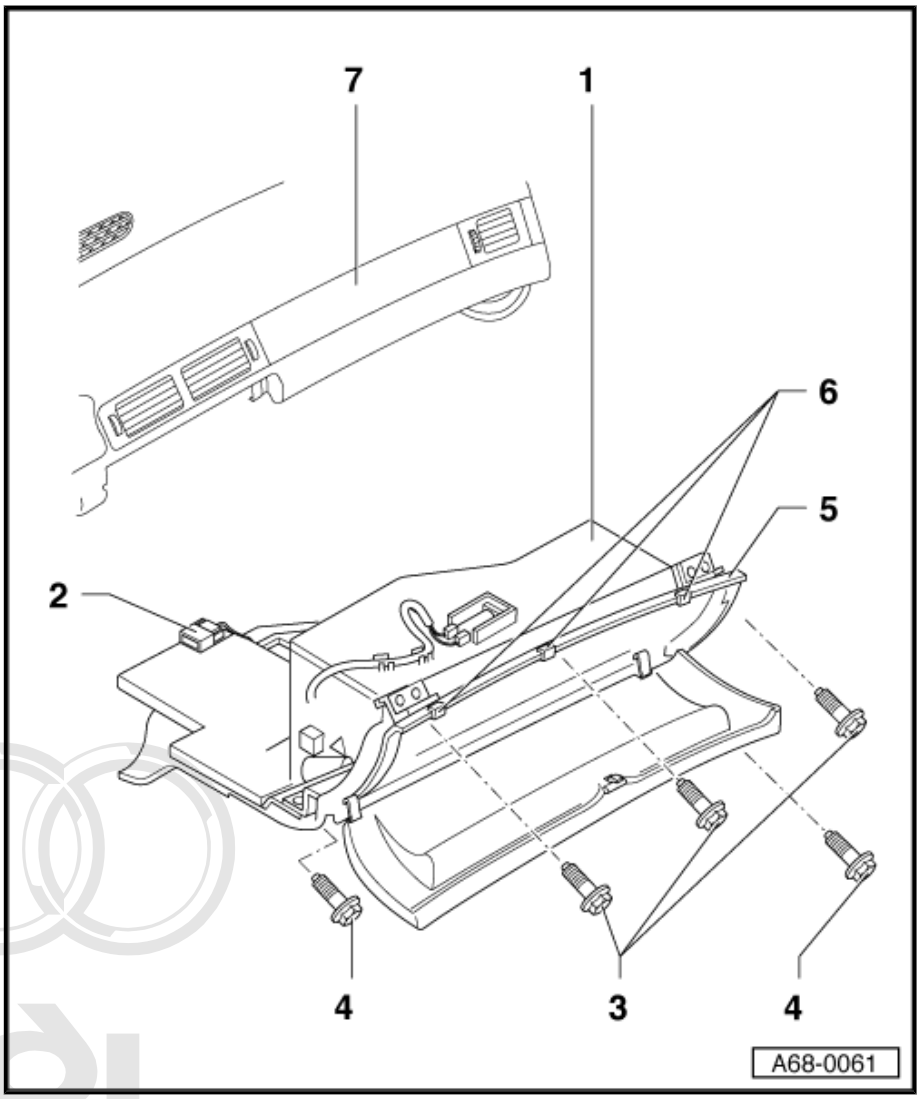

Protected by copyright. Copying for private or commercial purposes, in part or in whole, is not permitted unless authorised by AUDI AG. AUDI AG does not guarantee or accept any liability with respect to the correctness of information in this document. Copyright by AUDI AG.

11.5 Installing warning lamp for airbag deactivated on front passenger side

11.5.1 Removing front interior light -W1- without warning lamp for airbag deactivated on front passenger side

– Prise out cover panel for front interior light -W1- -3- at locations marked -5-.

– Unplug electrical connectors.

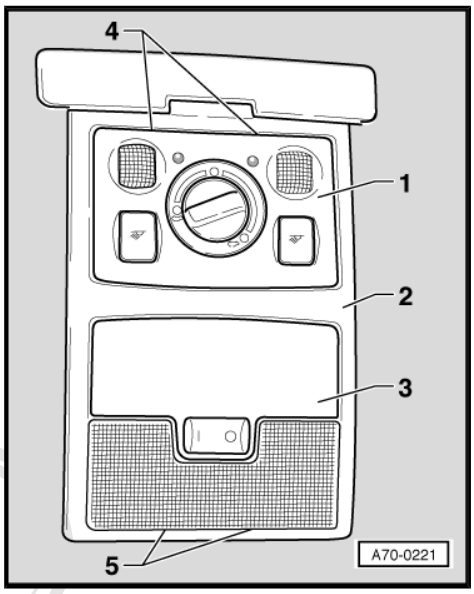

11.5.2 Installing front interior light -W1- with warning lamp for airbag deactivated on front passenger side

Note

The wiring to the warning lamp for airbag deactivated on front passenger side -K145- ("PASSENGER AIRBAG OFF" lamp) is part of the front interior light -W1- wiring harness.

Protected by copyright. Copying for private or commercial purposes, in part or in whole, is not permitted unless authorised by AUDI AG. AUDI AG does not guarantee or accept any liability with respect to the correctness of information in this document. Copyright by AUDI AG.

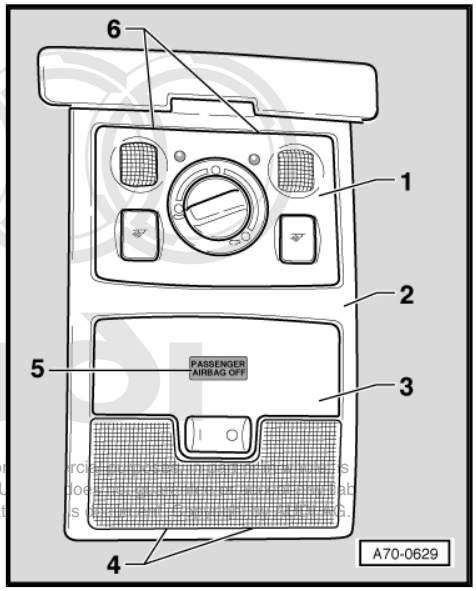

– Locate wiring harness for warning lamp for airbag deactivated on front passenger side -K145- -5- in area of opening in moulded headliner -2-.
– Plug in connector to front interior light -W1- -3- and warning lamp for airbag deactivated on front passenger side -K145- -5-.
– Make sure connectors engage properly (audibly).
– Install front interior light -W1- -3-.
– Switch on ignition.

> ⚠ **WARNING**
>
> ***Make sure nobody is in the vehicle when the battery is being connected.***

Protected by copyright. Copying for private or commercial purposes, in part or in whole, is permitted unless authorised by AUDI AG. AUDI AG does not guarantee or assume any liability with respect to the correctness of information in this document.

– Connect battery earth strap ⇒ Electrical system; Rep. Gr. 27 .
– Observe measures to be taken after connecting the battery ⇒ Electrical system; Rep. Gr. 27 .
– Re-code airbag control unit -J234- ⇒ page 86 .
– Perform functional test.
– Deactivate airbag on front passenger side with key-operated switch to deactivate airbag on front passenger side -E224- .

  Warning lamp for airbag deactivated on front passenger side -K145- must light up constantly.
– Activate airbag on front passenger side with key-operated switch to deactivate airbag on front passenger side -E224- .

  Warning lamp for airbag deactivated on front passenger side -K145- must go out.
– Interrogate and erase fault memories of all control units. To do so, use a suitable vehicle diagnostic, testing and information system, e.g. vehicle diagnostic, testing and information system -VAS 5051B- .

12 Retrofitting key-operated switch (Audi A6 2005 ▸)

WARNING

When retrofitting key-operated switch to deactivate airbag on front passenger side -E224- and warning lamp for airbag deactivated on front passenger side -K145- , observe safety precautions for working on airbags ⇒ General body repairs, interior; Rep. Gr. 69 .

WARNING

Before handling the airbag units (e.g. unplugging the electrical connector) the mechanic must discharge static electricity by briefly touching the door striker plate, or similar.

Components required for retrofitting ⇒ page 6

12.1 Removing glove box

Special tools and workshop equipment required

Protected by copyright. Copying for private or commercial purposes, in part or in whole, is not permitted unless authorised by AUDI AG. AUDI AG does not guarantee or accept any liability with respect to the correctness of information in this document. Copyright by AUDI AG.

- Radio release tool -T10057-

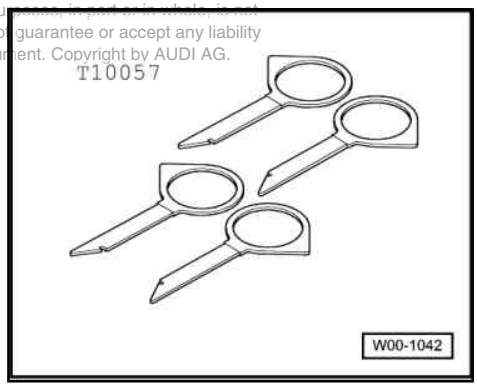

- Protective cap for wiring harness connector VAS 6223/9 from optical fibre repair set -VAS 6223-

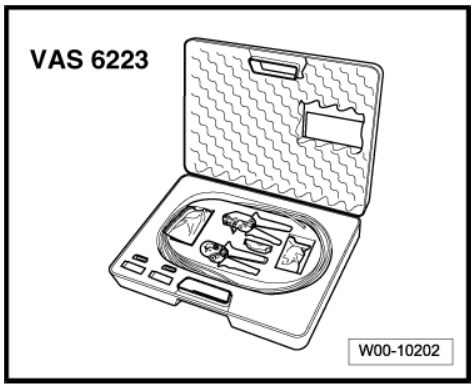

Note

If glove box lid does not open it can be manually released *⇒ page 65* .

Manual release

– Use screwdriver to prise off dash panel end trim on front passenger side -arrow-.

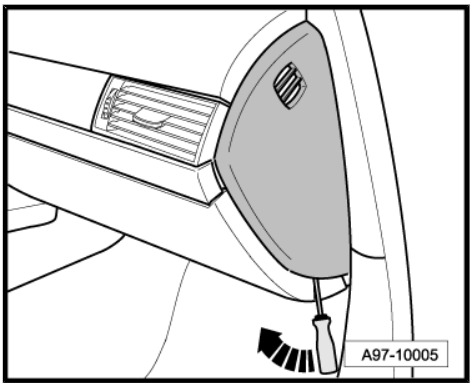

– Guide ∅ 6 mm drift punch -2- through opening -arrow-.

– Push in the locking pin and open the glove box lid -1-.

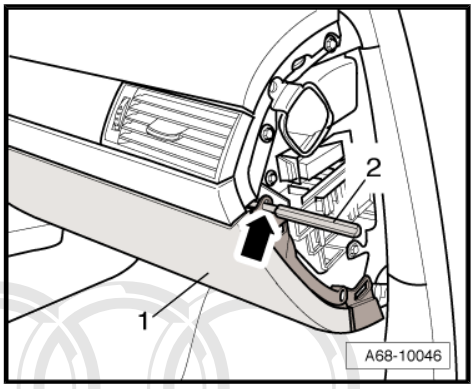

Removing glove box

> ⚠ **Caution**
>
> *Contrary to the procedure described for "Disconnecting and connecting battery" ⇒ Electrical system; Rep. Gr. 27 , the battery must be disconnected with the ignition on when retrofitting the key-operated switch to deactivate airbag on front passenger side -E224- and the warning lamp for airbag deactivated on front passenger side -K145- .*

– Switch on ignition.

– Remove luggage compartment floor trim.

– Disconnect earth wire -arrow- at battery ⇒ Electrical system; Rep. Gr. 27 .

Protected by copyright. Copying for p permitted unless authorised by AUD with respect to the correctness of

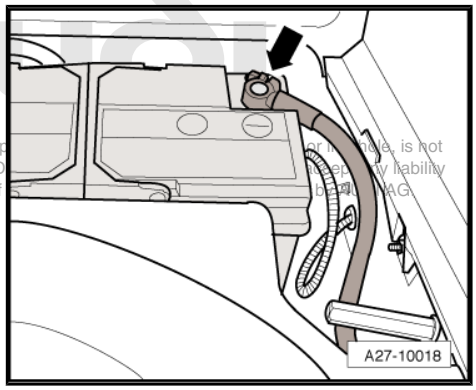

– Use screwdriver to prise off dash panel end trim on front passenger side -arrow-.

Removing CD changer -R41-

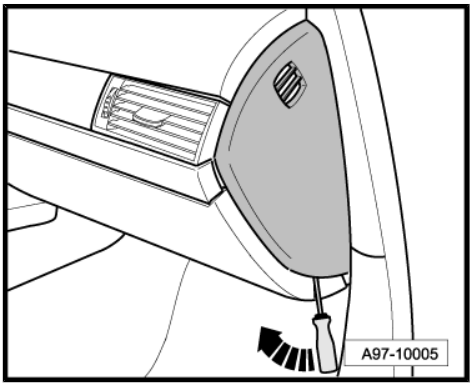

– Insert 2 keys of radio release tool -T10057- in front of CD changer -R41- .

Top L - top left

Top R - top right

– Pull CD changer -R41- out of mounting frame.

– Unplug connectors at CD changer -R41- .

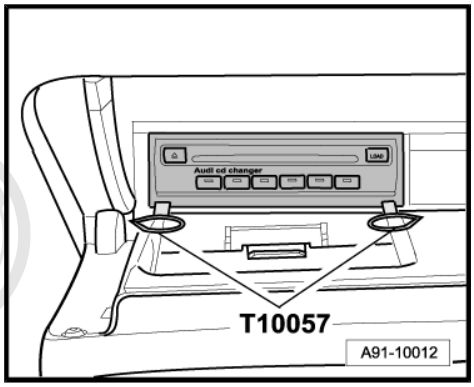

– Attach protective cap for wiring harness connector VAS 6223/9 -1- to connector of optical fibre -2-.

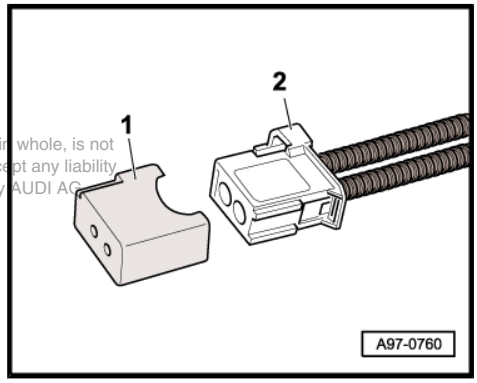

Note

Protected by copyright. Copying for private or commercial purposes, in part or in whole, is not permitted unless authorised by AUDI AG. AUDI AG does not guarantee or accept any liability with respect to the correctness of information. Copyright by AUDI AG.

The protective cap for the wiring harness connector VAS 6223/9 prevents contamination of or mechanical damage to the end face of the optical fibre, which would impair light transmission.

– Pull out radio release tool -T10057- by pressing tabs on CD changer -R41- .

Removing glove box (continued)

– Remove bolts -arrows-.

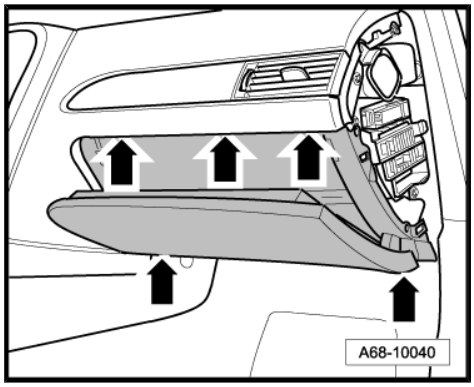

WARNING

Before unplugging the connectors, discharge static by briefly touching door striker plate for example.

– Unplug electrical connector at main connector.

– Remove glove box.

12.2 Converting glove box

Special tools and workshop equipment required

♦ Torque wrench -V.A.G 1783-

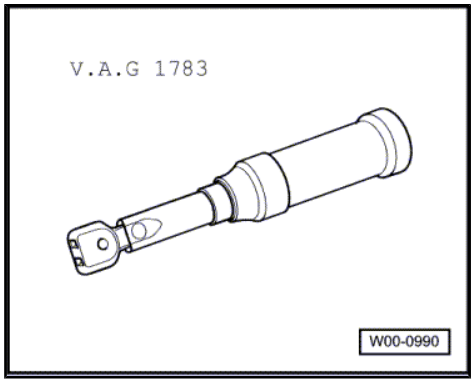

– Make a sketch or take a photograph as a guide for routing the wiring harness -2- on the glove box.

– Remove wiring harness -2- for glove box -1-.
– On back of glove box -1-, cut out cover panel -arrow B- within peripheral groove (perforation) -arrow A-.
– Install new wiring harness -2- for glove box -1-.

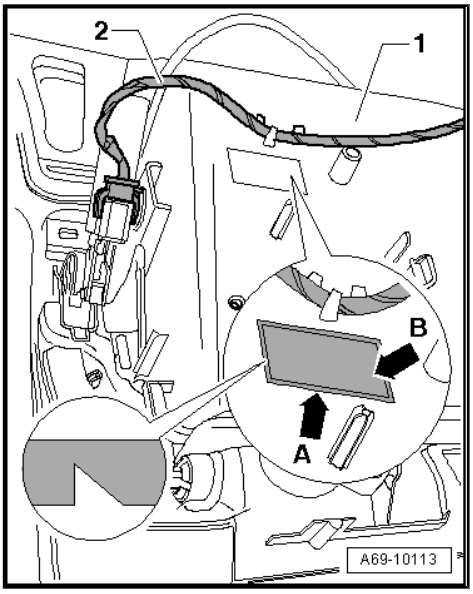

– Route and secure new wiring harness -2- on glove box -1- according to sketch or photograph.
– Thread connector for key-operated switch to deactivate airbag on front passenger side -E224- through opening in glove box -arrow-.

Protected by copyright. Copying for private or commercial purposes, in part or in whole, is not permitted unless authorised by AUDI AG. AUDI AG does not guarantee or accept any liability with respect to the correctness of information in this document. Copyright by AUDI AG.

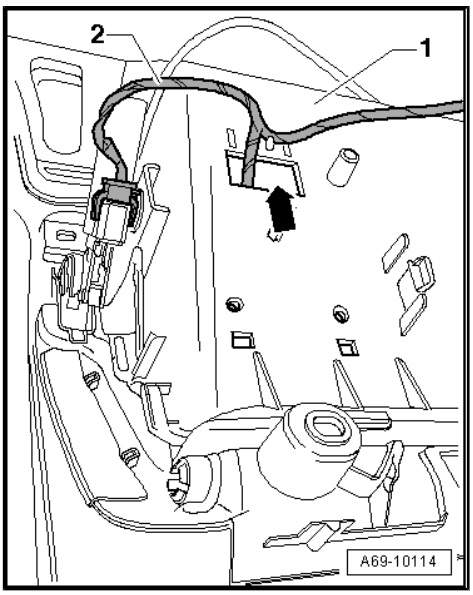

– Press key-operated switch to deactivate airbag on front passenger side -E224- -1- into mounting -2- in direction of -arrow- until retaining clips -arrows A- engage.

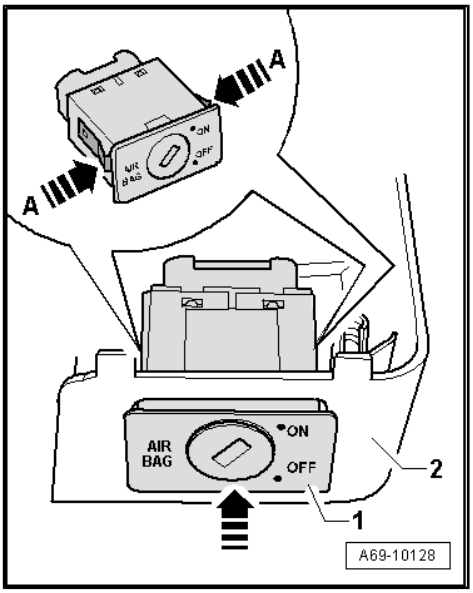

– Engage wiring harness for key-operated switch to deactivate airbag on front passenger side -E224- in keyhole-shaped opening of mounting -2-.

– Plug in connector -4- at key-operated switch to deactivate airbag on front passenger side -E224- -1-.

– Make sure connector engages properly (audibly).

– Insert retaining tabs of mounting -arrows A- at rear in slots of glove box -3-.

– Swivel up mounting -2- with key-operated switch to deactivate airbag on front passenger side -E224- and clip retaining tabs -arrows B- into front in glove box.

Protected by copyright. Copying for private or commercial purposes, in part or in whole, is not permitted unless authorised by AUDI AG. AUDI AG does not guarantee or accept any liability with respect to the correctness of information in this document. Copyright by AUDI AG.

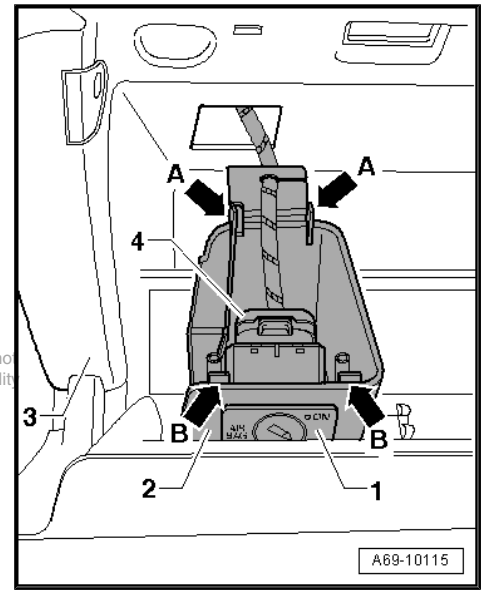

– Make sure retaining tabs -arrows- are properly engaged with glove box.

– Screw in bolts -1- and tighten to specified torque.

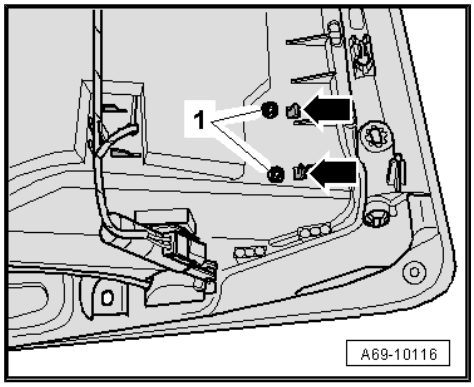

Tightening torque

Component	Nm
Mounting to glove box	2

12.3 Installing glove box

Special tools and workshop equipment required

♦ Torque wrench -V.A.G 1783-

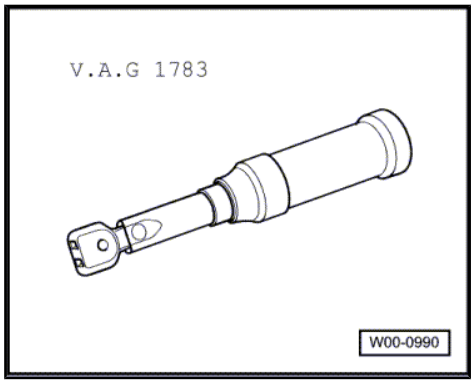

Installing glove box

– Plug in electrical connector at central connector.

– Thread connectors for CD changer -R41- through opening in glove box.

– Take care not to trap any wires when installing glove box.

– Screw in bolts -arrows- and tighten to specified torque.

Installing CD changer -R41-

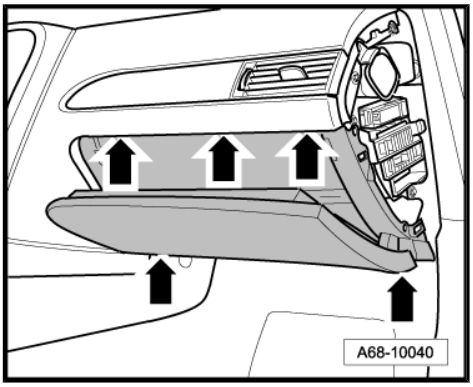

– Detach protective cap for wiring harness connector VAS 6223/9 -1- from connector of optical fibre -2-.
– Plug in connectors at CD changer -R41- .

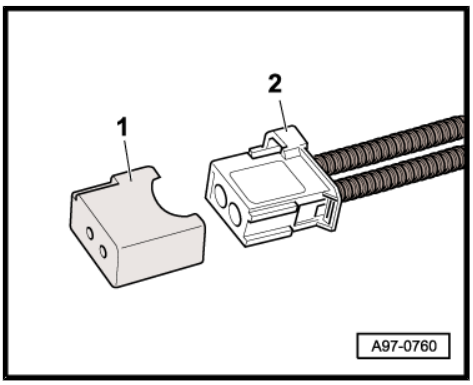

– Slide CD changer -R41- -3- into glove box. Take care not to trap any wires.

1 - Key-operated switch to deactivate airbag on front passenger side -E224-

2 - Mounting

Tightening torque

Component	Nm
Glove box to dash panel	3

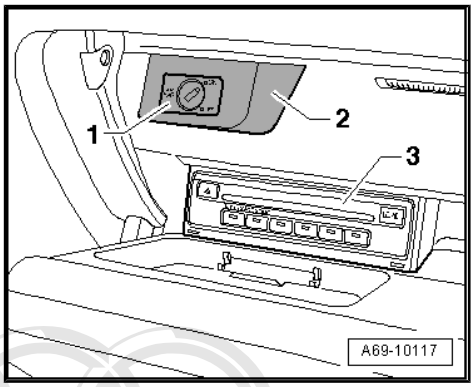

12.4 Installing warning lamp for airbag deactivated on front passenger side

12.4.1 Removing centre vent trim panel without warning lamp for airbag deactivated on front passenger side

Special tools and workshop equipment required

Protected by copyright. Copying for private or commercial purposes, in part or in whole, is not permitted unless authorised by AUDI AG. AUDI AG does not guarantee or accept any liability with respect to the correctness of information in this document. Copyright by AUDI AG.

♦ Removal wedge -3409-

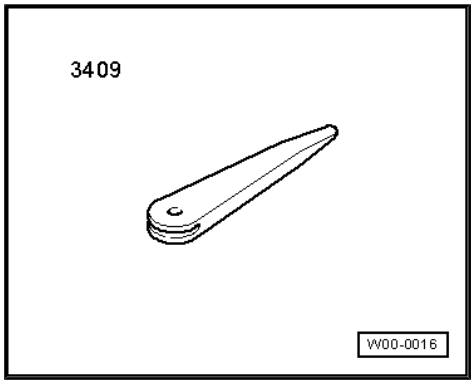

♦ Hook -3438-

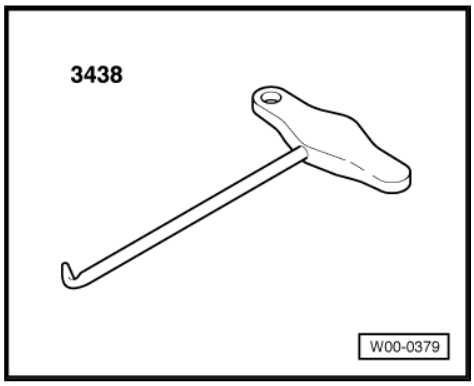

– Lower steering wheel as far as possible towards rear, making use of the full range of the steering column adjuster.
– Detach chrome frame of vent trim panel -1- on left in direction of -arrow-. Use removal wedge -3409- to unclip if necessary.
– Set slats of centre vent trim panel to horizontal position.
– Use a small, commercially available screwdriver -3- and -4- to release metal clips -2- in direction of -arrow-.

Protected by copyright. Copying for private or commercial purposes, in part or in whole, is not permitted unless authorised by AUDI AG. AUDI AG does not guarantee or accept any liability with respect to the correctness of information in this document. Copyright by AUDI AG.

Note

A hole is provided on both sides of the centre vent trim panel for engaging the hook -3438- .

– Pull centre vent trim panel -1- on both sides out of dash panel installation opening with hook -3438- , leaving the screwdrivers inserted.

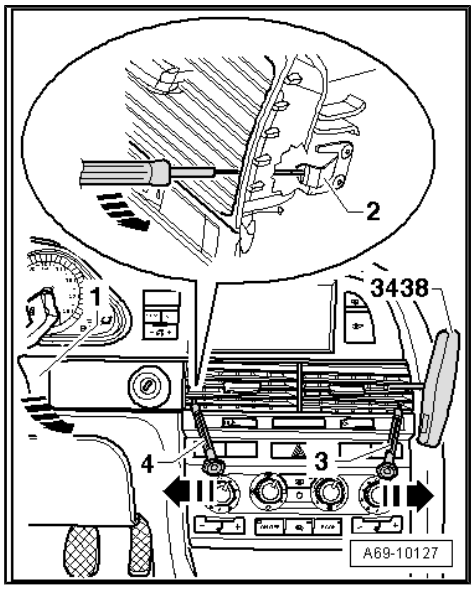

– Disengage wiring harness from clip -3-.
– Unplug all electrical connectors -arrows-.

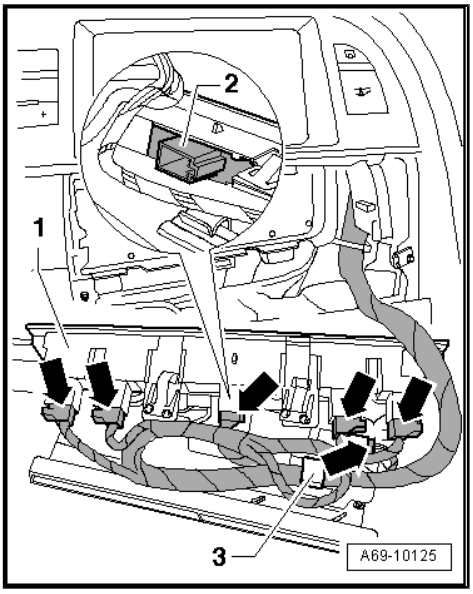

Note

The illustration shows a centre vent trim panel with full switch assignment. There may also be dummy covers fitted depending on equipment version.

– Make a sketch or take a photograph showing the sections of the centre vent trim panel fitted with switches or dummy covers.
– Press the hazard warning light switch -E3- -2- as well as all other switches and dummy covers out of the centre vent trim panel.

Note

Use the switches and dummy covers removed for the new centre vent trim panel with warning lamp for airbag deactivated on front passenger side.

12.4.2 Installing centre vent trim panel with warning lamp for airbag deactivated on front passenger side

Note

The wiring to the warning lamp for airbag deactivated on front passenger side -K145- ("PASSENGER AIRBAG OFF" lamp) is part of the passenger compartment wiring harness.

– Fit warning lamp for airbag deactivated on front passenger side -K145- in centre vent trim panel.

Protected by copyright. Copying for private or commercial purposes, in part or in whole, is not permitted unless authorised by AUDI AG. AUDI AG does not guarantee or accept any liability with respect to the correctness of information in this document. Copyright by AUDI AG.

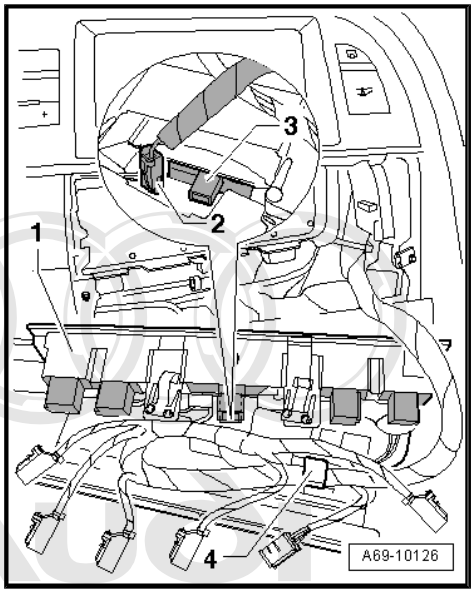

– Slide warning lamp for airbag deactivated on front passenger side -K145- -3- into corresponding opening in centre vent trim panel -1-.
– Make sure warning lamp for airbag deactivated on front passenger side -K145- engages properly in opening of centre vent trim panel.
– Locate wiring harness for warning lamp for airbag deactivated on front passenger side -K145- in area of centre vent trim panel.
– Plug in connector -2- at warning lamp for airbag deactivated on front passenger side -K145- -3-.
– Make sure connector engages properly (audibly).
– Slide hazard warning lamp switch -E3- and all other switches and dummy covers into mountings in centre vent trim panel in accordance with sketch or photograph. Never alter position with respect to centre vent trim panel removed on account of wire lengths.
– Engage wiring harness in clip -4-.
– Plug in connectors at switches/plug contacts, paying attention to colour coding.
– Make sure all connectors engage properly (audibly).
– Slide centre vent into dash panel opening.
– Take care not to trap any wires and make sure centre vent is properly engaged with dash panel.

Protected by copyright. Copying for private or commercial purposes, in part or in whole, is not permitted unless authorised by AUDI AG. AUDI AG does not guarantee or accept any liability with respect to the correctness of information in this document. Copyright by AUDI AG.

• Ignition switched on

> ⚠ **WARNING**
>
> ***Make sure nobody is in the vehicle when the battery is being connected.***

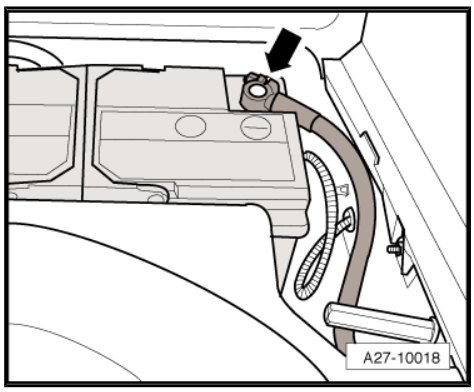

– Connect earth wire -arrow- to battery ⇒ Electrical system; Rep. Gr. 27 .
– Install luggage compartment floor trim.
– Observe measures to be taken after connecting the battery ⇒ Electrical system; Rep. Gr. 27 .
– Perform adaption for airbag control unit -J234- ⇒ page 87 .
– Perform functional test.
– Deactivate airbag on front passenger side with key-operated switch to deactivate airbag on front passenger side -E224- .

  Warning lamp for airbag deactivated on front passenger side -K145- must light up constantly.
– Activate airbag on front passenger side with key-operated switch to deactivate airbag on front passenger side -E224- .

  Warning lamp for airbag deactivated on front passenger side -K145- must go out.
– Interrogate and erase fault memories of all control units. To do so, use a suitable vehicle diagnostic, testing and information system, e.g. vehicle diagnostic, testing and information system -VAS 5051B- .

13 Retrofitting key-operated switch (Audi A8 1994 ▸, gradual introduction from approx. week 41/1998 onwards, with front and side or front and curtain airbag)

WARNING

When retrofitting key-operated switch to deactivate airbag on front passenger side -E224- and warning lamp for airbag deactivated on front passenger side -K145- , observe safety precautions for working on airbags ⇒ General body repairs, interior; Rep. Gr. 69 .

WARNING

Before handling the airbag units (e.g. unplugging the electrical connector) the mechanic must discharge static electricity by briefly touching the door striker plate, or similar.

Components required for retrofitting ⇒ page 6

13.1 Removing glove box

– Switch off ignition and remove ignition key.
– With ignition switched off, disconnect earth wire at battery ⇒ Electrical system; Rep. Gr. 27 .
– Open glove box.
– Unscrew frame for glove box -arrows-.
– Pull frame with glove box to rear, out of guide sleeves.

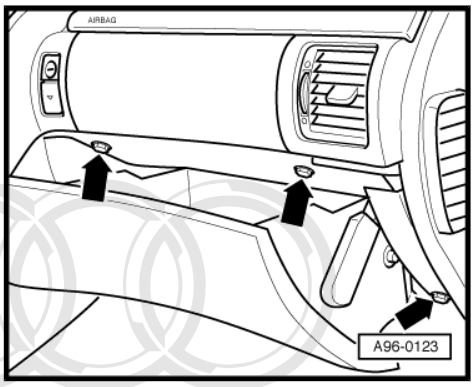

WARNING

Before unplugging the connectors, discharge static by briefly, e.g. by touching door striker plate.

– Unplug electrical connectors and set down glove box in footwell (passenger side).

– Remove glove box lock from glove box -arrows-.

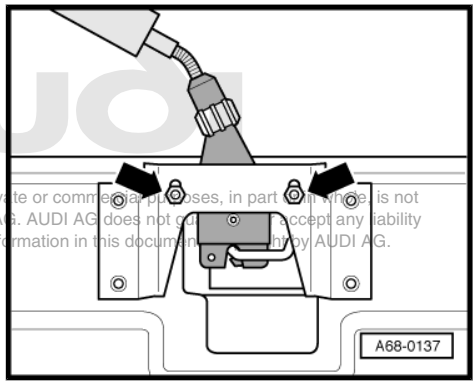

Protected by copyright. Copying for private or commercial purposes, in part or in whole, is not permitted unless authorised by AUDI AG. AUDI AG does not guarantee or accept any liability with respect to the correctness of information in this document copyright by AUDI AG.

13.2 Converting glove box

– Use flat screwdriver to press retaining tab -2- and take out cover panel (coin holder) -1-.

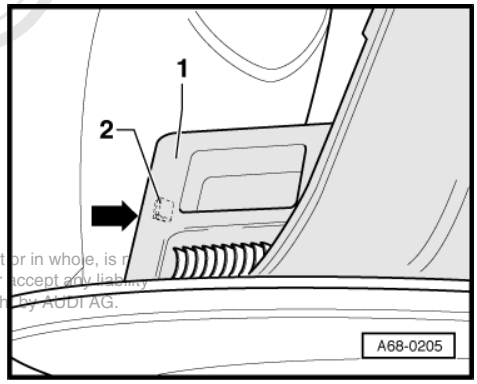

Protected by copyright. Copying for private or commercial purposes, in part or in whole, is not permitted unless authorised by AUDI AG. AUDI AG does not guarantee or accept any liability with respect to the correctness of information in this document. Copyright by AUDI AG.

– Unclip trim -2-.

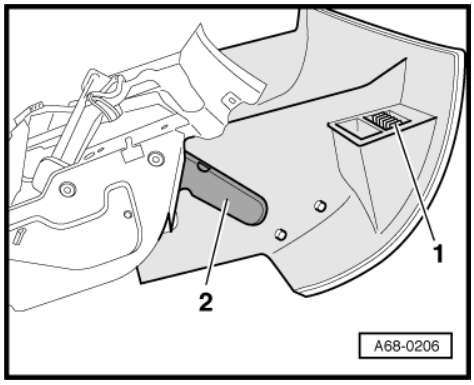

– Remove old wiring harness -5-.

– Install new wiring harness -5-.

– Route wiring harness -5- beneath trim panels -4- and -3- so that wiring harness does not rub on hinge.

– Clip in trim panel -4-.

– Use bolts -2- to screw in trim -3-.

– Install new trim -1- with key-operated switch to deactivate air-bag on front passenger side -E224- ⇒ page 75 .

1 - Coin holder with key-operated switch to deactivate airbag on front passenger side - E224-

2 - Bolts (2x)

3 - Trim for wiring harness

4 - Hinge trim

5 - Wiring harness

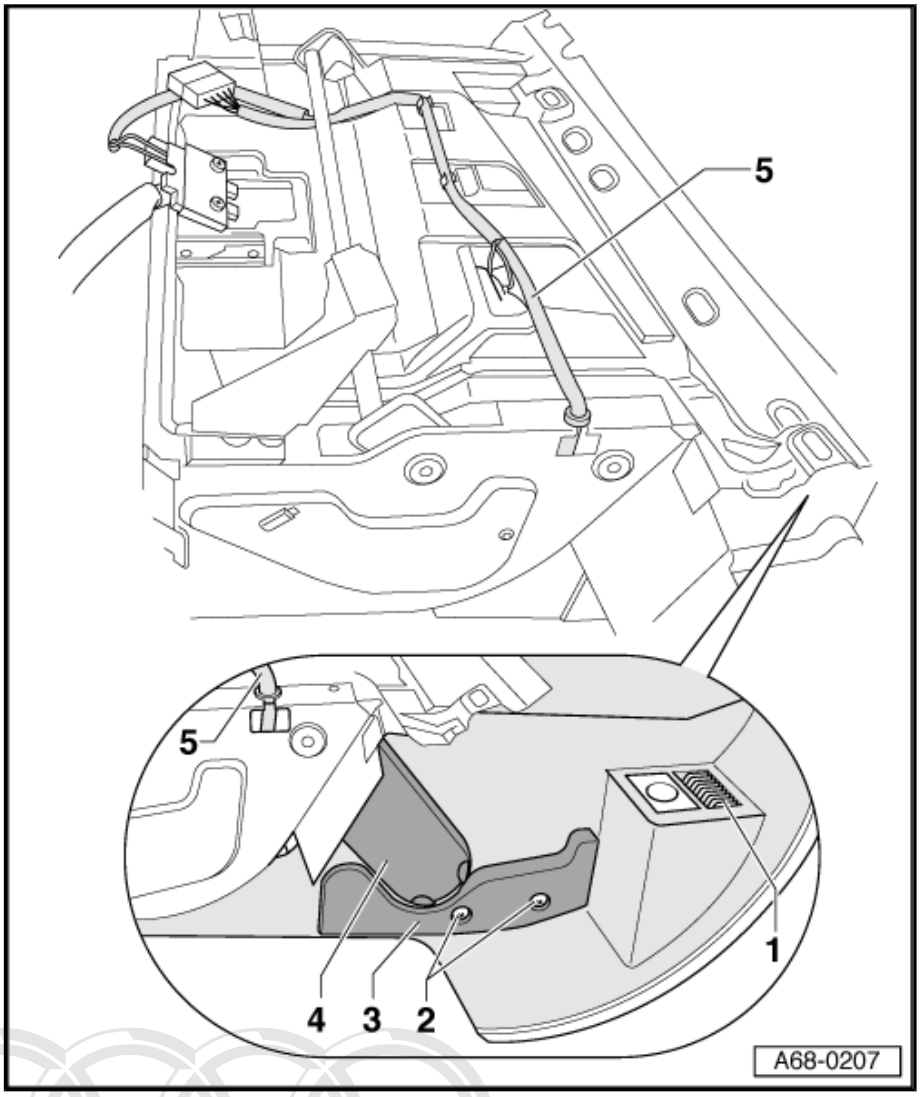

13.3 Installing key-operated switch

– With key -3- inserted, press lock cylinder -2- into key-operated switch to deactivate airbag on front passenger side -E224- -1- until lock cylinder -2- engages.

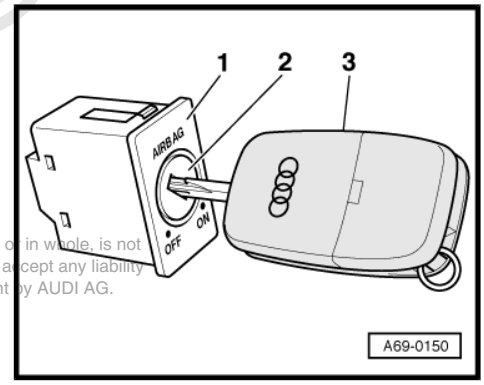

Protected by copyright. Copying for private or commercial purposes, in part or in whole, is not permitted unless authorised by AUDI AG. AUDI AG does not guarantee or accept any liability with respect to the correctness of information in this document. Copyright by AUDI AG.

– Press key-operated switch to deactivate airbag on front passenger side -E224- -1- into trim until retaining clips -arrows- engage.

– Plug in connector -2-.

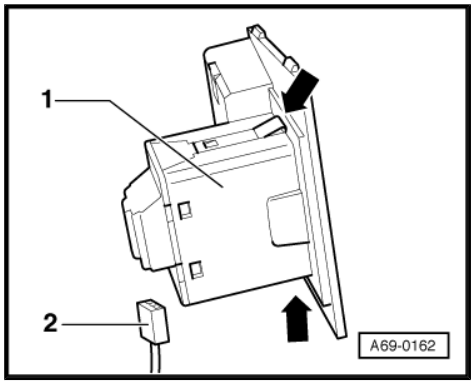

– Press cover panel -1- into glove box until retaining tab -2- engages.

Protected by copyright. Copying for private or commercial purposes, in part or in whole, is not permitted unless authorised by AUDI AG. AUDI AG does not guarantee or accept any liability with respect to the correctness of information in this document. Copyright by AUDI AG.

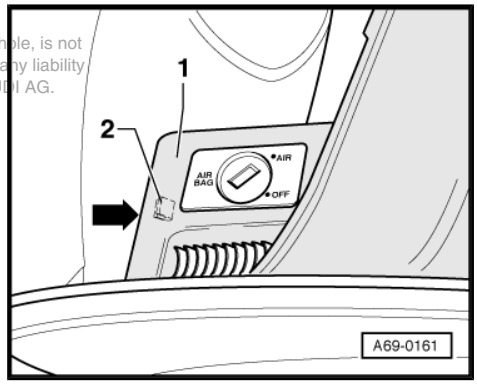

13.4 Installing glove box

– Bolt glove box lock to glove box -arrows-.

Installation is carried out in reverse order; note the following:

– If glove box will not close or there is play, adjust lock for glove box by moving it in elongated holes -arrows-.

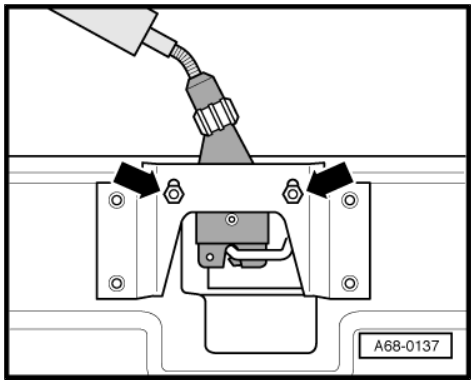

Tightening torque

Component	Nm
Glove box to dash panel	2.5

13.5 Installing warning lamp for airbag deactivated on front passenger side

13.5.1 Removing front interior light -W1- without warning lamp for airbag deactivated on front passenger side

– Prise out cover panel -2- of front interior light -W1- at locations marked -3-.
– Prise out front interior light -W1- -1- at locations marked -3-.
– Unplug connector for front interior light -W1- -1-.

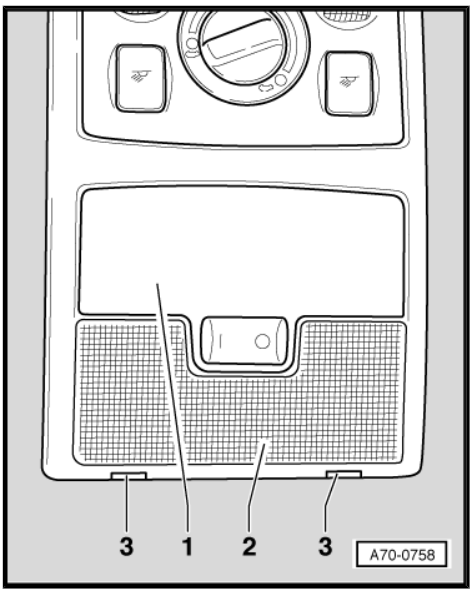

Protected by copyright. Copying for private or commercial purposes, in part or in whole, is not permitted unless authorised by AUDI AG. AUDI AG does not guarantee or accept any liability with respect to the correctness of information in this document. Copyright by AUDI AG.

13.5.2 Installing front interior light -W1- with warning lamp for airbag deactivated on front passenger side

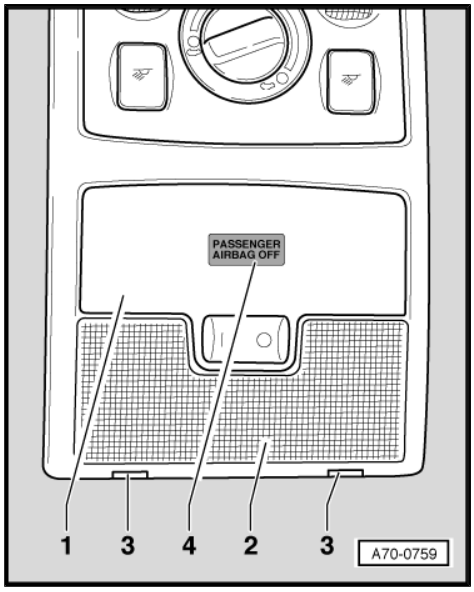

Note

The wiring to the warning lamp for airbag deactivated on front passenger side -K145- ("PASSENGER AIRBAG OFF" lamp) is part of the front interior light -W1- wiring harness.

– Plug in connectors to front interior light -W1- -1- and warning lamp for airbag deactivated on front passenger side -K145- .

– Install front interior light -W1- -1- with cover panel -2-.

– Switch on ignition.

WARNING

Make sure nobody is in the vehicle when the battery is being connected.

– Connect battery earth strap ⇒ Electrical system; Rep. Gr. 27 .

– Observe measures to be taken after connecting the battery ⇒ Electrical system; Rep. Gr. 27 .

– Re-code airbag control unit -J234- ⇒ page 86 .

– Perform functional test.

– Deactivate airbag on front passenger side with key-operated switch to deactivate airbag on front passenger side -E224- .

  Warning lamp for airbag deactivated on front passenger side -K145- must light up constantly.

– Activate airbag on front passenger side with key-operated switch to deactivate airbag on front passenger side -E224- .

  Warning lamp for airbag deactivated on front passenger side -K145- must go out.

– Interrogate and erase fault memories of all control units. To do so, use a suitable vehicle diagnostic, testing and information system, e.g. vehicle diagnostic, testing and information system -VAS 5051B- .

Protected by copyright. Copying for private or commercial purposes, in part or in whole, is not permitted unless authorised by AUDI AG. AUDI AG does not guarantee or accept any liability with respect to the use of information in this document. Copyright by AUDI AG.

14 Retrofitting key-operated switch (Audi A8 2003 ▸)

WARNING

When retrofitting key-operated switch to deactivate airbag on front passenger side -E224- and warning lamp for airbag deactivated on front passenger side -K145- , observe safety precautions for working on airbags ⇒ General body repairs, interior; Rep. Gr. 69 .

WARNING

Before handling the airbag units (e.g. unplugging the electrical connector) the mechanic must discharge static electricity by briefly touching the door striker plate, or similar.

Protected by copyright. Copying for private or commercial purposes, in part or in whole, is not permitted unless authorised by AUDI AG. AUDI AG does not guarantee or accept any liability with respect to the information in this document. Copyright by AUDI AG.

Components required for retrofitting ⇒ page 7

14.1 Removing glove box

Special tools and workshop equipment required

- Removal wedge -3409-
- Protective cap for wiring harness connector VAS 6223/9 from optical fibre repair set -VAS 6223-
- Radio release tool -T10057-

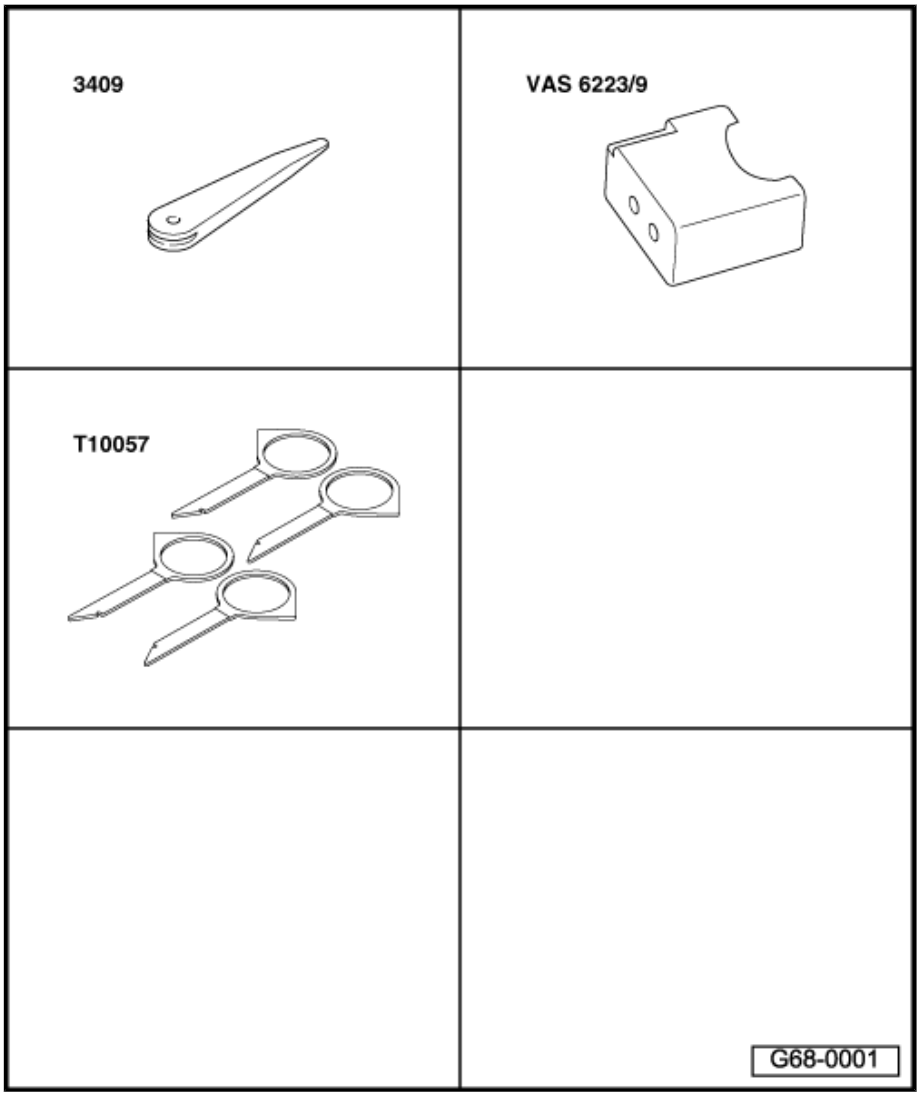

Caution

Contrary to the procedure described for "Disconnecting and connecting battery" ⇒ Electrical system; Rep. Gr. 27 , the battery must be disconnected with the ignition on when retrofitting the key-operated switch to deactivate airbag on front passenger side -E224- and the warning lamp for airbag deactivated on front passenger side -K145- .

– Switch on ignition.

– Disconnect earth wire at battery ⇒ Electrical system; Rep. Gr. 27 .

Removing CD changer -R41-

– Insert 2 keys of radio release tool -T10057- into front of CD changer -R41- .

♦ Top L - top left

♦ Top R - top right

– Pull CD changer -R41- out of mounting frame.

– Unplug connectors at CD changer -R41- .

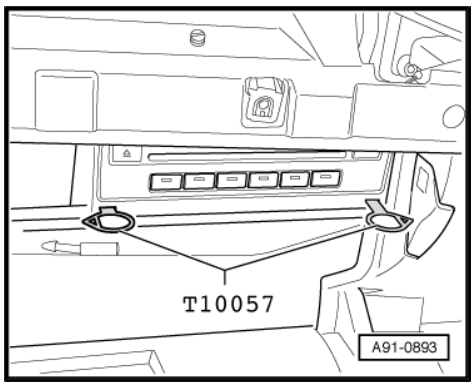

– Seal open wiring harness connector of optical fibre -2- with protective cap for wiring harness connector VAS 6223/9 -1-.

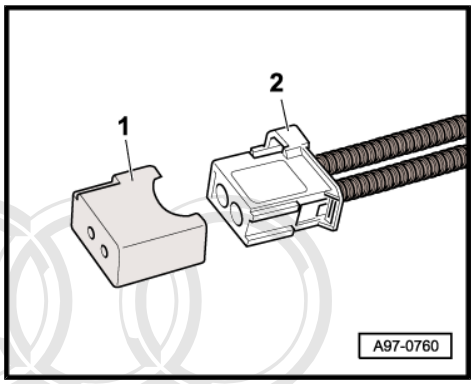

Note

The protective cap for the wiring harness connector VAS 6223/9 prevents contamination of or mechanical damage to the end face of the optical fibre wiring harness connector, which would impair light transmission.

– Pull radio release tool -T10057- out of CD changer -R41- by pressing catches on CD changer -R41- .

Removing storage compartment in glove box

– Use a small screwdriver to release retaining tabs -1- and -2- in direction of -arrow-.

– Pull storage compartment out of glove box.

Removing glove box

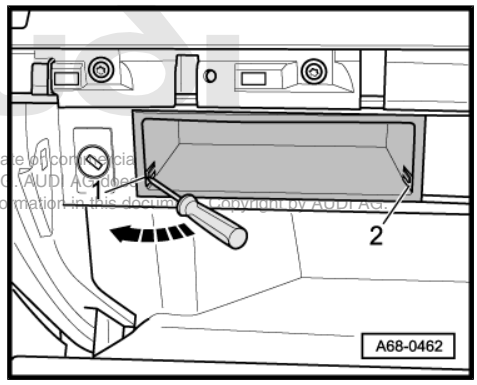

Protected by copyright. Copying for private or commercial purposes, in part or in whole, is not permitted unless authorised by AUDI AG. AUDI AG does not guarantee or assume any liability with respect to the correctness of information in this document. Copyright by AUDI AG.

– Use screwdriver to prise off dash panel end trim (right-side) -arrow-.

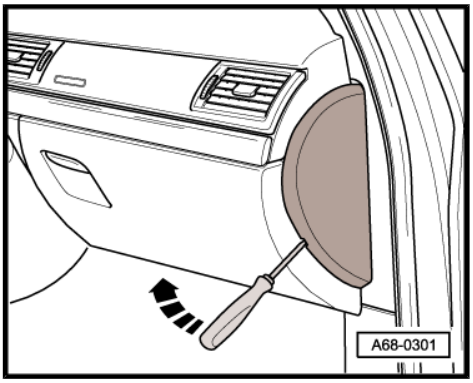

– Remove bolts -arrows-.

– Remove bolts -1- and -2-.

> ⚠ WARNING
>
> *Before unplugging the connectors, discharge static by briefly, e.g. by touching door striker plate.*

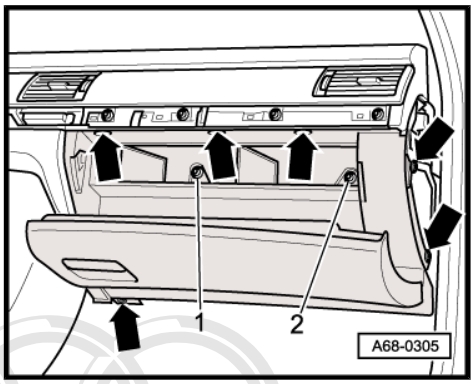

– Unplug connector -1- from glove box wiring harness -2-.

3 - Glove box power supply lead

Vehicles with knee airbag

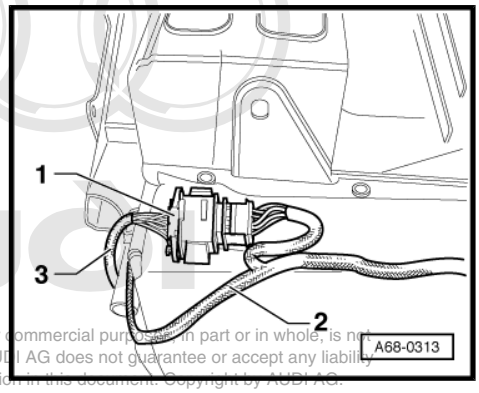

Protected by copyright. Copying for private or commercial purposes, in part or in whole, is not permitted unless authorised by AUDI AG. AUDI AG does not guarantee or accept any liability with respect to the correctness of information in this document. Copyright by AUDI AG.

– Pull catch -2- in direction of -arrow- and unplug electrical connectors -1- and -3-.

All vehicles (continued)

– Remove glove box.

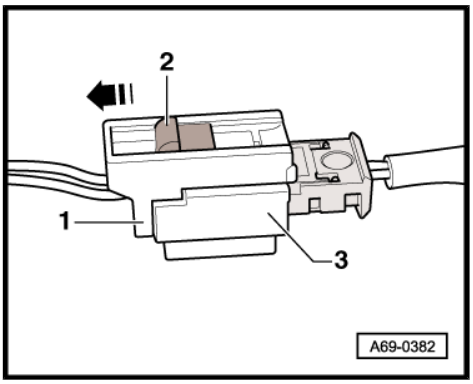

14.2 Converting glove box

- Make a sketch or take a photograph as a guide for routing the wiring harness -1- on the glove box.
- Remove glove box wiring harness -1-.
- Cut out cover panel on back of glove box within peripheral groove (perforation).
- Install new glove box wiring harness -1- with wiring for key-operated switch to deactivate airbag on front passenger side -E224- .
- Route and secure new wiring harness -1- on glove box according to -arrows- and sketch or photograph.

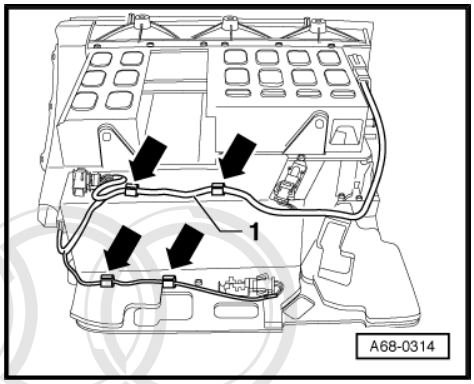

14.3 Installing key-operated switch

- Press key-operated switch -2- into glove box until retaining clips -arrows- engage.
- Plug in connector -1- at key-operated switch to deactivate airbag on front passenger side -E224- -2-.
- Make sure connector engages properly (audibly).

Copyright. Copying for private or commercial purposes, in part or in whole, is not permitted unless authorised by AUDI AG. AUDI AG does not guarantee or accept any liability with respect to the correctness of information in this document. Copyright by AUDI AG.

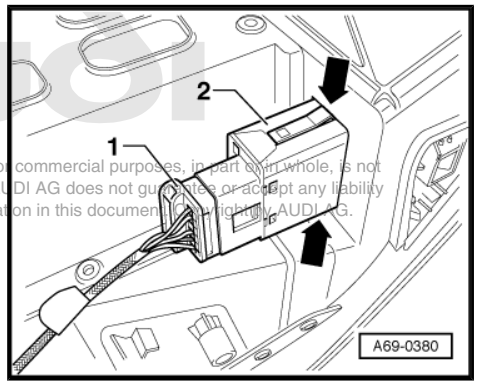

14.4 Installing glove box

Special tools and workshop equipment required

- Torque wrench -V.A.G 1783-

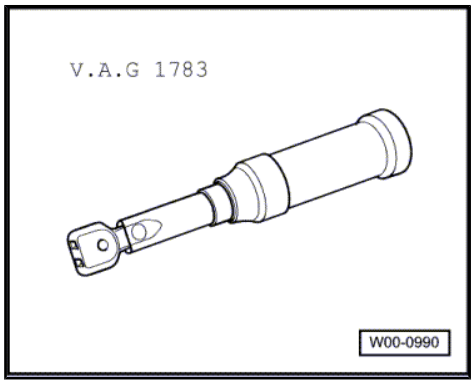

- The glove box, storage compartment and CD changer -R41- are to be installed in reverse order of removal.

Tightening torque

Component	Nm
Glove box to dash panel	4

14.5 Installing warning lamp for airbag deactivated on front passenger side

14.5.1 Removing trim panel with switch module (right-side) without warning lamp for airbag deactivated on front passenger side

Special tools and workshop equipment required

♦ Removal wedge -3409-

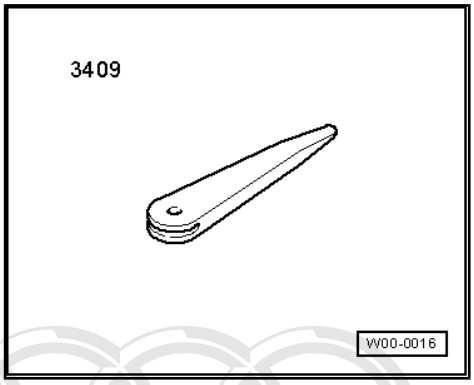

– Open coin holder.

– Slide trim for coin holder to left out of fastener -arrow- and detach.

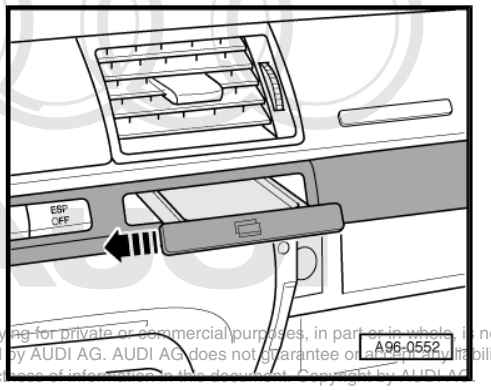

Protected by copyright. Copying for private or commercial purposes, in part or in whole, is not permitted unless authorised by AUDI AG. AUDI AG does not guarantee or accept any liability with respect to the correctness of information in this document. Copyright by AUDI AG

– Open glove box.

– Starting from above glove box, carefully separate trim panel with switch module -1- from dash panel using removal wedge -3409- .

– Detach trim panel with switch panel in direction of -arrow-.

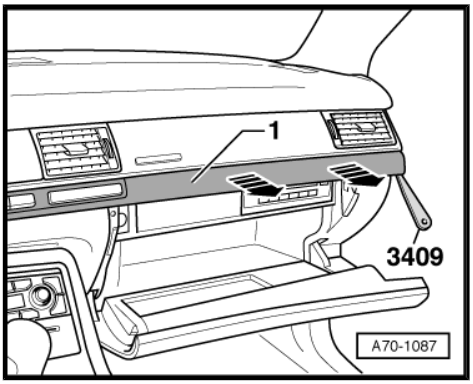

Note

Take particular care when unfastening clip at end of trim panel closest to driver.

– Unplug electrical connector.

14.6 Installing trim panel with switch module (right-side) with warning lamp for airbag deactivated on front passenger side

Note

- *The trim panel with switch module (right-side) with warning lamp for airbag deactivated on front passenger side is also referred to as operating unit in front of centre console -E461- with warning lamp for airbag deactivated on front passenger side -K145- .*
- *The wiring to the warning lamp for airbag deactivated on front passenger side -K145- ("PASSENGER AIRBAG OFF" lamp) is part of the passenger compartment wiring harness.*

Installation is carried out in reverse order; note the following:

– When fitting trim panel -1- with switch panel make sure both catches are inserted in centre of trim panel between dash panel and monitor housing -arrows-.

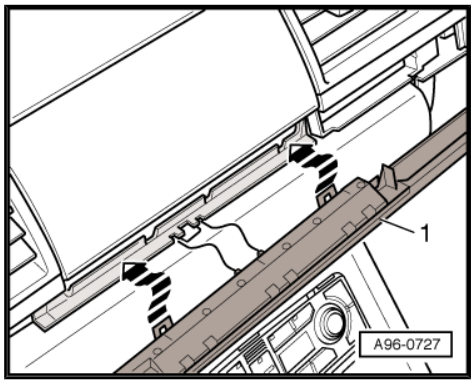

- Ignition switched on

> **WARNING**
>
> ***Make sure nobody is in the vehicle when the battery is being connected.***

– Connect earth wire to battery ⇒ Electrical system; Rep. Gr. 27 .

– Observe measures to be taken after connecting the battery ⇒ Electrical system; Rep. Gr. 27 .

– Re-code airbag control unit -J234- ⇒ page 86 .

– Perform functional test.

– Deactivate airbag on front passenger side with key-operated switch to deactivate airbag on front passenger side -E224- .

Warning lamp for airbag deactivated on front passenger side -K145- must light up constantly.

– Activate airbag on front passenger side with key-operated switch to deactivate airbag on front passenger side -E224- .

Warning lamp for airbag deactivated on front passenger side -K145- must go out.

– Interrogate and erase fault memories of all control units. To do so, use a suitable vehicle diagnostic, testing and information system, e.g. vehicle diagnostic, testing and information system -VAS 5051B- .

Protected by copyright. Copying for private or commercial purposes, in part or in whole, is not permitted unless authorised by AUDI AG. AUDI AG does not guarantee or accept any liability with respect to the correctness of information in this document. Copyright by AUDI AG.

15 Retrofitting key-operated switch (Audi TT 1999 ▸, Coupé/Roadster)

It is not necessary to retrofit the key-operated switch to deactivate airbag on front passenger side -E224- and the warning lamp for airbag deactivated on front passenger side -K145- on the Audi TT 1999 ▸ (Coupé/Roadster).

Protected by copyright. Copying for private or commercial purposes, in part or in whole, is not permitted unless authorised by AUDI AG. AUDI AG does not guarantee or accept any liability with respect to the correctness of information in this document. Copyright by AUDI AG.

16 Coding airbag control unit -J234-

Special tools and workshop equipment required

- E.g. vehicle diagnostic, testing and information system -VAS 5051B-

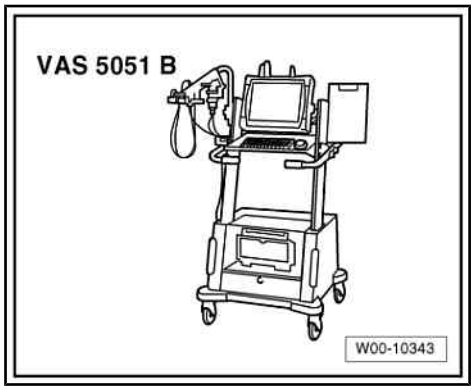

– After installing the key-operated switch to deactivate airbag on front passenger side -E224- , the airbag control unit -J234- must be re-coded (does not apply to Audi A6 2005 ‣).

– Connect a suitable vehicle diagnostic, testing and information system, e.g. vehicle diagnostic, testing and information system -VAS 5051B- to vehicle.

– Perform “Coding airbag control unit” program for relevant model in “Guided Fault Finding”.

Protected by copyright. Copying for private or commercial purposes, in part or in whole, is not permitted unless authorised by AUDI AG. AUDI AG does not guarantee or accept any liability with respect to the correctness of information in this document. Copyright by AUDI AG.

17 Adapting airbag control unit -J234- (Audi A6 2005 ▸)

Special tools and workshop equipment required

- E.g. vehicle diagnostic, testing and information system -VAS 5051B-

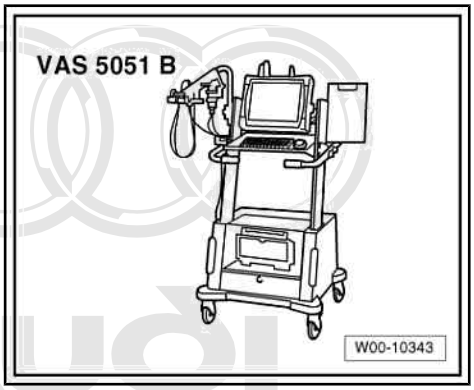

Copyright by AUDI AG. Copying for private or commercial purposes, in part or in whole, is not permitted unless authorised by AUDI AG. AUDI AG does not guarantee or accept any liability with respect to the correctness of information in this document. Copyright by AUDI AG.

– After installing the key-operated switch to deactivate airbag on front passenger side -E224- on Audi A6 2005 ▸, the airbag control unit -J234- must be adapted.

– Connect a suitable vehicle diagnostic, testing and information system, e.g. vehicle diagnostic, testing and information system -VAS 5051B- to vehicle.

– Perform “Deactivation of airbag on front passenger side on via key-operated switch” program in “Guided Fault Finding”.