Workshop Manual

Audi A3 2004 ➤

4-cylinder direct injection engine (1.2 ltr. 2-valve TFSI), mechanics									
Engine ID	CBZ B								

Edition 11.2019

Protected by copyright. Copying for private or commercial purposes, in part or in whole, is not permitted unless authorised by AUDI AG. AUDI AG does not guarantee or accept any liability with respect to the correctness of information in this document. Copyright by AUDI AG.

List of Workshop Manual Repair Groups

Repair Group

00 - Technical data
10 - Removing and installing engine
13 - Crankshaft group
15 - Cylinder head, valve gear
17 - Lubrication
19 - Cooling
21 - Turbocharging/supercharging
26 - Exhaust system

Protected by copyright. Copying for private or commercial purposes, in part or in whole, is not permitted unless authorised by AUDI AG. AUDI AG does not guarantee or accept any liability with respect to the correctness of information in this document. Copyright by AUDI AG.

Technical information should always be available to the foremen and mechanics, because their careful and constant adherence to the instructions is essential to ensure vehicle road-worthiness and safety. In addition, the normal basic safety precautions for working on motor vehicles must, as a matter of course, be observed.

All rights reserved.
No reproduction without prior agreement from publisher.

Copyright © 2019 Audi AG, Ingolstadt

D3E8024FF43

Contents

00 - Technical data . . . 1
- **1 Engine number** . . . 1
- **2 Safety precautions** . . . 2
  - 2.1 Working on the fuel system . . . 2
  - 2.2 Safety precautions when working on the ignition system . . . 2
  - 2.3 Working on the cooling system . . . 3
  - 2.4 Working on vehicles with start/stop system . . . 3
  - 2.5 Using testers and measuring instruments during a road test . . . 3
  - 2.6 Working on the exhaust system . . . 4
- **3 General repair instructions** . . . 5
  - 3.1 Rules for cleanliness when working on fuel supply system, injection system and turbocharger . . . 5
  - 3.2 Checking fuel system for leaks . . . 5
  - 3.3 Foreign particles in engine . . . 6
  - 3.4 Contact corrosion . . . 6
  - 3.5 Routing and attachment of pipes, hoses and wiring . . . 6
  - 3.6 Installing radiators, condensers and charge air coolers . . . 6
  - 3.7 Nuts, bolts . . . 6
  - 3.8 Identification plates . . . 7
  - 3.9 Use of impact wrenches . . . 7
  - 3.10 Checking vacuum system . . . 7

10 - Removing and installing engine . . . 9
- **1 Removing engine** . . . 9
- **2 Separating engine and manual gearbox** . . . 27
- **3 Separating engine and dual clutch gearbox** . . . 30
- **4 Securing engine to engine and gearbox support** . . . 32
- **5 Installing engine** . . . 34
- **6 Assembly mountings** . . . 39
  - 6.1 Exploded view - assembly mountings . . . 39
  - 6.2 Removing and installing engine mountings . . . 40
  - 6.3 Checking adjustment of assembly mountings (engine/gearbox mountings) . . . 42
  - 6.4 Adjusting assembly mountings . . . 43

13 - Crankshaft group . . . 47
- **1 Cylinder block (pulley end)** . . . 47
  - 1.1 Exploded view - poly V-belt drive . . . 47
  - 1.2 Removing and installing poly V-belt . . . 49
  - 1.3 Removing and installing idler roller for poly V-belt . . . 50
  - 1.4 Poly V-belt tensioner . . . 50
  - 1.5 Removing and installing poly V-belt pulley for crankshaft . . . 51
  - 1.6 Removing and installing bracket for ancillaries . . . 54
- **2 Cylinder block (gearbox end)** . . . 55
  - 2.1 Exploded view - flywheel and sealing flange . . . 55
  - 2.2 Removing and installing flywheel . . . 56
  - 2.3 Renewing sealing flange . . . 57
- **3 Crankshaft** . . . 65
  - 3.1 Extracting and driving in needle bearing for crankshaft - vehicles with dual clutch gearbox . . . 65
- **4 Pistons and conrods** . . . 67
  - 4.1 Exploded view - pistons and conrods . . . 67
  - 4.2 Removing and installing pistons . . . 69

Protected by copyright. Copying for private or commercial purposes, in part or in whole, is not permitted unless authorised by AUDI AG. AUDI AG does not guarantee or accept any liability with respect to the correctness of information in this document. Copyright by AUDI AG.

4.3 Measuring radial clearance of conrods . . . 70
4.4 Checking pistons and cylinder bores . . . 71

15 - Cylinder head, valve gear . . . 73

1 Chain drive . . . 73
1.1 Exploded view - timing chain covers . . . 73
1.2 Renewing crankshaft oil seal . . . 75
1.3 Removing and installing timing chain cover (top) . . . 77
1.4 Removing and installing timing chain cover (bottom) . . . 79
1.5 Exploded view - camshaft timing chain . . . 82
1.6 Checking valve timing . . . 83
1.7 Detaching camshaft timing chain from camshaft sprocket . . . 85
1.8 Removing and installing camshaft timing chain . . . 92
1.9 Checking timing chain . . . 99

2 Cylinder head . . . 104
2.1 Exploded view - cylinder head . . . 104
2.2 Removing and installing cylinder head . . . 106
2.3 Checking compression . . . 113

3 Valve gear . . . 116
3.1 Exploded view - camshaft housing . . . 116
3.2 Checking axial clearance of camshaft . . . 118
3.3 Removing and installing camshaft housing . . . 118
3.4 Removing and installing camshaft . . . 124
3.5 Renewing valve stem oil seals with cylinder head installed . . . 125
3.6 Renewing valve stem oil seals with cylinder head removed . . . 128
3.7 Valve dimensions . . . 131
3.8 Checking valve guides . . . 131
3.9 Checking valves . . . 132

17 - Lubrication . . . 133

1 Sump and oil pump . . . 133
1.1 Exploded view - sump, oil pump . . . 133
1.2 Removing and installing oil level and oil temperature sender G266 . . . 135
1.3 Removing and installing sump . . . 135
1.4 Removing and installing drive chain for oil pump . . . 138
1.5 Removing and installing oil pump . . . 139
1.6 Removing and installing non-return valve . . . 141

2 Oil filter bracket and engine oil cooler . . . 143
2.1 Exploded view - oil filter bracket and engine oil cooler . . . 143
2.2 Removing and installing oil filter bracket . . . 144
2.3 Removing and installing engine oil cooler . . . 145
2.4 Removing and installing oil pressure switch F1 . . . 146
2.5 Checking oil pressure switch F1 and oil pressure . . . 147
2.6 Exploded view - oil separator . . . 149
2.7 Removing and installing oil separator . . . 150
2.8 Engine oil . . . 152
2.9 Checking oil level . . . 152

19 - Cooling . . . 153

1 Cooling system . . . 153
1.1 Connection diagram - coolant hoses . . . 153
1.2 Draining and filling cooling system . . . 155
1.3 Checking cooling system for leaks . . . 161

2 Coolant pump and thermostat . . . 163
2.1 Exploded view - coolant pump . . . 163

Protected by copyright. Copying for private or commercial purposes, in part or in whole, is not permitted unless authorised by AUDI AG. AUDI AG does not guarantee or accept any liability with respect to the correctness of information in this document. Copyright by AUDI AG.

2.2 Removing and installing coolant pump pulley . . . 164
2.3 Removing and installing coolant pump . . . 165
2.4 Removing and installing coolant circulation pump V50 . . . 165
2.5 Exploded view - housing for thermostat with rear coolant pipe . . . 166
2.6 Removing and installing coolant temperature sender G62 . . . 168
2.7 Removing and installing radiator outlet coolant temperature sender G83 . . . 169
2.8 Removing and installing thermostat housing and coolant pipe (rear) . . . 170
2.9 Removing and installing coolant pipe (right-side) . . . 171

3 Radiator and radiator fans . . . 174
3.1 Exploded view - radiator and radiator fans . . . 174
3.2 Removing and installing radiator cowl . . . 175
3.3 Removing and installing radiator fan V7 with radiator fan control unit J293 . . . 176
3.4 Removing and installing radiator . . . 176

21 - Turbocharging/supercharging . . . 181

1 Turbocharger . . . 181
1.1 Exploded view - turbocharger . . . 181
1.2 Removing and installing turbocharger . . . 182
1.3 Removing and installing charge pressure positioner V465 . . . 186

2 Charge air cooler . . . 189
2.1 Exploded view - charge air cooler . . . 189
2.2 Removing and installing charge pressure sender G31 / intake air temperature sender 2 G299 . . . 190
2.3 Removing and installing charge air cooler . . . 190
2.4 Checking charge air system for leaks . . . 191

26 - Exhaust system . . . 194

1 Silencers . . . 194
1.1 Exploded view - silencers . . . 194
1.2 Removing and installing front exhaust pipe . . . 197
1.3 Removing and installing catalytic converter . . . 198
1.4 Separating centre and rear silencers . . . 200
1.5 Stress-free alignment of exhaust system . . . 201
1.6 Checking exhaust system for leaks . . . 202

2 Exhaust manifold . . . 203

Protected by copyright. Copying for private or commercial purposes, in part or in whole, is not permitted unless authorised by AUDI AG. AUDI AG does not guarantee or accept any liability with respect to the correctness of information in this document. Copyright by AUDI AG.

Protected by copyright. Copying for private or commercial purposes, in part or in whole, is not permitted unless authorised by AUDI AG. AUDI AG does not guarantee or accept any liability with respect to the correctness of information in this document. Copyright by AUDI AG.

00 – Technical data

1 Engine number

(ARL006705; Edition 11.2019)

- A sticker with “engine code” and “serial number” is attached to the air intake pipe -arrow-.
- Engine codes starting with the letter “C” have four letters (previously three letters).
- The first 3 characters of the engine code stand for the engine capacity and the mechanical construction and design. They are stamped onto the cylinder block together with the serial number.
- The 4th character indicates the power output and torque of the engine and is determined by the engine control unit.

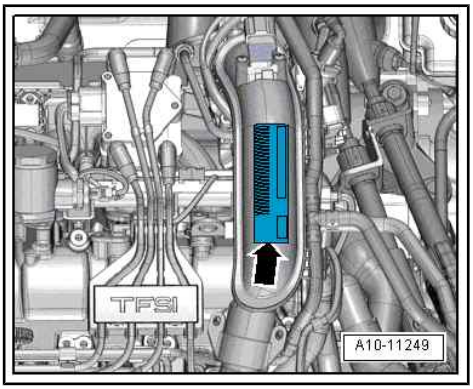

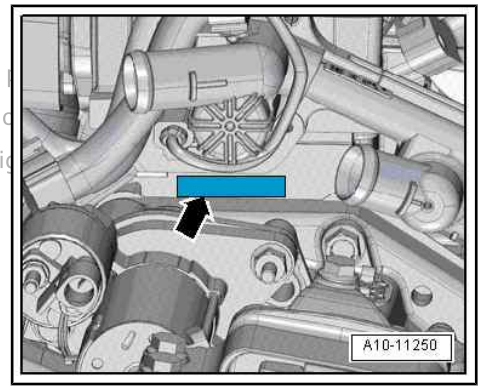

Note

tected by copyright. Copying for private or commercial purposes, in p
pe with duties authorised by AUDI AG. AUDI AG does not guarantee c
with respect to the correctness of information in this document. Copyrig

- *The four-letter engine code is found on the type plate (certain countries only), vehicle data sticker and engine control unit.*
- *Fitting locations of the type plate (certain countries only) and the vehicle data sticker ⇒ Maintenance ; Booklet 808*
- *If the sticker is missing, use a mirror and a torch to read off the “Engine code” and the “Serial number”:*
- *Read off the engine code and serial number on the left-side of the cylinder block -arrow-.*

2 Safety precautions

Overview

- ⇒ “2.1 Working on the fuel system”, page 2
- ⇒ “2.2 Safety precautions when working on the ignition system”, page 2
- ⇒ “2.3 Working on the cooling system”, page 3
- ⇒ “2.4 Working on vehicles with start/stop system”, page 3
- ⇒ “2.5 Using testers and measuring instruments during a road test”, page 3
- ⇒ “2.6 Working on the exhaust system”, page 4

Reproducing, copying or supplying for private or commercial purposes, in part or in whole, is not permitted unless authorised by AUDI AG. AUDI AG does not guarantee or accept any liability with respect to the correctness of information in this document. Copyright by AUDI AG.

2.1 Working on the fuel system

Risk of injury - fuel system operates under high pressure

The fuel system is pressurised. There is a risk of injury as fuel may spray out.

Before opening the fuel system:

– Put on safety goggles.

– Put on protective gloves.

– Release pressure (wrap a clean cloth around connection and open connection carefully).

Risk of fire due to escaping fuel

If the battery is connected, the door contact switch activates the fuel pump when the driver's door is opened. Escaping fuel may ignite, causing a fire.

– Before opening the fuel system, disconnect power supply to fuel pump.

2.2 Safety precautions when working on the ignition system

Risk of injury due to electric shock

When the engine is running, there are high voltage levels in the ignition system. There is a risk of electric shock when touching the ignition system!

– Never touch or disconnect ignition wiring when the engine is running or being turned at cranking speed.

Risk of damage to components

Washing the engine or connecting/disconnecting electrical wiring may result in components being damaged if the engine is running.

– Switch off ignition before connecting/disconnecting electrical wiring.
– Switch off ignition before cleaning engine.

2.3 Working on the cooling system

Risk of scalding as hot coolant can escape

The cooling system is under pressure when the engine is hot. Risk of scalding due to hot steam and hot coolant.

– Put on protective gloves.
– Put on safety goggles.
– Cover filler cap on expansion tank with a cloth and open carefully to release pressure.

2.4 Working on vehicles with start/stop system

Risk of injury - engine may start unexpectedly

The engine can start unexpectedly if the vehicle's start/stop system is activated. A message in the instrument cluster indicates whether the start/stop system is activated.

– To deactivate the start/stop system, switch off the ignition.

2.5 Using testers and measuring instruments during a road test

Risk of injury if test equipment is not secured

If an accident occurs and the front passenger's airbag is triggered, test equipment which is not secured adequately may be catapulted through the vehicle with potentially serious consequences.

– Secure test equipment on the rear seat with a strap.

Or:

– Have a second mechanic operate test equipment on the rear seat.

Protected by copyright. Copying for private or commercial purposes, in part or in whole, is not permitted unless authorised by AUDI AG. AUDI AG does not guarantee or accept any liability with respect to the correctness of information in this document. Copyright by AUDI AG.

2.6 Working on the exhaust system

When working on the exhaust system please note the following:

Caution

Risk of damage to flexible joint.

- *Do not bend flexible joint more than 10°.*
- *Install flexible joint so that it is not under tension.*
- *Take care not to damage wire mesh on flexible joint.*

Protected by copyright. Copying for private or commercial purposes, in part or in whole, is not permitted unless authorised by AUDI AG. AUDI AG does not guarantee or accept any liability with respect to the correctness of information in this document. Copyright by AUDI AG.

3 General repair instructions

Overview

- ⇒ “3.1 Rules for cleanliness when working on fuel supply system, injection system and turbocharger”, page 5
- ⇒ “3.2 Checking fuel system for leaks”, page 5
- ⇒ “3.3 Foreign particles in engine”, page 6
- ⇒ “3.4 Contact corrosion”, page 6
- ⇒ “3.5 Routing and attachment of pipes, hoses and wiring”, page 6
- ⇒ “3.6 Installing radiators, condensers and charge air coolers”, page 6
- ⇒ “3.7 Nuts, bolts”, page 6
- ⇒ “3.8 Identification plates”, page 7
- ⇒ “3.9 Use of impact wrenches”, page 7
- ⇒ “3.10 Checking vacuum system”, page 7

3.1 Rules for cleanliness when working on fuel supply system, injection system and turbocharger

Protected by copyright. Copying for private or commercial purposes, in part or in whole, is not permitted unless authorised by AUDI AG. AUDI AG does not guarantee or accept any liability with respect to the correctness of information in this document. Copyright by AUDI AG.

Even small quantities of dirt can lead to defects. For this reason, please observe the following rules when working on the fuel supply system, injection system and turbocharger:

- Clean connections and surrounding area thoroughly with engine cleaner or brake cleaner and dry cleaned area before loosening.
- Seal off open pipes/lines and connections immediately with clean plugs, e.g. from engine bung set - VAS 6122- .
- After removal, place parts on a clean surface and cover them. Only use lint-free cloths.
- Carefully cover or seal open components if repairs cannot be carried out immediately.
- Only install clean components; replacement parts should only be unpacked immediately prior to installation. Do not use parts that have been previously unpacked and stored away loose (e.g. in toolboxes, etc.).
- Do not work with compressed air when the system is open. If possible, do not move vehicle.
- Make sure that no fuel runs onto the fuel hoses. Should this occur, the fuel hoses must be cleaned again immediately.
- Protect unplugged electrical connectors against dirt and moisture and make sure connections are dry when attaching.

3.2 Checking fuel system for leaks

- Allow engine to run for several minutes at moderate rpm.
- Switch off ignition.
- Check complete fuel system for leaks.
- If leaks are found although the connections have been tightened to the correct torque, the relevant component must be renewed.

– Road-test vehicle and accelerate with full throttle at least once.

– Then inspect high-pressure section of fuel system again for leaks.

3.3 Foreign particles in engine

When working on the engine, all open inlet and exhaust ports must be sealed with suitable plugs (e.g. from engine bung set - VAS 6122-) to prevent foreign particles from entering the engine.

3.4 Contact corrosion

Contact corrosion can occur if unsuitable fasteners are used (e.g. bolts, nuts, washers, etc.).

For this reason, only fasteners with a special surface coating are fitted.

Additionally, all rubber and plastic parts and all adhesives are made of non-conductive materials.

Always install new parts if you are not sure whether used parts can be re-fitted ⇒ Electronic parts catalogue .

Please note:

Protected by copyright. Copying for private or commercial purposes, in part or in whole, is not permitted unless authorised by AUDI AG. AUDI AG does not guarantee or accept any liability with respect to the correctness of information in this document. Copyright by AUDI AG.

- We recommend using only genuine replacement parts; these have been tested and are compatible with aluminium.
- We recommend using Audi Genuine Accessories.
- Damage caused by contact corrosion is not covered by warranty.

3.5 Routing and attachment of pipes, hoses and wiring

Mark fuel lines, hydraulic lines, vacuum lines, lines for activated charcoal filter and electrical wiring etc. before removal so they can be re-installed in the original positions and correctly connected. Make sketches or take photographs if necessary.

3.6 Installing radiators, condensers and charge air coolers

Even when the radiator, condenser and charge air cooler are correctly installed, slight impressions may be visible on the fins of these components. This does not mean that the components are damaged. If the fins are only very slightly distorted, this does not justify renewal of the radiator, condenser or charge air cooler.

3.7 Nuts, bolts

- Loosen bolts in reverse sequence to specified tightening sequence.
- Bolts and nuts used to secure covers and housings must be tightened in steps according to the specified tightening sequence and method.
- Bolts and nuts which secure covers and housings should be loosened and tightened in diagonal sequence and in stages if no tightening sequence is specified.
- Always renew self-locking bolts and nuts.
- Unless otherwise specified, use a wire brush to clean the threads of bolts which are secured with locking fluid. Then install bolts with locking fluid; for locking fluid refer to ⇒ Electronic parts catalogue .

- Threaded holes which take self-locking bolts or bolts coated with locking fluid must be cleaned using a thread tap or similar. Otherwise there is a danger of the bolts shearing off the next time they are removed.
- The tightening torques stated apply to non-oiled nuts and bolts.

Protected by copyright. Copying for private or commercial purposes, in part or in whole, is not permitted unless authorised by AUDI AG. AUDI AG does not guarantee or accept any liability with respect to the correctness of information in this document. Copyright by AUDI AG.

3.8 Identification plates

When renewing vehicle components, the identification plates on the old parts that have a replacement part number (see ⇒ Electronic parts catalogue) must be attached to the new parts due to approval regulations.

3.9 Use of impact wrenches

In general, it is permitted to use an impact wrench to unscrew bolts and nuts. An exception to this is when work is performed inside an open high-voltage battery. For this work, it is not permitted to use an impact wrench.

An impact wrench may be used to screw in bolts and nuts when performing repair work if the following requirements are observed. In general, electric and compressed-air impact wrenches should be used.

Requirements:

- Only screw in bolts with locking fluid or self-locking nuts at low speed.
- Use a suitable impact wrench with variable speed and adjustable torque range.
- Use suitable bits when working in the vicinity of sensitive surfaces, e.g. plastic-coated bits for aluminium rims.
- When working in the vicinity of natural gas systems, observe the information in the Workshop Manual “Natural gas engines - General information”.

Use:

- Fit bolts/nuts by hand.
- Only use an impact wrench to screw in bolts/nuts until the head of the bolt/nut makes contact and then continue tightening with a torque wrench.
- Clean threaded pins before unscrewing the bolt/nut.

3.10 Checking vacuum system

Special tools and workshop equipment required

- Hand vacuum pump - VAS 6213-

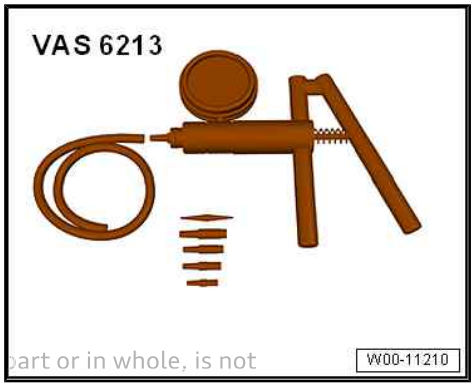

Protected by copyright. Copying for private or commercial purposes, in part or in whole, is not permitted unless authorised by AUDI AG. AUDI AG does not guarantee or accept any liability with respect to the correctness of information in this document. Copyright by AUDI AG.

Procedure

– Check all vacuum lines in the complete vacuum system for:
- Cracks
- Traces of animal bites
- Kinked or crushed lines
- Porous or leaking lines

– Check vacuum line to solenoid valve and from solenoid valve to corresponding component.

– If a fault is stored in the event memory, check the vacuum lines leading to the corresponding component and also check the remaining vacuum lines in the system.

– If it is not possible to build up a vacuum with the hand vacuum pump - VAS 6213- or if the vacuum pressure drops again immediately, check the hand vacuum pump and connecting hoses for leaks.

10 – Removing and installing engine

1 Removing engine

Special tools and workshop equipment required

Copyright. Copying for private or commercial purposes, in part or in whole, is not permitted unless authorised by AUDI AG. AUDI AG does not guarantee or accept any liability with respect to the correctness of information in this document. Copyright by AUDI AG.

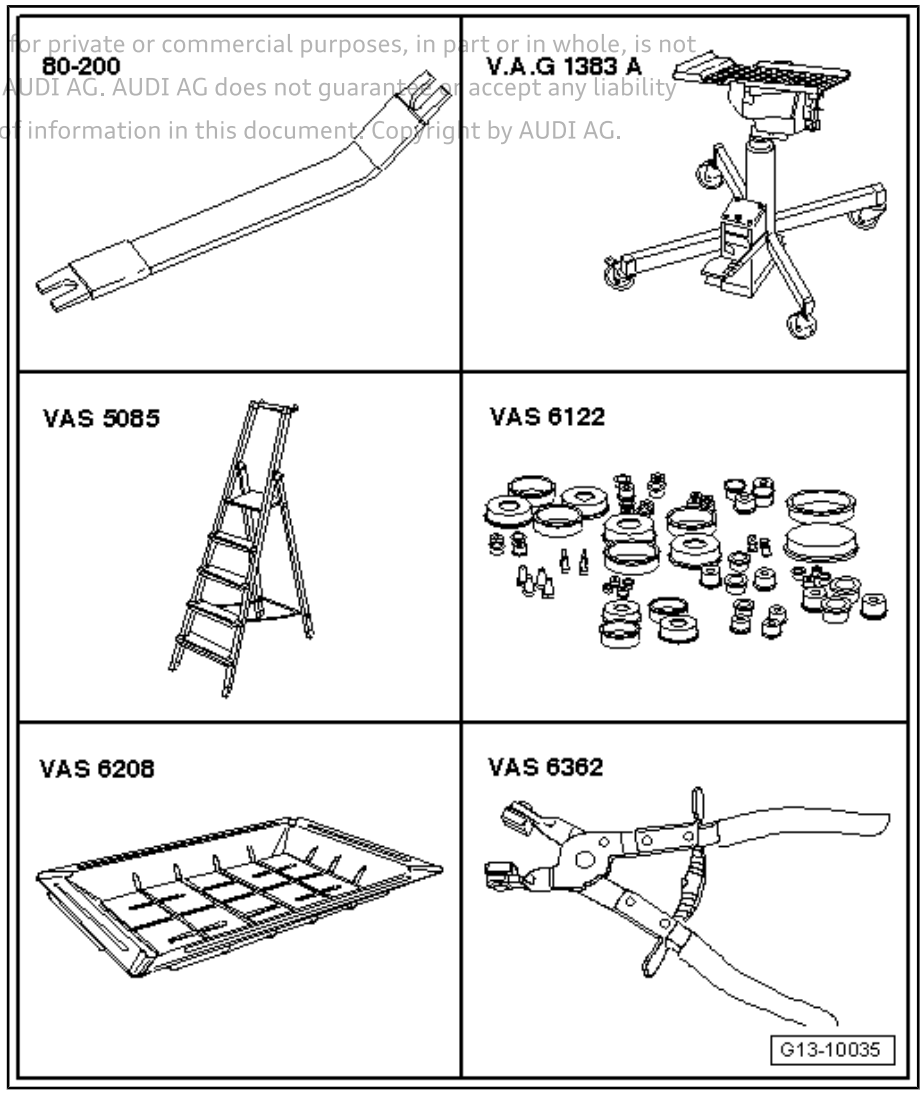

- Removal lever - 80 - 200-
- Engine and gearbox jack - V.A.G 1383 A-
- Stepladder - VAS 5085-
- Engine bung set - VAS 6122-
- Drip tray for workshop hoist - VAS 6208-
- Hose clip pliers - VAS 6362-

- Hook -2024 A /1- of lifting tackle - 2024 A-

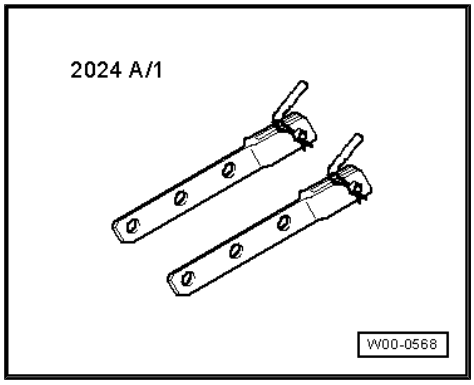

- Locking pin - T10060 A-

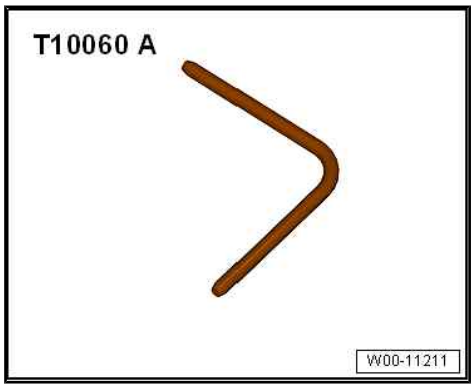

- Engine support - T10416- with adapters -T10416/1- , -T10416/2- , -T10416/3-

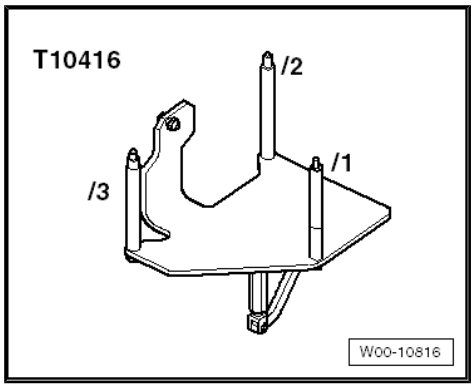

Procedure

Protected by copyright. Copying for private or commercial purposes, in part or in whole, is not permitted unless authorised by AUDI AG. AUDI AG does not guarantee or accept any liability with respect to the correctness of information in this document. Copyright by AUDI AG.

Note

- *The engine is removed from underneath together with the gearbox.*
- *Fit cable ties in the original positions when installing.*

WARNING

Risk of scalding due to hot steam and hot coolant.

- *The cooling system is under pressure when the engine is hot.*
- *To allow pressure to dissipate, cover filler cap on coolant expansion tank with cloth and open carefully.*

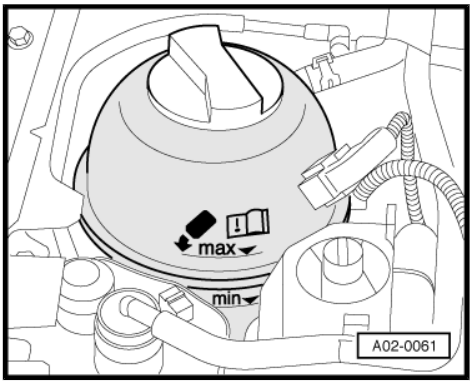

– Open filler cap on coolant expansion tank.

– Remove both front wheels.

– Remove noise insulation ⇒ Rep. gr. 50 .

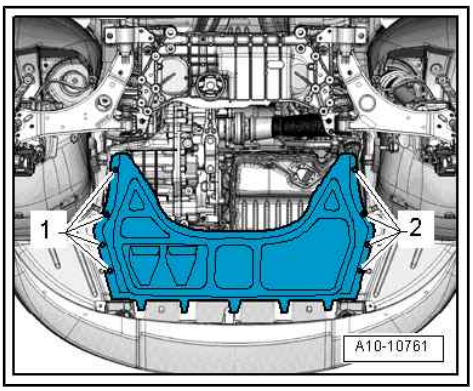

– Remove front left and front right wheel housing liners (front section) ⇒ Rep. gr. 66 .

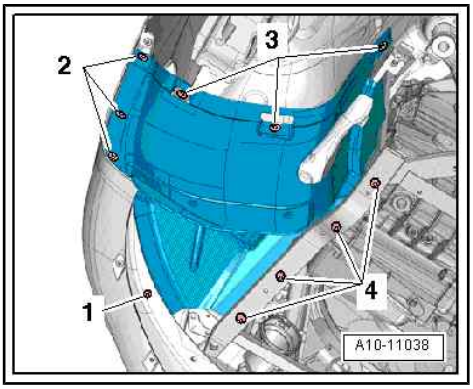

– Unplug electrical connector -1- at radiator outlet coolant temperature sender - G83- .

Protected by copyright. Copying for private or commercial purposes, i
ermitted unless authorised by AUDI AG. AUDI AG does not guarante
ith respect to the correctness of information in this document. Copy

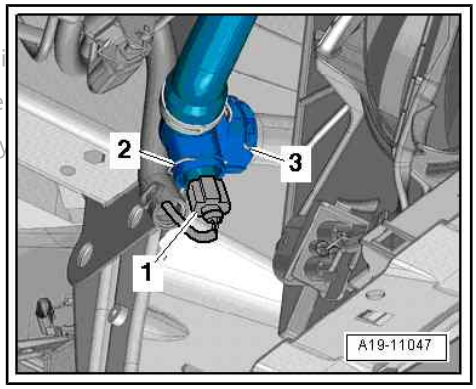

Note

Collect drained coolant in a clean container for re-use or disposal.

– Place drip tray for workshop hoist - VAS 6208- beneath engine.

– Lift retaining clip -3-, disconnect coolant hose (bottom left) from radiator and drain off coolant.

Note

Disregard -item 2-.

– Lift retaining clips -1- and -2- and disconnect coolant hoses (bottom right) from radiator. Drain remaining coolant.
– Move coolant hose -arrow- clear.

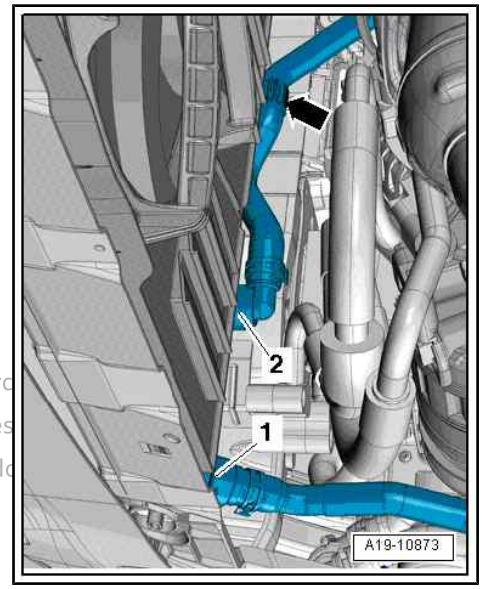

Protected by copyright. Copying for private or commerc
permitted unless authorised by AUDI AG. AUDI AG does
with respect to the correctness of information in this do

– Release retainers -arrows- at the sides and pull off cover -1- for air duct.

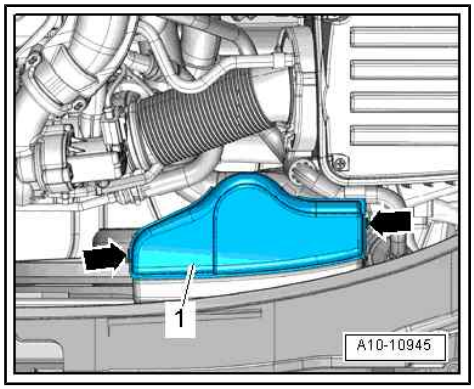

– Release retainers -arrows- and unclip air duct (bottom).

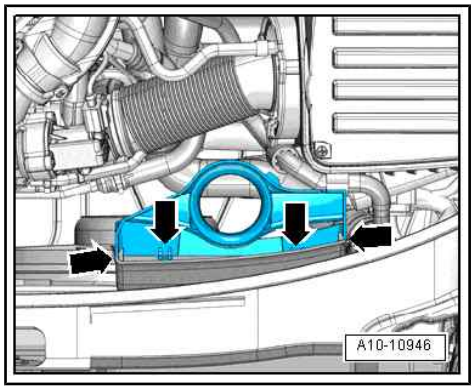

– Release hose clip -1- and detach air hose from turbocharger.
– Disconnect vacuum hose -2-.
– Unscrew bolt -3- and remove air cleaner housing.

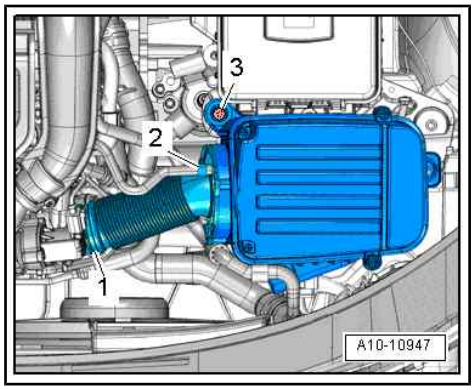

– Remove battery ⇒ Electrical system; Rep. gr. 27 .

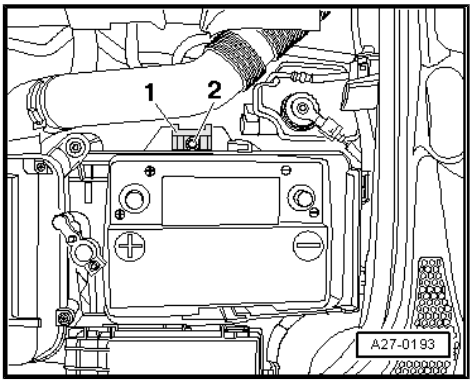

– Remove bolts -arrows- and take out battery tray -1-.

Protected by copyright. Copying for private or commerc
permitted unless authorised by AUDI AG. AUDI AG does
with respect to the correctness of information in this do

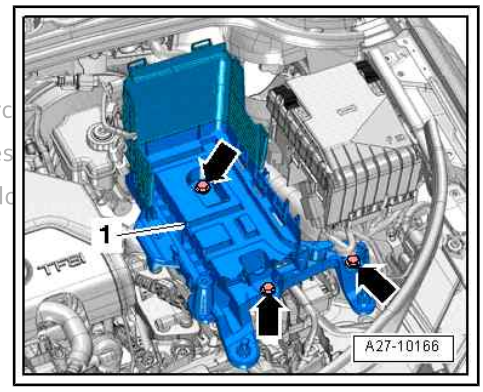

– Release hose clip -arrow- and disconnect coolant hose (bottom) from coolant expansion tank.

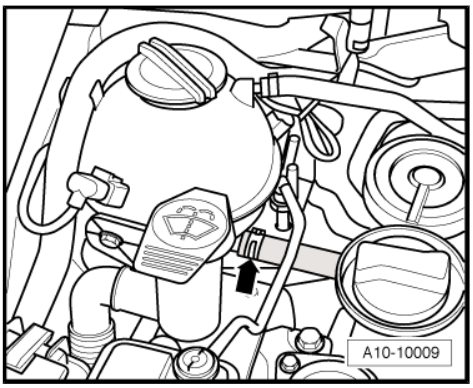

– Release hose clip -1- and detach coolant hose (top) from coolant expansion tank.
– Disconnect vacuum hose -2- from activated charcoal filter and move hose clear.

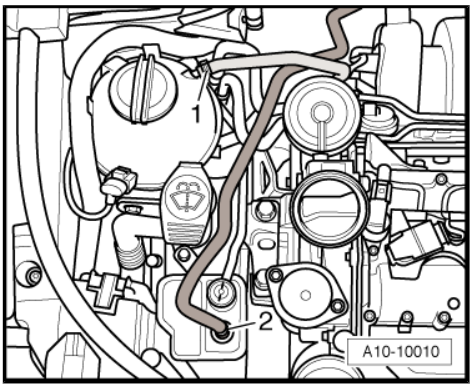

– Disconnect fuel supply line -2- (pull release ring).

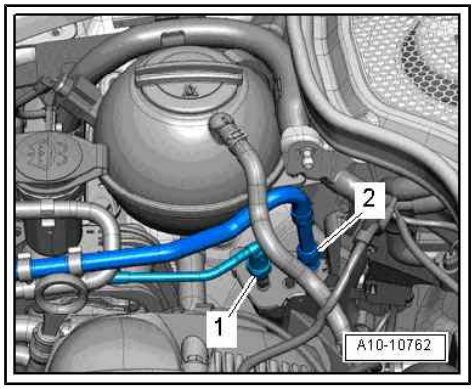

WARNING

The fuel system is pressurised.

Risk of injury as fuel may spray out.

- *Put on safety goggles.*
- *Put on protective gloves.*
- *Release pressure (wrap a clean cloth around connection and open connection carefully).*

– Seal off open pipes/lines and connections with clean plugs from engine bung set - VAS 6122- .

Note

Disregard -item 1-.

– Press release tab at bottom of bracket and unhook bracket -arrow- from timing chain cover (top) with coolant hoses still attached.

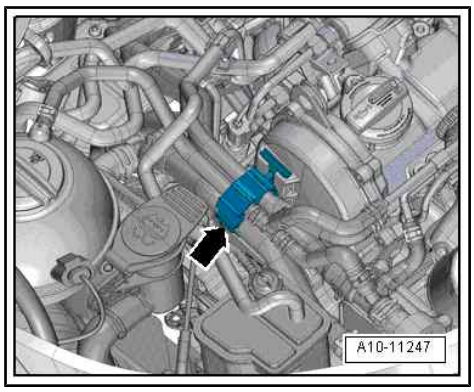

– Lift retaining clips -1- and -2- and disconnect coolant hoses from heat exchanger for heater.

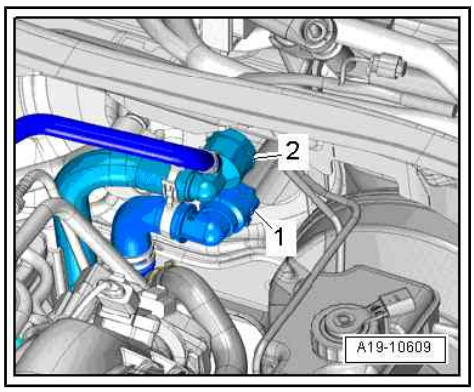

Protected by copyright. Copying for private or commercial purposes, in part or in whole, is not permitted unless authorised by AUDI AG. AUDI AG does not guarantee or accept any liability with respect to the correctness of information in this document. Copyright by AUDI AG.

– Unplug electrical connector -1-.
– Detach vacuum line -2- from brake servo.

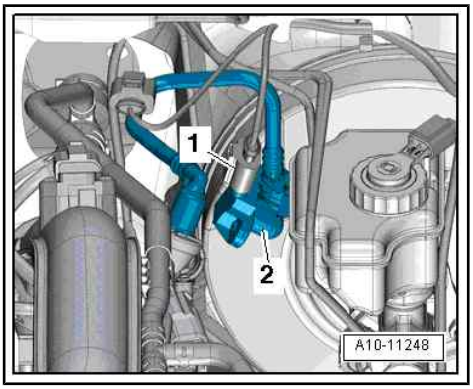

– Lift retaining clip -arrow- and disconnect coolant hose (top left) from radiator.

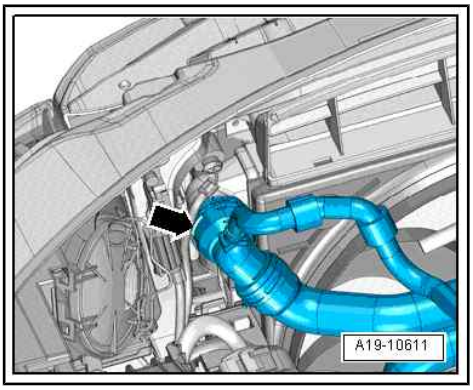

– Remove bolts -top arrows- for radiator cowl.
– Move coolant hose -2- clear.

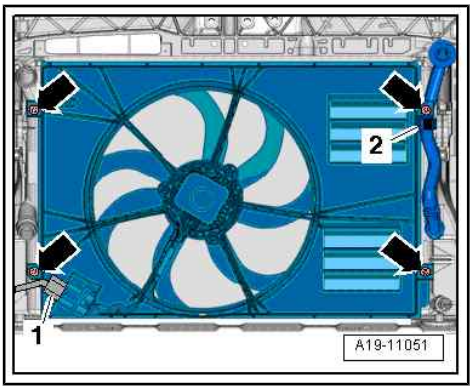

Note

♦ *The bolts -bottom arrows- are removed at a later stage.*
♦ *Disregard -item 1-.*

Vehicles with manual gearbox:

– Unclip securing clip -1- for gear selector cable.
– Detach cable end-piece from gearbox selector lever.

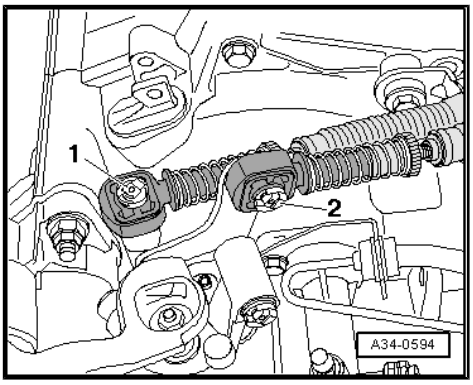

Note

Disregard -item 2-.

Protected by copyright. Copying for private or commercial purposes, in part or in whole, is not permitted unless authorised by AUDI AG. AUDI AG does not guarantee or accept any liability with respect to the correctness of information in this document. Copyright by AUDI AG.

- To prevent damage to gate selector cable, cable end-piece must be detached from gate selector cable before removing

– Pull locking device forwards as far as stop -arrow 1- and lock by turning anti-clockwise -arrow 2-.

– Then press relay lever towards front -arrow 3-.

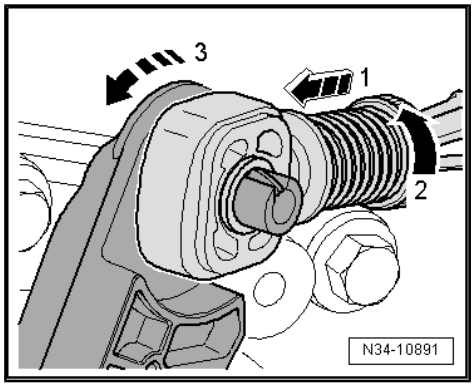

– Remove bolts -arrows-, detach cable support bracket from gearbox and place to one side.

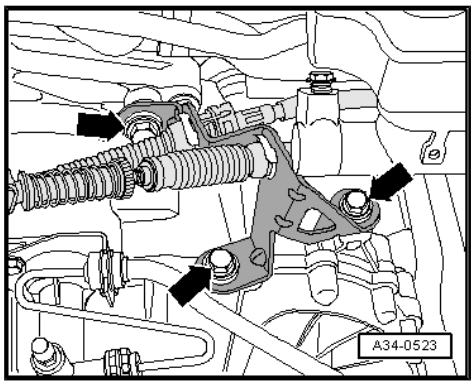

– Remove bolts -arrows- and place clutch slave cylinder to one side. Do not open pipes.

Protected by copyright. Copying for private or commercial purposes, in part or in whole, is not permitted unless authorised by AUDI AG. AUDI AG does not guarantee or assume any liability with respect to the correctness of information in this document. Copyright

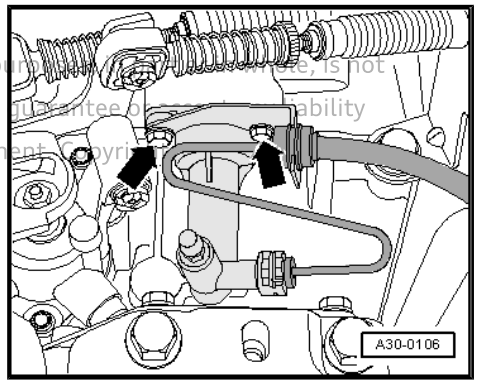

> **Caution**
>
> *Risk of damage to clutch slave cylinder.*
>
> ♦ *Do not operate clutch pedal with slave cylinder removed.*

Vehicles with dual clutch gearbox:

– Use removal lever - 80 - 200- to prise selector lever cable -2- off gearbox selector lever.

– Detach circlip -1- for selector lever cable.

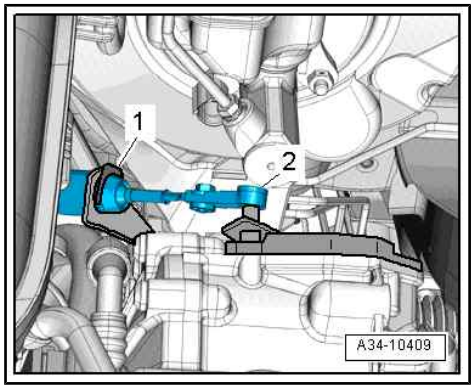

> **Caution**
>
> *Risk of damage to selector lever cable.*
>
> ♦ *Do not press the selector lever cable rearwards out of the cable support bracket. The selector lever cable is guided out of the cable support bracket at a later stage when lowering the engine/gearbox assembly.*

All vehicles (continued):

– Remove wiper arms ⇒ Electrical system; Rep. gr. 92 .

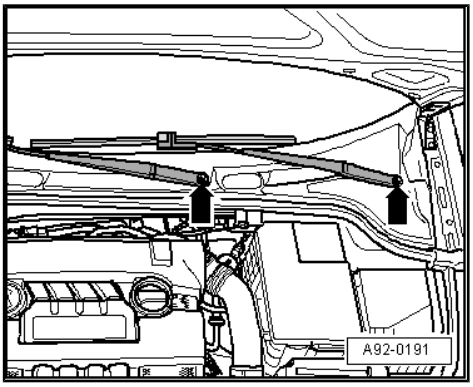

– Unclip washer jets -arrow-.

– Push washer jets through assembly opening back into plenum chamber, leaving hoses connected.

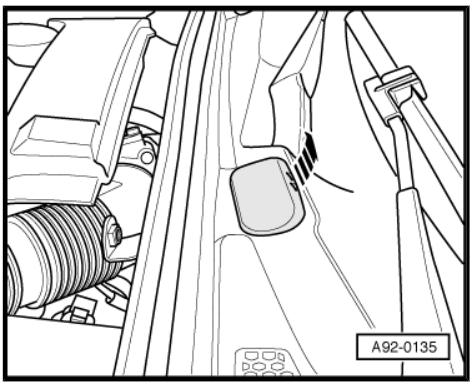

– Pull off seal -1-.

Protected by copyright. Copying for private or commercial purposes, in part or in whole, is not permitted unless authorised by AUDI AG. AUDI AG does not guarantee with respect to the correctness of information in this document.

Caution

Risk of damage to plenum chamber cover.

- *To avoid cracking the plenum chamber cover -2- during removal, apply a small amount of soap solution to the joint between the windscreen and the plenum chamber cover and pull the plenum chamber cover vertically up out of the windscreen surround, starting from the edge of the wind-screen.*

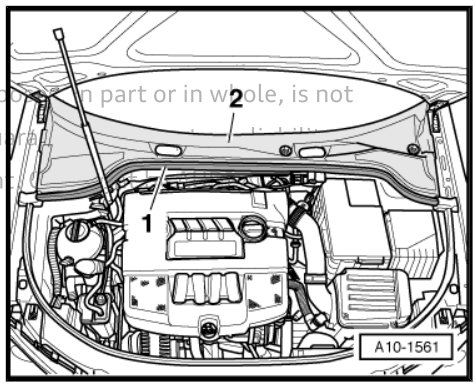

– Pull off plenum chamber cover -2-

Note

Use removal lever - 80 - 200- to lever out the wiring clips when performing the next work steps.

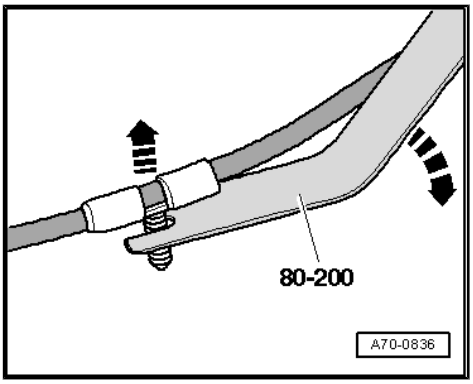

– Move clear engine wiring harness at rear of plenum chamber partition panel.
– Remove bolts -arrows- and detach plenum chamber partition panel.

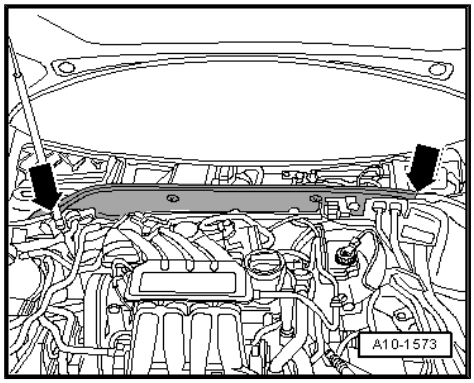

– Remove engine control unit ⇒ Rep. gr. 24 .
– Unplug electrical connector -1- for engine wiring harness.

Note

Disregard -item 2-.

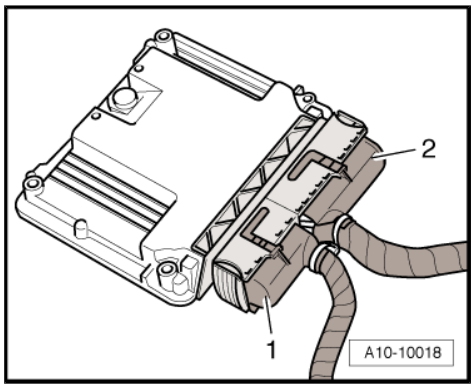

– Release wiring protector for engine wiring harness -arrow- and lift protector off.

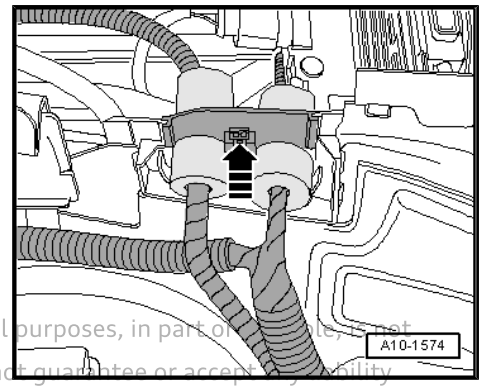

Protected by copyright. Copying for private or commercial purposes, in part or entirety, is not permitted unless authorised by AUDI AG. AUDI AG does not guarantee or accept any liability with respect to the correctness of information in this docu

– Open retainers for wiring duct -arrows-.

Note

Disregard -item 1-.

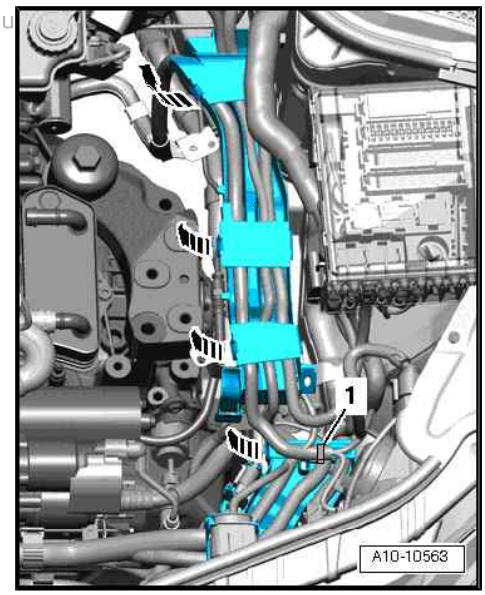

Protected by copyright. Copying for private or commercial purposes, in part or in whole, is not permitted unless authorised by AUDI AG. AUDI AG does not guarantee or assume liability with respect to the correctness of information in this document. Copyright by AUDI AG.

– Move clear and unplug electrical connector -1-.
– Open retainer -2- of wiring duct -arrow-.
– Remove wiring harness for engine control unit from wiring duct and place on engine.

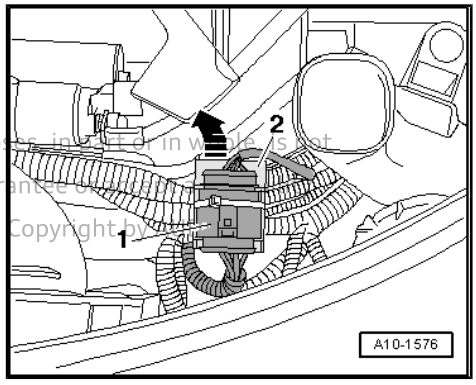

– Unplug electrical connector -arrow- at longitudinal member (bottom left).

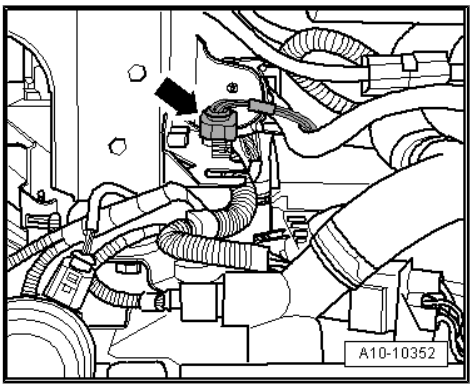

Note

For illustration purposes, the installation position is shown from below.

– Slide the two clips in the direction of the -arrows- and remove cover from electronics box in engine compartment.

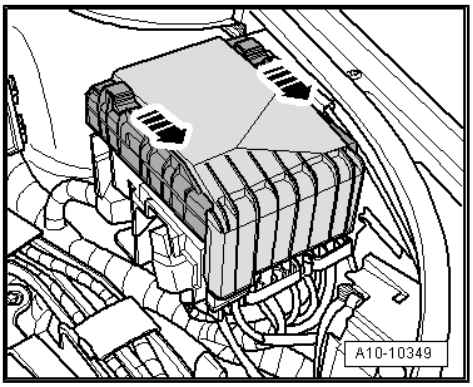

– Remove nut -arrow-, detach “B+” wire from electronics box in engine compartment and move wire clear.

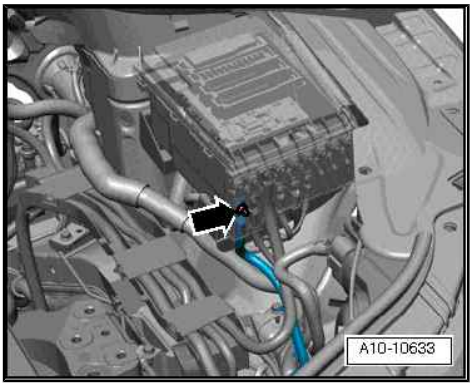

– Unscrew bolts -arrows- at engine mounting approx. 2 turns.

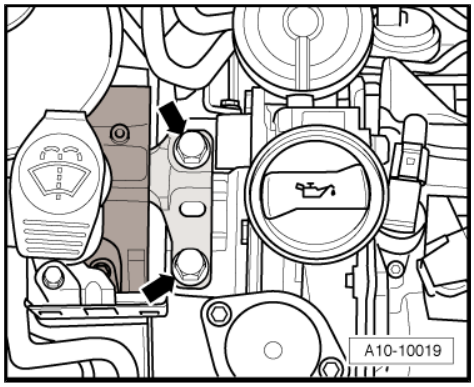

Vehicles with manual gearbox:

– Loosen bolts -arrows 1- at gearbox mounting approx. 2 turns.

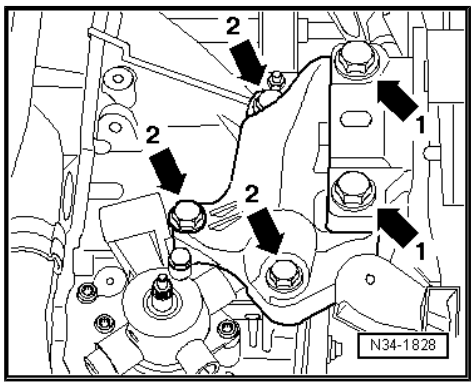

Note

Disregard -arrows 2-.

Vehicles with dual clutch gearbox:

– Loosen bolts -arrows- at gearbox mounting -1- approx. 2 turns.

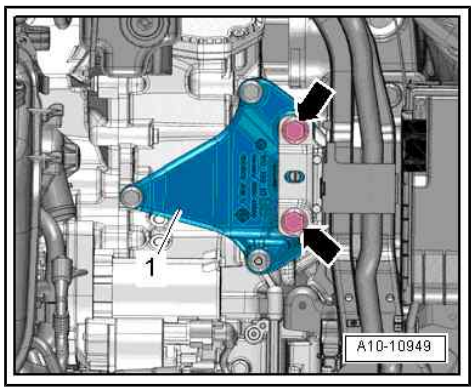

Vehicles with manual gearbox:

– Remove nut -1- and detach earth wire.

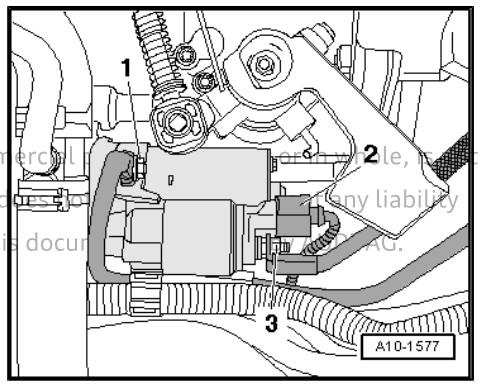

Note

On some versions the earth wire may be attached to the engine mounting.

Protected by copyright. Copying for private or commercial purposes, in part or in whole, is not permitted unless authorised by AUDI AG. AUDI AG does not guarantee or assume any liability with respect to the correctness of information in this document. Copyright by AUDI AG.

– Remove nut -3-, detach electrical wiring and move clear.

– Unplug electrical connector -2- and move clear.

– Unplug electrical connector -2- for Lambda probe - G39- .
– Unplug electrical connector -4- for reversing light switch - F4- .
– Move engine wiring harness clear at bracket -3-.
– Unscrew nut -arrow- and detach bracket with electrical wiring from stud.

1 - Electrical connector for Lambda probe after catalytic converter - G130-

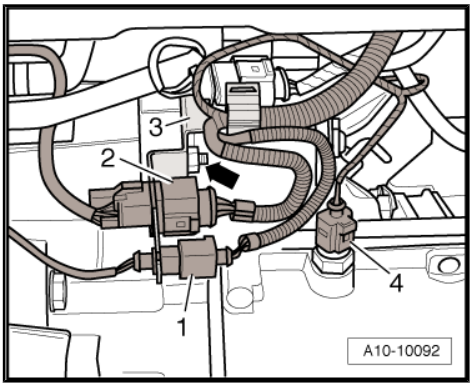

– If fitted, unplug electrical connector -2- for gearbox neutral position sender - G701- .

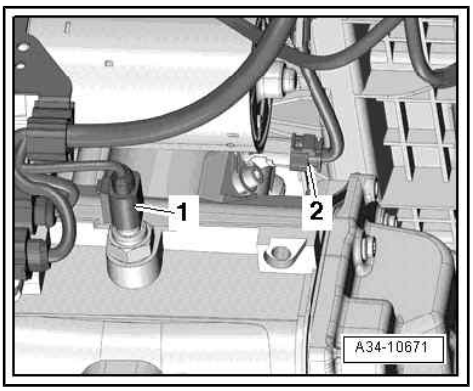

Note

Disregard -item 1-.

Vehicles with dual clutch gearbox:

– Unplug electrical connector -2- and move wiring clear.
– Push back protective cover -1- and unscrew B+ cable at starter solenoid switch.
– Remove nut -3- for earth wire.

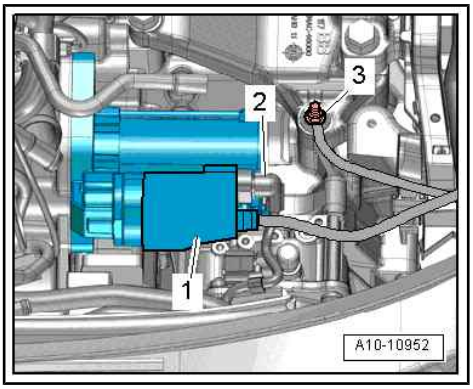

– Remove electrical connector -3- for Lambda probe after catalytic converter - G130- from bracket and unplug connector.
– Unplug electrical connector -2- for Lambda probe - G39- and -1- for dual clutch gearbox and move connectors clear.
– Move electrical wiring harness clear at gearbox.

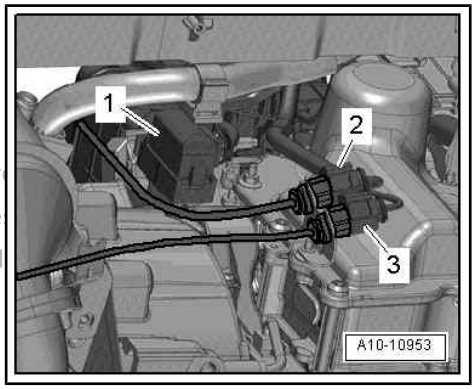

Protected by copyright. Copying for private or commer
permitted unless authorised by AUDI AG. AUDI AG doe
with respect to the correctness of information in this d

All vehicles (continued):

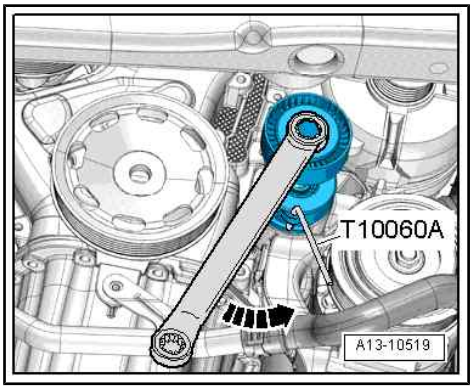

Caution

Running a used poly V-belt in the opposite direction could cause irreparable damage.

- *Before removing the poly V-belt, mark the direction of rotation with chalk or a felt-tip pen for re-installation.*

– To slacken poly V-belt, turn tensioner in anti-clockwise direction -arrow-.

– Use locking pin - T10060 A- to lock poly V-belt tensioner and detach poly V-belt.

– Unplug electrical connector -1- for air conditioner compressor regulating valve - N280- .

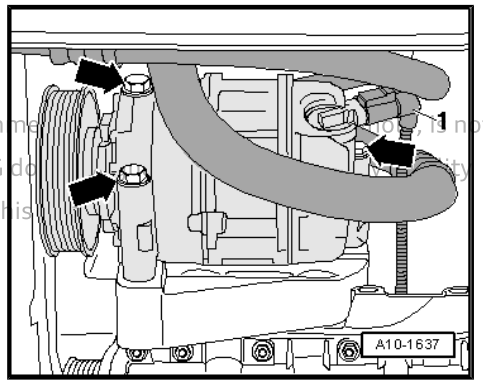

WARNING

Risk of injury caused by refrigerant.

- *The air conditioner refrigerant circuit must not be opened.*

Protected by copyright. Copying for private or commercial purposes, in part, is not permitted unless authorised by AUDI AG. AUDI AG does not guarantee or assume liability with respect to the correctness of information in this document.

– Remove bolts -arrows- for air conditioner compressor.

Caution

Risk of damage to refrigerant lines and hoses

- *Do NOT stretch, kink or bend refrigerant lines and hoses.*

– Tie up air conditioner compressor together with refrigerant hoses to longitudinal member (refrigerant hoses remain connected).

– Unplug electrical connector -1- at oil level and oil temperature sender - G266- .

– Unclip bracket -2- for electrical wire leading to oil level and oil temperature sender - G266- from subframe.

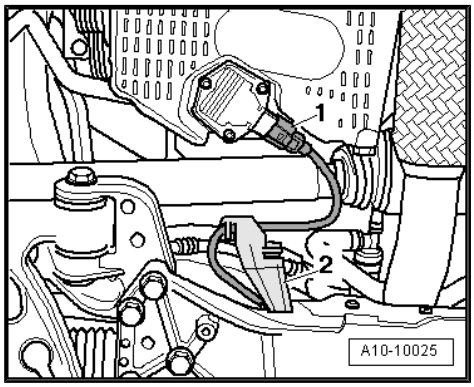

Caution

Risk of damage to flexible joint.

- *Do NOT bend flexible joint in front exhaust pipe more than 10°.*

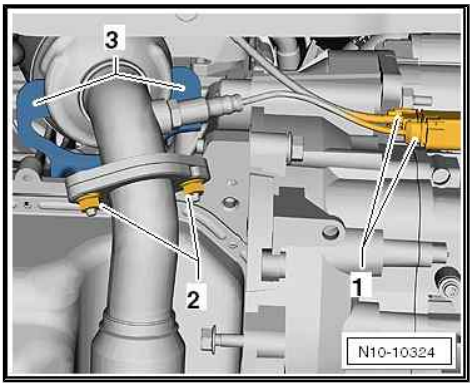

– Remove nuts -2-.

Note

Disregard items -1 and 3-.

– Remove nuts -2- and -3- and disconnect exhaust system.
– Remove bolts -1- and -5-.
– Pull bracket -4- for exhaust system off studs on front exhaust pipe.
– Detach front exhaust pipe.
– Unbolt drive shaft (left and right) from gearbox flange shaft.

Protected by copyright. Copying for private or commercial purposes, in part or in whole, is not permitted unless authorised by AUDI AG. AUDI AG does not guarantee or accept any liability with respect to the correctness of information in this document. Copyright by AUDI AG.

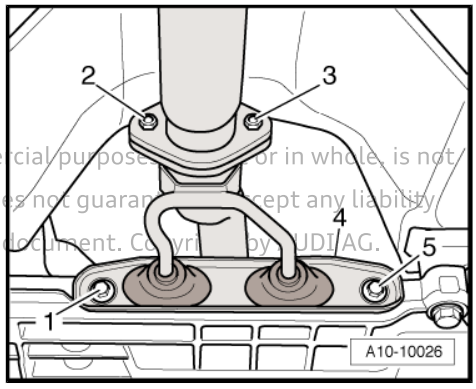

– Remove bolts -1, 2, 3- and remove pendulum support.

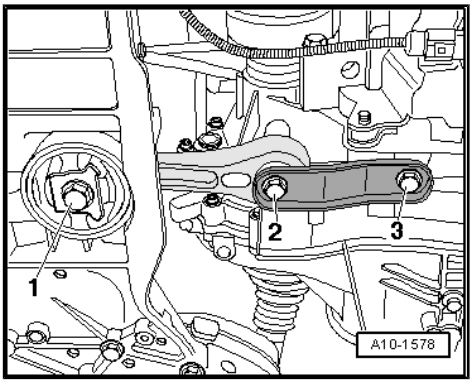

– Unplug electrical connector -1-.
– Remove bolts -bottom arrows- and take out air cowl downwards.

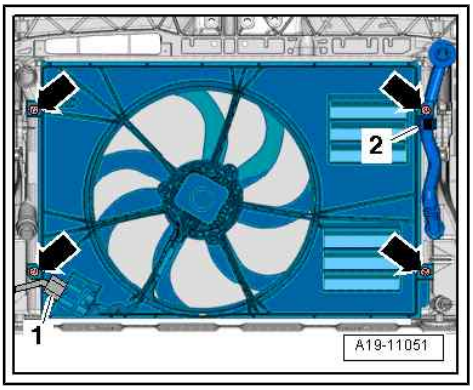

– Remove nuts -arrows- securing swivel joint (left-side).
– If fitted, loosen nut on bracket for front left vehicle level sender -G78- .
– Detach swivel joint from wishbone.

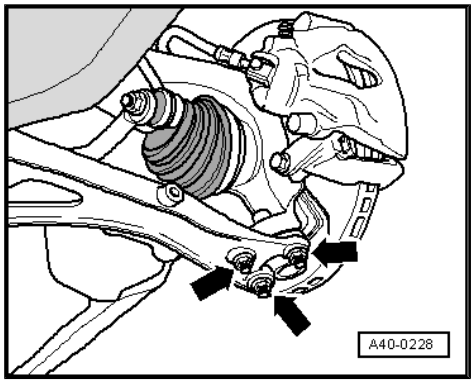

– Swing suspension strut (left-side) outwards and support with extension -2024 A /1- as shown in illustration.

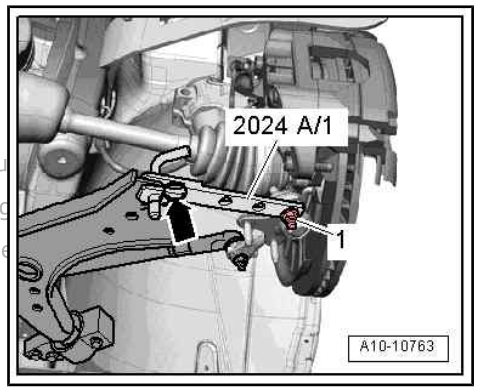

WARNING

Accident risk from loose components of support bracket.

- *Secure retaining pin and swivel joint with locking pin -arrow- and nut -1-.*

Protected by copyright. Copying for private or commercial pu
permitted unless authorised by AUDI AG. AUDI AG does not g
liability as to the correctness of information in this docume

Use engine support -T10416- with adapters -T10416/1- , -T10416/2- and -T10416/3- to lower engine/gearbox assembly.

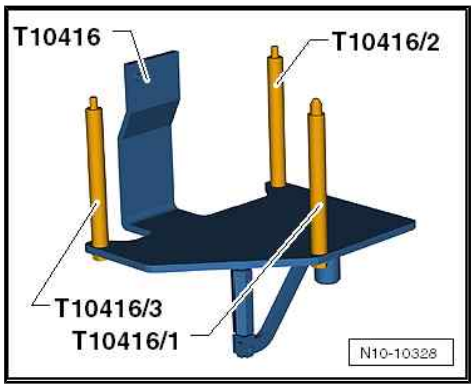

– Screw adapter -T10416/1- into hole on cylinder block as far as stop, as shown in illustration.
– Bring engine bracket -T10416- with adapters -T10416/2- and -T10416/3- into position on cylinder block.

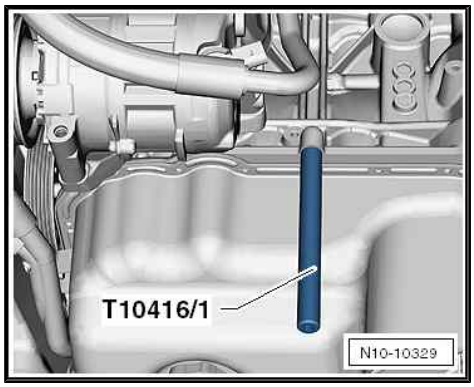

– Screw in bolt -1- by hand until it makes contact.
– Tighten all bolts on engine support to 20 Nm.
– Attach engine and gearbox jack - V.A.G 1383 A- to engine support -T10416- .

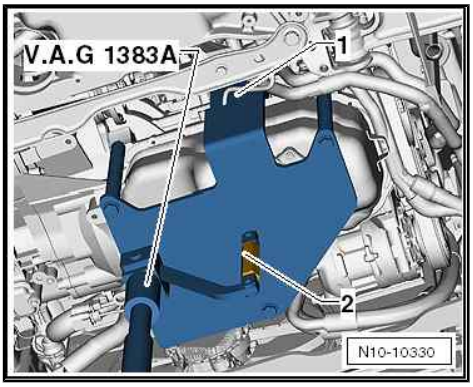

Note

- *The adjusting nut -2- is used to set the correct angle between the pin on the engine support -T10416- and the engine and gearbox jack - V.A.G 1383 A- .*
- *To unscrew bolts for assembly mounting use stepladder - VAS 5085- .*

– Remove bolts -arrows- securing engine mounting.

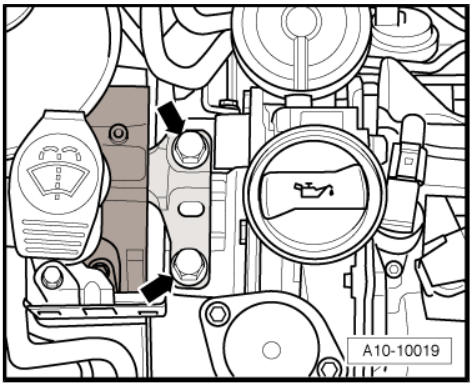

Vehicles with manual gearbox:

– Remove bolts -arrows 1- securing gearbox mounting.

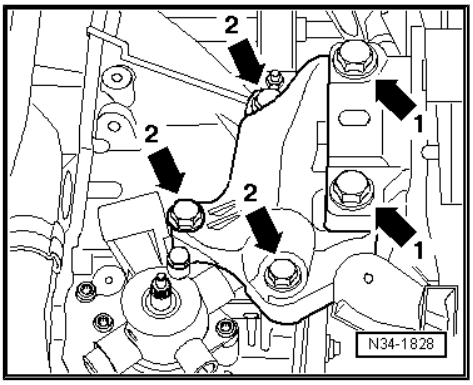

Note

Disregard -arrows 2-.

Protected by copyright. Copying for private or commercial purposes, in part or in whole, is not permitted unless authorised by AUDI AG. AUDI AG does not guarantee or accept any liability with respect to the correctness of information in this document. Copyright by AUDI AG.

Vehicles with dual clutch gearbox:

– Remove bolts -arrows- securing gearbox mounting -1-.

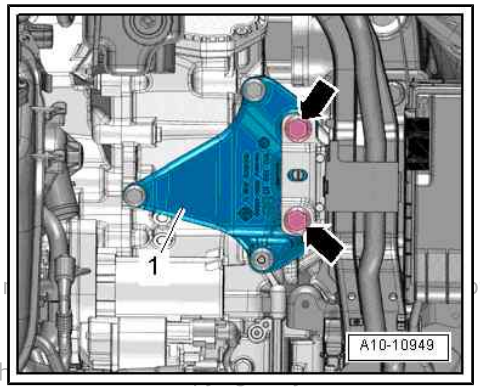

> **Caution**
>
> *Risk of damage to selector lever cable.*
>
> - *Guide the selector lever cable out of the cable support bracket when lowering the engine/gearbox assembly.*
> - *Take care not to bend or kink selector lever cable.*

Protected by copyright. Copying for private or com
permitted unless authorised by AUDI AG. AUDI AG
with respect to the correctness of information in th

All vehicles (continued):

> **Caution**
>
> *Danger of damage to hydraulic lines, vacuum lines or electrical wiring and to engine compartment.*
>
> - *Check that all hydraulic lines, vacuum lines and electrical wiring between engine, gearbox, subframe and body have been detached.*
> - *Carefully guide out engine/gearbox assembly with sub-frame from engine compartment when lowering.*

– Pull engine/gearbox assembly as far forward as possible, and lower gradually.

2 Separating engine and manual gearbox

Special tools and workshop equipment required

Protected by copyright. Copying for private or commercial purposes, in part or in whole, is not permitted unless authorised by AUDI AG. AUDI AG does not guarantee or accept any liability with respect to the correctness of information in this document. Copyright by AUDI AG.

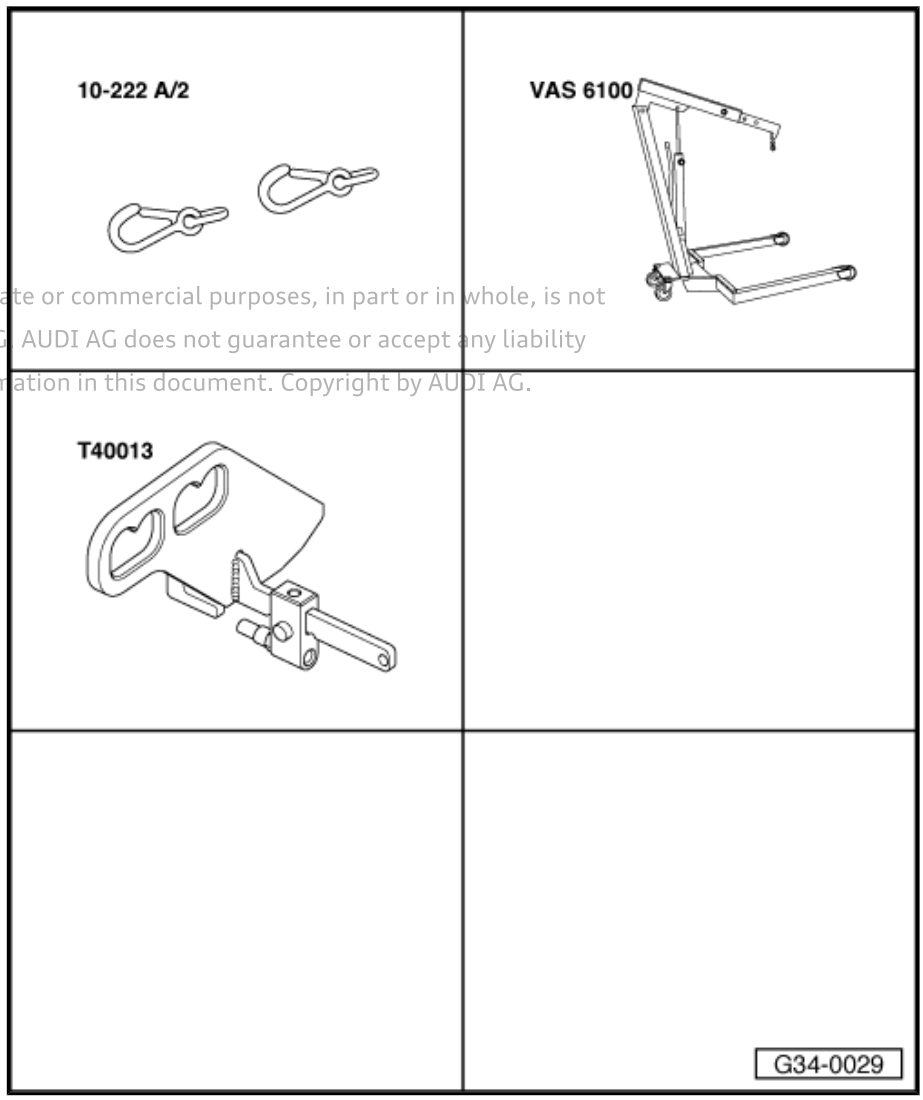

- Hooks - 10 - 222 A /2-
- Workshop hoist - VAS 6100-
- Lifting tackle - T40013-

Procedure

- Engine/gearbox assembly removed and attached to engine support -T10416- .

– Move electrical connector -1- for Lambda probe - G39- clear at bracket.

– Move electrical wiring harness clear -arrow-.

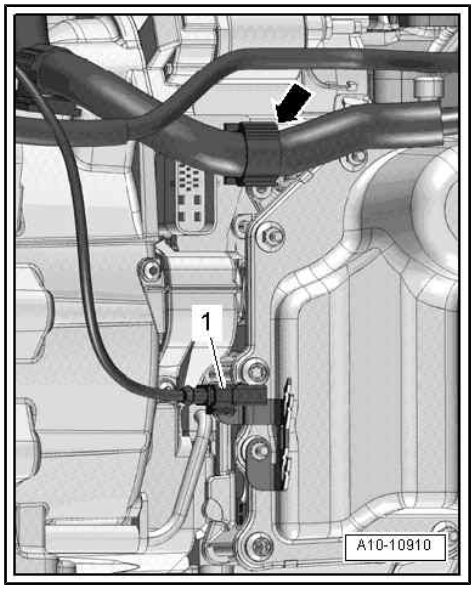

– Unscrew bolts -1 and 2- and detach starter from gearbox.

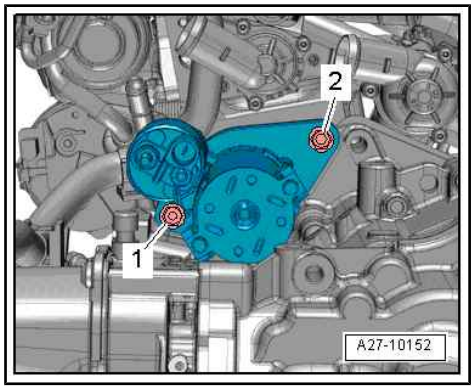

– Attach lifting tackle - T40013- to gearbox and close lock.

– Attach workshop hoist - VAS 6100- with hooks - 10 - 222 A / 2- to the lifting tackle.

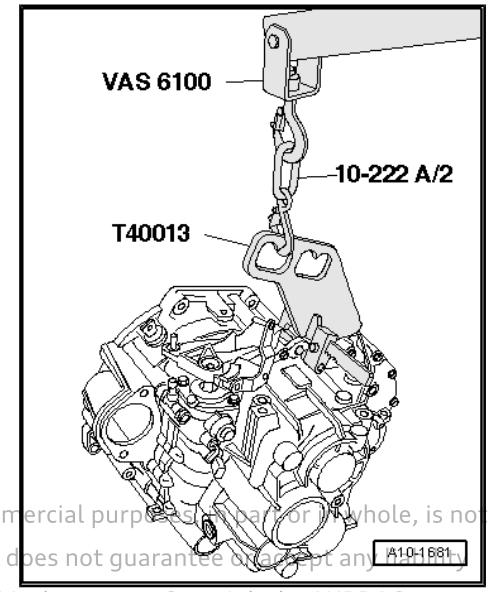

Protected by copyright. Copying for private or commercial purposes, in part or in whole, is not permitted unless authorised by AUDI AG. AUDI AG does not guarantee or accept any liability with respect to the correctness of information in this document. Copyright by AUDI AG.

– Unscrew bolts -arrows- and remove cover plate -1-.

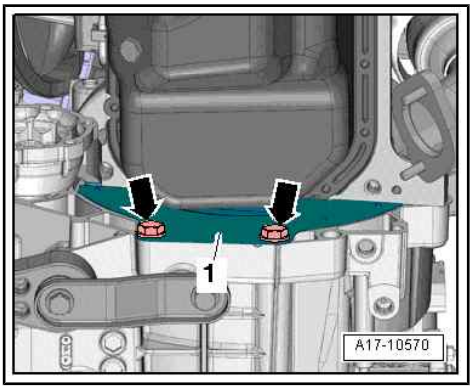

– Remove bolts -1, 4- securing gearbox to engine.

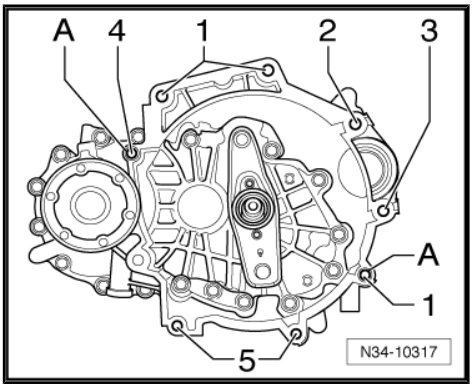

Note

Disregard -items 2, 3, 5 and A-.

– Detach gearbox from engine.

Protected by copyright. Copying for private or commercial purposes, in part or in whole, is not permitted unless authorised by AUDI AG. AUDI AG does not guarantee or accept any liability with respect to the correctness of information in this document. Copyright by AUDI AG.

3 Separating engine and dual clutch gearbox

Special tools and workshop equipment required

♦ Shackle - 10 - 222 A /12-

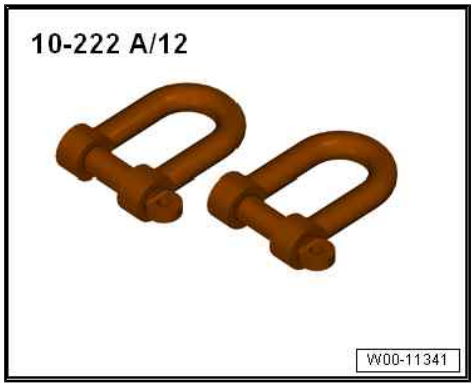

♦ Workshop hoist - VAS 6100-

Procedure

- Engine/gearbox assembly removed and attached to engine support -T10416- .

– Move electrical connector -1- for Lambda probe - G39- clear at bracket.

– Move electrical wiring harness clear -arrow-.

Protected by copyright. Copying for private or commercia
permitted unless authorised by AUDI AG. AUDI AG does n
with respect to the correctness of information in this doc

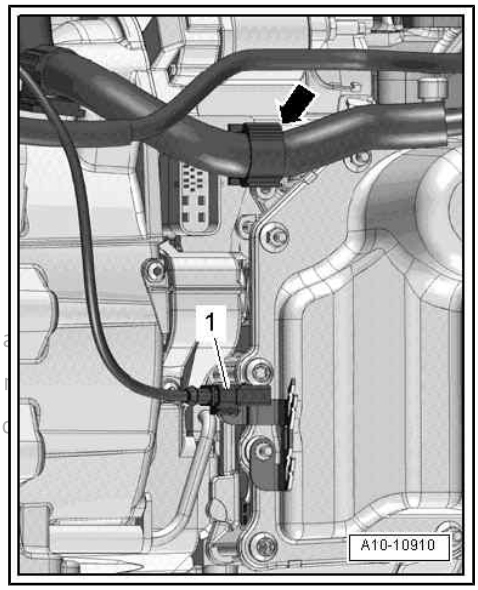

– Unscrew bolts -1 and 2- and detach starter from gearbox.

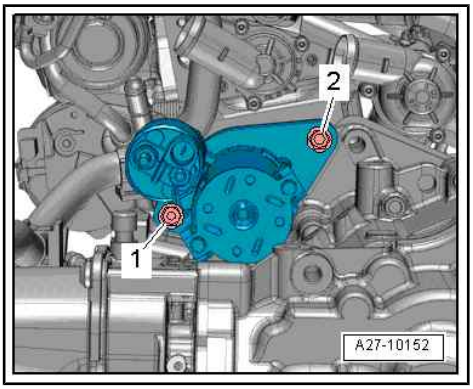

– Secure gearbox to workshop hoist - 10 - 222 A /12- using shackle - VAS 6100- .

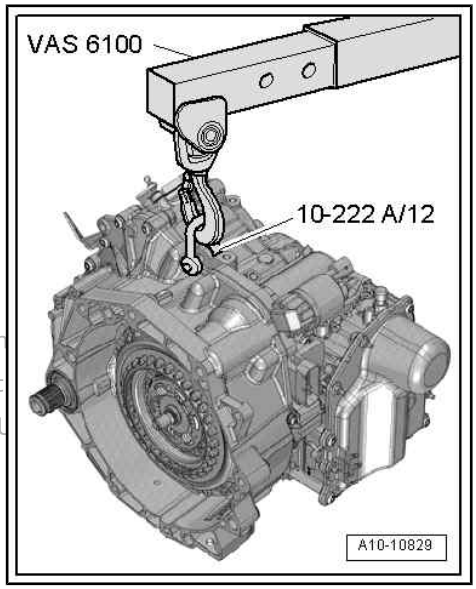

Protected by copyright. Copying for private or commercial purposes, in part or in
permitted unless authorised by AUDI AG. AUDI AG does not guarantee or accept
with respect to the correctness of information in this document. Copyright by AU

– Unscrew bolts -arrows- and remove cover plate -1-.

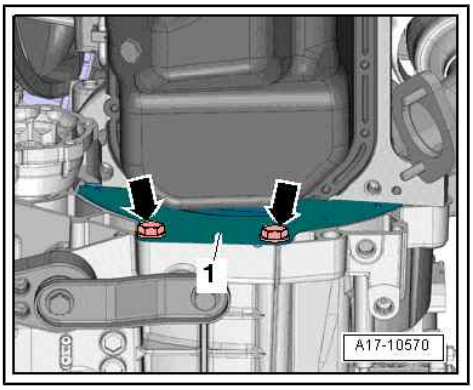

– Remove bolts -2, 3, 4, 6, 7- securing gearbox to engine.

Note

Disregard -items 1, 5, 8 and A-.

– Detach gearbox from engine.

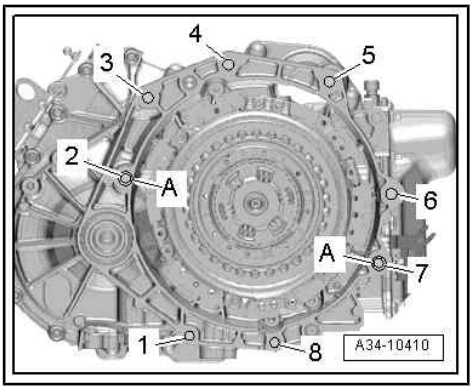

4 Securing engine to engine and gearbox support

Special tools and workshop equipment required

♦ Lifting tackle - 2024 A-

♦ Engine and gearbox support - VAS 6095A-

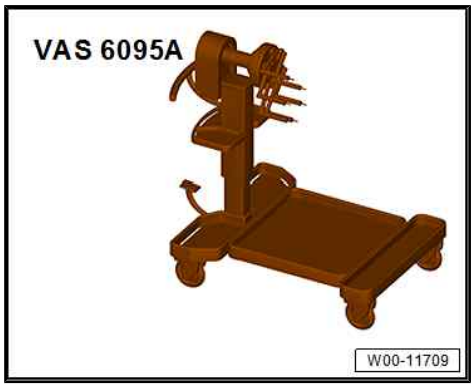

♦ Workshop hoist - VAS 6100-

Procedure

- Gearbox detached from engine
  ⇒ “2 Separating engine and manual gearbox”, page 27 or
  ⇒ “3 Separating engine and dual clutch gearbox”, page 30 .

Protected by copyright. Copying for private or commercial purposes, in part or in whole, is not permitted unless authorised by AUDI AG. AUDI AG does not guarantee or accept any liability with respect to the correctness of information in this document. Copyright by AUDI AG.

– Remove flywheel ⇒ page 56 .

– To transport engine, engage lifting tackle - 2024 A- on engine and workshop hoist - VAS 6100- .

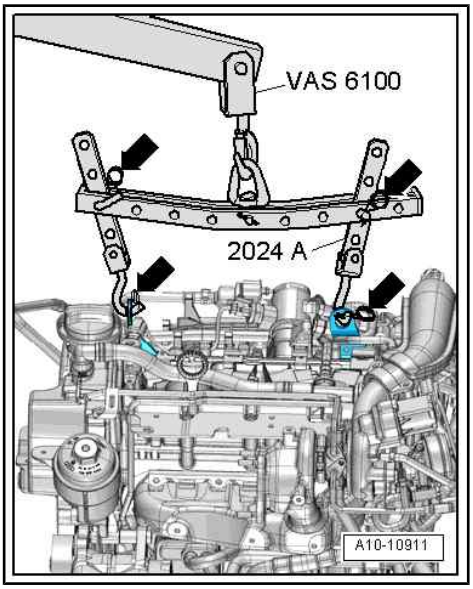

Note

To adjust to the centre of gravity of the assembly, the perforated rails of the support hooks must be positioned as shown.

WARNING

Accident risk from loose components of support bracket.

- ***The support hooks and retaining pins on the support bracket must be secured with locking pins -arrows-.***

– Secure engine to engine and gearbox support - VAS 6095A- using universal mounting - VAS 6095/1- .

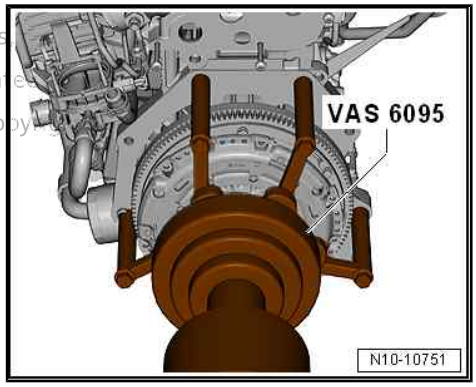

Protected by copyright. Copying for private or commercial purposes, in part or in whole, is not permitted unless authorised by AUDI AG. AUDI AG does not guarantee or assume any liability with respect to the correctness of information in this document. Copyright by AUDI AG.

Tightening torque

Component		Nm
Bolts/nuts	M6	10
	M8	20
	M10	45
	M12	65

5 Installing engine

Tightening torques

Note

- *Tightening torques apply only to lightly greased, oiled, phosphated or black-finished nuts and bolts.*
- *Additional lubricants such as engine or gearbox oil may be used, but do not use lubricants containing graphite.*
- *Do not use degreased parts.*
- *Tolerance for tightening torques: ± 15 %*

Protected by copyright. Copying for private or commercial purposes, in part or in whole, is not permitted unless authorised by AUDI AG. AUDI AG does not guarantee or accept any liability with respect to the correctness of information in this document. Copyright by AUDI AG.

Assembly mountings

⇒ "6.1 Exploded view - assembly mountings", page 39

Further tightening torques

Component		Nm
Bolts/nuts	M6	9
	M7	15
	M8	22
	M10	40
	M12	65

Securing manual gearbox to engine

Item	Bolt	Nm
1	M12x65	80
2[1)]	M12x135	80
3[1)]	M12x150	80
4	M12x80	80
5	M10x50	⇒ Rep. gr. 34
A	Dowel sleeves for centralising	

- [1)] Also for starter to gearbox

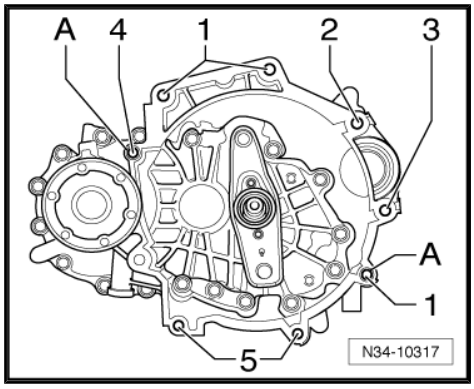

Securing dual-clutch gearbox to engine

Item	Bolt	Nm
1, 8	M10x50	⇒ Rep. gr. 34
2, 6, 7	M12x65	80
3, 4, 5	M12x55	80
A	Dowel sleeves for centralising	

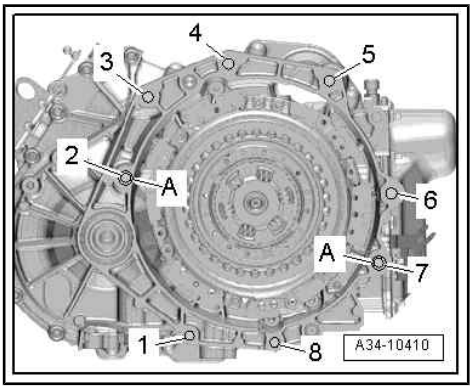

Procedure

Installation is carried out in reverse order; note the following:

- Engine installed on engine support -T10416- .

Note

- *Renew self-locking nuts and bolts.*
- *Renew bolts which are tightened to a specified angle as well as seals and gaskets.*
- *Secure all hose connections with the correct type of hose clips (same as original equipment) ⇒ Electronic parts catalogue .*
- *Fit all cable ties in the original positions when installing.*

– Install intermediate plate ⇒ page 56 .

– Install flywheel ⇒ page 56 .

Vehicles with manual gearbox:

– If not already fitted, install dowel sleeves -A- for centring engine and gearbox in cylinder block.

– Remove needle bearing in crankshaft if fitted ⇒ page 65 .

– Renew clutch release bearing if worn ⇒ Rep. gr. 30 .

– Clean the input shaft splines and the hub splines. Remove corrosion and apply only a very thin coating of grease - G 000 100- to the splines. Remove any excess grease.

– Make sure that clutch plate is properly centred.

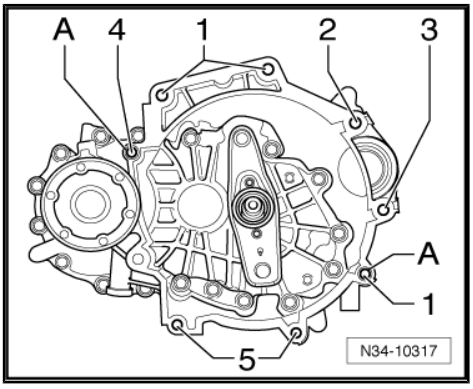

Vehicles with dual clutch gearbox:

– If not already fitted, install dowel sleeves -A- for centring engine and gearbox in cylinder block.

– Install needle bearing if not fitted in crankshaft ⇒ page 65 .

Protected by copyright. Copying for private or commercial purpo
permitted unless authorised by AUDI AG. AUDI AG does not gua
with respect to the correctness of information in this document.

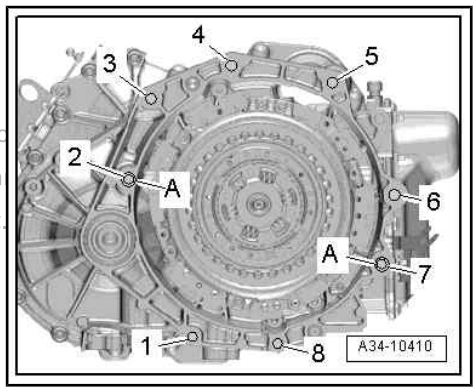

All vehicles (continued):

– Secure gearbox to engine.
– Install starter ⇒ Electrical system; Rep. gr. 27 .
– Guide engine/gearbox assembly into body.
– Initially screw in bolts -arrows- for engine mounting by hand until they make contact.

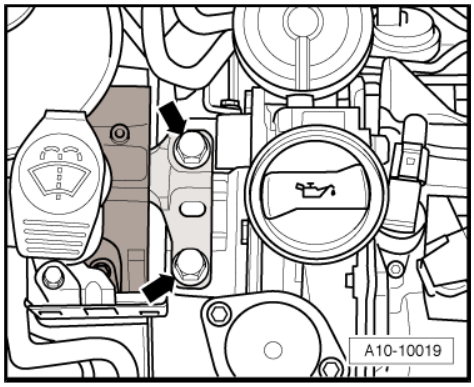

Vehicles with manual gearbox:

– Initially screw in bolts -arrows 1- for gearbox mounting by hand until they make contact.

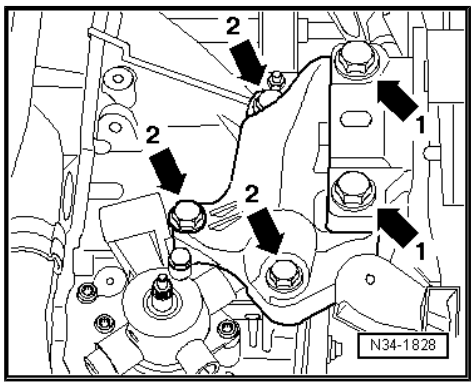

Note

Disregard -arrows 2-.

Protected by copyright. Copying for private or commercial purposes, in part or in whole, is not permitted unless authorised by AUDI AG. AUDI AG does not guarantee or accept any liability with respect to the correctness of information in this document. Copyright by AUDI AG.

Vehicles with dual clutch gearbox:

– Initially screw in bolts -arrows- for gearbox mounting -1- by hand until they make contact.

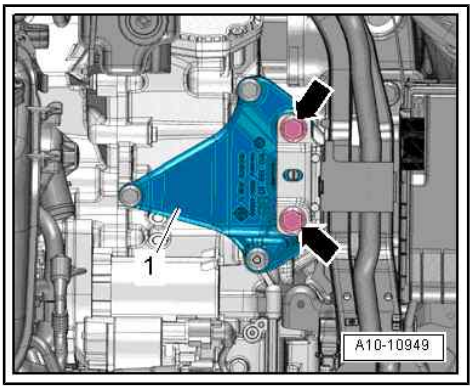

All vehicles (continued):

Note

The bolts are tightened to final torque only after adjusting the assembly mountings ⇒ page 39 .

– Detach engine support -T10416- from engine.
– Install drive shafts and swivel joint ⇒ Rep. gr. 40 .
– Install pendulum support ⇒ Rep. gr. 34 .
– Install front exhaust pipe ⇒ page 197 .
– Install air conditioner compressor ⇒ Rep. gr. 87 .
– Install poly V-belt ⇒ page 49 .
– Adjust assembly mountings ⇒ page 39 .
– Install engine control unit ⇒ Rep. gr. 24 .
– Install plenum chamber partition panel ⇒ Rep. gr. 50 .
– Install wiper arms ⇒ Electrical system; Rep. gr. 92 .

Vehicles with manual gearbox:

Caution

Risk of damage to clutch slave cylinder.

- ***Do not operate clutch pedal with slave cylinder removed.***

– Install clutch slave cylinder ⇒ Rep. gr. 30 .
– Install and adjust gear selector cable and gate selector cable ⇒ Rep. gr. 34 .

Vehicles with dual clutch gearbox:

– Install selector lever cable ⇒ Rep. gr. 34 .

All vehicles (continued):

– Install radiator cowl ⇒ page 175 .
– Electrical connections and routing ⇒ Current flow diagrams, Electrical fault finding and Fitting locations.
– Install battery mounting and battery ⇒ Electrical system; Rep. gr. 27 .
– Install air cleaner housing ⇒ Rep. gr. 24 .
– Check oil level ⇒ Maintenance ; Booklet 808 .

Caution

Risk of irreparable damage to control units because of excessive voltage.

- ***Never use battery charging equipment for boost starting.***

Protected by copyright. Copying for private or commercial purposes, in part or in whole, is not permitted unless authorised by AUDI AG. AUDI AG does not guarantee or accept any liability with respect to the correctness of information in this document. Copyright by AUDI AG.

Note

Do not reuse coolant.

- Fill up with coolant ⇒ page 157 .
- Install wheel housing liners ⇒ Rep. gr. 66 .
- Fit front wheels ⇒ Wheels and tyres; Rep. gr. 44 .
- Install noise insulation ⇒ Rep. gr. 50 .
- After renewing engine, misfire adaption must be reset. To do so, select `01 - Reset adaptions misfires` in `Guided Functions` mode of ⇒ Vehicle diagnostic tester.

Protected by copyright. Copying for private or commercial purposes, in part or in whole, is not permitted unless authorised by AUDI AG. AUDI AG does not guarantee or accept any liability with respect to the correctness of information in this document. Copyright by AUDI AG.

6 Assembly mountings

Overview

- ⇒ “6.1 Exploded view - assembly mountings”, page 39
- ⇒ “6.2 Removing and installing engine mountings”, page 40
- ⇒ “6.3 Checking adjustment of assembly mountings (engine/ gearbox mountings)”, page 42
- ⇒ “6.4 Adjusting assembly mountings”, page 43

6.1 Exploded view - assembly mountings

Protected by copyright. Copying for private or commercial purposes, in part or in whole, is not permitted unless authorised by AUDI AG. AUDI AG does not guarantee or accept any liability with respect to the correctness of information in this document. Copyright by AUDI AG.

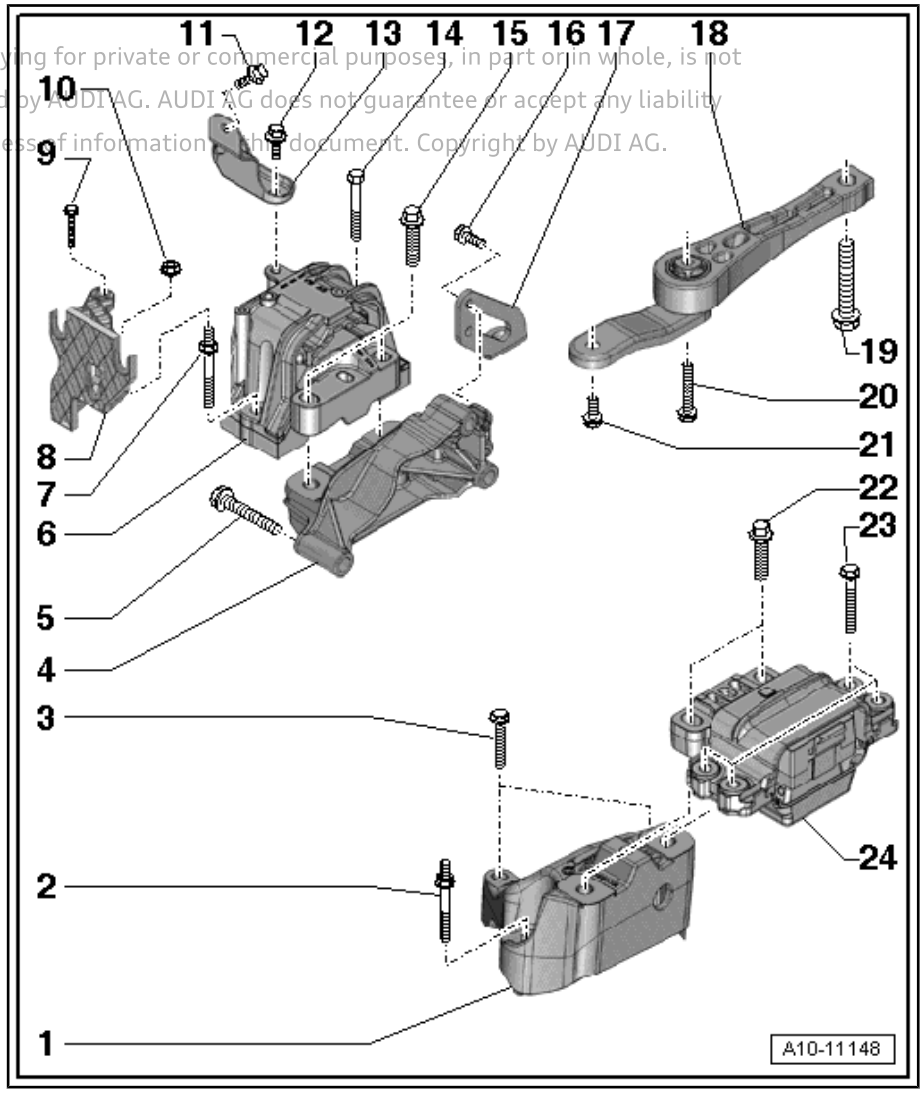

1 - Gearbox support

2 - Bolt
- ❑ Gearbox support to gearbox
- ❑ Tightening torque ⇒ Rep. gr. 34

3 - Bolt
- ❑ Gearbox support to gearbox
- ❑ Tightening torque ⇒ Rep. gr. 34

4 - Engine support

5 - Bolt
- ❑ 50 Nm

6 - Engine mounting

7 - Bolt
- ❑ Engine mounting to body
- ❑ Renew
- ❑ 40 Nm +90°

8 - Bracket for activated charcoal filter

9 - Bolt
- ❑ 9 Nm

10 - Nut
- ❑ 9 Nm

11 - Bolt
- ❑ Connecting bracket to body
- ❑ Renew
- ❑ 20 Nm +90°

12 - Bolt
- ❑ Connecting bracket to engine mounting
- ❑ Renew
- ❑ 20 Nm +90°

13 - Connecting bracket

14 - Bolt
- ❑ Engine mounting to body
- ❑ Renew
- ❑ 40 Nm +90°

15 - Bolt
- ❑ Engine mounting to engine support
- ❑ Renew
- ❑ 60 Nm +90°

16 - Bolt
- ❑ 22 Nm

17 - Bracket

18 - Pendulum support

19 - Bolt
- ❑ Pendulum support to subframe
- ❑ Tightening torque ⇒ Rep. gr. 34

20 - Bolt
- ❑ Pendulum support to gearbox
- ❑ Tightening torque ⇒ Rep. gr. 34

21 - Bolt
- ❑ Pendulum support to gearbox
- ❑ Tightening torque ⇒ Rep. gr. 34

22 - Bolt
- ❑ Gearbox mounting to gearbox support
- ❑ Tightening torque ⇒ Rep. gr. 34

23 - Bolt
- ❑ Gearbox mounting to body
- ❑ Tightening torque ⇒ Rep. gr. 34

24 - Gearbox mounting
- ❑ Illustration shows version for manual gearbox

6.2 Removing and installing engine mountings

Special tools and workshop equipment required

- ♦ Support bracket - 10 - 222 A-

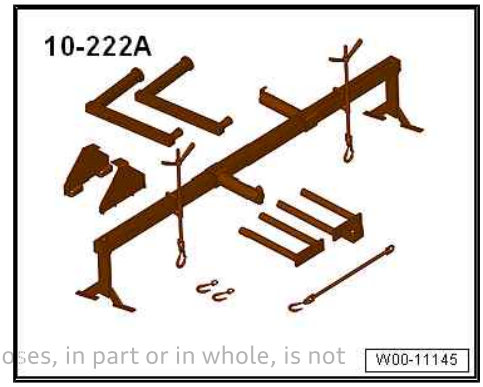

Protected by copyright. Copying for private or commercial purposes, in part or in whole, is not permitted unless authorised by AUDI AG. AUDI AG does not guarantee or accept any liability with respect to the correctness of information in this document. Copyright by AUDI AG.

♦ Shackle - 10 - 222 A /12-

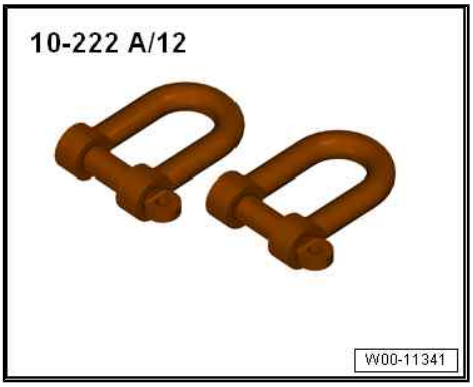

Removing

– Release activated charcoal filter -arrow B-, lift off -arrow A- and move clear to one side with line -1- connected.

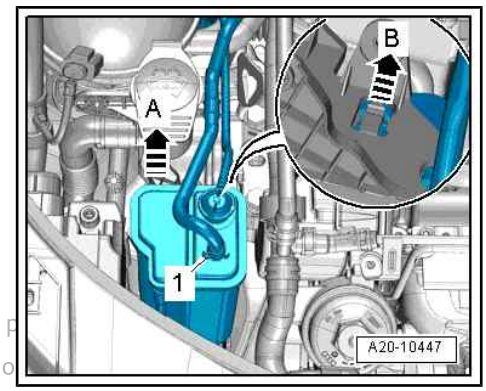

Protected by copyright. Copying for private or commercial purposes, in p
permitted unless authorised by AUDI AG. AUDI AG does not guarantee o
with respect to the correctness of information in this document. Copyright by AUDI AG.

– Remove bracket -3- for activated charcoal filter.

– Remove bolt on filler neck -2- for washer fluid reservoir.

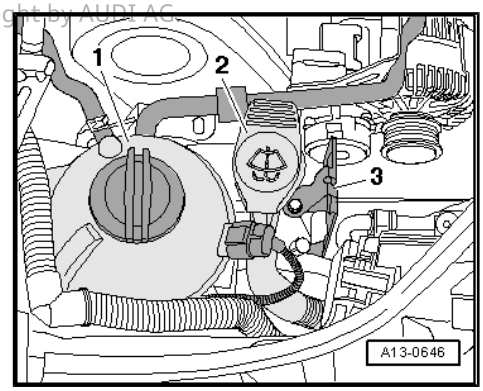

Note

Disregard -item 1-.

– Remove bolts -arrows-.

– Detach electrical connector -1- for coolant shortage indicator switch - F66- and move coolant expansion tank to side.

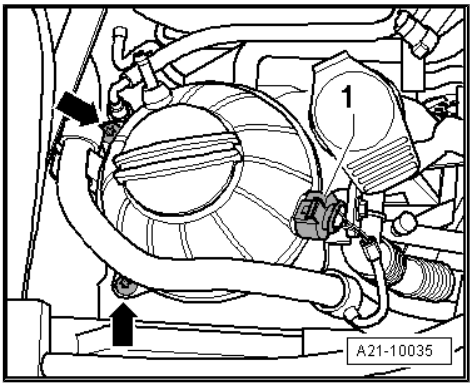

– Secure shackle - 10 - 222 A /12- to engine lifting eye (right-side).
– Set up support bracket - 10 - 222 A- on body flanges.
• The spindle is located at rear.
– Engage hook on spindle in shackle.
– Apply light tension to spindle.

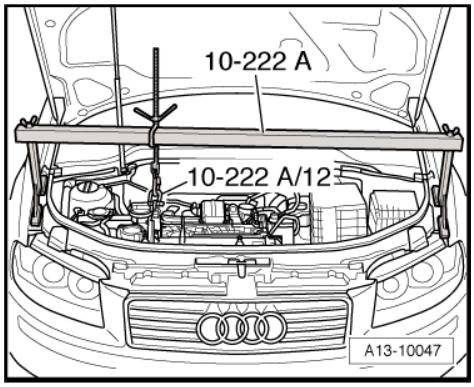

– Remove bolts -1 and 2- and detach connecting bracket.
– Remove bolts -3 ... 6- and detach engine mounting.

Installing

Installation is carried out in reverse order; note the following:

• Tightening torques
⇒ "6.1 Exploded view - assembly mountings", page 39

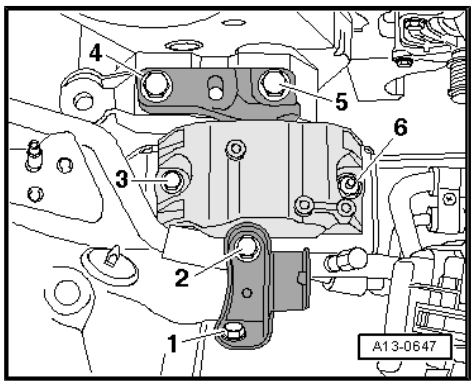

Note

Renew the bolts tightened with specified tightening angle.

– Install filler neck for washer fluid reservoir ⇒ Electrical system; Rep. gr. 92 .
– Check adjustment of assembly mountings (engine/gearbox mountings) ⇒ page 42 .

6.3 Checking adjustment of assembly mountings (engine/gearbox mountings)

Procedure

– Check distances at mounting (right-side) for engine and gearbox:
• The two bolt heads -2- must be parallel with edge of support arm -3- for engine mounting.
• There must be a distance of -x- = 12 mm between engine mounting -1- and timing chain cover -4-.

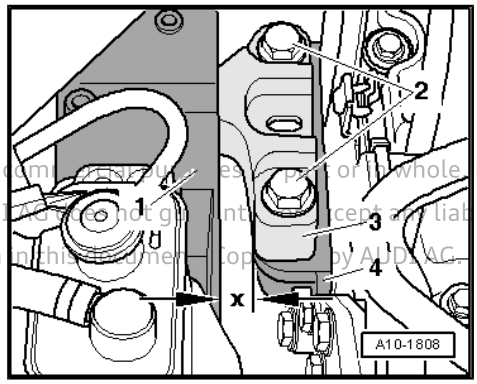

Protected by copyright. Copying for private or commercial purposes, in part or in whole, is not permitted unless authorised by AUDI AG. AUDI AG does not guarantee or assume any liability with respect to the correctness of information in this document. Copyright by AUDI AG.

Note

Distance -x- = 12 mm can also be checked with a metal rod of suitable size, or similar.

– If the distance measured is too large or small, the assembly mountings must be adjusted ⇒ page 43 .

Vehicles with manual gearbox:

– Ensure that the edges of the support arm -2- (on the gearbox assembly mounting) and gearbox support -1- are parallel.

• Dimension -x- must be identical on both sides.

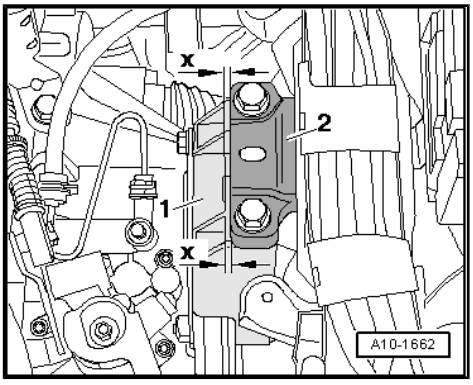

Vehicles with dual clutch gearbox:

– Ensure that the edges of the support arm -2- (on the gearbox assembly mounting) and gearbox support -1- are parallel.

• Dimension -x- must be identical on both sides.

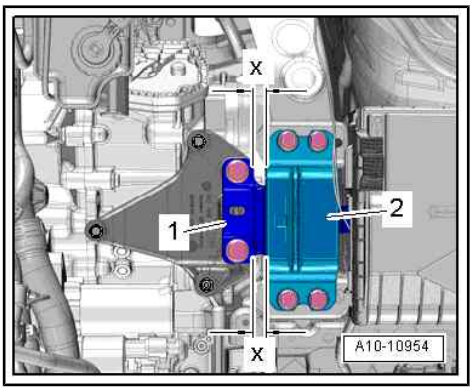

6.4 Adjusting assembly mountings

Special tools and workshop equipment required

♦ Support bracket - 10 - 222 A-

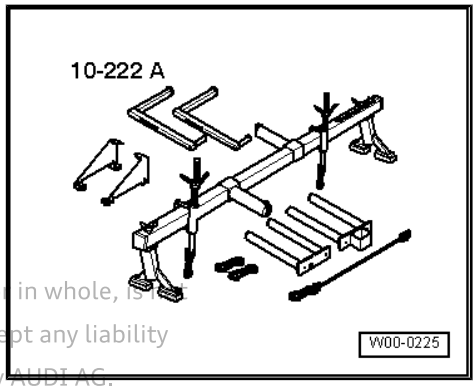

Protected by copyright. Copying for private or commercial purposes, in part or in whole, is not permitted unless authorised by AUDI AG. AUDI AG does not guarantee or accept any liability with respect to the correctness of information in this document. Copyright by AUDI AG.

Procedure

• Tightening torques
⇒ “6.1 Exploded view - assembly mountings”, page 39

– Remove air cleaner housing ⇒ Rep. gr. 24 .

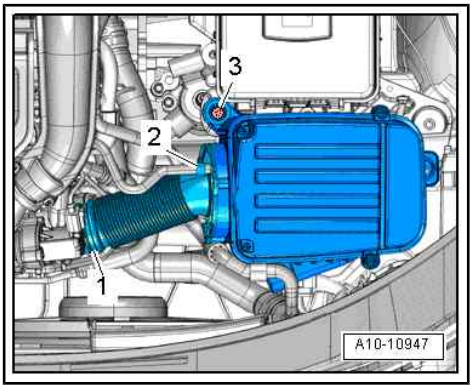

– Remove battery ⇒ Electrical system; Rep. gr. 27 .

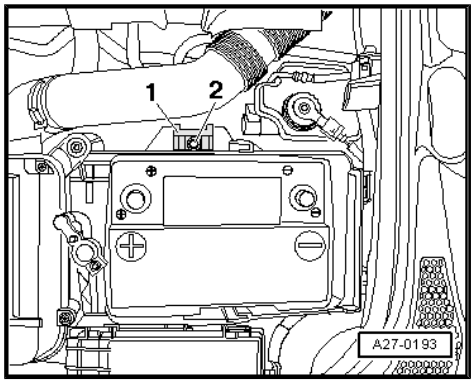

– Remove bolts -arrows- and take out battery tray -1-.

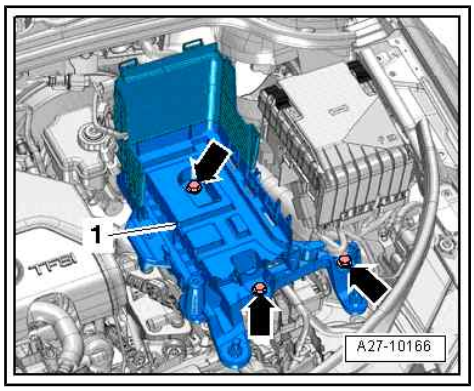

– Set up support bracket - 10 - 222 A- on body flanges.
– Hook spindle of lifting tackle onto left-side engine lifting eye.
– Take up weight of engine with the spindle, but do not lift.

Protected by copyright. Copying for private or commercial purposes, in part or in whole, is not permitted unless authorised by AUDI AG. AUDI AG does not guarantee or assume any liability with respect to the correctness of information in this document. Copyright by AUDI AG.

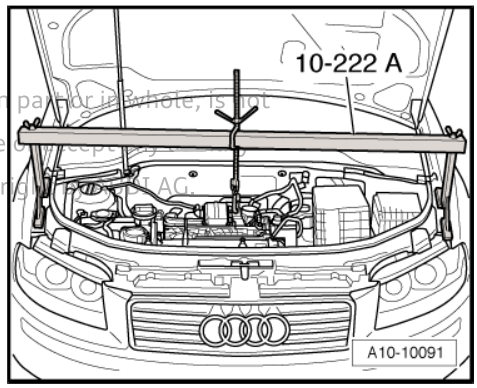

– Remove bolts -arrows- for engine mounting one by one and renew (if they were not renewed when installing engine).
– Initially fit bolts hand-tight.

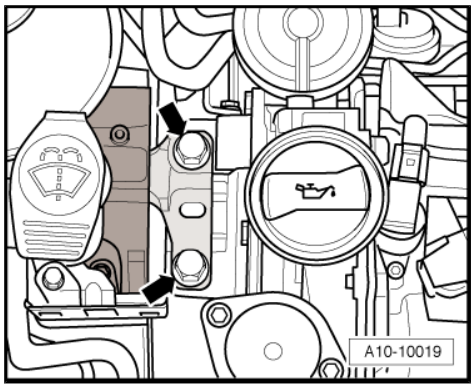

Vehicles with manual gearbox:

– Remove bolts -arrows 1- for gearbox mounting one by one and renew (if they were not renewed when installing engine).

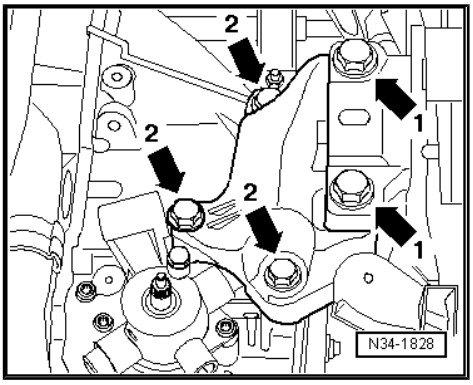

Note

Disregard -arrows 2-.

Vehicles with dual clutch gearbox:

– Remove bolts -arrows- for gearbox mounting -1- one by one and renew (if they were not renewed when installing engine).

– Initially fit bolts hand-tight.

All vehicles (continued):

– Slacken bolts on left and right-hand support arms by about two turns each.

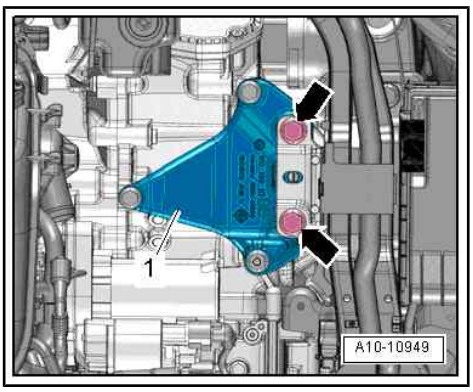

– Using an assembly lever, adjust engine/gearbox assembly between engine mounting -1- and support arm -3- for engine mounting until the specifications listed below are obtained:

• The two bolt heads -2- must be parallel with edge of support arm -3- for engine mounting.

• There must be a distance of -x- = 12 mm between engine mounting -1- and timing chain cover -4-.

Protected by copyright. Copies for private or commercial purposes, in part or in whole, are not permitted unless authorised by AUDI AG. AUDI AG does not guarantee or accept any liability with respect to the correctness of information in this document. Copyright by AUDI AG.

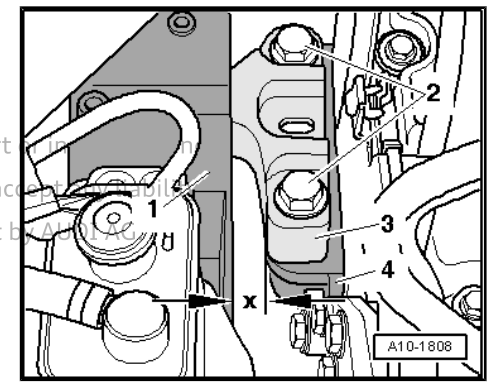

Note

Distance -x- = 12 mm can also be checked with a metal rod of suitable size, or similar.

– Tighten bolts for assembly mounting at gearbox.

Vehicles with manual gearbox:

– Ensure that the edges of the support arm -2- (on the gearbox assembly mounting) and gearbox support -1- are parallel.

• Dimension -x- must be identical on both sides.

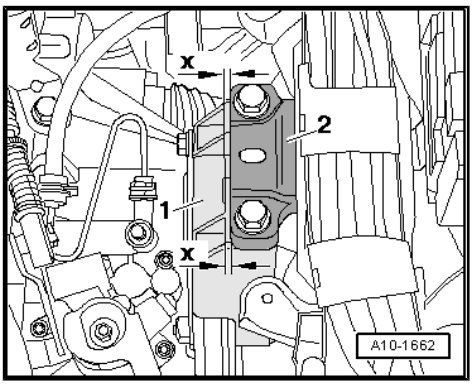

Vehicles with dual clutch gearbox:

– Ensure that the edges of the support arm -2- (on the gearbox assembly mounting) and gearbox support -1- are parallel.

• Dimension -x- must be identical on both sides.

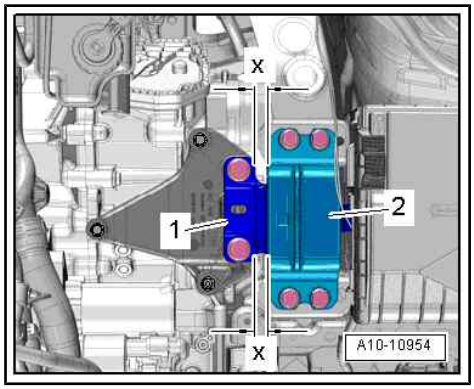

All vehicles (continued):

– Tighten bolts for assembly mounting.

Remaining installation steps are carried out in reverse sequence; note the following:

– Install battery mounting and battery ⇒ Electrical system; Rep. gr. 27 .

– Install air cleaner housing ⇒ Rep. gr. 24 .

Protected by copyright. Copying for private or commercial purposes, in part or in whole, is not permitted unless authorised by AUDI AG. AUDI AG does not guarantee or accept any liability with respect to the correctness of information in this document. Copyright by AUDI AG.

13 – Crankshaft group

Protected by copyright. Copying for private or commercial purposes, in part or in whole, is not permitted unless authorised by AUDI AG. AUDI AG does not guarantee or accept any liability with respect to the correctness of information in this document. Copyright by AUDI AG.

1 Cylinder block (pulley end)

Overview

- ⇒ “1.1 Exploded view - poly V-belt drive”, page 47
- ⇒ “1.2 Removing and installing poly V-belt”, page 49
- ⇒ “1.3 Removing and installing idler roller for poly V-belt”, page 50
- ⇒ “1.4 Poly V-belt tensioner”, page 50
- ⇒ “1.5 Removing and installing poly V-belt pulley for crankshaft”, page 51
- ⇒ “1.6 Removing and installing bracket for ancillaries”, page 54

1.1 Exploded view - poly V-belt drive

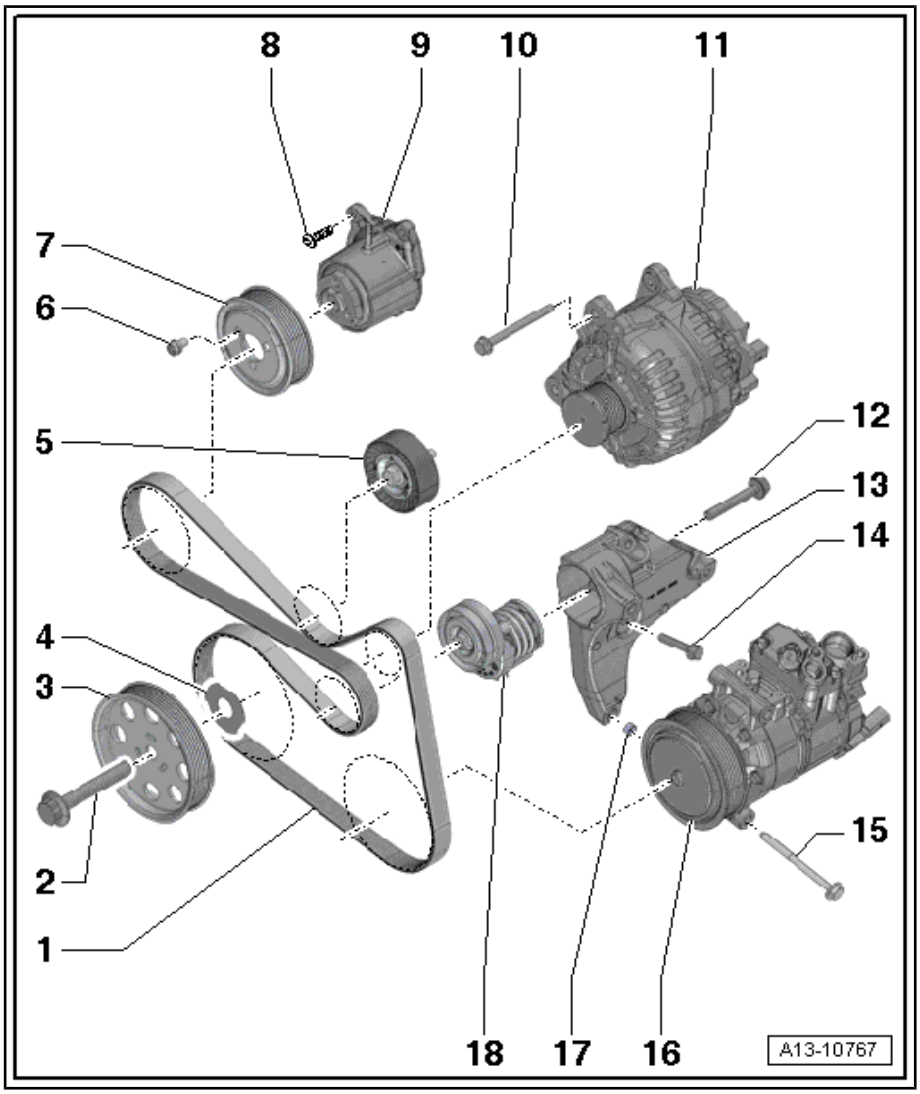

1 - Poly V-belt

- ❑ Check for wear
- ❑ Before removing, mark direction of rotation with chalk or felt-tip pen
- ❑ Removing and installing ⇒ page 49
- ❑ Do not kink
- ❑ When installing, make sure it is properly seated on pulleys

2 - Bolt

- ❑ With washer
- ❑ Renew
- ❑ Lubricate thread with oil before fitting
- ❑ Contact surface must be free of oil and grease
- ❑ 150 Nm +180°

3 - Poly V-belt pulley

- ❑ For crankshaft
- ❑ Removing and installing ⇒ page 51
- ❑ Contact surfaces must be free of oil and grease
- ❑ When loosening and tightening, use counter-hold tool - 3415- and -3415/2-
- ❑ Contact surfaces must be free of oil and grease

4 - Diamond-coated washer

- ❑ Renew
- ❑ Insert in notches on poly V-belt pulley

5 - Idler roller
- ❑ For poly V-belt
- ❑ With cover cap for bolt
- ❑ 40 Nm

6 - Bolt
- ❑ Tightening torque ⇒ Item 10 (page 164)

7 - Poly V-belt pulley
- ❑ For coolant pump
- ❑ Removing and installing ⇒ page 164

8 - Bolt
- ❑ Tightening torque ⇒ Item 11 (page 164)

9 - Coolant pump
- ❑ Removing and installing ⇒ page 165

10 - Bolt
- ❑ Tightening torque ⇒ Electrical system; Rep. gr. 27

11 - Alternator
- ❑ Removing and installing ⇒ Electrical system; Rep. gr. 27

12 - Bolt
- ❑ Renew
- ❑ 20 Nm +90°

13 - Bracket
- ❑ For ancillaries
- ❑ Removing and installing ⇒ page 54

14 - Bolt
- ❑ 23 Nm

15 - Bolt
- ❑ Tightening torque ⇒ Rep. gr. 87

16 - Air conditioner compressor
- ❑ Removing and installing ⇒ Rep. gr. 87

17 - Dowel sleeve

18 - Tensioner
- ❑ For poly V-belt
- ❑ Lock in position with locking pin - T10060 A- .
- ❑ Removing and installing ⇒ page 50

Plug for “TDC” drilling - tightening torque

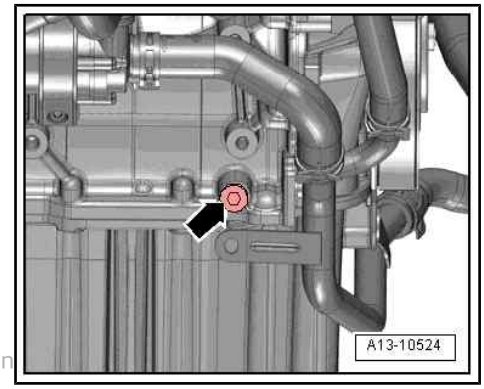

Note

Renew the seal on the screw plug for the “TDC” drilling.

– Tighten plug -arrow- in cylinder block to 30 Nm.

Protected by copyright. Copying for private or commercial purposes, in
permitted unless authorised by AUDI AG. AUDI AG does not guarantee or accept any liability
with respect to the correctness of information in this document. Copyright by AUDI AG.

1.2 Removing and installing poly V-belt

Special tools and workshop equipment required

- Locking pin - T10060 A-

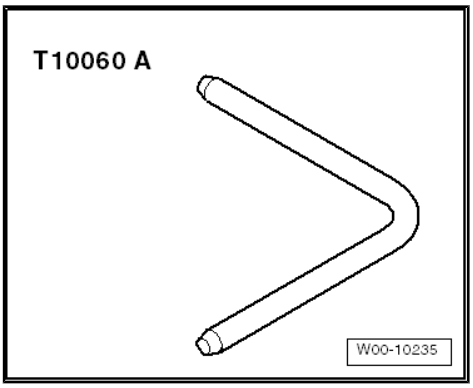

Removing

– Remove noise insulation ⇒ Rep. gr. 50 .

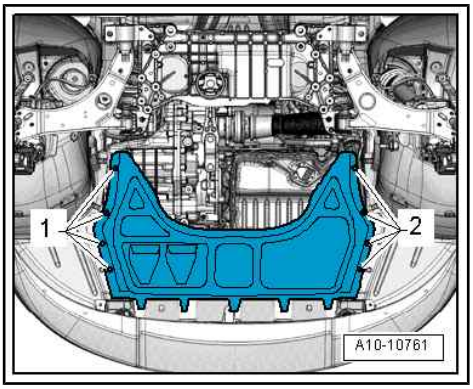

Caution

Running a used poly V-belt in the opposite direction could cause irreparable damage.

- *Before removing the poly V-belt, mark the direction of rotation with chalk or a felt-tip pen for re-installation.*

Protected by copyright. Copying for private or commercial purposes, in part or
permitted unless authorised by AUDI AG. AUDI AG does not guarantee or accep
with respect to the correctness of information in this document. Copyright by A

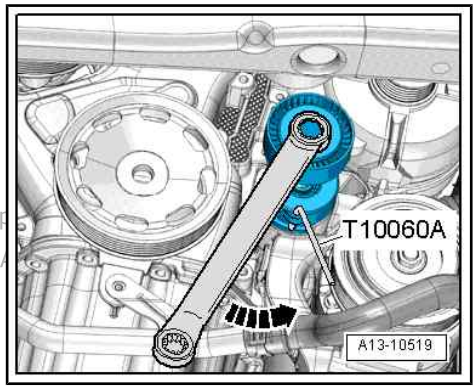

– To slacken poly V-belt turn tensioner in anti-clockwise direction -arrow-.

– Lock tensioner with locking pin - T10060 A- .

– Take off poly V-belt.

Installing

Installation is carried out in reverse order; note the following:

– Fit poly V-belt onto pulleys as shown in illustration.

Vehicles without air conditioner:

1 - Coolant pump
2 - Poly V-belt
3 - Alternator
4 - Tensioner
5 - Crankshaft

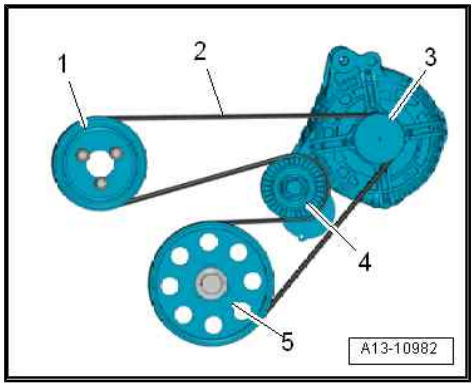

Vehicles with air conditioner:

1 - Coolant pump
2 - Crankshaft
3 - Tensioner
4 - Idler roller
5 - Alternator
6 - Air conditioner compressor
7 - Poly V-belt

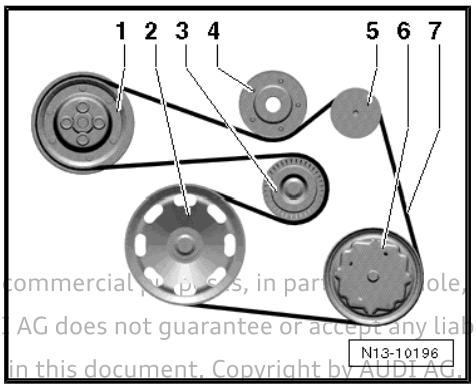

Protected by copyright. Copying for private or commercial purposes, in part or whole, is not permitted unless authorised by AUDI AG. AUDI AG does not guarantee or accept any liability with respect to the correctness of information in this document. Copyright by AUDI AG.

– Hold tensioner with ring spanner and remove locking pin - T10060 A- .
– Release tensioner.
– Check that poly V-belt is properly seated.
– Start engine and check that poly V-belt runs properly.
– Install noise insulation ⇒ Rep. gr. 50 .

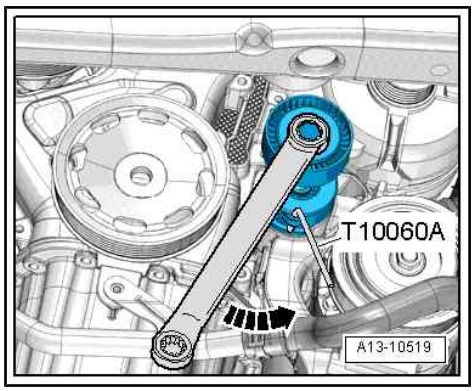

1.3 Removing and installing idler roller for poly V-belt

Removing

– Remove poly V-belt ⇒ page 49 .
– Pry off cap -1-.
– Unscrew idler roller -2-.

Installing

Installation is carried out in reverse order; note the following:

• Tightening torque
⇒ “1.1 Exploded view - poly V-belt drive”, page 47

– Install poly V-belt ⇒ page 49 .

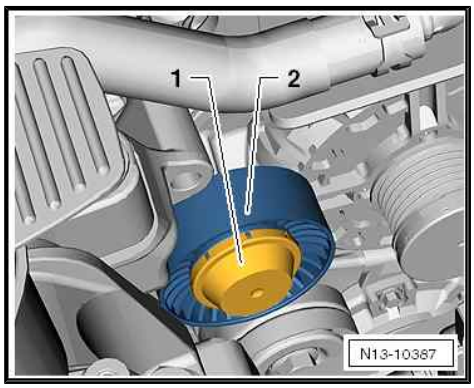

1.4 Poly V-belt tensioner

Removing

– Remove poly V-belt ⇒ page 49 .

– Unplug electrical connector -1- for air conditioner compressor regulating valve - N280- .

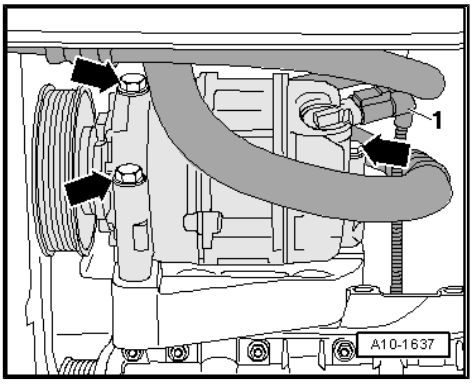

> **WARNING**
>
> *Risk of injury caused by refrigerant.*
>
> ♦ *The air conditioner refrigerant circuit must not be opened.*

– Remove bolts -arrows- for air conditioner compressor.

> **Caution**
>
> *Risk of damage to refrigerant lines and hoses*
>
> ♦ *Do NOT stretch, kink or bend refrigerant lines and hoses.*

– Tie up air conditioner compressor together with refrigerant hoses to longitudinal member (refrigerant hoses remain connected).

– Remove bolt -arrow- and take off tensioner -1-.

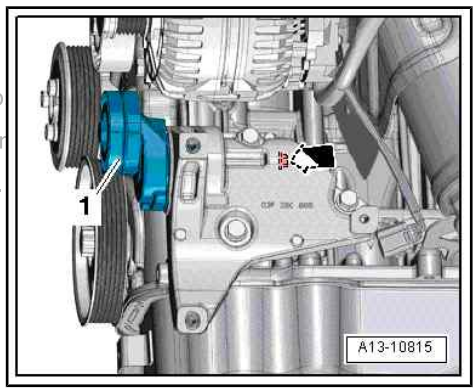

Installing

Protected by copyright. Copying for private or commercial purpo
permitted unless authorised by AUDI AG. AUDI AG does not guar
with respect to the correctness of information in this document.

Installation is carried out in reverse order; note the following:

- Tightening torque
  ⇒ "1.1 Exploded view - poly V-belt drive", page 47

– Install air conditioner compressor ⇒ Rep. gr. 87 .

– Install poly V-belt ⇒ page 49 .

1.5 Removing and installing poly V-belt pulley for crankshaft

Special tools and workshop equipment required

♦ Counterhold tool - 3415- with pins -3415/2-

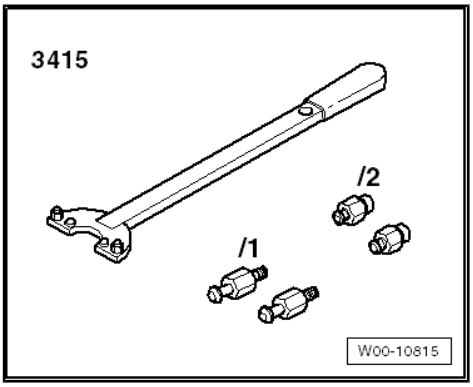

- Locking pin - T10340-

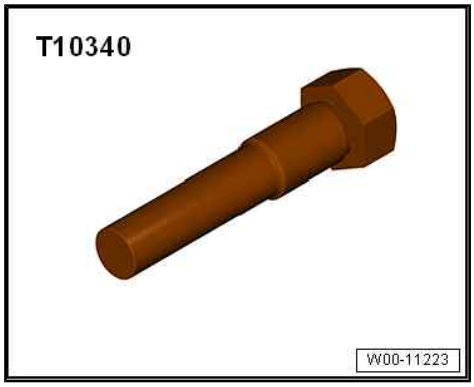

Removing

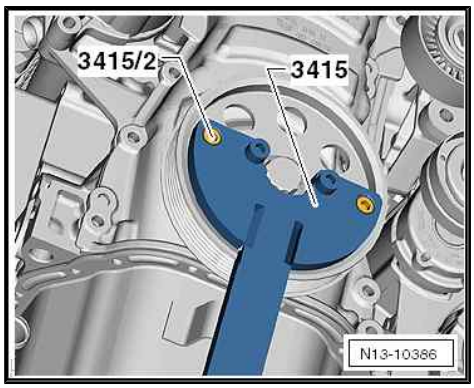

– If fitted, remove noise insulation frame ⇒ General body repairs, exterior; Rep. gr. 50 .

– Remove poly V-belt ⇒ page 49 .

– Loosen bolt for poly V-belt pulley using counterhold tool -3415- with pin -3415/2- .

– Remove bolt and take off poly V-belt pulley and diamond-coated washer.

Installing

- Tightening torque
  ⇒ "1.1 Exploded view - poly V-belt drive", page 47

Protected by copyright. Copying for private or commercial purposes, in part or in whole, is not permitted unless authorised by AUDI AG. AUDI AG does not guarantee or accept any liability with respect to the correctness of information in this document. Copyright by AUDI AG.

Note

- *Renew the bolts tightened with specified tightening angle.*
- *Renew the diamond-coated washer.*
- *All contact surfaces between bolt, poly V-belt pulley, bush and chain sprocket must be free of oil and grease.*
- *Use locking pin - 3415- in addition to counterhold tool - T10340- to prevent slipping and to make sure the tightening torque for the crankshaft pulley bolt is maintained.*

– Remove bolts -1- and -3- and take off bracket -2- for coolant pipe (right-side).

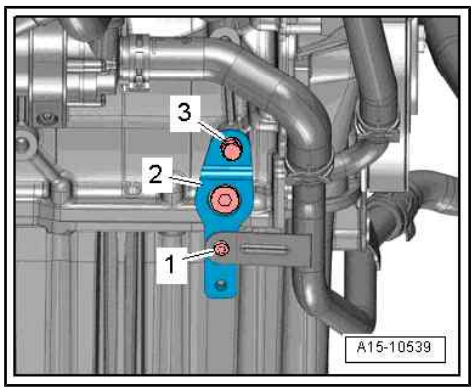

– Unscrew plug -arrow- for “TDC” hole on cylinder block.

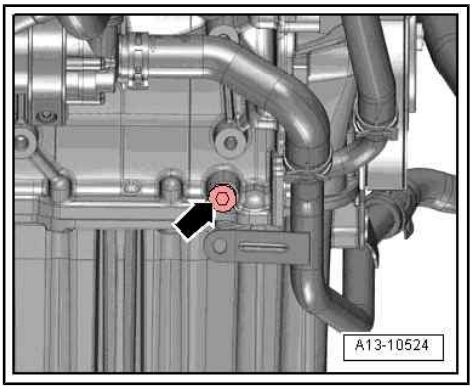

– Screw locking pin - T10340- into cylinder block as far as stop and tighten to 30 Nm.

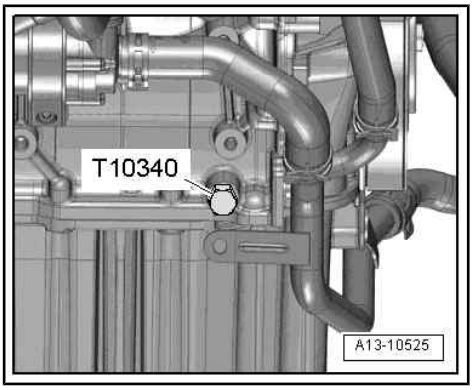

> **Caution**
>
> *Risk of damage to engine.*
>
> - *If the locking pin - T10340- cannot be screwed in as far as the stop, the crankshaft is not in the correct position.*
> - *In this case proceed as follows:*

– Remove locking pin.

– Turn crankshaft by 90° in direction of engine rotation.

– Screw locking pin - T10340- into cylinder block as far as stop and tighten to 30 Nm.

– Turn crankshaft further in normal direction of rotation as far as stop.

• The locking pin is now in contact with the crank web.

Protected by copyright. Copying for private or commercial purposes, in part or in whole, is not permitted unless authorised by AUDI AG. AUDI AG does not guarantee or accept any liability with respect to the correctness of information in this document. Copyright by AUDI AG.

> **Note**
>
> *The locking pin - T10340- locks the crankshaft only in the direction of engine rotation.*

– Fit diamond-coated washer and poly V-belt pulley, lubricate threads of bolt for poly V-belt pulley with oil and screw in by hand until bolt makes contact.

– Turn crankshaft in normal direction of rotation to check whether crankshaft web is resting against locking pin.

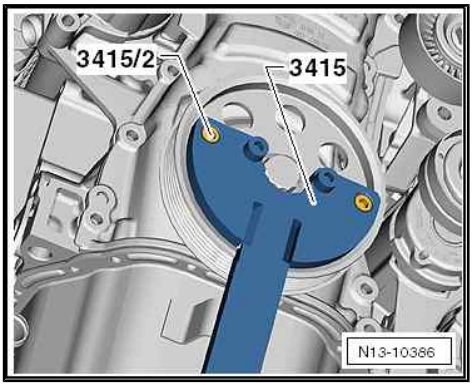

> **Caution**
>
> *Risk of damage to engine.*
>
> - *Also use counterhold tool - 3415- and pin -3415/2- to counterhold poly V-belt pulley when tightening bolt.*

– Tighten bolt for poly V-belt pulley (counterhold with counterhold tool - 3415- and pin -3415/2-).

– Remove locking pin - T10340- .

– Tighten plug for “TDC” drilling ⇒ page 48 .

Remaining installation steps are carried out in reverse sequence; note the following:

– Install coolant pipe (right-side) ⇒ page 171 .

– Install poly V-belt ⇒ page 49 .

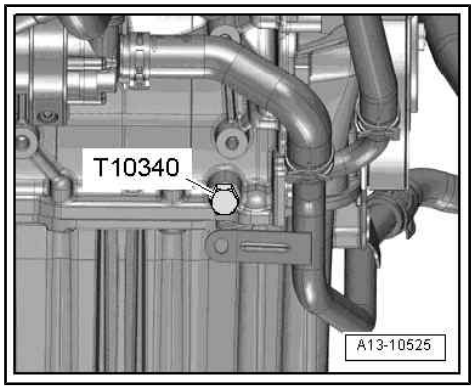

1.6 Removing and installing bracket for ancillaries

Removing

– Remove poly V-belt ⇒ page 49 .

– Unplug electrical connector -1- for air conditioner compressor regulating valve - N280- .

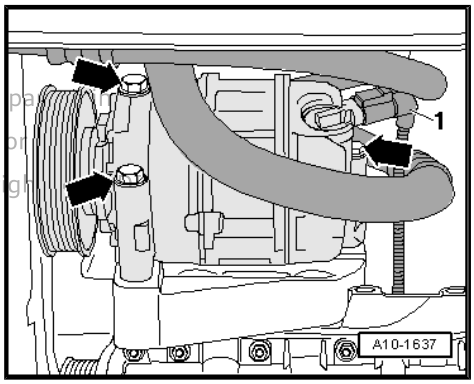

cted by copyright. Copying for private or commercial purposes, in pa
permitted unless authorised by AUDI AG. AUDI AG does not guarantee or
with respect to the correctness of information in this document. Copyrigh

WARNING

Risk of injury caused by refrigerant

- *The air conditioner refrigerant circuit must not be opened.*

– Remove bolts -arrows- for air conditioner compressor.

Caution

Risk of damage to refrigerant lines and hoses

- *Do NOT stretch, kink or bend refrigerant lines and hoses.*

– Tie up air conditioner compressor together with refrigerant hoses to longitudinal member (refrigerant hoses remain connected).

– Remove bolts -1- and detach bracket for ancillaries.

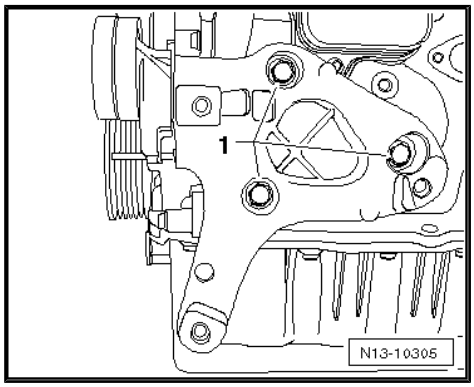

Installing

Installation is carried out in reverse order; note the following:

- Tightening torques
  ⇒ “1.1 Exploded view - poly V-belt drive”, page 47

– Install air conditioner compressor ⇒ Rep. gr. 87 .

– Install poly V-belt ⇒ page 49 .

2 Cylinder block (gearbox end)

Overview

- ⇒ “2.1 Exploded view - flywheel and sealing flange”, page 55
- ⇒ “2.2 Removing and installing flywheel”, page 56
- ⇒ “2.3 Renewing sealing flange”, page 57

2.1 Exploded view - flywheel and sealing flange

Note

Servicing clutch ⇒ Rep. gr. 30

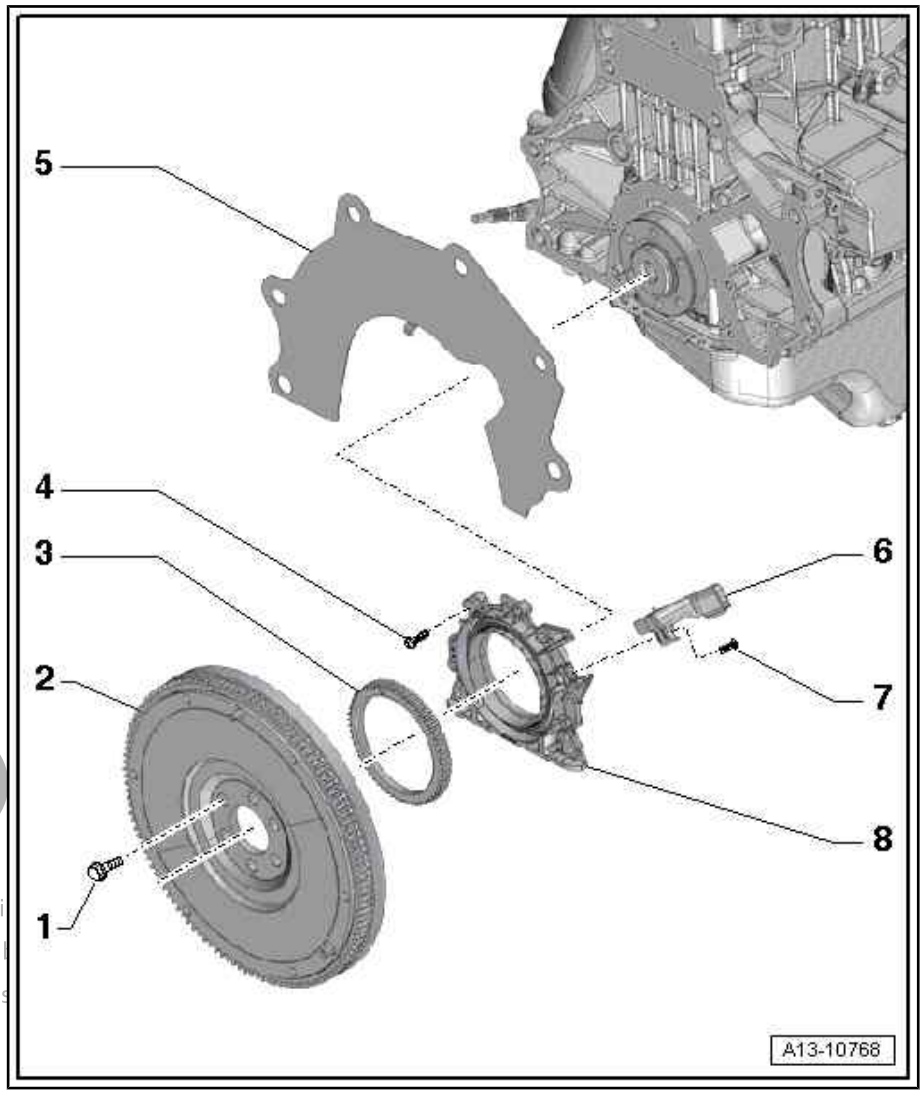

1 - Bolt
- ❑ Renew
- ❑ 60 Nm +90°

2 - Flywheel
- ❑ Different versions available ⇒ Electronic parts catalogue
- ❑ Can only be installed in one position (holes are off-set)
- ❑ Removing and installing ⇒ page 56

3 - Sender wheel
- ❑ For engine speed sender - G28-
- ❑ Removing and installing ⇒ “2.3 Renewing sealing flange”, page 57

4 - Bolt
- ❑ Renew
- ❑ 10 Nm

5 - Intermediate plate
- ❑ Must be positioned on dowel sleeves
- ❑ Do not damage or bend when assembling
- ❑ Is fitted onto sealing flange ⇒ page 56

Protected by copyright. Copyi
permitted unless authorised b
AG, respect to the correctnes

6 - Engine speed sender - G28-
- ❑ Removing and installing ⇒ Rep. gr. 28

7 - Bolt
- ❑ Tightening torque ⇒ Rep. gr. 28

8 - Sealing flange
- ❑ With seal
- ❑ Renewing ⇒ page 57

Installing intermediate plate

– Engage intermediate plate on sealing flange -arrow A- and push onto dowel sleeves -arrows B-.

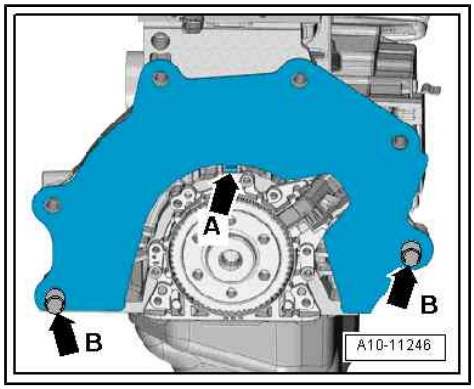

2.2 Removing and installing flywheel

Special tools and workshop equipment required

♦ Counterhold tool - 3067-

Protected by copyright. Copying for private or commercial purposes, in part or in whole, is not permitted unless authorised by AUDI AG. AUDI AG does not guarantee or accept any liability with respect to the correctness of information in this document. Copyright by AUDI AG.

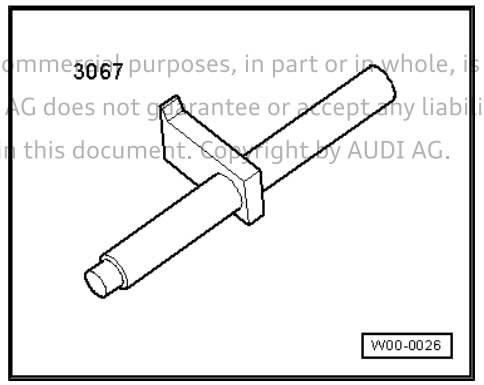

Removing

• Gearbox removed

– On vehicles with manual gearbox: remove clutch pressure plate ⇒ Rep. gr. 30 .

– Insert counterhold tool - 3067- to slacken bolts.

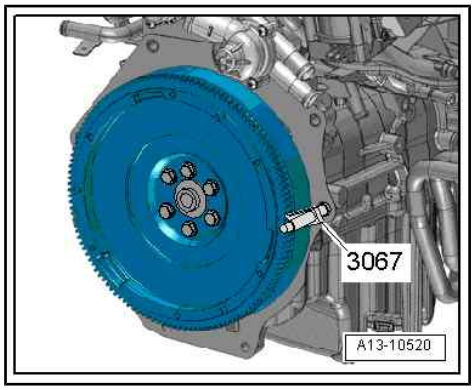

Vehicles with dual-mass flywheel:

Caution

Make sure dual-mass flywheel is not damaged on removal.

- ***Remove bolts -B- using normal hand tools (do not use pneumatic wrench or impact driver, etc.). The bolts may only be removed by hand using conventional tools.***

Protected by copyright. Copying for private or commercial purposes, in part or in whole, is not permitted unless authorised by AUDI AG. AUDI AG does not guarantee or accept any liability with respect to the correctness of information in this document. Copyright by AUDI AG.

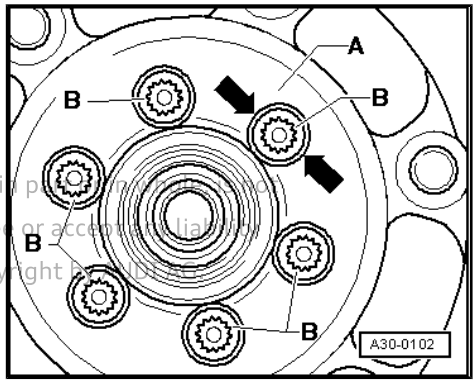

– Rotate the dual-mass flywheel -A- so that the bolts align centrally with the holes -arrows-.

– When unscrewing the bolts, make sure that the bolt heads do not come into contact with the dual-mass flywheel; the flywheel will otherwise be damaged as the bolts are screwed out.

All vehicles (continued):

– Remove bolts and take off flywheel.

Installing

Installation is carried out in reverse order; note the following:

- Tightening torque
  ⇒ “2.1 Exploded view - flywheel and sealing flange”, page 55

Note

- *Renew the bolts tightened with specified tightening angle.*
- *Can only be installed in one position (holes are off-set)*

– Fit counterhold tool - 3067- the other way round to tighten bolts.

– On vehicles with manual gearbox: install clutch pressure plate ⇒ Rep. gr. 30 .

2.3 Renewing sealing flange

Special tools and workshop equipment required

- Open ring spanner - V.A.G 1332/11-

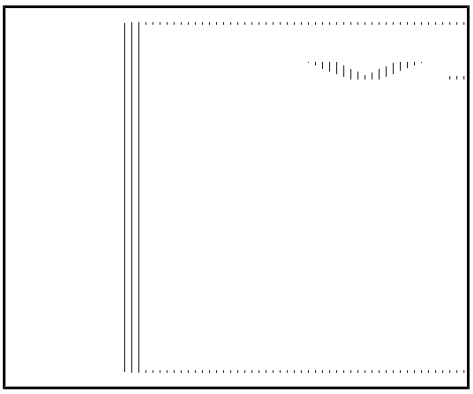

♦ Assembly tool - T10134-

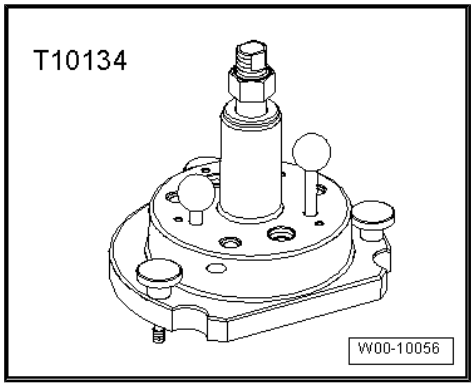

♦ Depth gauge - VAS 6082-

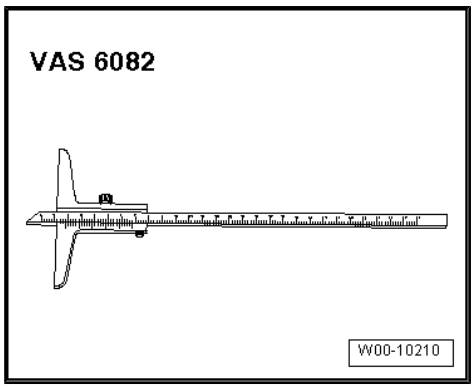

Protected by copyright. Copying for private or commercial purposes, in part or in whole, is not permitted unless authorised by AUDI AG. AUDI AG does not guarantee or accept any liability with respect to the correctness of information in this document. Copyright by AUDI AG.

♦ Bolt, M6x35 (3x)

♦ Feeler gauge

Pressing sealing flange with sender wheel off crankshaft

- Gearbox removed

Note

For illustration purposes, the procedure is shown with the engine removed.

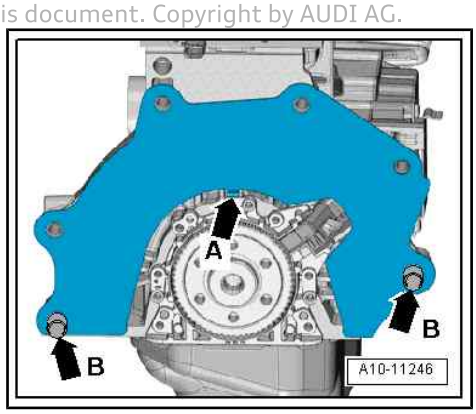

– Remove flywheel ⇒ page 56 .

– Press intermediate plate off dowel sleeves -arrows B- and detach from top of sealing flange -arrow A-

– Remove sump ⇒ page 135 .

– Remove engine speed sender - G28- ⇒ Rep. gr. 28 .

– Remove bolts for sealing flange.

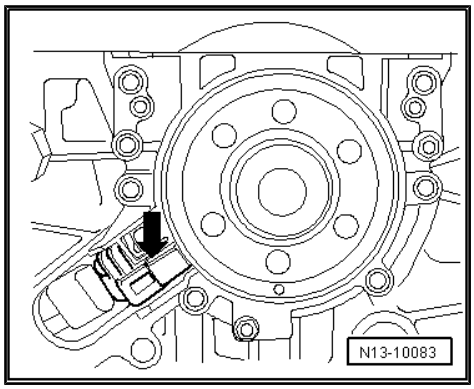

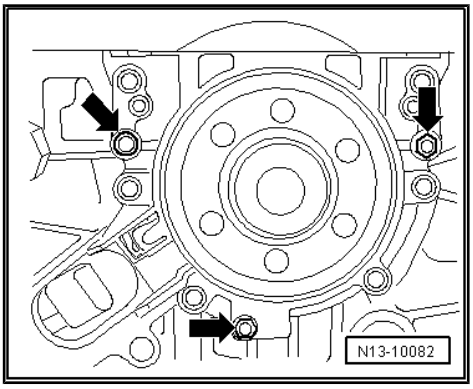

Note

The sealing flange is pressed off the crankshaft together with the sender wheel.

– To press off, screw 3 bolts M6x35 -arrows- alternately into sealing flange not more than $^1/_2$ turn at a time.

– Take off sealing flange with sender wheel.

Pressing in sealing flange with sender wheel

- Tightening torque
  ⇒ "2.1 Exploded view - flywheel and sealing flange", page 55

Note

♦ *The sealing flange with PTFE oil seal is fitted with a sealing lip support ring. This support ring acts as an assembly sleeve and must not be removed before installation.*

♦ *Sealing flange and sender wheel must not be separated or rotated out of position after removal from packaging.*

♦ *The sender wheel is held in its installation position by a locating pin on the assembly tool - T10134- .*

♦ *The sealing flange and oil seal are one unit and can only be replaced together with the sender wheel.*

♦ *The assembly tool - T10134- is held in the correct position relative to the crankshaft by a guide pin which is inserted into a hole in the crankshaft.*

Protected by copyright. Copying for private or commercial purposes, in part or in whole, is not permitted unless authorised by AUDI AG. AUDI AG does not guarantee or accept any liability with respect to the correctness of information in this document. Copyright by AUDI AG.

Construction of assembly tool - T10134- :

A - Tensioning flats

B - Nut

C - Assembly housing

D - Locating pin

E - Hexagon socket-head bolt

F - Guide pin for diesel engines (black handle)

G - Guide pin for petrol engines (red handle)

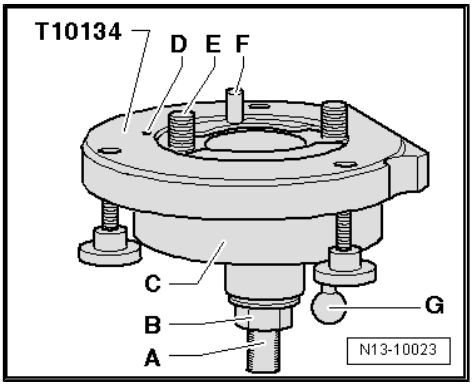

A - Fitting sealing flange with sender wheel onto assembly tool - T10134- :

– Unscrew nut -B- until it is just in front of tightening flats -A- on threaded spindle.

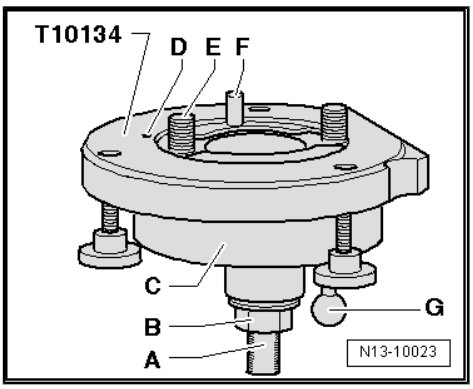

– Clamp assembly tool - T10134- in a vice on tightening flats -A- of threaded spindle.
– Press the assembly housing -C- downwards so that it lies on the nut -B- -arrow-.
• Inner part of assembly device and assembly housing must align (be level) with each other.

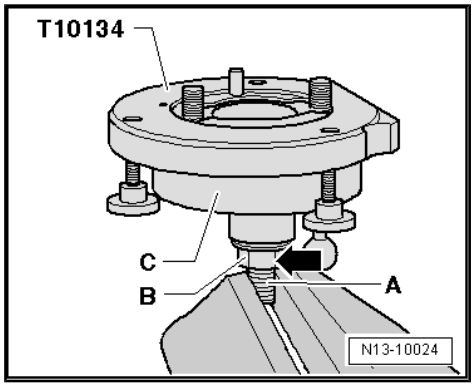

– Remove the securing clip -arrow- from new sealing flange.

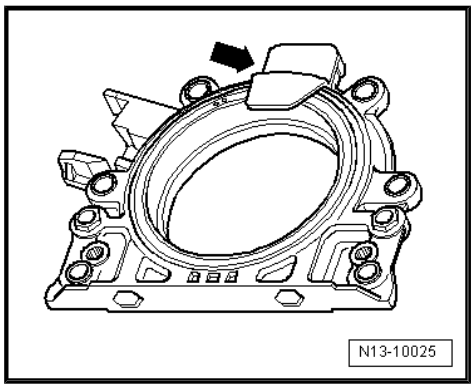

Note

The sender wheel must not be taken out of the sealing flange or rotated out of position.

• The locating hole -A- on the sender wheel -C- must align with the marking -B- on the sealing flange.

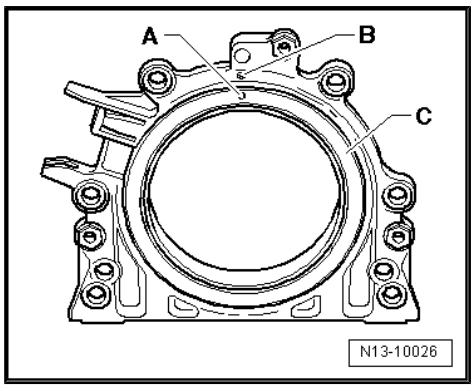

– Place sealing flange (with front side downwards) on a clean flat surface.
– Press the sealing lip support ring -A- downwards in direction of -arrows- until it lies against the flat surface.

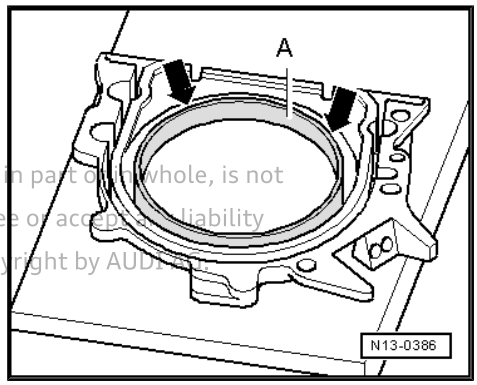

Protected by copyright. Copying for private or commercial purposes, in part or in whole, is not permitted unless authorised by AUDI AG. AUDI AG does not guarantee or accept any liability with respect to the correctness of information in this document. Copyright by AUDI AG.

- The upper edge of the sealing lip support ring must be flush with the front edge of the sealing flange -arrows-.

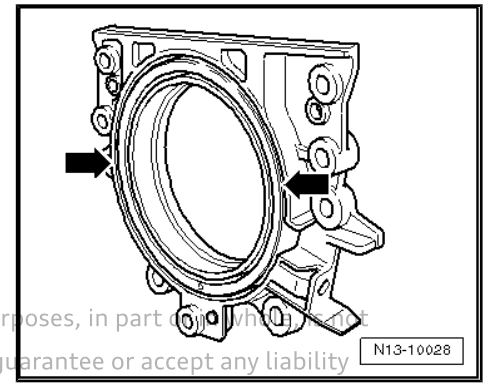

Protected by copyright. Copying for private or commercial purposes, in part or in whole, is not permitted unless authorised by AUDI AG. AUDI AG does not guarantee or accept any liability with respect to the correctness of information in this document. Copyright by AUDI AG.

– Place front side of sealing flange on assembly tool - T10134- , so that locating pin -B- can be inserted in hole -A- in sender wheel.
- Ensure that sealing flange lies flat on assembly tool.

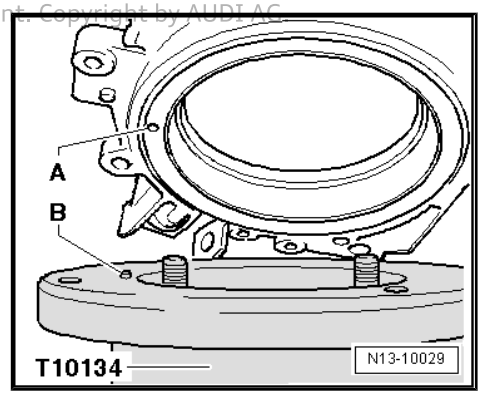

– Press the sealing flange and sealing lip support ring -B- onto the surface of the assembly tool - T10134- while tightening the 3 knurled screws -A- so that the locating pin will not slip out of the hole in the sender wheel.

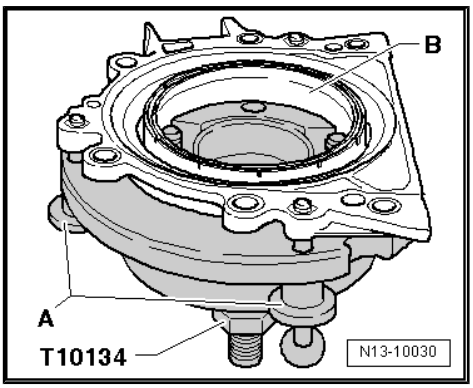

Note

Ensure that the sender wheel remains fixed on the assembly tool when installing the sealing flange.

B - Installing assembly tool - T10134- with sealing flange on crankshaft flange:

- Crankshaft flange must be free of oil and grease.
- Engine is at “TDC” position.

– Screw nut -B- to end of threaded spindle.
– Press threaded spindle of assembly tool - T10134- in direction of -arrow- until nut -B- makes contact with assembly housing -A-.
– Position flat edge of assembly housing towards sealing surface for sump on cylinder block.

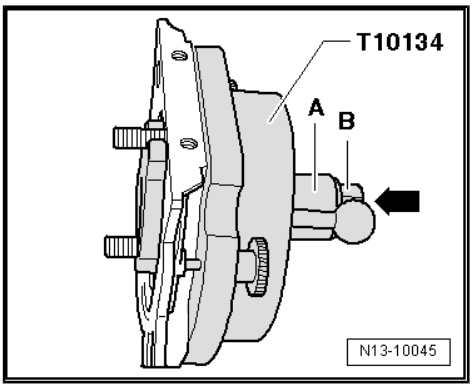

– Secure assembly tool - T10134- to crankshaft flange by screwing hexagon socket head bolts -A- approx. 5 threads into crankshaft flange.

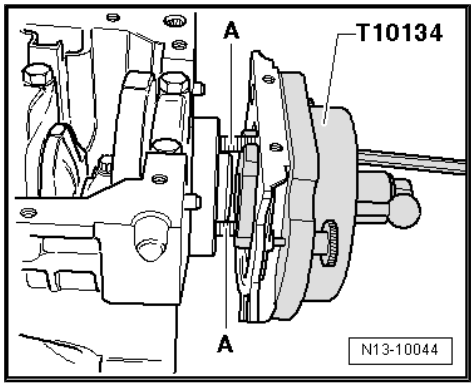

– Screw two bolts M6×35 mm -item A- into cylinder block to guide sealing flange.

Protected by copyright. Copying for private or commercial purposes, in part or in whole, is not permitted unless authorised by AUDI AG. AUDI AG does not guarantee or accept any liability with respect to the correctness of information in this document. Copyright by AUDI AG.

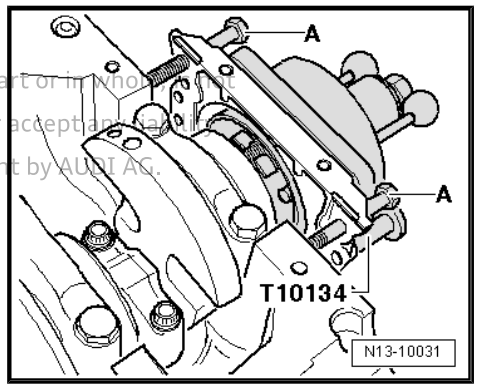

C - Securing assembly tool - T10134- onto crankshaft flange:

– Press the assembly housing -C- by hand in the direction of the -arrow- until the sealing lip support ring -B- lies on the surface of the crankshaft flange -A-.

– Press the guide pin for petrol engines (red handle) -F- into aperture in crankshaft. This ensures that sender wheel reaches its final installation position.

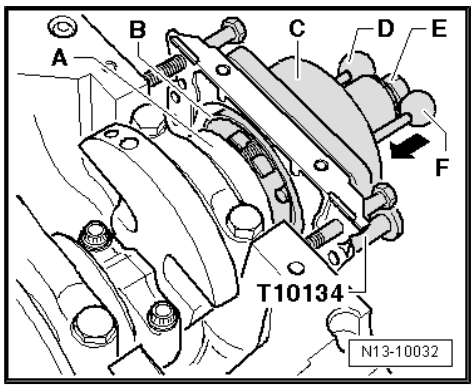

Note

The guide pin for diesel engines (black handle) -D- must not be inserted into threaded hole in crankshaft.

– Tighten the two hexagon socket head bolts on assembly tool hand-tight.

– Screw nut -E- onto threaded spindle by hand until it lies against the assembly housing -C-.

D - Pressing sender wheel onto crankshaft flange with assembly tool - T10134- :

– Tighten nut on assembly tool - T10134- to 35 Nm.

• A small air gap must be present between cylinder block and sealing flange after tightening nut to 35 Nm.

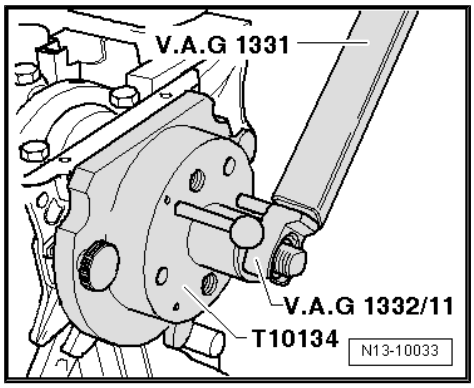

E - Checking installation position of sender wheel on crankshaft:

– Screw nut -E- to end of threaded spindle.

– Remove both bolts -A- from cylinder block.

– Unscrew knurled screws -B- from sealing flange.

– Unbolt assembly tool - T10134- from crankshaft flange (remove hexagon socket head bolts from crankshaft flange).

– Detach sealing lip support ring.

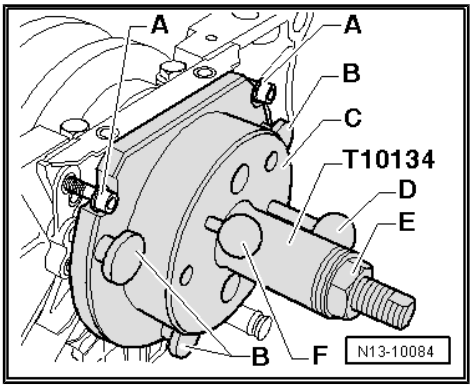

– Apply depth gauge - VAS 6082- to crankshaft flange.

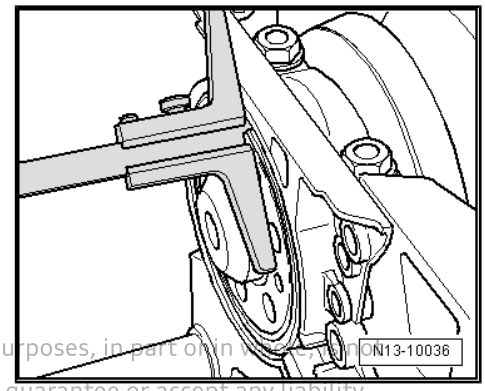

Protected by copyright. Copying for private or commercial purposes, in part or in whole, is not permitted unless authorised by AUDI AG. AUDI AG does not guarantee or accept any liability with respect to the correctness of information in this document. Copyright by AUDI AG.

– Measure distance -a- between crankshaft flange -A- and sender wheel -B-.

• Specification: Distance -a- = 0.5 mm.

– Press sender wheel in further if distance is too small ⇒ page 63 .

– If reading matches specification, continue with assembly ⇒ page 64 .

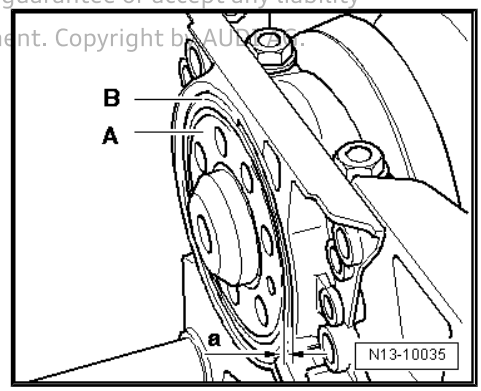

F - Pressing sender wheel in further:

– Secure assembly tool - T10134- to crankshaft flange by tightening hexagon socket head bolts -A- hand-tight.

– Slide assembly tool - T10134- onto sealing flange by hand.

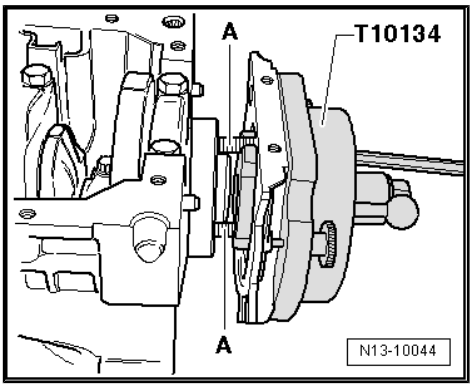

– Screw nut -E- onto threaded spindle by hand until it lies against the assembly housing -C-.

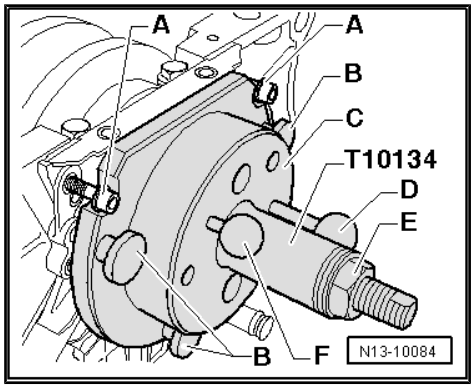

– Tighten nut on assembly tool - T10134- to 40 Nm.

Protected by copyright. Copying for private or commercial purposes, in part or in whole, is not permitted unless authorised by AUDI AG. AUDI AG does not guarantee or accept any liability with respect to the correctness of information in this document. Copyright by AUDI AG.

– Check installation position of sender wheel on crankshaft again ⇒ page 63 .

– Tighten nut on assembly tool - T10134- to 45 Nm if distance is too small.

– Check installation position of sender wheel on crankshaft again ⇒ page 63 .

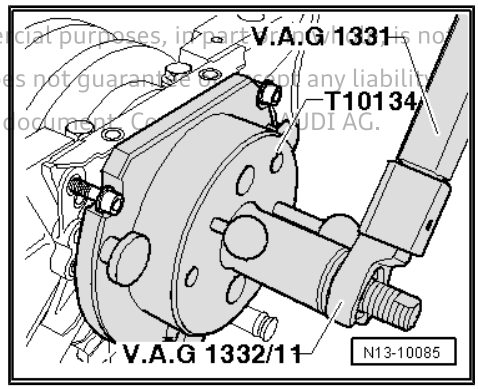

Assembling:

- Tightening torque
  ⇒ “2.1 Exploded view - flywheel and sealing flange”, page 55

Note

Renew sealing flange bolts.

– Tighten bolts for sealing flange in diagonal sequence.

– Install engine speed sender - G28- ⇒ Rep. gr. 28 .

– Install sump ⇒ page 135 .

– Install intermediate plate ⇒ page 56 .

– Install flywheel ⇒ page 56 .

3 Crankshaft

Overview

- ⇒ “3.1 Extracting and driving in needle bearing for crankshaft - vehicles with dual clutch gearbox”, page 65

> **Caution**
>
> *Risk of deformation of the cylinder block bearing pedestals.*
>
> - *The crankshaft must not be removed. Even loosening the main bearing cap bolts will cause deformation of the cylinder block bearing pedestals. This will result in reduced bearing clearance. Even if bearing shells are not renewed, a change in bearing clearance can cause bearing damage.*
> - *If the bearing cap bolts are loosened, the cylinder block must be renewed together with the crankshaft.*
> - *Crankshaft bearing clearance cannot be measured using workshop equipment.*

Protected by copyright. Copying for private or commercial purposes, in part or in whole, is not permitted unless authorised by AUDI AG. AUDI AG does not guarantee or accept any liability with respect to the correctness of information in this document. Copyright by AUDI AG.

3.1 Extracting and driving in needle bearing for crankshaft - vehicles with dual clutch gearbox

Special tools and workshop equipment required

- Centring mandrel - 3176-

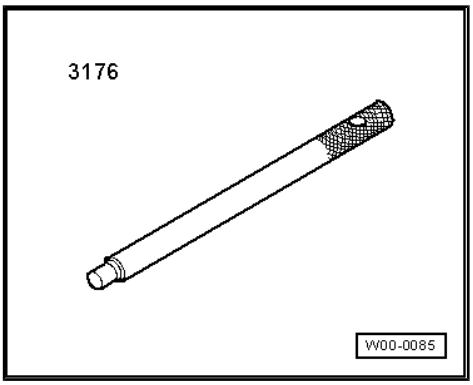

- Puller - T10055- with adapter -T10055/3-

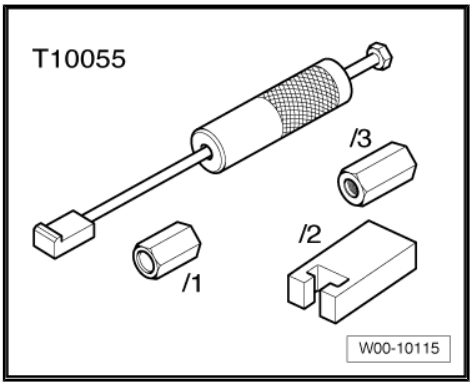

♦ -1- Internal puller Kukko 21/2

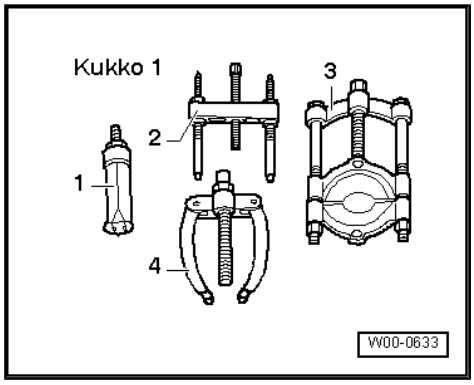

Procedure

- Gearbox removed

– Remove flywheel ⇒ page 56 .

– Use internal puller Kukko 21/2, adapter -T10055/3- and puller - T10055- to pull out needle bearing.

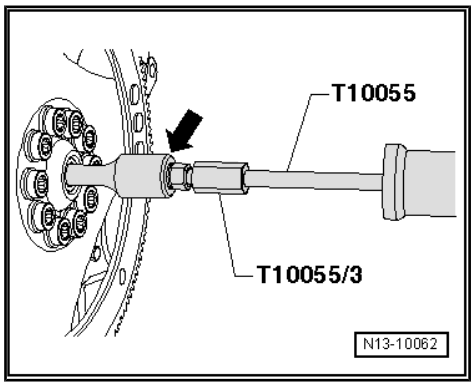

– Drive in needle bearing with centring mandrel - 3176- .

– Install flywheel ⇒ page 56 .

Protected by copyright. Copying for private or commercial purpos
permitted unless authorised by AUDI AG. AUDI AG does not guara
with respect to the correctness of information in this document.

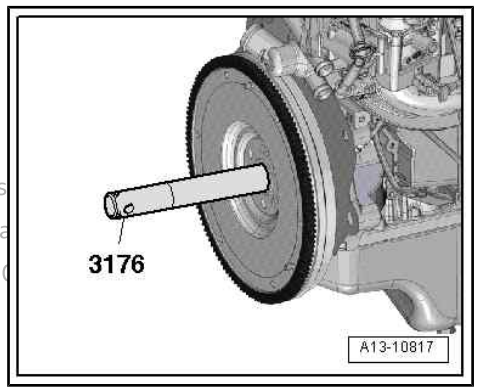

4 Pistons and conrods

Overview

- ⇒ “4.1 Exploded view - pistons and conrods”, page 67
- ⇒ “4.2 Removing and installing pistons”, page 69
- ⇒ “4.3 Measuring radial clearance of conrods”, page 70
- ⇒ “4.4 Checking pistons and cylinder bores”, page 71

4.1 Exploded view - pistons and conrods

Note

- *All bearing and running surfaces must be oiled before assembling.*
- *Oil spray jet and pressure relief valve ⇒ page 69*

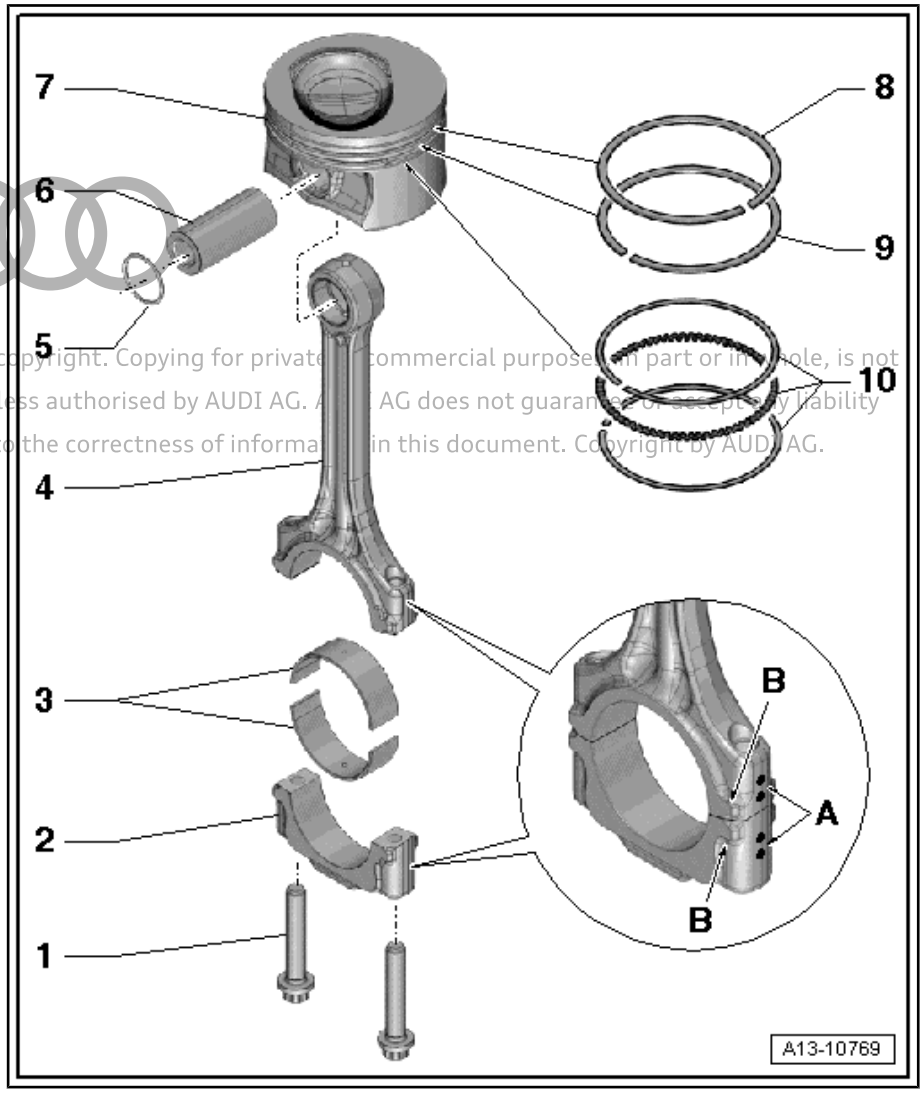

Protected by copyright. Copying for private or commercial purposes, in part or in whole, is not permitted unless authorised by AUDI AG. AUDI AG does not guarantee or accept any liability with respect to the correctness of information in this document. Copyright by AUDI AG.

1 - Bolts
- ❑ Renew
- ❑ Use old bolts when measuring radial clearance
- ❑ Lubricate threads and contact surface
- ❑ 30 Nm +90°

2 - Conrod bearing cap
- ❑ Due to the cracking method used to separate the bearing cap from the conrod in manufacture, the caps only fit in one position and only on the appropriate conrod
- ❑ Mark cylinder allocation in colour -A-
- ❑ Installation position: Markings -B- must be on same side

3 - Bearing shells
- ❑ With oil drilling
- ❑ Renew used bearing shells
- ❑ Installation position ⇒ page 68

4 - Conrod
- ❑ Only renew as a complete set
- ❑ With industrially cracked conrod bearing cap
- ❑ Separating parts of new conrod ⇒ page 69
- ❑ Mark cylinder allocation in colour -A-
- ❑ Installation position: Markings -B- must be on same side
- ❑ Guided axially via piston

- ❑ Measuring radial clearance ⇒ page 70

5 - Circlip

- ❑ 2x
- ❑ Renew

6 - Piston pin

- ❑ Removing and installing ⇒ “4.2 Removing and installing pistons”, page 69

7 - Piston

- ❑ Removing and installing ⇒ page 69
- ❑ Mark installation position and cylinder number
- ❑ Installation position: arrow on piston crown points to pulley end
- ❑ Checking pistons and cylinder bores ⇒ page 71

8 - Compression ring

- ❑ Marking “TOP” or side with lettering faces towards piston crown
- ❑ Use piston ring pliers to remove and install
- ❑ Measuring ring gap ⇒ page 71
- ❑ Measuring ring-to-groove clearance ⇒ page 72

9 - Compression ring

- ❑ Marking “TOP” or side with lettering faces towards piston crown
- ❑ Offset gap 120° relative to adjacent oil scraper ring
- ❑ Use piston ring pliers to remove and install
- ❑ Measuring ring gap ⇒ page 71
- ❑ Measuring ring-to-groove clearance ⇒ page 72

10 - Oil scraper ring

- ❑ 3 parts
- ❑ Offset gap of top steel element of piston ring by 120° to next compression ring
- ❑ Offset gaps of individual parts of oil scraper ring
- ❑ Measuring ring gap ⇒ page 71
- ❑ Ring-to-groove clearance cannot be checked

Installation position of bearing shells in conrods

– Insert bearing shells centrally in conrod/conrod bearing cap.

• Distance -a- = approx. 1.0 mm.

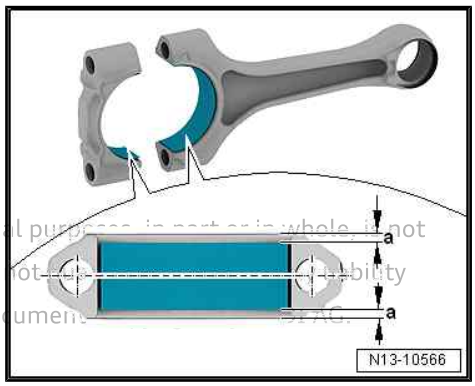

Protected by copyright. Copying for private or commercial purposes, in part or in whole, is not permitted unless authorised by AUDI AG. AUDI AG does not guarantee or assume any liability with respect to the correctness of information in this document. ©2019 AUDI AG.

Oil spray jet and pressure relief valve

1 - Bolt with pressure relief valve, 27 Nm

2 - Oil spray jet (for cooling of pistons)

- Installation position: align locating edge of oil spray jet with machined surface of cylinder block.

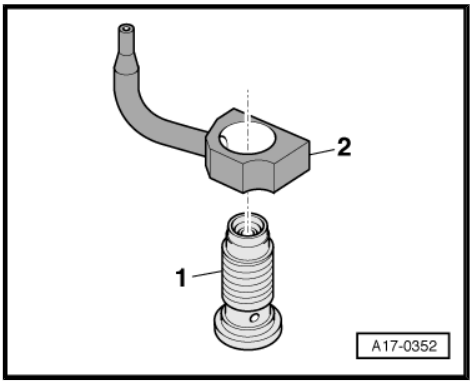

Note

- *Do not bend oil spray jets.*
- *Always renew bent oil spray jets.*

Protected by copyright. Copying for private or commercial purposes, in part or in whole, is not permitted unless authorised by AUDI AG. AUDI AG does not guarantee or accept any liability with respect to the correctness of information in this document. Copyright by AUDI AG.

Separating parts of new conrod

It is possible that the two parts of a new conrod are not completely separated as intended. If it is not possible to take off the conrod bearing cap by hand, proceed as follows:

– To avoid any risk of damage, the conrod should only be clamped lightly in a vice using jaw covers as shown in illustration.

- The conrod is clamped in position below the dotted line.

– Unscrew bolts -arrows- approx. 5 turns.

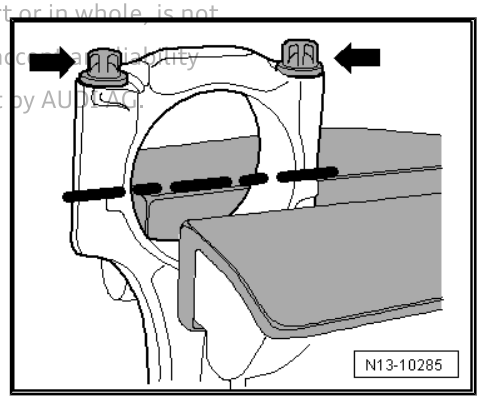

– Using a plastic hammer, carefully knock conrod bearing cap loose -arrow-.

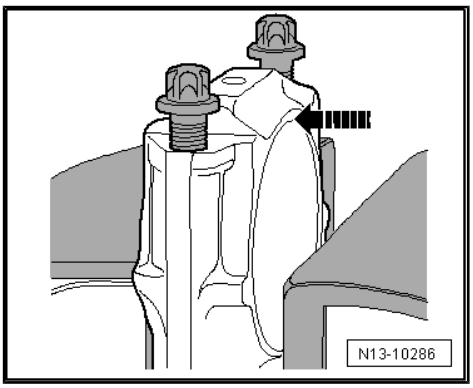

4.2 Removing and installing pistons

Special tools and workshop equipment required

♦ Pin - VW 222 A-

♦ Piston ring clamp, commercially available

Removing

– Remove cylinder head ⇒ page 106 .

– Remove sump ⇒ page 135 .

– Mark installation position and cylinder number of piston.

– Mark installation position and matching of cylinder and conrod bearing cap to conrod ⇒ Item 4 (page 67) .

– Remove conrod bearing cap and pull out piston and conrod upwards.

Note

If piston pin is difficult to remove, heat piston to approx. 60 °C.

– Take circlip out of piston pin boss.

– Use drift - VW 222 A- to drive out piston pin.

Installing

Installation is carried out in reverse order; note the following:

• Tightening torques
⇒ "4.1 Exploded view - pistons and conrods", page 67

Note

Renew bolts tightened with specified tightening angle.

– Oil running surfaces of bearing shells.

– Install pistons using commercially available piston ring clamp.

Protected by copyright. Copying for private or commercial purposes, in part or in whole, is not permitted unless authorised by AUDI AG. AUDI AG does not guarantee or accept any liability with respect to the correctness of information in this document. Copyright by AUDI AG.

• Installation position ⇒ Item 7 (page 68) .

– Install conrod bearing caps according to markings.

– Install sump ⇒ page 135 .

– Install cylinder head ⇒ page 106 .

4.3 Measuring radial clearance of conrods

Special tools and workshop equipment required

♦ Plastigauge

Procedure

– Remove conrod bearing cap. Clean bearing cap and bearing journal.

– Place a length of Plastigauge corresponding to the width of the bearing on the bearing journal or in the bearing shell.

– Fit conrod bearing cap and secure with old bolts
⇒ Item 1 (page 67) without rotating crankshaft.

– Remove conrod bearing cap again.

– Compare width of Plastigauge with measurement scale.

Radial clearance:

• New: 0.02 ... 0.06 mm.

• Wear limit: 0.09 mm.

– Renew conrod bolts.

4.4 Checking pistons and cylinder bores

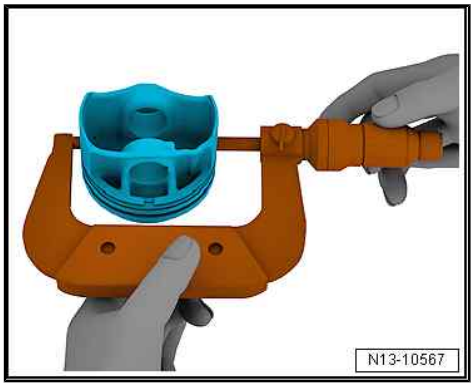

Checking piston

– Using a micrometer (75 ... 100 mm), measure approx. 12 mm from the lower edge, perpendicular to the piston pin axis.

• Maximum deviation from nominal dimension: 0.04 mm.

Piston Ø mm	
Basic dimension	70.955[1)]
Repair oversize I	71.205[1)]
Repair oversize II	71.455[1)]
• [1)] Dimensions including coating (thickness 0.01 mm). The coating will wear down in service.	

Protected by copyright. Copying for private or commercial purposes, in part or in whole, is not permitted unless authorised by AUDI AG. AUDI AG does not guarantee or accept any liability with respect to the correctness of information in this document. Copyright by AUDI AG

Measuring cylinder bore

– Use a cylinder gauge - VAS 6078- to take measurements at 3 points in transverse direction -A- and in longitudinal direction -B-.

• Maximum deviation from nominal dimension: 0.08 mm.

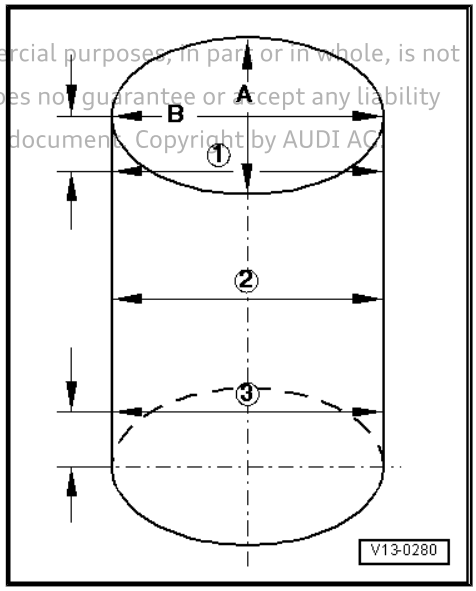

Note

Do not mount cylinder block on engine and gearbox support - VAS 6095- , as incorrect measurements may result.

Cylinder bore Ø mm	
Basic dimension	71.000
Repair oversize I	71.250
Repair oversize II	71.500

Measuring piston ring gap

– Insert piston ring at right angle to cylinder wall from above and push down into lower cylinder opening approx. 15 mm from bottom of cylinder. To do so, use a piston without rings.

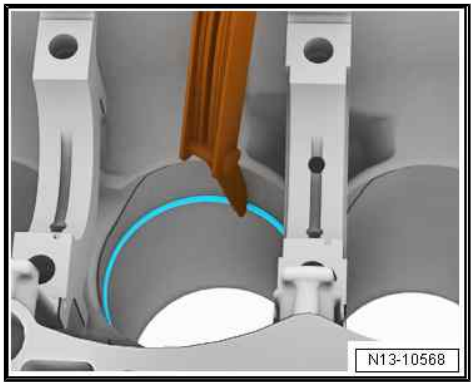

Piston ring	new mm	Wear limit mm
1st compression ring	0.20 … 0.40	1.00
2nd compression ring	0.40 … 0.60	1.00
Oil scraper ring	0.25 … 0.75	No wear limit data available

Measuring ring-to-groove clearance

– Clean groove in piston before checking clearance.

Piston ring	new mm	Wear limit mm
1st compression ring	0.03 … 0.09	0.15
2nd compression ring	0.02 … 0.06	0.15
Oil scraper ring	Cannot be measured	

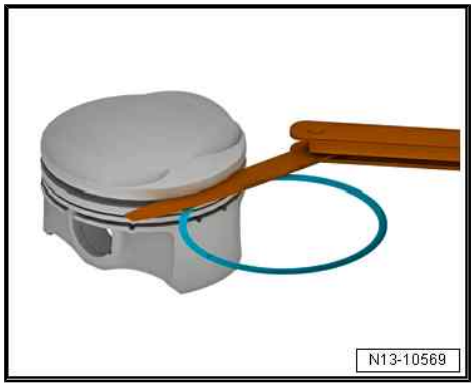

Protected by copyright. Copying for private or commercial purposes, in part or in whole, is not permitted unless authorised by AUDI AG. AUDI AG does not guarantee or accept any liability with respect to the correctness of information in this document. Copyright by AUDI AG.

15 – Cylinder head, valve gear

1 Chain drive

Overview

- ⇒ “1.1 Exploded view - timing chain covers”, page 73
- ⇒ “1.2 Renewing crankshaft oil seal”, page 75
- ⇒ “1.3 Removing and installing timing chain cover (top)”, page 77
- ⇒ “1.4 Removing and installing timing chain cover (bottom)”, page 79
- ⇒ “1.5 Exploded view - camshaft timing chain”, page 82
- ⇒ “1.6 Checking valve timing”, page 83
- ⇒ “1.7 Detaching camshaft timing chain from camshaft sprocket”, page 85
- ⇒ “1.8 Removing and installing camshaft timing chain”, page 92
- ⇒ “1.9 Checking timing chain”, page 99

1.1 Exploded view - timing chain covers

Protected by copyright. Copying for private or commercial purposes, in part or in whole, is not permitted unless authorised by AUDI AG. AUDI AG does not guarantee or accept any liability with respect to the correctness of information in this document. Copyright by AUDI AG.

1 - Cover (bottom)

- ❑ For timing chain
- ❑ Removing and installing ⇒ page 79
- ❑ Apply sealant when installing; refer to ⇒ Electronic parts catalogue

2 - Oil seal

- ❑ For crankshaft
- ❑ Renewing ⇒ page 75

3 - Bolt

- ❑ Renew
- ❑ Tightening torque and sequence ⇒ page 75

4 - Cover (top)

- ❑ For timing chain
- ❑ Removing and installing ⇒ page 77
- ❑ Apply sealant when installing; refer to ⇒ Electronic parts catalogue

5 - Bolt

- ❑ Renew
- ❑ Tightening torque and sequence ⇒ page 74

6 - Dowel pins

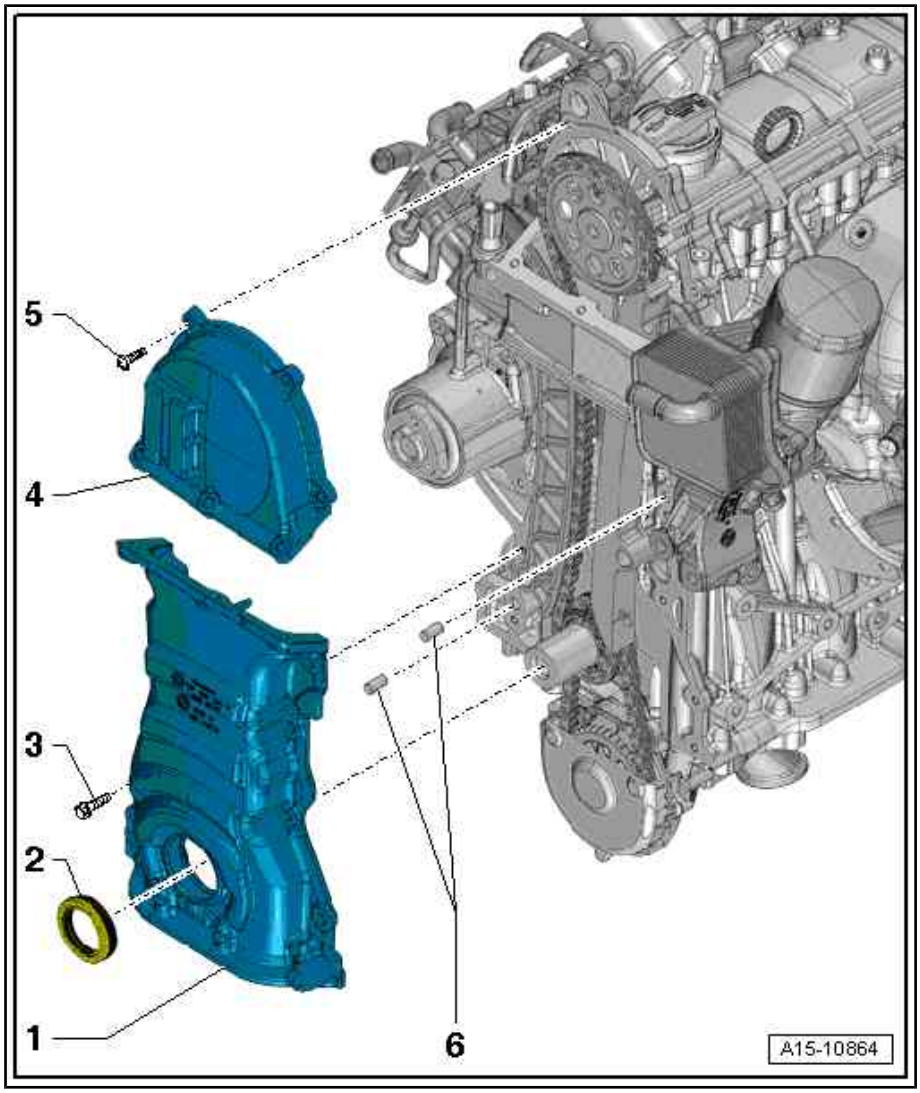

Timing chain cover (top) - tightening torque and tightening sequence

– Tighten bolts in 2 stages in the sequence shown:

Stage	Bolts	Tightening torque
1.	-A ... E-	5 Nm

Protected by copyright. Copying for private or commercial purposes, permitted unless authorised by AUDI AG. AUDI AG does not guarant with respect to the correctness of information in this document. Cop

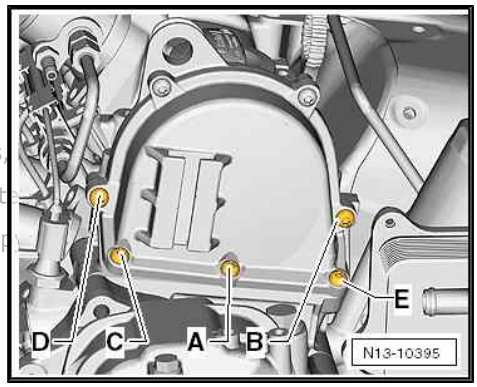

Stage	Bolts	Tightening torque
2.	-A … G-	8 Nm

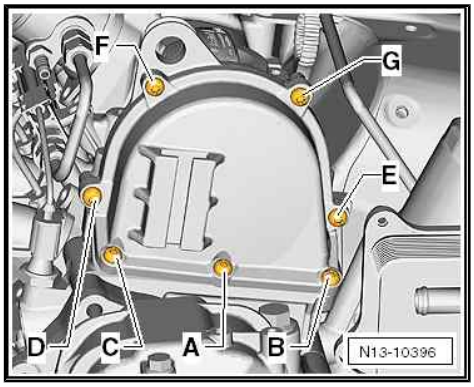

Timing chain cover (bottom) - tightening torque and tightening sequence

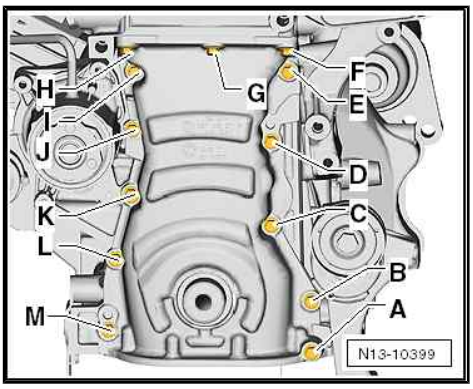

Note

Renew the bolts tightened with specified tightening angle.

– Tighten bolts in 2 stages in the sequence shown:

Stage	Bolts	Tightening torque/angle specification
1.	-A … M-	5 Nm
2.	-A … M-	Turn 30° further

Protected by copyright. Copying for private or commercial purposes, in part or in whole, is not permitted unless authorised by AUDI AG. AUDI AG does not guarantee or accept any liability with respect to the correctness of information in this document. Copyright by AUDI AG.

1.2 Renewing crankshaft oil seal

Special tools and workshop equipment required

♦ Extension - 3161-

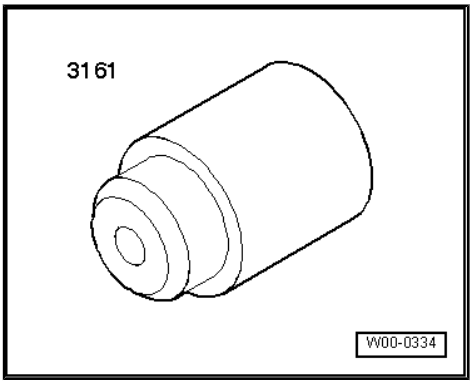

♦ Oil seal extractor - 3240-

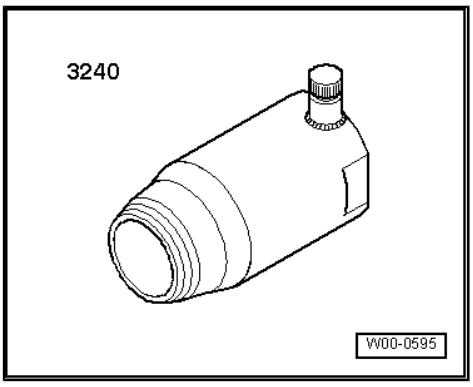

♦ Assembly tool - T10417-

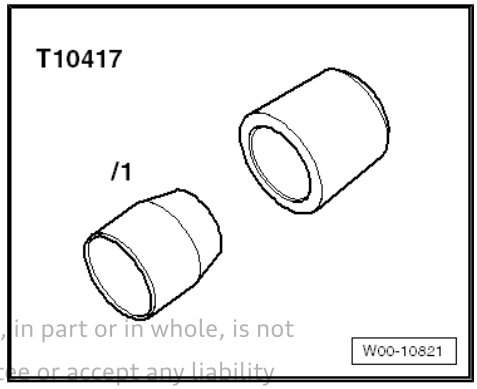

Protected by copyright. Copying for private or commercial purposes, in part or in whole, is not permitted unless authorised by AUDI AG. AUDI AG does not guarantee or accept any liability with respect to the correctness of information in this document. Copyright by AUDI AG.

Procedure

– Remove front wheel housing liner (front section, right-side) ⇒ Rep. gr. 66 .

– Remove poly V-belt pulley for crankshaft ⇒ page 51 .

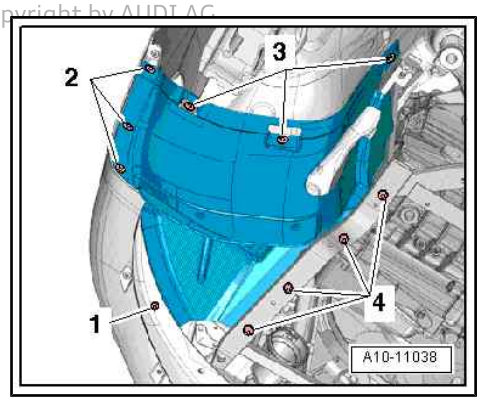

– Fit extension - 3161- into oil seal extractor - 3240- .

– Unscrew inner section of oil seal extractor -3240- approx. 30 mm and lock with knurled screw.

– Lubricate threaded head of oil seal extractor, place it in position and screw it into oil seal as far as possible (applying firm pressure).

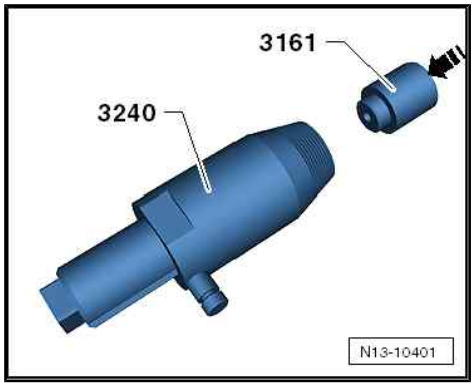

– Loosen knurled screw and turn inner part against crankshaft in direction of -arrow- until the oil seal is pulled out.

– Clamp flats of oil seal extractor in vice and use pliers to remove oil seal.

– Clean contact surface and sealing surface for oil seal.

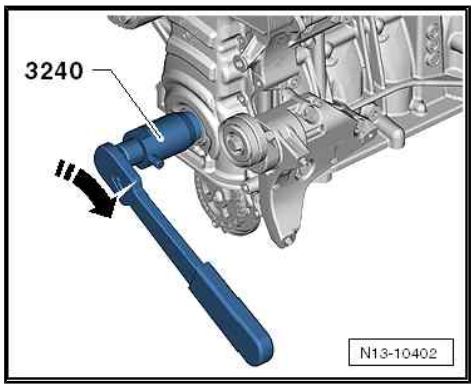

Note

Do not lubricate sealing lip and outer rim of oil seal before pressing in.

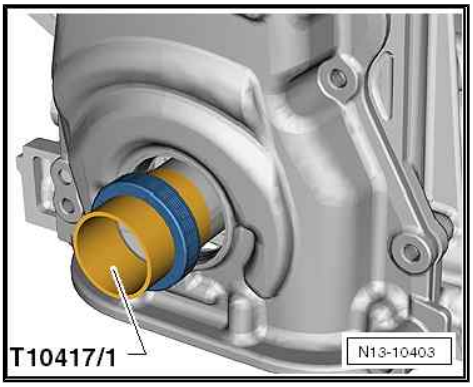

– Apply guide sleeve -T10417/1- to crankshaft and slide oil seal over guide sleeve.
– Take off guide sleeve.

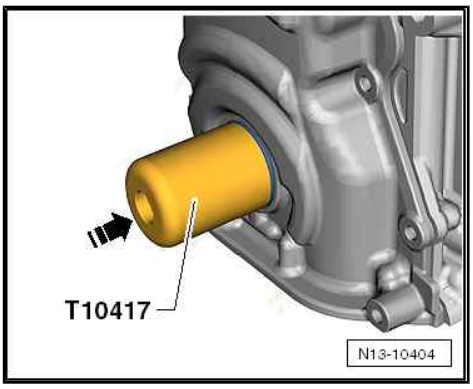

– Drive in oil seal carefully as far as stop using assembly tool -T10417- and a hammer.

Installation is carried out in the reverse order; note the following:

– Install poly V-belt pulley for crankshaft ⇒ page 51 .
– Install front wheel housing liner ⇒ Rep. gr. 66 .

1.3 Removing and installing timing chain cover (top)

Protected by copyright. Copying for private or commercial purposes, in part or in whole, is not permitted without the consent of AUDI AG. AUDI AG does not guarantee or accept any liability with respect to the correctness of information in this document. Copyright by AUDI AG.

Special tools and workshop equipment required

- Electric drill with plastic brush attachment
- Safety goggles
- Sealant ⇒ Electronic parts catalogue

Removing

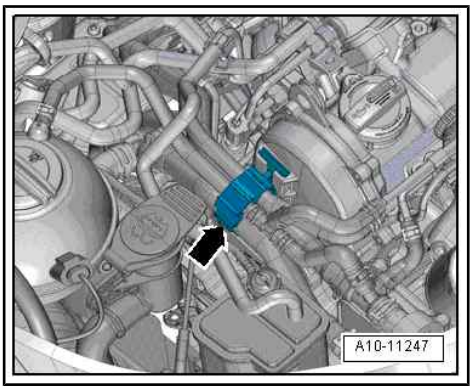

– Press release tab at bottom of bracket and unhook bracket -arrow- from timing chain cover (top) with coolant hoses still attached.

– Loosen and remove bolts in sequence -G … A-.

– Carefully release timing chain cover (top) from bonded joint and remove cover.

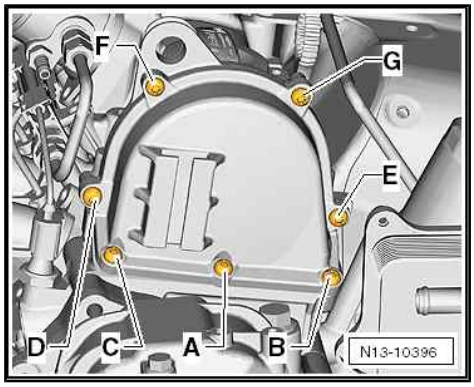

Installing

- Tightening torques
  ⇒ Fig. ""Timing chain cover (top) - tightening torque and tightening sequence"" , page 74

> ⚠ **Caution**
>
> *Protect lubrication system against contamination.*
>
> ♦ *Cover exposed parts of the engine.*

– Remove old sealant from grooves on timing chain cover (top) and from sealing surfaces.

> ⚠ **WARNING**
>
> *Risk of eye injury.*
>
> ♦ *Put on safety goggles.*

Protected by copyright. Copying for private or commercial purposes, in part or whole, is not permitted unless authorised by AUDI AG. AUDI AG does not guarantee or assume liability with respect to the correctness of information in this document. Copyright by AUDI AG.

– Remove remaining sealant on timing chain cover (top) and cylinder head cover using rotating plastic brush or similar.

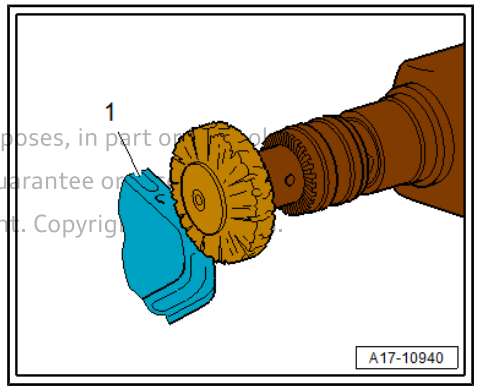

> ℹ **Note**
>
> *Note the use-by date of the sealant.*

– Cut off nozzle of tube at front marking (nozzle ∅ approx. 2.5 mm).

– Clean sealing surfaces; they must be free of oil and grease.

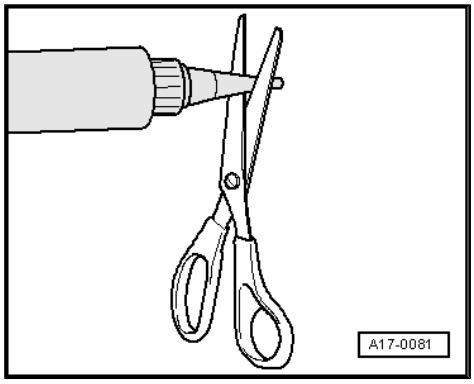

Copyright by Copyright Copyright Commercial purposes not permitted and distribution is prohibited. AUDI AG does not guarantee or assume any liability with respect to the correctness of information in this document.

Caution

Make sure lubrication system is not clogged by excess sealant.

- ***The sealant bead must not be thicker than specified.***

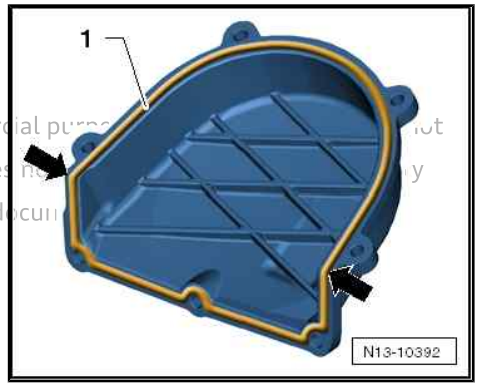

– Apply bead of sealant -1- onto clean sealing surface of timing chain cover (top) as shown in illustration.

- The bead of sealant must be 2.0 ... 3.0 mm thick.

– Apply slightly more sealant to area marked by -arrows-.

Note

The timing chain cover must be installed within 5 minutes after applying the sealant.

– Fit timing chain cover (top), screw bolts in by hand until they make contact and then tighten bolts ⇒ page 74 .

The remaining installation steps are carried out in the reverse sequence.

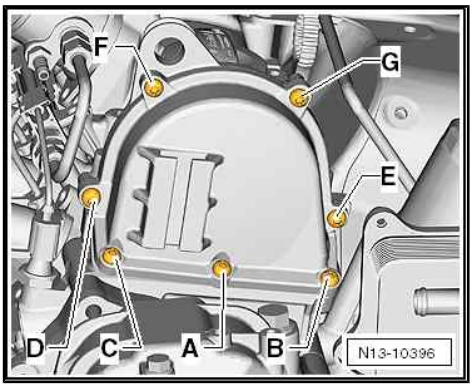

1.4 Removing and installing timing chain cover (bottom)

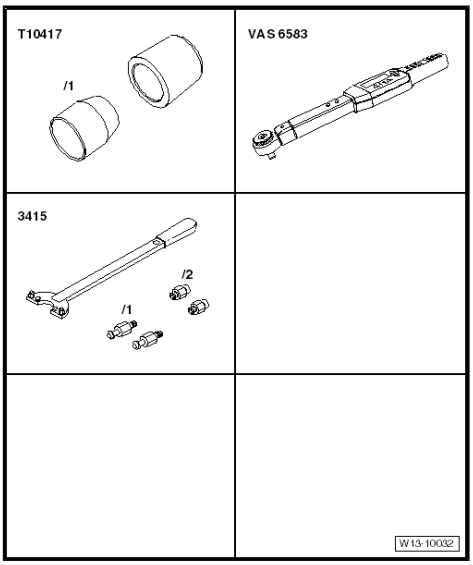

Special tools and workshop equipment required

- Assembly tool - T10417/1-
- Torque wrench - VAS 6583-
- Counterhold tool - 3415-
- Pin - 3415/2-
- Socket - VAS 262 001- (not illustrated)

- ♦
- ♦ Electric drill with plastic brush attachment
- ♦ Safety goggles
- ♦ Sealant ⇒ Electronic parts catalogue

Removing

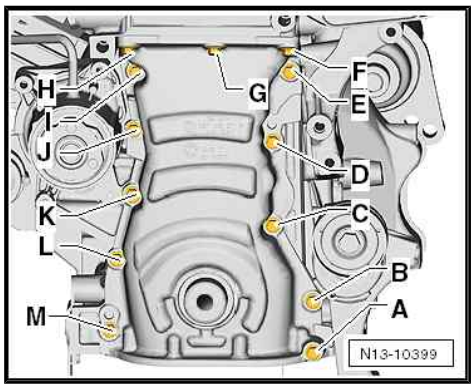

– Remove sump ⇒ page 135 .
– Removing idler roller for poly V-belt ⇒ page 50 .
– Remove poly V-belt pulley for coolant pump ⇒ page 164 .
– Remove poly V-belt pulley for crankshaft ⇒ page 51 .
– Loosen and remove bolts in sequence -M … A-.
– Carefully release timing chain cover (bottom) from bonded joint and remove cover.
– Press crankshaft oil seal out of timing chain cover (bottom).

Installing

- Tightening torques
  ⇒ Fig. ""Timing chain cover (bottom) - tightening torque and tightening sequence"", page 75

Note

Protected by copyright. Copying for private or commercial purposes, in part or in whole, is not permitted unless authorised by AUDI AG. AUDI AG does not guarantee or accept any liability with respect to the correctness of information in this document. Copyright by AUDI AG.

- ♦ *Renew the bolts tightened with specified tightening angle.*
- ♦ *Renew the crankshaft oil seal.*

Caution

Protect lubrication system against contamination.

- ♦ *Cover exposed parts of the engine.*

– Remove old sealant from grooves on timing chain cover (bottom) and from sealing surfaces.

WARNING

Risk of eye injury.

- ♦ *Put on safety goggles.*

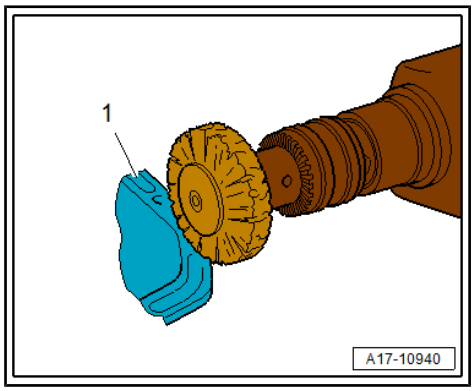

– Remove remaining sealant on timing chain cover (bottom), cylinder head and cylinder block using rotating plastic brush or similar.

Note

Note the use-by date of the sealant.

– Cut off nozzle of tube at front marking (nozzle ∅ approx. 2.5 mm).
– Clean sealing surfaces; they must be free of oil and grease.

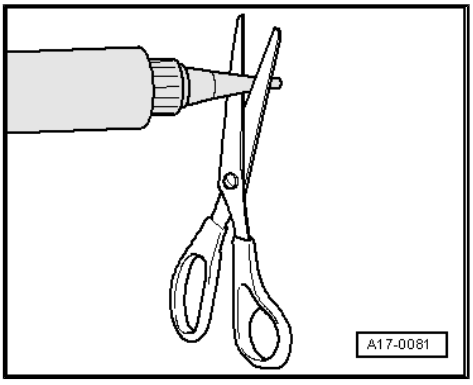

Caution

Make sure lubrication system is not clogged by excess sealant.

- ***The sealant bead must not be thicker than specified.***

– Apply sealant bead -1- onto clean sealing surface of timing chain cover (bottom) as shown in illustration.
• The bead of sealant should be 2 ... 3 mm thick and pass around the bolt holes, as shown in the illustration.

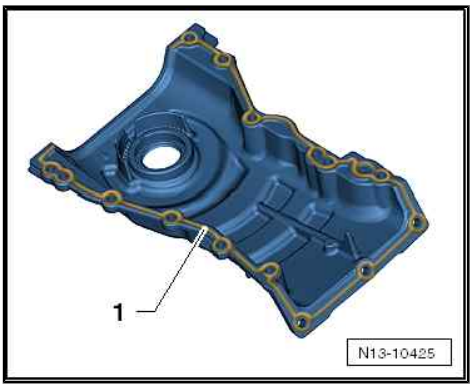

Note

The timing chain cover must be installed within 5 minutes after applying the sealant.

– Fit assembly tool - T10417/1- onto crankshaft journal.
– Carefully slide valve timing housing -1- over assembly tool together with oil seal.
– Remove assembly tool from crankshaft journal.

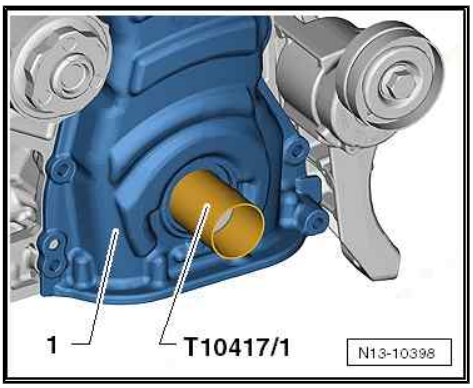

– Carefully fit timing chain cover (bottom) onto dowel pins -arrows- and press cover on until it makes contact with cylinder block and cylinder head.

Make sure that valve timing housing is kept straight.

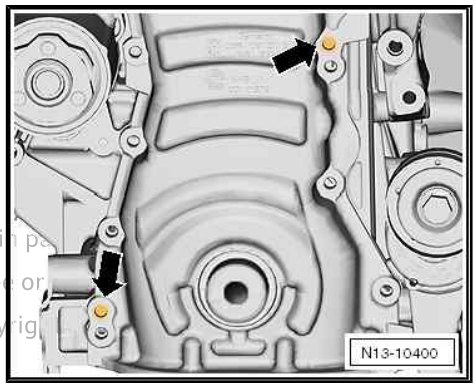

Protected by copyright. Copying for private or commercial purposes, in p
permitted unless authorised by AUDI AG. AUDI AG does not guarantee or
with respect to the correctness of information in this document. Copyrig

– Screw bolts for timing chain cover (bottom) in by hand until they make contact and then tighten bolts ⇒ page 75 .

Remaining installation steps are carried out in reverse sequence; note the following:

– Install crankshaft oil seal ⇒ page 75 .
– Install poly V-belt pulley for coolant pump ⇒ page 163 .
– Install idler roller for poly V-belt ⇒ page 50 .
– Install sump ⇒ page 135 .

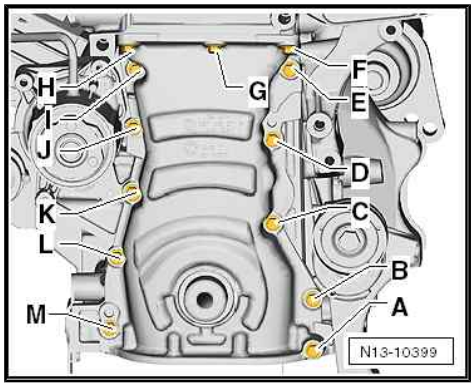

1.5 Exploded view - camshaft timing chain

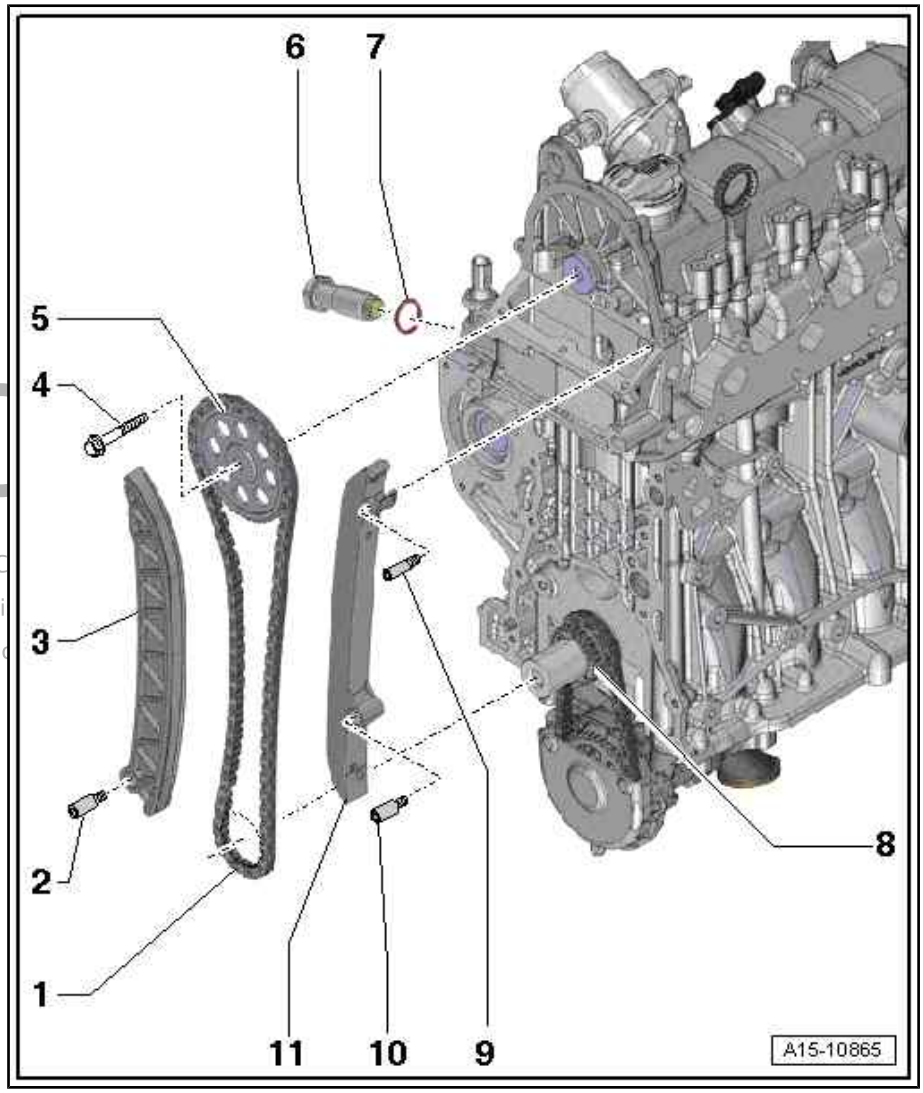

1 - Camshaft timing chain

- ❑ Detaching from camshaft sprocket ⇒ page 85
- ❑ Before removing, mark running direction with paint
- ❑ Removing and installing ⇒ page 92
- ❑ Checking ⇒ page 99
- ❑ Vehicles from 06.2011 onwards: after installing camshaft timing chain, perform `01 - Chain elongation adaption diagnosis` function in `Guided Functions` mode of ⇒ Vehicle diagnostic tester.

Copyright. C
itted unless authori
respect to the correc

2 - Guide pin

- ❑ 18 Nm

3 - Tensioning rail

4 - Bolt

- ❑ Renew
- ❑ When loosening and tightening, lock camshaft chain sprocket using counterhold tool -T10172-
- ❑ 50 Nm +90°

5 - Camshaft chain sprocket

- ❑ Removing and installing ⇒ “1.8 Removing and installing camshaft timing chain”, page 92

6 - Chain tensioner

- ❑ For camshaft timing chain
- ❑ Exerts spring pressure
- ❑ 60 Nm

7 - Seal

- ❑ Renew

8 - Chain sprocket

- ❑ For camshaft timing chain
- ❑ On crankshaft

9 - Guide pin

- ❑ 18 Nm

10 - Guide pin

- ❑ 18 Nm

11 - Guide rail

- ❑ Removing and installing ⇒ “1.8 Removing and installing camshaft timing chain”, page 92

1.6 Checking valve timing

Special tools and workshop equipment required

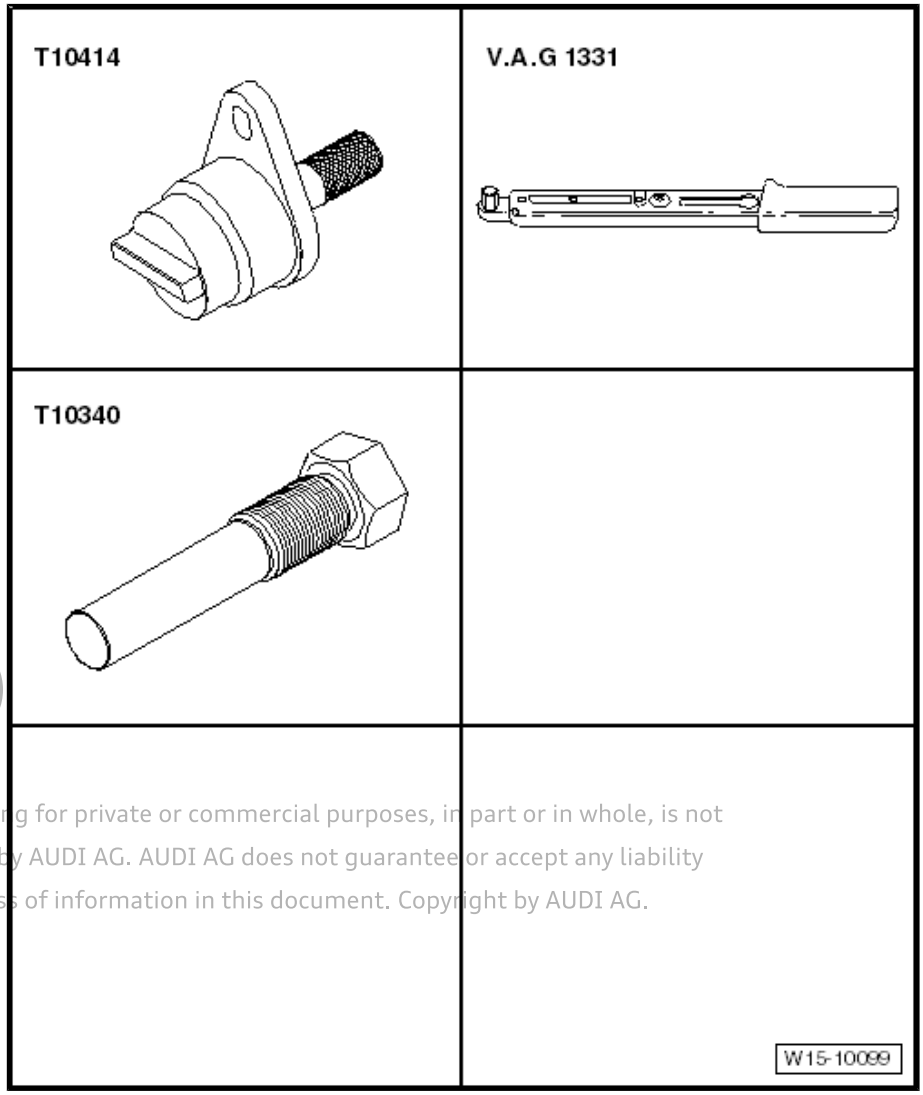

Protected by copyright. Copying for private or commercial purposes, in part or in whole, is not permitted unless authorised by AUDI AG. AUDI AG does not guarantee or accept any liability with respect to the correctness of information in this document. Copyright by AUDI AG.

- ♦ Camshaft clamp - T10414-
- ♦ Torque wrench (5 ... 50 Nm) - V.A.G 1331-
- ♦ Locking pin - T10340-

Protected by copyright. Copying for private or comme
permitted unless authorised by AUDI AG. AUDI AG do
with respect to the correctness of information in this

Test sequence

– Remove noise insulation ⇒ General body repairs, exterior; Rep. gr. 50 ; Noise insulation; Exploded view - noise insulation .

– Remove securing bolts -1- and detach bracket for coolant pipe -2-.

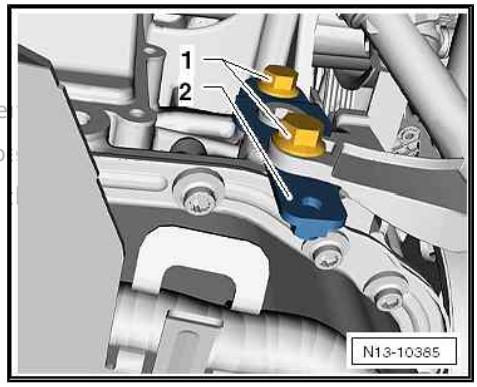

– Unscrew plug -arrow- on crankcase.

– Screw locking pin - T10340- into crankcase as far as stop.

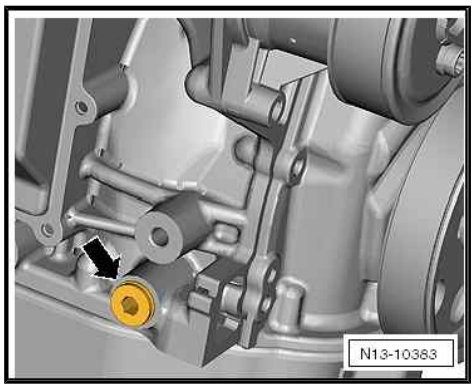

> ⚠ **Caution**
>
> *If the locking pin - T10340- cannot be screwed in as far as the stop, the crankshaft is not in the correct position.*
>
> *In this case, proceed as follows.*

– Remove locking pin.

– Turn crankshaft 90° ($^1/_4$ revolution) in normal direction of rotation.

– Screw locking pin - T10340- into crankcase as far as stop.

– Tighten locking pin - T10340- to 30 Nm.

– Turn crankshaft in normal direction of rotation as far as stop.

The locking pin - T10340- locks the crankshaft in the normal direction of rotation.

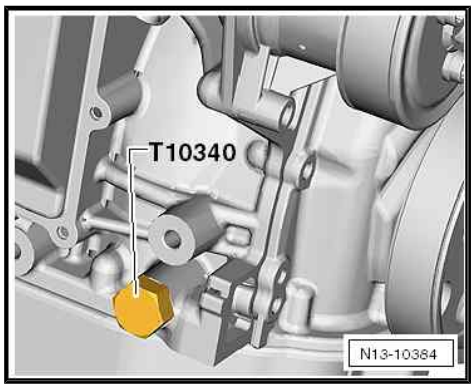

– Disconnect both hoses -1- from non-return valve.

– Remove securing bolt -2- and pull non-return valve out of cylinder head cover.

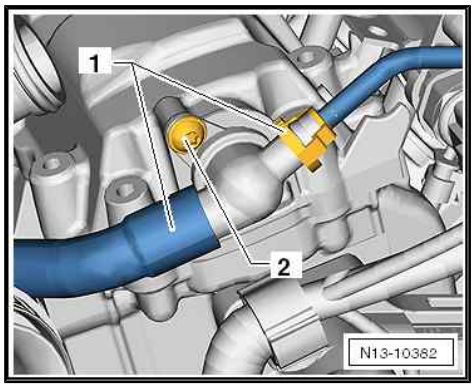

Grooves in camshaft -arrows- should be positioned as shown.

– Insert camshaft clamp - T10414- into cylinder head cover as far as stop.

Protected by copyright. Copying for private or commercial purposes, in part permitted unless authorised by AUDI AG. AUDI AG does not guarantee or ac with respect to the correctness of information in this document. Copyright

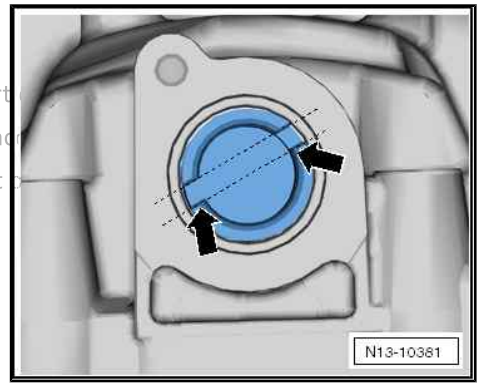

– Hand-tighten securing bolt -1-.

If the camshaft clamp - T10414- cannot be inserted into the camshaft opening as far as the stop, the valve timing is not correct and must be adjusted.

The valve timing is OK if the camshaft clamp - T10414- can be pushed into the cylinder head cover as far as the stop and the bolt -1- can be screwed in hand-tight.

– Remove camshaft clamp - T10414- and locking pin - T10340- .

Further assembly is basically carried out in reverse order of dismantling.

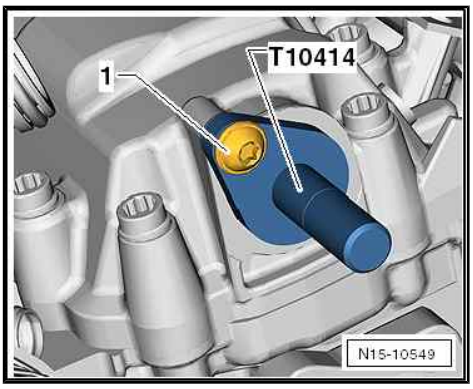

Tightening torques:

- ⇒ “2.5 Exploded view - housing for thermostat with rear coolant pipe”, page 166
- ⇒ “1.5 Exploded view - camshaft timing chain”, page 82
- ⇒ “2.1 Exploded view - cylinder head”, page 104
- ⇒ Fig. ““Plug for TDC drilling - tightening torque”“ , page 48
- ⇒ General body repairs, exterior; Rep. gr. 50 ; Noise insulation; Exploded view - noise insulation

1.7 Detaching camshaft timing chain from camshaft sprocket

Special tools and workshop equipment required

- Counterhold tool - T10172-

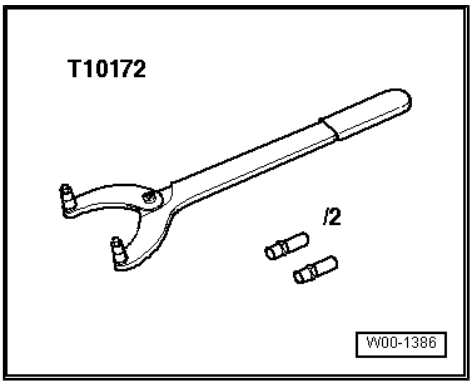

Protected by copyright. Copying for private or commercial purposes, in part or in whole, is not permitted unless authorised by AUDI AG. AUDI AG does not guarantee or assume any liability with respect to the correctness of information in this document. Copyright by AUDI AG.

- Locking pin - T10340-

- Camshaft clamp - T10414-

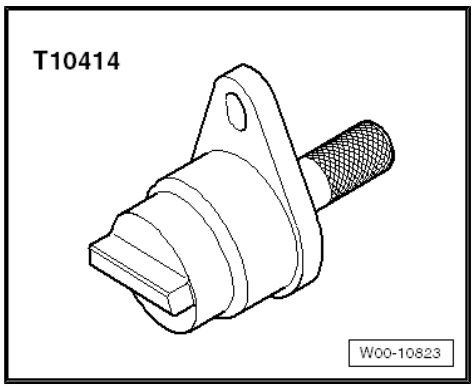

Removing

– Release activated charcoal filter -arrow B-, lift off -arrow A- and move clear to one side with line -1- connected.

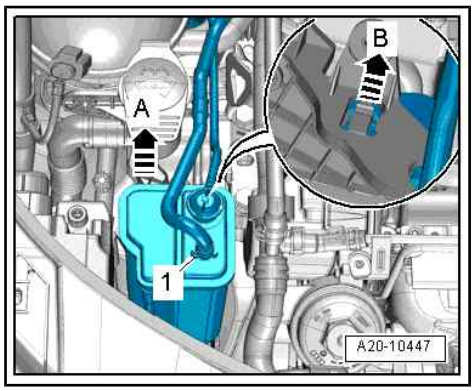

– Press release tabs on hose (right-side) and disconnect both hoses -1- from non-return valve.

– Remove bolt -2- and pull non-return valve out of camshaft housing.

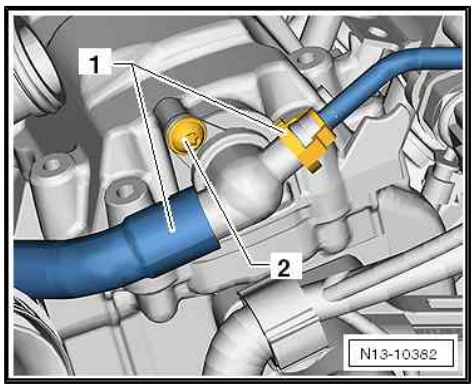

– Rotate crankshaft in normal direction of rotation -arrow- until camshaft is at “TDC”.

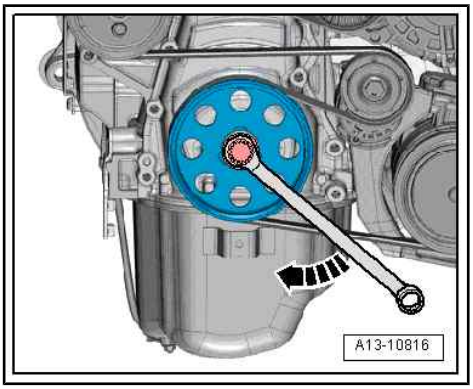

• Grooves -arrows- on camshaft should be positioned as shown in illustration.

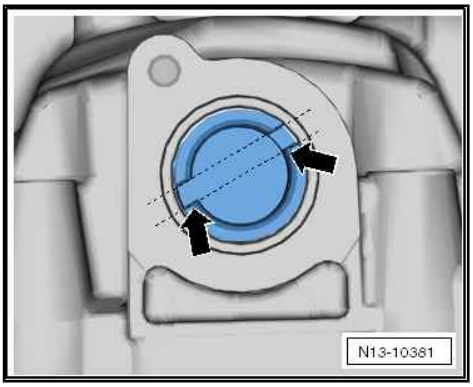

– Remove bolts -1- and -3- and take off bracket -2- for coolant pipe (right-side).

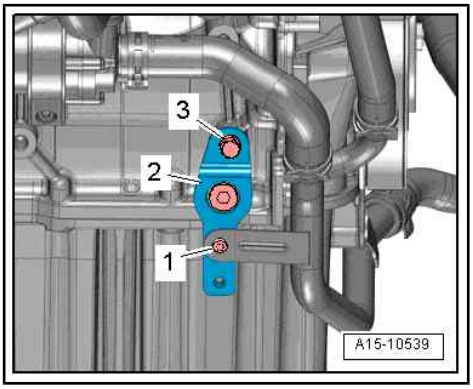

– Unscrew plug -arrow- for “TDC” hole on cylinder block.

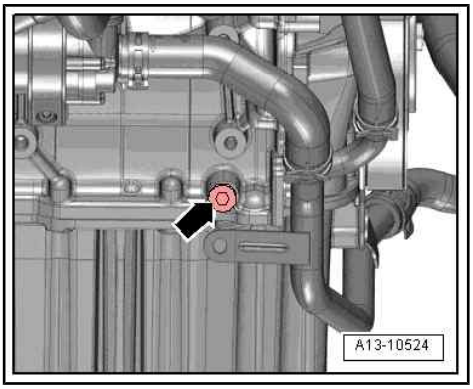

Protected by copyright. Copying for private or commercial purposes, in part or in whole, is not permitted unless authorised by AUDI AG. AUDI AG does not guarantee or accept any liability with respect to the correctness of information in this document. Copyright by AUDI AG.

– Screw locking pin - T10340- into cylinder block as far as stop and tighten to 30 Nm.

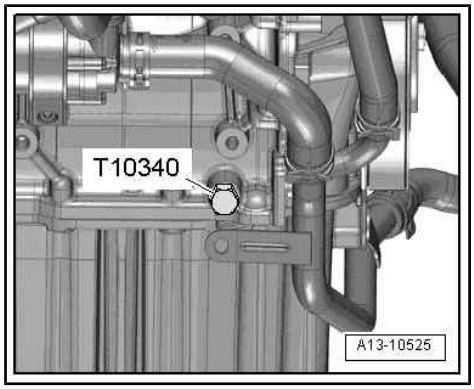

Note

The locking pin - T10340- locks the crankshaft only in the direction of engine rotation.

– Remove timing chain cover (top) ⇒ page 77 .

– Remove sump ⇒ page 135 .

– Unclip cover -1- for oil pump drive chain sprocket.

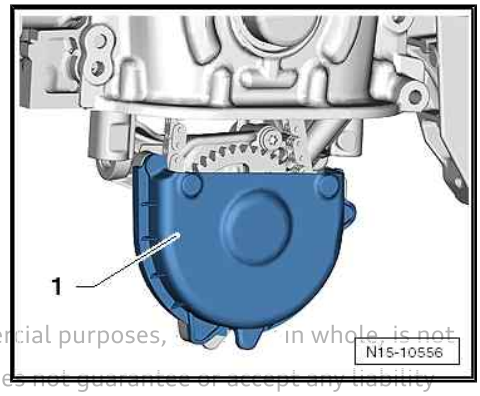

Protected by copyright. Copying for private or commercial purposes, in whole, is not permitted unless authorised by AUDI AG. AUDI AG does not guarantee or accept any liability with respect to the correctness of information in this document.

– Slide camshaft clamp - T10414- into camshaft housing as far as stop and screw bolt -1- in by hand until it makes contact.

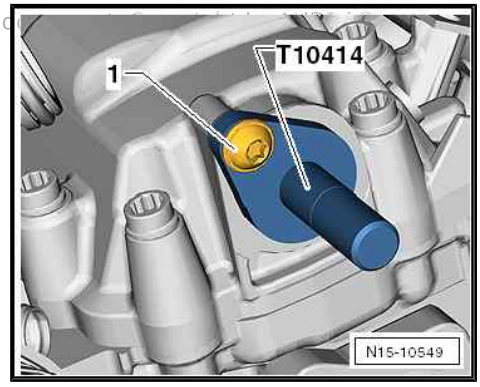

– Unscrew chain tensioner -arrow- for camshaft timing chain.

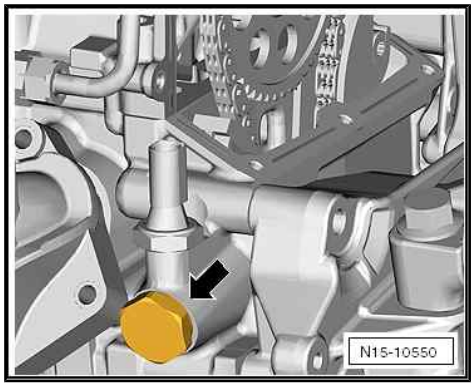

Caution

Risk of damage to camshaft.

- ***The camshaft clamp - T10414- must not be used as a counterhold tool.***

– Apply counterhold tool - T10172- to camshaft chain sprocket and remove bolt -1-.
– Detach camshaft chain sprocket.
– Place camshaft timing chain to one side and use a screwdriver or similar tool to prevent it dropping.

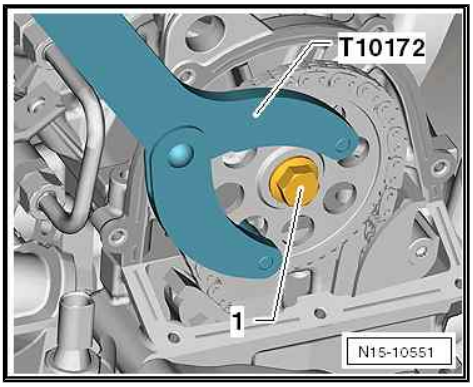

Installing

Tightening torques

- ⇒ “1.5 Exploded view - camshaft timing chain”, page 82
- ⇒ “2.1 Exploded view - cylinder head”, page 104

Note

- *Renew the bolts tightened with specified tightening angle.*
- *Renew the seal and O-rings.*

– Check “TDC” position of camshaft and crankshaft:

- Camshaft clamp - T10414- must be fitted to camshaft housing.

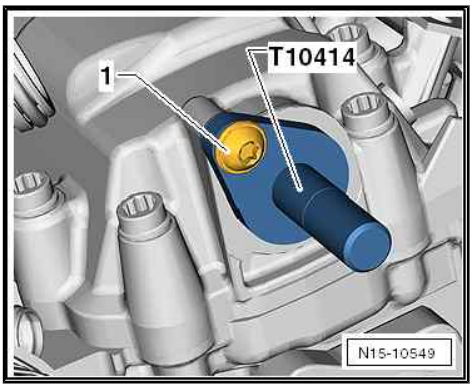

Caution

Risk of damage to camshaft.

- ***The camshaft clamp - T10414- must not be used as a counterhold tool.***

- Locking pin - T10340- is screwed into cylinder block as far as stop and tightened to 30 Nm.
- Crankshaft is turned in normal direction of rotation until it makes contact with locking pin - T10340- = “TDC” position.

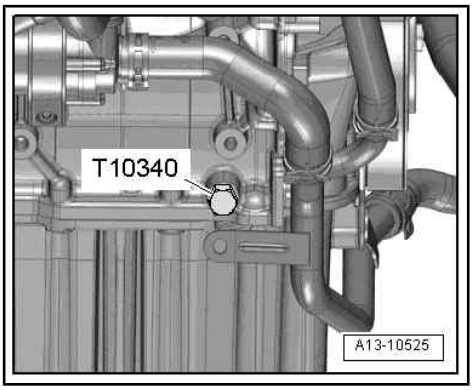

Protected by copyright. Copying for private or commercial purposes, in part or in whole, is not permitted unless authorised by AUDI AG. AUDI AG does not guarantee or assume liability with respect to the correctness of information in this document. Copyright

– Fit camshaft timing chain -1- onto crankshaft chain sprocket -2- from below and pull chain upwards between guide rail and tensioning rail so it is taut.
– Use a screwdriver -3- or similar tool to prevent the camshaft timing chain from dropping out.

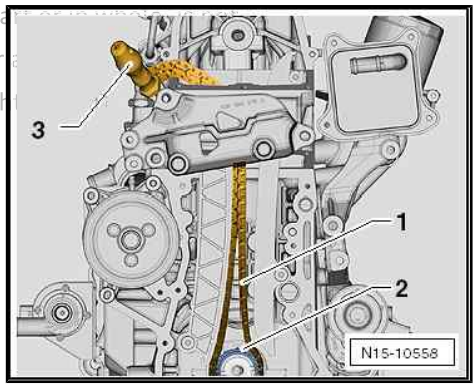

– Fit camshaft timing chain -1- onto camshaft chain sprocket -2-.

– Position camshaft chain sprocket on camshaft and fit bolt for camshaft chain sprocket without tightening.

• It should just be possible to turn the camshaft chain sprocket on the camshaft without axial movement.

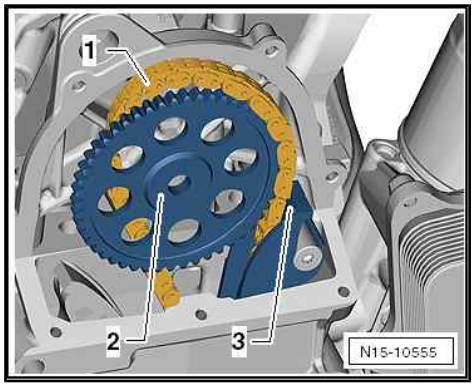

Note

Disregard -item 3-.

Protected by copyright. Copying for private or commercial purposes, in part or in whole, is not permitted unless authorised by AUDI AG. AUDI AG does not guara
with respect to the correctness of information in this document. C

– Screw in and tighten chain tensioner -arrow- for timing chain.

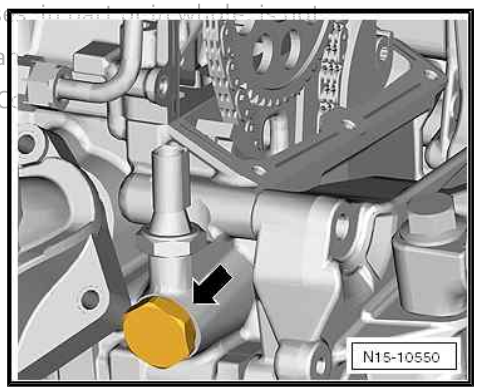

Caution

Risk of damage to camshaft.

- *The camshaft clamp - T10414- must not be used as a counterhold tool.*

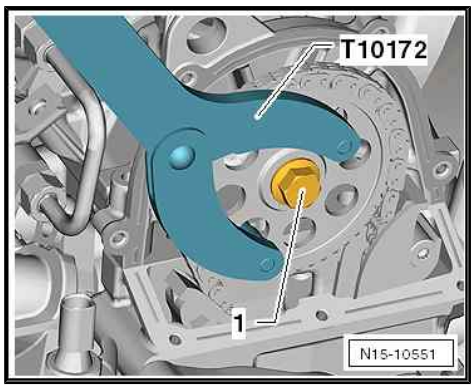

– Tighten bolt -1- initially to 50 Nm (counterhold at camshaft chain sprocket using counterhold tool - T10172-).

Note

The bolt for the camshaft chain sprocket is not tightened to its final torque until the valve timing has been checked.

Checking adjustment

– Unscrew bolt -1- and remove camshaft clamp - T10414- .

– Remove locking pin - T10340- .

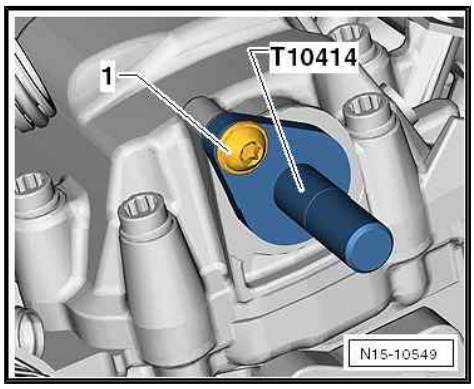

– Turn crankshaft 2 revolutions in normal direction of rotation -arrow- until camshaft is at “TDC” again.

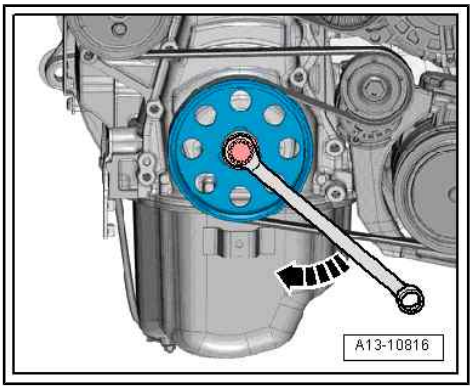

• Grooves -arrows- on camshaft should be positioned as shown in illustration.

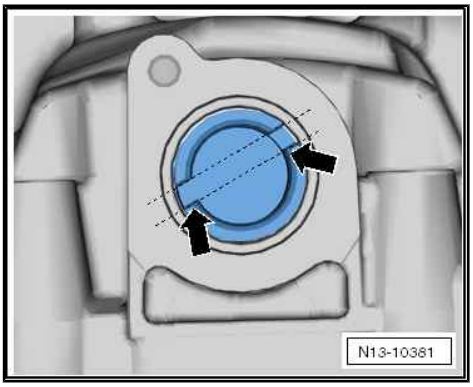

– Screw locking pin - T10340- into cylinder block as far as stop and tighten to 30 Nm.

Protected by copyright. Copying for private or commercia
permitted unless authorised by AUDI AG. AUDI AG does n
with respect to the correctness of information in this doc

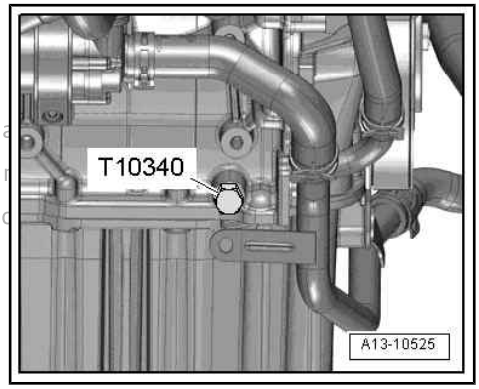

– Turn crankshaft in normal direction of rotation -arrow- until it makes contact with locking pin.

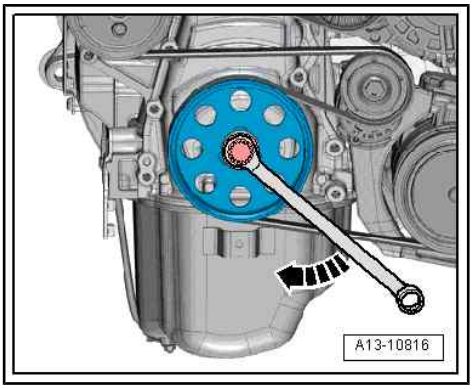

- It should be possible to insert camshaft clamp - T10414- into camshaft housing as far as stop and lock it in place with bolt -1-.

– If camshaft clamp - T10414- cannot be inserted into camshaft housing as far as stop, repeat adjustment procedure ⇒ page 96 .

– If it is possible to insert camshaft clamp - T10414- completely, take off camshaft clamp again.

– Remove locking pin - T10340- .

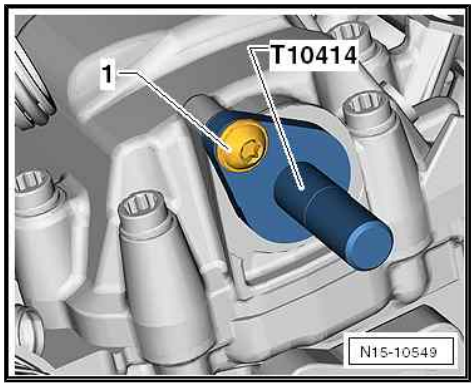

Installation is carried out in the reverse order; note the following:

– Install sump ⇒ page 135 .

– Install timing chain cover (top) ⇒ page 77 .

– Install bracket for coolant pipe (right-side) ⇒ page 166 .

– Vehicles from 06.2011 onwards: after installing camshaft timing chain, perform `01 - Chain elongation adaption diagnosis` function in `Guided Functions` mode of ⇒ Vehicle diagnostic tester.

1.8 Removing and installing camshaft timing chain

Special tools and workshop equipment required

♦ Counterhold tool - 3415- with pins -3415/2-

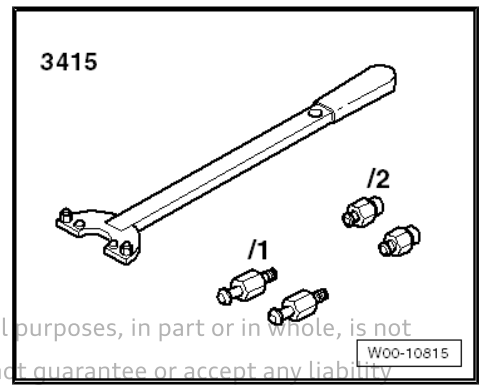

Protected by copyright. Copying for private or commercial purposes, in part or in whole, is not permitted unless authorised by AUDI AG. AUDI AG does not guarantee or accept any liability with respect to the correctness of information in this document. Copyright by AUDI AG.

♦ Counterhold tool - T10172 A-

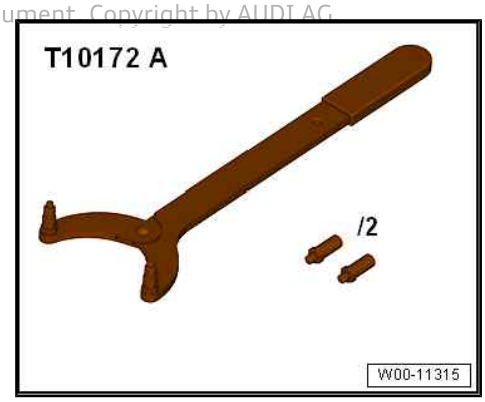

♦ Locking pin - T10340-

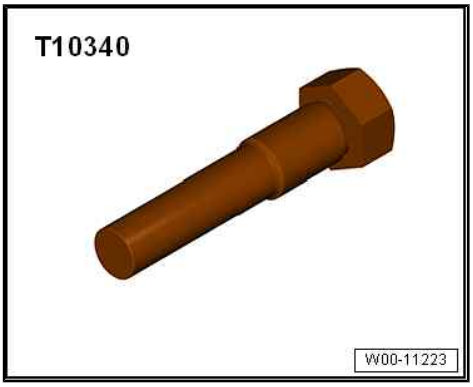

♦ Camshaft clamp - T10414-

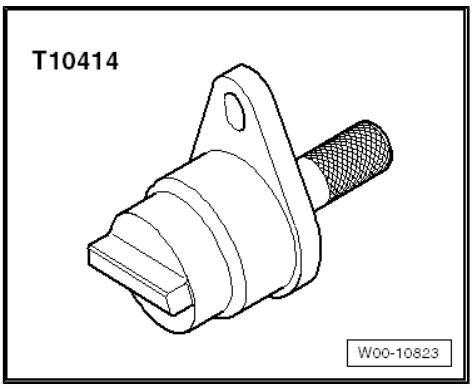

Removing

– Release activated charcoal filter -arrow B-, lift off -arrow A- and move clear to one side with line -1- connected.

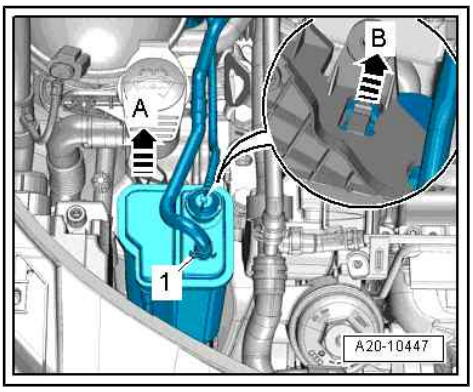

– Press release tabs on hose (right-side) and disconnect both hoses -1- from non-return valve.

– Remove bolt -2- and pull non-return valve out of camshaft housing.

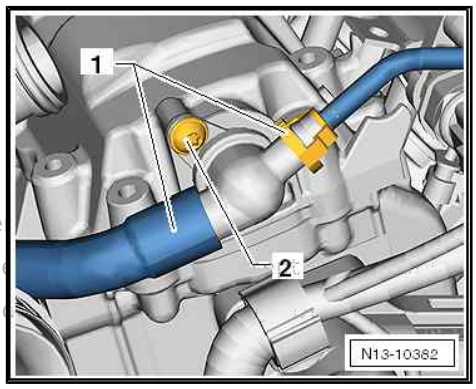

Protected by copyright. Copying for private or comme
permitted unless authorised by AUDI AG. AUDI AG do
with respect to the correctness of information in this

– Rotate crankshaft in normal direction of rotation -arrow- until camshaft is at “TDC”.

Protected by copyright. Copying for private or commercial purposes
permitted unless authorised by AUDI AG. AUDI AG does not guaran
with respect to the correctness of information in this document. Co

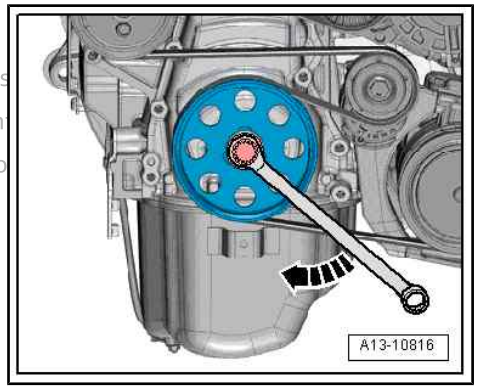

• Grooves -arrows- on camshaft should be positioned as shown in illustration.

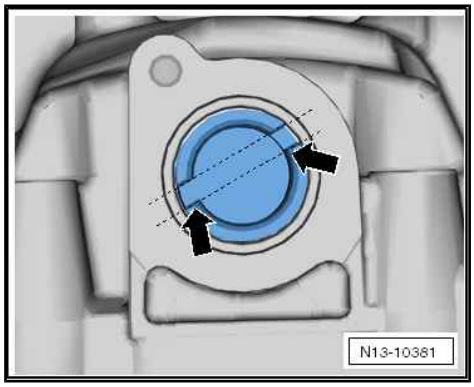

– Remove bolts -1- and -3- and take off bracket -2- for coolant pipe (right-side).

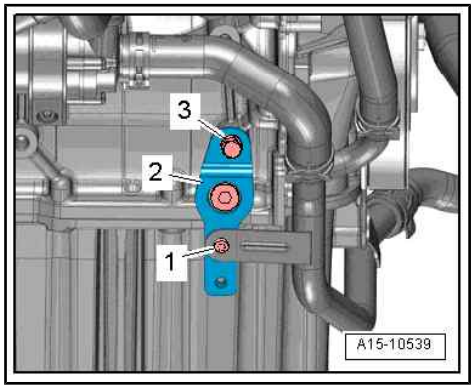

– Unscrew plug -arrow- for “TDC” hole on cylinder block.

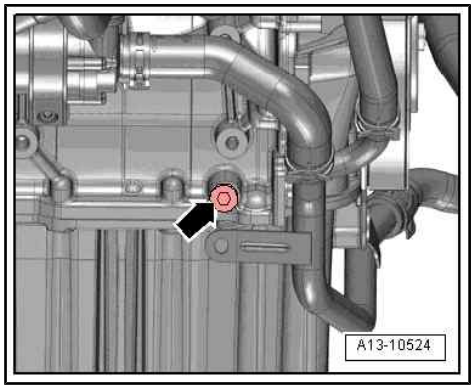

– Screw locking pin - T10340- into cylinder block as far as stop and tighten to 30 Nm.

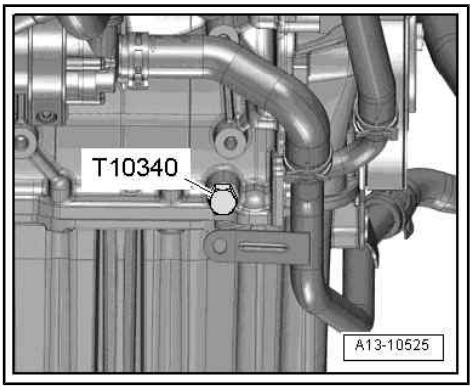

Note

The locking pin - T10340- locks the crankshaft only in the direction of engine rotation.

– Remove timing chain cover (top) ⇒ page 77 .

– Remove timing chain cover (bottom) ⇒ page 79 .

– Slide camshaft clamp - T10414- into camshaft housing as far as stop and screw bolt -1- in by hand until it makes contact.

Protected by copyright. Copying for private or commercial
permitted unless authorised by AUDI AG. AUDI AG does n
with respect to the correctness of information in this docu

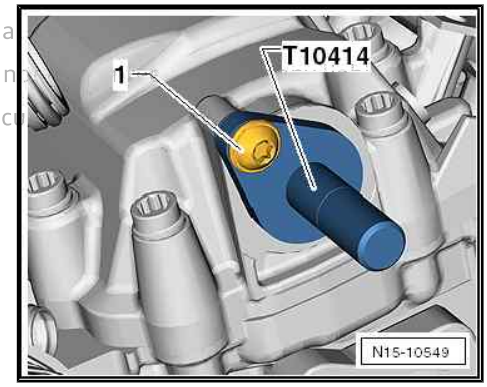

– Unscrew chain tensioner -arrow- for camshaft timing chain.

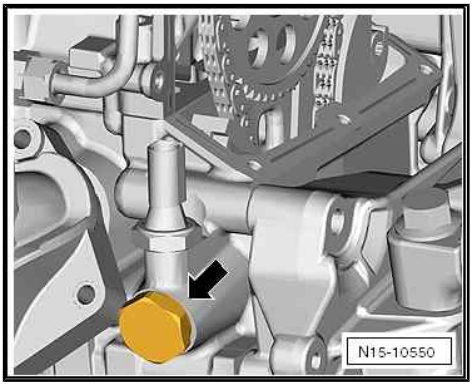

Caution

If a used timing chain rotates in the opposite direction when it is refitted, this can cause breakage.

- ***Mark running direction of timing chain with coloured arrows for re-installation.***

Risk of damage to camshaft.

- ***The camshaft clamp - T10414- must not be used as a counterhold tool.***

– Apply counterhold tool - T10172- to camshaft chain sprocket and remove bolt -1-.

– Detach camshaft chain sprocket together with camshaft timing chain.

– Pull out camshaft timing chain from below.

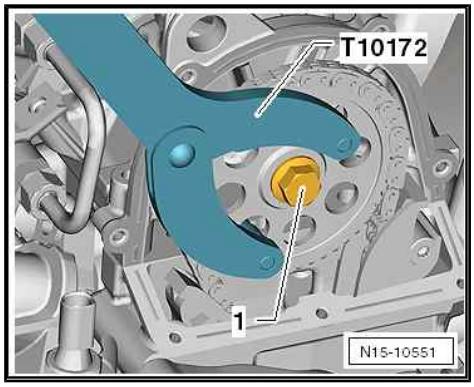

Installing

Tightening torques

- ⇒ “1.5 Exploded view - camshaft timing chain”, page 82
- ⇒ “2.1 Exploded view - cylinder head”, page 104

Note

♦ *Renew the bolts tightened with specified tightening angle.*

♦ *Renew the seal and O-rings.*

– Check “TDC” position of camshaft and crankshaft:

- Camshaft clamp - T10414- must be fitted to camshaft housing.

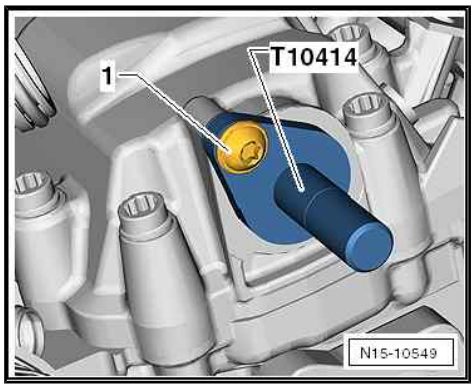

Caution

Risk of damage to camshaft.

♦ ***The camshaft clamp - T10414- must not be used as a counterhold tool.***

Protected by copyright. Copying for private or commercial purposes, in pa
permitted unless authorised by AUDI AG. AUDI AG does not guarantee or
with respect to the correctness of information in this document. Copyrigh

- Locking pin - T10340- is screwed into cylinder block as far as stop and tightened to 30 Nm.
- Crankshaft is turned in normal direction of rotation until it makes contact with locking pin - T10340- = “TDC” position.

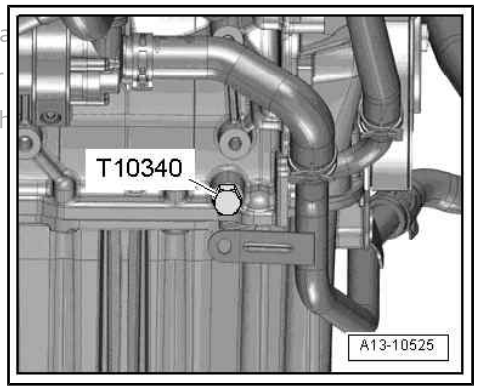

– Fit camshaft timing chain according to marks applied when removing.

– Fit camshaft timing chain -1- onto crankshaft chain sprocket -2- from below and guide chain upwards between guide rail and tensioning rail.

– Use a screwdriver -3- or similar tool to prevent the camshaft timing chain from dropping out.

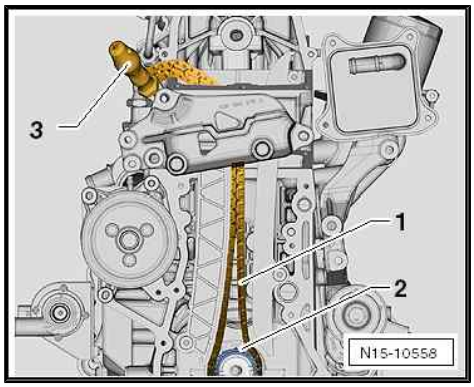

– Fit camshaft timing chain -1- onto camshaft chain sprocket -2-.

– Position camshaft chain sprocket on camshaft and fit bolt for camshaft chain sprocket without tightening.

• It should just be possible to turn the camshaft chain sprocket on the camshaft without axial movement.

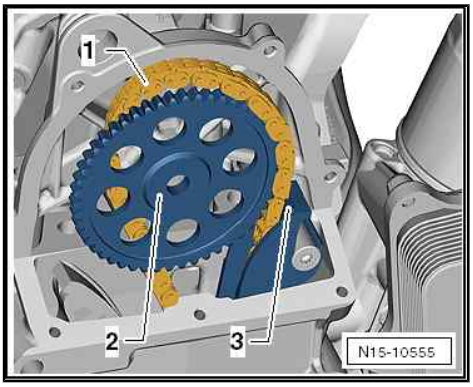

Note

Disregard -item 3-.

– Screw in and tighten chain tensioner -arrow- for timing chain.

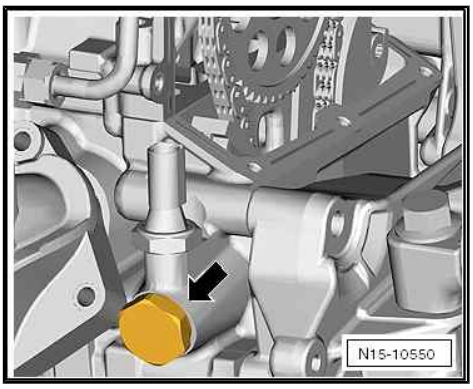

Caution

Risk of damage to camshaft.

- ***The camshaft clamp - T10414- must not be used as a counterhold tool.***

Protected by copyright. Copying for private or commer
permitted unless authorised by AUDI AG. AUDI AG does
with respect to the correctness of information in this d

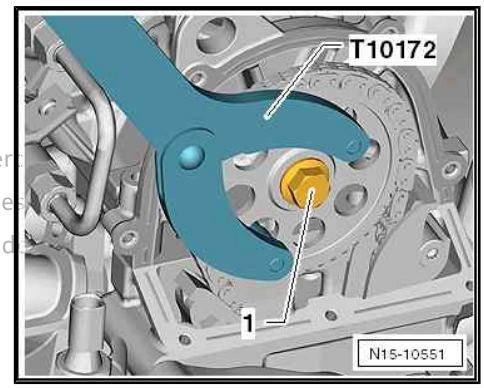

– Tighten bolt -1- initially to 50 Nm (counterhold at camshaft chain sprocket using counterhold tool - T10172-).

Note

The bolt for the camshaft chain sprocket is not tightened to its final torque until the valve timing has been checked.

Checking adjustment

– Fit poly V-belt pulley onto crankshaft.

– Screw in old bolt for poly V-belt pulley and tighten to 50 Nm (counterhold with counterhold tool - 3415- and pin -3415/2-).

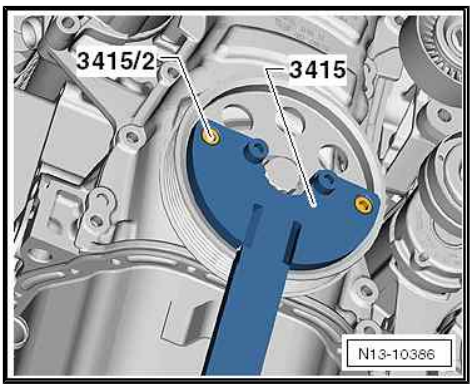

Note

Illustration shows installation position with timing chain cover fitted.

– Unscrew bolt -1- and remove camshaft clamp - T10414- .

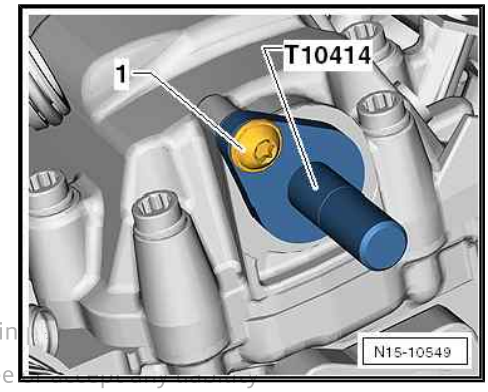

Protected by copyright. Copying for private or commercial purposes, in
permitted unless authorised by AUDI AG. AUDI AG does not guarantee
w of information in this document. Copyr

– Remove locking pin - T10340- .

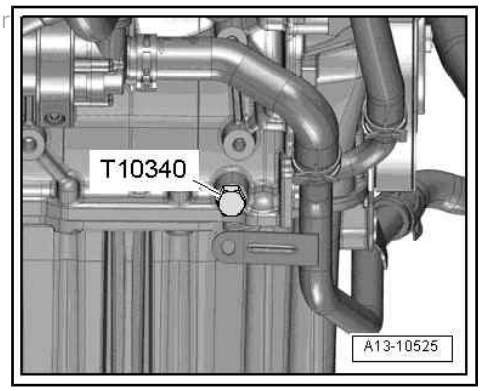

– Turn crankshaft 2 revolutions in normal direction of rotation -arrow- until camshaft is at “TDC” again.

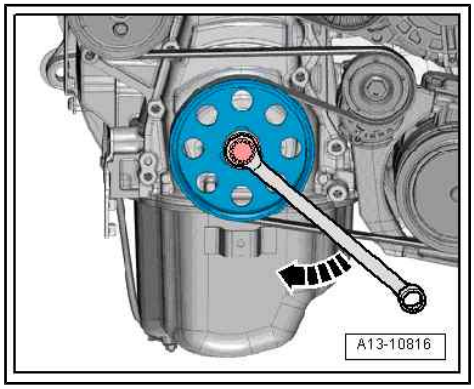

• Grooves -arrows- on camshaft should be positioned as shown in illustration.

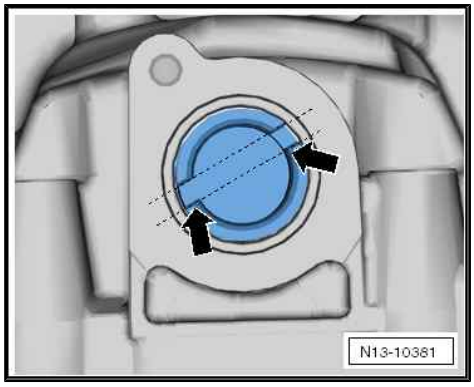

– Screw locking pin - T10340- into cylinder block as far as stop and tighten to 30 Nm.

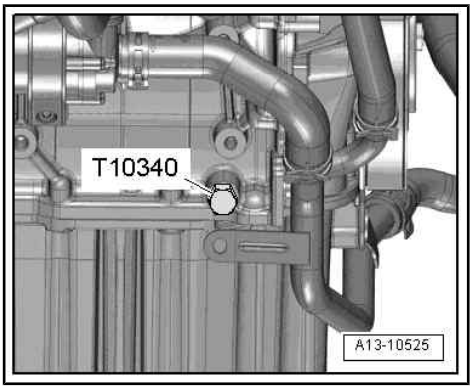

– Turn crankshaft in normal direction of rotation -arrow- until it makes contact with locking pin.

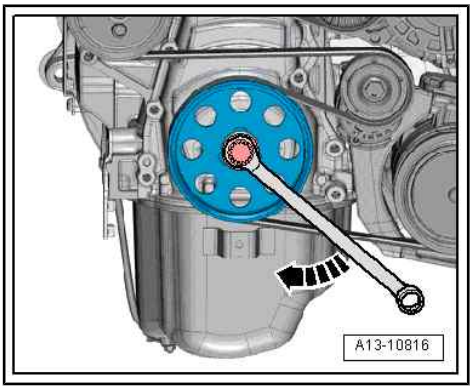

• It should be possible to insert camshaft clamp - T10414- into camshaft housing as far as stop and lock it in place with bolt -1-.

– If camshaft clamp - T10414- cannot be inserted into camshaft housing as far as stop, repeat adjustment procedure ⇒ page 96 .

– If it is possible to insert camshaft clamp - T10414- completely, take off camshaft clamp again.

– Remove locking pin - T10340- .

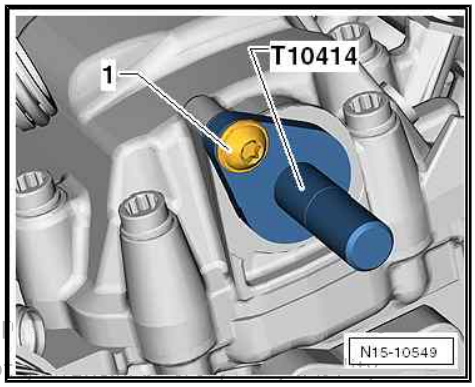

Protected by copyright. Copying for private or commercial p
permitted unless authorised by AUDI AG. AUDI AG does no
with respect to the correctness of information in this docum

– Remove old bolt for poly V-belt pulley (counterhold with counterhold tool - 3415- and pin -3415/2-).

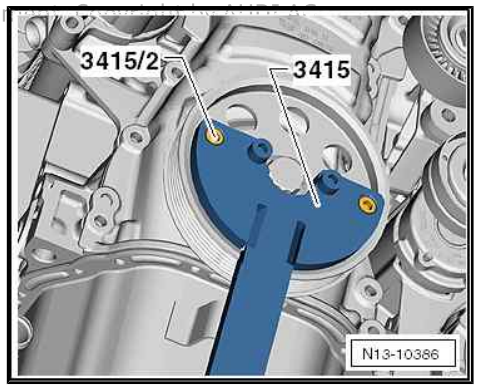

Installation is carried out in the reverse order; note the following:

– Install timing chain cover (bottom) ⇒ page 79 .

– Install timing chain cover (top) ⇒ page 77 .

– Vehicles from 06.2011 onwards: after installing camshaft timing chain, perform `01 - Chain elongation adaption diagnosis` function in `Guided Functions` mode of ⇒ Vehicle diagnostic tester.

1.9 Checking timing chain

Special tools and workshop equipment required

♦ Camshaft clamp - T10414-

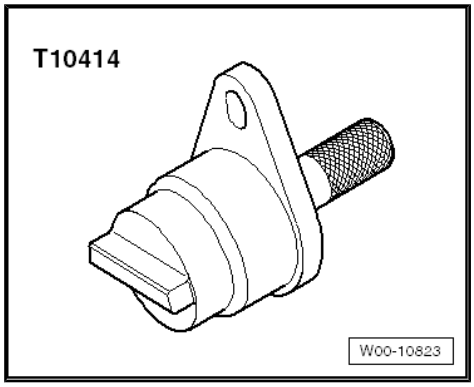

♦ Torque wrench - VAS 6583-

♦ Testing tools - T10550-

♦ Pointer - T10550/2-

♦ Scaling sleeve - T10550/3-

♦ Adapter - T10550/4-

Protected by copyright. Copying for private or commercial purposes, in part or in whole, is not permitted unless authorised by AUDI AG. AUDI AG does not guarantee or accept any liability with respect to the correctness of information in this document. Copyright by AUDI AG.

- Engine oil temperature must be at least 40 °C ⇒ Vehicle diagnostic tester.
- Engine must not be at »TDC« position.

– Remove front wheel (right-side) ⇒ Running gear, axles, steering; Rep. gr. 44 ; Wheels, tyres .

– Remove noise insulation ⇒ General body repairs, exterior; Rep. gr. 50 ; Noise insulation; Exploded view - noise insulation .

– Remove front wheel housing liner (right-side) ⇒ General body repairs, exterior; Rep. gr. 66 ; Wheel housing liners; Removing and installing wheel housing liner .

– Remove poly V-belt ⇒ page 49 .

Vehicles with auxiliary/supplementary heater:

– Remove auxiliary/supplementary heater with exhaust pipe and coolant hoses connected ⇒ Auxiliary/supplementary heater; Rep. gr. 82 ; Auxiliary/supplementary heater; Removing and installing auxiliary/supplementary heater .

All vehicles (continued):

– Remove bolts -3- for coolant pipe.

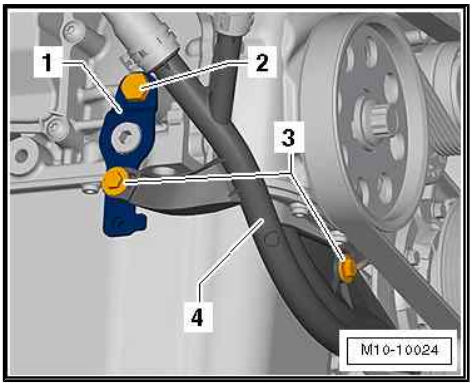

Note

Disregard items -1 and 2-.

– Move coolant pipe -4- clear to one side (coolant hoses remain connected).

– Disconnect both hoses -1- from non-return valve.

– Remove securing bolt -2- and pull non-return valve out of cylinder head cover.

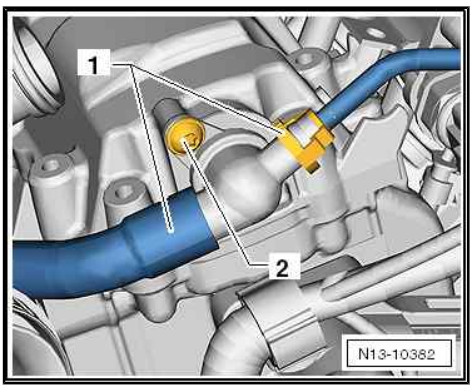

– Rotate crankshaft in normal direction of rotation until notches on camshaft -arrows- are at the position shown.

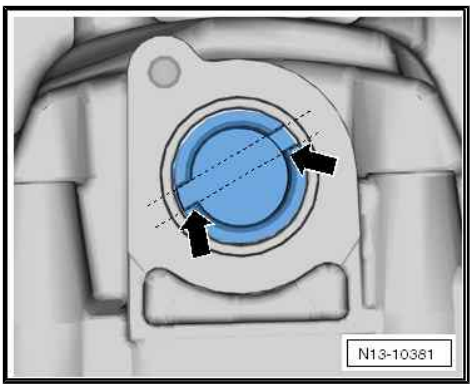

– Insert camshaft clamp - T10414- into cylinder head cover as far as stop.

– Hand-tighten securing bolt -1-.

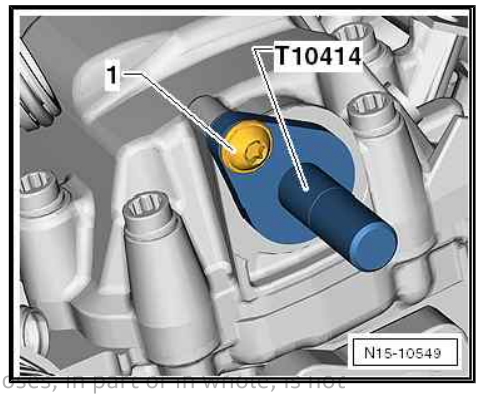

Protected by copyright. Copying for private or commercial purposes, in part or in whole, is not permitted unless authorised by AUDI AG. AUDI AG does not guarantee or accept any liability with respect to the correctness of information in this document. Copyright by AUDI AG.

– Screw pointer - T10550/2- into hole underneath pulley -1- in sump -2-.
– Align pointer vertically, ensuring that the tip faces upwards.
– Tighten pointer with knurled nut.

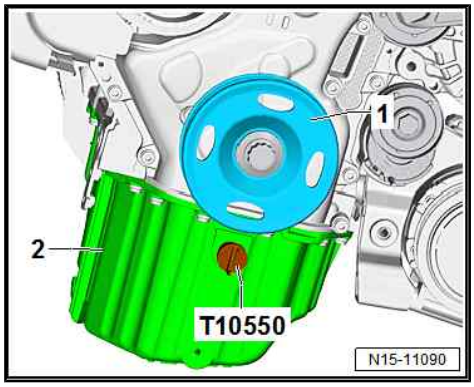

– Fit adapter - T10550/4- in scaling sleeve - T10550/3- as shown. To do so, proceed as follows.

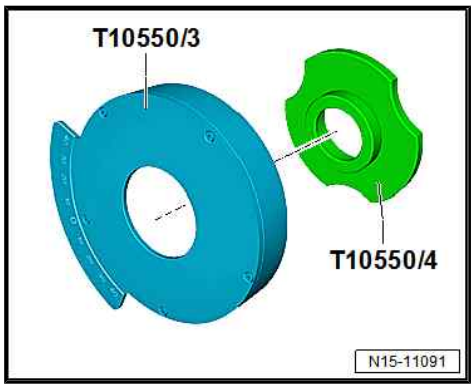

> ⚠ **Caution**
>
> ***Risk of injury: fingers could become jammed between the parts.***
>
> ***The scaling sleeve - T10550/3- is fitted with magnets.***
>
> ***Carefully bring the parts together.***
>
> ***When doing so, note that the parts pull towards each other very quickly.***

– Place adapter - T10550/4- on workbench with the three pins facing downwards.
– Hold scaling sleeve - T10550/3- with the opening centrally above adapter - T10550/4- .
– Use your thumbs to reach into the adapter opening and pull the adapter upwards while guiding the scaling sleeve downwards.

Protected by copyright. Copying for private or commercial purposes, in part or in whole, is not
permitted unless authorised by AUDI AG. AUDI AG does not guarantee or accept any liability
with respect to the correctness of information in this document. Copyright by AUDI AG.

– Position scaling sleeve - T10550/3- on pulley together with adapter - T10550/4- .
– Align scaling sleeve - T10550/3- with pointer - T10550/2- as shown.

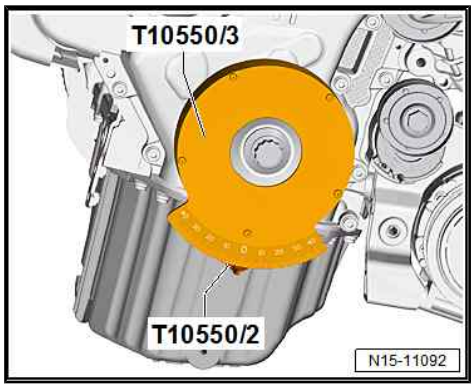

– Fit torque wrench - VAS 6583- onto crankshaft bolt using a suitable socket.
– Push torque wrench - VAS 6583- clockwise and hold at 40 Nm.
– Turn scaling sleeve - T10550/3- so that pointer - T10550/2- is at position »0«.

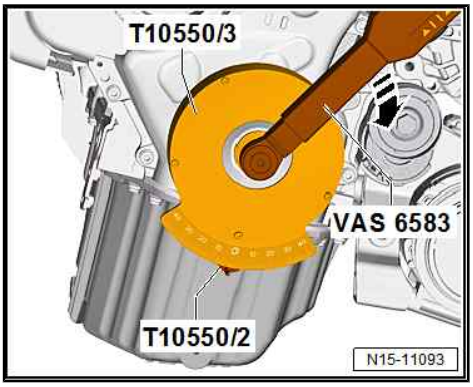

– Switch torque wrench - VAS 6583- direction setting and slowly push it anti-clockwise.
– Hold torque wrench - VAS 6583- at 40 Nm.
– Read off value indicated on scaling sleeve.
– If the timing chain skips during the test, it must be renewed ⇒ page 92 .
– Timing chain skipping can be easily heard and felt.

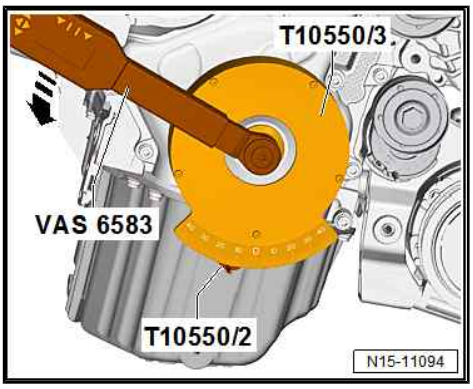

Test evaluation

– If the chain is elongated by up to 25°, the timing chain is OK.
– If the timing chain is elongated by 26° or more, it is not OK and must be renewed ⇒ page 92 .

Assembly is performed in reverse sequence; note the following:

Note

♦ *The scaling sleeve - T10550/3- is fitted with magnets.*
♦ *Do not use any tools to prise the scaling sleeve - T10550/3- off the pulley.*

Protected by copyright. Copies for private or commercial purposes, in part or in whole, is not permitted unless authorised by AUDI AG. AUDI AG does not guarantee or accept any liability with respect to the correctness of information in this document. Copyright by AUDI AG.

– Turn scaling sleeve - T10550/3- approx. 45° to the right so that the scaling area is no longer above the pointer - T10550/2- .
– Reach behind scaling sleeve - T10550/3- with both hands.
– Press against pulley bolt with your thumbs and pull off scaling sleeve - T10550/3- .
– Hold edges of scaling sleeve - T10550/3- with both hands.
– Hold scaling sleeve - T10550/3- a small distance above a workbench.
– Press off adapter - T10550/4- with your thumbs.

Tightening torque

♦ ⇒ “1.2 Draining and filling cooling system”, page 155
♦ ⇒ “2.1 Exploded view - cylinder head”, page 104
♦ ⇒ “1.2 Removing and installing poly V-belt”, page 49
♦ ⇒ General body repairs, exterior; Rep. gr. 50 ; Noise insulation; Exploded view - noise insulation
♦ ⇒ General body repairs, exterior; Rep. gr. 66 ; Wheel housing liners; Removing and installing wheel housing liner
♦ ⇒ Running gear, axles, steering; Rep. gr. 44 ; Wheels, tyres

2 Cylinder head

Overview

- ⇒ “2.1 Exploded view - cylinder head”, page 104
- ⇒ “2.2 Removing and installing cylinder head”, page 106
- ⇒ “2.3 Checking compression”, page 113

2.1 Exploded view - cylinder head

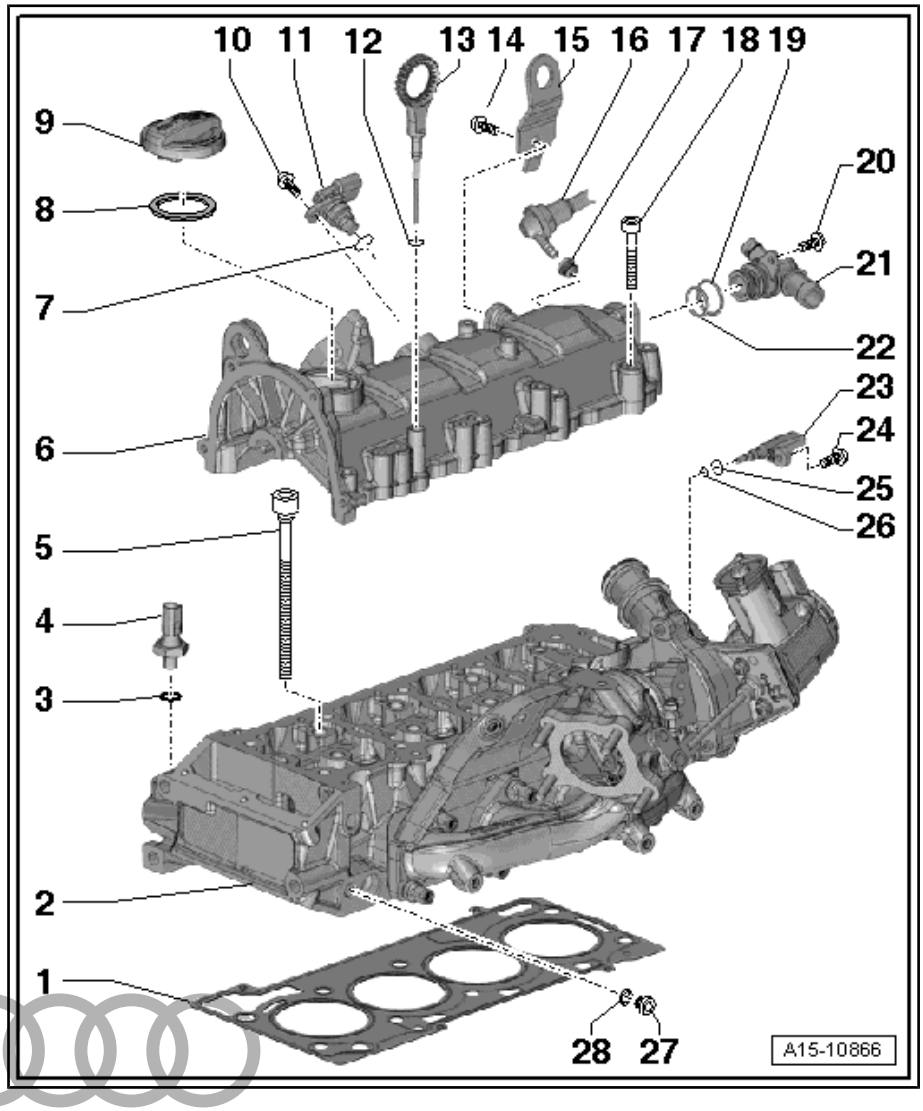

1 - Cylinder head gasket

- ❑ Renewing ⇒ “2.2 Removing and installing cylinder head”, page 106
- ❑ Installation position: Part number points towards cylinder head, and must be legible from the inlet side
- ❑ If renewed, change coolant and engine oil

2 - Cylinder head

- ❑ Removing and installing ⇒ page 106
- ❑ Checking for distortion ⇒ page 105
- ❑ Sealing surface for camshaft housing must be free of oil and grease
- ❑ If renewed, change coolant and engine oil

3 - Seal

- ❑ Renew

4 - Oil pressure switch - F1-

- ❑ Removing and installing ⇒ page 146

5 - Bolt

- ❑ Renew
- ❑ Correct sequence when slackening ⇒ page 110
- ❑ Tightening torque and sequence ⇒ page 106

6 - Camshaft housing

- ❑ Removing and installing ⇒ page 118

7 - O-ring

- ❑ Renew

8 - Seal

- ❑ Renew if damaged or leaking

9 - Filler cap

10 - Bolt

- ❑ Tightening torque ⇒ Rep. gr. 28

Protected by copyright. Copying for private or commercial purposes, in part or in whole, is not permitted unless authorised by AUDI AG. AUDI AG does not guarantee or accept any liability with respect to the correctness of information in this document. Copyright by AUDI AG.

11 - Hall sender - G40-
- ❑ Removing and installing ⇒ Rep. gr. 28

12 - O-ring
- ❑ Renew

13 - Oil dipstick

14 - Bolt
- ❑ 20 Nm

15 - Engine lifting eye

16 - Non-return valve
- ❑ For crankcase breather

17 - Grommet

18 - Bolt
- ❑ Correct sequence when slackening ⇒ page 120
- ❑ Tightening torque and sequence ⇒ page 117

19 - O-ring
- ❑ Renew

20 - Bolt
- ❑ 7 Nm

21 - Non-return valve

22 - O-ring
- ❑ Renew

23 - Coolant temperature sender - G62-
- ❑ Removing and installing ⇒ page 168

24 - Bolt
- ❑ Tightening torque ⇒ Item 7 (page 167)

25 - O-ring
- ❑ Renew

26 - Teflon ring

27 - Plug
- ❑ Depending on version
- ❑ 15 Nm

28 - Seal
- ❑ Depending on version
- ❑ Renew

Protected by copyright. Copying for private or commercial purposes, in part or in whole, is not permitted unless authorised by AUDI AG. AUDI AG does not guarantee or accept any liability with respect to the correctness of information in this document. Copyright by AUDI AG.

Checking cylinder head for distortion

– Use straight edge 500 mm - VAS 6075- and feeler gauge to measure cylinder head for distortion at several points.

• Max. permissible distortion: 0.05 mm.

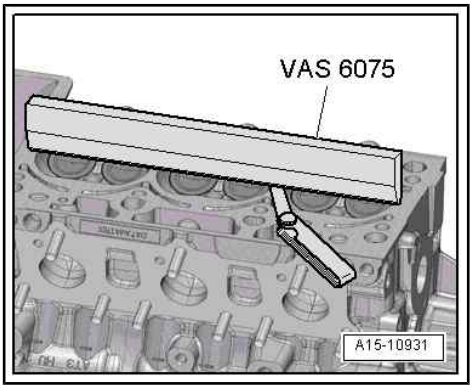

Cylinder head - tightening torque and sequence

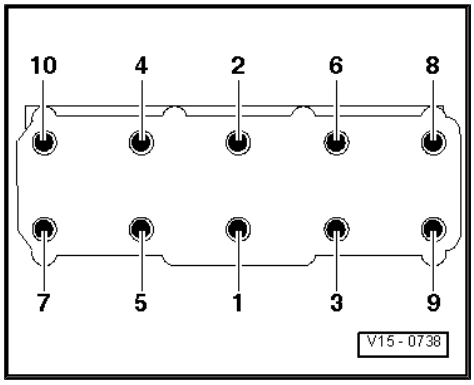

Note

Renew the bolts tightened with specified tightening angle.

– Tighten bolts in 4 stages in the sequence shown:

Stage	Bolts	Tightening torque/angle specification
1.	-1 … 10-	Screw in by hand until contact is made
2.	-1 … 10-	40 Nm
3.	-1 … 10-	Turn 90° further
4.	-1 … 10-	Turn 90° further

Protected by copyright. Copying for private or commercial purposes, in part or in whole, is not permitted unless authorised by AUDI AG. AUDI AG does not guarantee or accept any liability with respect to the correctness of information in this document. Copyright by AUDI AG.

2.2 Removing and installing cylinder head

Special tools and workshop equipment required

- Support bracket - 10 - 222 A-

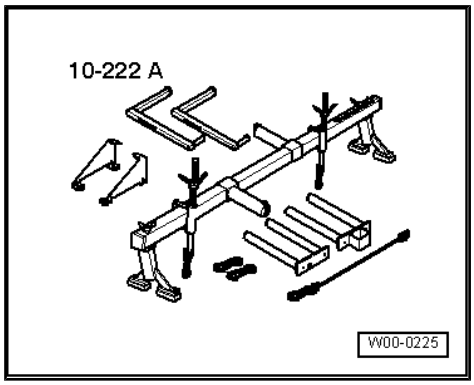

- Bracket - T10358-

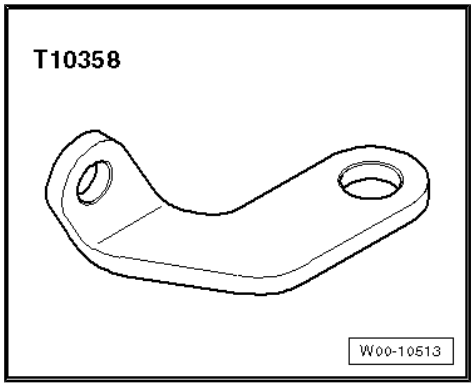

- M8x30 bolt
- Electric drill with plastic brush attachment
- Safety goggles
- Sealant ⇒ Electronic parts catalogue

Removing

– Drain coolant ⇒ page 155 .
– Remove oil filter bracket ⇒ page 144 .
– Remove intake manifold ⇒ Rep. gr. 24 .
– Remove camshaft housing ⇒ page 118 .

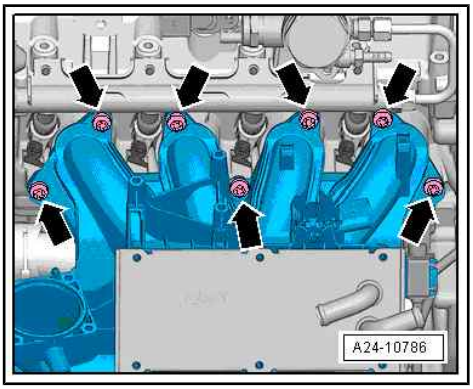

– Release activated charcoal filter -arrow B-, lift off -arrow A- and move clear to one side with line -1- connected.

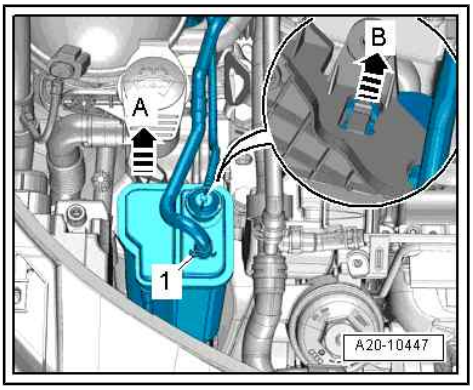

– Remove bracket -3- for activated charcoal filter.
– Remove bolt on filler neck -2- for washer fluid reservoir.

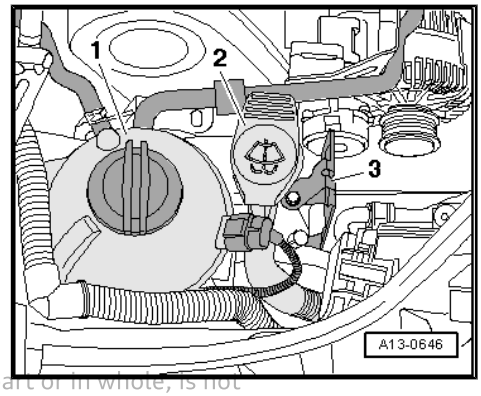

Note

Disregard -item 1-.

Protected by copyright. Copying for private or commercial purposes, in part or in whole, is not permitted unless authorised by AUDI AG. AUDI AG does not guarantee or accept any liability with respect to the correctness of information. Copyright by AUDI AG.

– Remove bolts -arrows-.
– Detach electrical connector -1- for coolant shortage indicator switch - F66- and move coolant expansion tank to side.

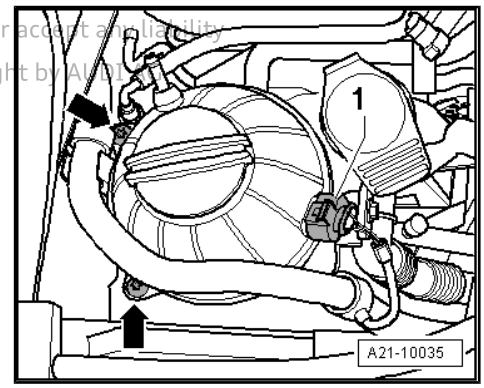

– Unplug electrical connector -1- on oil pressure switch - F1- -item 2-.

– Remove thermostat housing ⇒ page 170 .

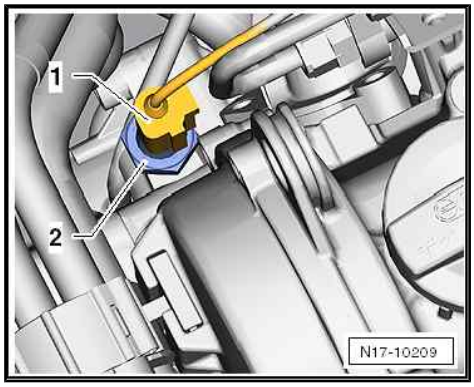

– Secure bracket - T10358- in hole for oil filter bracket with bolt M8x30 -arrow-.

• Washer must be placed under bolt head.

• Two washers must be inserted between bracket - T10358- and cylinder block.

– Set up support bracket - 10 - 222 A- top edges of body flanges (left and right) as illustrated.

– Engage hook of spindle - 10 - 222 A /11- in retainer - T10358- .

– Apply light tension to spindle.

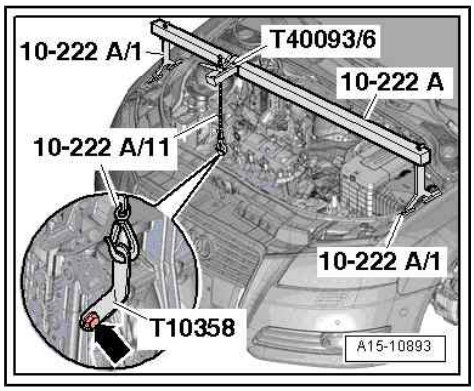

Protected by copyright. Copying for private or commercial purposes, in part or in whole, is not permitted unless authorised by AUDI AG. AUDI AG does not guarantee or accept any liability with respect to the correctness of information in this document. ©2019 AUDI AG

– Remove bolts -1 and 2- and detach connecting bracket.

– Remove bolts -3 ... 6- and detach engine mounting.

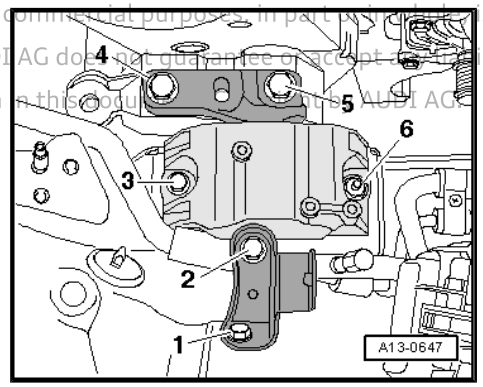

– Unscrew bolts -arrows- and remove engine support.

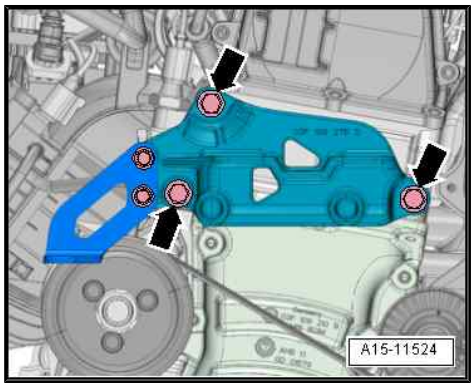

– Remove bolts -arrows-.

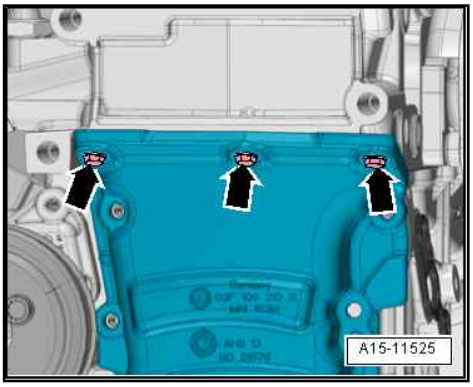

Protected by copyright. Copying for private or commercial purposes, in part or in whole, is not permitted unless authorised by AUDI AG. AUDI AG does not guarantee or accept any liability with respect to the correctness of information in this document. Copyright by AUDI AG.

– Mark original positions of roller rocker fingers and compensation elements for re-installation.
– Remove roller rocker fingers together with compensation elements and put down on a clean surface.
– Slacken cylinder head bolts in the sequence -1 ... 10-.
– Remove bolts and carefully take off cylinder head.
– Place cylinder head onto soft surface (foam plastic).

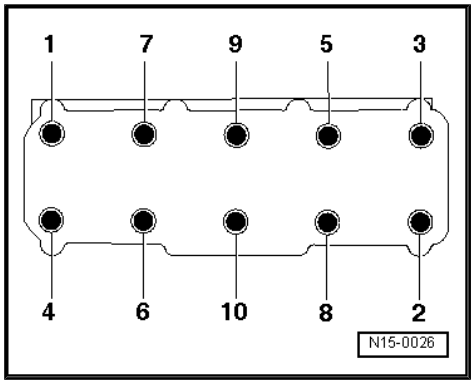

Installing

Tightening torques

- ⇒ “2.1 Exploded view - cylinder head”, page 104
- ⇒ Fig. ““Cylinder head - tightening torque and sequence”“ , page 106

Caution

Risk of damage to sealing surfaces.

- *Carefully remove sealant residue from cylinder head and cylinder block.*
- *Ensure that no long scores or scratches are made on the surfaces.*

Risk of damage to cylinder block.

- *No oil or coolant must be allowed to remain in the blind holes for the cylinder head bolts in the cylinder block.*

Risk of leaks at cylinder head gasket.

- *Carefully remove any sealant residue from the cylinder head and cylinder block. Ensure that no long scores or scratches are made on the surfaces.*
- *Carefully remove any remaining emery and abrasive material.*
- *Do not remove new cylinder head gasket from packaging until it is ready to be fitted.*
- *Handle the cylinder head gasket very carefully to prevent damage to the silicone coating or the indented area of the gasket.*

Risk of damage to open valves.

- *When installing an exchange cylinder head, the plastic protectors fitted to protect the open valves should not be removed until the cylinder head is ready to be fitted.*

Protected by copyright. Copying for private or commercial purposes, in part or in whole, is not permitted unless authorised by AUDI AG. AUDI AG does not guarantee or accept any liability with respect to the correctness of information in this document. Copyright by AUDI AG.

Note

- *Renew the bolts tightened with specified tightening angle.*
- *Renew gasket and O-rings.*
- *When installing an exchange cylinder head, the contact surfaces between the hydraulic compensation elements, roller rocker fingers and cams must be oiled before installing the camshaft housing.*
- *Secure all hose connections with the correct type of hose clips (same as original equipment) ⇒ Electronic parts catalogue .*
- *After fitting a new cylinder head or cylinder head gasket, change the engine oil and the coolant in the entire cooling system.*

Protected by copyright. Copying for private or commercial purposes, in part or in whole, is not permitted unless authorised by AUDI AG. AUDI AG does not guarantee or accept any liability with respect to the correctness of information in this document. Copyright by AUDI AG.

Caution

Protect lubrication system and bearings against contamination.

- ***Cover exposed parts of the engine.***

– Clean sealing surfaces on cylinder head and cylinder block; they must be free of oil and grease.

WARNING

Risk of eye injury.

- *Put on safety goggles.*

– Remove remaining sealant on timing chain cover (bottom) using rotating plastic brush or similar.

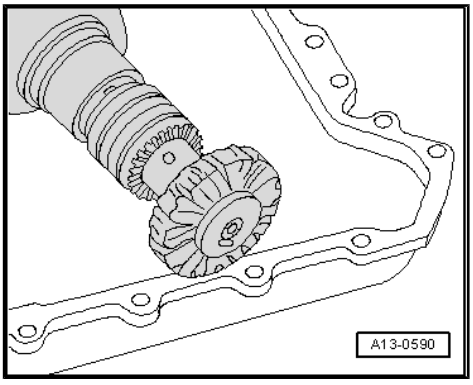

Note

Note expiry date of silicone sealant.

– Cut off nozzle of tube at front marking (nozzle ∅ approx. 2.5 mm).

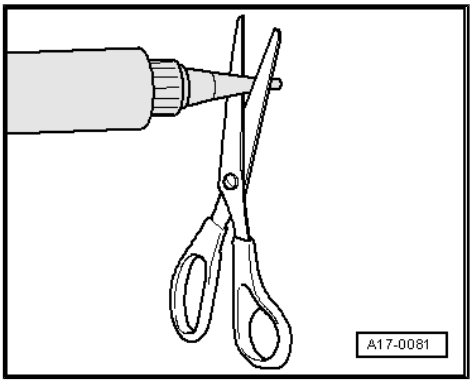

Caution

Make sure lubrication system is not clogged by excess sealant.

- ***The sealant bead must not be thicker than specified.***

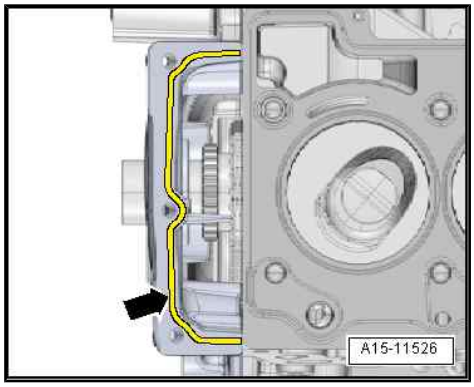

– Apply bead of sealant -arrow- onto clean outer sealing surface of camshaft housing, as shown in illustration.

• The bead of sealant must be 2.0 ... 3.0 mm thick.

Note

The cylinder head must be installed within 5 minutes of applying the sealant.

– Check that crankshaft is still positioned at “TDC” and then turn back in the opposite direction of engine rotation by approx. 45°.

Protected by copyright. Copying for private or commercial purposes, in part or in whole, is not permitted unless authorised by AUDI AG. AUDI AG does not guarantee or accept any liability with respect to correct and complete information in this doc

– If not already fitted, install dowel sleeves -arrows- in cylinder block.

– Fit cylinder head gasket onto dowel sleeves in cylinder block.

• Installation position: Part No. must be visible.

– Fit cylinder head.

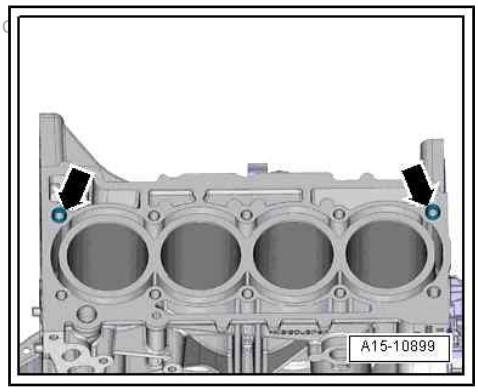

– Screw in cylinder head bolts by hand until they make contact and then tighten ⇒ page 106 .

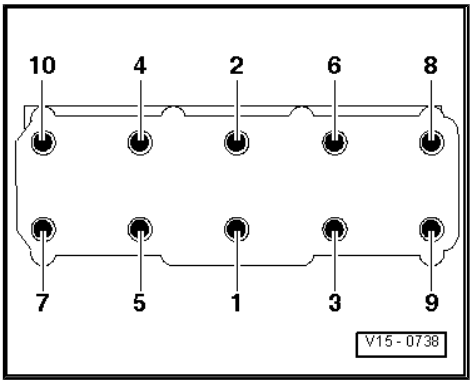

Note

Cylinder head bolts do not have to be torqued down again later after repair work.

– Fit each roller rocker finger onto end of corresponding valve stem and clip onto hydraulic compensation element.

Installation is carried out in the reverse order; note the following:

– Install engine mountings ⇒ page 40 .
– Install thermostat housing ⇒ page 170 .
– Install camshaft housing ⇒ page 118 .
– Install intake manifold ⇒ Rep. gr. 24 .
– Install oil filter bracket ⇒ page 144 .
– Change engine oil ⇒ Maintenance ; Booklet 808 .

Caution

Risk of damage to valves and piston crowns after working on valve gear.

- ***Turn the engine carefully at least 2 rotations to ensure that none of the valves make contact when the starter is operated.***

– Fill cooling system with fresh coolant ⇒ page 157 .

2.3 Checking compression

Special tools and workshop equipment required

- Spark plug spanner - 3122 B-

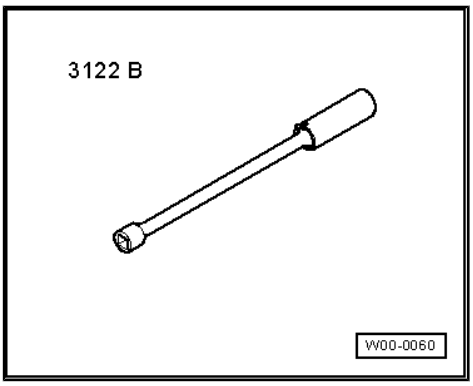

Protected by copyright. Copying for private or commercial purposes, in part or in whole, is not permitted unless authorised by AUDI AG. AUDI AG does not guarantee or accept any liability with respect to the correctness of information in this document. Copyright by AUDI AG.

♦ Compression tester - V.A.G 1763-

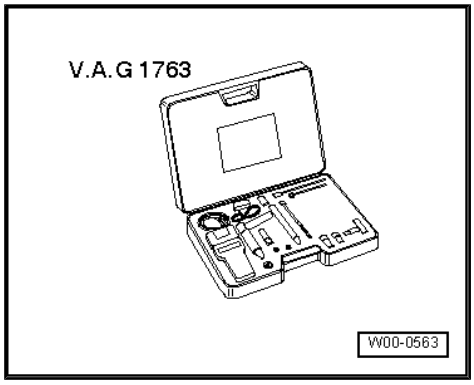

♦ Puller - T10112-

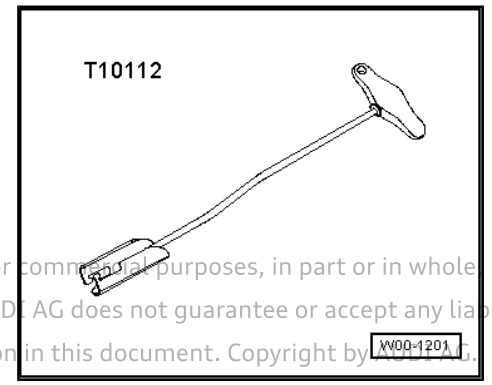

Protected by copyright. Copying for private or commercial purposes, in part or in whole, is not permitted unless authorised by AUDI AG. AUDI AG does not guarantee or accept any liability with respect to the correctness of information in this document. Copyright by AUDI AG.

Procedure

- Engine oil temperature at least 30 °C
- Battery voltage at least 12.5 V

– Switch off ignition.

– Unplug electrical connectors -arrows- at injectors.

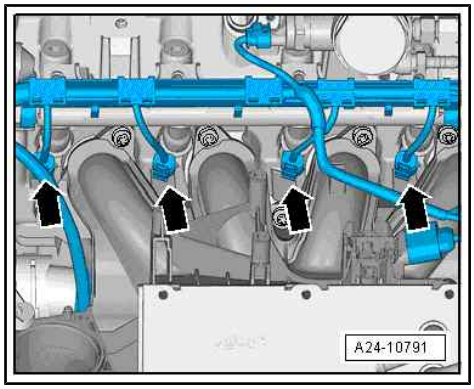

– Unplug electrical connector -arrow- at ignition transformer - N152- .

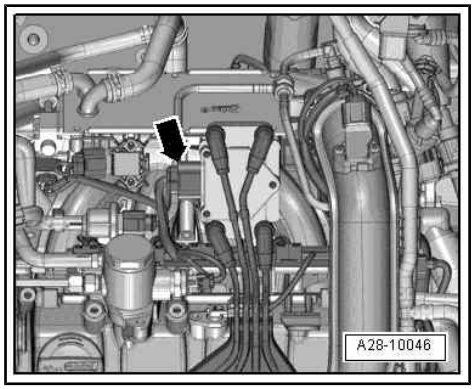

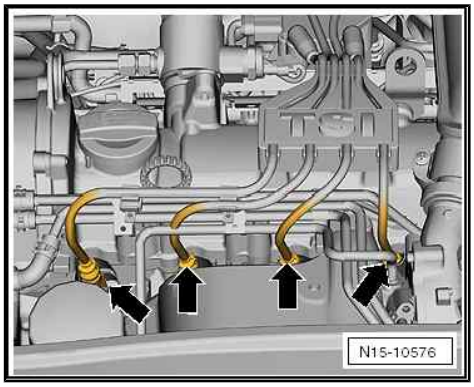

– Pull off spark plug connectors -arrows- using puller - T10112- .
– Unscrew spark plugs using spark plug socket - 3122 B- .
– Check compression pressure with compression tester - V.A.G 1763- (see ⇒ operating instructions for details of how to use tester).
– Have a second mechanic press down the accelerator pedal completely and at the same time operate the starter until the pressure on the tester display no longer increases.
– Repeat procedure on each cylinder.

Compression pressure	bar
When new	10.0 … 15.0
Wear limit	7.0
Maximum difference between cylinders	3.0

Installation is carried out in the reverse order; note the following:

– Install spark plugs ⇒ Maintenance ; Booklet 808 .
– Install spark plug connectors ⇒ Rep. gr. 28 .

Entries are stored in engine control unit because electrical connectors have been unplugged.

– Erase any entries in event memory ⇒ Vehicle diagnostic tester, `Guided Functions`, `Interrogate event memory`, then `Generate readiness code`.

Protected by copyright. Copying for private or commercial purposes, in part or in whole, is not permitted unless authorised by AUDI AG. AUDI AG does not guarantee or accept any liability with respect to the accuracy of the information in this document. Copyright by AUDI AG.

3 Valve gear

Overview

- ⇒ “3.1 Exploded view - camshaft housing”, page 116
- ⇒ “3.2 Checking axial clearance of camshaft”, page 118
- ⇒ “3.3 Removing and installing camshaft housing”, page 118
- ⇒ “3.4 Removing and installing camshaft”, page 124
- ⇒ “3.5 Renewing valve stem oil seals with cylinder head installed”, page 125
- ⇒ “3.6 Renewing valve stem oil seals with cylinder head removed”, page 128
- ⇒ “3.7 Valve dimensions”, page 131
- ⇒ “3.8 Checking valve guides”, page 131
- ⇒ “3.9 Checking valves”, page 132

Protected by copyright. Copying for private or commercial purposes, in part or in whole, is not permitted unless authorised by AUDI AG. AUDI AG does not guarantee or accept any liability with respect to the correctness of information in this document. Copyright by AUDI AG.

3.1 Exploded view - camshaft housing

1 - Cylinder head
- ❑ Removing and installing ⇒ page 106

2 - Dowel pin
- ❑ 2x

3 - Bolt
- ❑ Correct sequence when slackening ⇒ page 124
- ❑ Tightening torque and sequence ⇒ page 118

4 - Retaining frame
- ❑ For camshaft
- ❑ Removing and installing ⇒ “3.4 Removing and installing camshaft”, page 124

5 - Camshaft
- ❑ With cam for high-pressure pump
- ❑ Before removing, detach roller tappet for high-pressure pump
- ❑ Checking axial clearance ⇒ page 118
- ❑ Removing and installing ⇒ page 124
- ❑ Lubricate with oil before installing (also lubricate collar of axial bearing)

6 - Camshaft housing
- ❑ With integrated camshaft bearings
- ❑ Removing and installing ⇒ page 118

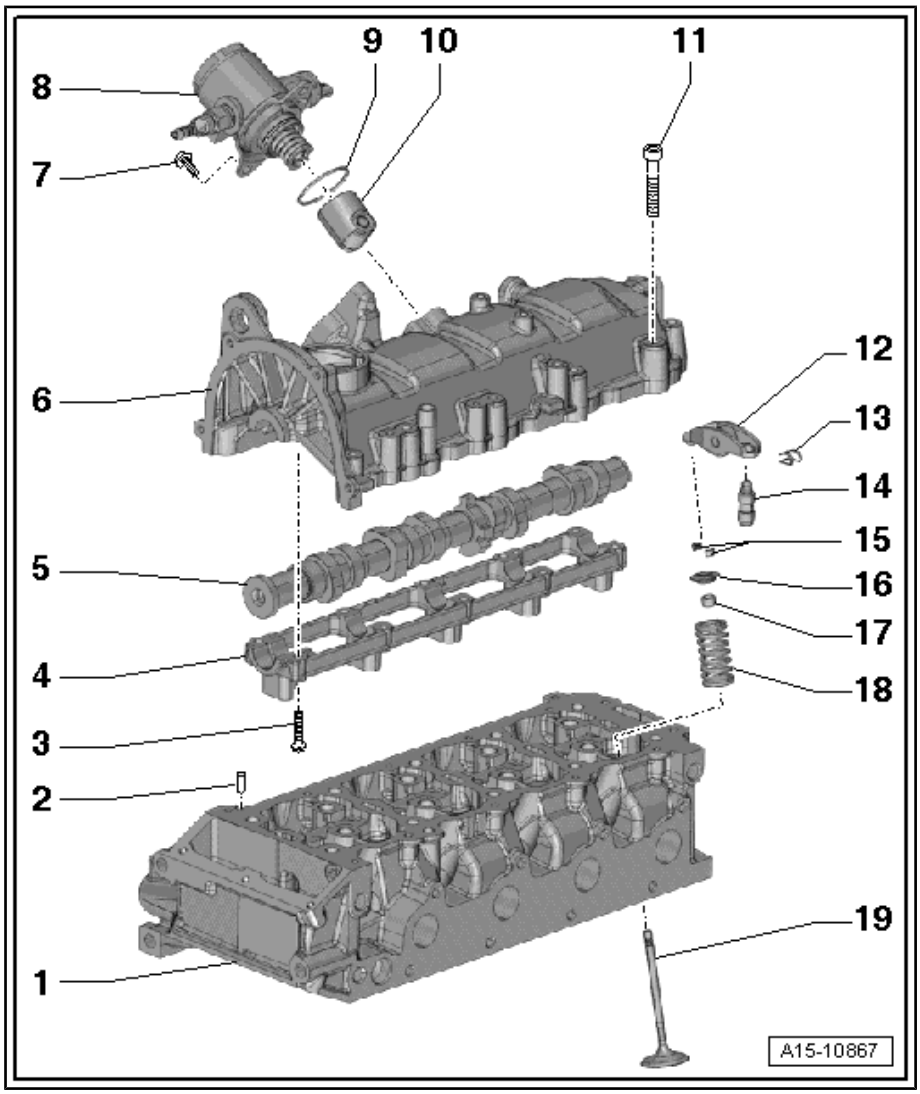

- ❑ Apply sealant when installing (2 different sealants); refer to ⇒ Electronic parts catalogue

7 - Bolt

- ❑ Tightening torque ⇒ Rep. gr. 24

8 - High-pressure pump

- ❑ Removing and installing ⇒ Rep. gr. 24

9 - O-ring

- ❑ Renew

10 - Roller tappet

- ❑ For high-pressure pump

11 - Bolt

- ❑ Renew
- ❑ Correct sequence when slackening ⇒ page 120
- ❑ Tightening torque and sequence ⇒ page 117

12 - Roller rocker finger

- ❑ Mark installation position for re-installation
- ❑ Check roller bearings for ease of movement
- ❑ Lubricate contact surfaces before installing
- ❑ Attach to hydraulic compensation element -item 15- using securing clip -item 13-

13 - Securing clip

- ❑ Not available as separate part

14 - Valve cotters

15 - Hydraulic compensation element

- ❑ Mark installation position for re-installation
- ❑ Lubricate running surfaces with oil

16 - Valve spring plate

17 - Valve stem oil seal

- ❑ Renewing with cylinder head installed ⇒ page 125
- ❑ Renewing with cylinder head removed ⇒ page 128

18 - Valve spring

19 - Valve

- ❑ Must not be machined; only grinding-in is permissible
- ❑ Valve dimensions ⇒ “3.7 Valve dimensions”, page 131
- ❑ Checking valve guides ⇒ page 131

Camshaft housing - tightening torque and sequence

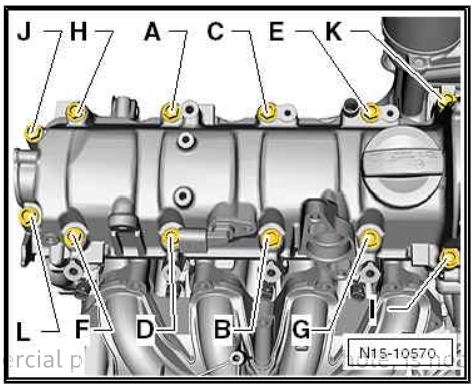

Note

Renew the bolts tightened with specified tightening angle.

– Tighten bolts in 2 stages in the sequence shown:

Stage	Bolts	Tightening torque/angle specification
1.	-A … L-	8 Nm
2.	-A … L-	Turn 90° further

Protected by copyright. Copying for private or commercial purposes, in part or in whole, is not permitted unless authorised by AUDI AG. AUDI AG does not guarantee or accept any liability with respect to the correctness of information in this document. Copyright by AUDI AG.

Retaining frame for camshaft - tightening torque and sequence

– Tighten bolts in 2 stages in the sequence shown:

Stage	Bolts	Tightening torque
1.	-A … J-	Screw in by hand until contact is made
2.	-A … J-	8 Nm

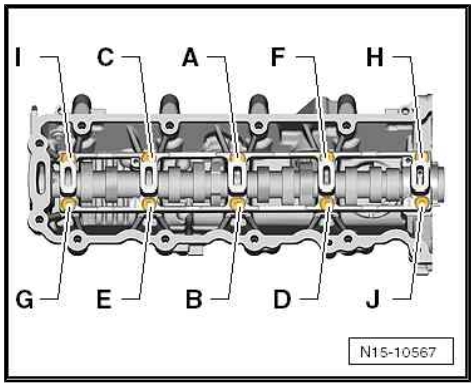

Protected by copyright. Copying for private or commercial purposes, in part or in whole, is not permitted unless authorised by AUDI AG. AUDI AG does not guarantee or accept any liability with respect to the correctness of information in this document. Copyright by AUDI AG.

3.2 Checking axial clearance of camshaft

Special tools and workshop equipment required

♦ Universal dial gauge bracket - VW 387-

♦ Dial gauge - VAS 6080-

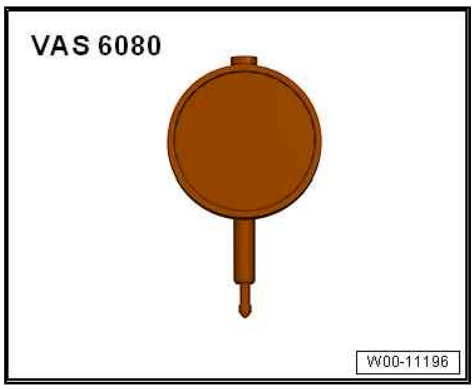

Procedure

– Perform measurement with camshaft housing installed.

– Secure universal dial gauge bracket - VW 387- with dial gauge - VAS 6080- to camshaft housing, as shown in illustration.

– Measure axial clearance.

• Wear limit: 0.40 mm.

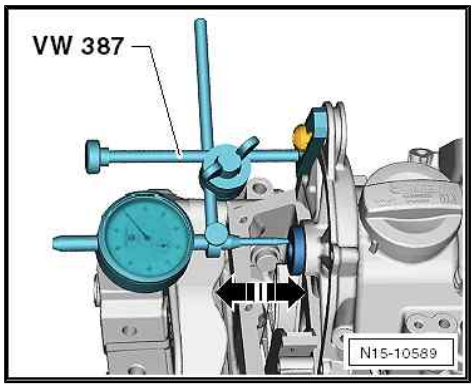

3.3 Removing and installing camshaft housing

Special tools and workshop equipment required

- Guide pins - T40199-

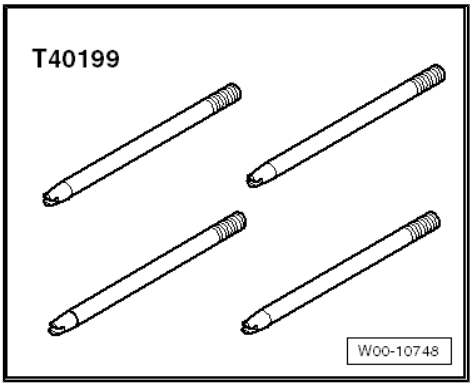

- Locking pin - T10340-

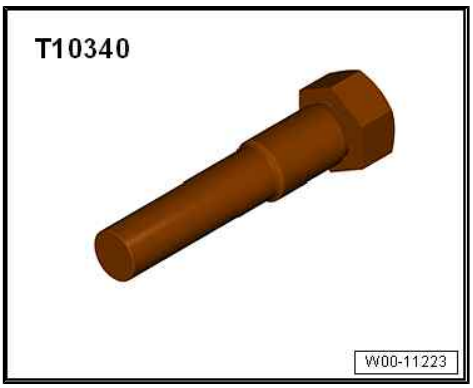

- Camshaft clamp - T10414-

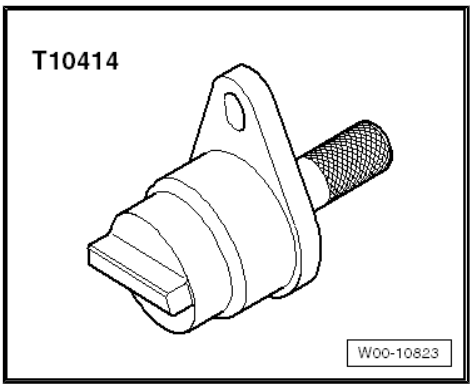

- Electric drill with plastic brush attachment
- Safety goggles
- Sealant (2x) ⇒ Electronic parts catalogue

Removing

– Detach camshaft timing chain from camshaft sprocket ⇒ page 85 .

– Remove turbocharger ⇒ page 182 .

– Unplug electrical connector -1- at Hall sender - G40- .

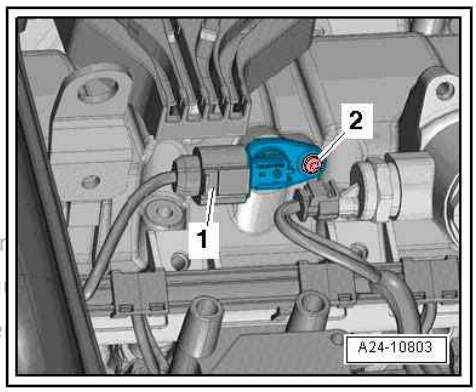

Note

Disregard -item 2-.

Protected by copyright. Copying for private or commercial pur
permitted unless authorised by AUDI AG. AUDI AG does not g
pect to the correctness of information in this docume

– Remove fuel rail ⇒ Removing and installing injectors; Rep. gr. 24 .

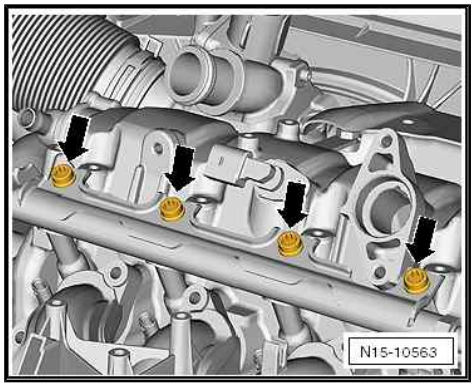

– Detach non-return valve -arrow- for crankcase breather system.
– Pull oil dipstick out of guide tube.

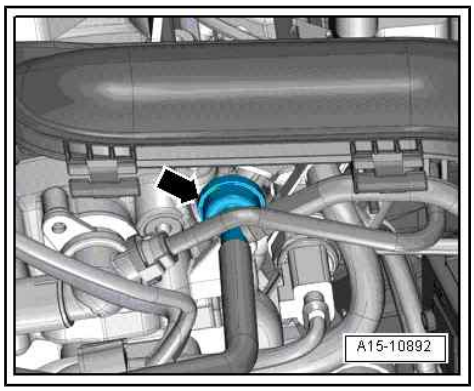

– Loosen and remove bolts for camshaft housing in the sequence -L ... A-.
– Carefully release camshaft housing from bonded joint and detach.
– Mark original positions of roller rocker fingers and compensation elements for re-installation.
– Remove roller rocker fingers together with compensation elements and put down on a clean surface.

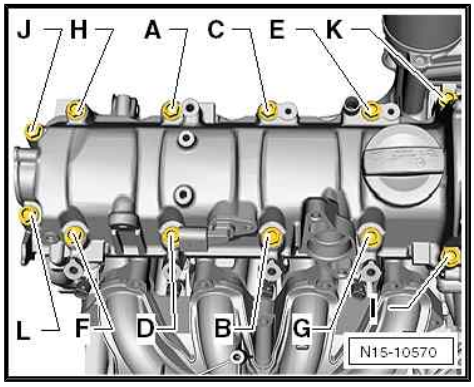

Installing

Tightening torques

- ⇒ Fig. ""Camshaft housing - tightening torque and sequence"", page 117
- ⇒ "1.1 Exploded view - turbocharger", page 181

Protected by copyright. Copying for private or commercial purposes, in part or in whole, is not permitted unless authorised by AUDI AG. AUDI AG does not guarantee or accept any liability with respect to the correctness of information in this document. Copyright by AUDI AG.

- Locking pin - T10340- is screwed into cylinder block as far as stop and tightened to 30 Nm.
- Crankshaft is turned in normal direction of rotation until it makes contact with locking pin - T10340- = “TDC” position.

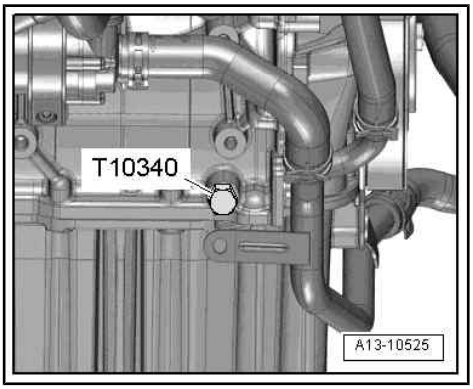

> **Caution**
>
> *Protect lubrication system and bearings against contamination.*
>
> ♦ *Cover exposed parts of the engine.*

– Remove old sealant from sealing surfaces.

> **Caution**
>
> *Protect lubrication system against contamination.*
>
> ♦ *Cover exposed parts of the engine.*

> **WARNING**
>
> *Risk of eye injury.*
>
> ♦ *Put on safety goggles.*

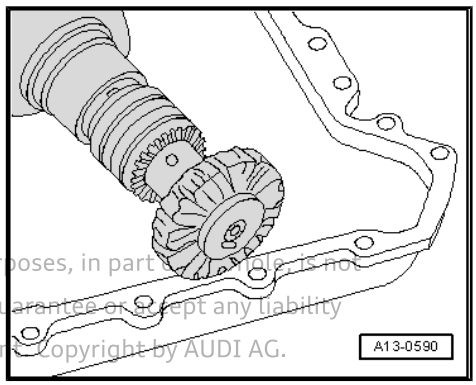

– Remove remaining sealant from camshaft housing and cylinder head using rotating plastic brush or similar.
– Clean sealing surfaces; they must be free of oil and grease.

Protected by copyright. Copying for private or commercial purposes, in part or whole, is not permitted unless authorised by AUDI AG. AUDI AG does not guarantee or accept any liability with respect to the correctness of information in this document. Copyright by AUDI AG.

– Screw guide pins - T40199- -item 1- into cylinder head.

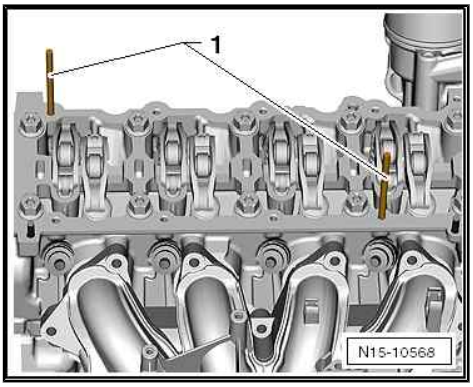

> **Note**
>
> *The guide pins are used to position the camshaft housing correctly when installing. This prevents the roller rocker fingers from slipping off the compensation elements.*

– Turn camshaft to “TDC”.
- Grooves -arrows- on camshaft should be positioned as shown in illustration.

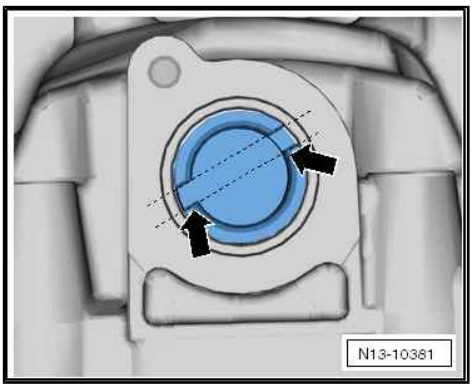

– Slide camshaft clamp - T10414- into camshaft housing as far as stop and screw bolt -1- in by hand until it makes contact.

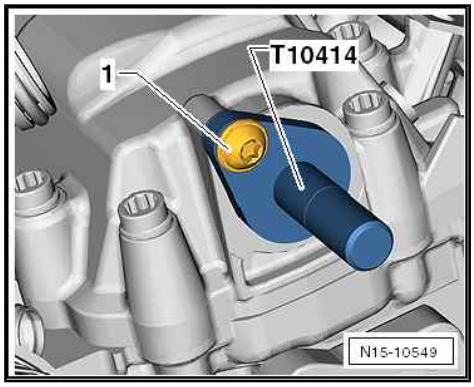

Caution

Risk of leaks.

- *Different sealants must be used for the outer seal on the camshaft housing and for the seal at the camshaft bearing pedestals. For correct types of sealant refer to ⇒ Electronic parts catalogue .*

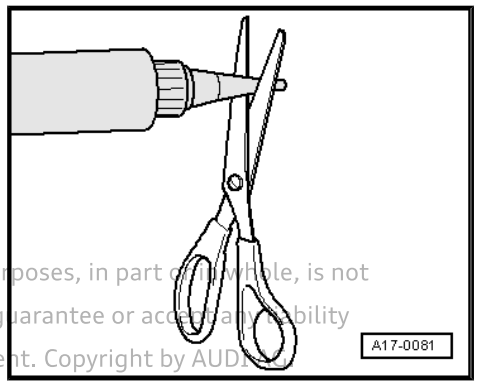

Protected by copyright. Copying for private or commercial purposes, in part or in whole, is not permitted unless authorised by AUDI AG. AUDI AG does not guarantee or accept any liability with respect to the correctness of information in this document. Copyright by AUDI AG.

Note

Note the use-by date of the sealant.

– For outer seal on camshaft housing: cut off nozzle of tube at front marking (nozzle ∅ approx. 2 mm).

Caution

Make sure lubrication system is not clogged by excess sealant.

- *The sealant bead must not be thicker than specified.*

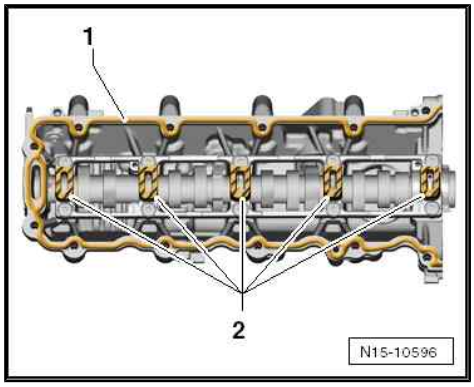

– Apply bead of sealant -1- onto clean outer sealing surface of camshaft housing, as shown in illustration.

• The bead of sealant must be 2.0 ... 3.0 mm thick.

– Apply a thin and even layer of sealant to clean sealing surfaces of camshaft housing (hatched areas -2- in illustration).

– Make sure that all roller rocker fingers make contact with the corresponding valve ends correctly and are clipped into their respective support elements.

Note

The camshaft housing must be installed within 5 minutes after applying the sealant.

Protected by copyright. Copying for private or commercial purposes, in part or in whole, is not permitted unless authorised by AUDI AG. AUDI AG does not guarantee or assume any liability with respect to the correctness of information in this document. Copyright by AUDI AG.

Caution

Make sure remnants of oil are removed before fitting, otherwise leakage can occur.

- *Make sure sealing surfaces are free of oil when fitting camshaft housing.*

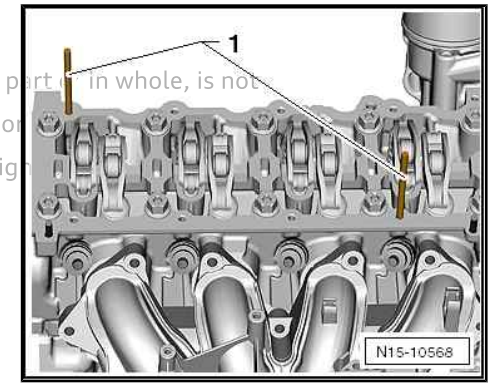

– Carefully lower camshaft housing vertically onto guide pins -T40199- -item 1- in cylinder head.

Note

Make sure that camshaft housing is kept straight.

– Tighten camshaft housing bolts ⇒ page 117 .

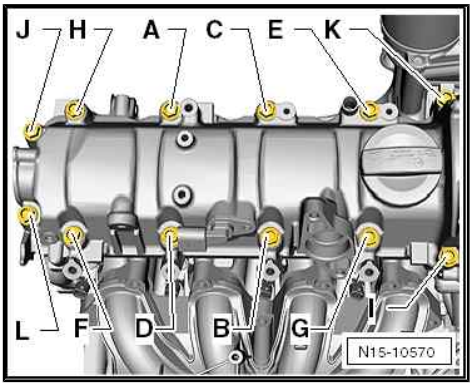

Caution

Risk of leaks.

- *Sealants for camshaft housing and timing chain cover (top) must not be allowed to mix.*

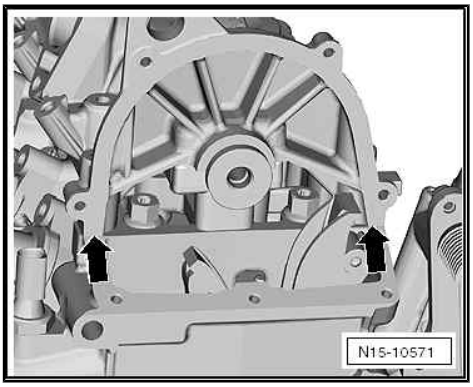

– Remove any excess sealant in area of -arrows-.

Note

After fitting camshaft housing, allow sealant to dry for approx. 30 minutes.

Remaining installation steps are carried out in reverse sequence; note the following:

– Install camshaft timing chain ⇒ page 96 .

– Install fuel rail ⇒ Removing and installing injectors; Rep. gr. 24 .

– Install turbocharger ⇒ page 182 .

– Install spark plug connectors ⇒ Rep. gr. 28 .

3.4 Removing and installing camshaft

Removing

– Remove high-pressure pump ⇒ Rep. gr. 24 .

– Remove camshaft housing ⇒ page 118 .

– Unscrew bolt -1- and remove camshaft clamp - T10414- .

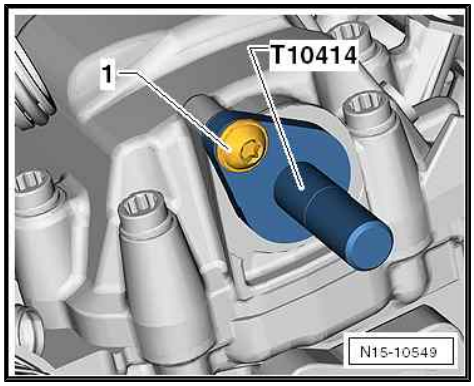

– Remove bolts in sequence -A … J-.

– Detach retaining frame from camshaft housing.

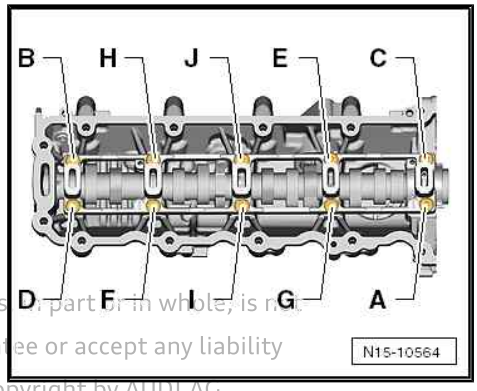

Protected by copyright. Copying for private or commercial purposes, in part or in whole, is not permitted unless authorised by AUDI AG. AUDI AG does not guarantee or accept any liability with respect to the correctness of information in this document. Copyright by AUDI AG.

– Pull camshaft -1- out of camshaft housing -2-.

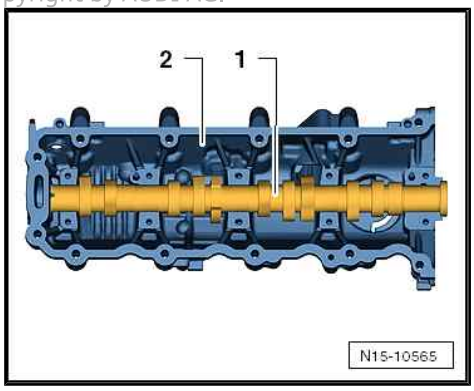

Installing

- Tightening torque
  ⇒ Fig. ""Retaining frame for camshaft - tightening torque and sequence"" , page 118

– Insert camshaft -1- into camshaft housing -2- (lubricate running surfaces with oil before inserting).

– Slide camshaft clamp - T10414- into camshaft housing as far as stop and screw bolt in by hand until it makes contact.

– Fit retaining frame onto camshaft bearing points (note position of dowel pins -arrows-).

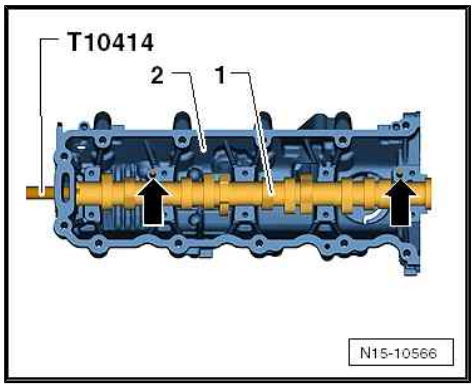

– Screw in retaining frame bolts by hand until they make contact and then tighten ⇒ page 118 .

Remaining installation steps are carried out in reverse sequence; note the following:

– Install camshaft housing ⇒ page 118 .

– Install high-pressure pump ⇒ Rep. gr. 24 .

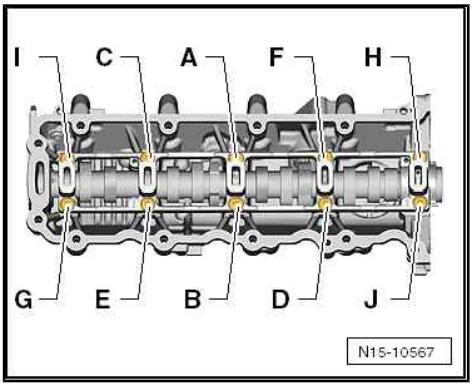

3.5 Renewing valve stem oil seals with cylinder head installed

Protected by copyright. Copying for private or commercial purposes, in part or in whole, is not unless authorised by AUDI AG. AUDI AG does not guarantee or accept any liability with respect to the correctness of information in this document. Copyright by AUDI AG.

Special tools and workshop equipment required

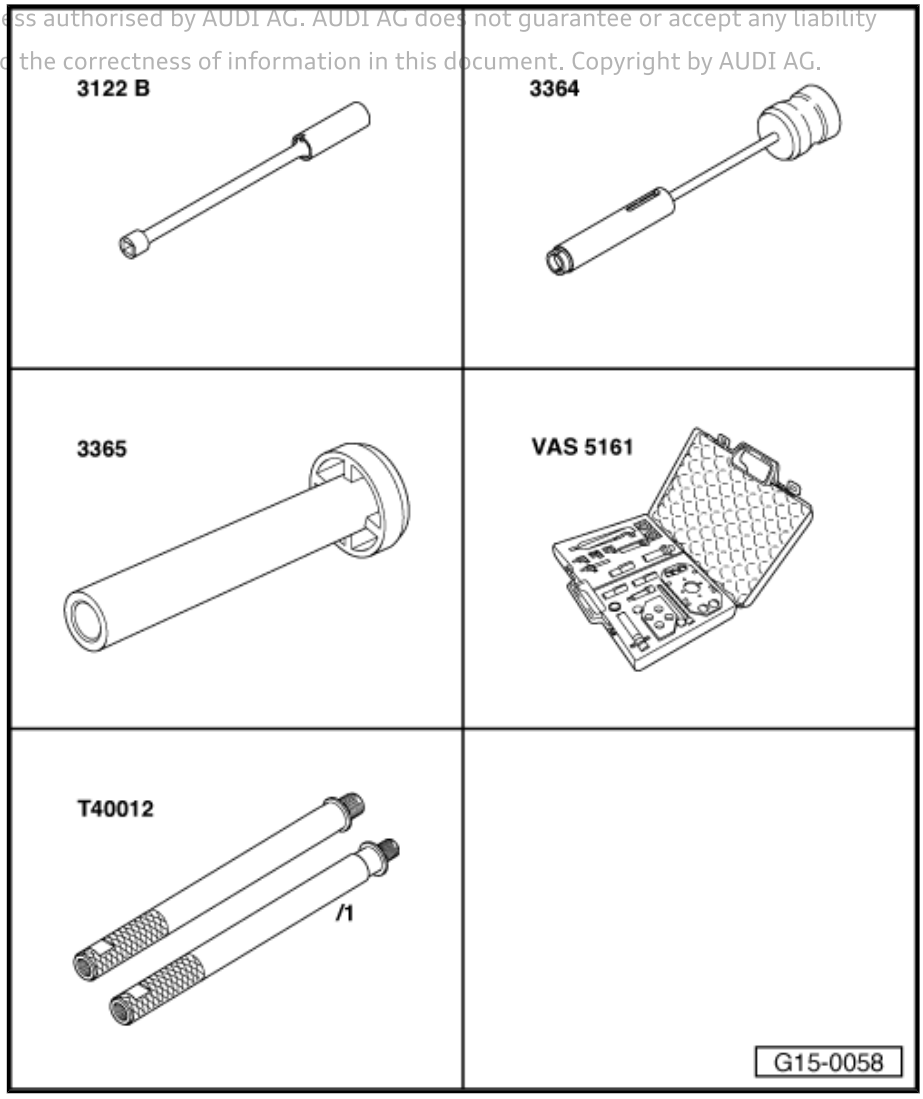

- Spark plug spanner - 3122 B-
- Valve stem seal puller - 3364-
- Valve stem oil seal fitting tool - 3365-
- Removal and installation device for valve cotters - VAS 5161- with guide plate -VAS 5161/28-

♦ Adapters - T40012-

Procedure

– Remove camshaft housing ⇒ page 118 .

– Mark original positions of roller rocker fingers and hydraulic compensation elements for re-installation.

– Remove roller rocker fingers together with hydraulic compensation elements and put down on a clean surface.

– Unscrew spark plugs using spark plug socket - 3122 B- .

– Set piston of appropriate cylinder to “bottom dead centre”.

– Screw adapter - T40012- with seal hand-tight into the corresponding spark plug thread.

– Connect adapter to compressed air line using a commercially available connection piece and apply constant air pressure.

• Minimum pressure: 6 bar

– Fit guide plate -VAS 5161/28- onto cylinder head in correct position:

• Mark “A” should face exhaust side; mark “E” should face inlet side.

– Secure guide plate to cylinder head with hexagon socket head bolts -arrows-.

– Apply drift -VAS 5161/3- to guide plate and use plastic-headed hammer to release sticking valve cotters.

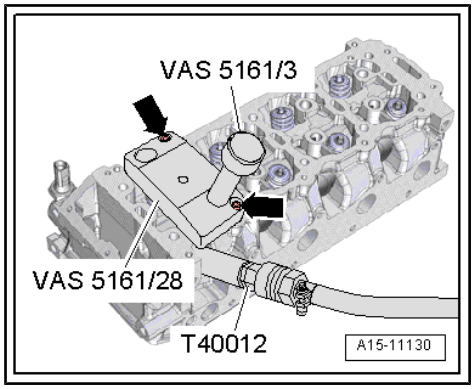

– Screw snap-in device -VAS 5161/6- with engaging fork -VAS 5161/5- into guide plate.

– Insert assembly cartridge -VAS 5161/8- in guide plate.

– Attach pressure fork -VAS 5161/2- to snap-in device and push assembly cartridge down.

– At the same time, turn knurled screw of assembly cartridge clockwise until tips engage in valve cotters.

– Move knurled screw back and forth slightly; the valve cotters are thus forced apart and taken up by the assembly cartridge.

– Release pressure fork.

– Take out assembly cartridge.

– Detach guide plate and turn to one side.

• The compressed air hose remains connected.

– Detach valve spring with valve spring plate.

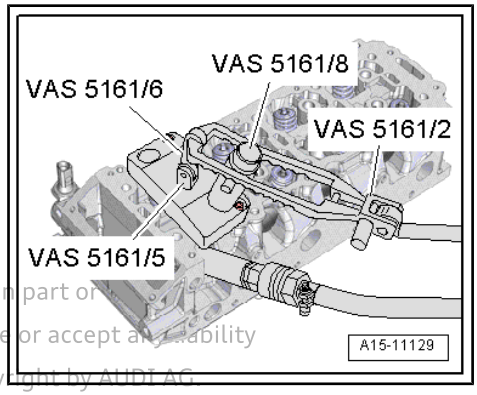

Protected by copyright. Copying for private or commercial purposes, in part or in whole, is not permitted unless authorised by AUDI AG. AUDI AG does not guarantee or accept any liability with respect to the correctness of information in this document. Copyright by AUDI AG.

– Pull off valve stem oil seal with valve stem seal puller - 3364- .

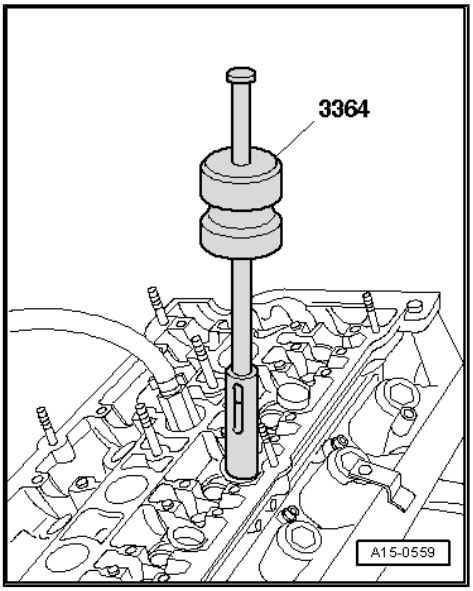

Caution

Make sure valve stem oil seals are not damaged when installing.

- *New valve stem oil seals -B- are supplied with plastic sleeve; fit plastic sleeve -A- onto valve stem.*

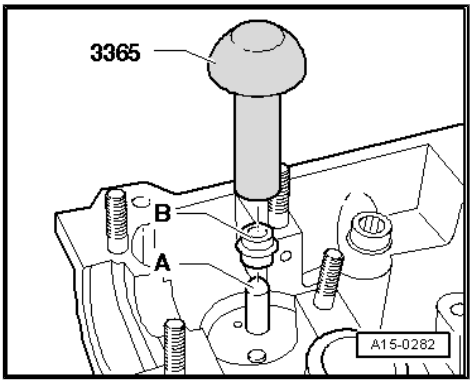

– Lightly oil sealing lip of valve stem oil seal.
– Slide valve stem oil seal onto plastic sleeve.
– Carefully press valve stem oil seal onto valve guide using valve stem seal fitting tool - 3365- .
– Remove plastic sleeve.

If valve cotters have been removed from assembly cartridge, they must first be inserted in insertion device -VAS 5161/18- .

- Larger diameter of valve cotters faces upwards.
– Press assembly cartridge onto insertion device from above and pick up valve cotters.

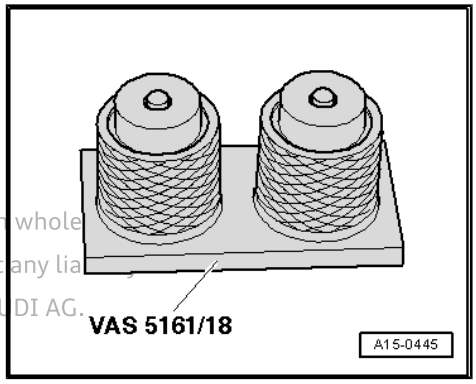

Protected by copyright. Copying for private or commercial purposes, in part or in whole, is not permitted unless authorised by AUDI AG. AUDI AG does not guarantee or accept any liability with respect to the correctness of information in this document. Copyright by AUDI AG.

– Insert valve spring and valve spring plate.
– Secure guide plate -VAS 5161/28- back onto cylinder head.
– Insert assembly cartridge -VAS 5161/8- in guide plate.
– Press down pressure fork and pull knurled screw upwards while turning screw in both directions - this will insert the valve cotters.
– Release pressure fork with knurled screw still in pulled position.
– Repeat procedure for each valve.

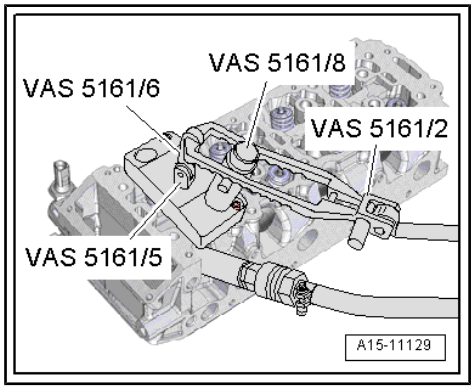

Assembling

Installation is carried out in the reverse order; note the following:

– Install spark plugs ⇒ Maintenance ; Booklet 808 .
– Install camshaft housing ⇒ page 118 .

3.6 Renewing valve stem oil seals with cylinder head removed

Special tools and workshop equipment required

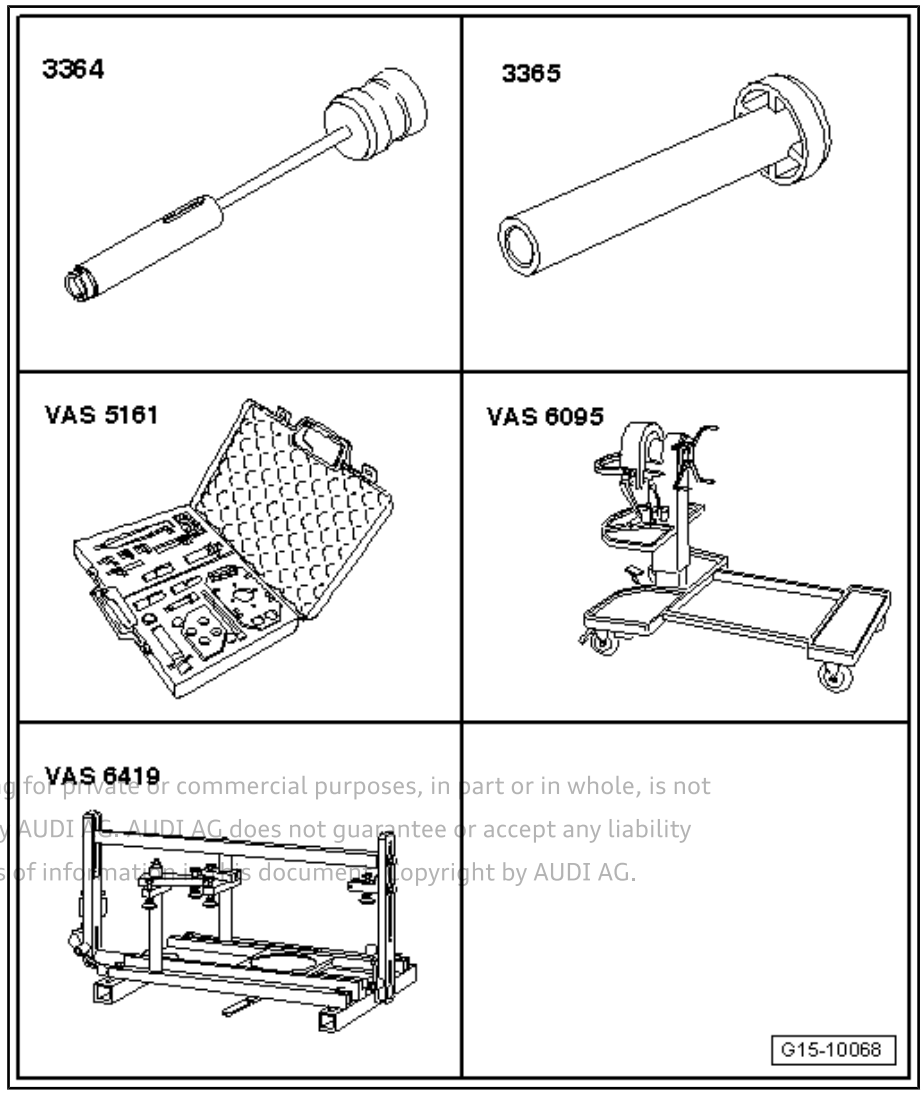

Protected by copyright. Copying for private or commercial purposes, in part or in whole, is not permitted unless authorised by AUDI AG. AUDI AG does not guarantee or accept any liability with respect to the correctness of information in this document. Copyright by AUDI AG.

♦ Valve stem seal puller - 3364-
♦ Valve stem oil seal fitting tool - 3365-

Protected by copyright. Copying for private or commercial purposes, in part or in whole, is not permitted unless authorised by AUDI AG. AUDI AG does not guarantee or accept any liability with respect to the correctness of information in this document. Copyright by AUDI AG.

- ♦ Removal and installation device for valve cotters - VAS 5161- with guide plate -VAS 5161/28-
- ♦ Engine and gearbox support - VAS 6095-
- ♦ Cylinder head tensioning device - VAS 6419-

Procedure

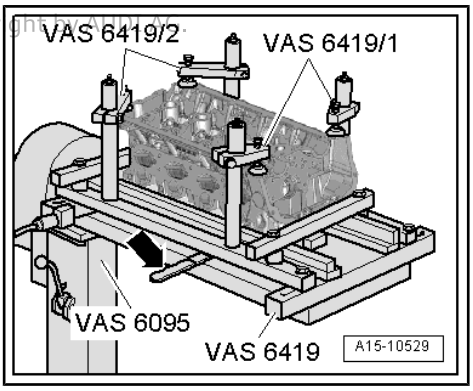

– Insert cylinder head tensioning device - VAS 6419- into engine and gearbox support - VAS 6095- .

– Secure cylinder head in cylinder head tensioning device, as shown in illustration.

– Connect cylinder head tensioning device to compressed air supply.

– Using lever -arrow-, slide air pad under combustion chamber where valve stem oil seals are to be removed.

– Apply just enough compressed air to bring air pad into contact with valve heads.

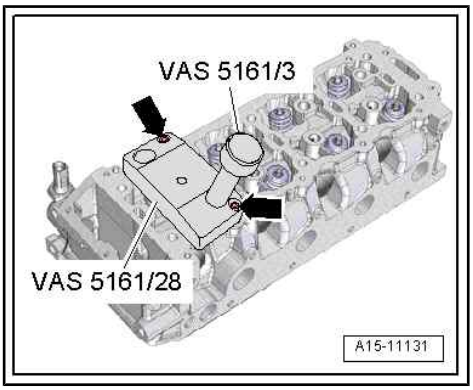

– Fit guide plate -VAS 5161/28- onto cylinder head in correct position:

• Mark “A” should face exhaust side; mark “E” should face inlet side.

– Secure guide plate to cylinder head with hexagon socket head bolts -arrows-.

– Apply drift -VAS 5161/3- to guide plate and use plastic-headed hammer to release sticking valve cotters.

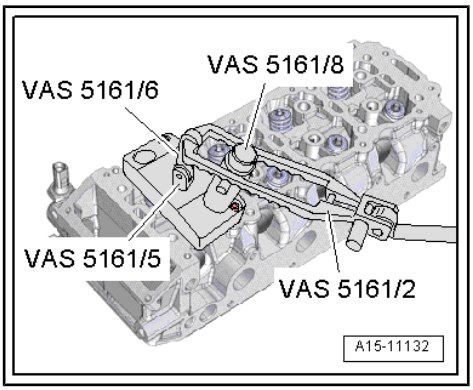

– Screw snap-in device -VAS 5161/6- with engaging fork -VAS 5161/5- into guide plate.

– Insert assembly cartridge -VAS 5161/8- in guide plate.

– Attach pressure fork -VAS 5161/2- to snap-in device and push assembly cartridge down.

– At the same time, turn knurled screw of assembly cartridge clockwise until tips engage in valve cotters.

– Move knurled screw back and forth slightly; the valve cotters are thus forced apart and taken up by the assembly cartridge.

– Release pressure fork.

– Take out assembly cartridge.

– Detach guide plate and turn to one side.

– Detach valve spring with valve spring plate.

– Pull off valve stem oil seal with valve stem seal puller - 3364- .

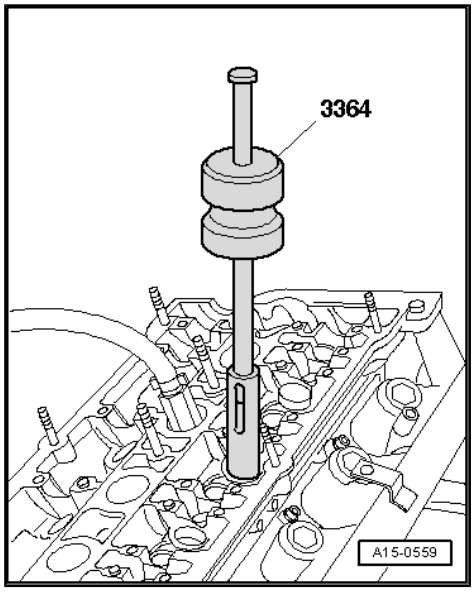

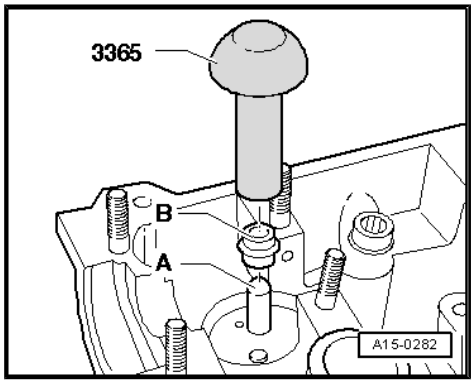

> ⚠ **Caution**
>
> ***Make sure valve stem oil seals are not damaged when installing.***
>
> ◆ ***New valve stem oil seals -B- are supplied with plastic sleeve; fit plastic sleeve -A- onto valve stem.***

– Lightly oil sealing lip of valve stem oil seal.

– Slide valve stem oil seal onto plastic sleeve.

– Carefully press valve stem oil seal onto valve guide using valve stem seal fitting tool - 3365- .

– Remove plastic sleeve.

If valve cotters have been removed from assembly cartridge, they must first be inserted in insertion device -VAS 5161/18- .

• Larger diameter of valve cotters faces upwards.

– Press assembly cartridge onto insertion device from above and pick up valve cotters.

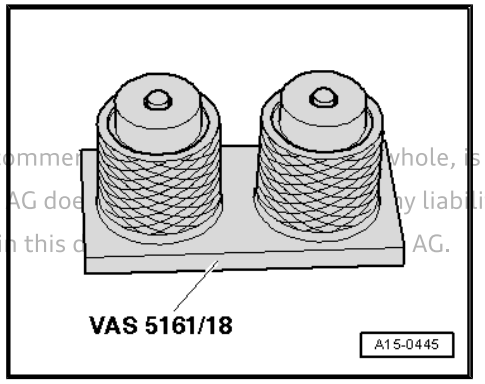

Protected by copyright. Copying for private or commer whole, is not permitted unless authorised by AUDI AG. AUDI AG doe y liability with respect to the correctness of information in this d AG.

Protected by copyright. Copying for private or commercial purposes, in part or in whole, is not permitted unless authorised by AUDI AG. AUDI AG does not guarantee or accept any liability with respect to the correctness of information in this document. Copyright by AUDI AG.

– Insert valve spring and valve spring plate.
– Secure guide plate -VAS 5161/28- back onto cylinder head.
– Insert assembly cartridge -VAS 5161/8- in guide plate.
– Press down pressure fork and pull knurled screw upwards while turning screw in both directions - this will insert the valve cotters.
– Release pressure fork with knurled screw still in pulled position.
– Repeat procedure for each valve.

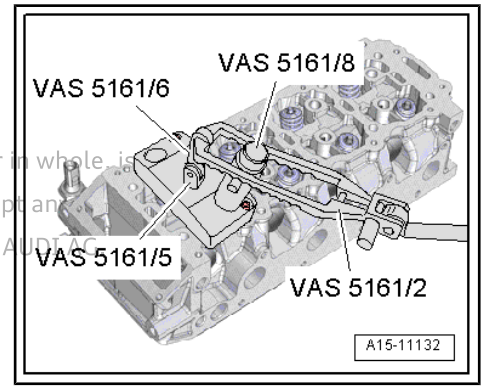

3.7 Valve dimensions

Note

Inlet and exhaust valves must not be machined. Only grinding-in is permitted.

Dimension		Inlet valve	Exhaust valve
∅ a	mm	35.5	30.0
∅ b	mm	5.98	5.96
c	mm	98.67	98.36
α	∠°	45	45

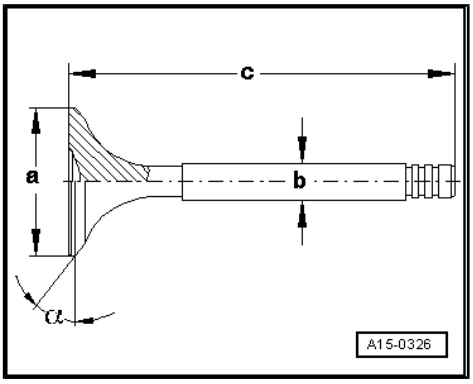

WARNING

Care must be taken when disposing of old sodium-cooled exhaust valves - risk of injury.

- *The valves must be sawn in two with a metal saw between the centre of the stem and valve head. When doing so, the valves must not come into contact with water.*
- *Then throw a maximum of ten valves into a bucket of water and step away immediately.*
- *A sudden chemical reaction will occur upon contact with water in which the sodium filling burns.*
- *After performing these steps the valves can be disposed of in the normal way.*

3.8 Checking valve guides

Special tools and workshop equipment required

♦ Universal dial gauge bracket - VW 387-

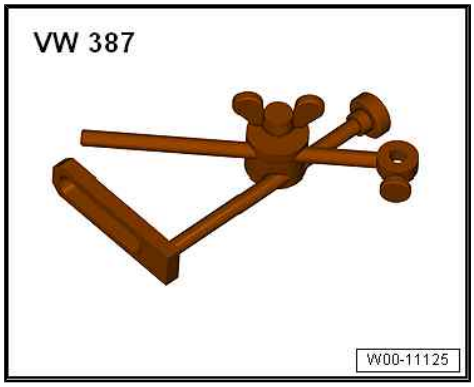

♦ Dial gauge - VAS 6079-

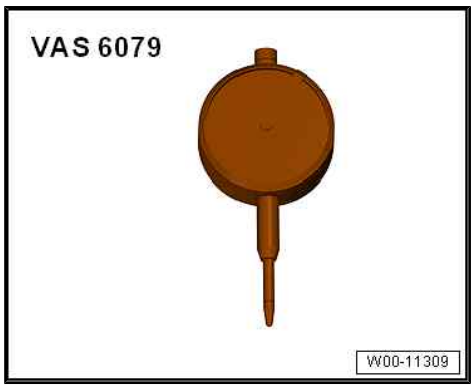

Procedure

Protected by copyright. Copying for private or commercial purposes, in part or in whole, is not permitted unless authorised by AUDI AG. AUDI AG does not guarantee or accept any liability with respect to the correctness of information in this document. Copyright by AUDI AG.

Note

♦ *If the valve has to be renewed as part of a repair, use a new valve for the measurement.*

♦ *Only insert inlet valve into inlet guide and exhaust valve into exhaust guide, as the stem diameters are different.*

– Secure dial gauge - VAS 6079- to cylinder head with universal dial gauge bracket - VW 387- as shown in illustration.

– Insert valve into guide.

• End of valve stem must be flush with valve guide.

– Measure the amount of sideways play.

• Wear limit: 0.8 mm.

– If the wear limit is exceeded, repeat the measurement with new valves.

– Renew cylinder head if wear limit is still exceeded.

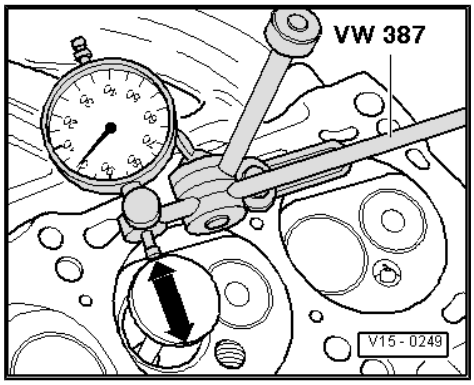

Note

Valve guides cannot be renewed.

3.9 Checking valves

– Visually inspect for scoring on valve stems and valve seat surfaces.

– Renew valve if scoring is clearly visible.

17 – Lubrication

1 Sump and oil pump

Overview

- ⇒ “1.1 Exploded view - sump, oil pump”, page 133
- ⇒ “1.2 Removing and installing oil level and oil temperature sender G266 ”, page 135
- ⇒ “1.3 Removing and installing sump”, page 135
- ⇒ “1.4 Removing and installing drive chain for oil pump”, page 138
- ⇒ “1.5 Removing and installing oil pump”, page 139
- ⇒ “1.6 Removing and installing non-return valve”, page 141

1.1 Exploded view - sump, oil pump

Note

- *If large quantities of metal shavings or abrasion are found when performing engine repairs, this may be an indication of damage to the crankshaft or conrod bearings. To prevent further damage, the following steps are required after completion of repair work: clean the oil passages carefully and renew the oil spray jets, engine oil cooler and oil filter.*
- *Oil spray jet and pressure relief valve ⇒ page 69*

Protected by copyright. Copying for private or commercial purposes, in part or in whole, is not permitted unless authorised by AUDI AG. AUDI AG does not guarantee or accept any liability with respect to the correctness of information in this document. Copyright by AUDI AG.

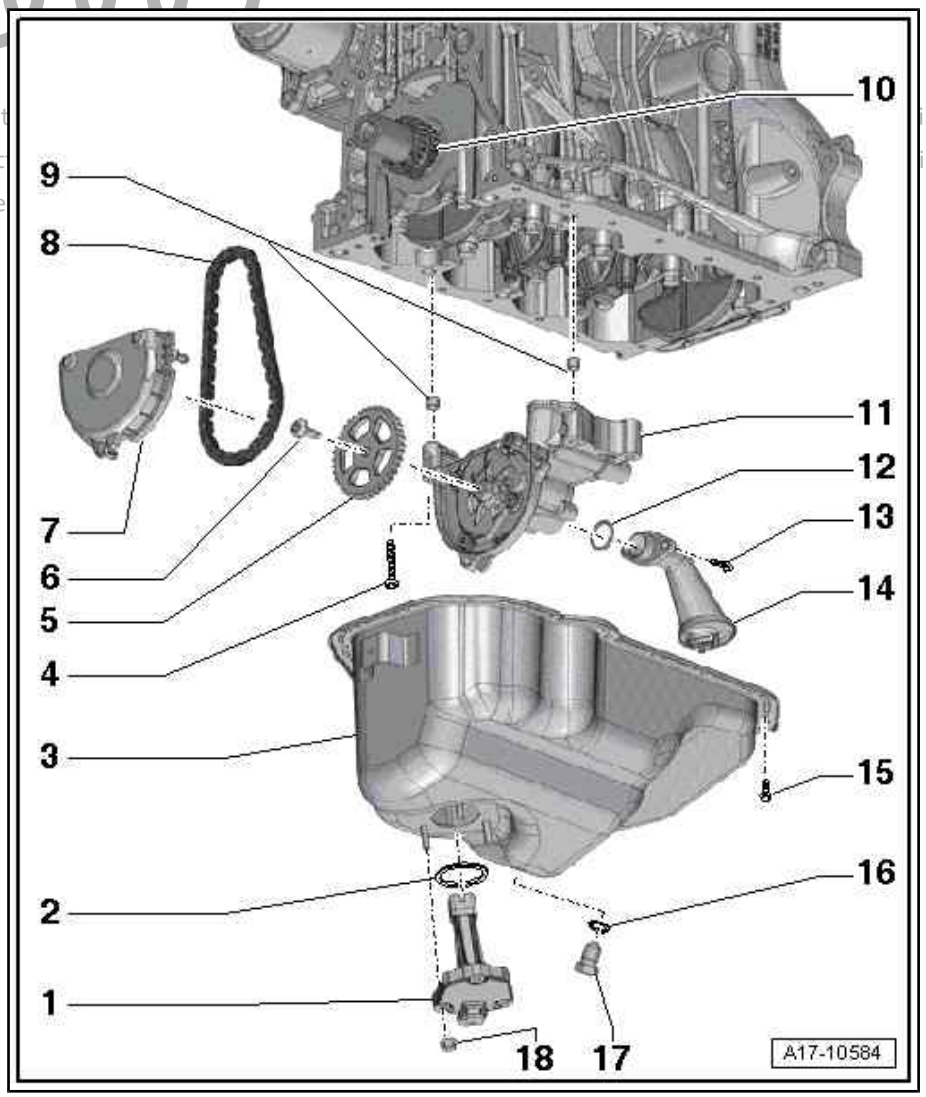

1 - Oil level and oil temperature sender - G266-

- ❑ Removing and installing ⇒ page 135

2 - Seal

- ❑ Renew

3 - Sump

- ❑ Removing and installing ⇒ page 135
- ❑ Apply sealant when installing; refer to ⇒ Electronic parts catalogue

4 - Bolt

- ❑ Renew
- ❑ 14 Nm +90°

5 - Drive chain sprocket

- ❑ For oil pump
- ❑ Sprocket can only be fitted on oil pump shaft in one position.
- ❑ Counterhold using counterhold tool - T10172-

6 - Bolt

- ❑ Renew
- ❑ 20 Nm +90°

7 - Cover

- ❑ For chain sprocket
- ❑ Clipped onto oil pump

8 - Drive chain

- ❑ For oil pump
- ❑ Before removing, mark running direction with paint
- ❑ Check for wear
- ❑ Removing and installing ⇒ page 138

9 - Dowel sleeves

10 - Chain sprocket

- ❑ For drive chain for oil pump
- ❑ On crankshaft

11 - Oil pump

- ❑ With pressure relief valve
- ❑ Removing and installing ⇒ page 139
- ❑ Before installing, check that the two dowel sleeves for centring oil pump/cylinder block are fitted

12 - O-ring

- ❑ Renew

13 - Bolt

- ❑ 8 Nm

14 - Suction pipe

- ❑ Clean strainer if dirty

15 - Bolt

- ❑ Renew
- ❑ 13 Nm
- ❑ When loosening and tightening the bolts on the gearbox end, use Allen key, long reach - T10058-

16 - Seal

- ❑ Renew

17 - Oil drain plug

- ❑ 30 Nm

18 - Nut

- ❑ 9 Nm

Non-return valve (threaded version) - tightening torque

– Tighten non-return valve -arrow- to 7 Nm.

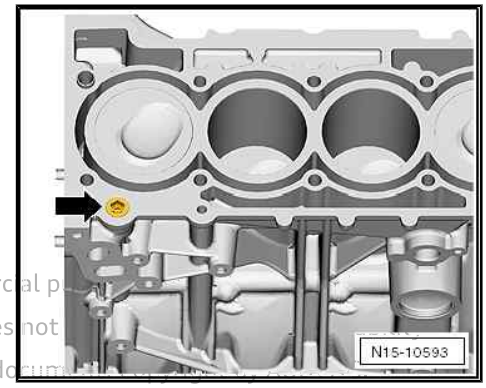

Protected by copyright. Copying for private or commercial p
permitted unless authorised by AUDI AG. AUDI AG does not
with respect to the correctness of information in this do

1.2 Removing and installing oil level and oil temperature sender - G266-

Removing

- Engine oil drained ⇒ Maintenance ; Booklet 808

– Unplug electrical connector -3-.

– Remove nuts -1- and detach oil level and oil temperature sender - G266- -item 4-.

Installing

Installation is carried out in reverse order; note the following:

- Tightening torque
  ⇒ “1.1 Exploded view - sump, oil pump”, page 133

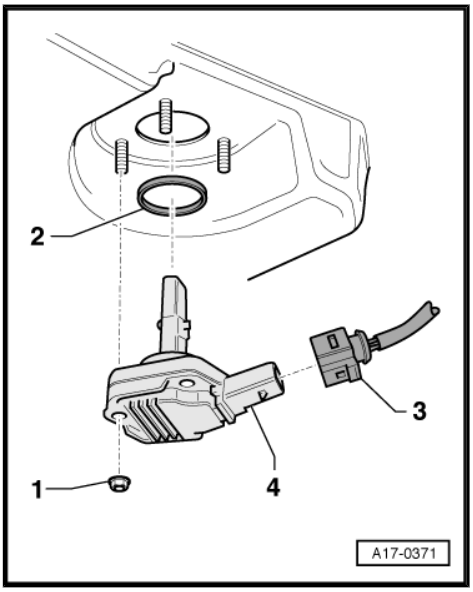

Note

Renew seal -2-.

1.3 Removing and installing sump

Special tools and workshop equipment required

- Socket - T10058-

- Electric drill with plastic brush attachment
- Safety goggles
- Sealant ⇒ Electronic parts catalogue

Removing

- Engine oil drained ⇒ Maintenance ; Booklet 808

– Remove front exhaust pipe ⇒ page 197 .

– Unplug electrical connector -arrow- at oil level and oil temperature sender - G266- .

Protected by copyright. Copying for private or commercial purpose
permitted unless authorised by AUDI AG. AUDI AG does not guara
with respect to the correctness of information in this document. C

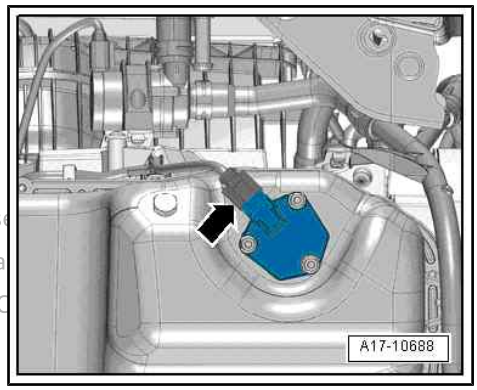

– Remove bolts -arrows- and move coolant pipe (right-side) to side.

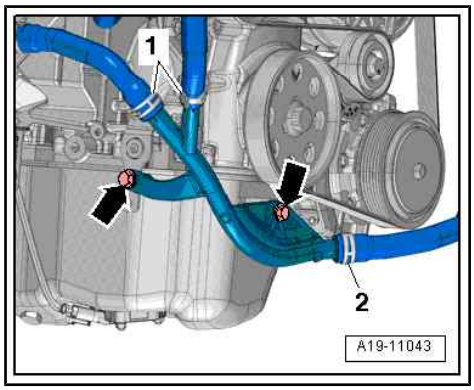

Note

Disregard items -1 and 2-.

– Unscrew bolts -arrows- and remove cover plate -1-.

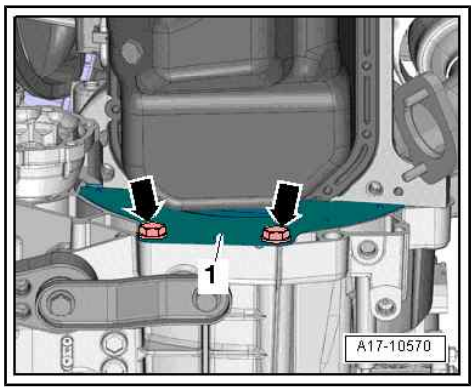

– Slacken bolts -1, 2- and -arrows- in diagonal sequence and remove.
– Carefully release oil sump from bonded joint and detach.

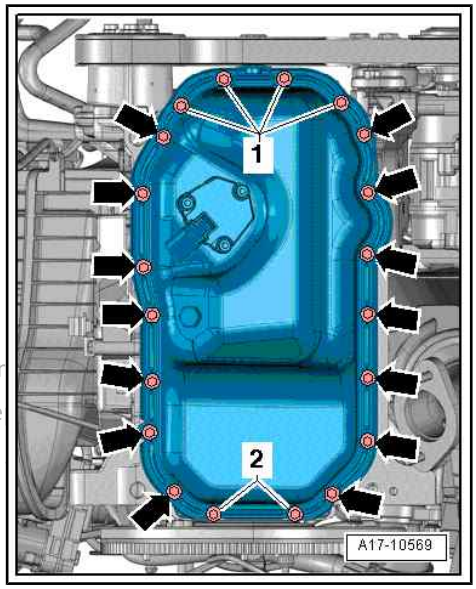

Protected by copyright. Copying for private or commercial purposes, in part or
permitted unless authorised by AUDI AG. AUDI AG does not guarantee or acce
with respect to the correctness of information in this document. Copyright by

Installing

- Tightening torques
  ⇒ “1.1 Exploded view - sump, oil pump”, page 133

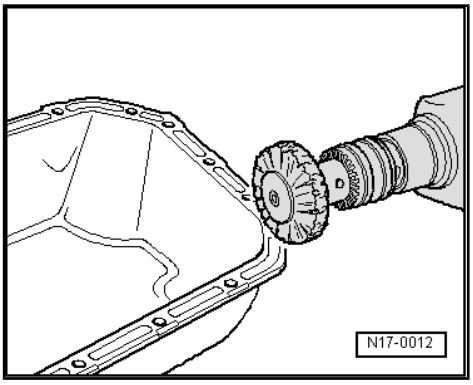

Caution

Protect lubrication system against contamination.

- *Cover exposed parts of the engine.*

– Remove old sealant from sealing surfaces.

WARNING

Risk of eye injury.

- *Put on safety goggles.*

– Remove sealant residue from sump and cylinder block using rotating plastic brush or similar.
– Clean sealing surfaces; they must be free of oil and grease.

Note

Note the use-by date of the sealant.

– Cut off nozzle of tube at front marking (nozzle ∅ approx. 2 mm).

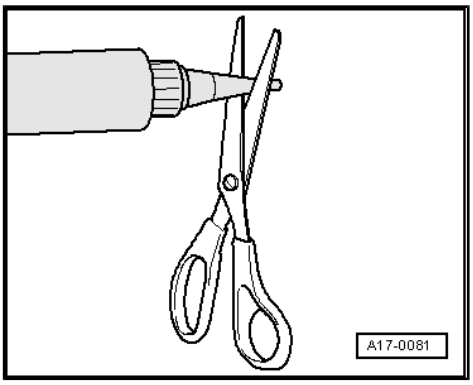

Caution

Make sure lubrication system is not clogged by excess sealant.

- ***The sealant bead must not be thicker than specified.***

Protected by copyright. Copying for private or comm t
permitted unless authorised by AUDI AG. AUDI AG
makes no warranty with respect to the correctness of information in th

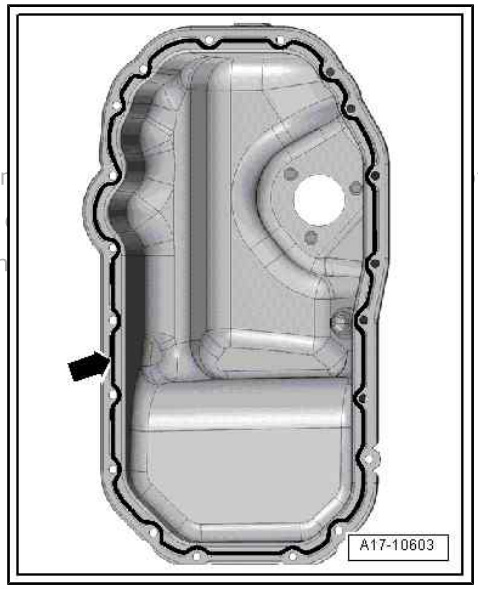

– Apply bead of sealant -arrow- onto clean sealing surface of sump as illustrated.

• Thickness of sealant bead: 2 ... 3 mm

Note

The sump must be installed within 5 minutes after applying the sealant.

– Fit sump and tighten bolts
⇒ "1.1 Exploded view - sump, oil pump", page 133 .

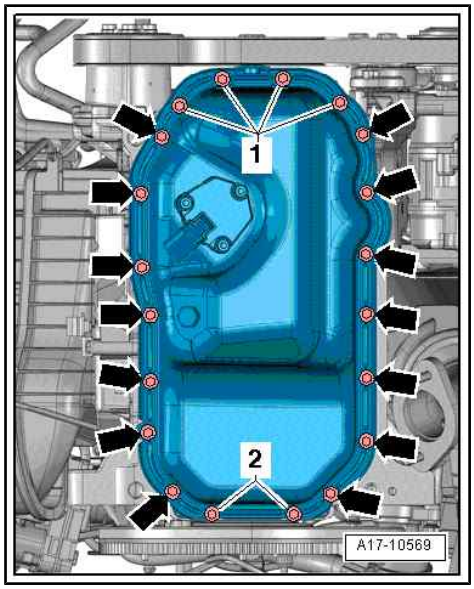

Note

After fitting sump, sealant must dry for approx. 30 minutes. Then (and only then) fill the engine with engine oil.

Remaining installation steps are carried out in reverse sequence; note the following:

– Install cover plate ⇒ Rep. gr. 34 .

– Install coolant pipe (right-side) ⇒ page 171 .

– Install front exhaust pipe ⇒ page 197 .

1.4 Removing and installing drive chain for oil pump

Special tools and workshop equipment required

♦ Counterhold tool - T10172-

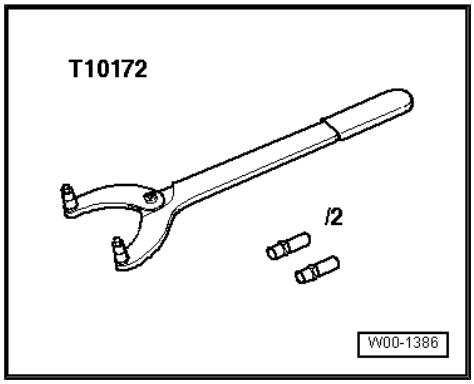

Removing

– Remove camshaft timing chain ⇒ page 92 .

– Unclip cover -1- for oil pump drive chain sprocket.

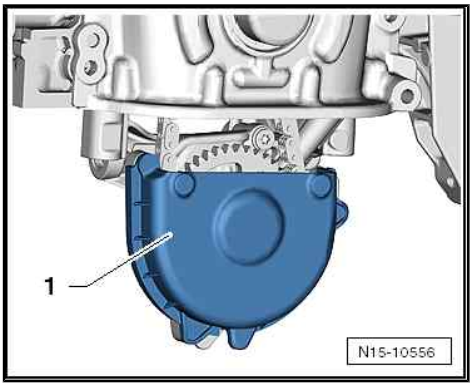

> **Caution**
>
> *If a used drive chain rotates in the opposite direction when it is refitted, this can cause breakage.*
>
> ♦ *Mark running direction of drive chain with paint for re-installation.*

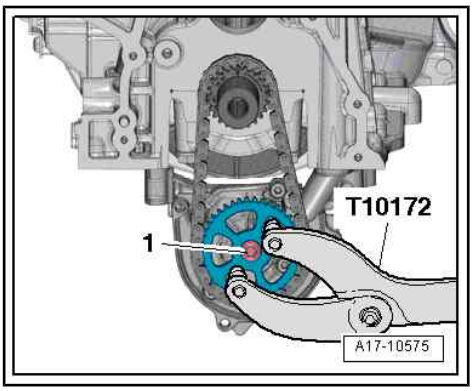

– Slacken off bolt -1- for chain sprocket for oil pump; use counterhold tool - T10172- to counterhold at chain sprocket.

– Remove bolt and detach chain sprocket for oil pump together with drive chain.

Installing

Installation is carried out in reverse order; note the following:

- Tightening torque
  ⇒ “1.1 Exploded view - sump, oil pump”, page 133

> **Note**
>
> *Renew the bolts tightened with specified tightening angle.*

– Install drive chain for oil pump together with drive chain sprocket according to marks applied when removing.

- Drive chain sprocket for oil pump can only be installed in one position -arrow-.

– Install camshaft timing chain ⇒ page 92 .

Protected by copyright. Copying for private or commercial purposes, in part or in whole, is not permitted unless authorised by AUDI AG. AUDI AG does not guarantee or assume liability with respect to the correctness of information in this document. Copyright by AUDI AG.

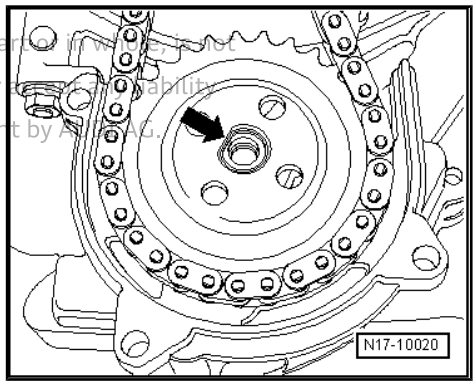

1.5 Removing and installing oil pump

Special tools and workshop equipment required

♦ Counterhold tool - T10172-

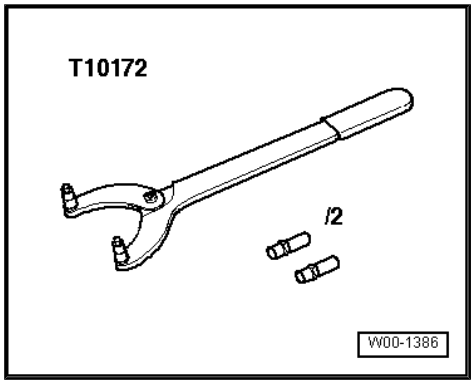

Removing

– Remove sump ⇒ page 135 .

– Unclip cover -1- for oil pump drive chain sprocket.

Protected by copyright. Copying for private or commercial purposes, in part or in
permitted unless authorised by AUDI AG. AUDI AG does not guarantee or accept
with respect to the correctness of information in this document. Copyright by AUDI

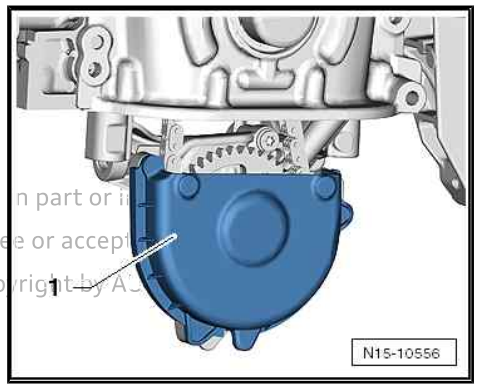

– Slacken off bolt for drive chain sprocket for oil pump several turns -arrow-; use counterhold tool - T10172- to counterhold at drive chain sprocket.

– Remove bolt and detach drive chain sprocket from chain.

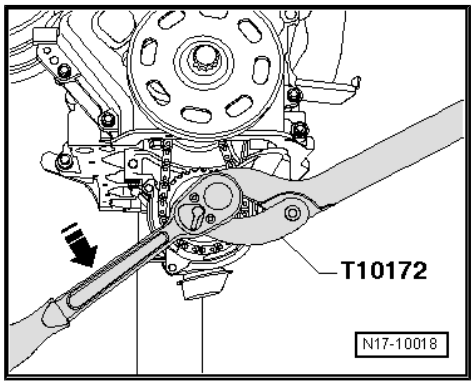

– Remove bolts -arrows- and remove oil pump.

Installing

• Tightening torques
⇒ “1.1 Exploded view - sump, oil pump”, page 133

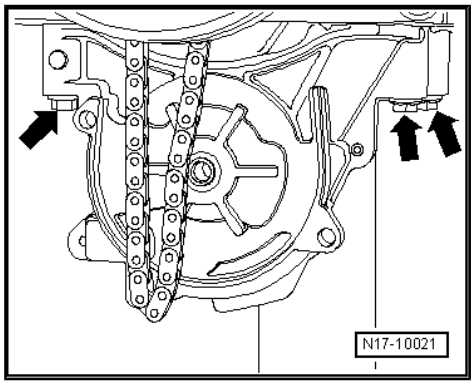

Note

Renew the bolts tightened with specified tightening angle.

– Check whether dowel sleeves for centring oil pump and cylinder block are fitted; install missing dowel sleeves.

– Fit oil pump and tighten bolts.

- Drive chain sprocket for oil pump can only be installed in one position -arrow-.

Remaining installation steps are carried out in reverse sequence; note the following:

– Install sump ⇒ page 135 .

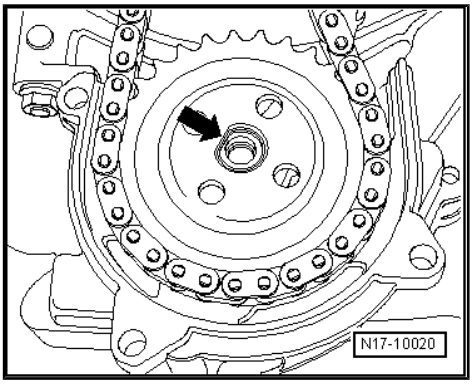

1.6 Removing and installing non-return valve

⇒ "1.6.1 Removing and installing non-return valve (threaded version)", page 141
⇒ "1.6.2 Removing and installing non-return valve (push-fitted version)", page 141

Protected by copyright. Copying for private or commercial purposes, in part or in whole, is not permitted unless authorised by AUDI AG. AUDI AG does not guarantee or accept any liability with respect to the correctness of information in this document. Copyright by AUDI AG.

1.6.1 Removing and installing non-return valve (threaded version)

Note

Non-return valve is fitted in different locations depending on version. Threaded version: non-return valve is screwed into top of cylinder block; for allocation refer to ⇒ Electronic parts catalogue .

Removing

– Remove cylinder head ⇒ page 106 .

– Unscrew non-return valve -arrow-.

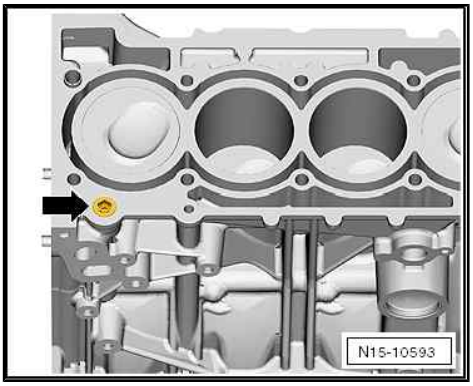

Installing

Installation is carried out in reverse order; note the following:

- Tightening torque
  ⇒ Fig. ""Non-return valve (threaded version) - tightening torque"" , page 135

– Install cylinder head ⇒ page 106 .

1.6.2 Removing and installing non-return valve (push-fitted version)

Note

Non-return valve is fitted in different locations depending on version. Push-fitted version: non-return valve is fitted in underside of cylinder block; for allocation refer to ⇒ Electronic parts catalogue .

Special tools and workshop equipment required

♦ Internal puller Kukko -21/1-

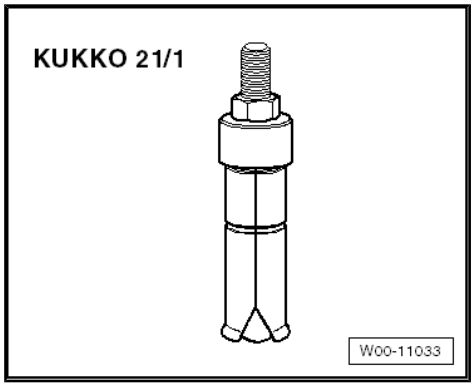

♦ Adapter Kukko -22/1-

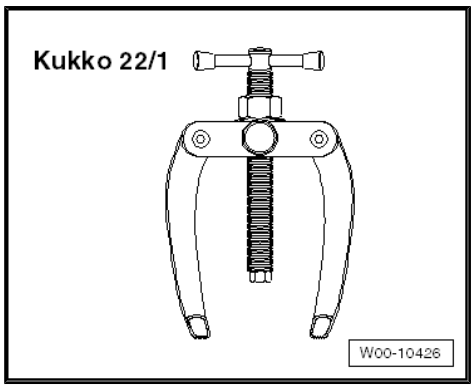

Removing

– Remove oil pump ⇒ page 139 .

– Clean sealing surface in area of non-return valve.

– To prevent damage, apply adhesive tape to sealing surface -arrows-.

– Insert internal puller Kukko -21/1- -item 1- into non-return valve and spread jaws of puller by turning hexagon nut.

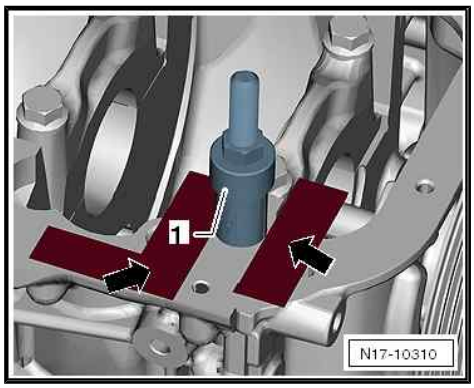

– Apply adapter Kukko -22/1- -item 2- to sealing surface of cylinder block and screw onto internal puller Kukko -21/1- -item 1-.

– Turn hexagon nut to extract non-return valve from cylinder block.

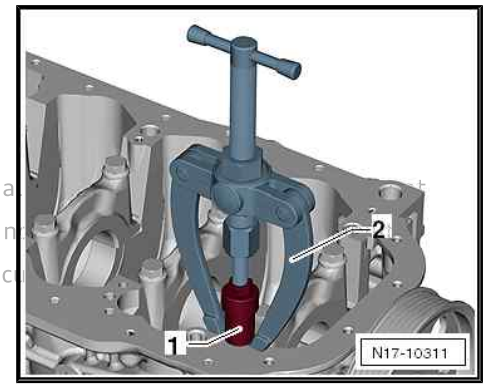

Installing

Protected by copyright. Copying for private or commercial purposes, in part or in whole, is not permitted unless authorised by AUDI AG. AUDI AG does not guarantee or accept any liability with respect to the correctness of information in this document.

Installation is carried out in reverse order; note the following:

– Remove adhesive tape.

– Lubricate O-rings for new non-return valve with engine oil.

– Push non-return valve into cylinder block so that it is flush with cylinder block.

– Install oil pump ⇒ page 139 .

2 Oil filter bracket and engine oil cooler

Overview

- ⇒ page 143
- ⇒ “2.2 Removing and installing oil filter bracket”, page 144
- ⇒ “2.3 Removing and installing engine oil cooler”, page 145
- ⇒ “2.4 Removing and installing oil pressure switch F1 ”, page 146
- ⇒ “2.5 Checking oil pressure switch F1 and oil pressure”, page 147
- ⇒ “2.6 Exploded view - oil separator”, page 149
- ⇒ “2.7 Removing and installing oil separator”, page 150
- ⇒ “2.8 Engine oil”, page 152
- ⇒ “2.9 Checking oil level”, page 152

2.1 Exploded view - oil filter bracket and engine oil cooler

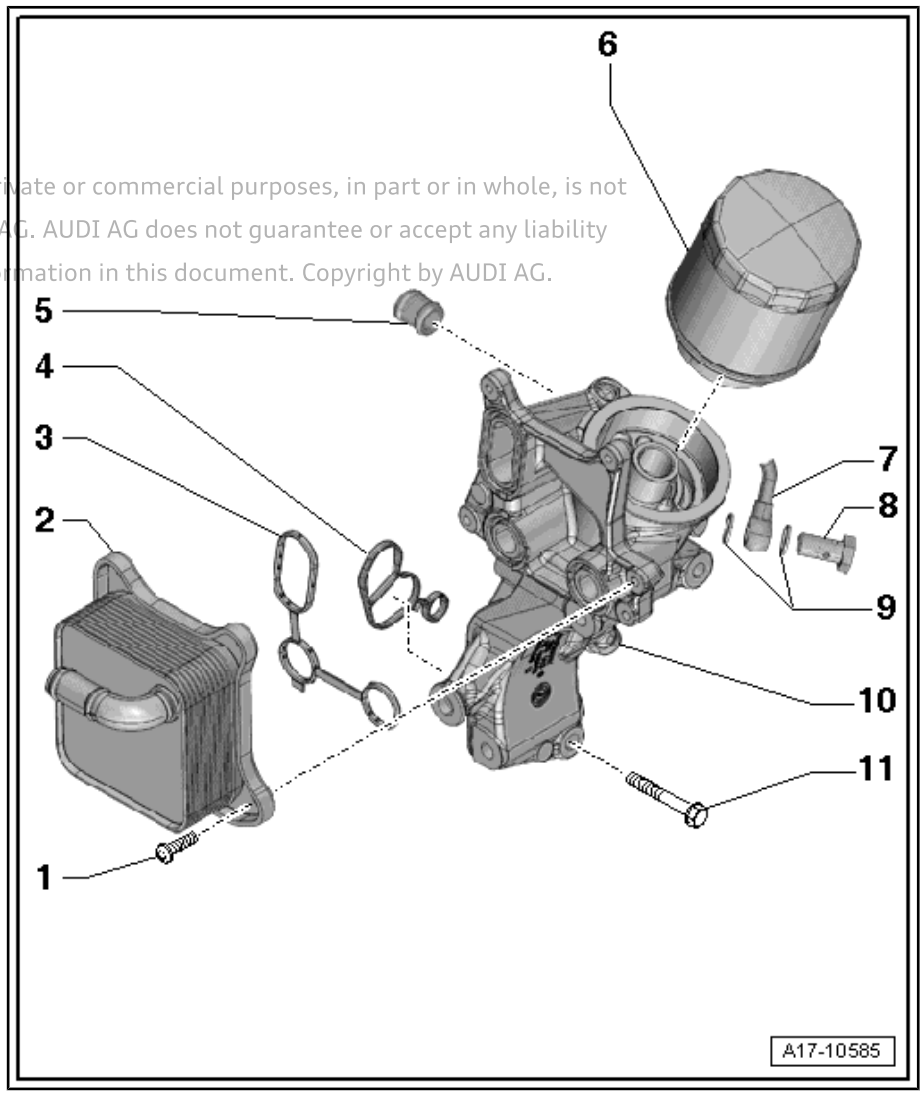

1 - Bolt
- ❑ Renew
- ❑ 8 Nm +90°

2 - Engine oil cooler
- ❑ See note ⇒ page 133
- ❑ Connection diagram - coolant hoses ⇒ page 153
- ❑ Removing and installing ⇒ “2.3 Removing and installing engine oil cooler”, page 145
- ❑ If renewed, refill system with fresh coolant

3 - Gasket
- ❑ Renew

4 - Gasket
- ❑ Renew

5 - Connecting pipe
- ❑ Renew

6 - Oil filter
- ❑ Removing and installing ⇒ Maintenance ; Booklet 808

7 - Oil supply line
- ❑ To turbocharger

8 - Banjo bolt
- ❑ 30 Nm

9 - Seals
- ❑ Renew

10 - Oil filter bracket
- ❑ Removing and installing ⇒ page 144

Protected by copyright. Copying for private or commercial purposes, in part or in whole, is not permitted unless authorised by AUDI AG. AUDI AG does not guarantee or accept any liability with respect to correctness of information in this document. Copyright by AUDI AG.

11 - Bolt

❑ 25 Nm

Oil pressure switch - F1-

1 - Electrical connector

2 - Oil pressure switch - F1-

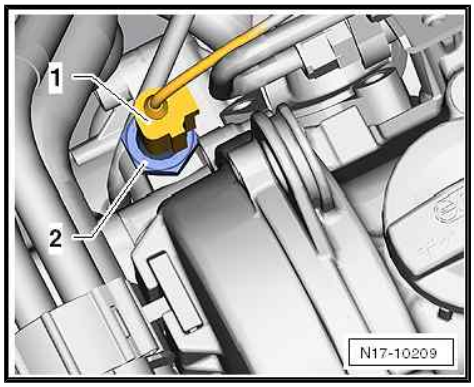

- Opening/closing pressure 0.3 ... 0.6 bar
- Removing and installing ⇒ page 146
- Checking ⇒ page 147
- 20 Nm

2.2 Removing and installing oil filter bracket

Special tools and workshop equipment required

- Hose clip pliers - VAS 6362-

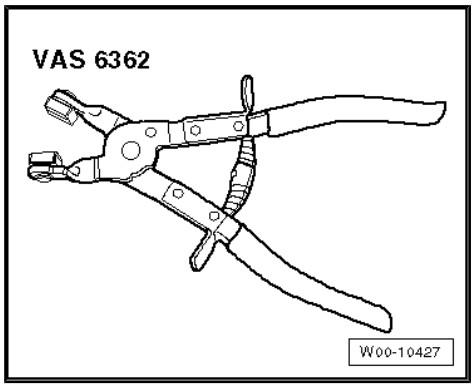

Removing

Protected by copyright. Copying for private or commercial purpose
permitted unless authorised by AUDI AG. AUDI AG does not guaran
with respect to the correctness of information in this document. C

– Drain coolant ⇒ page 155 .

– Remove alternator ⇒ Electrical system; Rep. gr. 27 .

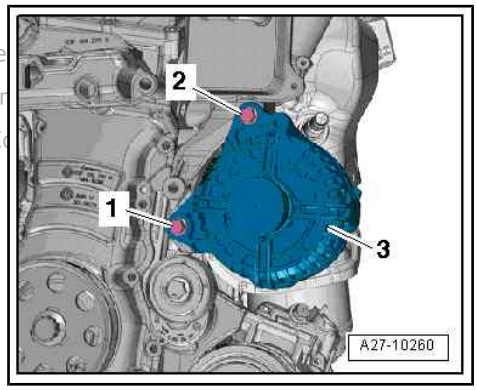

– Remove Lambda probe - G39- -item 1- ⇒ Rep. gr. 24 .

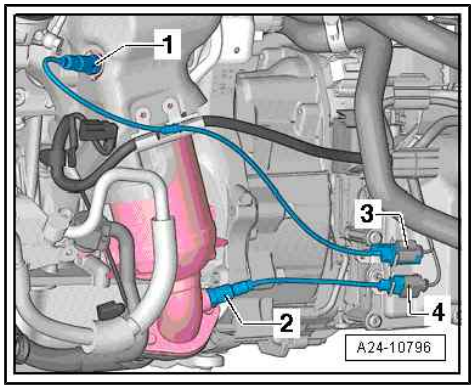

– Remove bolts -arrows- and detach heat shield -1-.

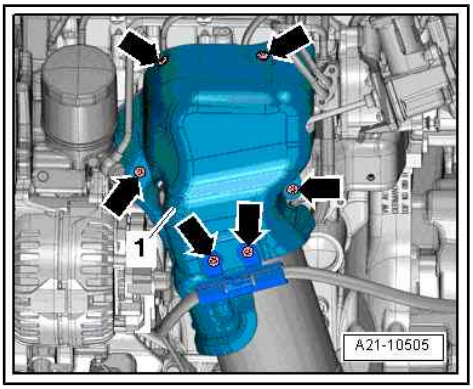

– Release hose clip -1- and detach coolant hose.
– Remove banjo bolt -2-.
– Remove bolt -3- and detach oil supply line.

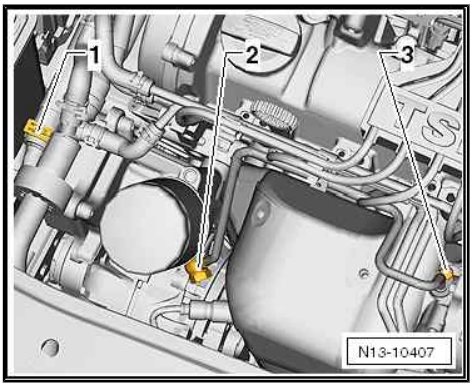

– Remove bolt -1- and detach oil filter bracket.

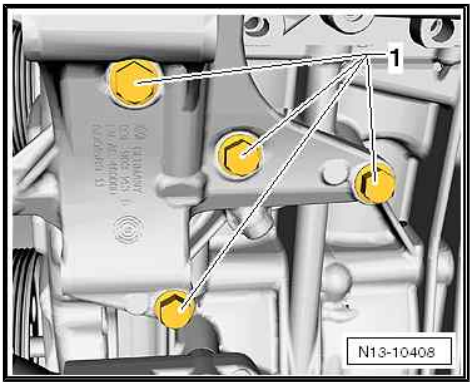

Installing

Installation is carried out in reverse order; note the following:

- Tightening torques
  ⇒ "2.1 Exploded view - oil filter bracket and engine oil cooler", page 143

Note

- *Renew seals, gasket and connecting pipe.*
- *Secure all hose connections with the correct type of hose clips (same as original equipment) ⇒ Electronic parts catalogue .*

– Install heat shield ⇒ page 196 .
– Install Lambda probe - G39- ⇒ Rep. gr. 24
– Install alternator ⇒ Electrical system; Rep. gr. 27 .
– Fill up with coolant ⇒ page 157 .

Protected by copyright. Copying for private or commercial purposes, in part or in whole, is not permitted unless authorised by AUDI AG. AUDI AG does not guarantee or accept any liability with respect to the correctness of information in this document. Copyright by AUDI AG.

2.3 Removing and installing engine oil cooler

Special tools and workshop equipment required

♦ Hose clip pliers - VAS 6362-

Protected by copyright. Copying for private or commercial purposes, in part or in whole is not permitted unless authorised by AUDI AG. AUDI AG does not guarantee or accept any liability with respect to the correctness of information in this document.

Removing

– Drain coolant ⇒ page 155 .

– Release activated charcoal filter -arrow B-, lift off -arrow A- and move clear to one side with line -1- connected.

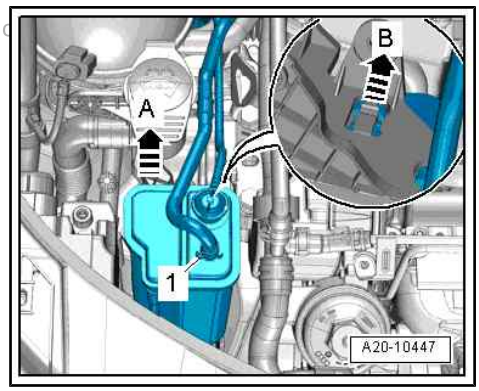

– Release hose clip -1- and detach coolant hose.

– Remove bolts -arrows- and detach engine oil cooler from cylinder block.

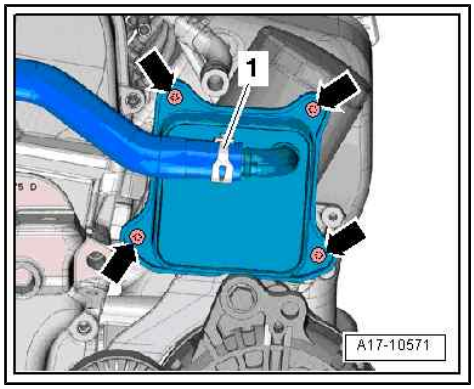

Installing

Installation is carried out in reverse order; note the following:

- Tightening torques
  ⇒ "2.1 Exploded view - oil filter bracket and engine oil cooler", page 143

Note

♦ *Renew the bolts tightened with specified tightening angle.*

♦ *Renew gasket.*

♦ *Secure all hose connections with the correct type of hose clips (same as original equipment) ⇒ Electronic parts catalogue .*

– Fill up with coolant ⇒ page 157 .

Note

The coolant in the entire system must be changed if the engine oil cooler is renewed.

2.4 Removing and installing oil pressure switch - F1-

Special tools and workshop equipment required

♦ Articulated wrench, 24 mm - T40175-

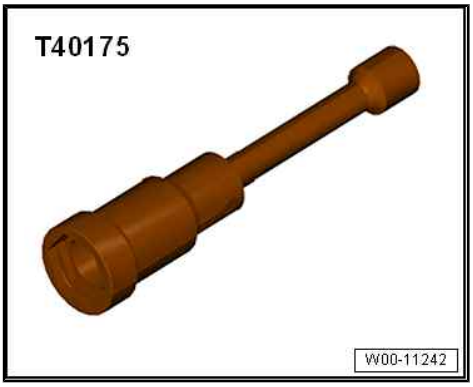

Removing

– Unplug electrical connector -1-.

– Remove oil pressure switch - F1- -item 2-.

Installing

Installation is carried out in reverse order; note the following:

- Tightening torque
  ⇒ Fig. “" Oil pressure switch -F1- ”" , page 144

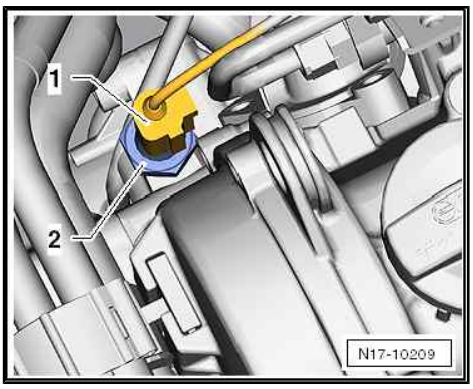

Note

Renew seal.

– Check oil level ⇒ Maintenance ; Booklet 808 .

2.5 Checking oil pressure switch - F1- and oil pressure

Protected by copyright. Copying for private or commercial purposes, in part or in whole, is not permitted unless authorised by AUDI AG. AUDI AG does not guarantee or accept any liability with respect to the correctness of information in this document. Copyright by AUDI AG.

Special tools and workshop equipment required

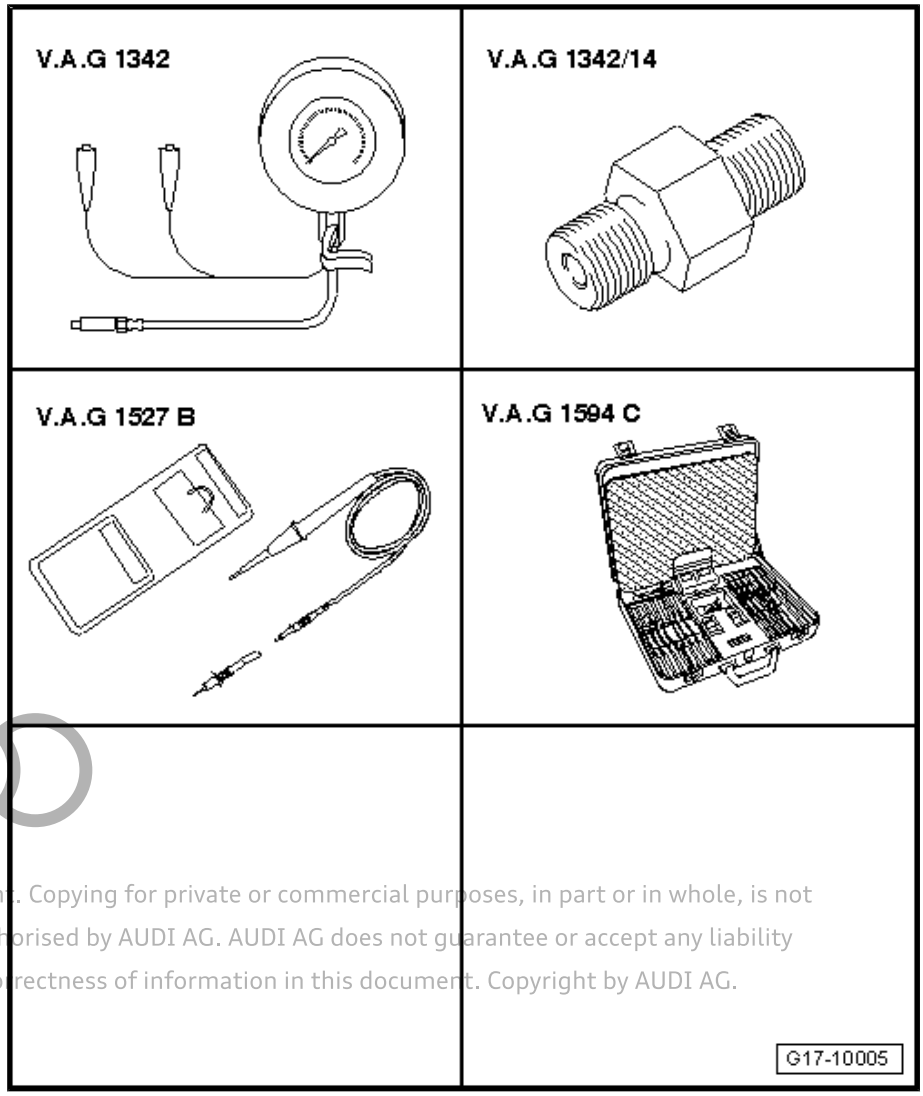

Protected by copyright. Copying for private or commercial purposes, in part or in whole, is not permitted unless authorised by AUDI AG. AUDI AG does not guarantee or accept any liability with respect to the correctness of information in this document. Copyright by AUDI AG.

- ♦ Oil pressure tester - V.A.G 1342-
- ♦ Adapter - V.A.G 1342/14-
- ♦ Voltage tester - V.A.G 1527B-
- ♦ Auxiliary measuring set - V.A.G 1594C-

Procedure

- Oil level OK
- Engine oil temperature approx. 80 °C

– Remove oil pressure switch - F1- ⇒ page 146 .

– Connect oil pressure tester - V.A.G 1342- with adapter - V.A.G 1342/14- to bore for oil pressure switch.

– Screw oil pressure switch - F1- into oil pressure tester.

– Connect brown wire of oil pressure tester to earth “–”.

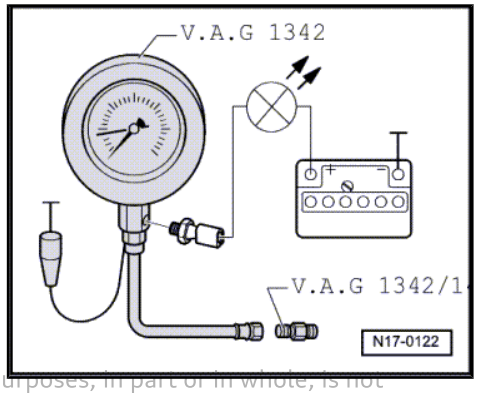

Checking oil pressure switch

– Connect voltage tester - V.A.G 1527B- with adapter leads from auxiliary measuring set - V.A.G 1594C- to oil pressure switch and battery positive (“+”).

• LED should not light up.

Protected by copyright. Copying for private or commercial purposes, in part or in whole, is not permitted unless authorised by AUDI AG. AUDI AG does not guarantee or accept any liability with respect to the correctness of information in this document. Copyright by AUDI AG.

Note

Renew oil pressure switch if LED lights up at this stage.

– Start engine.

Note

Observe the oil pressure tester and LED while starting the engine, as the switching point of the oil pressure switch may already be exceeded when starting.

• LED should light up at 0.3 ... 0.6 bar.

– Renew oil pressure switch if LED does not light up.

Checking oil pressure

– Start engine.

• Oil pressure at 2000 rpm: at least 2.0 bar.

Assembling

Installation is carried out in the reverse order; note the following:

– Install oil pressure switch - F1- ⇒ page 146 .

2.6 Exploded view - oil separator

1 - Bolt

- ❑ Tightening torque
  ⇒ Item 2 (page 164)

2 - Coolant circulation pump - V50-

- ❑ Removing and installing
  ⇒ page 165

3 - Bolt

- ❑ 8 Nm

4 - Bracket

- ❑ For coolant circulation pump - V50-

5 - Oil separator

- ❑ Removing and installing
  ⇒ page 150

6 - Intermediate plate

- ❑ With valves

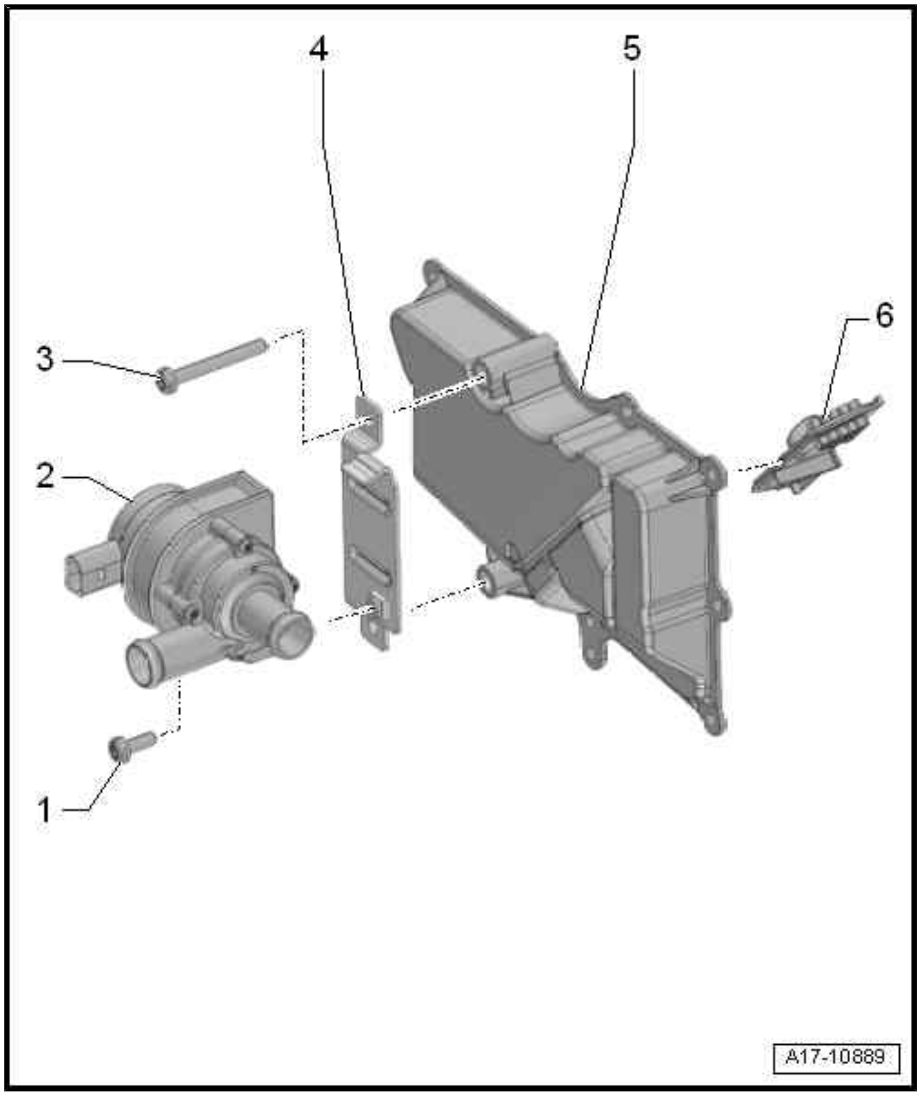

2.7 Removing and installing oil separator

Removing

– Remove noise insulation -1- ⇒ Rep. gr. 50 .

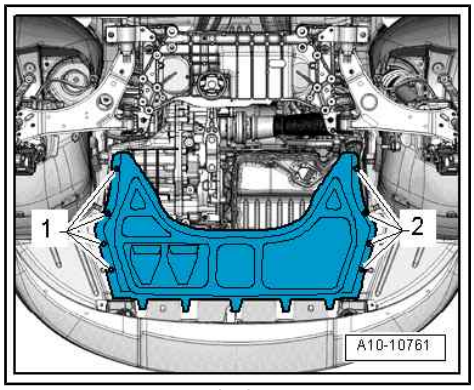

Protected by copyright. Copying for private or commercial purposes, in part or in whole, is not permitted unless authorised by AUDI AG. AUDI AG does not guarantee or accept any liability with respect to the correctness of information in this document. Copyright by AUDI AG.

– Unplug electrical connector -1-.
– Tie up coolant circulation pump - V50- to one side.

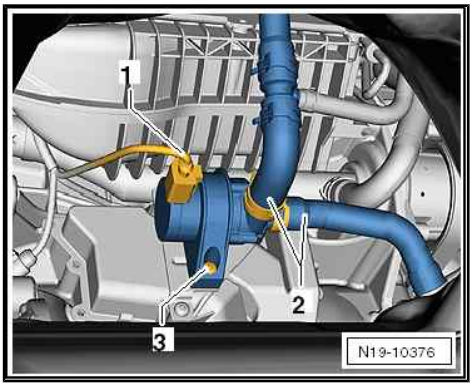

– Remove bolts -arrows- and carefully release oil separator -1- with bracket -2- from bonded joint.

Protected by copyright. Copying for private or commerci
permitted unless authorised by AUDI AG. AUDI AG does
no respect to the correctness of information in this do

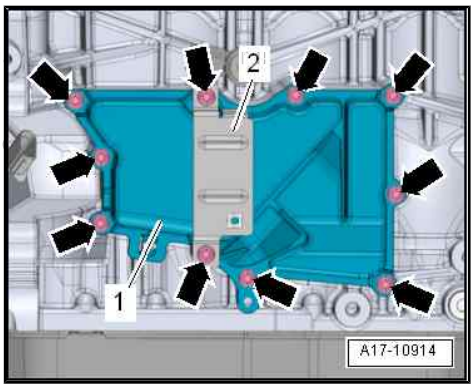

Installing

- Tightening torques
  ⇒ "2.6 Exploded view - oil separator", page 149

> **Caution**
>
> *Protect lubrication system against contamination.*
>
> ♦ *Cover exposed parts of the engine.*

– Remove old sealant from sealing surfaces.
– Clean sealing surfaces; they must be free of oil and grease.

– Insert intermediate plate with valves in oil separator.

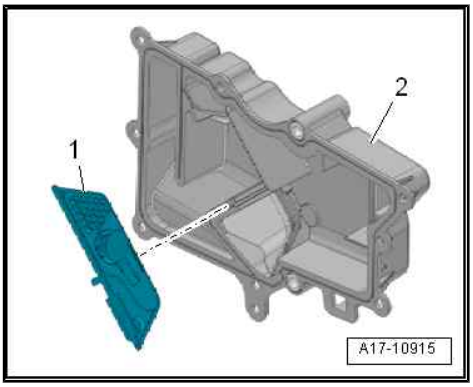

> **Note**
>
> *Note the use-by date of the sealant.*

– Cut off nozzle of tube at front marking (nozzle ∅ approx. 2 mm).

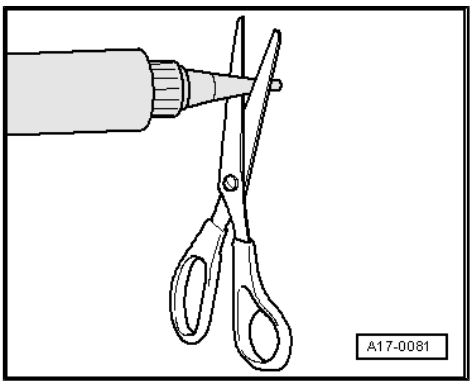

Caution

Make sure lubrication system is not clogged by excess sealant.

- *The sealant bead must not be thicker than specified.*

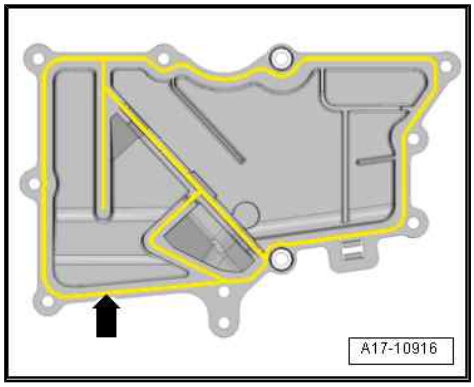

– Apply bead of sealant -arrow- onto clean sealing surface of oil separator as illustrated.

• Thickness of sealant bead: 2 ... 3 mm

Note

The oil separator must be installed within 5 minutes after applying the sealant.

– Fit oil separator -1- with bracket -2-.

– Tighten bolts -arrows- in diagonal sequence and in stages.

– Install coolant circulation pump - V50- ⇒ page 165 .

– Install noise insulation ⇒ Rep. gr. 50 .

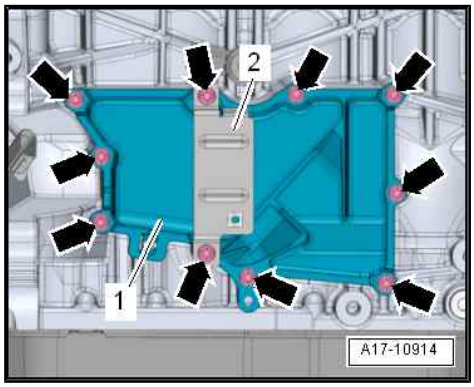

2.8 Engine oil

Oil capacities, oil specifications and viscosity grades ⇒ Maintenance tables .

2.9 Checking oil level

Check oil level ⇒ Maintenance ; Booklet 808 .

Caution

Risk of damage to catalytic converter.

- *The oil level must not be above the "MAX" mark on the dipstick.*

Protected by copyright. Copying for private or commercial purposes, in part or in whole, is not permitted unless authorised by AUDI AG. AUDI AG does not guarantee or accept any liability with respect to the correctness of information in this document. Copyright by AUDI AG.

19 – Cooling

1 Cooling system

Overview

- ⇒ “1.1 Connection diagram - coolant hoses”, page 153
- ⇒ “1.2 Draining and filling cooling system”, page 155
- ⇒ “1.3 Checking cooling system for leaks”, page 161

WARNING

Risk of scalding due to hot steam and hot coolant.

- *The cooling system is under pressure when the engine is hot.*
- *To allow pressure to dissipate, cover filler cap on coolant expansion tank with cloth and open carefully.*

Note

- *Secure all hose connections with the correct type of hose clips (same as original equipment) ⇒ Electronic parts catalogue .*
- *The arrow markings on coolant pipes and on ends of hoses must align.*

1.1 Connection diagram - coolant hoses

Protected by copyright. Copying for private or commercial purposes, in part or in whole, is not permitted unless authorised by AUDI AG. AUDI AG does not guarantee or accept any liability with respect to the correctness of information in this document. Copyright by AUDI AG.

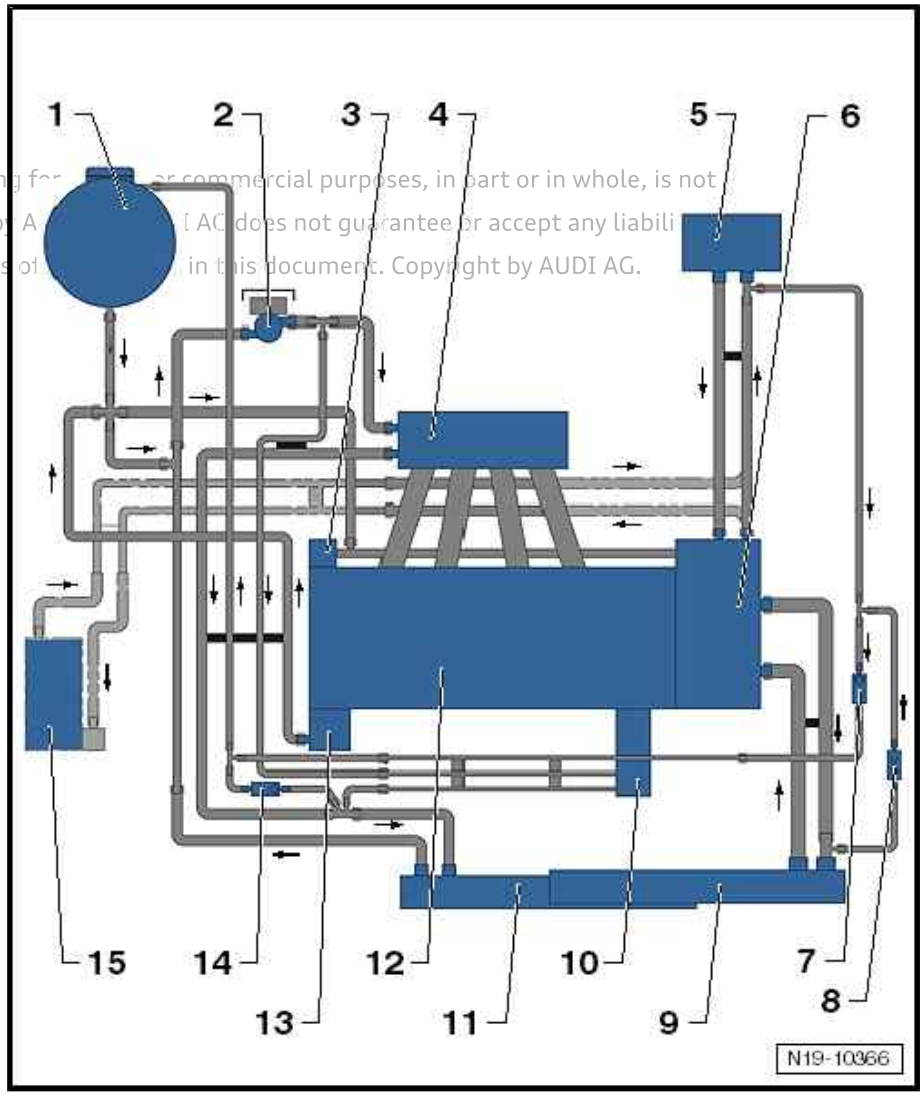

Protected by copyright. Copying for [illegible] or commercial purposes, in part or in whole, is not permitted unless authorised by A[illegible] AG. AG does not guarantee or accept any liabili[illegible] with respect to the correctness of [illegible] in this document. Copyright by AUDI AG.

1 - Coolant expansion tank

- ❑ Checking pressure relief valve in filler cap ⇒ page 162

2 - Coolant circulation pump - V50-

3 - Coolant pump

4 - Intake manifold

- ❑ With charge air cooler
- ❑ If renewed, refill system with fresh coolant

5 - Heat exchanger for heater

- ❑ Removing and installing ⇒ Rep. gr. 87
- ❑ If renewed, refill system with fresh coolant

6 - Housing

- ❑ For thermostat

7 - Non-return valve

- ❑ Arrow points in direction of through-flow

8 - Restrictor

9 - Radiator

- ❑ Combined with low-temperature radiator for charge air system
- ❑ If renewed, refill system with fresh coolant

10 - Turbocharger

11 - Low-temperature radiator

- ❑ For charge air system
- ❑ Combined with radiator
- ❑ If renewed, refill system with fresh coolant

12 - Cylinder head and cylinder block

- ❑ If renewed, refill system with fresh coolant

13 - Engine oil cooler

- ❑ If renewed, refill system with fresh coolant

14 - Non-return valve

- ❑ Arrow points in direction of through-flow

15 - Auxiliary heater

- ❑ Depending on vehicle equipment

1.2 Draining and filling cooling system

Special tools and workshop equipment required

Protected by copyright. Copying for private or commercial purposes, in part or in whole is not permitted unless authorised by AUDI AG. AUDI AG does not guarantee or accept any liability with respect to the correctness of information in this document. Copyright by AUDI AG.

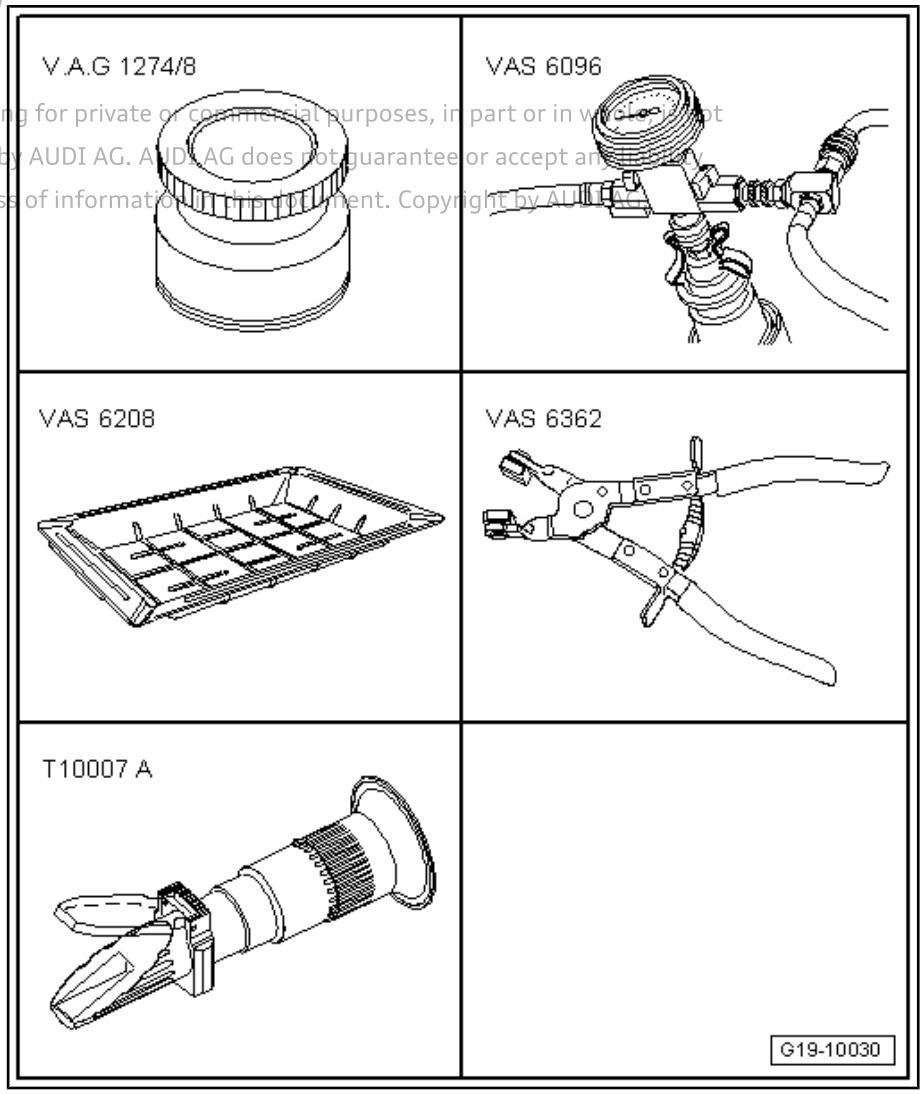

- Adapter for cooling system tester - V.A.G 1274/8-
- Cooling system charge unit - VAS 6096- with -VAS 6096/1-
- Drip tray for workshop hoist - VAS 6208-
- Hose clip pliers - VAS 6362-
- Refractometer - T10007 A-

Draining

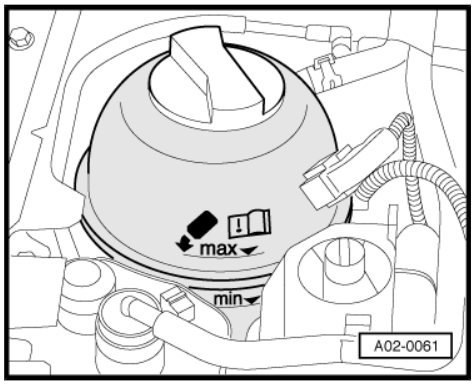

Note

Collect drained coolant for disposal.

WARNING

Risk of scalding due to hot steam and hot coolant.

- ***The cooling system is under pressure when the engine is hot.***
- ***To allow pressure to dissipate, cover filler cap on coolant expansion tank with cloth and open carefully.***

– Open filler cap on coolant expansion tank.

– Remove noise insulation ⇒ Rep. gr. 50 .

Protected by copyright. Copying for private or comm
permitted unless authorised by AUDI AG. AUDI AG d
with respect to the correctness of information in this

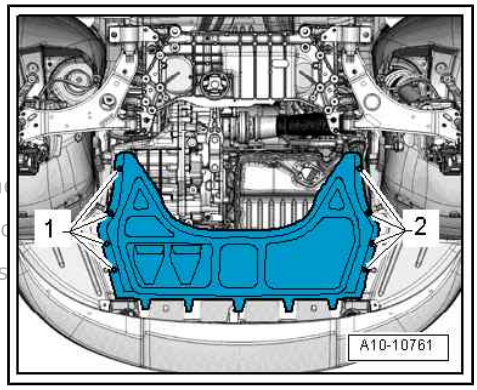

– Place drip tray for workshop hoist - VAS 6208- beneath engine.

– Lift retaining clip -3- and disconnect coolant hose (bottom left) from radiator.

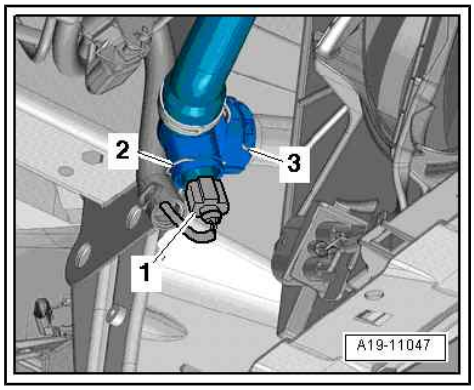

Note

Disregard items -1 and 2-.

– Pull out retaining clip -1- and disconnect coolant hose (bottom right) from radiator.

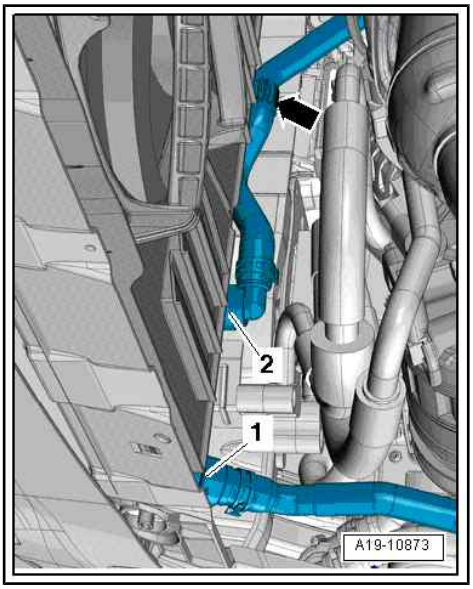

Note

Disregard -item 2- and -arrow-.

Filling

- Ignition switched off.

Caution

To ensure optimal corrosion protection, only distilled water may be mixed with coolant additives.

Protected by copyright. Copying for private or commercial purposes, in part or in whole, is not permitted unless authorised by AUDI AG. AUDI AG does not guarantee or accept any liability with respect to the correctness of information in this document. Copyright by AUDI AG.

Protected by copyright. Copying for private or commercial purposes, in part or in whole, is not permitted unless authorised by AUDI AG. AUDI AG does not guarantee or accept any liability with respect to the correctness of information in this document. Copyright by AUDI AG.

Note

- *The effectiveness of the coolant is greatly influenced by the quality of the water with which it is mixed. Because water may contain different substances depending on the country or even the region, the water quality to be used for cooling systems has been specified. Distilled water meets all the requirements and is therefore recommended for use when topping up or filling up with coolant.*
- *Use only coolant additives listed in the ⇒ Electronic parts catalogue (ETKA) . If you use other coolant additives, this can significantly impair in particular the corrosion protection effect. The resulting damage could lead to loss of coolant and consequently to serious engine damage.*
- *Coolant with the recommended mixture ratio prevents frost and corrosion damage and stops scaling. At the same time it raises the boiling point of the fluid in the system. For this reason the cooling system must be filled all year round with the correct coolant additive.*
- *Because of its high boiling point, the coolant improves engine reliability under heavy loads, particularly in countries with tropical climates.*
- *Refractometer - T10007A- or refractometer - T10007B- MUST be used to determine the current level of frost protection.*
- *Scale -1- on the refractometer applies to coolant additives G12 ++ and G12evo.*
- *Scale -2- on the refractometer applies to coolant additive G13.*
- *If more than one type of coolant additive has been used: Always use the scale for G13 to determine the anti-freeze protection.*
- *The mixture must guarantee frost protection down to at least -25 °C (in countries with arctic climate: down to -36 °C). The amount of antifreeze should only be increased if greater frost protection is required in very cold climates. This must only be down to -48 °C, however, as otherwise the cooling efficiency of the coolant is impaired.*
- *The coolant concentration must not be reduced by adding water even in warmer seasons and in warmer countries. Frost protection must be provided to at least -25 °C.*
- *The temperature indicated on the refractometer corresponds to the temperature at which the first ice crystals can form in the coolant.*
- *Do not reuse coolant.*
- *Only use water/coolant additive as a lubricant for coolant hoses.*

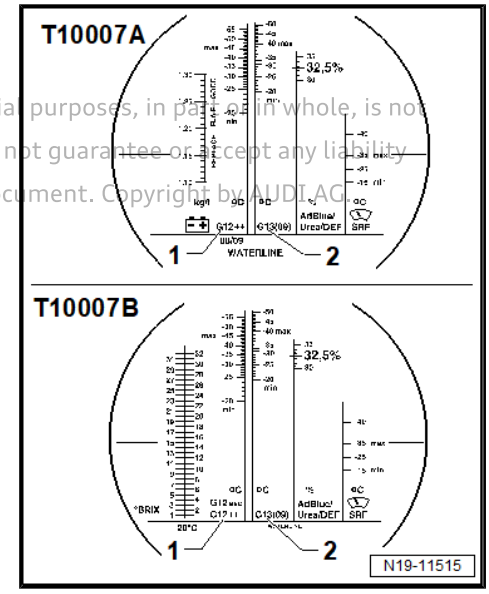

Recommended mixture ratio for coolant

- Coolant (40 %) and distilled water (60 %) for frost protection to -25 °C
- Coolant (50 %) and distilled water (50 %) for frost protection to -36 °C
- Coolant ⇒ Electronic parts catalogue

Procedure

– Connect coolant hose (bottom left) -3- with plug-in connector to radiator ⇒ page 175 .

Protected by copyright. Copying for private or commercial purposes, in part
permitted unless authorised by AUDI AG. AUDI AG does not guarantee or ac
with respect to the correctness of information in this document. Copyright b

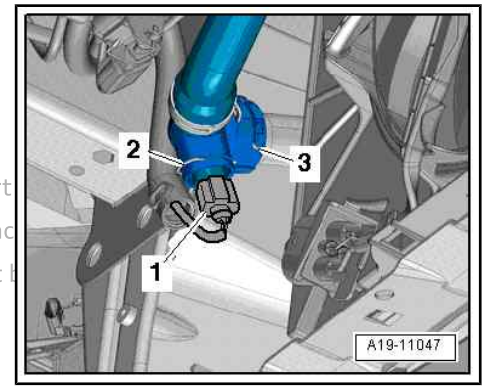

– Connect coolant hose (bottom right) -1- to radiator with plug-in connector ⇒ page 175 .

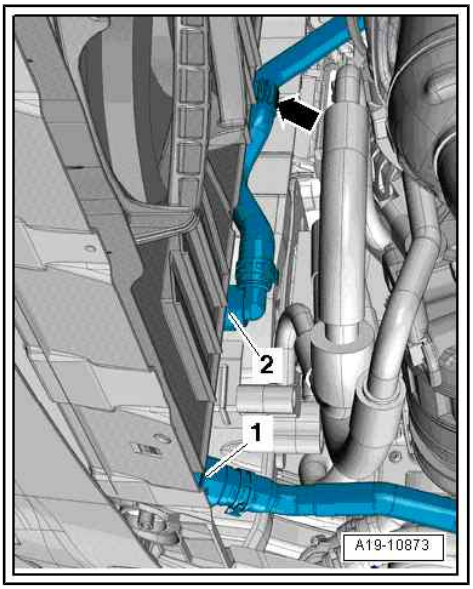

– Fill reservoir of -VAS 6096- with 8 litres of premixed coolant (according to recommended ratio).
– Fit adapter for cooling system tester - V.A.G 1274/8- onto coolant expansion tank.
– Attach cooling system charge unit - VAS 6096- to adapter - V.A.G 1274/8- .
– Run vent hose -1- into a small container -2-.

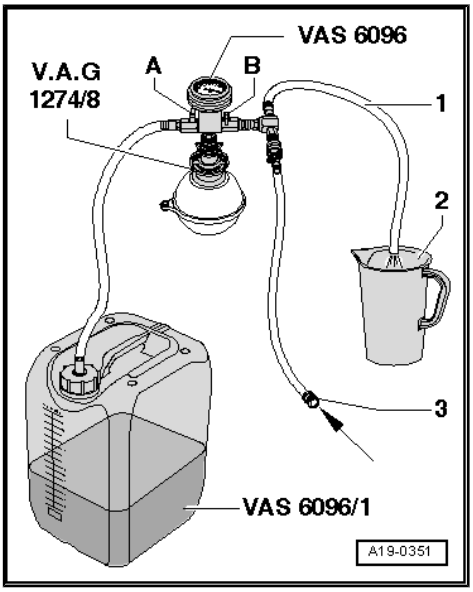

Note

The vented air draws along a small amount of coolant, which should be collected.

– Close both valves -A- and -B- (turn lever at right angles to direction of flow).
– Connect hose -3- to compressed air supply.
• Pressure: 6 ... 10 bar.

– Open valve -B- by setting lever in direction of flow.

• The suction jet pump generates a partial vacuum in the cooling system; the needle on the gauge should move into the green zone.

– Also briefly open valve -A- (turn lever in direction of flow) so that hose on reservoir of -VAS 6096- can fill with coolant.

– Close valve -A- again.

– Leave valve -B- open for another 2 minutes.

• The suction jet pump continues to generate a partial vacuum in the cooling system; the needle on the gauge should remain in the green zone.

– Close valve -B-.

• The needle on the gauge should stop in the green zone. The vacuum level in the cooling system is then sufficient for subsequent filling.

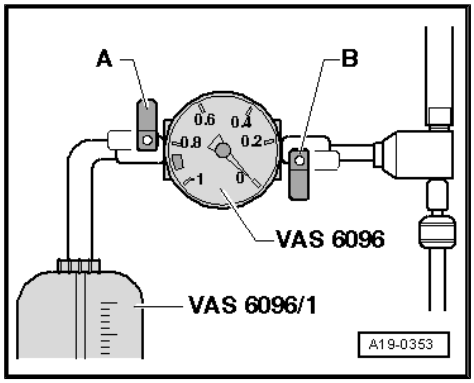

Note

♦ *If the needle does not reach the green zone, repeat the process.*

♦ *Check cooling system for leaks if the vacuum is not maintained.*

Protected by copyright. Copying for private or commercial purposes, in part or in whole, is not permitted unless authorised by AUDI AG. AUDI AG does not guarantee or accept any liability with respect to the correctness of information in this document. Copyright by AUDI AG.

– Detach compressed air hose.

– Open valve -A-.

• The vacuum in the cooling system causes the coolant to be drawn out of the reservoir of -VAS 6096- ; the cooling system is then filled.

– Detach cooling system charge unit - VAS 6096- from coolant expansion tank.

– Top up coolant to “max” mark.

– On vehicles with auxiliary heater, switch heater on (for about 30 seconds) and then off again.

– Start engine and run for 2 minutes (maximum) at approx. 1500 rpm.

– Top up coolant to overflow hole on expansion tank with engine running.

– Close filler cap on coolant expansion tank (make sure it engages).

– Allow engine to run at idling speed until both large coolant hoses at radiator become warm.

– Switch off ignition and allow engine to cool down.

– Install noise insulation ⇒ Rep. gr. 50 .

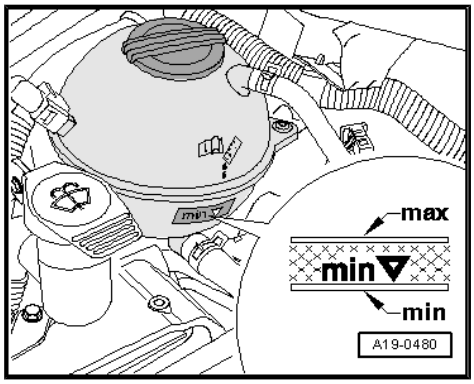

– Check coolant level.

- The coolant level must be between the “min” and “max” markings when the engine is cold.
- The coolant level can be at the “max” marking when the engine is warm.

– Top up with coolant again if necessary.

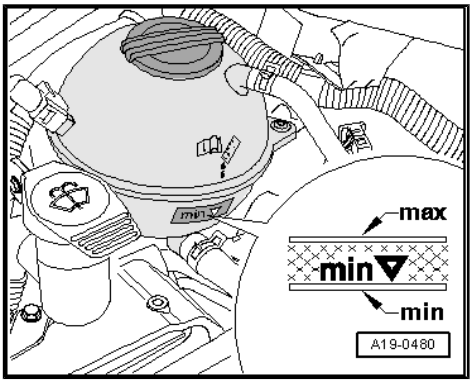

1.3 Checking cooling system for leaks

Special tools and workshop equipment required

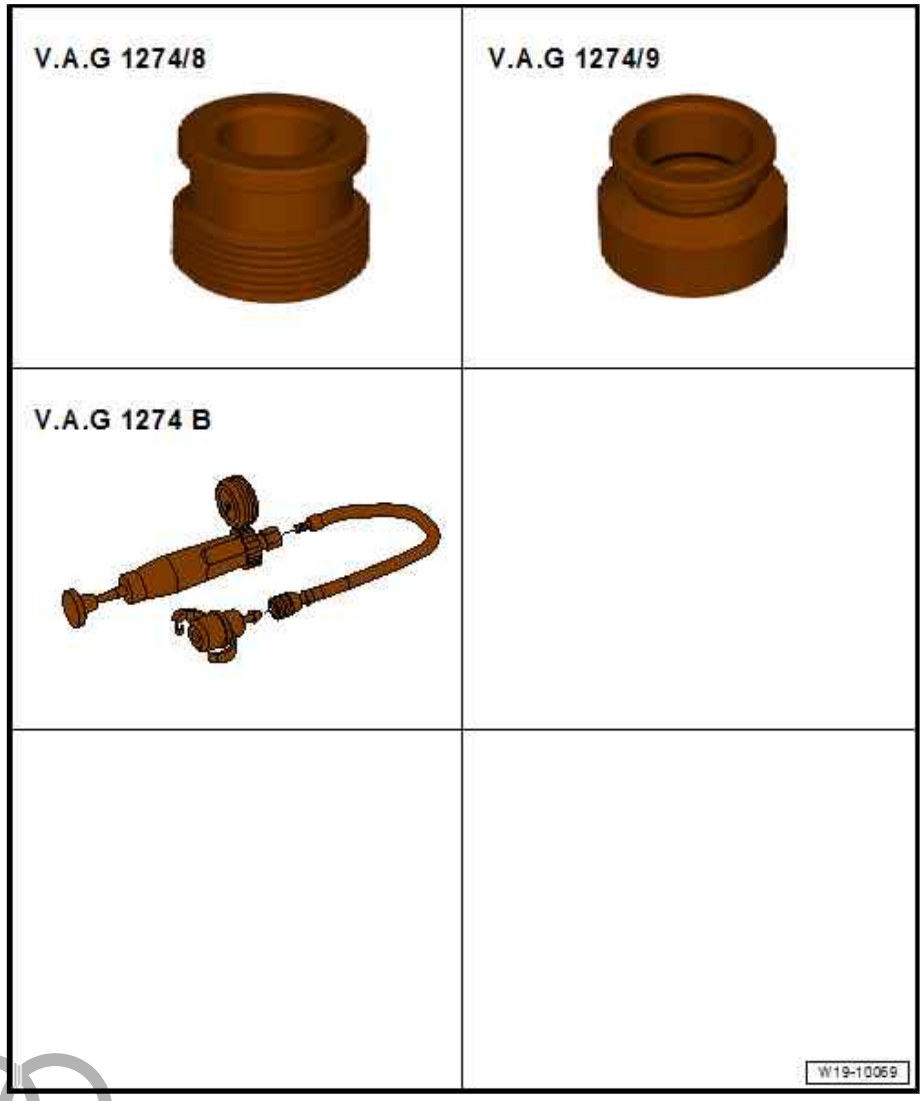

- ♦ Adapter for cooling system tester - V.A.G 1274/8-
- ♦ Adapter for cooling system tester - V.A.G 1274/9-
- ♦ Cooling system tester - V.A.G 1274 B-

Protected by copyright. Copying for private or commercial purposes, in part or in whole, is not permitted unless authorised by AUDI AG. AUDI AG does not guarantee or accept any liability with respect to the correctness of information in this document. Copyright by AUDI AG.

Procedure

- Engine must be warm.

WARNING

The cooling system is under pressure when the engine is hot. Risk of scalding due to hot steam and hot coolant.

Danger of scalding skin and other parts of the body.

- *Put on protective gloves.*
- *Put on safety goggles.*
- *Cover filler cap on expansion tank with a cloth and open carefully to release pressure.*

– Open filler cap on coolant expansion tank.

– Fit cooling system tester - V.A.G 1274 B- with adapter - V.A.G 1274/8- onto coolant expansion tank.

– Using hand pump on cooling system tester, build up a pressure of approx. 1.5 bar.

• The pressure should not drop more than 0.2 bar within 10 minutes.

– If the pressure drops more than 0.2 bar, locate leak and eliminate fault.

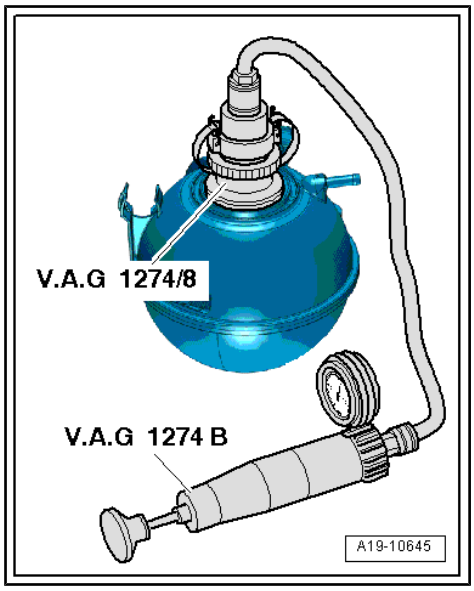

Note

The drop in pressure of 0.2 bar within 10 minutes is caused by the decrease in coolant temperature. The colder the engine is, the less the pressure will fall. If necessary, check again when the engine is cold.

Checking pressure relief valve in filler cap

– Fit cooling system tester - V.A.G 1274 B- with adapter - V.A.G 1274/9- onto filler cap.

– Build up pressure with hand pump on cooling system tester.

• The pressure relief valve should open at a pressure of 1.4 ... 1.6 bar.

– Renew filler cap if pressure relief valve does not open as described.

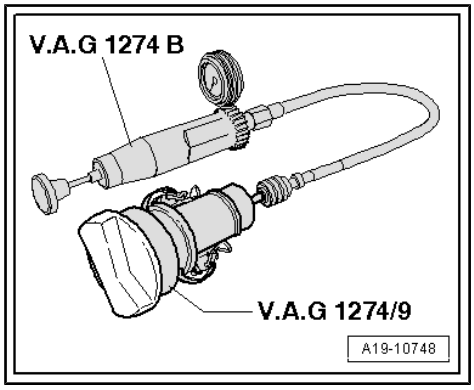

Protected by copyright. Copying for private or commercial purposes, in part or in whole, is not permitted unless authorised by AUDI AG. AUDI AG does not guarantee or accept any liability with respect to the correctness of information in this document. Copyright by AUDI AG.

2 Coolant pump and thermostat

Overview

- ⇒ “2.1 Exploded view - coolant pump”, page 163
- ⇒ “2.2 Removing and installing coolant pump pulley”, page 164
- ⇒ “2.3 Removing and installing coolant pump”, page 165
- ⇒ “2.4 Removing and installing coolant circulation pump V50 ”, page 165
- ⇒ “2.5 Exploded view - housing for thermostat with rear coolant pipe”, page 166
- ⇒ “2.6 Removing and installing coolant temperature sender G62 ”, page 168
- ⇒ “2.7 Removing and installing radiator outlet coolant temperature sender G83 ”, page 169
- ⇒ “2.8 Removing and installing thermostat housing and coolant pipe (rear)”, page 170
- ⇒ “2.9 Removing and installing coolant pipe (right-side)”, page 171

2.1 Exploded view - coolant pump

Protected by copyright. Copying for private or commercial purposes, in part or in whole, is not permitted unless authorised by AUDI AG. AUDI AG does not guarantee or accept any liability with respect to the correctness of information in this document. Copyright by AUDI AG.

1 - Coolant hose

2 - Bolt

- ❑ 9 Nm

3 - Coolant hose

4 - Coolant circulation pump - V50-

- ❑ Removing and installing ⇒ page 165

5 - Bracket

- ❑ For coolant circulation pump - V50-

6 - Bolt

- ❑ 9 Nm

7 - Solenoid for coolant circuit - N492-

8 - Coolant pump

- ❑ With integral seal
- ❑ Removing and installing ⇒ page 165

9 - Poly V-belt pulley

- ❑ For coolant pump
- ❑ Removing and installing ⇒ page 164

10 - Bolt

- ❑ 20 Nm

11 - Bolt

- ❑ 9 Nm

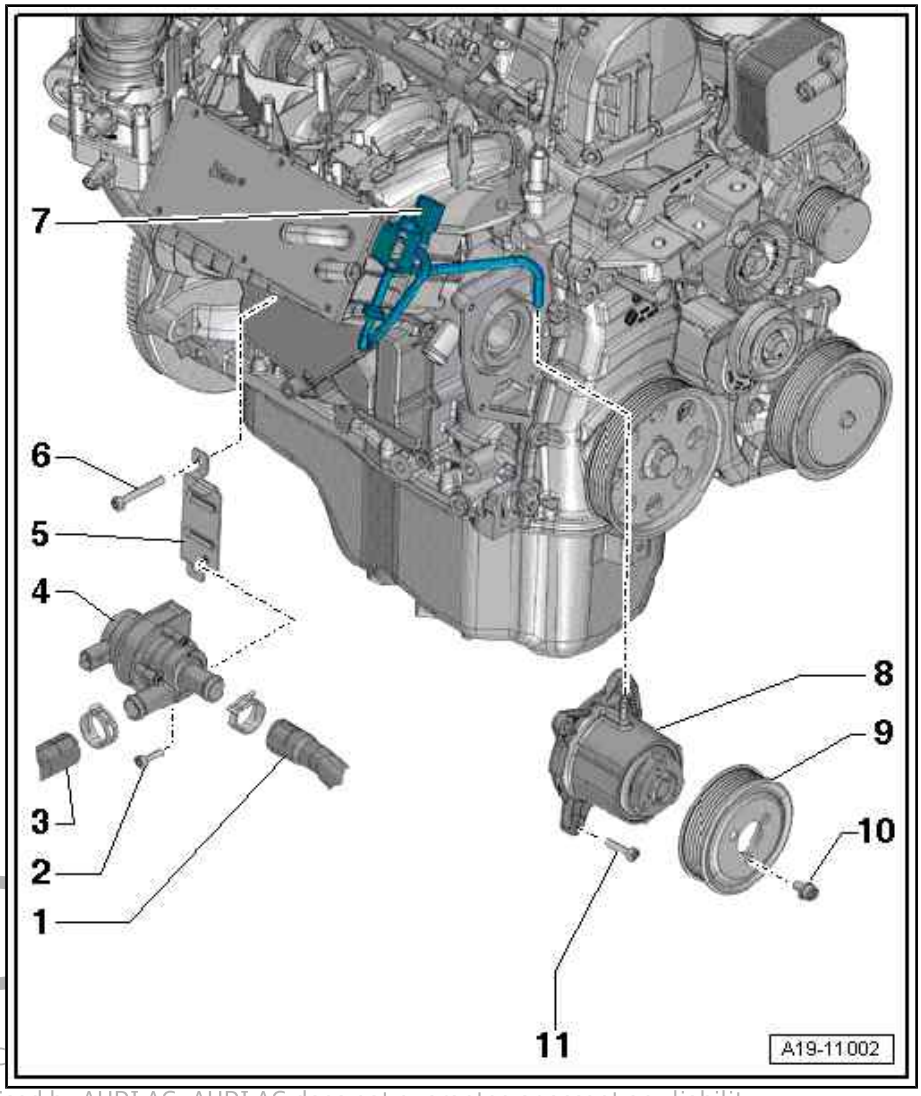

Protected by copyright. C
permitted unless authorised by AUDI AG. AUDI AG does not guarantee or accept any liability
with respect to the correctness of information in this document. Copyright by AUDI AG.

2.2 Removing and installing coolant pump pulley

Special tools and workshop equipment required

- ♦ Counterhold tool - T10172- with adapters -T10172/7-

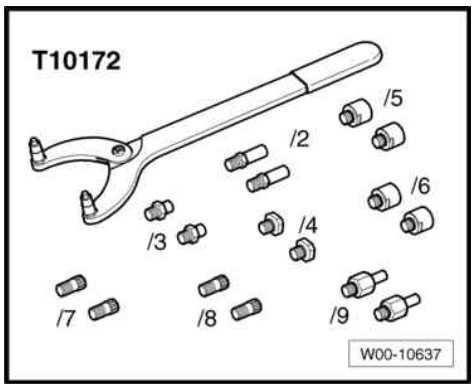

Removing

– Remove poly V-belt ⇒ page 49 .

– Remove bolts -arrow- and detach bracket from engine support.

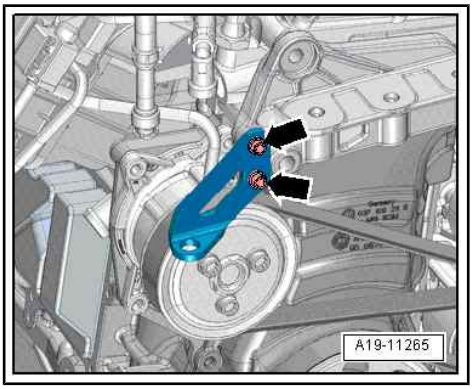

– Loosen bolts on poly V-belt pulley for coolant pump using counterhold tool - T10172- with adapter -T10172/7- .

– Remove bolts and take off poly V-belt pulley.

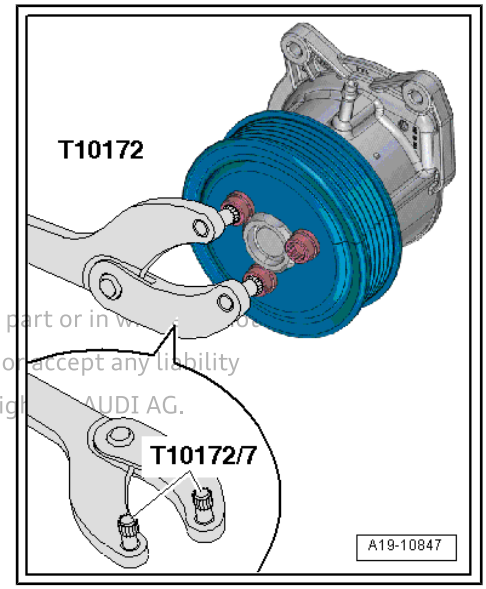

Installing

Installation is carried out in reverse order; note the following:

Tightening torques

- ⇒ “6.1 Exploded view - assembly mountings”, page 39
- ⇒ “2.1 Exploded view - coolant pump”, page 163

– Install poly V-belt ⇒ page 49 .

Protected by copyright. Copying for private or commercial purposes, in part or in whole, is not permitted unless authorized by AUDI AG. AUDI AG does not guarantee or accept any liability with respect to the correctness of information in this document. Copyright by AUDI AG.

2.3 Removing and installing coolant pump

Removing

– Drain coolant ⇒ page 155 .

– Remove poly V-belt pulley for coolant pump ⇒ page 164 .

– Disconnect vacuum hose -1-.

– Remove bolts -arrows- and detach coolant pump.

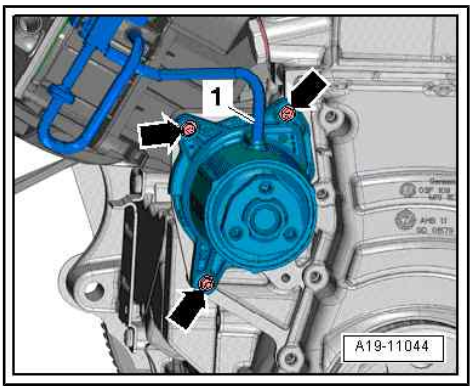

Installing

Installation is carried out in reverse order; note the following:

- Tightening torque
  ⇒ “2.1 Exploded view - coolant pump”, page 163

– Install poly V-belt pulley for coolant pump ⇒ page 164 .

– Fill up with coolant ⇒ page 157 .

2.4 Removing and installing coolant circulation pump - V50-

Special tools and workshop equipment required

♦ Hose clamps up to 25 mm - 3094-

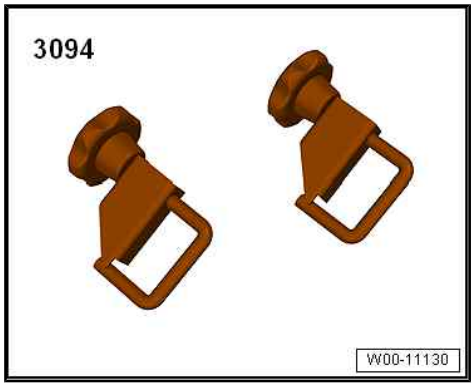

♦ Hose clip pliers - VAS 6362-

Protected by copyright. Copying for private or commercial purposes, in part or in whole, is not permitted unless authorised by AUDI AG. AUDI AG does not guarantee or accept any liability with respect to the correctness of information in this document. Copyright by AUDI AG.

Removing

– Unplug electrical connector -1-.

– Remove bolt -3- and detach coolant circulation pump - V50- from bracket.

– Clamp off coolant hoses -2- using hose clamps, up to 25 mm - 3094- and detach from coolant circulation pump - V50- .

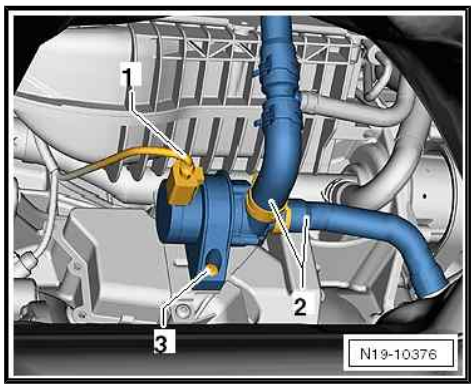

Installing

Installation is carried out in reverse order; note the following:

- Tightening torques
  ⇒ “2.1 Exploded view - coolant pump”, page 163

Note

Secure all hose connections with the correct type of hose clips (same as original equipment) ⇒ Electronic parts catalogue .

– Check coolant level ⇒ page 161 .

2.5 Exploded view - housing for thermostat with rear coolant pipe

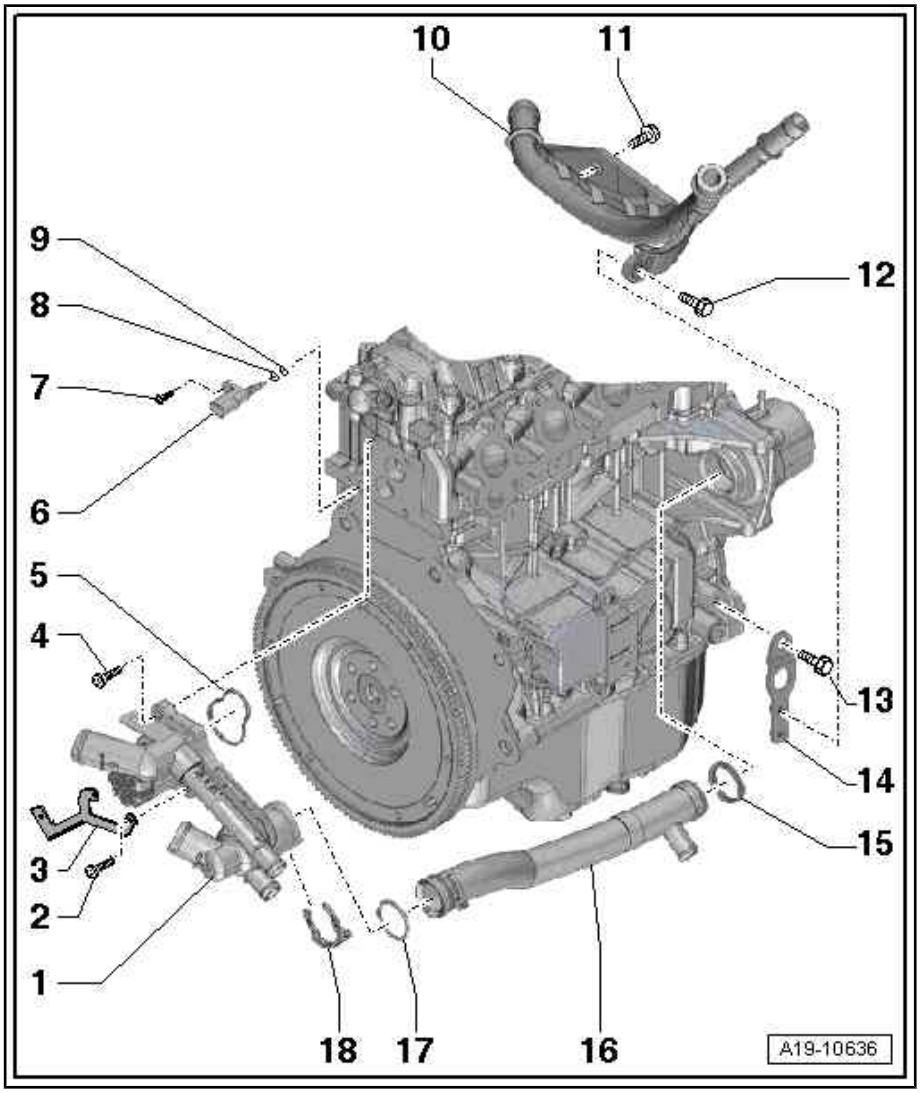

1 - Housing
- ❑ For thermostat
- ❑ Removing and installing ⇒ page 170

2 - Bolt
- ❑ 11 Nm

3 - Retainer
- ❑ For electrical wiring harness

4 - Bolt
- ❑ 9 Nm

5 - Gasket
- ❑ Renew

6 - Coolant temperature sender - G62-
- ❑ Removing and installing ⇒ page 168

7 - Bolt
- ❑ 9 Nm

8 - O-ring
- ❑ Renew

9 - Teflon ring

10 - Coolant pipe (right-side)
- ❑ Removing and installing ⇒ page 171

11 - Bolt
- ❑ 9 Nm

12 - Bolt
- ❑ 9 Nm

13 - Bolt
- ❑ 40 Nm

14 - Bracket
- ❑ For coolant pipe (right-side)

15 - Seal
- ❑ Renew

16 - Coolant pipe (rear)
- ❑ Removing and installing ⇒ page 170

17 - O-ring
- ❑ Renew

18 - Retaining clip

Protected by copyright. Copying for private or commercial purposes, in part or in whole, is not permitted unless authorised by AUDI AG. AUDI AG does not guarantee or accept any liability with respect to the correctness of information in this document. Copyright by AUDI AG.

2.6 Removing and installing coolant temperature sender - G62-

Removing

- Engine cold.

– Open filler cap on coolant expansion tank briefly to dissipate residual pressure in cooling system.

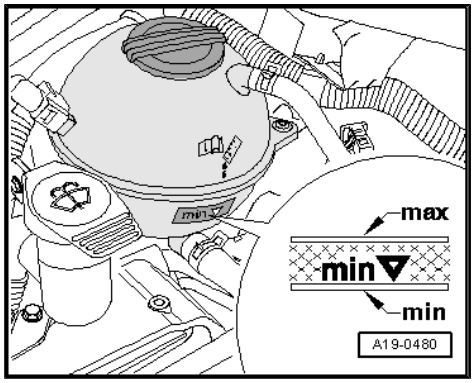

– Remove air cleaner housing ⇒ Rep. gr. 24 .

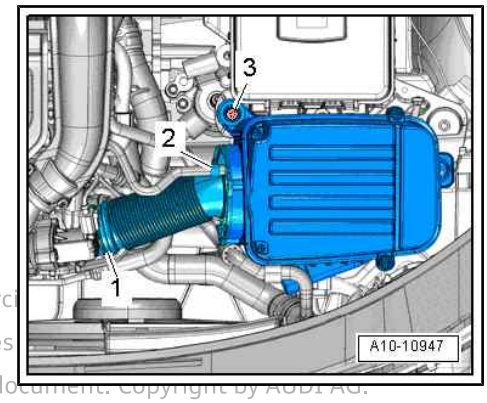

Protected by copyright. Copying for private or commerci
permitted unless authorised by AUDI AG. AUDI AG does
with respect to the correctness of information in this document. Copyright by AUDI AG.

– Remove bolts -arrows-.

– Push bracket -1- for electrical wiring harness and coolant hoses to one side.

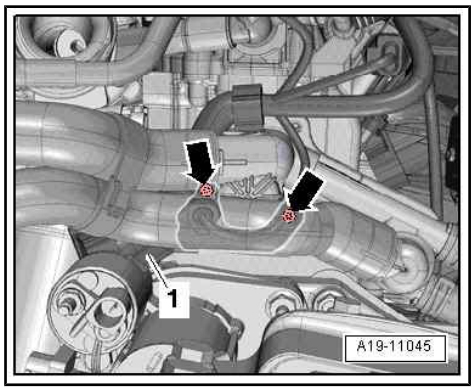

– Unplug electrical connector -2- at coolant temperature sender - G62- .

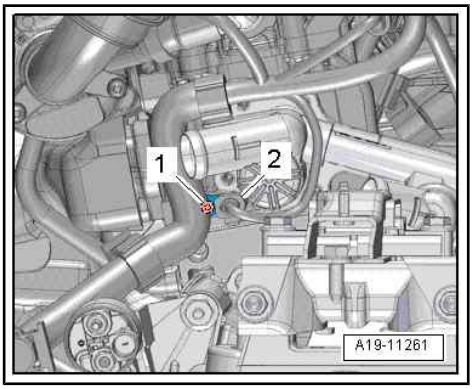

Note

Place a cloth underneath to catch escaping coolant.

– Unscrew bolt -1- and pull off coolant temperature sender - G62- .

– Use a small hook to remove O-ring and teflon ring, taking care not to damage sealing surface.

Installing

Installation is carried out in reverse order; note the following:

- Tightening torques
  ⇒ "2.5 Exploded view - housing for thermostat with rear coolant pipe", page 166

Note

Fit new O-ring.

– Install air cleaner housing ⇒ Rep. gr. 24 .

– Check coolant level ⇒ page 161 .

2.7 Removing and installing radiator outlet coolant temperature sender - G83-

Removing

- Engine cold.

– Open filler cap on coolant expansion tank briefly to dissipate residual pressure in cooling system.

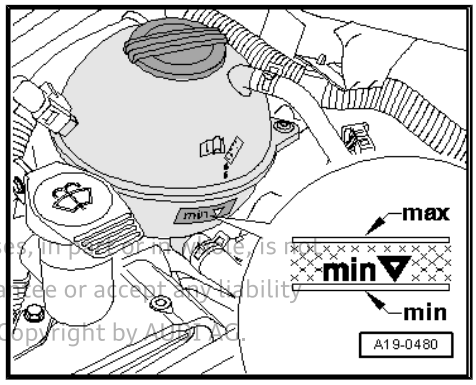

Protected by copyright. Copying for private or commercial purposes, in part or in whole, is not permitted unless authorised by AUDI AG. AUDI AG does not guarantee or accept any liability with respect to the correctness of information in this document. Copyright by AUDI AG.

– Remove noise insulation ⇒ Rep. gr. 50 .

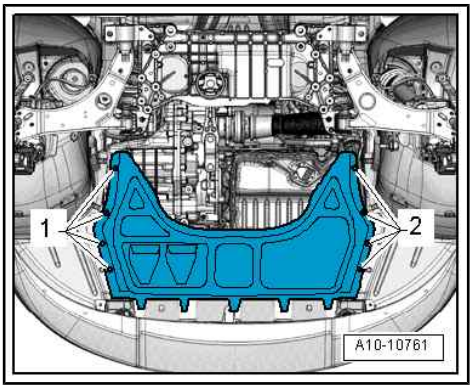

– Unplug electrical connector -1-.

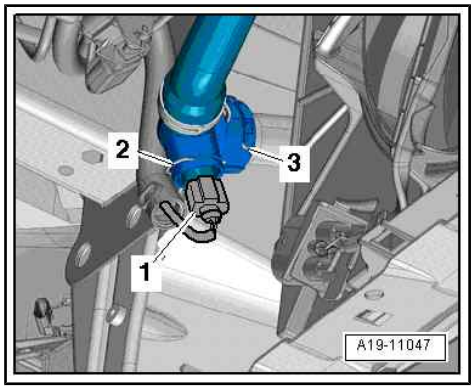

Note

Place a cloth underneath to catch escaping coolant.

– Pull out retaining clip -2- and detach radiator outlet coolant temperature sender - G83- .

Note

Disregard -item 3-.

Installing

Installation is carried out in reverse order; note the following:

Protected by copyright. Copying for private or commercial purposes, in part or in whole, is not permitted unless authorised by AUDI AG. AUDI AG does not guarantee or accept any liability with respect to the correctness of information in this document. Copyright by AUDI AG.

Note

- *Fit new O-ring.*
- *Insert new radiator outlet coolant temperature sender - G83- immediately into connection to avoid loss of coolant.*

– Install noise insulation ⇒ Rep. gr. 50 .

– Check coolant level ⇒ page 161 .

2.8 Removing and installing thermostat housing and coolant pipe (rear)

Special tools and workshop equipment required

- Hose clip pliers - VAS 6362-

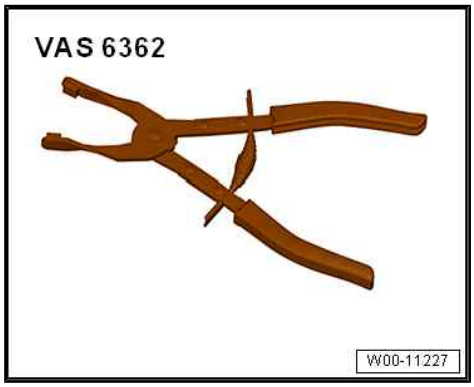

Removing

– Drain coolant ⇒ page 155 .

– Release hose clips -arrows- and detach coolant hoses.

– Move electrical wiring harness -1- clear.

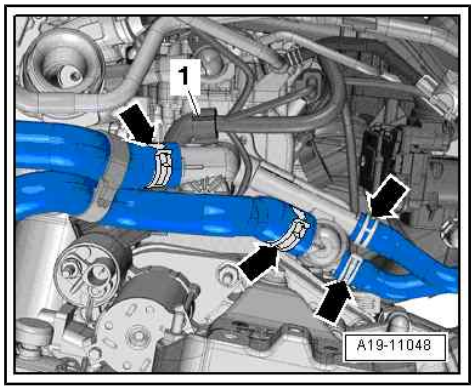

– Unplug electrical connector -2- at coolant temperature sender - G62- .
– Pull off retaining clip -3-.
– Remove bolts -arrows- and move bracket -1- clear to one side.
– Detach thermostat housing from rear coolant pipe.

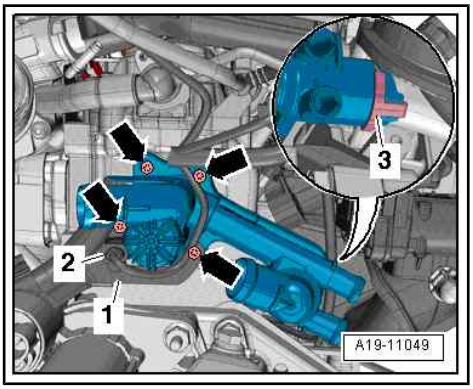

Protected by copyright. Copying for private or commercial purposes, in part permitted unless authorised by AUDI AG. AUDI AG does not guarantee or ac with respect to the correctness of information in this document. Copyright

– Release hose clip -arrow- and disconnect coolant hose from rear coolant pipe.

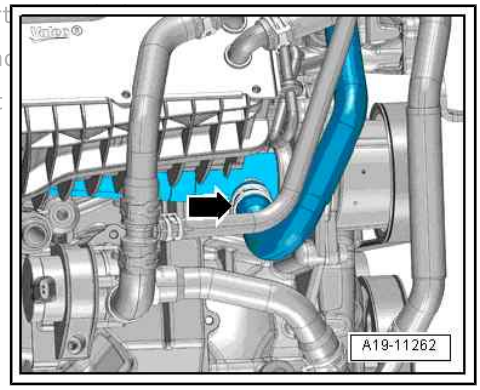

– Detach rear coolant pipe -1- from cylinder block -3-.

Installing

- Tightening torques
  ⇒ "2.5 Exploded view - housing for thermostat with rear coolant pipe", page 166

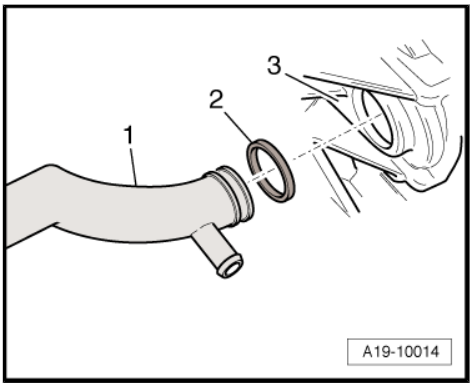

Note

- *Renew gaskets, seals and O-rings.*
- *Secure all hose connections with the correct type of hose clips (same as original equipment) ⇒ Electronic parts catalogue .*

– Clean and smoothen sealing surfaces for seal -2-.
– Lubricate seal lightly with coolant.

– After securing thermostat housing, move coolant pipe up against housing as far as stop and only then insert retaining clip -arrow-.
– Check that coolant pipe is firmly secured in thermostat housing.

Remaining installation steps are carried out in reverse sequence; note the following:

– Fill up with coolant ⇒ page 157 .

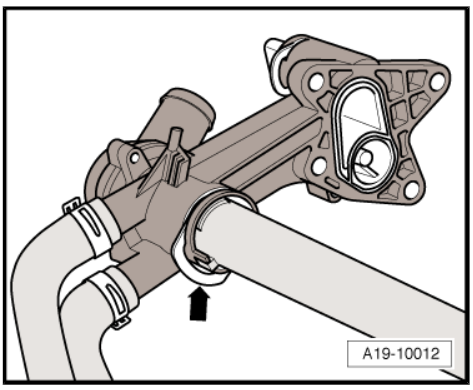

2.9 Removing and installing coolant pipe (right-side)

Special tools and workshop equipment required

- Hose clamps up to 25 mm - 3094-

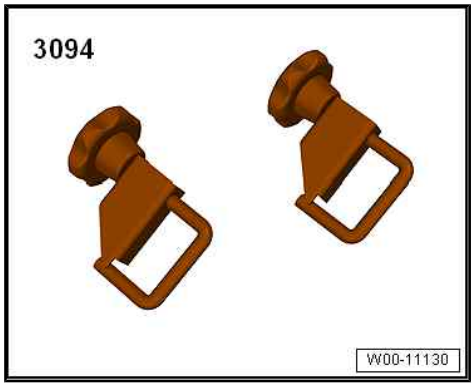

- Drip tray for workshop hoist - VAS 6208-

- Hose clip pliers - VAS 6362-

Protected by copyright. Copying for private or commercial purposes, in whole or in part, is not permitted unless authorised by AUDI AG. AUDI AG does not guarantee or accept any liability with respect to the correctness of information in this document. Copyright by AUDI AG

Removing

– Remove noise insulation ⇒ Rep. gr. 50 .

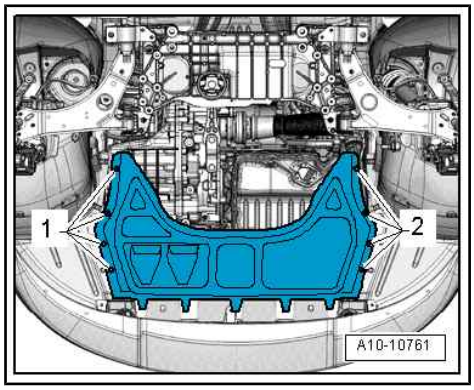

– Place drip tray for workshop hoist - VAS 6208- beneath engine.
– Clamp off coolant hoses using hose clamps, up to 25 mm - 3094- , release hose clips -1 and 2- and disconnect hoses.
– Unscrew bolts -arrows- and remove coolant pipe (right-side).

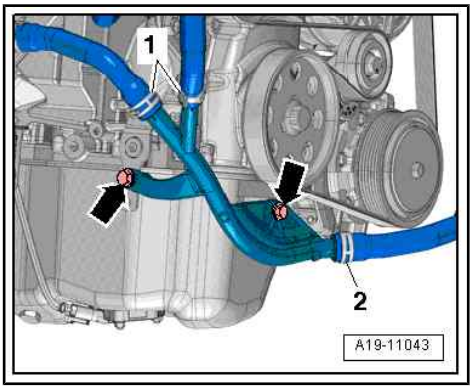

Installing

Installation is carried out in reverse order; note the following:

- Tightening torques
  ⇒ "2.5 Exploded view - housing for thermostat with rear coolant pipe", page 166

Note

Secure all hose connections with the correct type of hose clips (same as original equipment) ⇒ Electronic parts catalogue .

– Install noise insulation ⇒ Rep. gr. 50 .
– Check coolant level ⇒ page 161 .

Protected by copyright. Copying for private or commercial purposes, in part or in whole, is not permitted unless authorised by AUDI AG. AUDI AG does not guarantee or accept any liability with respect to the correctness of information in this document. Copyright by AUDI AG.

3 Radiator and radiator fans

Overview

- ⇒ “3.1 Exploded view - radiator and radiator fans”, page 174
- ⇒ “3.2 Removing and installing radiator cowl”, page 175
- ⇒ “3.3 Removing and installing radiator fan V7 with radiator fan control unit J293 ”, page 176
- ⇒ “3.4 Removing and installing radiator”, page 176

3.1 Exploded view - radiator and radiator fans

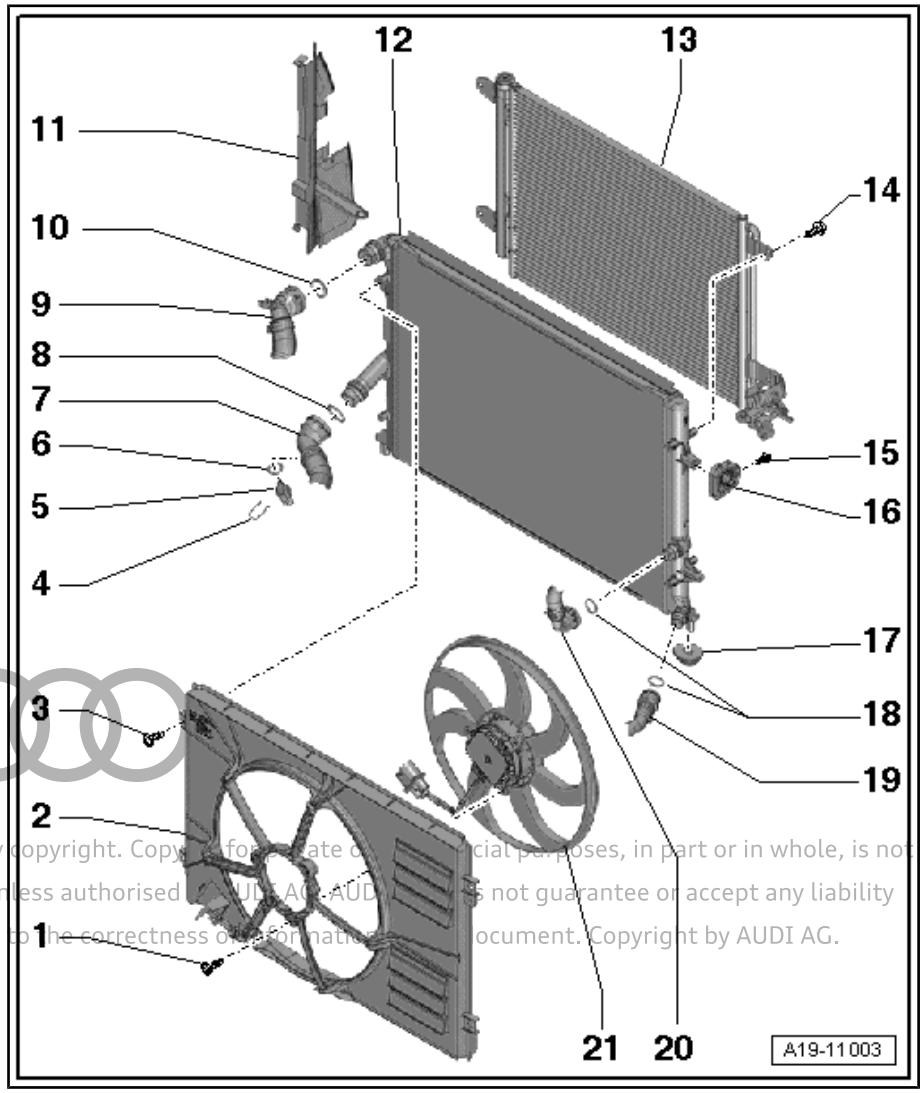

1 - Bolt
- ❑ 5 Nm

2 - Radiator cowl
- ❑ Removing and installing ⇒ page 175

3 - Bolt
- ❑ 5 Nm

4 - Retaining clip

5 - Radiator outlet coolant temperature sender - G83-
- ❑ Removing and installing ⇒ page 169

6 - O-ring
- ❑ Renew

7 - Coolant hose
- ❑ Bottom left
- ❑ To connection for thermostat
- ❑ Lift retaining clip to detach
- ❑ Connecting ⇒ page 175

8 - O-ring
- ❑ Renew

9 - Coolant hose
- ❑ Top left
- ❑ To connection at cylinder head
- ❑ Lift retaining clip to detach
- ❑ Connecting ⇒ page 175

10 - O-ring
- ❑ Renew

11 - Air duct (left-side)

12 - Radiator
- ❑ Removing and installing ⇒ page 176
- ❑ If renewed, refill system with fresh coolant

Protected by copyright. Copy[illegible] for [illegible]ate o[illegible]cial purposes, in part or in whole, is not permitted unless authorised [illegible] AUDI AG. AUDI [illegible] not guarantee or accept any liability with respect to the correctness of information [illegible] document. Copyright by AUDI AG.

13 - Condenser

- ❑ For vehicles with air conditioner
- ❑ Removing and installing ⇒ Rep. gr. 87

14 - Bolt

- ❑ 5 Nm

15 - Bolt

- ❑ 5 Nm

16 - Retainer

- ❑ For radiator

17 - Mounting

18 - O-rings

- ❑ Renew

19 - Coolant hose

- ❑ Bottom right
- ❑ Lift retaining clip to detach
- ❑ Connecting ⇒ page 175

20 - Coolant hose

- ❑ Top right
- ❑ Lift retaining clip to detach
- ❑ Connecting ⇒ page 175

21 - Radiator fan - V7-

- ❑ With radiator fan control unit - J293-
- ❑ Removing and installing ⇒ page 176

Protected by copyright. Copying for private or commercial purposes, in part or in whole, is not permitted unless authorised by AUDI AG. AUDI AG does not guarantee or accept any liability with respect to the correctness of information in this document. Copyright by AUDI AG.

Connecting coolant hose with plug-in connector

– Remove old O-ring -2- from coolant hose -3-.

– Lubricate new O-ring with coolant additive and fit O-ring in coolant hose.

– Press coolant hose onto connection -1- until it engages audibly.

– Press coolant hose in again and then pull to check that plug-in connector is correctly engaged.

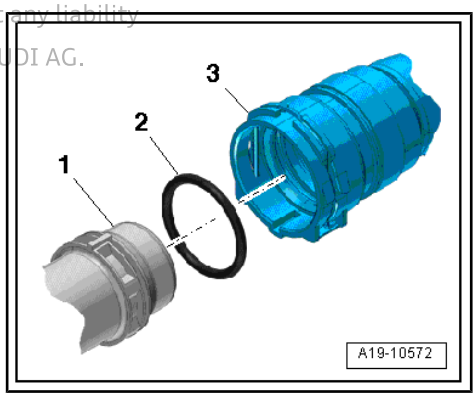

3.2 Removing and installing radiator cowl

Removing

– Remove air cleaner housing ⇒ Rep. gr. 24 .

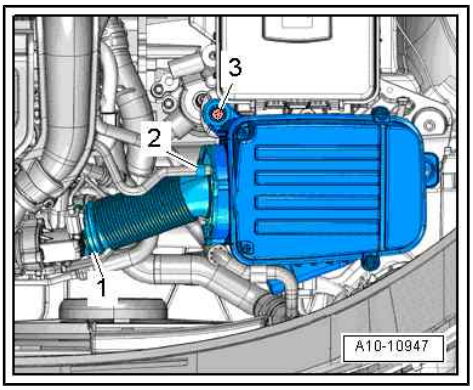

– Remove noise insulation ⇒ Rep. gr. 50 .

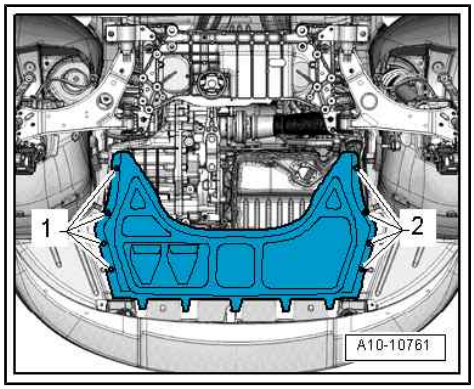

WARNING

Risk of injury as the radiator fans may start up automatically.

- *Unplug electrical connectors before working in vicinity of radiator cowl.*

Protected by copyright. Copying for private or comm
permitted unless authorised by AUDI AG. AUDI AG d
with respect to the correctness of information in thi

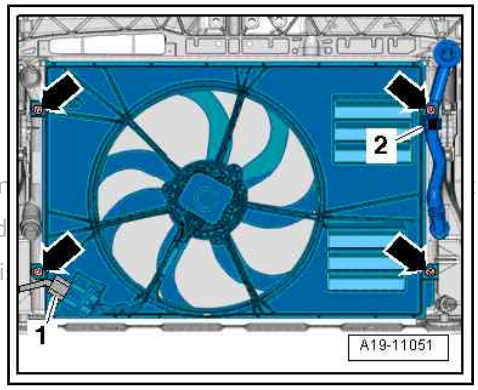

– Unplug electrical connector -1- for radiator fan.
– Move coolant hose -2- clear.
– Unscrew bolts -arrows- and remove radiator cowl with radiator fan downwards.

Installing

Installation is carried out in reverse order; note the following:

- Tightening torques
  ⇒ "3.1 Exploded view - radiator and radiator fans", page 174

– Install noise insulation ⇒ Rep. gr. 50 .
– Install air cleaner housing ⇒ Rep. gr. 24 .

3.3 Removing and installing radiator fan - V7- with radiator fan control unit - J293-

Removing

– Remove radiator cowl ⇒ page 175 .
– Move electrical wiring clear.
– Unscrew bolts -arrows- and remove radiator fans.

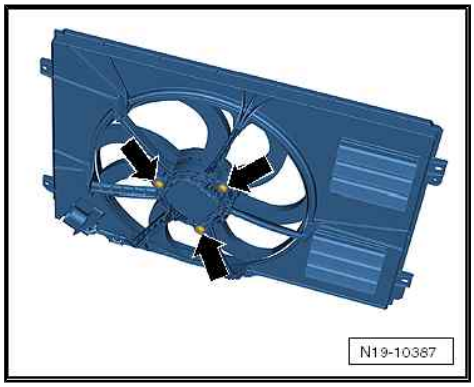

Installing

Installation is carried out in reverse order; note the following:

- Tightening torques
  ⇒ "3.1 Exploded view - radiator and radiator fans", page 174

Note

Fit all cable ties in the original positions when installing.

– Install radiator cowl ⇒ page 175 .

3.4 Removing and installing radiator

Special tools and workshop equipment required

- Drip tray for workshop hoist - VAS 6208-

- Drill bit, ∅ 5 mm
- Step drill (4 - 20 mm)
- Electric drill
- Safety goggles

Removing

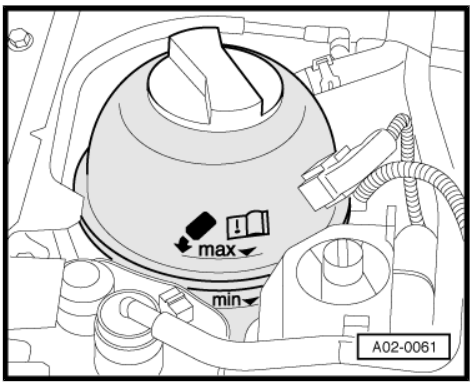

> ⚠ **WARNING**
>
> ***Risk of scalding due to hot steam and hot coolant.***
>
> - ***The cooling system is under pressure when the engine is hot.***
> - ***To allow pressure to dissipate, cover filler cap on coolant expansion tank with cloth and open carefully.***

– Open filler cap on coolant expansion tank.
– Remove radiator cowl ⇒ page 175 .
– Remove bumper cover (front) ⇒ Rep. gr. 63 .

– Place drip tray for workshop hoist - VAS 6208- beneath engine.
– Lift retaining clips -1 and 2- and disconnect coolant hoses (right-side) from radiator.

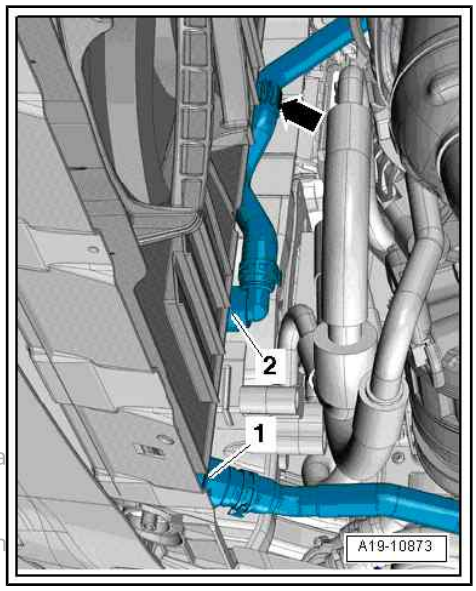

Note

Disregard -arrow-.

Protected by copyright. Copying for private or commercial purposes, in pa
permitted unless authorised by AUDI AG. AUDI AG does not guarantee or
with respect to the correctness of information in this document. Copyrigh

– Unplug electrical connector -1- at radiator outlet coolant temperature sender - G83- .
– Lift retaining clip -3- and disconnect coolant hose (bottom left) from radiator.

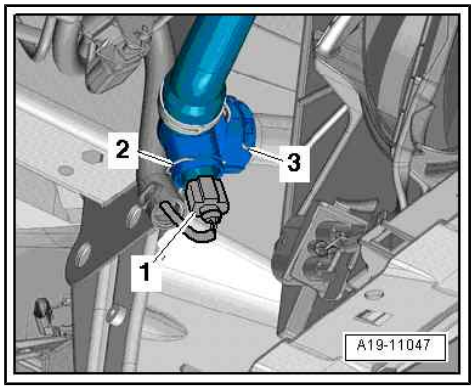

Note

Disregard -item 2-.

– Lift retaining clip -arrow- and disconnect coolant hose (top) from radiator.

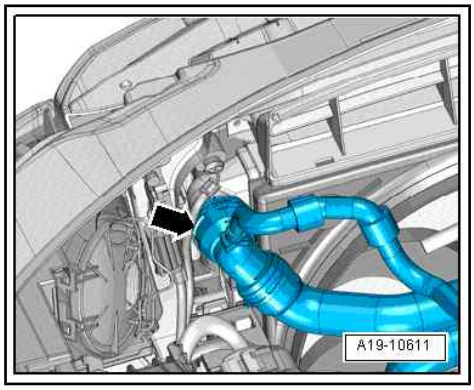

– Remove bolts -4, 5-.
– Move bracket -3- with horns -1 and 6- clear to one side.

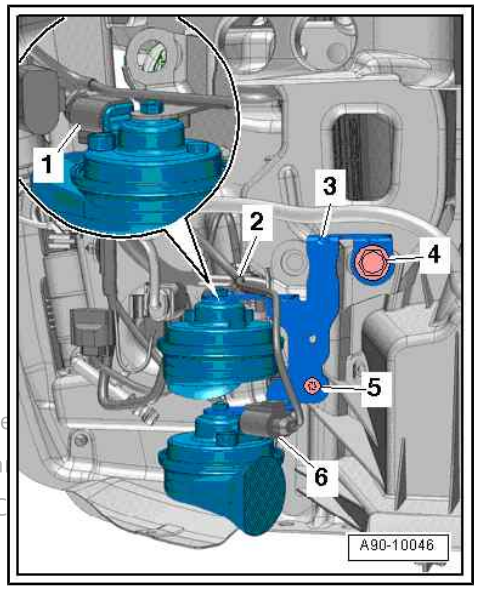

Note

Disregard -item 2-.

Protected by copyright. Copying for private or commercial purpose
permitted unless authorised by AUDI AG. AUDI AG does not guara
with respect to the correctness of information in this document. C

Note

To remove the bolt for the coolant lines on the side of the radiator, you have to drill a hole on the right side of the plastic frame.

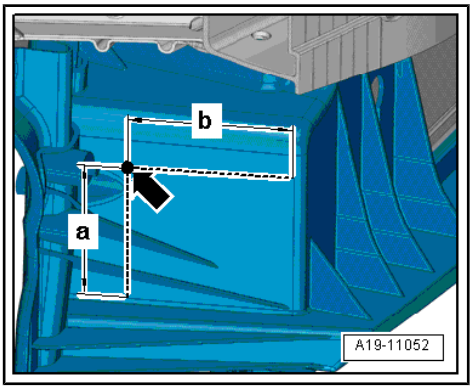

– Mark dimensions -a- and -b- on plastic frame.
- Dimension -a- = 75 mm
- Dimension -b- = 60 mm
– Mark intersection point -arrow- with paint.

WARNING

Risk of eye injury.

- *Put on safety goggles.*

Protected by copyright. Copying for private or commercial purposes, in part or in whole, is not permitted unless authorised by AUDI AG. AUDI AG does not guarantee or accept any liability with respect to the correctness of information in this document. Copyright by AUDI AG.

– Drill a 5 mm ∅ hole in plastic frame.
– Enlarge hole to 16 mm ∅ using step drill (4 - 20 mm).

– Unclip air ducts for radiator on both sides.

WARNING

Risk of injury caused by refrigerant.

- *The air conditioner refrigerant circuit must not be opened.*

– Remove bolts -arrows-.

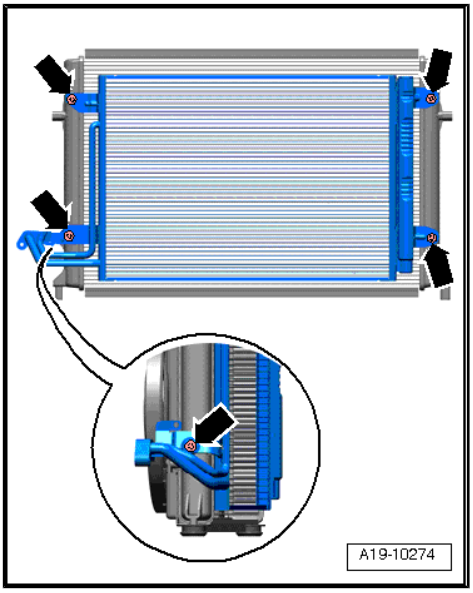

Caution

Risk of damage to refrigerant lines and hoses

- *Do NOT stretch, kink or bend refrigerant lines and hoses.*

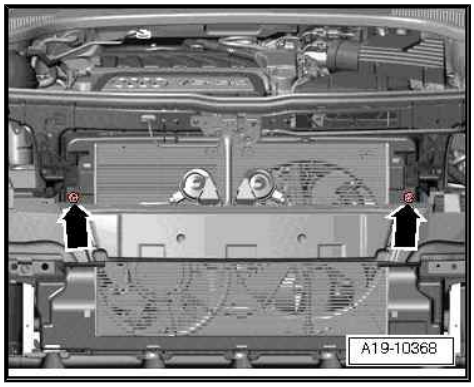

– Release air ducts (left and right) and push to one side in order to remove bolts -arrows-.
– Swivel top edge of radiator slightly to rear.
– Lift radiator and detach from bottom mounting points.
– Move condenser to front and place in lock carrier, then secure with cable ties to prevent from dropping.
– Take out radiator downwards.

Installing

Installation is carried out in reverse order; note the following:

- Tightening torques
  ⇒ "3.1 Exploded view - radiator and radiator fans", page 174

Note

If there are slight impressions on the fins, refer to ⇒ page 6 .

– Install condenser ⇒ Rep. gr. 87 .
– Install bracket for horns ⇒ Rep. gr. 90 .
– Install bumper cover (front) ⇒ Rep. gr. 63 .
– Install radiator cowl ⇒ page 175 .
– Connect coolant hoses with plug-in connector ⇒ page 175 .
– Fill up with coolant ⇒ page 157 .

Protected by copyright. Copying for private or commercial purposes, in part or in whole, is not permitted unless authorised by AUDI AG. AUDI AG does not guarantee or accept any liability with respect to the correctness of information in this document. Copyright by AUDI AG.

21 – Turbocharging/supercharging

1 Turbocharger

Overview

- ⇒ “1.1 Exploded view - turbocharger”, page 181
- ⇒ “1.2 Removing and installing turbocharger”, page 182
- ⇒ “1.3 Removing and installing charge pressure positioner V465 ”, page 186

Protected by copyright. Copying for private or commercial purposes, in part or in whole, is not permitted unless authorised by AUDI AG. AUDI AG does not guarantee or accept any liability with respect to the correctness of information in this document. Copyright by AUDI AG.

1.1 Exploded view - turbocharger

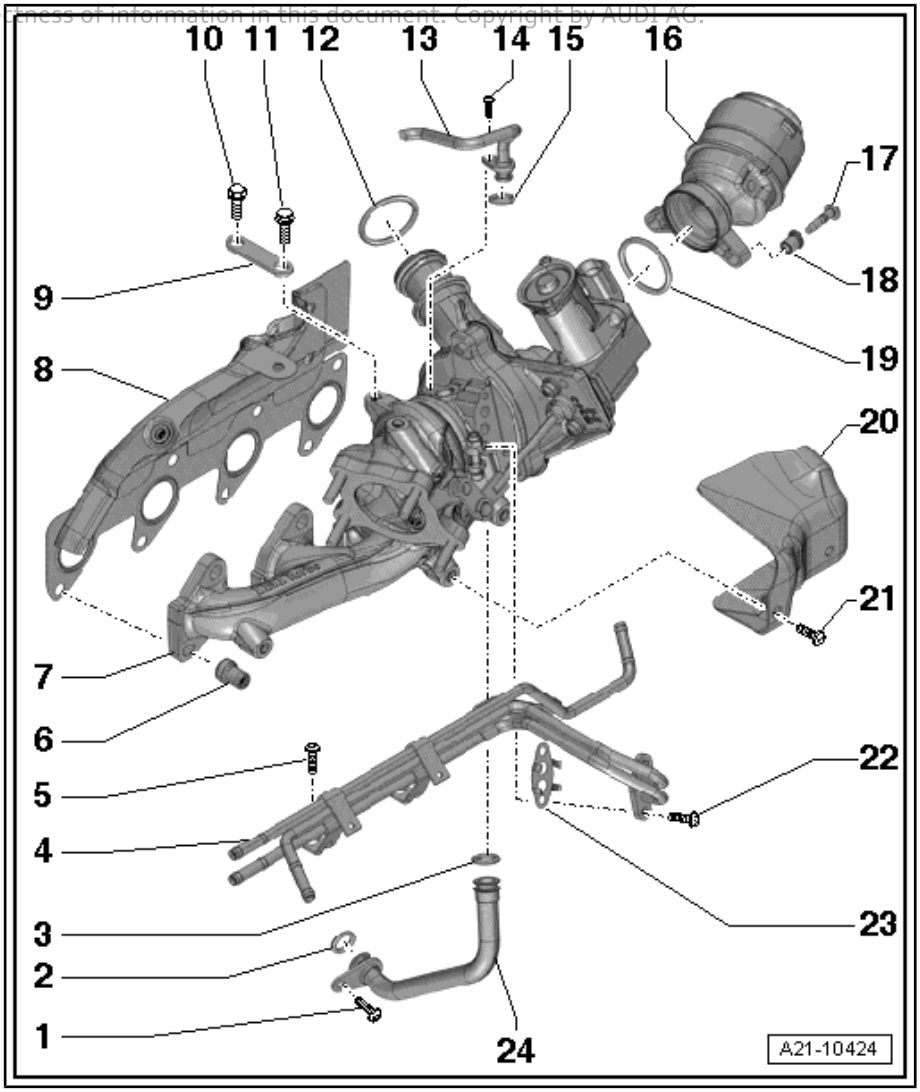

1 - Bolt
- ❑ 9 Nm

2 - O-ring
- ❑ Renew

3 - O-ring
- ❑ Renew

4 - Coolant lines

5 - Bolt
- ❑ 9 Nm

6 - Nut
- ❑ Coat threads with high-temperature paste; for high-temperature paste refer to ⇒ Electronic parts catalogue
- ❑ Tightening torque and sequence ⇒ page 182

7 - Turbocharger
- ❑ Combined with charge pressure positioner - V465- and exhaust manifold
- ❑ Cannot be dismantled
- ❑ Removing and installing ⇒ page 182
- ❑ Reset learnt values after renewing turbocharger ⇒ Vehicle diagnostic tester, `Guided Functions`, `Reset learnt values`

8 - Gasket
- ❑ With heat shield
- ❑ Renew

9 - Bracket
- ❑ For turbocharger

10 - Bolt
- ❑ 20 Nm

11 - Bolt
- ❑ 20 Nm

12 - O-ring
- ❑ Renew

13 - Oil supply line

14 - Bolt
- ❑ 9 Nm

15 - O-ring
- ❑ Renew

16 - Pulsation damper

17 - Bolt
- ❑ 9 Nm

18 - Sleeve

19 - O-ring
- ❑ Renew

20 - Heat shield

21 - Bolt
- ❑ 8 Nm

22 - Bolt
- ❑ 9 Nm

23 - Gasket
- ❑ Renew

24 - Oil return pipe

Turbocharger - tightening torque and sequence

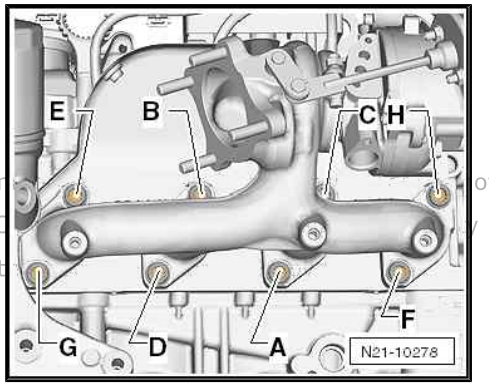

Note

Renew nuts.

Protected by copyright. Copying for private or com ot
permitted unless authorized by AUDI AG. AUDI AG
with respect to the correctness of information in t

– Tighten nuts in 4 stages in the sequence shown:

Stage	Nuts	Tightening torque
1.	-A … H-	Screw in by hand until contact is made
2.	-A … H-	18 Nm
3.	-A … H-	Re-tighten to 12 Nm
4.	-A … H-	Re-tighten to 12 Nm

Note

This tightening sequence has been specified in order to compensate for the settling of the joints.

1.2 Removing and installing turbocharger

Special tools and workshop equipment required

- Hose clamps up to 25 mm - 3094-

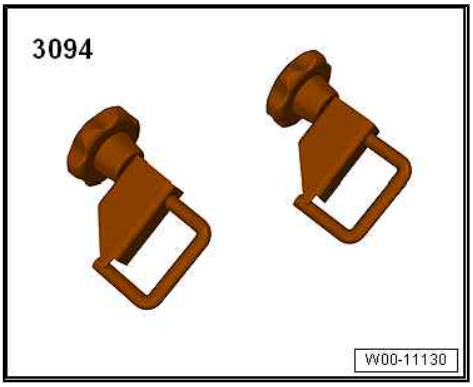

- Engine bung set - VAS 6122-

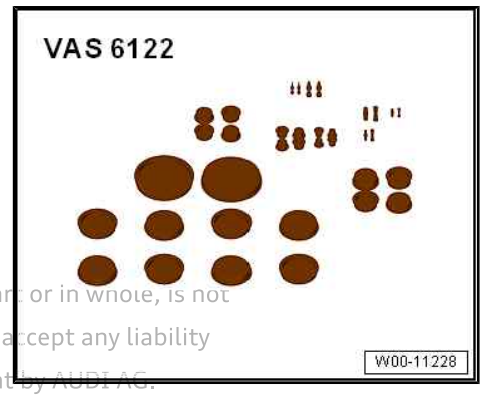

Protected by copyright. Copying for private or commercial purposes, in part or in whole, is not permitted unless authorised by AUDI AG. AUDI AG does not guarantee or accept any liability with respect to the correctness of information in this document. Copyright by AUDI AG.

- Puller - T10112 A-

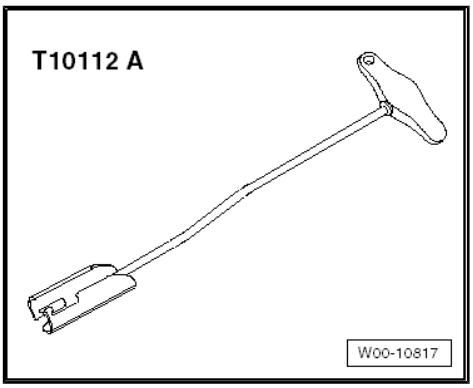

Removing

Caution

If the turbocharger has suffered mechanical damage (e.g. damaged compressor wheel), it is not sufficient merely to fit a new turbocharger. The following work must be performed in order to avoid further damage:

- *Check air cleaner housing, air filter element and air hoses for dirt and foreign particles.*
- *Check the entire charge air system (including the charge air cooler) for foreign matter.*
- *If foreign matter is found in the charge air system, clean all relevant ducts and hoses and renew charge air cooler if necessary.*

Note

Observe rules for cleanliness ⇒ page 5 .

– Remove catalytic converter ⇒ page 198 .
– Detach crankcase breather hose and air hose -1-.
– Unplug electrical connector -2-.

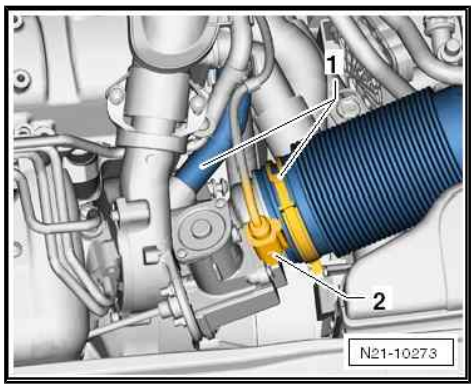

– Remove bolts -1- and detach retaining bracket.
– Unplug electrical connector -2- on charge pressure sender - G31- / intake air temperature sender 2 - G299- and move electrical wiring clear.
– Move hoses (left-side) clear at air cleaner housing.
– Release retainers -arrows- and detach air pipe -3- first from throttle valve module - J338- and then from turbocharger.
– Fold open cover -4- and remove bolt behind it.

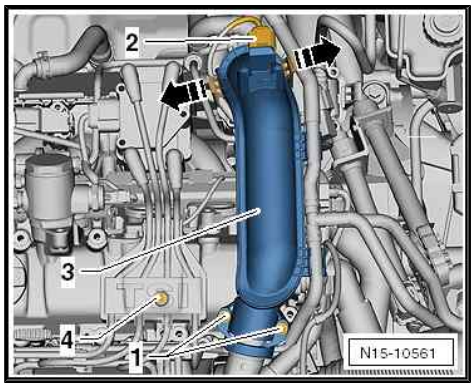

– Pull off spark plug connectors -arrows- using puller - T10112 A- and move ignition cables back towards rear.

Protected by copyright. Copying for private or comme
permitted unless authorised by AUDI AG. AUDI AG do
with respect to the correctness of information in this

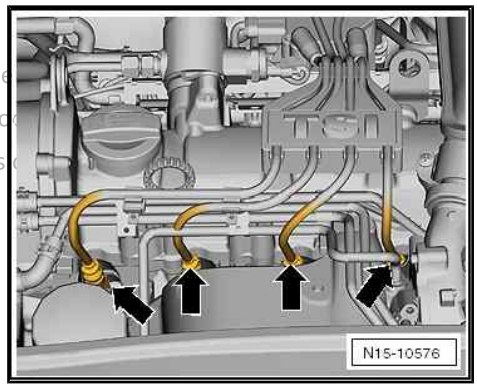

– Remove banjo bolt -2-.
– Remove bolt -3- and detach oil supply line.

Note

Disregard -item 1-.

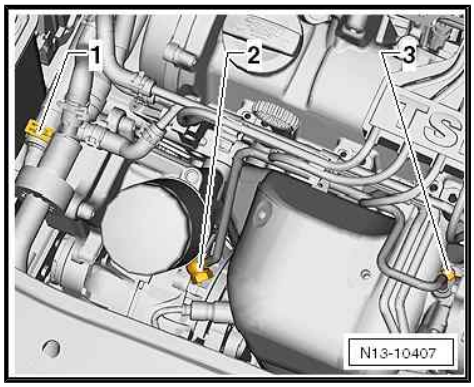

– Clamp off coolant hoses using hose clamps up to 25 mm - 3094- , release hose clips -arrows- and disconnect hoses.
– Unscrew bolts -1 and 2- and detach coolant pipes.

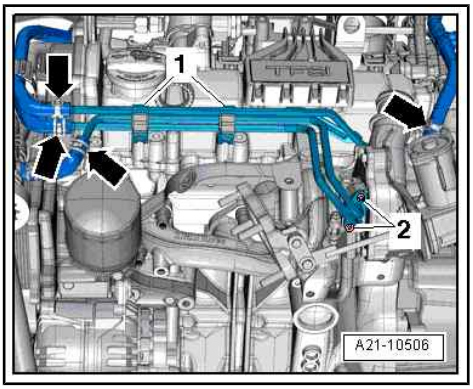

– Unscrew bolt -1- and pull oil return line -2- out of turbocharger.
– Unscrew bolt for heat shield -3- and detach heat shield.

Protected by copyright. Copying for private or commercial purposes, in part o
permitted unless authorised by AUDI AG. AUDI AG does not guarantee or acce
with respect to the correctness of information in this document. Copyright by

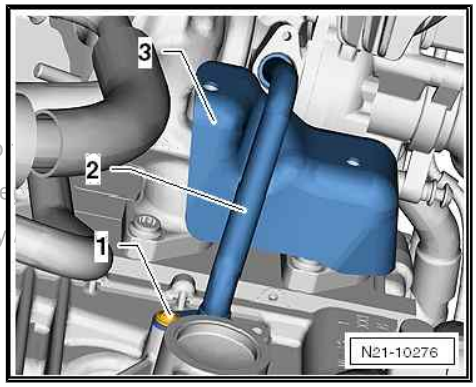

– Slacken nuts in the sequence: -H … A-.

– Remove nuts and detach turbocharger with exhaust manifold.

– Seal off open pipes/lines and connections with clean plugs from engine bung set - VAS 6122- .

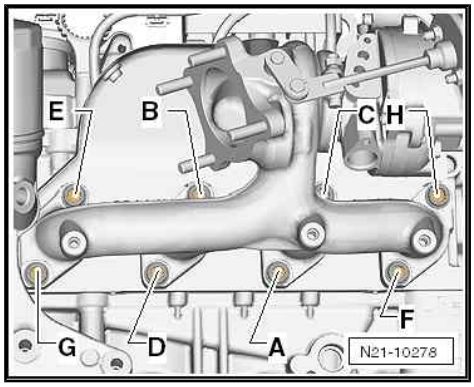

Installing

Installation is carried out in reverse order; note the following:

Tightening torques

- ⇒ “2.1 Exploded view - oil filter bracket and engine oil cooler”, page 143
- ⇒ “1.1 Exploded view - turbocharger”, page 181
- ⇒ “2.1 Exploded view - charge air cooler”, page 189

Note

- *Renew seals, gaskets, O-rings and self-locking nuts.*
- *Fill turbocharger with engine oil at connection for oil supply line.*
- *Hose connections and hoses for charge air system must be free of oil and grease prior to fitting.*
- *Secure all hose connections with the correct type of hose clips (same as original equipment) ⇒ Electronic parts catalogue .*
- *After installing the turbocharger, allow the engine to idle for approx. 1 minute without pressing the accelerator to ensure that the turbocharger is supplied with oil.*

– Install catalytic converter ⇒ page 198 .

– Check oil level ⇒ Maintenance ; Booklet 808 .

– Check coolant level ⇒ page 161 .

– Reset learnt values after renewing turbocharger with charge pressure positioner - V465- ⇒ Vehicle diagnostic tester, `Guided Functions`, `Reset learnt values`

1.3 Removing and installing charge pressure positioner - V465-

Removing

Protected by copyright. Copying for private or commercial purposes, in part or in whole, is not permitted unless authorised by AUDI AG. AUDI AG does not guarantee or accept any liability with respect to the correctness of information in this document. Copyright by AUDI AG.

- Check if a spacer is installed before removing or renewing the charge pressure positioner - V465- .
- Please refer to the current TPI for information on whether a spacer has to be installed and, if so, which type.

– Switch off ignition.

– Unplug connector -arrow- from charge pressure positioner - V465- -1-.

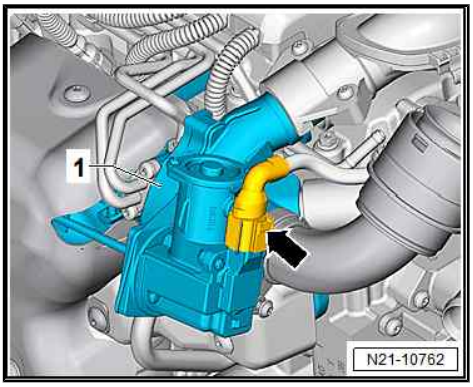

– Unplug electrical connector -arrow- for Lambda probe - G39- and unclip it from bracket -1-.

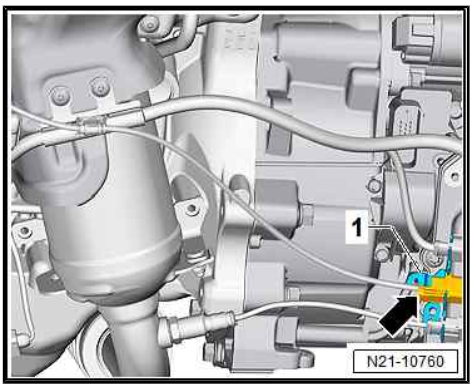

– Unclip electrical wire for Lambda probe - G39- -1- from bracket -3-.

– Remove Lambda probe - G39- -1- ⇒ Rep. gr. 24 .

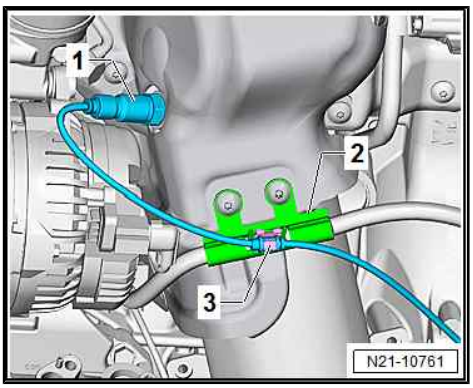

Protected by copyright. Copying for private or commercial purposes, in part or in whole, is not permitted unless authorised by AUDI AG. AUDI AG does not guarantee or assume any liability with respect to the correctness of information in this document. Copyright

– Remove securing bolts -arrows-.

– Push heat shield -1- for turbocharger to side so that control rod is accessible.

• Wiring retainer -2- remains in installation position.

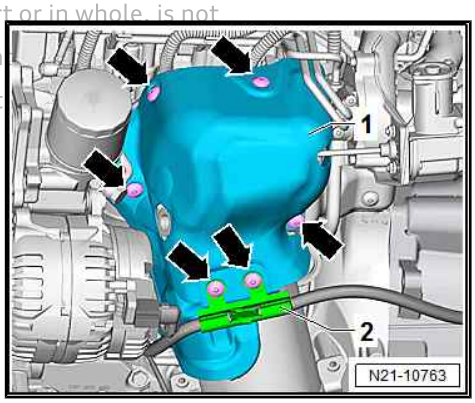

– Detach securing clip -3- from control rod connection to turbocharger -2-.
– Remove nuts -arrows- and detach charge pressure positioner - V465- -1-.
– If fitted, remove spacer -4-.

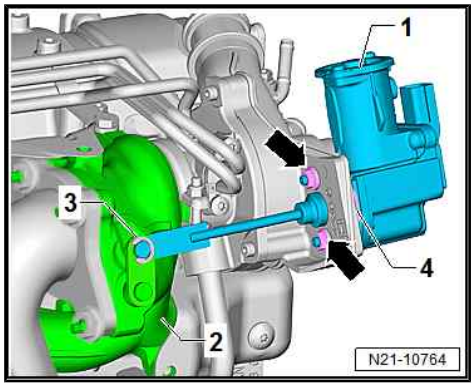

Note

- *One or two spacers may be fitted.*
- *For greater clarity, the heat shield is not illustrated.*

Installing

Installation is carried out in the reverse order; note the following:

– Secure charge pressure positioner - V465- with new nuts.

Fit new securing clip -3-.

– Adapt engine control unit - J623- to charge pressure positioner - V465- ⇒ Vehicle diagnostic tester; , “Guided Functions” .

– If necessary, insert spacer -2-.

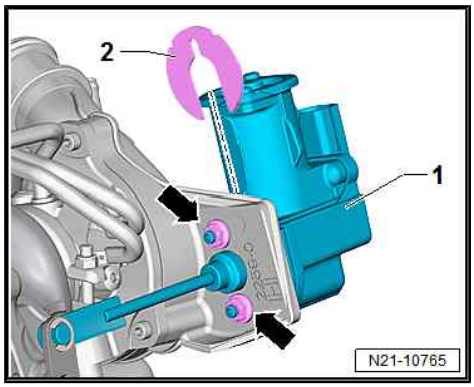

Note

For greater clarity, the heat shield is not illustrated.

Only fit new securing nuts -arrows- after performing adaption in ⇒ Vehicle diagnostic tester; “Guided Functions” mode.

Tightening torques

- ⇒ “1.1 Exploded view - turbocharger”, page 181
- Lambda probe - G39- ⇒ Rep. gr. 24

Protected by copyright. Copying for private or commercial purposes, in part or in whole, is not permitted unless authorised by AUDI AG. AUDI AG does not guarantee or accept any liability with respect to the correctness of information in this document. Copyright by AUDI AG.

2 Charge air cooler

Protected by copyright. Copying for private or commercial purposes, in part or in whole, is not permitted unless authorised by AUDI AG. AUDI AG does not guarantee or accept any liability with respect to the correctness of information in this document. Copyright by AUDI AG.

Overview

- ⇒ "2.1 Exploded view - charge air cooler", page 189
- ⇒ "2.2 Removing and installing charge pressure sender G31 / intake air temperature sender 2 G299 ", page 190
- ⇒ "2.3 Removing and installing charge air cooler", page 190
- ⇒ "2.4 Checking charge air system for leaks", page 191

2.1 Exploded view - charge air cooler

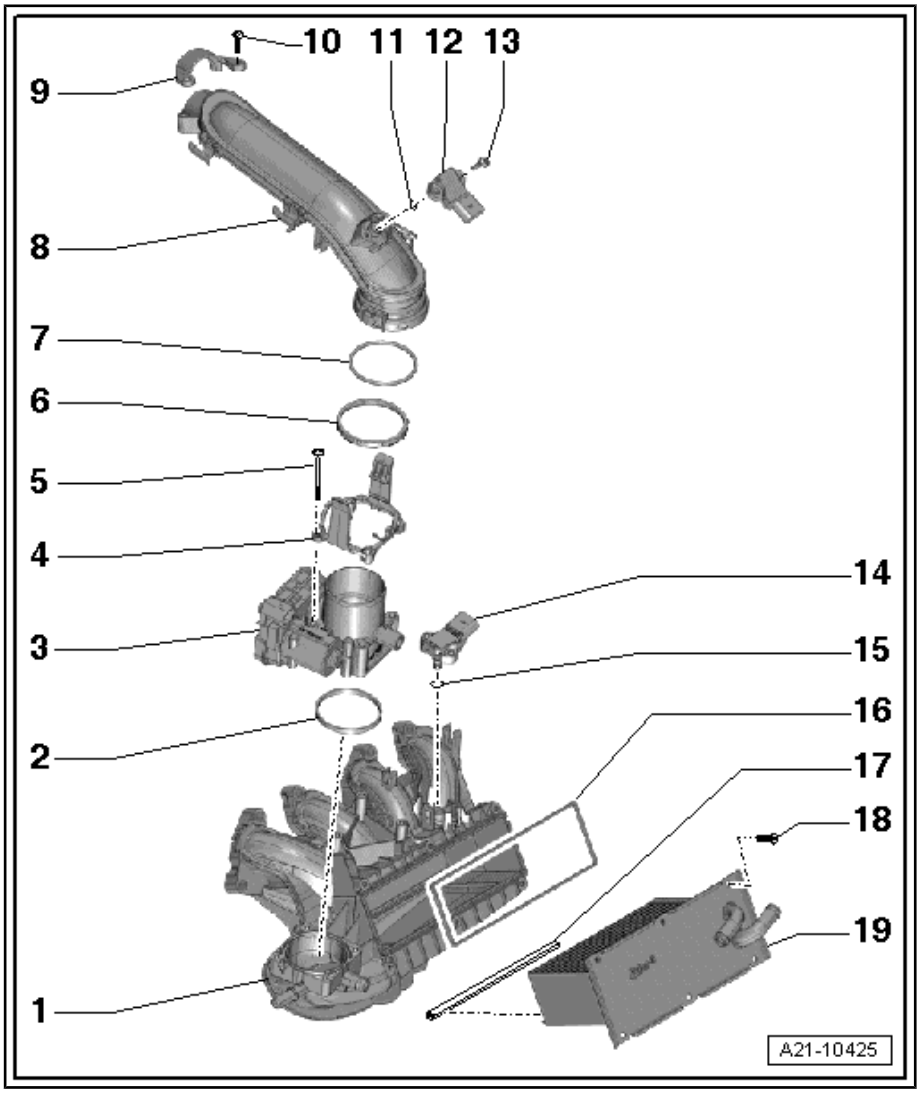

1 - Intake manifold
- ❑ Removing and installing ⇒ Rep. gr. 24

2 - Seal
- ❑ Renew

3 - Throttle valve module - J338-
- ❑ Removing and installing ⇒ Rep. gr. 24

4 - Retaining clip

5 - Bolt
- ❑ 7 Nm

6 - Support ring
- ❑ Renew

7 - O-ring
- ❑ Renew

8 - Air pipe

9 - Retaining bracket

10 - Bolt
- ❑ 5 Nm

11 - O-ring
- ❑ Renew

12 - Charge pressure sender - G31- / intake air temperature sender 2 - G299-
- ❑ Removing and installing ⇒ page 190

13 - Bolt
- ❑ 3 Nm

14 - Intake air temperature sender - G42- / intake manifold pressure sender - G71-
- ❑ Clipped on

15 - O-ring
- ❑ Renew

16 - Seal
- ❑ Renew

17 - Sealing lip

18 - Bolt

- ❑ Screw in bolts initially by hand until they make contact
- ❑ 7 Nm

19 - Charge air cooler

- ❑ Removing and installing ⇒ page 190

2.2 Removing and installing charge pressure sender - G31- / intake air temperature sender 2 - G299-

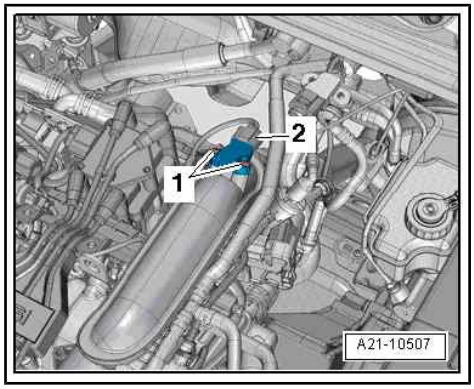

Removing

– Unplug electrical connector -2-.

– Unscrew bolts -1- and remove charge pressure sender - G31- / intake air temperature sender 2 - G299- .

Installing

Installation is carried out in reverse order; note the following:

- Tightening torque
  ⇒ "1.1 Exploded view - turbocharger", page 181

Note

Fit new O-ring.

Protected by copyright. Copying for private or commercial purposes, in part or in whole, is not permitted unless authorised by AUDI AG. AUDI AG does not guarantee or accept any liability with respect to the correctness of information in this document. Copyright by AUDI AG.

2.3 Removing and installing charge air cooler

Special tools and workshop equipment required

♦ Hose clamps up to 25 mm - 3094-

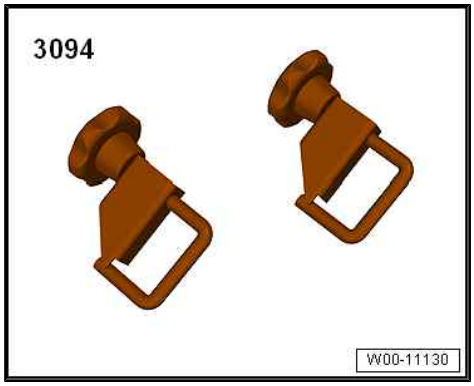

♦ Drip tray for workshop hoist - VAS 6208-

Protected by copyright. Copying for private or commercial p
permitted unless authorised by AUDI AG. AUDI AG does not gu
liability
with respect to the correctness of information in this document. C
by AUDI AG.

Removing

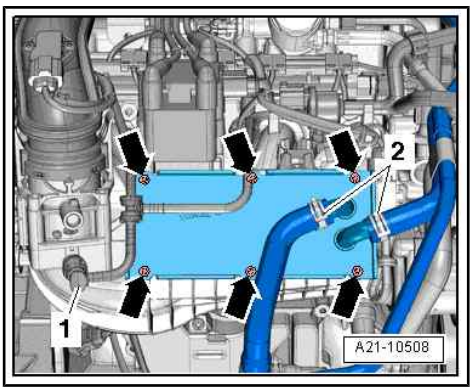

Note

Observe rules for cleanliness ⇒ *page 5* .

– Disconnect pipe -1- leading to activated charcoal filter solenoid valve 1 - N80- by pressing release tabs.
– Place drip tray for workshop hoist - VAS 6208- beneath engine.
– Clamp off coolant hoses using hose clamps, up to 25 mm - 3094- , release hose clips -2- and disconnect hoses from charge air cooler.
– Remove bolts -arrows- and detach charge air cooler.

Note

For illustration purposes, the installation position is shown from the rear and with the engine removed.

Installing

Installation is carried out in reverse order; note the following:

Note

♦ *Renew seal and O-ring.*
♦ *Secure all hose connections with the correct type of hose clips (same as original equipment) ⇒ Electronic parts catalogue .*

– Check coolant level ⇒ page 161 .

2.4 Checking charge air system for leaks

Special tools and workshop equipment required

♦ Charge air system tester - V.A.G 1687- with adapters -V.A.G 1687/10- and -V.A.G 1687/14-

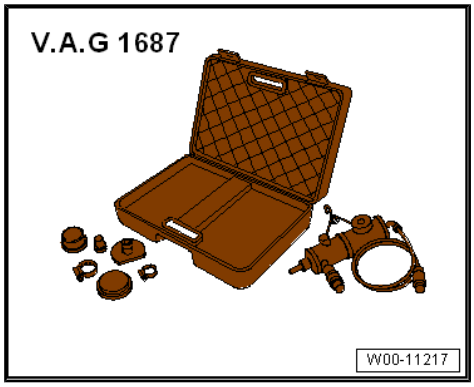

♦ Hose clip pliers - VAS 6362-

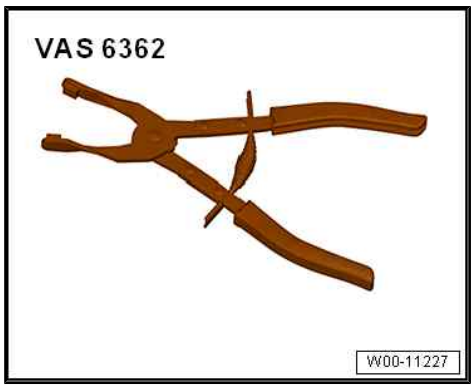

Procedure

– Remove air cleaner housing ⇒ Rep. gr. 24 .

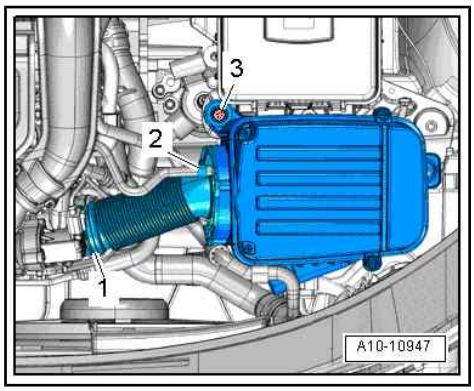

– Connect adapter - V.A.G 1687/10- with -V.A.G 1687/14- to turbocharger.

– Connect hose -1- of charge air system tester -V.A.G 1687- to adapter.

ected by copyright. Copying for private or commercial purpos
permitted unless authorised by AUDI AG. AUDI AG does not guara
with respect to the correctness of information in this document. C

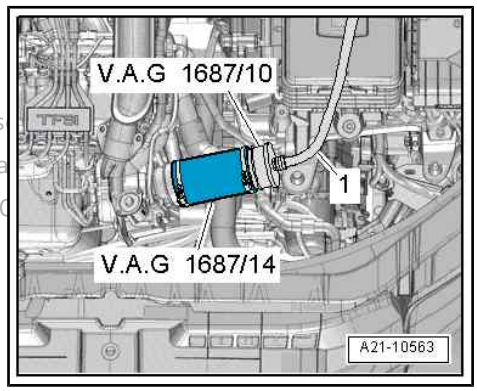

Prepare charge air system tester - V.A.G 1687- as follows:

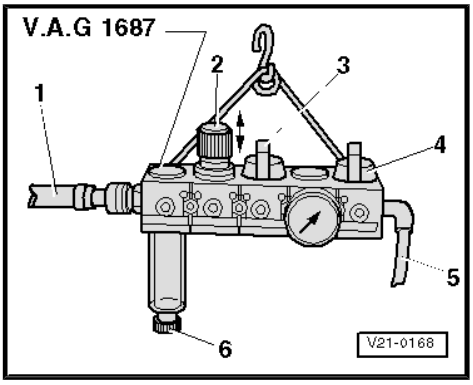

– Unscrew pressure control valve -2- completely and close valves -3- and -4-.

• Make sure knob is pulled out before turning pressure control valve.

– Using a commercially available connection piece, connect charge air system tester - V.A.G 1687- to compressed air -1-.

Note

If there is water in sight glass, remove drain plug -6- and drain water.

– Open valve -3-.

Protected by copyright. Copying for private or commercial purposes, in part or in whole, is not permitted unless authorised by AUDI AG. AUDI AG does not guarantee or accept any liability with respect to the correctness of information in this document. Copyright by AUDI AG.

Caution

Risk of damage if pressure is set too high.

♦ ***The pressure must not exceed 0.5 bar.***

– Adjust pressure to 0.5 bar via pressure control valve -2-.

– Open valve -4- and wait until test system is pressurised. If necessary, adjust pressure to 0.5 bar again.

– Check charge air system for audible leaks or leaks that can be felt with the hand; apply commercially available leak detection spray or use ultrasonic tester - V.A.G 1842- .

Note

♦ *A small amount of air escapes through the valves and enters the engine. Therefore it is not possible to perform a pressure retention test.*

♦ *For operation of ultrasonic tester -V.A.G 1842- , refer to ⇒ Operating instructions .*

♦ *Release pressure in test circuit by detaching hose coupling from adapter before removing adapter.*

♦ *Hose connections and air pipes/hoses must be free of oil and grease prior to fitting.*

♦ *Secure all hose connections with the correct type of hose clips (same as original equipment) ⇒ Electronic parts catalogue .*

26 – Exhaust system

1 Silencers

Overview

- ⇒ “1.1 Exploded view - silencers”, page 194
- ⇒ “1.2 Removing and installing front exhaust pipe”, page 197
- ⇒ “1.3 Removing and installing catalytic converter”, page 198
- ⇒ “1.4 Separating centre and rear silencers”, page 200
- ⇒ “1.5 Stress-free alignment of exhaust system”, page 201
- ⇒ “1.6 Checking exhaust system for leaks”, page 202

1.1 Exploded view - silencers

Note

The exhaust manifold and the turbocharger are combined as one unit; removing and installing ⇒ page 181 .

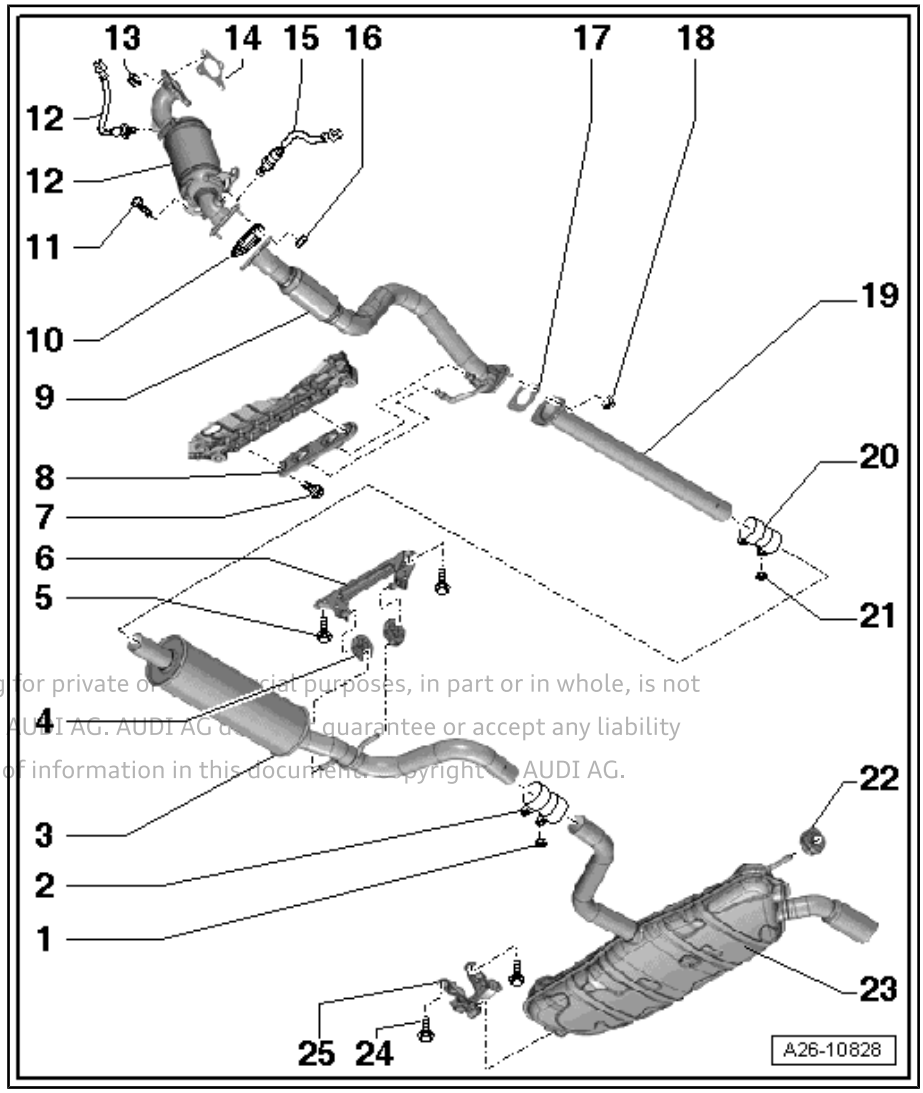

1 - Nut
- ❑ Renew
- ❑ 23 Nm

2 - Clamp (rear)
- ❑ For separate replacement of centre and rear silencers
- ❑ Installation position ⇒ page 197
- ❑ Before tightening, align exhaust system so it is free of stress ⇒ page 201
- ❑ Tighten bolted connections evenly

3 - Centre silencer
- ❑ Combined in one unit with rear silencer as original equipment. Can be renewed separately for repair purposes
- ❑ Cutting point ⇒ page 200
- ❑ Align exhaust system so it is free of stress ⇒ page 201

4 - Rubber mounting
- ❑ Renew if damaged

5 - Bolt
- ❑ 25 Nm

6 - Retainer
- ❑ Note installation posi-

Protected by copyright. Copying for private or commercial purposes, in part or in whole, is not permitted unless authorised by AUDI AG. AUDI AG does not guarantee or accept any liability with respect to the correctness of information in this document. Copyright by AUDI AG.

tion

7 - Bolt

- ❑ 25 Nm

8 - Retainer

9 - Front exhaust pipe

- ❑ With flexible joint; do not bend flexible joint more than 10° – otherwise it can be damaged
- ❑ Removing and installing ⇒ page 197
- ❑ Align exhaust system so it is free of stress ⇒ page 201

10 - Gasket

- ❑ Renew

11 - Bolt

- ❑ Tightening torque and sequence ⇒ page 196

12 - Catalytic converter

- ❑ Protect against knocks and impact
- ❑ Removing and installing ⇒ page 198

13 - Nut

- ❑ Renew
- ❑ Coat threads with high-temperature paste; for high-temperature paste refer to ⇒ Electronic parts catalogue
- ❑ Tightening torque and sequence ⇒ page 196

14 - Lambda probe - G39- and Lambda probe heater - Z19-

- ❑ Removing and installing ⇒ Rep. gr. 24

15 - Lambda probe after catalytic converter - G130- and Lambda probe heater 1 after catalytic converter - Z29-

- ❑ Removing and installing ⇒ Rep. gr. 24

16 - Nut

- ❑ Renew
- ❑ 25 Nm

17 - Gasket

- ❑ Renew

18 - Nut

- ❑ Renew
- ❑ 25 Nm

19 - Intermediate pipe

- ❑ Align exhaust system so it is free of stress ⇒ page 201

Protected by copyright. Copying for private or commercial purposes, in part or in whole, is not permitted unless authorised by AUDI AG. AUDI AG does not guarantee or accept any liability with respect to the correctness of information in this document. Copyright by AUDI AG.

20 - Clamp (front)

- ❑ Before tightening, align exhaust system so it is free of stress ⇒ page 201
- ❑ Installation position ⇒ page 196
- ❑ Tighten bolted connections evenly

21 - Nut

- ❑ 25 Nm

22 - Rubber mounting

- ❑ Renew if damaged

23 - Rear silencer

- ❑ Combined in one unit with centre silencer as original equipment. Can be renewed separately for repair purposes
- ❑ Cutting point ⇒ page 200
- ❑ Align exhaust system so it is free of stress ⇒ page 201

24 - Bolt

❑ 25 Nm

25 - Retainer

❑ Note installation position

Catalytic converter - tightening torque and sequence

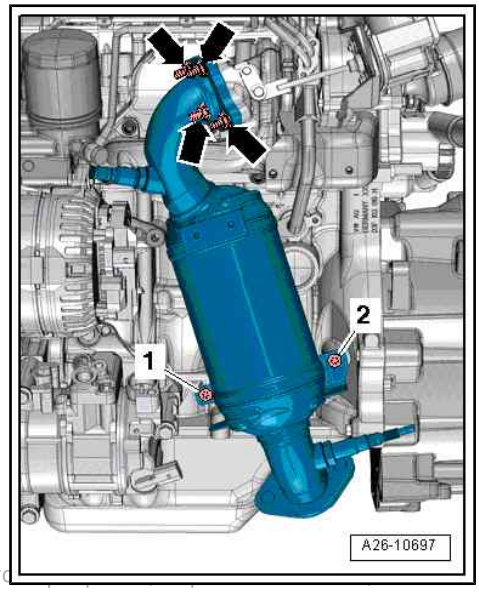

Note

Renew nuts.

– Tighten nuts and bolts in 4 stages as follows:

Stage	Nuts/bolts	Tightening torque
1.	-Arrows-	Screw in by hand until contact is made
2.	-1-	25 Nm
3.	-2-	25 Nm
4.	-Arrows-	23 Nm

Protected by copyright. Copying for private or commerc
permitted unless authorised by AUDI AG. AUDI AG does
with respect to the correctness of information in this do

Heat shield - tightening torque

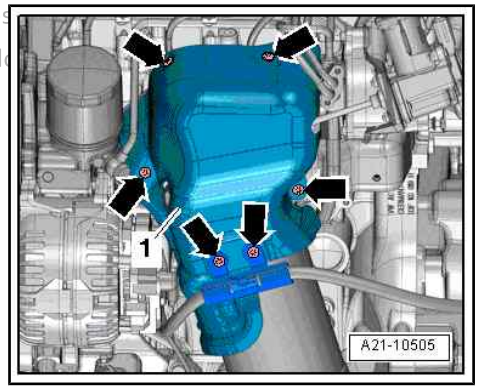

– Tighten bolts in 2 stages in the sequence shown:

Stage	Bolts	Tightening torque
1.	-Arrows-	Screw in by hand until contact is made
2.	-Arrows-	9 Nm

Installation position of front clamp

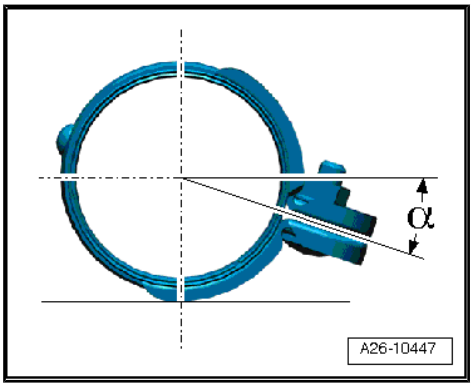

– Fit the clamp at the angle shown.

- Bolted connections face to right.
- Nuts face upwards.
- α = approx. 20°

Installation position of rear clamp

– Install clamp so that ends of bolts do not protrude beyond bottom of clamp.

• Bolted connections face to rear.

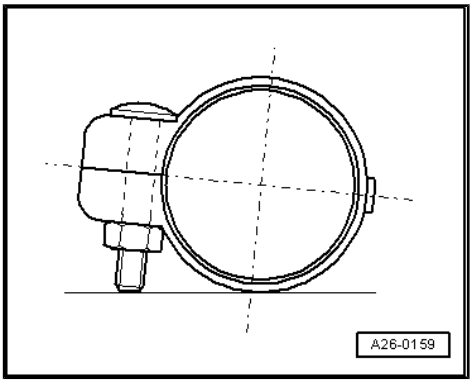

1.2 Removing and installing front exhaust pipe

Removing

– Remove noise insulation ⇒ Rep. gr. 50 .

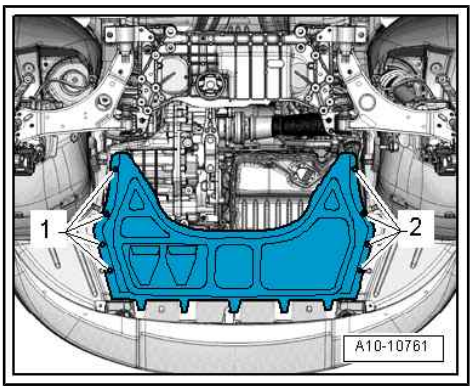

– Remove nuts -2-.

Note

Disregard items -1 and 3-.

Protected by copyright. Copying for private or commercial
permitted unless authorised by AUDI AG. AUDI AG does no
with respect to the correctness of information in this docu

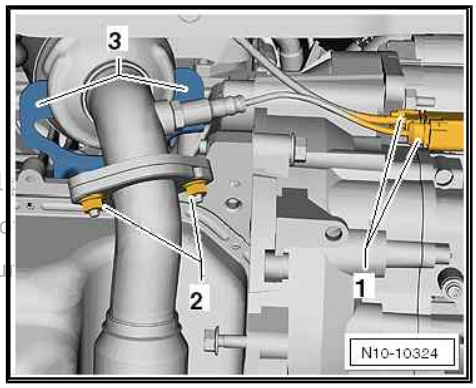

– Remove nuts -2 and 3- and disconnect exhaust system.
– Remove bolts -1- and -5-.
– Pull off bracket -4- for exhaust system from pins on front exhaust pipe.
– Detach front exhaust pipe.

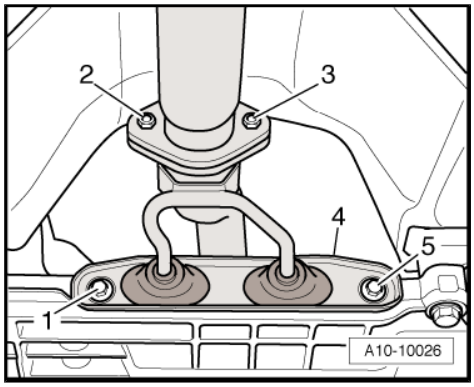

Installing

Installation is carried out in reverse order; note the following:

- Tightening torques
  ⇒ "1.1 Exploded view - silencers", page 194

Note

Renew gaskets and nuts.

– Align the exhaust system so it is free of stress ⇒ page 201 .
– Install noise insulation ⇒ Rep. gr. 50 .

1.3 Removing and installing catalytic converter

Removing

– Remove Lambda probe - G39- -item 1- ⇒ Rep. gr. 24 .

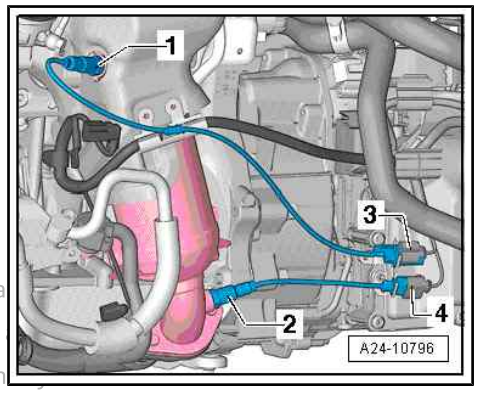

Protected by copyright. Copying for private or commercial purposes, in pa
permitted unless authorised by AUDI AG. AUDI AG does not guarantee or
with respect to the correctness of information in this document. Copyrigh

– Unplug electrical connector -2-.

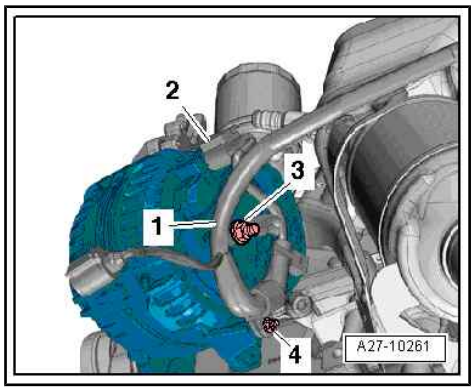

Note

Disregard -items 1, 3, 4-.

– Remove poly V-belt ⇒ page 49 .

– Unplug electrical connector -1- for air conditioner compressor regulating valve - N280- .

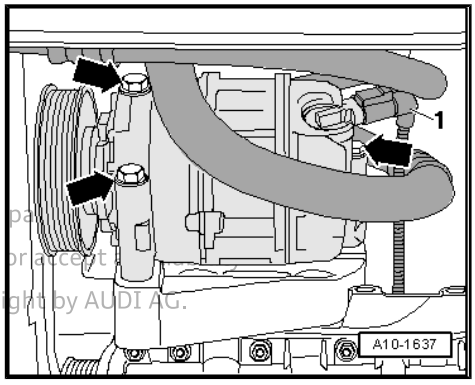

WARNING

Risk of injury caused by refrigerant.

- *The air conditioner refrigerant circuit must not be opened.*

Protected by copyright. Copying for private or commercial purposes, in part or in whole, is not permitted unless authorised by AUDI AG. AUDI AG does not guarantee or accept any liability with respect to the correctness of information in this document. Copyright by AUDI AG.

– Remove bolts -arrows- for air conditioner compressor.

Caution

Risk of damage to refrigerant lines and hoses

- *Do NOT stretch, kink or bend refrigerant lines and hoses.*

– Tie up air conditioner compressor together with refrigerant hoses to longitudinal member (refrigerant hoses remain connected).

– Remove bolts -arrows- and detach heat shield -1-.

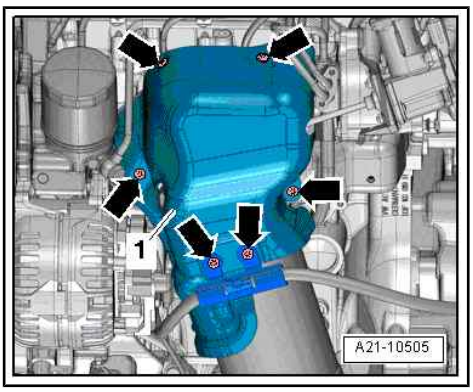

– Remove electrical connector -3- for Lambda probe after catalytic converter - G130- from bracket and unplug connector.

– Move clear electrical wiring for Lambda probe after catalytic converter - G130- .

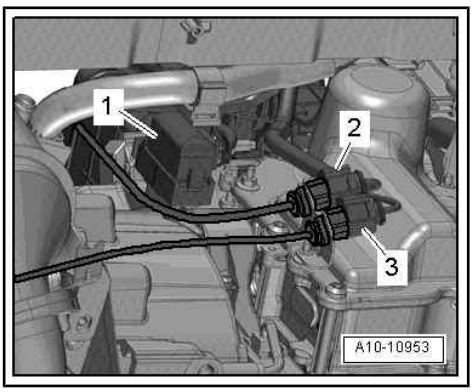

Note

Disregard items -1 and 2-.

– Remove nuts -2-.

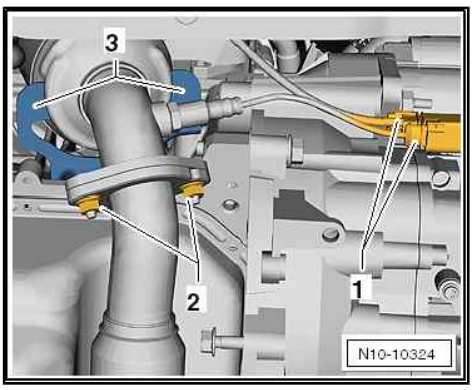

Note

Disregard items -1 and 3-.

– Remove nuts -arrows- and bolts -1 and 2- and detach catalytic converter.

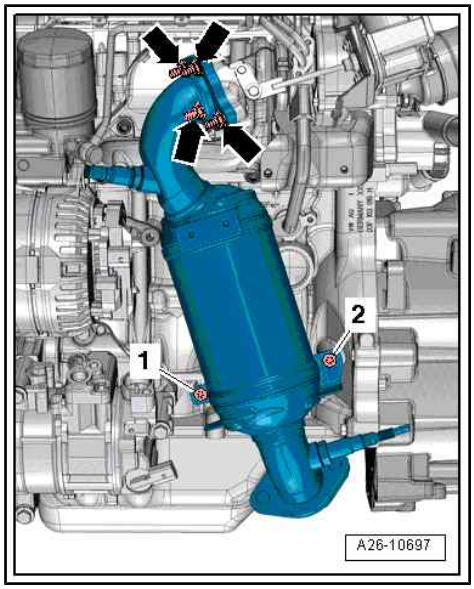

Installing

Installation is carried out in reverse order; note the following:

- Tightening torques
  ⇒ Fig. ""Heat shield - tightening torque"" , page 196

Note

Renew gaskets and nuts.

– Tighten nuts and bolts for catalytic converter ⇒ page 196 .

– Install front exhaust pipe ⇒ page 197 .

– Install air conditioner compressor ⇒ Rep. gr. 87 .

– Install poly V-belt ⇒ page 49 .

1.4 Separating centre and rear silencers

♦ The connecting pipe can be cut through at the cutting point in order to renew the centre or rear silencer separately.

♦ The cutting point is marked by an indentation on the circumference of the exhaust pipe.

Copyright by AUDI AG. Copying for private or commercial purposes, in part or in whole, is not permitted without the prior written consent of AUDI AG. AUDI AG does not guarantee or accept any liability with respect to the correctness of information in this document. Copyright by AUDI AG.

Special tools and workshop equipment required

♦ Chain pipe cutter - VAS 6254-

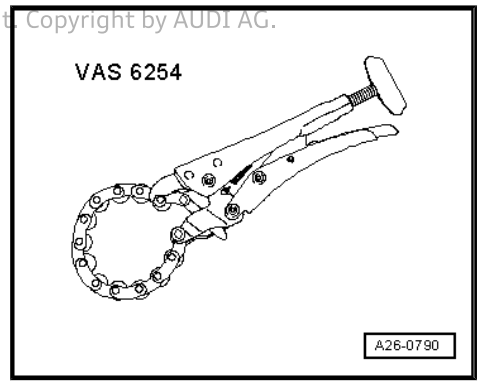

Procedure

- Tightening torques
  ⇒ "1.1 Exploded view - silencers", page 194

– Cut through exhaust pipe at right angles at the position marked -arrow 2- using chain-type pipe cutter - VAS 6254- .

– Position clamp -4- at side marks when installing -arrow 1- and -arrow 3-.

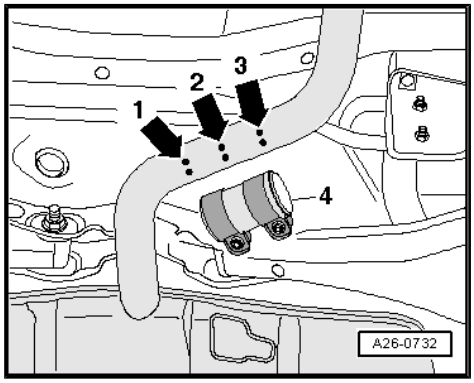

– Install clamp so that ends of bolts do not protrude beyond bottom of clamp.
• Bolted connections face to rear.
– Align the exhaust system so it is free of stress ⇒ page 201 .

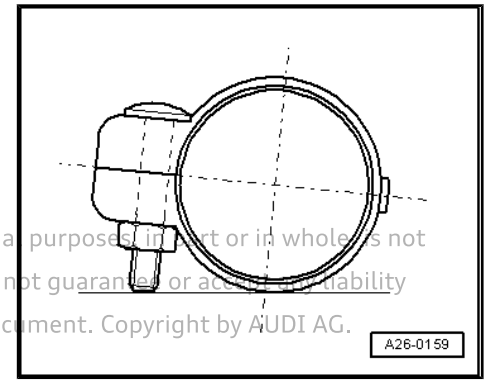

Protected by copyright. Copying for private or commercial purposes, in part or in whole, is not permitted unless authorised by AUDI AG. AUDI AG does not guarantee or accept any liability with respect to the correctness of information in this document. Copyright by AUDI AG.

1.5 Stress-free alignment of exhaust system

Procedure

• Tightening torques
⇒ “1.1 Exploded view - silencers”, page 194
• The exhaust system must be aligned when it is cool.
– Loosen bolted connections on front clamp.
– Push rear section of exhaust system towards front of vehicle -arrow-, so that rear mounting for centre silencer is preloaded by -a- = 13 ... 17 mm.

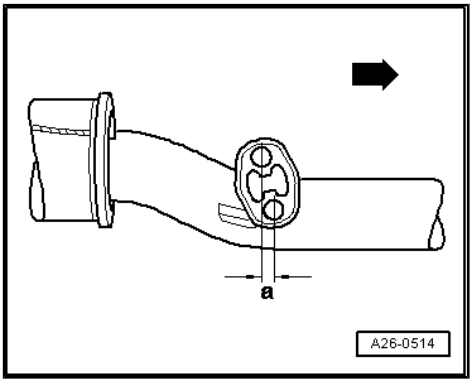

– Fit the clamp at the angle shown.
• Bolted connections face to right.
• Nuts face upwards.
• α = approx. 20°

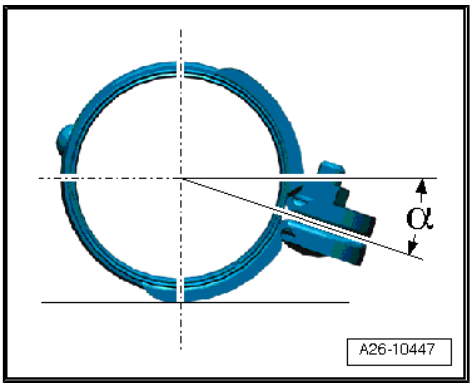

– Position rear silencer to align tailpipe as follows:
• Distance between tailpipe and bumper cut-out must be equal on both sides.
• Distance -a- (top) = distance -b- (left) = distance -b- (right).
– If necessary, unfasten rear silencer mounting to align tailpipe.

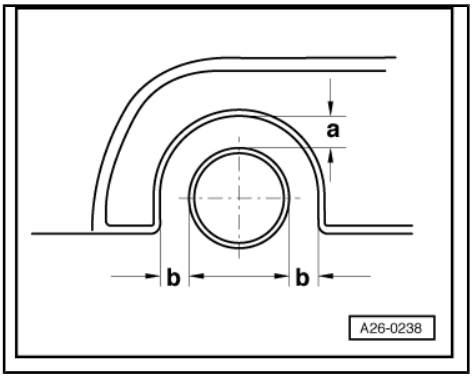

1.6 Checking exhaust system for leaks

- Start engine and run at idling speed.
- Plug tailpipe during leak test (e.g. with cloth or plugs).
- Listen for noise at connections between cylinder head/exhaust manifold with turbocharger, exhaust manifold with turbocharger/catalytic converter etc. to locate any leaks.
- Rectify any leaks that are found.

Protected by copyright. Copying for private or commercial purposes, in part or in whole, is not permitted unless authorised by AUDI AG. AUDI AG does not guarantee or accept any liability with respect to the correctness of information in this document. Copyright by AUDI AG.

2 Exhaust manifold

The exhaust manifold and the turbocharger are combined as one unit; removing and installing ⇒ page 181 .

Protected by copyright. Copying for private or commercial purposes, in part or in whole, is not permitted unless authorised by AUDI AG. AUDI AG does not guarantee or accept any liability with respect to the correctness of information in this document. Copyright by AUDI AG.