Service Training

Audi A3 Sportback

Self-Study Programme 332

Audi A3 Sportback

Audi is defining a new segment in the premium compact class. The A3 Sportback is characterised by the sporting elegance of a coupé and the versatility of a 5-door.

The Audi Sportback is deliberately going its own, new way in the compact class. It offers the emphatically sporty qualities and the athletic styling of the three-door version with which it shares its drive train, dynamic suspension and wheelbase. In addition to two rear doors, it offers even more space and variability thanks to its rear end which is a total of 68 millimetres longer than on its threedoor counterpart.

The A3 Sportback is immediately recognisable at first glance in the rear-view mirror by its striking single-frame radiator grille, the distinctive tapering of the sides and the dynamic shape of the clearglass headlights.

The silhouette of the A3 Sportback when viewed from the side becomes flatter towards the rear of the car in typical coupé fashion and combines with the gently rearward sloping roof line and the restyled rear end to give the car its dynamic overall proportions.

332_074

Contents

Introduction 4

Body 6

Occupant protection 12

Engine 22

Running gear 38

Convenience electronics 44

Infotainment 50

The Self-Study Programme conveys basic principles with regard to the design and function of new models, new automotive components or new technologies.

The Self-Study Programme is not a Repair Manual!
All values given are intended as a guideline only, and refer to the software version valid at the time of publication of the SSP.

For maintenance and repair work, always refer to the current technical literature.

Reference

Note

Overview

Dimensions of the A3 Sportback.

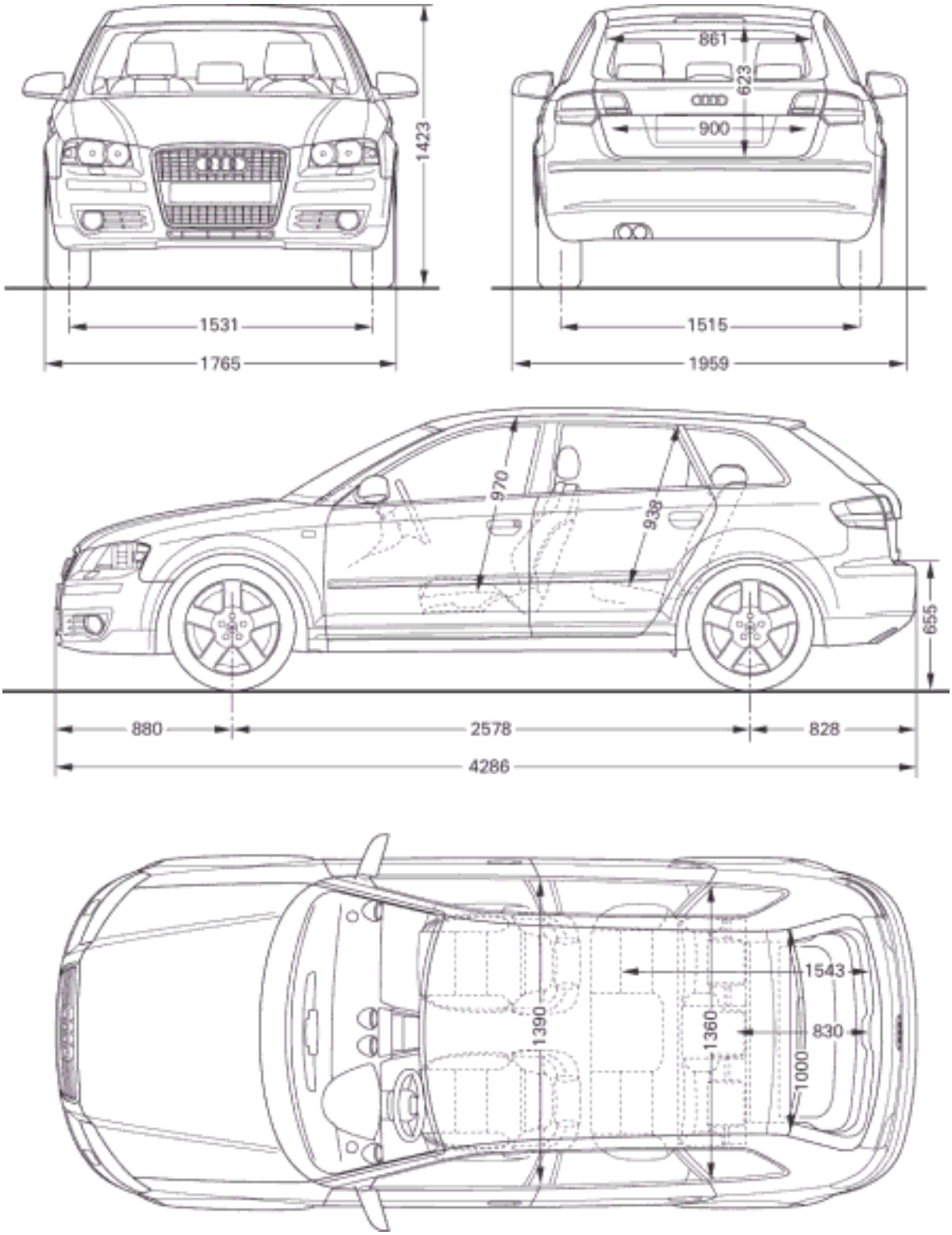

332_051

Body

The body of the Audi A3 Sportback has a highly rigid and crash-optimised occupant cell.

Special attention was given to the following aspects:

- the body rigidity,
- the steering column rigidity,
- local rigidity in highly stressed areas,
- interior acoustics and driving comfort,
- the crash optimised body structure and
- the hybrid construction of the front end.

Front view of the body-in-white

332_048

Rear view of the body-in-white

332_049

By using state-of-the-art calculation and simulation methods, new materials and joining techniques, and by optimising the joining sequence during the bodyshell assembly process, it was possible to increase body rigidity by 20% compared to the predecessor model and enhance the crash performance of the body structure.

Materials

Bodyshell

Ultra-high-strength and higher-strength sheet metal are used in areas which are subjected to high mechanical stresses during a crash.

Welded tailored blanks and deep-drawn sheet metal are used in other areas.

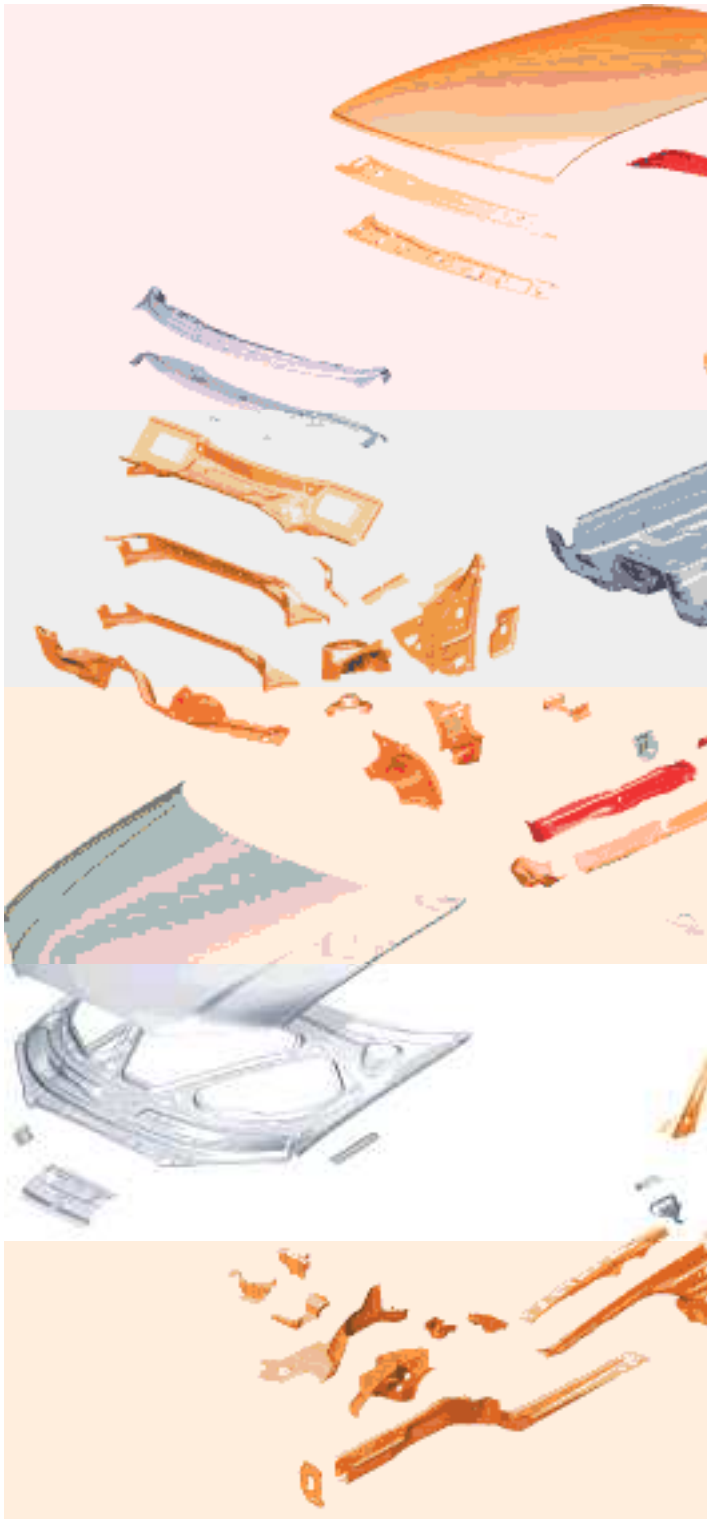

Ultra-high-strength sheet metal
higher-strength sheet metal

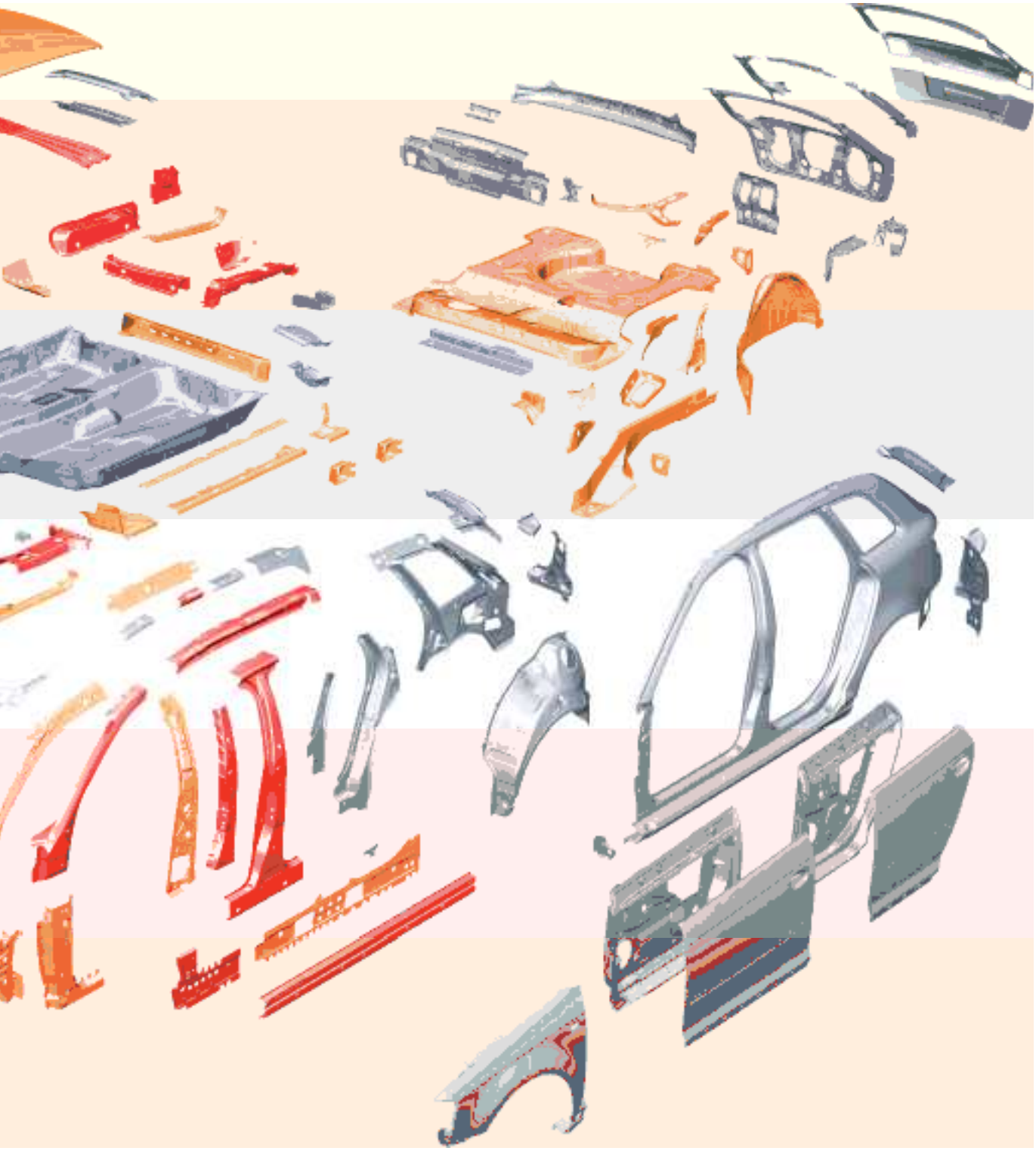

332_052

Materials

Doors, sills and floorpan

Welded tailored blanks and tailored blanks with flexible rolled wall thickness are used in the front floorpan assembly and door areas.
The result is a distribution of material which provides optimum stress absorption.

The sills are reinforced using rolled profiles. Rolled profiles have a high strength-to-weight ratio.

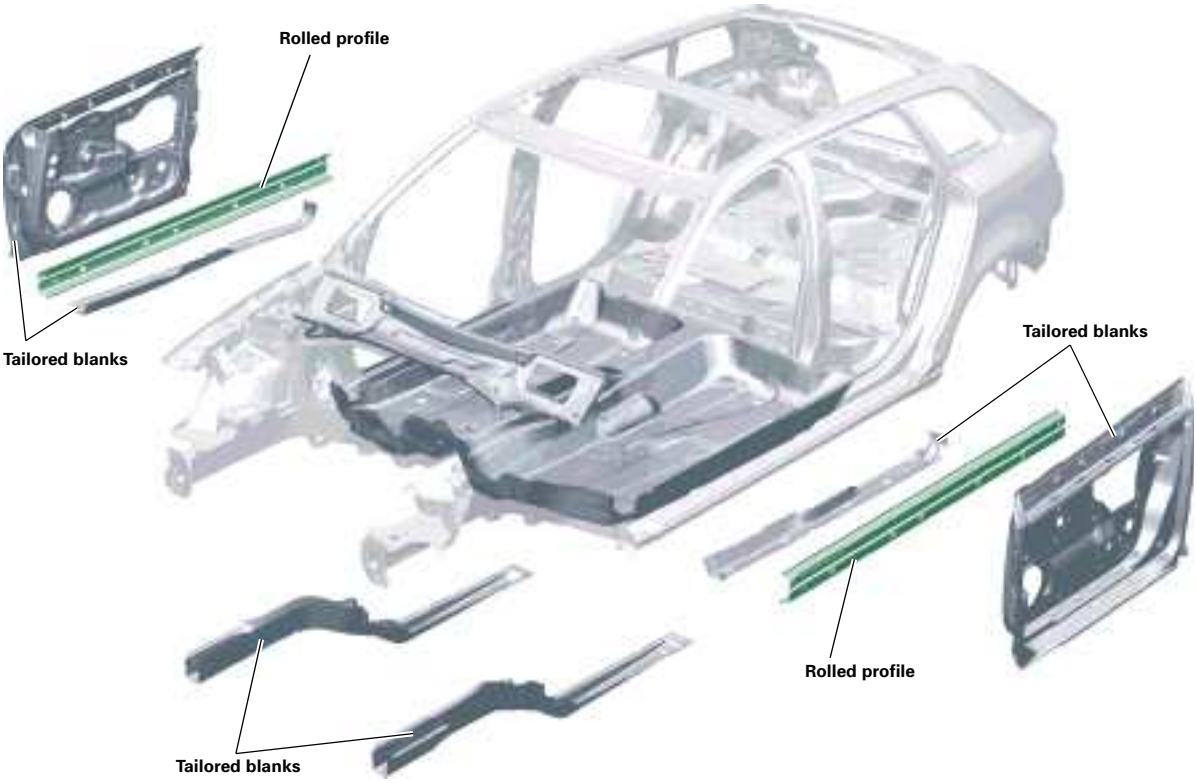

332_053

Joining technique

Various joining techniques
are applied to interconnect the individual body elements.

Spot welding joining

Crash-relevant and
rigidity-defining
joints are spot-weld bonded using a high-strength structural adhesive.
The overall length of the bonded seams is approx. 26 m.

Laser welding

Laser welding is used in areas which are not easily accessible.
The total length of the laser welded joints is approx. 25 m.

Laser soldering

Laser-solder joining is used to achieve a better design and higher rigidity in the area of the invisible joint and boot lid.
The total length of the laser-soldered joints is approx. 3.3 m

Plasma soldering

To ensure the high rigidity and good design of the water channel,
materials are joined by plasma soldering.
The overall length of the plasma-soldered joints is approx. 1.1 m.

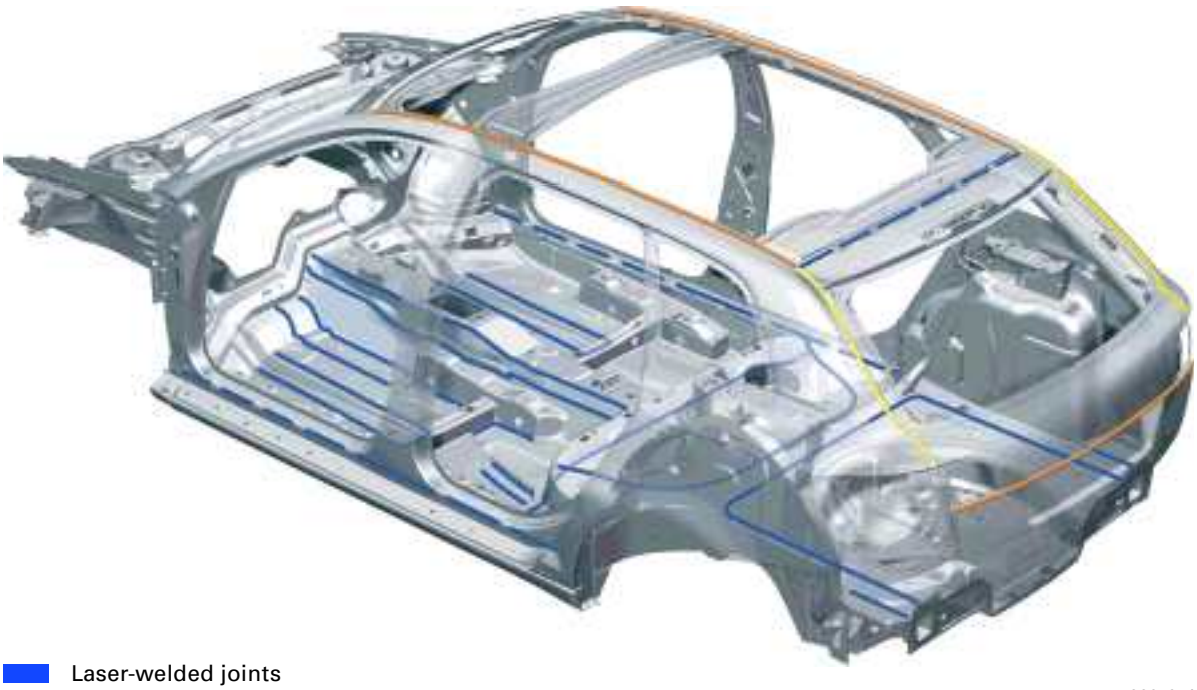

Laser-welded joints
Laser-soldered joints
Plasma-soldered joints

332_071

Roof rail

Description

The Audi A3 Sportback has a roof rail whose new style design accentuates the car's coupe like roofline.
It is made from aluminium and is available in two finishes:
– high-gloss anodised or
– black powder-coated

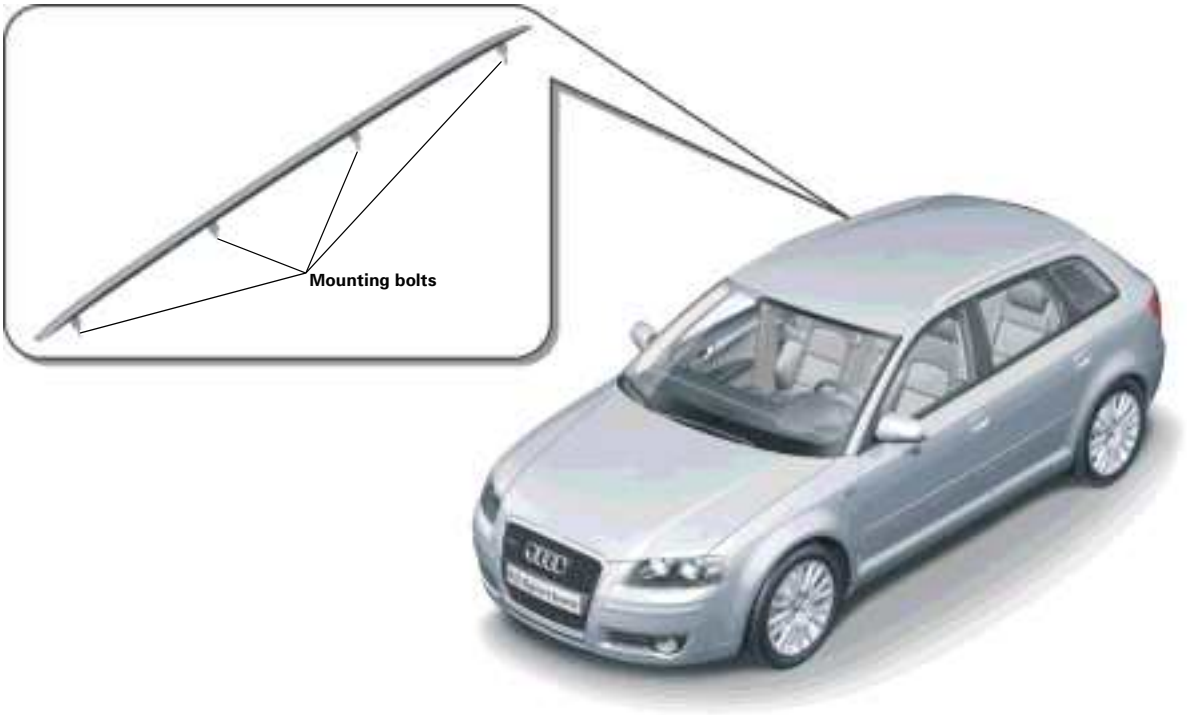

332_019

Mounting

The roof rail is mounted to the roof side member using four bolts.

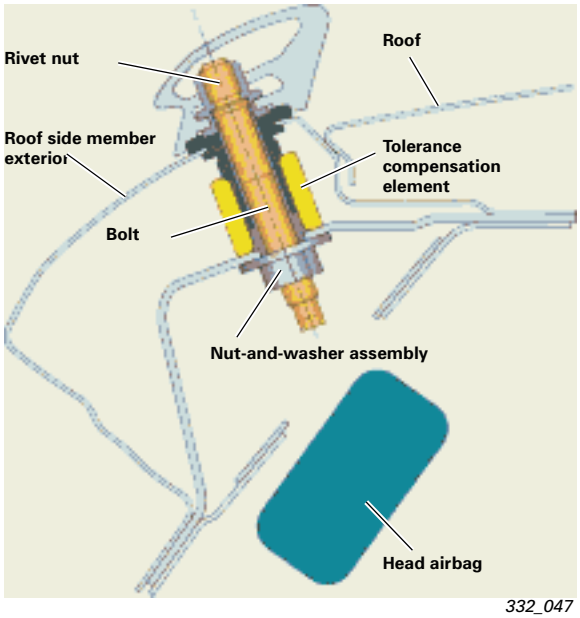

332_047

Open Sky roof

Description

The optional Open Sky roof creates a more pleasant interior climate. It lets more light into the car and allows the occupants a view of the sky above.
The front glass segment can be opened completely and slid back.
Two separate sun blinds protect against the glare of the sun and can also be used when the glass roof is open.

Function

Opening is powered by an electric motor.
When opening, the glass roof moves upwards and outwards.
Operation is by pushbutton. The glass roof halts in the position in which the pushbutton is released.

Open Sky roof open

332_055

Open Sky roof closed

332_054

Safety system

Like the system in the Audi A3 3-door, the safety system in the Audi A3 Sportback is built to the highest standards. The long list of safety requirements includes full compliance with legislation currently in force, as well as consumer tests with the aim of achieving class-leading car safety ratings for the new Audi A3 Sportback. Audi's internal requirements often present the development team with additional challenges. Special emphasis was placed on a high level of occupant protection in accidents and on compatibility. Audi's "safety first" approach to vehicle design complements the information derived from scientific analysis of actual accidents and their impacts. To this end, the Audi Accident Research Unit (AARU) analyses the data from accidents involving recent Audi vehicles. The task of the research team is to analyse and reconstruct accidents, and to identify areas where there is potential for improvement. In addition to this, the AARU evaluates the information stored in the respective accident databases.

The differences to the Audi A3 `04 are highlighted on the following pages.

The safety system in the Audi A3 Sportback consists of the following components:

- Airbag control unit
- Dual-stage driver and front passenger airbags
- Front side airbags
- Sideguards (head airbags)
- Side impact detection sensors on the C-pillar
- Side impact detection sensors in the front doors
- Crash sensors for differentiated head-on collision detection, otherwise known as "upfront" sensors
- Front belt tensioners
- Battery disconnector, only for models with battery in luggage compartment
- Switches in the front seat-belt buckles
- Seat occupied sensor, front passenger side

The vehicle can also be equipped with rear side airbags and a keyswitch with associated warning lamp for deactivating the front passenger airbag.

The active head restraints in the front seats round off the safety system in the Audi A3 Sportback.

Note

Follow the safety instructions in the repair manual before performing any work on the airbag system!

Legend

E224	Front passenger side airbag deactivation key switch
E24	Driver side belt switch
E25	Front passenger side belt switch
G128	Seat occupied sensor, front passenger side
G179	Side airbag crash sensor, driver side (front door)
G180	Side airbag crash sensor, front passenger side (front door)
G256	Rear side airbag crash sensor, driver side (C-pillar)
G257	Rear side airbag crash sensor, front passenger driver side (C-pillar)
G283	Driver side front airbag crash sensor (frontend left)
G284	Front passenger side front airbag crash sensor (frontend right)

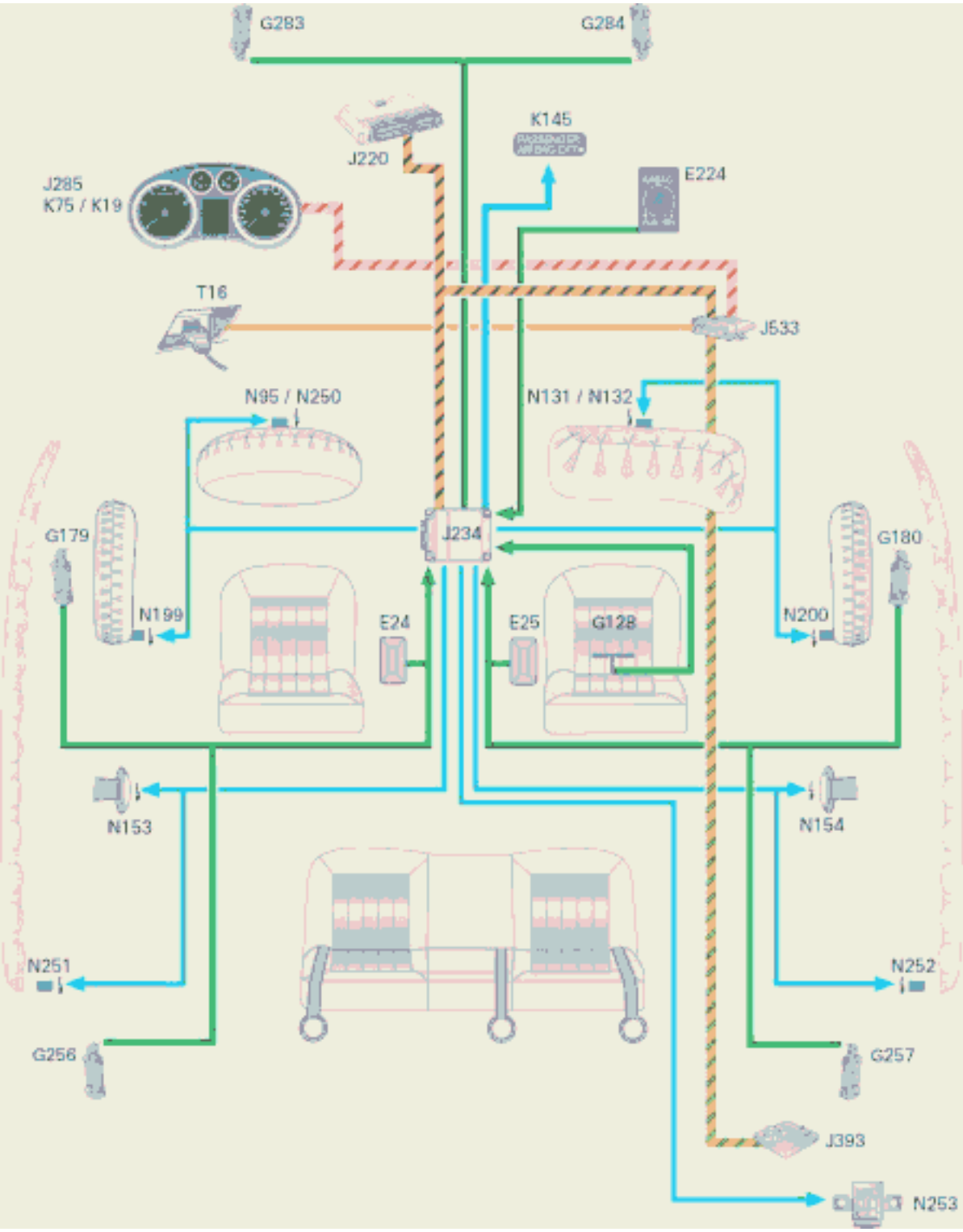

332_004

J220	Engine control unit
J234	Airbag control unit
J285	Control unit with display in dash panel insert
J393	Convenience system central control unit
J533	Data bus diagnostic interface (Gateway)
K19	Seat belt warning system warning lamp
K75	Airbag warning lamp
K145	Front passenger side airbag deactivated warning lamp (PASSENGER AIRBAG OFF)
N95	Airbag igniter, driver side
N250	Driver side airbag igniter -2-
N131	Front passenger side airbag igniter 1
N132	Front passenger side airbag igniter 2
N153	Driver seat belt tensioner igniter -1-
N154	Front passenger seat belt tensioner igniter -1-
N199	Side airbag igniter, driver side
N200	Side airbag igniter, front passenger side
N251	Driver side curtain airbag igniter
N252	Front passenger side curtain airbag igniter
N253	Battery isolation igniter
T16	16-pin connector, diagnosis connection

Airbag control unit J234

The airbag control unit's hardware and electronics have been modified compared to the control unit in the Audi A3 3-door such that they are also capable of activating the dual-stage front airbags. The airbag control unit has also been modified in such a way that no mechanical safing sensor is required.

The airbag control unit is integrated in the drive train CAN bus.

The airbag electronics basically have the following tasks:

- collision detection (front, side, rear)
- defined deployment of the airbags or front airbag stages, belt tensioners and battery disconnector
- activation of the belt-on indicator
- evaluation of all input information
- continuous monitoring of the entire airbag system
- capacitor-based independent power supply for a defined period of time (approx. 150 ms)
- fault display by failure warning lamp
- storage of fault/ and collision information
- notification of a collision event to other system components via the drive train CAN-bus or a discrete collision output (conventionally wired)

332_005

Information about the occurrence of a crash is utilised by other control units for opening the central locking system, shutting off the fuel supply and activating the hazard warning light system, etc.

Rear collision detection

If the airbag control unit recognises a rear collision whose severity exceeds the predefined deployment threshold, then it ignites the belt tensioners and, where fitted, the battery isolation igniter.

Crash sensors for side protection system

Side airbag crash sensors, G179, G180
(in the front doors)

For the first time in the Audi A3 Sportback, pressure sensors will be installed in the two front doors.
In a side impact, the deformation of the vehicle causes a rapid increase in air pressure in the door cavity. This increase in pressure is detected by the sensor and signalled to the airbag control unit.

Rear side airbag crash sensors, G256, G257
(C-pillar)

The two rear side airbag crash sensors G256 and G257, which are installed in the C-pillar area on the left and right hand sides, are conventional acceleration sensors which are already being used in the Audi A3 3-door.

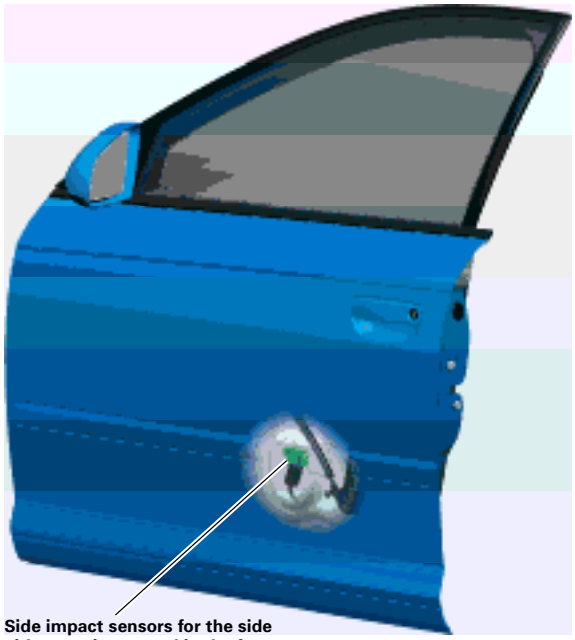

Side impact sensors for the side airbag are integrated in the front door

332_006

Note

The airbag control system uses sensors integrated in the front doors, etc. To avoid any impairment to the function of the side airbags, no modifications should be made to the doors and door trims (e.g. retrofitting of loudspeakers).
Damage to the front doors can cause impairment of system functions. All work on the front doors should be referred to a specialist workshop.

Belt-on indicator

The new Audi A3 Sportback has the belt-on indicator function for driver and front passenger as known from the Audi A6 ´05.

For further information, refer to Self-Study Programme 323, Audi A6 ´05.

Seat belt warning system warning lamp

332_007

Airbag

Front airbags

Dual-stage gas generators are employed in the front airbags.
The impact load acting on the driver and front passenger during an accident is reduced by radial inflation of the driver side airbag and by time-staggered ignition of the propellant charges. The airbag control unit controls the time interval between the two deployments depending on the severity and nature of the accident. The time interval can vary between approx. 5 ms and 40 ms.

In any event, both propellant charges are ignited. This ensures that no propellant charge remains active after an airbag deployment.

Driver airbag, N95, N250

The driver airbag uses two pyrotechnic propellant charges.

The airbag control unit activates the electrical detonator of the first propellant charge. The detonator ignites the priming charge, which in turn detonates the actual propellant charge through nozzle holes in the gas chamber. The combustion of the propellant charge produces a pressure inside the gas generator. If the gas pressure exceeds a defined threshold, then the gas generator housing deforms and allows the gas to flow through the metal filter to the airbag. The airbag unfolds and is inflated by the gases resulting from combustion of the propellant charge. After a preset time delay, the airbag control unit energises the second electrical detonator, which directly ignites the secondary propellant charge. When a preset pressure is reached, the developing gas lifts the cap off the second-stage chamber and flows into the first-stage combustion chamber. From here, the gas flows through the filter to the airbag.

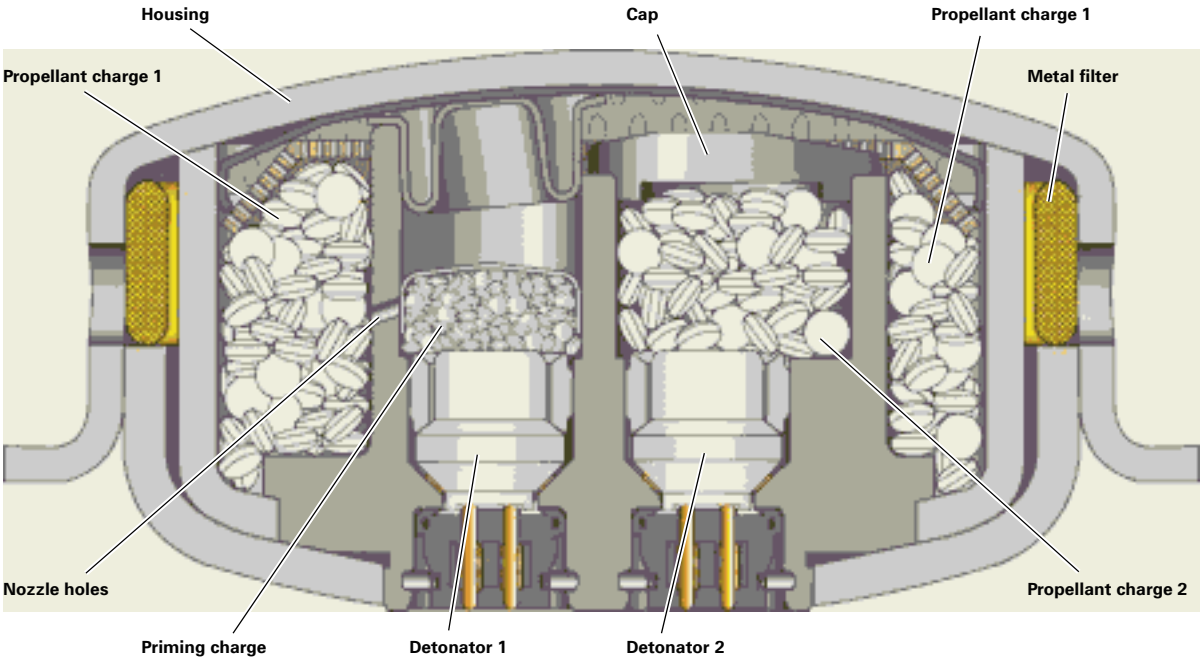

332_032

Ignition of the first propellant charge

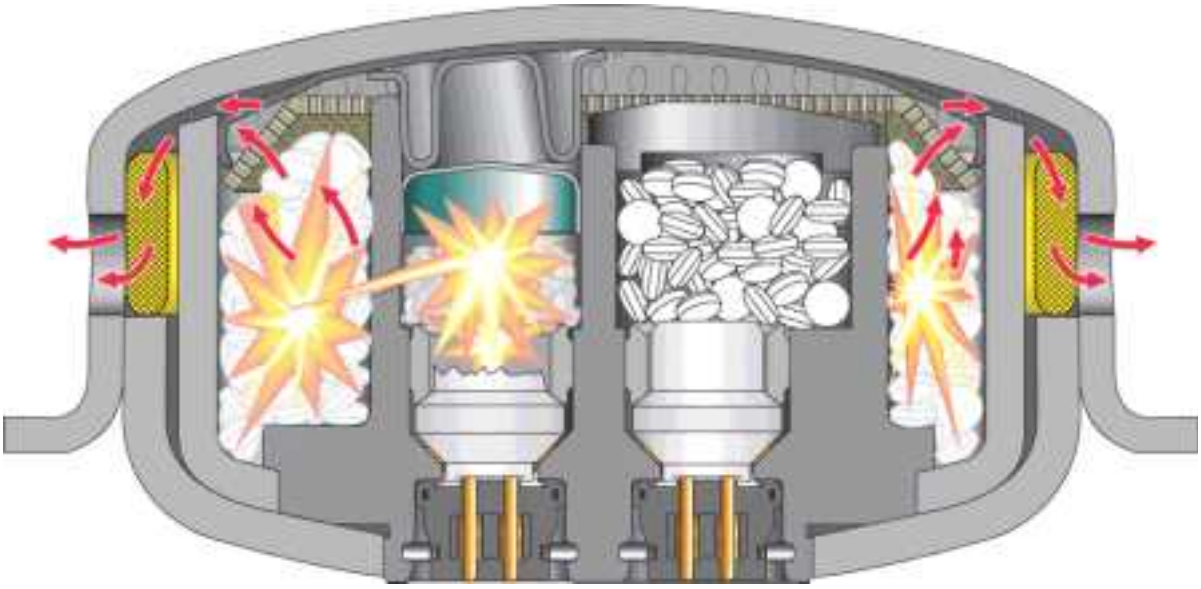

332_033

Ignition of the second propellant charge

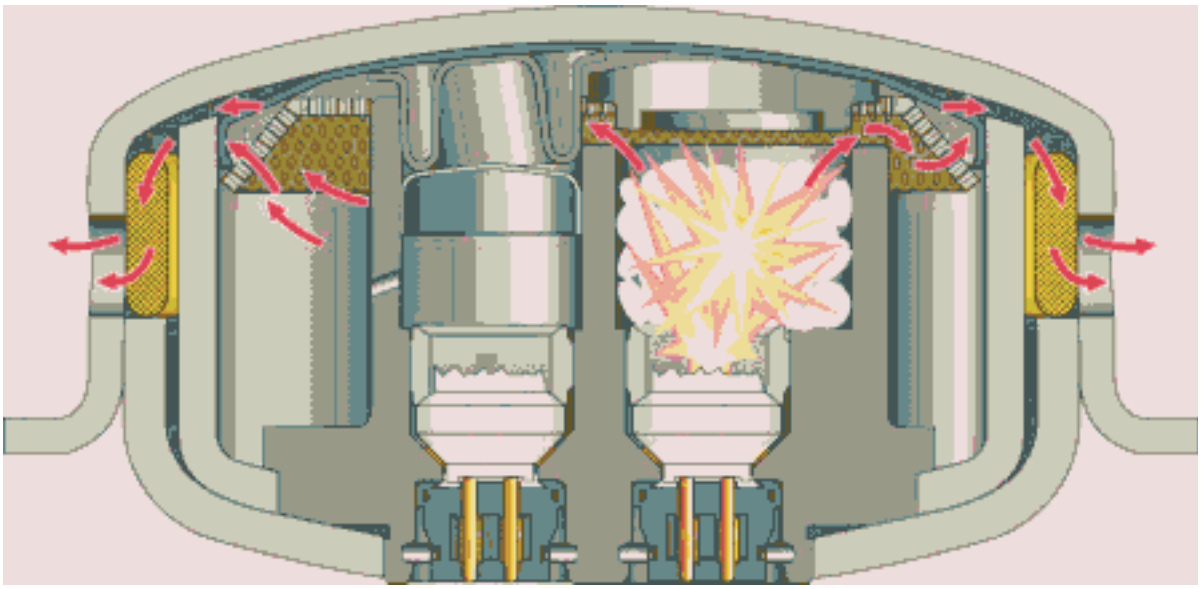

332_034

Front passenger airbag, N131, N132

Unlike the driver airbag, the gas generator in the front passenger airbag works by the hybrid gas principle. The gas generator consists of two pyrotechnic propellant charges which are integrated in a pressurised gas bottle.
The detonator activated by the airbag control unit ignites the first propellant charge by means of the priming charge. Should the pressure developing inside the gas bottle exceed a preset value, the rupture disc will explode and the gas mixture will inflate the airbag. The airbag is further inflated by the combustion of the second propellant charge .
The coil springs ensure that the propellant charges burn as intended.

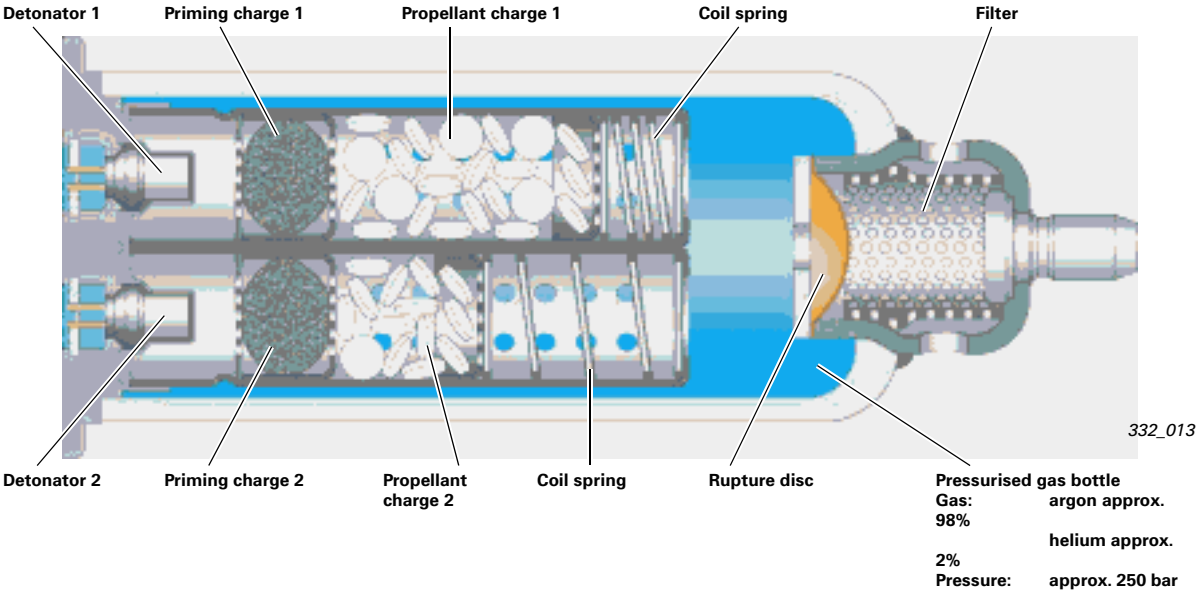

Side airbags, N199, N200

Like the airbags used in the Audi A6 ´05, the side airbags used in the Audi A3 Sportback are modules.

For further details, refer to Self-Study Programme 323, Audi A6 ´05.

So-called pyrotechnic tubular gas generators are used as gas generators.
If the airbag control unit detects a side impact which meets the criteria for deployment, then it energises the relevant side airbag detonators. The primary charge is ignited by means of the priming charge. The developing gas flows through the metal filter into the airbag.

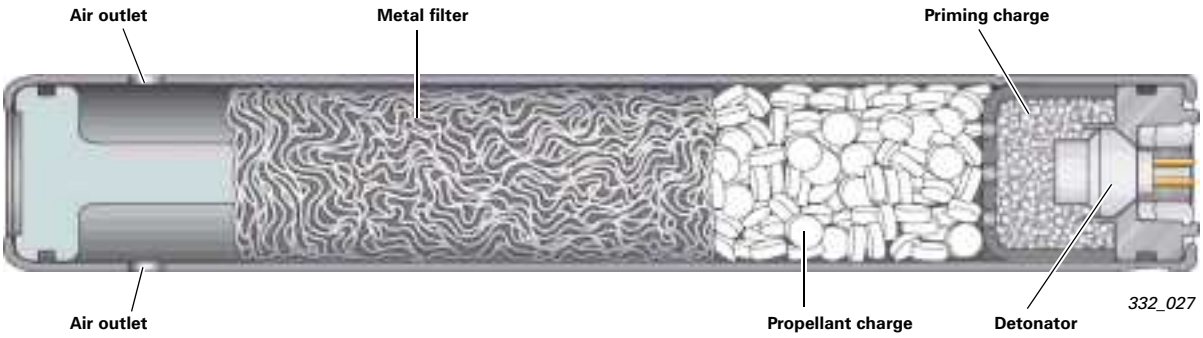

Head airbags, N251, N252
Sideguards

The sideguard covers almost the entire side window area. With these modules, the hybrid gas generator is installed in the rear roof area and inflates the airbag through a gas lance.

The support is mechanically propelled out of its mount through the detonation of the propellant charge.
The helium stored in the pressurised gas bottle at 600 bar now breaches the rupture disc.
The gas flows through the filter into the gas lance which connects the airbag to the gas generator.

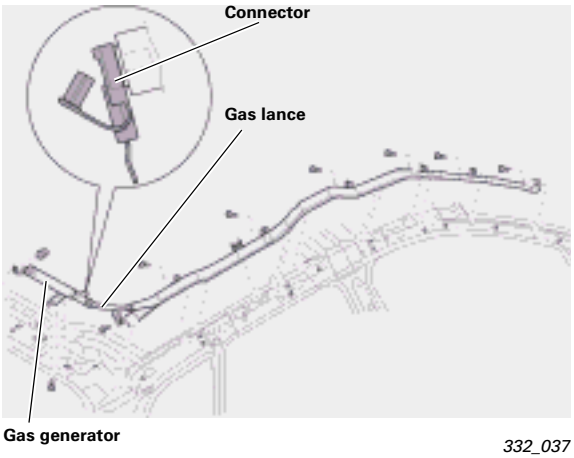

332_037

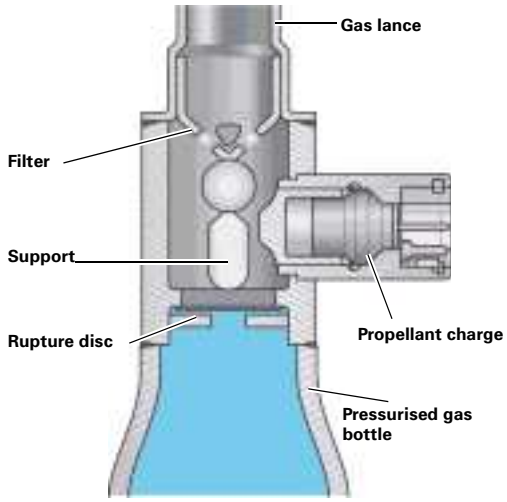

332_035

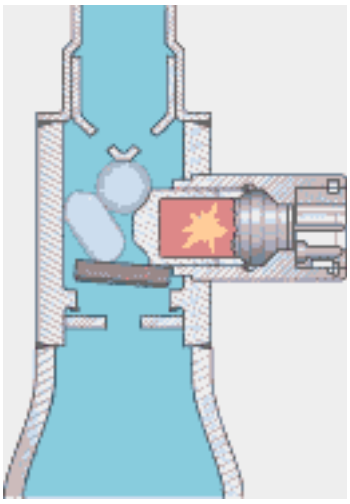

332_036

Active head restraints

The task and function of the active head restraint are described in Self-Study Programme 312, Audi A3 ´04 Electrical System.
For further information, refer to this Self-Study Programme.

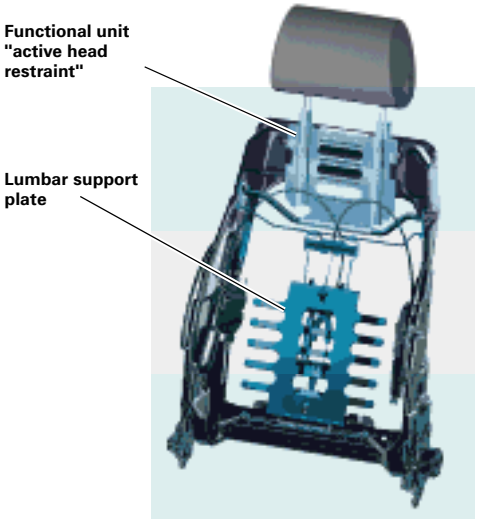

326_024

Battery isolation igniter, N253

The battery isolation igniter has the same task as the battery cut-off relay.
This involves disconnecting the starter and alternator leads from the vehicle battery in the event of a crash. The battery isolation igniter is used only on models whose battery is installed in the luggage compartment.
The battery isolation igniter is activated and monitored for diagnosis by the airbag control unit. Every time the airbag is deployed, the battery isolation igniter is activated and must be subsequently replaced.

When the pyrotechnic propellant charge is ignited, the developing gas pressure displaces the bolt located on a piston and breaks the connection between the two battery terminals.

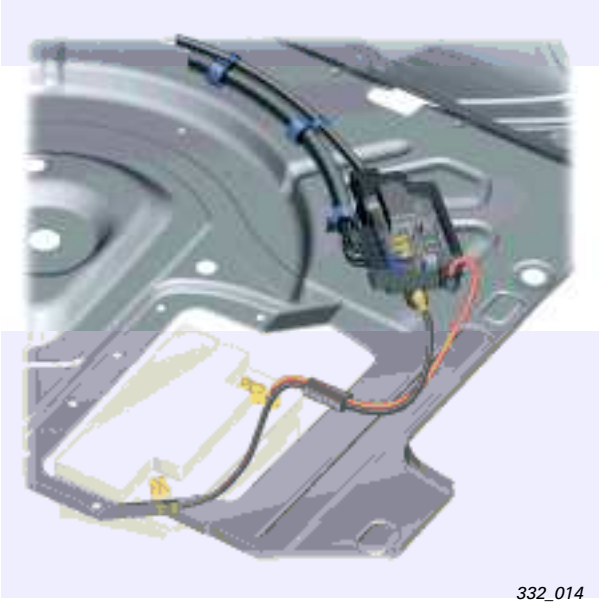

332_014

Battery isolation igniter

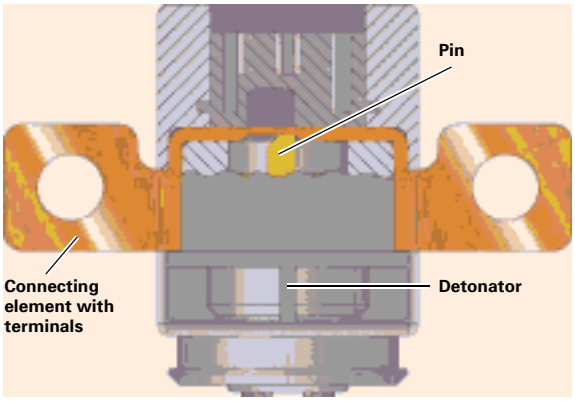

332_030

Battery isolation igniter activated

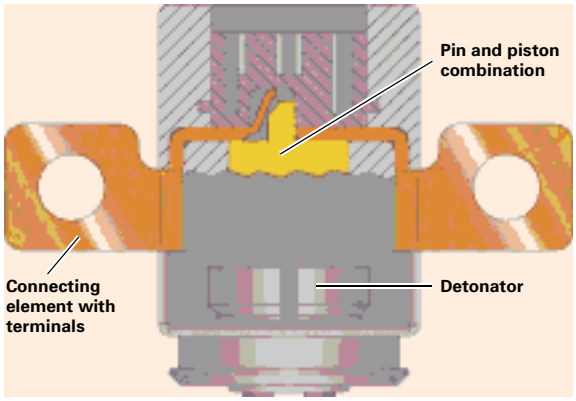

332_031

Seat occupied recognition system for the North American market

The seat occupied recognition system for the North American market has been carried over from the Audi A6 ´05.
However, the individual components have been adapted to suit the Audi A3 Sportback.
The system is described in Self-Study Programme 323 Audi A6 ´05.

The system has the following component parts:

- Seat squab
- Sensor mat for seat occupied recognition
- Pressure sensor for seat occupied recognition , G452
- Seat occupied recognition control unit, J706
- Front passenger side belt switch, E25
- Seat belt force sensor for seat occupied recognition, G453
- Front passenger side airbag deactivated warning lamp, K145 (PASSENGER AIRBAG OFF)
- Airbag control unit, J234

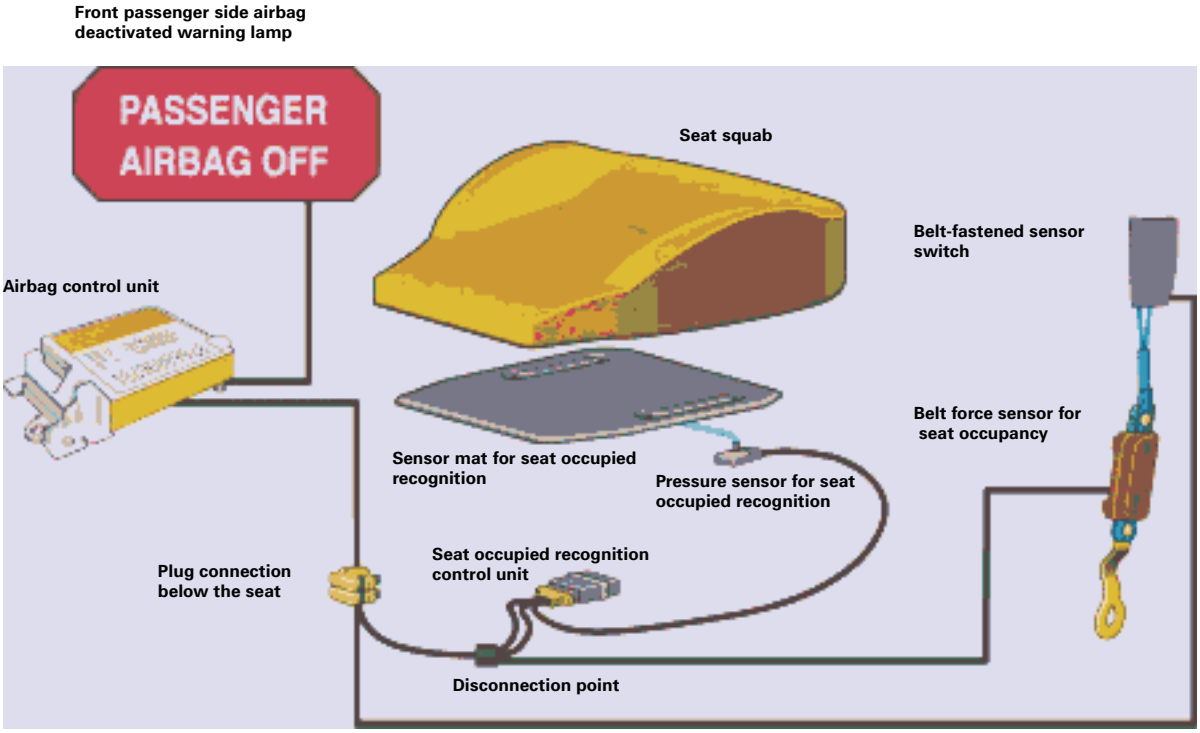

326_019

2.0l 4-cylinder turbo FSI

The new turbo FSI engine is a progression on the 2.0l 4-cyl. FSI engine with stratified petrol direct injection which combines the advantages of direct injection combustion with the dynamics of the exhaust turbo technology. The result is an extremely responsive unit which conveys a highly enjoyable driving experience.

Reference

You will find a description of the design and function of the 2.0l FSI engine in SSP 279.

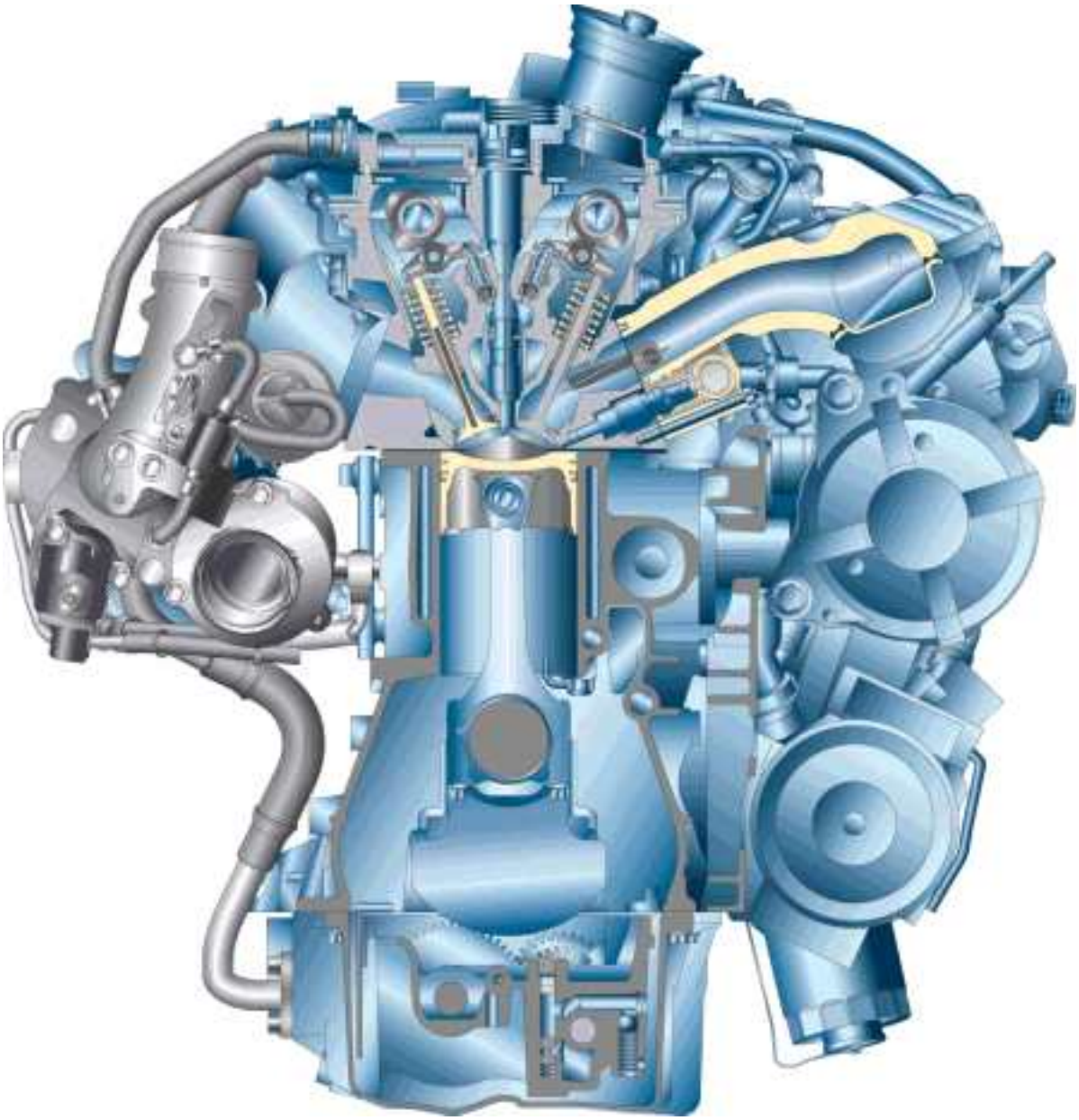

332_001

The engine number can be found at the bottom lefthand side of the engine block in the area of the gearbox flange.

332_029

Torque/power curve

Torque in Nm

Power output in kW

Engine speed in rpm

332_015

Specifications

Engine code	**AXX**
Type	**In-line 4-cylinder petrol engine**
Displacement	**1984 cm^3**
Power output	**147 kW (200 bhp)**
Torque	**280 Nm at 1800-4700 rpm**
Bore	**82.5 mm**
Stroke	**92.8 mm**
Compression ratio	**10.5:1**
Weight	**approx. 152 kg**
Firing order	1 - 3 - 4 - 2
Engine management	Bosch Motronic MED 9.1
Variable valve timing	42° crank angle
Exhaust gas recirculation	Inner EGR
Exhaust emission standard	EU 4 / ULEV

Crankshaft

The crankshaft has been modified to meet the tougher demands of the turbo FSI engine, resulting in higher component strength and enhanced acoustics.
The flanges on the main bearings and the conrod journal have been enlarged for greater rigidity. This way, the rigidity specifications have been met despite the 6.4 mm increase in stroke length.

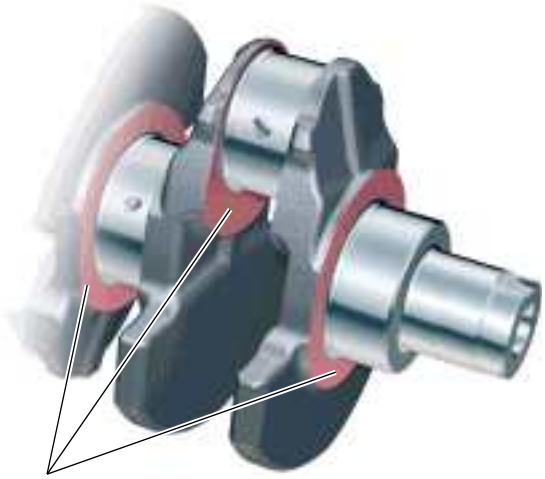

332_020

Engine mass balancer unit

The balancer shaft gear has been adopted from the naturally aspirated engine with respect to its operating principle and position. However, the following modifications were necessary:

- separation of the gearing and imbalance masses to improve balancing
- oil pump with wider gear
- clean oil controlled pressure regulator with pressure control on the raw oil side close to the oil pump,
  integrated in the balancer shaft housing
- strength optimised die-cast housing
- the balancer shafts are mounted directly in the aluminium housing
- decoupled final drive sprocket in the balancer shaft drive gear

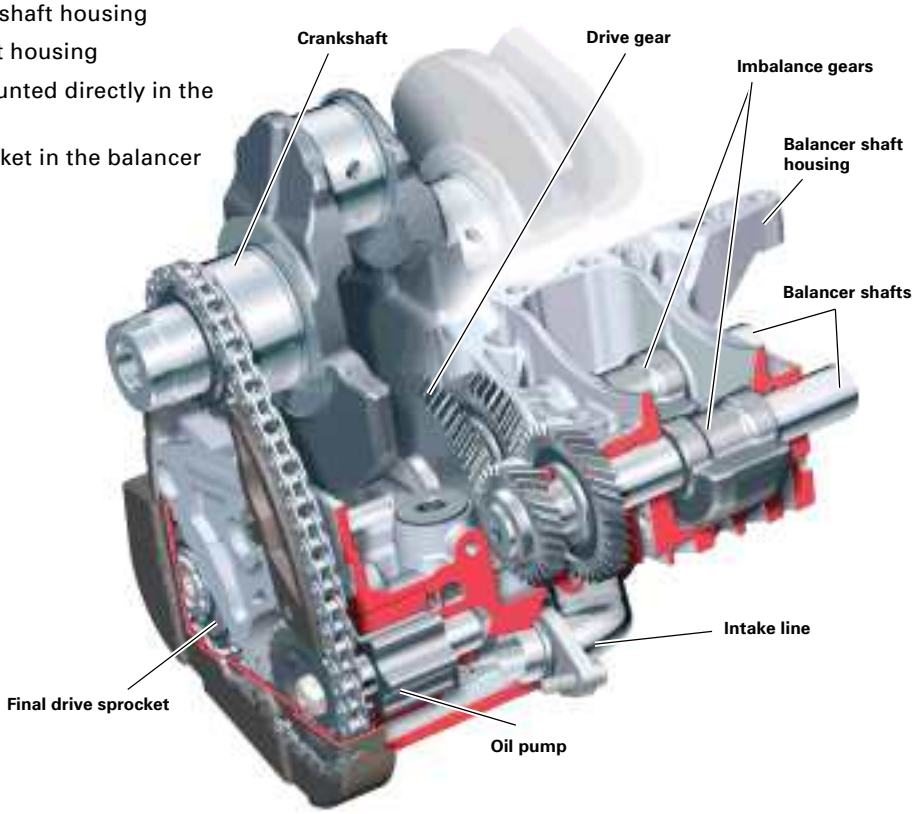

332_021

Decoupled final drive sprocket

The higher torsional irregularity in the crankshaft of the turbo engine at the bottom end of the RPM range results in much greater chain forces in the balancer shaft chain drive. The oscillation angle of 2° crank angle in the turbo engine is significantly higher than the relative oscillation angle of 0.8° crank angle in the naturally aspirated engine. The sudden load on the chain drive would subject the chain to increased wear unless measures are taken. For this reason, bow springs have been integrated into the sprocket wheel hub. They decouple the input shaft of the balancer shaft module from the crankshaft. This device functions similarly to a dual-mass flywheel.

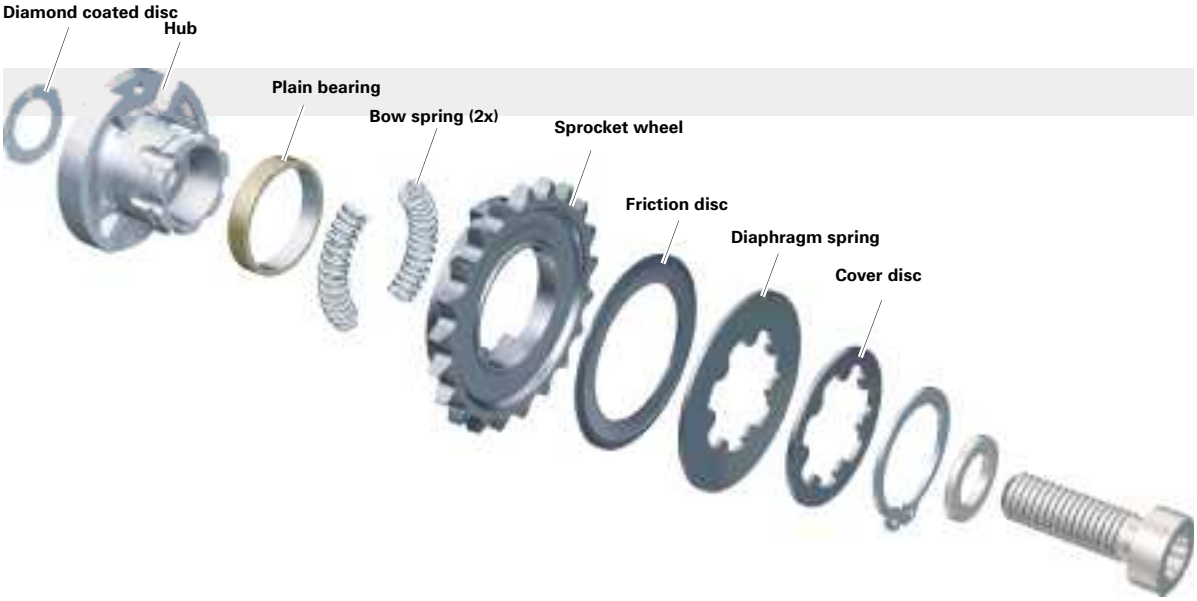

332_022

Chain load with and without decoupling

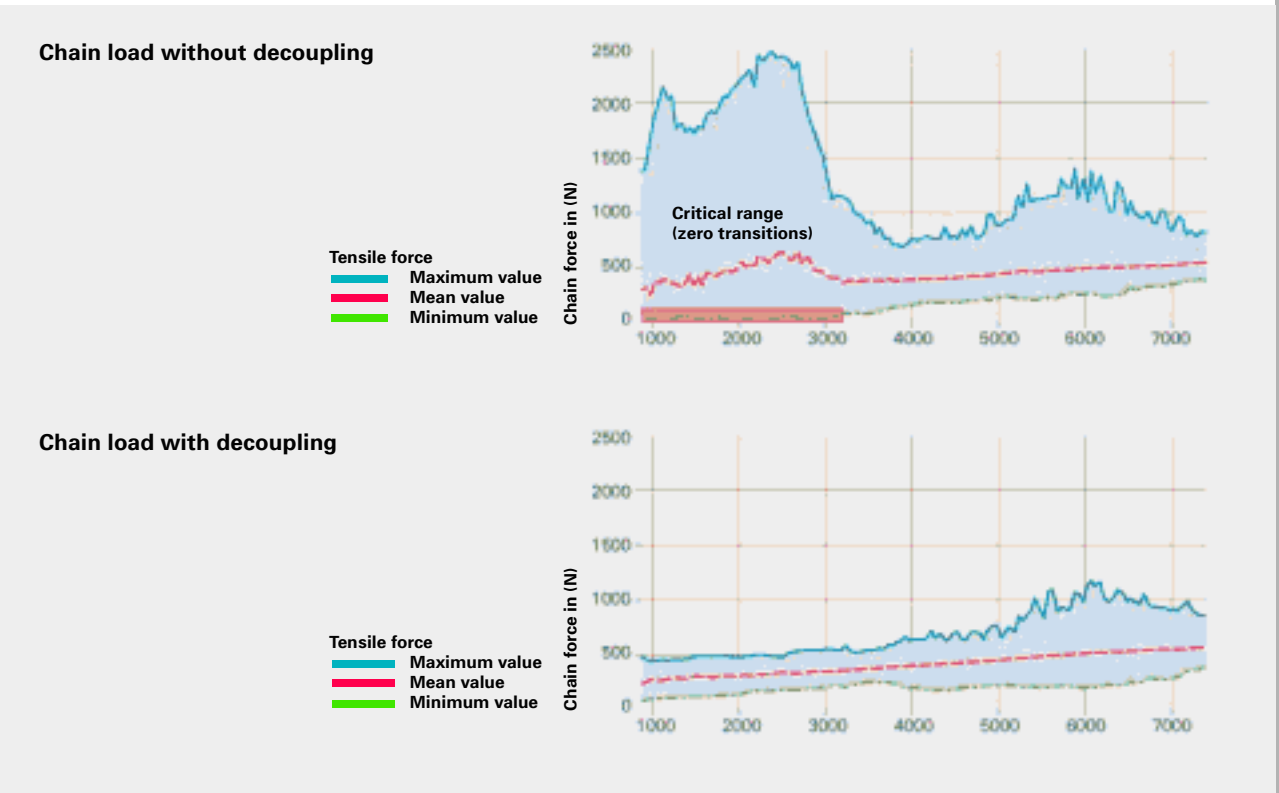

332_016

Toothed belt drive

As with all Audi 4-cylinder inline engines, the timing gear is designed as a toothed belt drive and directly drives the exhaust camshaft.

The toothed belt tensioning system carried over from the naturally aspirated engine has been modified to meet the much higher demands placed on the toothed belt drive including:

- turbo-related higher valve spring pressures
- turbo-related valve timing associated with the 42° crank angle adjustment range of the continuous variable valve timing on the intake camshaft
- high-pressure pump drive by a triple cam on the intake camshaft.

The result is the elliptical toothed belt sprocket on the crankshaft.
The CTC toothed belt sprocket* used here for the first time greatly reduces the torsional vibration of the camshaft and the tensile forces acting on the toothed belt.

Function

The toothed belt sprocket is positioned on the crankshaft at TDC of cylinder 1, as shown in Fig. 332_023. When the working cycle begins, high tensile forces act on the toothed belt. They are reduced by the elliptical shape of the toothed belt sprocket because the flat side of the sprocket gear allows a slight slackening of the toothed belt. The resulting torsional vibration counteracts the torsional vibration of the 2nd engine order at the antinode of the timing gear without producing too much excitation in the other RPM ranges.

* CTC toothed belt sprocket = **c**rankshaft **t**orsional **c**ancellation

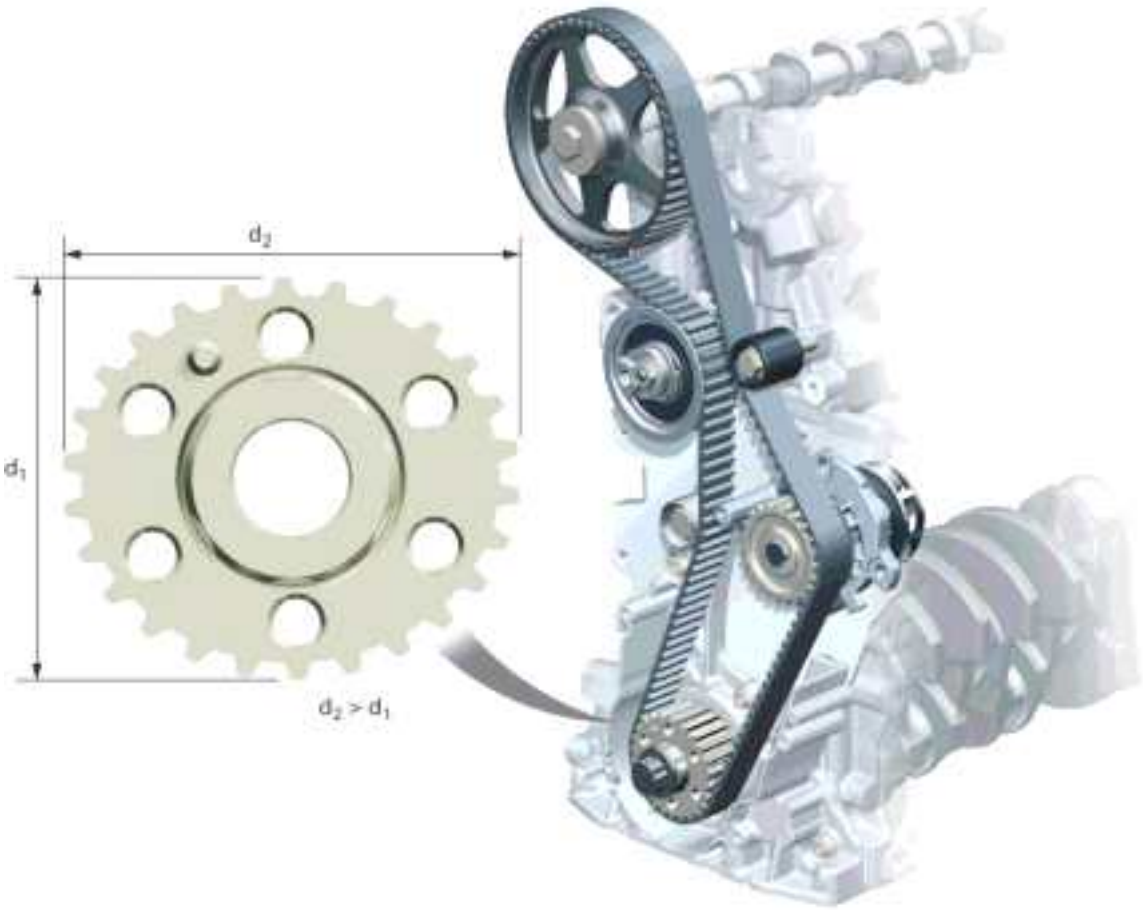

332_023

Cylinder head

The following turbo-specific modifications were made to the cylinder head (in relation to the 2.0l FSI):

- sodium-filled exhaust valves
- intake valves with reinforced seats
- roller rocker fingers optimised for rigidity with a reduction in cam and roller land width
- valve springs rated for increased spring forces (identical valve springs are used for the intake and exhaust valves)

In addition, the intake port geometry has been revised, enhancing the tumble effect along with knock resistance and running smoothness.

The high-pressure pump mounted on the cylinder head has been installed rotated through 90°.

2.0l 4V FSI

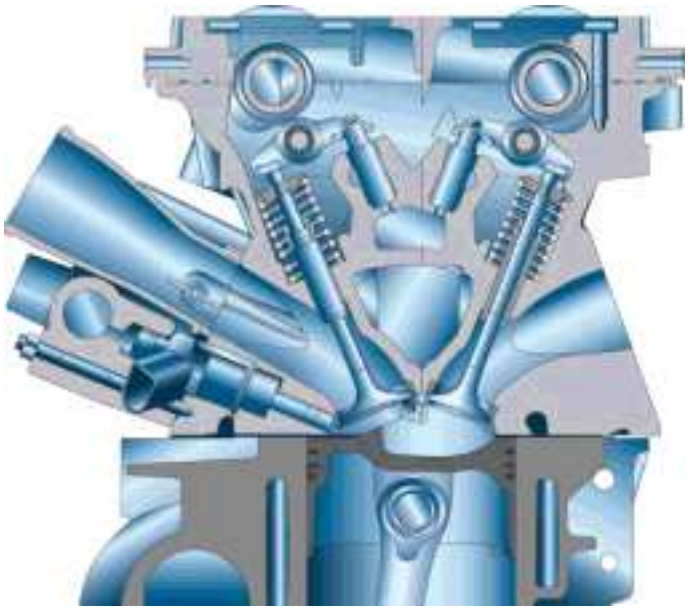

332_002

2.0l 4V T-FSI

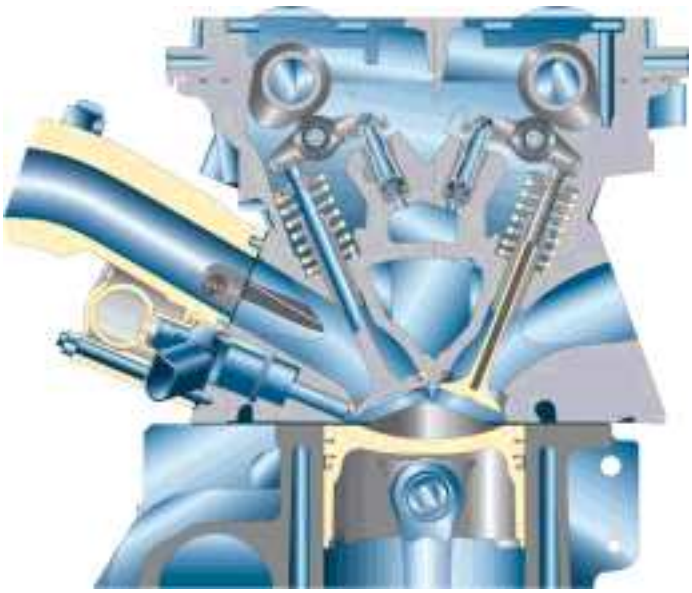

332_017

Crankcase ventilation

A permanent vacuum is maintained in the cylinder crankcase by separate ventilation of the cylinder crankcase and cylinder head, since the crankcase breather is connected to the intake manifold.

The blow-by gases flow from the crankcase into the cylinder head through the primary oil separator in the oil filter module.
Here the blow-by gases mix with the gases from the cylinder head and flow through a labyrinth, where a secondary oil separation stage takes place.

Since a turbo engine requires a more sophisticated pressure control system, a two-stage pressure control valve which branches off the blow-by gases to the intake manifold or from the turbocharger is installed on the cylinder head cover. If a vacuum is present inside the intake manifold, the blow-by gases flow directly into the intake manifold. If a boost pressure is present, a non-return valve in the pressure control valve housing closes and the blow-by gases flow through a port into the cylinder head cover ahead of the turbocharger. A so-called diagnosis channel has been integrated to detect faulty installation of the pressure control valve. If the pressure control valve is not installed correctly, unmetered air penetrates the pressure control valve seal on the cylinder head cover. Unmetered air is diagnosed by the reaction of the lambda probe.

if a boost pressure is present upstream of turbocharger
if a vacuum is present in the intake manifold

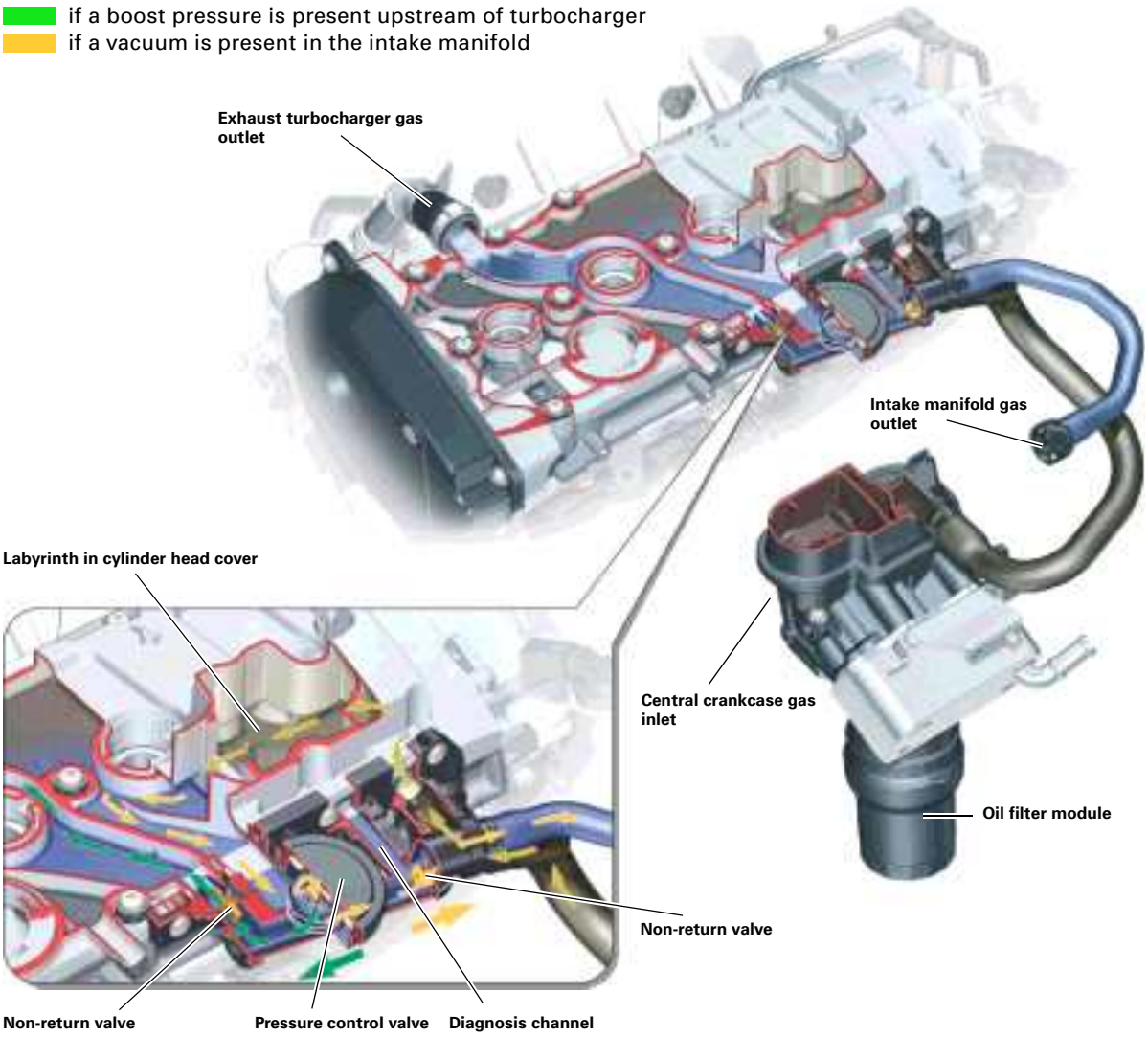

332_057

Exhaust turbocharger/manifold module

Due to the constraints on available space, a modular package comprising an exhaust manifold and turbine housing has been developed for the respective longitudinal and transverse mounting drive train variants. Special emphasis was placed on implementing a service solution for the easy removal and installation of the exhaust manifold and the integration of a close-coupled catalytic converter.

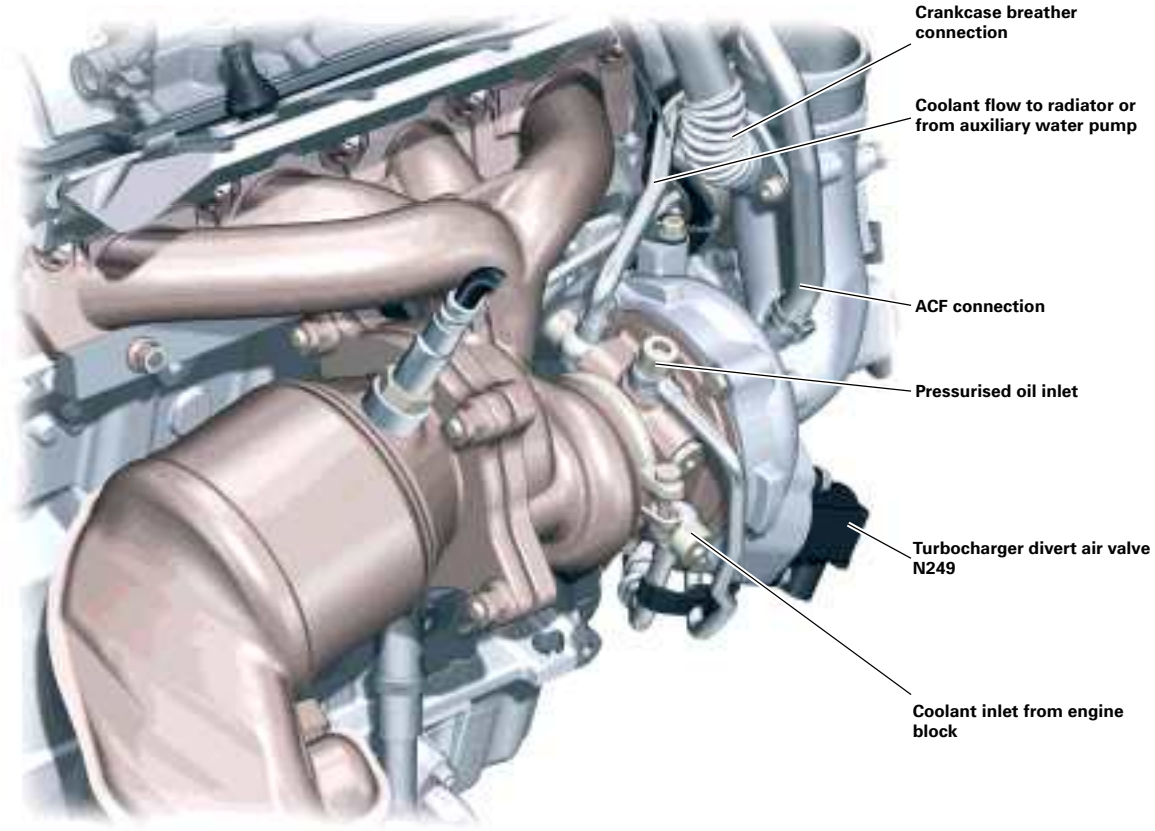

332_024

The turbine shaft mounting is integrated in the compressor housing. The air intake includes connections for crankcase and ACF ventilation. A specially adapted silencer for the reduction of pressure pulsation noises is attached to the pressure connection.

The required boost pressure is set by means of charge pressure control solenoid valve N75 (on the 1.8 turbo it functions as an overpressure control unit) and a so-called "wastegate". An electrical turbocharger divert air valve N249 is used to avoid "overbraking" of the turbocharger turbine when the engine is in overrun with the throttle valve closed and boost pressure still present.
The charge pressure control solenoid valve N75 and the turbocharger divert air valve N249 are located on the turbocharger.

A clamping flange on the cylinder head allows easy removal and installation of the module with a minimum of bolting.
The terminal block does not have to be detached.

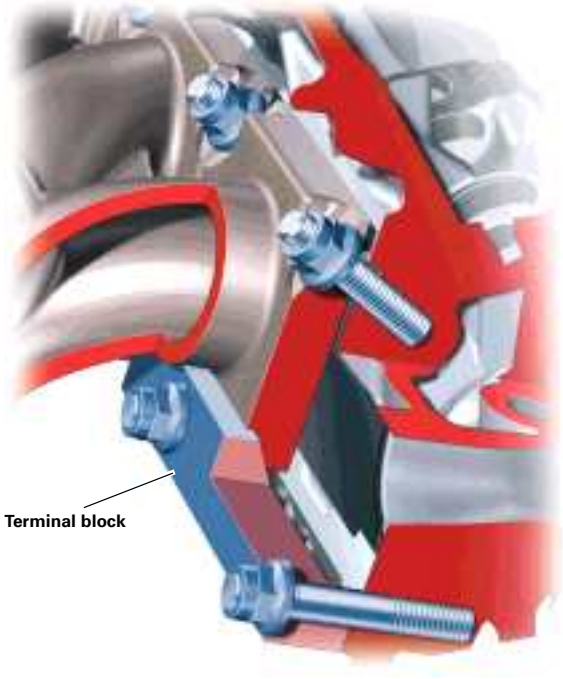

332_025

The exhaust manifold is designed as a split manifold. A divider is integrated in the manifold to ensure a steady flow of exhaust gases onto the turbine wheel. The ports of cylinders 1 and 4 and cylinders 2 and 3 are separated according to the firing order. Furthermore, the divider prevents the exhaust gas pressure from expanding into ports of the other cylinders.

This allows the required turbine speed to be maintained and optimises turbocharger response.

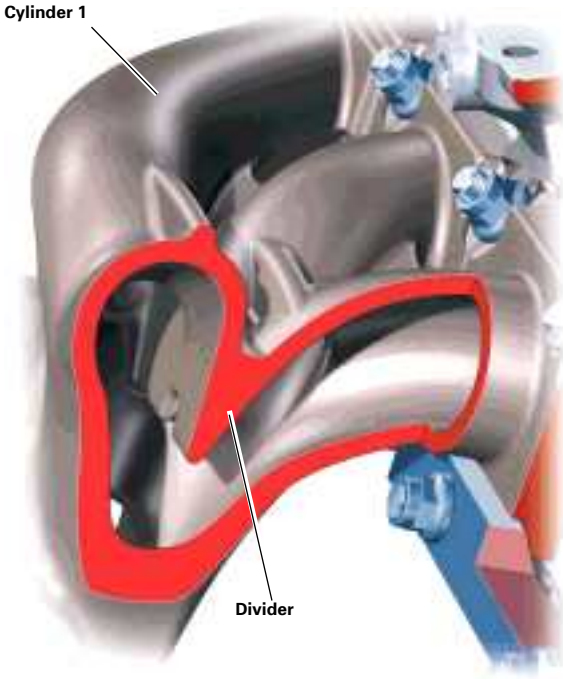

332_026

Charge air ducting and boost pressure control

The boost pressure and intake pressure are converted to a control pressure by the pulsed charge pressure control solenoid valve N75. The applied control pressure acts on the pressure unit which actuates the wastegate flap by means of a linkage. The wastegate flap opens a bypass which allows some of the exhaust gases to flow past the turbine wheel to the exhaust system. With this control system, it is possible to regulate the turbine speed and set the maximum boost pressure.

Note

In the event that the control system fails, the boost pressure will act directly on the pressure unit and against its spring pressure. In this way, the maximum boost pressure is reduced to a base boost pressure.

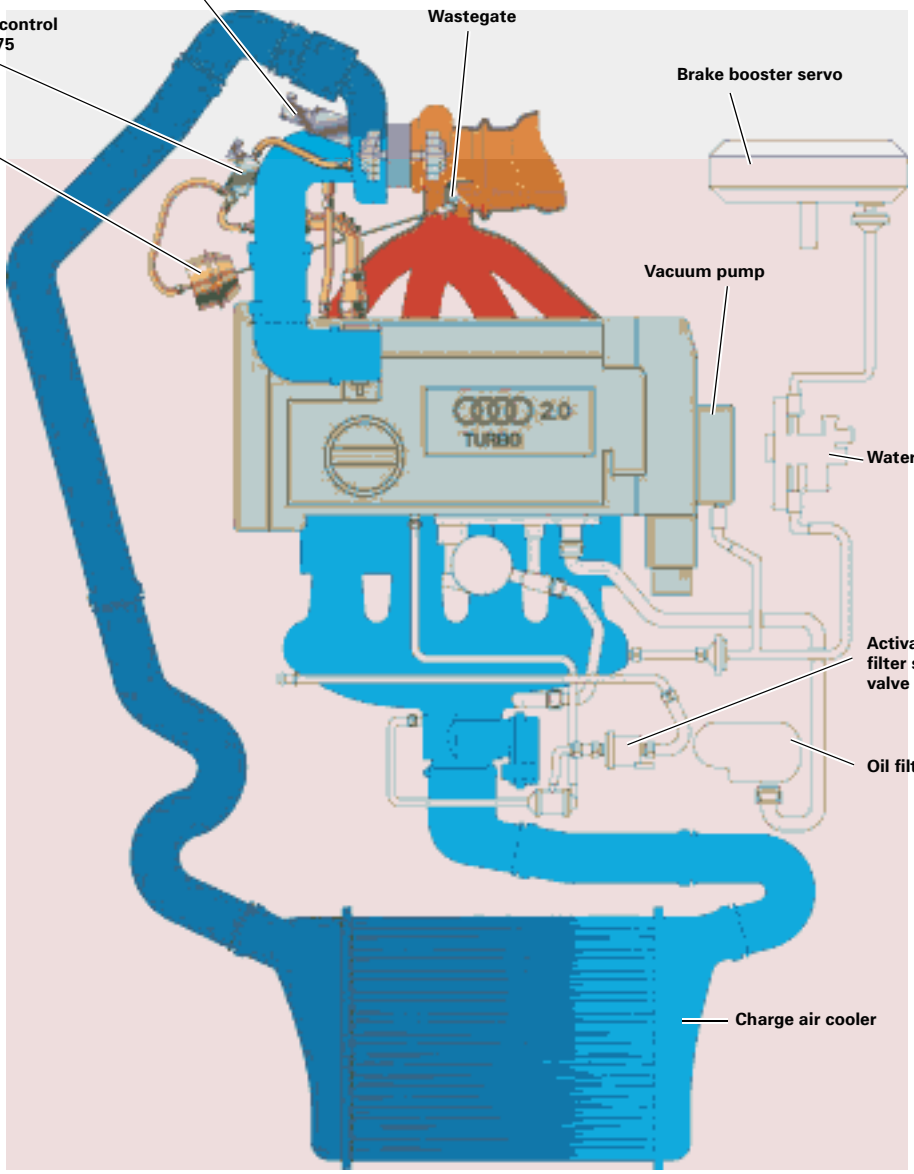

332_011

Air divert control in overrun

If the throttle valve is closed when the engine is in overrun, a back pressure will develop in the compressor housing due to the continuing presence of boost pressure. This back pressure noticeably reduces the speed of the compressor wheel, the net result of which is in a reduction in boost pressure and increased turbo lag. To avoid this, the turbocharger divert air valve N249 is opened by an electrical actuator. The valve opens a bypass which allows the compressed air to flow back to the intake side of the compressor circuit via the compressor wheel. In this way, the required turbine speed is maintained. The turbocharger divert air valve N249 closes when the throttle valve opens and the boost pressure is immediately available again.

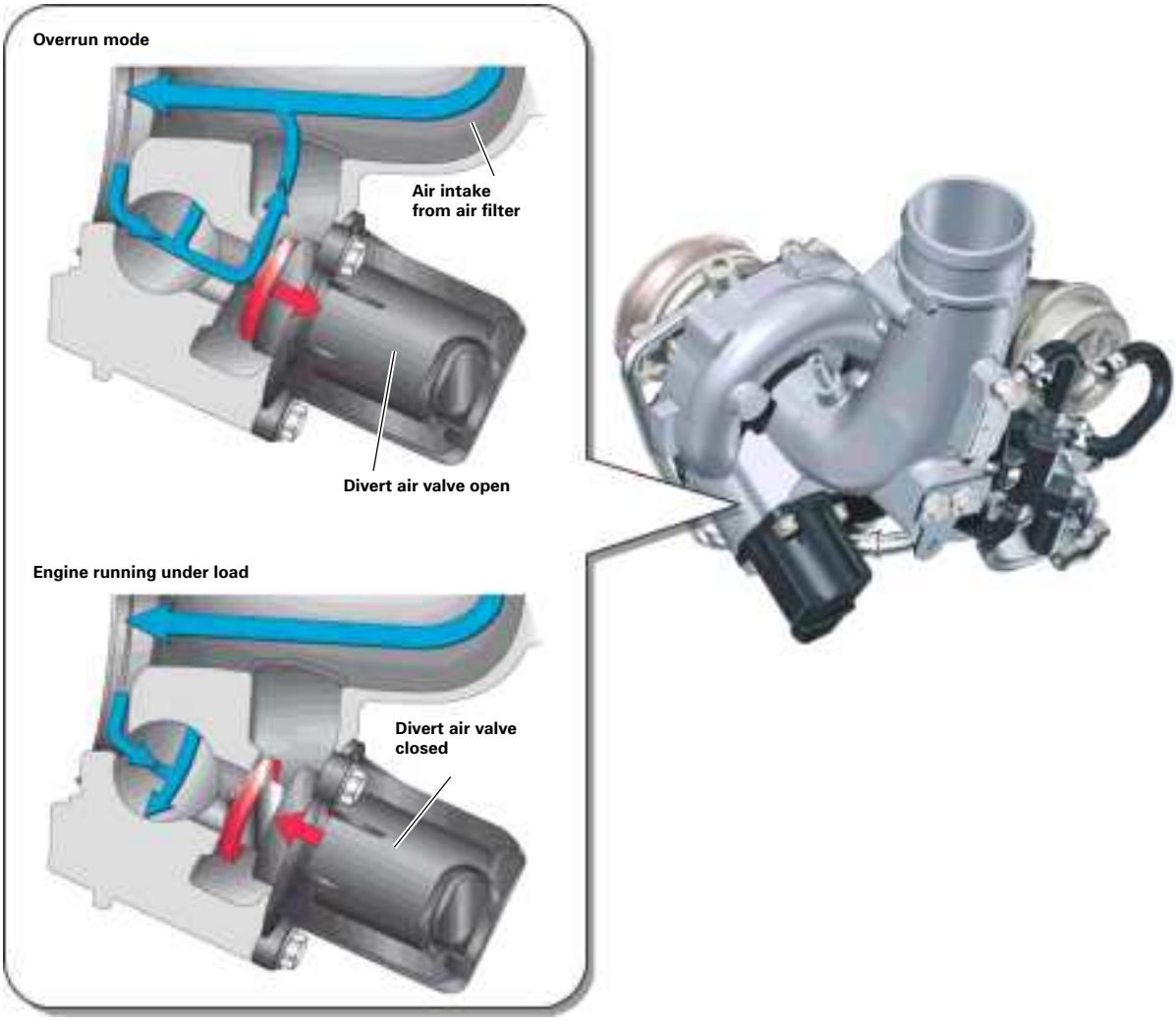

332_012

Cooling system

To prevent carbon build-up on the turbine shaft in the turbocharger, an auxiliary water pump provides additional water circulation for up to 15 minutes after the hot engine is shut off. The pump transports the lower-temperature coolant against the direction of flow. The coolant, which is taken in by the auxiliary water pump, flows from the radiator through the turbocharger to the engine block and back to the cooler to dissipate stored heat.

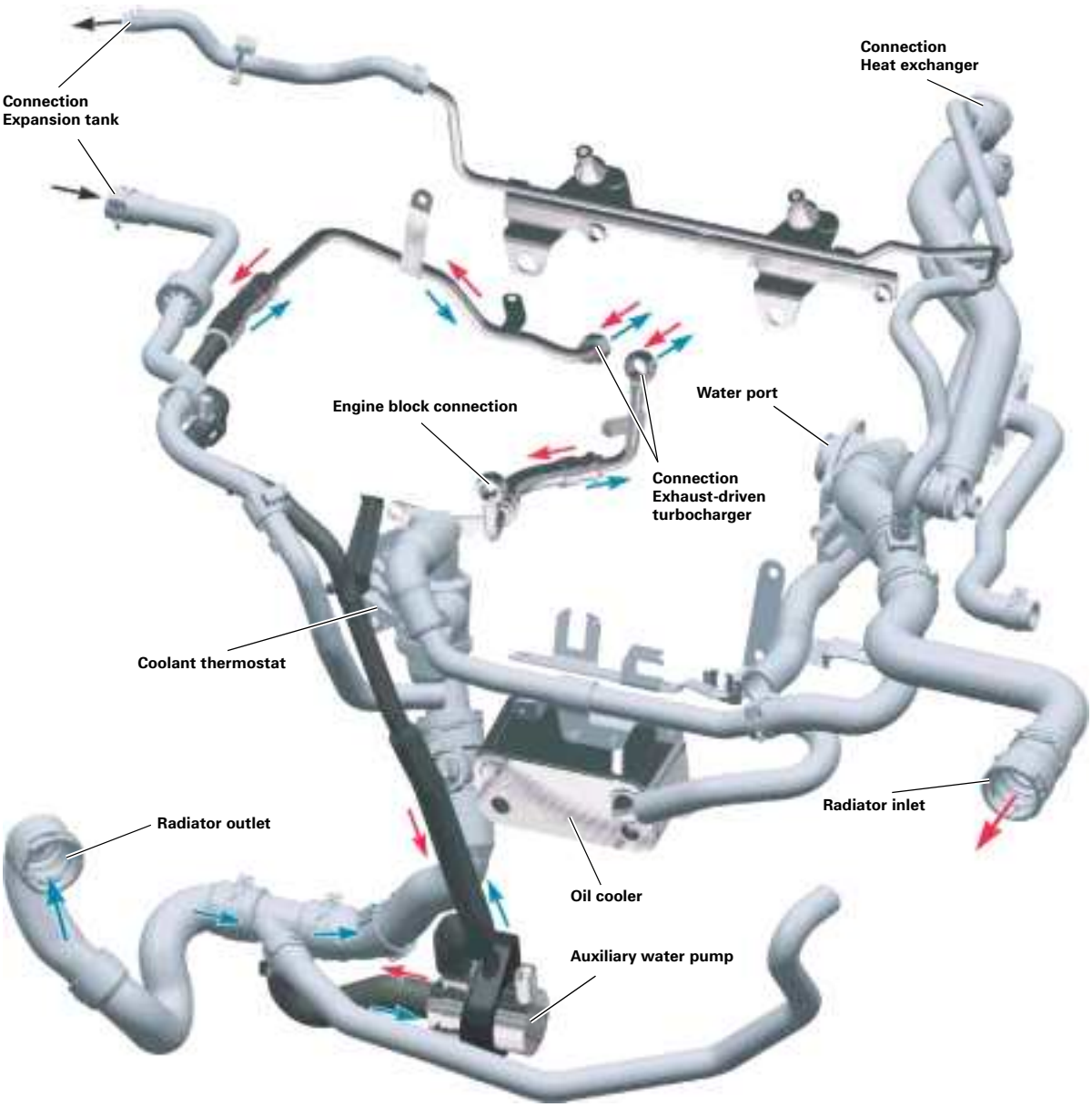

332_028

Tumble flaps

As the engine is operated in homogeneous-charge mode only, tumble flaps are used to improve mixture formation inside the engine.

They are actuated:
- to improve idling quality when the engine is cold
- to improve charging efficiency at engine start-up
- in overrun
- in homogeneous split mode (HOSP)

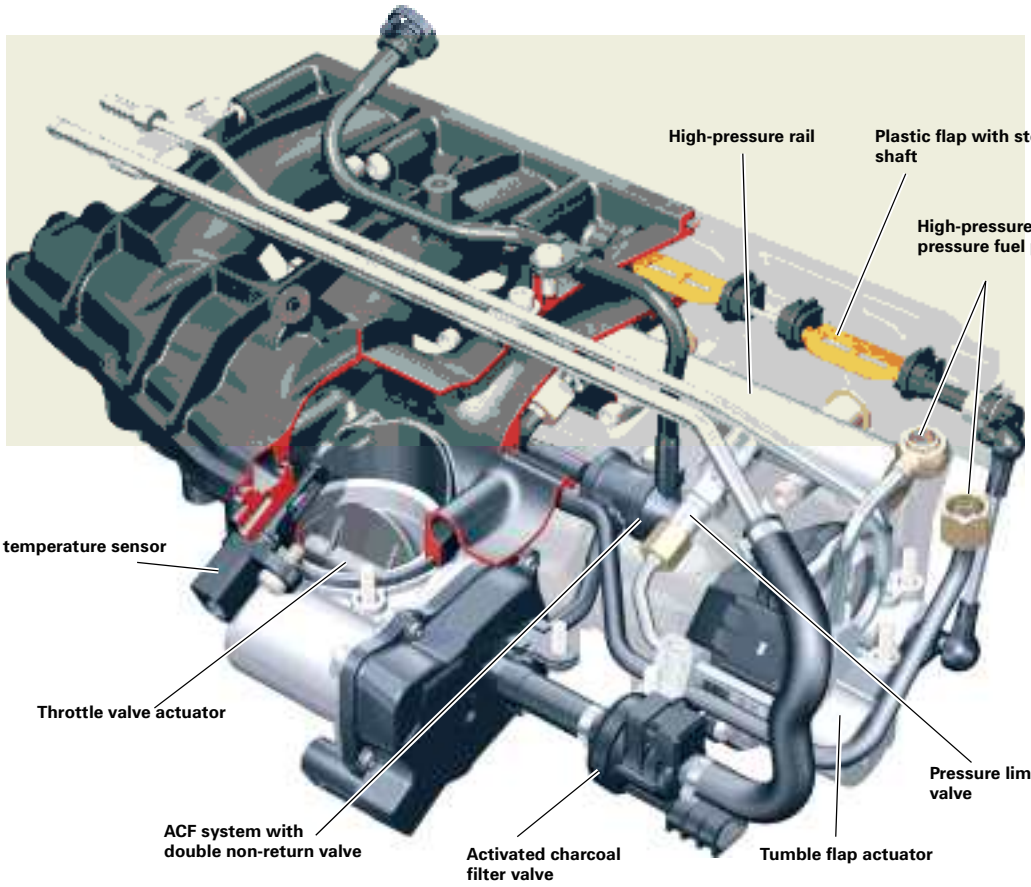

332_058

Operating mode	
HOSP	Homogeneous split for rapid heating-up of the catalytic converter
Lambda value	approx. 1.05
Intake manifold flap	closed on one side (to enhance tumble effect)
Throttle valve	wide open
Injection timing	first injection approx. 300° before ignition TDC, second injection with a reduced amount of fuel approx. 60° before ignition TDC
Ignition timing	retarded, mixture ignites very late, exhaust valves already open, exhaust gas temperature rises rapidly. The catalytic converter reaches its operating temperature rapidly.

Fuel supply

The new direct-injection petrol engines are supplied by a demand-controlled fuel pump. This demand control was developed to minimise the energy demand of the fuel pump and save fuel.
The fuel pump supplies only as much fuel as is required by the engine while maintaining the required system pressure. This task is performed by the Engine Control Unit (ECU) and an electronic power module which controls fuel pump speed by pulse width modulation.

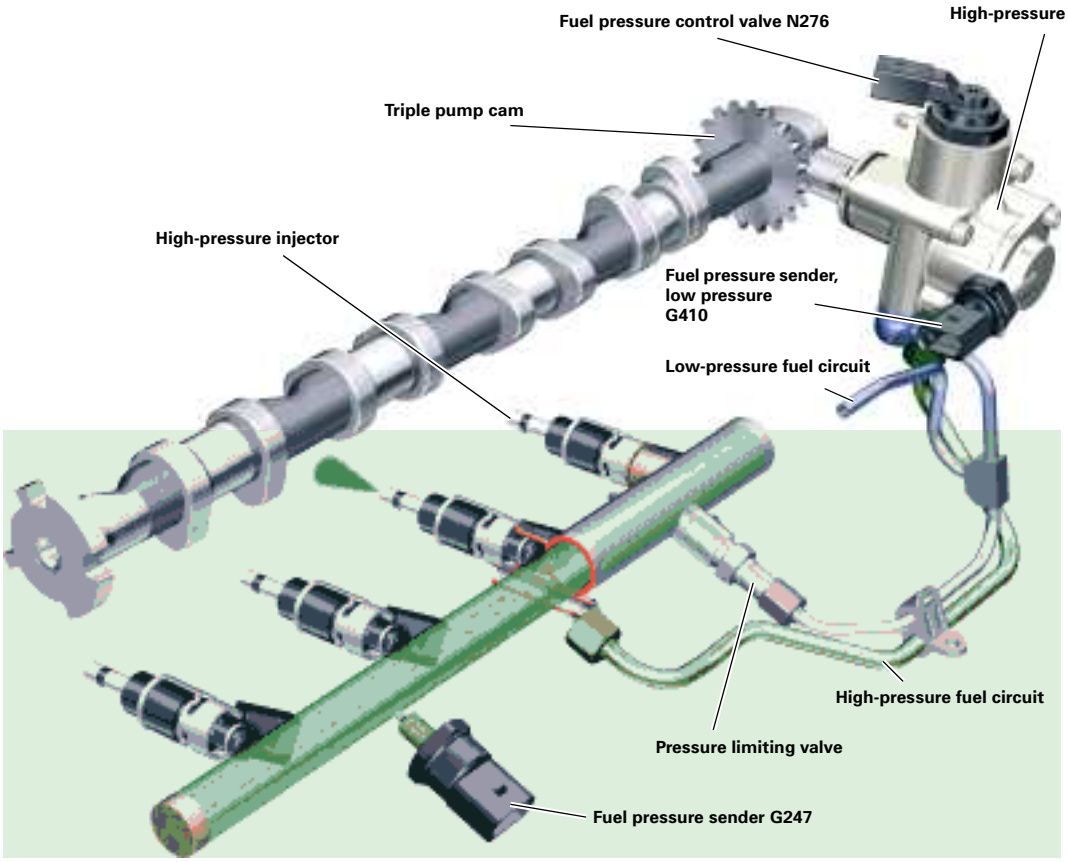

332_073

Fuel demand control system

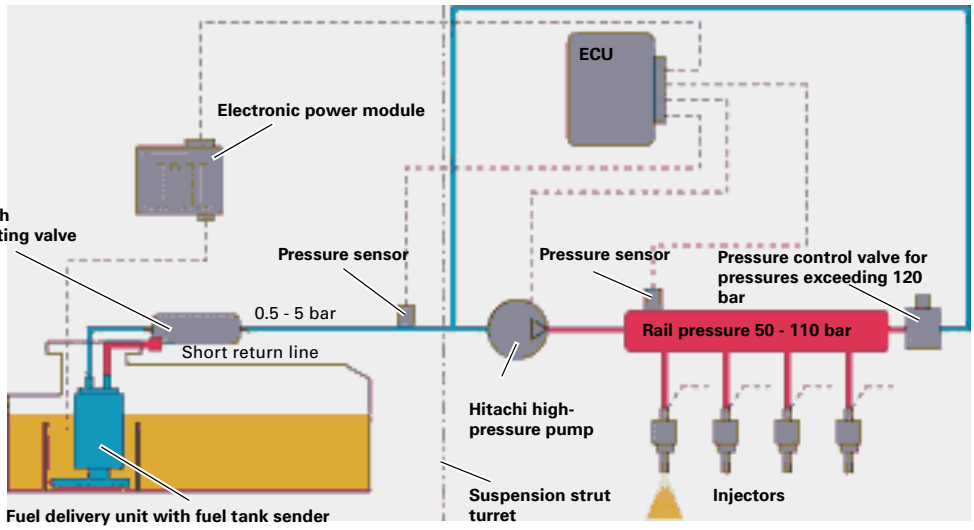

332_078

Electrical fuel delivery

Injection system

Actuators and sensor diagram

Air mass meter G70

Charge air pressure sender G31
intake manifold pressure sender G71

Engine speed sender G28

Hall sender G40

Throttle valve drive angle sender -1- (electric power control) G187
Throttle valve drive angle sender -2- (electric power control) G188 Throttle valve control unit J338

Accelerator pedal position sender G79
Accelerator pedal position sender -2- G185

Brake light switch F
Brake pedal switch F63

Fuel pressure sender G247

Intake manifold flap potentiometer G336

Knock sensor 1 G61
Knock sensor 2 G66

Coolant temperature sender G62

Radiator outlet coolant temperature sender G83

Fuel pressure sender, low pressure G410

Intake air temperature sensor G42

Lambda probe G39
Lambda probe after catalytic converter G130

Exhaust gas temperature sender -1- G235

Clutch position sender G476

Alternator DF

Cruise control On/Off

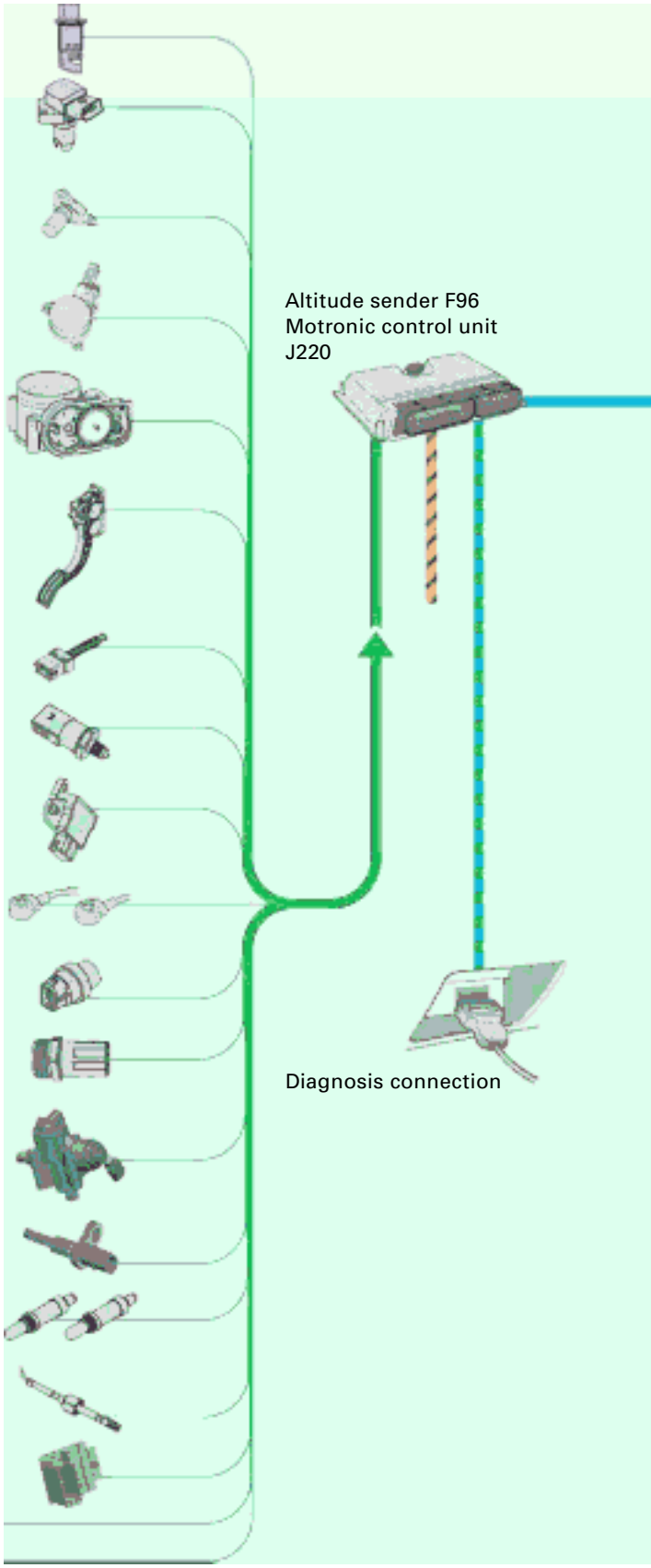

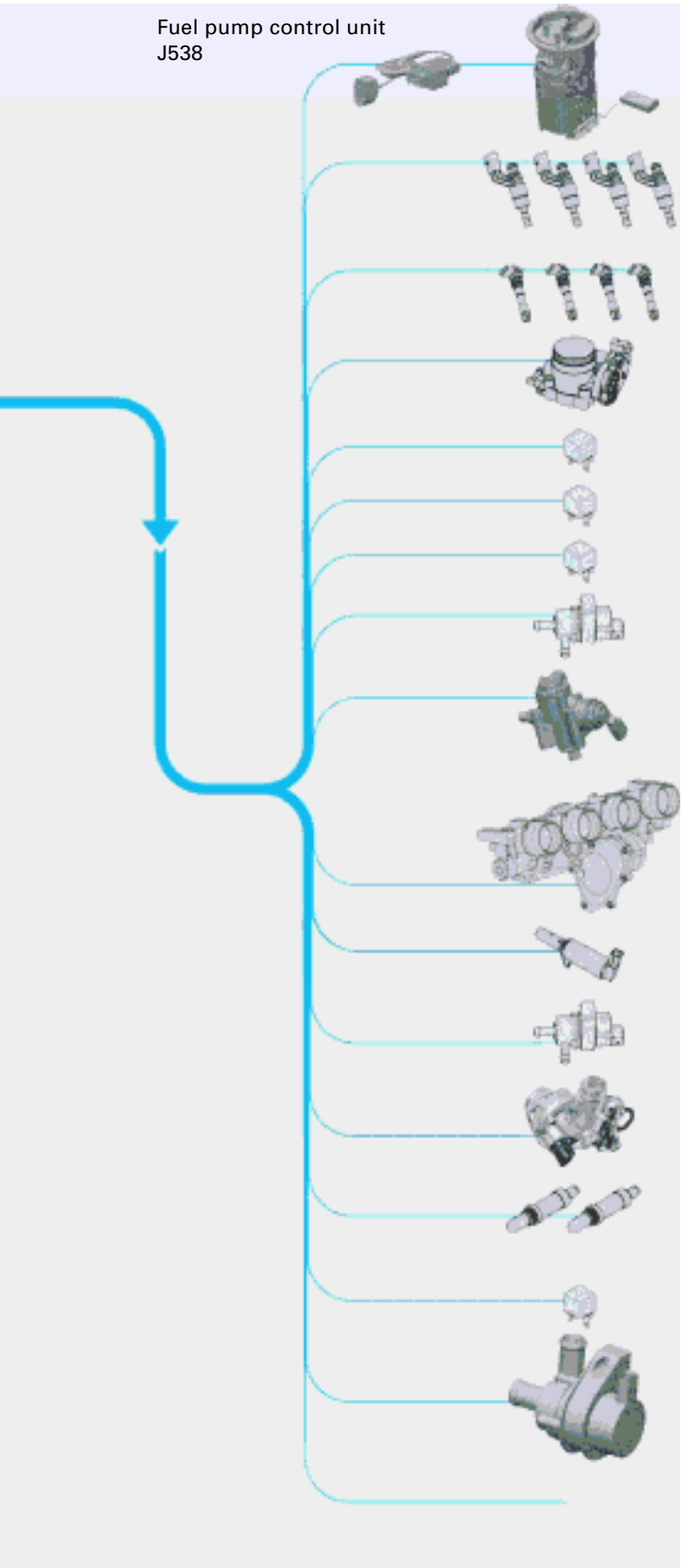

Fuel gauge sender G Fuel pump (pre-supply pump) G6

Injector, cylinder 1 N30
Injector, cylinder 2 N31
Injector, cylinder 3 N32
Injector, cylinder 4 N33

Ignition coil 1 with output stage N70
Ignition coil 2 with output stage N127
Ignition coil 3 with output stage N291
Ignition coil 4 with output stage N292

Throttle valve control unit J338
Throttle valve drive (electric power control) G186

Motronic current supply relay J271

Engine component current supply relay J757

Terminal 15 voltage supply relay J329

Activated charcoal filter system solenoid valve I (pulsed) N80

Fuel pressure regulating valve N276

Intake manifold flap motor V157

Inlet camshaft timing adjustment valve -1- N205

Charge pressure control solenoid valve N75

Turbocharger divert air valve N249

Lambda probe heater Z19
Lambda probe 1 heating, after catalytic converter Z29

Continued coolant circulation relay J151

Coolant run-on pump V51

Radiator fan control unit J293 PWM

332_039

Axles

Front axle

The front axle of the A3 Sportback is identical in design and function to the A3 3-door.
The spring/shock absorber set-up has been adapted to suit the Sportback.

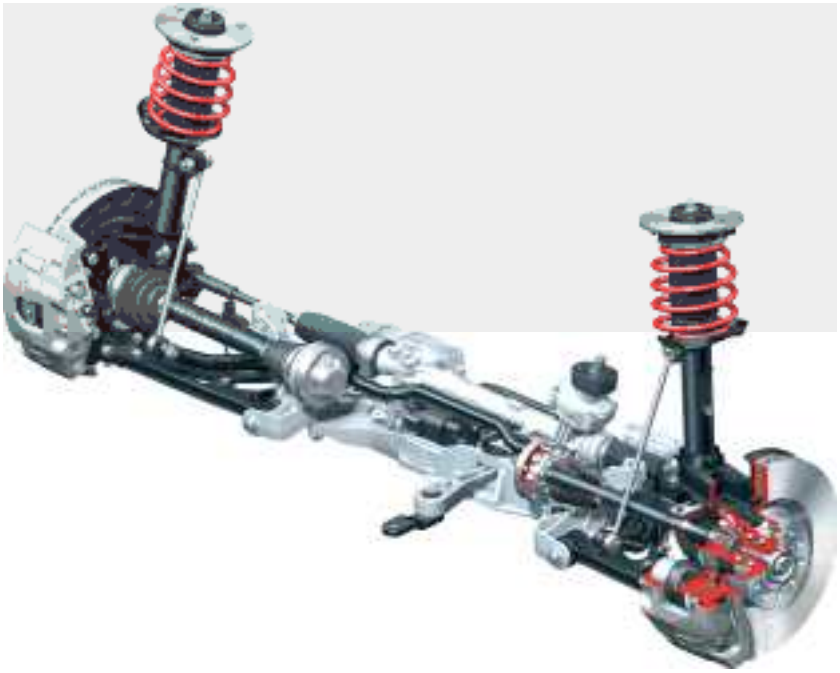

332_075

Rear axles

The rear axles for front-wheel drive and quattro all-wheel drive are identical in design and function to the A3 3-door. The spring links, wheel carriers and wheel bearings have been modified for use in the A3 Sportback.

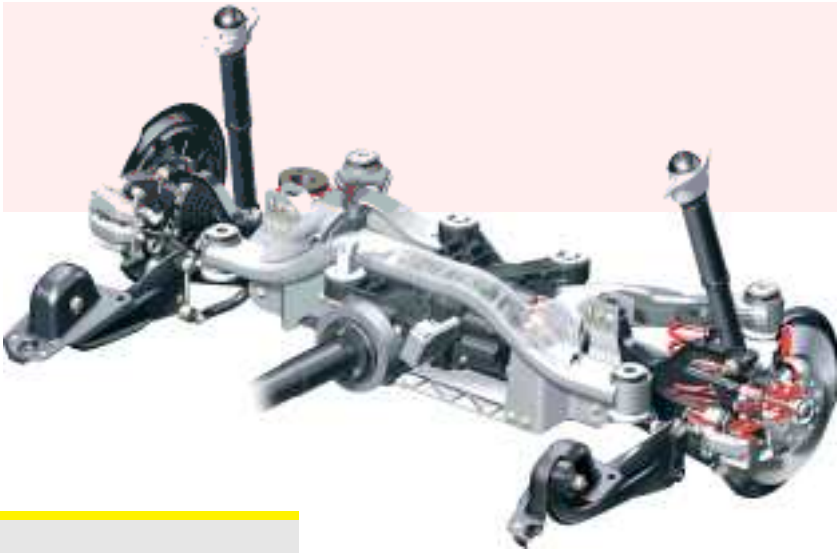

332_076

Reference

You will find a description of the design and function of the axles in SSP 290.

Suspension alignment

The suspension alignment procedure and setting values are the same as for the A3 3-door version.

Steering system

The electromechanical steering system (EPS) used on the A3 3-door is also used in the A3 Sportback. As before, the steering has been adapted to the various front axle loads by two different characteristic curves in the power steering control unit J500. A modified version of the warning lamp activation circuit will be come into use in the A3 3-door in May 04. A yellow or red LED is activated depending on fault severity (See chapter Electrical system/Dash panel insert). This modified display will also be introduced into the A3 Sportback. The steering column will be carried over from the A3 3-door.

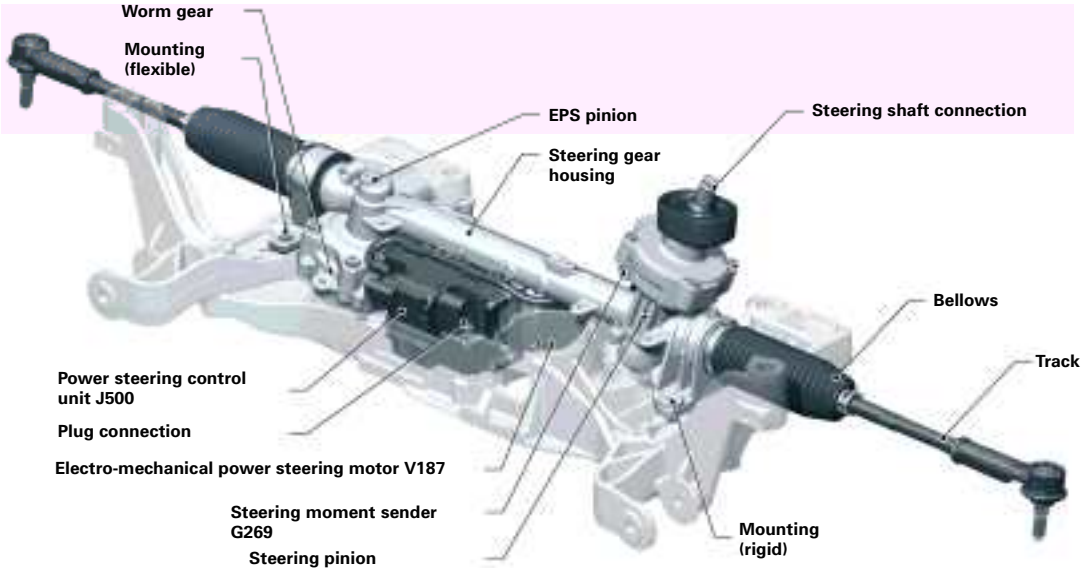

332_077

Steering wheels

The steering wheel and airbag are identical in design to the steering wheels in the A6 and A8.
The following steering wheels are available:

332_082

332_083

	Basis	Option	Option
Attraction	Steering wheel in 4-spoke design	Sport steering wheel in 3-spoke design with shift paddles (standard with DSG)	Multifunction sport steering wheel for telephone and radio operation in 3-spoke design
Ambition	Sport steering wheel in 3-spoke design with leather gear knob and gearshift gaiter	Multifunction sport steering wheel for telephone and radio operation in 3-spoke design with shift paddles	Multifunction sport steering wheel for telephone and radio operation in 4-spoke design with shift paddles
Ambiente	Leather steering wheel in 4-spoke design with leather gear knob and gearshift gaiter	Multifunction sport steering wheel for telephone and radio operation in 4-spoke design	

Brake system

The brake system is identical to the 3-door version.

ESP

The Sportback carries over the ESP Mk 60 system already featured in the A3 3-door. The "Tyre Pressure Monitor" (TPM) will be optionally available as an additional function.

Operating principle

When a tyre loses air, its rolling circumference decreases. This increases the number of revolutions necessary to cover a specific distance. This information is acquired by the wheel speed sender and evaluated by the ESP control unit. In this way, the control unit recognises changes in tyre pressure. The ability of the control unit to precisely evaluate measurement data is limited in certain dynamic operating conditions, such as cornering at high speed, driving on rough roads, driving away and braking. In these situations, the information acquired is not evaluated with regard to loss of pressure.

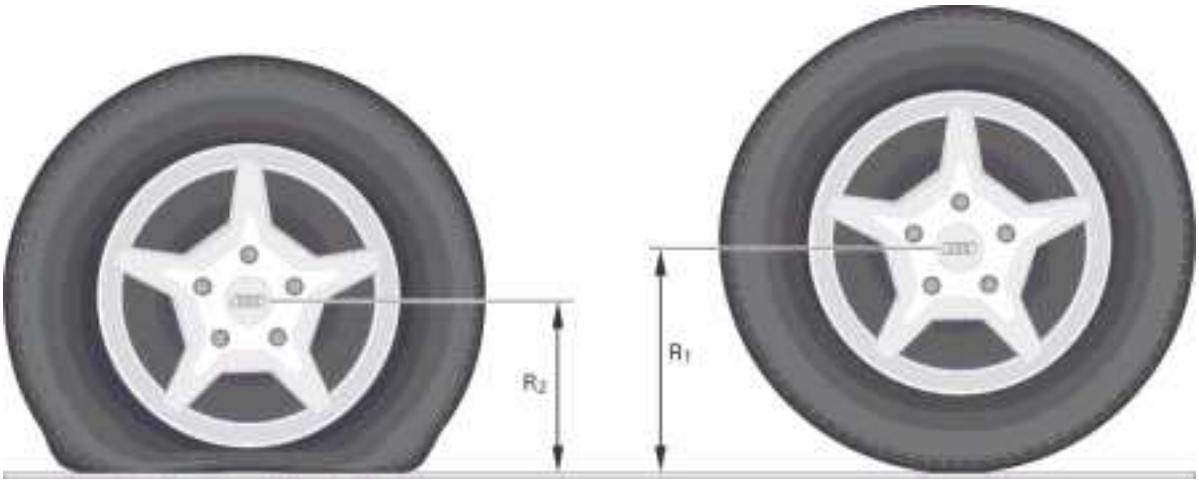

332_040

Calibration

System calibration is started by pressing the tyre pressure monitor button (for at least 2 seconds). During the subsequent trip, the signals generated by the wheel speed sender are evaluated, with allowance being made for the different vehicle operating states and speeds. The vehicle need only be driven for a few minutes in order to obtain an initial "rough calibration". On completion of the calibration phase, the control unit will have "learned" the nominal data for wheel speed as a function of the respective road speed and vehicle states. The calibration must be performed after each tyre change, and after any change or adjustment in tyre pressure. The driver is alerted to the loss of pressure by the warning lamp in the speedometer and by a single buzz tone which sounds when the ignition is turned on. The warning is reset when a system recalibration is started.

System overview

332_046

Service work

System faults are indicated by the continuous illumination of the TPM warning lamp and registered in the fault memory of the ESP control unit.
Control units with TPM capability have additional measured value blocks for system diagnosis.

Wheels and tyres

Two new wheels will be featured on the A3 Sportback.

A cast aluminium wheel in size 6.5J x 16" is available as an option on models with the "Attraction" trim.

332_079

A cast aluminium wheel in size 7.5J x 17 is available as an option on all models.

332_080

Bus topology

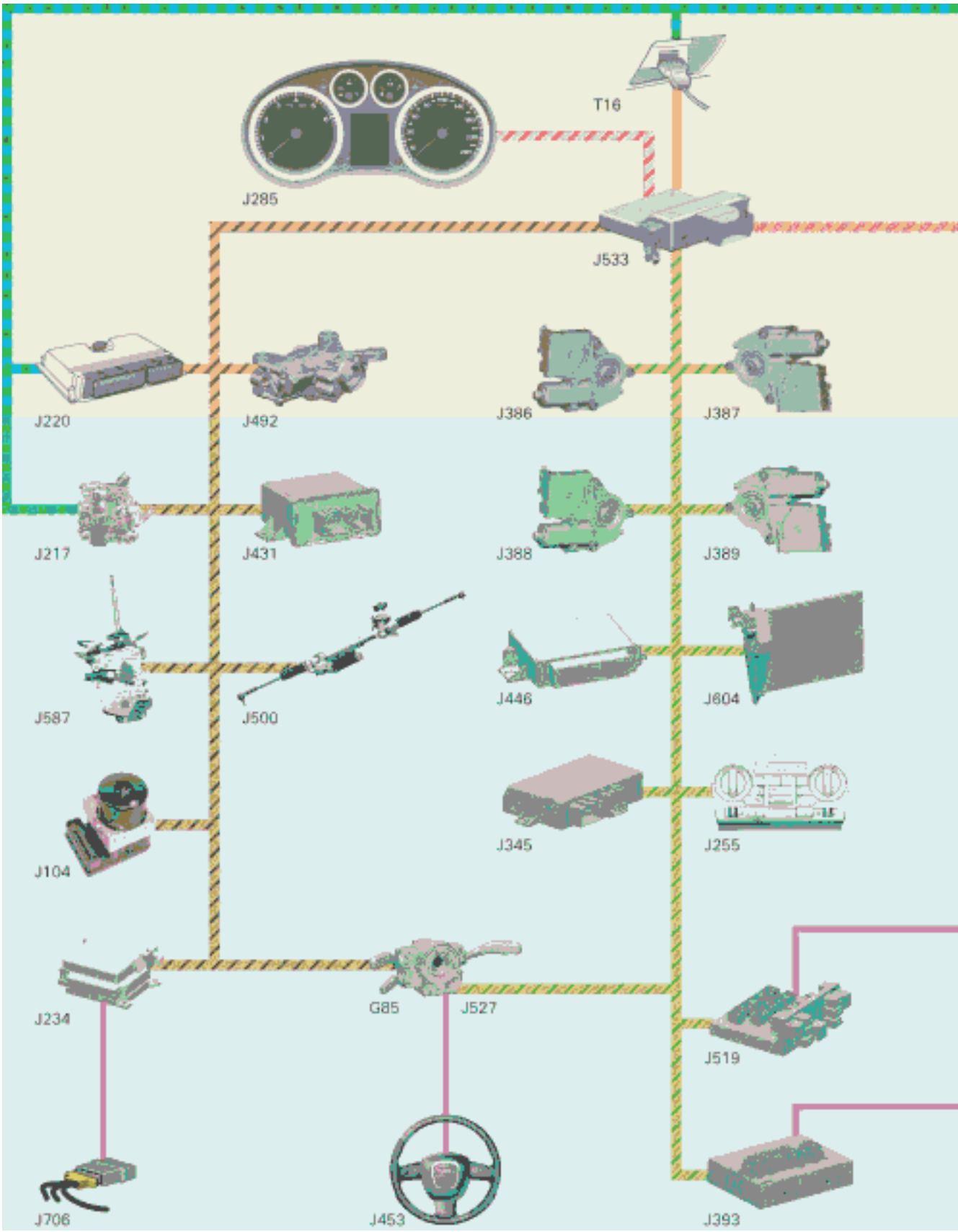

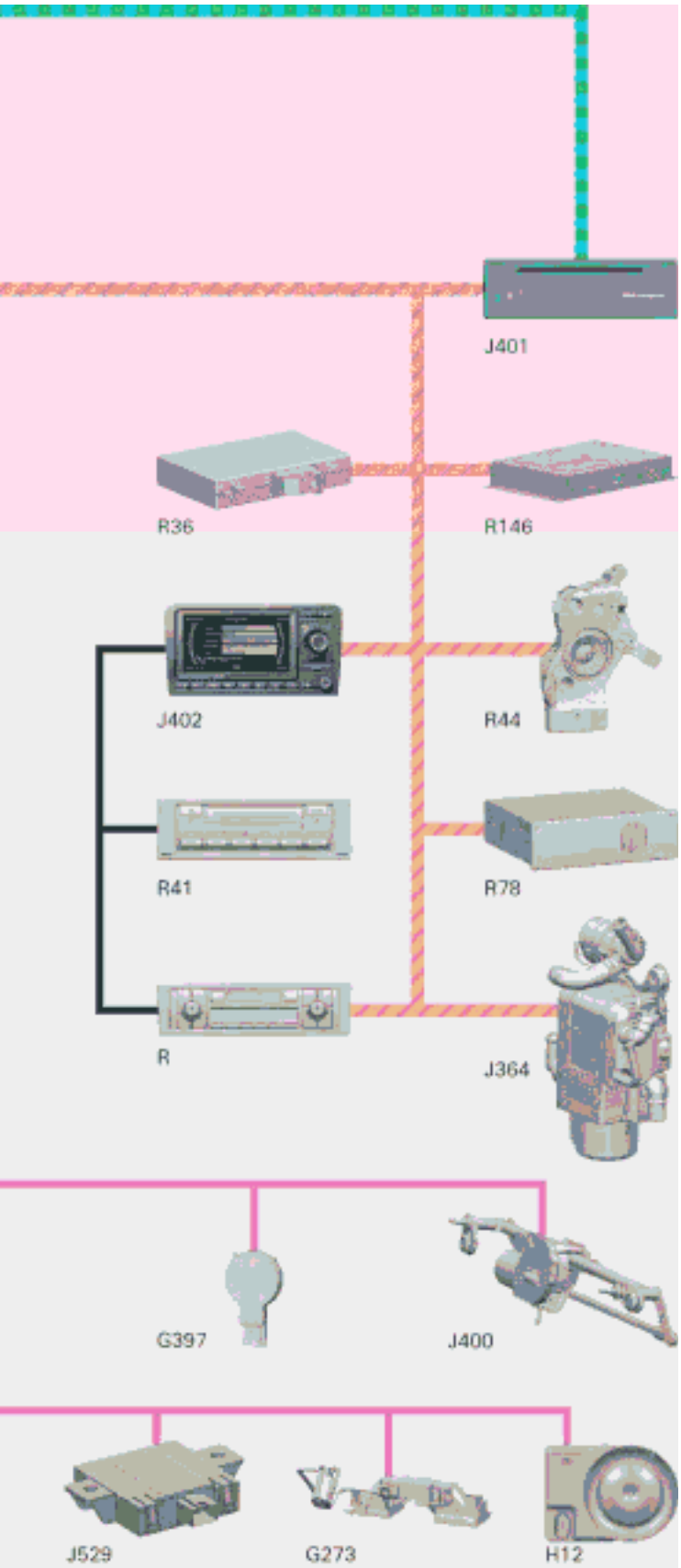

332_010

The bus topology is based on the Audi A3 3-door. The Sportback has two additional door control units as well as the optional infotainment systems, such as the Navigation Plus system (RNS-E) incl. TV tuner and satellite radio for the North American market.

Legend

G85	Steering angle sender
G273	Interior monitoring sensor
H12	Alarm horn
J104	ABS control unit
J217	Automatic gearbox control unit
J220	Motronic control unit
J234	Airbag control unit
J255	Climatronic control unit
J285	Control unit with display in dash panel insert
J345	Trailer detection control unit
J364	Additional heater control unit
J386	Driver door control unit
J387	Front passenger door control unit
J388	Rear left door control unit
J389	Rear right door control unit
J393	Convenience system central control unit
J400	Wiper motor control unit
J401	Navigation system with CD drive control unit
J402	Operating electronics control unit, navigation
J431	Headlight range control, control unit
J446	Parking aid control unit
J453	Multi-function steering wheel control unit
J492	Four-wheel drive control unit
J500	Power steering control unit
J519	Onboard power supply control unit
J527	Steering column electronics control unit
J529	Anti-theft/tilt system control unit
J533	Data bus diagnostic interface
J587	Selector lever sensors control unit
J604	Auxiliary air heater control unit
J706	Seat occupied recognition control unit
R	Radio
R36	Telephone transmitter and receiver unit
R41	CD changer
R44	Amplifier with bass loudspeaker (on left in luggage compartment)
R78	TV tuner
R146	Satellite radio (SDARS)

- Driveline CAN bus:500 kBaud
- Instrument cluster CAN bus:500 kBaud
- Diagnosis CAN bus:500 kBaud
- Convenience CAN bus:100 kBaud
- Infotainment CAN bus:100 kBaud
- LIN
- K-lead
- Panasonic bus

New features of the convenience electronics

1 **Onboard power supply control unit J519**
The control unit has been adapted for the Audi A3 Sportback to the new function "rain and light detector sensor G397" as well as the modified rear lights design.

332_043

2 **Rain and light detector sensor G397**
The combined sensor is already known from the Audi A6´05, and is connected via the LIN data bus to the onboard power supply control unit J519. Adaption of the specific windscreen type is carried out by coding the sensor using the diagnostic tester. Then the coding is sent via the onboard power supply control unit to the sensor, where it is saved to memory.

3 **Steering column electronics control unit J527**
The control unit has been modified for use of the new multifunction steering wheels. The multifunction steering wheel is encoded in the steering column electronics control unit and communicates with the control unit across the LIN bus.

4 **Convenience system central control unit J393**
The control unit familiar from the Audi A3´04 has new software for use in the Audi A3 Sportback. The master function for central locking control has been extended to include the rear doors.

5 **Rear door control units**
In the Audi A3 Sportback, the rear doors are equipped with door control units which are networked via
the convenience CAN bus. The control units activate the central locking, the window lifter motor and the button lighting. If the vehicle is equipped with the optional lighting package, the entry lights, door reflector lights and door inner handle lights will also be energised.

Reference

You will find further information about the rain and light detector sensor in SSP 326 Audi A6 ´05 - Electrical System.

Control unit with display in dash panel insert J285

The A3 Sportback and 3-door for model year '05 will come with an upgraded version of the dash panel insert. It has the same basic functions as the dash panel insert known from the A3 3-door.

332_009

New and modified warning lamps

Further warning lights have been added to the modified dash panel insert for the new vehicle functions, whereby some of the lights have a new logo.
These are:

Symbol	Description
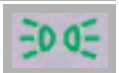	From week 45/04, the dipped beam warning lamp will be integrated into the rotary light switch. The dash panel insert is designed for both warning light positions. In addition, the warning lamp can be activated or deactivated using the coding function.
	The logo for the ESP warning lamp has been adapted to conform to the Group standard.
	If the yellow electromechanical steering warning lamp comes on, then there is a fault in the electromechanical steering system. Steering boost may be reduced as a result. An audible warning tone also sounds.
	If the red electromechanical steering warning lamp comes on, then there is a malfunction in the electromechanical steering system. This is accompanied by three warning beeps.
	The tyre pressure monitor warning lamp indicates a change in the rolling circumference of a wheel. Also refer to chapter ESP, page 42
	The "door open" warning lamp has a modified logo depicting two open doors. The lamp indicates that at least one door is open. In vehicles with a Highline dash panel insert, the warning is indicated by an icon on the central display.
	The "fuel filler cap open" warning lamp (North America only) has a modified logo. The lamp indicates that the fuel tank system is not closed. In vehicles with a Highline dash panel insert, the warning is indicated by an icon on the central display.

Onboard computer

The optional Driver Information System (FIS) will be extended to an onboard computer. In the onboard computer, the following functions can be programmed:
- auxiliary heating/ventilation
- clock
- computer (FIS menu)
- speed alarm (speed warning)
- radio display in FIS
- language
- units

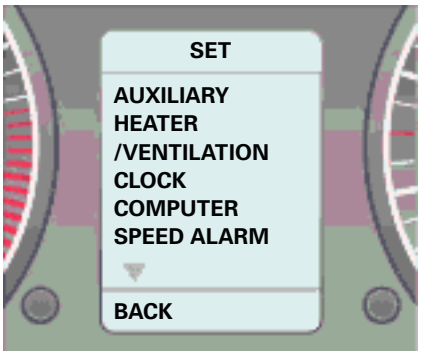

332_044

Function selector switch 2 E272 in the centre console is used only to operate the basic navigation functions which are displayed on the central display of the dash panel insert.

3-wire fuel tank sender

From week 45/04, 3-wire fuel tank senders will be installed.
In this configuration, the fuel tank sender evaluates the two components of the fuel tank sender between the middle signal pickup and the respective outer connection.
The dash panel insert computes from both measured values and the known overall resistance of the fuel tank sender ohmic value R11, ohmic value R12 and lining resistance R1s. A lining resistance R1s > 150 Ω is registered in the fault memory. The following message appears on the central display of the dash panel insert: "Tank system faulty - Please visit workshop". In this case, the fuel tank sender (both fuel tank senders in the case of quattro models) must be replaced.
All fuel tank resistance and litre values can be read out as measured data using the diagnostic tester. With quattro models, the values R21, R22 and R2s are evaluated for fuel gauge sender -2- G169.

Dash panel insert J285

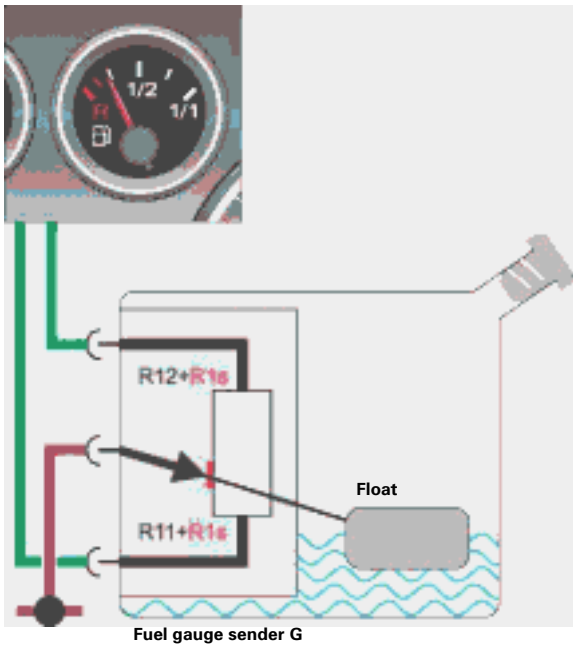

Fuel gauge sender G

332_045

Diagnosis

The radio controlled clock test mode (See SSP 312, page 43) now displays the result "Test in progress", "Test OK" or "Test NOK" and "Measurement completed". If no test has been performed during the current diagnosis, "Measurement completed" is displayed.

Further new measured values are available for diagnosis of various components on the dash panel insert. These are explained in "Guided Fault Finding".

New Navigation Plus system (RNS-E)

The new Navigation Plus system is available in the Audi A3 Sportback as an optional extra. This improved version of the existing Navigation Plus system introduces the MMI operating logic already familiar from the Audi A8 and Audi A6 into the AB segment. However, the display panel and the control elements are not kept physically separate from each other. As before, the new Navigation Plus system is designed for installation in a 2-DIN slot in the dash panel. Apart from the Audi A3, the new Navigation Plus system is available in the A4´04, Allroad´04 and Audi A6´04 Avant. As different front panels are available for the respective models, there are several variants with different part numbers.

332_060

Operation

On the base of the front panel are the individual hardkeys for various functions including

- RADIO - controls the integrated analog radio tuner (above it, the additional control for the optional digital radio tuner (to be available at a later date))
- CD / TV - controls the external CD changer in the glove box as well as the internal audio sources (DVD drive and two SD card readers) and the optional external analog TV tuner
- NAME - address book, integrated in the control unit with similar functions to the address book in the Audi A6 and A8
- TEL - controls the optional universal mobile phone preparation II
- NAV - controls the integrated, DVD-based navigation unit
- INFO - displays the TMC data evaluated by the Navigation Plus system and controls the TP Memo function which automatically records traffic information for subsequent playback

The CAR and SETUP keys are reserved for controlling vehicle-specific functions and as a setup key for setting further options of the individual main functions.

332_061

The central rotary/pushbutton control on the right of the display is used to select functions from the respective menus or customise functions to the driver's personal preferences. Like in the Audi A6 and Audi A8, there are four so-called softkeys located around the rotary/pushbutton control. If you are in a function menu, e.g. Radio, the currently active function is shown in the four corners of the display - in this case "Memory", "Band", "Manual" and "Sound". Each of the four softkeys opens the associated functional submenu where you can adjust various audio settings - e.g. bass, treble, etc. Pressing the RETURN key takes you back one menu level.

332_062

Internal DVD drive and SD card reader

The internal DVD drive can also be used as an audio source. As with the
SD card reader, it is Mp3 compatible. Please note that during active route guidance, the navigation DVD must remain inserted in the drive. The drive cannot be used simultaneously for navigation and playback of audio data. The data contained on the DVD is specific to this navigation system and cannot be exchanged with the navigation DVD from the Audi A6 or A8. It is not possible to play video DVDs on the DVD drive. The NAME function mainly serves as the destination memory for the navigation system, and is only available when a navigation DVD is inserted.

332_063

Pressing the pop-up button on the left next to the volume control folds down the 6.5 inch wide colour display screen, which is operated by an electromechanical drive. This provides access to the DVD drive and the two multimedia card/SD card slots hidden behind the display screen. These drives are media sources which can play back mp3 files as an alternative to conventional CDs. Commercial SD (Secure Digital) or MMC (Multi Media Card) cards can be used. The cards are locked mechanically into the drive slots. By gently pressing on the inserted card, the lock is released and the card can be removed.

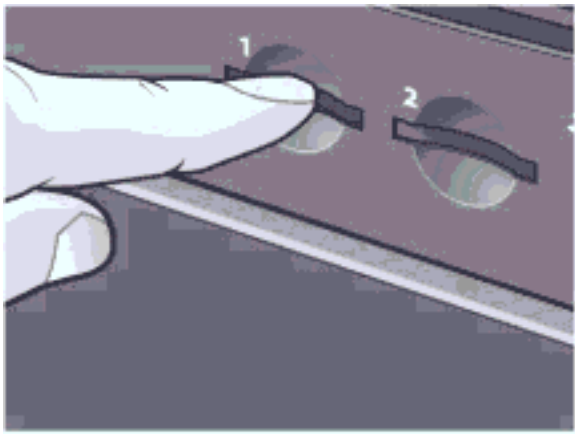

332_064

Integrated voice control

As of next spring, the Navigation Plus system (RNS-E) will be optionally available with voice control. In this case, a microphone which serves as a the voice control is installed into the overhead module. The voice control comes combined with a multifunction steering wheel. The microphone is also used for the universal mobile phone preparation II (if fitted) which eliminates the need for connecting a separate microphone to the telephone transmitter and receiver unit R36.
The voice control of the new Navigation Plus system controls the functions of the radio, audio sources (CD changer, DVD drive, SD card drives), address book (NAME), telephone and navigation system. A Help function is also available. Unlike in the Audi A6 and A8, the voice-operated system is integrated in the operating electronics control unit, navigation J402, and not installed in the vehicle as a separate module. The system is operated using the controls on the multifunction steering wheel. Alternatively, the mobile telephone can be voice-operated by pressing the PTT button on the mobile phone adapter.

Available sound systems

The new Navigation Plus system (RNS-E) for the Audi A3 ´05 comes with a choice of two different sound system options. Firstly, the standard sound system, whereby the two front channels are amplified directly by the power amps of the RNS-E and the other channels are amplified by the amplifier with bass loudspeaker R44 in the rear of the vehicle. This system has self-diagnostic capability and all loudspeaker channels can be diagnosed using the diagnostic tester. During the final control tests on each channel, a fixed frequency is output to the respective final control element. A new feature of models with the standard sound system is that final control tests can now be performed on the rear loudspeakers using the "Final control test" function of the Navigation Plus system (RNS-E) under Address word 37 (Navigation Plus RNS-E). These tests can otherwise only be performed directly using the amplifier with bass loudspeaker (on left in luggage compartment) R44.

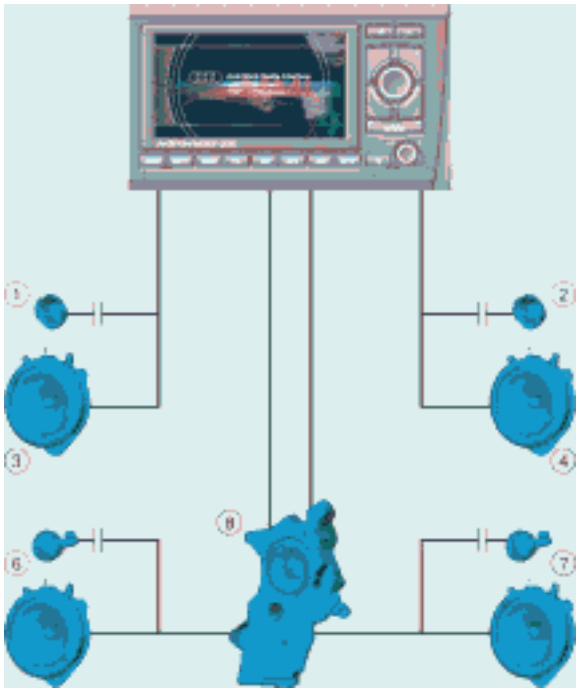

332_042

The optional BOSE sound system does not have selfdiagnosis capability via diagnostic tester VAS 5051 or VAS 5052. All audio channels are amplified by a separate BOSE amplifier. As with the BOSE sound system in the Audi A6 and A8, this amplifier now also features an AudioPilot microphone. However, this AudioPilot system does not send data from the vehicle network (e.g. engine variant, leather or fabric seats) to the BOSE amplifier R12. The AudioPilot system in the Audi A3 records music and noise signals through the microphone in the overhead module, then subtracts the "clean" music signal and, after a frequency analysis, amplifies the frequency ranges affected by noise to a greater degree than the unaffected frequency ranges.

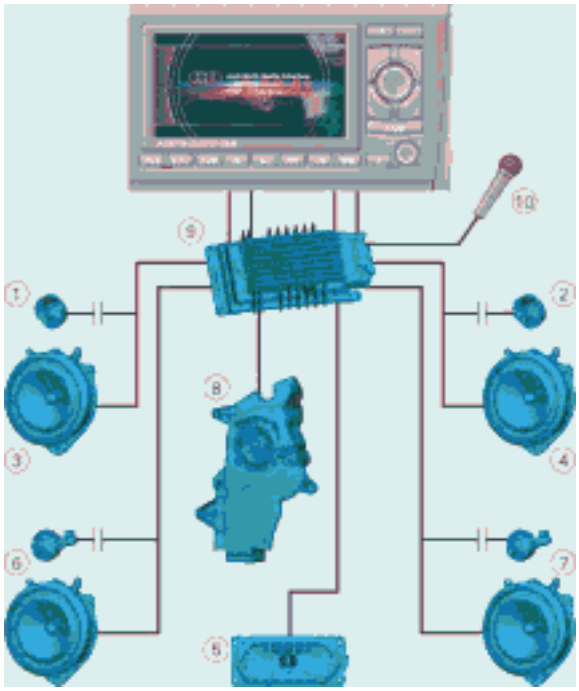

332_041

Reference

For information about the AudioPilot system, please refer to SSP 293, Audi A8 `03 Infotainment.

legend (for Fig. 332_041 and Fig. 332_042)

1 Front left treble loudspeaker R20
2 Front right left treble loudspeaker R22
3 Front left mid-range loudspeaker R103
4 Front right mid-range loudspeaker R104
5 Centre mid-high range loudspeaker
6 Rear left loudspeaker R4
7 Rear right loudspeaker R5
8 Amplifier with bass loudspeaker (on left in luggage compartment) R44 for BOSE: bass loudspeaker R100
9 Amplifier R12
10 Audiopilot microphone

Control of functions using the multimedia interface

Radio (incl. digital radio at a later date)
- the analog radio tuner can be operated are (band selection, station memory, audio settings, etc.)
- the separate digital tuner (subject to national availability) can also be controlled via this menu (DAB, SDARS).

332_065

CD changer / SD cards
The CD/TV key can be used to control an audio CD in the DVD drive or the optional CD changer and both
SD cards. The respective sources are selected by pressing the CD/TV key several times.

332_066

TV tuner
A further option selectable with the CD/TV key is control of the optional TV tuner (currently analog only).

332_067

Universal mobile phone preparation II
Pressing the TEL key opens the menu for controlling the mobile telephone in the optional universal mobile phone preparation II (See SSP 312, Audi A3 ´04 Electrical System).

332_068

DVD navigation
The NAV key opens the control menu of the DVD-based navigation system. A wide range of route display modes and options are available. On entering a destination for example, the driver is offered a choice of up to two alternative routes. A new feature is the "Birdview" function which shows features such as street intersections from an overhead perspective. Also new is the "split screen" function which provides an additional detailed map of street intersections, as shown adjacent.

332_069

Info
The INFO function can be used to play back recorded TP Memo messages and display TMC messages. Additional information is obtained by selecting a message. Press the RETURN button to return to the Main Menu screen.

332_070

System overview

The new Navigation Plus system is fully integrated into the CAN bus architecture of the Audi A3.
Only the optional CD changer exchanges data with the operating electronics control unit, navigation J402 via a separate bus port (Panasonic bus, See SSP 312). The distance signal is sent from the ABS control unit J104 to the vehicle bus system, where it is picked off by the infotainment CAN bus and utilised for navigation purposes, as with the signals from the reversing light switch and the telephone mute function of the optional universal mobile phone preparation II.
A separate pin is provided on the operating electronics control unit, navigation J402 for retrofitting a thirdparty mobile phone preparation. This pin can be used to send the telephone mute signal to the Navigation Plus system. When installing, please note that the coding of the Navigation Plus system (operating electronics control unit, navigation J402) must be adapted accordingly to ensure proper function of the telephone mute function (See section on 'Diagnosis'). Otherwise, the telephone mute signal will be ignored by the operating electronics control unit, navigation J402.

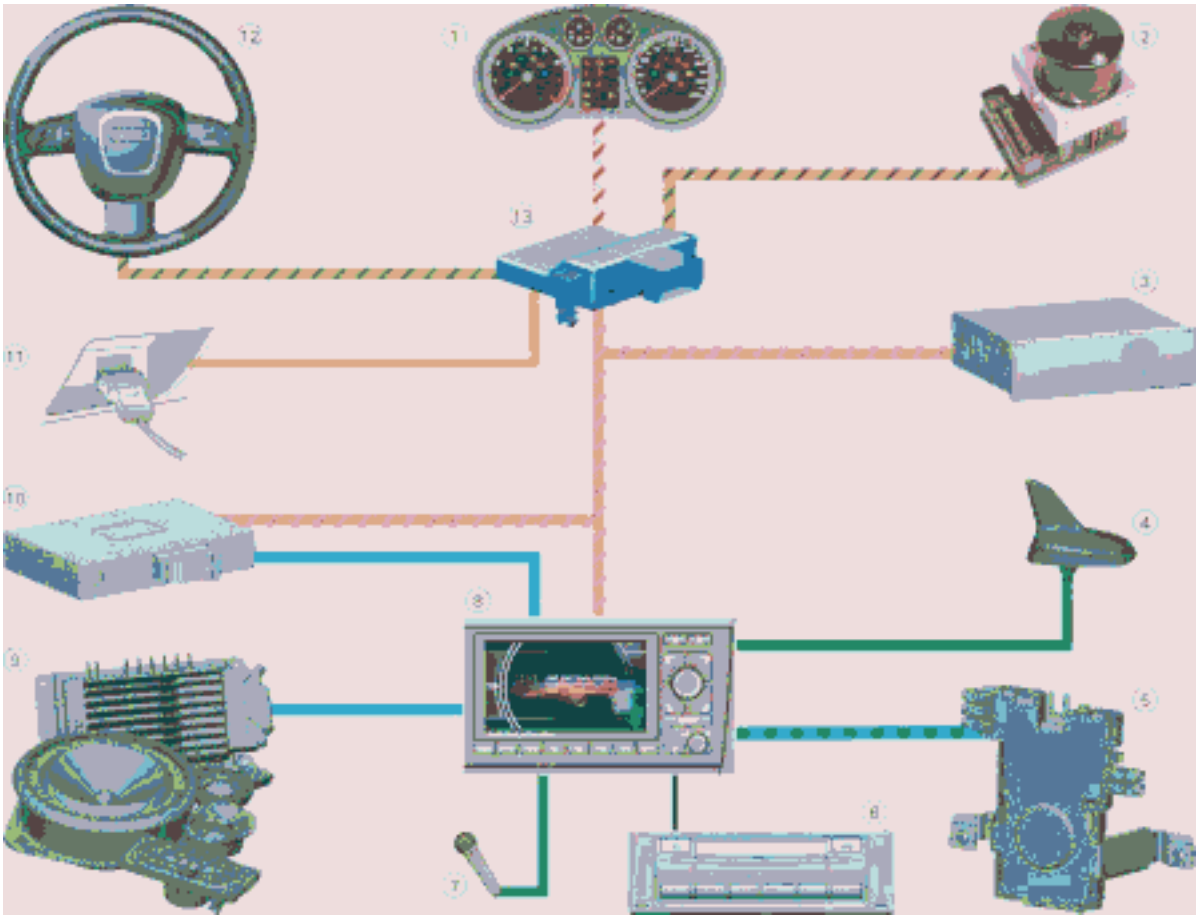

332_038

Legend

1 Control unit with display in dash panel insert J285
2 ABS control unit J104
3 TV tuner R78
4 Telephone aerial R65
5 Left aerial module R108
6 CD changer R41
7 Front left microphone R140 (for voice control/telephone)
8 Operating electronics control unit, navigation J402
9 Sound system
10 Telephone transmitter and receiver unit R36
11 16-pin connector T16 (diagnosis plug)
12 Multi-function steering wheel control unit J453
13 Data bus diagnostic interface J533

Reference

For information about the infotainment CAN bus and the available components, please refer to SSP 312, Audi A3 ´04 Electrical System!

Diagnosis

Most diagnosis procedures for the new Navigation Plus system can be performed using the diagnostic tester. In addition to the extended control unit identification, the following functions are available: data blocks, coding and adaptation functions as well as sequential and selective final control tests.

The control unit identification contains two different part numbers, one for the hardware and one for the software.
Entries in the fault memory are stored together with environmental conditions. The following table shows how they are interpreted:

01101011	5	1	86	0654321	0	25.05.04	15:28:12	
							15:28:12	Time of occurrence of fault
						25.05.04		Date of fault occurrence
					0			must always be zero
				0654321				km reading on fault occurrence
			86					Fault counter
		1						Fault frequency counter
	5							Fault priority level
1011								Fault type
0								System test performed (zero denotes 'yes')
1								Fault saved (1) / not saved (0)
1								Fault active (1) / passive (0)
0								Warning lamp on / off

Coding

					x	Installation of TV tuner, CD changer or multifunction steering wheel
				x		Installation of satellite / digital radio (SDARS / DAB)
			x			Installation of mobile phone preparation Important! If a third-party mobile phone preparation is retrofitted, the value "3" MUST be coded otherwise the telephone mute signal will be ignored by the navigation control unit J402.
		x				Sound characteristic of target vehicle (A3 / A4 / A6 (C5))
	x					Default setting
x						Model

Adaption

Adaption channel	Description
01	Tyre circumference in millimetres. If the input value is "0", then the system in the Audi A3 ´06 will calibrate itself after several kilometres and input the corresponding value automatically.
02	Pulses per wheel revolution. If the input value is "0", then the system in the Audi A3 ´06 will calibrate itself after several kilometres and input the corresponding value automatically.
03	Display language (German / English / French / Italian / Spanish)
05	Threshold switch-off speed for TV picture
07	Units of distance and Road speed (km/h or miles/h), time and date format
08	GALA characteristic curve, if a BOSE system is fitted, this value must be set to "255" as otherwise the AudioPilot will not function properly.
65	Read test for the DVD drive
66	Self-test of the operating electronics control unit, navigation J402 (RNS-E)
67	CD / DVD eject from integrated drive
68	Display test screen
69	Test display folding mechanism
70	Change display brightness (0% - 100%)

Final control tests

No.	Designation	Final control test	
		sequential	selective
1	Front left treble loudspeaker	X	X
2	Bass loudspeaker, front left	X	X
3	Front right left treble loudspeaker	X	X
4	Bass loudspeaker, front right	X	X
5	Rear left treble loudspeaker	X	X
6	Bass loudspeaker, rear left	X	X
9	Rear right treble loudspeaker	X	X
10	Bass loudspeaker, rear right	X	X
11	Subwoofer	X	X
12	Passive front loudspeaker	X	X

Notes

SSP 279

- Engine
- Injection system
- Operating modes
- Exhaust treatment

Order number: 240.2810.98.20

332_084

332_085

SSP 290 Audi A3 '04

- Introduction
- Body
- Engine
- Gearbox
- Running gear
- Electrical system
- Heating/air conditioning
- Service

Order number: A03.5S00.01.20

332_086

SSP 293 Infotainment

- Infotainment
- Sound system
- Radio module
- Navigation

Order number: 000.2811.13.20

SSP 312 Audi A3 '04

- Control units
- Distributed functions
- Infotainment
- Occupant protection

Order number: A03.5S00.03.20

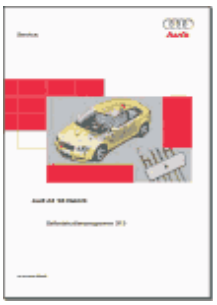

332_087

332_088

SSP 313 Audi A3 '04 Running Gear

- Axles
- Steering
- Brake system
- ESP
- Wheels / tyres
- Hand and foot controls

Order number: A03.5S00.04.20

Vorsprung durch Technik **www.audi.de**

332

All rights reserved.
Technical specifications subject to change without notice.

Copyright
AUDI AG
I/VK-35
Service.training@audi.de
Fax +49-841/89-36367

AUDI AG
D-85045 Ingolstadt
Technical status: 05/04

Printed in Germany
A04.5S00.11.20