Rear Drive Axle - Corvette

SPECIFICATIONS

FASTENER TIGHTENING SPECIFICATIONS

Fastener Tightening Specifications

Application	Specification	
	Metric	English
Differential Case Bolts	55 N.m	41 lb ft
Differential-to-Transmission Bolts and Nuts	50 N.m	37 lb ft
Drain Plug	35 N.m	26 lb ft
Driveline Support Assembly-to-Engine Flywheel Housing Bolts	50 N.m	37 lb ft
Electronic Brake and Traction Control Module (EBTCM) LH Mounting Bracket Bolts	50 N.m	37 lb ft
Fill Plug	35 N.m	26 lb ft
Left Side Cover Bolts	25 N.m	18 lb ft
Negative Battery Cable Bolt	15 N.m	11 lb ft
Pinion Housing/Cage Bolts	25 N.m	18 lb ft
Pinion Nut	500 N.m	370 lb ft
Propeller Input Shaft Bearing Positioning Bolts	35 N.m	26 lb ft
Propeller Shaft Hub Clamp Bolt	130 N.m	96 lb ft
Rear Cover Bolts and Stud	10 N.m	89 lb in
Rear Shock Absorber Lower Mounting Bolt	220 N.m	162 lb ft
Rear Suspension Crossmember Mounting Nuts	110 N.m	81 lb ft
Right Side Cover Bolts	25 N.m	18 lb ft
Ring Gear Bolts	195 N.m	144 lb ft
Shift Control Closeout Boot Retaining Nuts	12 N.m	106 lb in
Shift Control Mounting Bolts	30 N.m	22 lb ft
Transaxle Mount Bracket-to-Differential Bolts	50 N.m	37 lb ft
Transaxle Mount-to-Bracket Nuts	59 N.m	43 lb ft
Transaxle Mount-to-Rear Suspension Crossmember Nuts	50 N.m	37 lb ft
Transmission Oil Cooler Rear Pipe Fitting-to-Junction Fittings at Engine Flywheel Housing	27 N.m	20 lb ft
Transmission Shift Rod Clamp Bolt	30 N.m	22 lb ft

Transmission Stud Mount Bolts	10 N.m	89 lb in
Transmission Stud-to-Mount	42 N.m	31 lb ft
Transmission Wiring Harness-to-LH Transmission Case Retaining Bolt	2.5 N.m	22 lb in
Vehicle Speed Sensor Bolt	10 N.m	89 lb in

REAR AXLE SPECIFICATIONS

Rear Axle Specifications

Application	Specification	
	Metric	**English**
Differential Case Shim Sizes	1.0 mm	0.039 in
	1.25 mm	0.048 in
	1.3 mm	0.050 in
	1.4 mm	0.054 in
	1.5 mm	0.059 in
	1.55 mm	0.060 in
	1.6 mm	0.062 in
	1.65 mm	0.064 in
	1.7 mm	0.066 in
	1.75 mm	0.068 in
	1.8 mm	0.070 in
	1.85 mm	0.072 in
	1.9 mm	0.074 in
	1.95 mm	0.076 in
	2.0 mm	0.078 in
	2.05 mm	0.079 in
	2.1 mm	0.081 in
	2.15 mm	0.083 in
	2.2 mm	0.085 in
	2.25 mm	0.087 in
	2.30 mm	0.089 in
Pinion Housing/Cage Shim Sizes	0.2 mm	0.070 in
	0.25 mm	0.009 in
	0.3 mm	0.011 in
	0.5 mm	0.019 in
	1.0 mm	0.0393 in
	1.30 mm	0.050 in
	1.35 mm	0.052 in
	1.40 mm	0.054 in
	1.45 mm	0.056 in
	1.50 mm	0.058 in

	1.55 mm	0.060 in
	1.60 mm	0.062 in
	1.65 mm	0.064 in
	1.70 mm	0.066 in
	1.75 mm	0.068 in
	1.80 mm	0.070 in
	1.85 mm	0.072 in
	1.90 mm	0.074 in
	1.95 mm	0.076 in
Pinion Rotating Torque	1.4-2.8 N.m	12-25 lb in
Ring Gear/Pinion A1 Nominal Value - All Axles	103.00 mm	4.055 in
Ring Gear/Pinion A2 Nominal Value - 3.15-3.42 Ratio Axles	65.5 mm	2.58 in
Ring Gear/Pinion A2 Nominal Value - 2.73 Ratio Axle	74.5 mm	2.93 in
Ring Gear/Pinion Backlash	0.13-0.21 mm	0.0067-0.0082 in

REAR AXLE USAGE

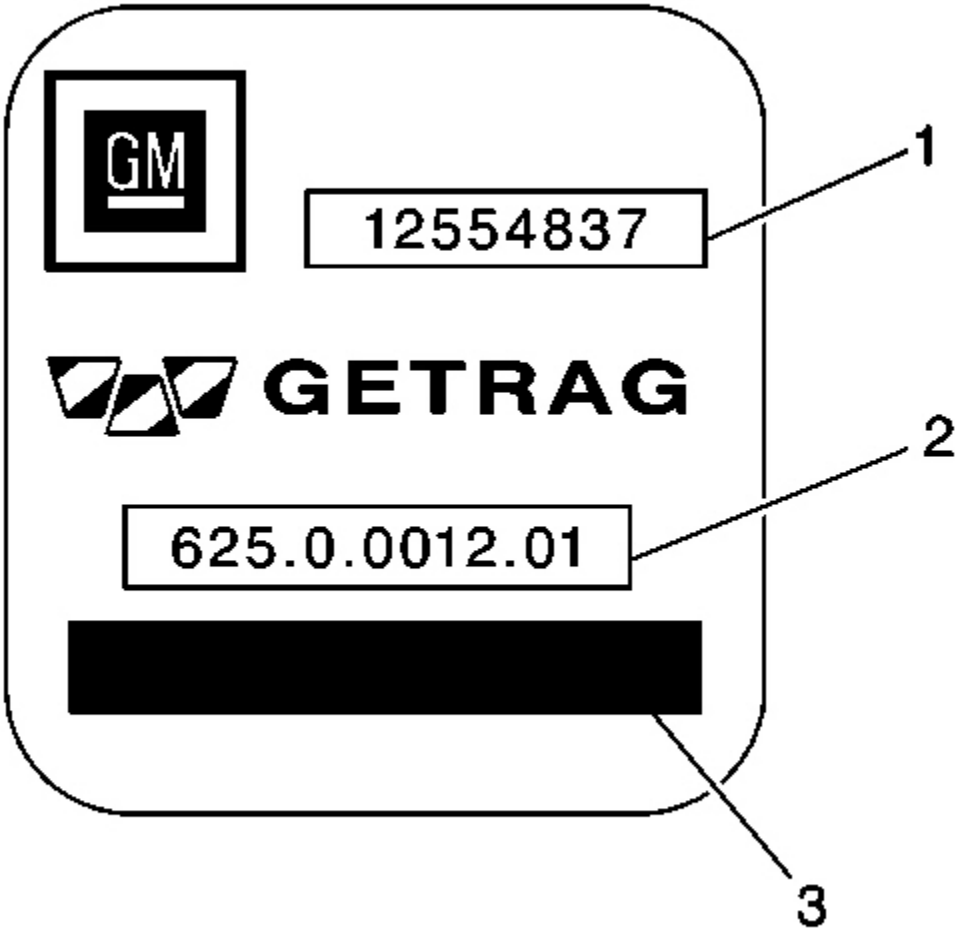

Fig. 1: Rear Axle Usage
Courtesy of GENERAL MOTORS CORP.

Callouts For Fig. 1

Callout	Component Name
1	GM Part Number
2	Getrag Part Number
3	Serial Number

Available Axle Ratios

GM P/N	Axle Ratio	Transmission

12551769	3.42 (Standard)	Manual
12554837	2.73 (Standard)	Automatic
12556313	3.15 (Optional)	Automatic

SPACER AND SHIM SPECIFICATIONS

Pinion Shim Calculation Table with an A1 Value Greater Than 103.00 mm (4.055 in) All Axle Ratios

Calculations	Example Measurements		Actual Measurements	
-	Metric	English	Metric	English
B Nominal Value	5.00 mm	0.197 in	5.00 mm	0.197 in
B1 Measured Value	3.44 mm	0.135 in	-	-
B2 (B Nominal Value Minus B1 = B2)	1.56 mm	0.061 in	-	-
-				
A1 Value (Taken from Ring Gear)	103.03 mm	4.056 in	-	-
A Nominal Value	103.00 mm	4.055 in	103.00 mm	4.055 in
B3 (A1 Value Minus A Nominal = B3)	0.03 mm	0.0012 in	-	-
-				
B2	1.56 mm	0.061 in	-	-
B3	0.03 mm	0.0012 in	-	-
Pinion Shim Size (B2 Plus B3 = Pinion Shim)	1.59 mm	0.0622 in	-	-

Pinion Shim Calculation Table with an A1 Value Less Than 103.00 mm (4.055 in) All Axle Ratios

Calculations	Example Measurements		Actual Measurements	
-	Metric	English	Metric	English
B Nominal Value	5.00 mm	0.197 in	5.00 mm	0.197 in
B1 Measured Value	3.44 mm	0.135 in	-	-
B2 (B Nominal Value Minus B1 = B2)	1.56 mm	0.061 in	-	-
-				
A1 Value (Taken from Ring Gear)	102.97 mm	4.054 in	-	-
A Nominal Value	103.00 mm	4.055 in	103.00 mm	4.055 in
B3 (A1 Value Minus A Nominal = B3)	-0.03 mm	-0.0011 in	-	-
-				
B2	1.56 mm	0.061 in	-	-
B3	-0.03 mm	-0.0011 in	-	-
Pinion Shim Size (B2 Plus B3 = Pinion Shim)	1.53 mm	0.0599 in	-	-

Differential Case Left Side Shim Calculation Table with an A2 Value Greater Than 65.5 mm (2.58 in) 3.15/3.42 Ratio Axles

Calculations	Example Measurements		Actual Measurements	
-	Metric	English	Metric	English
C Nominal Value	5.00 mm	0.197 in	5.00 mm	0.197 in
C1 Measured Value	1.19 mm	0.047 in	-	-
C2 (C Nominal Value Minus C1 = C2)	3.81 mm	0.15 in	-	-
-				
A2 Value (Taken from Ring Gear)	65.53 mm	2.579 in	-	-
D Nominal Value	65.50 mm	2.58 in	65.50 mm	2.58 in
C3 (A2 Value Minus D Nominal = C3)	0.03 mm	0.0012 in	-	-
-				
C2	3.81 mm	0.15 in	-	-
C3	0.03 mm	0.0012 in	-	-
Left Side Case Shim (C2 Plus C3 = Left Side Shim)	3.84 mm	0.1512 in	-	-

Differential Case Left Side Shim Calculation Table with an A2 Value Less Than 65.5 mm (2.58 in) 3.15/3.42 Ratio Axles

Calculations	Example Measurements		Actual Measurements	
-	Metric	English	Metric	English
C Nominal Value	5.00 mm	0.197 in	5.00 mm	0.197 in
C1 Measured Value	1.19 mm	0.047 in	-	-
C2 (C Nominal Value Minus C1 = C2)	3.81 mm	0.15 in	-	-
-				
A2 Value (Taken from Ring Gear)	65.47 mm	2.577 in	-	-
D Nominal Value	65.50 mm	2.58 in	65.50 mm	2.58 in
C3 (A2 Value Minus D Nominal = C3)	-0.03 mm	-0.0012 in	-	-
-				
C2	3.81 mm	0.15 in	-	-
C3	-0.03 mm	-0.0012 in	-	-
Left Side Case Shim (C2 Plus C3 = Left Side Shim)	3.78 mm	0.1498 in	-	-

Differential Case Left Side Shim Calculation Table with an A2 Value Greater Than 74.50 mm (2.933 in) 2.73 Ratio Axles

Calculations	Example Measurements		Actual Measurements	
-	Metric	English	Metric	English
C Nominal Value	5.00 mm	0.197 in	5.00 mm	0.197 in
C1 Measured Value	1.19 mm	0.047 in	-	-
C2 (C Nominal Value Minus C1 = C2)	3.81 mm	0.15 in	-	-

-				
A2 Value (Taken from Ring Gear)	74.53 mm	2.934 in	-	-
D Nominal Value	74.50 mm	2.933 in	74.50 mm	2.933 in
C3 (A2 Value Minus D Nominal = C3)	0.03 mm	0.0012 in	-	-
-				
C2	3.81 mm	0.15 in	-	-
C3	0.03 mm	0.0012 in	-	-
Left Side Case Shim (C2 Plus C3 = Left Side Shim)	3.84 mm	0.1512 in	-	-

Differential Case Left Side Shim Calculation Table with an A2 Value Less Than 74.50 mm (2.933 in) 2.73 Ratio Axles

Calculations	Example Measurements		Actual Measurements	
-	Metric	English	Metric	English
C Nominal Value	5.00 mm	0.197 in	5.00 mm	0.197 in
C1 Measured Value	1.19 mm	0.047 in	-	-
C2 (C Nominal Value Minus C1 = C2)	3.81 mm	0.15 in	-	-
-				
A2 Value (Taken from Ring Gear)	74.47 mm	2.932 in	-	-
D Nominal Value	74.50 mm	2.933 in	74.50 mm	2.933 in
C3 (A2 Value Minus D Nominal = C3)	-0.03 mm	-0.0012 in	-	-
-				
C2	3.81 mm	0.15 in	-	-
C3	-0.03 mm	-0.0012 in	-	-
Left Side Case Shim (C2 Plus C3 = Left Side Shim)	3.78 mm	0.1498 in	-	-

LUBRICATION SPECIFICATIONS

Capacities

Application	Quantity	
	Metric	English
Differential Lubricant	1.6 liters	1.69 quarts
Friction Modifier	0.12 liters	4.0 ounces

SEALERS, ADHESIVES, AND LUBRICANTS

Sealers, Adhesives, and Lubricants

Application	Type of Material	GM Part Numbers	
		United States	Canada
Differential Fill	Differential Lubricant - Synthetic	12378261	10953455

Differential Fill	Friction Modifier	1052358	992694
Stud Mount Bolts	Sealant	1052942	10953466
Transmission Mounting Stud - Case	Sealant	1052942	10953466
Left Cover - Flange	Sealant	1052942	10953466

COMPONENT LOCATOR

REAR AXLE DISASSEMBLED VIEWS

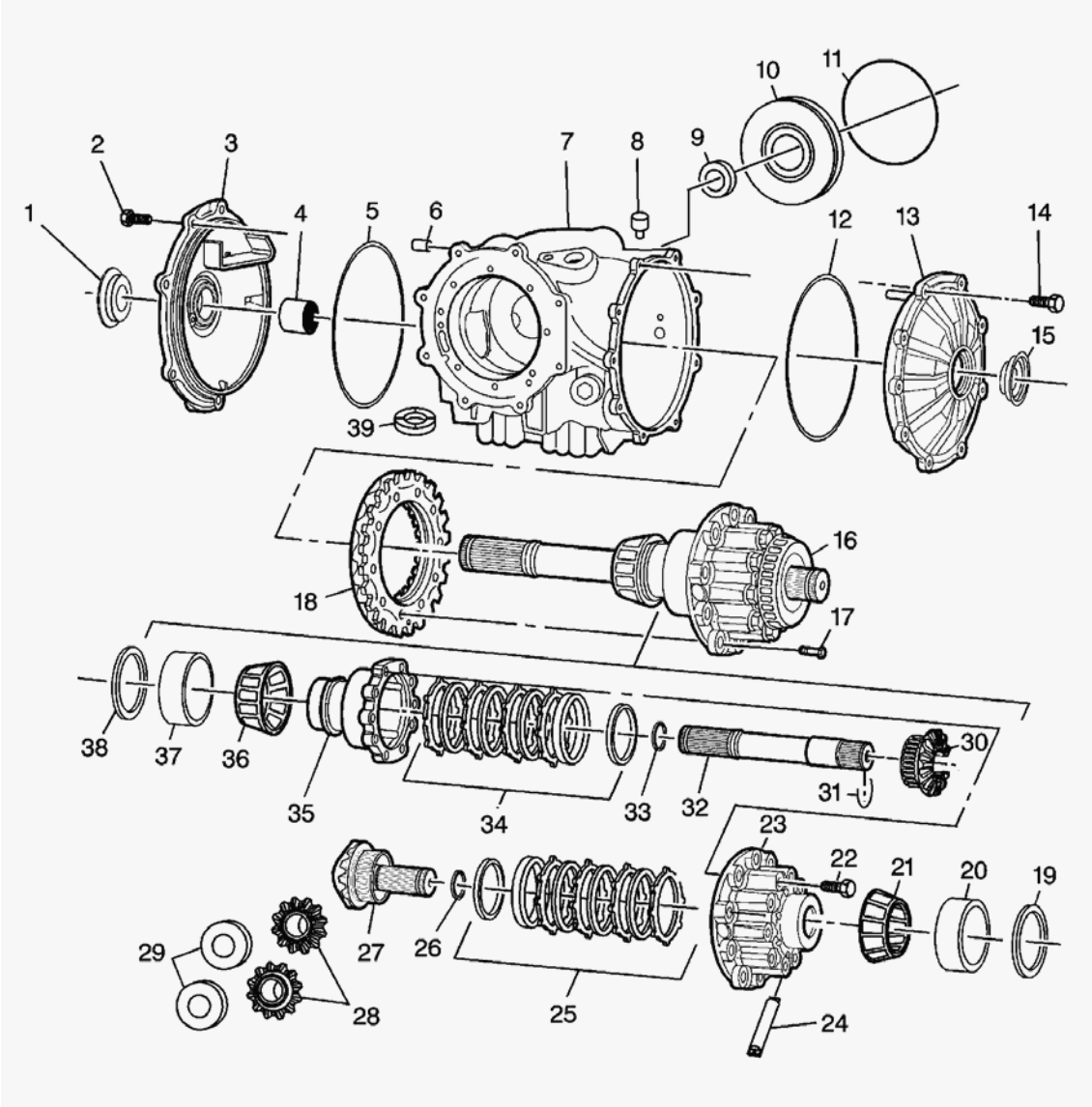

Fig. 2: Differential Carrier and Case Assembly
Courtesy of GENERAL MOTORS CORP.

Callouts For Fig. 2

Callout	Component Name
1	Output Shaft Oil Seal - Left
2	Bolt
3	Cover - Left
4	Bearing
5	O-ring
6	Dowel
7	Carrier
8	Vent
9	Oil Seal - Automatic Transmission Only
10	Cover - Automatic Transmission Only
11	O-ring - Automatic Transmission Only
12	O-ring
13	Cover - Right
14	Bolt
15	Output Shaft Oil Seal - Right
16	Differential Case Assembly
17	Bolt
18	Ring Gear
19	Shim(s)
20	Race
21	Bearing
22	Bolt
23	Differential Case - Right
24	Cross Pin
25	Clutch Pack - Right
26	C-Clip
27	Gear and Output Shaft - Right
28	Side Gears
29	Side Gear Washers
30	Gear - Left
31	C-Clip
32	Output Shaft - Left
33	C-Clip
34	Clutch Pack - Left
35	Differential Case - Left
36	Bearing
37	Race
38	Shim(s)
39	Magnet

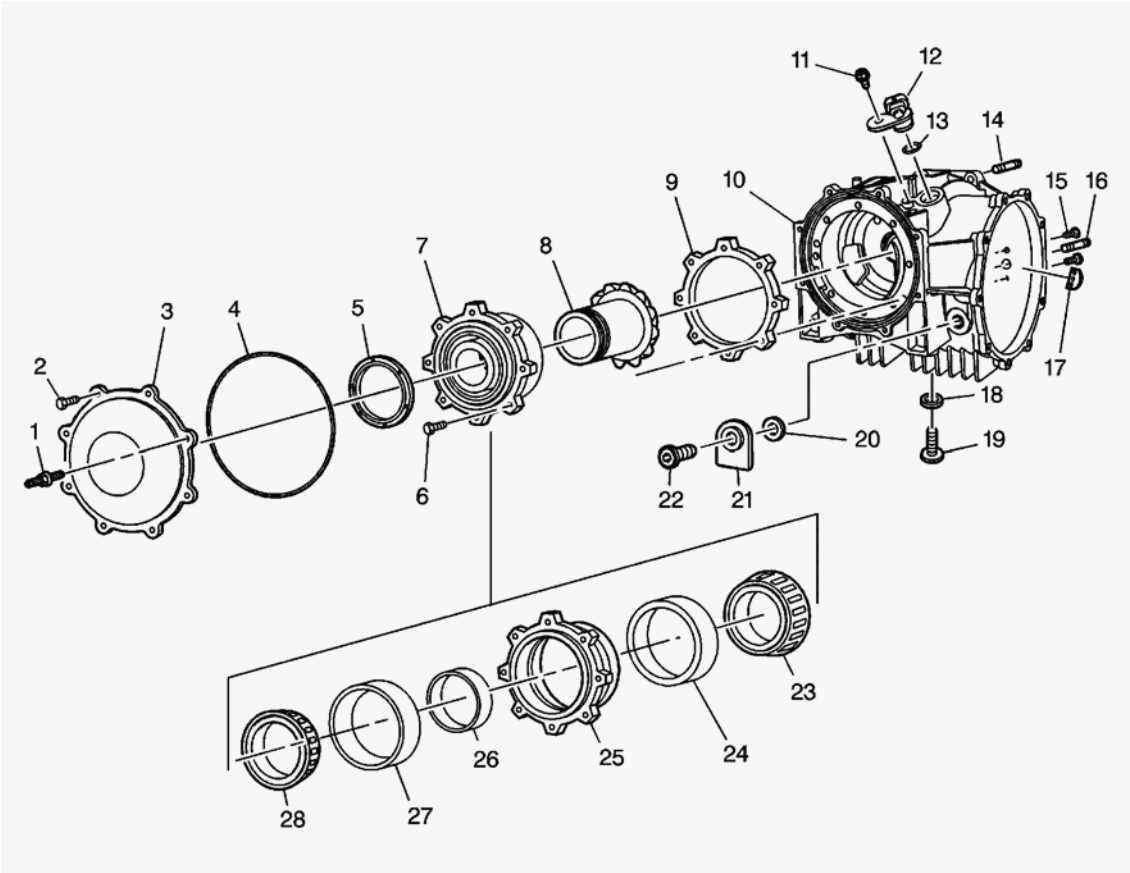

Fig. 3: Drive Pinion Assembly
Courtesy of GENERAL MOTORS CORP.

Callouts For Fig. 3

Callout	Component Name
1	Stud
2	Bolt
3	Cover - Rear
4	O-Ring
5	Nut
6	Bolt
7	Pinion Housing/Cage - with Bearings and Spacer
8	Pinion
9	Shims
10	Carrier
11	Bolt
12	Vehicle Speed Sensor
13	O-Ring
14	Transmission Stud - Cover
15	Bolt

16	Transmission Stud - Case
17	Adapter
18	Washer
19	Drain Plug
20	Washer
21	Lubricant Fill Tag
22	Fill Plug
23	Bearing
24	Race
25	Pinion Housing/Cage
26	Spacer
27	Race
28	Bearing

DIAGNOSTIC INFORMATION AND PROCEDURES

DIAGNOSTIC STARTING POINT - REAR DRIVE AXLE

Begin the system diagnosis by reviewing the **Rear Axle Disassembled Views** and **Rear Drive Axle Description and Operation** and **Wheel Drive Shafts Description and Operation** in Wheel Drive Shafts. Reviewing the description and operation information will help you determine the correct symptom diagnostic procedure when a malfunction exists. Reviewing the description and operation information will also help you determine if the condition described by the customer is normal operation. Refer to **Symptoms - Rear Drive Axle** in order to identify the correct procedure for diagnosing the system and where the procedure is located.

SYMPTOMS - REAR DRIVE AXLE

Strategy Based Diagnostics

Review the system operations in order to familiarize yourself with the system functions. Refer to **Rear Axle Disassembled Views** and **Rear Drive Axle Description and Operation** and **Wheel Drive Shafts Description and Operation** in Wheel Drive Shafts. All diagnosis on a vehicle should follow a logical process. Strategy based diagnostics is a uniform approach for repairing all systems. The diagnostic flow may always be used in order to resolve a system problem. The diagnostic flow is the place to start when repairs are necessary. For a detailed explanation, refer to **Strategy Based Diagnosis** in General Information.

Visual/Physical Inspection

- Inspect for aftermarket devices, which could affect the operation of the vehicle. Refer to **Checking Aftermarket Accessories** in Wiring Systems.
- Inspect the easily accessible or visible system components for obvious damage or conditions, which could cause the symptom.
- Check for the correct lubricant level and the proper viscosity.
- Verify the exact operating conditions under which the concern exists. Note factors such as vehicle speed,

road conditions, ambient temperature, and other specifics.

- Compare the driving characteristics or sounds, if applicable, to a known good vehicle and make sure you are not trying to correct a normal condition.

Intermittent

Test the vehicle under the same conditions that the customer reported in order to verify the system is operating properly.

Symptom List

Refer to a symptom diagnostic procedure from the following list in order to diagnose the symptom:

- **Diagnostic Starting Point - Vibration Diagnosis and Correction** in Vibration Diagnosis and Correction
- **Diagnostic Starting Point - Automatic Transmission** in Automatic Transmission - 4L60-E
- **Transmission Noisy** in Manual Transmission - MM6
- **Symptoms - Propeller Shaft** in Propeller Shaft
- **Clutch Noisy** in Clutch
- **Noisy in Drive**
- **Noisy When Coasting**
- **Intermittent Noise**
- **Constant Noise**
- **Noisy on Turns**
- **Rear Axle Lubricant Leak Diagnosis**

NOISY IN DRIVE

Noisy in Drive

Cause	Correction
IMPORTANT: **Inspect for the proper gear oil levels prior to performing system diagnosis. Refer to Lubricant Level Inspection - Rear Drive Axle .**	
Worn clutch disc and/or pressure plate assembly	Repair or replace as required. Refer to **Clutch Noisy** in Clutch.
Transmission noise	Repair or replace as required. Refer to **Transmission Noisy** in Manual Transmission - MM6 or **Diagnostic Starting Point - Automatic Transmission** in Automatic Transmission - 4L60-E.
Driveline assembly noise	Repair or replace as required. Refer to **Symptoms - Propeller Shaft** in Propeller Shaft.
Worn axle shaft constant velocity joints	Replace the constant velocity joints as required.

Worn, loose, or damaged axle mount and/or bracket	Repair or replace the axle mount and/or bracket as required.
Bearing noise within the differential assembly	A grinding or roar type noise will increase or decrease relative to the vehicle speed. 1. Check for the proper fluid level. Fill as required. 2. If the noise continues, repair or replace the unit as required.
Gear set whine noise within the differential assembly	A whine type noise will increase or decrease relative to the vehicle speed, approximately 31-37 km/h (50-60 mph). Typical causes of a gear set whine type noise may include incorrect backlash and/or pinion depth adjustment or worn or scored gear set teeth. 1. Check for the proper fluid level. Fill as required. 2. Repair or replace the unit as required.

NOISY WHEN COASTING

Noisy When Coasting

Cause	Correction
IMPORTANT: **Inspect for the proper gear oil levels prior to performing system diagnosis. Refer to Lubricant Level Inspection - Rear Drive Axle .**	
Worn axle shaft constant velocity joints	Replace the constant velocity joints as required.
Worn, loose, or damaged axle mount and/or bracket	Repair or replace the axle mount and/or bracket as required.
Bearing noise within the differential assembly	A grinding or roar type noise will increase or decrease relative to the vehicle speed. 1. Inspect for the proper fluid level. Fill as required. 2. If the noise continues, repair or replace the unit as required.
Gear set whine noise within the differential assembly	A whine type noise will increase or decrease relative to the vehicle speed, approximately 31-37 km/h (50-60 mph). Typical causes of a gear set whine type noise may include incorrect backlash and/or pinion depth adjustment or worn or scored gear set teeth. 1. Inspect for the proper fluid level. Fill as required. 2. Repair or replace the unit as required.

INTERMITTENT NOISE

Intermittent Noise

Cause	Correction
IMPORTANT: **Inspect for the proper gear oil levels prior to performing system diagnosis. Refer to Lubricant Level Inspection - Rear Drive Axle .**	
Worn, loose, or damaged axle mount and/or bracket	Repair or replace the axle mount and/or bracket as required.
Incorrect gear oil	Replace with the correct gear oil and friction modifier additive. Refer to **Sealers, Adhesives, and Lubricants** .

CONSTANT NOISE

Constant Noise

Cause	Correction
IMPORTANT: **Inspect for the proper gear oil levels prior to performing system diagnosis. Refer to Lubricant Level Inspection - Rear Drive Axle .**	
Low gear oil levels	Faulty oil seals or other type leaks may contribute to lower than required fluid levels. Refer to **Rear Axle Lubricant Leak Diagnosis** . Fill to the proper level with the correct gear oil and friction modifier additive. Refer to **Sealers, Adhesives, and Lubricants** and **Lubricant Change** .
Worn, loose, or damaged axle mount and/or bracket	Repair or replace the axle mount and/or bracket as required.
Bearing noise within the differential assembly	A grinding or roar type noise will increase or decrease relative to the vehicle speed. 1. Inspect for the proper fluid level. Fill as required. 2. If the noise continues, repair or replace the unit as required.
Gear set whine noise within the differential assembly	A whine type noise will increase or decrease relative to the vehicle speed, approximately 31-37 km/h (50-60 mph). Typical causes of a gear set whine type noise may include incorrect backlash and/or pinion depth adjustment or worn or scored gear set teeth. 1. Inspect for the proper fluid level. Fill as required. 2. Repair or replace the unit as required.

NOISY ON TURNS

Noisy on Turns

Cause	Correction
IMPORTANT: • **Inspect for the proper gear oil levels prior to performing system diagnosis. Refer to Lubricant**	

Level Inspection - Rear Drive Axle . • **Operate the vehicle turning in tight circles in both left and right directions. A chatter type concern may indicate an incorrect type gear oil, lack of the friction modifier additive, or worn friction discs and/or plates.**	
Worn or loose rear axle mount and/or bracket	Repair or replace as required.
Worn axle shaft constant velocity joints	Replace the constant velocity joints as required.
Worn wheel bearings	Replace the wheel bearings as required.
Incorrect gear oil	Fill to the proper level with the correct gear oil and friction modifier additive. Refer to **Sealers, Adhesives, and Lubricants** and **Lubricant Change** .
Worn clutch plates	Replace the friction discs and plates as required.

REAR AXLE LUBRICANT LEAK DIAGNOSIS

Rear Axle Lubricant Leak Diagnosis

Cause	Correction
IMPORTANT: **Upon completion of all repairs, refill the axle with the proper amounts of axle lubricant and friction modifier additive. Refer to Lubricant Change and Lubrication Specifications .**	
Restricted or damaged vent valve assembly	Repair or replace the vent valve as required.
Worn, scored, or missing drain and/or fill plug sealing washers	Install new sealing washers and tighten the plugs per specifications.
Damaged speed sensor and/or O-ring seal	Replace the speed sensor and/or the O-ring seal as required.
Leaking transmission mounting stud	Remove the mounting stud, and reseal the threads.
Rear cover O-ring seal	Replace the rear cover O-ring seal.
Left or right side cover O-ring seal	Replace the side cover O-ring seal as required.
Worn or damaged axle shaft oil seals	Replace the axle shaft oil seals as required.
Worn or damaged carrier seal plate O-ring or oil seal - automatic transmission only	Replace the O-ring and oil seal as required.
Housing or side cover porosity	Replace the housing and/or the covers as required.

REPAIR INSTRUCTIONS

LUBRICANT CHANGE

Draining Procedure

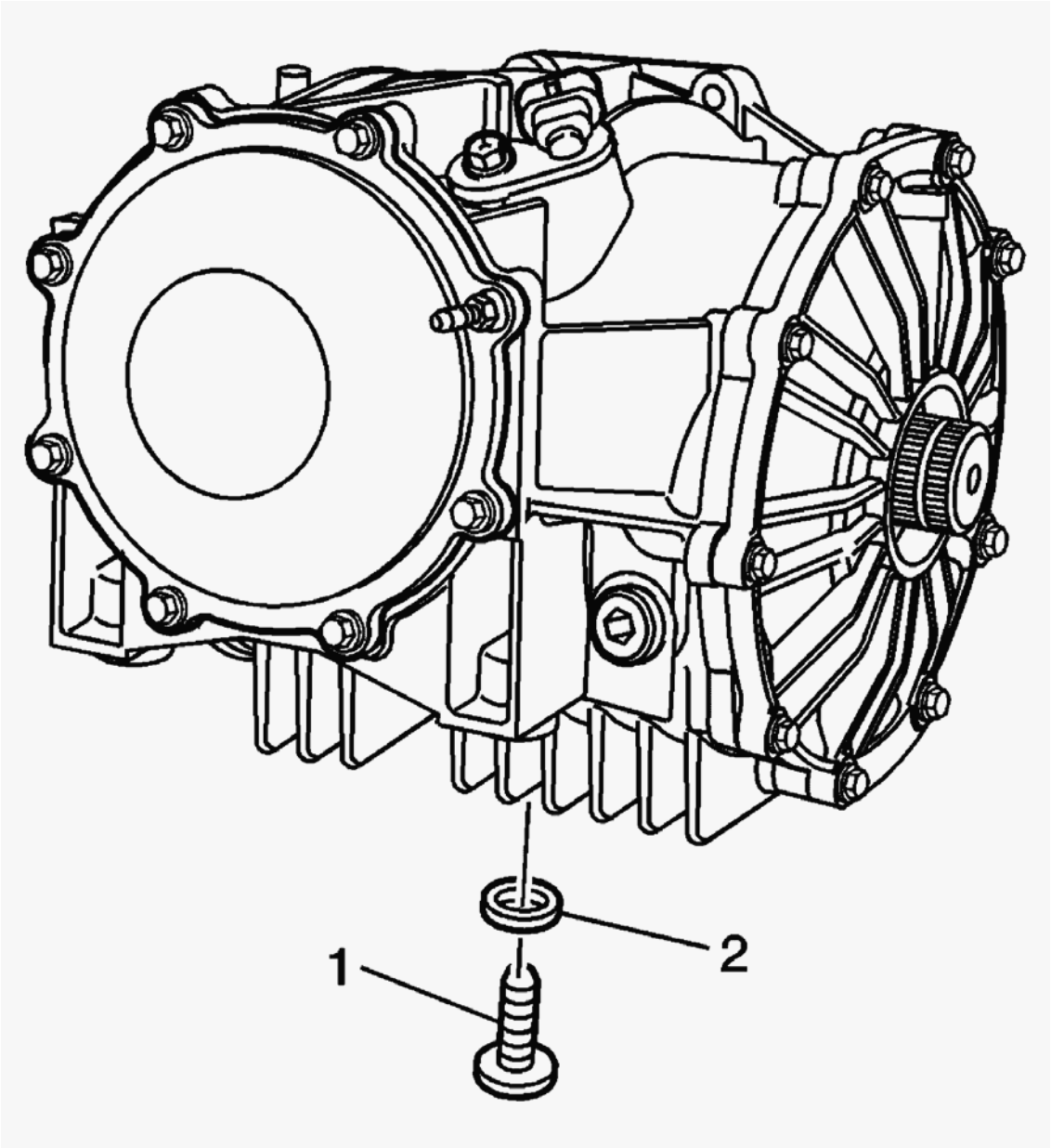

Fig. 4: Differential, Drain Plug & Washer
Courtesy of GENERAL MOTORS CORP.

1. Raise and support the vehicle. Refer to **Lifting and Jacking the Vehicle** in General Information.
2. Clean any dirt from around the differential drain plug.
3. Remove the drain plug and washer from the differential.
4. Drain the fluid.

Filling Procedure

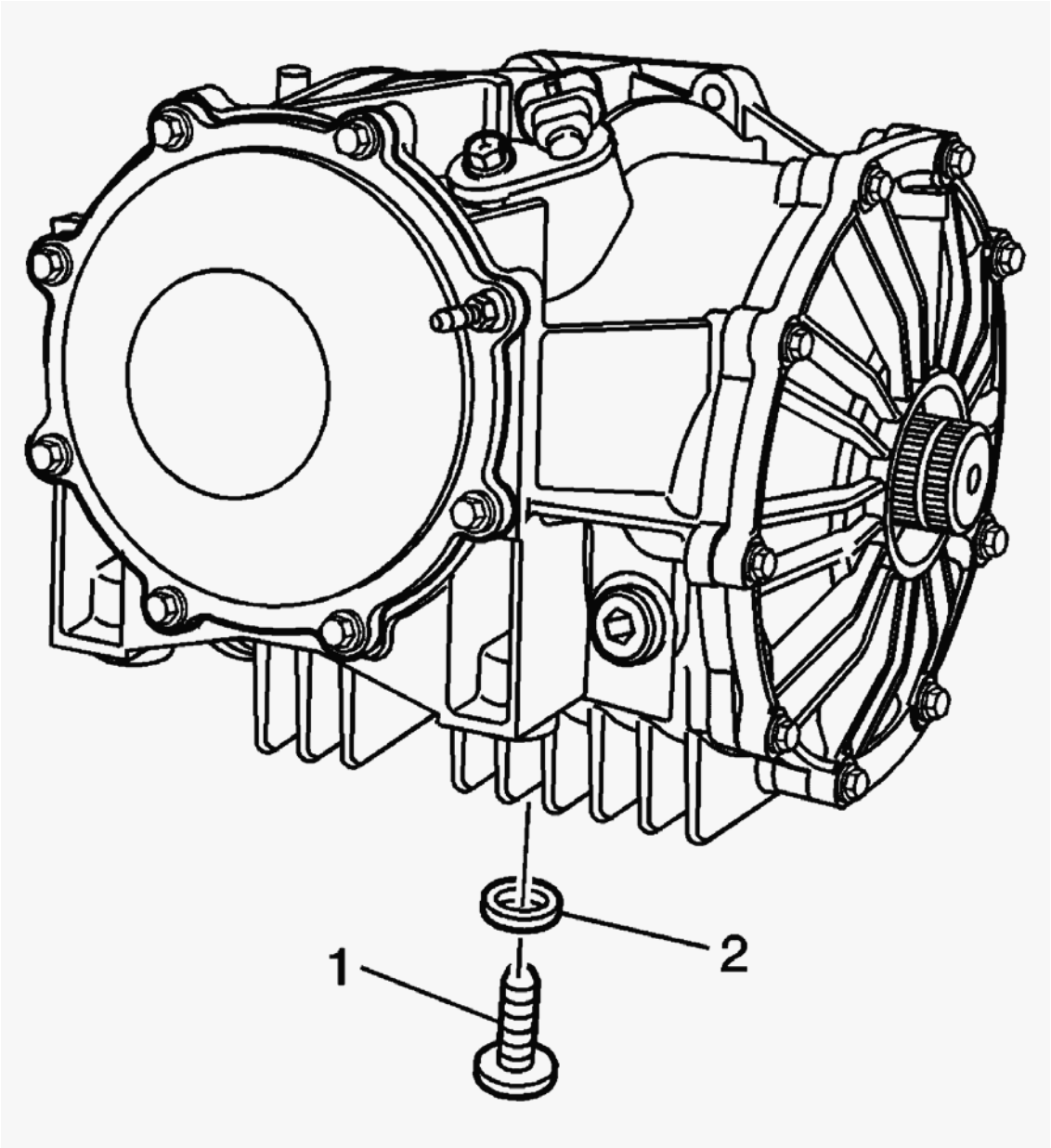

Fig. 5: Differential, Drain Plug & Washer
Courtesy of GENERAL MOTORS CORP.

NOTE: **Refer to Fastener Notice .**

IMPORTANT: **Do not operate the vehicle at wide open throttle for a minimum of 480 km (300 miles) after refilling the differential with lubricant and friction modifier. Scoring of the ring and pinion gears may result, leading to differential noise.**

1. Install the drain plug and washer to the differential.

Tighten: Tighten the differential drain plug to 35 N.m (26 lb ft).

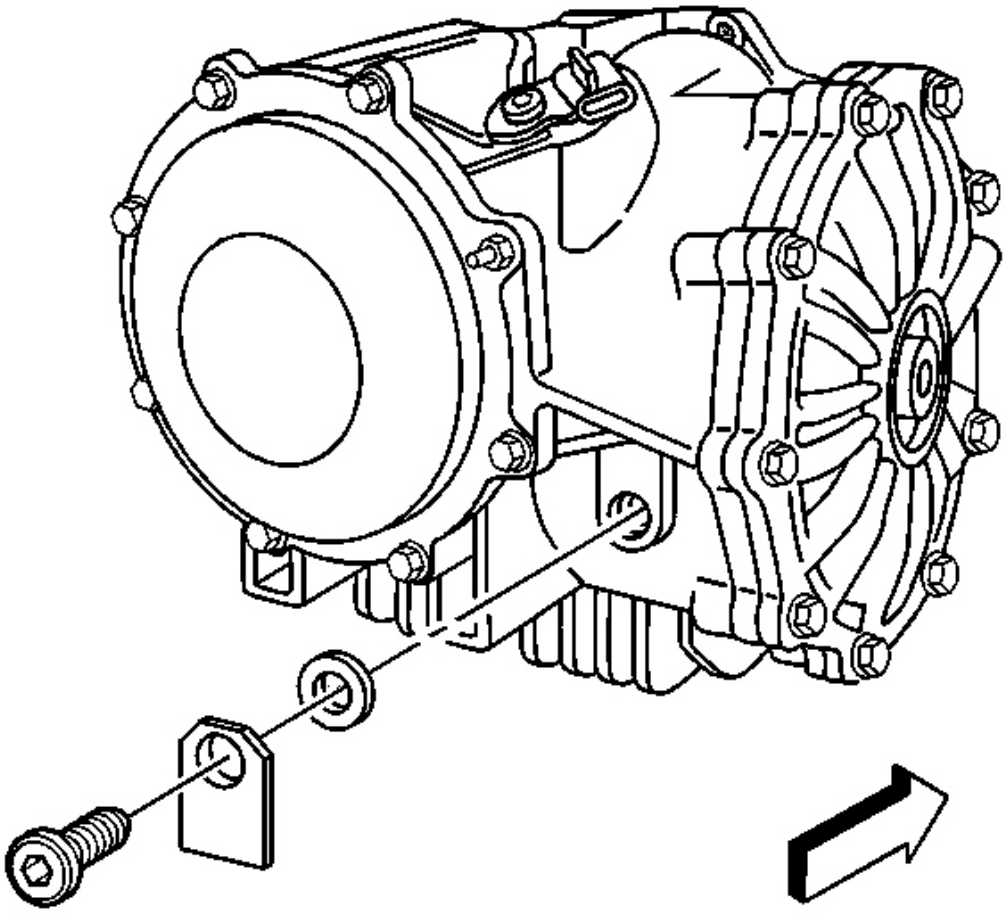

Fig. 6: Differential, Fill Plug, Lubricant Tag, & Washer
Courtesy of GENERAL MOTORS CORP.

2. Clean any dirt from around the differential fill plug.
3. Remove the fill plug, lubricant tag, and washer from the differential.
4. Fill the differential with fluid:
   - Fill with synthetic axle lubricant GM P/N 12378261 (Canadian P/N 10953455).
   - Add approximately 118 ml (4.0 oz) limited-slip differential lubricant additive GM P/N 1052358 (Canadian P/N 992694).
5. Check the fluid level to ensure it is even with the bottom of the fill plug hole to no lower than 6 mm (0.25 in) below the opening.

6. Install the fill plug, lubricant tag, and washer to the differential.

   Tighten: Tighten the differential fill plug to 35 N.m (26 lb ft).

7. Lower the vehicle.

LUBRICANT LEVEL INSPECTION - REAR DRIVE AXLE

Inspection Procedure

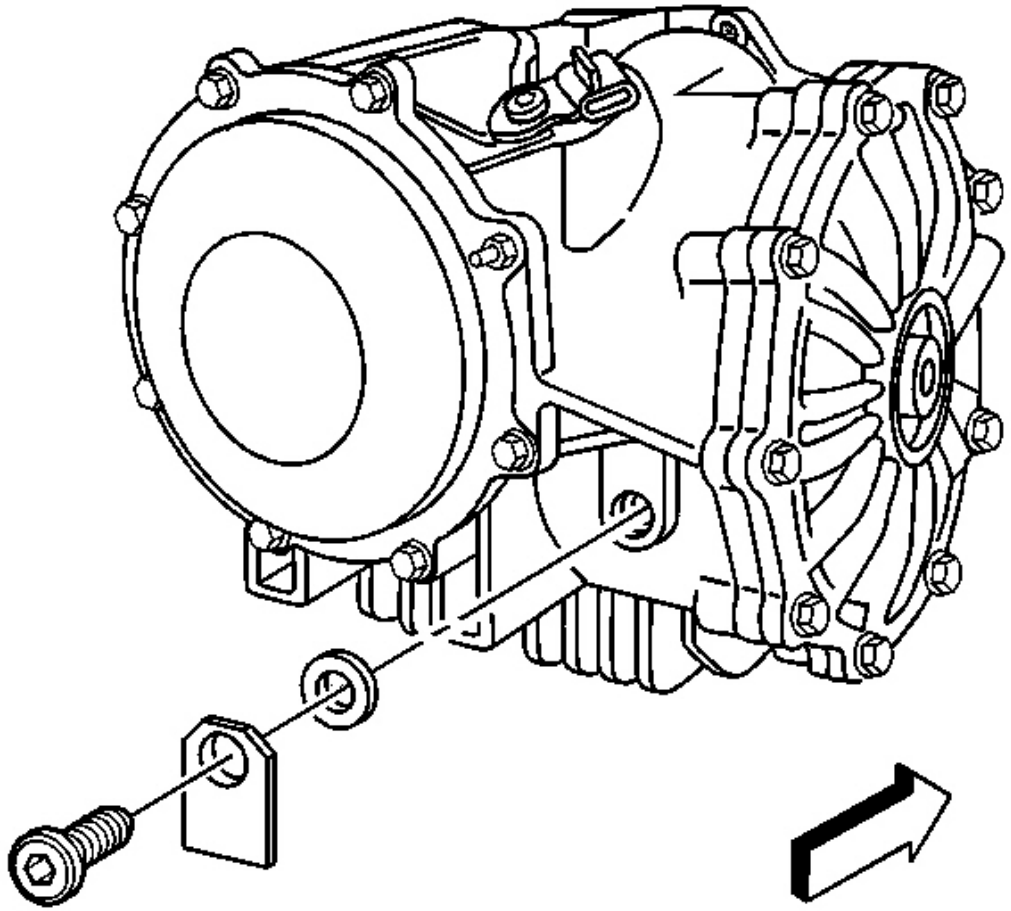

Fig. 7: Differential, Fill Plug, Lubricant Tag, & Washer
Courtesy of GENERAL MOTORS CORP.

1. Raise and support the vehicle. Refer to **Lifting and Jacking the Vehicle** in General Information.

2. Clean any dirt from around the differential fill plug.
3. Remove the fill plug, lubricant tag, and washer from the differential.
4. Check the differential fluid level. it should be even with the bottom of the fill plug hole to no lower than 6 mm (0.25 in) below the opening.
5. Add new fluid if necessary.
   - Fill with synthetic axle lubricant GM P/N 12378261 (Canadian P/N 10953455).
   - If necessary, add enough limited-slip differential lubricant additive GM P/N 1052358 (Canadian P/N 992694), or equivalent to maintain the original ratio of 1.6 L (1.69 qt) of axle lubricant to 118 ml (4.0 oz) of limited-slip additive.

NOTE: Refer to Fastener Notice in Cautions and Notices.

6. Install the fill plug, lubricant tag, and washer to the differential.

   Tighten: Tighten the differential fill plug to 35 N.m (26 lb ft).

7. Lower the vehicle.

AXLE VIBRATION DAMPER REPLACEMENT

Removal Procedure

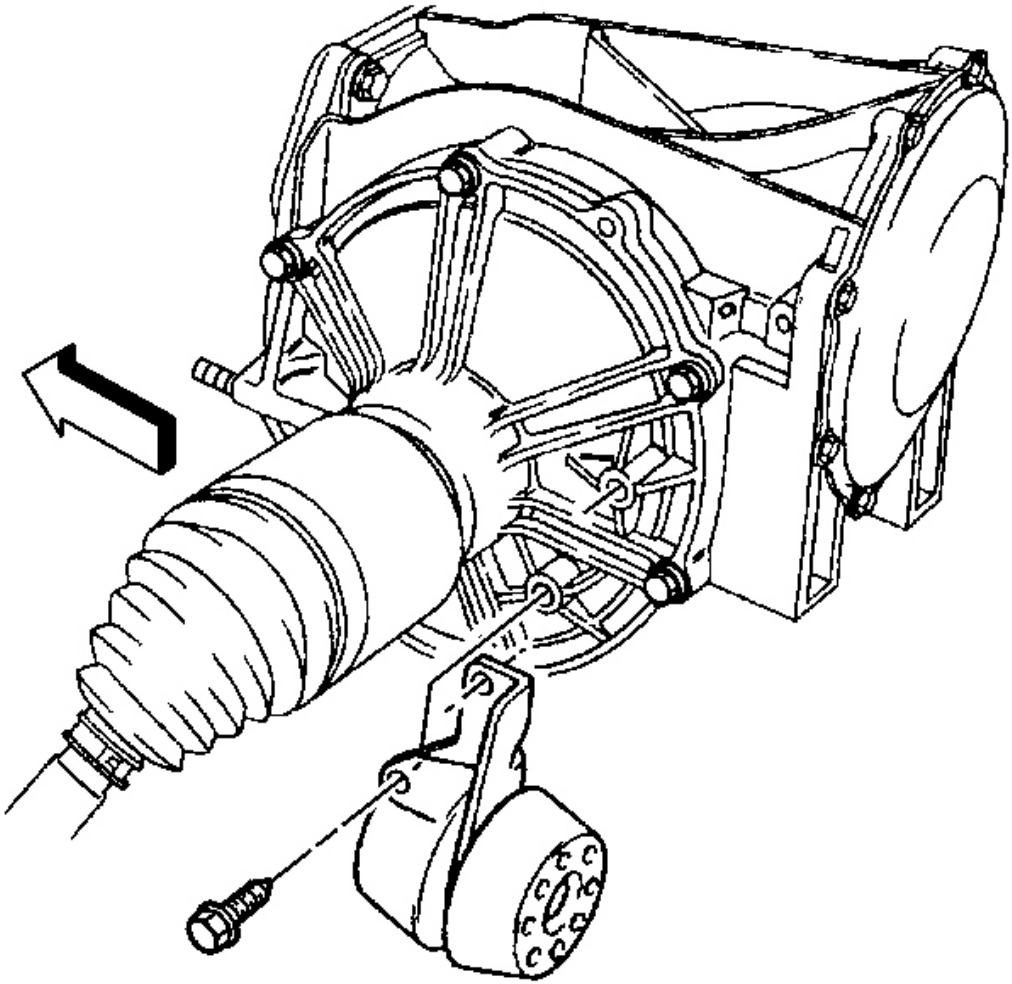

Fig. 8: Differential Cover, Damper/Tuned Absorber & Bolts
Courtesy of GENERAL MOTORS CORP.

1. Raise and suitably support the vehicle. Refer to **Lifting and Jacking the Vehicle** in General Information.
2. Remove the LH rear tire and wheel assembly. Refer to **Tire and Wheel Removal and Installation** in Tires and Wheels.
3. Remove the damper/tuned absorber mounting bolts.
4. Remove the damper/tuned absorber.

Installation Procedure

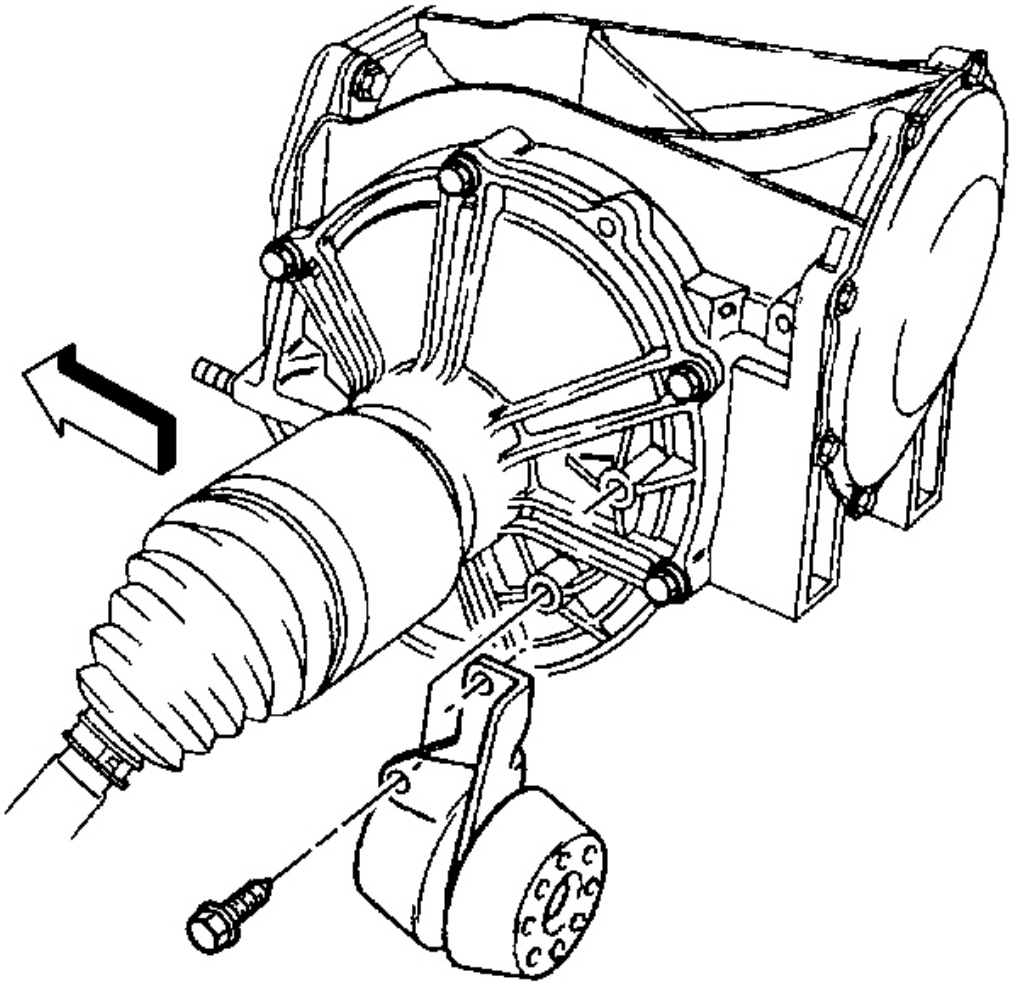

Fig. 9: Differential Cover, Damper/Tuned Absorber & Bolts
Courtesy of GENERAL MOTORS CORP.

1. Install the damper/tuned absorber to the differential.

   NOTE: Refer to Fastener Notice in Cautions and Notices.

2. Install the damper/tuned absorber mounting bolts.

   Tighten: Tighten the damper/tuned absorber mounting bolts to 25 N.m (18 lb ft).

3. Install the LH rear tire and wheel assembly. Refer to **Tire and Wheel Removal and Installation** in Tires

and Wheels.

4. Lower the vehicle.

TRANSMISSION MOUNT REPLACEMENT

Tools Required

J 42055 Transmission Support Fixture

Removal Procedure

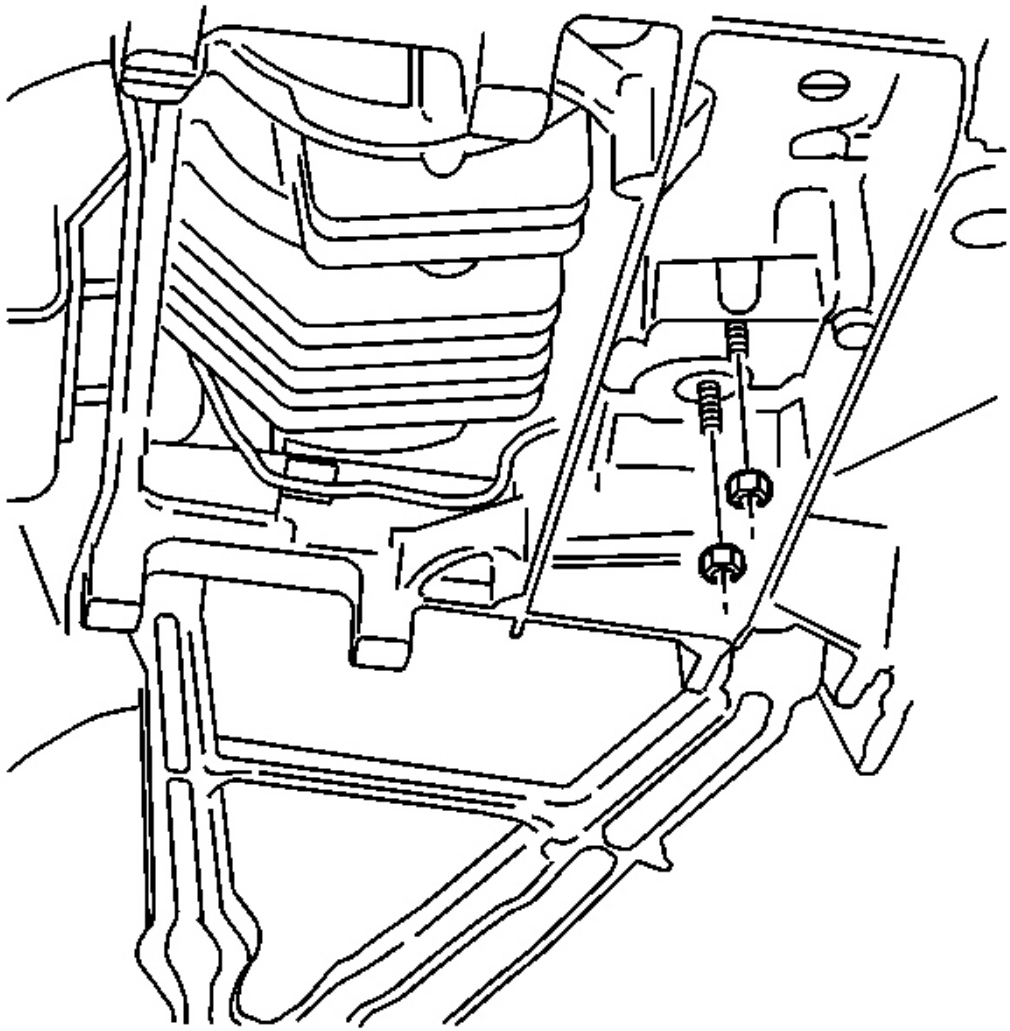

Fig. 10: Transaxle Mount & Rear Crossmember Nuts
Courtesy of GENERAL MOTORS CORP.

CAUTION: Refer to Battery Disconnect Caution in Cautions and Notices.

1. Disconnect the negative battery cable.
2. Raise and suitably support the vehicle. Refer to **Lifting and Jacking the Vehicle** in General Information.
3. Remove the rear tire and wheel assemblies. Refer to **Tire and Wheel Removal and Installation** in Tires and Wheels.
4. Remove the rear leaf spring. Refer to **Rear Transverse Spring Replacement** in Rear Suspension.
5. Remove the transaxle mount to rear crossmember nuts.

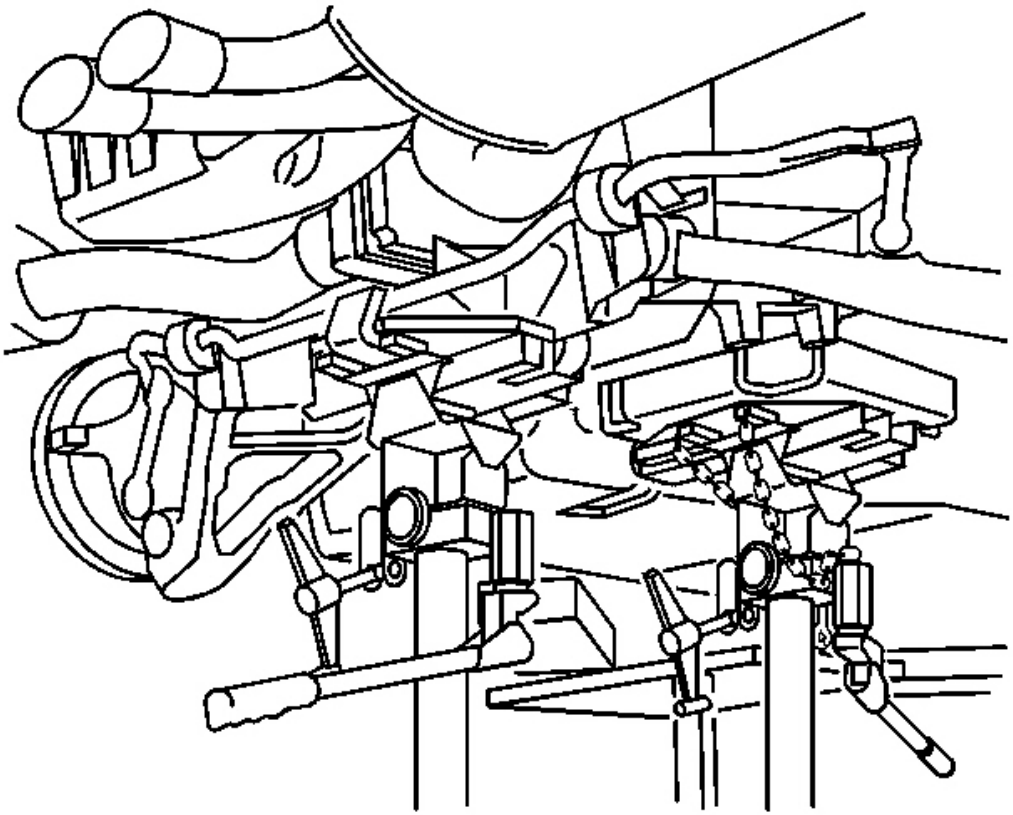

Fig. 11: View Of Jack Under Front End
Courtesy of GENERAL MOTORS CORP.

6. Assemble the **J 42055** .
7. Install the **J 42055** to a transmission jack.
8. Position and firmly secure the **J 42055** with the transmission jack to the transmission.
9. Position a transmission jack under the rear suspension crossmember and firmly secure the crossmember to the jack.
10. Using ONLY HAND TOOLS, remove the rear suspension crossmember retaining nuts.
11. Carefully lower the rear crossmember approximately 37 mm (1.5 in).

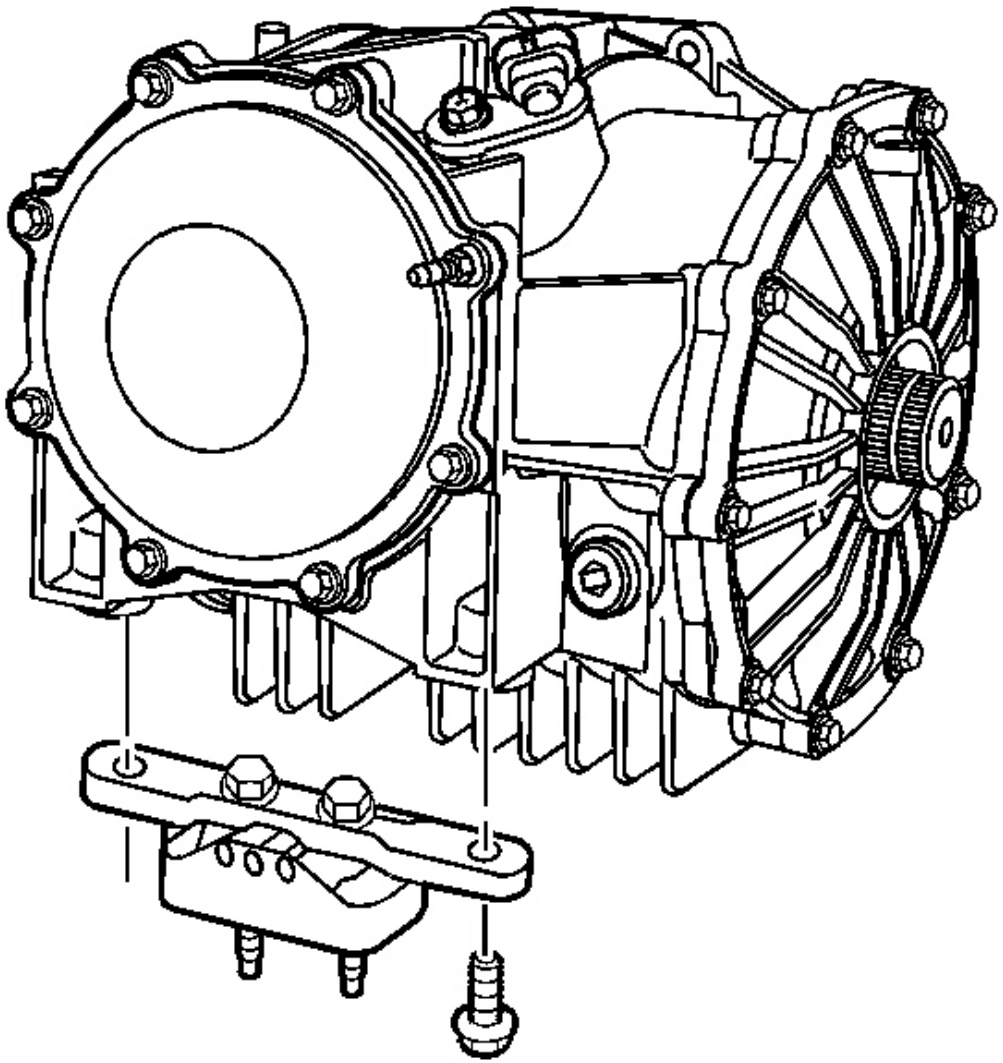

Fig. 12: Transaxle Mount Bracket & Differential Bolts
Courtesy of GENERAL MOTORS CORP.

12. Remove the transaxle mount bracket to differential bolts.
13. Remove the transaxle mount with bracket.

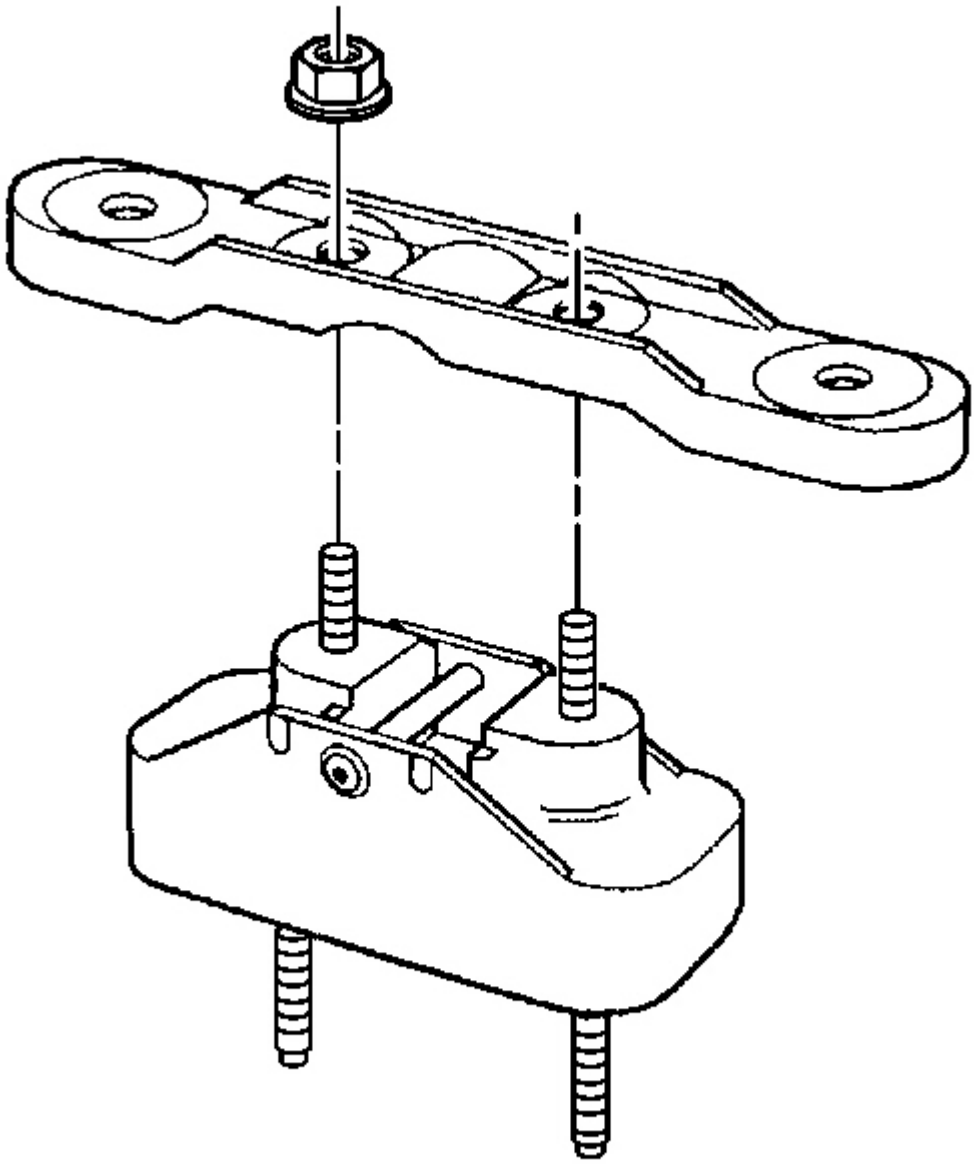

Fig. 13: Transaxle Mount & Bracket Nuts
Courtesy of GENERAL MOTORS CORP.

14. Remove the transaxle mount to bracket nuts.

Installation Procedure

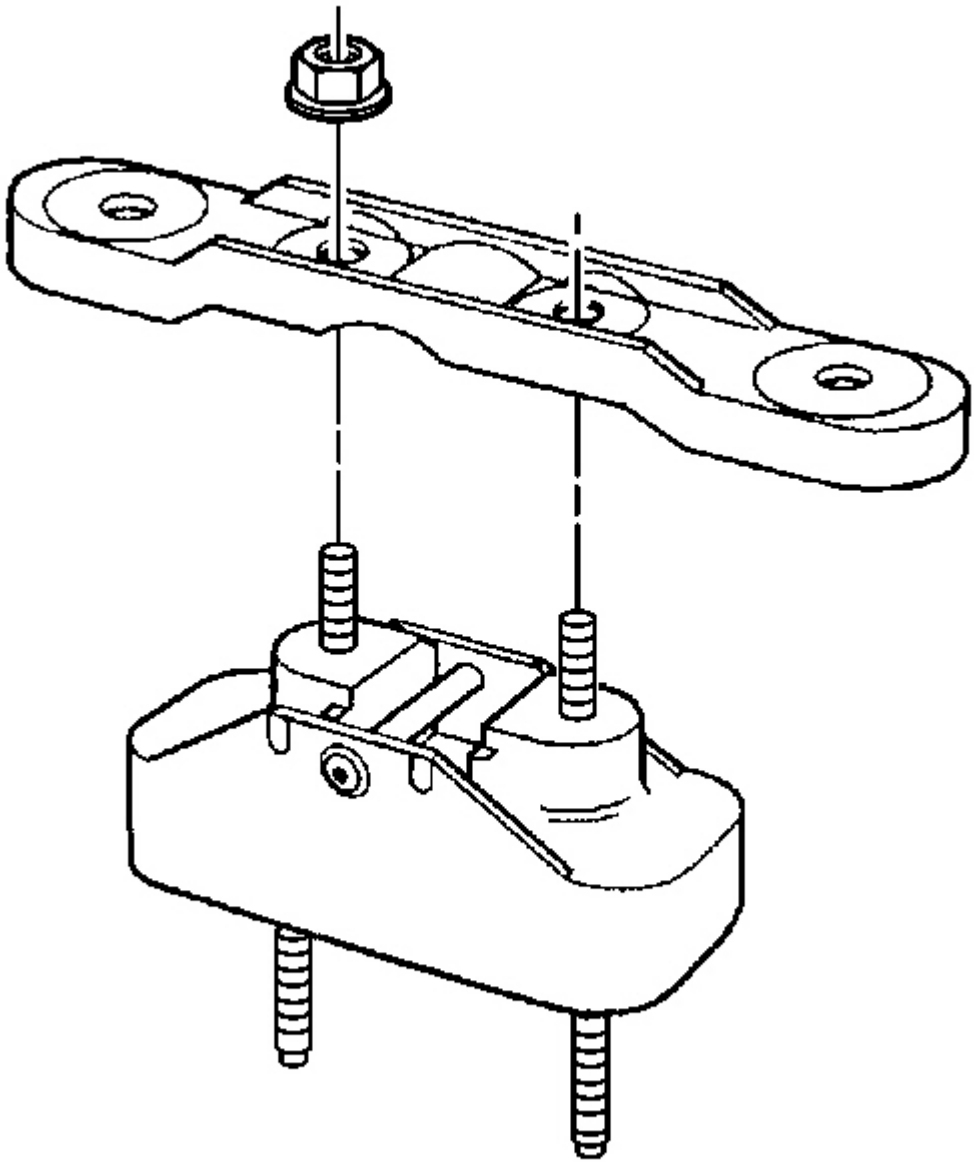

Fig. 14: Transaxle Mount & Bracket Nuts
Courtesy of GENERAL MOTORS CORP.

1. Install the transaxle mount to the transaxle mount bracket.

NOTE: **Refer to Fastener Notice in Cautions and Notices.**

2. Install the transaxle mount to bracket nuts.

Tighten: Tighten the transaxle mount to bracket nuts to 59 N.m (43 lb ft).

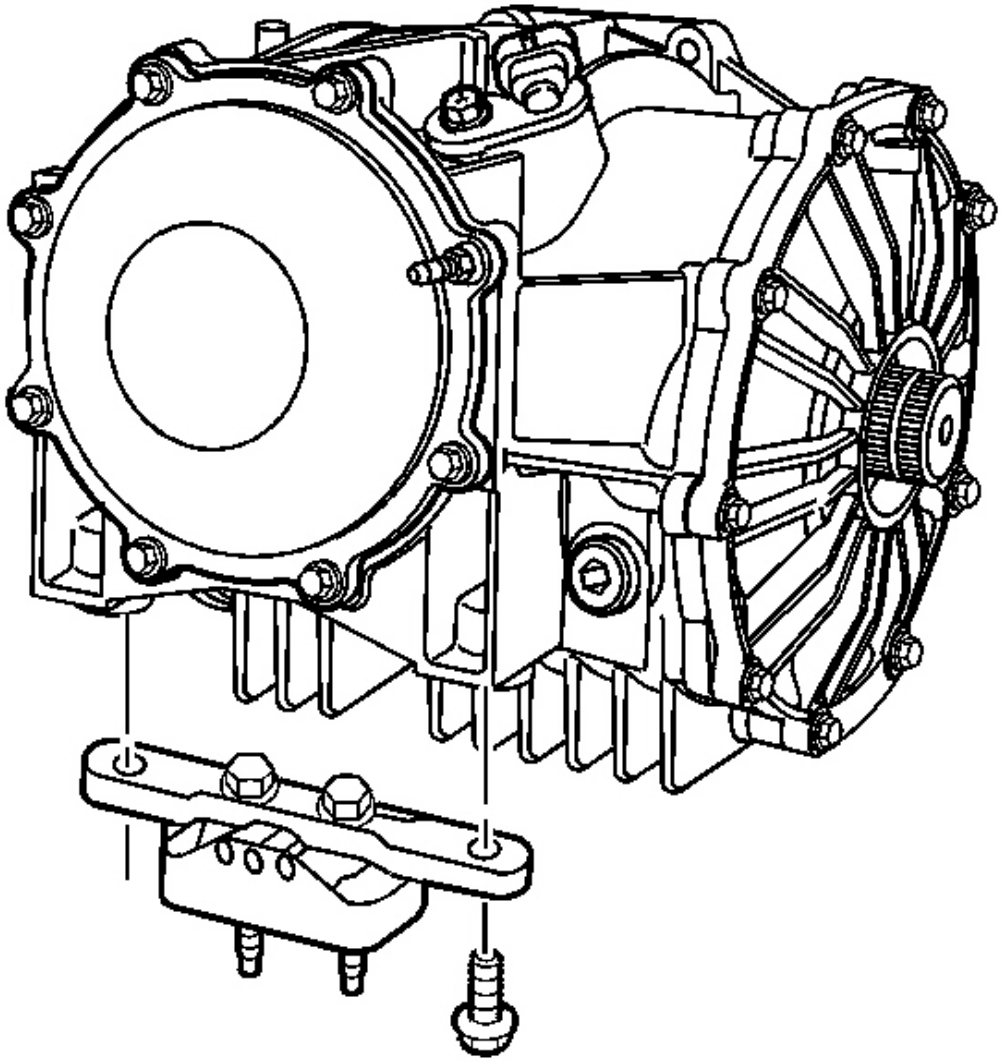

Fig. 15: Transaxle Mount Bracket & Differential Bolts
Courtesy of GENERAL MOTORS CORP.

3. Install the transaxle mount with bracket to the differential.
4. Install the transaxle mount bracket to differential bolts.

Tighten: Tighten the transaxle mount bracket to differential bolts to 50 N.m (37 lb ft).

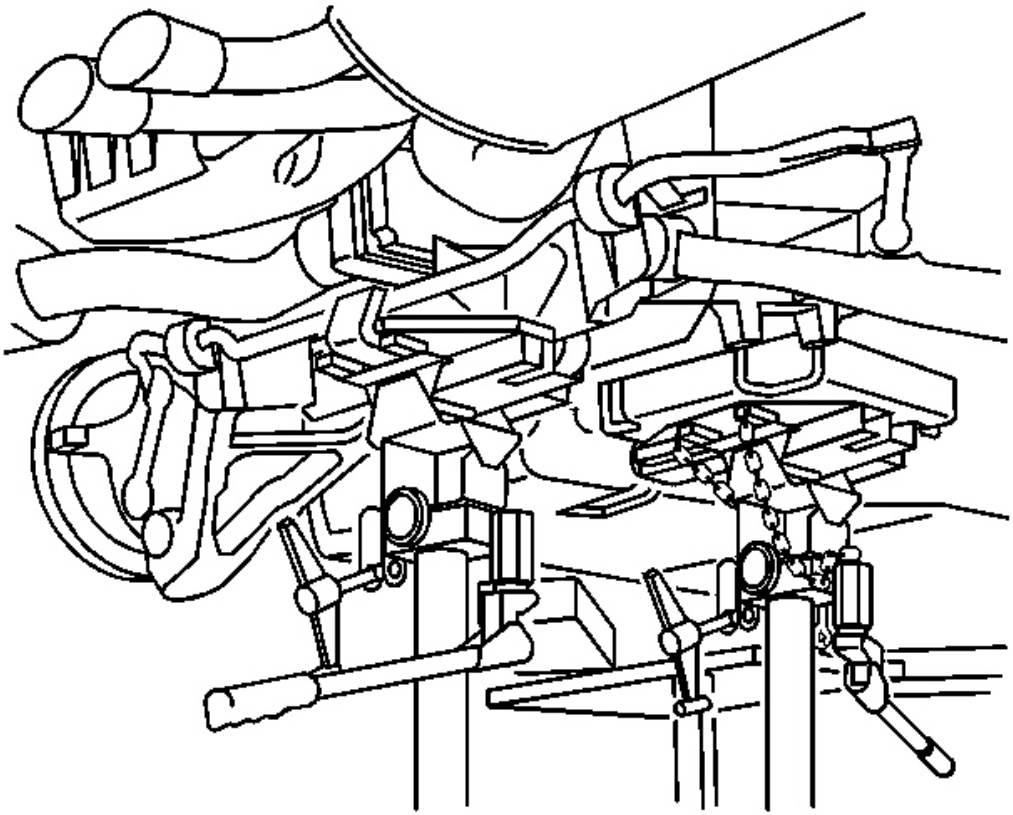

Fig. 16: View Of Jack Under Front End
Courtesy of GENERAL MOTORS CORP.

5. SLOWLY raise the rear suspension crossmember (still firmly attached to a transmission jack), to the vehicle frame rails.

   Guide the transaxle mount studs into the slots in the rear crossmember.

6. Using ONLY HAND TOOLS, install NEW rear suspension crossmember mounting nuts.

   Tighten: Tighten the rear suspension crossmember mounting nuts to 110 N.m (81 lb ft).

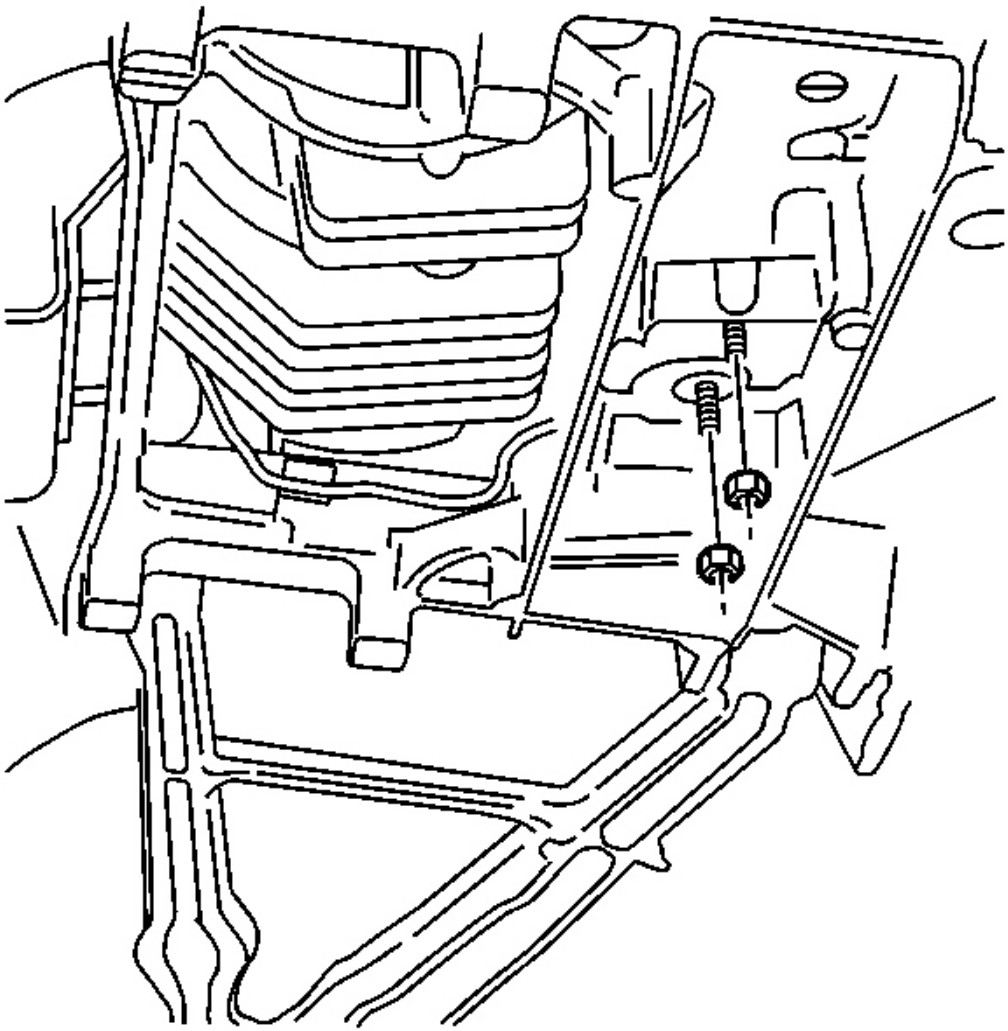

Fig. 17: Transaxle Mount-To-Rear Crossmember Nuts
Courtesy of GENERAL MOTORS CORP.

7. Remove the transmission jack from the rear suspension crossmember.
8. Release the **J 42055** from the transmission, then remove the **J 42055** and transmission jack.
9. Install the transaxle mount to rear suspension crossmember nuts.

   Tighten: Tighten the transaxle mount to rear suspension crossmember nuts to 50 N.m (37 lb ft).

10. Install the rear leaf spring. Refer to **Rear Transverse Spring Replacement** in Rear Suspension.

11. Install the rear tire and wheel assemblies. Refer to **Tire and Wheel Removal and Installation** in Tires and Wheels.
12. Lower the vehicle.
13. Connect the negative battery cable.

    Tighten: Tighten the negative battery cable bolt to 15 N.m (11 lb ft).

14. Program the transmitters. Refer to **Transmitter Programming** in Keyless Entry.

VEHICLE SPEED SENSOR (VSS) REPLACEMENT

Removal Procedure

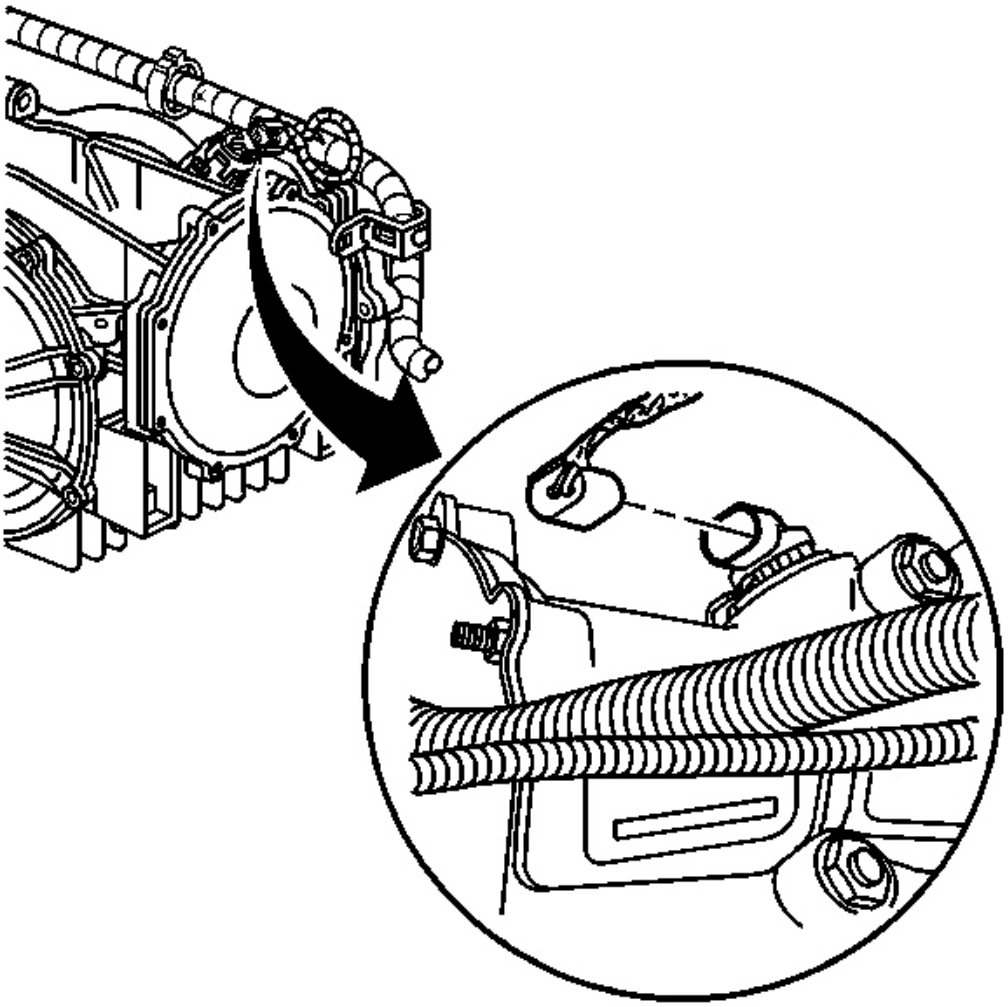

Fig. 18: VSS Electrical Connector
Courtesy of GENERAL MOTORS CORP.

1. Raise and suitably the vehicle. Refer to **Lifting and Jacking the Vehicle** in General Information.
2. Remove the RH muffler assembly. Refer to **Muffler Replacement - Right** in Engine Exhaust.
3. Clean any dirt from around the vehicle speed sensor.
4. Disconnect the electrical connector from the vehicle speed sensor (VSS).

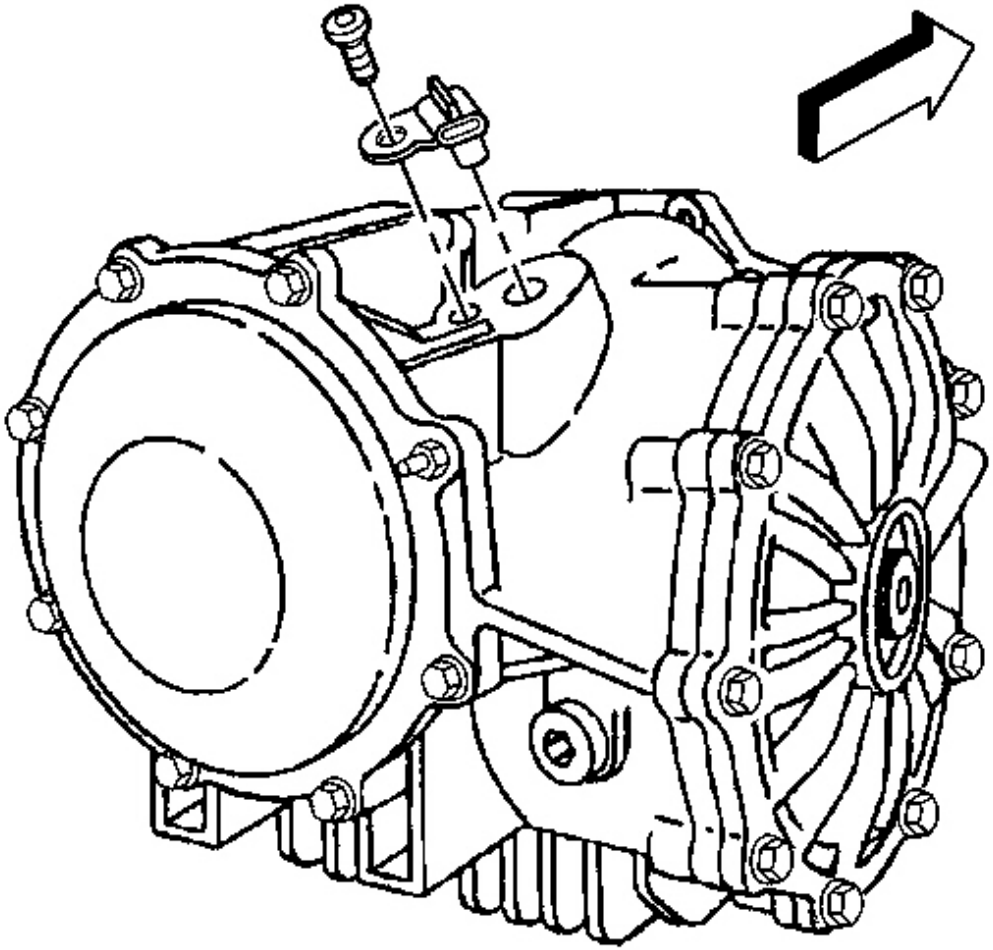

Fig. 19: VSS & Retaining Bolt
Courtesy of GENERAL MOTORS CORP.

5. Remove the bolt retaining the VSS to the rear differential case.
6. Remove the VSS from the differential case.

Installation Procedure

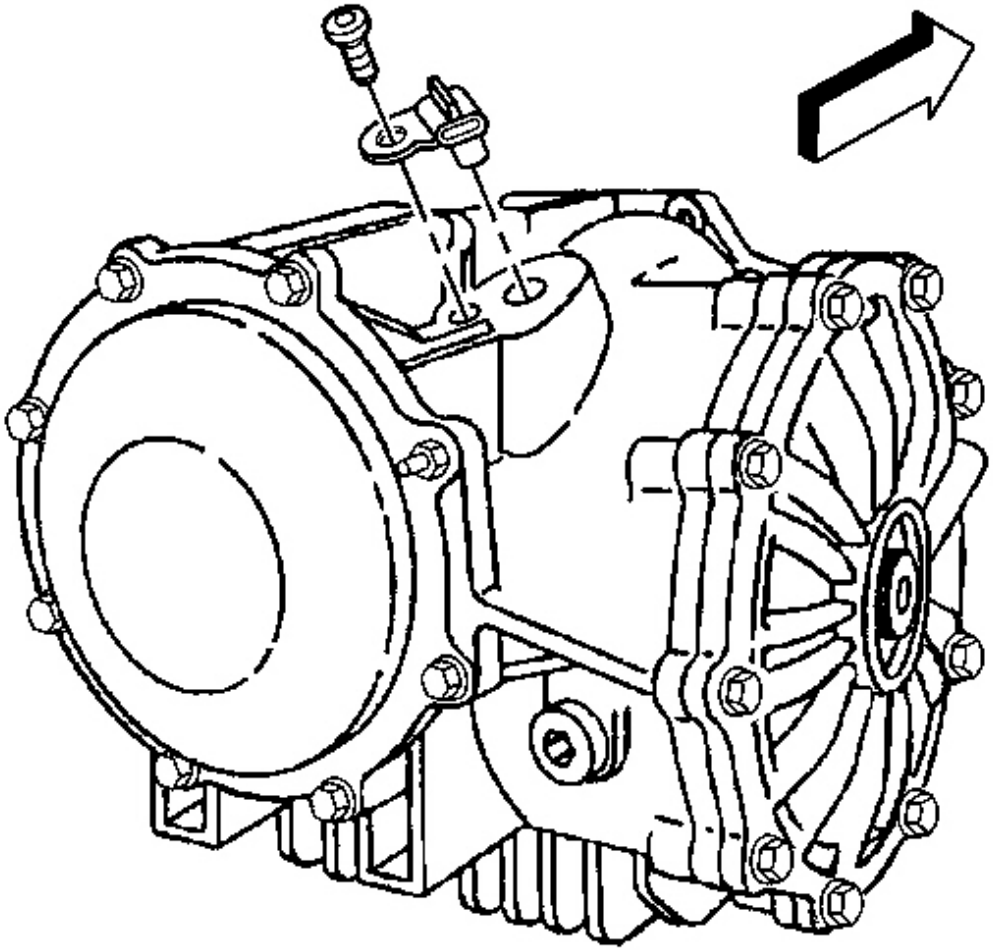

Fig. 20: VSS & Retaining Bolt
Courtesy of GENERAL MOTORS CORP.

1. Lubricate the O-ring seal of the VSS with clean engine oil.
2. Install the VSS into the hole on the axle case.

NOTE: Refer to Fastener Notice in Cautions and Notices.

3. Install the VSS retaining bolt the differential.

Tighten: Tighten the vehicle speed sensor retaining bolt to 10 N.m (89 lb in).

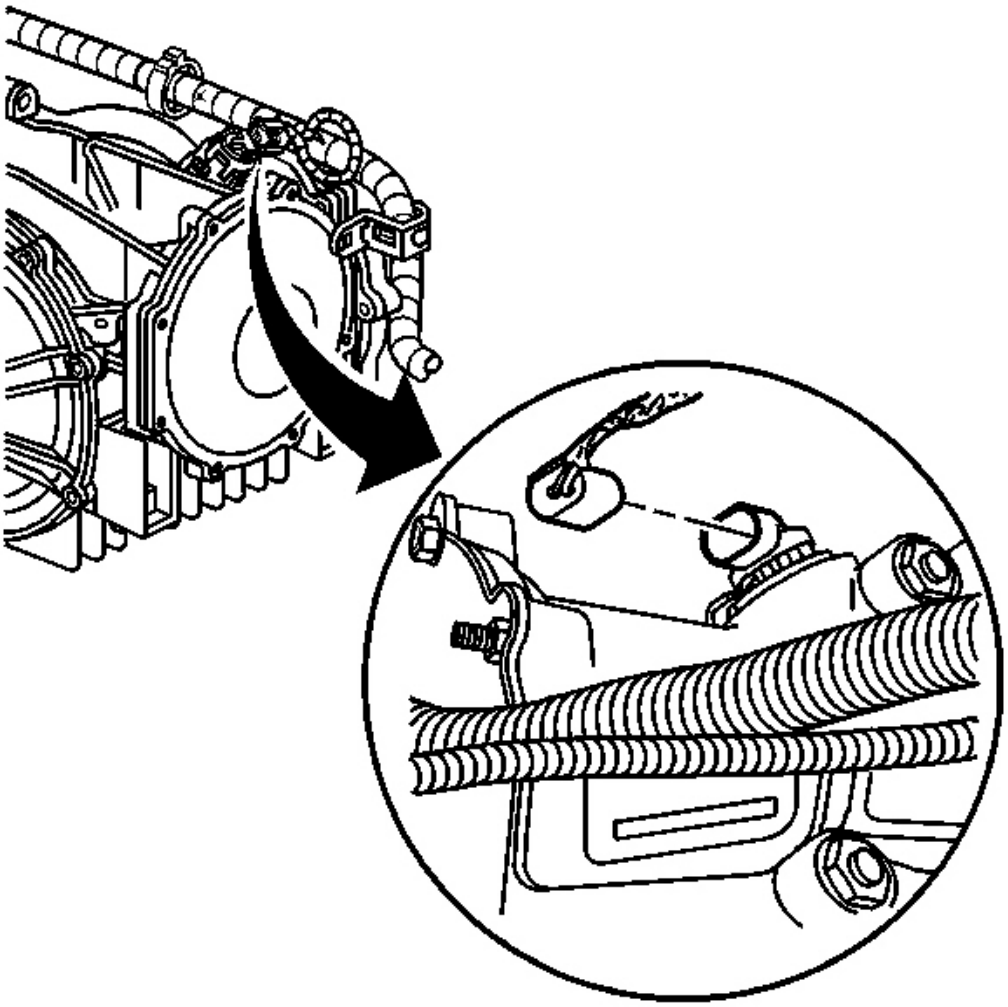

Fig. 21: VSS Electrical Connector
Courtesy of GENERAL MOTORS CORP.

4. Connect the electrical connector to the sensor.
5. Install the RH muffler assembly. Refer to **Muffler Replacement - Right** in Engine Exhaust.
6. Lower the vehicle.

DIFFERENTIAL CARRIER COVER AND SEAL REPLACEMENT - LEFT

Removal Procedure

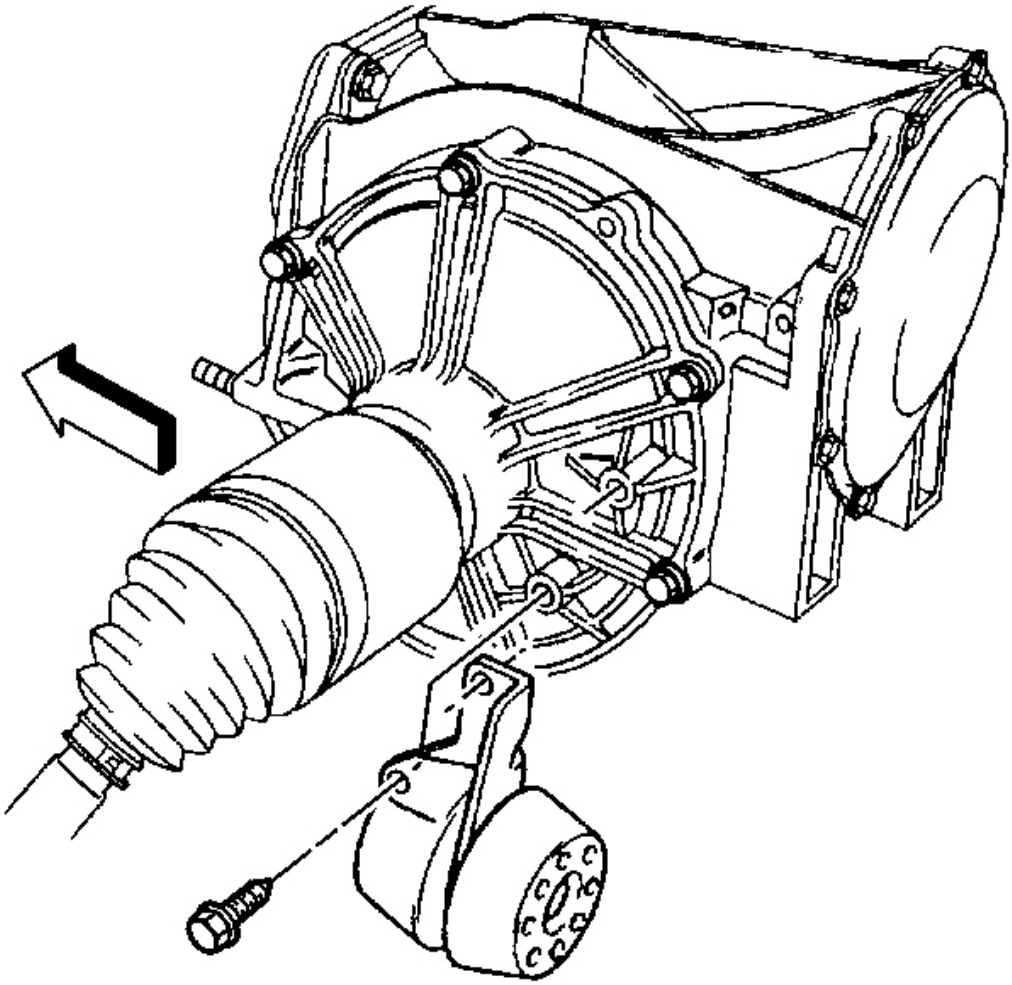

Fig. 22: Differential Cover, Damper/Tuned Absorber & Bolts
Courtesy of GENERAL MOTORS CORP.

1. Raise and suitably support the vehicle. Refer to **Lifting and Jacking the Vehicle** in General Information.
2. Remove the LH rear tire and wheel assembly. Refer to **Tire and Wheel Removal and Installation** in Tires and Wheels.
3. Remove the LH wheel drive shaft. Refer to **Wheel Drive Shaft Replacement** in Wheel Drive Shafts.
4. Remove the LH muffler assembly. Refer to **Muffler Replacement - Left** in Engine Exhaust.
5. Drain the fluid from the differential. Refer to **Lubricant Change** .
6. Remove the damper/tuned absorber bolts.
7. Remove the damper/tuned absorber.

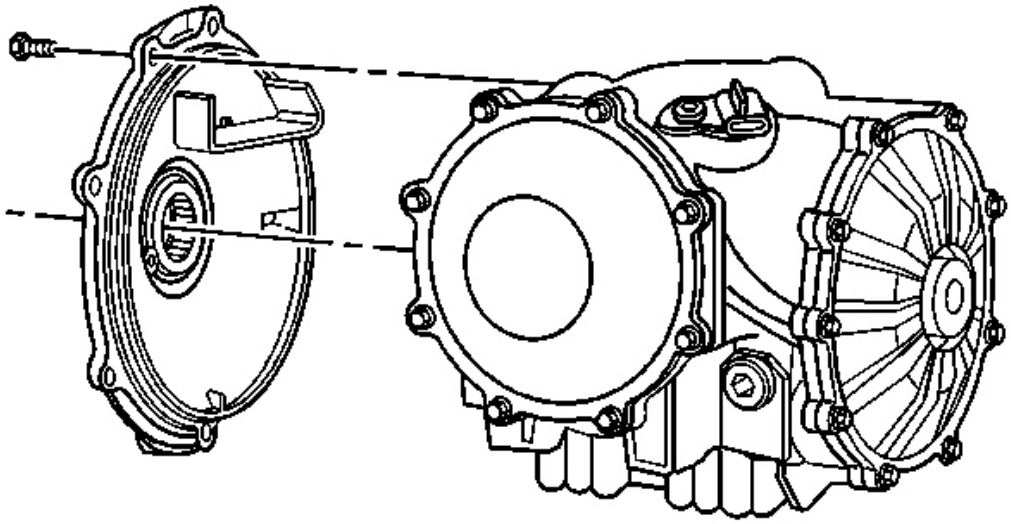

Fig. 23: Differential Cover (Left) & Bolts
Courtesy of GENERAL MOTORS CORP.

8. Loosen the nut retaining the transmission to the transmission LH mounting stud.
9. Install a second nut onto the stud.
10. Remove the stud from the differential cover (left).
11. Clean any dirt or debris from around the differential cover (left).

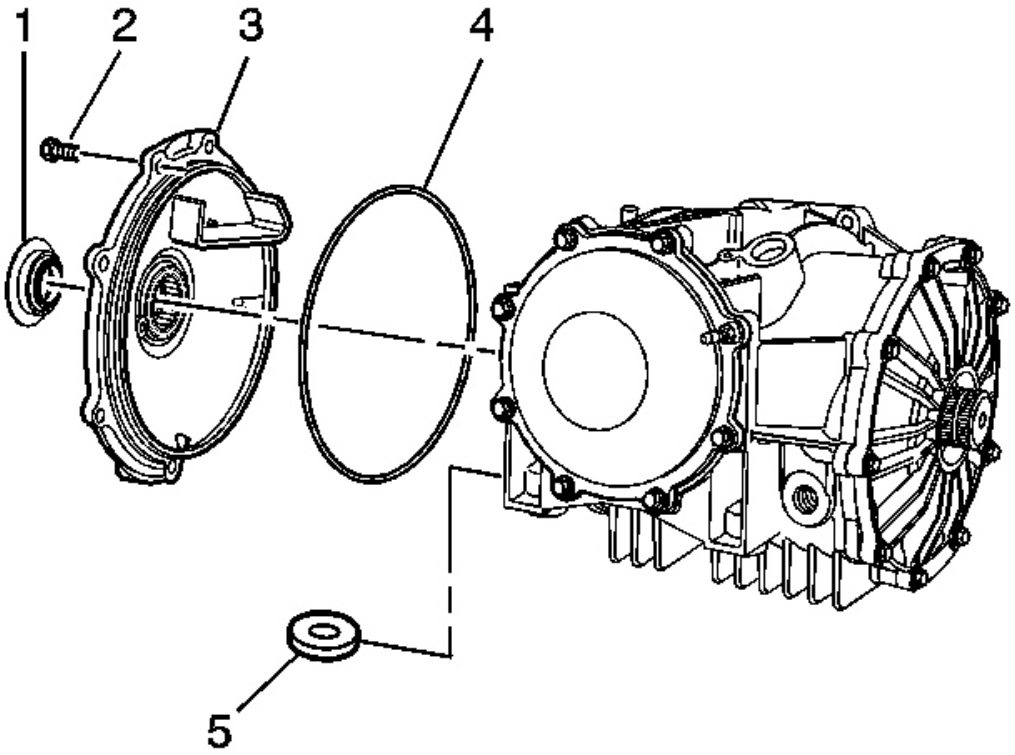

Fig. 24: Differential Cover (Left), O-Ring Seal & Bolts
Courtesy of GENERAL MOTORS CORP.

12. Remove the bolts (2) retaining the differential cover (left).
13. Remove the differential cover (left) from the differential.
14. Remove and discard the O-ring seal (4) from the differential side cover.

Installation Procedure

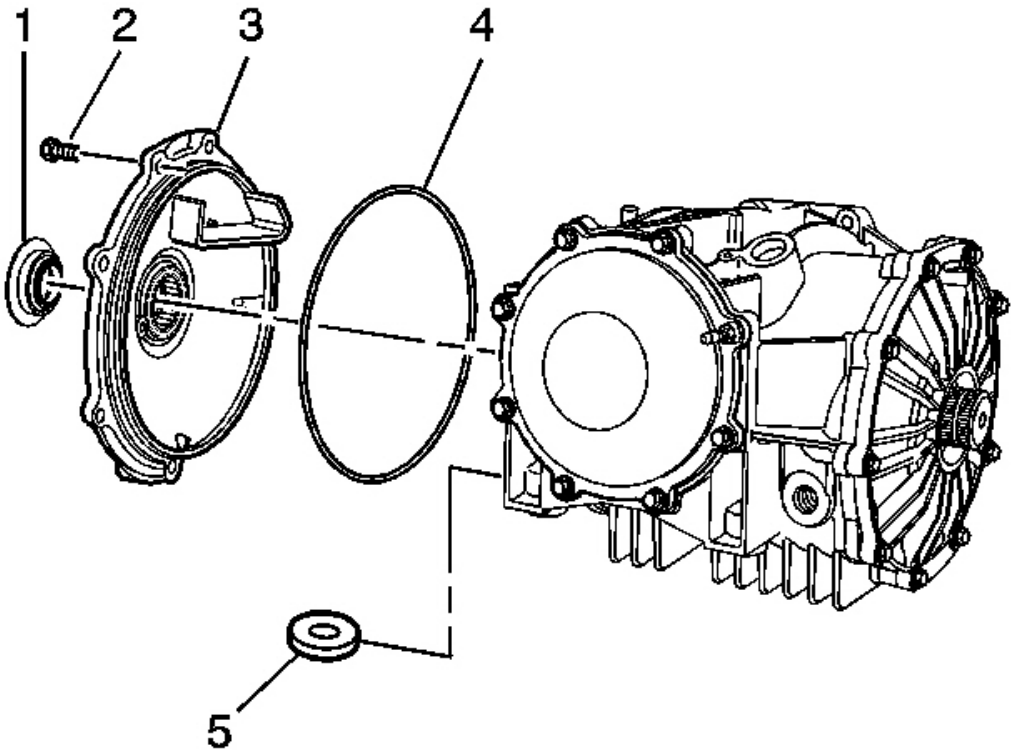

Fig. 25: Differential Cover (Left), O-Ring Seal & Bolts
Courtesy of GENERAL MOTORS CORP.

1. Clean the O-ring sealing surface on the differential cover (left) and the differential housing.
2. Install a new O-ring seal (4) to the differential cover (left).
3. Install the differential cover (left) to the differential.

NOTE: Refer to Fastener Notice in Cautions and Notices.

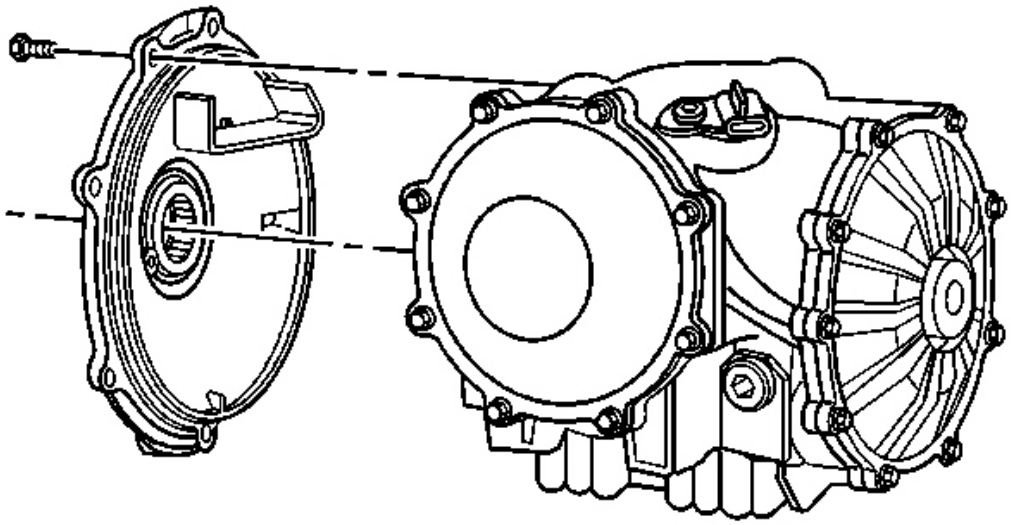

Fig. 26: Differential Cover (Left) & Bolts
Courtesy of GENERAL MOTORS CORP.

4. Install the differential cover (left) retaining bolts.

   Tighten: Tighten the differential cover (left) bolts to 25 N.m (18 lb ft).

5. Using two nuts installed on the stud, install the transmission mounting stud to the differential cover (left).

   Tighten: Tighten the transmission mounting stud to 42 N.m (31 lb ft).

6. Remove the second nut from the transmission mounting stud.
7. Tighten the nut retaining the transmission to the transmission LH mounting stud.

   Tighten: Tighten the differential to transmission nut to 50 N.m (37 lb ft).

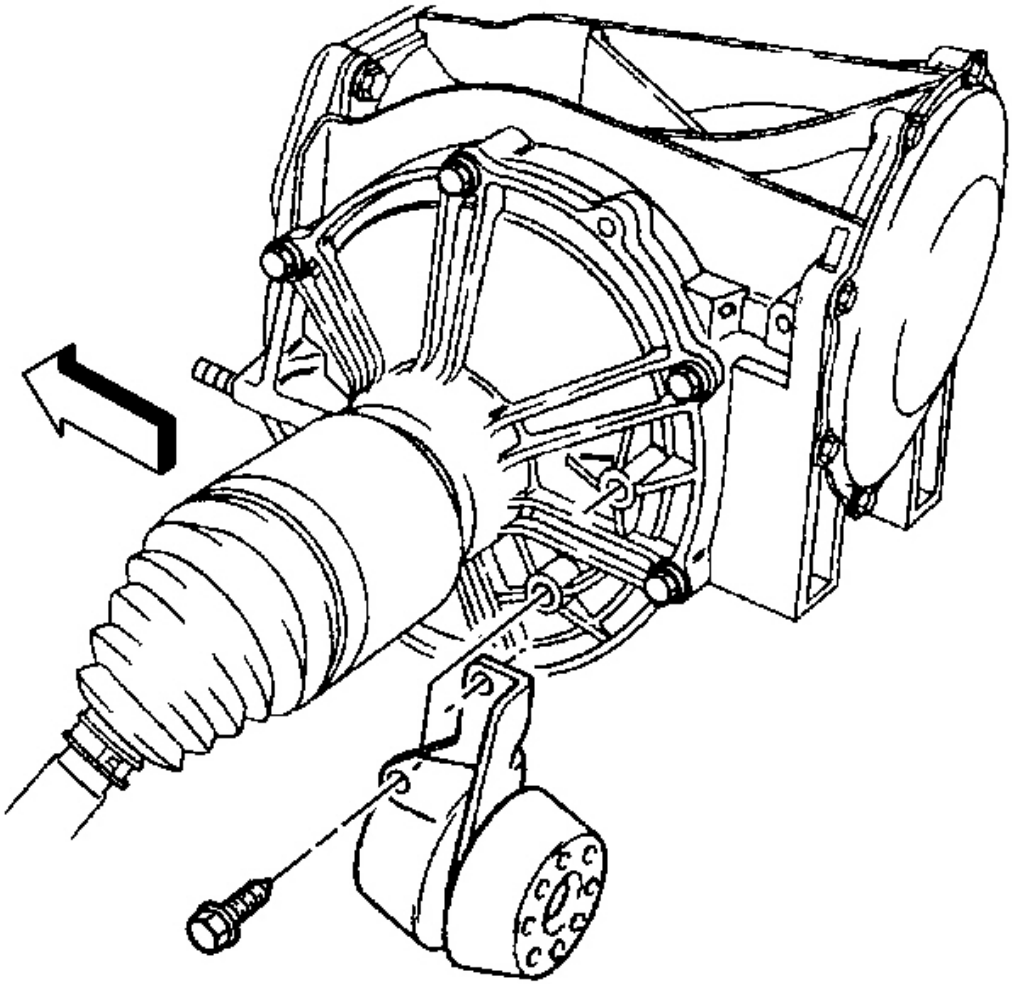

Fig. 27: Differential Cover, Damper/Tuned Absorber & Bolts
Courtesy of GENERAL MOTORS CORP.

8. Install the damper/tuned absorber to the differential cover (left).
9. Install the bolts mounting the damper/tuned absorber to the differential cover (left).

   Tighten: Tighten the damper/tuned absorber mounting bolts to 25 N.m (18 lb ft).

10. Fill the differential with the proper fluids and to the proper level. Refer to **Lubricant Change** .
11. Install the LH muffler assembly. Refer to **Muffler Replacement - Left** in Engine Exhaust.
12. Install the LH wheel drive shaft. Refer to **Wheel Drive Shaft Replacement** in Wheel Drive Shafts.

13. Install the LH rear tire and wheel assembly. Refer to **Tire and Wheel Removal and Installation** in Tires and Wheels.
14. Lower the vehicle.

DIFFERENTIAL CARRIER COVER AND SEAL REPLACEMENT - RIGHT

Tools Required

-

- **J 42168-16** Spacers. See **Special Tools and Equipment** .
- **J 42170** Bearing and Race Installer. See **Special Tools and Equipment** .
- **J 42194** Bearing and Race Remover. See **Special Tools and Equipment** .
- **J 46405** Output Shaft Seal Installer. See **Special Tools and Equipment** .

Removal Procedure

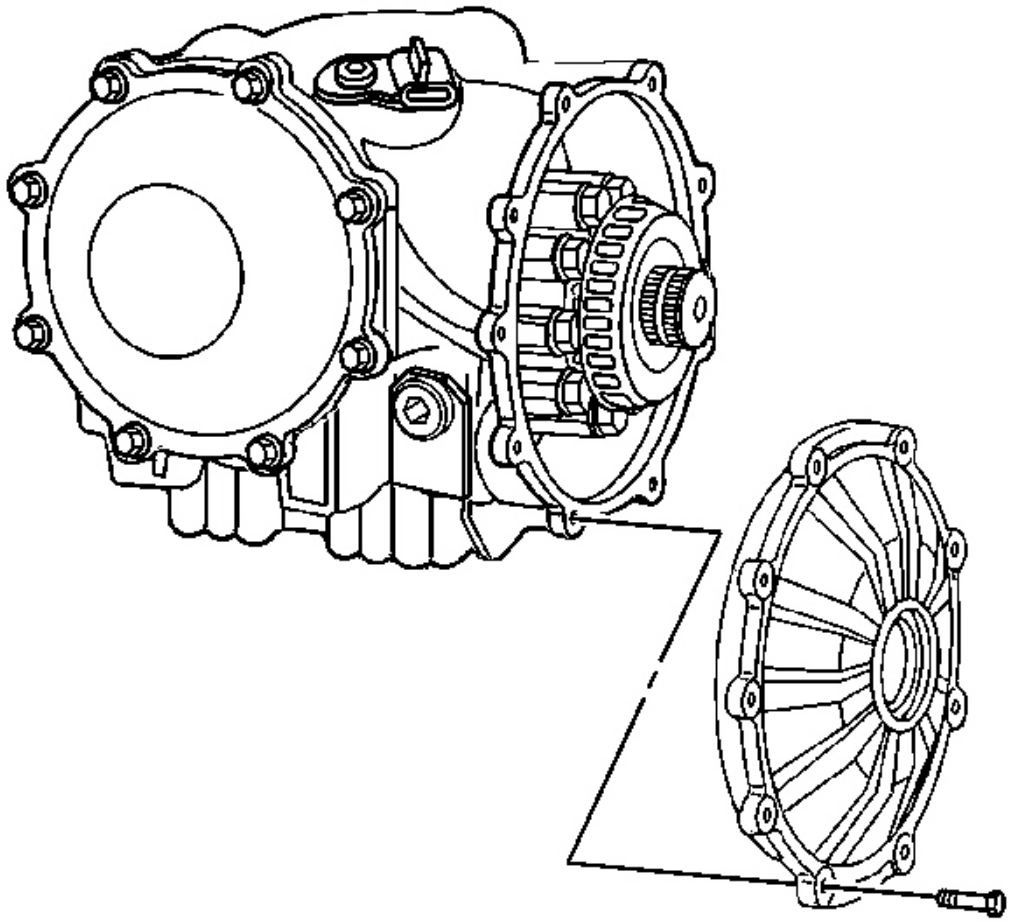

Fig. 28: Differential Cover (Right) & Bolts
Courtesy of GENERAL MOTORS CORP.

1. Raise and support the vehicle. Refer to **Lifting and Jacking the Vehicle** in General Information.
2. Remove the RH rear tire and wheel assembly. Refer to **Tire and Wheel Removal and Installation** in Tires and Wheels.
3. Remove the RH wheel drive shaft. Refer to **Wheel Drive Shaft Replacement** in Wheel Drive Shafts.
4. Remove the RH muffler assembly. Refer to **Muffler Replacement - Right** in Engine Exhaust.
5. Drain the fluid from the differential. Refer to **Lubricant Change** .
6. Clean any dirt or debris from around the differential cover (right).
7. Remove the bolts retaining the differential cover (right).
8. Remove the transmission vent tube retainer (automatic transmission).

9. Remove the differential cover (right) from the differential.

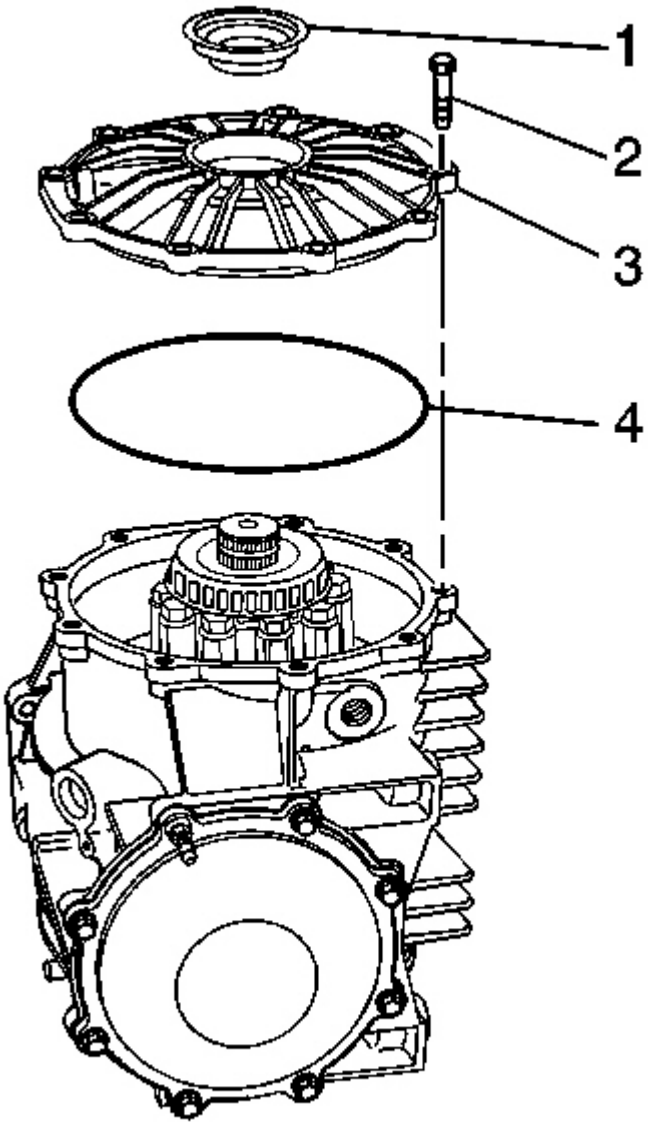

Fig. 29: Differential Cover (Right), Axle Seal & O-Ring Seal
Courtesy of GENERAL MOTORS CORP.

10. Remove and discard the axle seal (1), and O-ring seal (4) from the differential cover (right).

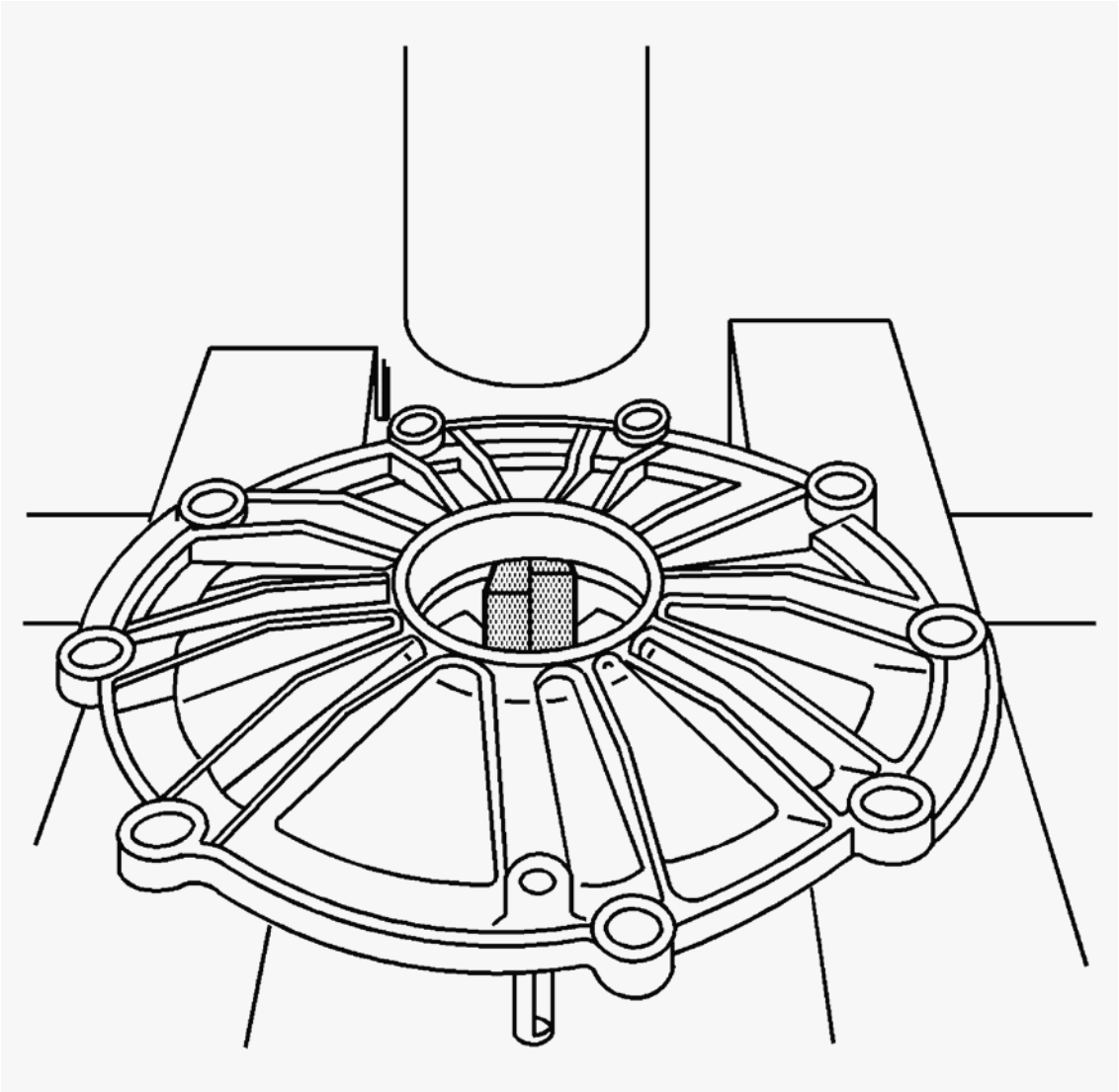

Fig. 30: Differential Cover (Right) & J 42194
Courtesy of GENERAL MOTORS CORP.

11. Install the **J 42194** into the differential cover (right), in order to remove the bearing race and shims. See **Special Tools and Equipment** . Position the cover into a hydraulic press.

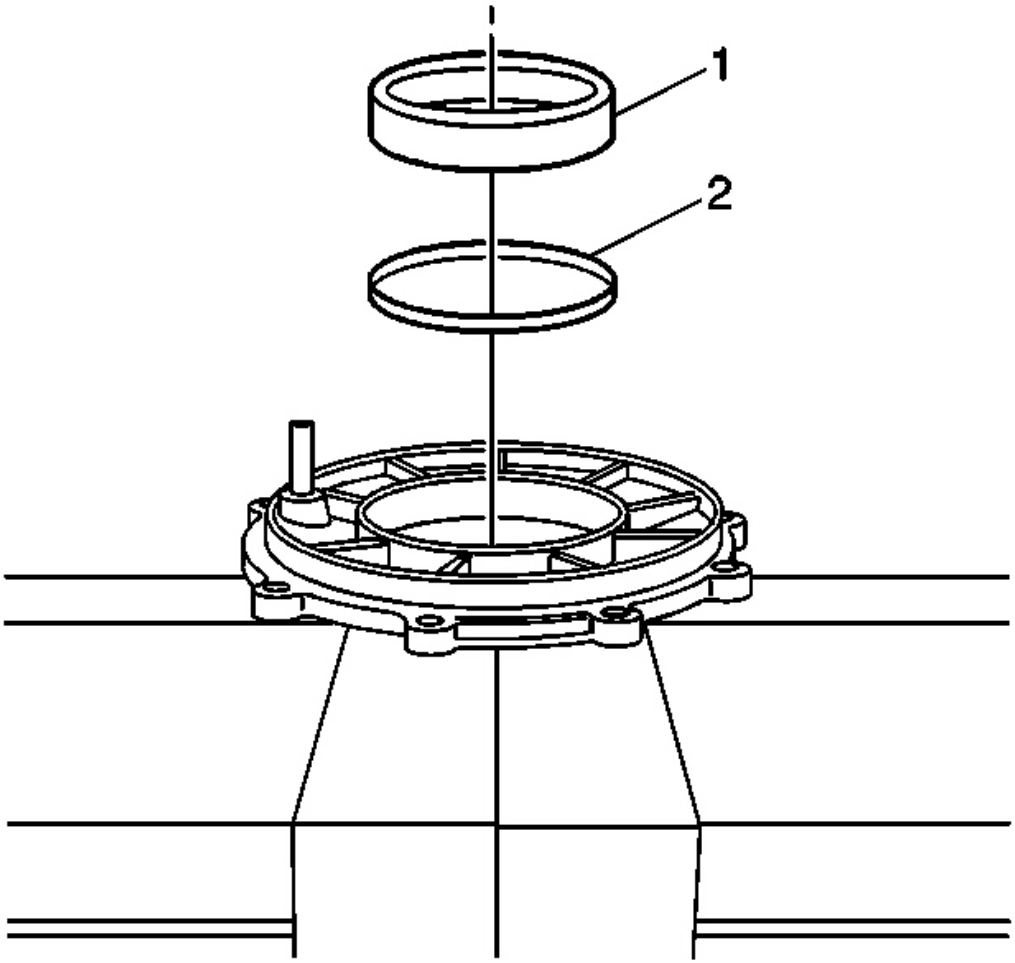

Fig. 31: Bearing Race & Shims
Courtesy of GENERAL MOTORS CORP.

12. Using a hydraulic press, remove the bearing race (1) and shims (2). Mark or tag the shims for assembly.

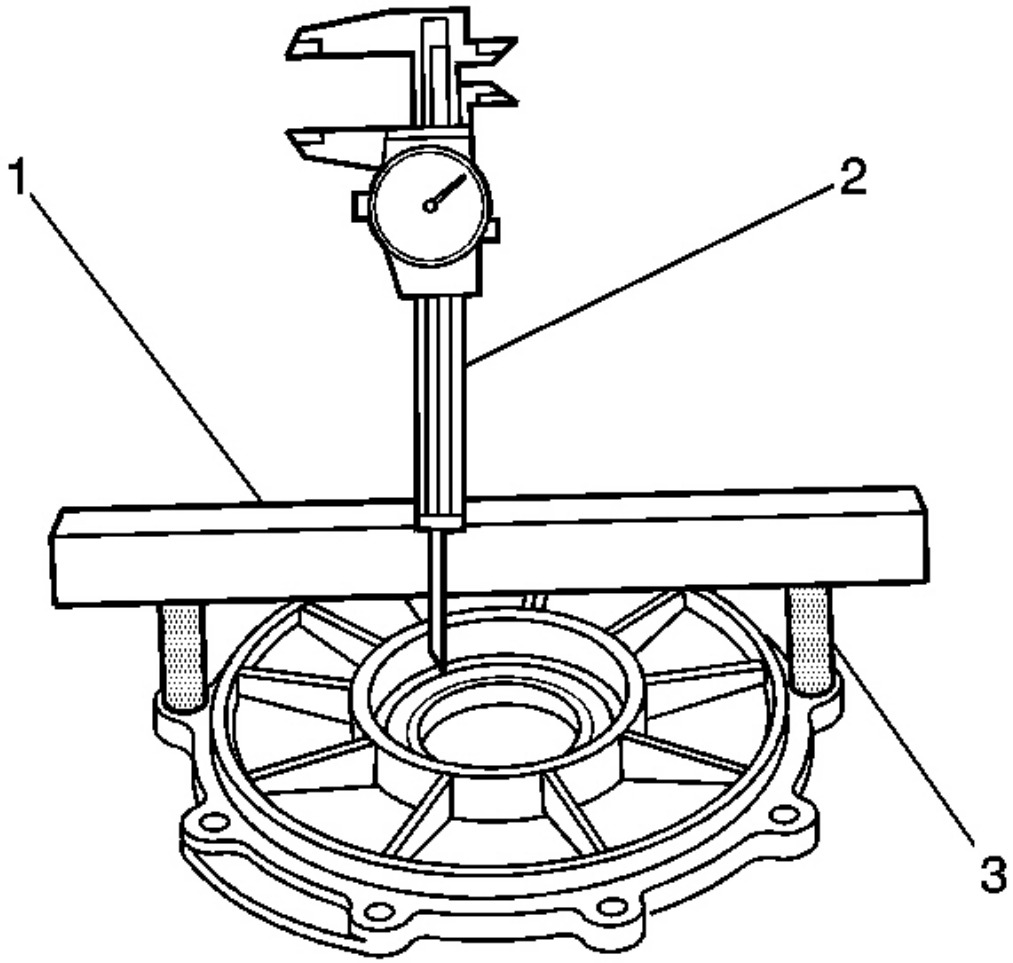

Fig. 32: Measuring Differential Cover Bore Dimension
Courtesy of GENERAL MOTORS CORP.

IMPORTANT: Whenever service requires the replacement of the right side differential cover, the covers MUST be measured and the right side shim pack adjusted to compensate for machining tolerances between the two components. Failure to perform this measurement procedure may result in improper differential bearing preload.

13. Use a caliper (2), a straight edge (1), and **J 42168-16** (3) in order to measure the NEW differential cover bore dimension. See **Special Tools and Equipment** . Record the measurement as value A.
14. Use a caliper (2), a straight edge (1), and **J 42168-16** (3) in order to measure the old differential cover

bore dimension. See **Special Tools and Equipment** . Record the measurement as value B.

15. Subtract value B from value A. If the computation is a positive value, add shims equal to the value, to the existing shim pack. If the computation is a negative value, subtract shims equal to the value, from the existing shim pack.

Installation Procedure

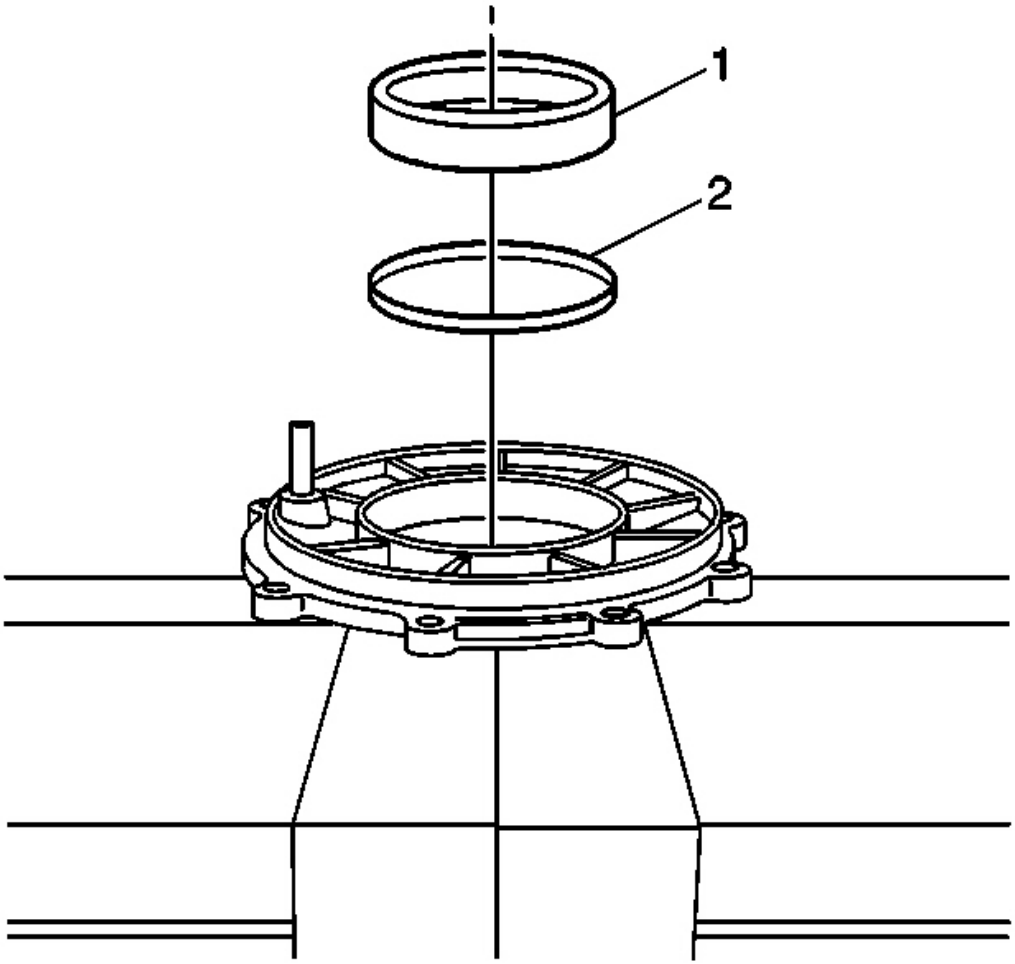

Fig. 33: Bearing Race & Shims
Courtesy of GENERAL MOTORS CORP.

1. Install the selected shims (2) and the bearing race (1) to the NEW cover (right).

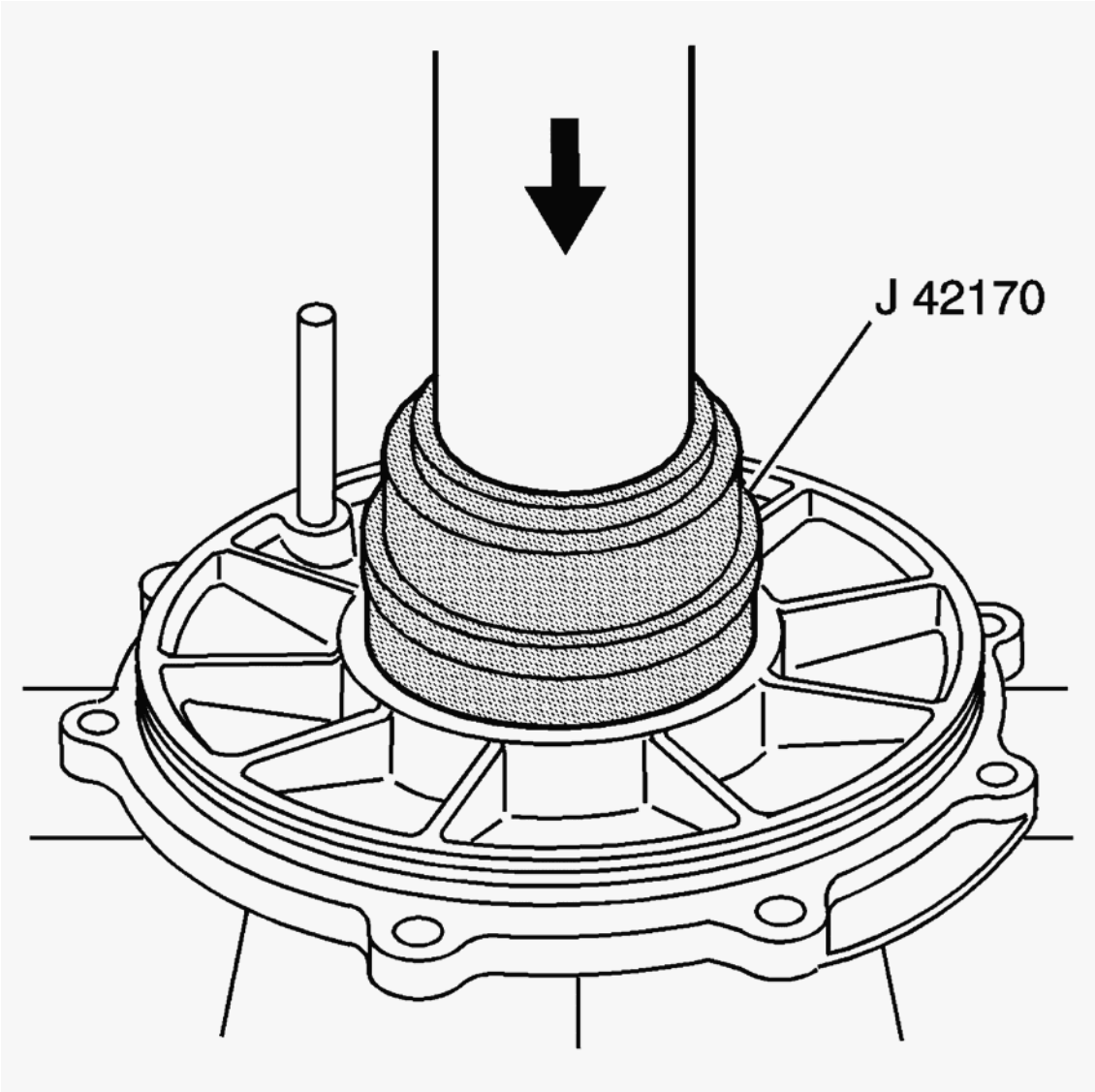

Fig. 34: Pressing Shims & Bearing Race Into Cover Using J 42170 & Hydraulic Press
Courtesy of GENERAL MOTORS CORP.

2. Press the shims and bearing race into the NEW cover (right) using the **J 42170** and a hydraulic press. See **Special Tools and Equipment** .

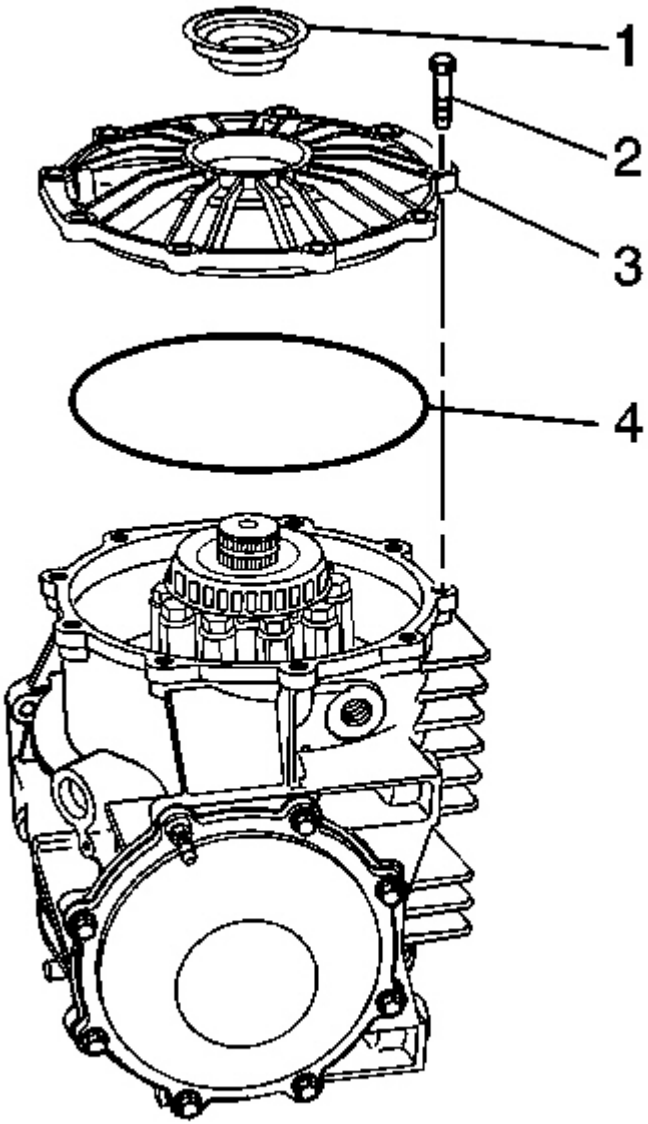

Fig. 35: Differential Cover (Right), Axle Seal & O-Ring Seal
Courtesy of GENERAL MOTORS CORP.

3. Clean the O-ring sealing surface on the differential cover (right) and the differential housing.
4. Install a new O-ring seal (4) to the differential cover (right).

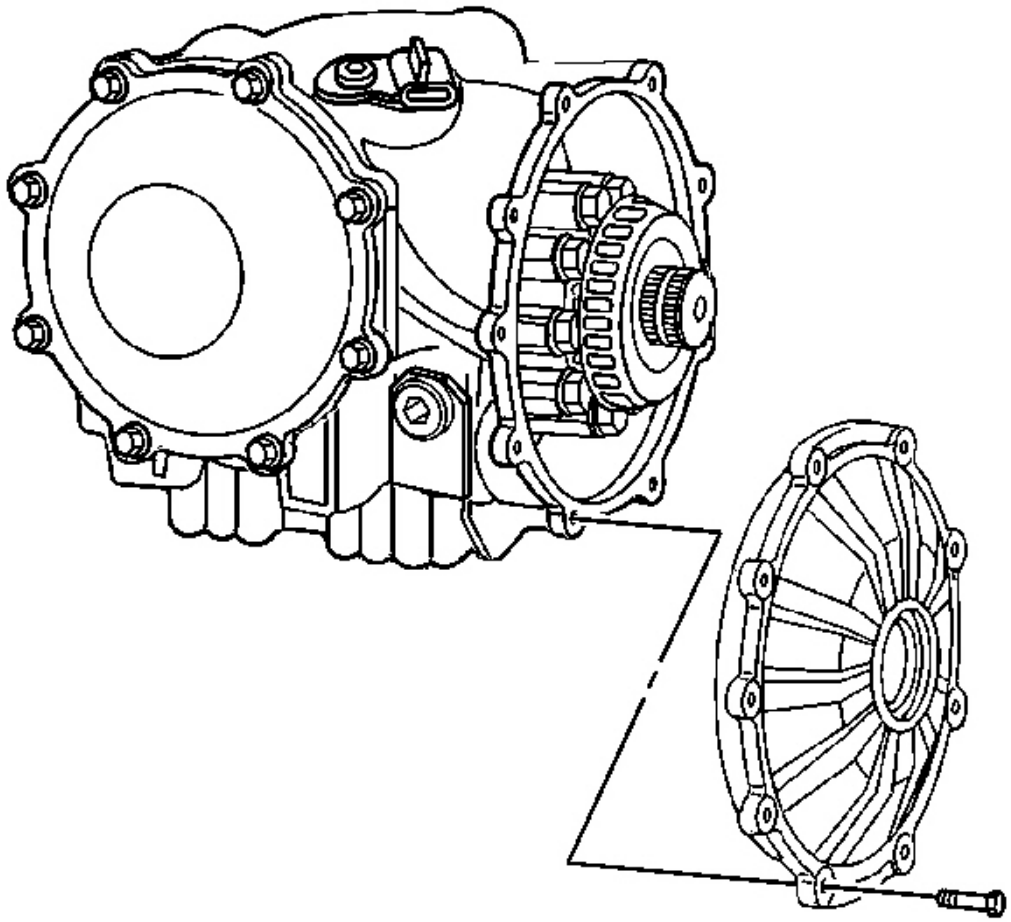

Fig. 36: Differential Cover (Right) & Bolts
Courtesy of GENERAL MOTORS CORP.

5. Install the differential cover (right) to the differential.

NOTE: **Refer to Fastener Notice in Cautions and Notices.**

6. Install the differential cover (right) retaining bolts.

Tighten: Tighten the differential cover (right) retaining bolts to 25 N.m (18 lb ft).

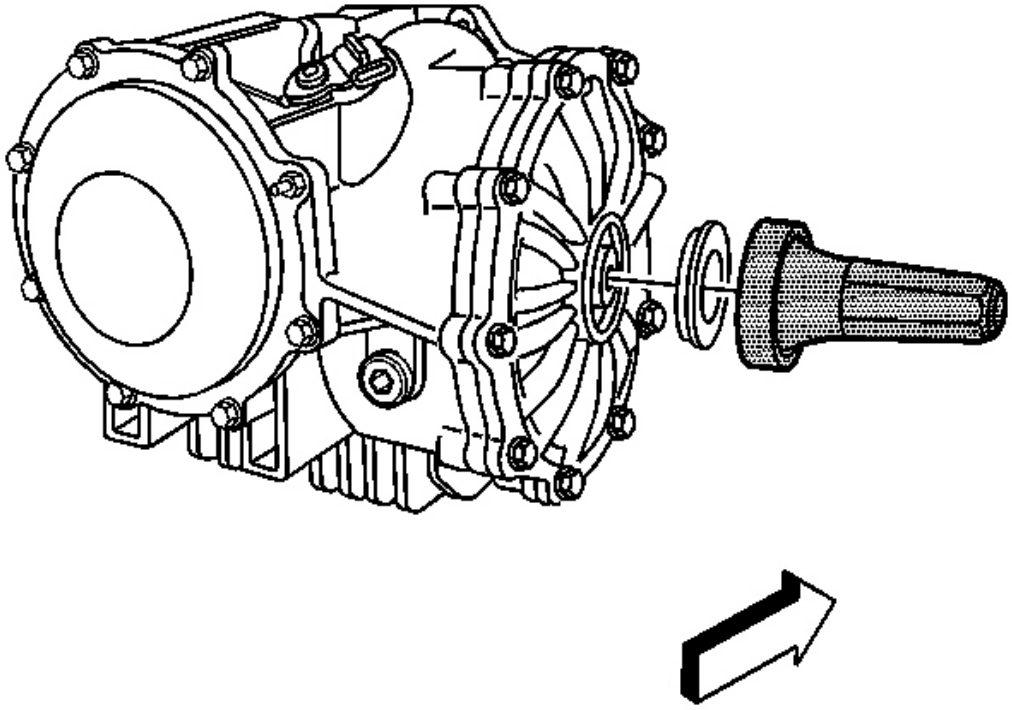

Fig. 37: Installing Axle Seal Into Differential Using J 46405
Courtesy of GENERAL MOTORS CORP.

7. Install the axle seal into the differential cover (right) using **J 46405** . See **Special Tools and Equipment** .
8. Install the transmission vent tube retainer onto the vent tube, then position the retainer to receive the retaining bolt (automatic transmission).
9. Fill the rear axle differential with the proper fluids and to the proper level. Refer to **Lubricant Change** .
10. Install the RH muffler assembly. Refer to **Muffler Replacement - Right** in Engine Exhaust.
11. Install the RH wheel drive shaft. Refer to **Wheel Drive Shaft Replacement** in Wheel Drive Shafts.
12. Install the RH rear tire and wheel assembly. Refer to **Tire and Wheel Removal and Installation** in Tires and Wheels.
13. Lower the vehicle.

OUTPUT SHAFT SEAL REPLACEMENT

Tools Required

J 46405 Output Shaft Seal Installer. See **Special Tools and Equipment** .

Removal Procedure

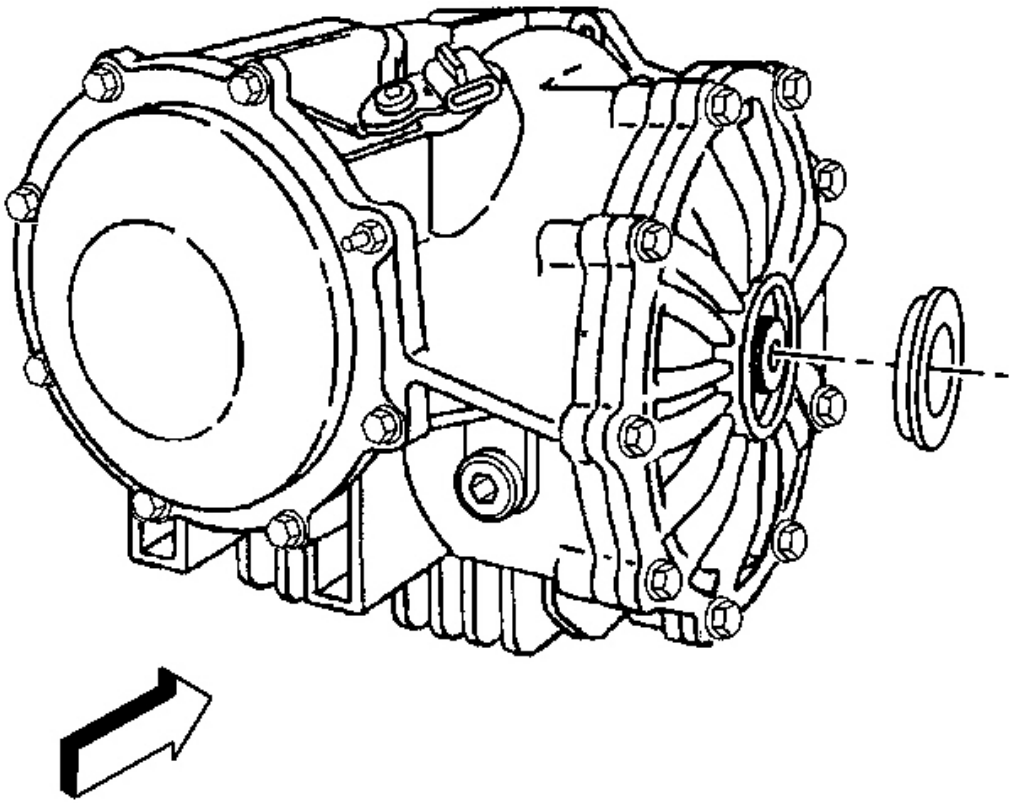

Fig. 38: Differential Output Shaft Seal
Courtesy of GENERAL MOTORS CORP.

1. Raise and suitably support the vehicle. Refer to **Lifting and Jacking the Vehicle** in General Information.
2. Remove the appropriate rear tire and wheel assembly. Refer to **Tire and Wheel Removal and Installation** in Tires and Wheels.
3. Remove the appropriate drive shaft. Refer to **Wheel Drive Shaft Replacement** in Wheel Drive Shafts.

IMPORTANT: Take care not to damage any sealing surfaces when removing the differential output shaft seal.

4. Remove the differential output shaft seal.

Installation Procedure

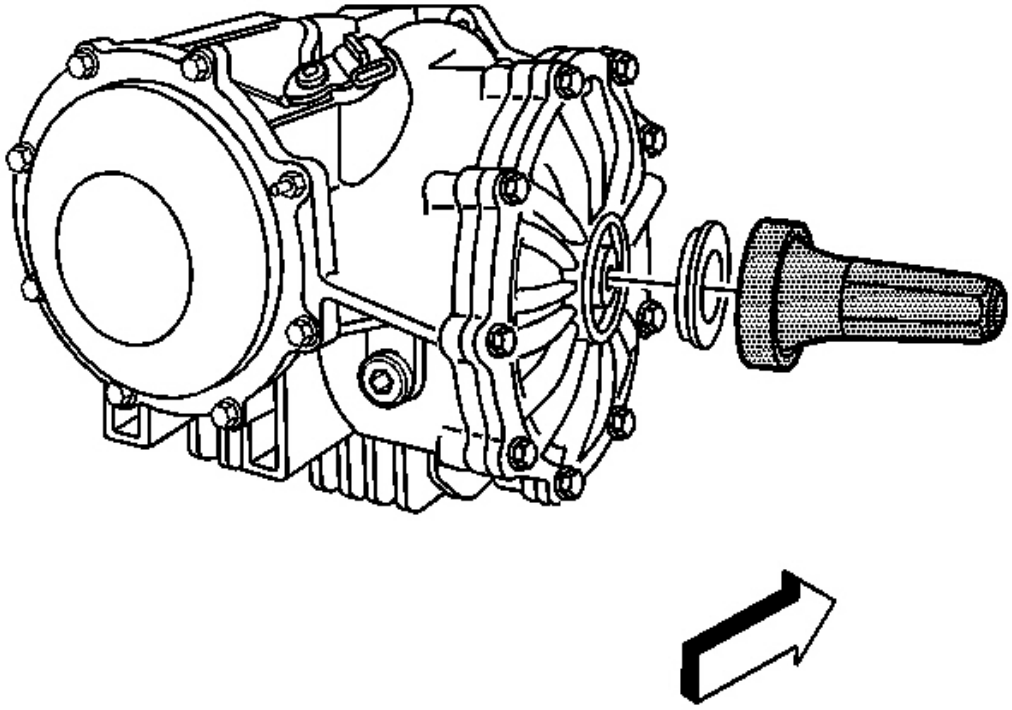

Fig. 39: Installing Axle Seal Into Differential Using J 46405
Courtesy of GENERAL MOTORS CORP.

1. Using the **J 46405** , install the differential output shaft seal. See **Special Tools and Equipment** .
2. Install the drive shaft. Refer to **Wheel Drive Shaft Replacement** in Wheel Drive Shafts.
3. Install the rear tire and wheel assembly. Refer to **Tire and Wheel Removal and Installation** in Tires and Wheels.
4. Lower the vehicle.

DIFFERENTIAL REPLACEMENT (MANUAL TRANSMISSION)

Tools Required

- **J 42055** Transmission Support Fixture
- **J 36221** Hydraulic Clutch Line Separator

Removal Procedure

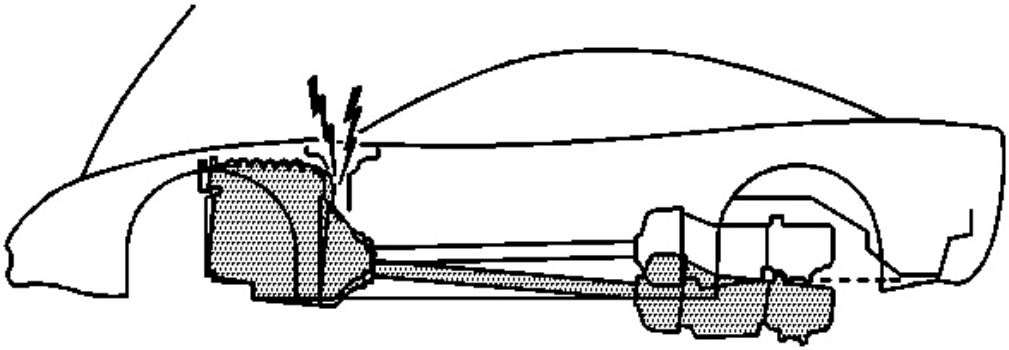

Fig. 40: Rear Of Driveline
Courtesy of GENERAL MOTORS CORP.

NOTE: **When tilting down the rear of the driveline, observe the clearance between the rear of the engine and the composite dash panel. Do not allow the engine to rest unsupported against the composite dash panel, or vehicle damage may result.**

NOTE: **When lowering and removing the rear of the driveline, observe the clearance between the rear of the transaxle assembly and the underbody to prevent damage.**

NOTE: **When tilting down the rear of the driveline, insert a putty knife or similar tool between the shift control bracket on the driveline support assembly and the brake pipe retainer on the driveline tunnel wall to prevent damage.**

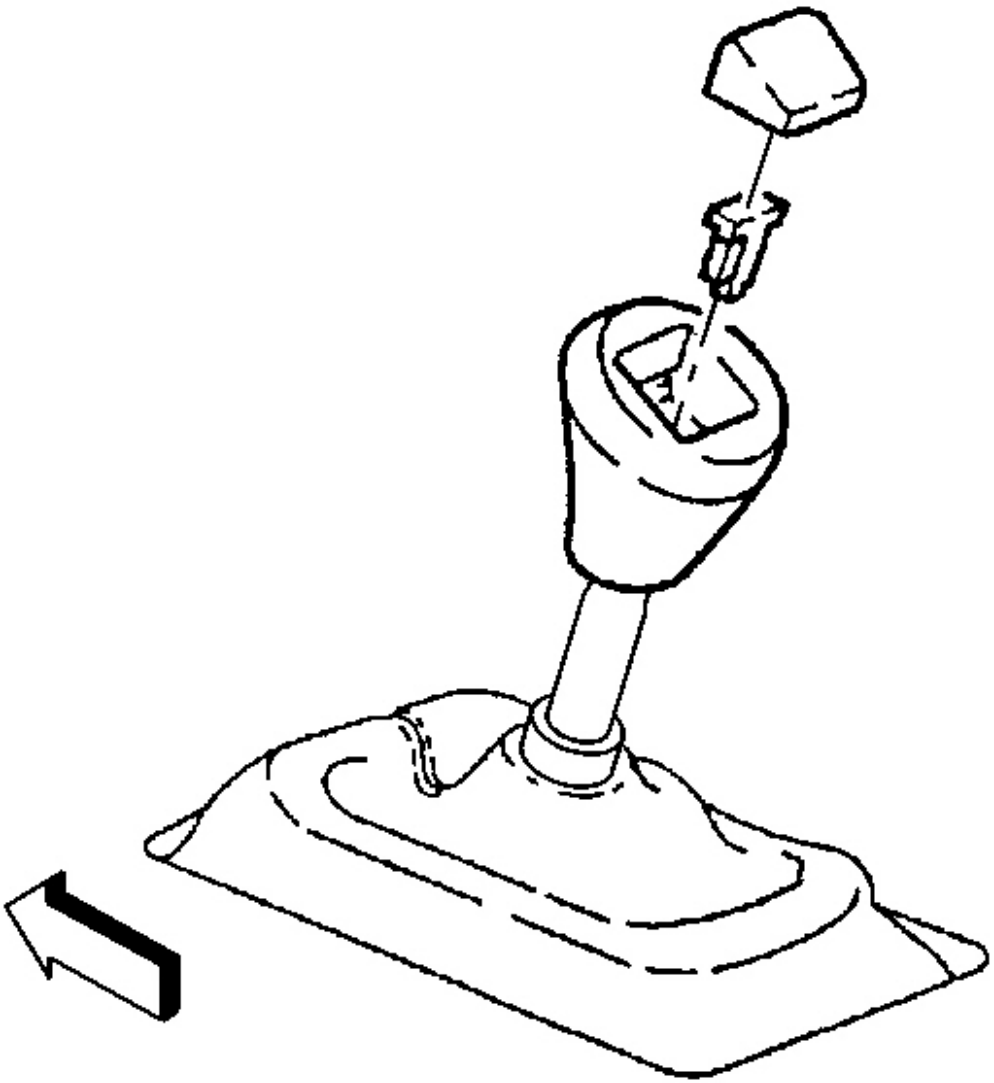

Fig. 41: Shift Control Knob Button
Courtesy of GENERAL MOTORS CORP.

CAUTION: Refer to Battery Disconnect Caution in Cautions and Notices.

1. Disconnect the negative battery cable.
2. Remove the console. Refer to **Console Replacement** in Instrument Panel, Gauges and Console.

3. Carefully pry off the shift control knob button.
4. Pry the shift control knob retainer out of the slots and remove the retainer.

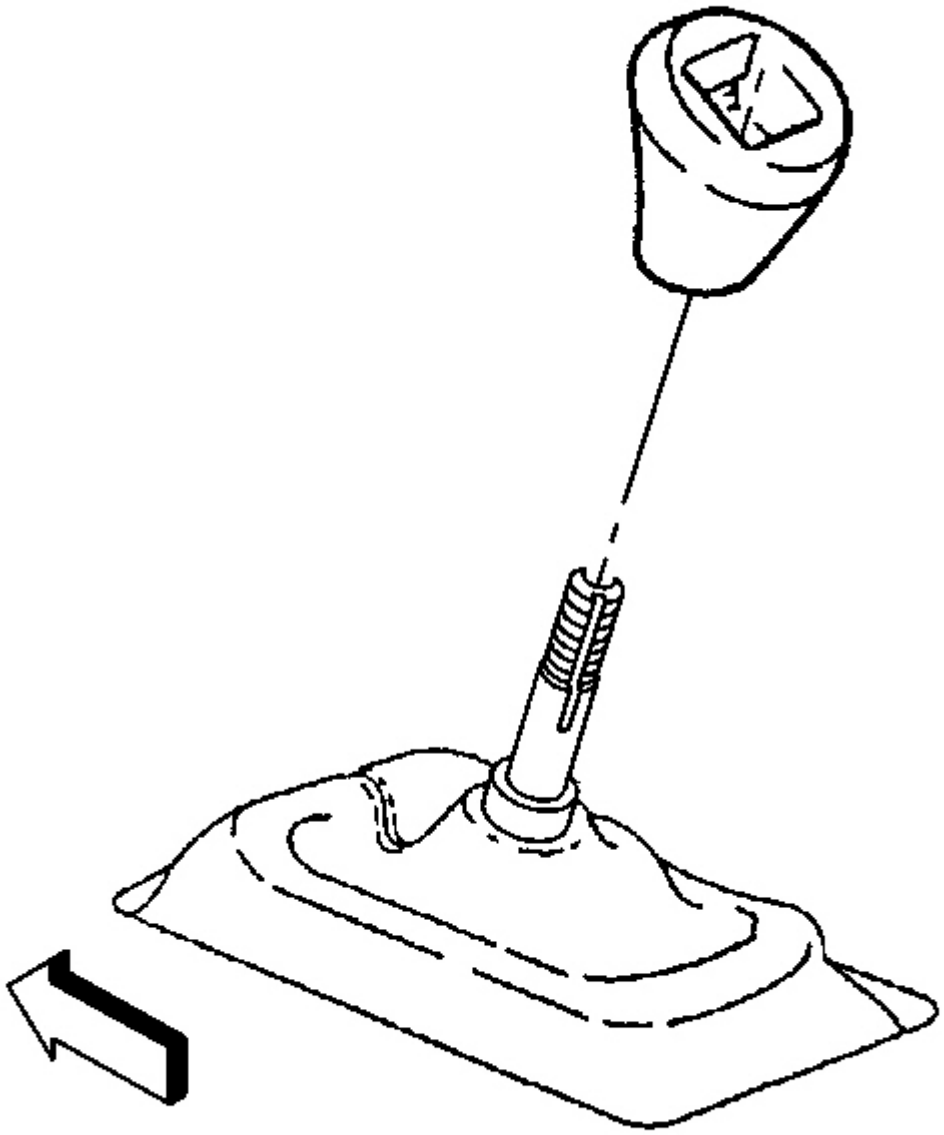

Fig. 42: Gear Shift Knob Removed
Courtesy of GENERAL MOTORS CORP.

5. Unscrew the shift control knob.

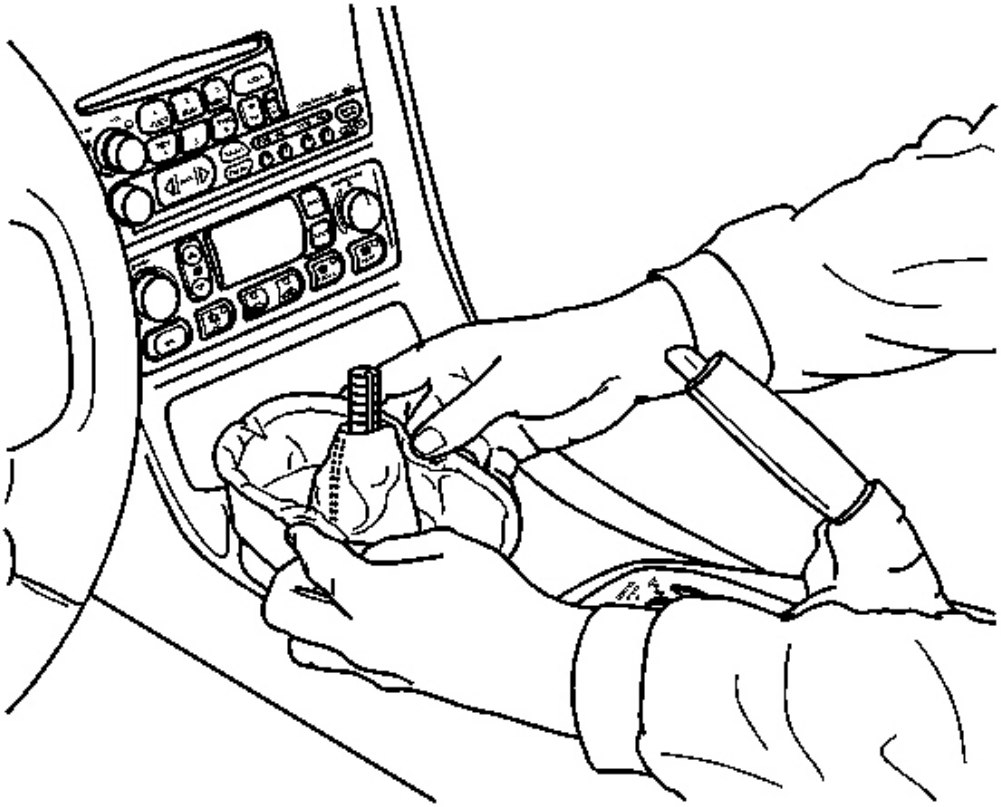

Fig. 43: Shift Control Boot, Shift Control Lever & IP Accessory Trim Plate
Courtesy of GENERAL MOTORS CORP.

6. Grasp the sides of the shift control boot and apply light pressure in toward the shift control lever to begin to release the shift boot retaining tabs from the IP accessory trim plate.
7. Using light pressure, continue to release the remaining boot retaining tabs.

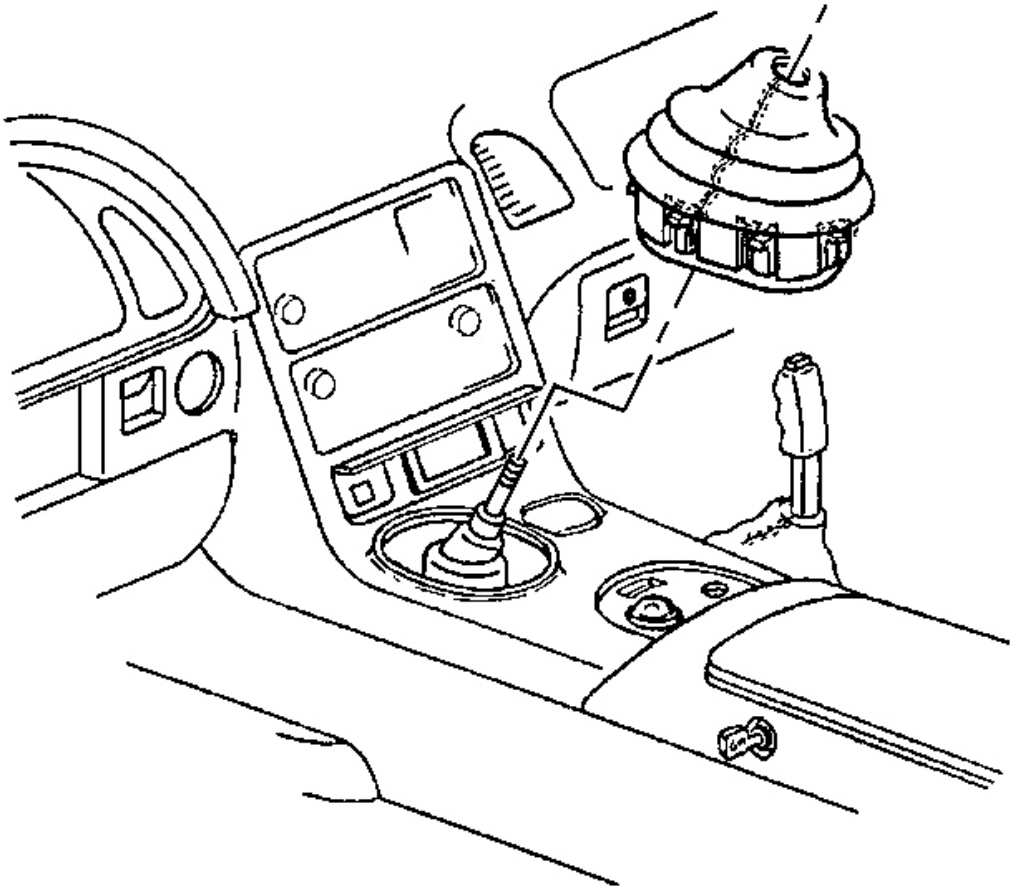

Fig. 44: IP Accessory Trim Plate & Boot
Courtesy of GENERAL MOTORS CORP.

8. Lift the boot away from the trim plate and remove the boot.
9. Remove the IP accessory trim plate. Refer to **Trim Plate Replacement - Instrument Panel (I/P) Accessory** in Instrument Panel, Gauges and Console.

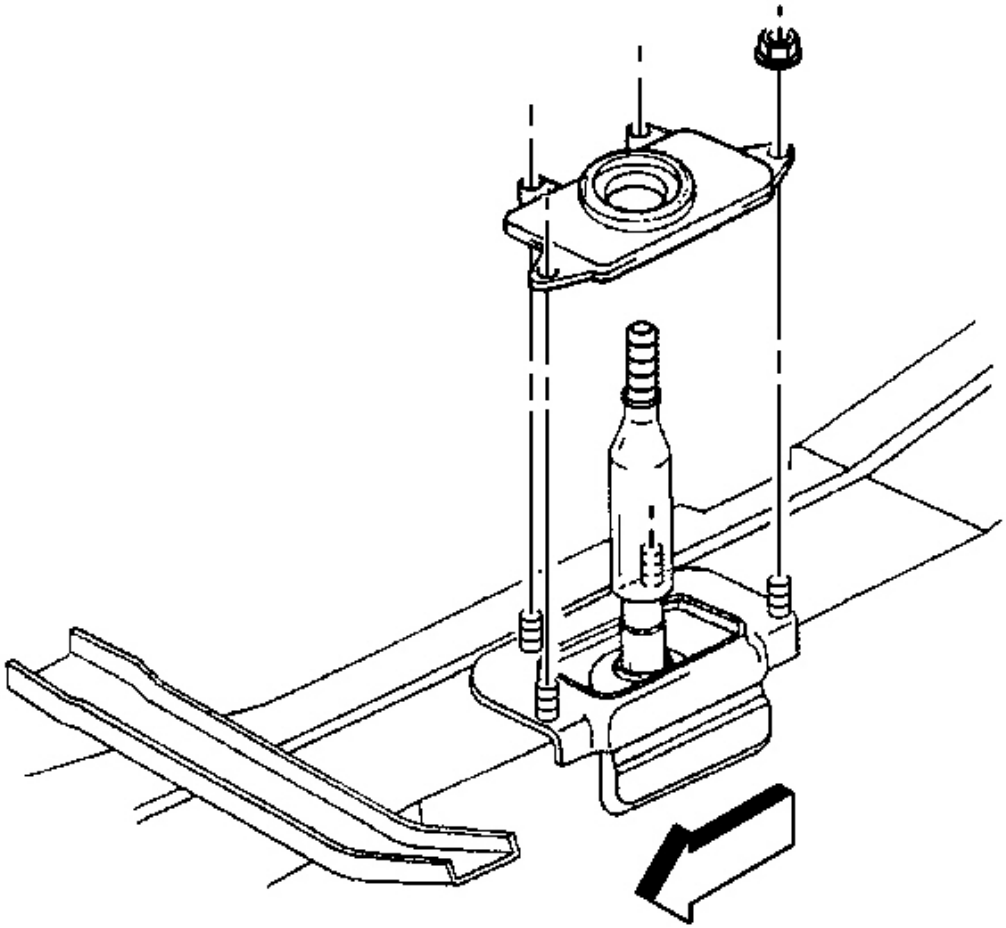

Fig. 45: Shift Control Closeout Boot & Retaining Nuts
Courtesy of GENERAL MOTORS CORP.

10. Remove the shift control closeout boot retaining nuts.
11. Remove the shift control closeout boot.
12. Remove the shift control assembly. Refer to **Shift Control Assembly Replacement** in Manual Transmission.
13. Remove the left IP lower insulator panel. Refer to **Closeout/Insulator Panel Replacement - Left** in Instrument Panel, Gauges and Console.

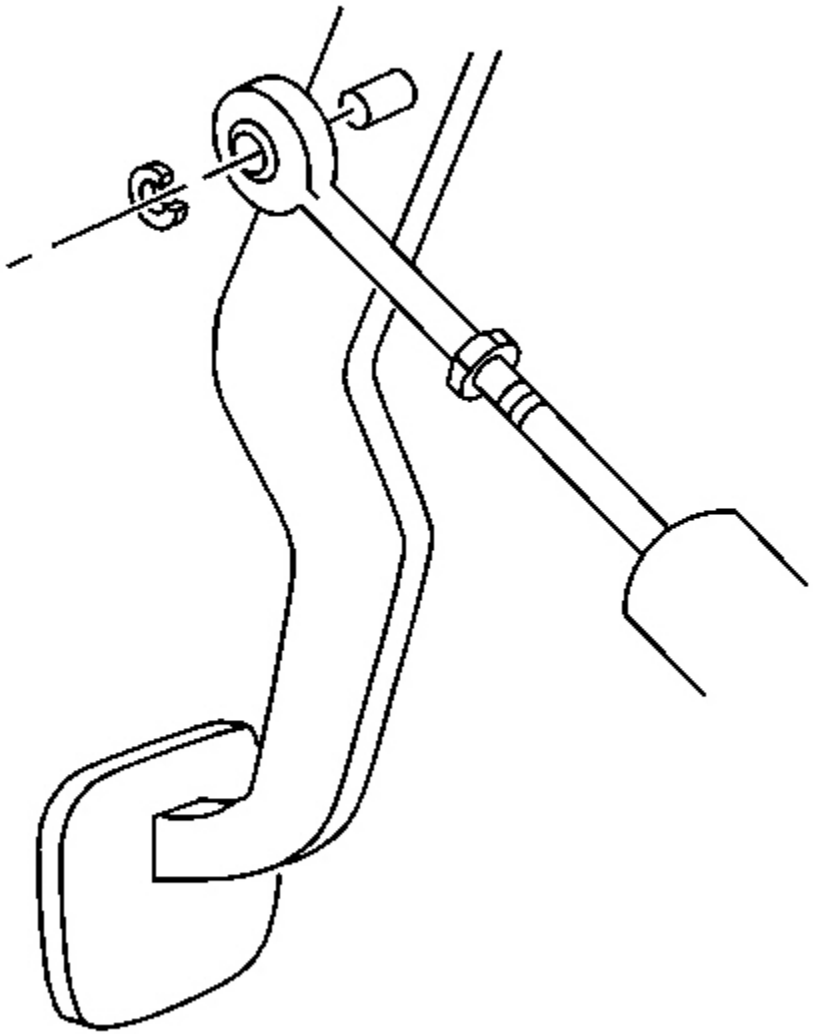

Fig. 46: Clutch Master Cylinder Pushrod
Courtesy of GENERAL MOTORS CORP.

14. Remove the clutch master cylinder pushrod retainer.
15. Disconnect the clutch master cylinder pushrod from the clutch pedal.

Fig. 47: Clutch Actuator Cylinder Hose
Courtesy of GENERAL MOTORS CORP.

16. Raise and suitably support the vehicle. Refer to **Lifting and Jacking the Vehicle** in General Information.
17. Remove the clutch actuator cylinder hose from the hose retaining clip (at the rear of the engine).

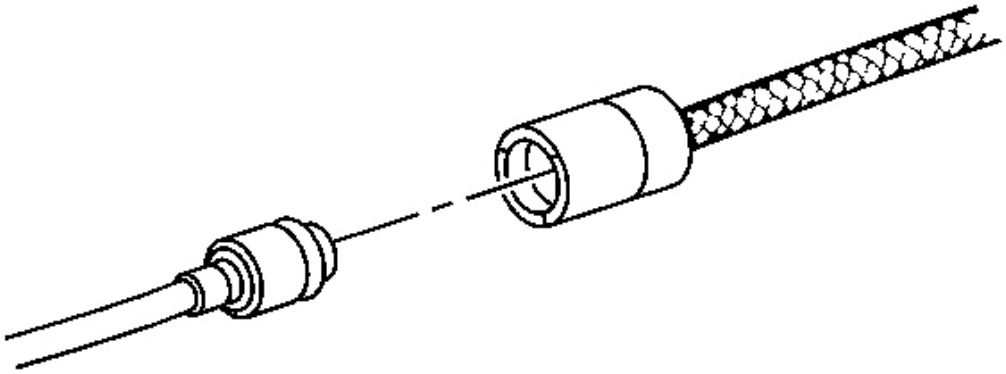

Fig. 48: Identifying White Circular Release Ring
Courtesy of GENERAL MOTORS CORP.

18. Using the **J 36221** , depress the white circular release ring on the actuator cylinder hose and simultaneously pull lightly on the master cylinder hose to disconnect.
19. Protect both hose coupling ends from dirt and damage.

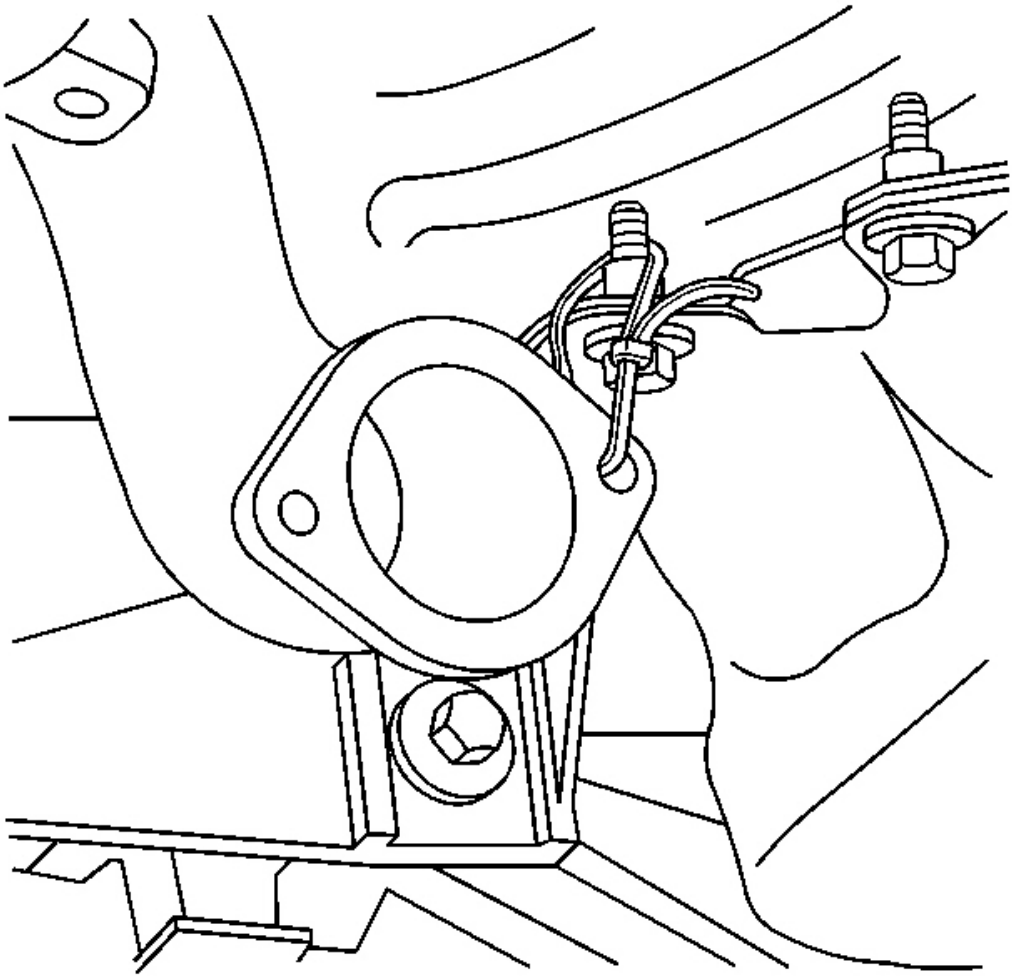

Fig. 49: Driveline Tunnel Closeout Panel & Muffler Assemblies
Courtesy of GENERAL MOTORS CORP.

20. Remove the rear tire and wheel assemblies. Refer to **Tire and Wheel Removal and Installation** in Tires and Wheels.
21. Remove the catalytic converters. Refer to **Catalytic Converter Replacement** in Engine Exhaust.
22. Tie off the muffler assemblies to the underbody to support out of the way.
23. Remove the driveline tunnel closeout panel. Refer to **Driveline Tunnel Closeout Panel Replacement** in Propeller Shaft.

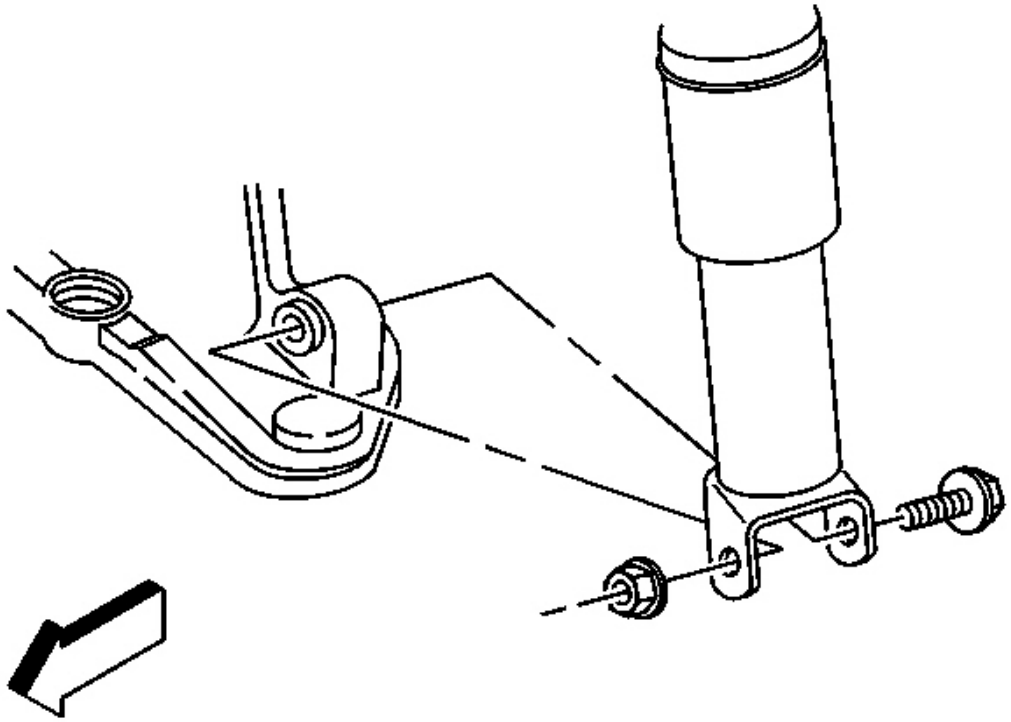

Fig. 50: Suspension Knuckle & Lower Ball Joint
Courtesy of GENERAL MOTORS CORP.

24. Remove the rear transverse spring. Refer to **Rear Transverse Spring Replacement** in Rear Suspension.
25. Support the lower control arm with a straight jack.
26. Disconnect the outer tie rod end from the suspension knuckle. Refer to **Tie Rod Replacement (Outer End)** or **Tie Rod Replacement (Suspension Link)** in Rear Suspension.
27. Remove the shock absorber lower mounting bolt.
28. Disconnect the lower ball joint from the suspension knuckle. Refer to **Knuckle Replacement** in Rear Suspension.
29. Remove the straight jack from the control arm.
30. Repeat steps 25 through 29 for the other side of the vehicle.

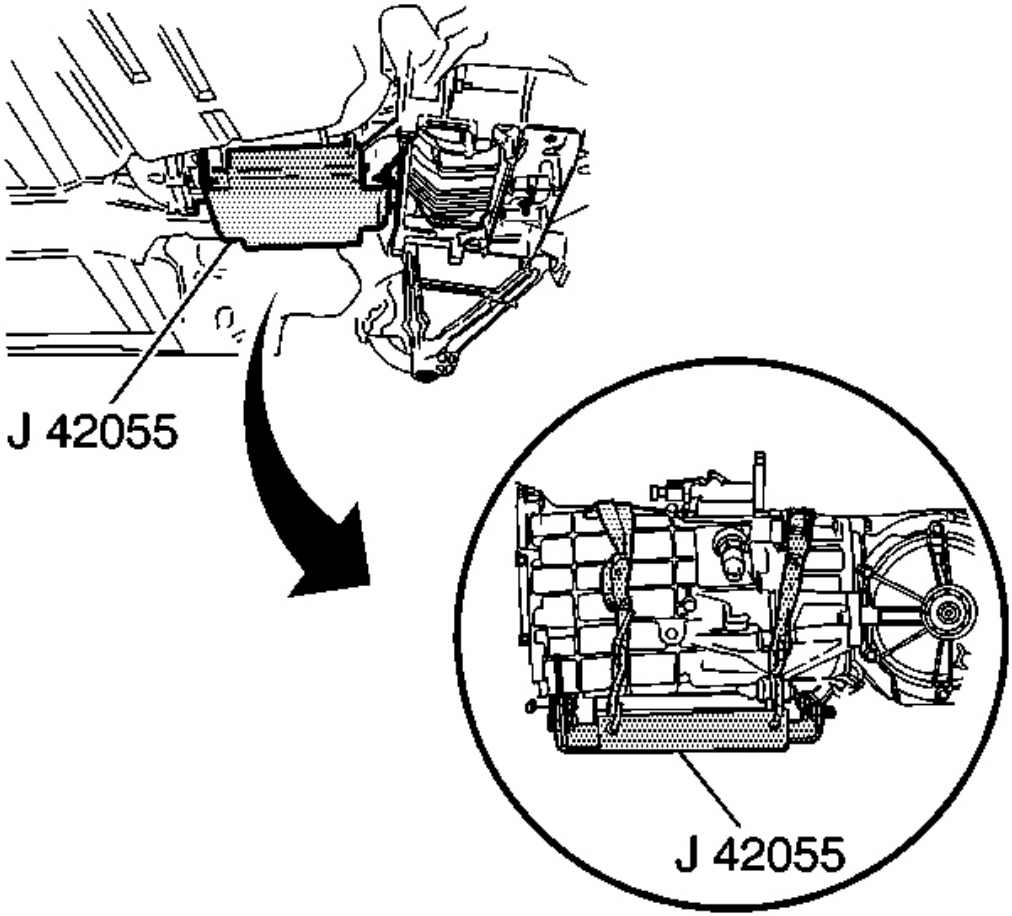

Fig. 51: View Of J 42055
Courtesy of GENERAL MOTORS CORP.

31. Assemble the **J 42055** .
32. Install the **J 42055** to a transmission jack.
33. Position and firmly secure the **J 42055** with the transmission jack to the transmission.

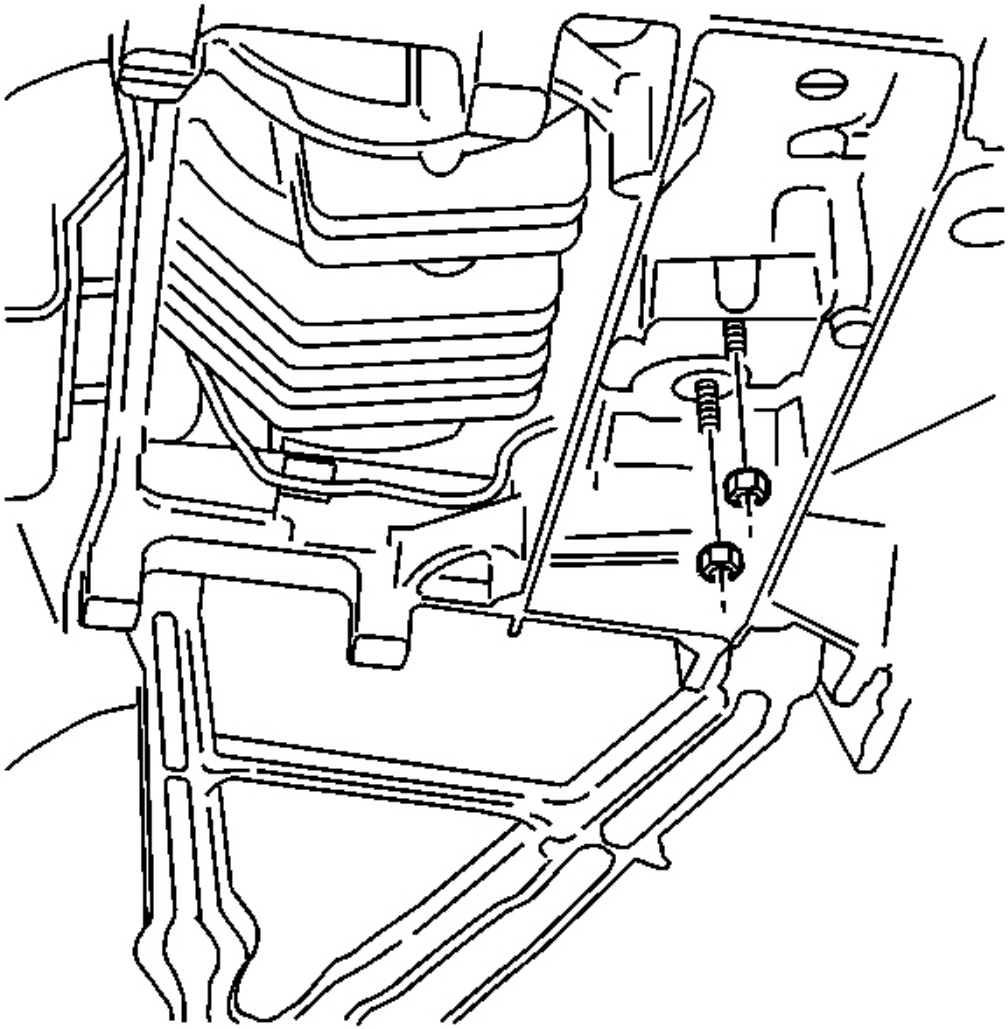

Fig. 52: Transaxle Mount & Rear Crossmember Nuts
Courtesy of GENERAL MOTORS CORP.

34. Disconnect the wiring harness and brake pipe clip retainers from the rear suspension crossmember.
35. Remove the differential to transmission lower nut.

    Removing the nut at this time will aid in separating the differential from the transmission after the driveline has been removed from the vehicle.

36. Remove the transaxle mount to rear crossmember nuts.

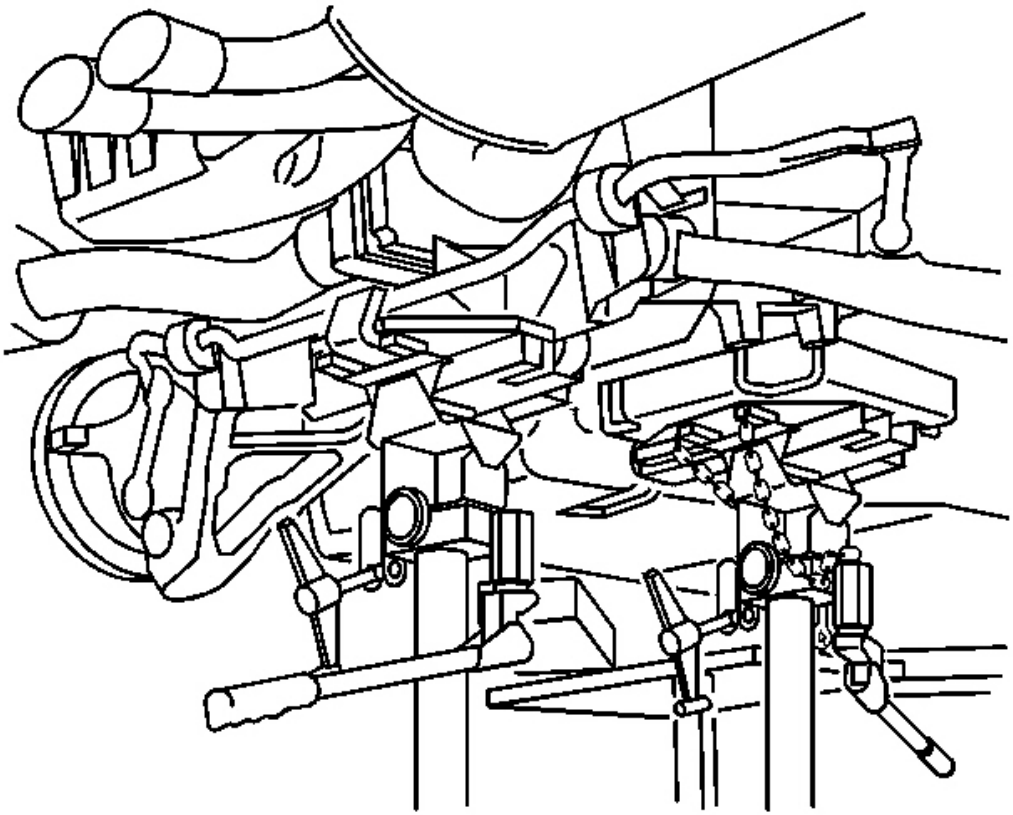

Fig. 53: View Of Jack Under Front End
Courtesy of GENERAL MOTORS CORP.

37. Position a transmission jack under the rear suspension crossmember and firmly secure the crossmember to the jack.
38. Using ONLY HAND TOOLS, remove the rear suspension crossmember retaining nuts.

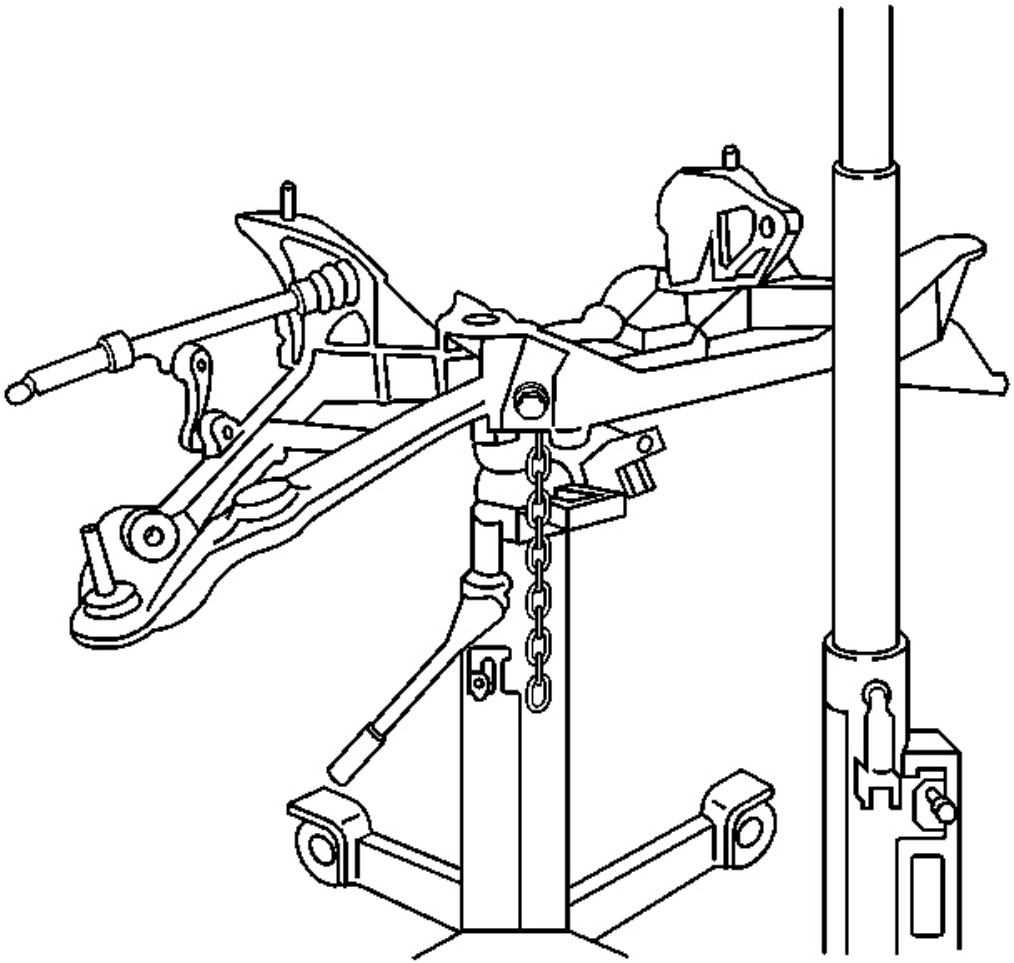

Fig. 54: Rear Suspension Crossmember
Courtesy of GENERAL MOTORS CORP.

39. With the aid of an assistant, slowly lower the rear suspension crossmember away from the vehicle frame rails and remove the crossmember.

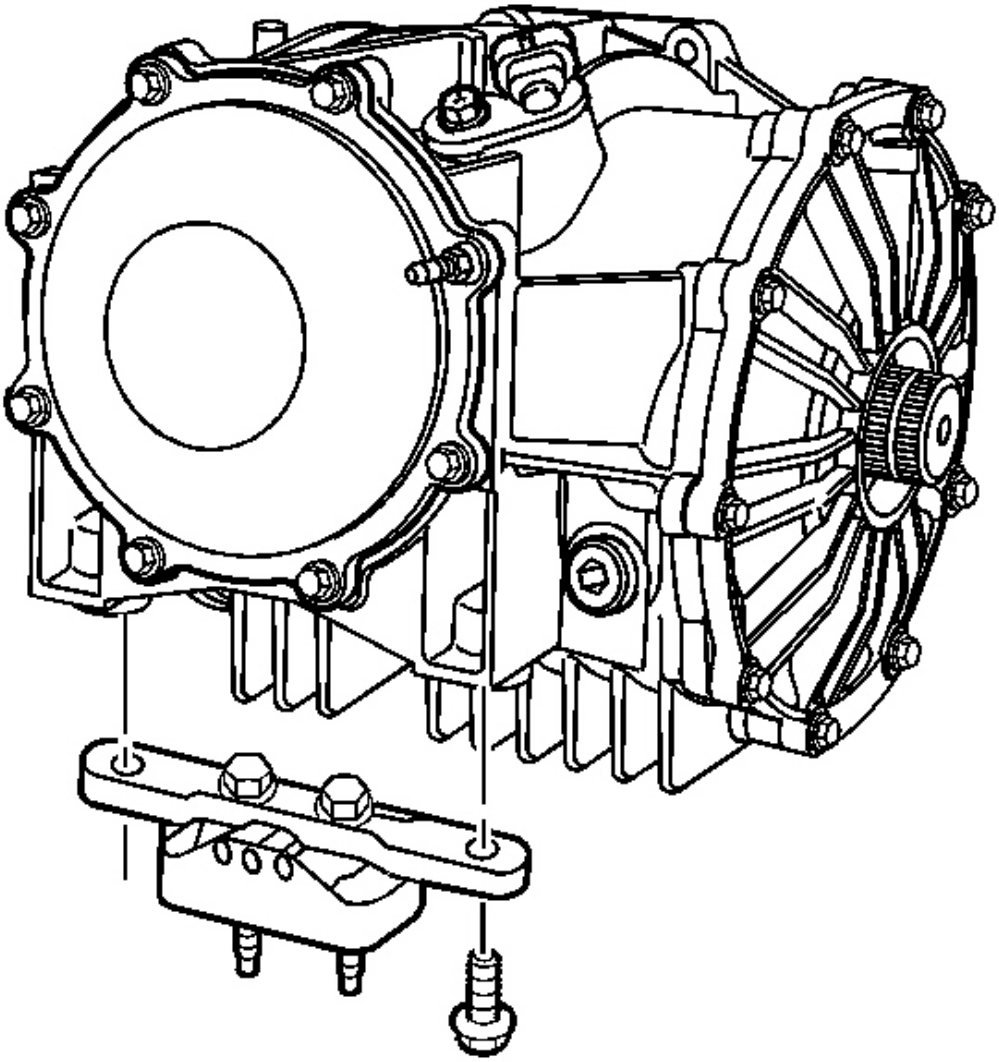

Fig. 55: Transaxle Mount Bracket & Differential Bolts
Courtesy of GENERAL MOTORS CORP.

40. Remove the transaxle mount bracket to differential bolts.
41. Remove the transaxle mount with bracket.

Removing the transaxle mount will allow for greater stability on a workbench after the driveline is removed.

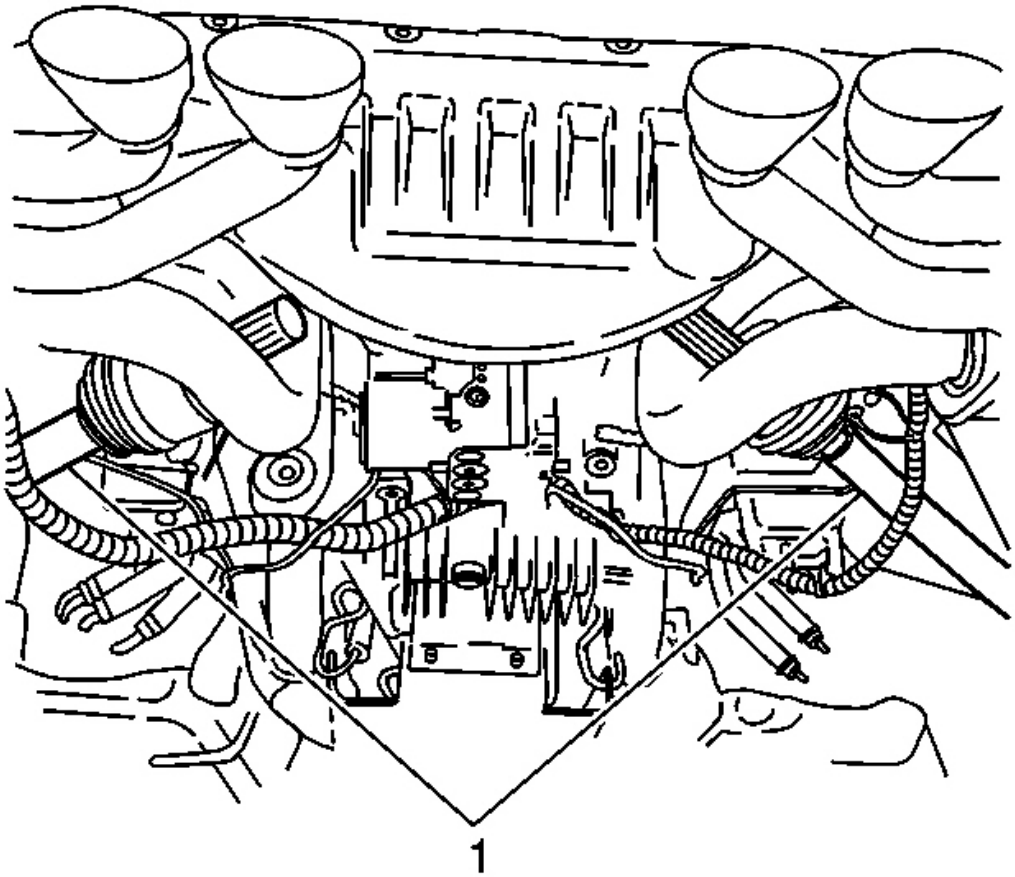

Fig. 56: Muffler Assembly Pipes & Rear Axle Shafts
Courtesy of GENERAL MOTORS CORP.

42. Using a pry bar, CAREFULLY release the axle shafts from the differential.
43. Tie off the axle shafts (1) to the underbody to support out of the way.

The muffler assembly pipes toward the rear provide a good location to help support the axle shafts (1).

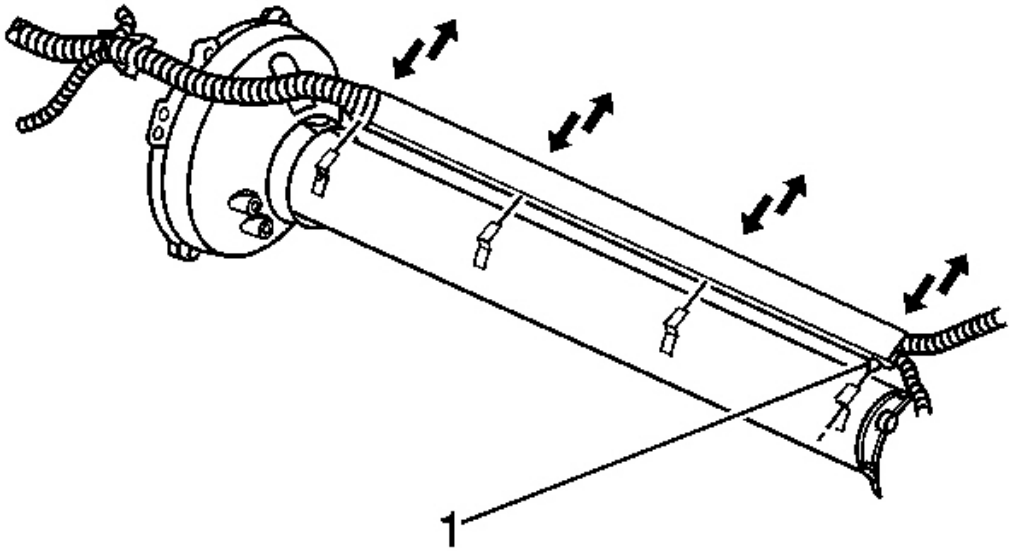

Fig. 57: Wiring Harness & Driveline Support Assembly
Courtesy of GENERAL MOTORS CORP.

44. Release the retainer (1) securing (and positioning) the wiring harness to the L-shaped brackets along the driveline support assembly, then slide the harness up out of the brackets and position out of the way.

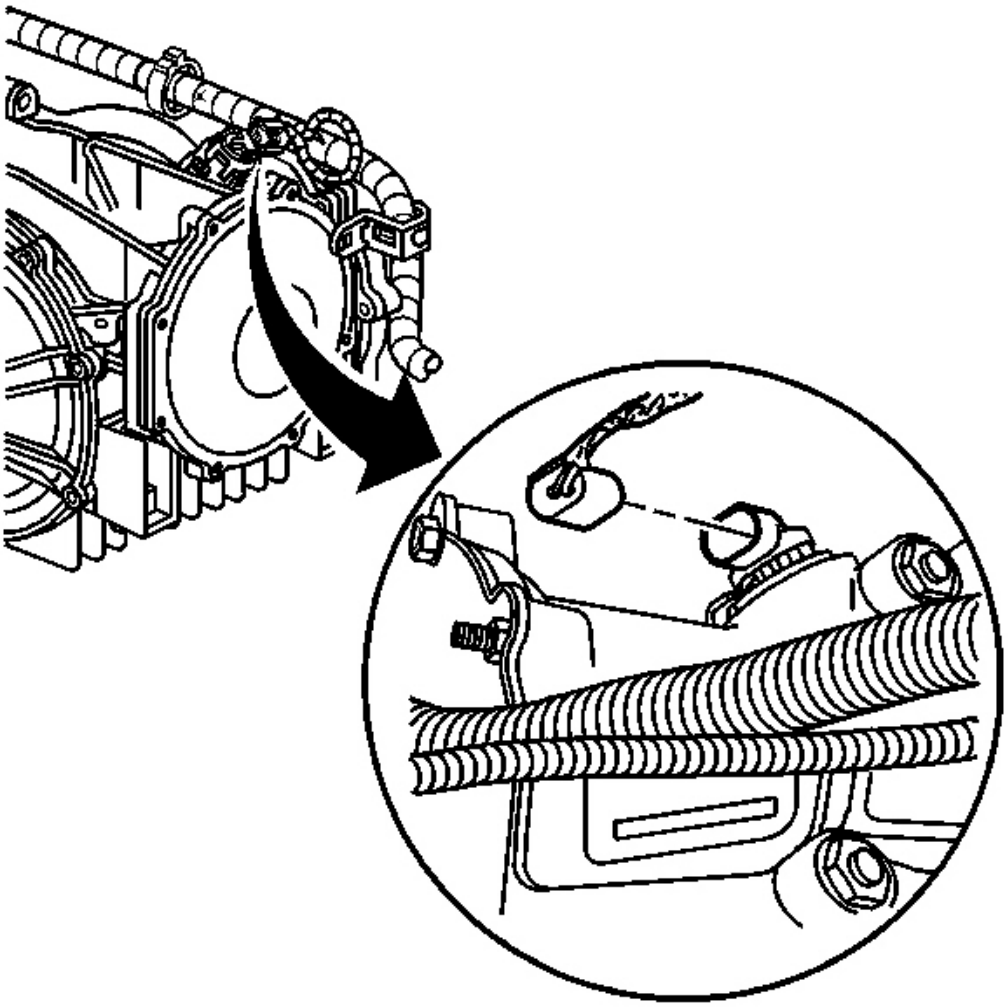

Fig. 58: VSS Electrical Connector
Courtesy of GENERAL MOTORS CORP.

45. SLOWLY lower the driveline approximately 50 mm (2 in), while simultaneously adjusting the angle of tilt, in order to access the electrical connectors.
46. Disconnect the vehicle speed sensor (VSS) electrical connector.

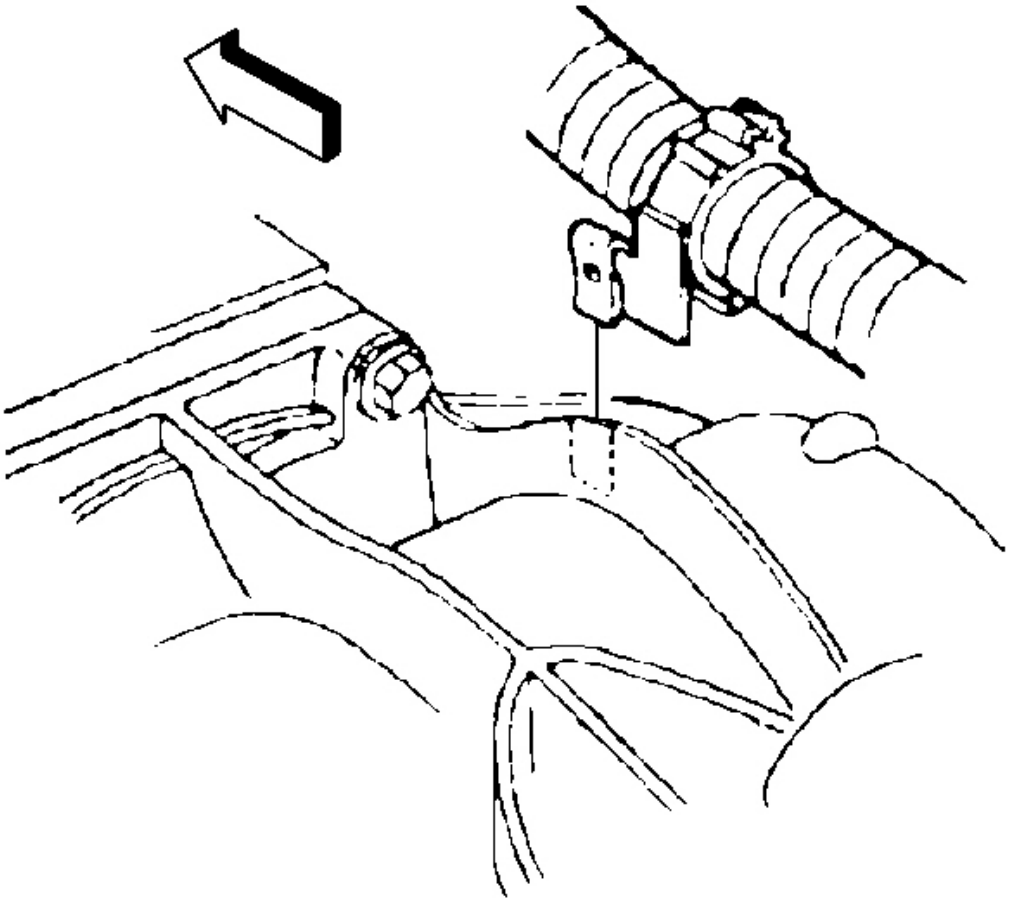

Fig. 59: Wiring Harness Retainer Clip & Differential Rear Cover
Courtesy of GENERAL MOTORS CORP.

47. Disconnect the wiring harness retainer from the stud at the differential rear cover.
48. Disconnect the wiring harness retainer clip from the top of the differential.

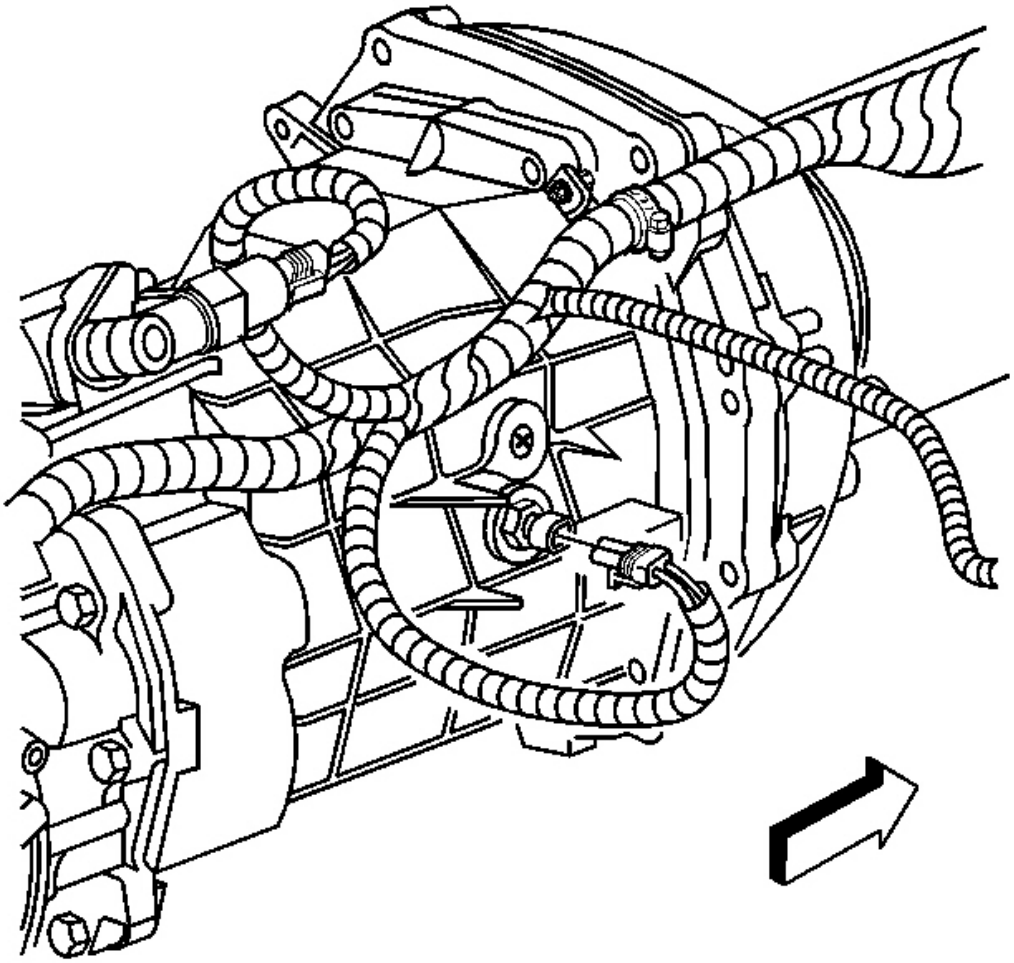

Fig. 60: Backup Lamp Switch Electrical Connector
Courtesy of GENERAL MOTORS CORP.

49. Disconnect the backup lamp switch electrical connector.

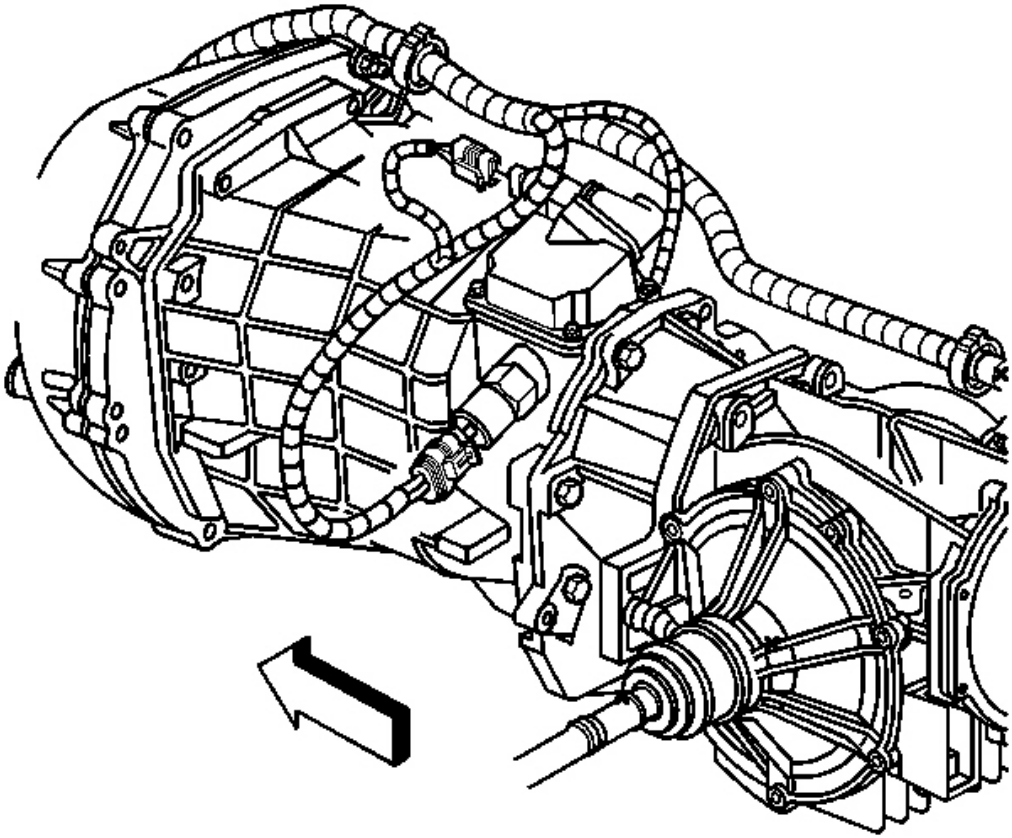

Fig. 61: Reverse Lockout Solenoid Electrical Connector
Courtesy of GENERAL MOTORS CORP.

50. Disconnect the reverse lockout solenoid electrical connector.

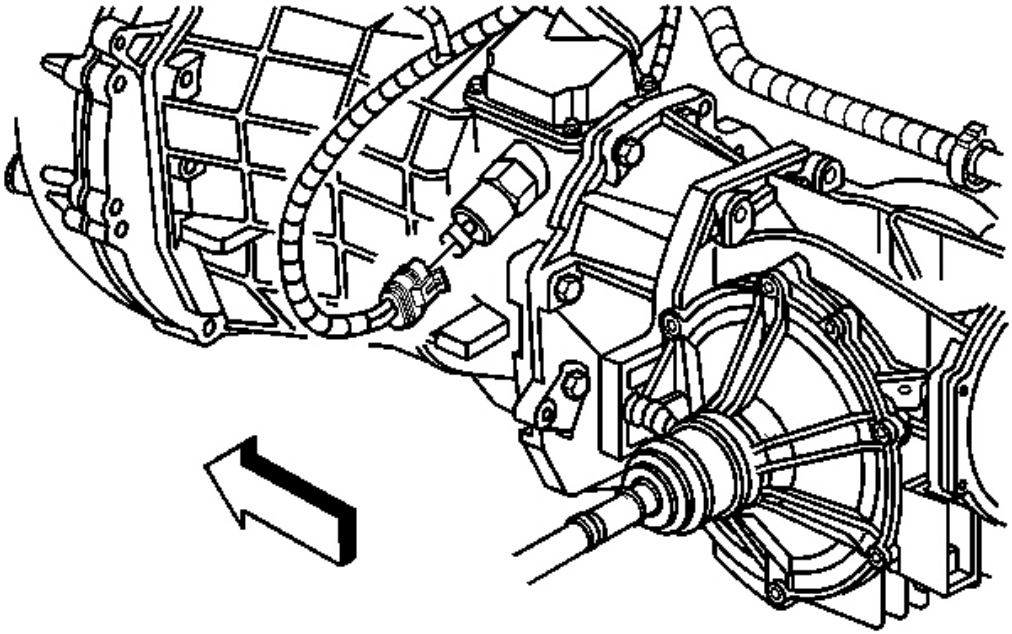

Fig. 62: Gear Select (Skip Shift) Solenoid Electrical Connector
Courtesy of GENERAL MOTORS CORP.

51. Disconnect the gear select (skip shift) solenoid electrical connector.

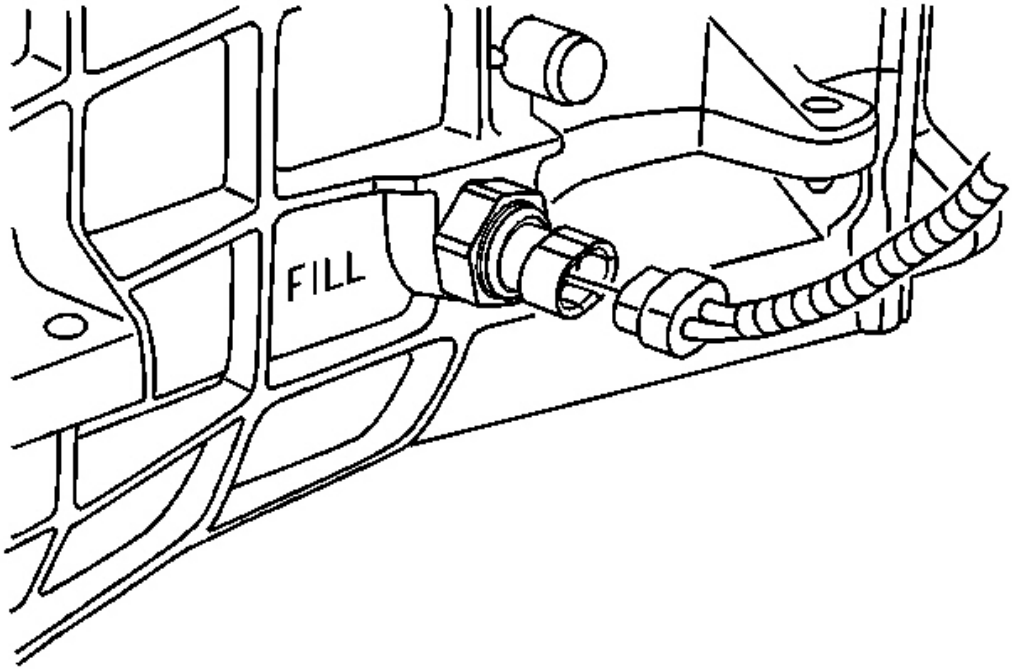

Fig. 63: Transmission Fluid Temperature Sensor Electrical Connector
Courtesy of GENERAL MOTORS CORP.

52. Disconnect the transmission fluid temperature sensor electrical connector, if equipped.

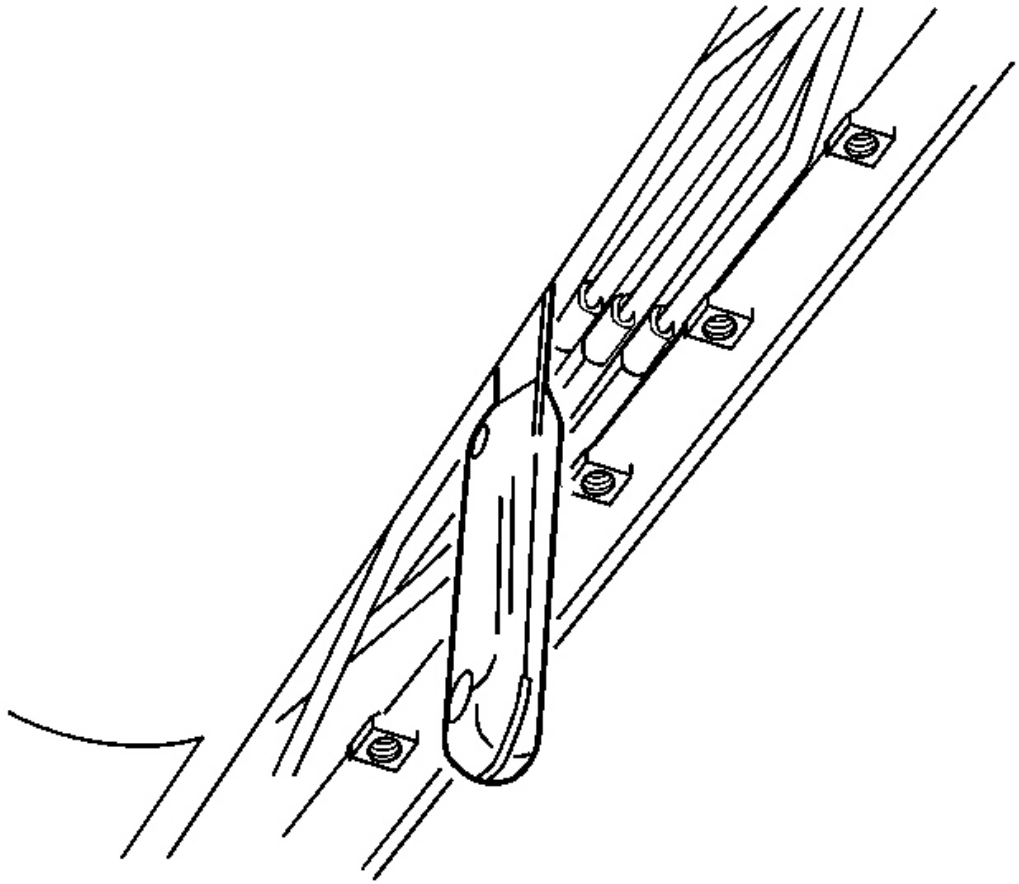

Fig. 64: Edge Of Shifter Bracket
Courtesy of GENERAL MOTORS CORP.

53. Insert a putty knife, or similar tool, between the edge of the shifter bracket on the side of the driveline support assembly and the brake pipe retainer on the wall of the driveline tunnel.

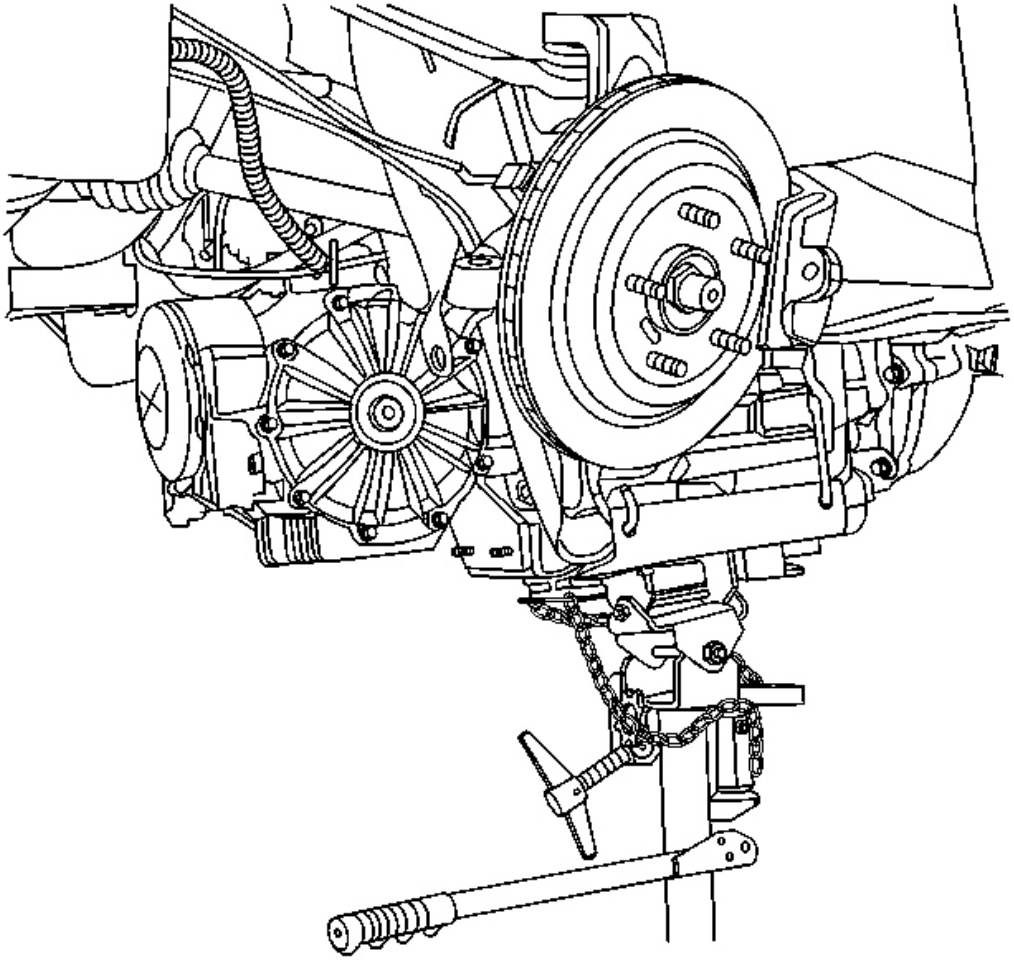

Fig. 65: Supporting Transmission Using Jackstand
Courtesy of GENERAL MOTORS CORP.

54. SLOWLY lower the driveline, while simultaneously adjusting the angle of tilt, and observe the relationship between the top rear of the differential and the lowest part of the rear compartment panel floor (the center storage compartment between the frame rails); the differential should not be lowered more than approximately EVEN with the specified body point of reference.

    (The engine positive crankcase ventilation (PCV) pipes which route along the rear of the engine intake manifold will likely contact the dash panel.)

55. Release the wiring harness from the harness retainer along the top of the transmission.
56. Check to be sure that the wiring harness is free from the driveline being removed.

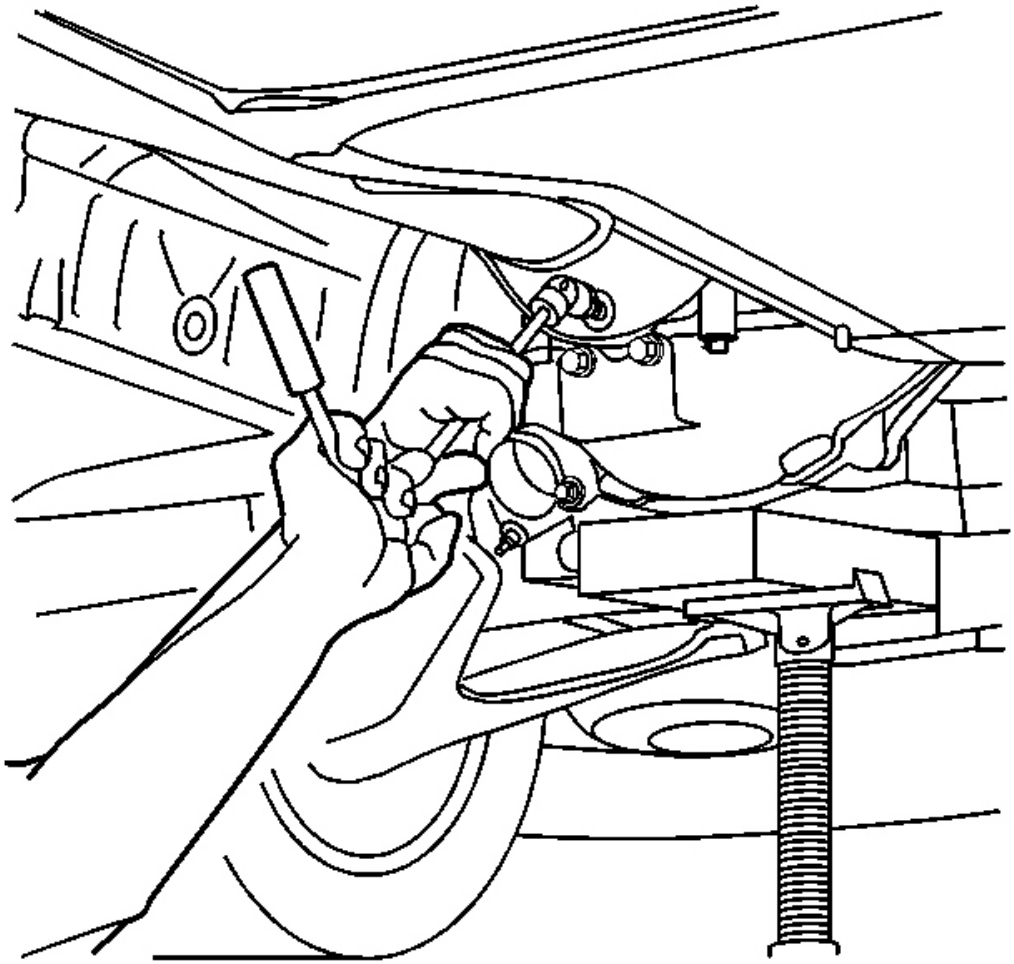

Fig. 66: Removing/Installing Driveline Support Assembly To Engine Flywheel Housing Bolts
Courtesy of GENERAL MOTORS CORP.

57. Using a block of wood to protect the engine oil pan, place a jack under the rear of the engine oil pan to support the engine and prevent contact with the composite dash panel.
58. Remove the driveline support assembly to engine flywheel housing bolts.
59. Carefully bend the wiring harness bracket away from the driveline toward the driveline tunnel wall in order to make a clear removal path for the driveline.

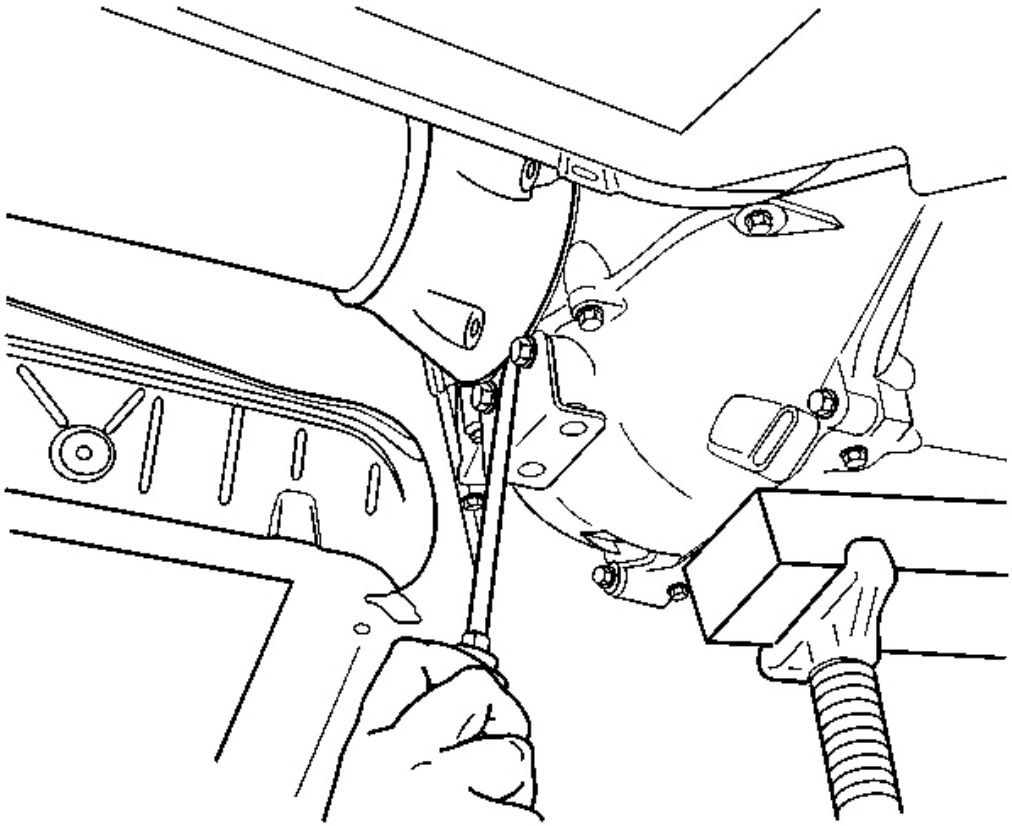

Fig. 67: Separating Edge Of Driveline Support Assembly & Engine Flywheel Housing Using Flat Bladed Tool
Courtesy of GENERAL MOTORS CORP.

IMPORTANT: The aid of an assistant will be necessary for the remaining steps.

60. Have an assistant insert a flat bladed screwdriver, or similar tool, between the edge of the driveline support assembly and the engine flywheel housing, then begin to pry the driveline loose from the engine.

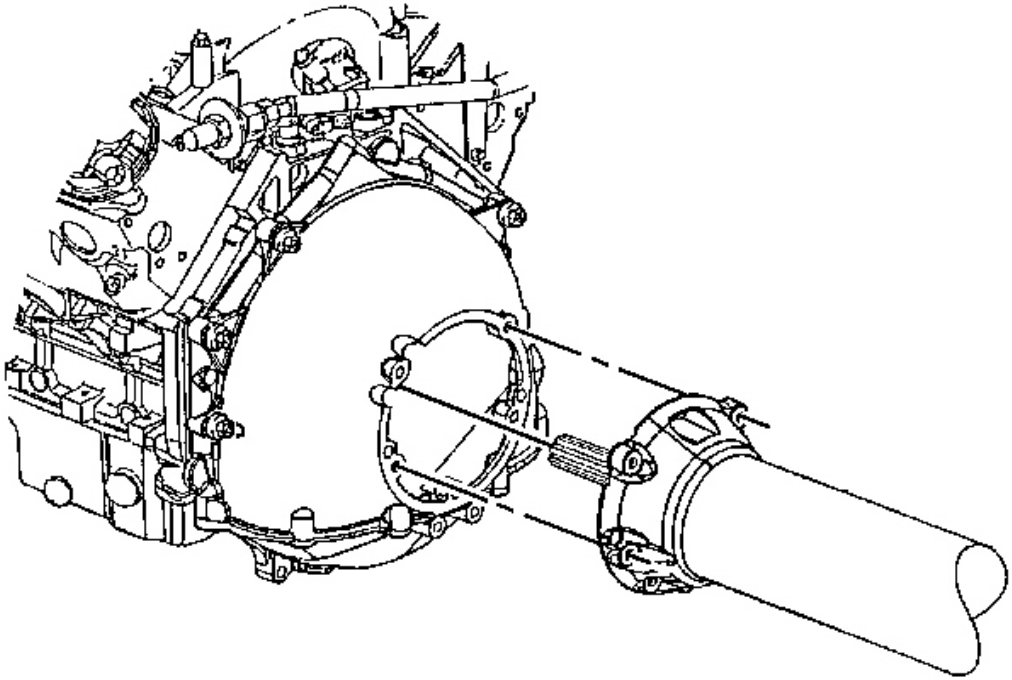

Fig. 68: Propeller Input Shaft
Courtesy of GENERAL MOTORS CORP.

61. Have an assistant guide the front of the driveline during the removal of the driveline from the vehicle.
62. SLOWLY lower the driveline, while simultaneously adjusting the angle of tilt and pulling the driveline away from the engine UNTIL the propeller input shaft at the front of the driveline support assembly just clears the engine flywheel housing.
63. SLOWLY lower the driveline completely out of the vehicle.

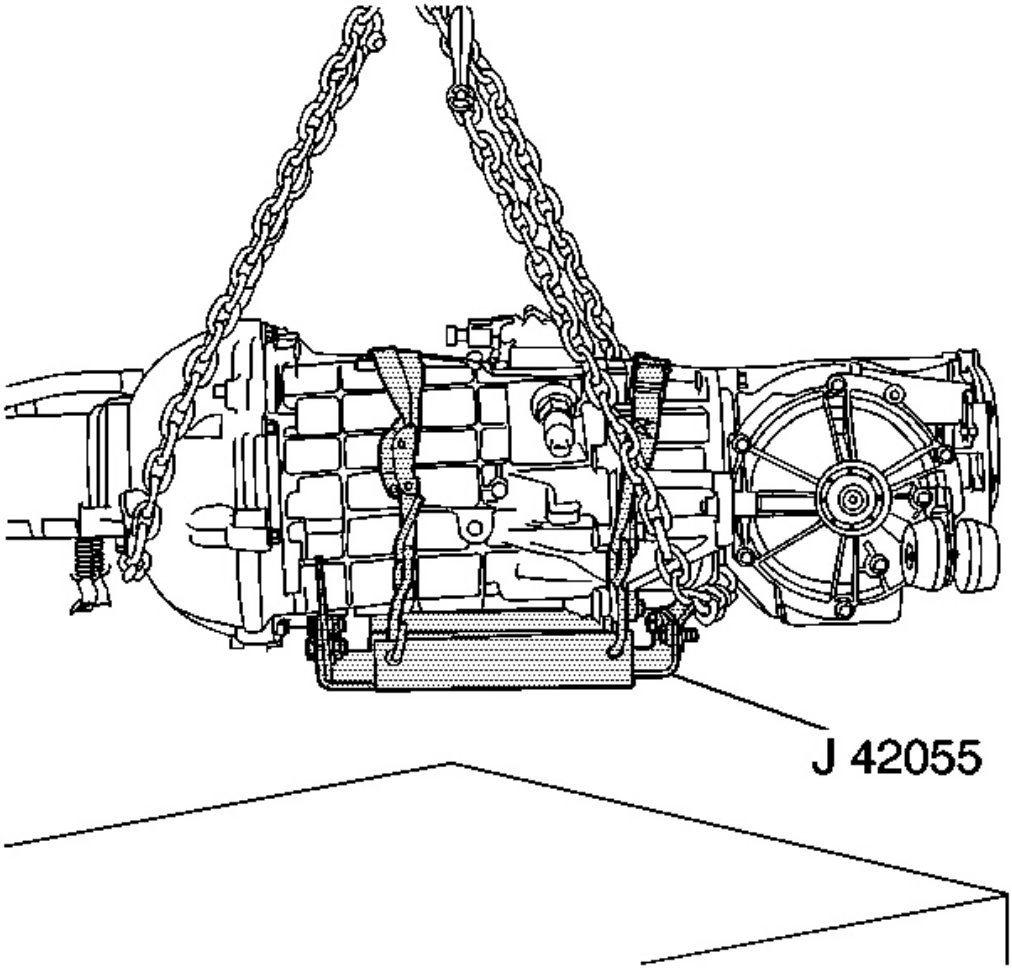

Fig. 69: J 42055 & Transmission Jack
Courtesy of GENERAL MOTORS CORP.

64. Position the chainfall, or equivalent lifting device, in a way which will protect the rear exhaust hangers located on the driveline support assembly.
65. Using the lifting device, raise the driveline to relieve the weight from the transmission jack.
66. Disconnect the **J 42055** from the transmission jack ONLY; the **J 42055** will provide stability to the driveline components while working on a bench.
67. Position the driveline on a workbench with the lift device still attached.
68. Support the driveline support assembly and the differential for additional balance.
69. Remove the lifting device from the driveline.

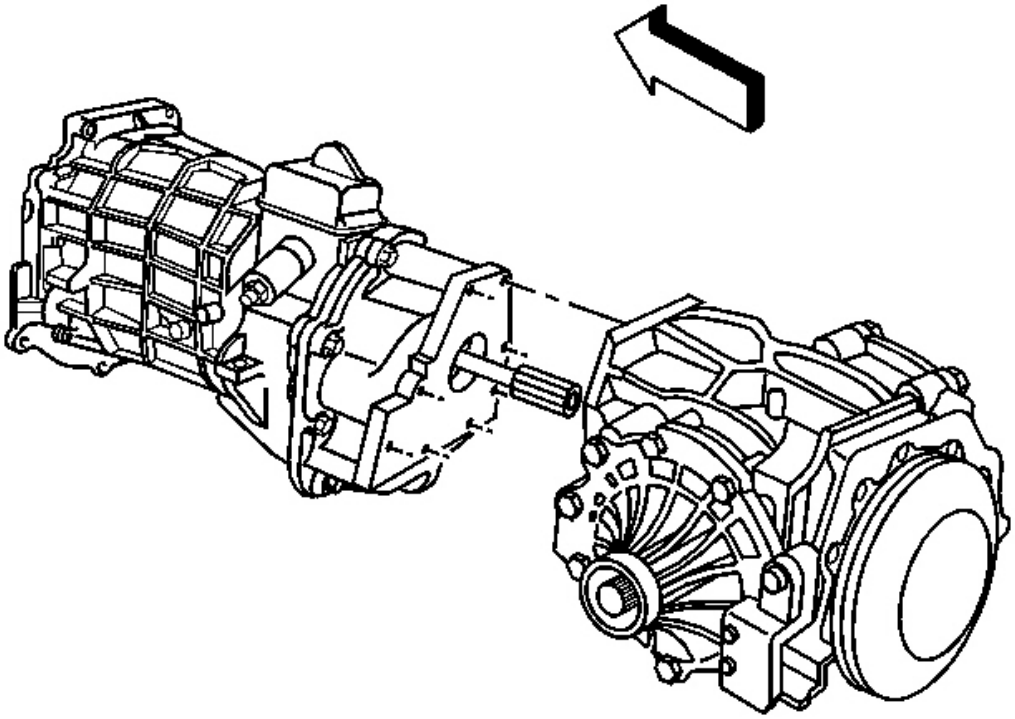

Fig. 70: Differential, Transmission Bolts & Nuts
Courtesy of GENERAL MOTORS CORP.

70. Remove the differential to transmission bolts and nuts.
71. SLOWLY slide the differential from the transmission.

Installation Procedure

NOTE: **When tilting down the rear of the driveline, insert a putty knife or similar tool between the shift control bracket on the driveline support assembly and the brake pipe retainer on the driveline tunnel wall to prevent damage.**

NOTE: **Ensure that the clutch hydraulic hoses are positioned away from nearby vehicle components or vehicle damage may result.**

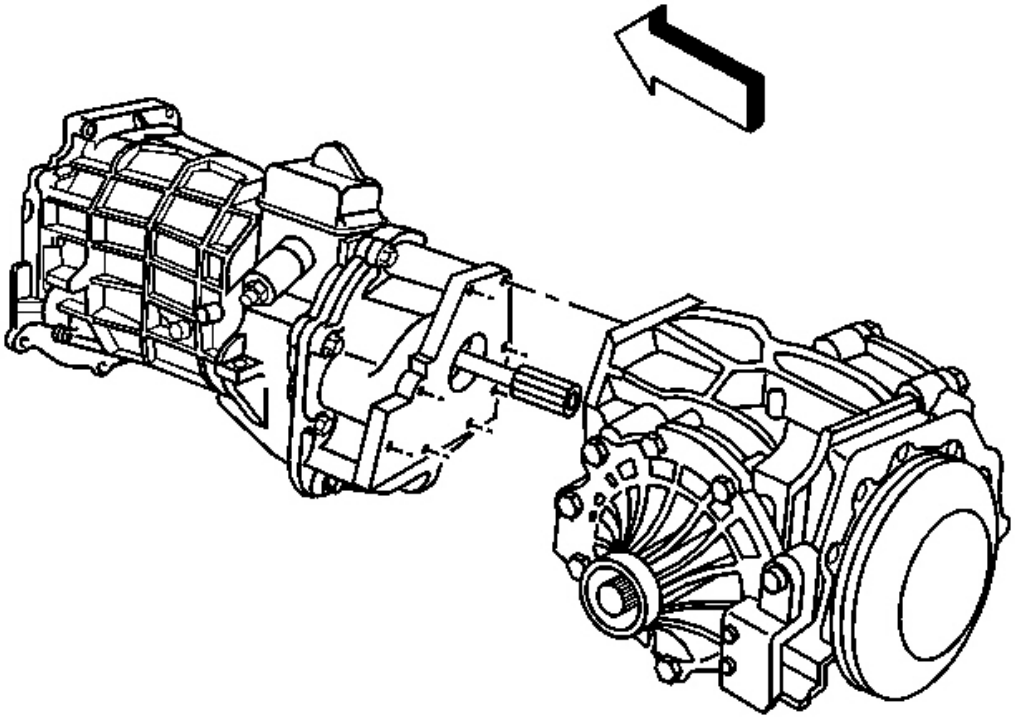

Fig. 71: Differential, Transmission Bolts & Nuts
Courtesy of GENERAL MOTORS CORP.

1. SLOWLY slide the differential to the transmission.

NOTE: **Refer to Fastener Notice in Cautions and Notices.**

2. Install the differential to transmission bolts and nuts.

   Tighten: Tighten the differential to transmission bolts and nuts to 50 N.m (37 lb ft).

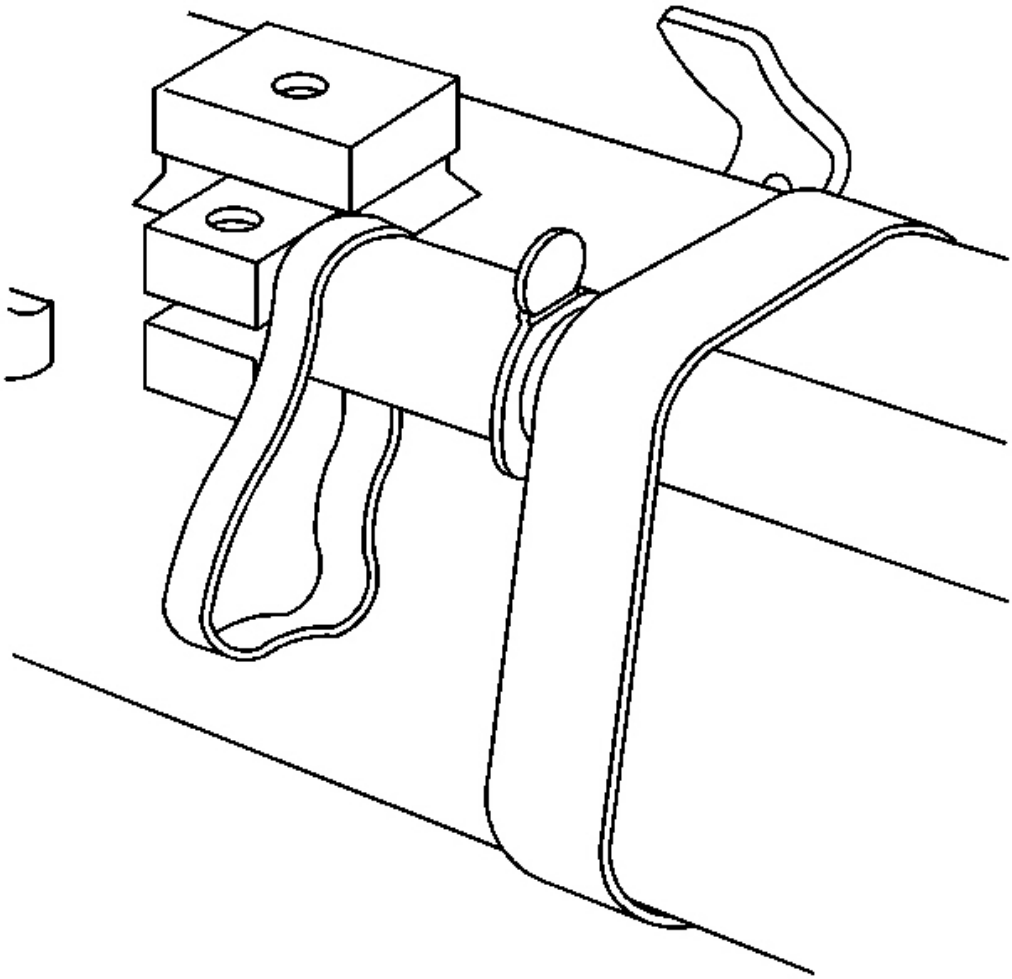

Fig. 72: Rubber Band & Transmission Shift Rod
Courtesy of GENERAL MOTORS CORP.

3. Loosely install a rubber band onto the transmission shift rod and position just behind the shift rod clamp.

   The rubber band will be used to aid in installing the shift control assembly after the driveline has been installed.

4. Using a piece of masking tape, or similar tape which can be easily broken, affix the transmission shift rod to the driveline support assembly and position the rod just to the outside of the mounting boss used for the shift control.

   The tape is intended to keep the shift rod in position to aid in shift control installation after the driveline

has been installed.

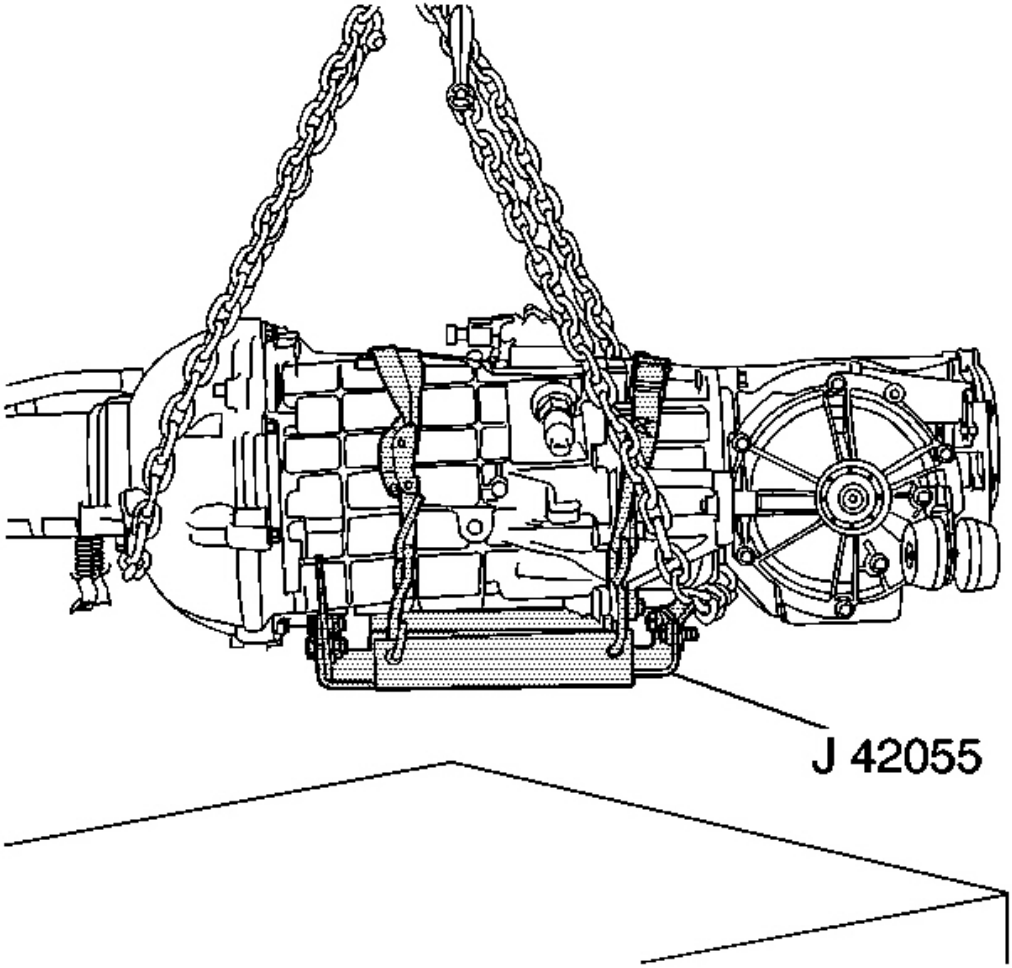

Fig. 73: J 42055 & Transmission Jack
Courtesy of GENERAL MOTORS CORP.

5. Position the chainfall, or equivalent lifting device, in a way which will protect the rear exhaust hangers located on the driveline support assembly.

IMPORTANT: The aid of an assistant will be necessary for the following steps until the driveline is installed into the vehicle.

6. Using the lifting device, raise the driveline off the workbench and position the driveline with the **J 42055** onto a transmission jack.

7. Connect the **J 42055** to the transmission jack.

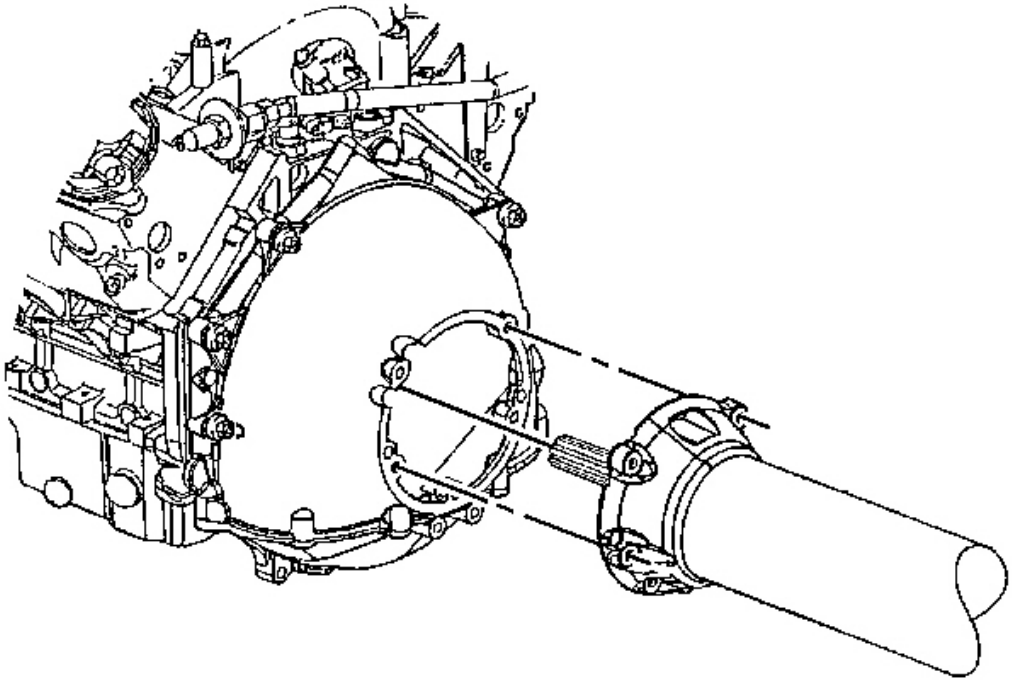

Fig. 74: Propeller Input Shaft
Courtesy of GENERAL MOTORS CORP.

8. Remove the lifting device from the driveline.
9. Position the driveline under the vehicle.
10. Begin to raise the driveline at the approximate angle used during removal.
11. Position the wiring harness along the driveline support assembly and LOOSELY install the harness into the harness retaining slots.
12. Have an assistant guide the front of the driveline so the propeller input shaft is just to the rear of the engine flywheel housing, then raise the driveline to the PROPER HEIGHT and the PROPER ANGLE to install to the engine.
13. Have an assistant begin to insert the propeller input shaft into the clutch driven plate hub while maintaining the proper angle of the driveline; if necessary, use a screwdriver to rotate the shaft slightly to bring the splines into alignment.

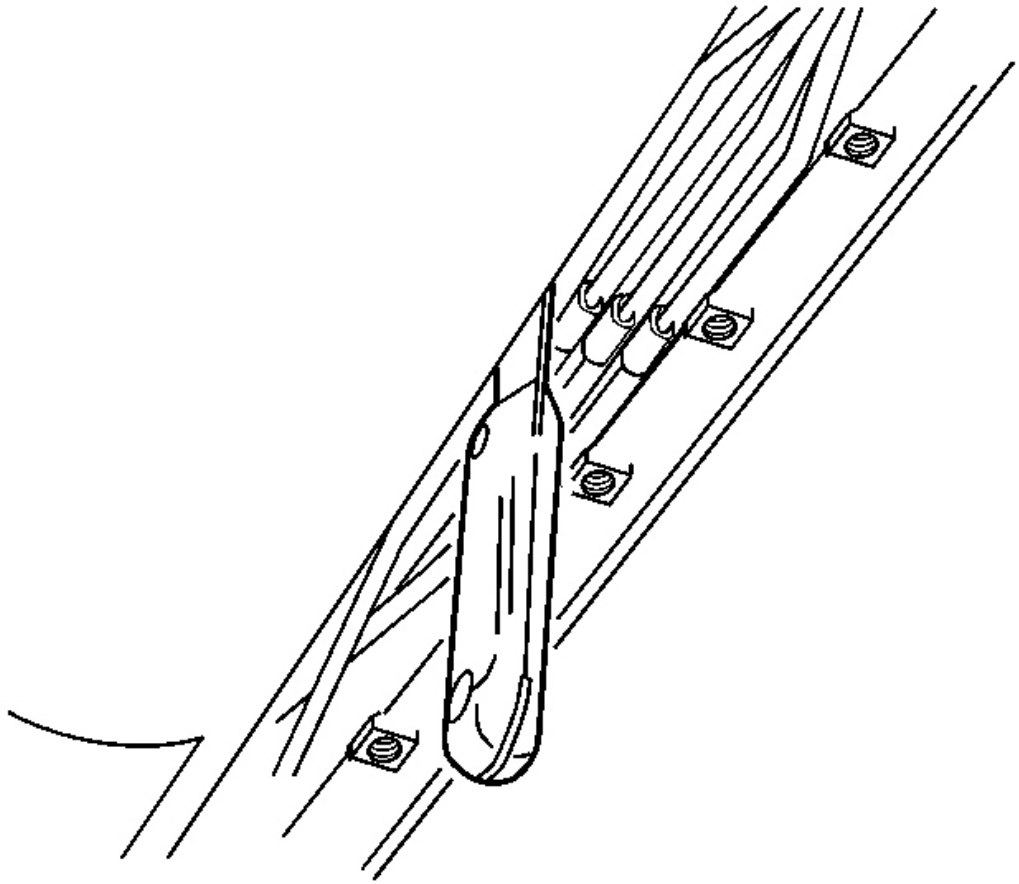

Fig. 75: Edge Of Shifter Bracket
Courtesy of GENERAL MOTORS CORP.

14. Insert a putty knife, or similar tool, between the edge of the shifter bracket on the side of the driveline support assembly and the brake pipe retainer on the wall of the driveline tunnel.

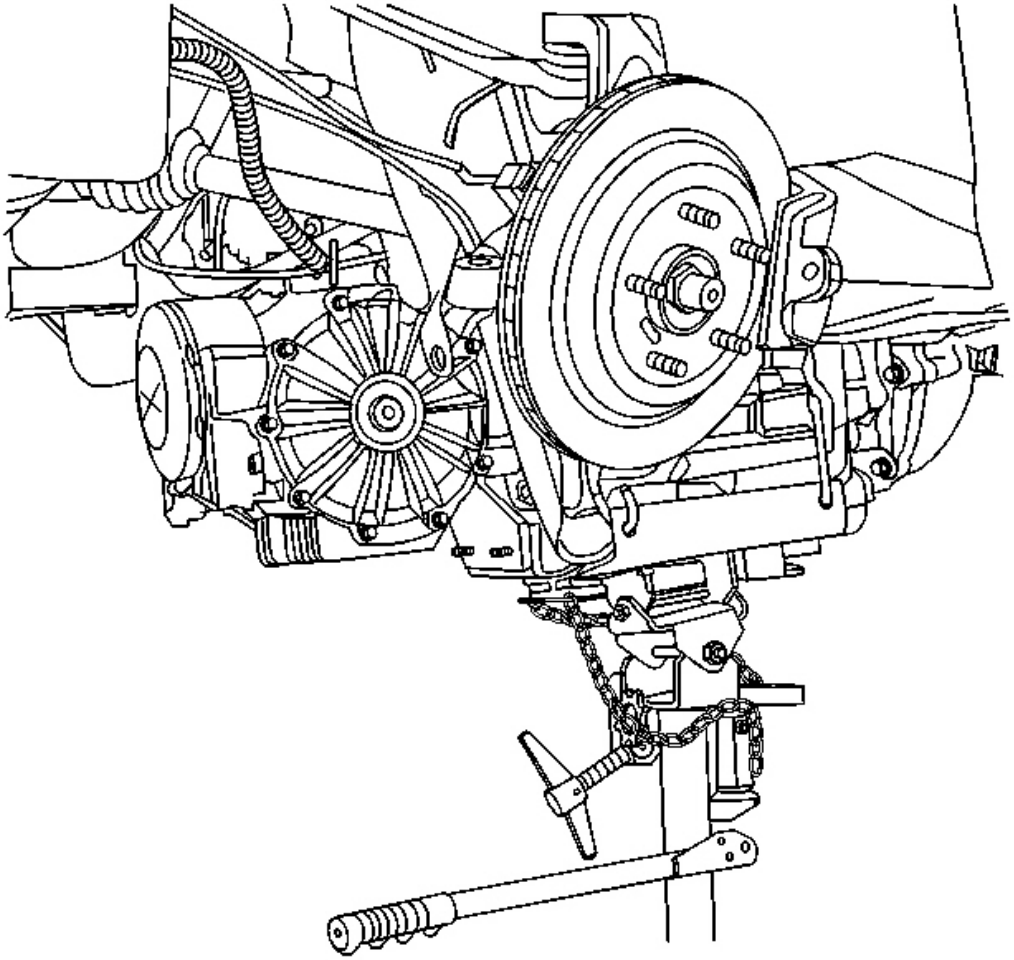

Fig. 76: Supporting Transmission Using Jackstand
Courtesy of GENERAL MOTORS CORP.

15. SLOWLY seat the driveline to the engine flywheel housing while maintaining the proper angle of the driveline.
16. Reposition the wiring harness bracket from near the driveline tunnel wall to align with the appropriate driveline support assembly bolt hole.

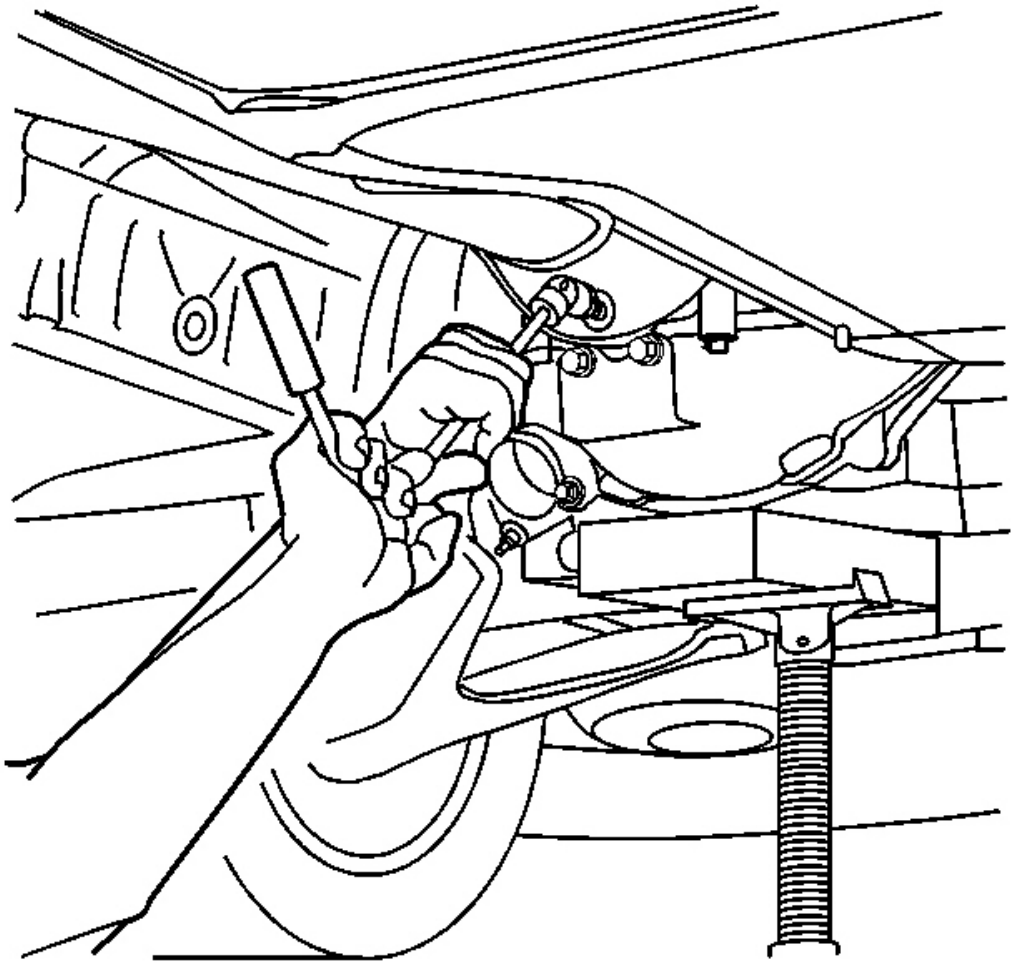

Fig. 77: Driveline Support Assembly To Engine Flywheel Housing Bolts
Courtesy of GENERAL MOTORS CORP.

17. Install the driveline support assembly to engine flywheel housing bolts.

    Tighten: Tighten the driveline support assembly to engine flywheel housing bolts to 50 N.m (37 lb ft).

18. Install the wiring harness to the wiring harness retainer along the top of the transmission.
19. SLOWLY raise the driveline to approximately 5 cm (2 in) BELOW the final installed height.

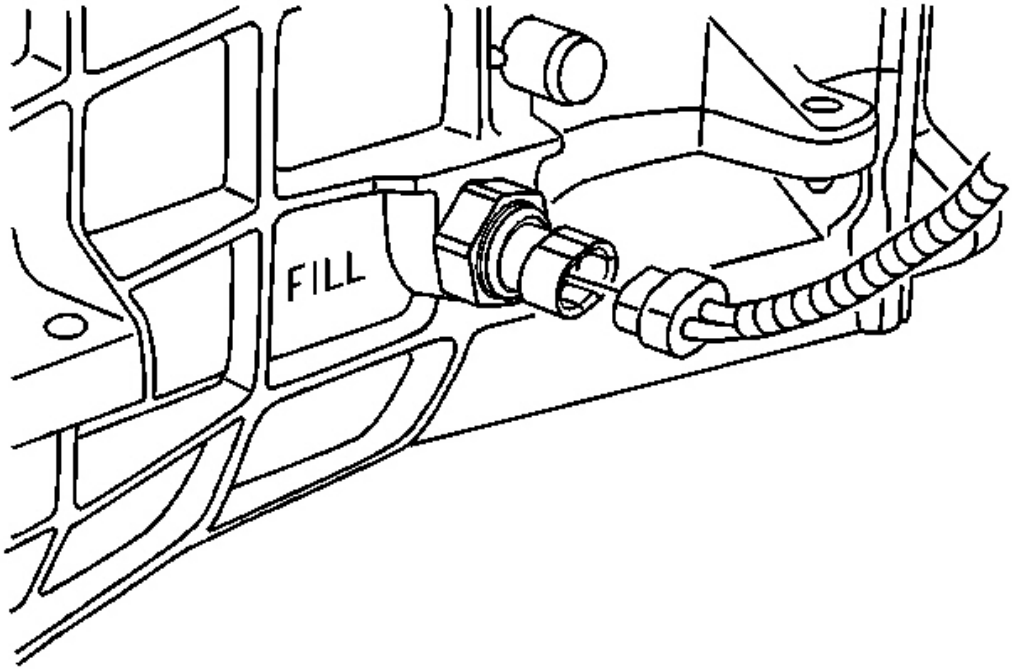

Fig. 78: Transmission Fluid Temperature Sensor Electrical Connector
Courtesy of GENERAL MOTORS CORP.

20. Connect the transmission fluid temperature sensor electrical connector, if equipped.

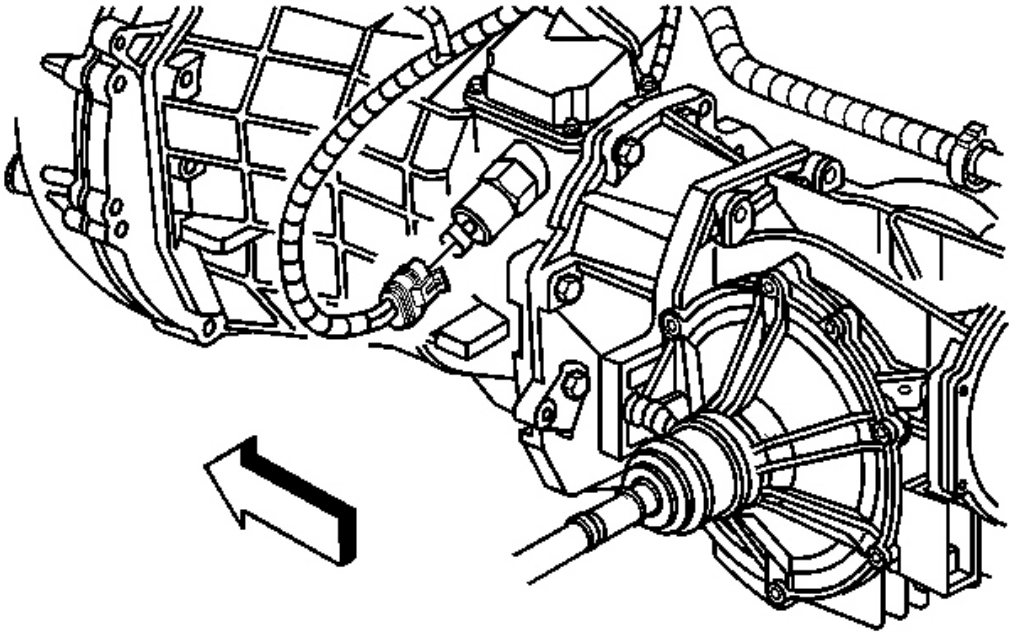

Fig. 79: Gear Select (Skip Shift) Solenoid Electrical Connector
Courtesy of GENERAL MOTORS CORP.

21. Connect the gear select (skip shift) solenoid electrical connector.

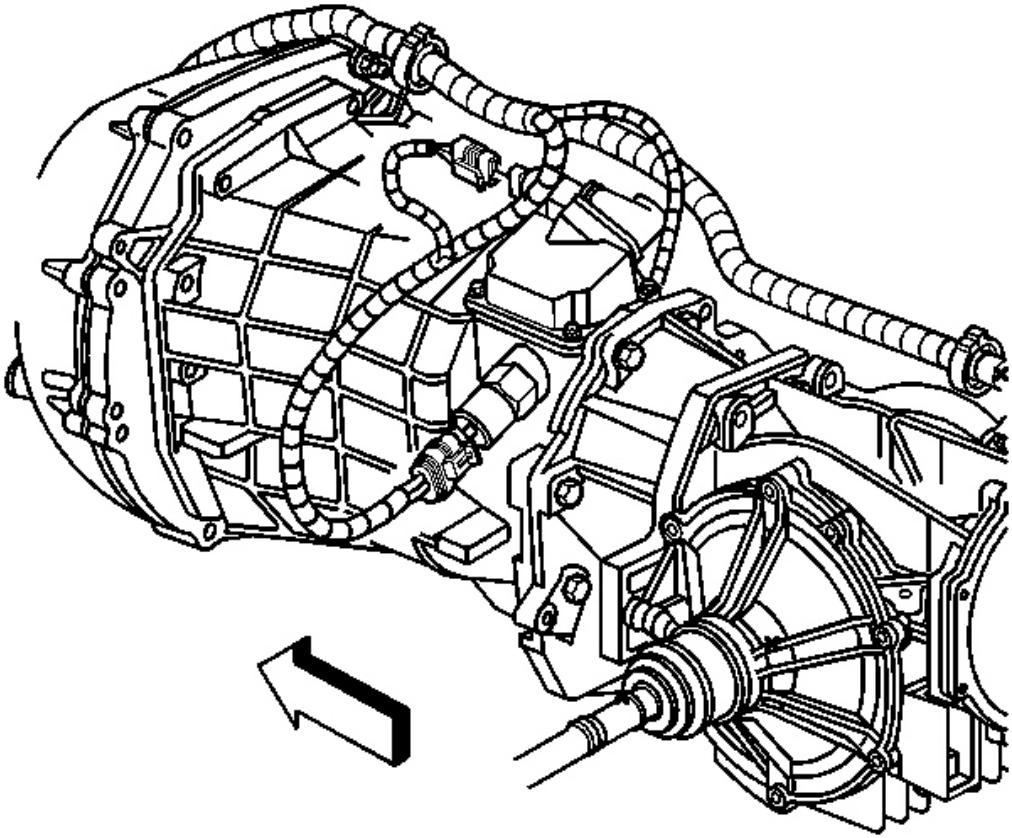

Fig. 80: Reverse Lockout Solenoid Electrical Connector
Courtesy of GENERAL MOTORS CORP.

22. Connect the reverse lockout solenoid electrical connector.

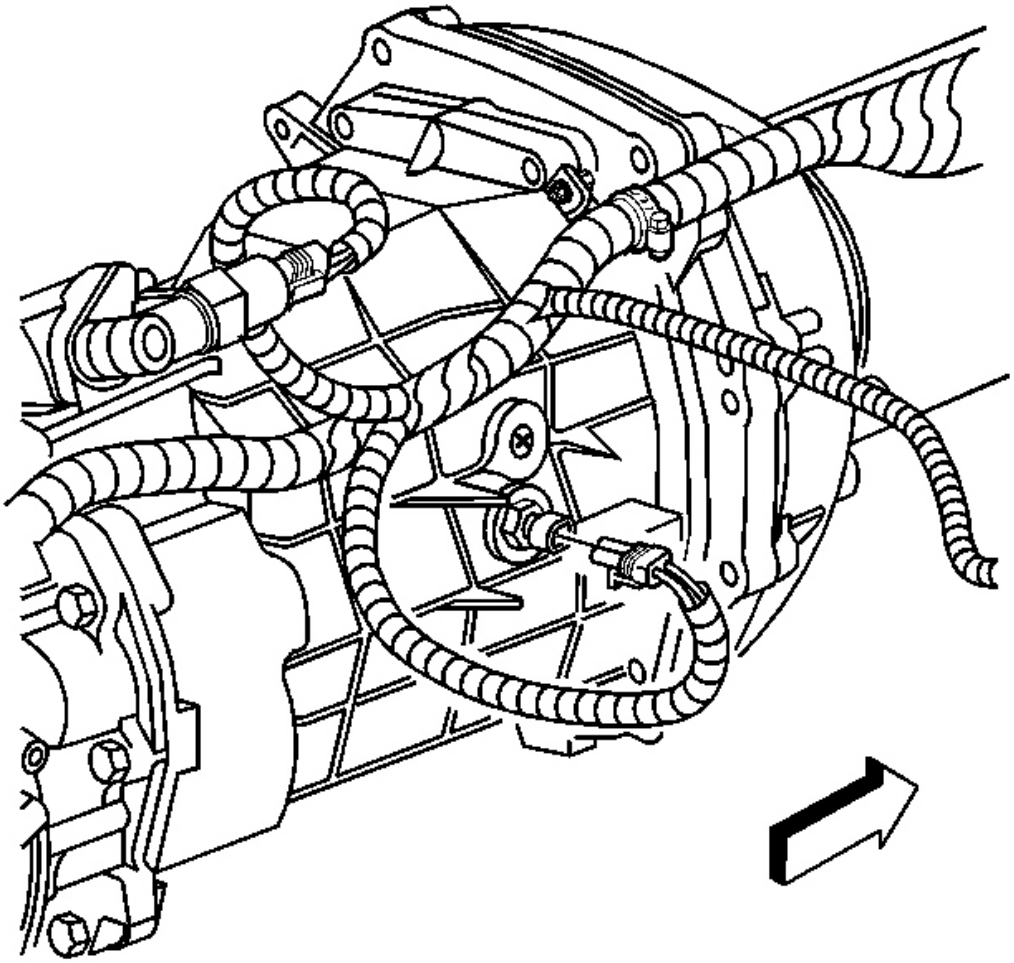

Fig. 81: Backup Lamp Switch Electrical Connector
Courtesy of GENERAL MOTORS CORP.

23. Connect the backup lamp switch electrical connector.

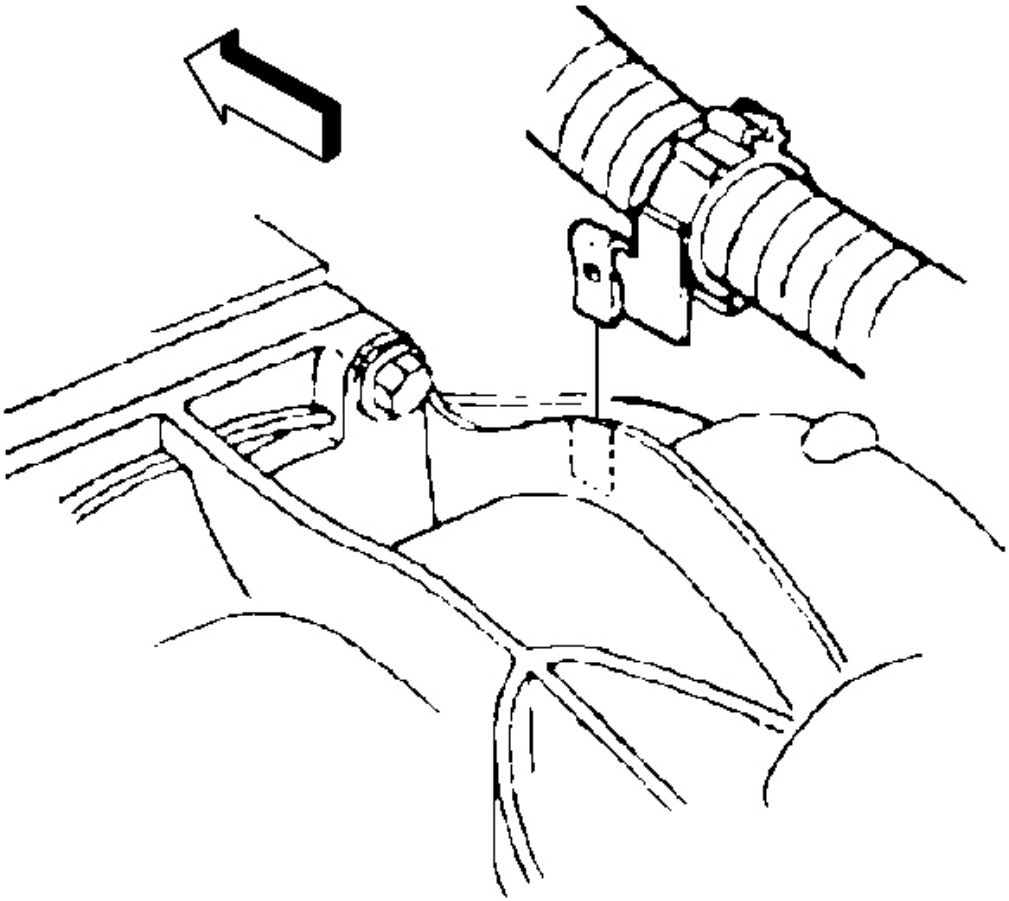

Fig. 82: Wiring Harness Retainer Clip & Differential Rear Cover
Courtesy of GENERAL MOTORS CORP.

24. Connect the wiring harness clip to the top of the differential.
25. Connect the wiring harness retainer to the stud at the differential rear cover.

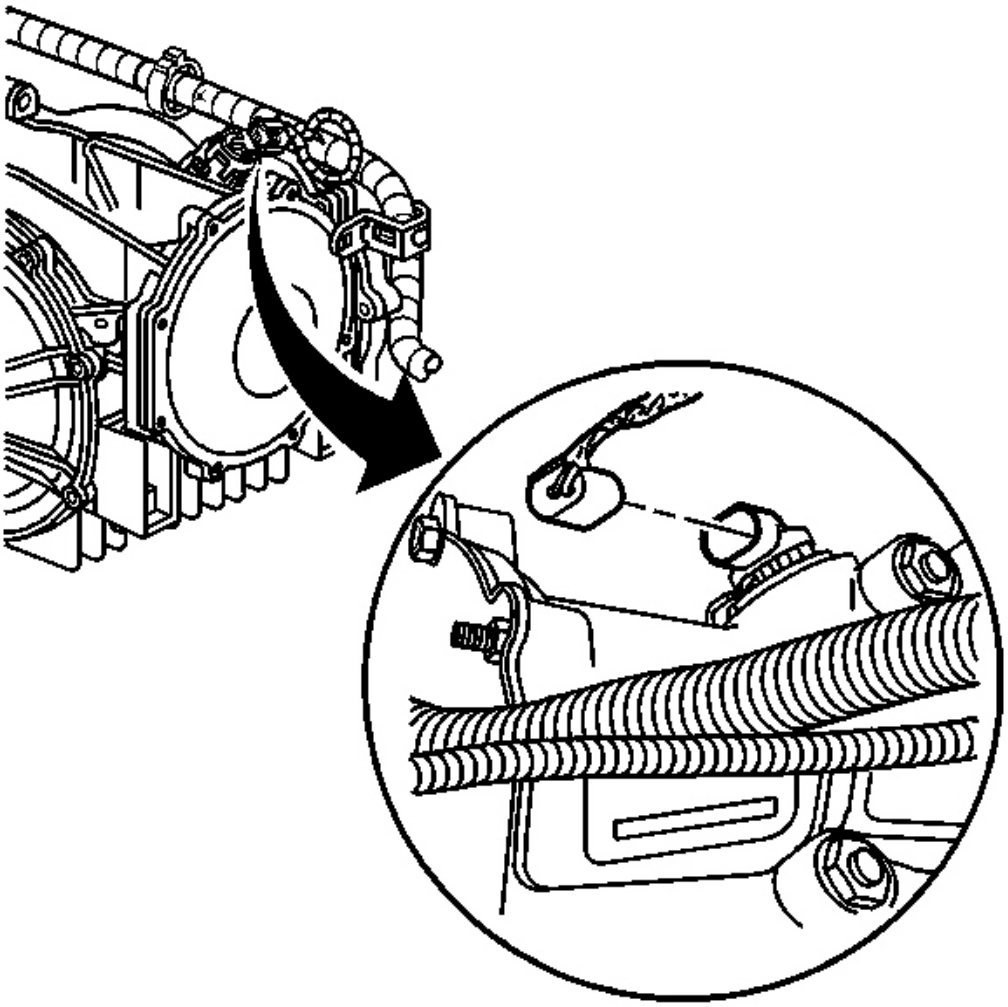

Fig. 83: VSS Electrical Connector
Courtesy of GENERAL MOTORS CORP.

26. Connect the vehicle speed sensor (VSS) electrical connector.

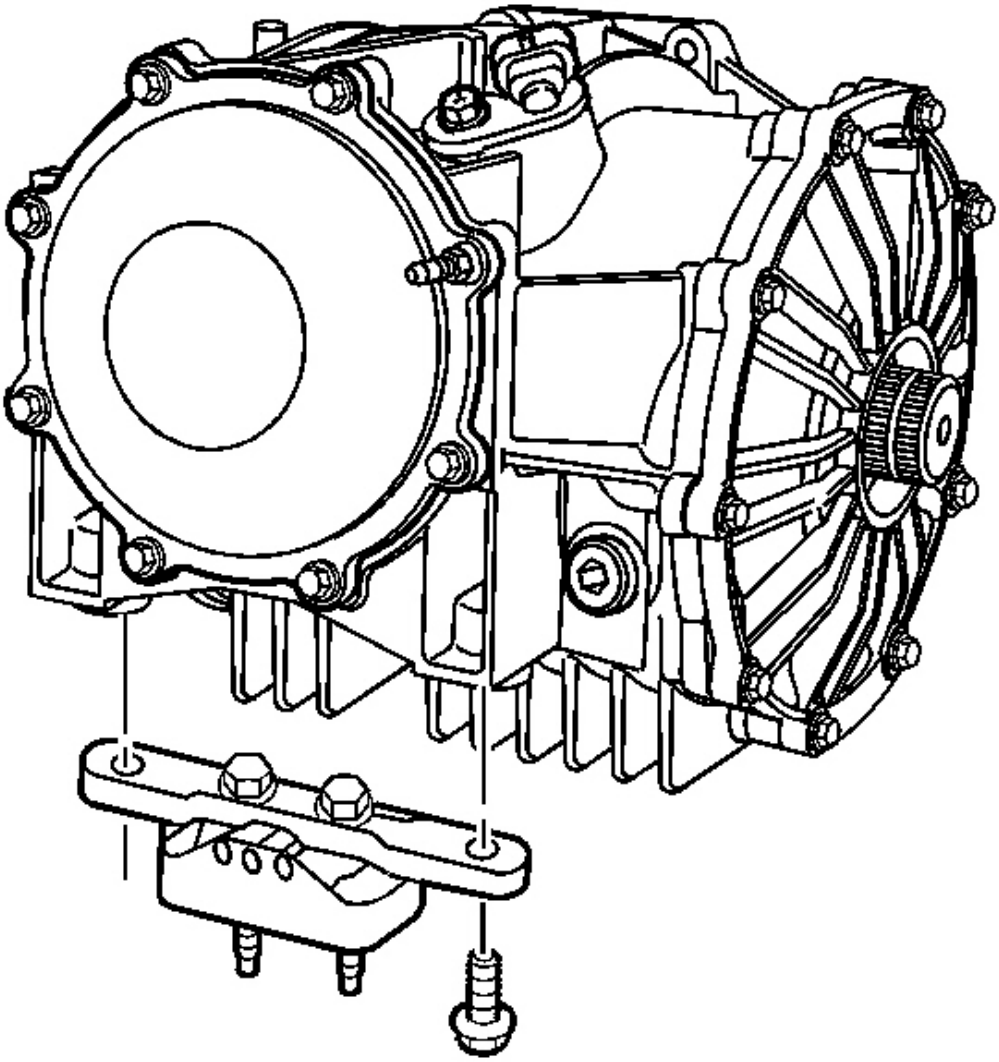

Fig. 84: Transaxle Mount Bracket & Differential Bolts
Courtesy of GENERAL MOTORS CORP.

27. Slowly raise the driveline to final installation height.
28. Remove the putty knife, if still in position.
29. Remove the jack which supported the rear of the engine.
30. Remove the tie-off retainers from the axle shafts.
31. CAREFULLY align and seat the axle shafts to the differential.

32. Install the transaxle mount with bracket to the differential.
33. Install the transaxle mount bracket to differential bolts.

    Tighten: Tighten the transaxle mount bracket to differential bolts to 50 N.m (37 lb ft).

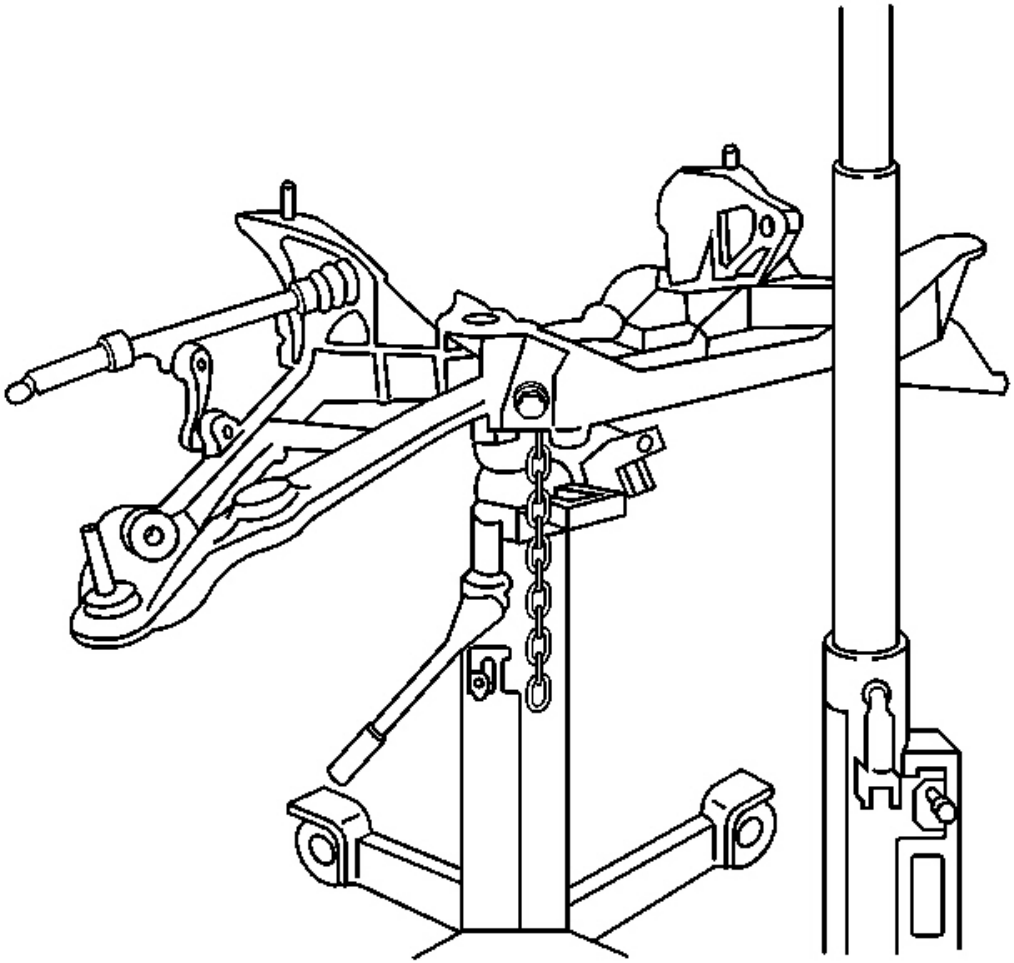

Fig. 85: Rear Suspension Crossmember
Courtesy of GENERAL MOTORS CORP.

34. With the aid of an assistant, begin to raise the rear suspension crossmember (still firmly attached to a transmission jack), to the vehicle frame rails.
35. Guide the rear suspension crossmember alignment pins into the alignment holes in the vehicle frame rails, and guide the transaxle mount studs into the mounting holes in the crossmember, then raise the

crossmember to seat to the frame rails.

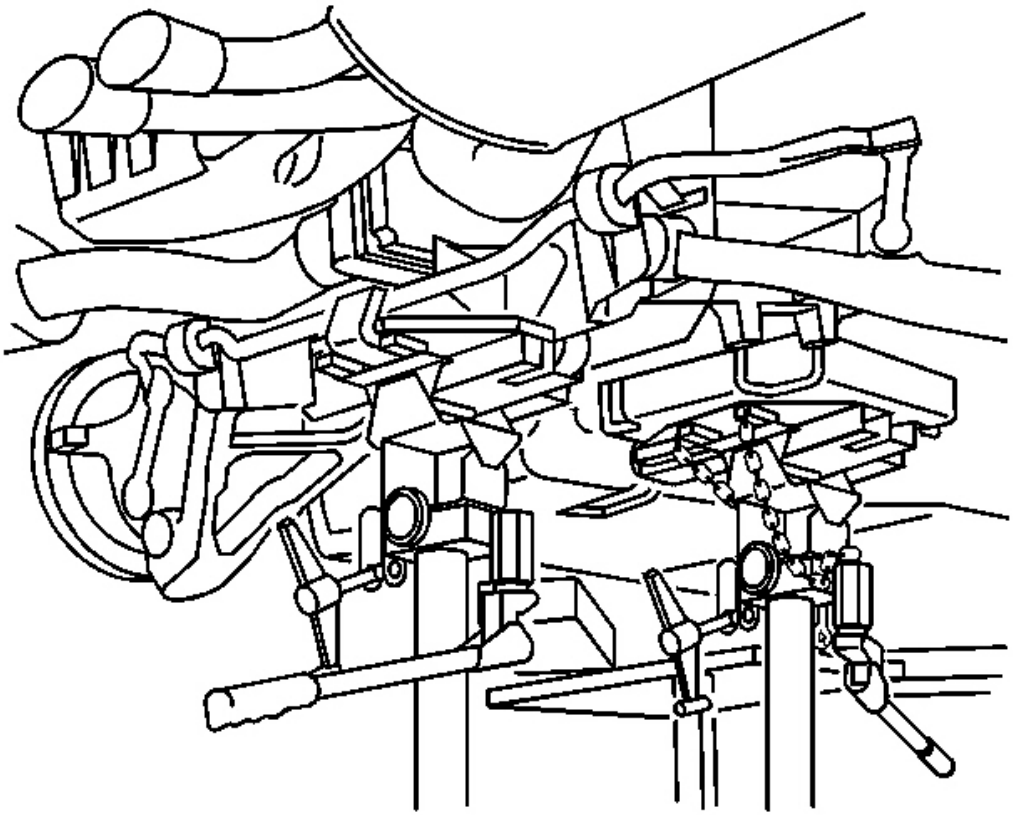

Fig. 86: View Of Jack Under Front End
Courtesy of GENERAL MOTORS CORP.

36. Using ONLY HAND TOOLS, install NEW rear suspension crossmember mounting nuts.

    Tighten: Tighten the rear suspension crossmember mounting nuts to 110 N.m (81 lb ft).

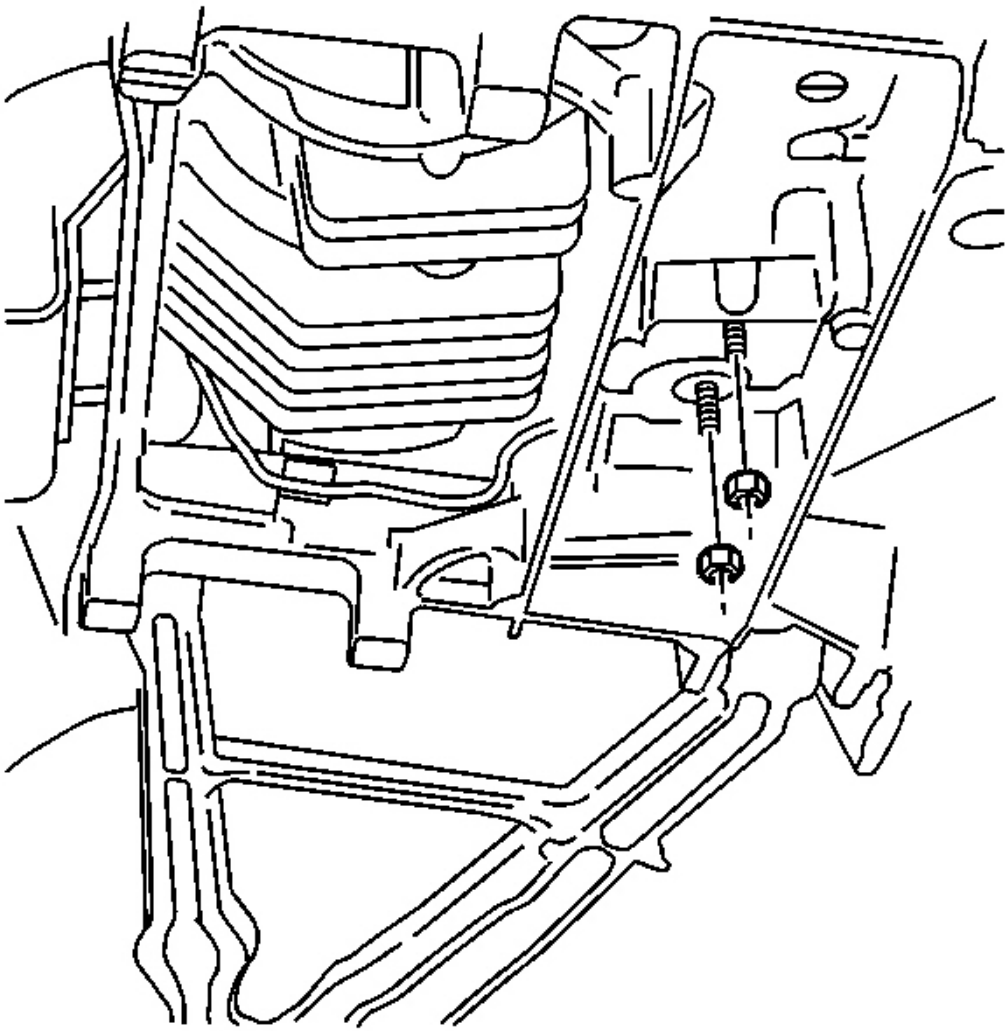

Fig. 87: Transaxle Mount & Rear Crossmember Nuts
Courtesy of GENERAL MOTORS CORP.

37. Remove the transmission jack from the rear suspension crossmember.
38. Release the **J 42055** from the transmission, then remove the **J 42055** and transmission jack.
39. Install the transaxle mount to rear suspension crossmember nuts.

    Tighten: Tighten the transaxle mount to rear suspension crossmember nuts to 50 N.m (37 lb ft).

40. Install the differential to transmission lower nut.

Tighten: Tighten the differential to transmission lower nut to 50 N.m (37 lb ft).

41. Connect the wiring harness and brake pipe clip retainers to the rear suspension crossmember.

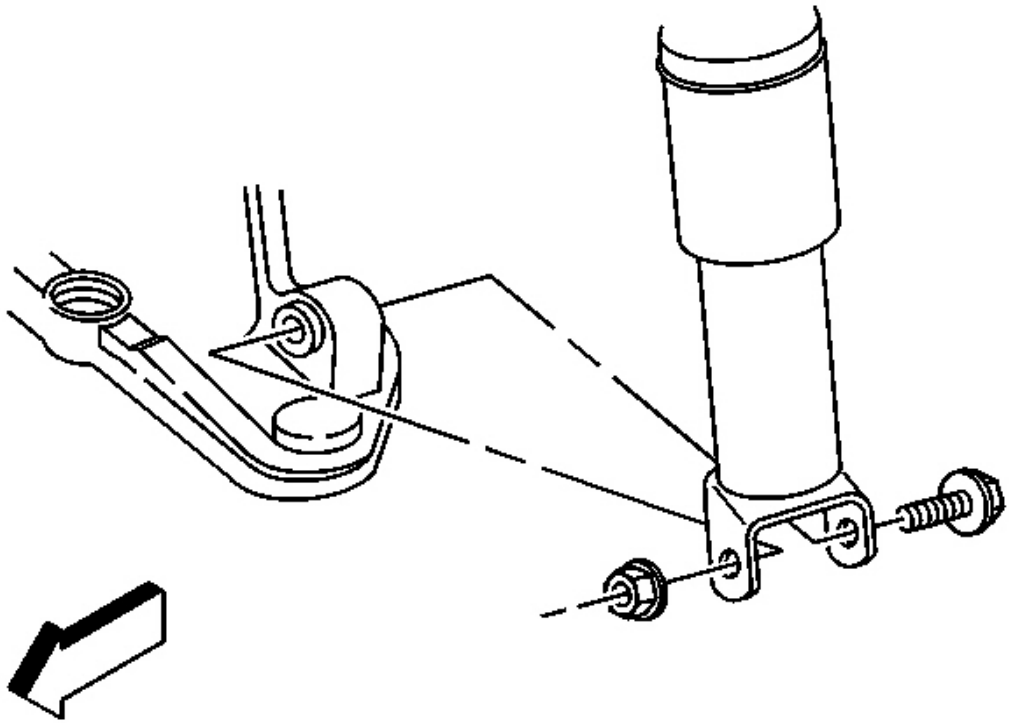

Fig. 88: Suspension Knuckle & Lower Ball Joint
Courtesy of GENERAL MOTORS CORP.

42. Support the lower control arm with a jack.
43. Connect the lower ball joint to the suspension knuckle. Refer to **Knuckle Replacement** in Rear Suspension.
44. Install the shock absorber lower mounting bolt.

    Tighten: Tighten the rear shock absorber lower mounting bolt to 220 N.m (162 lb ft).

45. Connect the outer tie rod end to the suspension knuckle. Refer to **Tie Rod Replacement (Outer End)** or **Tie Rod Replacement (Suspension Link)** in Rear Suspension.
46. Remove the straight jack from the suspension control arm.
47. Repeat steps 41 through 46 for the other side of the vehicle.

48. Install the rear transverse spring. Refer to **Rear Transverse Spring Replacement** in Rear Suspension.

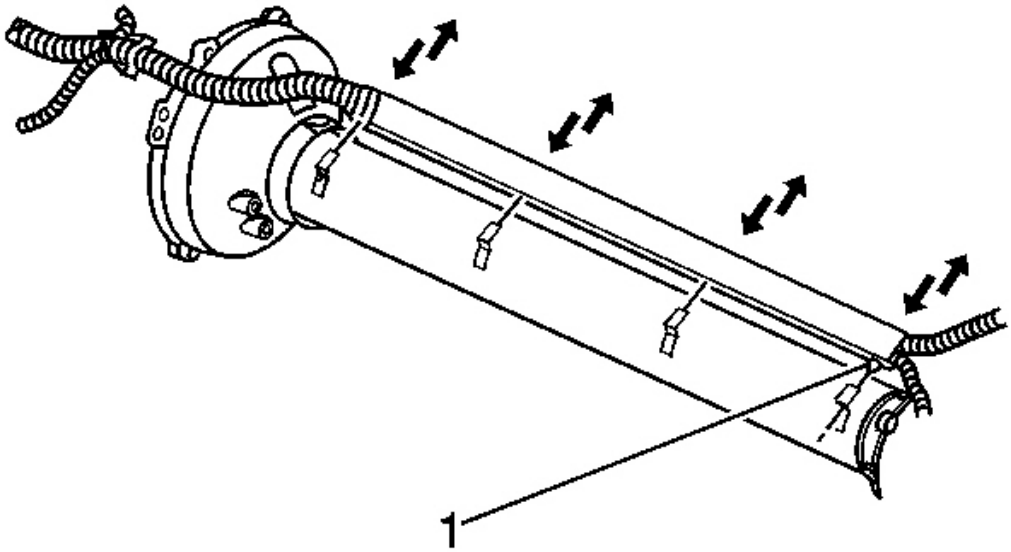

Fig. 89: Wiring Harness & Driveline Support Assembly
Courtesy of GENERAL MOTORS CORP.

49. Carefully pull the wiring harness down into the L-shaped brackets along the driveline support assembly, align the harness retainer (locator) (1) to the hole in the forward bracket, then secure in place.

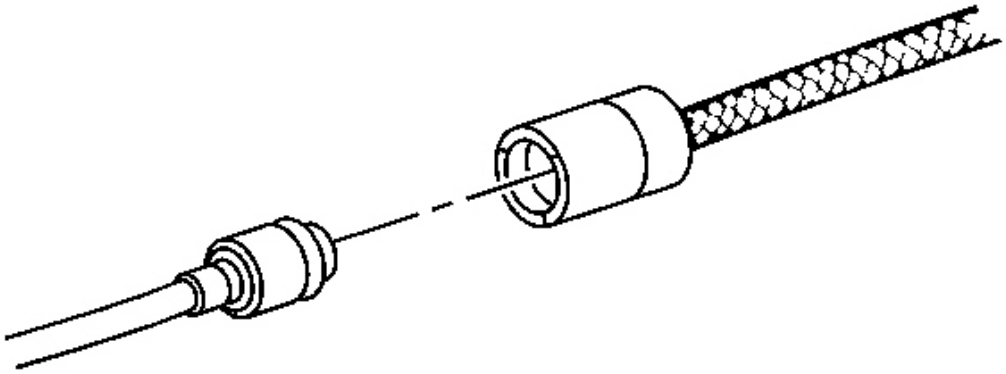

Fig. 90: Identifying White Circular Release Ring
Courtesy of GENERAL MOTORS CORP.

IMPORTANT: DO NOT rely on an audible click or a visual verification of the clutch hydraulic hose quick connect fitting connection.

50. Connect the clutch actuator cylinder hose to the clutch master cylinder hose.

    Push together the clutch hydraulic hose quick connect fittings, then pull back on the fittings to verify engagement.

51. Check the clutch hydraulic hoses for twists or kinks.

Fig. 91: Clutch Actuator Cylinder Hose
Courtesy of GENERAL MOTORS CORP.

52. Install the clutch actuator cylinder hose to the hose retaining clip (at the rear of the engine).
53. Install the driveline tunnel closeout panel. Refer to **Driveline Tunnel Closeout Panel Replacement** in Propeller Shaft.
54. Remove the tie-off retainers from the muffler assemblies.

55. Install the catalytic converters. Refer to **Catalytic Converter Replacement** in Engine Exhaust.
56. Install the rear tire and wheel assemblies. Refer to **Tire and Wheel Removal and Installation** in Tires and Wheels.

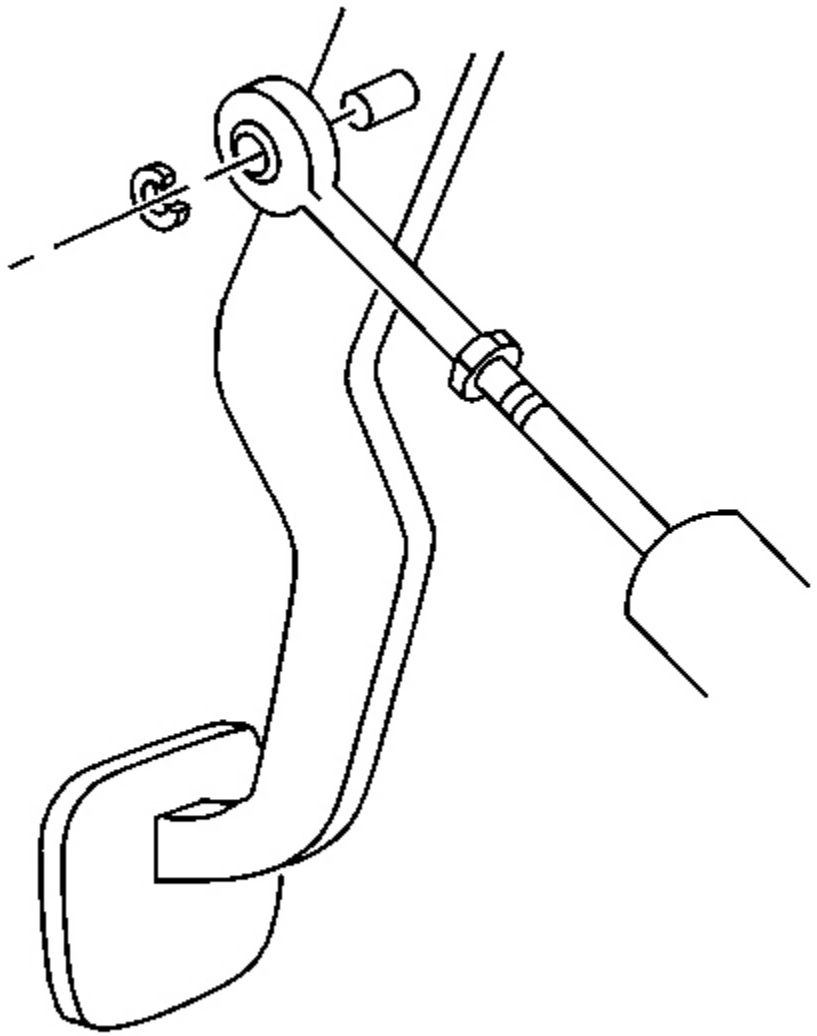

Fig. 92: Clutch Master Cylinder Pushrod
Courtesy of GENERAL MOTORS CORP.

57. Lower the vehicle.
58. Connect the clutch master cylinder pushrod to the clutch pedal.

59. Install the clutch master cylinder pushrod retainer.
60. Install the left IP lower insulator panel. Refer to **Closeout/Insulator Panel Replacement - Left** in Instrument Panel, Gauges and Console.

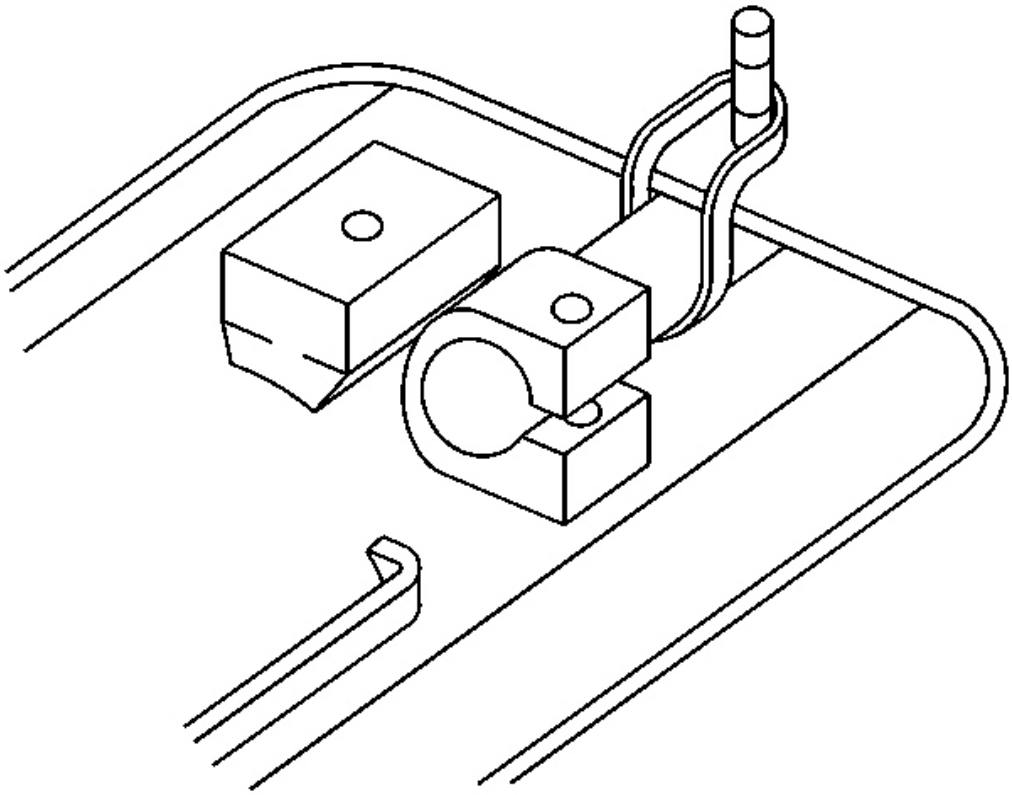

Fig. 93: Rubber Band & Rear Stud On Top Of Driveline Tunnel
Courtesy of GENERAL MOTORS CORP.

61. Grasp the transmission shift rod and pull up to break the masking tape installed earlier to maintain position during installation.
62. Stretch the rubber band, while still installed onto the transmission shift rod, over the rear stud on top of the driveline tunnel to aid in shift control installation.
63. Install the shift control assembly. Refer to **Shift Control Assembly Replacement** in Manual Transmission.
64. Break and remove the rubber band.

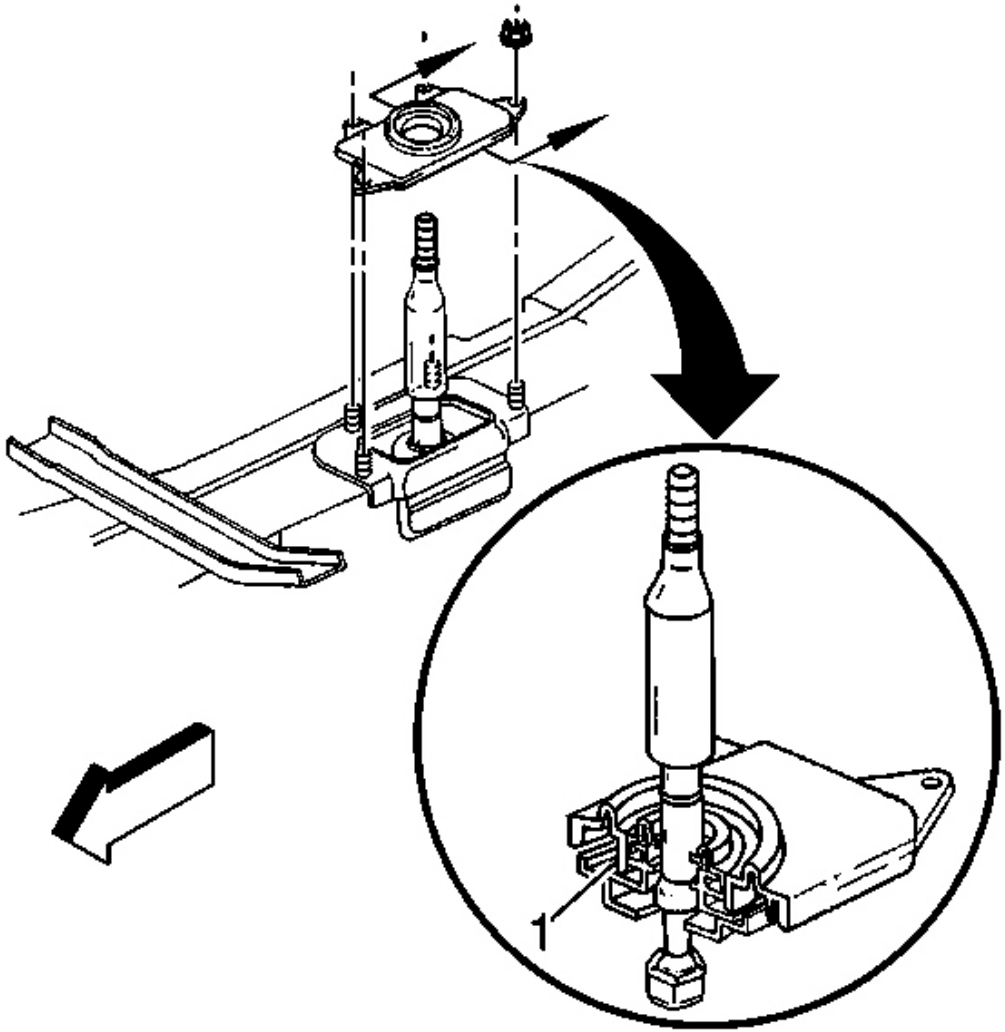

Fig. 94: Control Closeout Boot & Retaining Nuts
Courtesy of GENERAL MOTORS CORP.

65. Install the shift control closeout boot.

    Check that the closeout boot fully seats to the shift control lever seal and the base of the shift control assembly (1).

66. Install the shift control closeout boot retaining nuts.

    Tighten: Tighten the shift control closeout boot retaining nuts to 12 N.m (106 lb in).

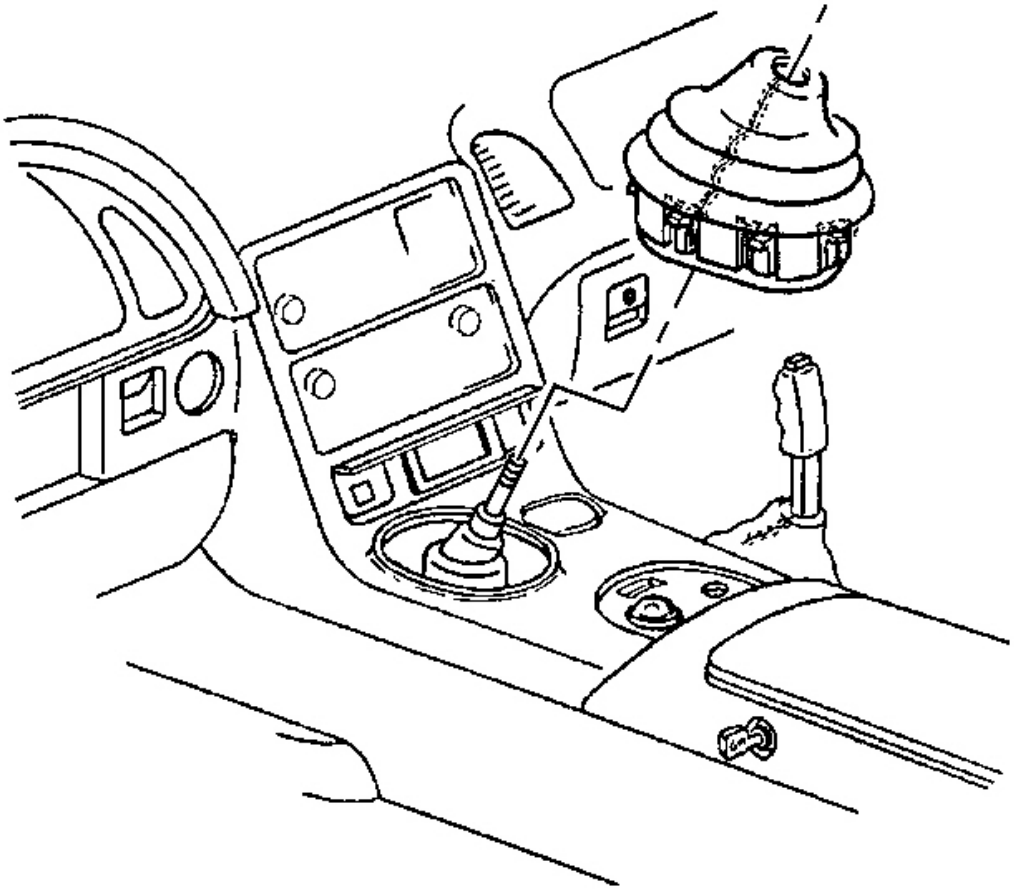

Fig. 95: IP Accessory Trim Plate & Boot
Courtesy of GENERAL MOTORS CORP.

67. Install the IP accessory trim plate. Refer to **Trim Plate Replacement - Instrument Panel (I/P) Accessory** in Instrument Panel, Gauges and Console.
68. Install the shift control boot over the shift control lever.

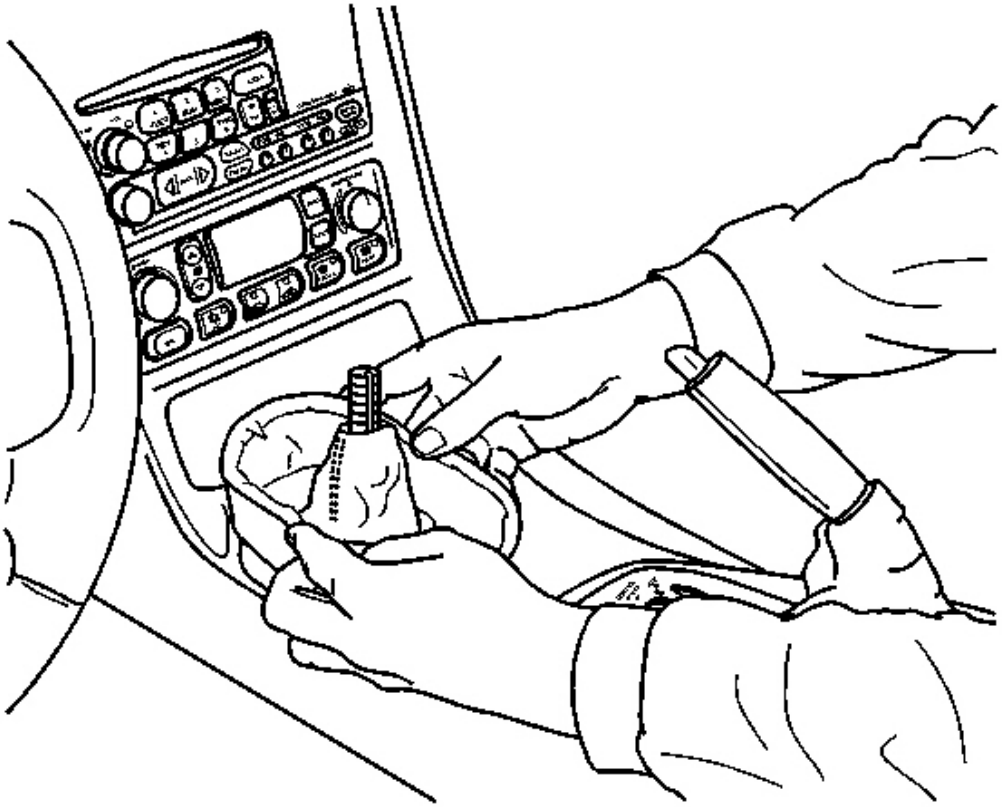

Fig. 96: Shift Control Boot, IP Accessory Trim Plate & Boot Retaining Tabs
Courtesy of GENERAL MOTORS CORP.

69. Align the shift control boot to the IP accessory trim plate opening, then press to lock the boot retaining tabs.
70. Adjust the shape of the boot for appearance, if necessary.

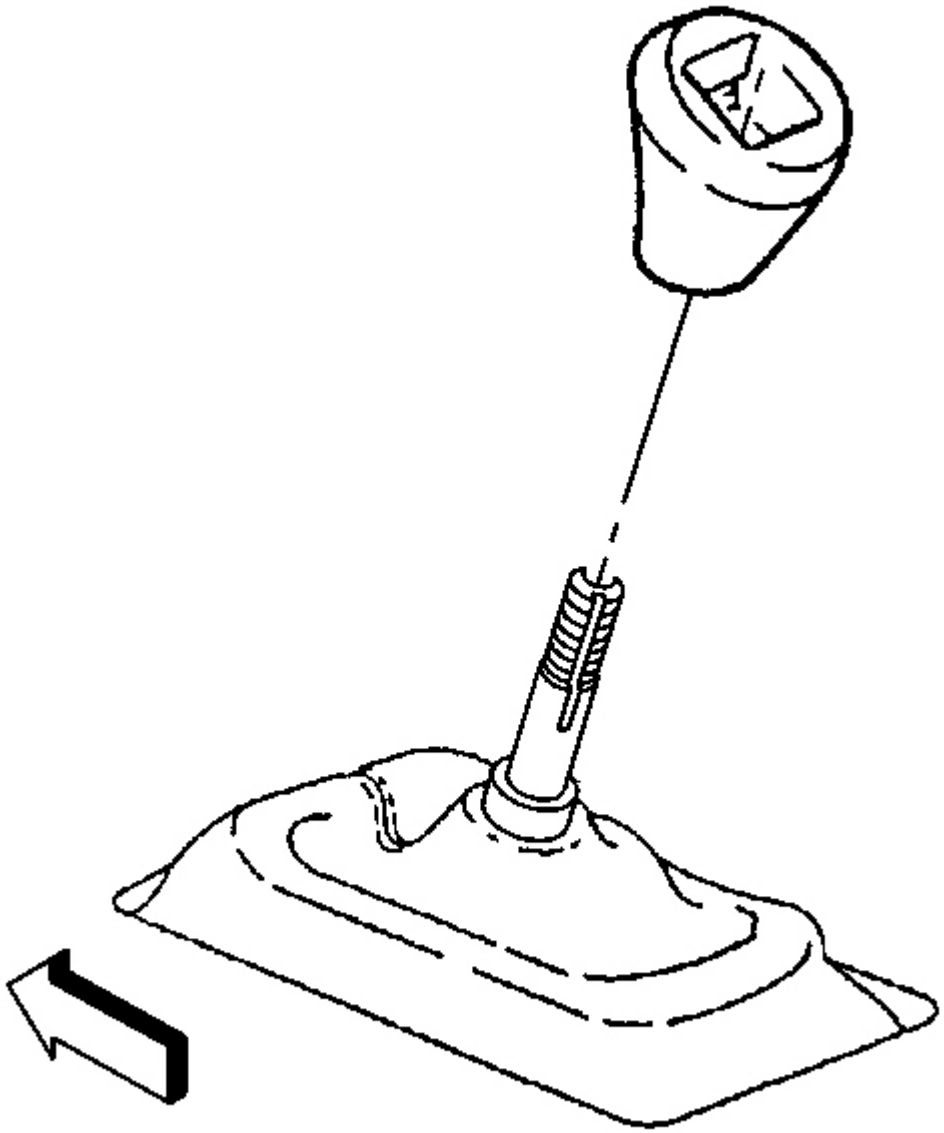

Fig. 97: Gear Shift Knob Removed
Courtesy of GENERAL MOTORS CORP.

71. Screw the shift control knob onto the shift control lever until the knob bottoms out.

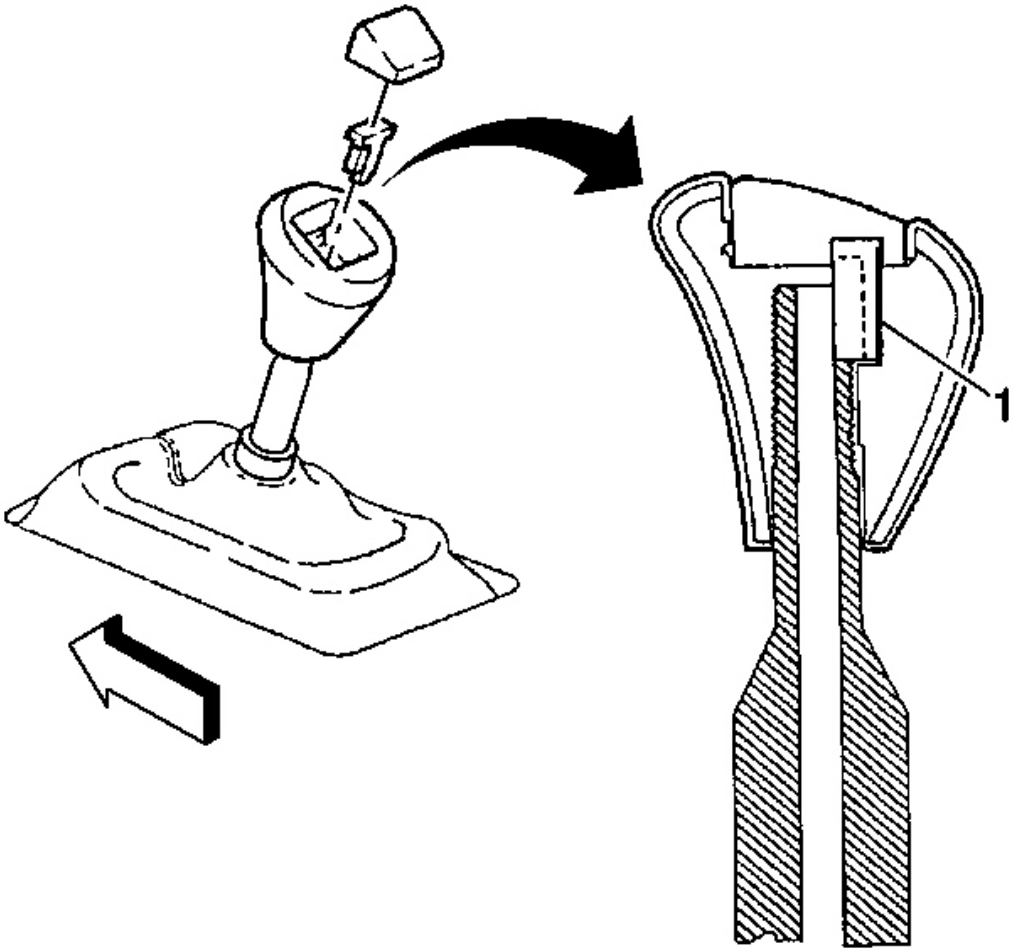

Fig. 98: Shift Control Knob Button
Courtesy of GENERAL MOTORS CORP.

72. Unscrew the shift control knob just enough to align the retainer slot with the slot on the shift control lever.
73. Install the shift control knob retainer (1) into the slots and seat fully.
74. Install the shift control knob button.
75. Install the console. Refer to **Console Replacement** in Instrument Panel, Gauges and Console.
76. Connect the negative battery cable.

Tighten: Tighten the negative battery cable bolt to 15 N.m (11 lb ft).

77. Program the transmitters. Refer to **Transmitter Programming** in Keyless Entry.
78. Bleed the clutch hydraulic system. Refer to **Hydraulic Clutch Bleeding** in Clutch.

DIFFERENTIAL REPLACEMENT (AUTOMATIC TRANSMISSION)

Tools Required

J 42055 Transmission Support Fixture

Removal Procedure

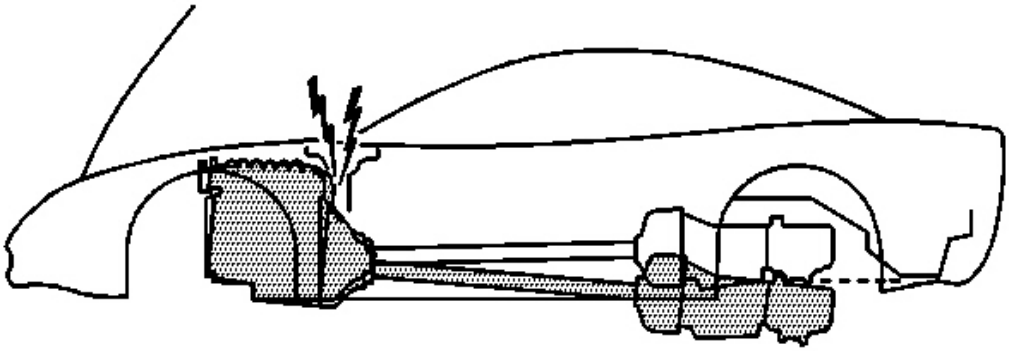

Fig. 99: Rear Driveline & Rear Transaxle Assembly
Courtesy of GENERAL MOTORS CORP.

NOTE: **Failure to follow the proper removal and installation procedures may result in damage to the engine crankshaft thrust bearing.**

NOTE: **When tilting down the rear of the driveline, observe the clearance between the rear of the engine and the composite dash panel. Do not allow the engine to rest unsupported against the composite dash panel, or vehicle damage may result.**

NOTE: **When lowering and removing the rear of the driveline, observe the clearance between the rear of the transaxle assembly and the underbody to prevent damage.**

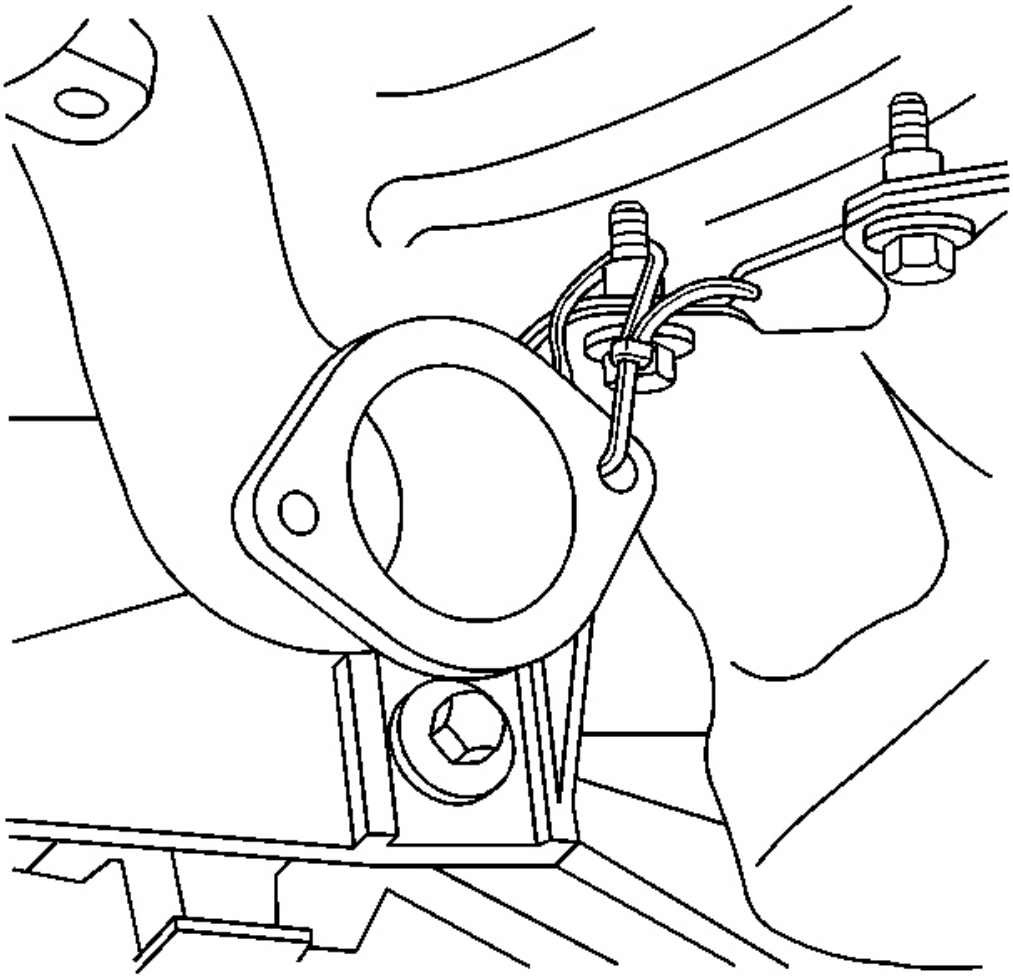

Fig. 100: Driveline Tunnel Closeout Panel & Muffler Assemblies
Courtesy of GENERAL MOTORS CORP.

CAUTION: Refer to Battery Disconnect Caution in Cautions and Notices.

1. Disconnect the negative battery cable.
2. Raise and suitably support the vehicle. Refer to **Lifting and Jacking the Vehicle** in General Information.
3. Remove the rear tire and wheel assemblies. Refer to **Tire and Wheel Removal and Installation** in Tires and Wheels.
4. Remove the catalytic converters. Refer to **Catalytic Converter Replacement** in Engine Exhaust.

5. Tie off the LH muffler assembly to the underbody to support the muffler out of the way.
6. Remove the RH muffler assembly. Refer to **Muffler Replacement - Right** in Engine Exhaust.
7. Remove the driveline tunnel closeout panel. Refer to **Driveline Tunnel Closeout Panel Replacement** in Propeller Shaft.

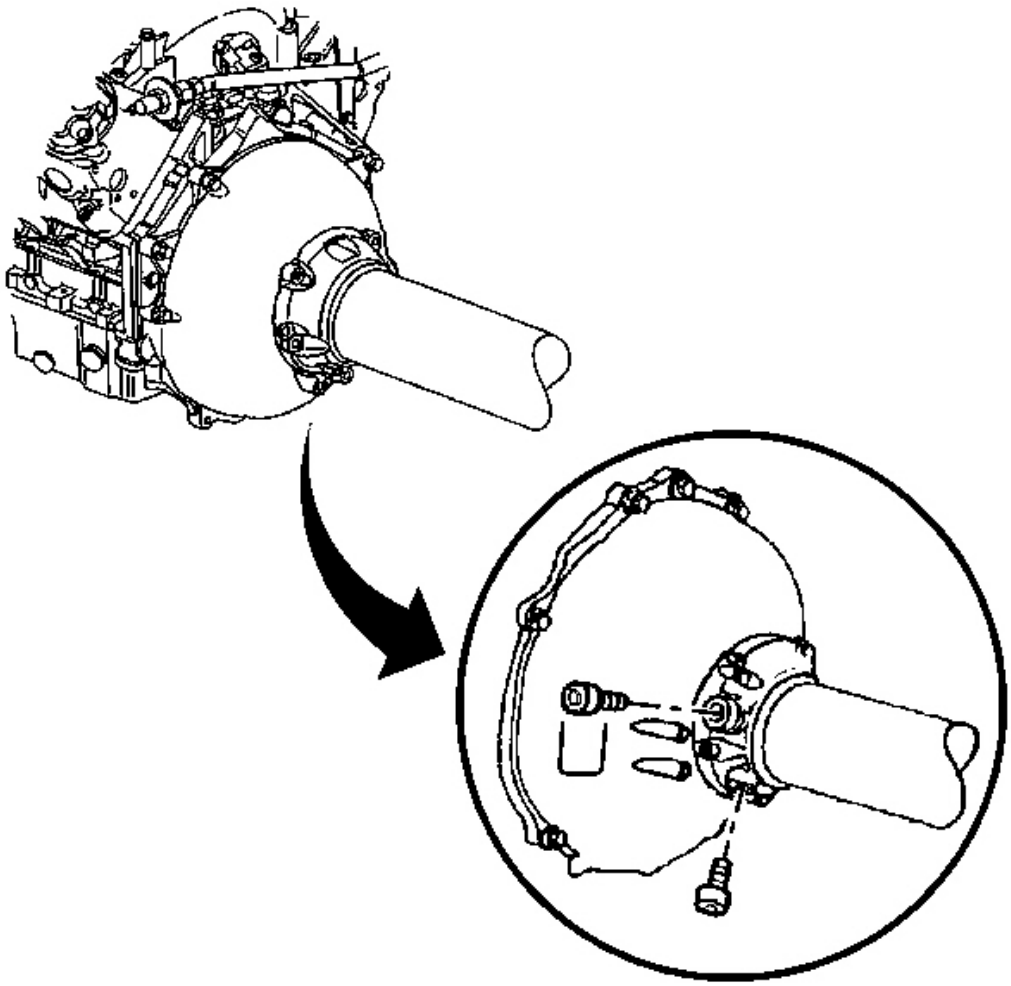

Fig. 101: Propeller Input Shaft Front Bearing Positioning Bolts
Courtesy of GENERAL MOTORS CORP.

8. Remove the two plug bolts from the front of driveline support assembly.

NOTE: Refer to Fastener Notice in Cautions and Notices.

IMPORTANT: The propeller input shaft front bearing positioning bolts are intended to remain torqued to specification and in place UNTIL INSTRUCTED in the installation procedure.

IMPORTANT: Failure to use the minimum length fastener specified will prevent proper retention of the propeller input shaft front bearing during disassembly or installation.

9. Install two bolts, M10 - 1.5 X 55 mm, or longer, in place of the plug bolts.

   (The long bolts are located to maintain the propeller input shaft front bearing in original position during removal and installation.)

   Tighten: Tighten the propeller input shaft front bearing positioning bolts to 35 N.m (26 lb ft).

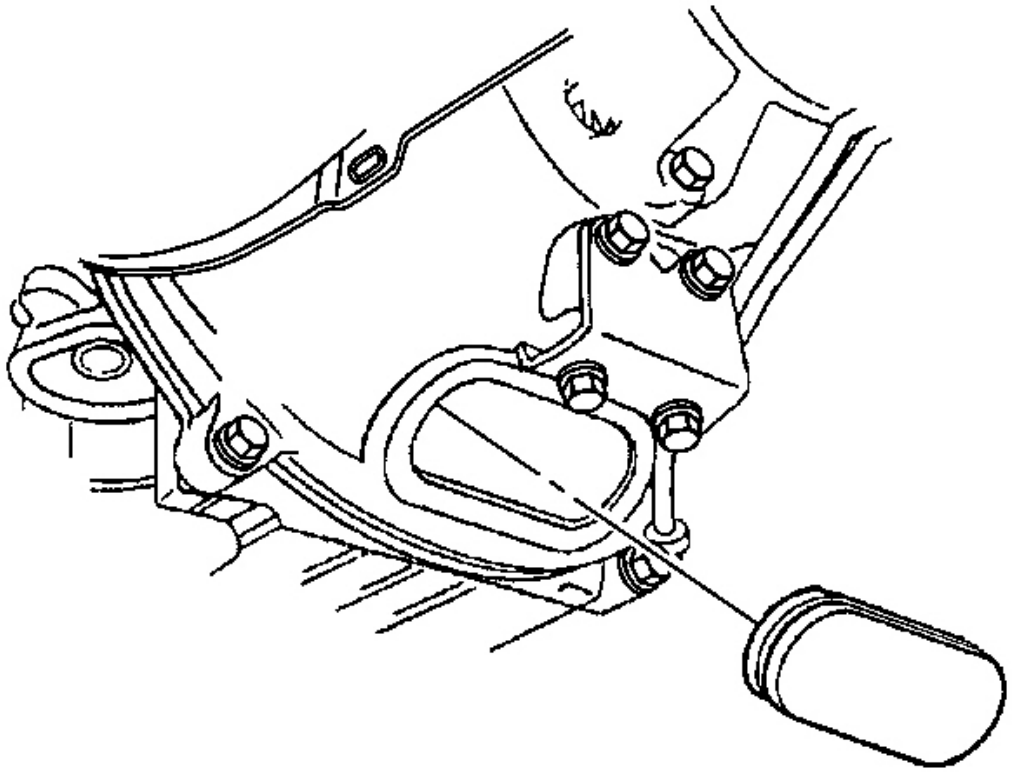

Fig. 102: Engine Flywheel Housing Access Plug
Courtesy of GENERAL MOTORS CORP.

10. Using a flat bladed screwdriver, remove the engine flywheel housing access plug.

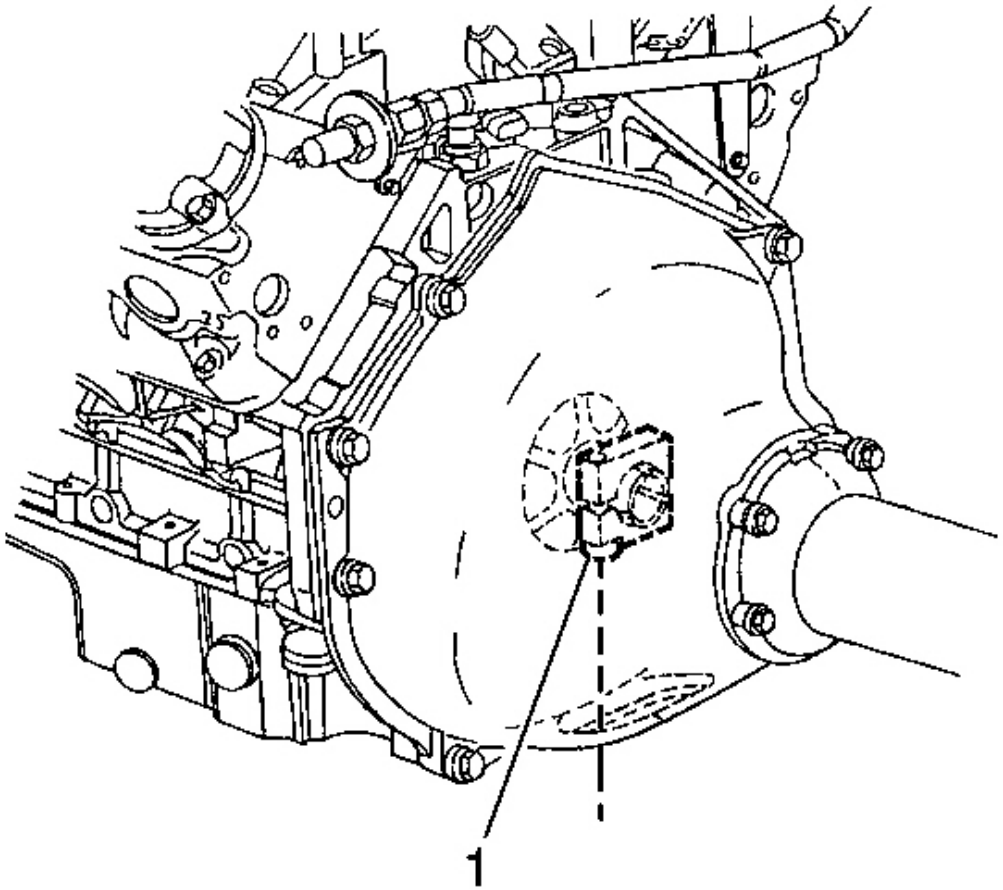

Fig. 103: Propeller Shaft Hub Clamp Bolt
Courtesy of GENERAL MOTORS CORP.

11. Loosen the propeller shaft hub clamp bolt (1).

    Rotate the engine at the flywheel, if necessary for alignment.

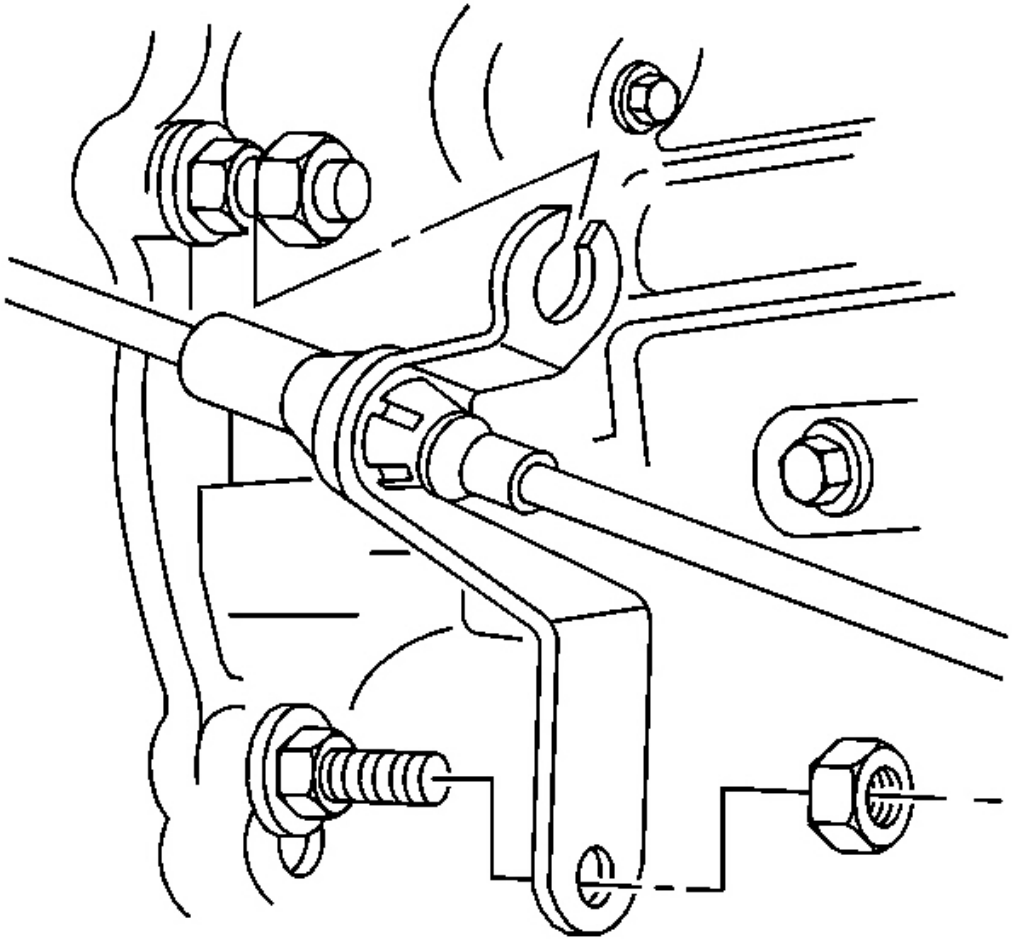

Fig. 104: Transmission Shift Cable Bracket & Bolts
Courtesy of GENERAL MOTORS CORP.

12. Remove the nuts retaining the transmission shift cable bracket to the transmission.

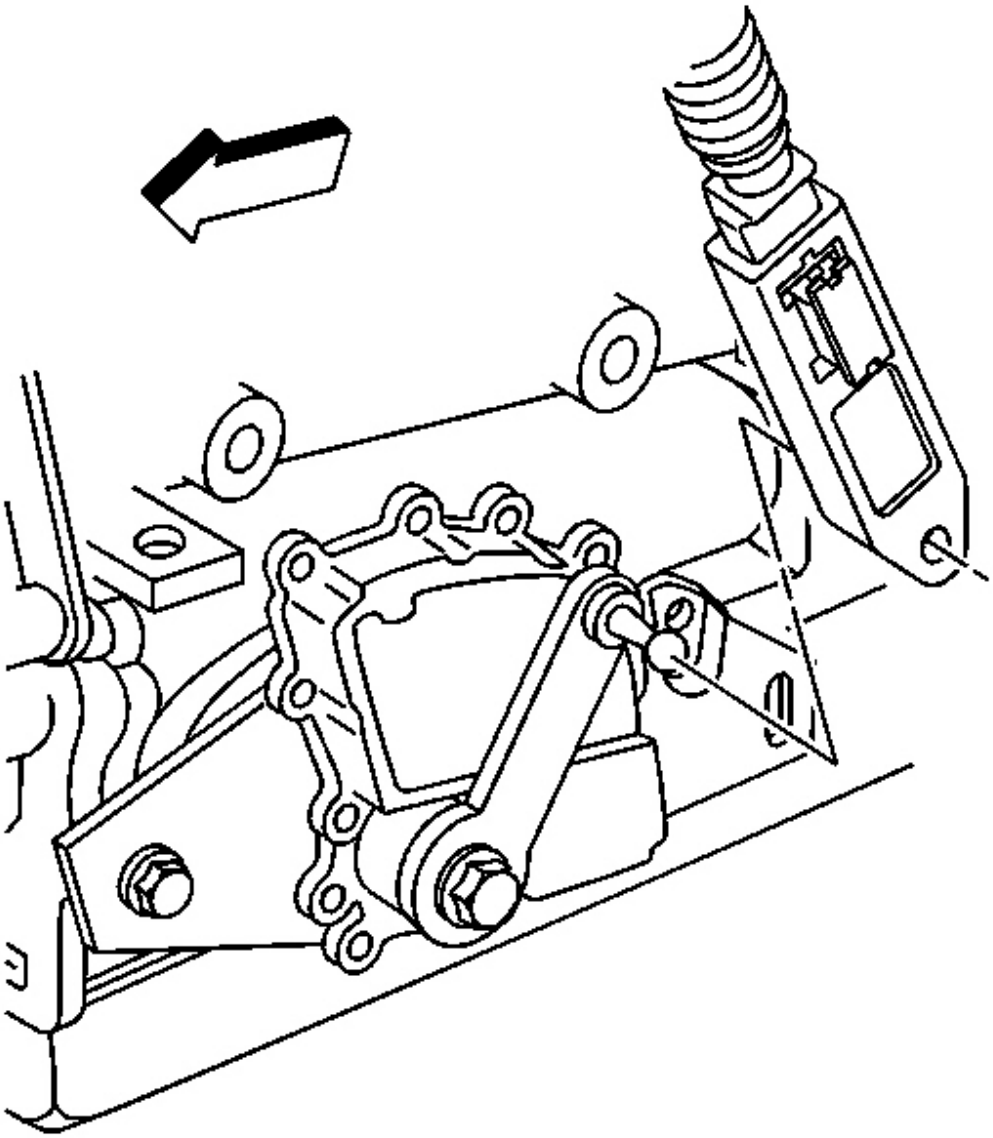

Fig. 105: Transmission Shift Lever
Courtesy of GENERAL MOTORS CORP.

13. Disconnect the transmission shift control cable from the transmission shift lever.

    Unsnap to release the cable.

14. Reposition the transmission shift cable and bracket.

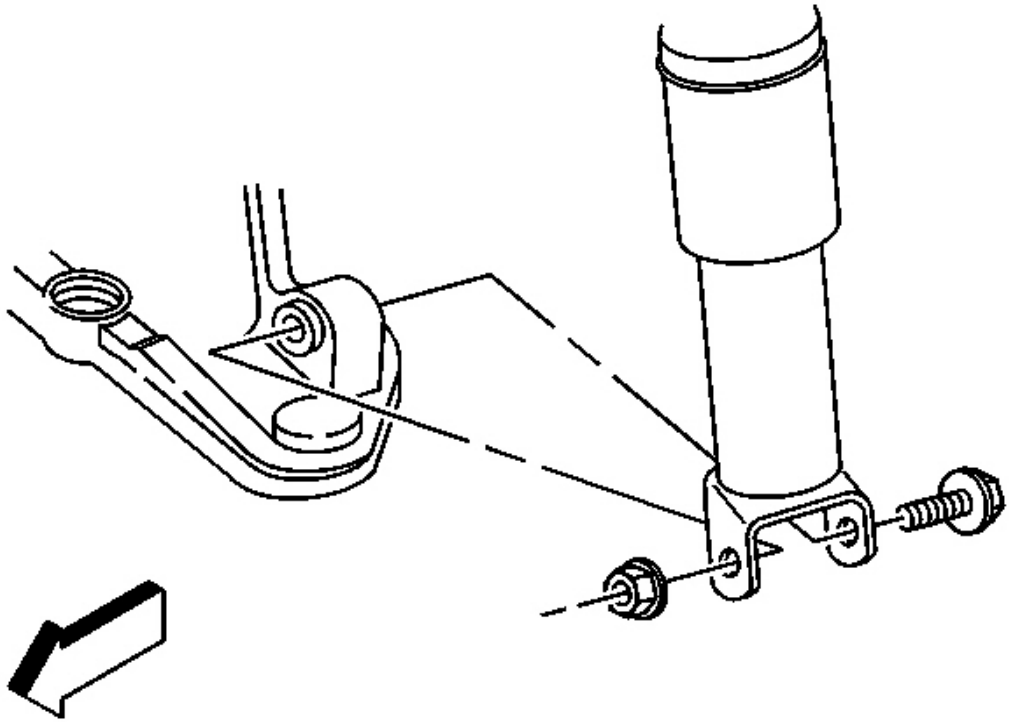

Fig. 106: Suspension Knuckle & Lower Ball Joint
Courtesy of GENERAL MOTORS CORP.

15. Remove the rear transverse spring. Refer to **Rear Transverse Spring Replacement** in Rear Suspension.
16. Support the lower control arm with a straight jack.
17. Disconnect the outer tie rod end from the suspension knuckle. Refer to **Tie Rod Replacement (Outer End)** or **Tie Rod Replacement (Suspension Link)** in Rear Suspension.
18. Remove the shock absorber lower mounting bolt.
19. Disconnect the lower ball joint from the suspension knuckle. Refer to **Knuckle Replacement** in Rear Suspension.
20. Remove the straight jack from the control arm.
21. Repeat steps 18 through 22 for the other side of the vehicle.

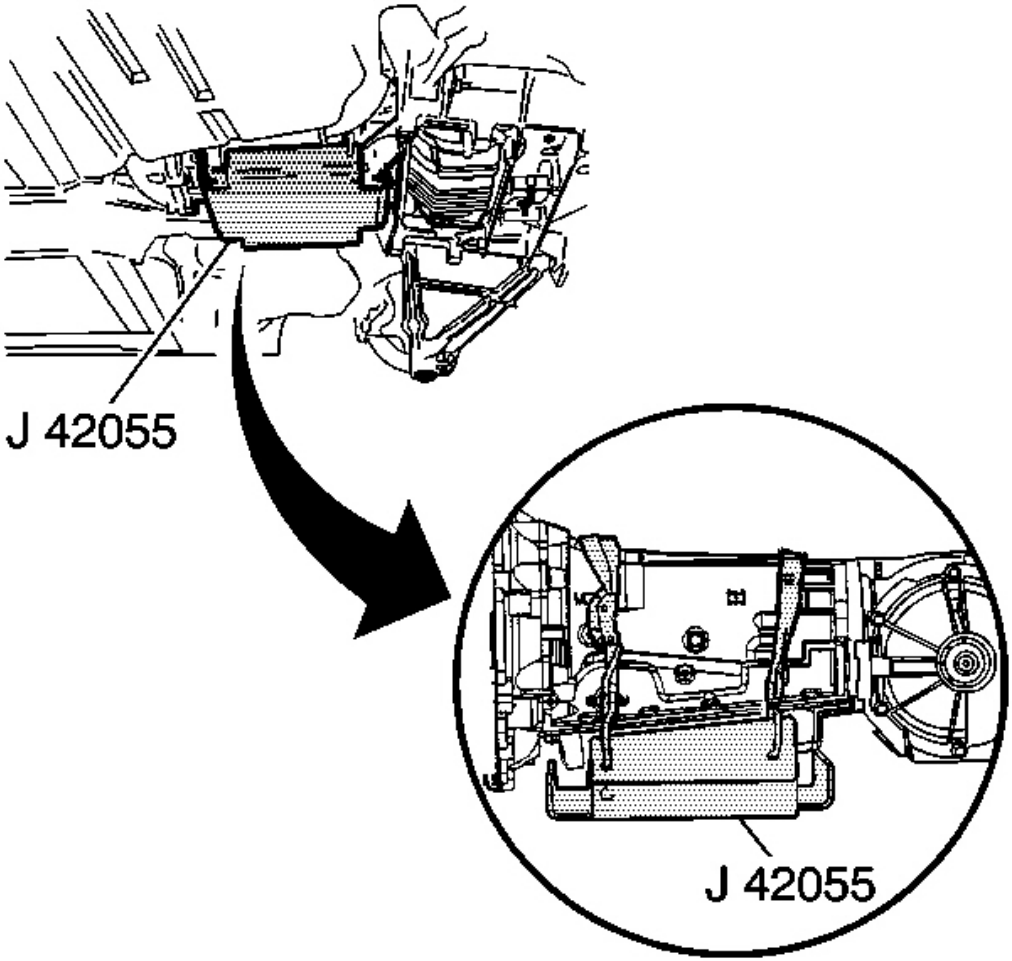

Fig. 107: Install J 42055 To Transmission Jack
Courtesy of GENERAL MOTORS CORP.

22. Assemble the **J 42055** .
23. Install the **J 42055** to a transmission jack.
24. Position and firmly secure the **J 42055** with the transmission jack to the transmission.

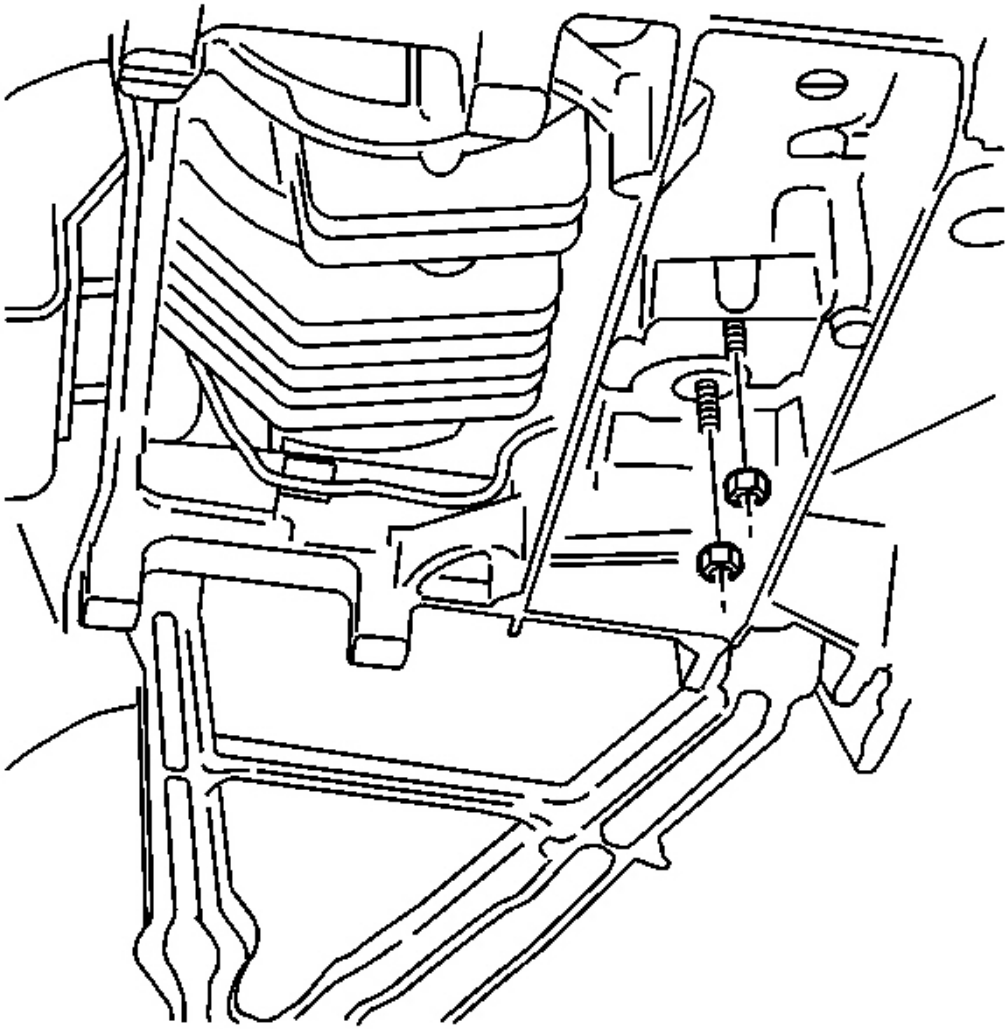

Fig. 108: Transaxle Mount & Rear Crossmember Nuts
Courtesy of GENERAL MOTORS CORP.

25. Disconnect the wiring harness and brake pipe clip retainers from the rear suspension crossmember.
26. Remove the differential to transmission lower nut.

    Removing the nut at this time will aid in separating the differential from the transmission after the driveline has been removed from the vehicle.

27. Remove the transaxle mount to rear crossmember nuts.

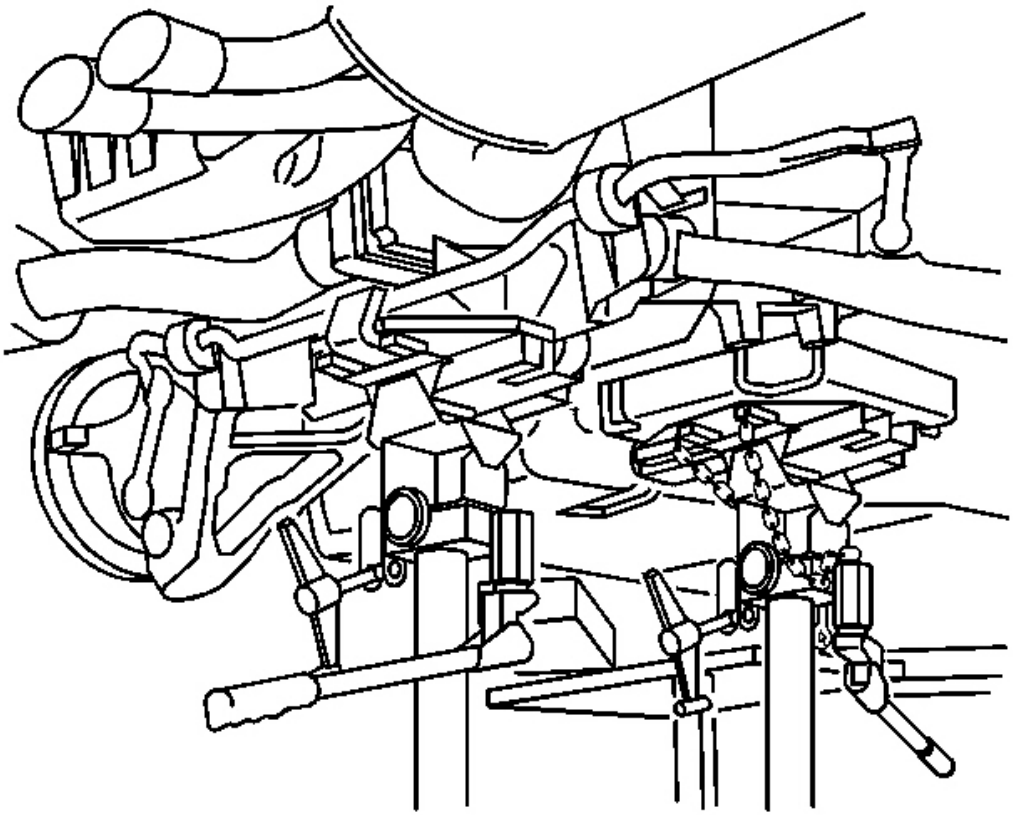

Fig. 109: View Of Jack Under Front End
Courtesy of GENERAL MOTORS CORP.

28. Position a transmission jack under the rear suspension crossmember and firmly secure the crossmember to the jack.
29. Using ONLY HAND TOOLS, remove the rear suspension crossmember retaining nuts.

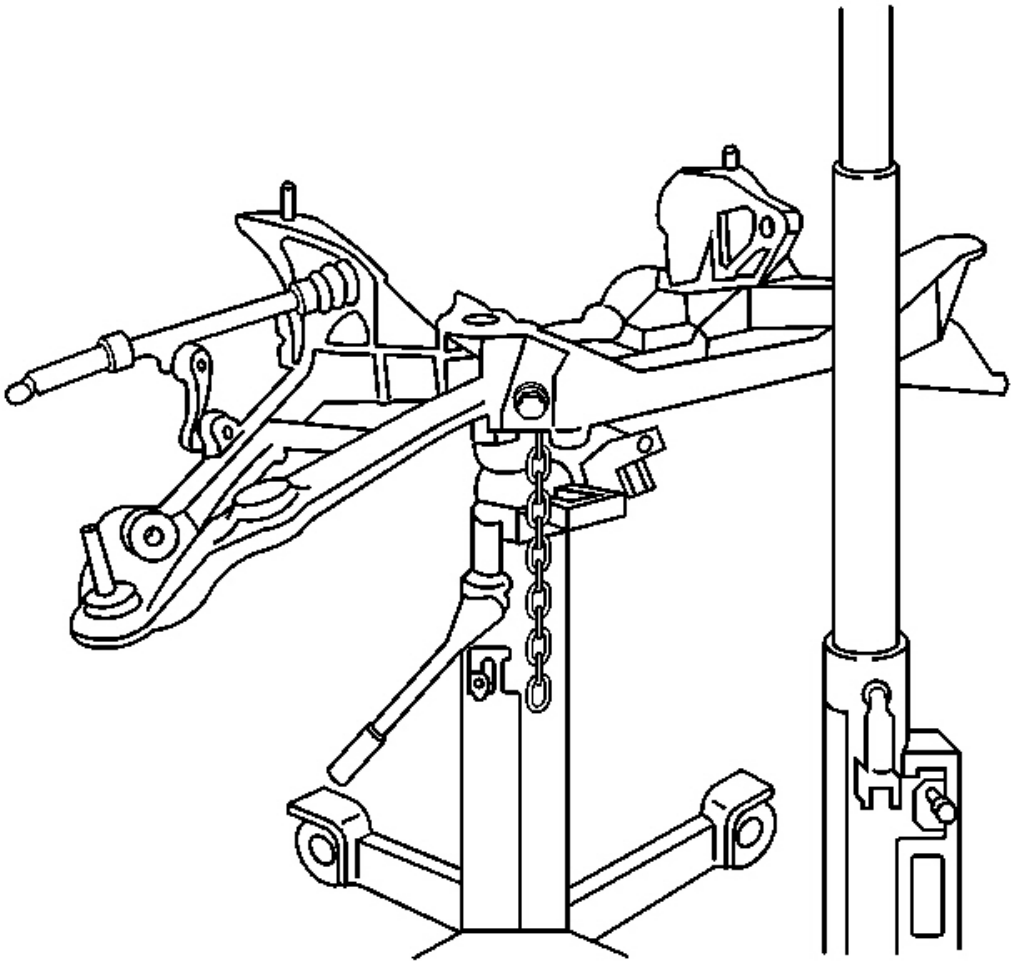

Fig. 110: Rear Suspension Crossmember
Courtesy of GENERAL MOTORS CORP.

30. With the aid of an assistant, slowly lower the rear suspension crossmember away from the vehicle frame rails and remove the crossmember.

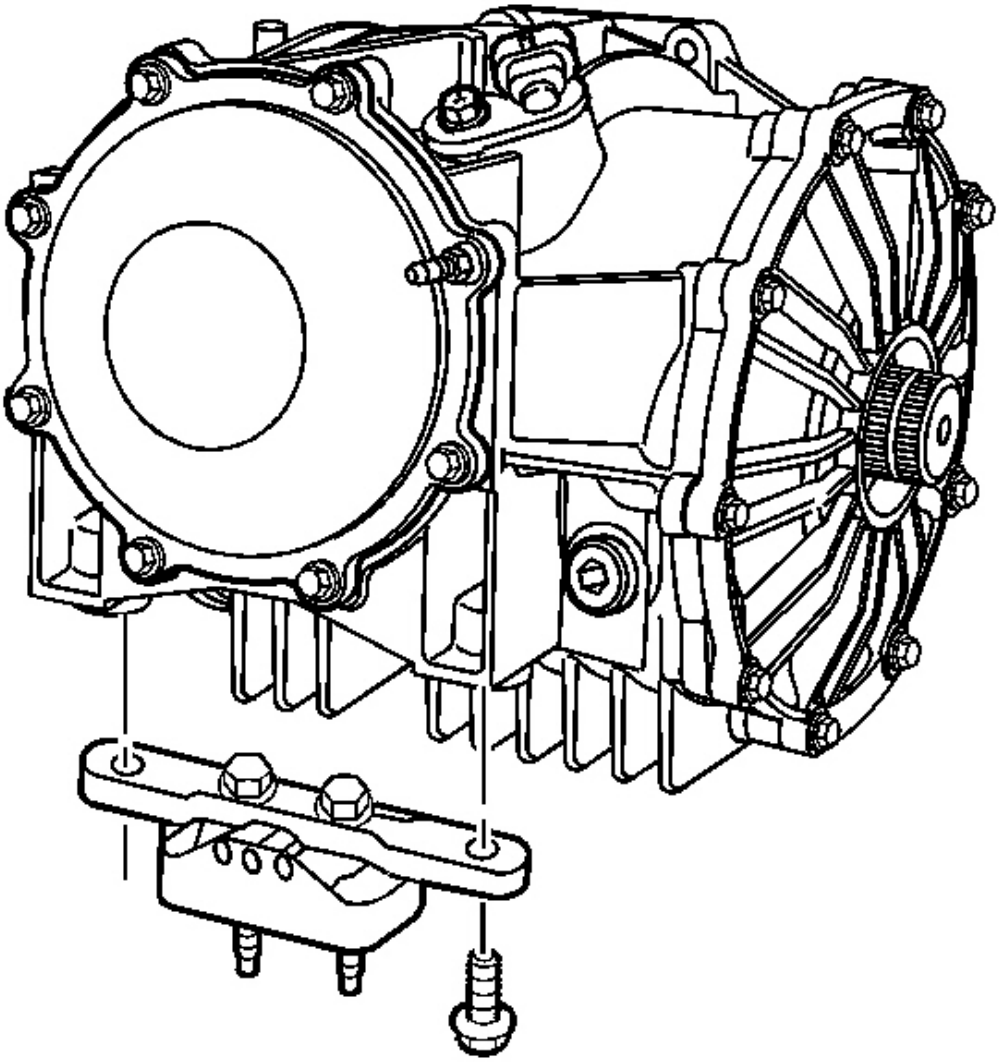

Fig. 111: Transaxle Mount Bracket & Differential Bolts
Courtesy of GENERAL MOTORS CORP.

31. Remove the transaxle mount bracket to differential bolts.
32. Remove the transaxle mount with bracket.

Removing the transaxle mount will allow for greater stability on a workbench after the driveline is removed.

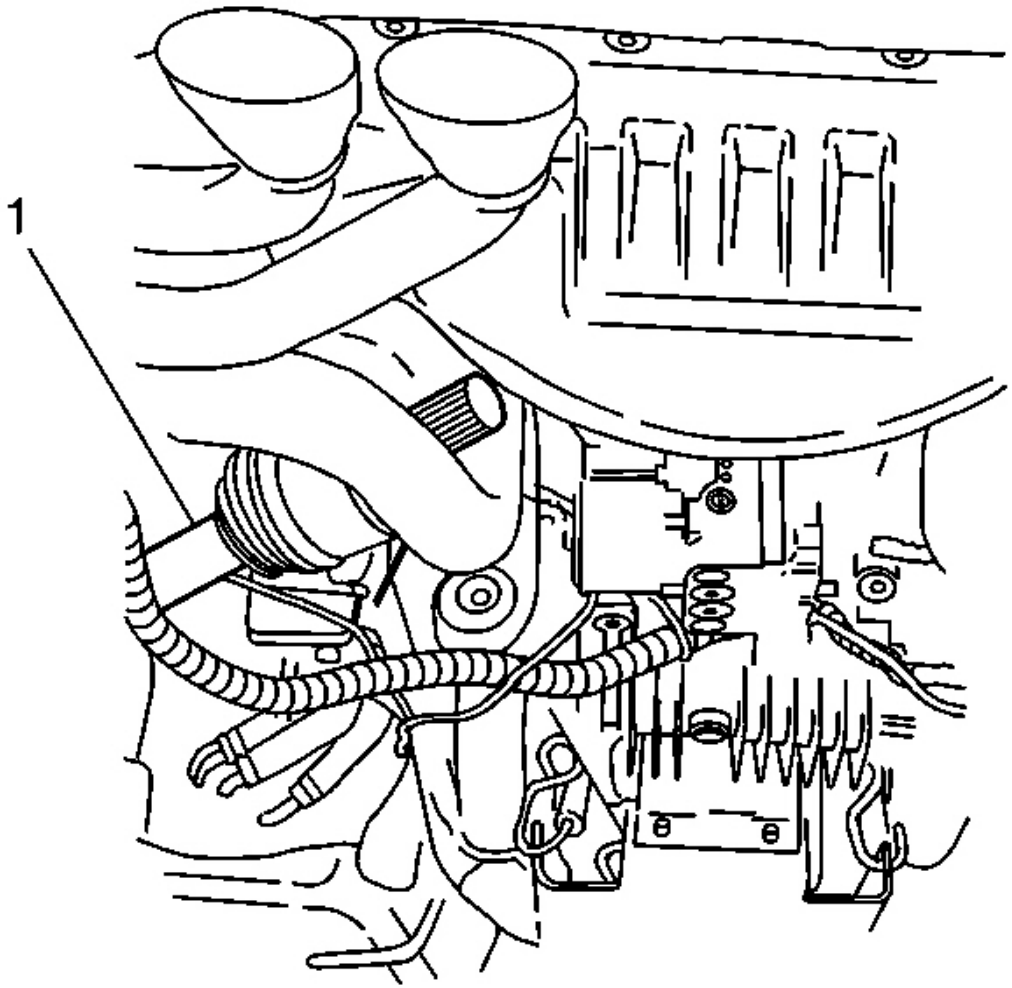

Fig. 112: LH Axle Shaft & Differential
Courtesy of GENERAL MOTORS CORP.

33. Using a pry bar, CAREFULLY release the axle shafts from the differential.
34. Tie off the axle shafts to the underbody to support the shafts out of the way.

    The LH muffler assembly pipe toward the rear provides a good location to help support the LH axle shaft (1).

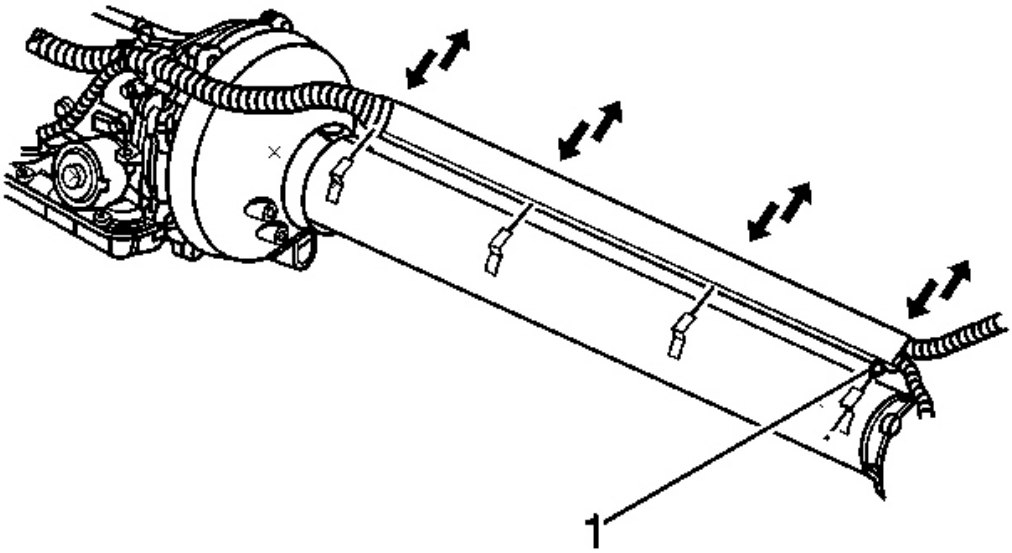

Fig. 113: Wiring Harness & Driveline Support Assembly
Courtesy of GENERAL MOTORS CORP.

35. Release the retainer (1) securing (and positioning) the wiring harness to the L-shaped brackets along the driveline support assembly, then slide the harness up out of the brackets and position out of the way.

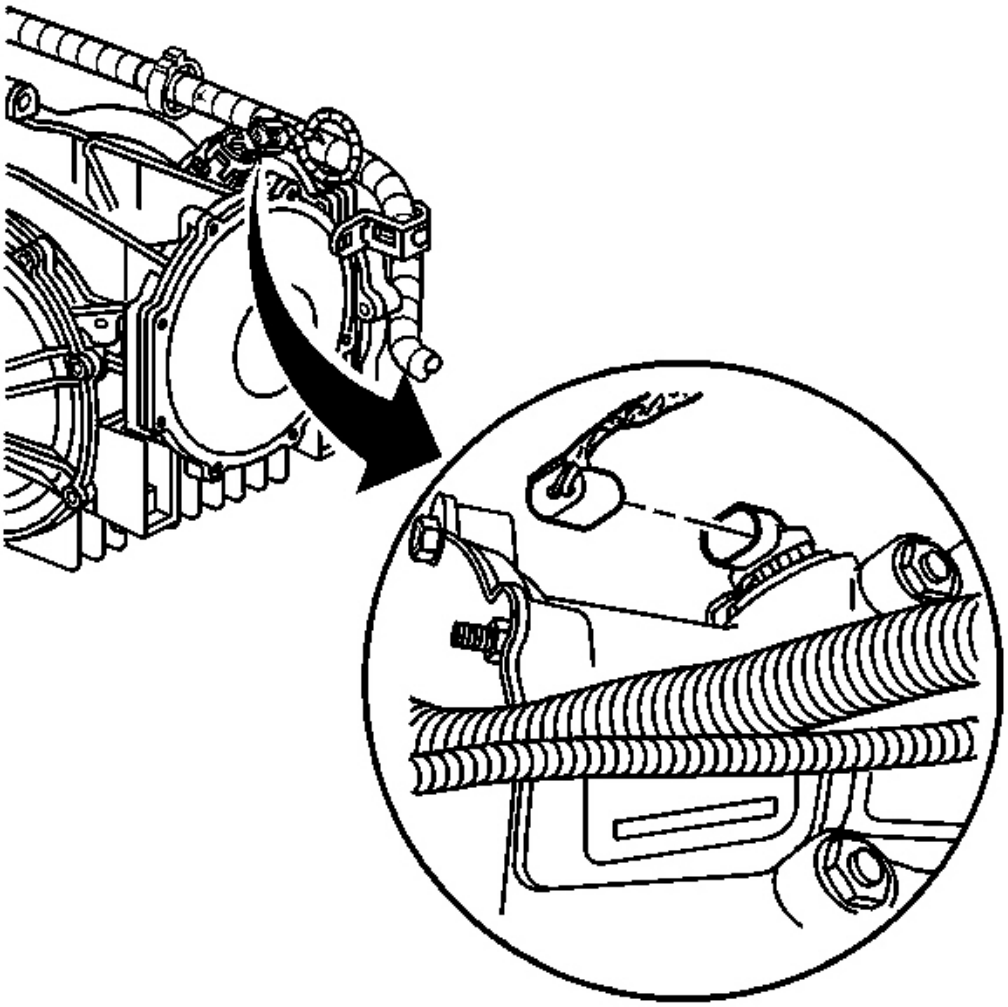

Fig. 114: VSS Electrical Connector
Courtesy of GENERAL MOTORS CORP.

36. SLOWLY lower the driveline approximately 50 mm (2 in), while simultaneously adjusting the angle of tilt, in order to access the electrical connectors.
37. Disconnect the vehicle speed sensor (VSS) electrical connector.

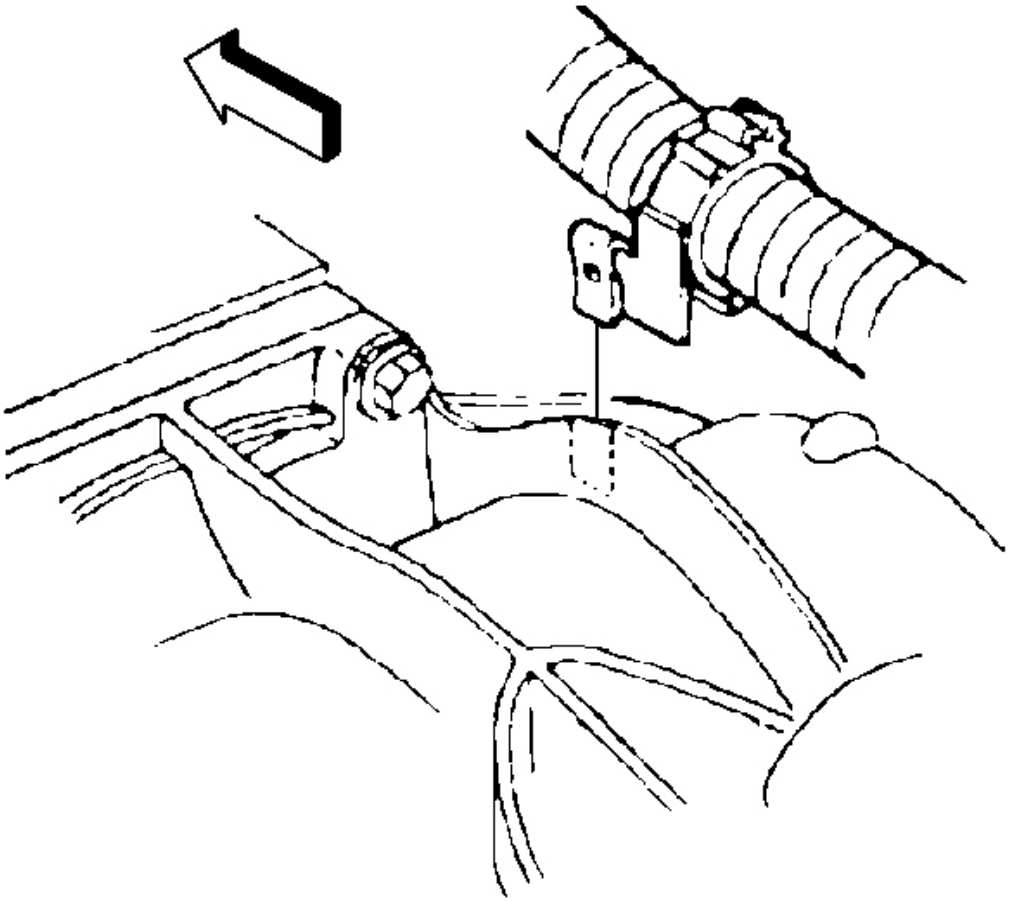

Fig. 115: Wiring Harness Retainer Clip & Differential Rear Cover
Courtesy of GENERAL MOTORS CORP.

38. Disconnect the wiring harness retainer from the stud at the differential rear cover.
39. Disconnect the wiring harness retainer clip from the top of the differential.

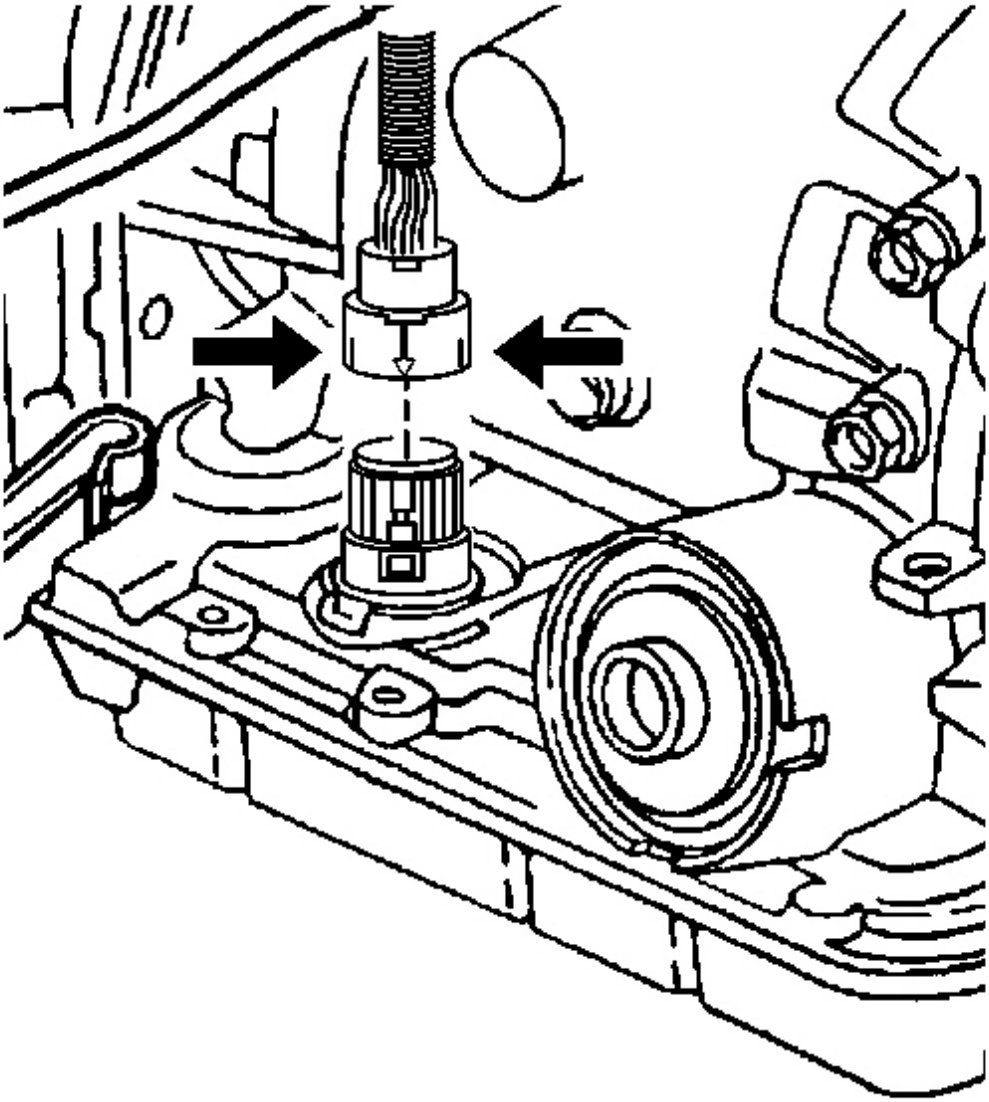

Fig. 116: Transmission Harness 20-Way Connector
Courtesy of GENERAL MOTORS CORP.

40. Disconnect the transmission harness 20-way connector.

    Depress both tabs on the connector and pull straight up; do not pry the connector.

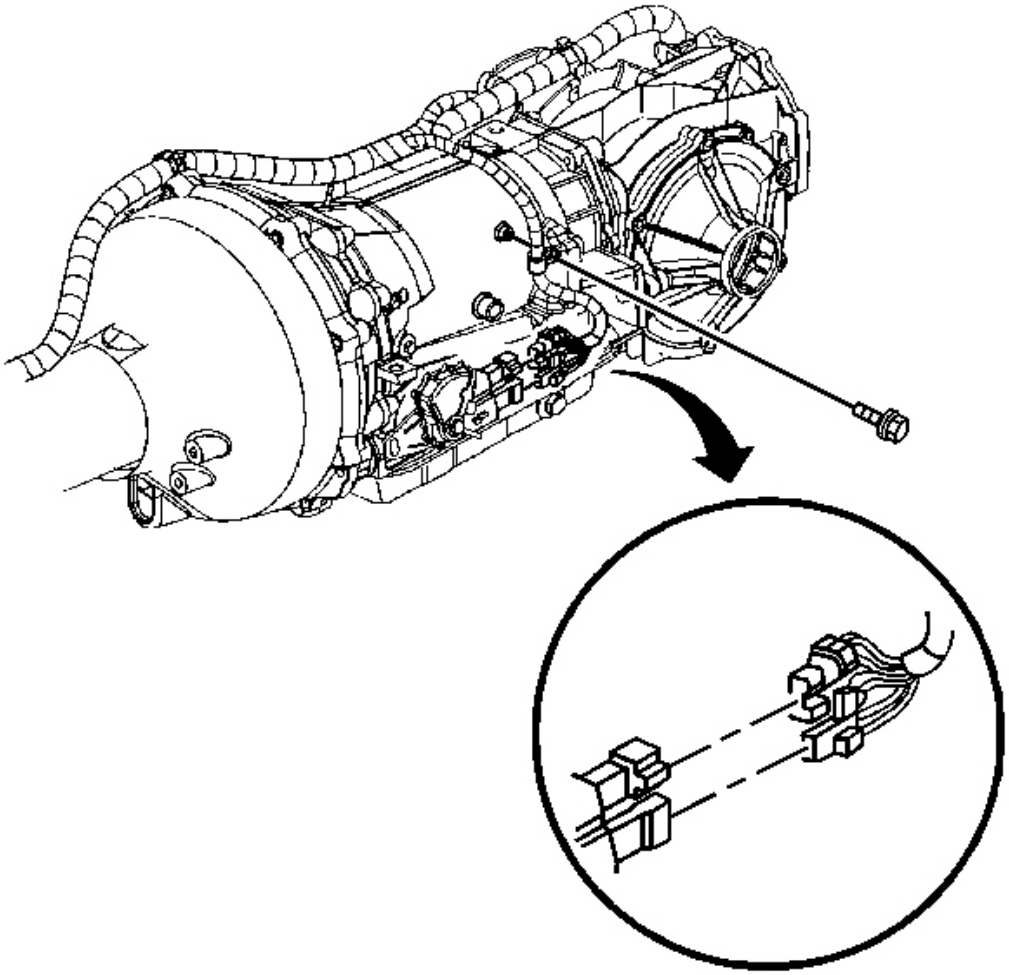

Fig. 117: Park/Neutral Position Switch Electrical Connectors
Courtesy of GENERAL MOTORS CORP.

41. Disconnect the park/neutral position switch electrical connectors.
42. Remove the bolt retaining the transmission wiring harness to the LH side of the transmission case.

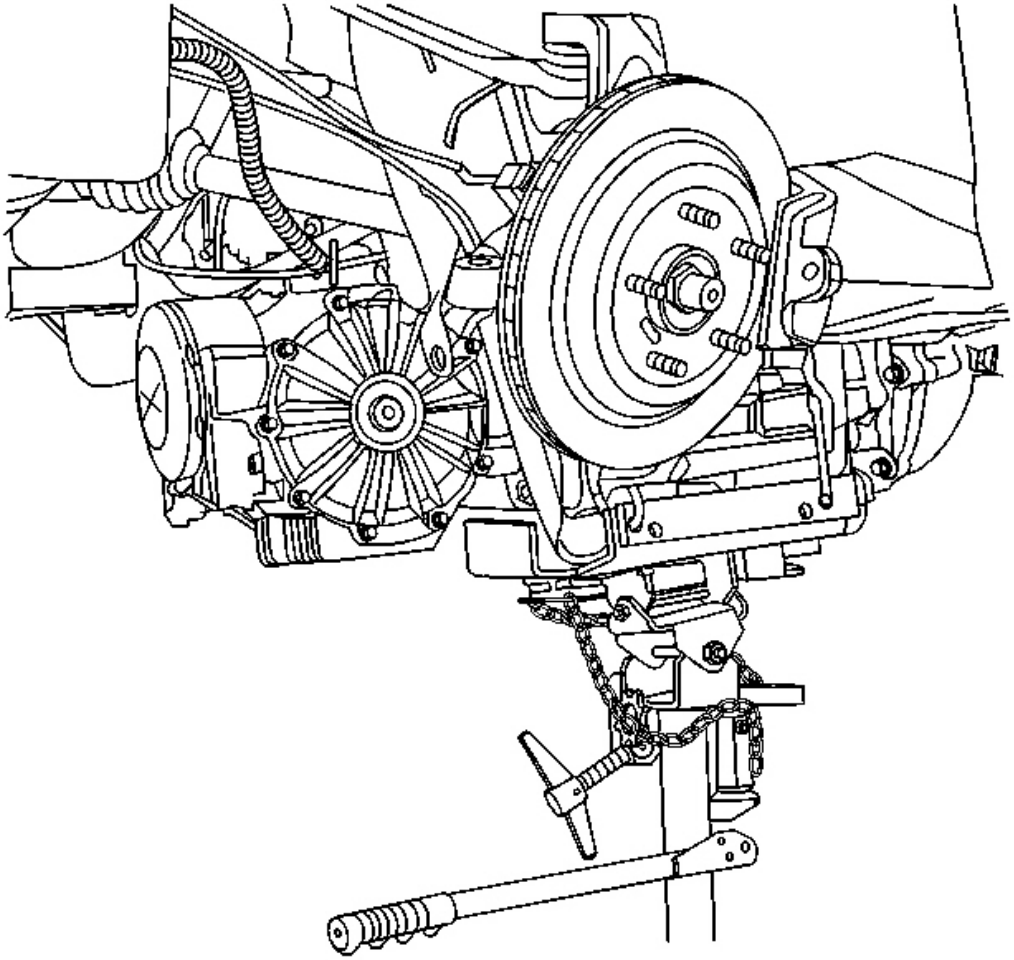

Fig. 118: Supporting Transmission Using Jackstand
Courtesy of GENERAL MOTORS CORP.

43. SLOWLY lower the driveline, while simultaneously adjusting the angle of tilt, and observe the relationship between the top rear of the differential and the lowest part of the rear compartment panel floor (the center storage compartment between the frame rails); the differential should not be lowered more than approximately EVEN with the specified body point of reference.

    (The engine positive crankcase ventilation (PCV) pipes which route along the rear of the engine intake manifold will likely contact the dash panel.)

44. Release the wiring harness from the harness retainer along the top of the transmission.
45. Check to be sure that the wiring harness is free from the driveline being removed.

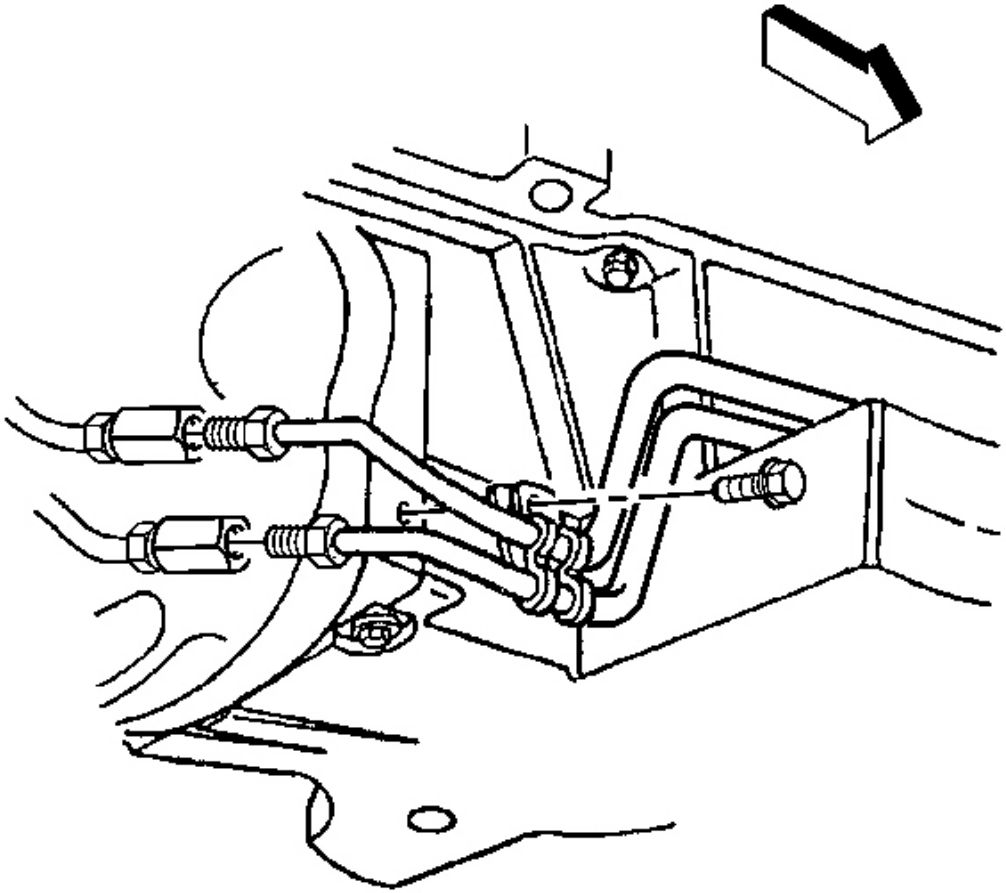

Fig. 119: Locating Cooler Fittings
Courtesy of GENERAL MOTORS CORP.

46. Disconnect the transmission oil cooler rear pipes from the junction fittings at the engine flywheel housing, then cap the pipes and plug the junction fittings to prevent contamination.

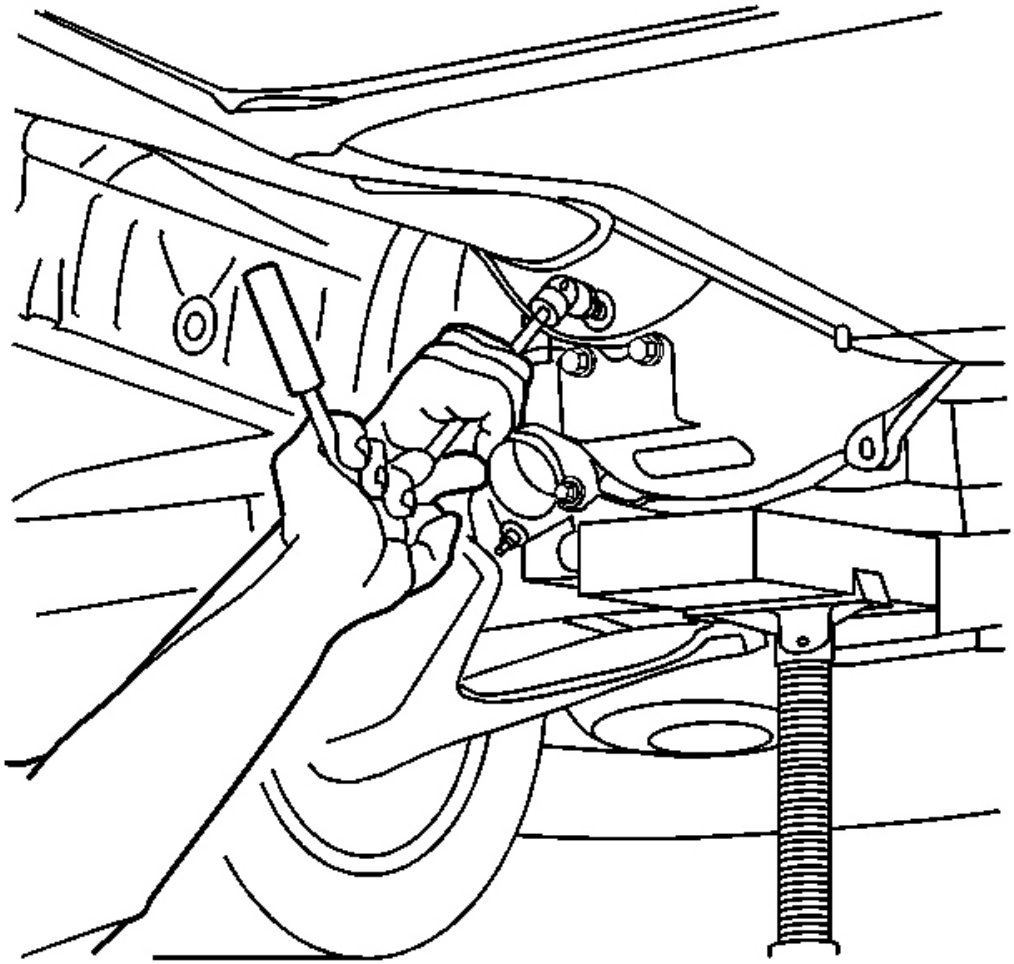

Fig. 120: Removing/Installing Driveline Support Assembly To Engine Flywheel Housing Bolts
Courtesy of GENERAL MOTORS CORP.

47. Using a block of wood to protect the engine oil pan, place a jack under the rear of the engine oil pan to support the engine and prevent contact with the composite dash panel.
48. Remove the driveline support assembly to engine flywheel housing bolts.

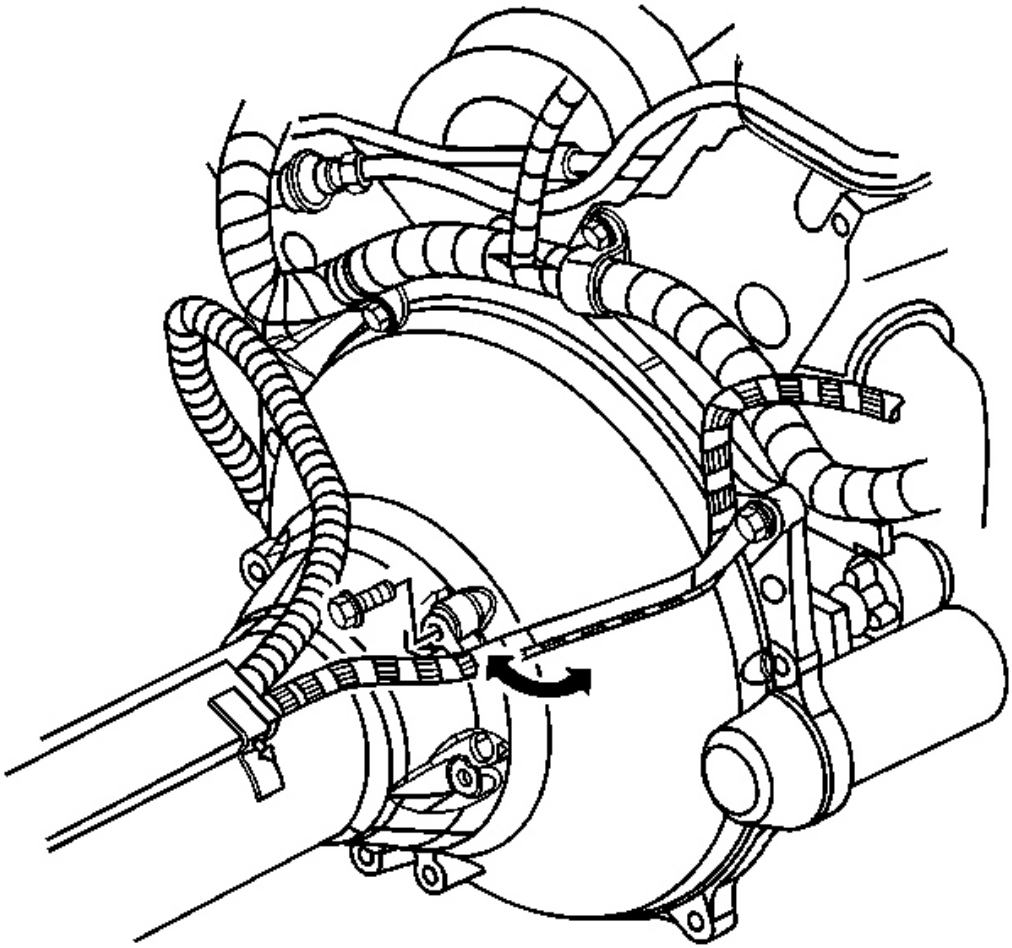

Fig. 121: Wiring Harness Bracket
Courtesy of GENERAL MOTORS CORP.

49. Carefully bend the wiring harness bracket away from the driveline, toward the driveline tunnel wall in order to make a clear removal path for the driveline.

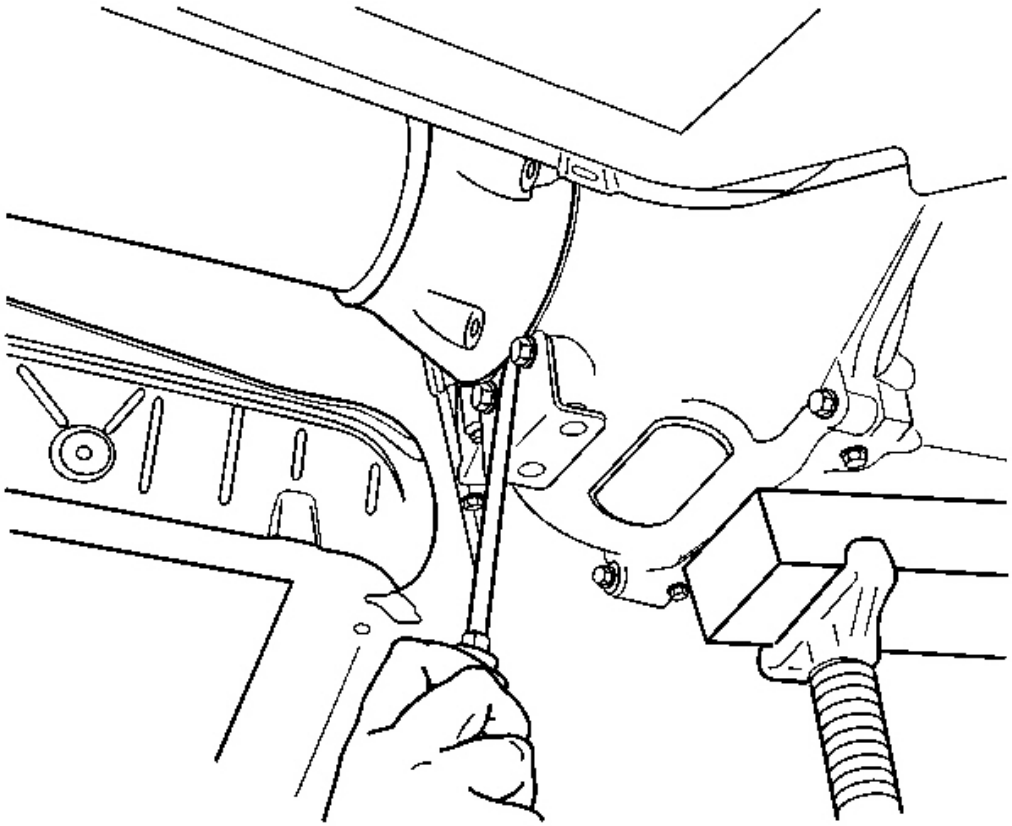

Fig. 122: Separating Edge Of Driveline Support Assembly & Engine Flywheel Housing Using Flat Bladed Tool
Courtesy of GENERAL MOTORS CORP.

IMPORTANT: The aid of an assistant will be necessary for the remaining steps.

50. Have an assistant insert a flat bladed screwdriver, or similar tool, between the edge of the driveline support assembly and the engine flywheel housing, then begin to pry the driveline loose from the engine.

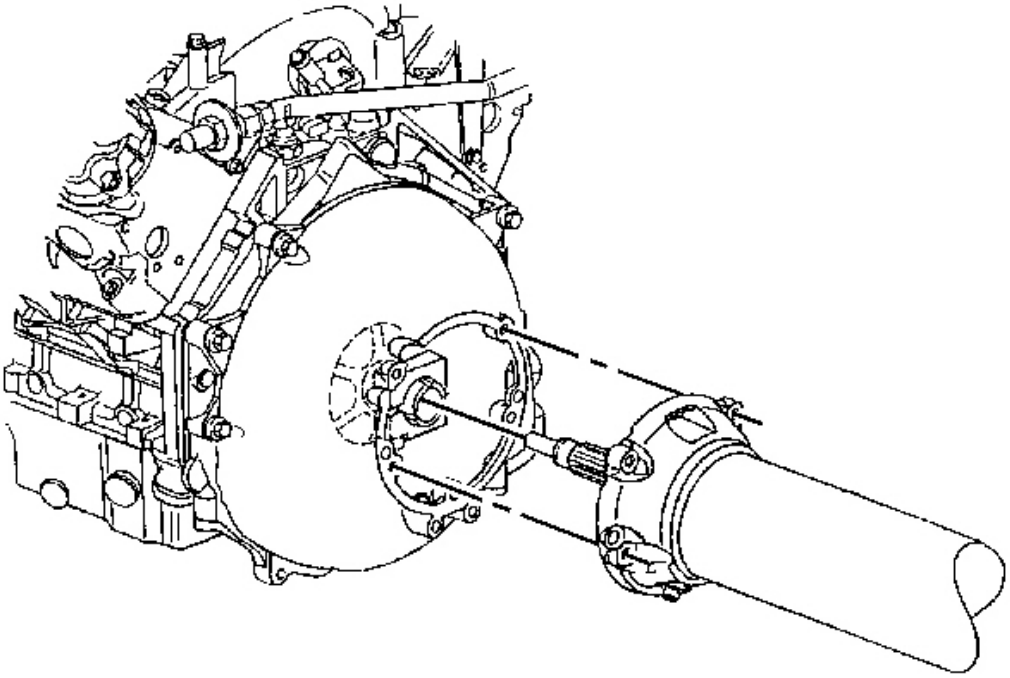

Fig. 123: Propeller Input Shaft
Courtesy of GENERAL MOTORS CORP.

51. Have an assistant guide the front of the driveline during the removal of the driveline from the vehicle.
52. SLOWLY lower the driveline, while simultaneously adjusting the angle of tilt and pulling the driveline away from the engine UNTIL the propeller input shaft at the front of the driveline support assembly just clears the engine flywheel housing.
53. SLOWLY lower the driveline completely out of the vehicle.

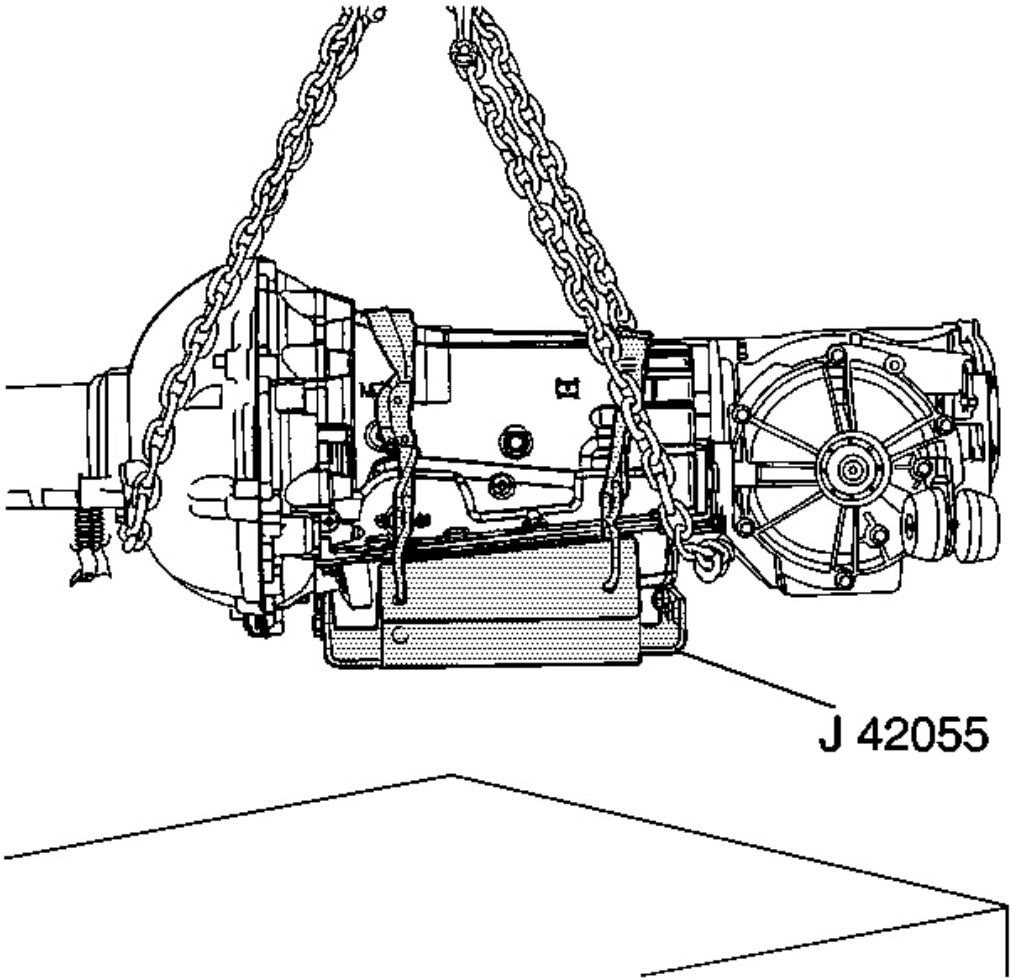

Fig. 124: , Driveline Support Assembly And The Differential
Courtesy of GENERAL MOTORS CORP.

54. Position the chainfall, or equivalent lifting device, in a way which will protect the transmission oil cooler rear pipes and the rear exhaust hangers located on the driveline support assembly.
55. Using the lifting device, raise the driveline to relieve the weight from the transmission jack.
56. Disconnect the **J 42055** from the transmission jack ONLY, the **J 42055** will provide stability to the driveline components while working on a bench.
57. Position the driveline on a workbench with the lifting device still attached.
58. Support the driveline support assembly and the differential for additional balance.
59. Remove the lifting device from the driveline.

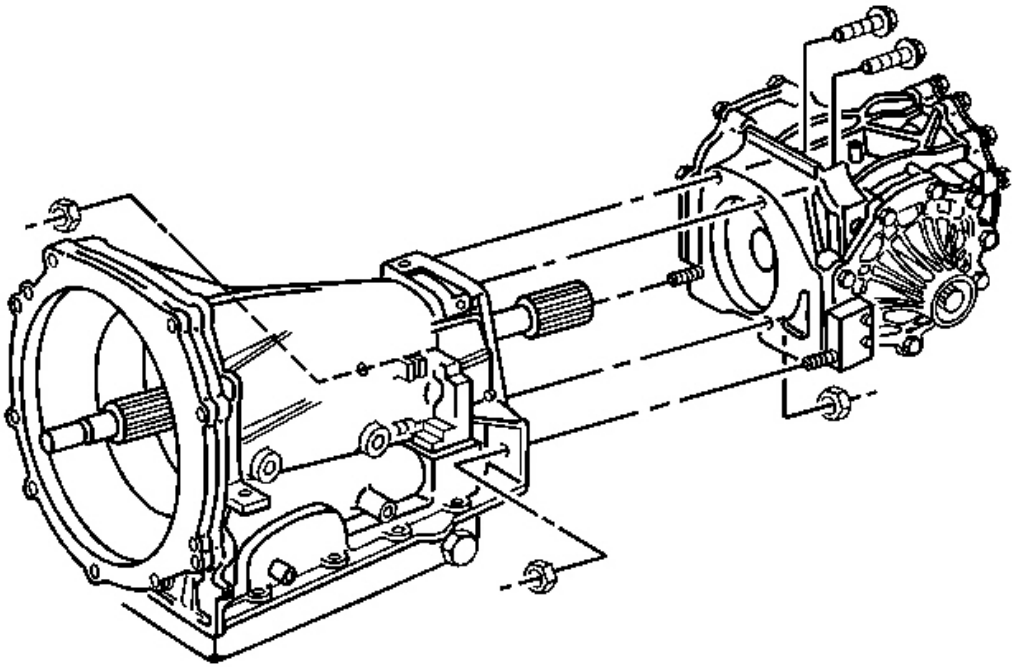

Fig. 125: Differential, Transmission Bolts & Nuts
Courtesy of GENERAL MOTORS CORP.

60. Remove the differential to transmission bolts and nuts.

IMPORTANT: Use care when separating the differential from the transmission to not damage the transmission output shaft seal in the differential plate.

61. SLOWLY slide the differential from the transmission.

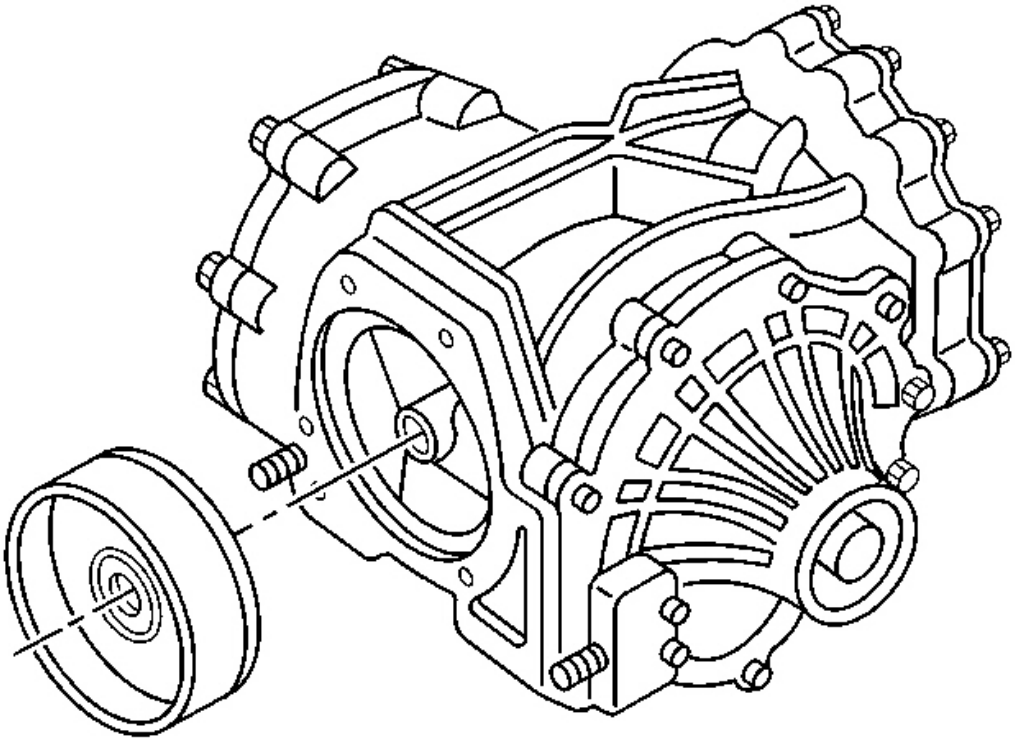

Fig. 126: Differential Plate & Differential
Courtesy of GENERAL MOTORS CORP.

62. Remove the differential plate from the differential.

Installation Procedure

NOTE: **Failure to follow the proper removal and installation procedures may result in damage to the engine crankshaft thrust bearing.**

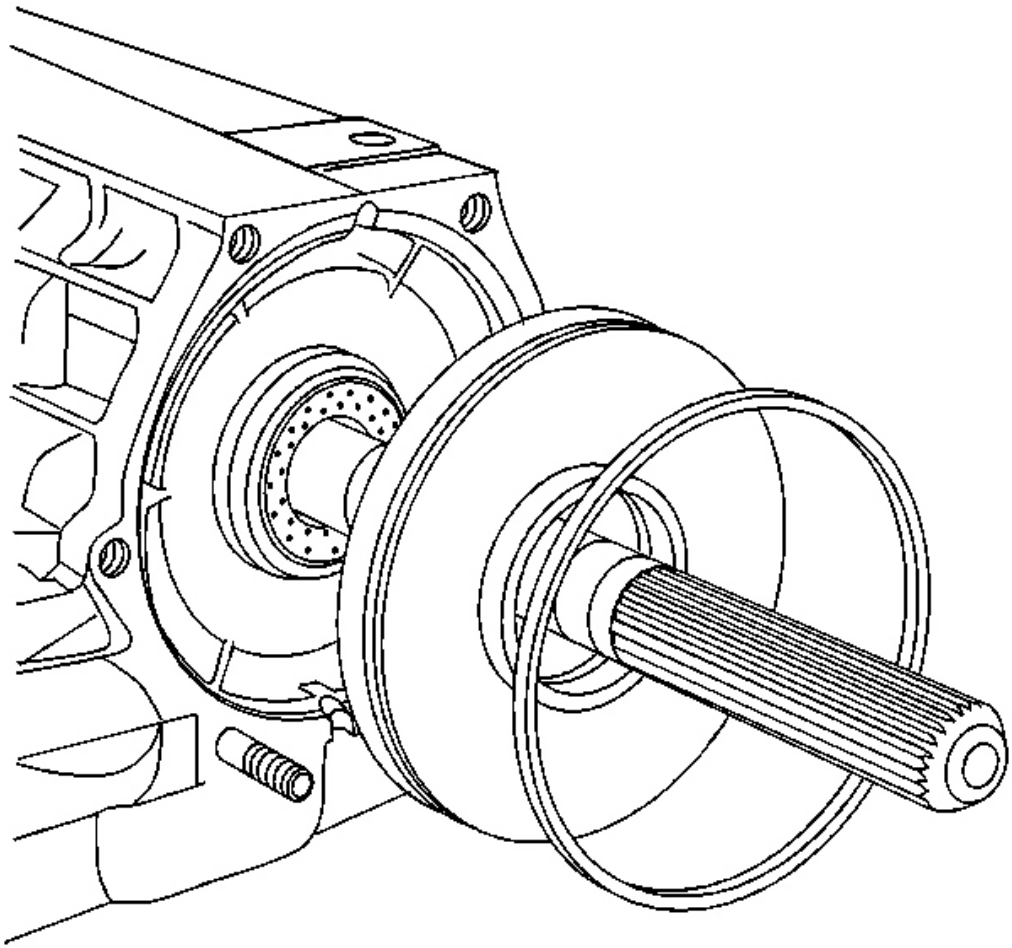

Fig. 127: Transmission Case & Differential Plate Seal Flush
Courtesy of GENERAL MOTORS CORP.

1. Install the differential plate to the transmission, use care not to damage the transmission output seal in the rear of the plate.
2. Position the square-lip differential plate seal flush with the transmission case.

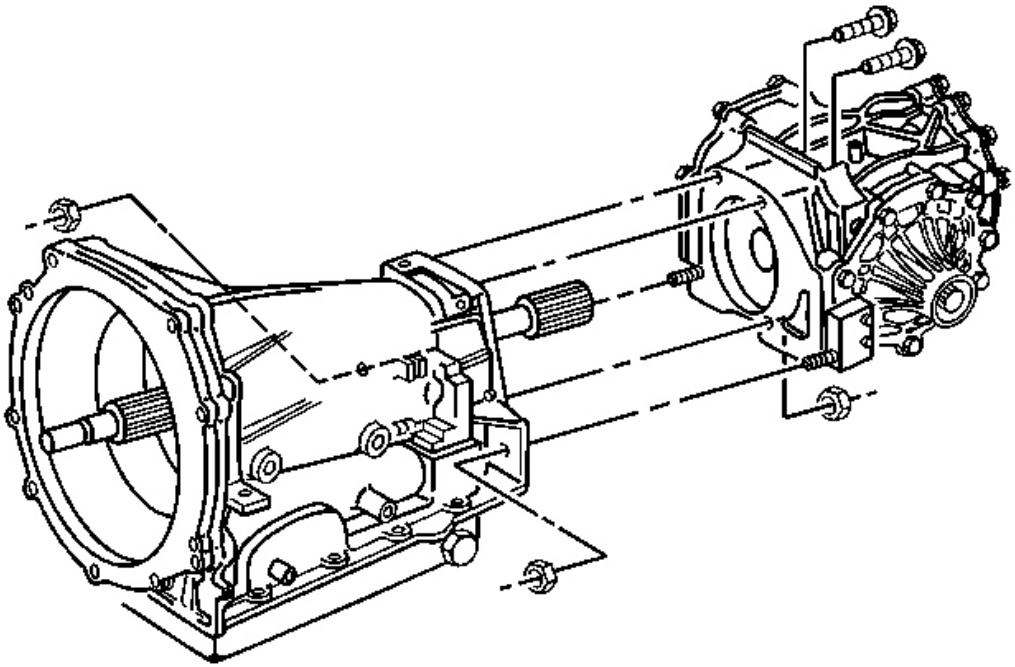

Fig. 128: Differential, Transmission Bolts & Nuts
Courtesy of GENERAL MOTORS CORP.

3. SLOWLY slide the differential to the transmission.

NOTE: **Refer to Fastener Notice in Cautions and Notices.**

4. Install the differential to transmission bolts and nuts.

Tighten: Tighten the differential to transmission bolts and nuts to 50 N.m (37 lb ft).

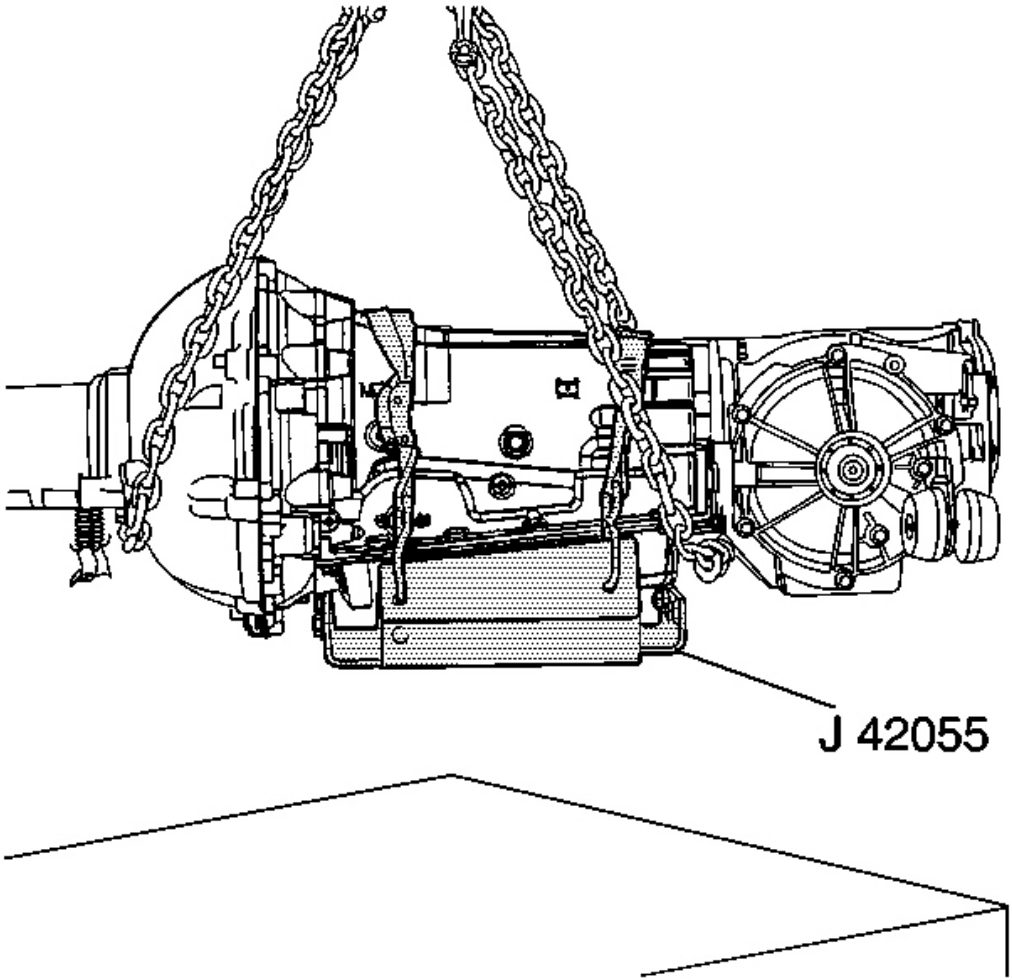

Fig. 129: , Driveline Support Assembly And The Differential
Courtesy of GENERAL MOTORS CORP.

5. Position the chainfall, or equivalent lifting device, in a way which will protect the transmission oil cooler rear pipes and the rear exhaust hangers located on the driveline support assembly.

IMPORTANT: The aid of an assistant will be necessary for the following steps until the driveline is installed into the vehicle.

6. Using the lifting device, raise the driveline off the workbench and position the driveline with the **J 42055** onto a transmission jack.
7. Connect the **J 42055** to the transmission jack.

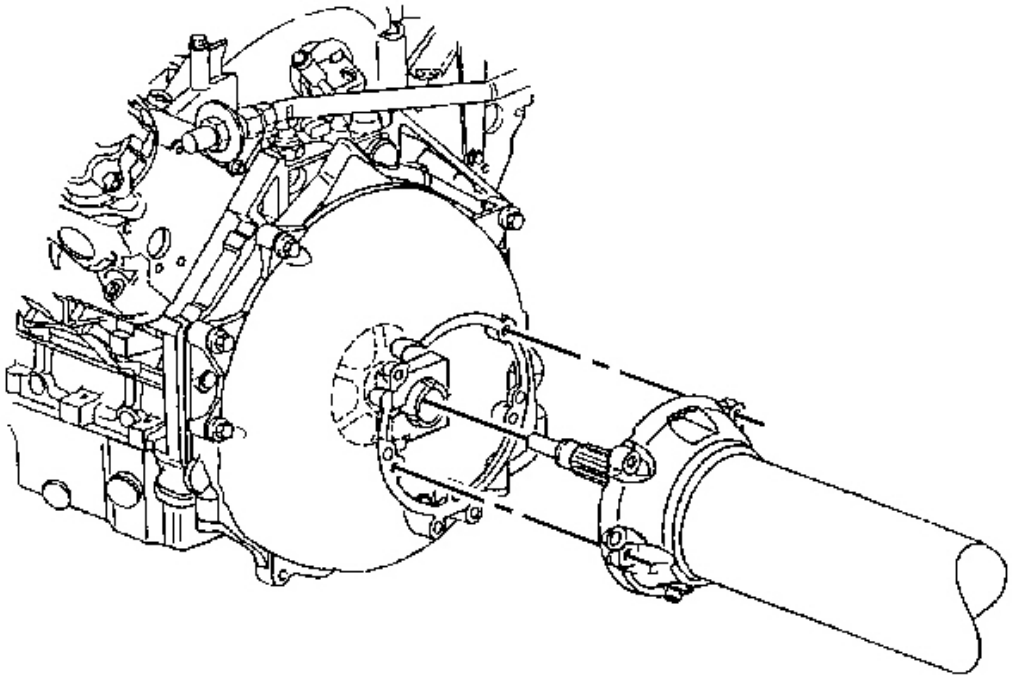

Fig. 130: Propeller Input Shaft
Courtesy of GENERAL MOTORS CORP.

8. Remove the lifting device from the driveline.
9. Position the driveline under the vehicle.
10. Begin to raise the driveline at the approximate angle used during removal.
11. Position the wiring harness along the driveline support assembly and LOOSELY install the harness into the harness retaining slots.
12. Have an assistant guide the front of the driveline so the propeller input shaft is just to the rear of the engine flywheel housing, then raise the driveline to the PROPER HEIGHT and the PROPER ANGLE to install to the engine.

IMPORTANT: Use care not to use too much force to install the propeller input shaft into the propeller shaft hub. The propeller input shaft front bearing positioning system is designed to withstand an insertion force not greater than 582 N (130 lb).

13. Have an assistant begin to insert the propeller input shaft into the propeller shaft hub while maintaining the proper angle of the driveline, if necessary use a screwdriver to rotate the shaft slightly to bring the splines into alignment.

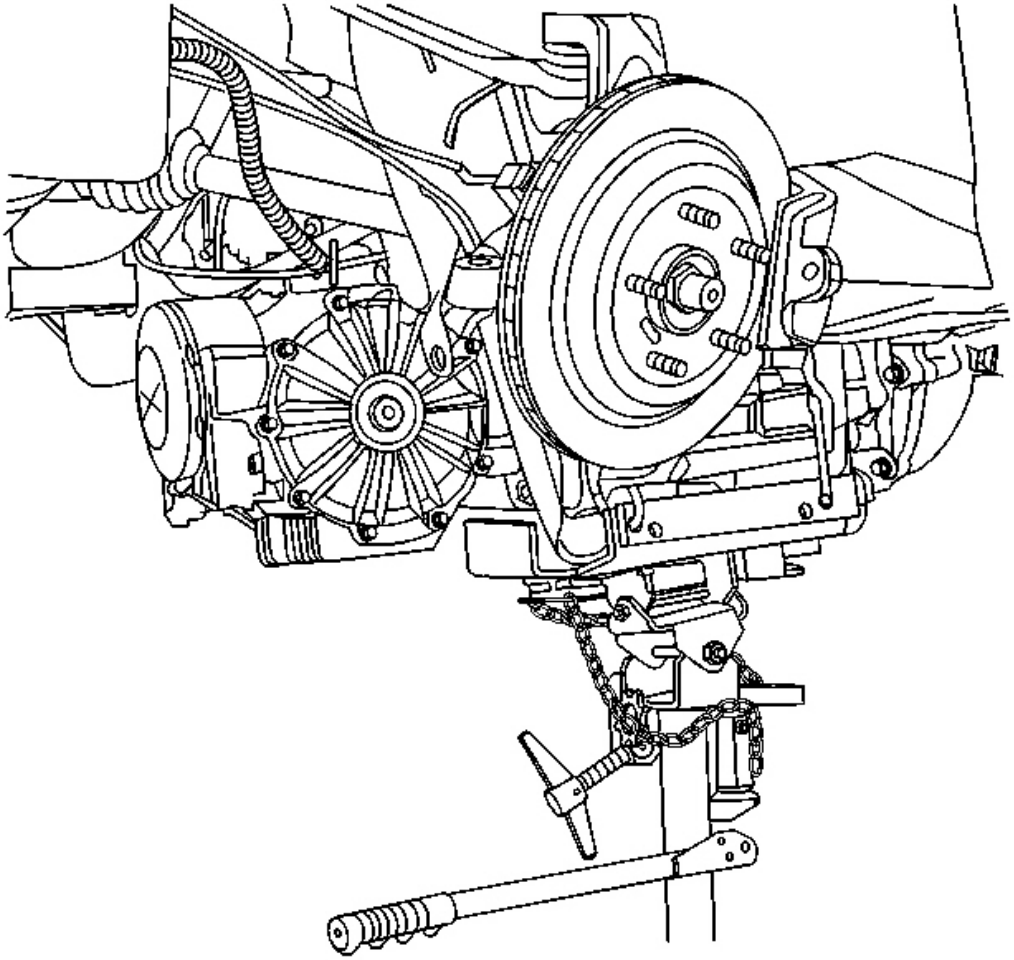

Fig. 131: Supporting Transmission Using Jackstand
Courtesy of GENERAL MOTORS CORP.

14. SLOWLY seat the driveline to the engine flywheel housing while maintaining the proper angle of the driveline.

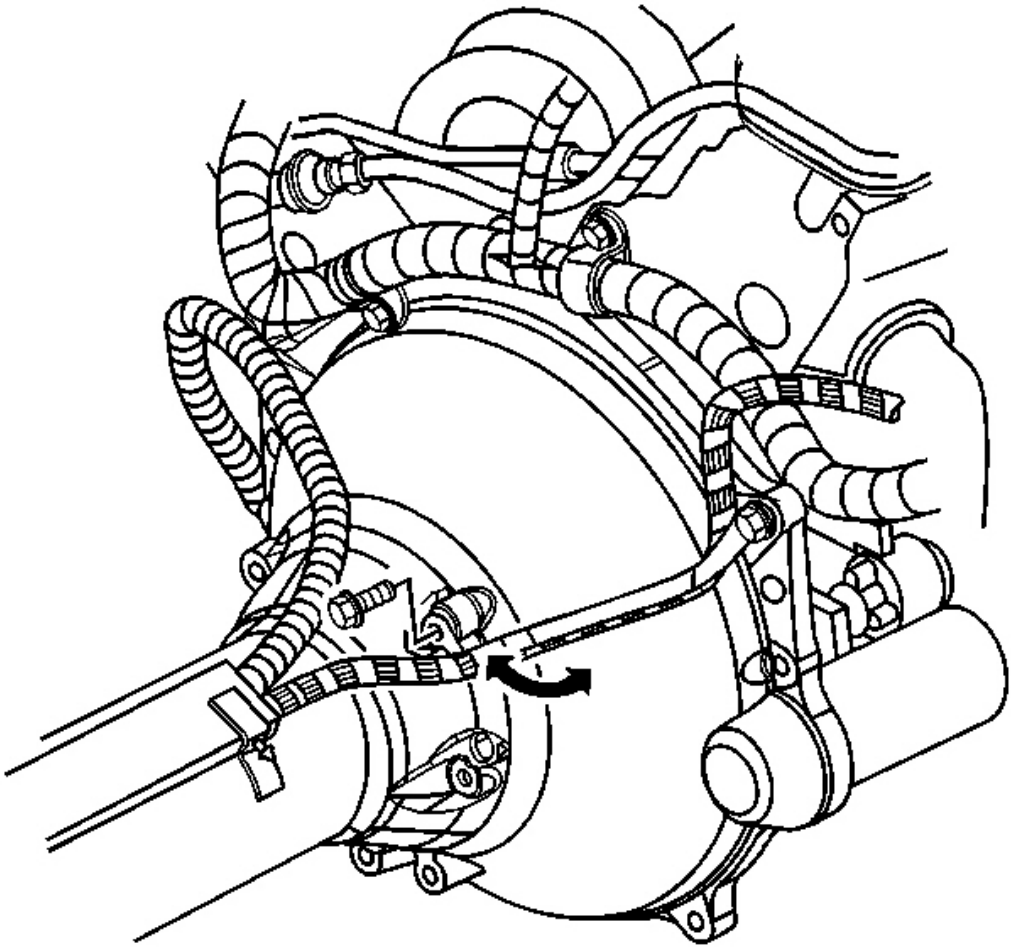

Fig. 132: Wiring Harness Bracket
Courtesy of GENERAL MOTORS CORP.

15. Reposition the wiring harness bracket from near the driveline tunnel wall to align with the appropriate driveline support assembly bolt hole.

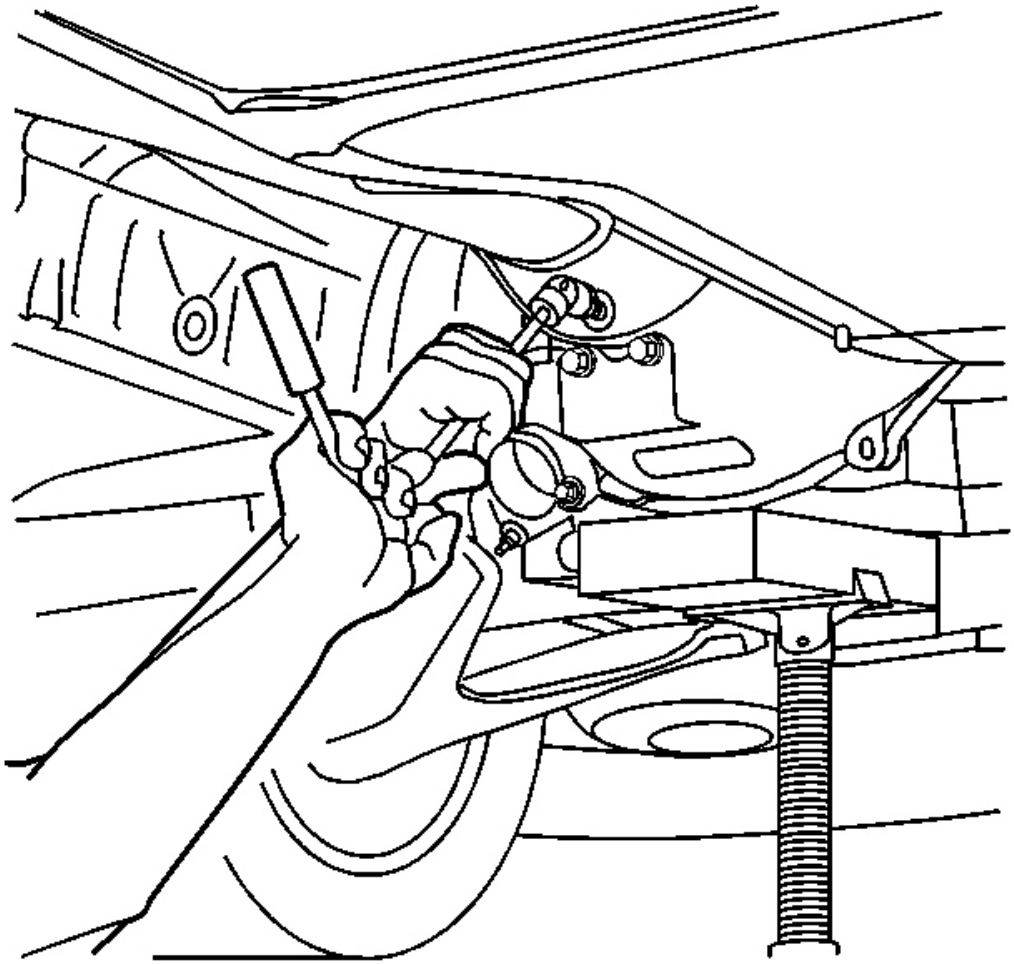

Fig. 133: Removing/Installing Driveline Support Assembly To Engine Flywheel Housing Bolts
Courtesy of GENERAL MOTORS CORP.

16. Install the driveline support assembly to engine flywheel housing bolts.

    Tighten: Tighten the driveline support assembly to engine flywheel housing bolts to 50 N.m (37 lb ft).

17. Install the wiring harness to the wiring harness retainer along the top of the transmission.
18. SLOWLY raise the driveline to approximately 50 mm (2 in) BELOW the final installed height.

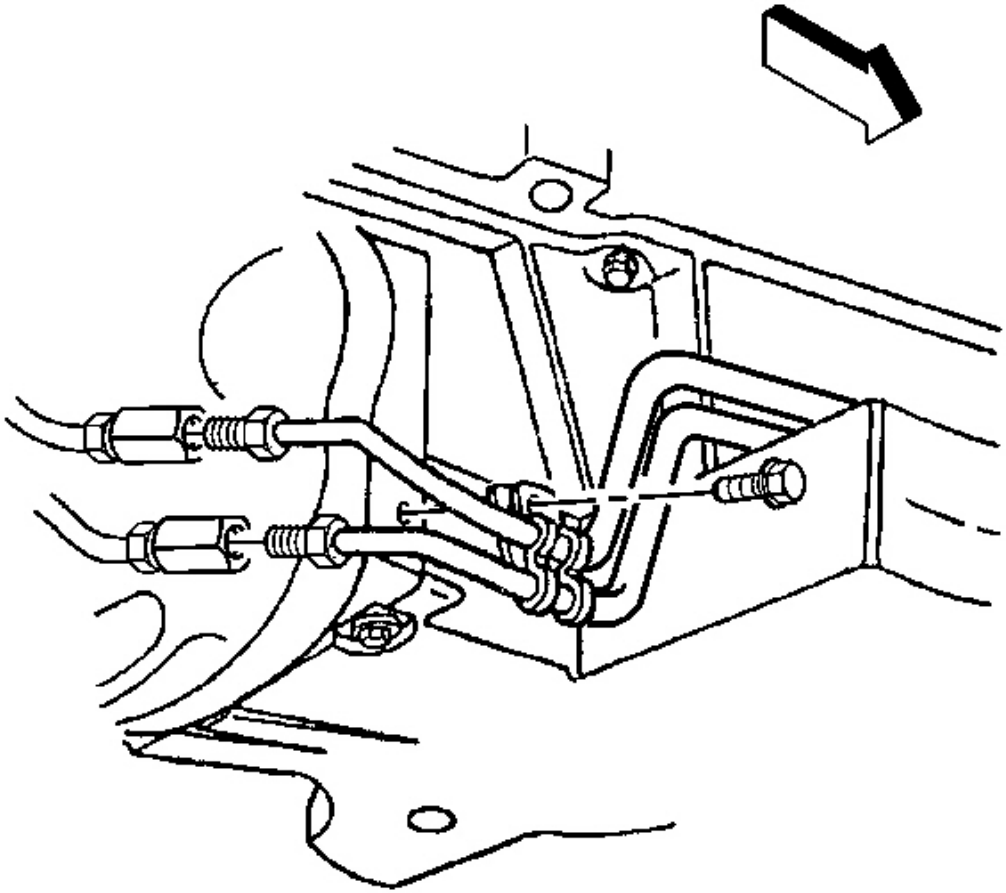

Fig. 134: Locating Cooler Fittings
Courtesy of GENERAL MOTORS CORP.

19. Remove the caps from the transmission oil cooler rear pipes and remove the plugs from the junction fittings at the engine flywheel housing.
20. ALIGN and HAND-START, then tighten ONLY by hand to seat the transmission oil cooler rear pipes to the junction fittings at the engine flywheel housing.

    Tighten: Tighten the transmission oil cooler rear pipes to junction fittings at engine flywheel housing to 27 N.m (20 lb ft).

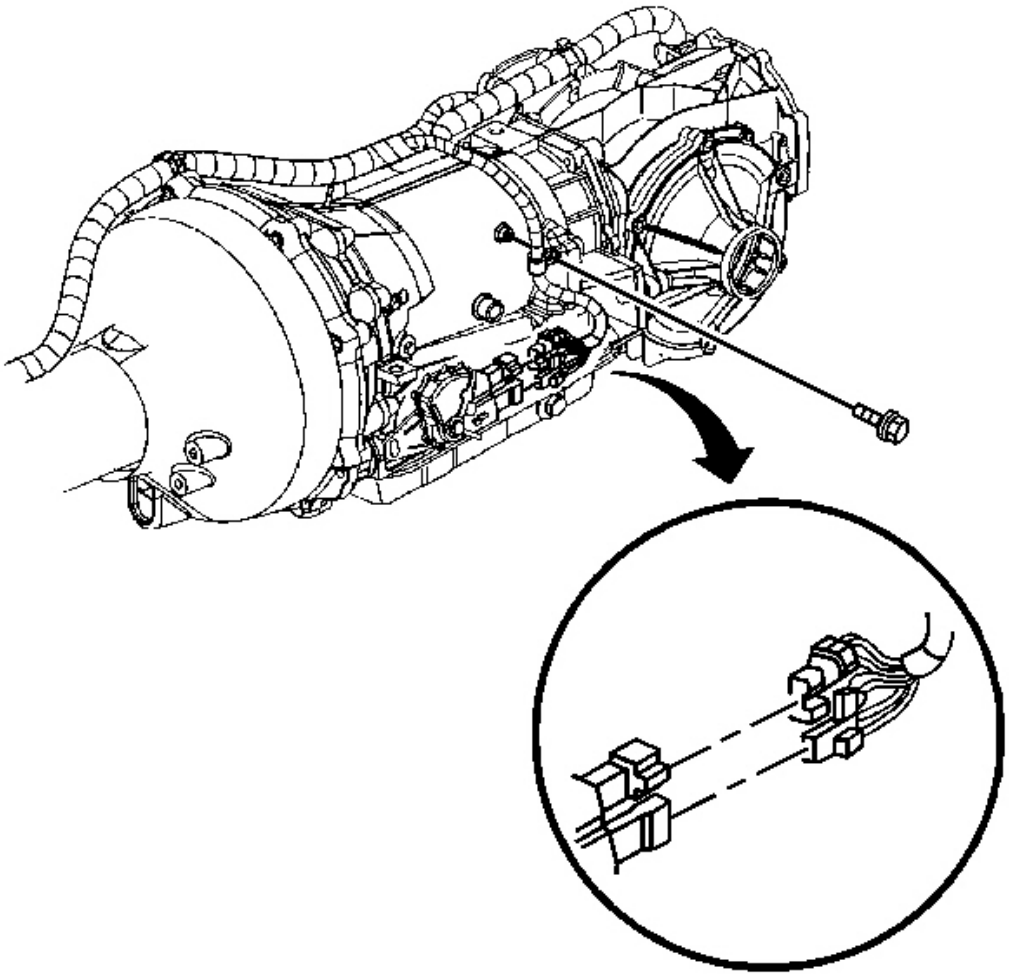

Fig. 135: Park/Neutral Position Switch Electrical Connectors
Courtesy of GENERAL MOTORS CORP.

21. Install the transmission wiring harness to LH side of transmission case retaining bolt.

    Tighten: Tighten the transmission wiring harness to LH side of transmission case retaining bolt to 2.5 N.m (22 lb in).

22. Connect the park/neutral position switch electrical connectors.

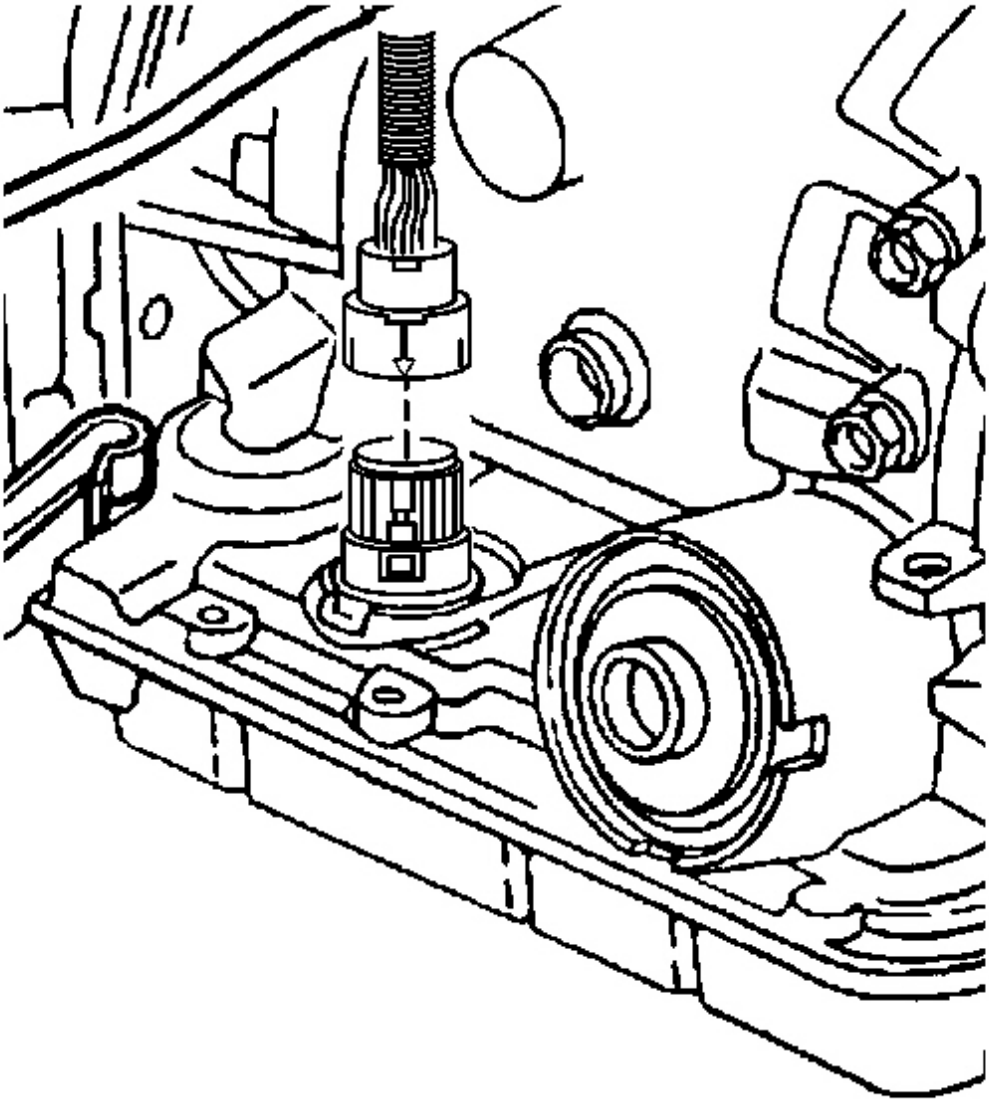

Fig. 136: Transmission Harness 20-Way Connector
Courtesy of GENERAL MOTORS CORP.

23. Connect the transmission harness 20-way connector.

    Align the arrows on each half of the connector and insert straight down.

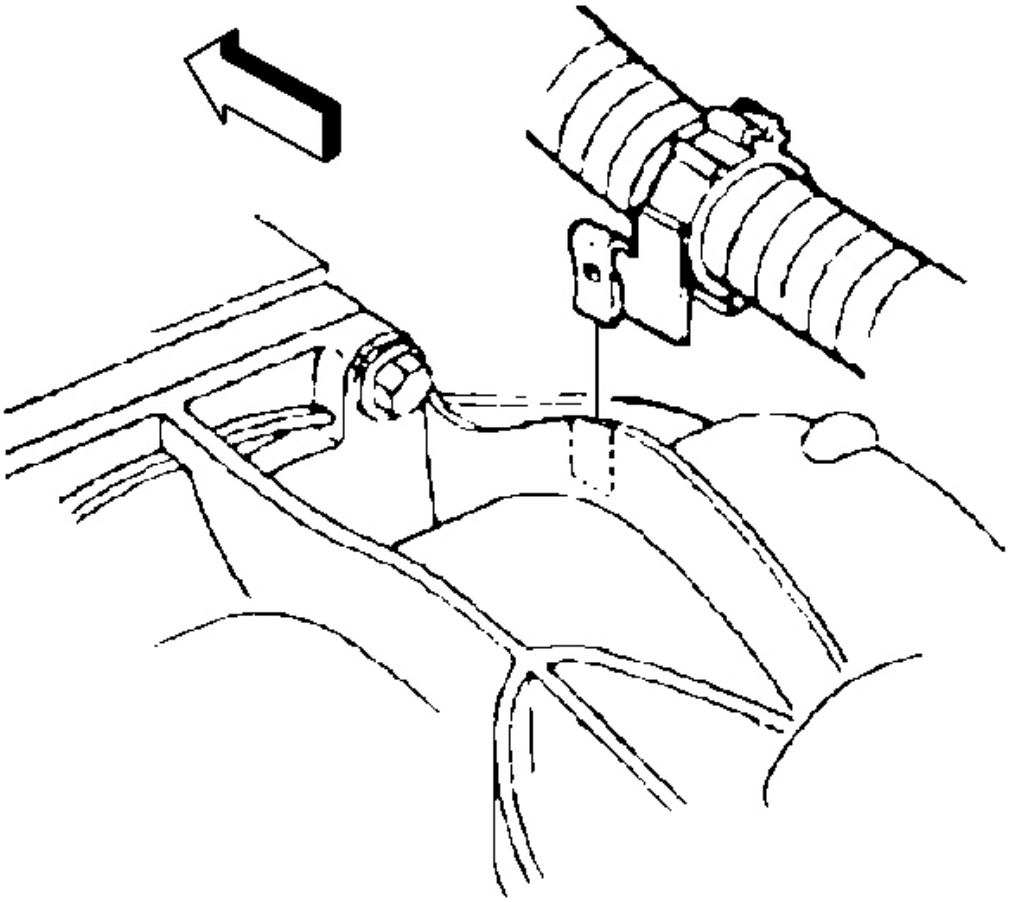

Fig. 137: Wiring Harness Retainer Clip & Differential Rear Cover
Courtesy of GENERAL MOTORS CORP.

24. Connect the wiring harness clip to the top of the differential.
25. Connect the wiring harness retainer to the stud at the differential rear cover.

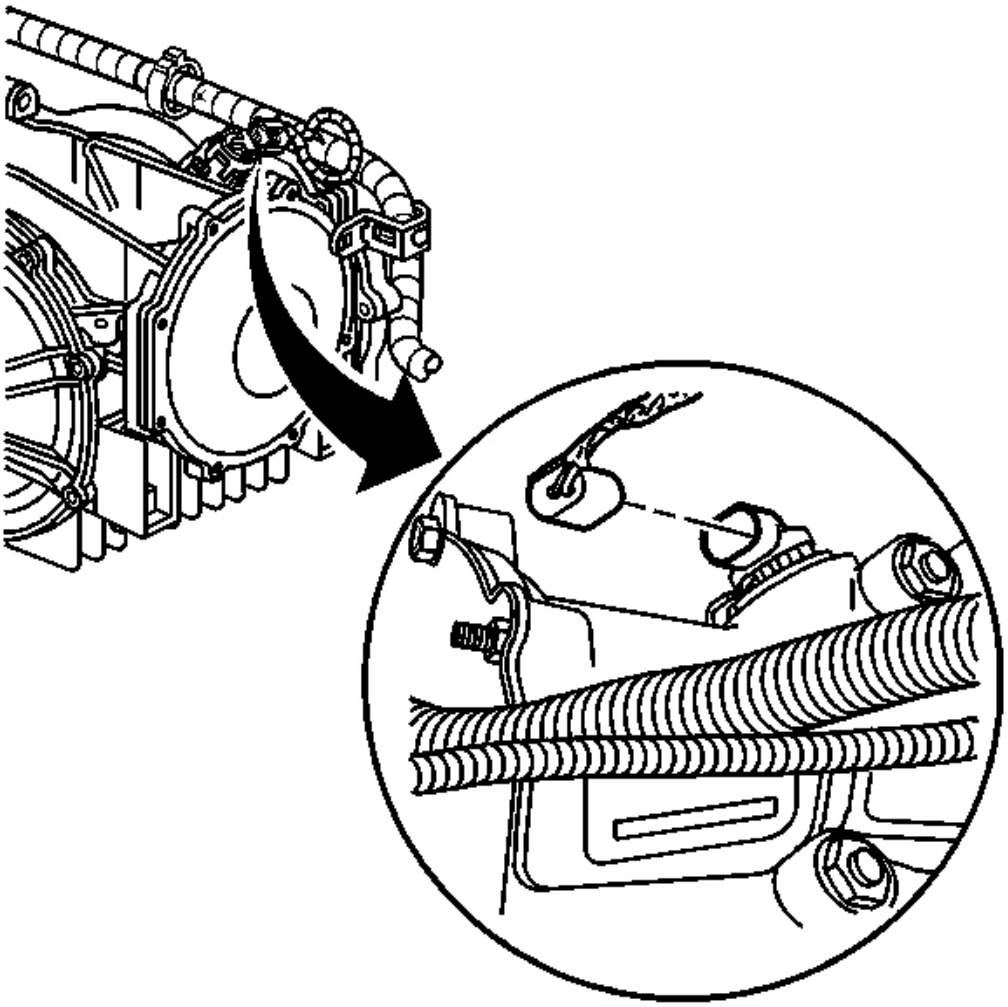

Fig. 138: VSS Electrical Connector
Courtesy of GENERAL MOTORS CORP.

26. Connect the vehicle speed sensor (VSS) electrical connector.

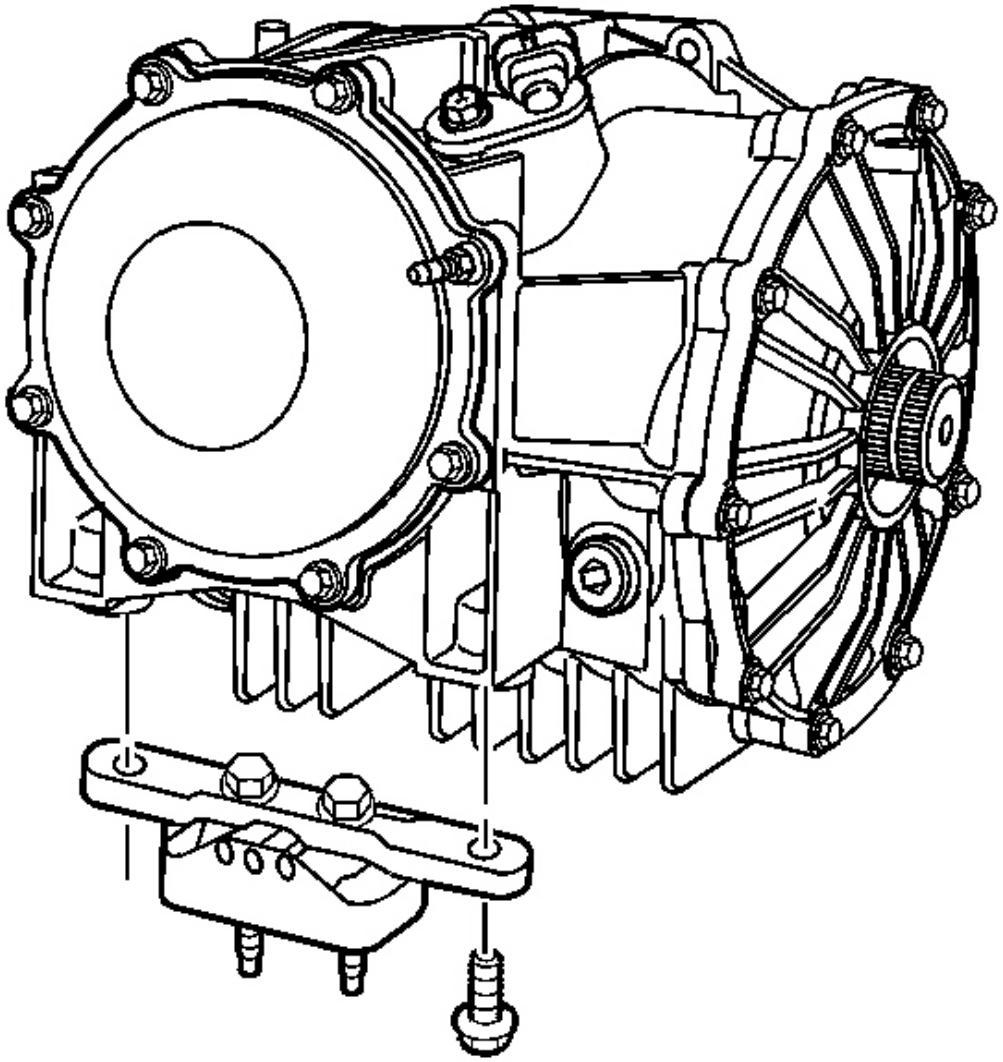

Fig. 139: Transaxle Mount Bracket & Differential Bolts
Courtesy of GENERAL MOTORS CORP.

27. Slowly raise the driveline to final installation height.
28. Remove the jack which supported the engine.
29. Remove the tie-off retainers from the axle shafts.
30. CAREFULLY align and seat the axle shafts to the differential.
31. Install the transaxle mount and bracket to the differential.

32. Install the transaxle mount bracket to differential bolts.

    Tighten: Tighten the transaxle mount bracket to differential bolts to 50 N.m (37 lb ft).

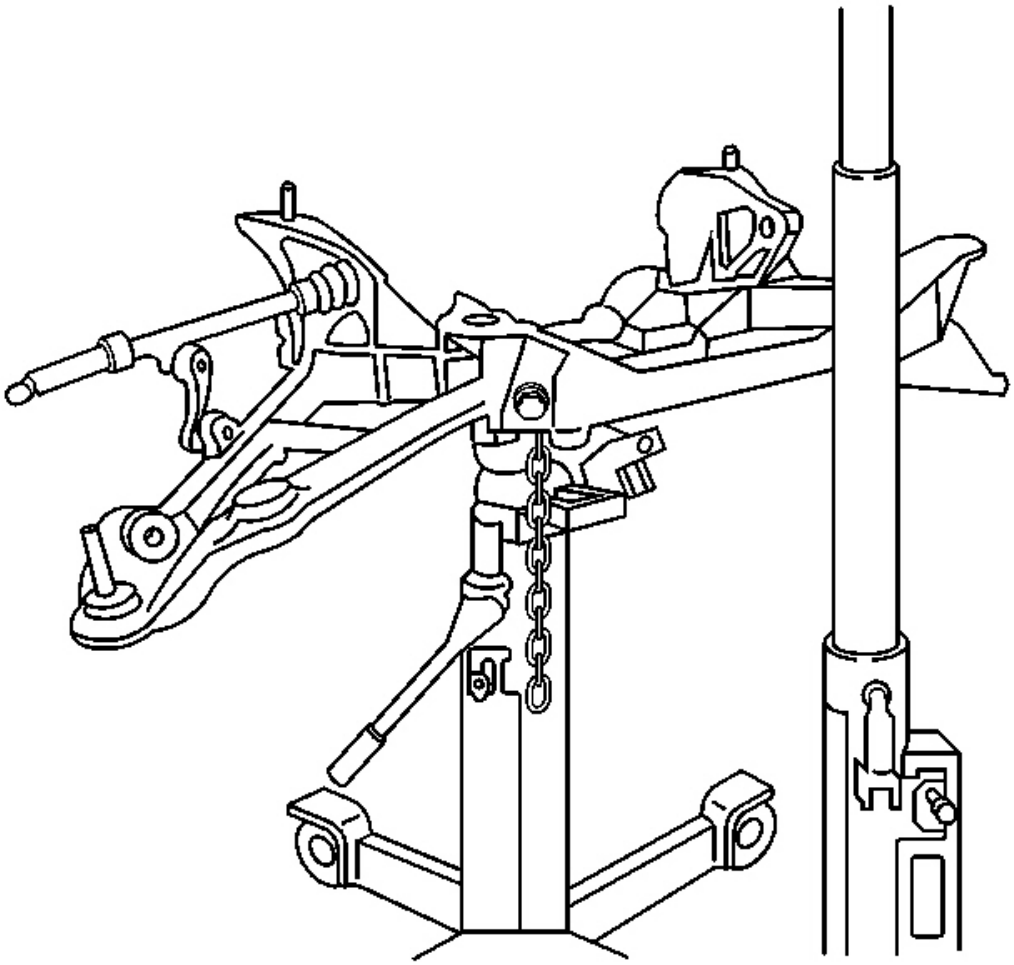

Fig. 140: Rear Suspension Crossmember
Courtesy of GENERAL MOTORS CORP.

33. With the aid of an assistant, begin to raise the rear suspension crossmember (still firmly attached to a transmission jack), to the vehicle frame rails.
34. Guide the rear suspension crossmember alignment pins into the alignment holes in the vehicle frame rails, and guide the transaxle mount studs into the mounting holes in the crossmember, then raise the crossmember to seat to the frame rails.

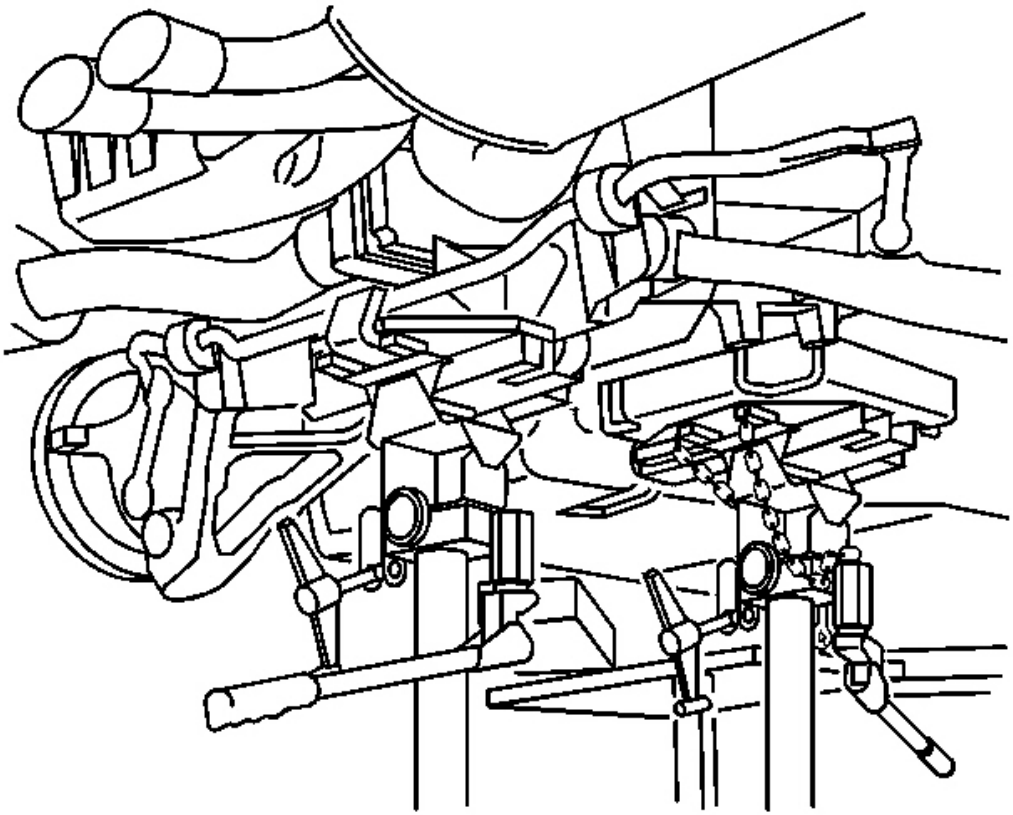

Fig. 141: View Of Jack Under Front End
Courtesy of GENERAL MOTORS CORP.

35. Using ONLY HAND TOOLS, install NEW rear suspension crossmember mounting nuts.

    Tighten: Tighten the rear suspension crossmember mounting nuts to 110 N.m (81 lb ft).

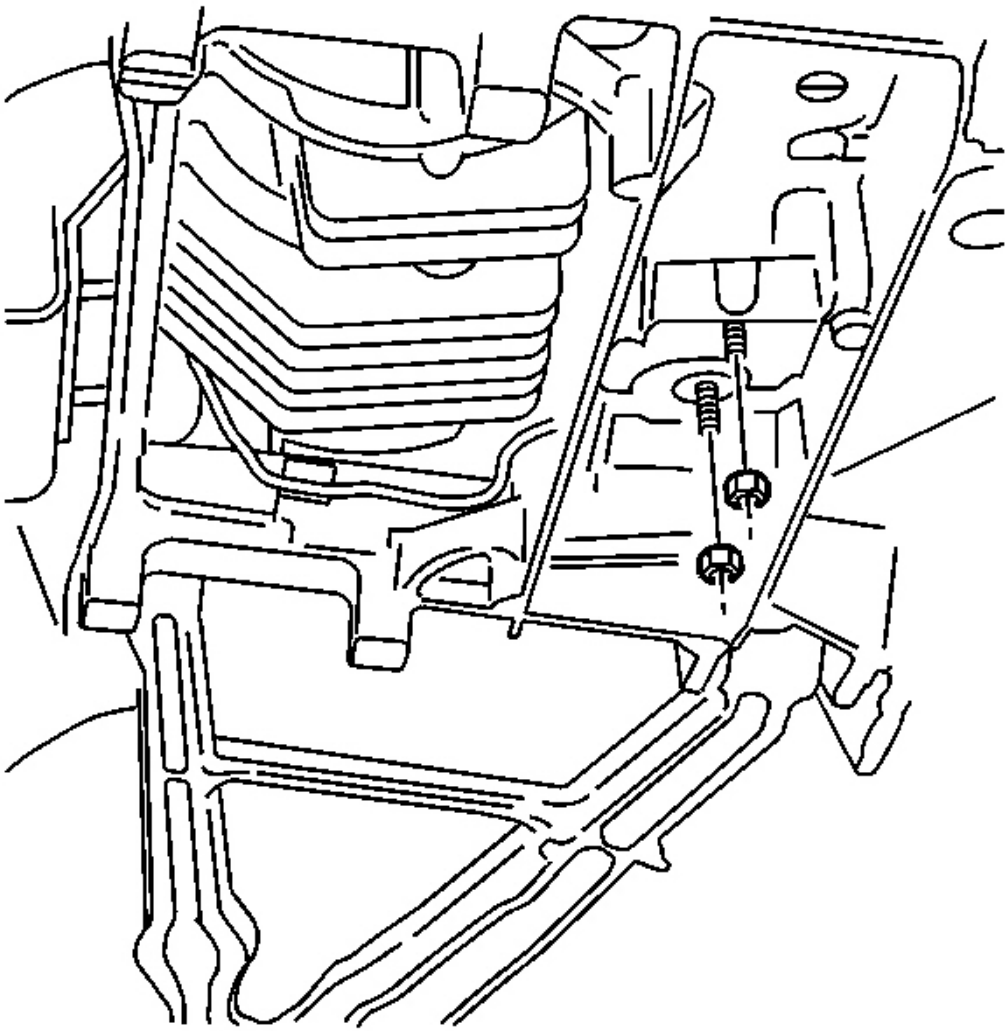

Fig. 142: Transaxle Mount & Rear Crossmember Nuts
Courtesy of GENERAL MOTORS CORP.

36. Remove the transmission jack from the rear suspension crossmember.
37. Release the **J 42055** from the transmission, then remove the **J 42055** and transmission jack.
38. Install the transaxle mount to rear suspension crossmember nuts.

    Tighten: Tighten the transaxle mount to rear suspension crossmember nuts to 50 N.m (37 lb ft).

39. Install the differential to transmission lower nut.

Tighten: Tighten the differential to transmission lower nut to 50 N.m (37 lb ft).

40. Connect the wiring harness and brake pipe clip retainers to the rear suspension crossmember.

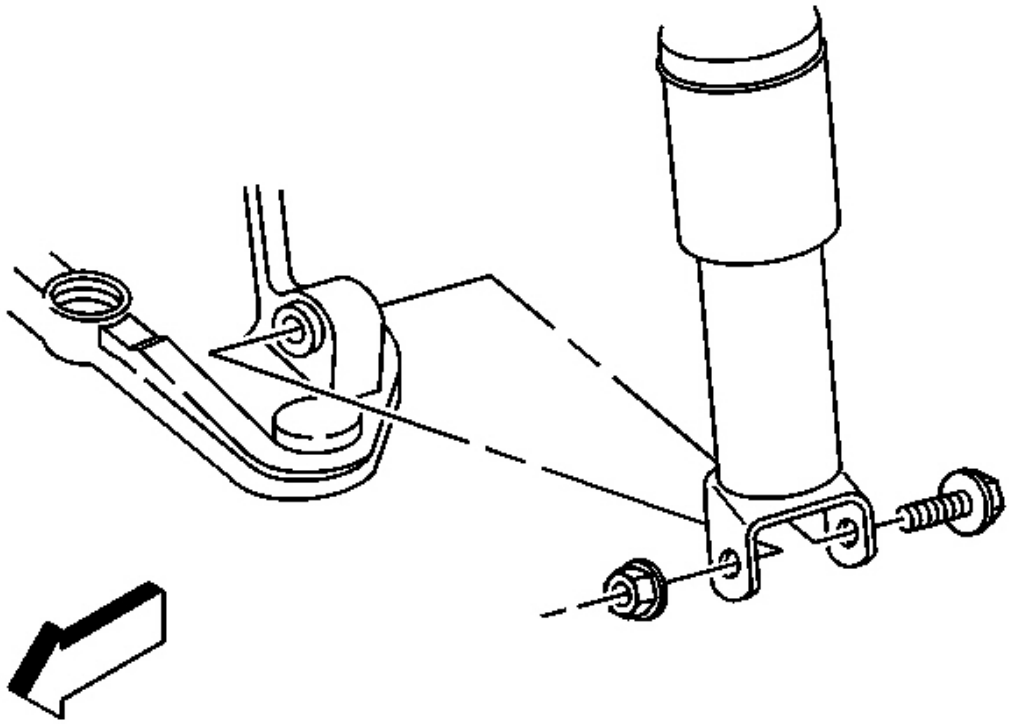

Fig. 143: Suspension Knuckle & Lower Ball Joint
Courtesy of GENERAL MOTORS CORP.

41. Support the lower control arm with a jack.
42. Connect the lower ball joint to the suspension knuckle. Refer to **Knuckle Replacement** in Rear Suspension.
43. Install the shock absorber lower mounting bolt.

    Tighten: Tighten the rear shock absorber lower mounting bolt to 220 N.m (162 lb ft).

44. Connect the outer tie rod end to the suspension knuckle. Refer to **Tie Rod Replacement (Outer End)** or **Tie Rod Replacement (Suspension Link)** in Rear Suspension.
45. Remove the jack from the suspension control arm.
46. Repeat steps 40 through 45 for the other side of the vehicle.

47. Install the rear transverse spring. Refer to **Rear Transverse Spring Replacement** in Rear Suspension.

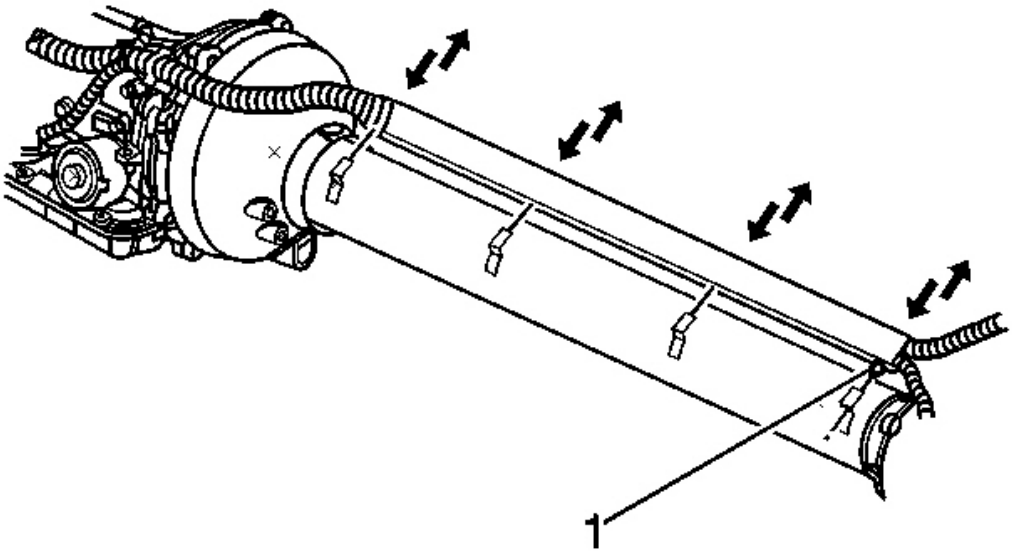

Fig. 144: Wiring Harness & Driveline Support Assembly
Courtesy of GENERAL MOTORS CORP.

48. Carefully pull the wiring harness down into the L-shaped brackets along the driveline support assembly, align the harness retainer (locator) (1) to the hole in the forward bracket, then secure in place.

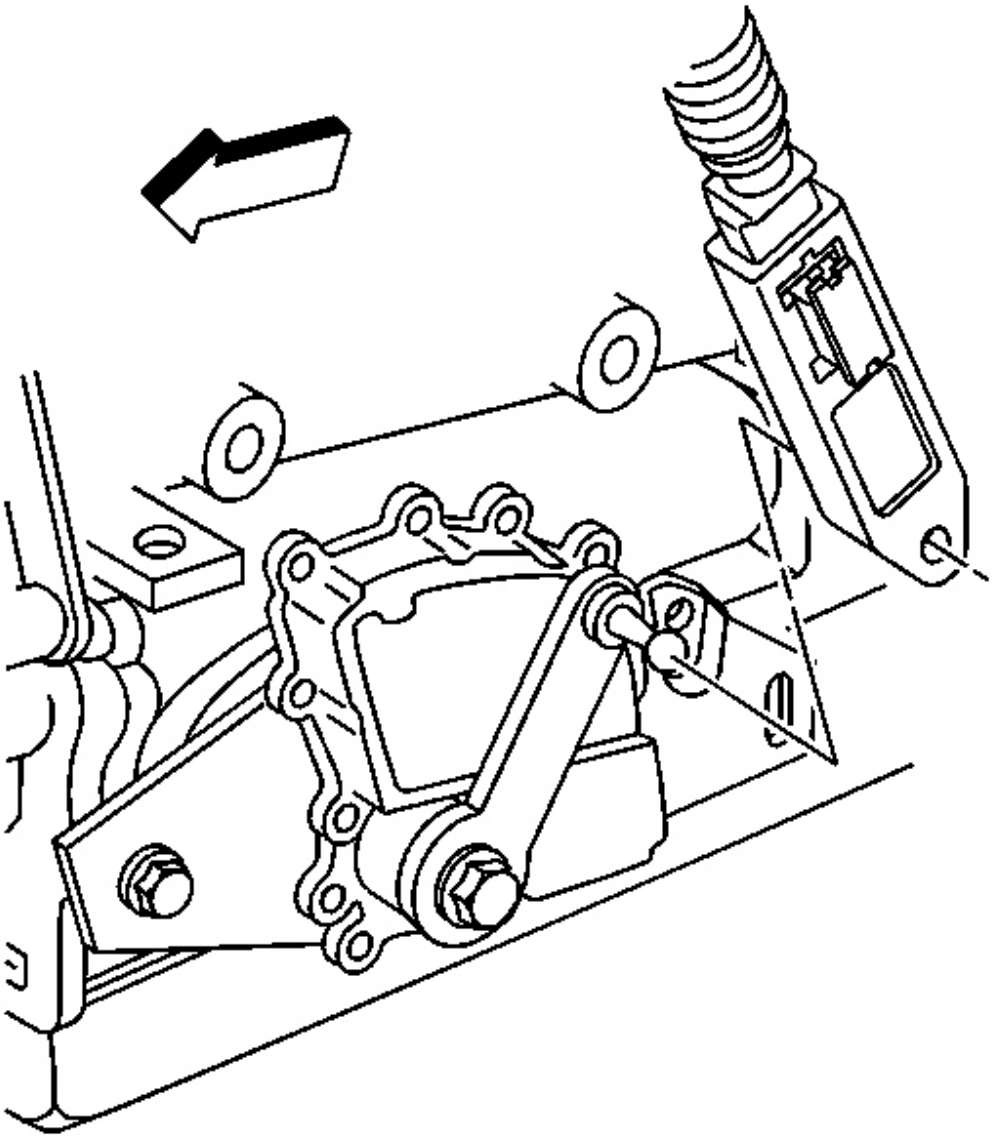

Fig. 145: Transmission Shift Lever
Courtesy of GENERAL MOTORS CORP.

49. Install the transmission shift cable and bracket into position.
50. Connect the transmission shift cable to the transmission shift lever.

    Press to secure the cable.

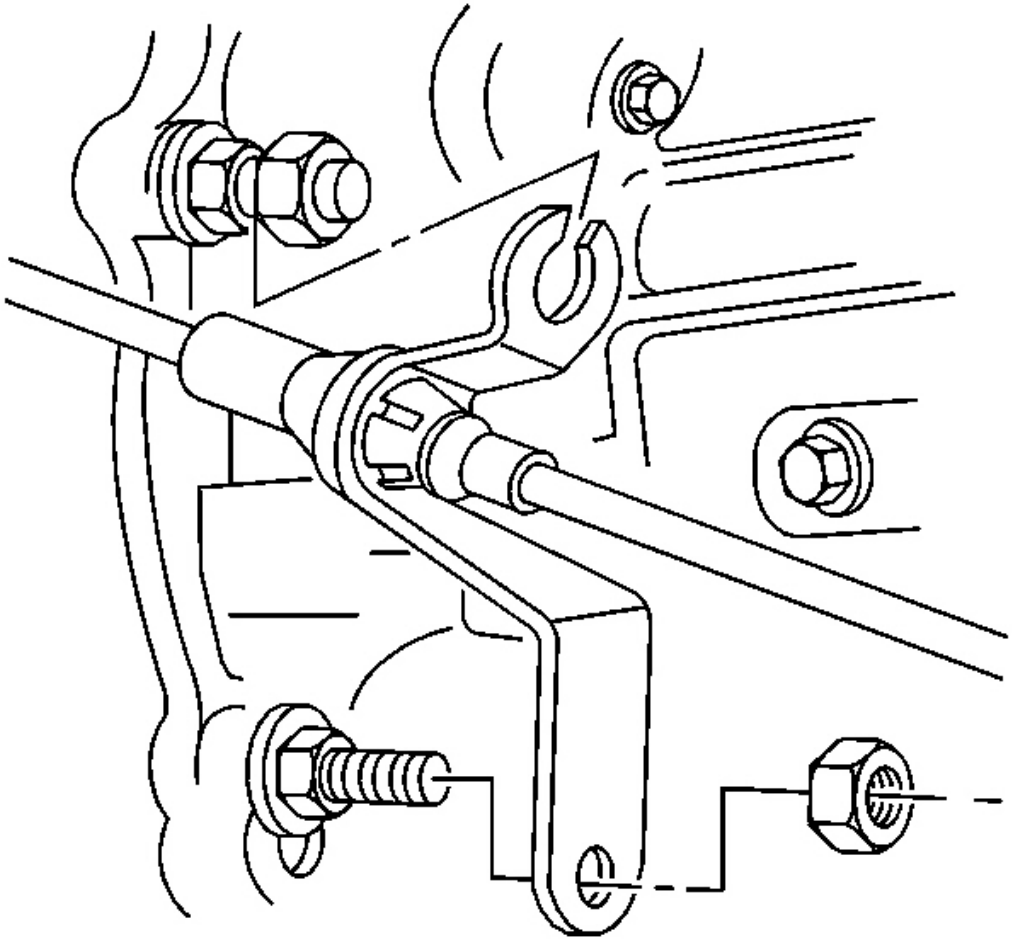

Fig. 146: Transmission Shift Cable Bracket & Bolts
Courtesy of GENERAL MOTORS CORP.

51. Install the nuts retaining the transmission shift cable bracket to the transmission.

    Tighten: Tighten the transmission shift cable bracket retaining nuts to 20 N.m (15 lb ft).

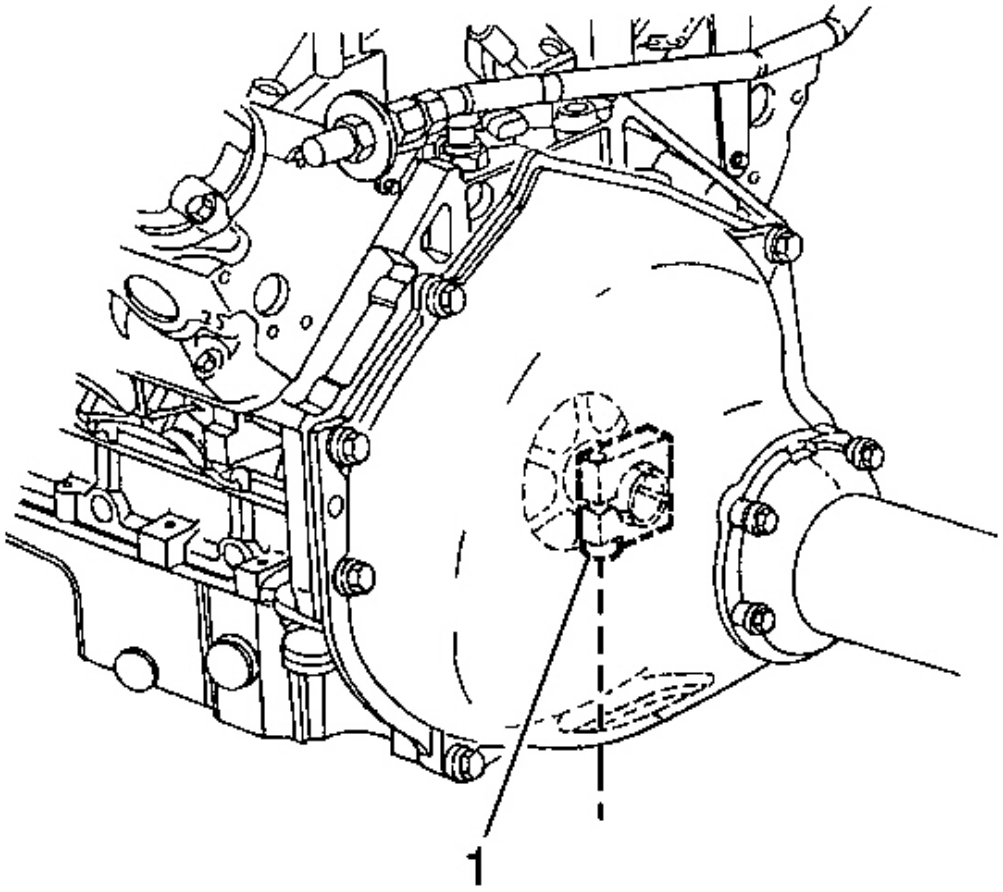

Fig. 147: Propeller Shaft Hub Clamp Bolt
Courtesy of GENERAL MOTORS CORP.

52. HAND-TIGHTEN the propeller shaft hub clamp bolt (1) until FINGER-TIGHT.

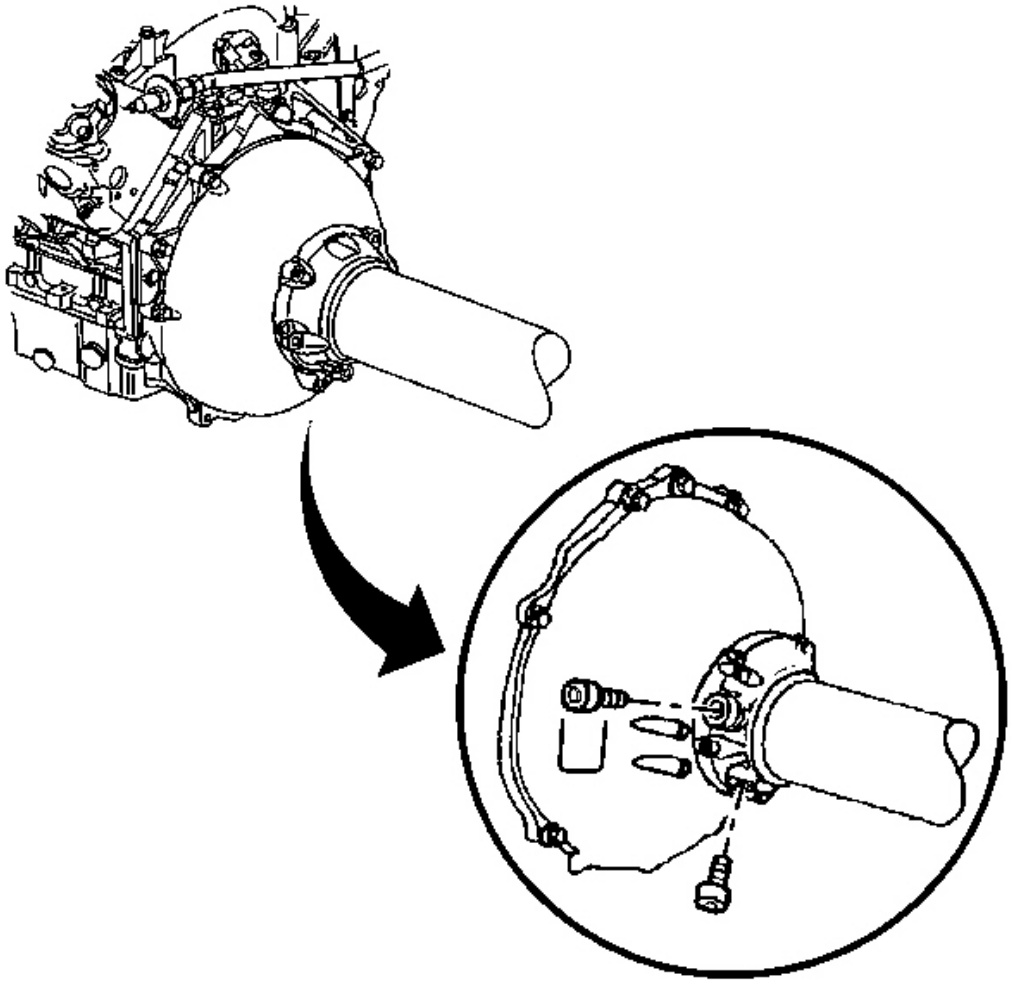

Fig. 148: Propeller Input Shaft Front Bearing Positioning Bolts
Courtesy of GENERAL MOTORS CORP.

53. Remove the propeller input shaft front bearing positioning bolts (M10 - 1.5 X 55 mm) from the driveline support assembly.
54. Install the two plug bolts to the front of the driveline support assembly.

    Tighten: Tighten the driveline support assembly front plug bolts to 50 N.m (37 lb ft).

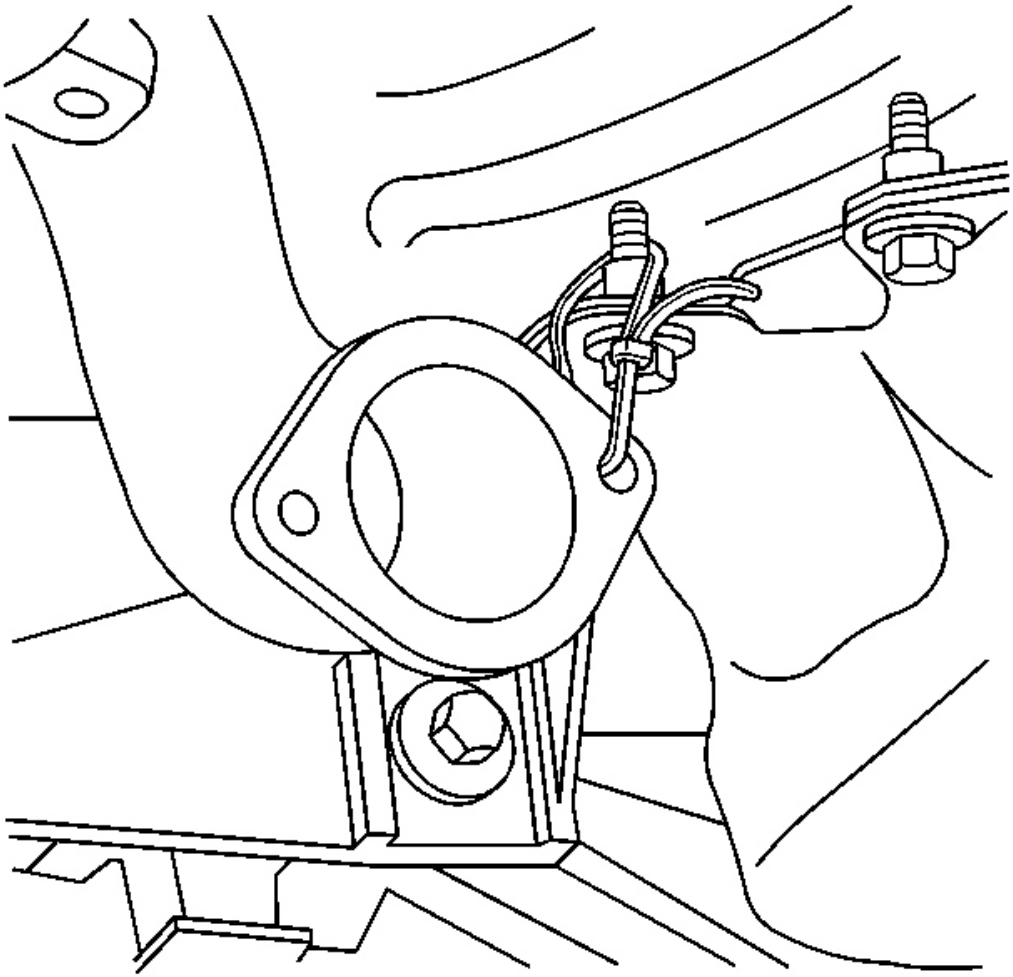

Fig. 149: Driveline Tunnel Closeout Panel & Muffler Assemblies
Courtesy of GENERAL MOTORS CORP.

55. Install the driveline tunnel closeout panel. Refer to **Driveline Tunnel Closeout Panel Replacement** in Propeller Shaft.
56. Remove the tie-off retainer from the LH muffler assembly.
57. Install the RH muffler assembly. Refer to **Muffler Replacement - Right** in Engine Exhaust.
58. Install the catalytic converters. Refer to **Catalytic Converter Replacement** in Engine Exhaust.
59. Install the rear tire and wheel assemblies. Refer to **Tire and Wheel Removal and Installation** in Tires and Wheels.
60. Lower the vehicle.

61. Connect the negative battery cable.

Tighten: Tighten the negative battery cable bolt to 15 N.m (11 lb ft).

62. Program the transmitters. Refer to **Transmitter Programming** in Keyless Entry.

IMPORTANT: The following steps MUST be performed in order to provide proper alignment of the propeller shaft hub, the propeller input shaft and the propeller input shaft front bearing.

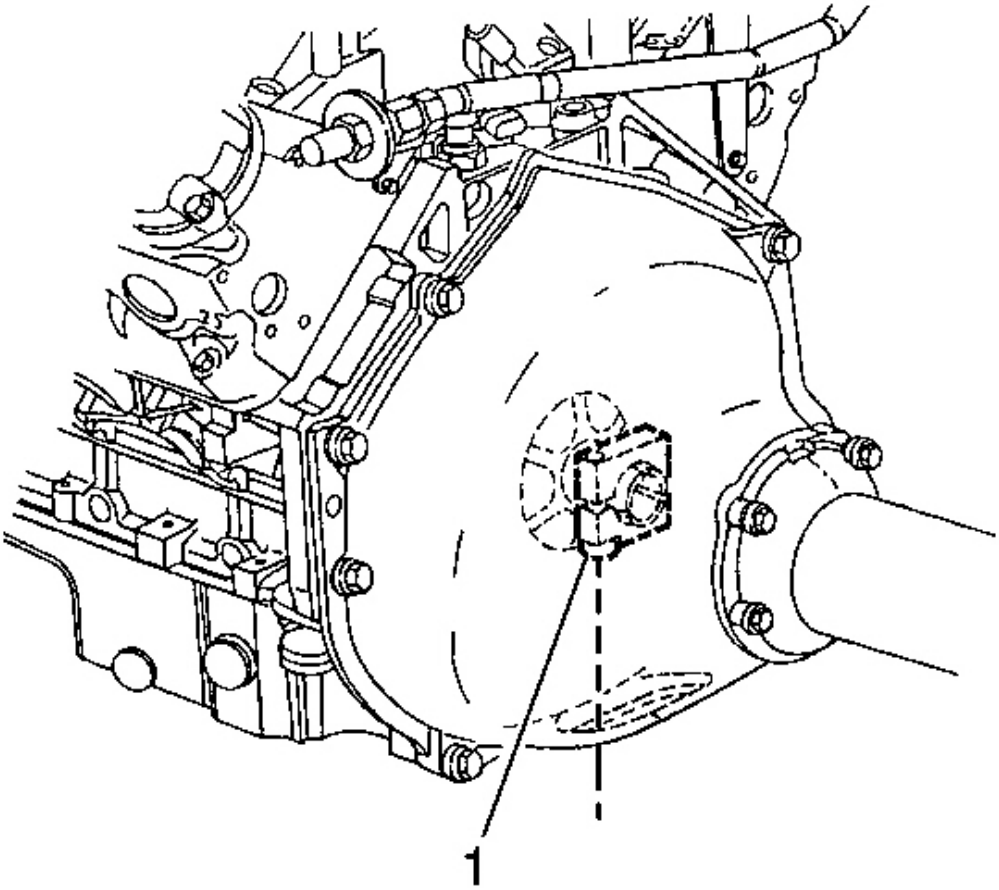

Fig. 150: Propeller Shaft Hub Clamp Bolt
Courtesy of GENERAL MOTORS CORP.

63. Start and run the engine at idle until normal operating temperatures are reached.

(Idle or drive for at least 10 minutes.)

64. Turn off the engine and allow the powertrain to cool to ROOM temperature.
65. Raise the vehicle.
66. Tighten the propeller shaft hub clamp bolt (1).

    Tighten: Tighten the propeller shaft hub clamp bolt to 130 N.m (96 lb ft).

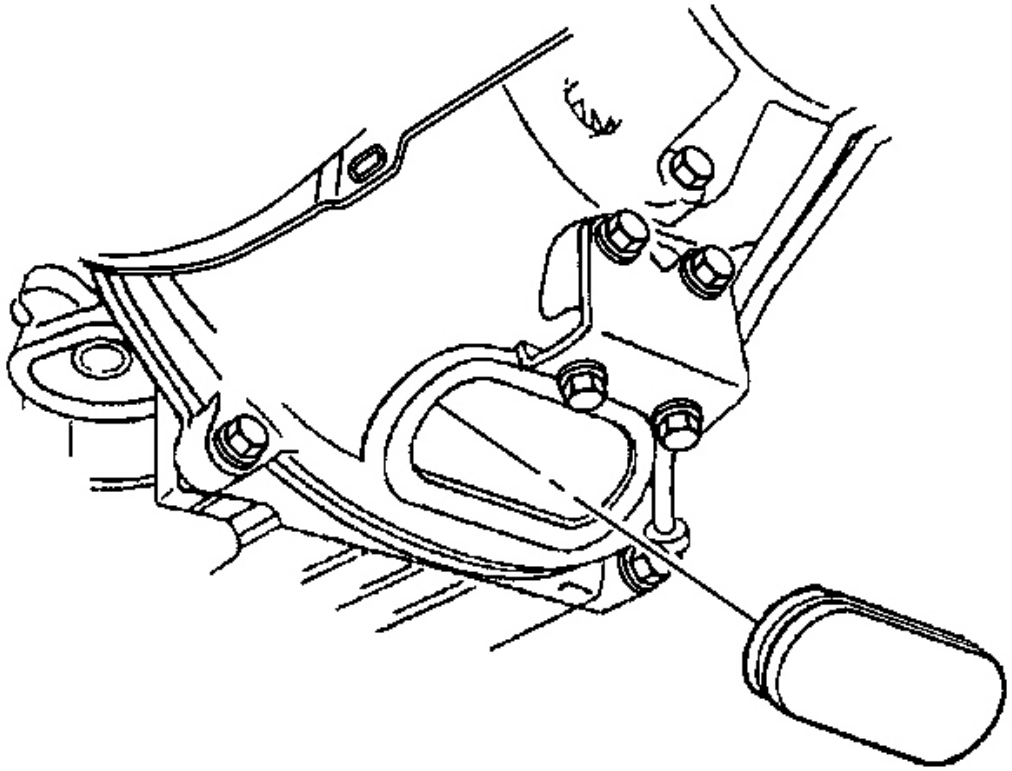

Fig. 151: Engine Flywheel Housing Access Plug
Courtesy of GENERAL MOTORS CORP.

67. Install the engine flywheel housing access plug.
68. Flush the transmission oil cooler. Refer to **Automatic Transmission Oil Cooler Flushing and Flow Test (J 45096)** or **Automatic Transmission Oil Cooler Flushing and Flow Test (J 35944-A)** in Automatic Transmission - 4L60-E.
69. Lower the vehicle.

REAR AXLE - DISASSEMBLE

Tool Required

- **J 23907** Slide Hammer. See **Special Tools and Equipment** .
- **J 25070** Heat Gun
- J 29369-2 Bushing and Bearing Remover - 2-3 in
- **J 42155** Differential Lifting Tool. See **Special Tools and Equipment** .
- **J 42173** Differential Holding Fixture. See **Special Tools and Equipment** .
- **J 42194** Bearing Race Remover. See **Special Tools and Equipment** .

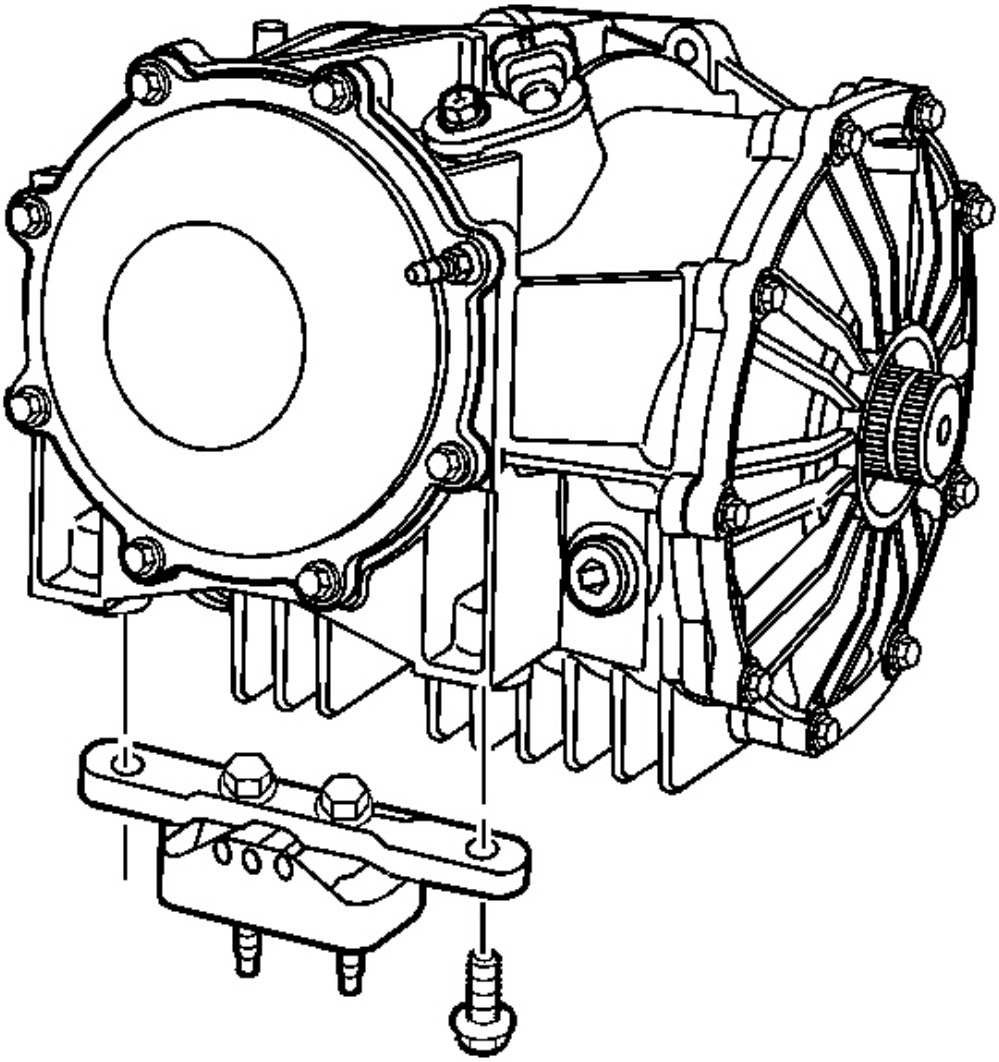

Fig. 152: Transaxle Mount Bracket & Differential Bolts
Courtesy of GENERAL MOTORS CORP.

1. Remove the differential mount and bolts.

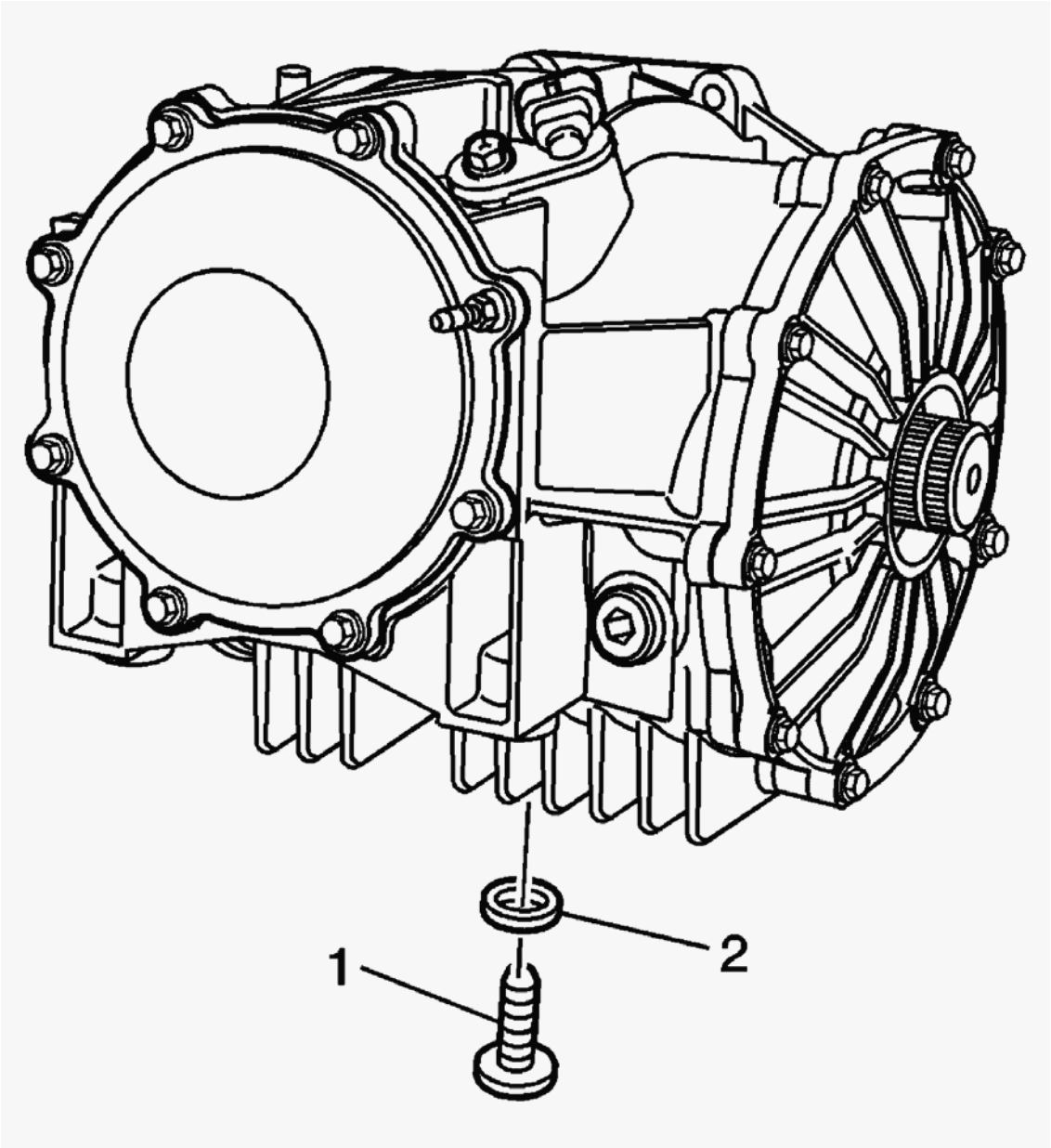

Fig. 153: Differential, Drain Plug & Washer
Courtesy of GENERAL MOTORS CORP.

2. Remove the drain plug (1) and washer (2) and allow the fluid to drain.

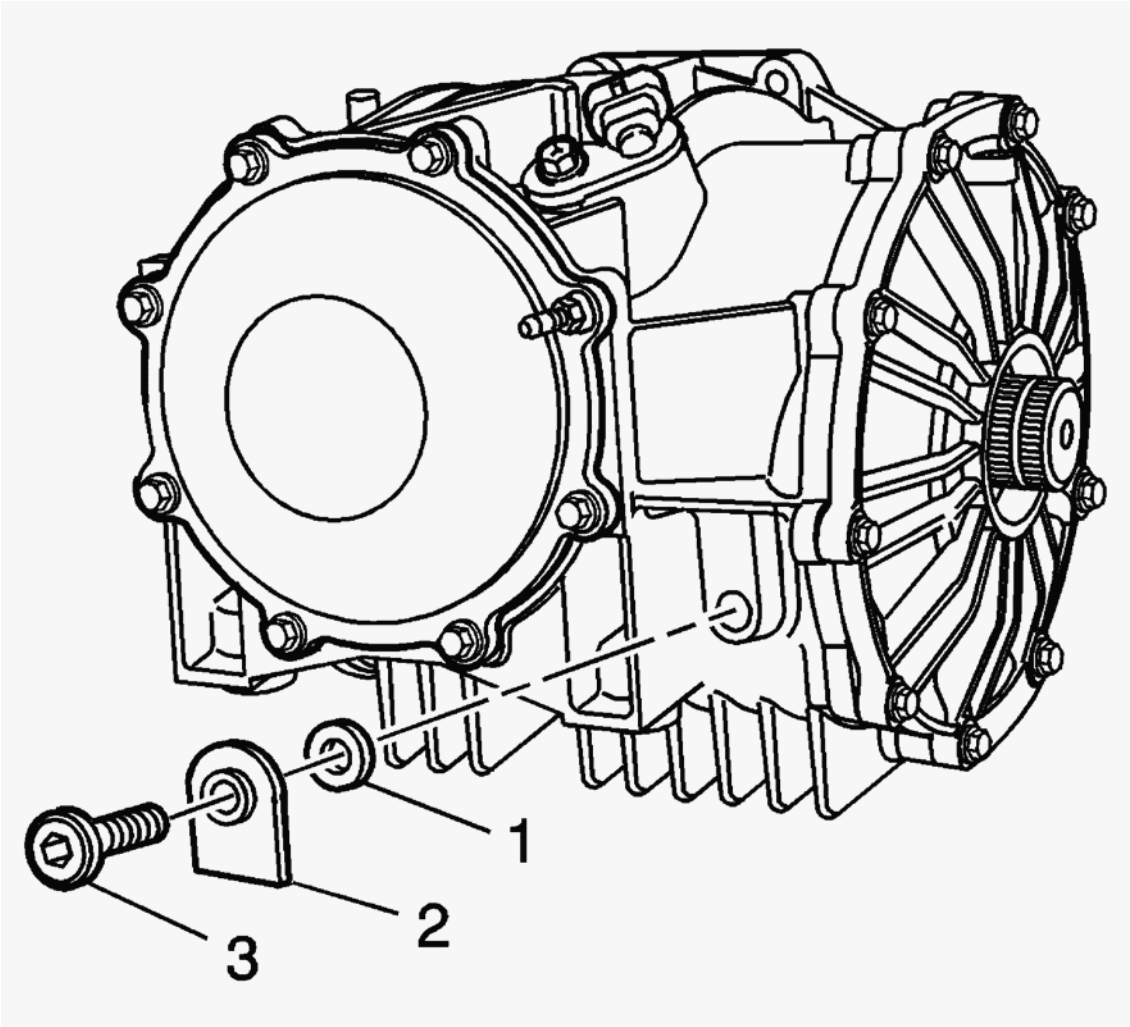

Fig. 154: Fill Plug, Lubricant Tag & Washer
Courtesy of GENERAL MOTORS CORP.

3. Remove the fill plug (3), lubricant tag (2), and washer (1).

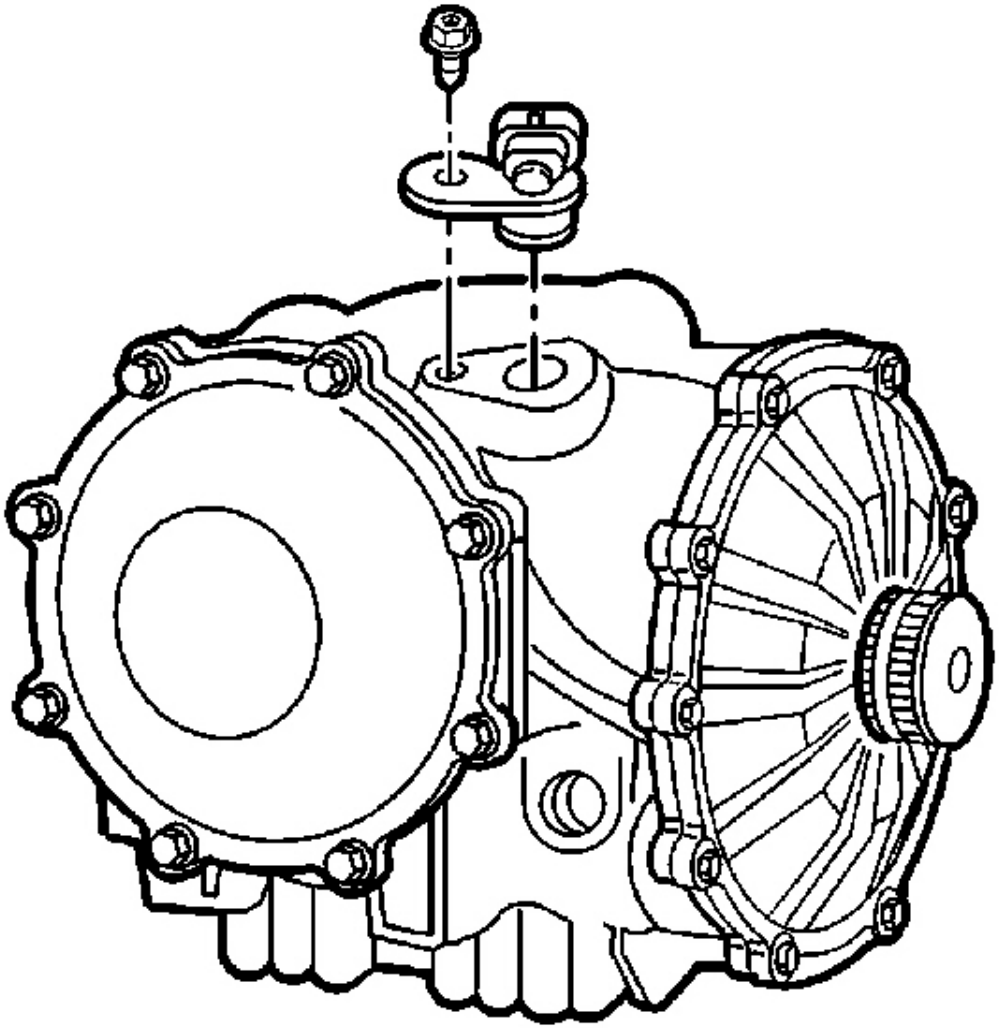

Fig. 155: Vehicle Speed Sensor & Bolt
Courtesy of GENERAL MOTORS CORP.

4. Remove the vehicle speed sensor and bolt.

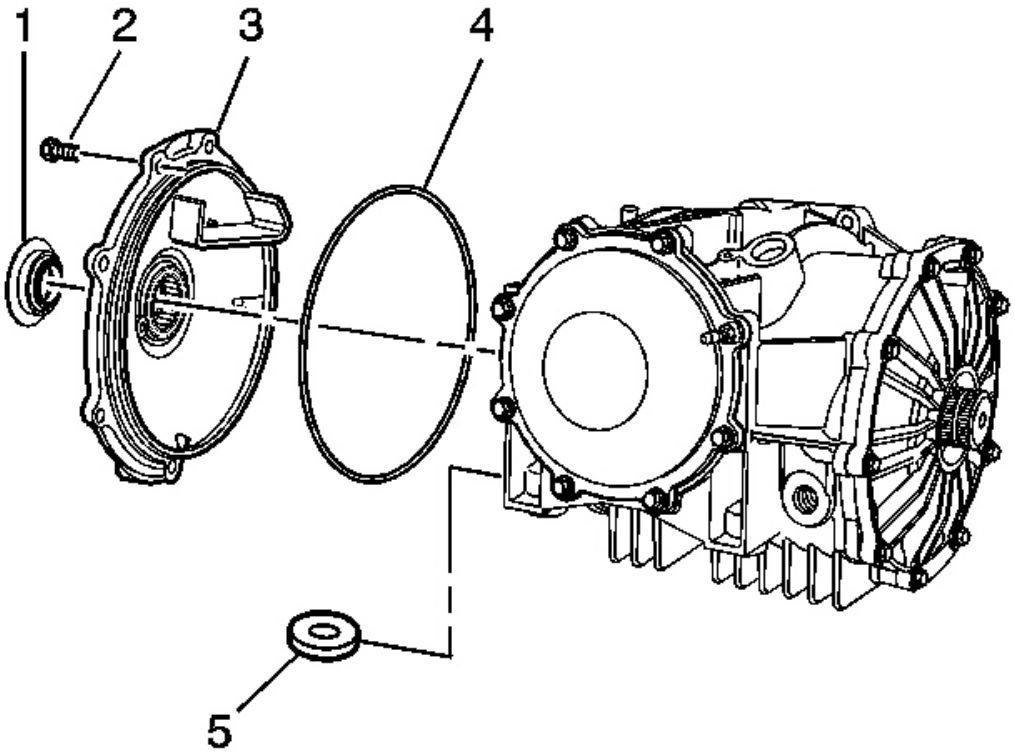

Fig. 156: Differential Cover (Left), O-Ring Seal & Bolts
Courtesy of GENERAL MOTORS CORP.

5. Remove the cover - left (3) and bolts (2).
6. Remove the O-ring (4) and oil seal (1) from the cover.
7. Remove the magnet (5) from the carrier.

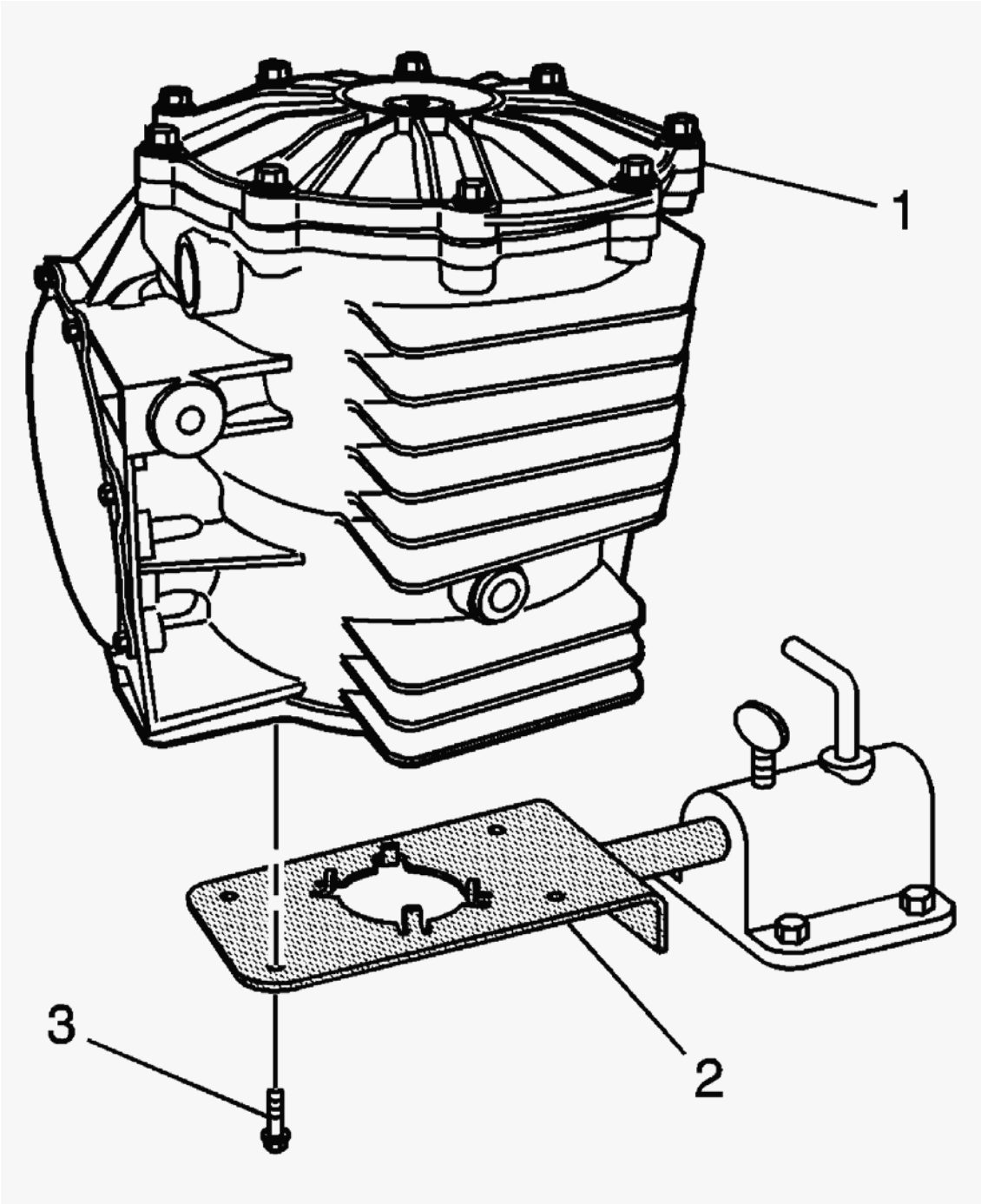

Fig. 157: J 42173 & Differential Assembly
Courtesy of GENERAL MOTORS CORP.

8. Install the differential assembly (1) onto the **J 42173** (2). See **Special Tools and Equipment** .

NOTE: Refer to Fastener Notice in Cautions and Notices.

9. Install 4 M8 x 1.25 bolts (3).

Tighten: Tighten the bolts to 25 N.m (18 lb ft).

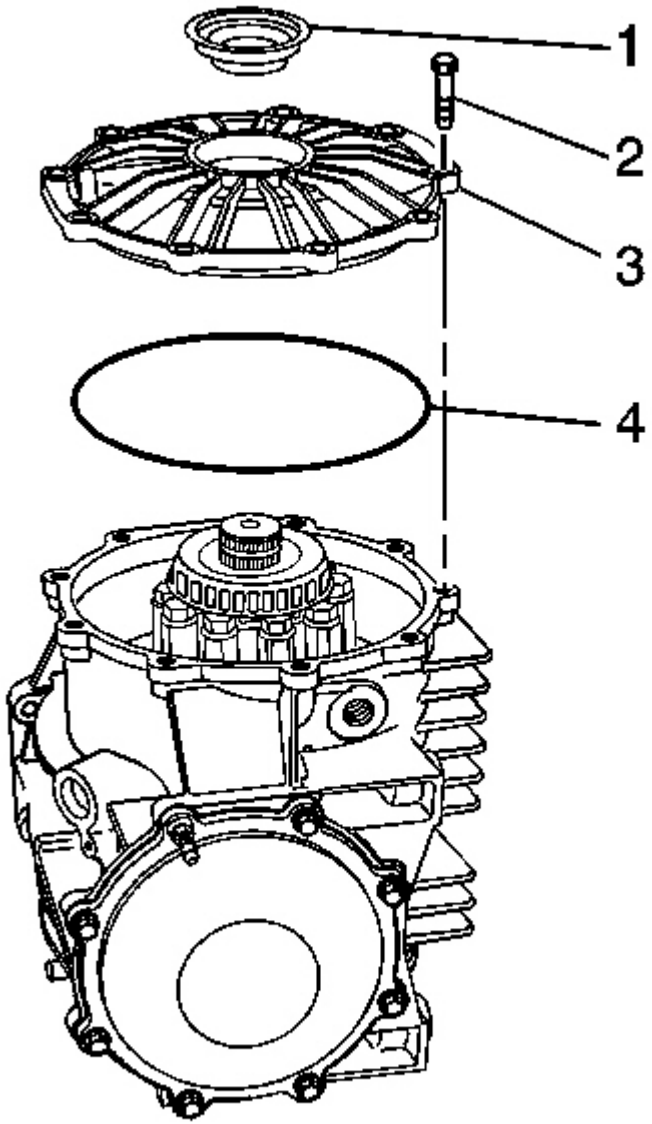

Fig. 158: Differential Cover (Right), Axle Seal & O-Ring Seal
Courtesy of GENERAL MOTORS CORP.

10. Remove the cover - right (3) and bolts (2) from the differential.
11. Remove the O-ring (4) and oil seal (1) from the cover.

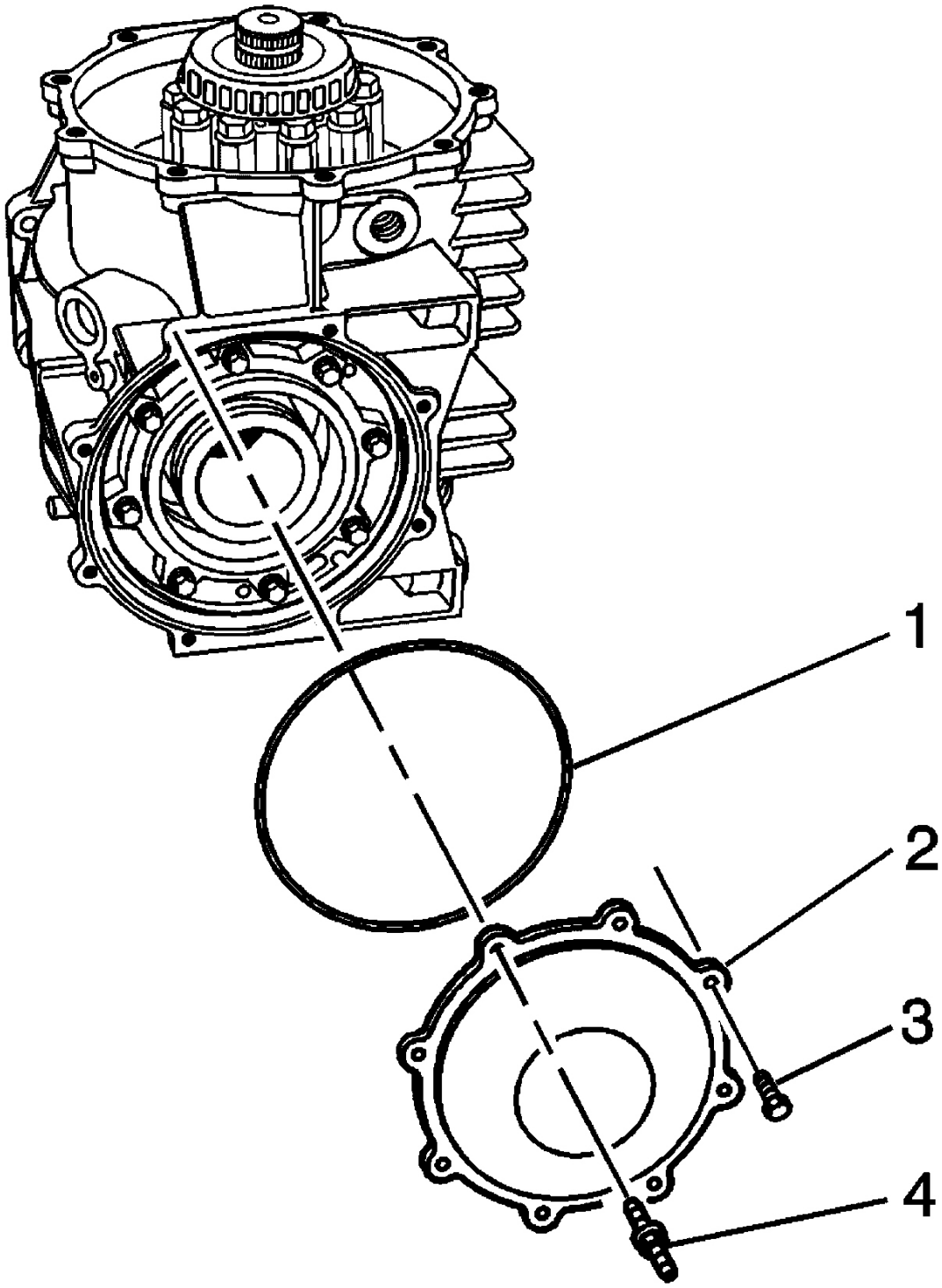

Fig. 159: Cover-Rear, Bolts, Bolt/Stud & O-Ring
Courtesy of GENERAL MOTORS CORP.

IMPORTANT: Note and mark the location of the cover - rear bolt/stud for assembly.

12. Remove the cover-rear (2), bolts (3), bolt/stud (4), and O-ring (1).

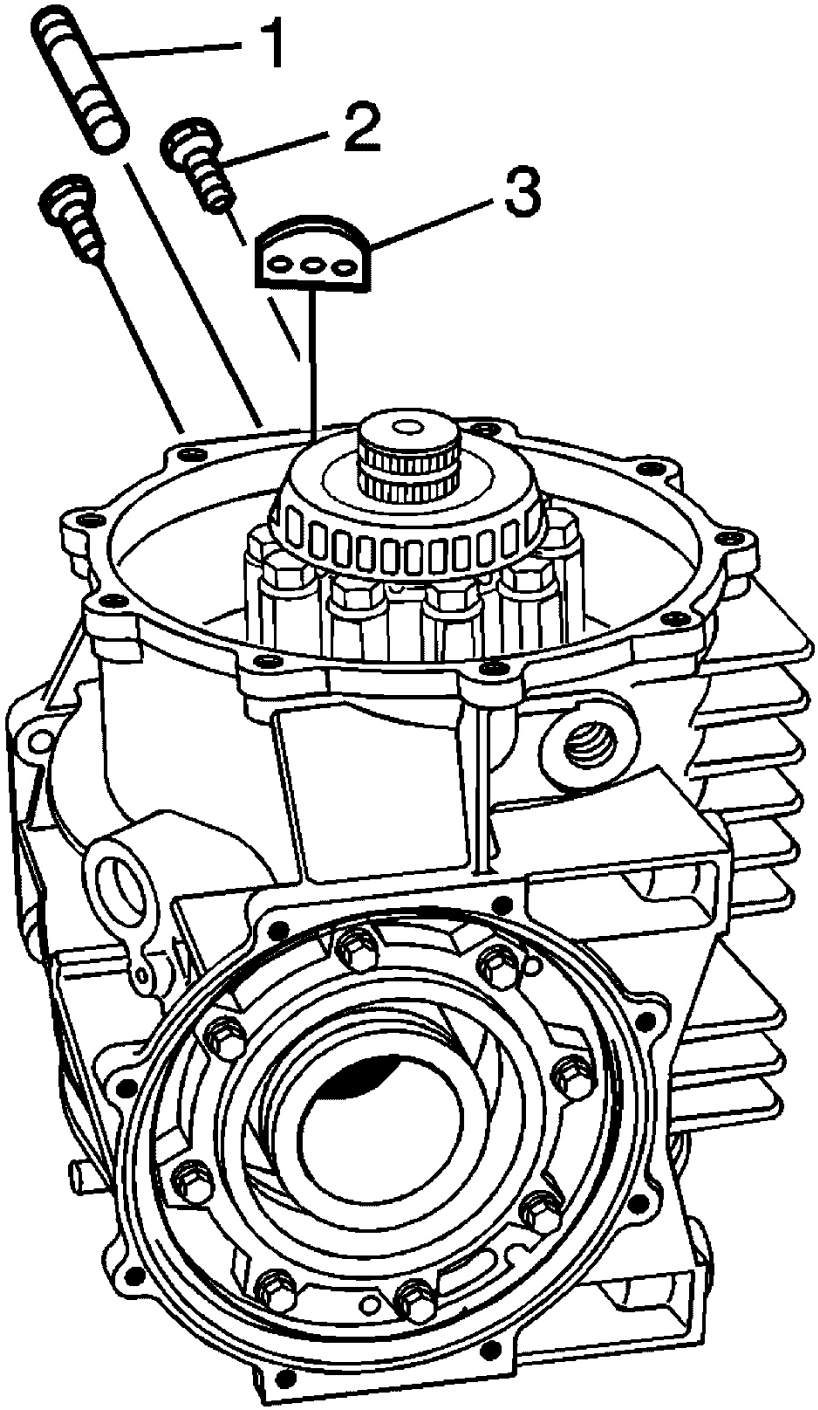

Fig. 160: Differential, Transmission Stud Bolts & Mount
Courtesy of GENERAL MOTORS CORP.

13. Install 2 M10 x 1.5 nuts onto the transmission stud (1). Remove the stud from the differential.
14. Remove the bolts (2) and mount (3) from the differential. Note and mark the position and direction of the mount.

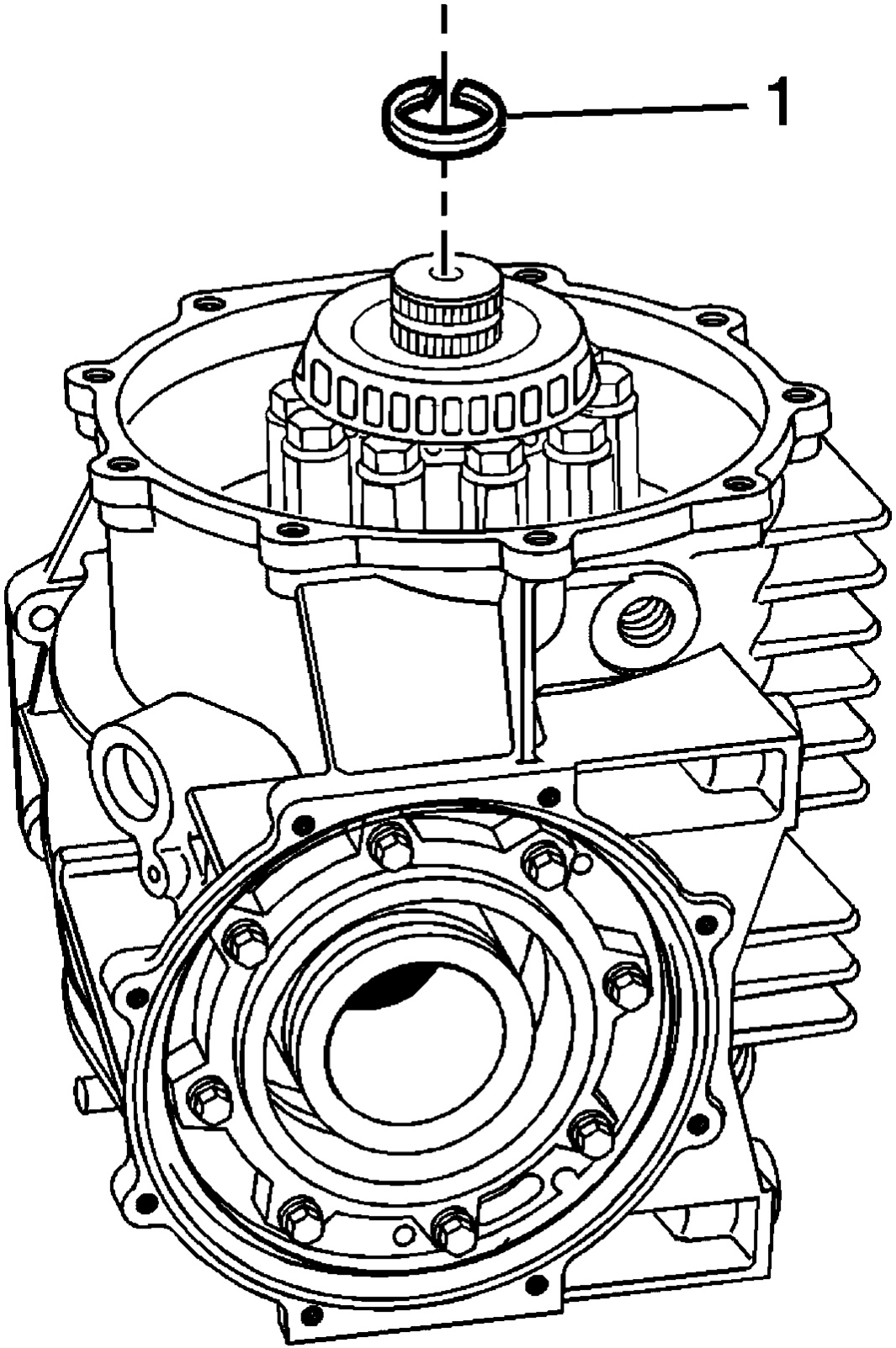
1

Fig. 161: Output Shaft & C-Clip
Courtesy of GENERAL MOTORS CORP.

15. Remove the C-clip (1) from the output shaft.

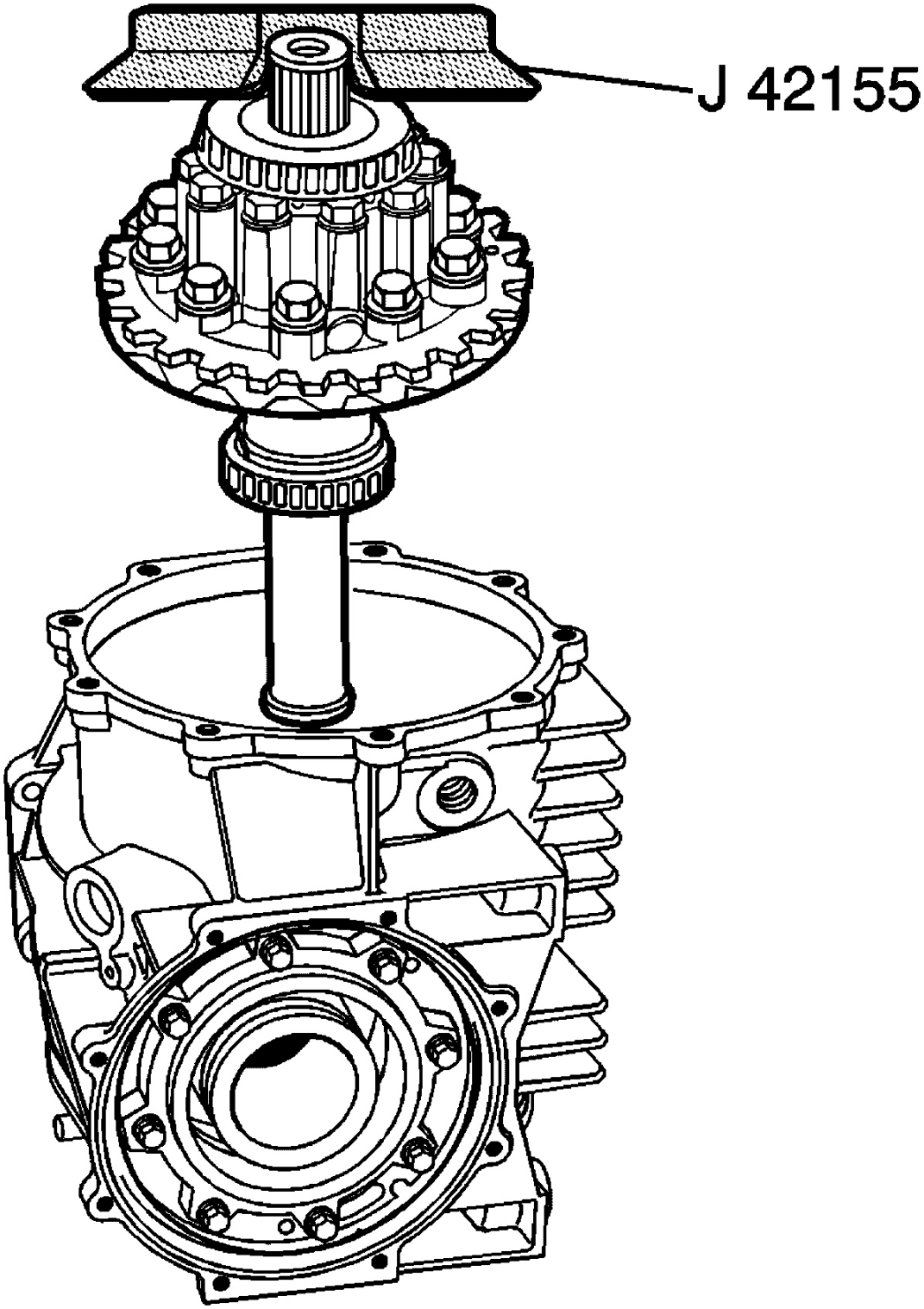

Fig. 162: J 42155 & Differential Case Assembly

Courtesy of GENERAL MOTORS CORP.

16. Install the **J 42155** into the groove of the output shaft in order to remove the differential case assembly. See **Special Tools and Equipment** .

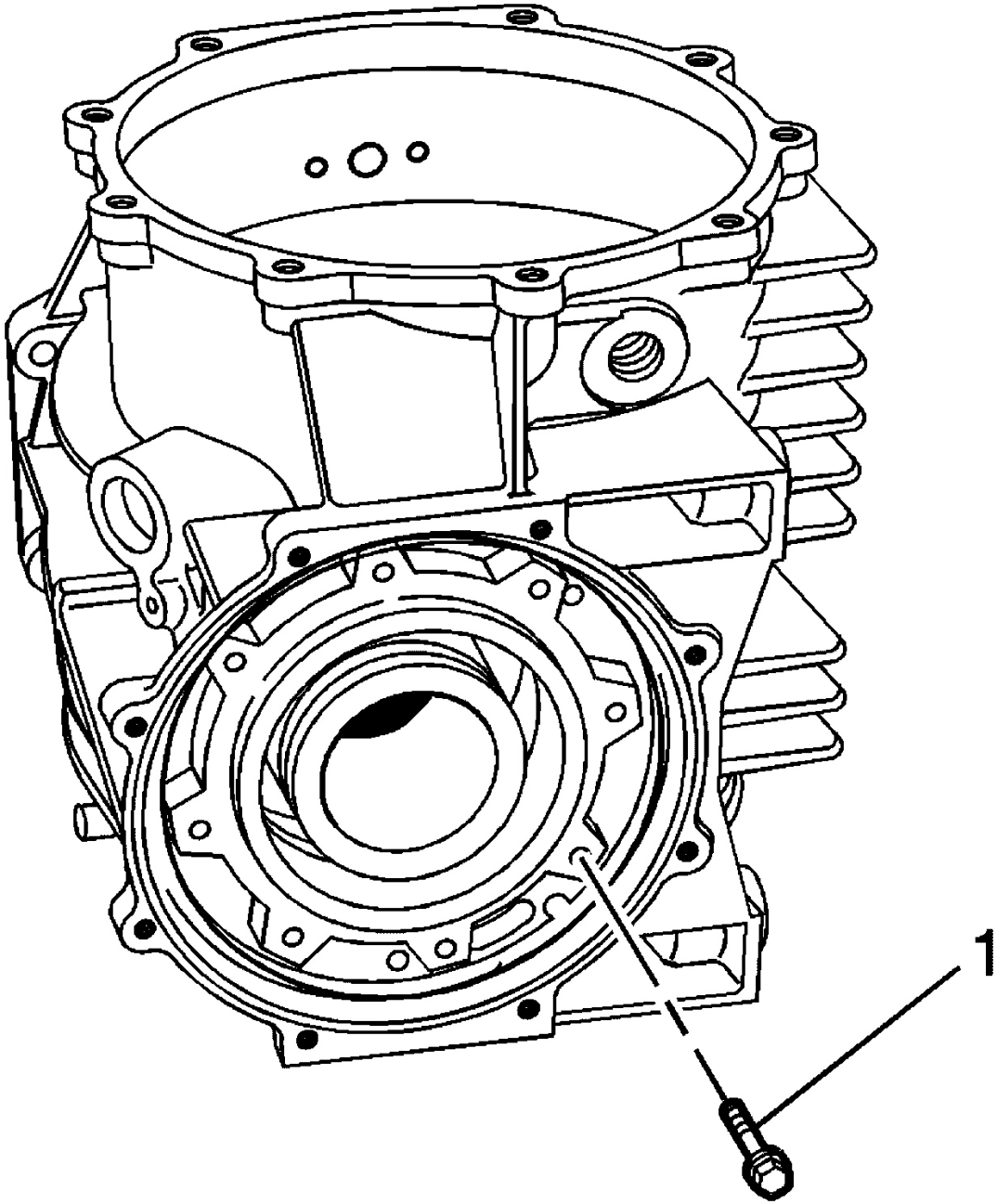

Fig. 163: Pinion Housing/Cage Bolts
Courtesy of GENERAL MOTORS CORP.

17. Remove the pinion housing/cage bolts (1).

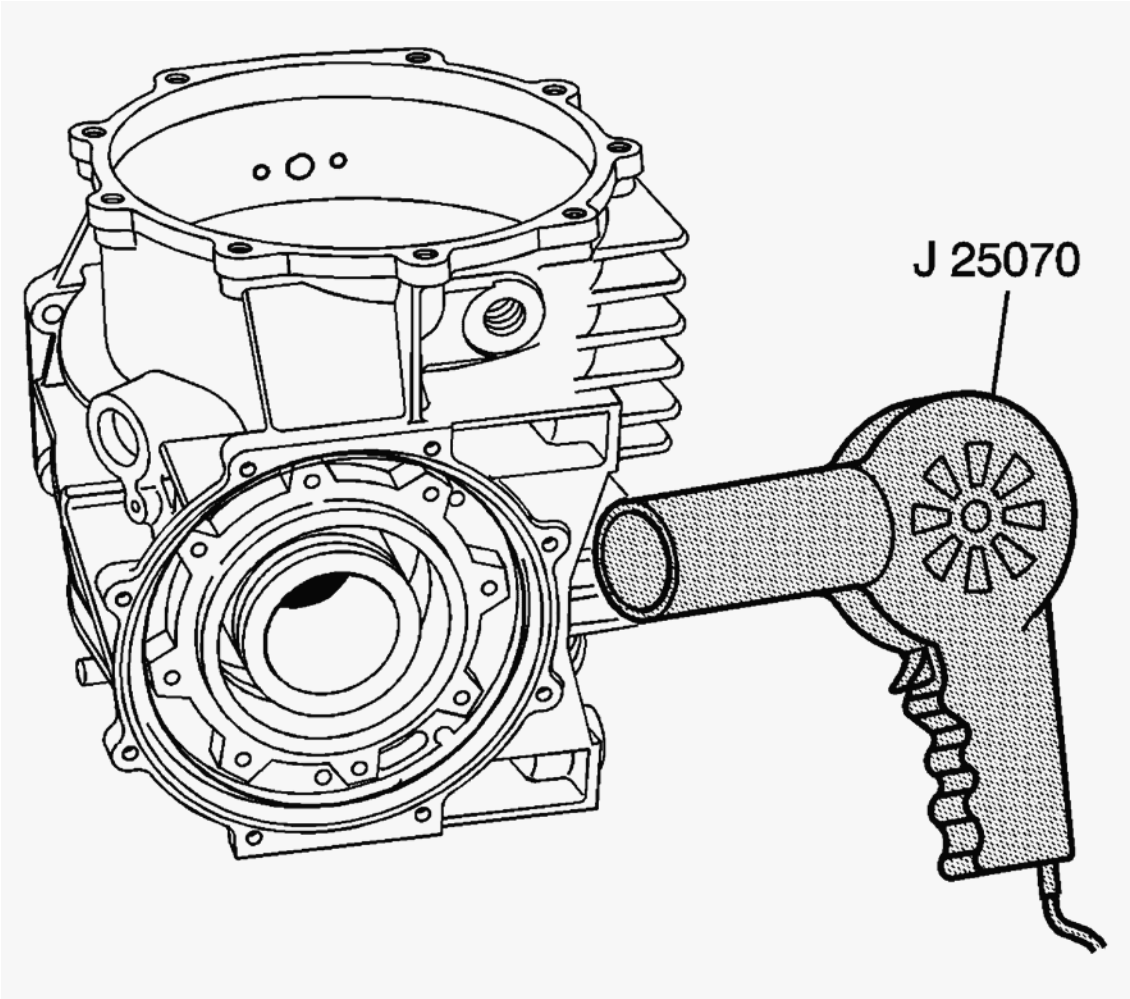

Fig. 164: J 25070 & Differential Housing
Courtesy of GENERAL MOTORS CORP.

18. Heat the differential housing, around the pinion housing, using **J 25070** . Heating the housing will ease in pinion removal.

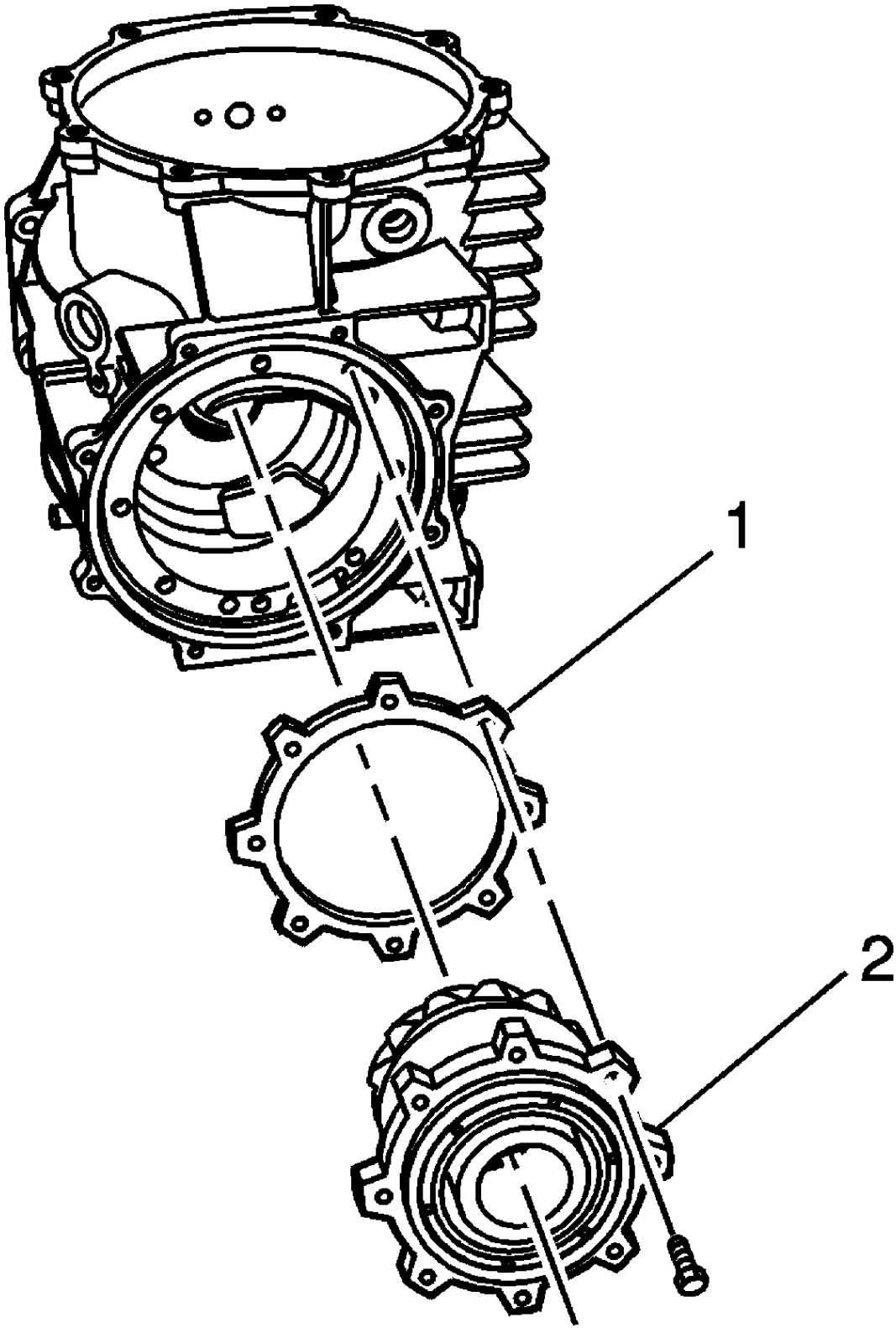
1
2

Fig. 165: Pinion Housing/Cage Assembly, Shims & Differential Housing
Courtesy of GENERAL MOTORS CORP.

19. Remove the pinion housing/cage assembly (2) and shims (1) from the differential housing. Mark or tag the shims for assembly.

    Locate 2 screwdrivers or pry bars to the flange area of the pinion housing/cage to ease in removal.

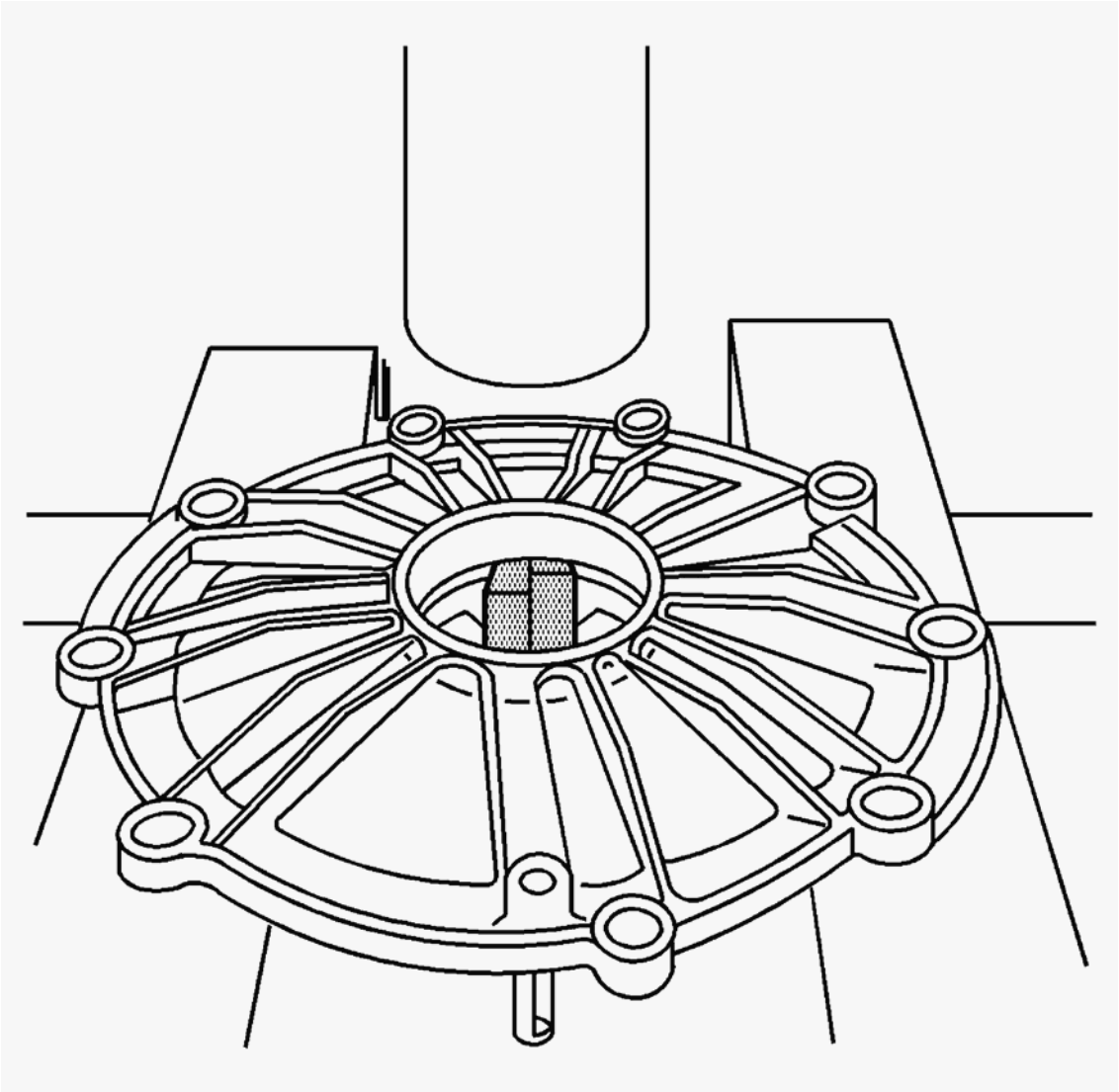

Fig. 166: Differential Cover (Right) & J 42194
Courtesy of GENERAL MOTORS CORP.

20. Install the **J 42194** into the cover - right in order to remove the bearing race and shims. See **Special Tools and Equipment** .
21. Position the cover - right into a hydraulic press.

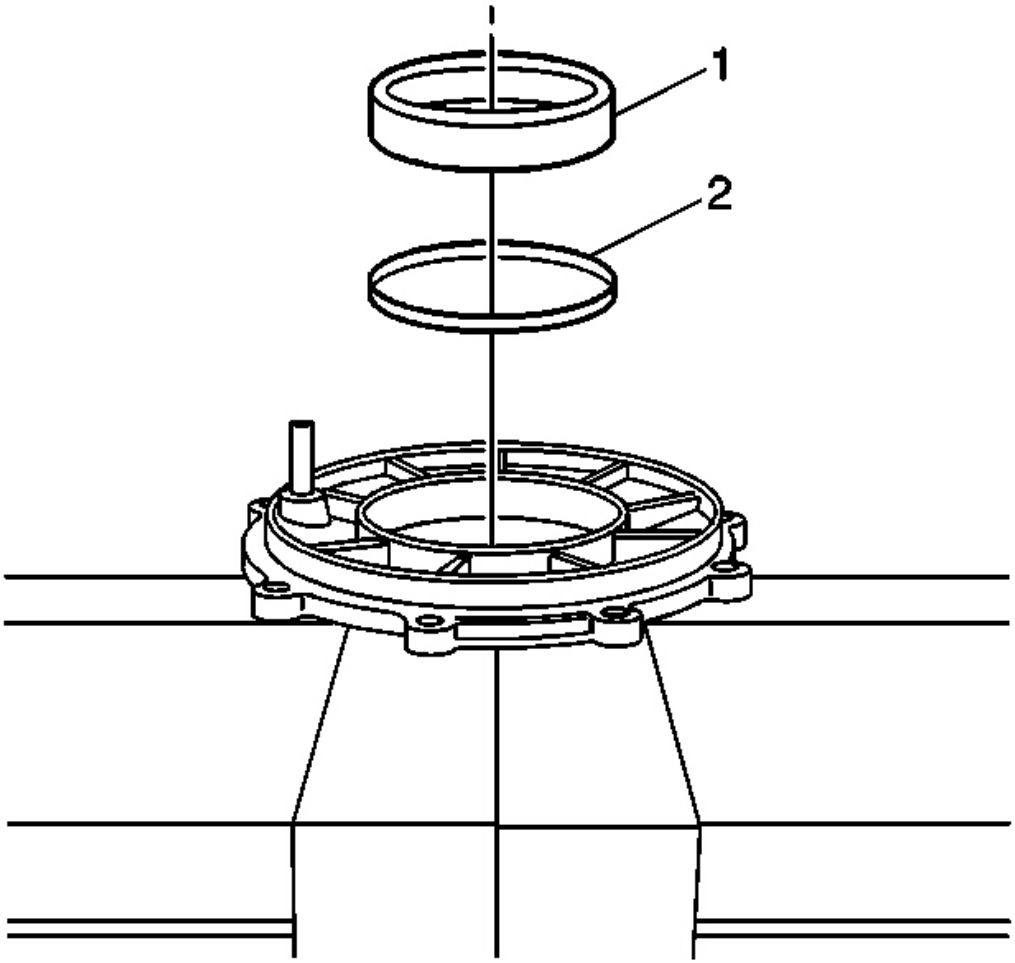

Fig. 167: Bearing Race & Shims
Courtesy of GENERAL MOTORS CORP.

22. Using a hydraulic press, remove the bearing race (1) and shims (2). Mark or tag the shims for assembly.

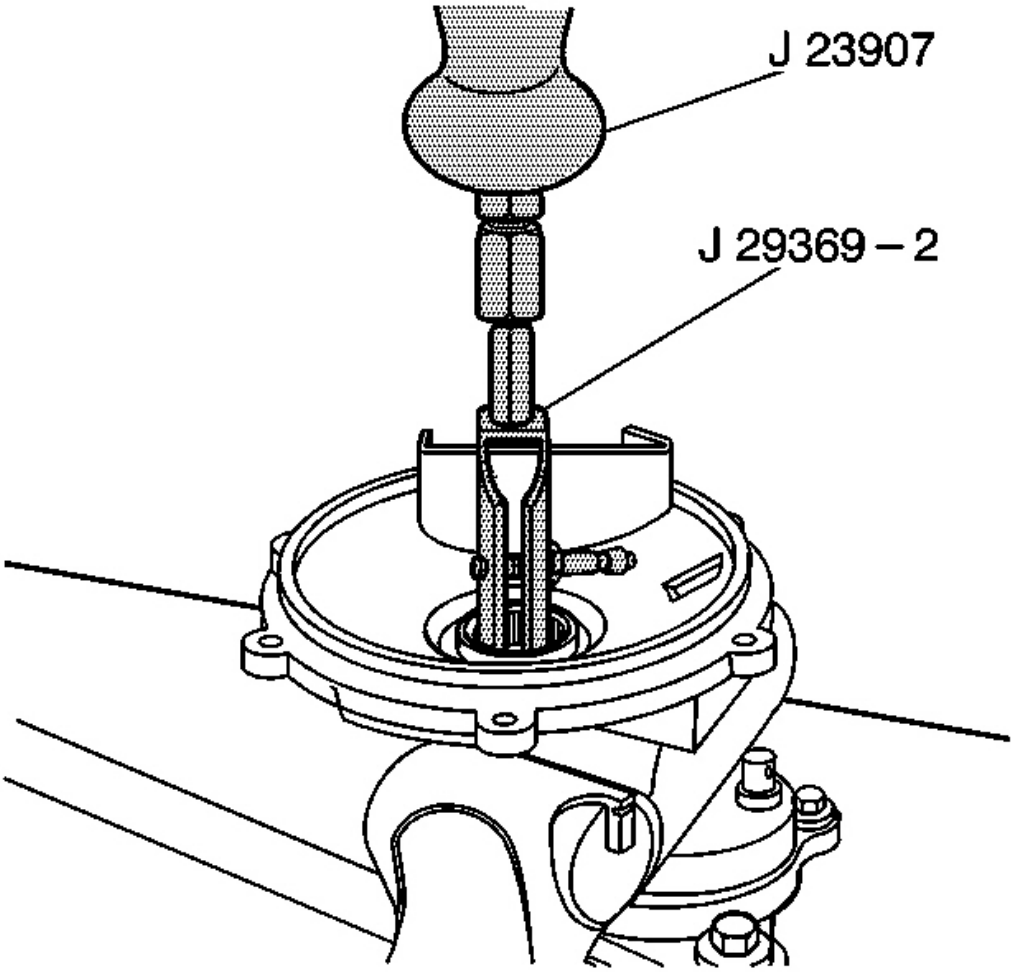

Fig. 168: Install J 29396-2 Into Left Bearing
Courtesy of GENERAL MOTORS CORP.

23. Install the J 29369-2 into the cover - left bearing.
24. Install the **J 23907** to the. See **Special Tools and Equipment** . J 29369-2 in order to remove the bearing.

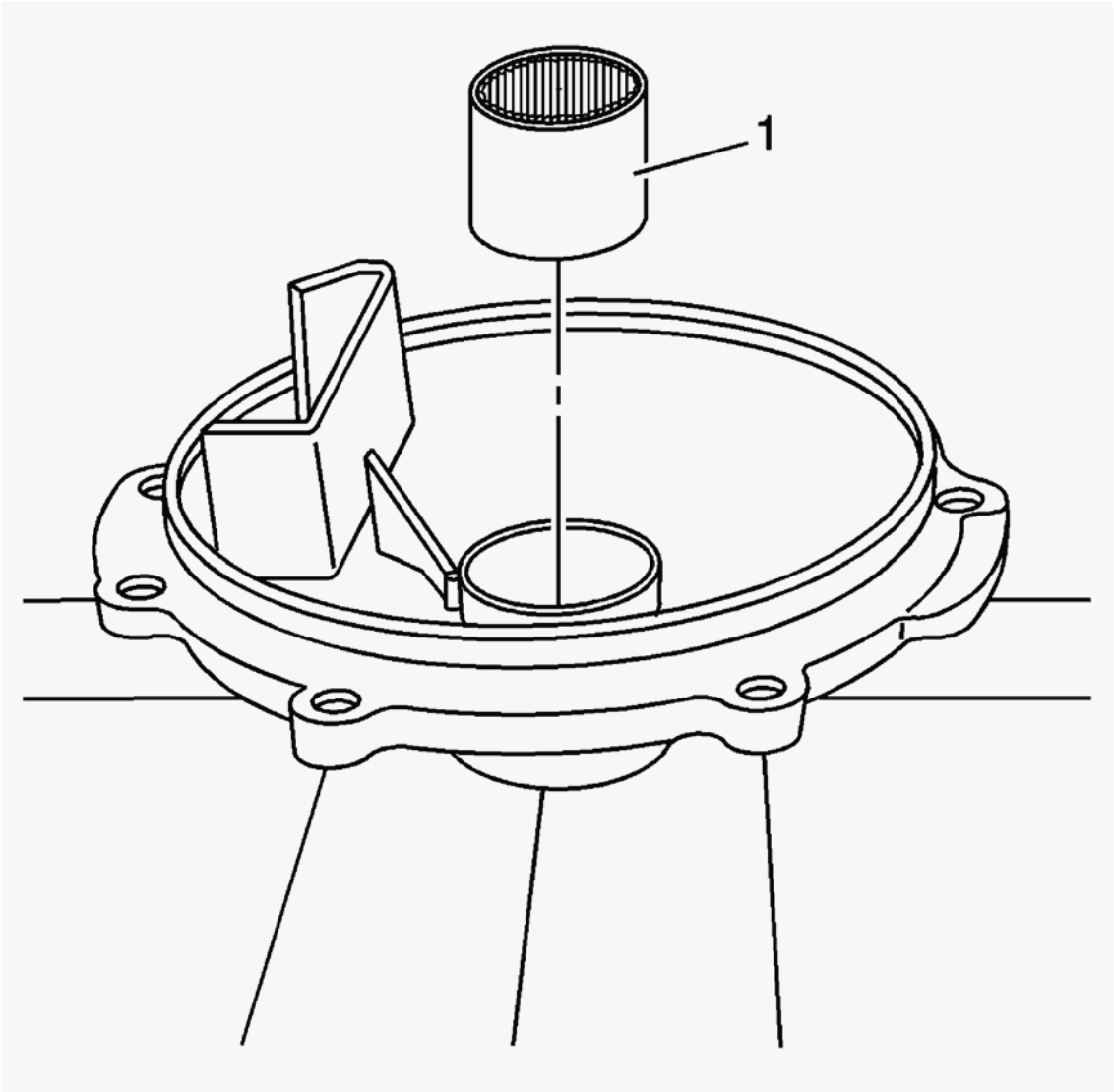

Fig. 169: Left Side Cover Output Shaft Bearing
Courtesy of GENERAL MOTORS CORP.

25. Remove the bearing (1).

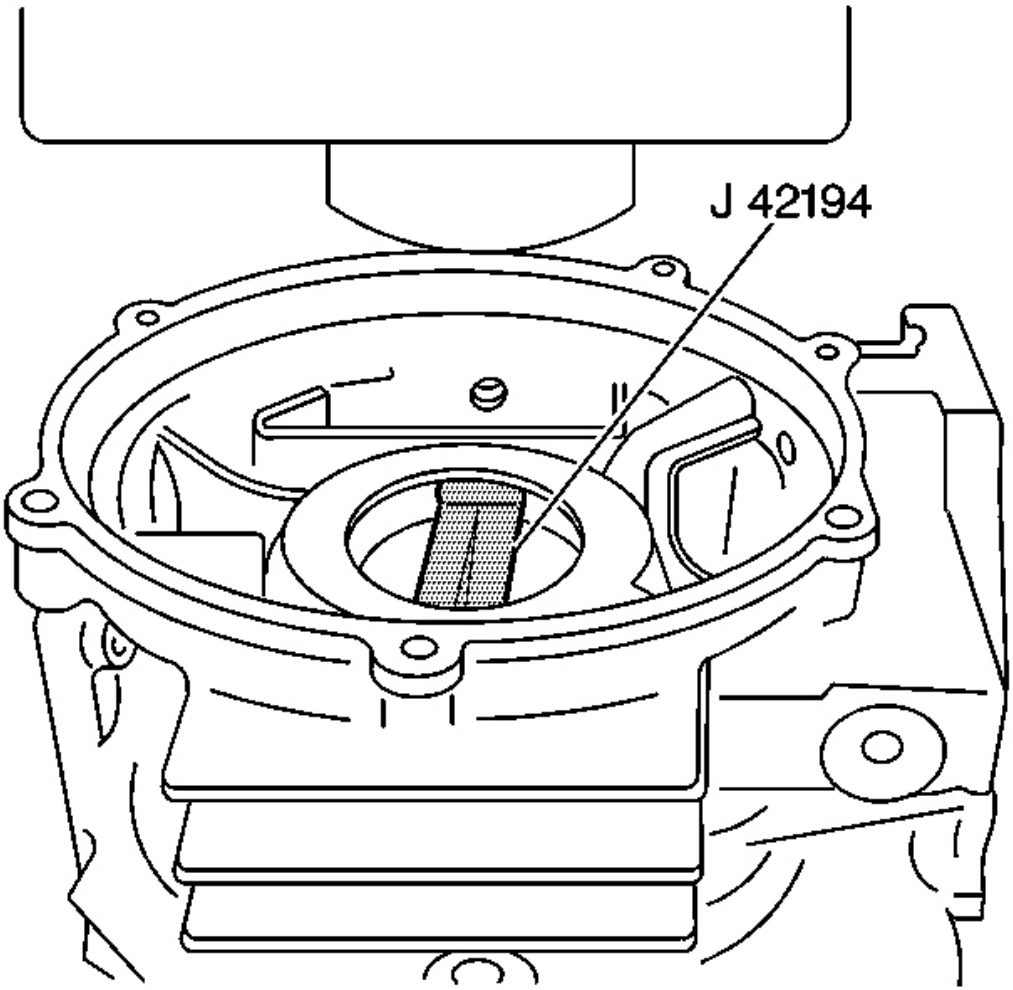

Fig. 170: Install J 42194 Into Left Bearing Race
Courtesy of GENERAL MOTORS CORP.

26. Install the **J 42194** into the differential housing, behind the left bearing race, in order to remove the bearing race and shim. See **Special Tools and Equipment** .
27. Position the housing into a hydraulic press.

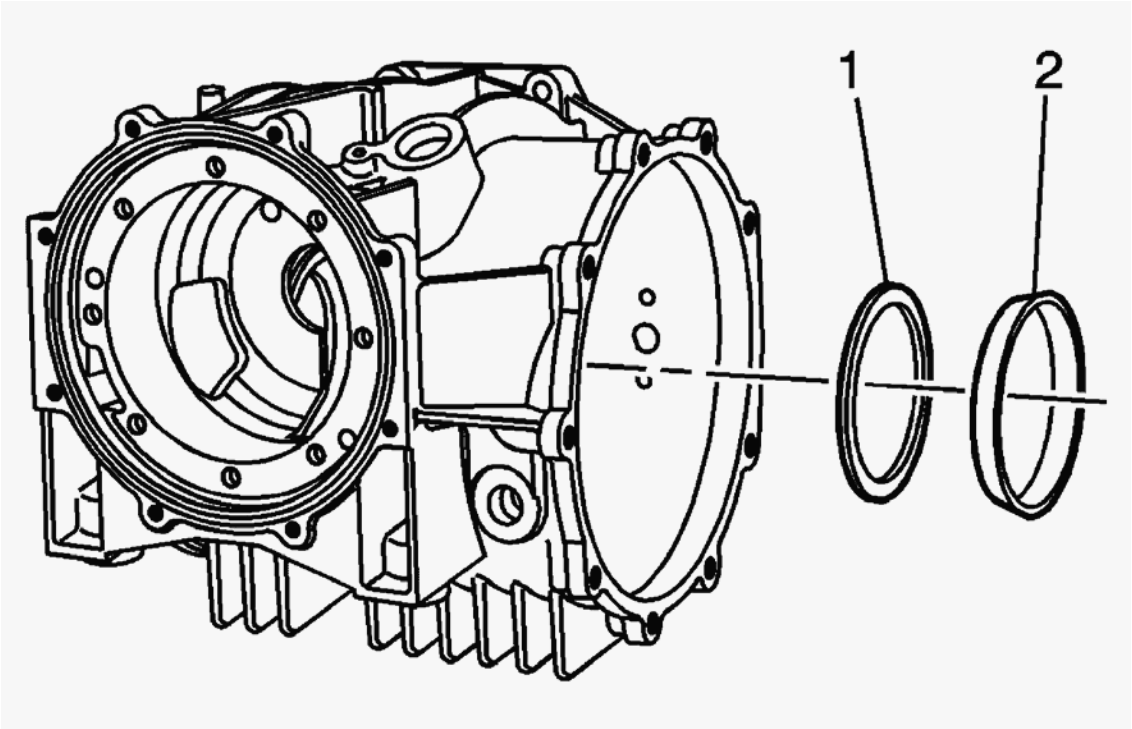

Fig. 171: Differential, Housing Race & Shim
Courtesy of GENERAL MOTORS CORP.

28. Using a hydraulic press, remove the race (2) and shim or shims (1) from the differential housing. Mark or tag the shims for assembly.

RING GEAR AND DIFFERENTIAL HOUSING DISASSEMBLE

Tools Required

- **J 42159** Differential Side Bearing Remover. See **Special Tools and Equipment** .
- **J 42162** Side Gear Compressor. See **Special Tools and Equipment** .
- **J 42173** Differential Holding Fixture. See **Special Tools and Equipment** .

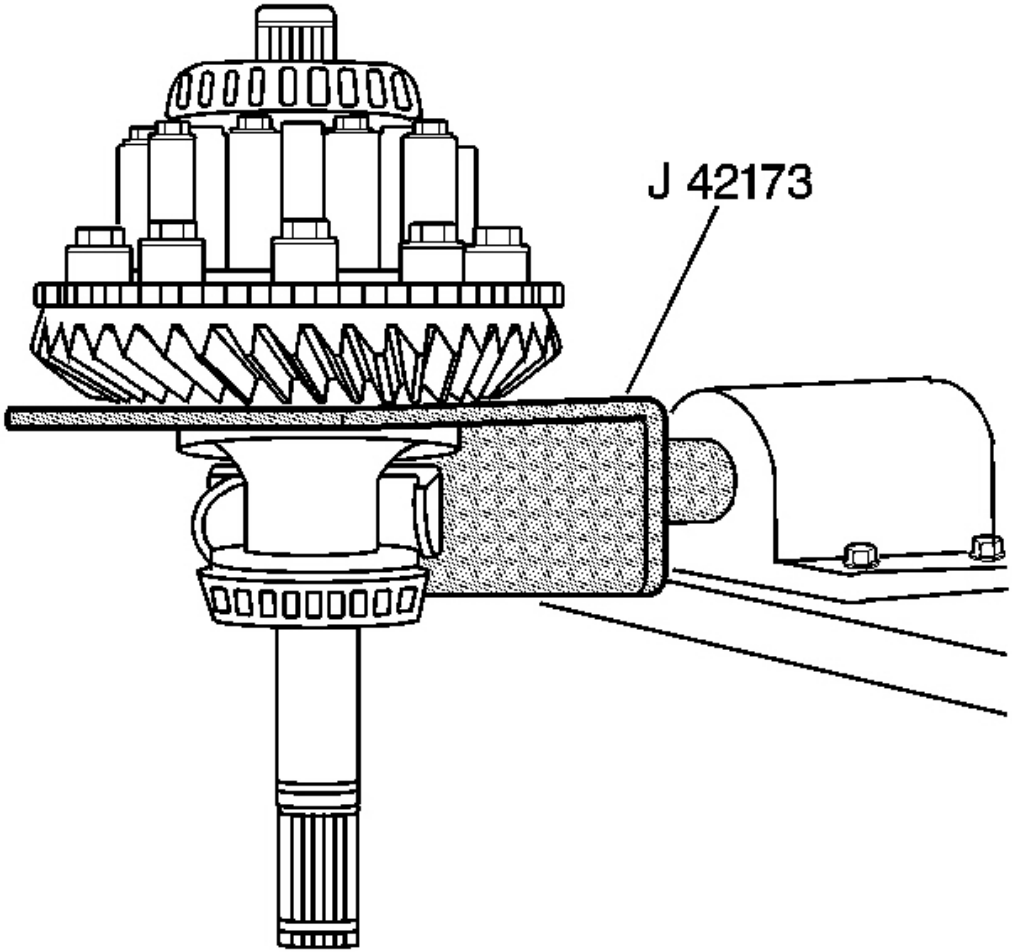

Fig. 172: Differential Case Assembly & J 42173
Courtesy of GENERAL MOTORS CORP.

1. Position the differential case assembly onto the **J 42173** . See **Special Tools and Equipment** .

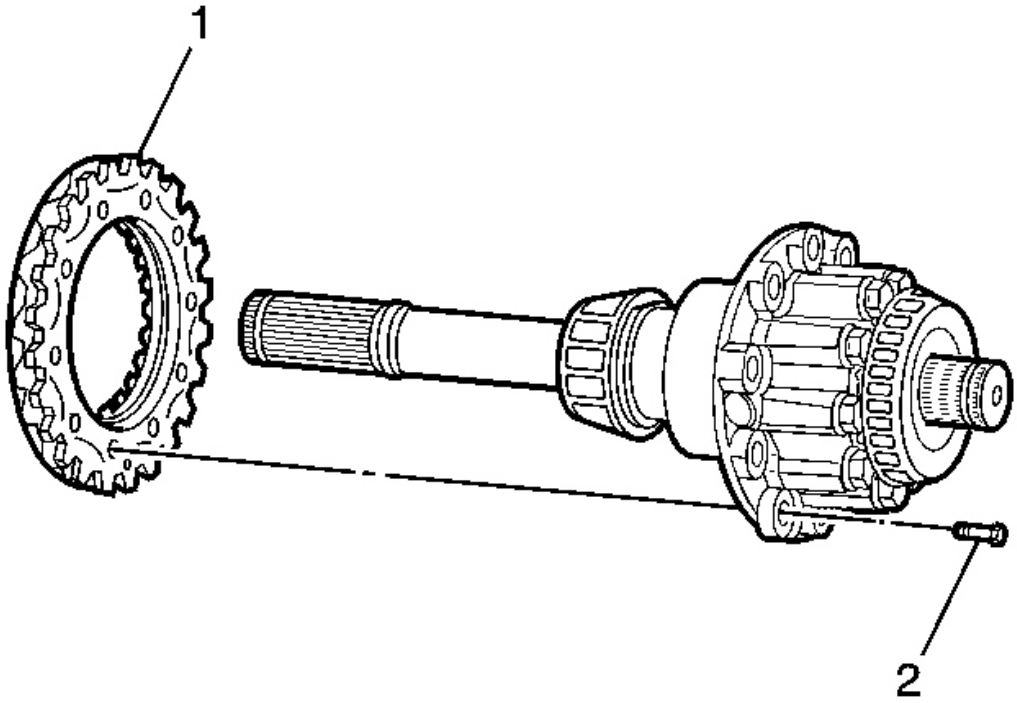

Fig. 173: Ring Gear & Ring Gear Bolts
Courtesy of GENERAL MOTORS CORP.

2. Remove the ring gear bolts (2) and ring gear (1).
3. Discard the ring gear bolts (2).

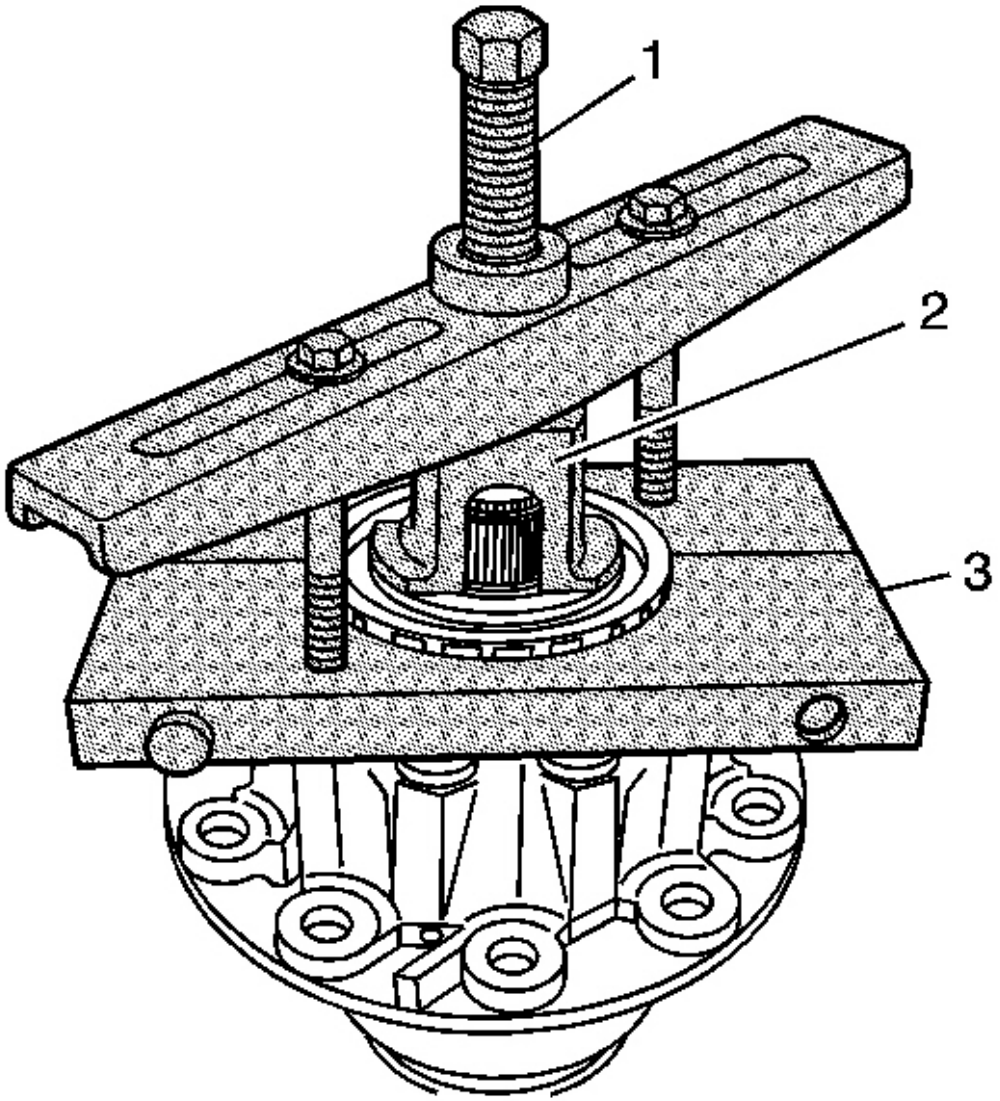

Fig. 174: Install J 42159 Onto Right Side Bearing
Courtesy of GENERAL MOTORS CORP.

4. Install the **J 42159** onto the right differential side bearing. See **Special Tools and Equipment** .
5. Using the **J 42159** , **J 42162** , and a hydraulic press, remove the right side bearing from the differential. See **Special Tools and Equipment** .

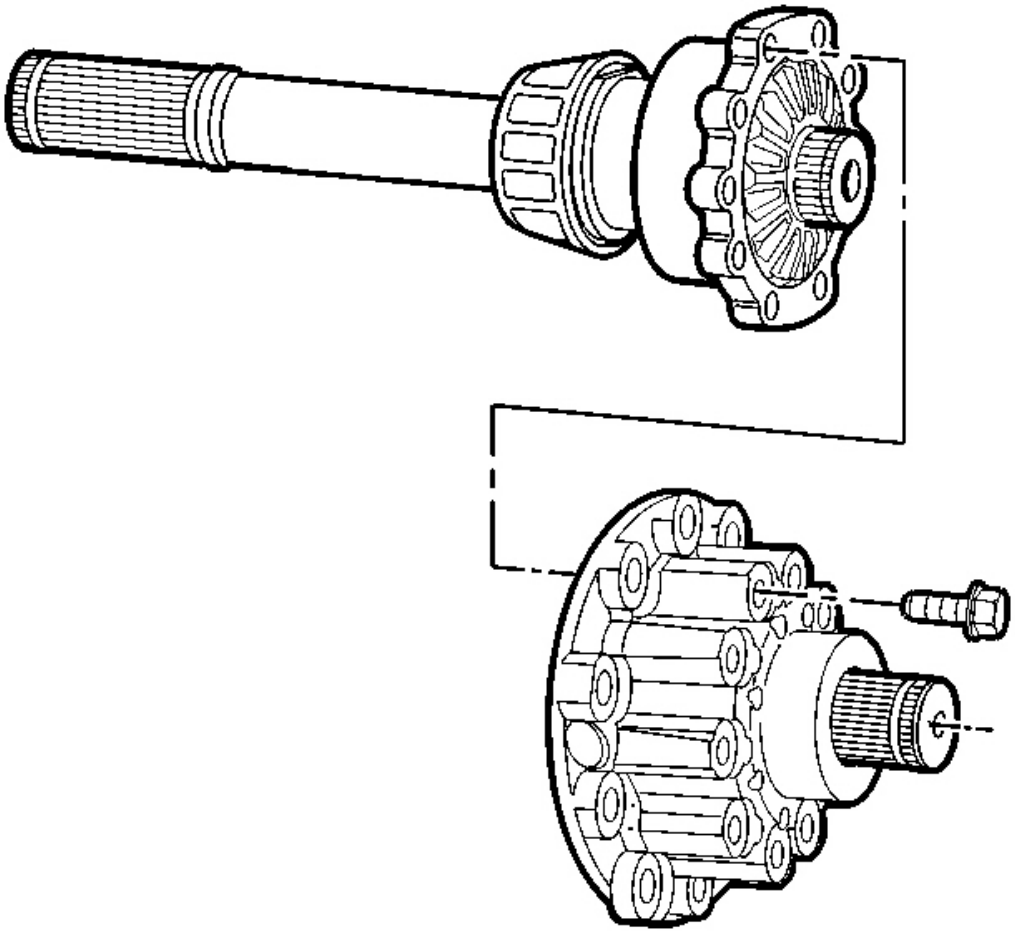

Fig. 175: Differential Case Bolts & Case Halves, Right & Left
Courtesy of GENERAL MOTORS CORP.

6. Remove the differential case bolts.
7. Separate the case halves, right and left.

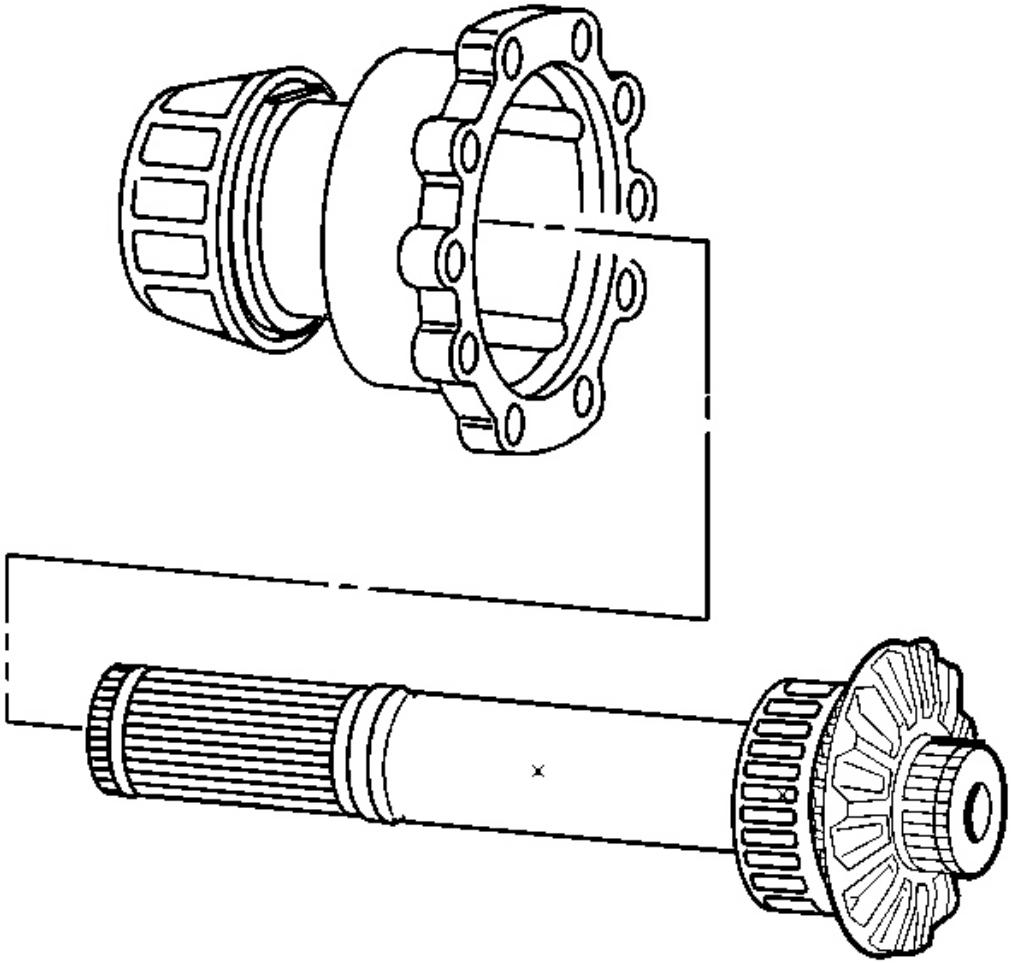

Fig. 176: Left Case, Left Output Shaft & Gear
Courtesy of GENERAL MOTORS CORP.

8. Remove the left output shaft and gear from the left case.

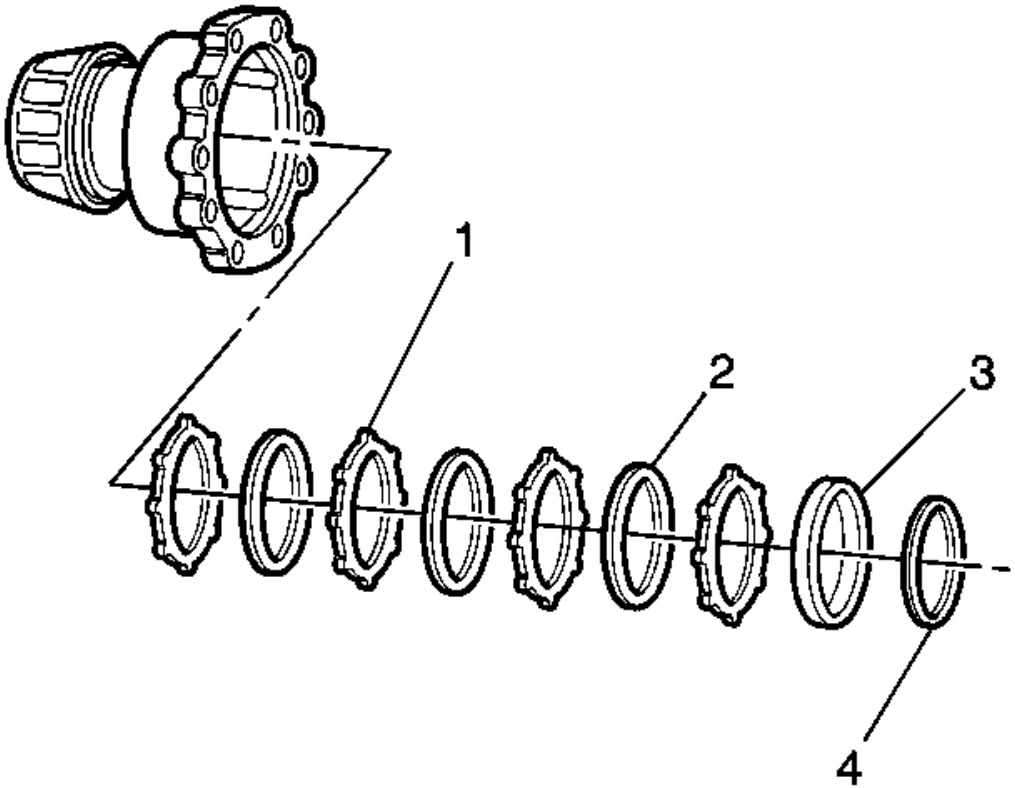

Fig. 177: Friction Discs & Separator Plates
Courtesy of GENERAL MOTORS CORP.

IMPORTANT: Friction discs and separator plates develop specific wear patterns. During disc and plate removal, the components must be retained in the specific order in which they were removed.

9. Remove the left clutch pack from the left case.
   - Remove the separator plates (1).
   - Remove the friction discs (2).
   - Remove the friction disc - thick (3).
   - Remove the bellville washer (4).
10. Tag the clutch pack to indicate the position of the components.

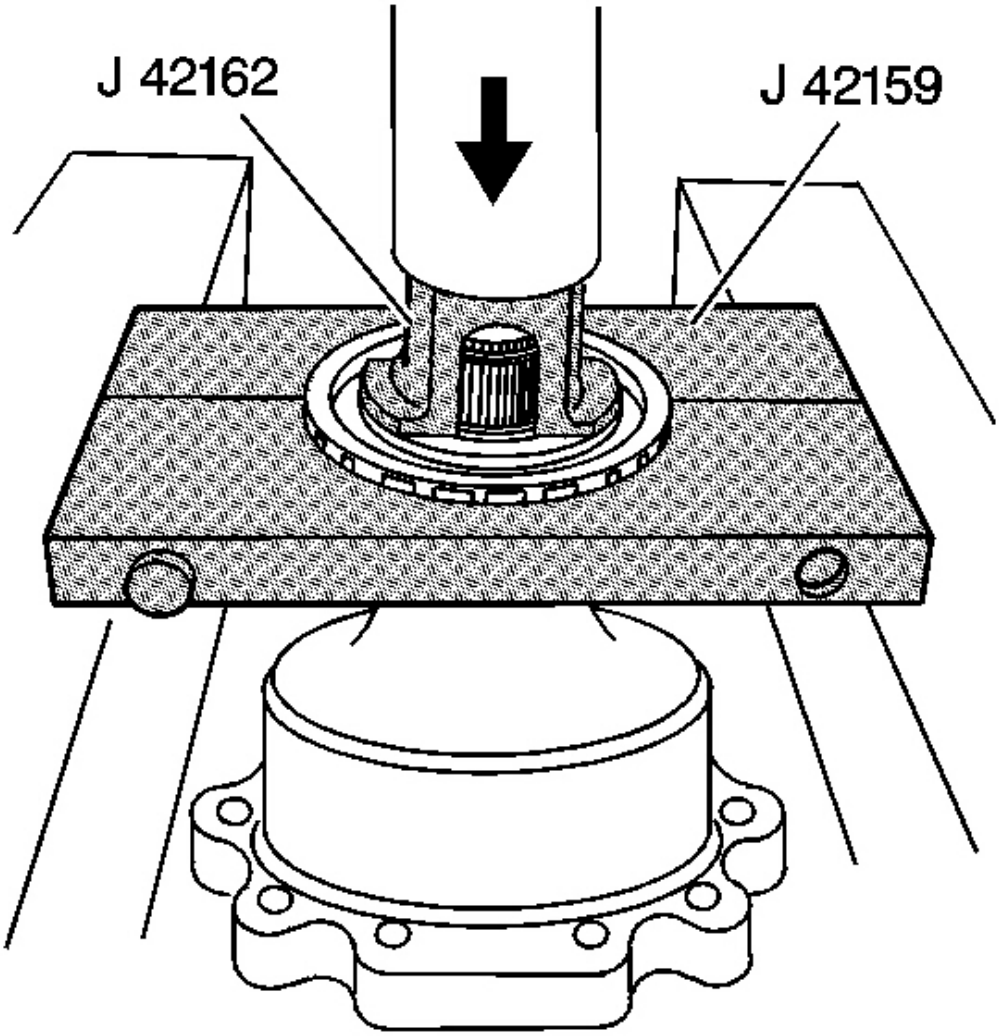

Fig. 178: Install J 42159 Onto Left Differential Side Bearing
Courtesy of GENERAL MOTORS CORP.

11. Install the **J 42159** onto the left differential side bearing. See **Special Tools and Equipment** .
12. Using the **J 42159** , **J 42162** , and a hydraulic press, remove the left side bearing from the differential. See **Special Tools and Equipment** .

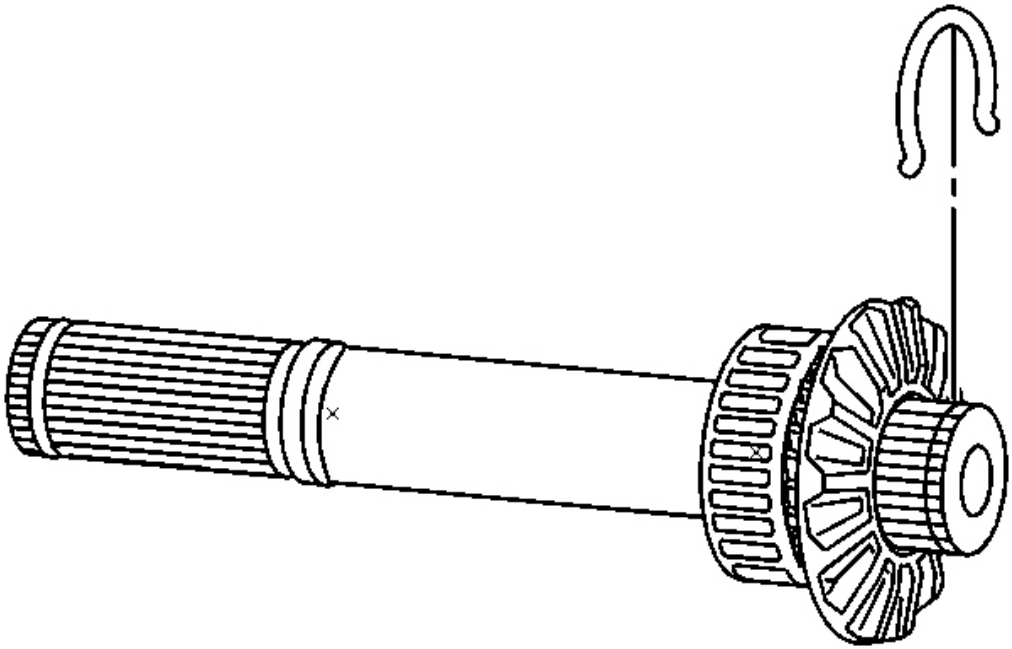

Fig. 179: Left Output Shaft & C-Clip
Courtesy of GENERAL MOTORS CORP.

13. Remove the C-clip from the left output shaft.

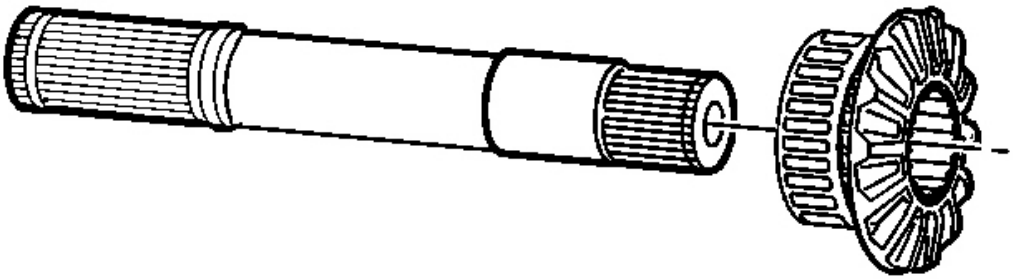

Fig. 180: Left Output Shaft & Gear
Courtesy of GENERAL MOTORS CORP.

14. Remove the gear from the left output shaft.

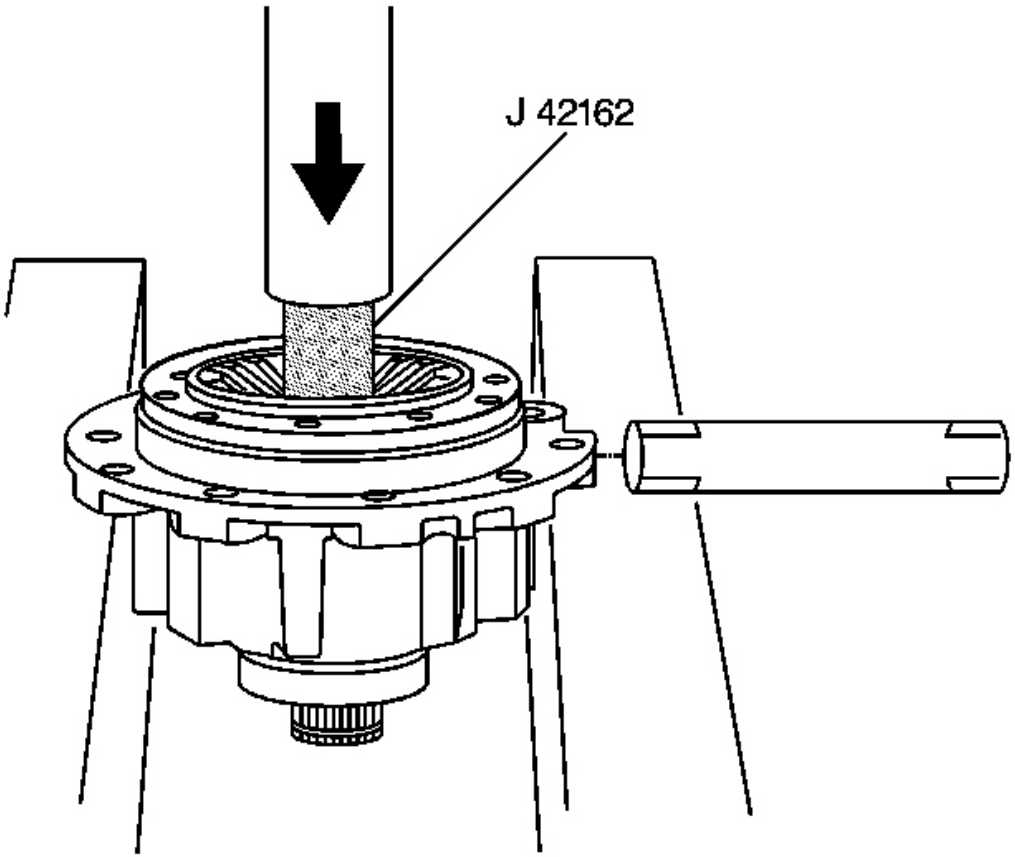

Fig. 181: Right Differential Case, Bellville Washer & Clutch Pack
Courtesy of GENERAL MOTORS CORP.

15. Using the **J 42162** and a hydraulic press, compress the bellville washer and clutch pack in order to remove the cross pin from the right differential case. See **Special Tools and Equipment** .

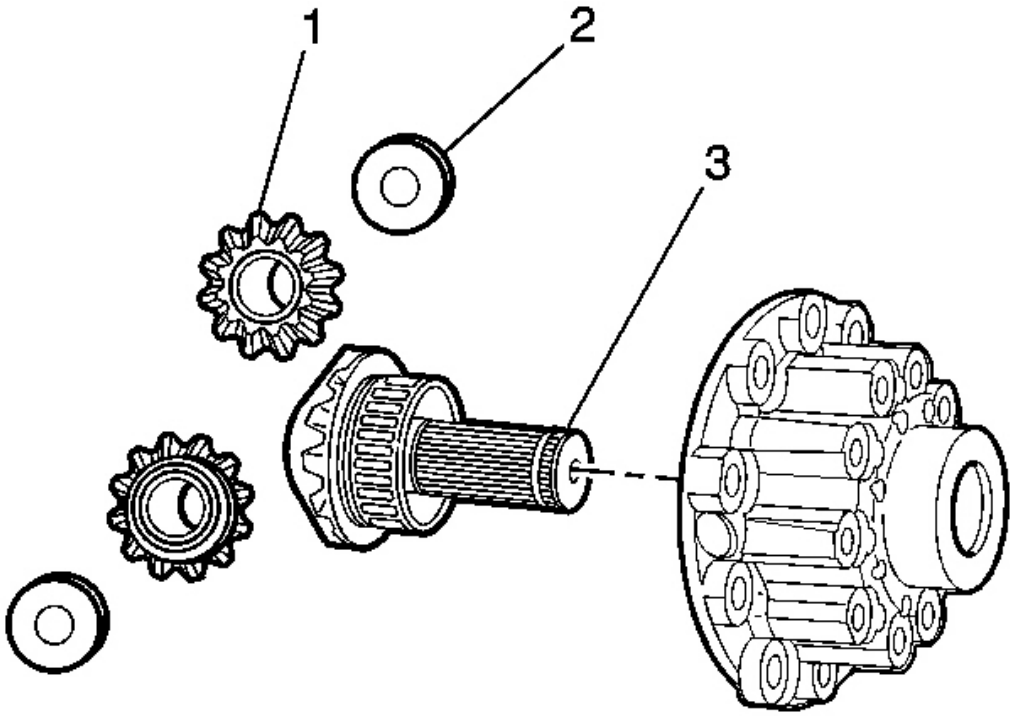

Fig. 182: Right Side Gears, Side Gear Washers & Output Shaft & Gear & Right Differential Case
Courtesy of GENERAL MOTORS CORP.

16. Remove the right side gears (1), side gear washers (2), and output shaft and gear (3) from the right differential case.

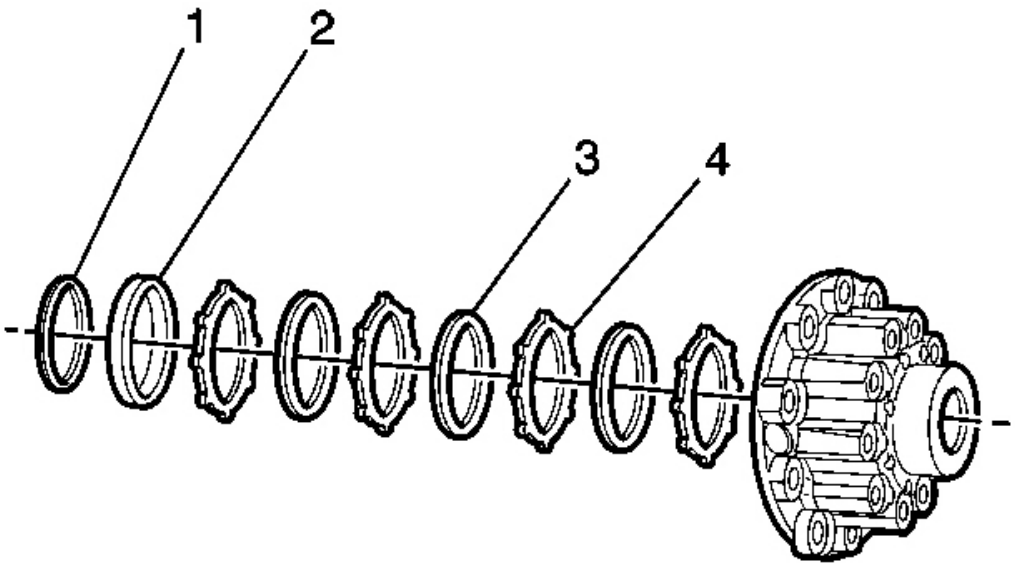

Fig. 183: Friction Discs, Separator Plates & Bellville Washer
Courtesy of GENERAL MOTORS CORP.

IMPORTANT: Friction discs and separator plates develop specific wear patterns. During disc and plate removal, the components must be retained in the specific order in which they were removed.

17. Remove the right clutch pack from the right case.
    - Remove the bellville washer (1).
    - Remove the friction disc - thick (2).
    - Remove the friction discs (3).
    - Remove the separator plates (4).
18. Tag the clutch pack to indicate the position of the components.

DRIVE PINION DISASSEMBLE

Tools Required

- **J 42162** Side Gear Compressor. See **Special Tools and Equipment** .
- **J 42164** Pinion Gear Holder. See **Special Tools and Equipment** .
- **J 42166** Front Pinion Bearing Remover. See **Special Tools and Equipment** .
- **J 42172** Bearing Race Installer/Spanner Wrench. See **Special Tools and Equipment** .

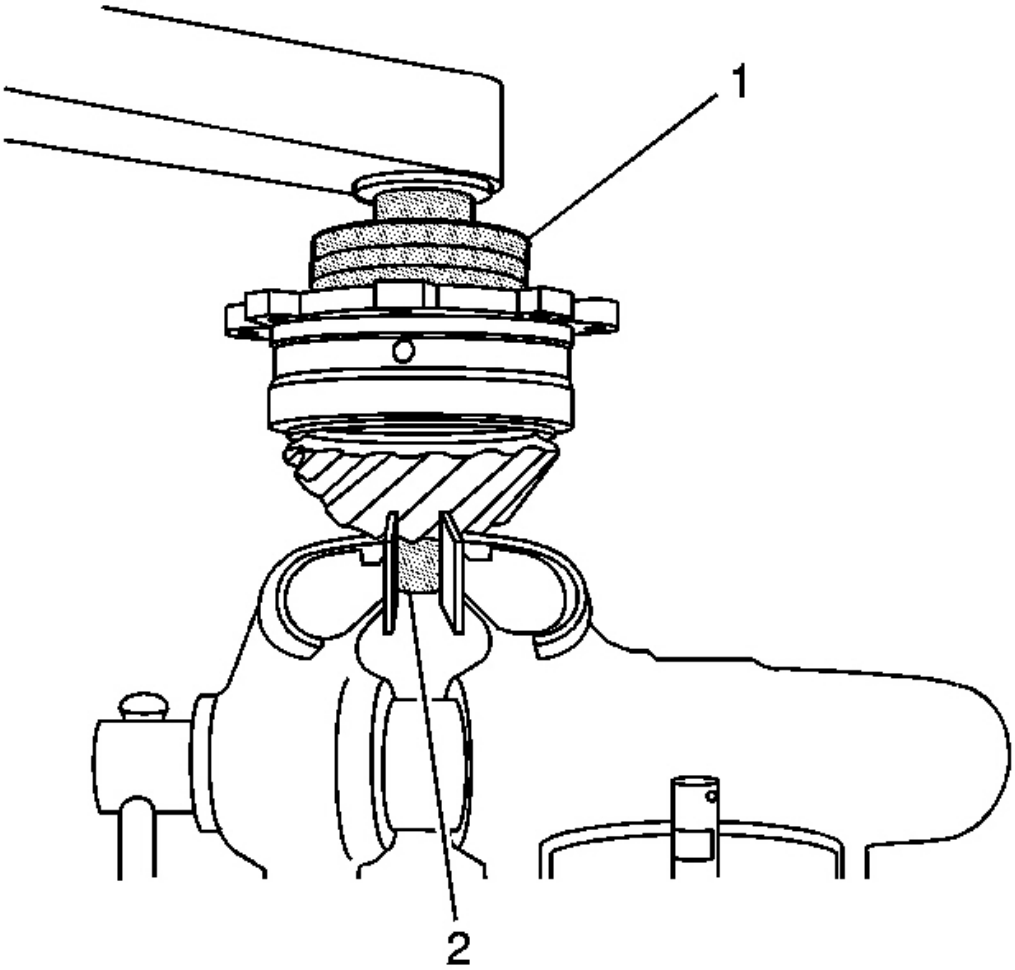

Fig. 184: Removing/Installing Pinion Nut Using J 42172
Courtesy of GENERAL MOTORS CORP.

1. Remove the pinion nut using the **J 42172** and the **J 42164** . See **Special Tools and Equipment** .

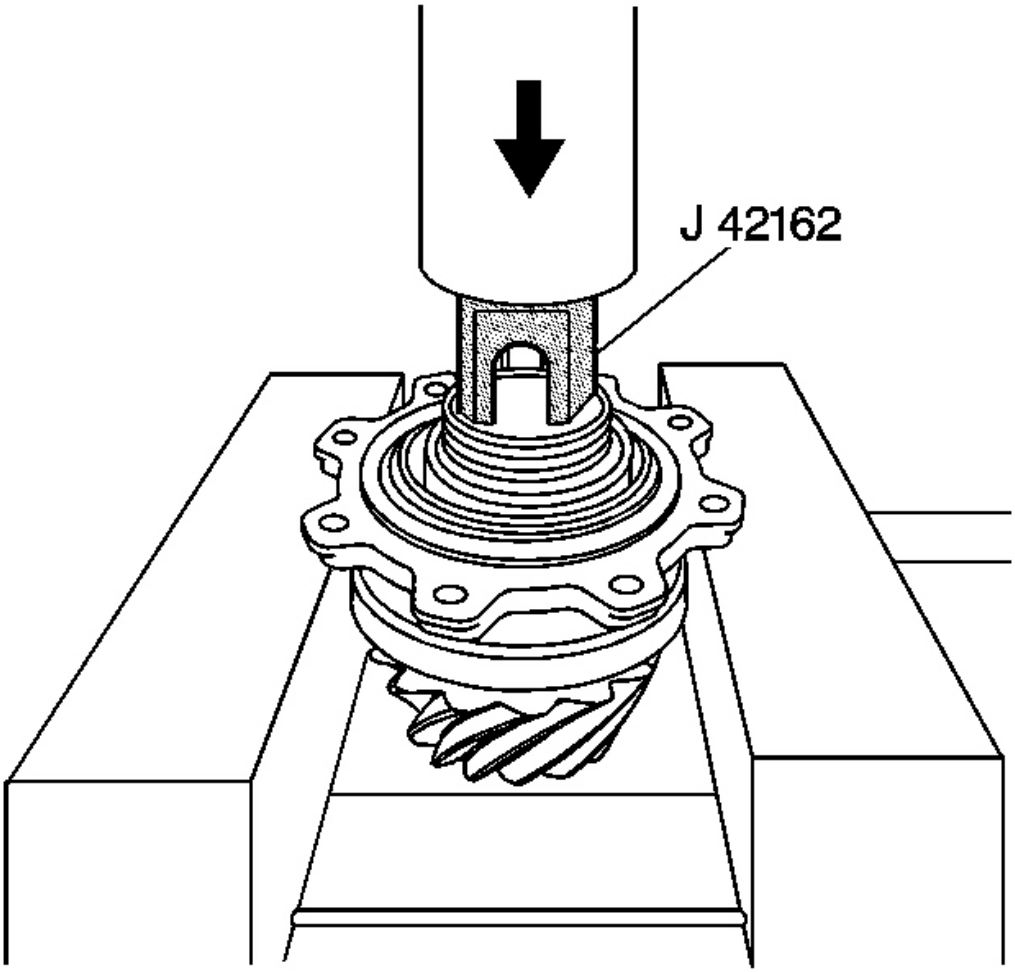

Fig. 185: Housing/Cage Pinion Shaft & Bearing
Courtesy of GENERAL MOTORS CORP.

2. Position the pinion housing/cage into a press.
3. Use the **J 42162** and a hydraulic press in order to remove the pinion shaft and bearing from the housing/cage. See **Special Tools and Equipment** .

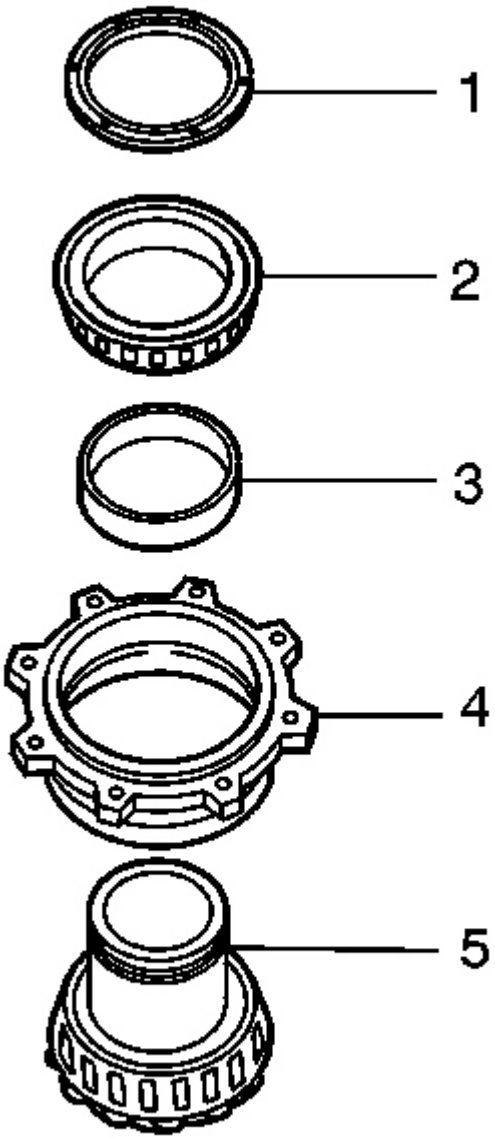

Fig. 186: Nut, Bearing, Spacer & Pinion Shaft & Housing/Cage
Courtesy of GENERAL MOTORS CORP.

IMPORTANT: The spacer is specific for the bearing set and must be used in order to achieve the proper bearing preload. The pinion bearings, spacer and housing/cage must be replaced as a set.

4. Remove the nut (1), bearing (2), spacer (3), and pinion shaft (5) from the housing/cage (4).

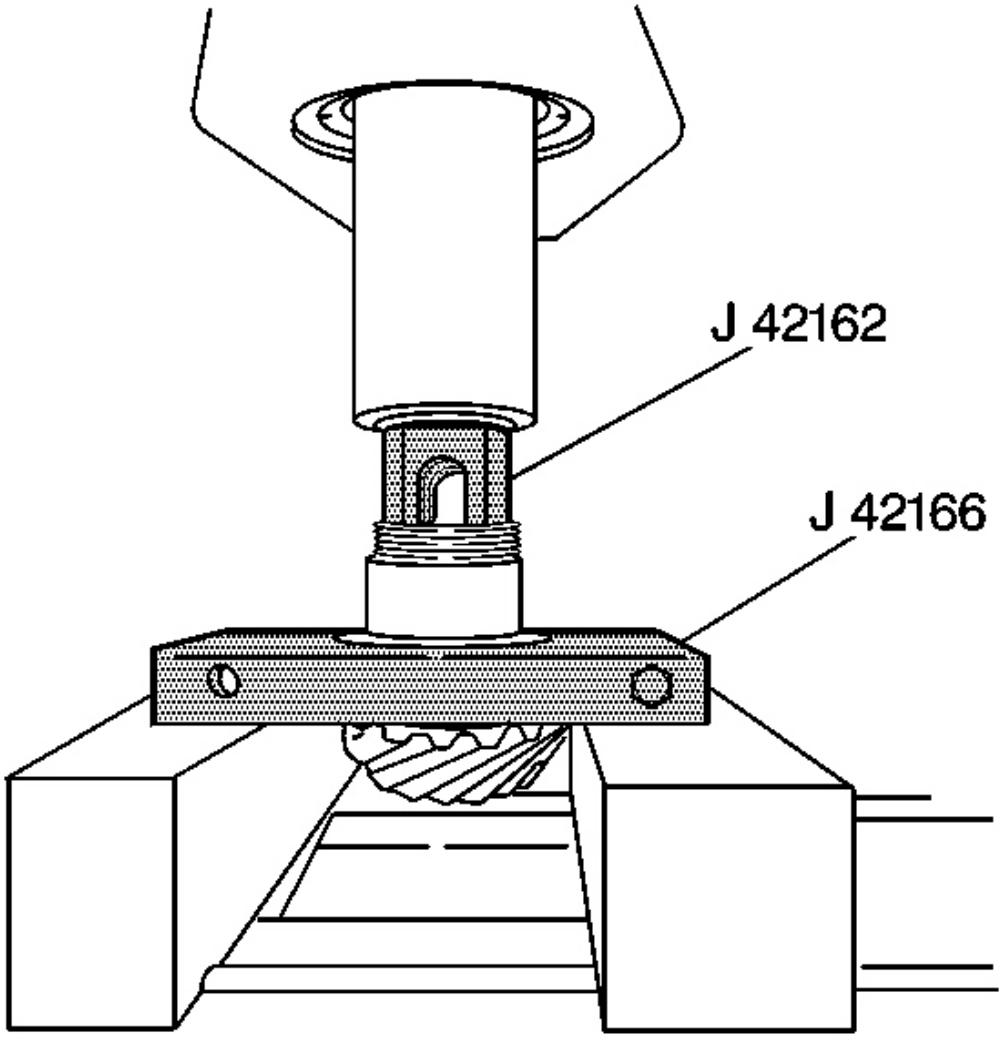

Fig. 187: Pinion Shaft, Bearing, J 42162 & J 42166
Courtesy of GENERAL MOTORS CORP.

5. Install the **J 42166** onto the pinion shaft and bearing. See **Special Tools and Equipment** .
6. Use the **J 42162** , **J 42166** , and a hydraulic press in order to remove the bearing from the shaft. See **Special Tools and Equipment** .

DIFFERENTIAL CASE CLEANING AND INSPECTION

Differential Case

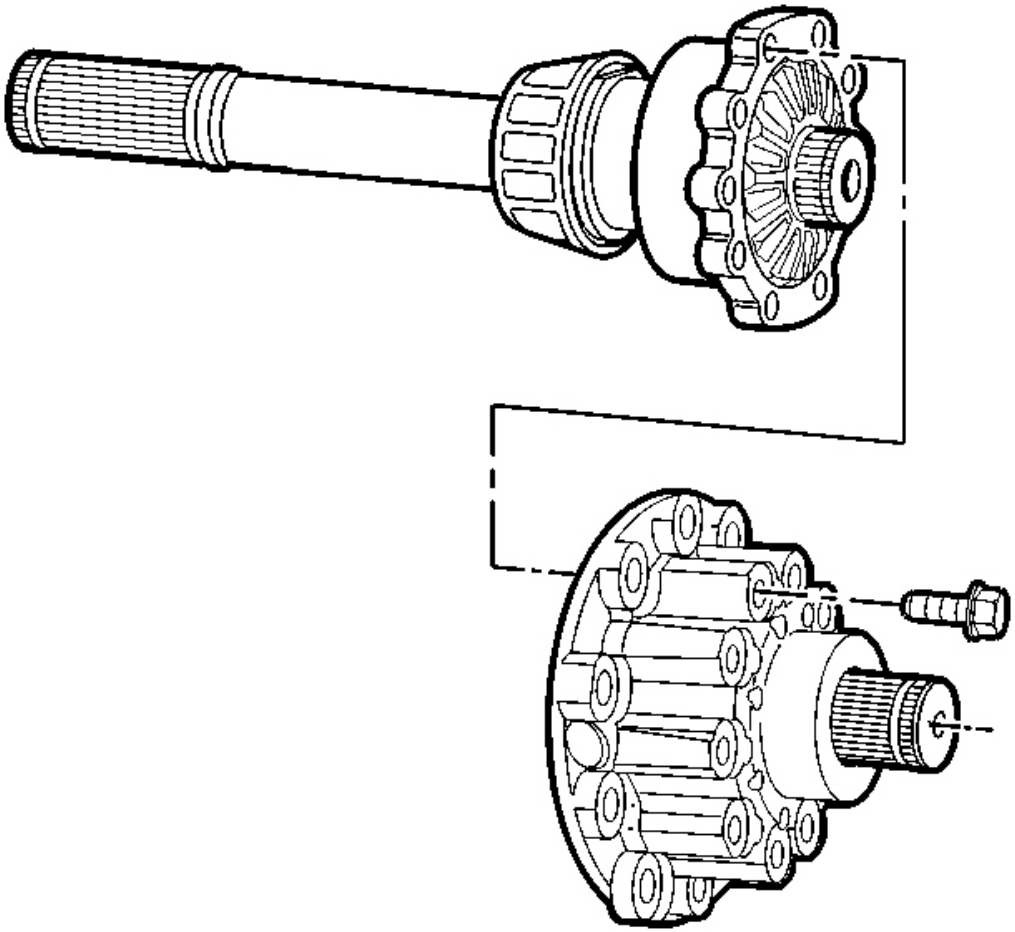

Fig. 188: Differential Case Bolts & Case Halves, Right & Left
Courtesy of GENERAL MOTORS CORP.

1. Clean the differential case components in solvent.
2. Inspect the components for the following:
    - Cracks or other damage
    - Damage to threaded bolt holes
    - Unusual wear, scoring, or grooves in the clutch pack area
    - Scored or damaged case side bearing mounting flanges

Gears and Shafts

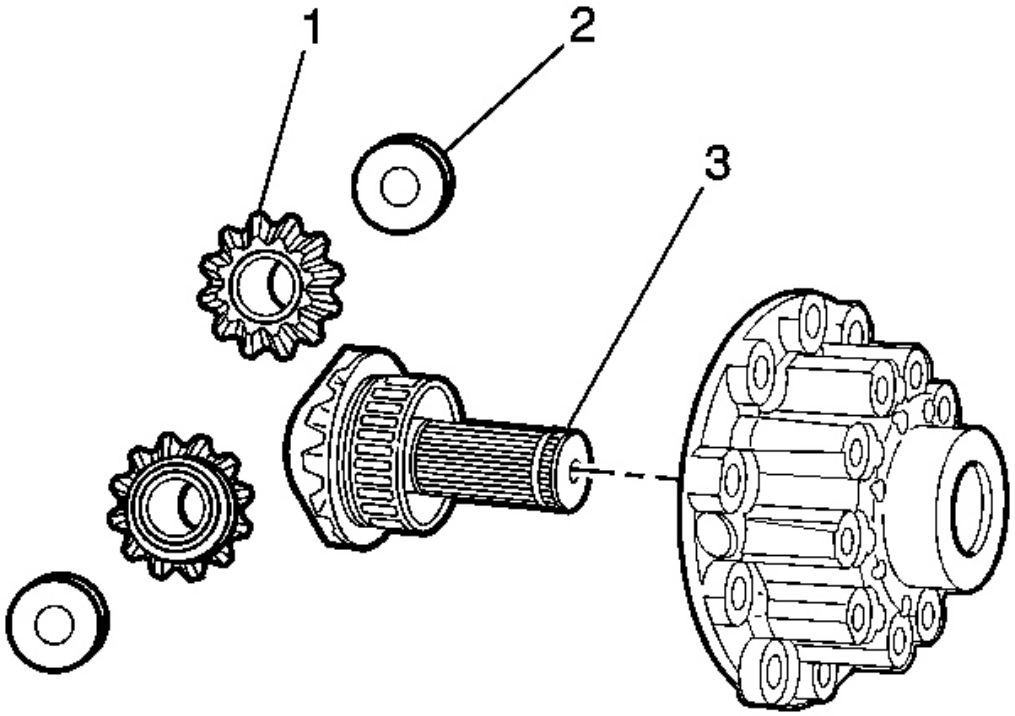

Fig. 189: Right Side Gears, Side Gear Washers & Output Shaft & Gear & Right Differential Case
Courtesy of GENERAL MOTORS CORP.

1. Clean the gears and shafts with solvent.
2. Inspect the gears for the following:
    - Chips or cracks
    - Pitting
    - Heat discoloration
    - Unusual wear
    - Excessive wear or scoring in the side gear (1) pin bores
    - Wear, grooves, or scoring on the side gear pin
    - Scored or worn side gear washers (2)
    - Unusual wear or grooves on the output gear (3) splines
    - Damaged to the ring gear threaded bolt holes
    - Damage to the ring gear vehicle speed sensor reluctor ring lobes

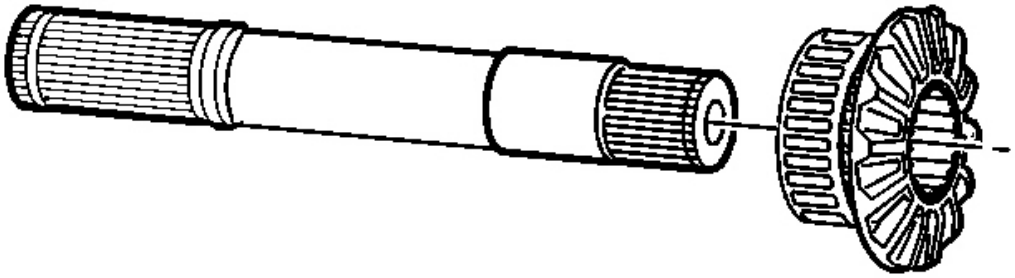

Fig. 190: Left Output Shaft & Gear
Courtesy of GENERAL MOTORS CORP.

3. Inspect the shafts for the following:
    - Unusual wear
    - Grooved, worn, or damaged splines
    - Damaged C-clip grooves

Clutch Discs and Plates

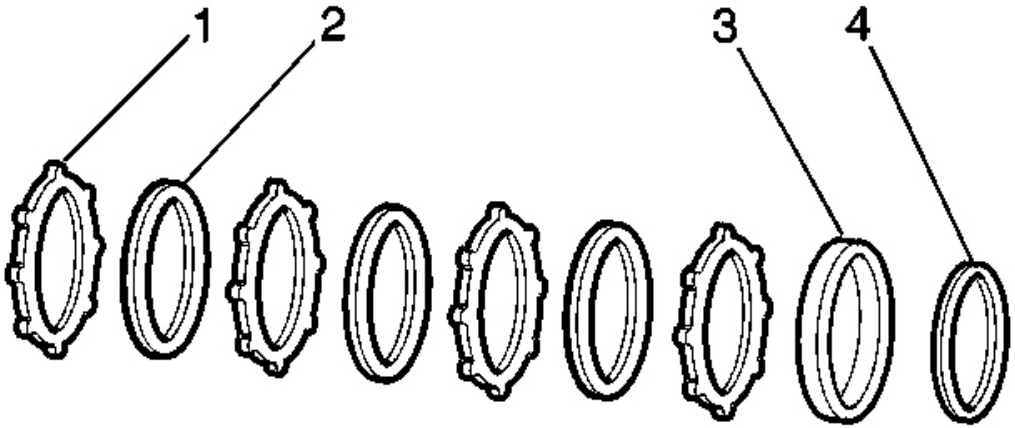

Fig. 191: Friction Material & Plate Friction Surfaces
Courtesy of GENERAL MOTORS CORP.

1. Clean the discs and plates with solvent.
2. Inspect the discs and plates for the following:
    - Unusual wear, scoring, or grooves on the separator plate friction surfaces (1)
    - Friction plates with uneven wear or worn friction material (2 and 3)

      If any one plate or disk in either the left or right pack show signs of wear or scoring replace the complete pack on both sides.

    - Bent or warped plates or discs

      Lay the plates and discs on a flat surface and inspect for warpage

    - A worn, scored, or collapsed bellville washer (4)

Bearings and Races

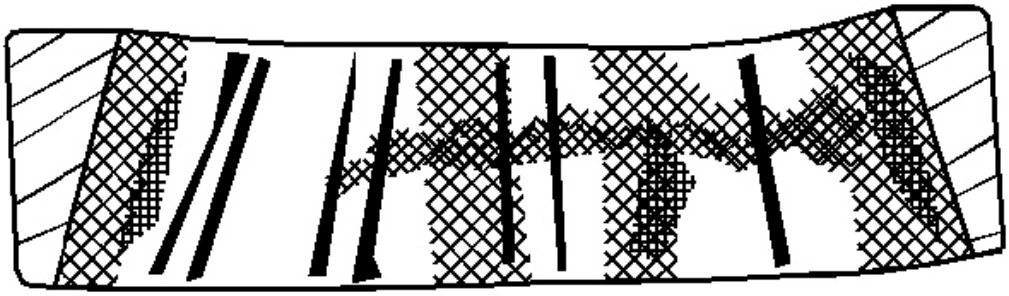

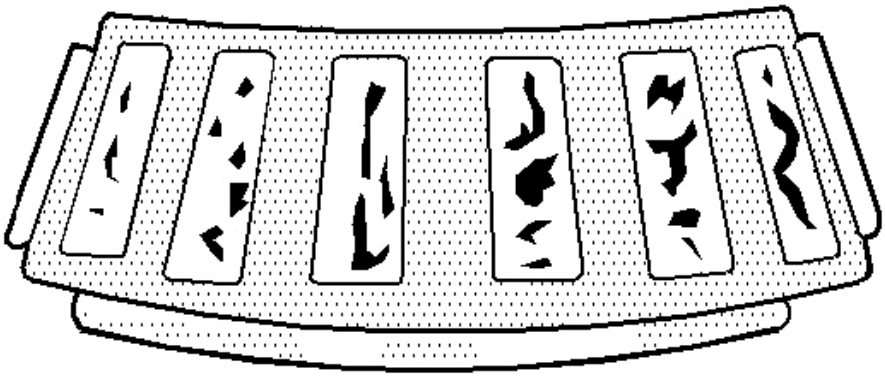

Fig. 192: Inspecting Bearing Rollers & Races For Pitting, Grooves & Excessive Wear
Courtesy of GENERAL MOTORS CORP.

1. Inspect the bearing rollers and races for the following:
   - Pitting
   - Scoring or grooves
   - Excessive wear or other damage

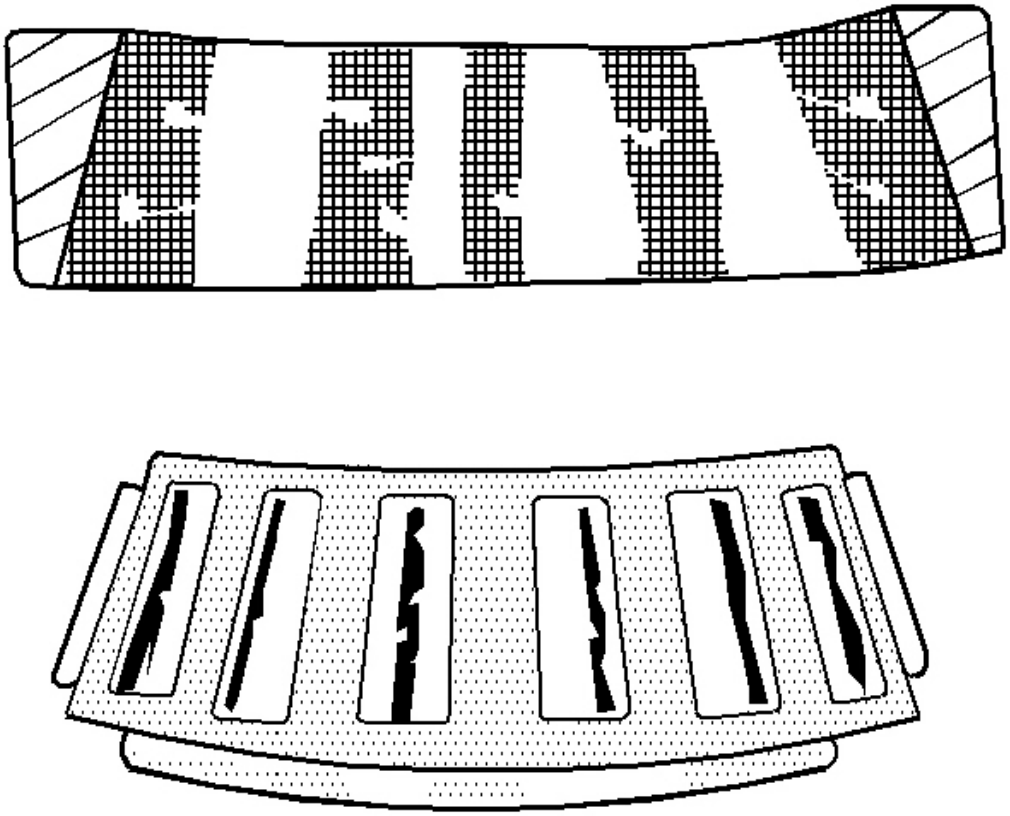

Fig. 193: Inspecting Bearing Rollers & Races For Head Discoloration
Courtesy of GENERAL MOTORS CORP.

2. Inspect the bearing rollers and races for heat discoloration.

   Heat discoloration ranges from a faint yellow to a dark blue color. This discoloration may result from an overload or improper lubrication. Excessive heat causes softening of the rollers and races. Bearings or races with sign of heat discoloration must be replaced.

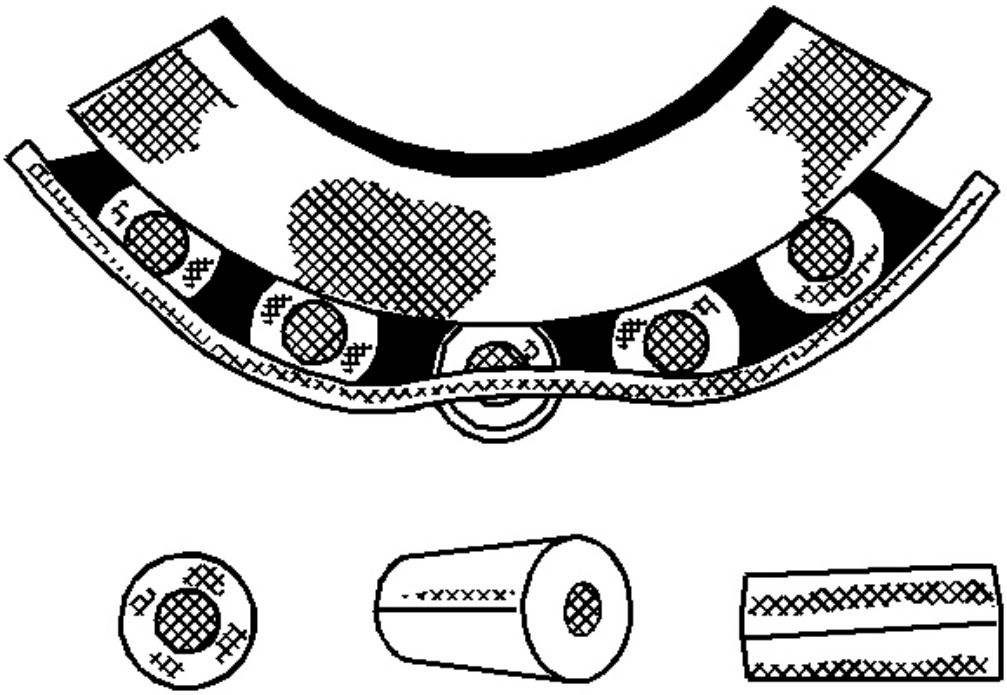

<u>Fig. 194: Inspecting Bent Cage</u>
Courtesy of GENERAL MOTORS CORP.

3. Inspect for bent bearing cages.

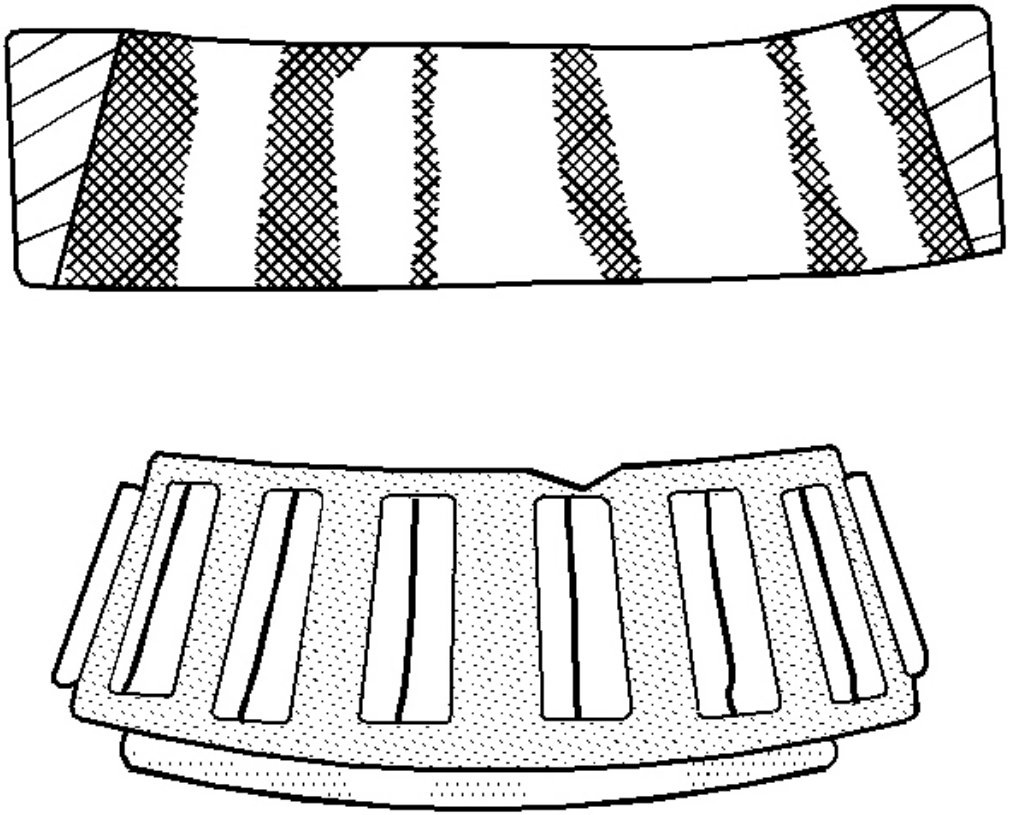

Fig. 195: Inspecting For Damaged Bearing Cages
Courtesy of GENERAL MOTORS CORP.

4. Inspect for damaged bearing cages.

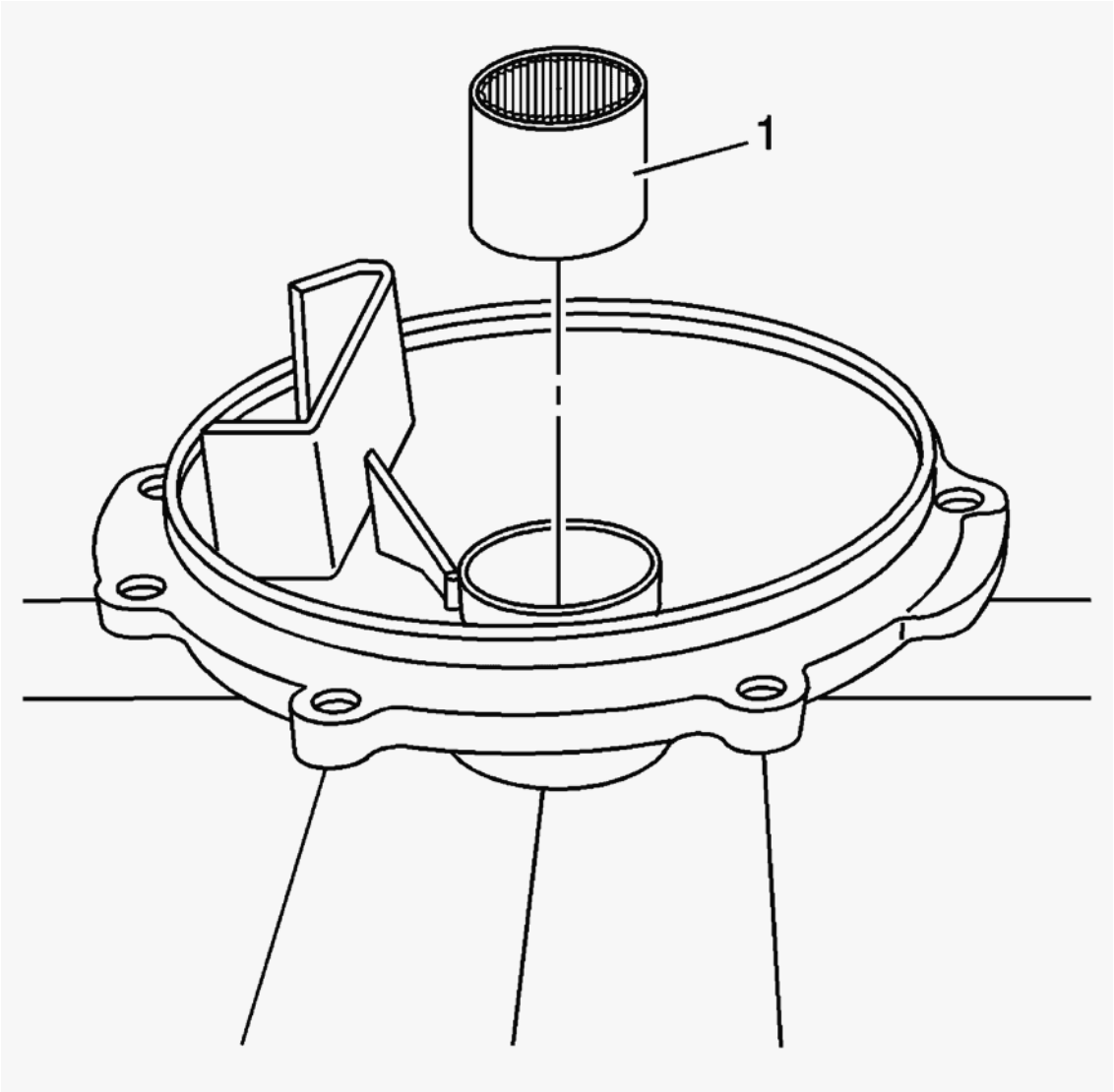

Fig. 196: Inspecting Left Side Cover Output Shaft Bearing For Worn Needle Bearings
Courtesy of GENERAL MOTORS CORP.

5. Inspect the left side cover output shaft bearing (1) for worn or missing needle bearings.

DIFFERENTIAL HOUSING CLEANING AND INSPECTION

Differential Carrier

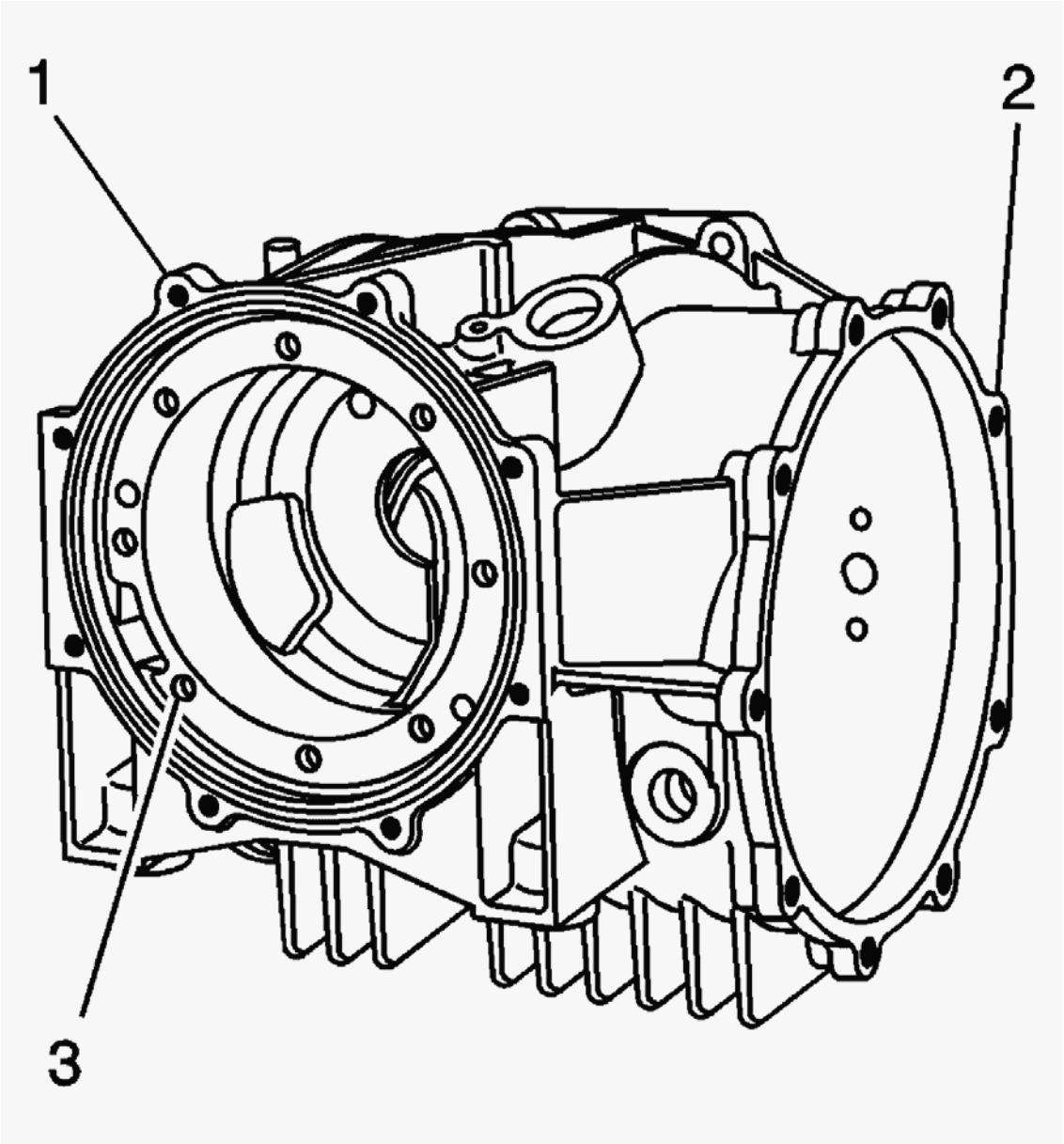

Fig. 197: O-Ring Seal Grooves, Threaded Bolt Holes & Broken Flanges
Courtesy of GENERAL MOTORS CORP.

1. Clean the differential carrier in solvent.
2. Inspect for the following:
    - Damage to threaded bolt holes (1)
    - Broken flanges (2)
    - Restrictions within the internal oil passages
    - Damaged case or cover sealing surfaces
    - Damage to the O-ring seal grooves (3)
    - Porosity

Differential Carrier Covers

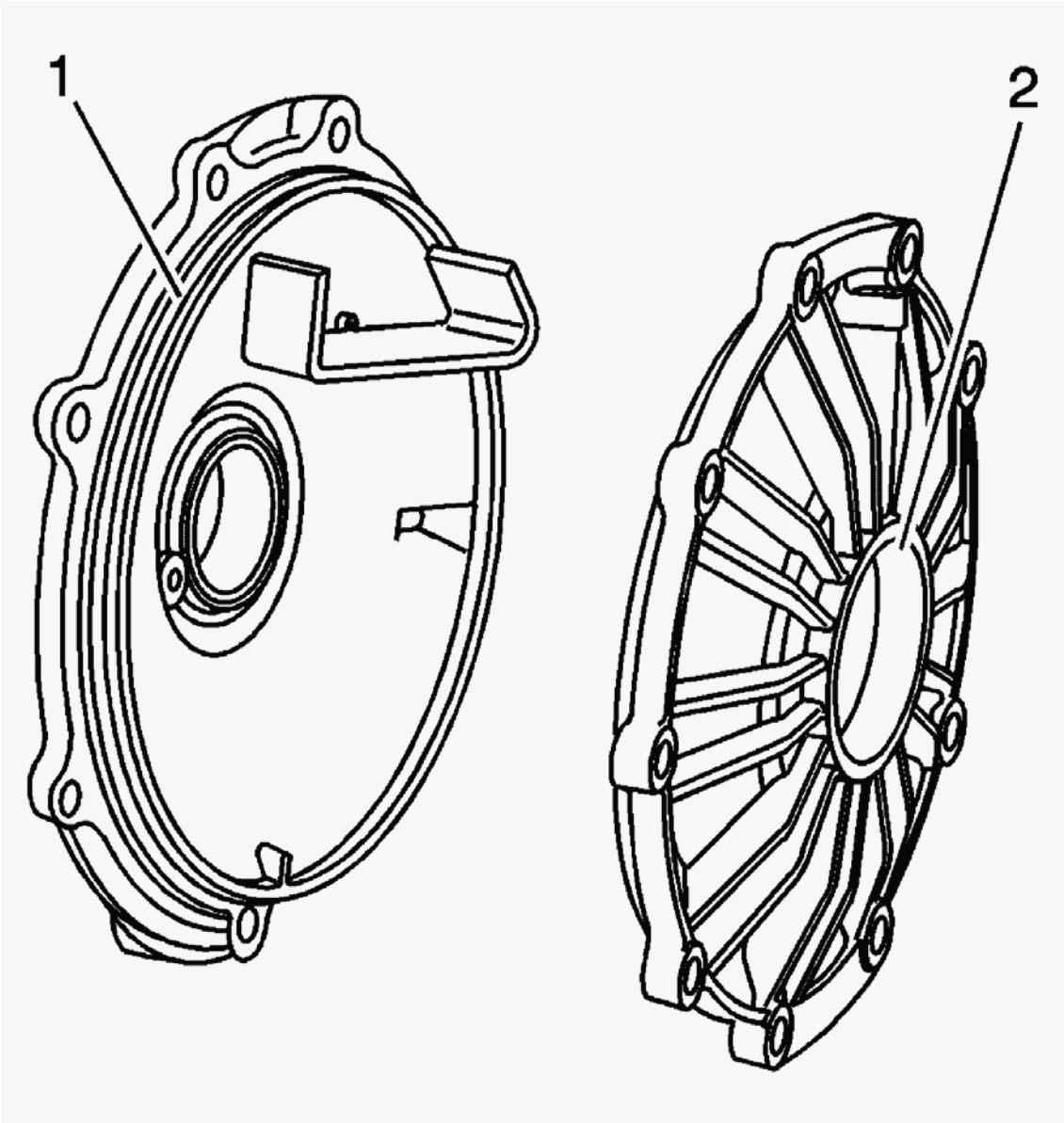

Fig. 198: Axle Shaft Oil Seal Bores & O-Ring Seal Grooves
Courtesy of GENERAL MOTORS CORP.

1. Clean the covers in solvent.
2. Inspect the covers for the following:
    - Damage to the O-ring seal grooves (1)
    - Damage to the axle shaft oil seal bores (2)
    - Restrictions within the internal oil passages
    - Porosity
    - Dents or damage to the exterior of the cover - rear that may create interference with the pinion shaft

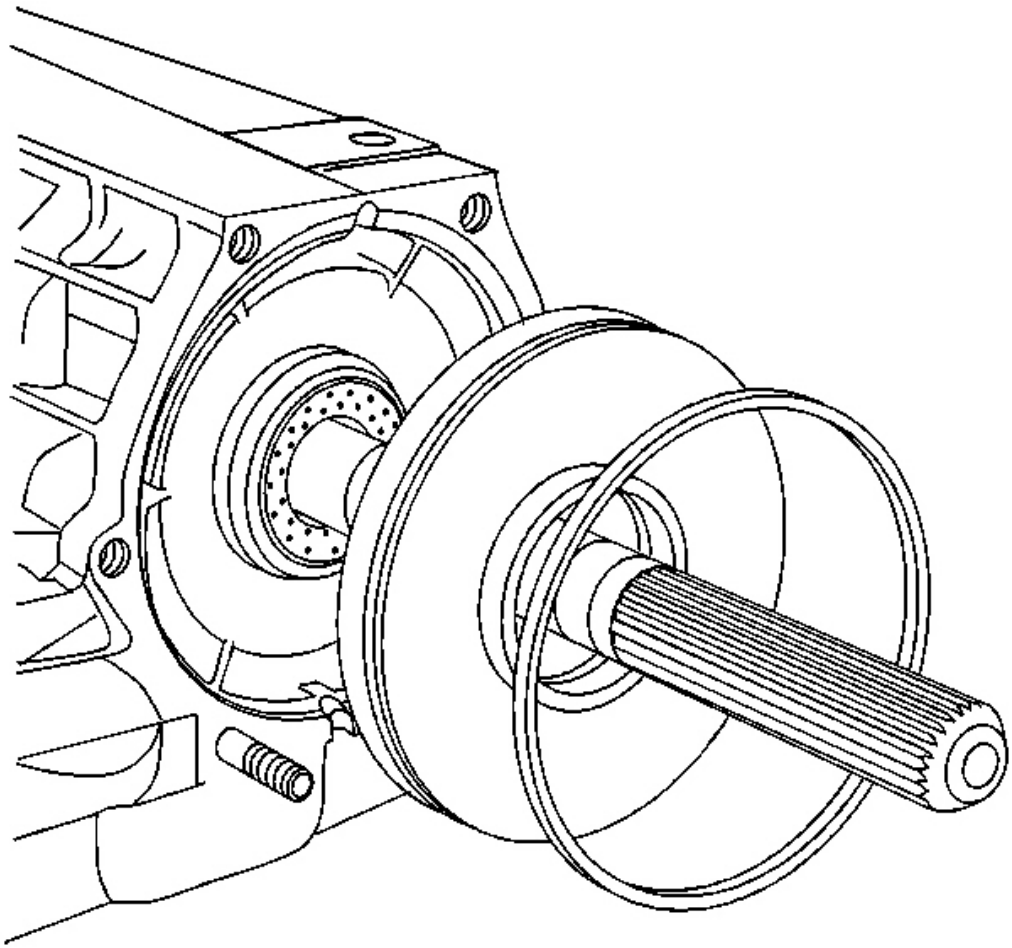

Fig. 199: Transmission Case & Differential Plate Seal Flush
Courtesy of GENERAL MOTORS CORP.

1. Clean the carrier seal plate in solvent.
2. Inspect for the following:
    - Cracks or other damage
    - A damaged oil seal bore
    - A damaged O-ring seal groove

Drive Pinion Cleaning and Inspection

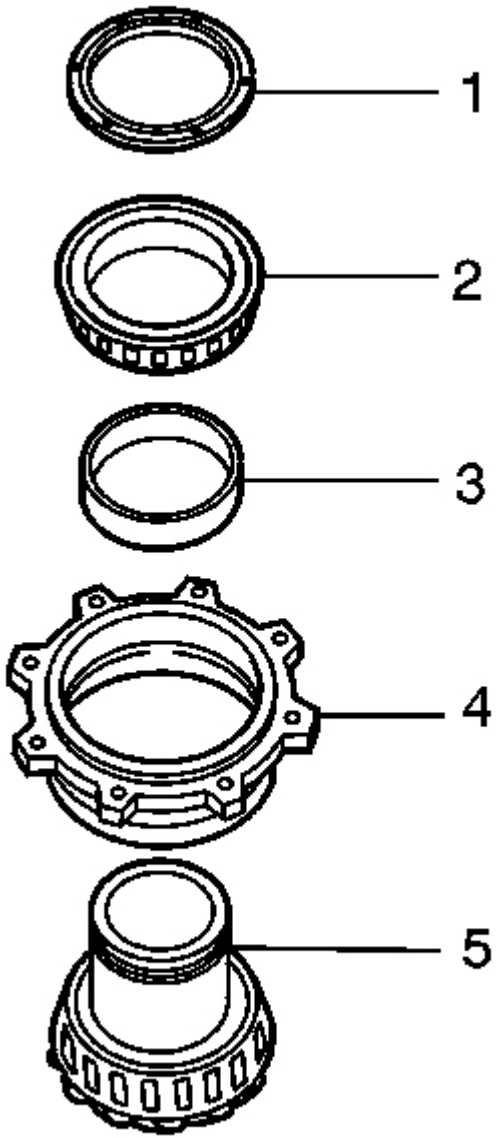

Fig. 200: Nut, Bearing, Spacer & Pinion Shaft & Housing/Cage
Courtesy of GENERAL MOTORS CORP.

1. Clean the pinion components in solvent.
2. Inspect for the following:
    - Damage to the nut threads or locking area (1)

- Worn or scored bearings (2)
- The pinion housing/cage (4) for damaged bolt holes, broken flanges, restrictions within the oil passages, worn or loose bearing races and/or race bores
- The pinion shaft (5) for damaged threads, worn splines, or worn or scored gear teeth

RING GEAR AND DIFFERENTIAL HOUSING ASSEMBLE

Tools Required

- **J 42162** Side Gear Compressor. See **Special Tools and Equipment** .
- **J 42170** Bearing and Race Installer. See **Special Tools and Equipment** .
- **J 42173** Differential Holding Fixture. See **Special Tools and Equipment** .

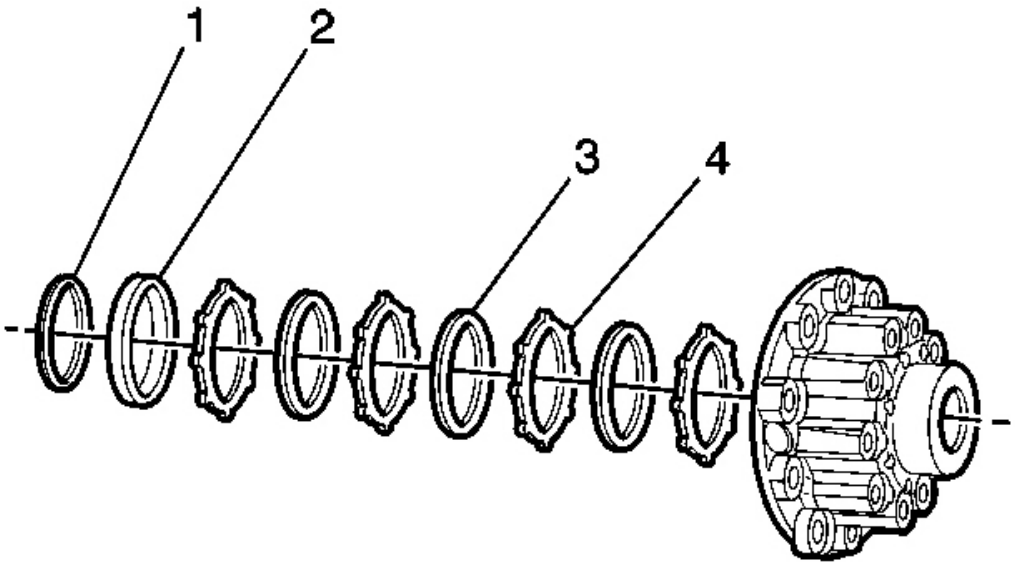

Fig. 201: Friction Discs, Separator Plates & Bellville Washer
Courtesy of GENERAL MOTORS CORP.

IMPORTANT: Friction discs and separator plates develop specific wear patterns. During disc and plate installation, the components must be installed in the specific order in which they were removed.

1. Install the right clutch pack to the right case.
   - Install the separator plates (4).

- Install the friction discs (3).
- Install the friction disc - thick (2).
- Install the bellville washer (1).

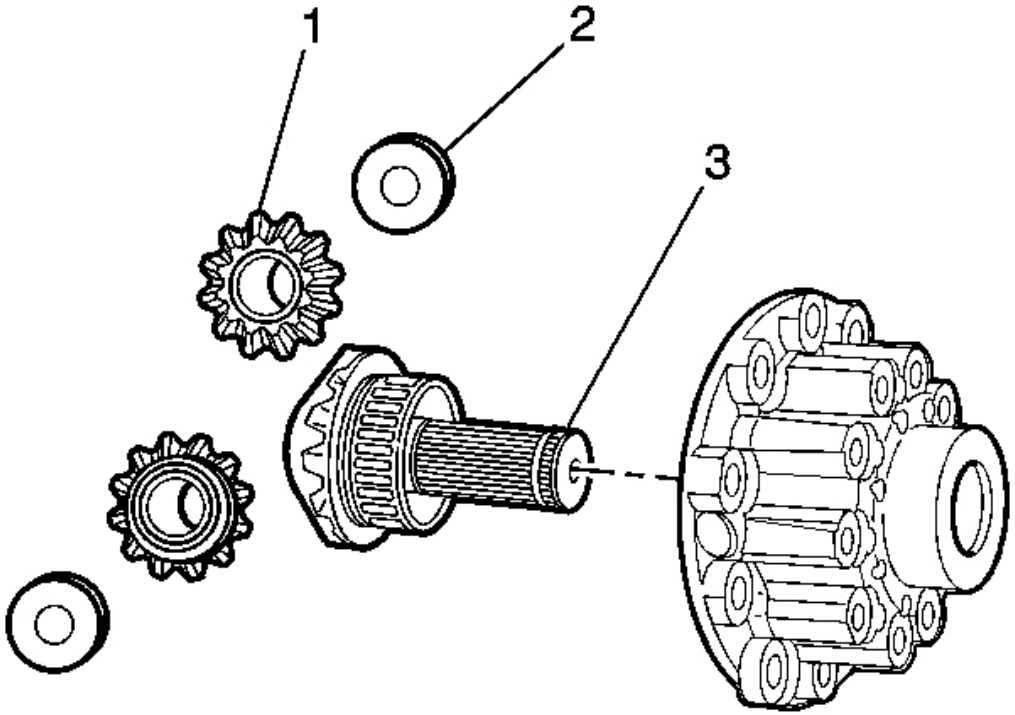

Fig. 202: Right Side Gears, Side Gear Washers & Output Shaft & Gear & Right Differential Case
Courtesy of GENERAL MOTORS CORP.

2. Install the right output shaft and gear (3), side gears (1), and washers (2) to the right differential case.

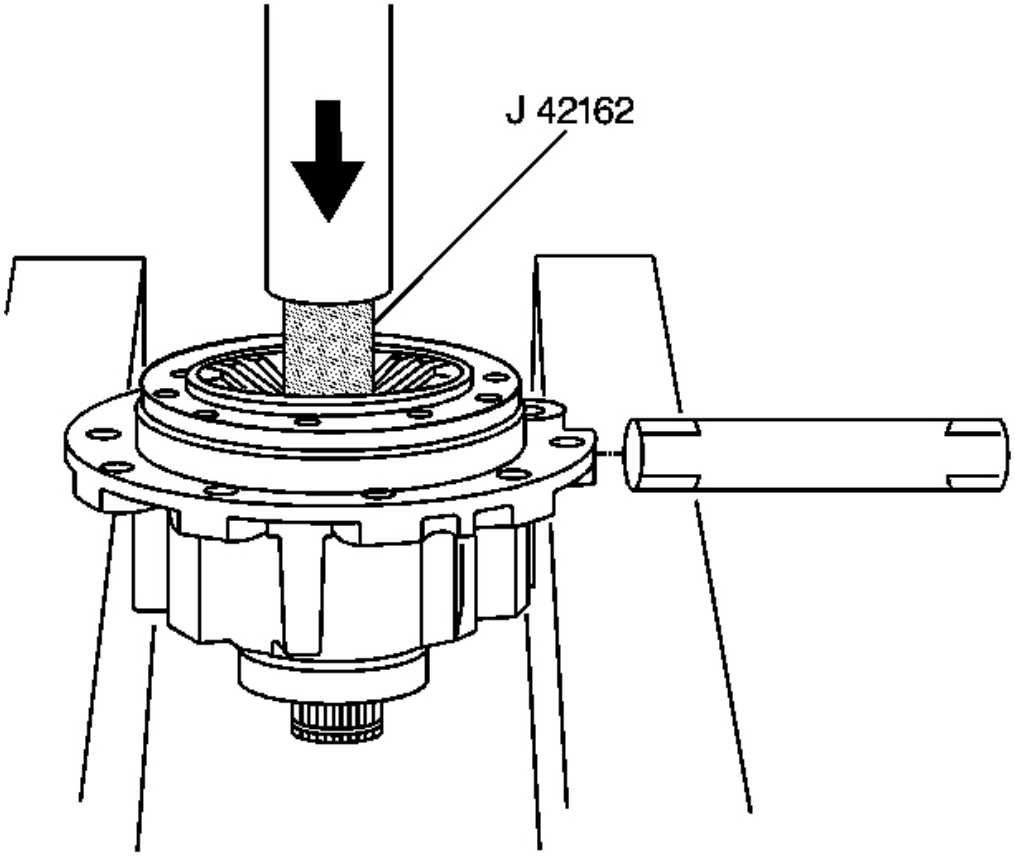

Fig. 203: Right Differential Case, Bellville Washer & Clutch Pack
Courtesy of GENERAL MOTORS CORP.

3. Using the **J 42162** and a hydraulic press, compress the bellville washer and clutch pack in order to install the cross pin to the right differential case. See **Special Tools and Equipment** .

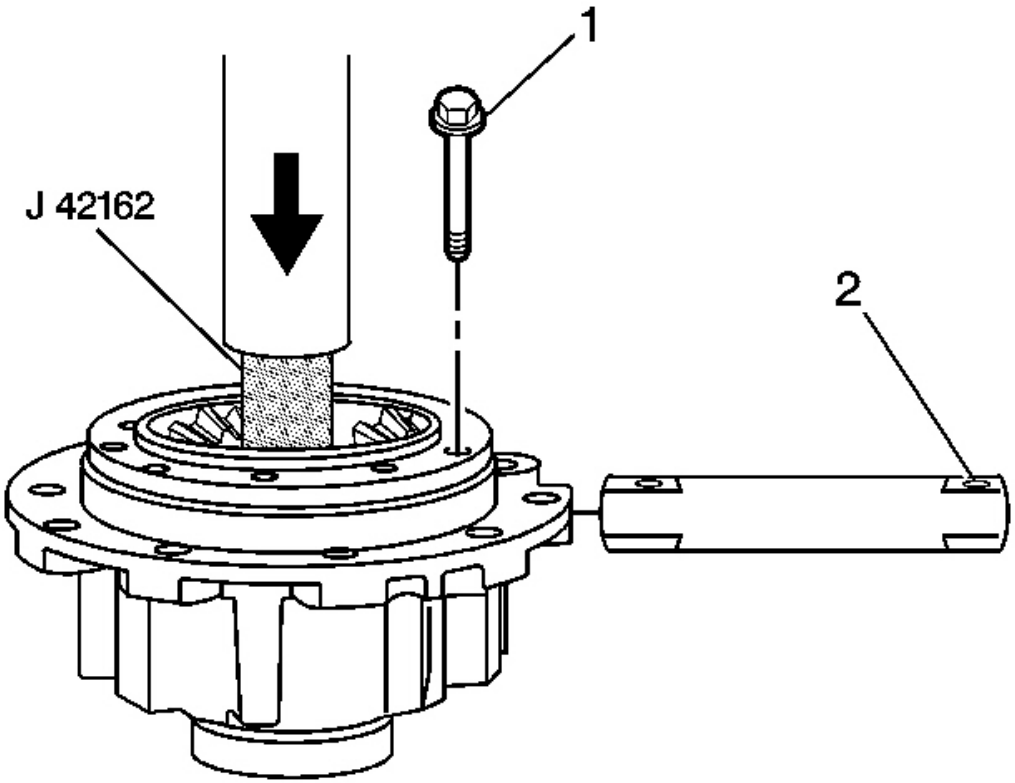

Fig. 204: Pin, Pin Retaining Bolt &
Courtesy of GENERAL MOTORS CORP.

4. Using an M8 bolt for alignment, properly position the cross pin into the right differential case. The hole in the pin (2) must align with the hole in the case. During final assembly of the case halves, the pin retaining bolt (1) must be able to pass through the hole in the cross pin.
5. With the pin and case aligned, release the pressure from the press and remove the **J 42162** and bolt. See **Special Tools and Equipment** .

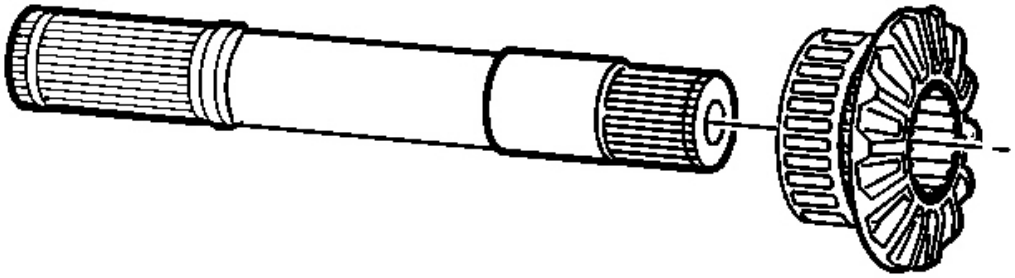

Fig. 205: Left Output Shaft & Gear
Courtesy of GENERAL MOTORS CORP.

6. Install the gear to the left output shaft.

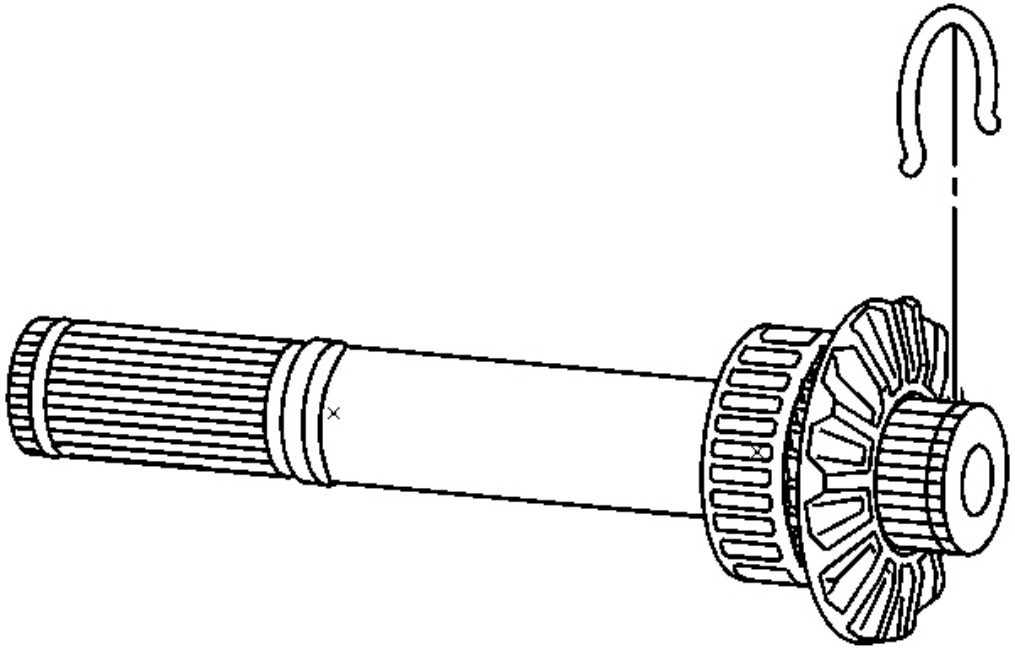

Fig. 206: Left Output Shaft & C-Clip
Courtesy of GENERAL MOTORS CORP.

7. Install the C-clip to the left output shaft.

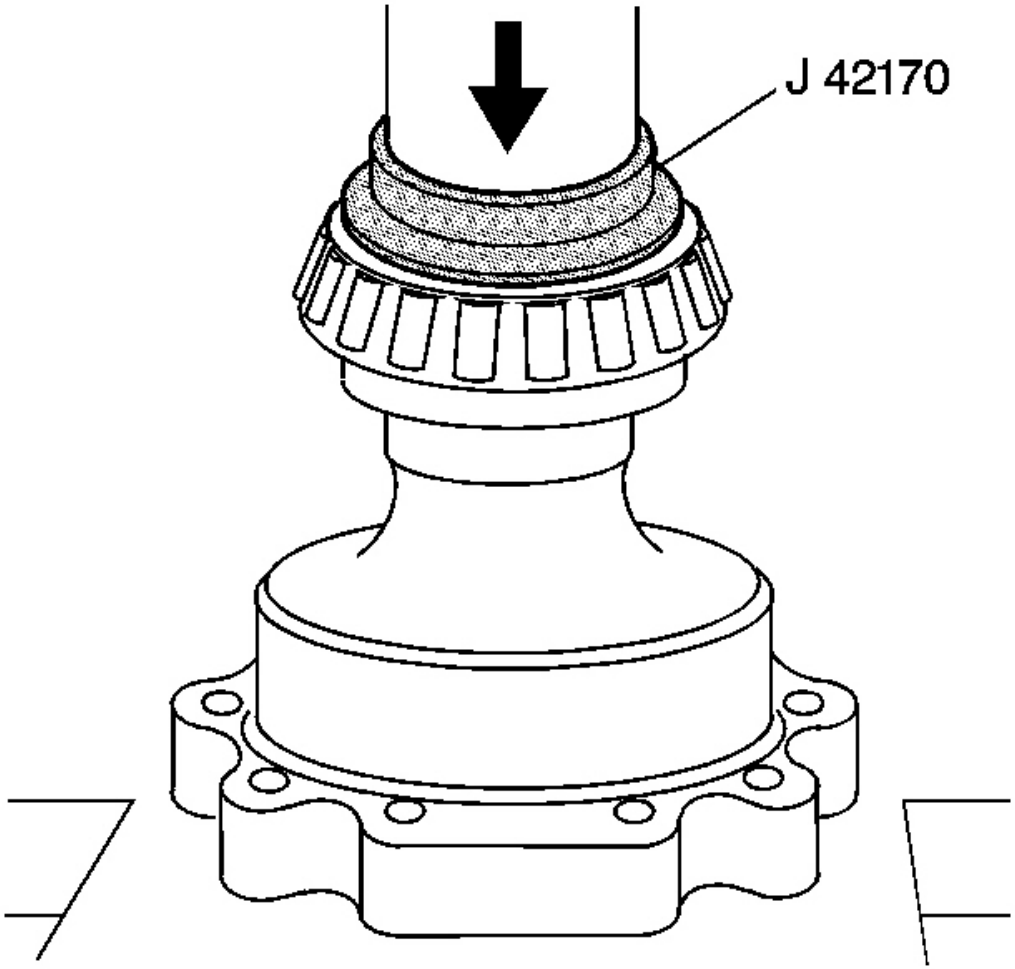

Fig. 207: Left Side Bearing & J 42170
Courtesy of GENERAL MOTORS CORP.

8. Using the **J 42170** and a hydraulic press, install the left side bearing to the differential. See **Special Tools and Equipment** .

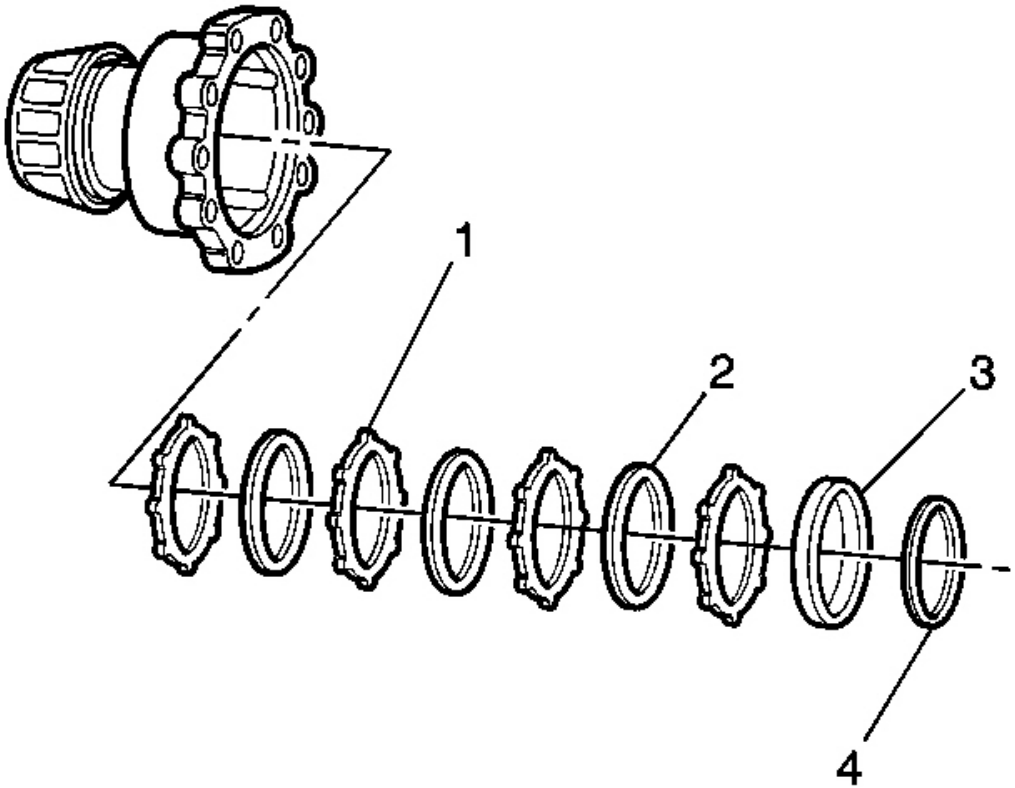

Fig. 208: Friction Discs & Separator Plates
Courtesy of GENERAL MOTORS CORP.

IMPORTANT: Friction discs and separator plates develop specific wear patterns. During disc and plate installation, the components must be installed in the specific order in which they were removed.

9. Install the left clutch pack to the left case.
   - Install the separator plates (1).
   - Install the friction discs (2).
   - Install the friction disc - thick (3).
   - Install the bellville washer (4).

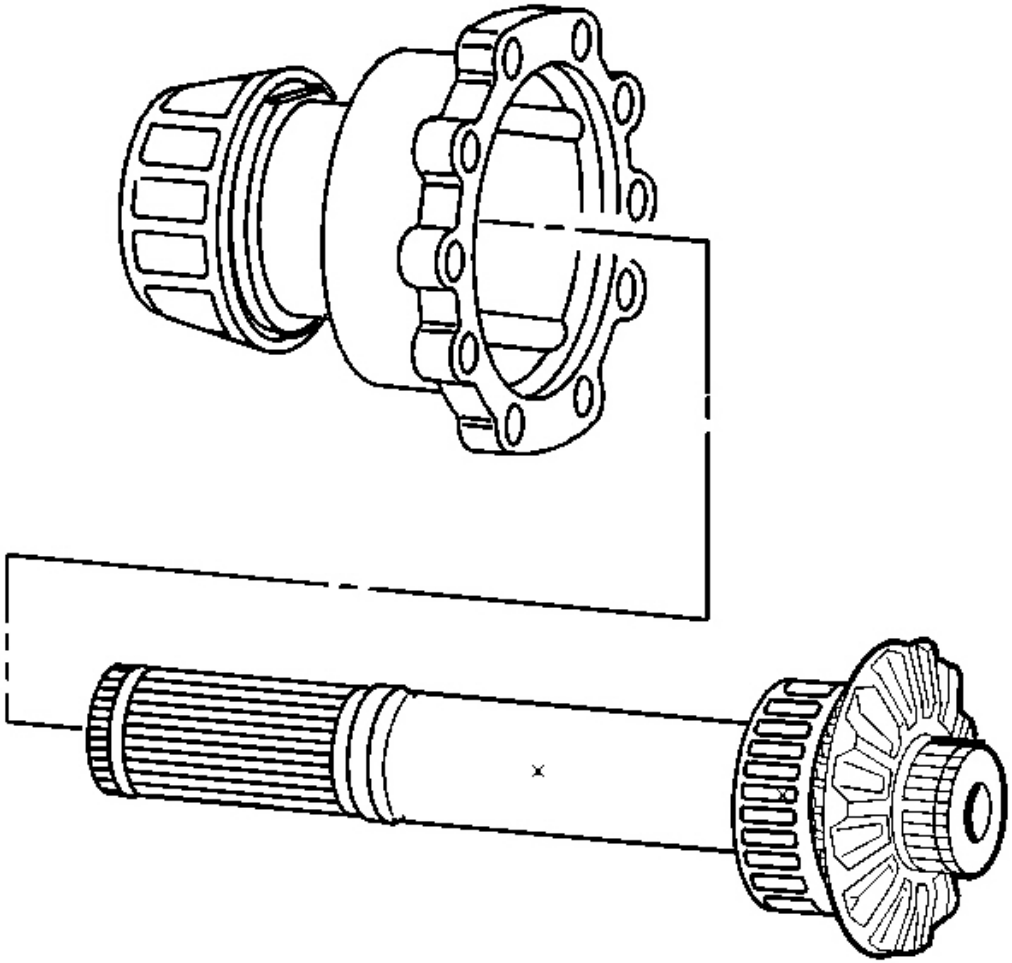

Fig. 209: Left Case, Left Output Shaft & Gear
Courtesy of GENERAL MOTORS CORP.

10. Install the left output shaft and gear to the left case.

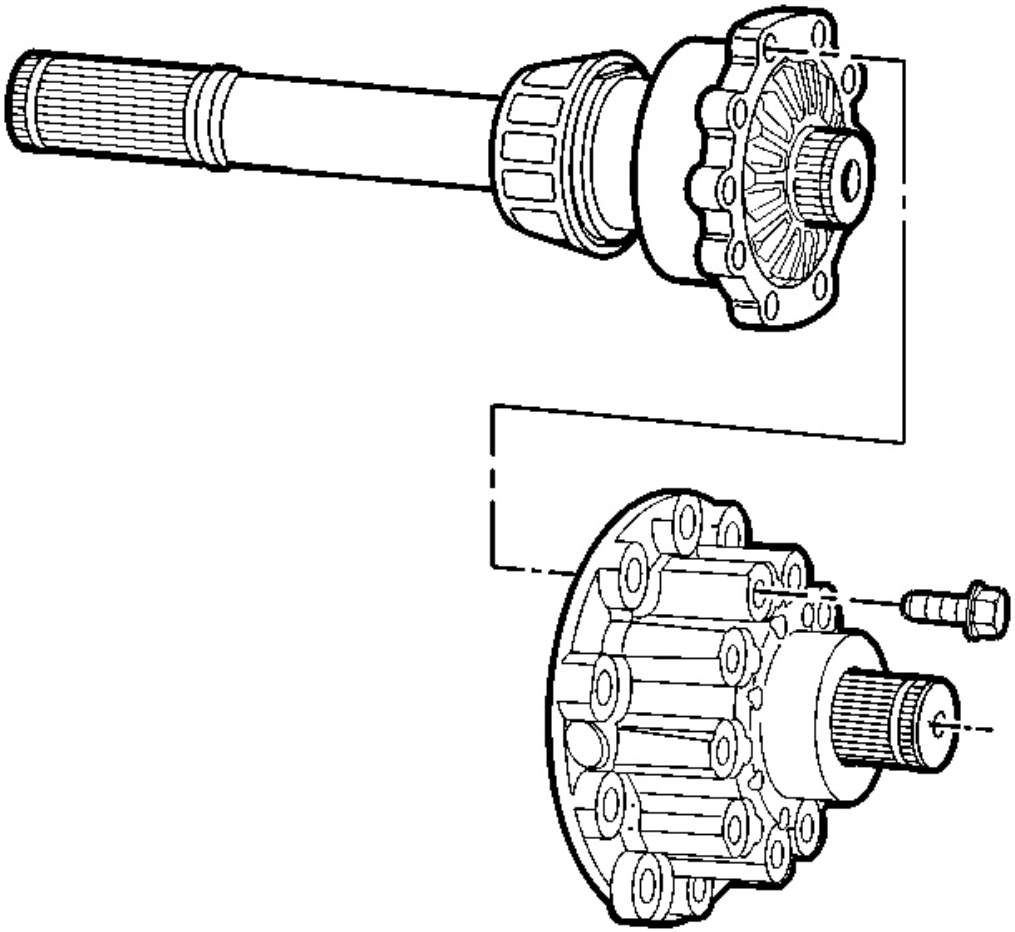

Fig. 210: Differential Case Bolts & Case Halves, Right & Left
Courtesy of GENERAL MOTORS CORP.

11. Assemble the case halves.

NOTE: **Refer to Fastener Notice in Cautions and Notices.**

12. Install the case bolts.

Tighten: Tighten the bolts to 55 N.m (41 lb ft).

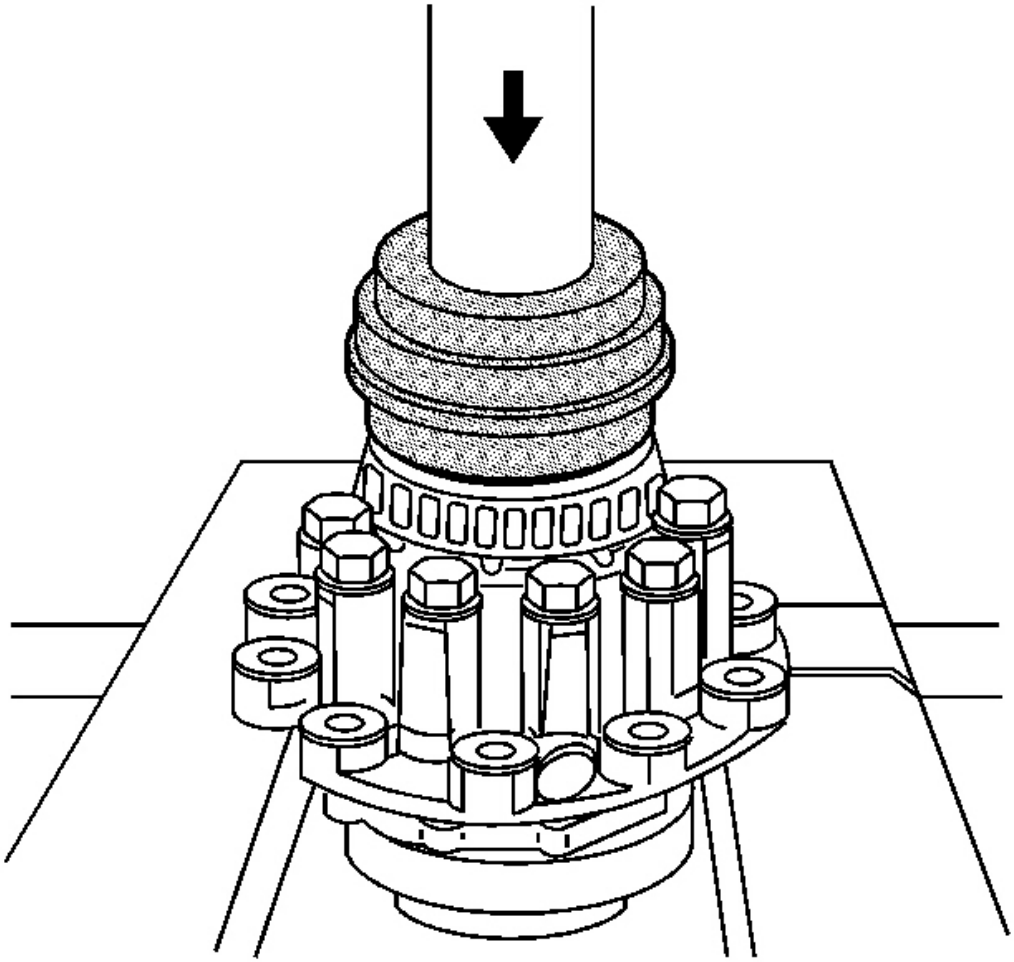

Fig. 211: Right Side Bearing & J 42170
Courtesy of GENERAL MOTORS CORP.

13. Using the **J 42170** and a hydraulic press, install the right side bearing to the differential. See **Special Tools and Equipment** .

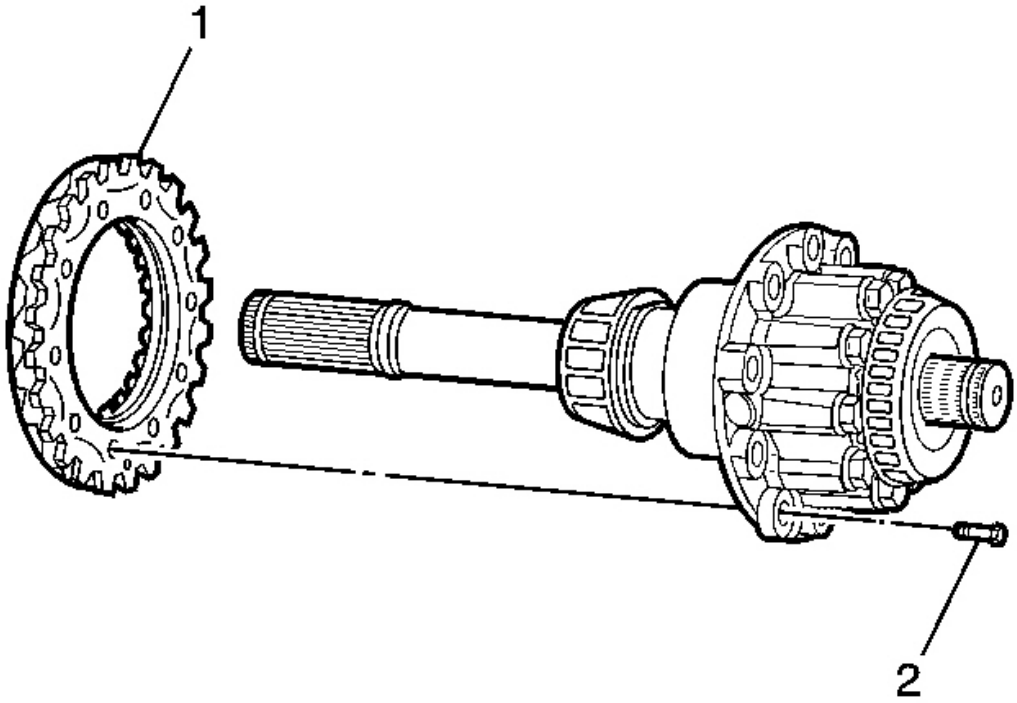

Fig. 212: Ring Gear & Ring Gear Bolts
Courtesy of GENERAL MOTORS CORP.

14. Install the ring gear (1) to the differential. Use several bolts to properly align the ring gear to the case.

    A hammer and brass punch may be used to aid in seating the ring gear onto the differential case.

15. Install the NEW ring gear bolts (2).

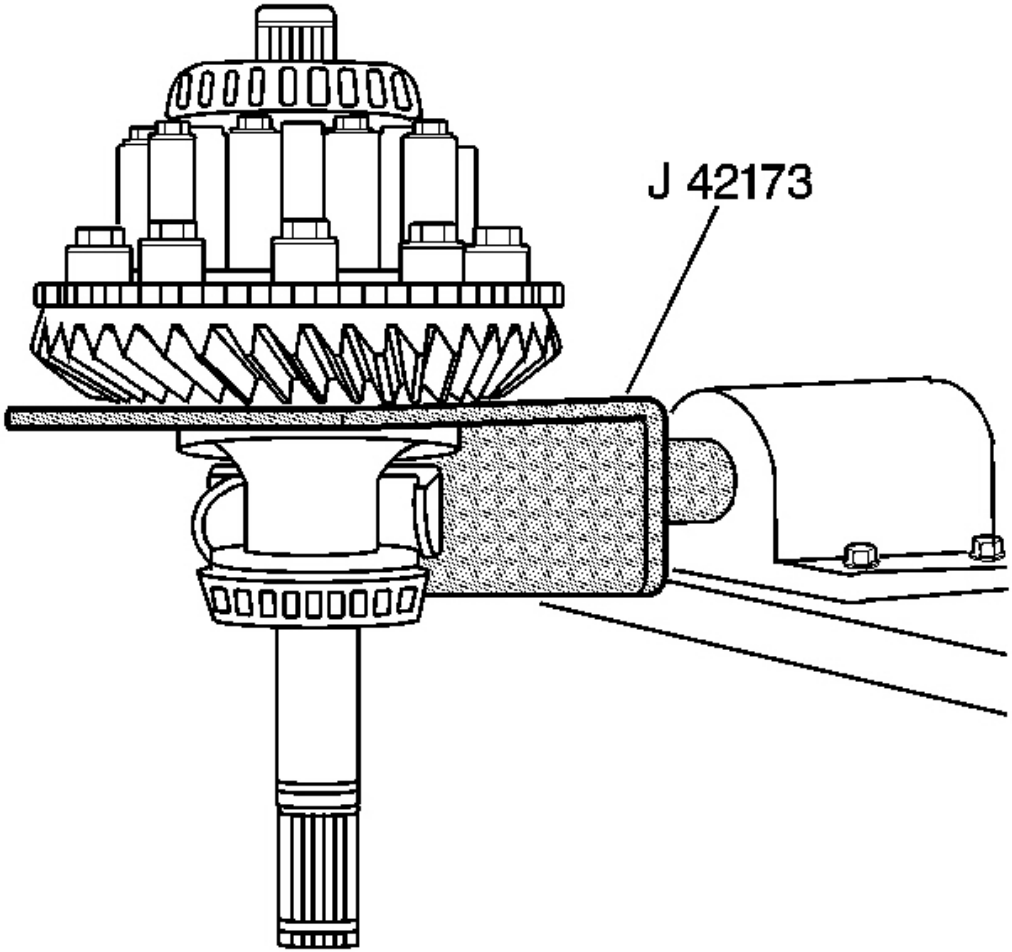

Fig. 213: Differential Case Assembly & J 42173
Courtesy of GENERAL MOTORS CORP.

16. Position the differential assembly onto the **J 42173** . See **Special Tools and Equipment** .

    Tighten: Tighten the ring gear bolts to 195 N.m (144 lb ft).

DRIVE PINION SHIM SELECTION

Tools Required

- **J 42168-1** Differential Centerline Cylinder. See **Special Tools and Equipment** .
- **J 42168-2** Shim Gage Assembly. See **Special Tools and Equipment** .

- **J 42168-9** Holding Strap. See **Special Tools and Equipment** .
- **J 42168-11** Pinion Housing Centering Spacer. See **Special Tools and Equipment** .
- **J 42173** Differential Holding Fixture. See **Special Tools and Equipment** .

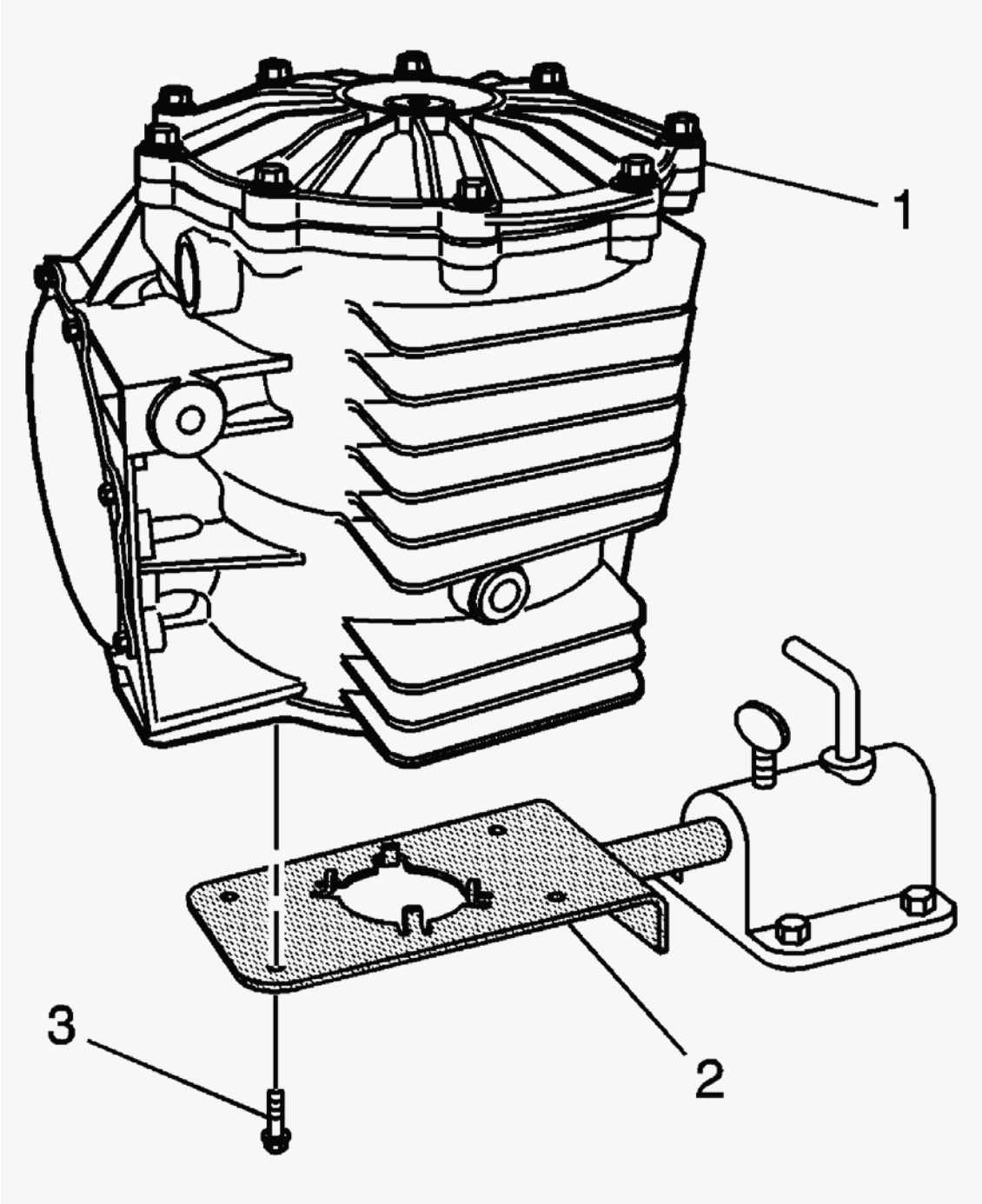

Fig. 214: J 42173 & Differential Assembly
Courtesy of GENERAL MOTORS CORP.

IMPORTANT: The pinion depth adjustment procedure and shim selection must be performed prior to pinion shaft and housing assembly.

1. Install the differential assembly (1) onto the **J 42173** (2). See **Special Tools and Equipment** .

NOTE: Refer to Fastener Notice in Cautions and Notices.

2. Install 4 M8 x 1.25 bolts (3).

Tighten: Tighten the bolts to 25 N.m (18 lb ft).

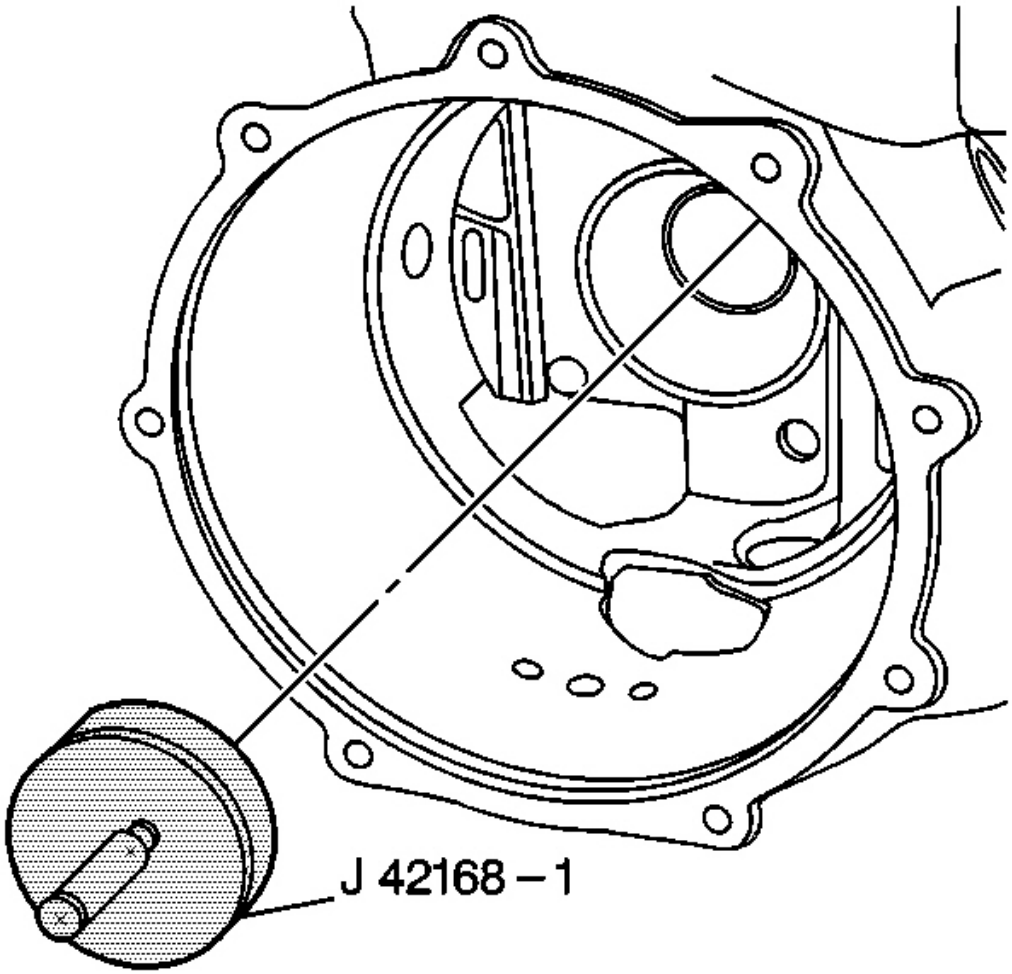

Fig. 215: Left Bearing Race Bore & J 42168-1 Removed

Courtesy of GENERAL MOTORS CORP.

3. Install the **J 42168-1** into the left bearing race bore of the differential housing. See **Special Tools and Equipment** .

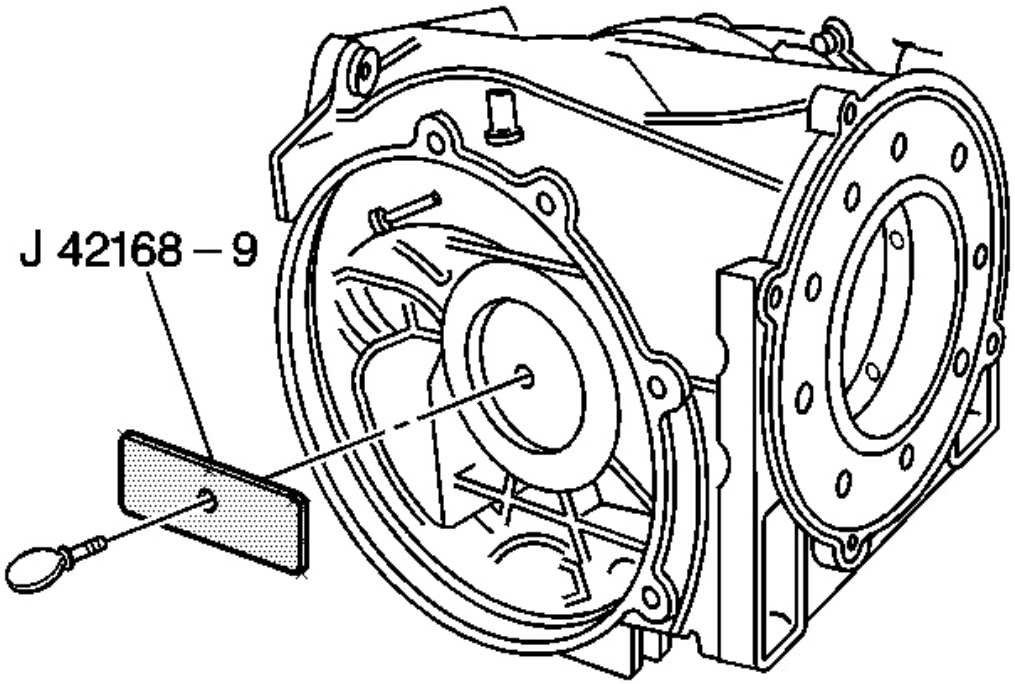

Fig. 216: Thumbscrew & J 42168-9 Removed
Courtesy of GENERAL MOTORS CORP.

4. Install the **J 42168-9** and thumbscrew to the **J 42168-1** . See **Special Tools and Equipment** . Tighten the thumbscrew until snug.

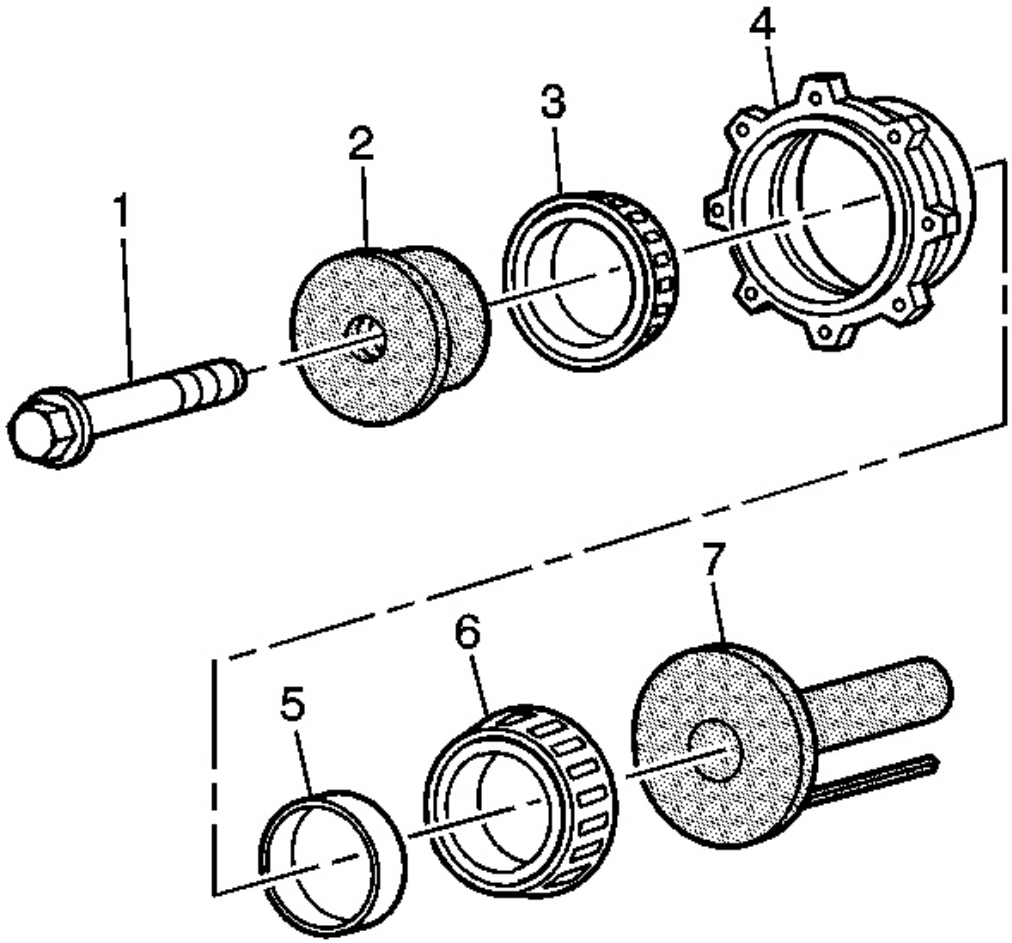

Fig. 217: Bearing Races & Components
Courtesy of GENERAL MOTORS CORP.

5. Install the bearing races into the pinion housing/cage (4). Refer to **Drive Pinion Assemble** .
6. Install the **J 42168-11** (2), bearings (3 and 6), spacer (5), **J 42168-2** (7), and bolt (1) to the pinion housing/cage (4). See **Special Tools and Equipment** . Tighten the bolt until sung.

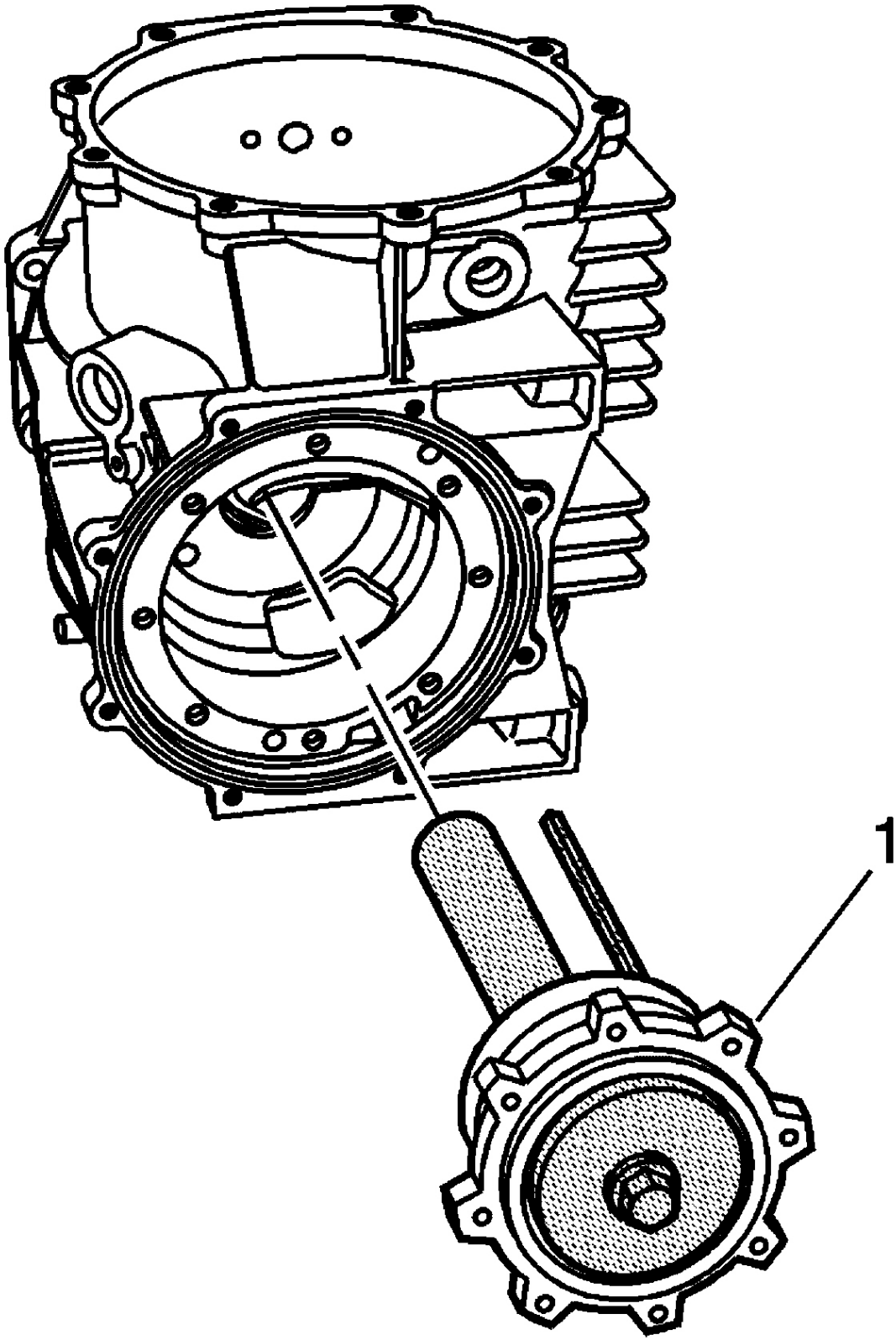
1

Fig. 218: Differential Housing & Pinion Housing/Cage Assembly
Courtesy of GENERAL MOTORS CORP.

7. Install the pinion housing/cage assembly (1) into the differential housing.

   The use of M8 x 1.25 dowels or long bolts will ease in pinion housing installation and alignment.

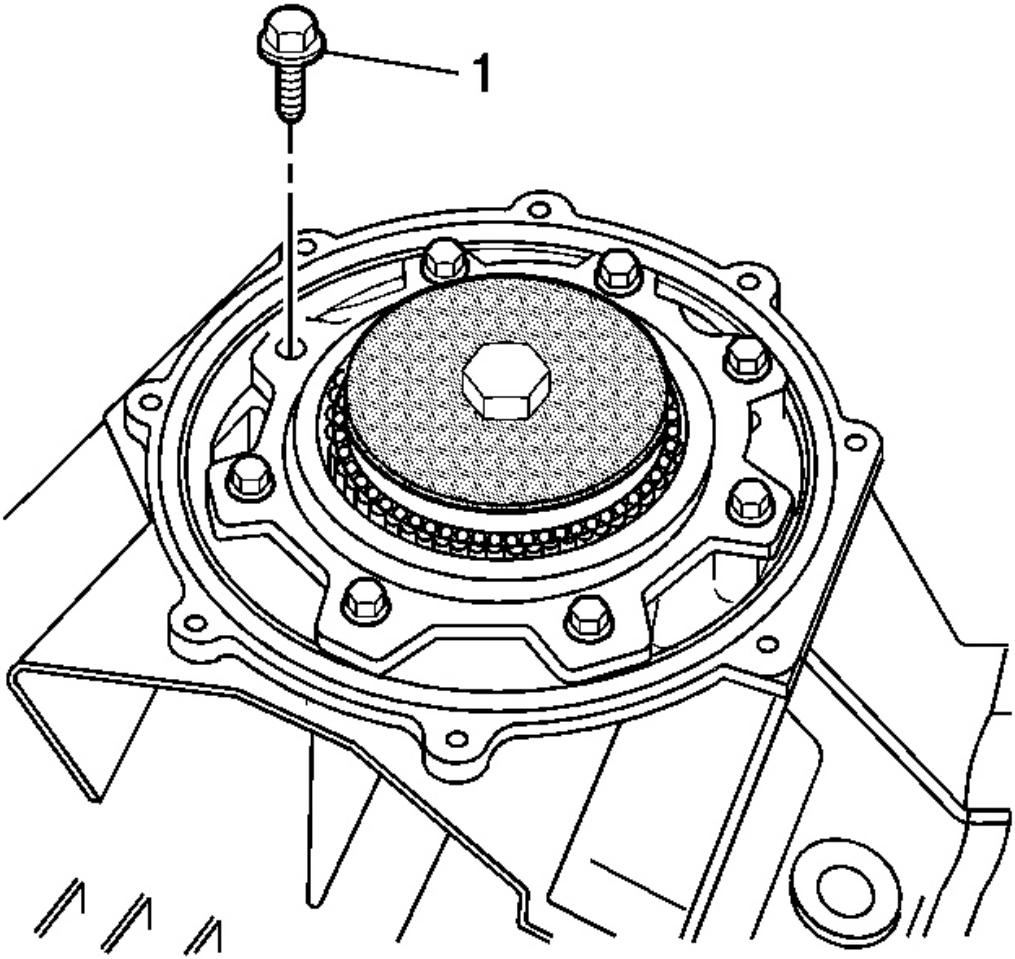

Fig. 219: Pinion Housing/Cage Bolts
Courtesy of GENERAL MOTORS CORP.

IMPORTANT: ALL of the pinion housing/cage bolts must be installed in order to obtain an accurate measurement and correct shim selection.

8. Install the pinion housing/cage bolts (1).

   Tighten: Tighten the bolts to 25 N.m (18 lb ft).

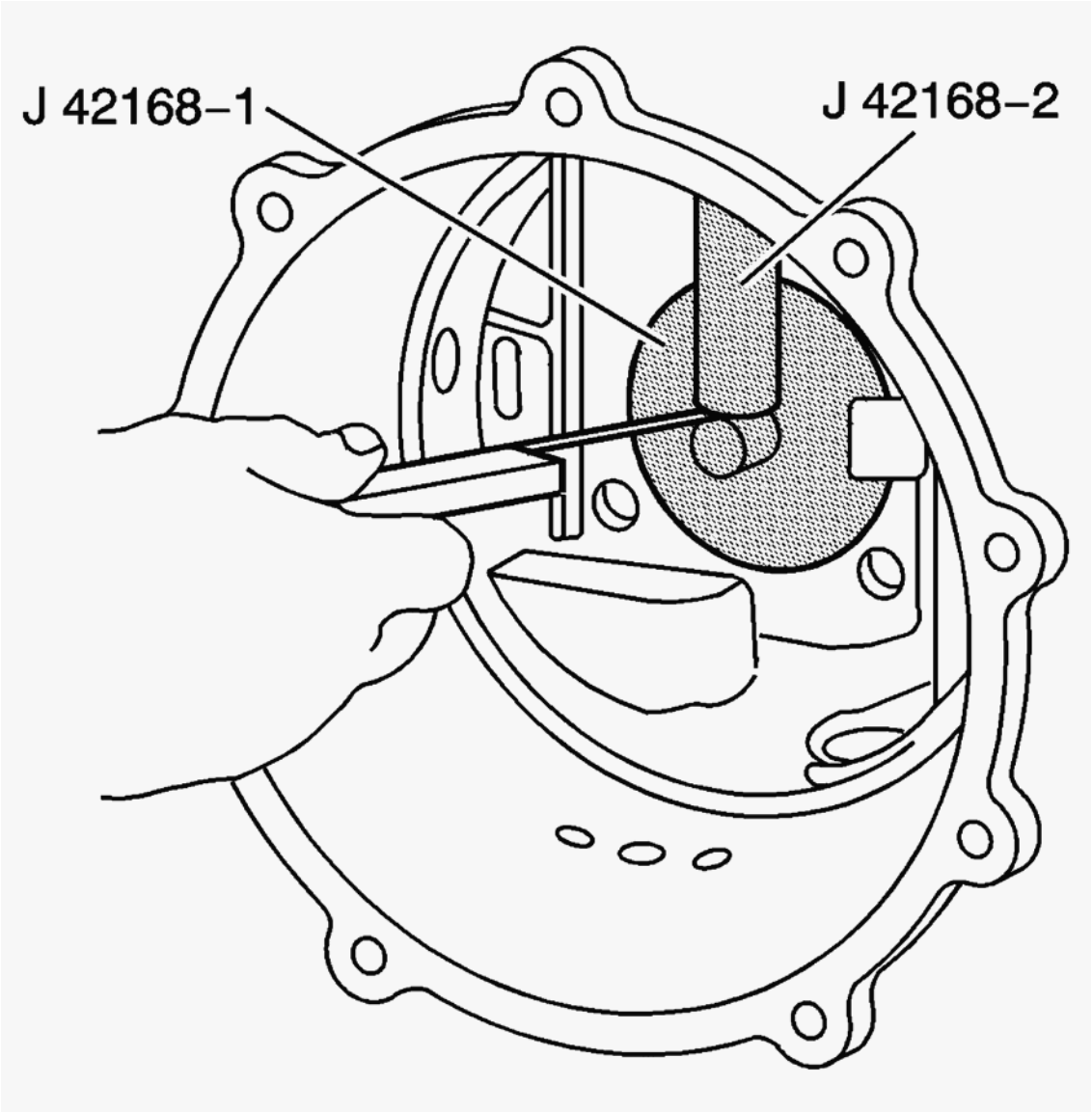

Fig. 220: Feeler Gage
Courtesy of GENERAL MOTORS CORP.

9. Using a feeler gage, measure the distance between the **J 42168-2** and the **J 42168-1** . See **Special Tools and Equipment** . Record the dimension as B1.
10. Subtract the B1 value from a B nominal value of 5 mm (0.197 in). Record that calculation as B2.

    Refer to the applicable calculation tables in **Spacer and Shim Specifications** .

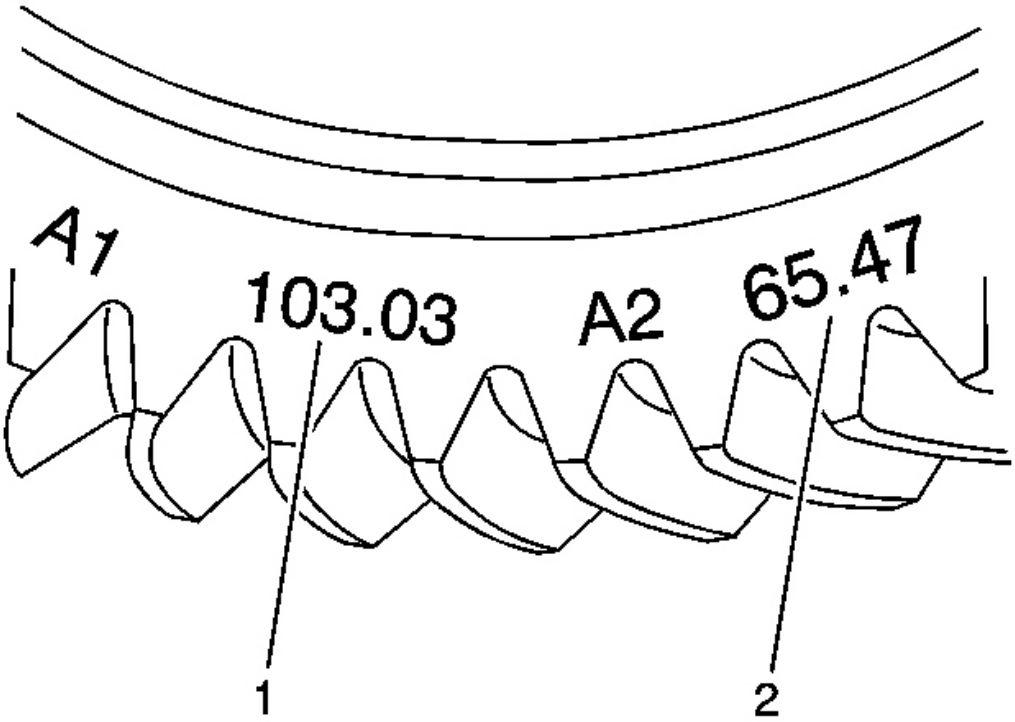

Fig. 221: Locating A1 Value & A2 Value On Side Of Ring Gear
Courtesy of GENERAL MOTORS CORP.

11. Locate the A1 value (1) on the side of the ring gear.

IMPORTANT: The A1 value is a manufacturing variation between the ring gear and pinion. The A1 value may be higher, lower, or equal to 103.00 mm (4.055 in) nominal value. When subtracting the A nominal value from the A1 value, the B3 calculation may compute to a positive, negative, or zero total.

12. Subtract the A nominal value of 103.00 mm (4.055 in) from the A1 value. Record the calculation as B3.
13. Add the B2 value to the B3 value for the proper pinion housing shim thickness. The B3 value may be a positive, negative, or zero value.
14. Select shims equal to the calculated value. It may be necessary to round the shim or shims total to obtain the proper size shim pack. If the shim thickness calculation is past the midpoint value, round the number higher to the next decimal value.

Refer to **Rear Axle Specifications** .

DIFFERENTIAL SIDE BEARINGS ASSEMBLE

Tools Required

- **J 42155** Differential Lifting Tool. See **Special Tools and Equipment** .
- **J 42168-1** Differential Centerline Cylinder. See **Special Tools and Equipment** .
- **J 42168-2** Shim Gage Assembly. See **Special Tools and Equipment** .
- **J 42168-7** Depth Gage. See **Special Tools and Equipment** .
- **J 42168-9** Holding Strap. See **Special Tools and Equipment** .
- **J 42168-11** Pinion Housing Centering Spacer. See **Special Tools and Equipment** .
- **J 42168-13** Gage Plate Assembly. See **Special Tools and Equipment** .
- **J 42168-15** Side Bearing Shim Selector. See **Special Tools and Equipment** .
- **J 42168-16** Spacers. See **Special Tools and Equipment** .
- **J 42170** Bearing and Race Installer. See **Special Tools and Equipment** .
- **J 42173** Differential Holding Fixture. See **Special Tools and Equipment** .

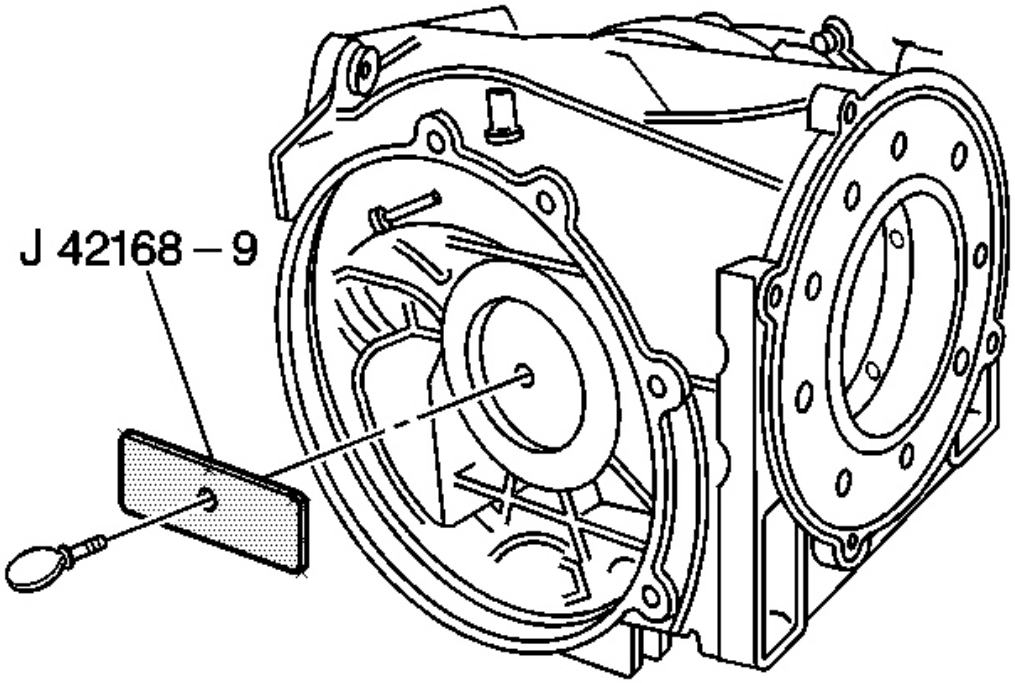

Fig. 222: Install/Remove J 42168-9 Thumbscrew
Courtesy of GENERAL MOTORS CORP.

1. Remove the **J 42168-9** and thumbscrew from the **J 42168-1** . See **Special Tools and Equipment** .

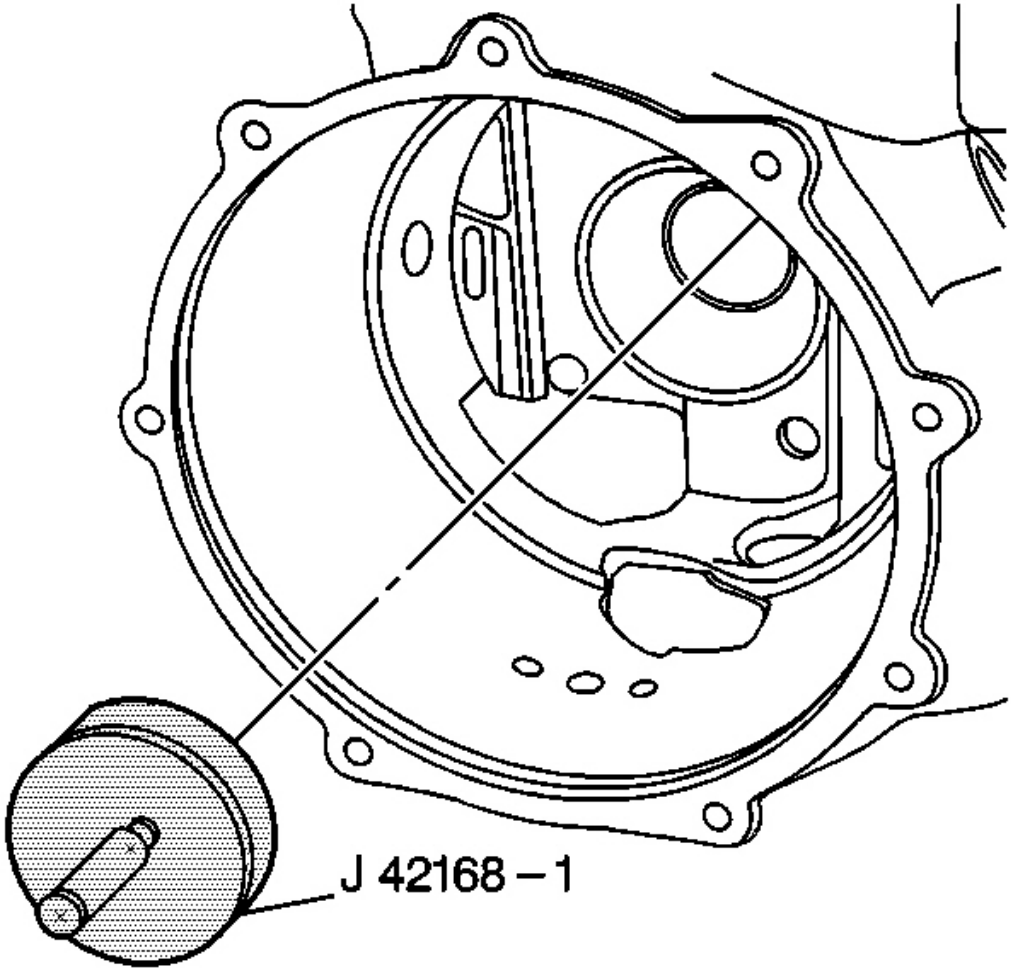

Fig. 223: Left Bearing Race Bore & J 42168-1 Removed
Courtesy of GENERAL MOTORS CORP.

2. Remove the **J 42168-1** from the left bearing race bore of the differential housing. See **Special Tools and Equipment** .

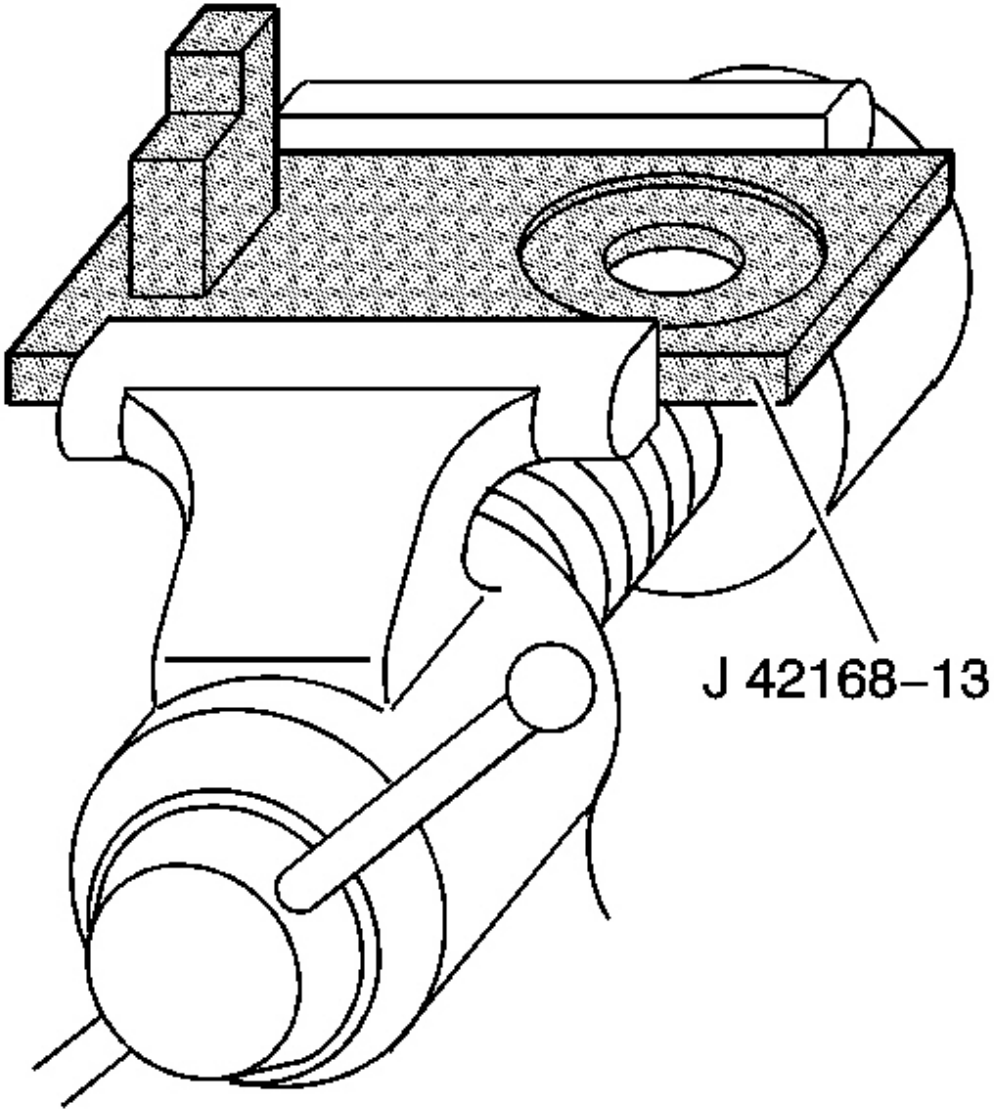

Fig. 224: Installing J 42168-13 Into Vice
Courtesy of GENERAL MOTORS CORP.

IMPORTANT: Level the tool in order to obtain accurate measurements.

3. Install the **J 42168-13** into a vice. See **Special Tools and Equipment** .

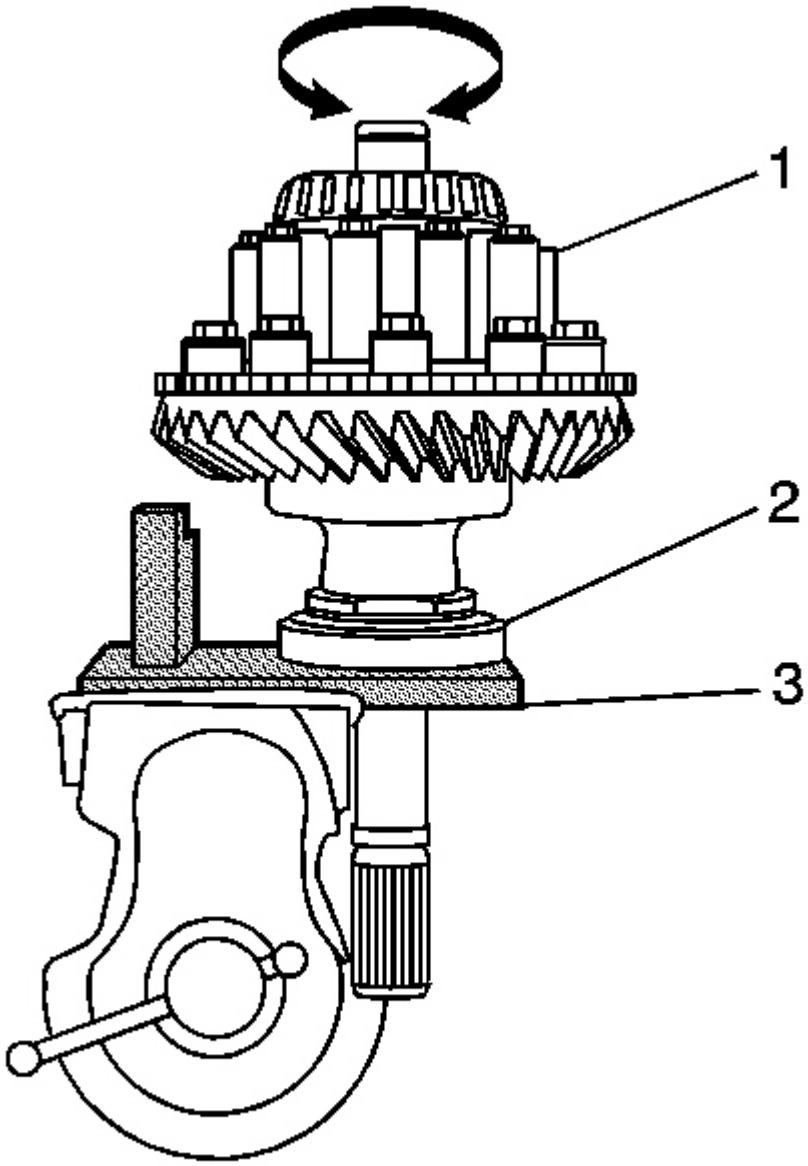

Fig. 225: Differential Case & Bearing Race
Courtesy of GENERAL MOTORS CORP.

4. Position the bearing race (2) onto the **J 42168-13** (3). See **Special Tools and Equipment** .
5. Position the differential case (1) onto the **J 42168-13** (3) and into the bearing race (2). See **Special Tools and Equipment** . Rotate the differential, in both directions, in order to seat the bearing to the race.

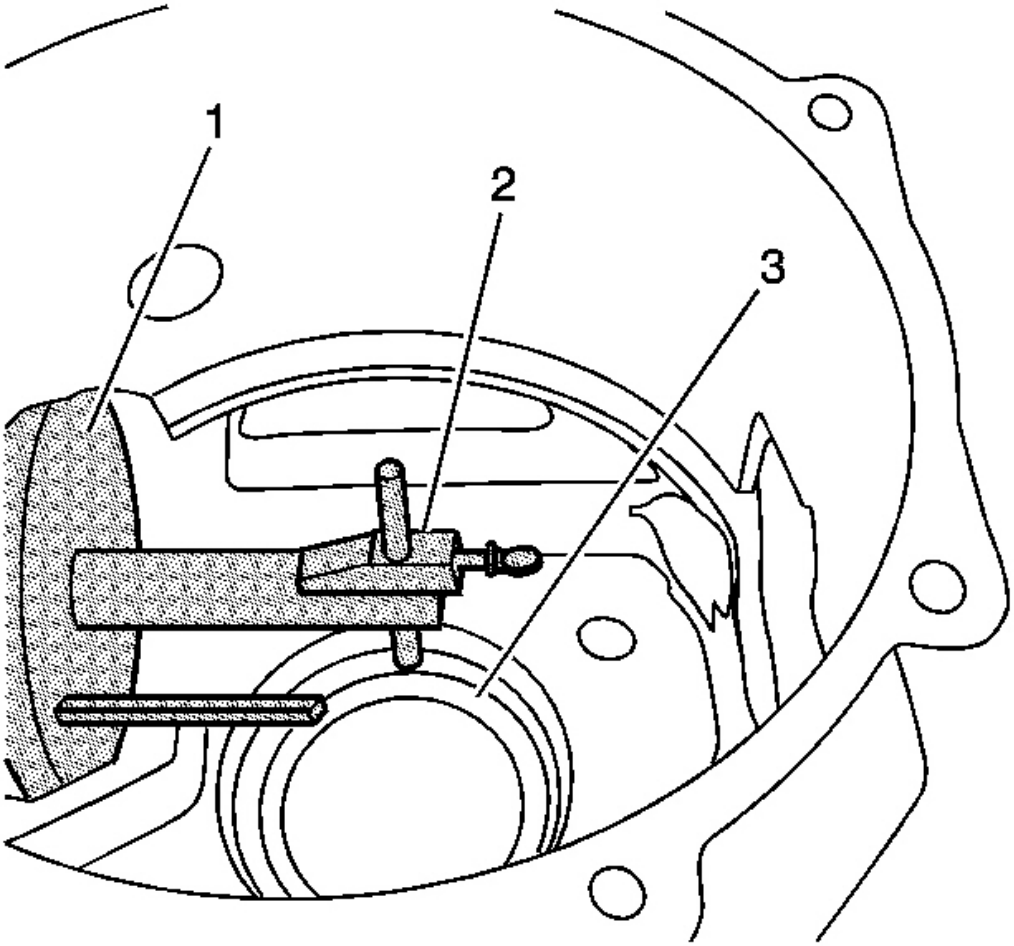

Fig. 226: Installing J 42168-7 Into Bottom Of Bearing Race Bore
Courtesy of GENERAL MOTORS CORP.

6. Install the **J 42168-7** (2) into the hole in **J 42168-2** (1). See **Special Tools and Equipment** . Loosen the thumbscrew and allow the rod to contact the bottom of the bearing race bore, machined surface (3).
7. Tighten the thumbscrew.
8. Remove the **J 42168-7** from the **J 42168-2** . See **Special Tools and Equipment** .

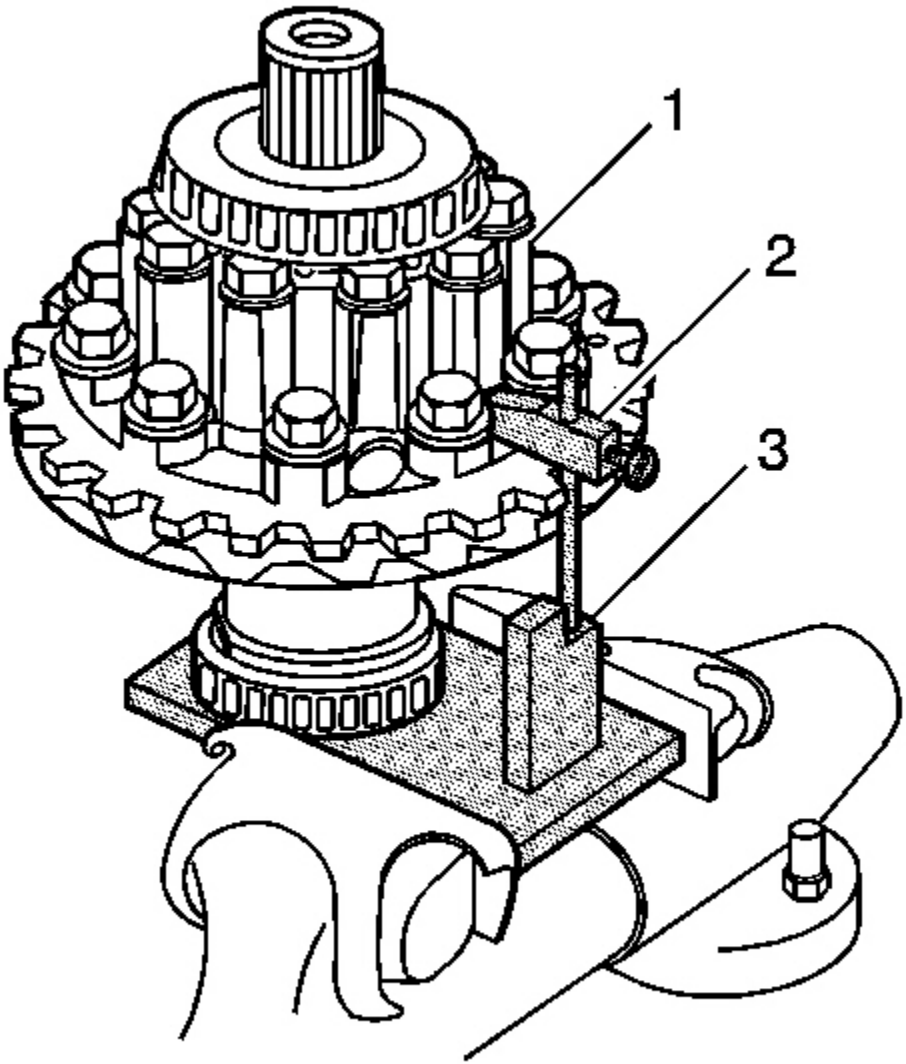

Fig. 227: Installing J 42168-7 Into Oil Passages Of Differential
Courtesy of GENERAL MOTORS CORP.

9. Install the **J 42168-7** (2) into one of the two oil passages of the differential (1). See **Special Tools and Equipment** . The tapered portion of the tool will wedge and be retained into the differential.
10. Rotate the differential until the rod of **J 42168-7** is above the **J 42168-13** (3) gage block. See **Special Tools and Equipment** .

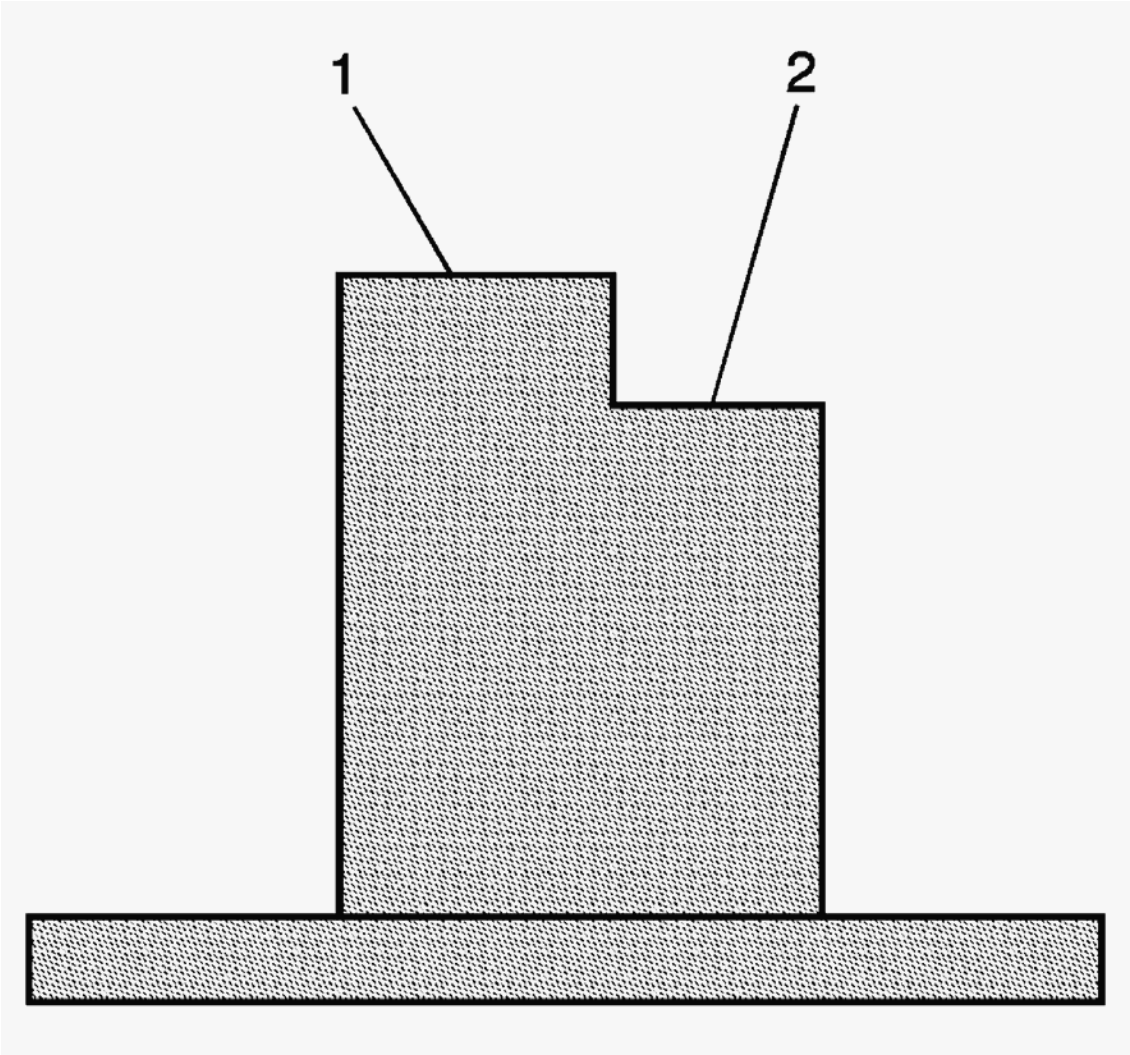

Fig. 228: Upper Gage Block & Lower Gage Block
Courtesy of GENERAL MOTORS CORP.

11. The **J 42168-13** upper gage block location (1) is used when servicing 2. See **Special Tools and Equipment** .73 ratio differentials. The lower gage block location (2) is used when servicing the 3.15 and 3.42 ratio differentials.

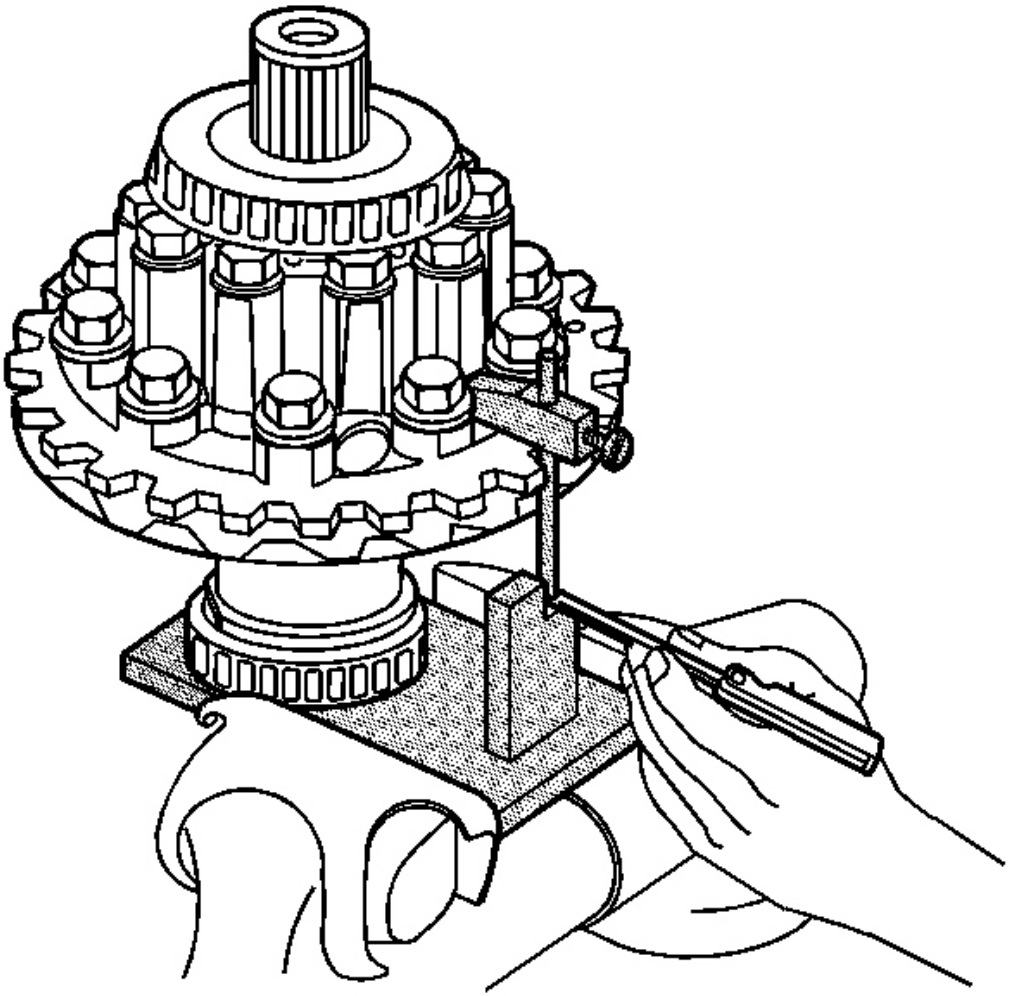

Fig. 229: Measuring Distance Between Rod Of J 42168-7 & Gage Block Using A Feeler Gage
Courtesy of GENERAL MOTORS CORP.

12. Using a feeler gage, measure the distance between the rod of **J 42168-7** and the gage block of **J 42168-13** . See **Special Tools and Equipment** . Record the measurement as dimension C1.
13. Subtract C1 value from a C nominal value of 5 mm (0.197 in). Record that calculation as C2.

    Refer to the applicable calculation table in **Spacer and Shim Specifications** .

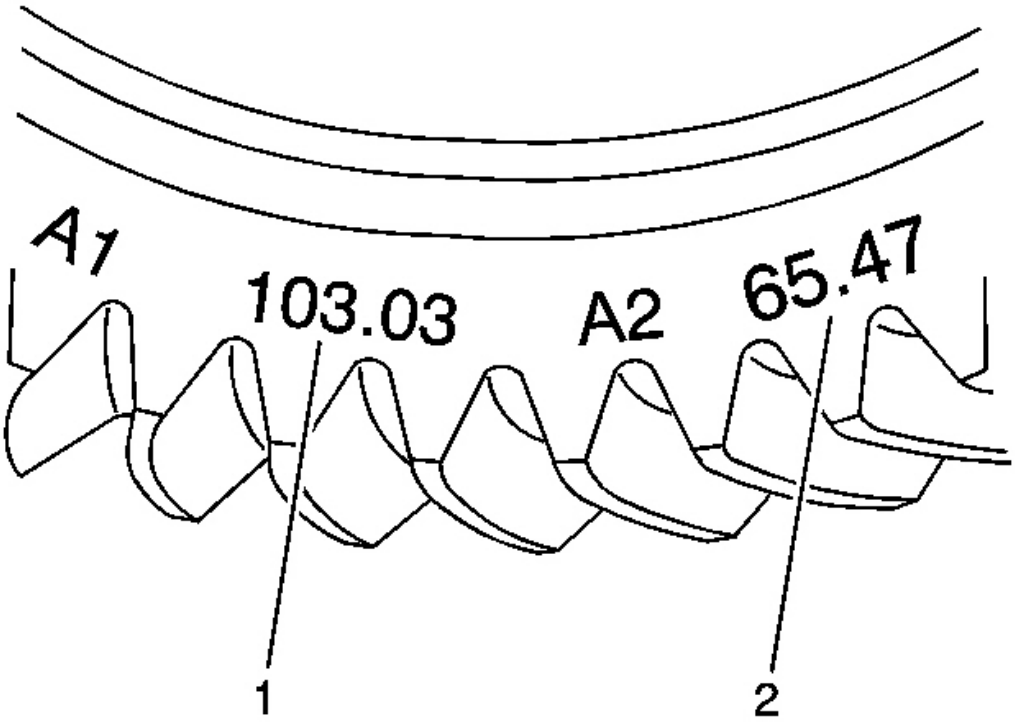

Fig. 230: Locating A1 Value & A2 Value On Side Of Ring Gear
Courtesy of GENERAL MOTORS CORP.

14. Locate the A2 value (2) on the side of the ring gear.

IMPORTANT: The A2 value is a manufacturing variation between the ring gear and pinion. The A2 value may be higher, lower, or equal to 65.5 mm (2.58 in), 3.15 and 3.42 ratio differentials, or 74.5 mm (2.93 in), 2.73 ratio differential, nominal value. When subtracting the D nominal value from the A2 value, the C3 calculation may compute to a positive, negative, or zero total.

15. Subtract the D nominal value of either 65.5 mm (2.58 in) or 74.5 mm (2.93 in) from the A2 value. Record the calculation as C3.
16. Add the C2 value to the C3 value for the proper left side differential bearing shim thickness. The C3 value may be a positive, negative, or zero value.

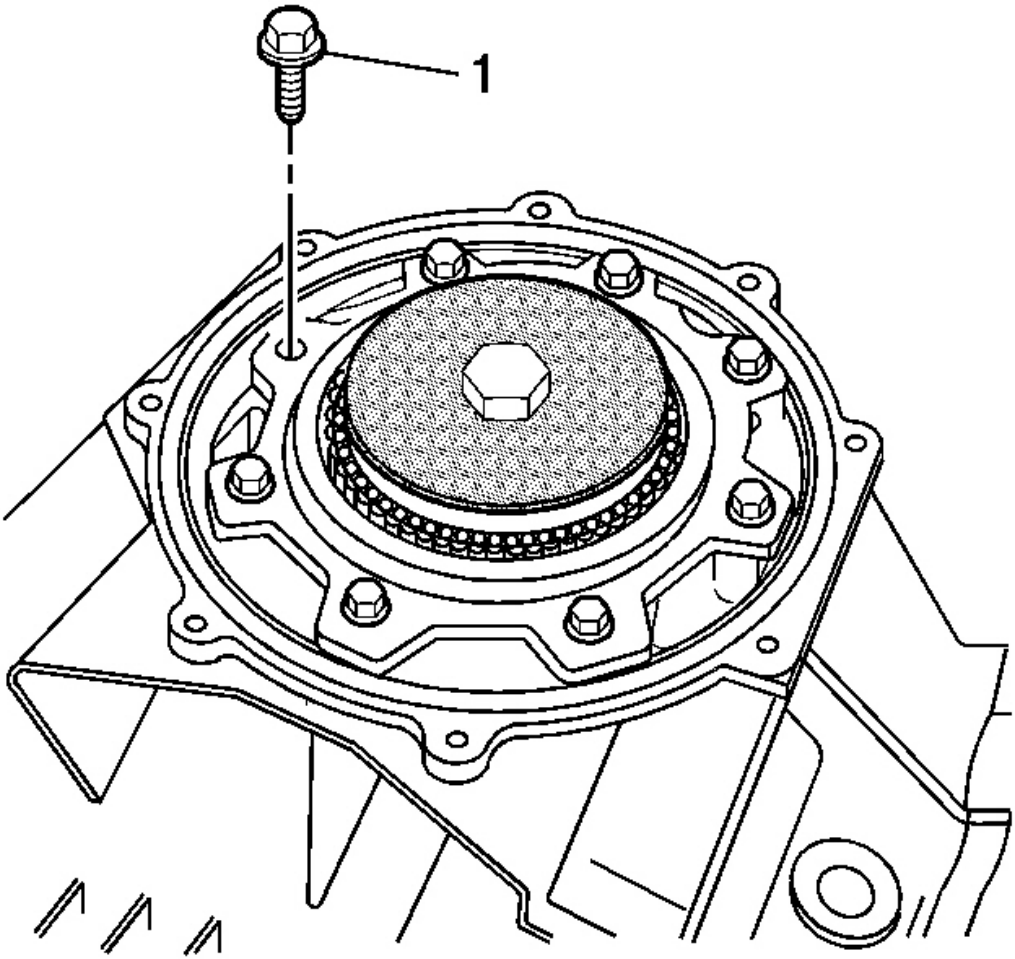

Fig. 231: Pinion Housing/Cage Bolts
Courtesy of GENERAL MOTORS CORP.

17. Select shims equal to the calculated value. It may be necessary to round the shim or shims total to obtain the proper shim sizes. If the shim thickness calculation is past the midpoint value, round the number to the next decimal value. Refer to **Rear Axle Specifications** .
18. Remove the pinion housing/cage bolts (1).

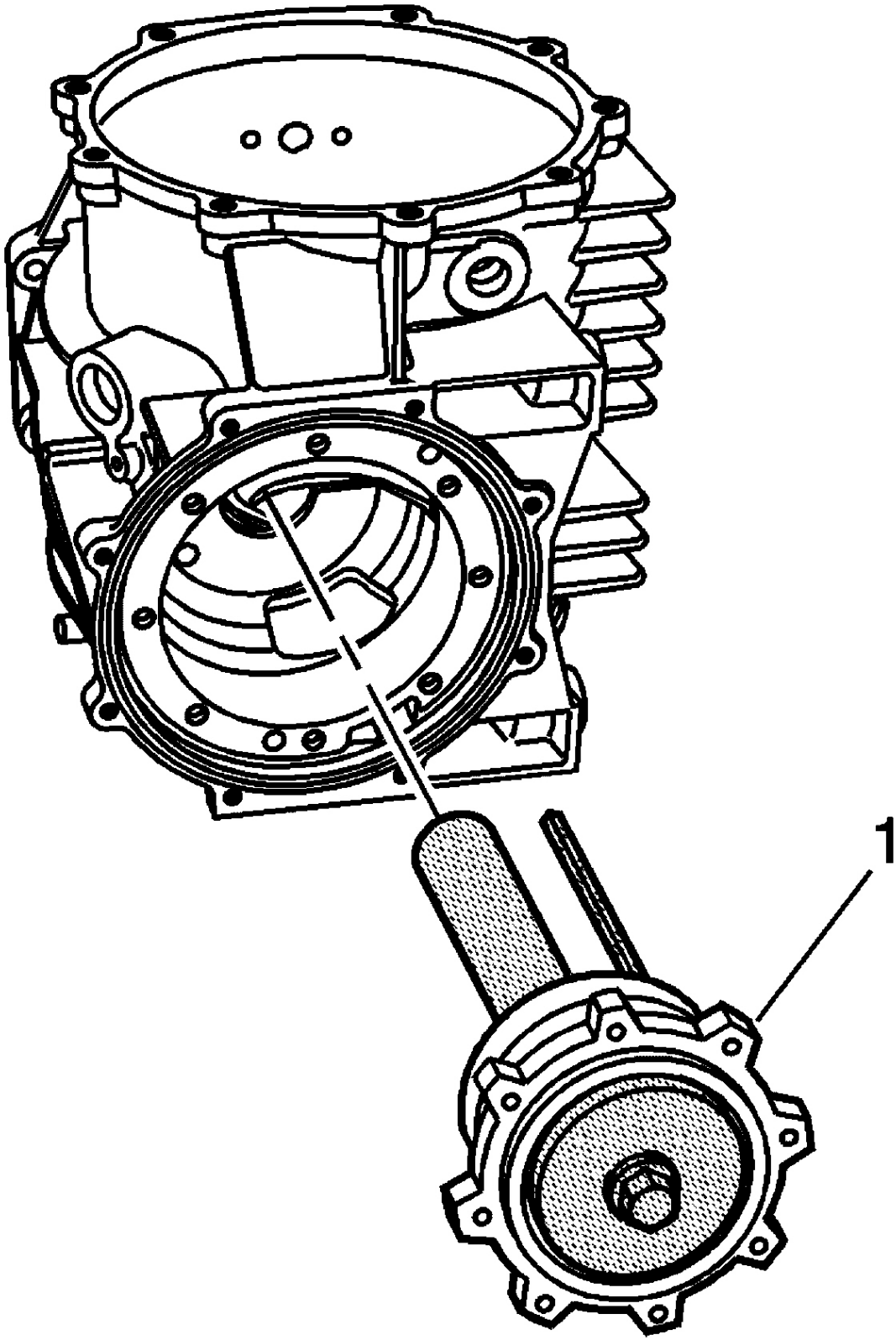
1

Fig. 232: Differential Housing & Pinion Housing/Cage Assembly
Courtesy of GENERAL MOTORS CORP.

19. Remove the pinion housing/cage (1) from the differential.

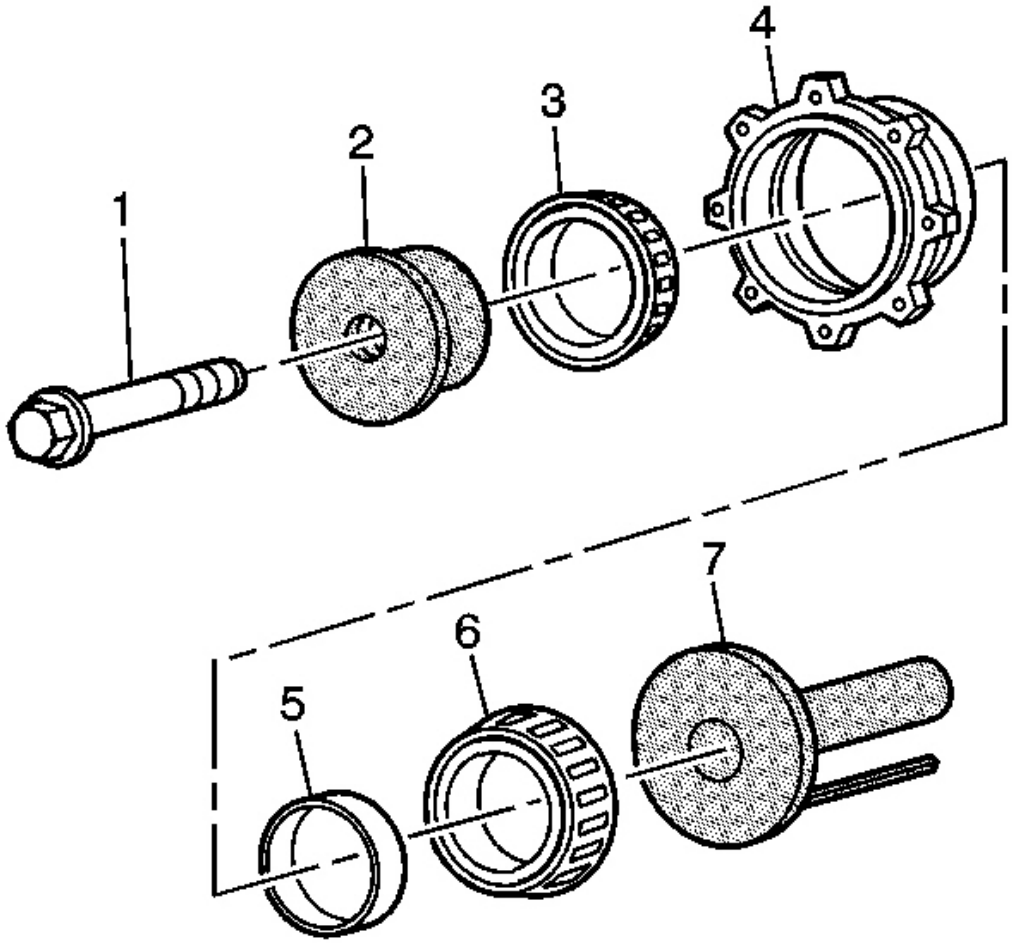

Fig. 233: Bearing Races & Components
Courtesy of GENERAL MOTORS CORP.

20. Remove the **J 42168-11** , bearings (3 and 6), spacer (5), and **J 42168-2** (7) from the pinion housing/cage (4). See **Special Tools and Equipment** .

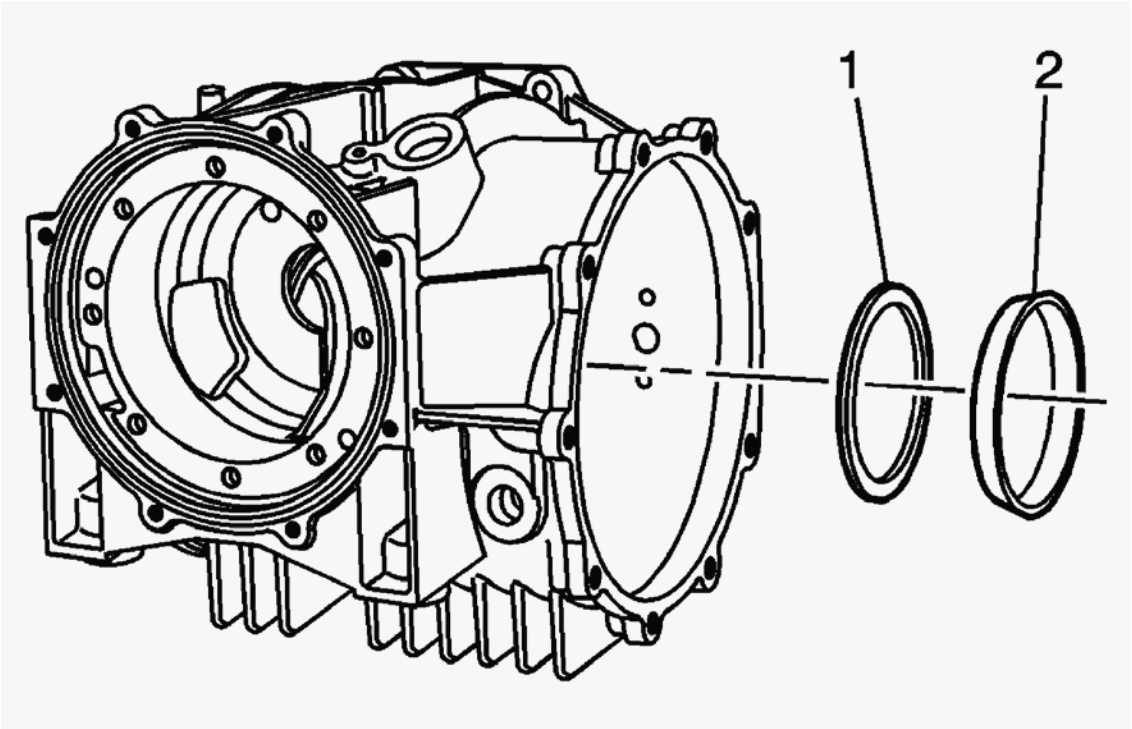

Fig. 234: Differential, Housing Race & Shim
Courtesy of GENERAL MOTORS CORP.

21. Use the **J 42170** and a hydraulic press in order to install the selected shims (1) and bearing race (2) to the differential housing. See **Special Tools and Equipment** .

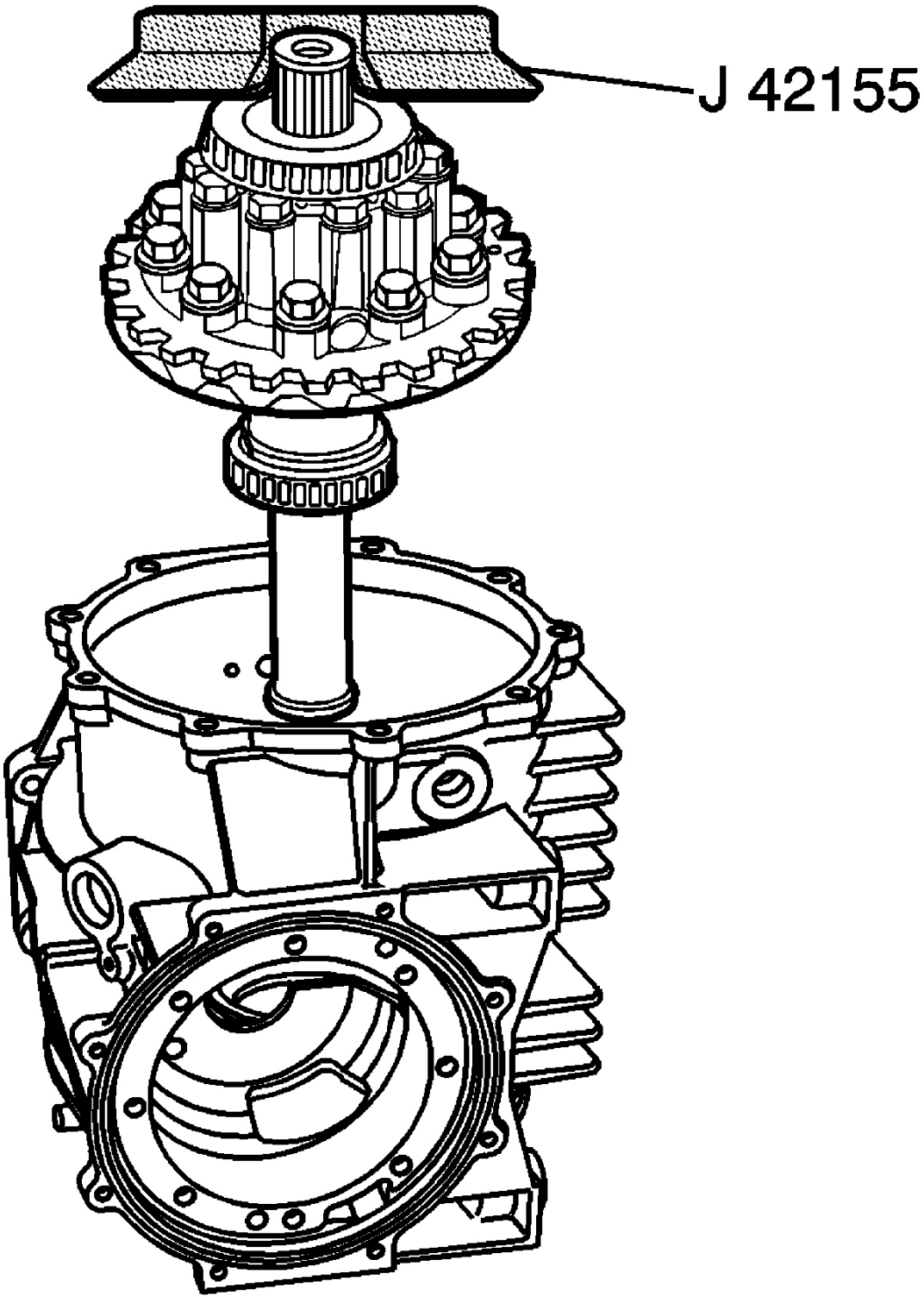

Fig. 235: 42155 Differential Case, Differential Housing & J 42155

Courtesy of GENERAL MOTORS CORP.

22. Use the **J 42155** in order to install the differential case into the differential housing. See **Special Tools and Equipment** .

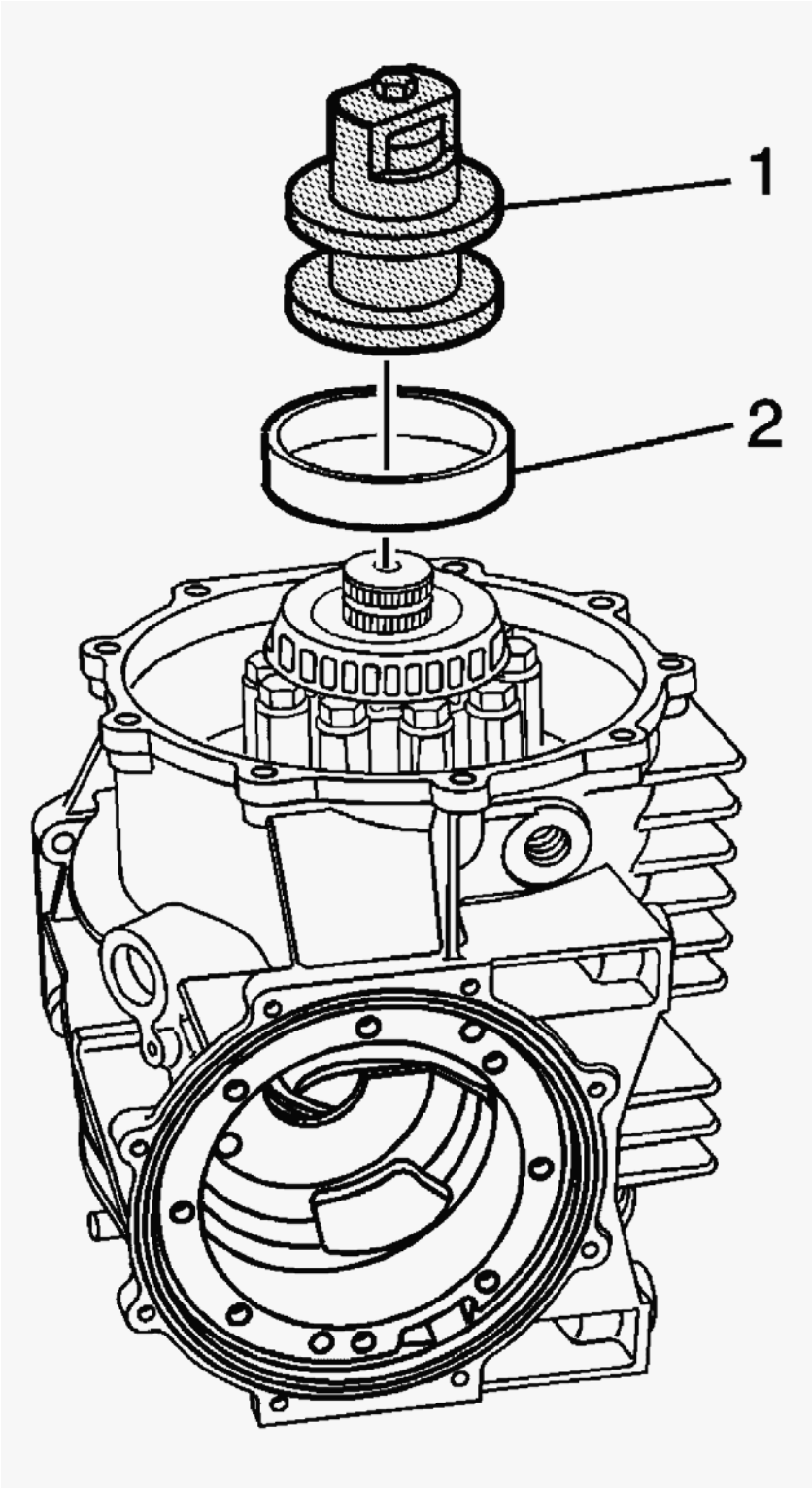

Fig. 236: Right Side Bearing Race, Differential & J 42168-15
Courtesy of GENERAL MOTORS CORP.

23. Install the right side bearing race (2), and the **J 42168-15** (1) onto the differential. See **Special Tools and**

Equipment .

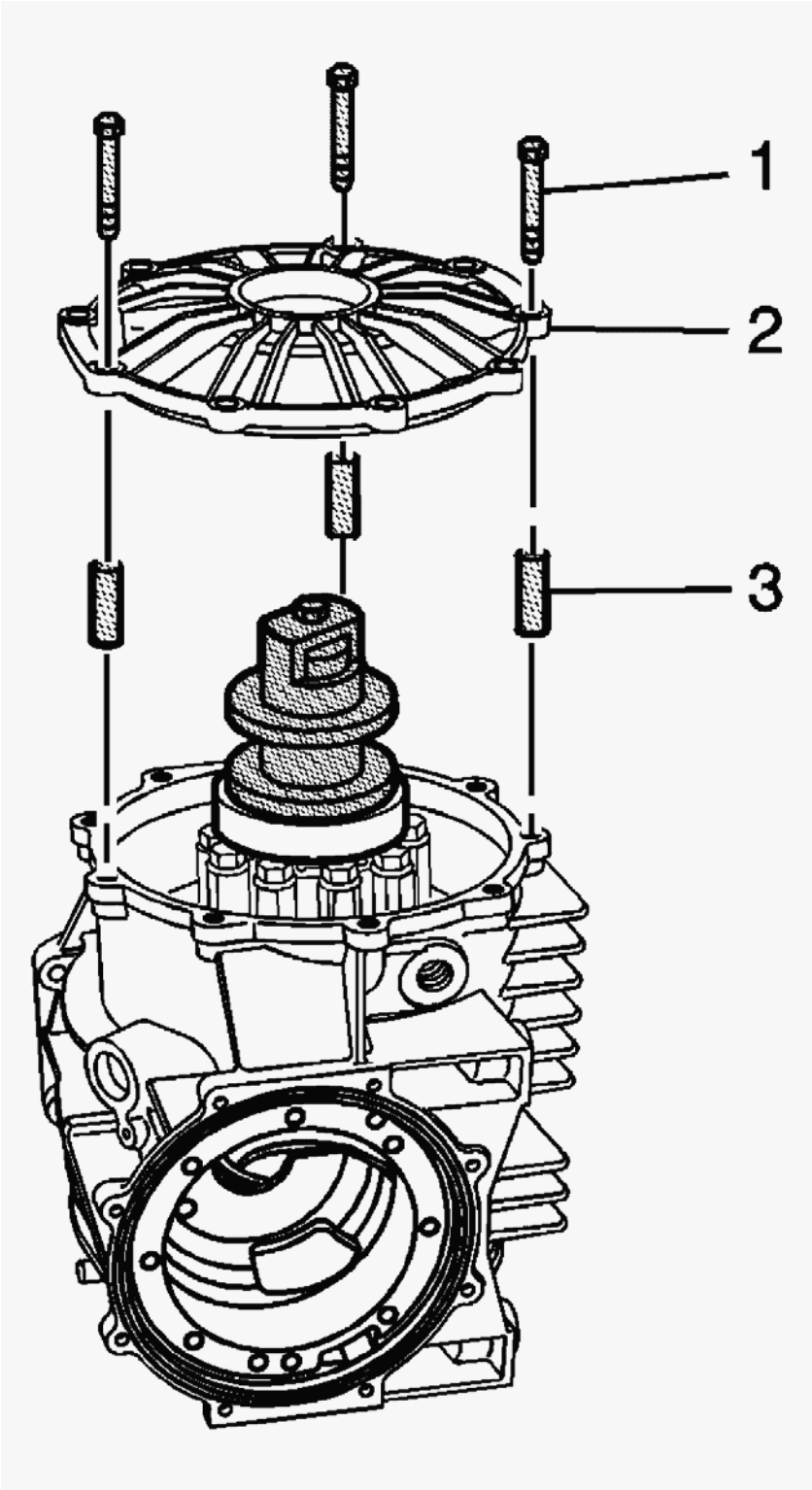

Fig. 237: Differential, Cover & Bolts
Courtesy of GENERAL MOTORS CORP.

IMPORTANT: In order to perform the shim selection procedure:

- **The oil seal must be removed from the cover - right.**
- **The pinion housing/cage must NOT be installed to the differential case.**

24. Install the cover - right (2) and **J 42168-16** bolts and spacers to the differential. See **Special Tools and Equipment** . Position the **J 42168-16** bolts and spacers evenly apart. See **Special Tools and Equipment** .

    Tighten: Tighten the bolts to 25 N.m (18 lb ft).

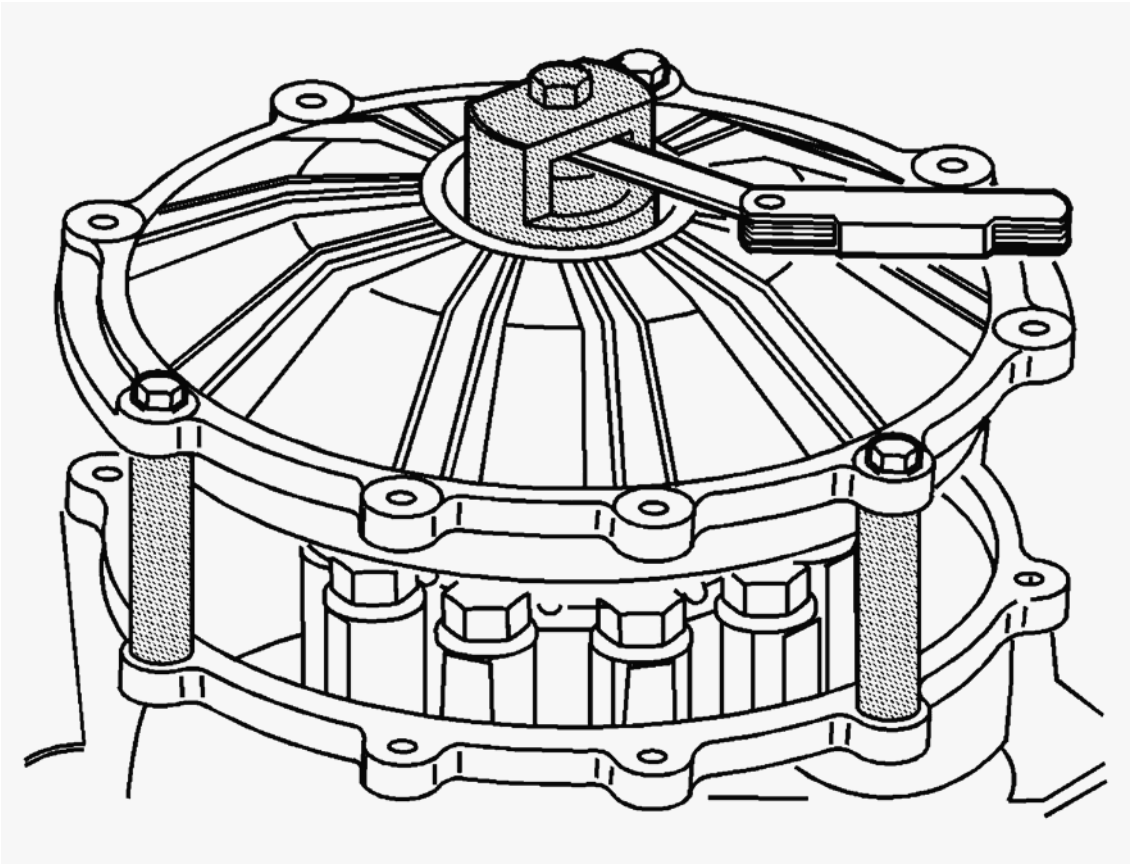

Fig. 238: Right Side Differential Bearing
Courtesy of GENERAL MOTORS CORP.

25. Insert a feeler gage into the **J 42168-15** and measure the gap. See **Special Tools and Equipment** . The measured dimension is the right side differential bearing shim size.

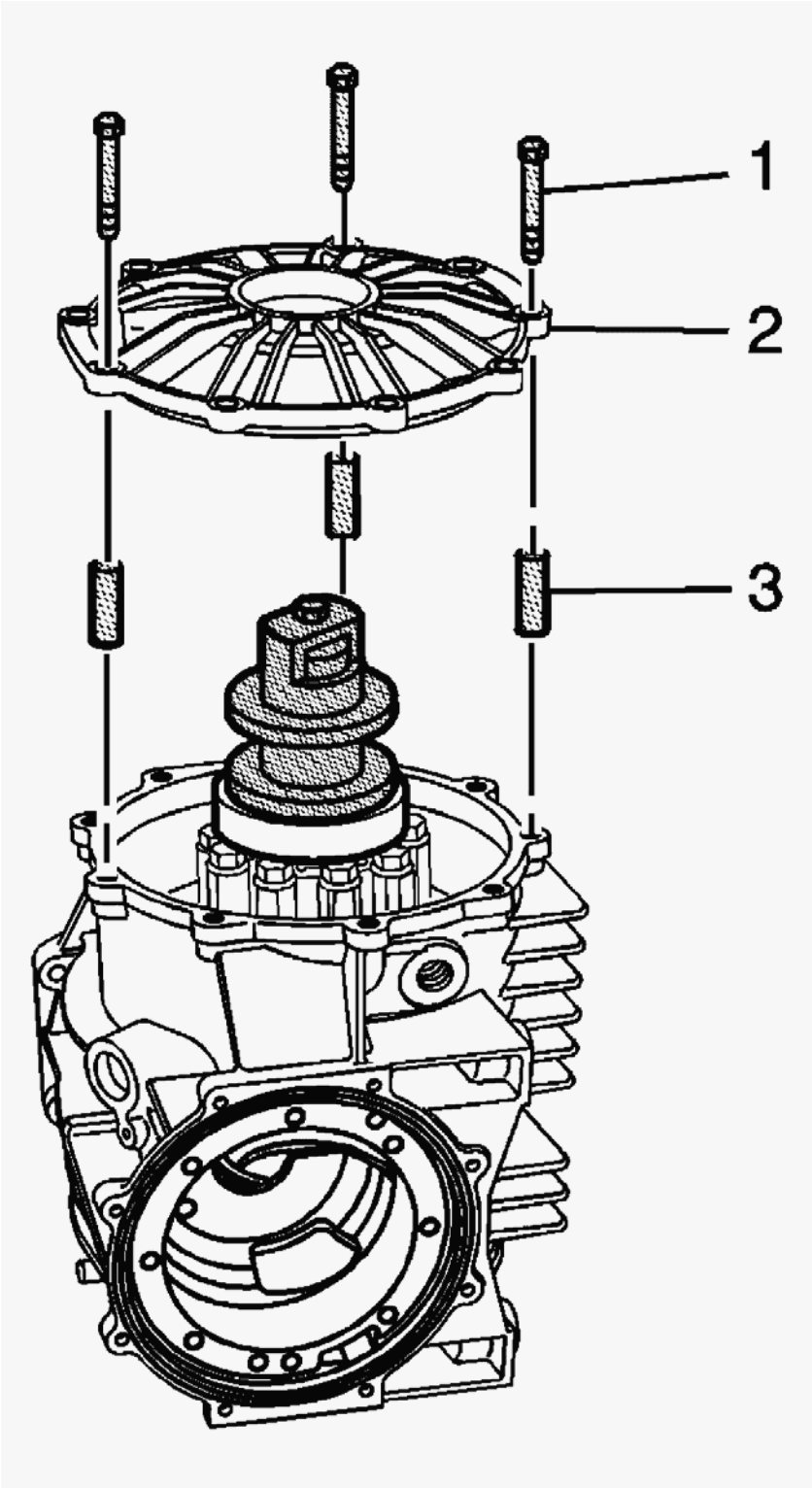

Fig. 239: Differential, Cover & Bolts
Courtesy of GENERAL MOTORS CORP.

26. Remove the bolts (1), cover (2), and tools.

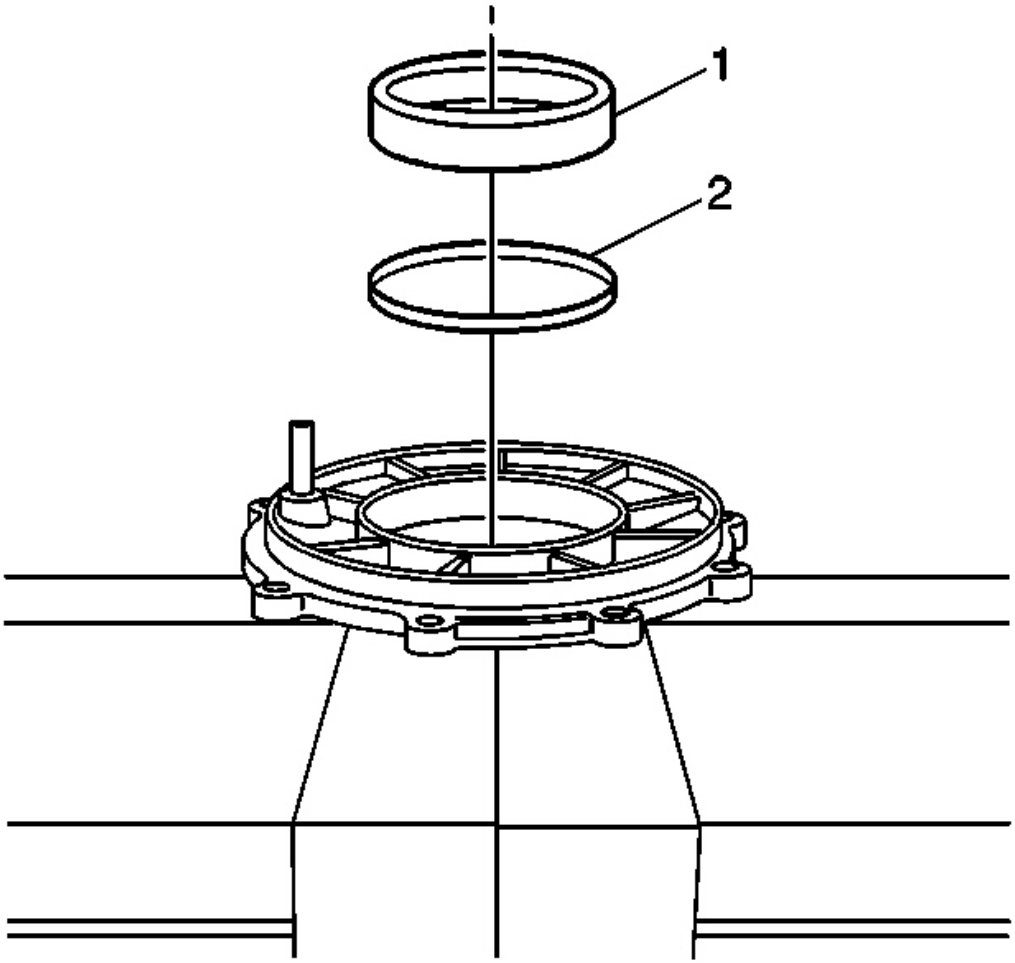

Fig. 240: Bearing Race & Shims
Courtesy of GENERAL MOTORS CORP.

27. Install the selected shim (2) and bearing race (1) to the cover - right.

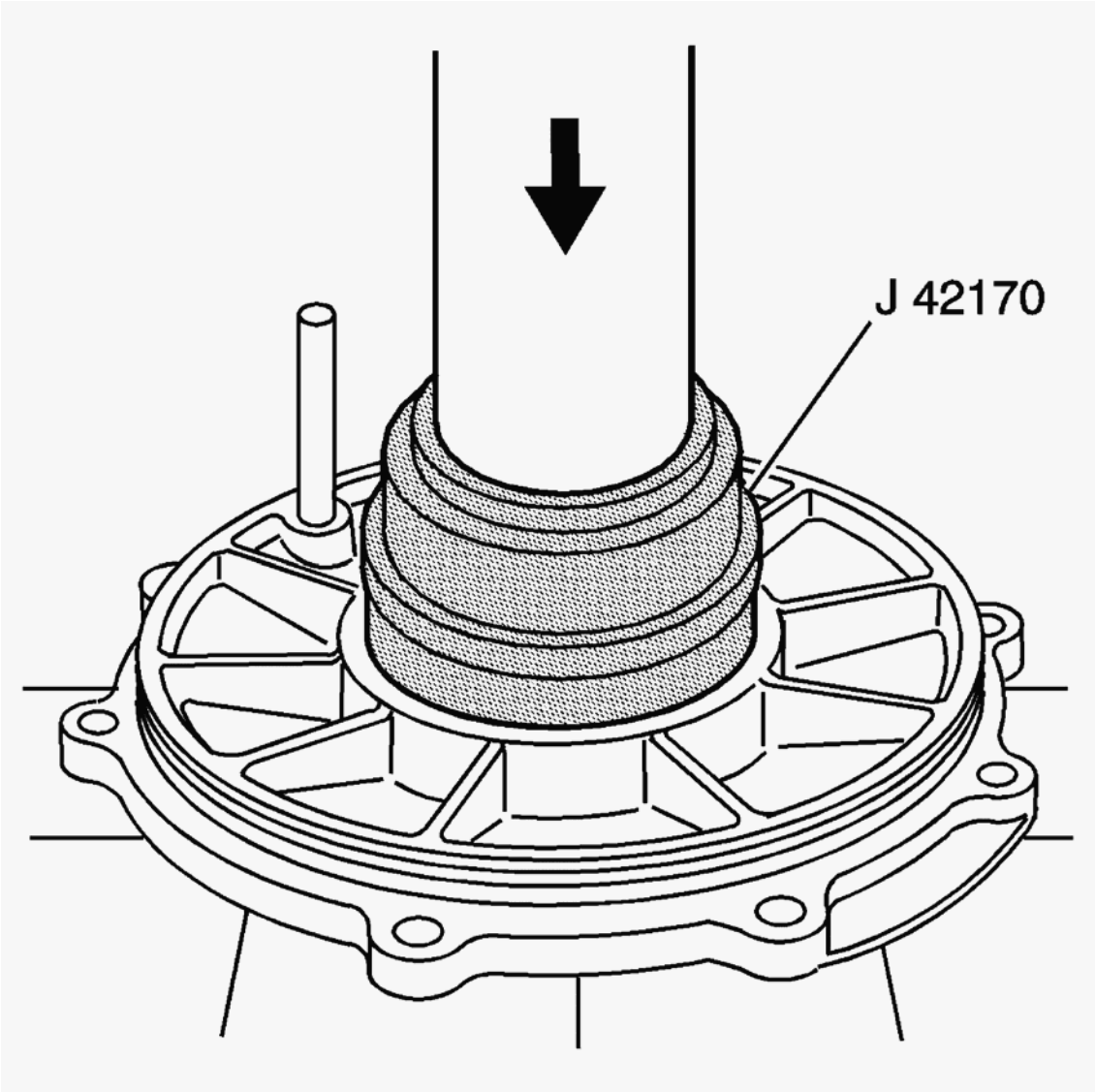

Fig. 241: Pressing Shims & Bearing Race Into Cover Using J 42170 & Hydraulic Press
Courtesy of GENERAL MOTORS CORP.

28. Install the shim or shims and bearing race into the cover - right using the **J 42170** and a hydraulic press. See **Special Tools and Equipment** . Refer to **Rear Axle - Assemble** .

DRIVE PINION ASSEMBLE

Tools Required

- **J 42164** Pinion Gear Holder. See **Special Tools and Equipment** .
- **J 42170** Bearing and Race Installer. See **Special Tools and Equipment** .
- **J 42172** Bearing Race Installer/Spanner Wrench. See **Special Tools and Equipment** .

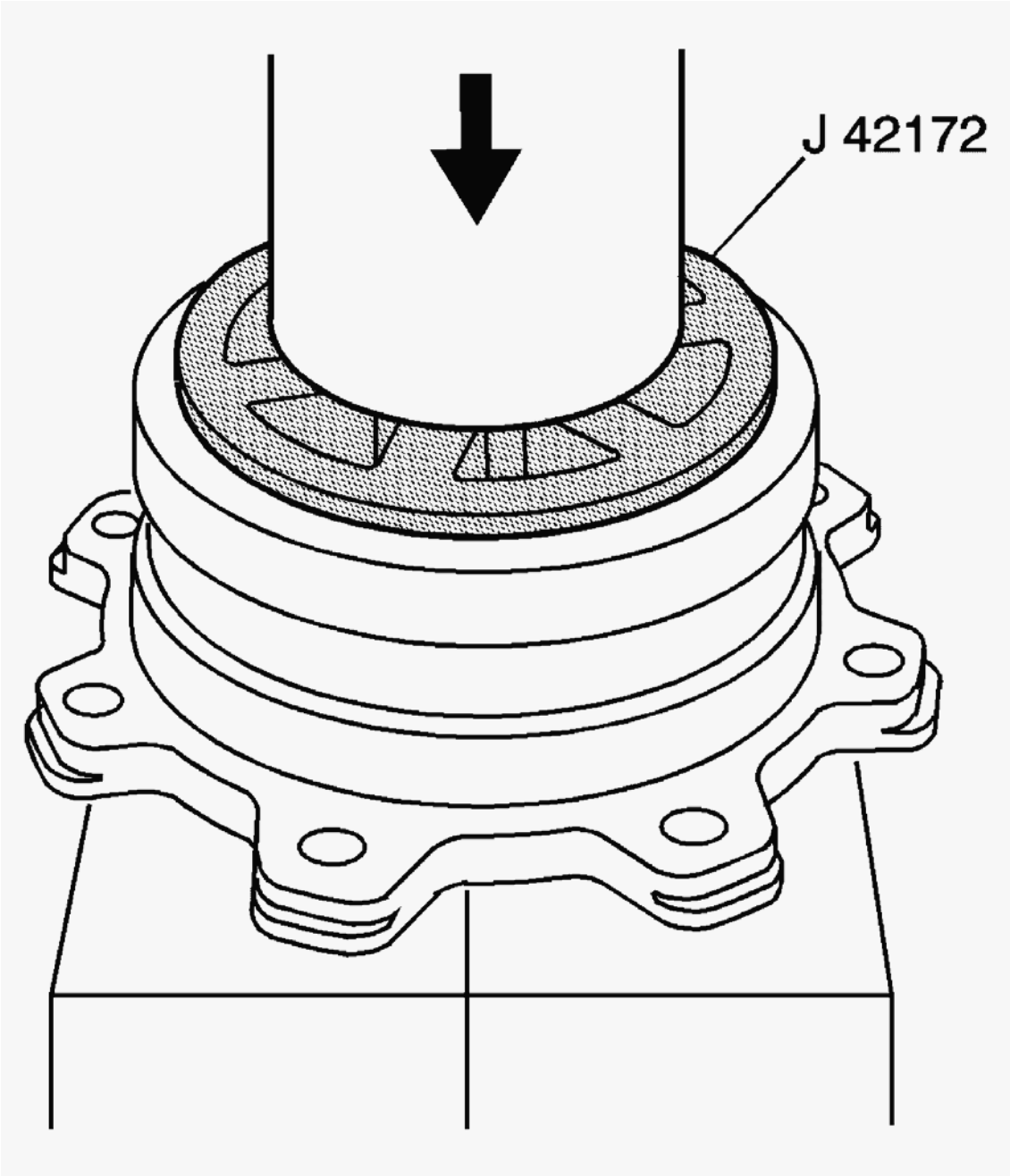

Fig. 242: Inner Bearing Race, Pinion Housing/Cage & J 42170
Courtesy of GENERAL MOTORS CORP.

IMPORTANT: The spacer is specific for the bearing set and must be used in order to achieve the proper bearing preload. The pinion bearings, spacer and housing/cage must be replaced as a set.

1. Install the inner bearing race into the pinion housing/cage using the **J 42172** and a hydraulic press, if required. See **Special Tools and Equipment** .

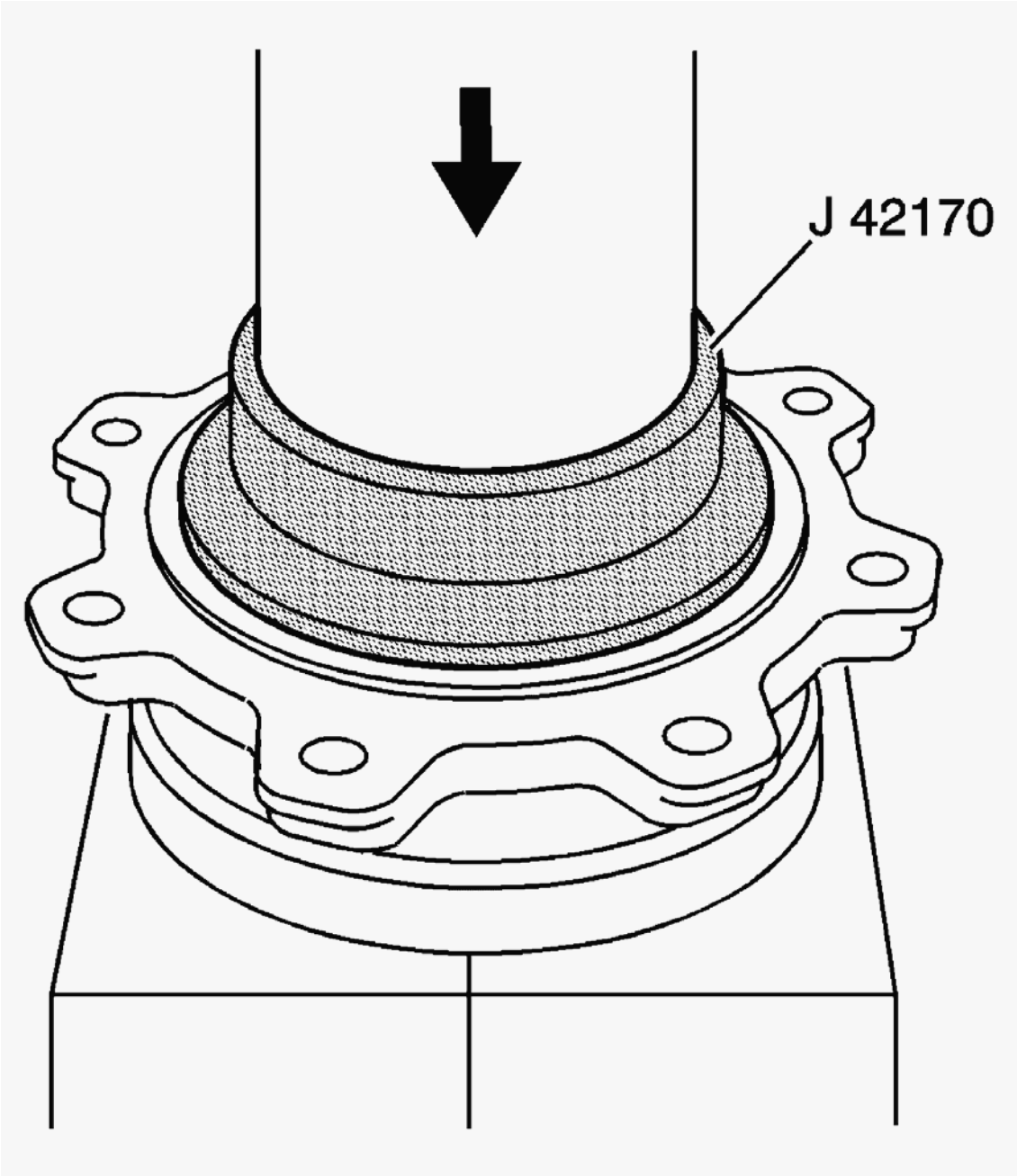

Fig. 243: Outer Bearing Race, Pinion Housing/Cage & J 42170
Courtesy of GENERAL MOTORS CORP.

2. Install the outer bearing race into the pinion housing/cage using the **J 42170** and a hydraulic press, if required. See **Special Tools and Equipment** .

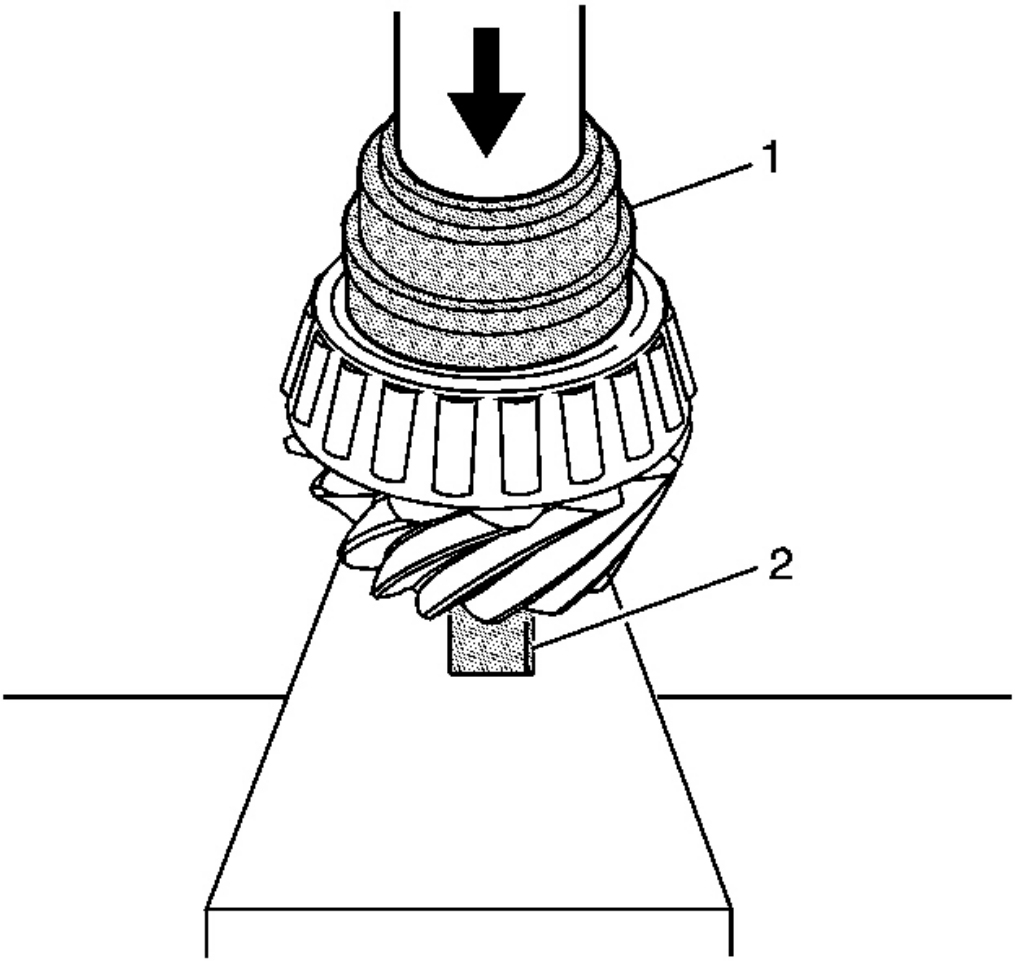

Fig. 244: Pinion Shaft & J 42170
Courtesy of GENERAL MOTORS CORP.

3. Install the bearing onto the pinion shaft using the **J 42170** , **J 42164** , and a hydraulic press. See **Special Tools and Equipment** .

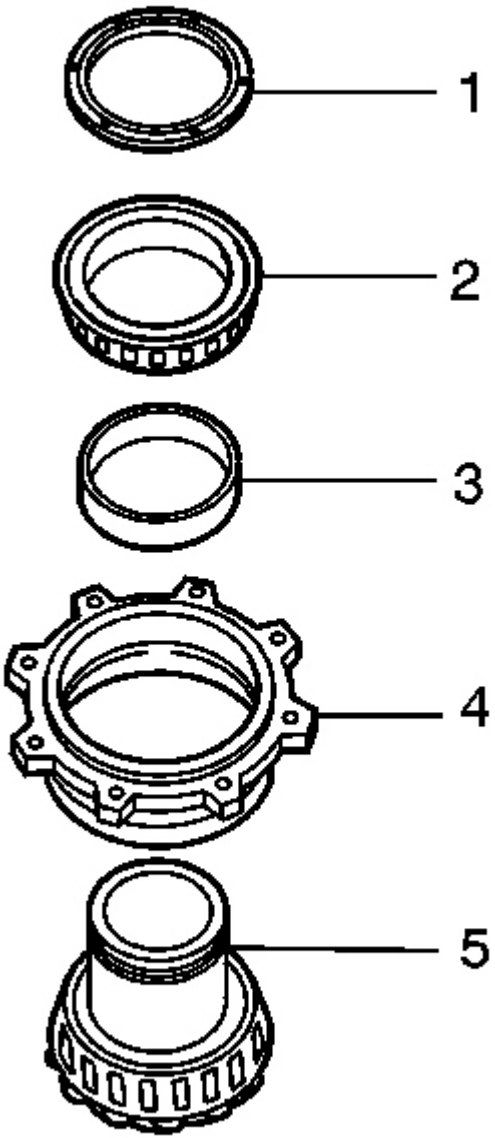

Fig. 245: Nut, Bearing, Spacer & Pinion Shaft & Housing/Cage
Courtesy of GENERAL MOTORS CORP.

4. Assemble the pinion shaft (5), spacer (3), and bearing (2) into the housing/cage (4).

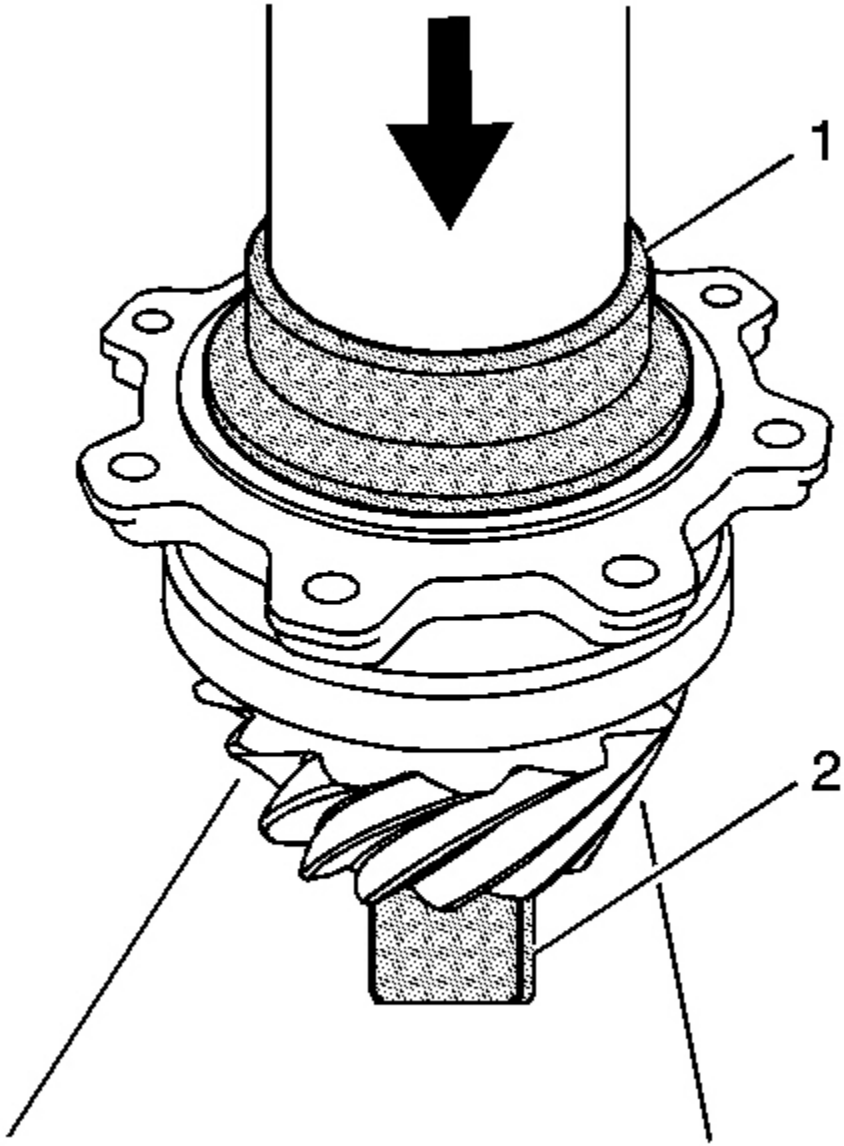

Fig. 246: Bearing, Pinion Shaft & J 42170
Courtesy of GENERAL MOTORS CORP.

5. Press the bearing onto the pinion shaft using **J 42170** , **J 42164** , and a hydraulic press. See **Special Tools and Equipment** .

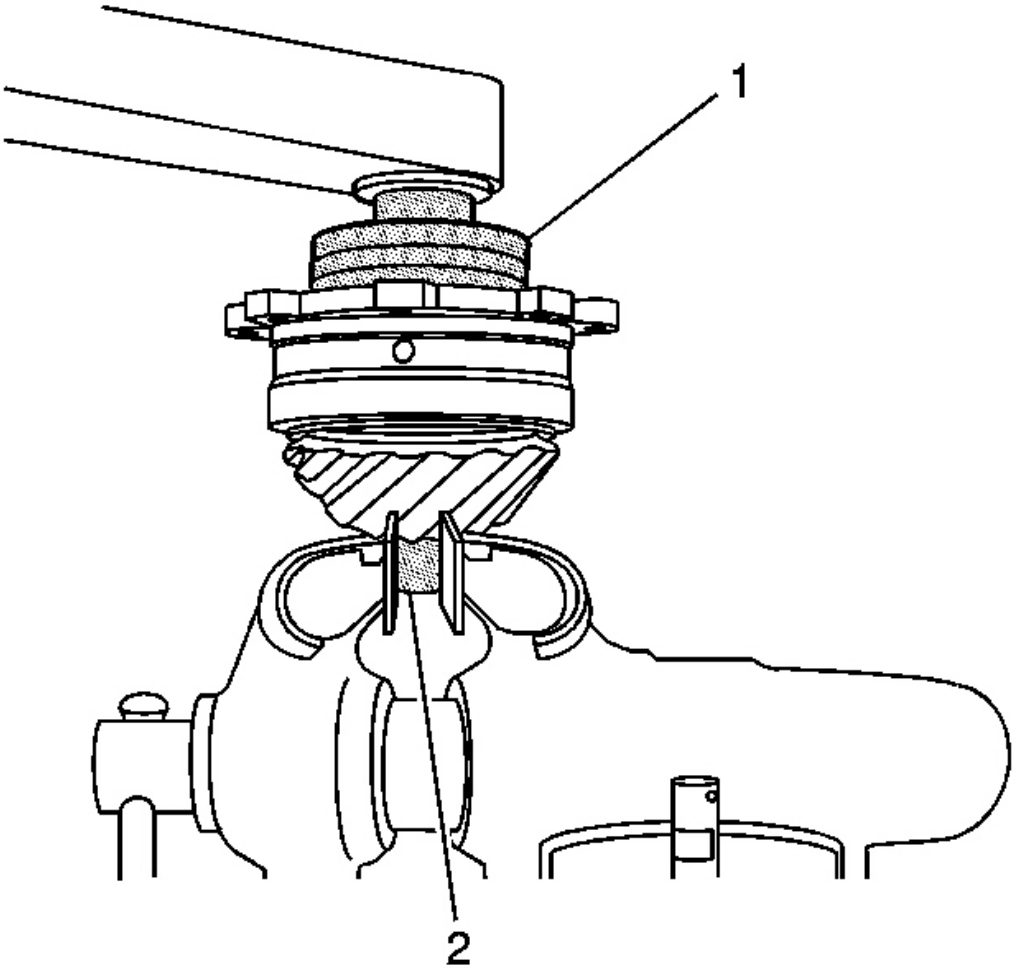

Fig. 247: Removing/Installing Pinion Nut Using J 42172
Courtesy of GENERAL MOTORS CORP.

NOTE: Refer to Fastener Notice in Cautions and Notices.

6. Install the nut onto the pinion shaft using a torque wrench, **J 42172** , and **J 42164** . See **Special Tools and Equipment** .

   Tighten: Tighten the nut to 500 N.m (370 lb ft).

7. Using a punch, stake the areas of the nut into the notches in the end of the pinion shaft.
8. Measure the rotating torque of the pinion shaft using the **J 42164** . See **Special Tools and Equipment** . A properly assembled pinion shaft and bearings should have a rotating torque of 1.4-2.8 N.m (12-25 lb in).

REAR AXLE - ASSEMBLE

Tool Required

- **J 8001** Dial Indicator Set. See **Special Tools and Equipment** .
- **J 46405** Output Shaft Seal Installer. See **Special Tools and Equipment** .
- **J 42155** Differential Lifting Tool. See **Special Tools and Equipment** .
- **J 42157** Left Output Shaft Bearing Installer. See **Special Tools and Equipment** .
- **J 42164** Pinion Gear Holder. See **Special Tools and Equipment** .
- **J 42170** Bearing and Race Installer. See **Special Tools and Equipment** .
- **J 42173** Differential Holding Fixture. See **Special Tools and Equipment** .

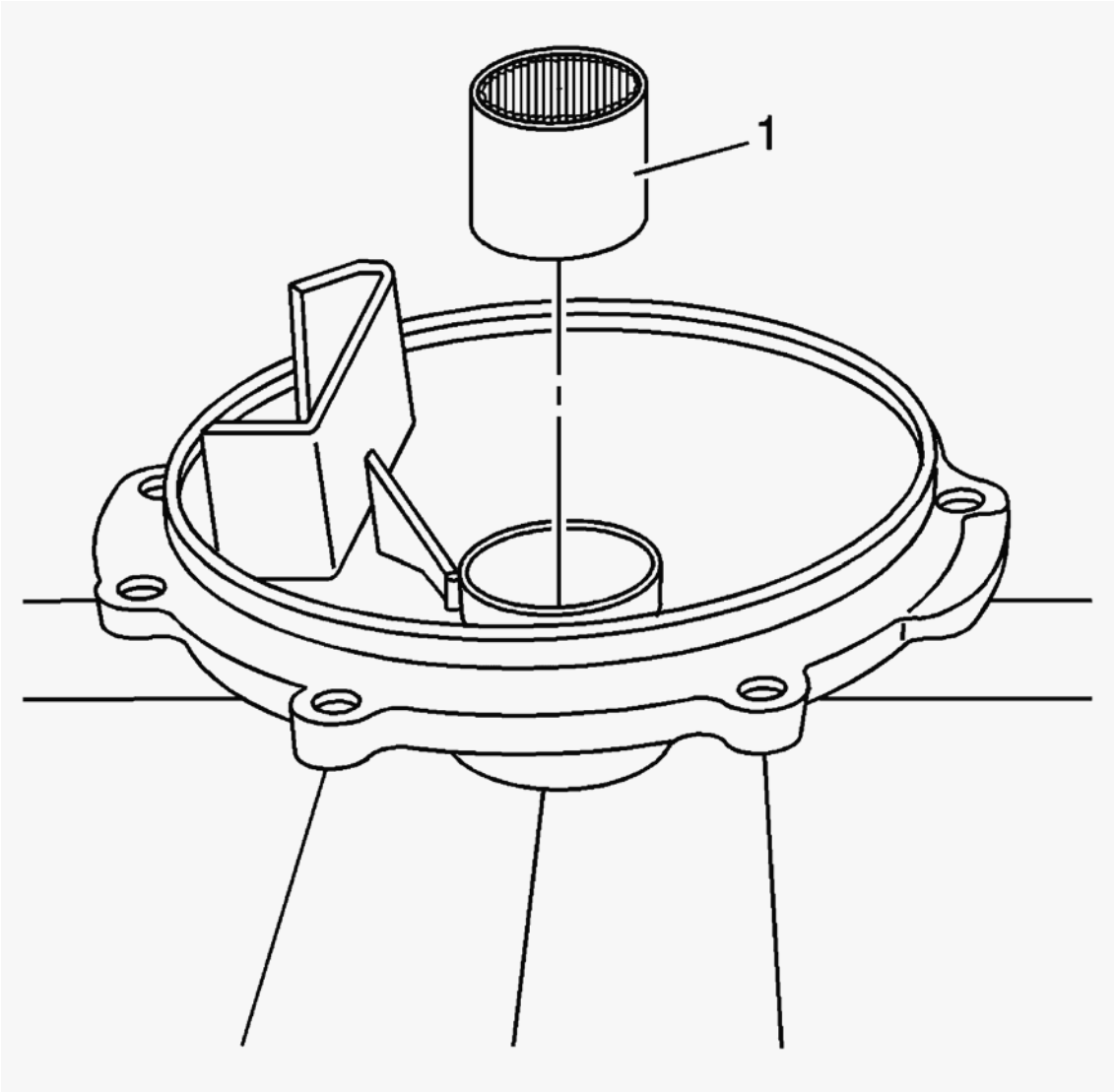

Fig. 248: Left Side Cover Output Shaft Bearing
Courtesy of GENERAL MOTORS CORP.

IMPORTANT: If the pinion assembly components have not been replaced, reuse the original pinion housing shims. If the pinion assembly components have been replaced, refer to Drive Pinion Shim Selection for selection of the proper size shims.

1. Assemble the drive pinion prior to rear axle assembly. Refer to **Drive Pinion Assemble** .
2. Install the bearing (1) to the cover - left.

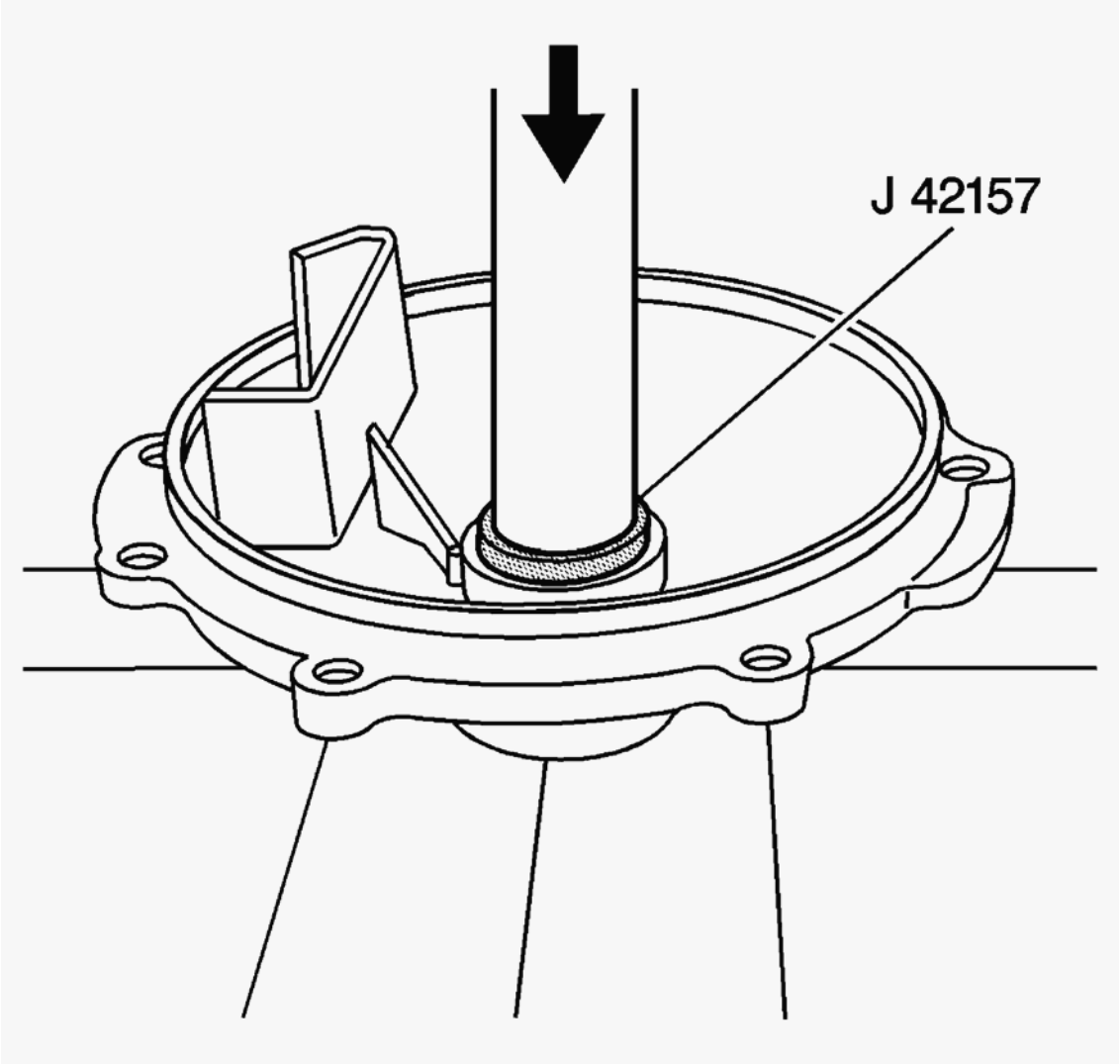

Fig. 249: Bearing, Left Cover & J 42157
Courtesy of GENERAL MOTORS CORP.

3. Install the bearing into the cover - left using the **J 42157** and a hydraulic press. See **Special Tools and Equipment** .

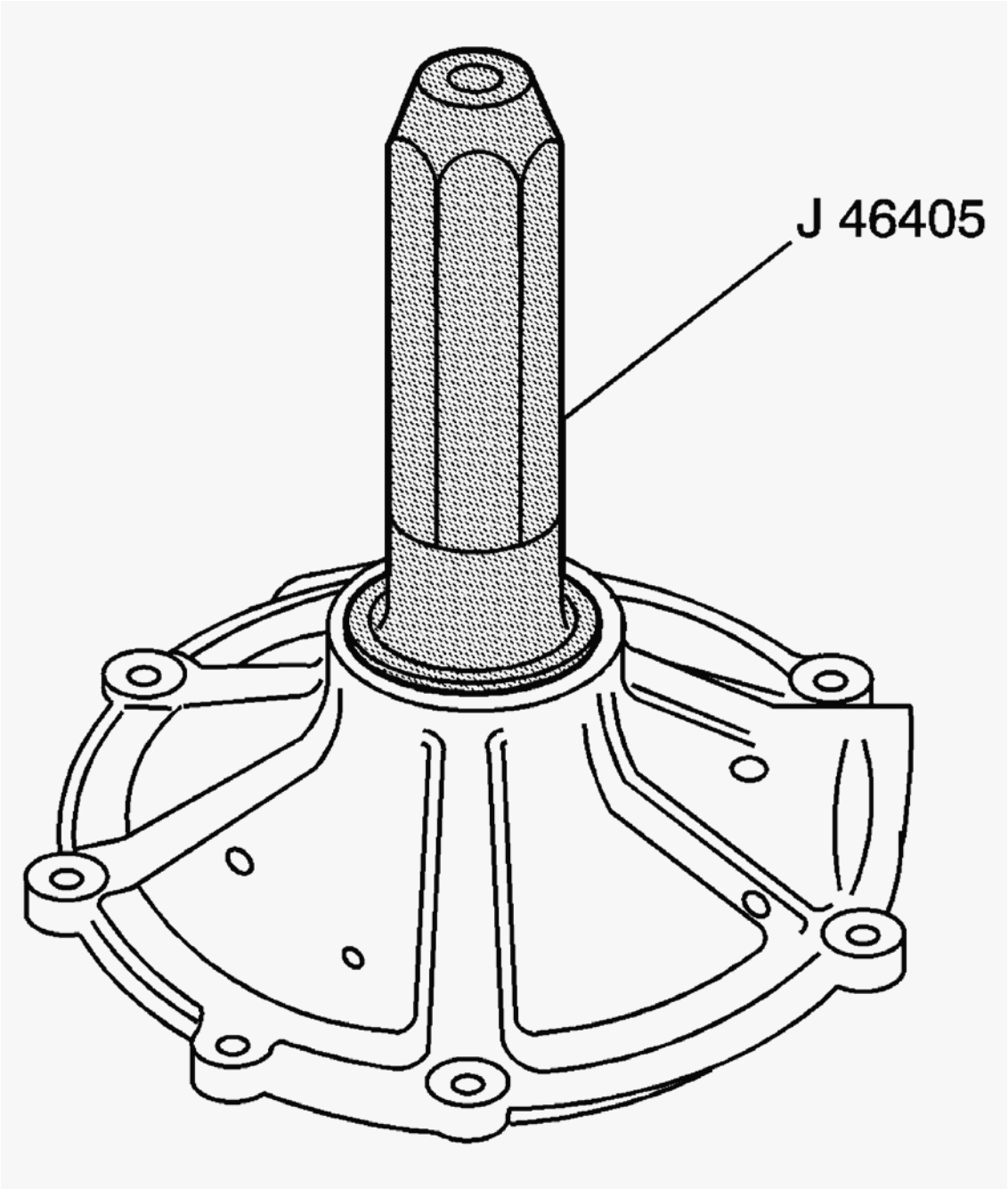

Fig. 250: Oil Seal, Left Cover & J 46405
Courtesy of GENERAL MOTORS CORP.

4. Install the oil seal into the cover - left using the **J 46405** . See **Special Tools and Equipment** .

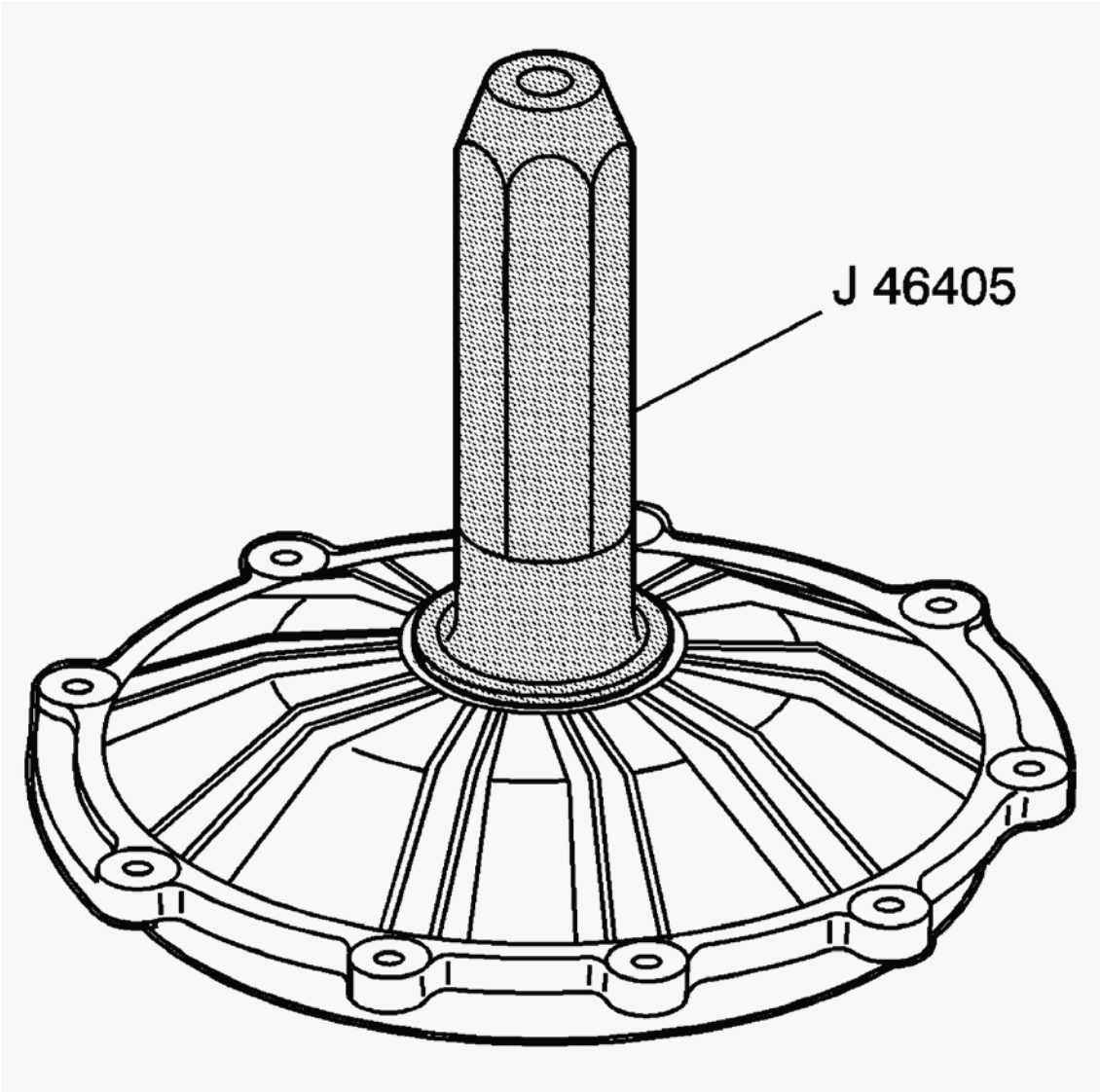

Fig. 251: Oil Seal, Right Cover & J46405
Courtesy of GENERAL MOTORS CORP.

5. Install the oil seal into the cover - right using the **J 46405** . See **Special Tools and Equipment** .

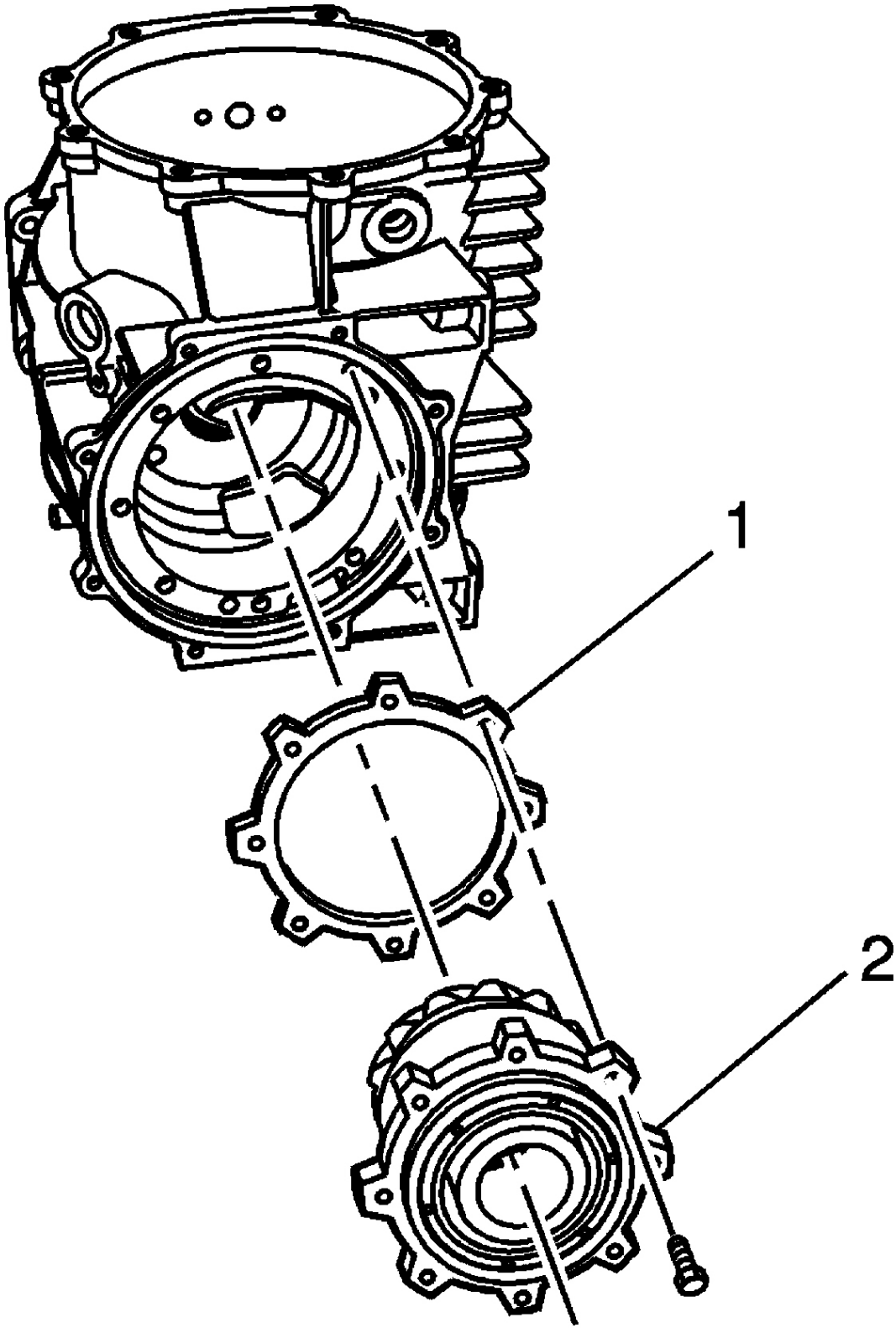
1
2

Fig. 252: Pinion Housing/Cage Assembly, Shims & Differential Housing
Courtesy of GENERAL MOTORS CORP.

6. Install the pinion housing assembly (2) and the selected shim or shims (1) to the differential housing. Refer to **Drive Pinion Shim Selection** for shim selection.

   The use of M8 x 1.25 dowels or long bolts will ease in pinion housing/cage and shim installation and alignment.

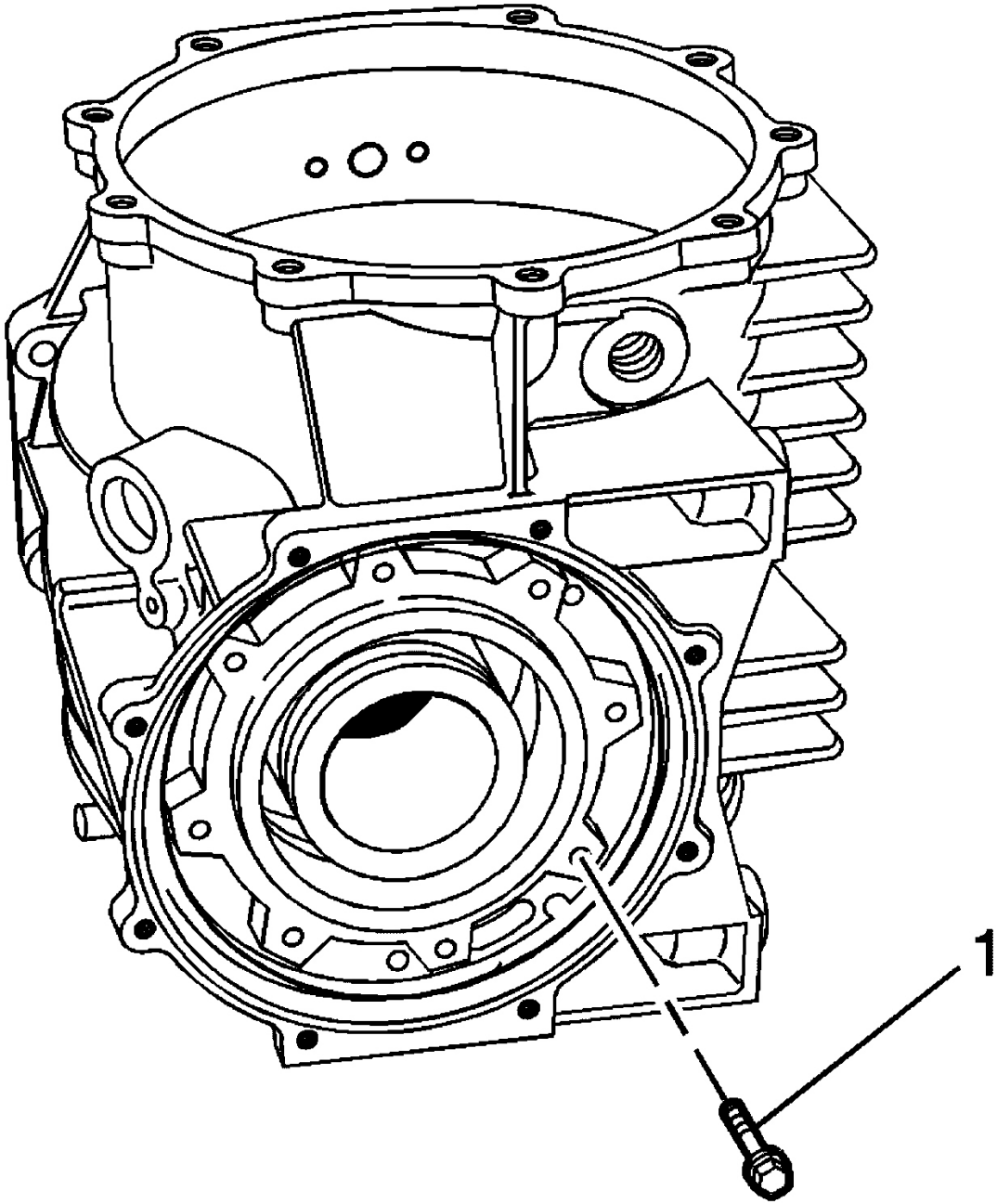

Fig. 253: Pinion Housing/Cage Bolts
Courtesy of GENERAL MOTORS CORP.

NOTE: Refer to Fastener Notice in Cautions and Notices.

7. Install the pinion housing/cage bolts (1).

Tighten: Tighten the bolts to 25 N.m (18 lb ft).

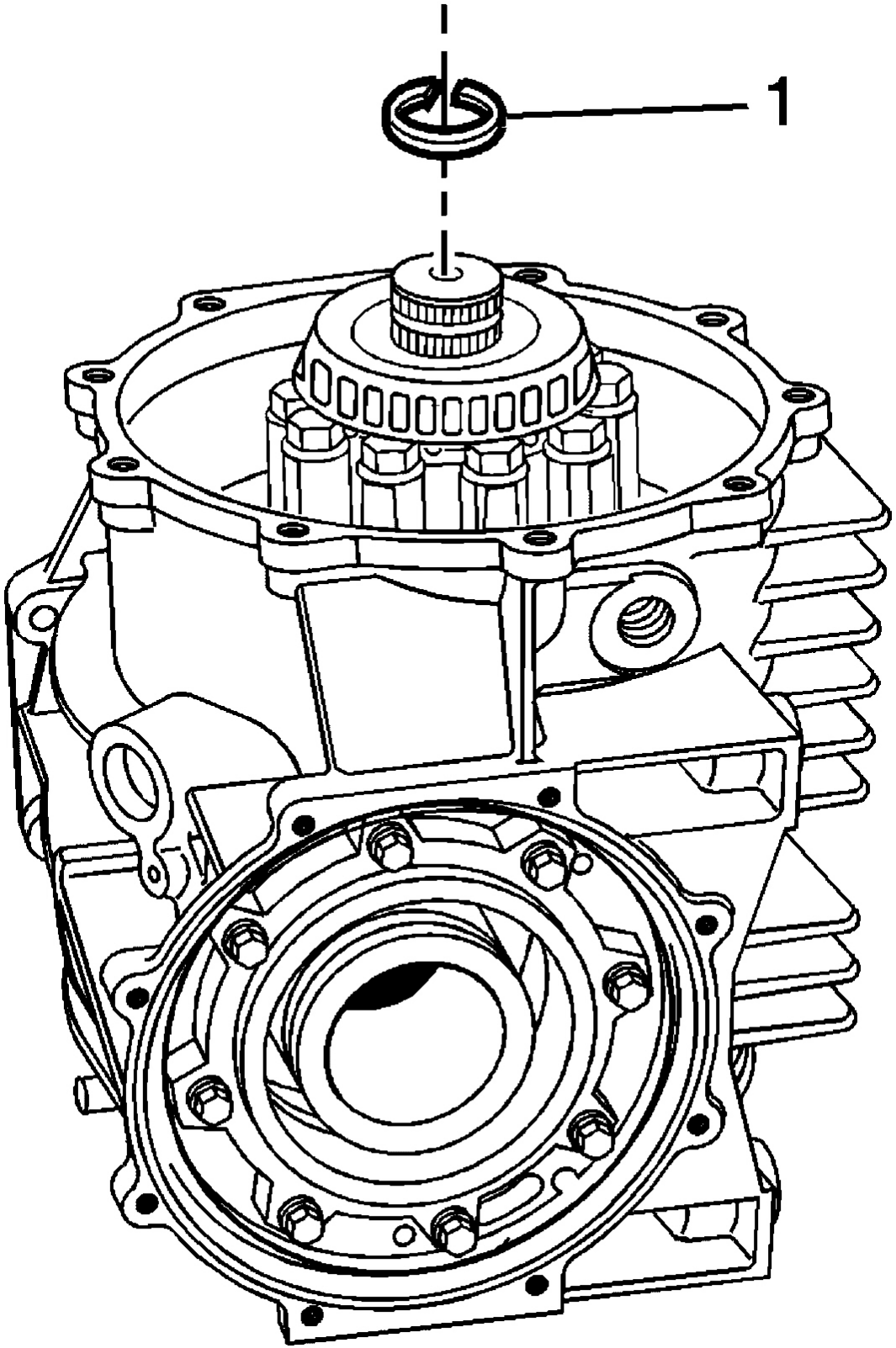
1

Fig. 254: Output Shaft & C-Clip
Courtesy of GENERAL MOTORS CORP.

8. Install the C-clip (1) into the groove of the output shaft.

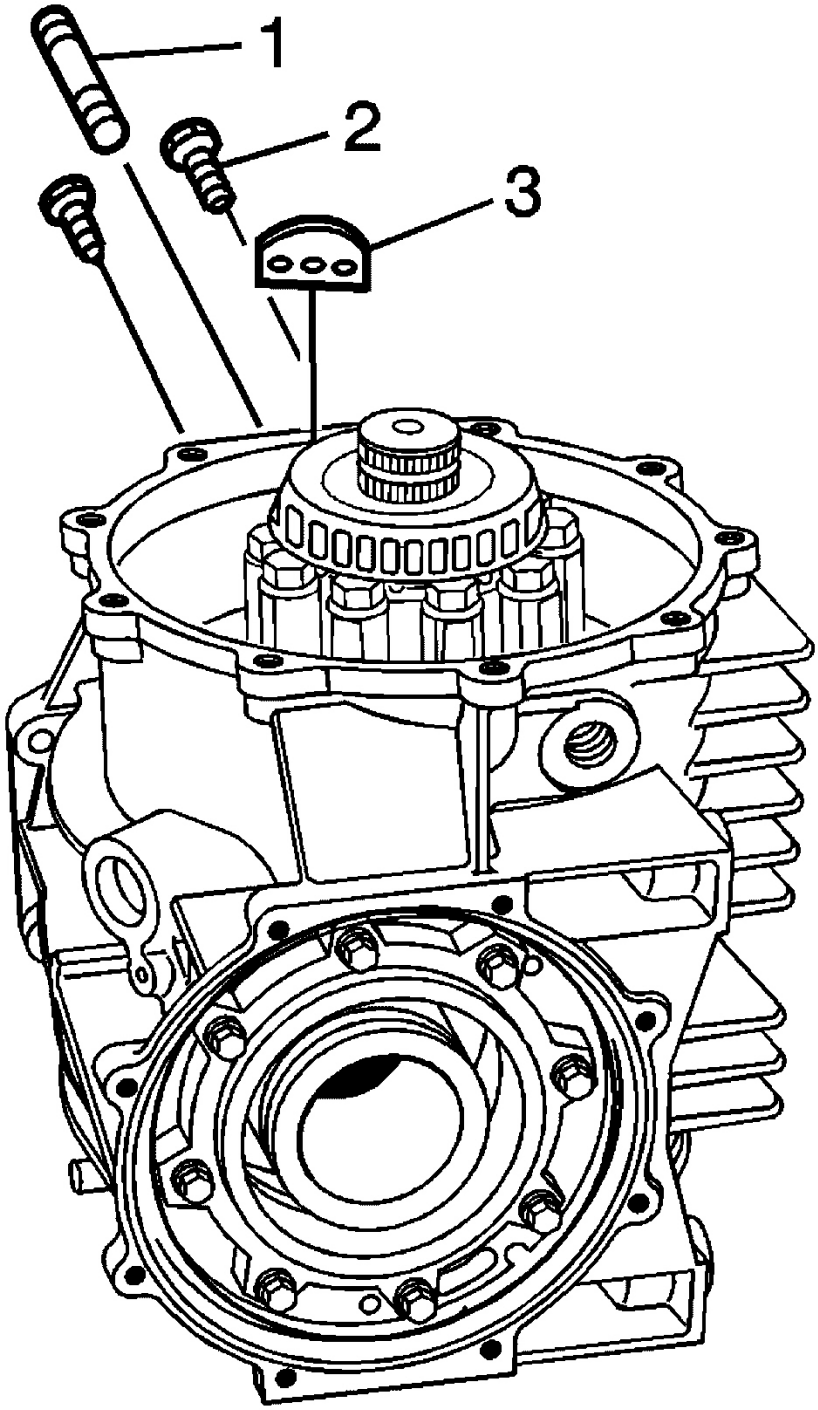

Fig. 255: Differential, Transmission Stud Bolts & Mount
Courtesy of GENERAL MOTORS CORP.

9. Apply sealant GM P/N 1052942 (Canadian P/N 10953466) or equivalent to the threads of the bolts (2)

and stud (1). Apply sealant only to the end of the stud that installs into the mount.

10. Install the mount (3) and bolts (2).

    Tighten: Tighten the bolts to 10 N.m (89 lb in).

11. Install 2 M10 x 1.5 nuts onto the transmission stud (1). Install the stud into the mount.

    Tighten: Tighten the stud to 42 N.m (31 lb ft).

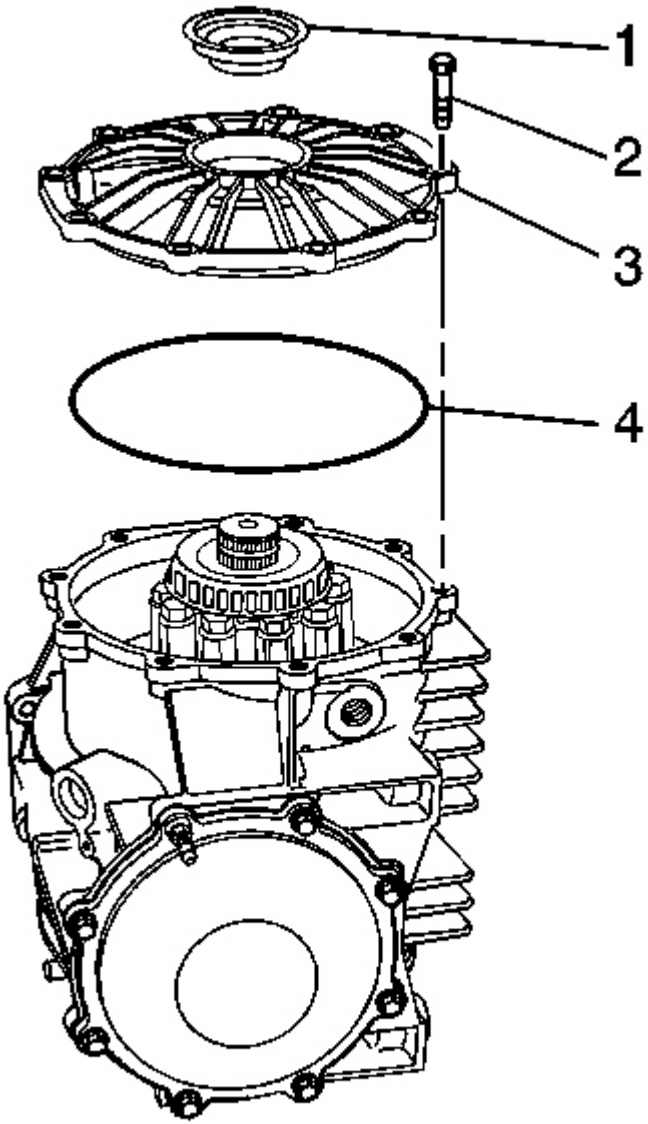

Fig. 256: Differential Cover (Right), Axle Seal & O-Ring Seal
Courtesy of GENERAL MOTORS CORP.

12. Install the O-ring (4) to the groove of the cover - right (3).
13. Install the cover - right and bolts (2).

Tighten: Tighten the bolts to 25 N.m (18 lb ft).

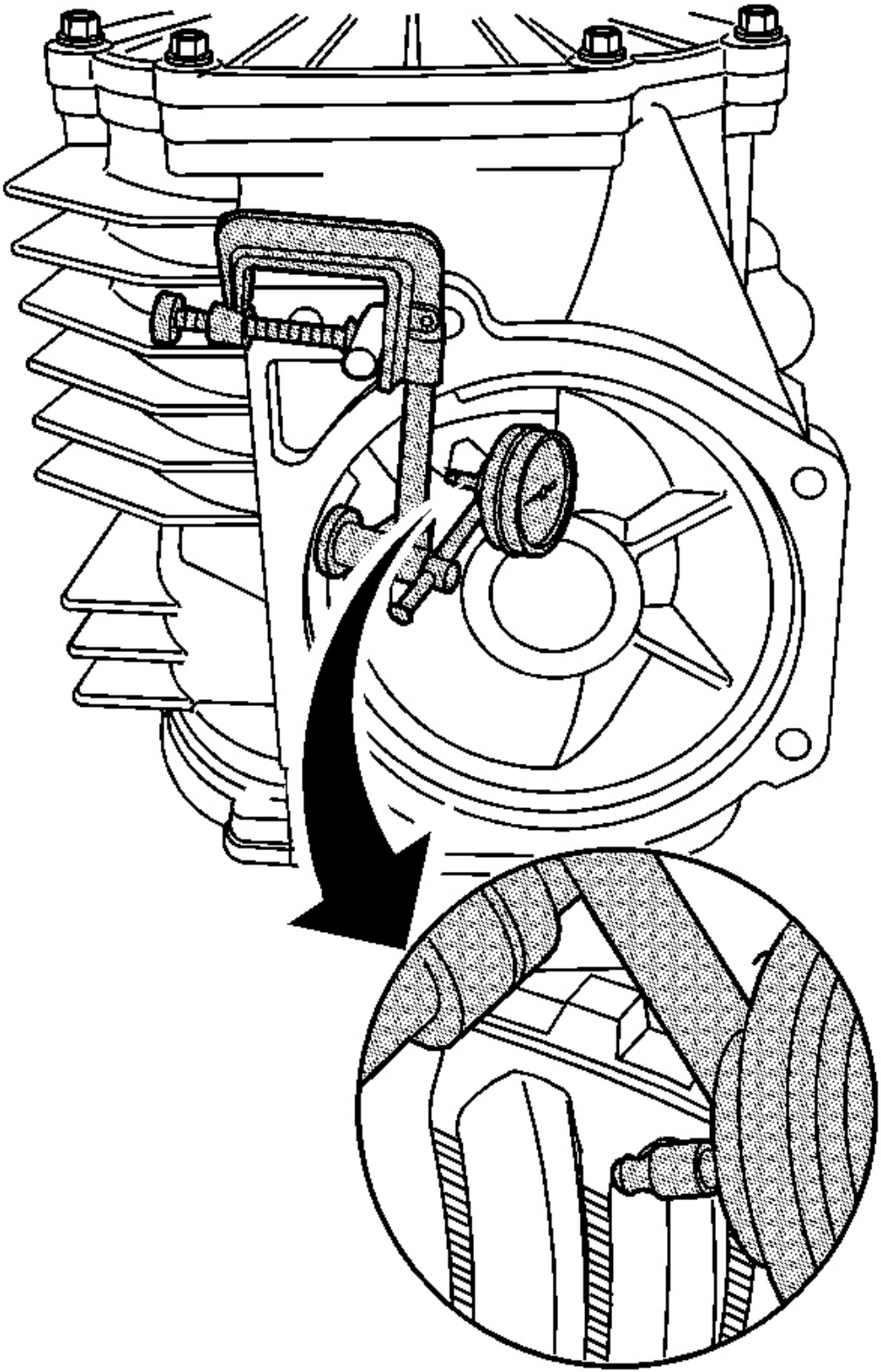

Fig. 257: Transmission Stud & Ring Gear Tooth Surface
Courtesy of GENERAL MOTORS CORP.

14. Install the **J 8001** onto the transmission stud. See **Special Tools and Equipment** . Position the tip of the dial indicator against the center of the ring gear tooth surface.

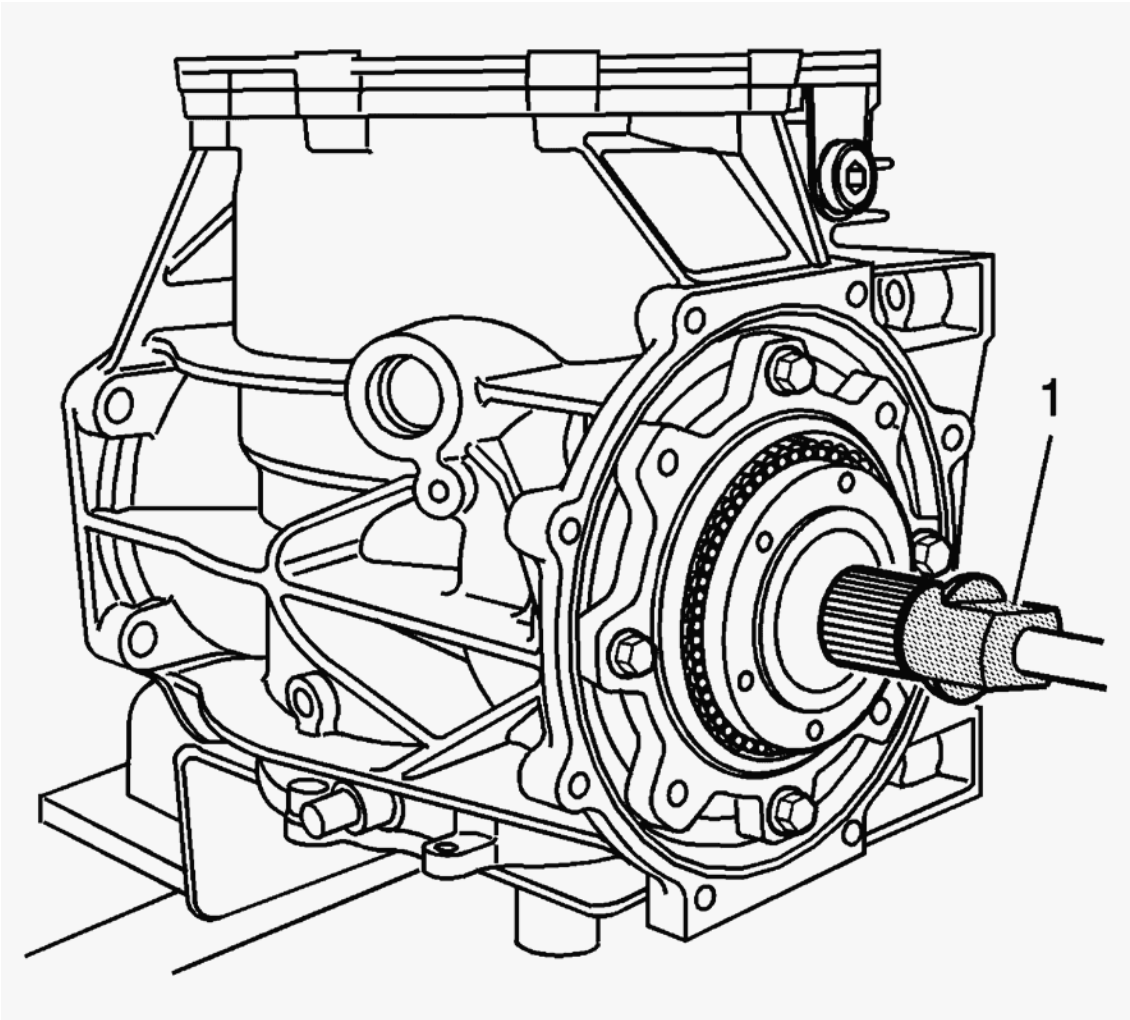

Fig. 258: Splines Of Pinion & J 42164
Courtesy of GENERAL MOTORS CORP.

15. Install the **J 42164** (1) into the splines of the pinion **J 42164** will retain the pinion in order to properly measure backlash. See **Special Tools and Equipment** .

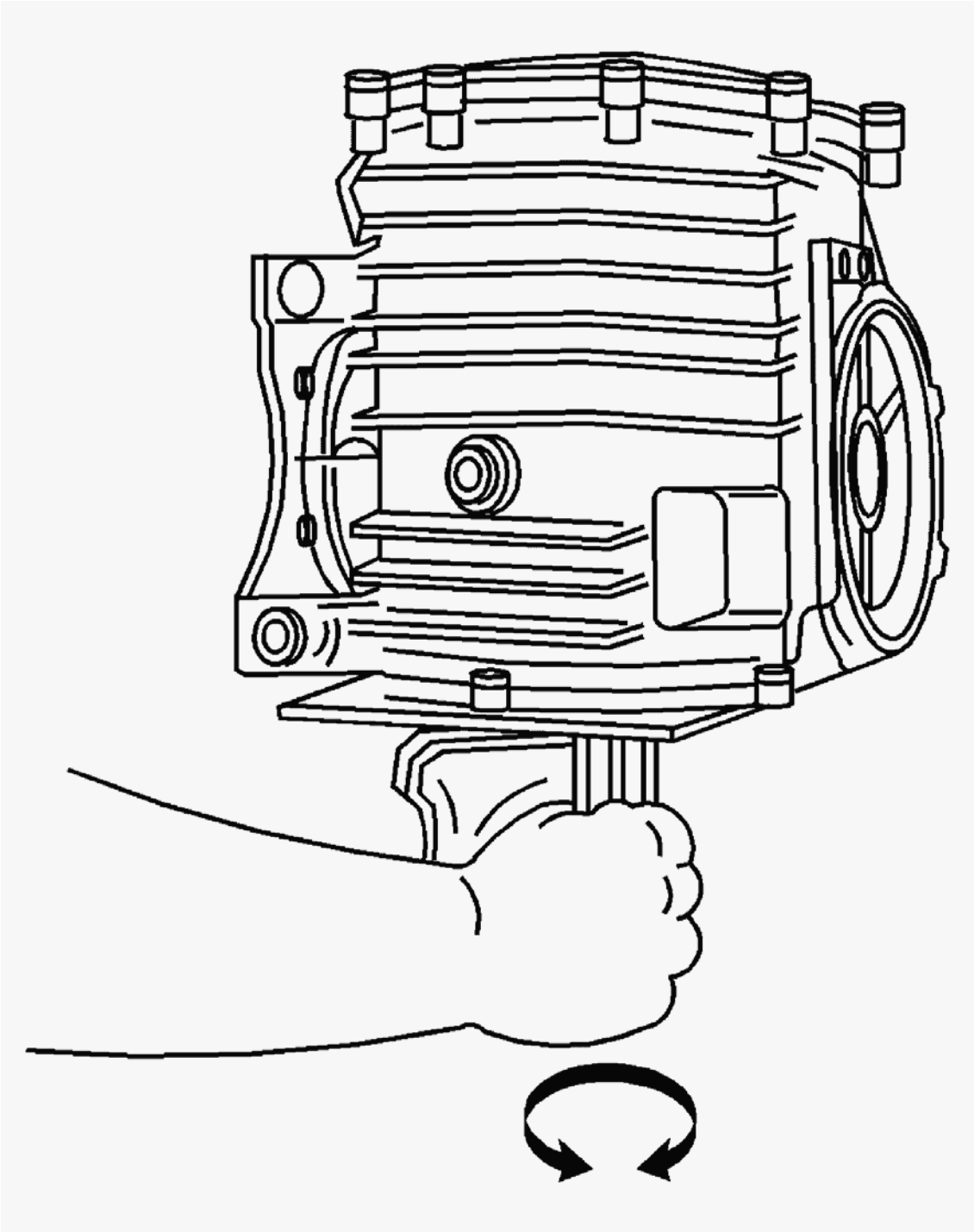

Fig. 259: Moving Right Output Shaft In Both Directions
Courtesy of GENERAL MOTORS CORP.

16. Move the output shaft - right in both directions in order to measure the gear backlash. Measure the backlash in two to three locations. Refer to **Rear Axle Specifications** .

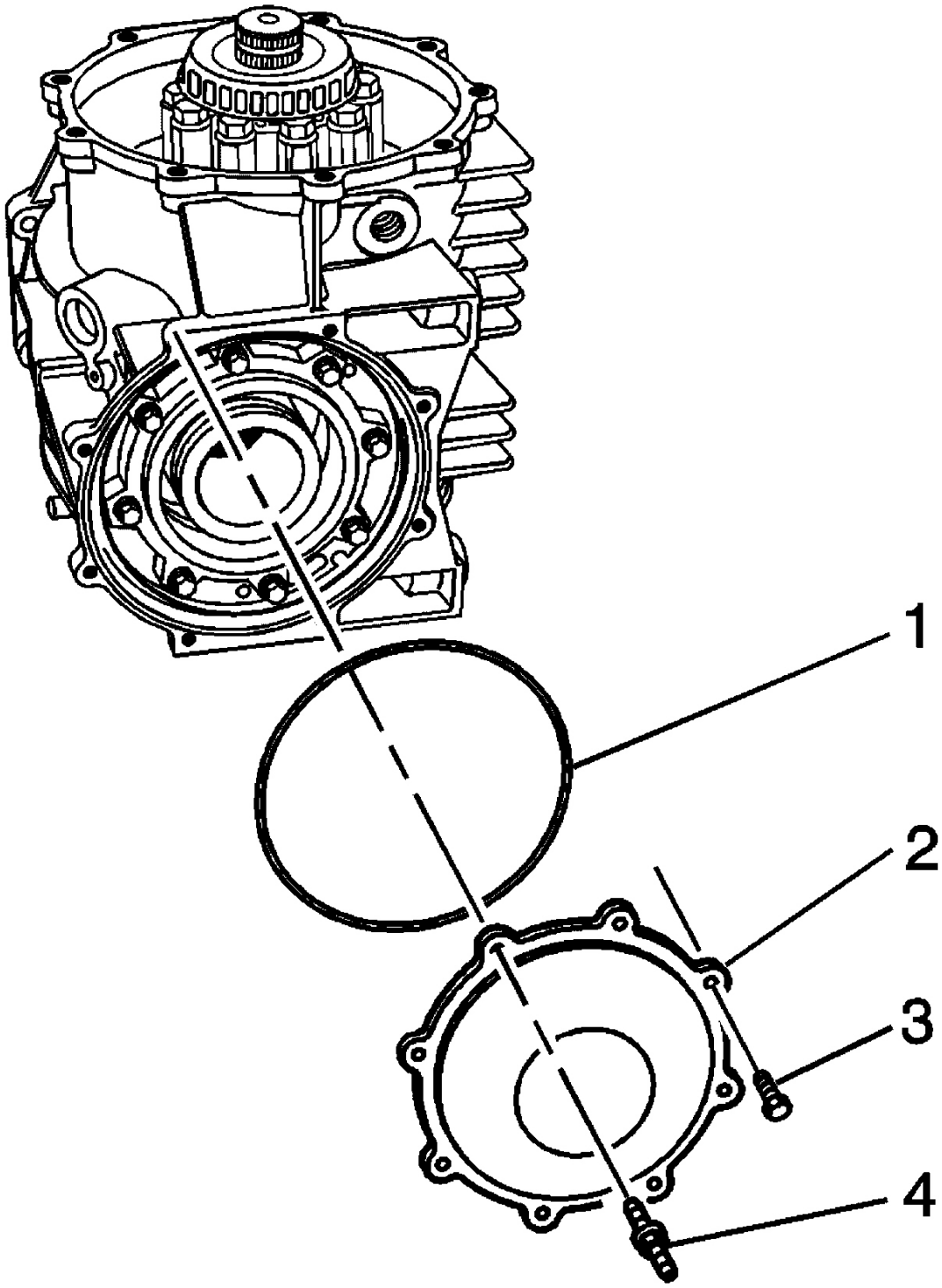

Fig. 260: Cover-Rear, Bolts, Bolt/Stud & O-Ring
Courtesy of GENERAL MOTORS CORP.

IMPORTANT: Note the location of the cover - rear bolt/stud for assembly.

17. Install the cover - rear (2), bolts (3), bolt/stud (4), and O-ring (1).

    Tighten: Tighten the bolts and bolt/stud to 10 N.m (89 lb in).

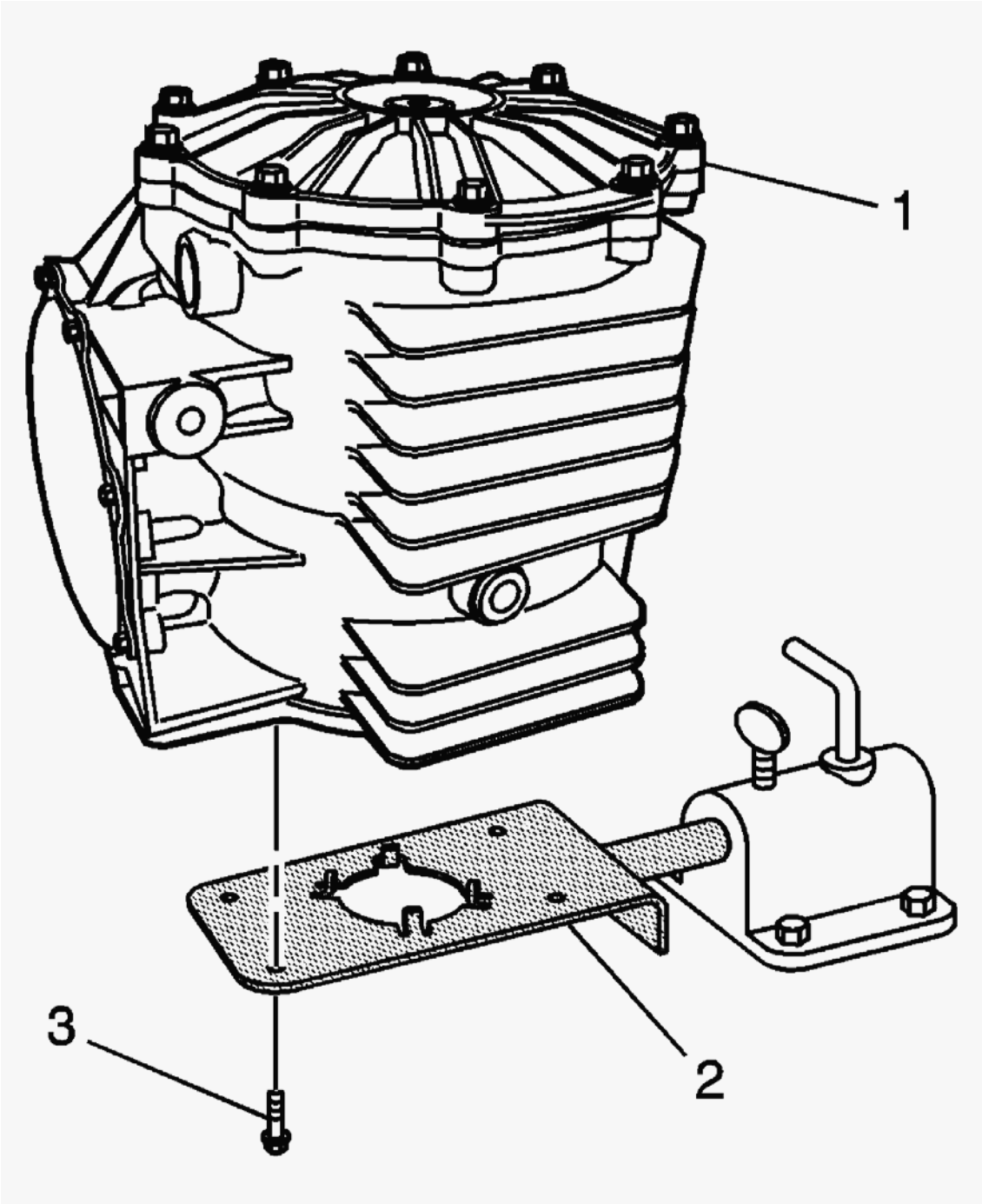

Fig. 261: J 42173 & Differential Assembly
Courtesy of GENERAL MOTORS CORP.

18. Remove the bolts (3) and the differential assembly (1) from the **J 42173** (2). See **Special Tools and Equipment** .

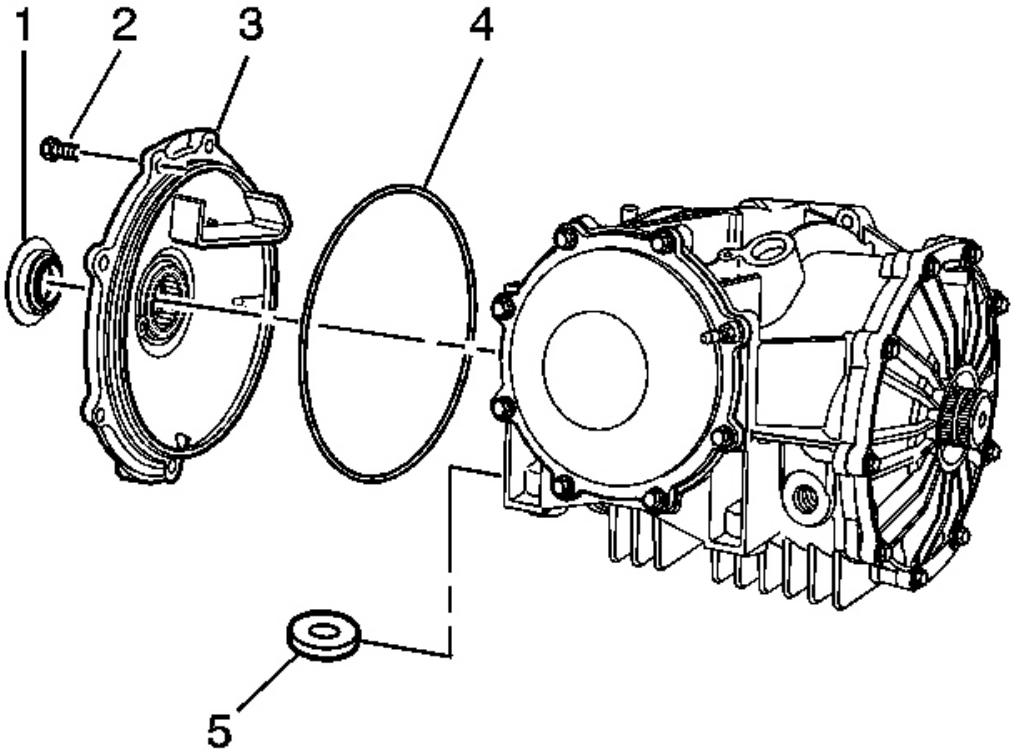

Fig. 262: Differential Cover (Left), O-Ring Seal & Bolts
Courtesy of GENERAL MOTORS CORP.

19. Install the O-ring (4) into the groove of the cover - left (3).
20. Install the magnet (5) to the carrier.
21. Apply a continuous 3 mm (0.125 in) bead of sealant GM P/N 1052942 (Canadian P/N 10953466) or equivalent to the left cover flange (3).
22. Apply sealant around the bolt holes. Keep the sealant away from the O-ring.
23. Install the cover - left (3) and bolts (2).

    Tighten: Tighten the bolts to 25 N.m (18 lb ft).

24. Clean the excess sealant from the left cover/housing splitline.

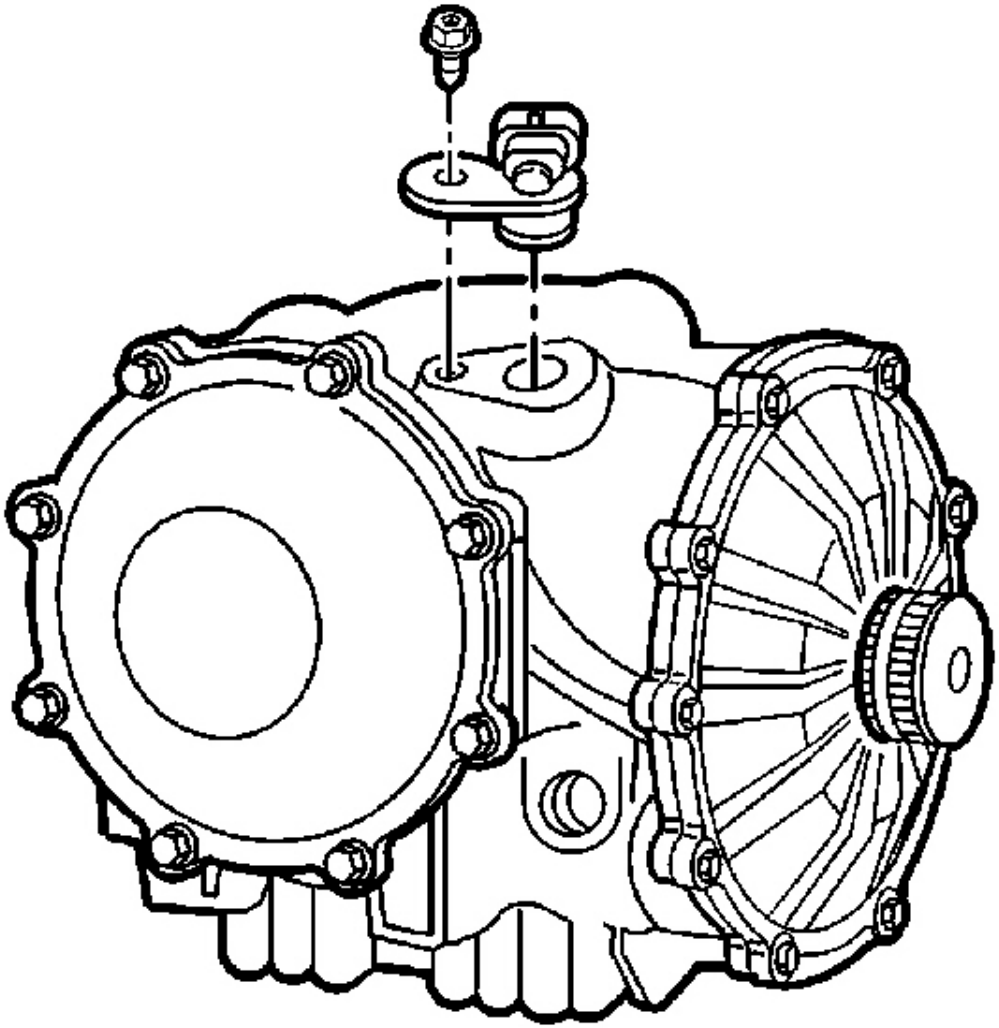

Fig. 263: Vehicle Speed Sensor & Bolt
Courtesy of GENERAL MOTORS CORP.

25. Install the vehicle speed sensor and bolt.

    Tighten: Tighten the bolt to 25 N.m (18 lb ft).

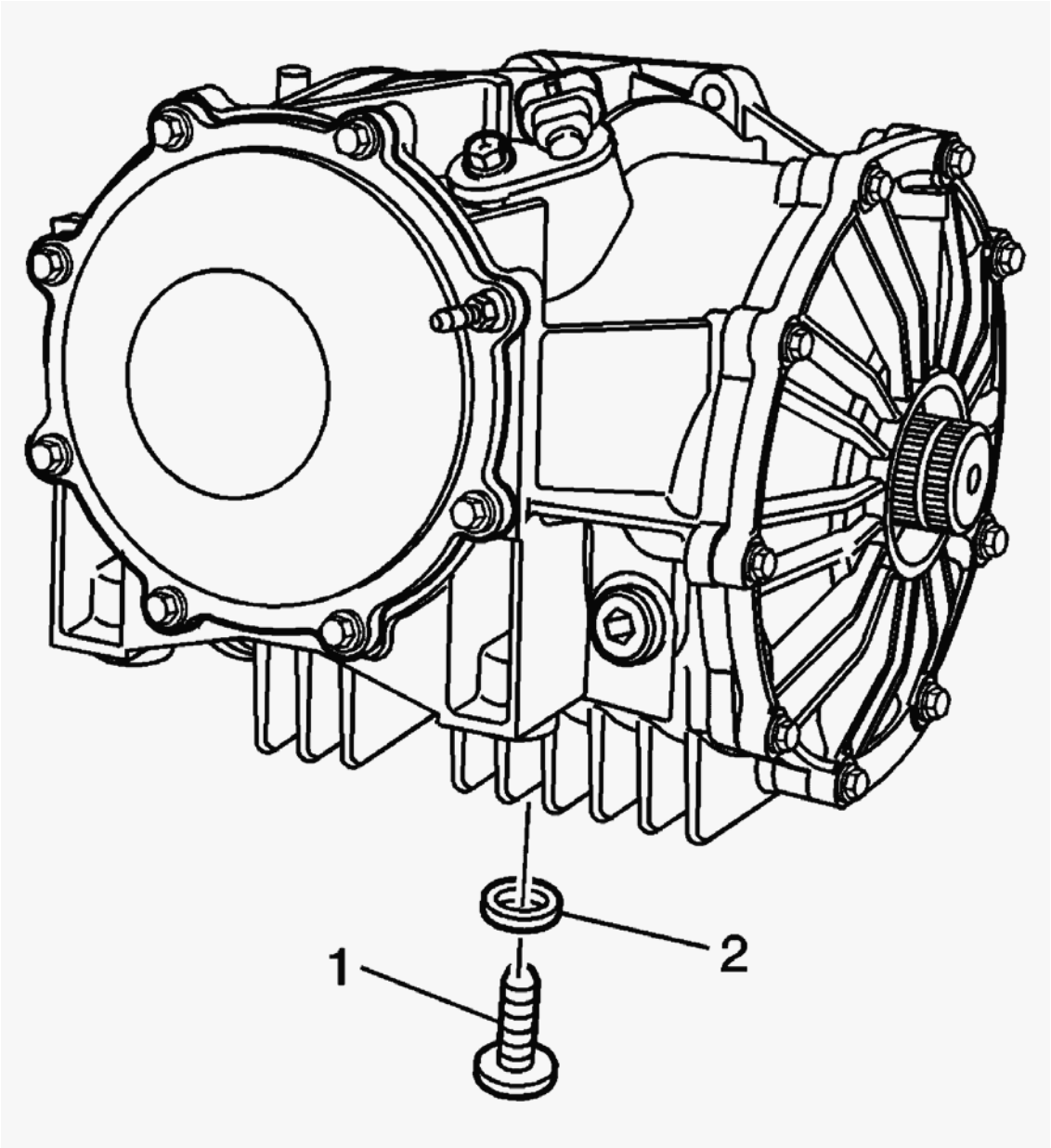

Fig. 264: Differential, Drain Plug & Washer
Courtesy of GENERAL MOTORS CORP.

26. Install the drain plug (1) and washer (2).

    Tighten: Tighten the drain plug to 35 N.m (26 lb ft).

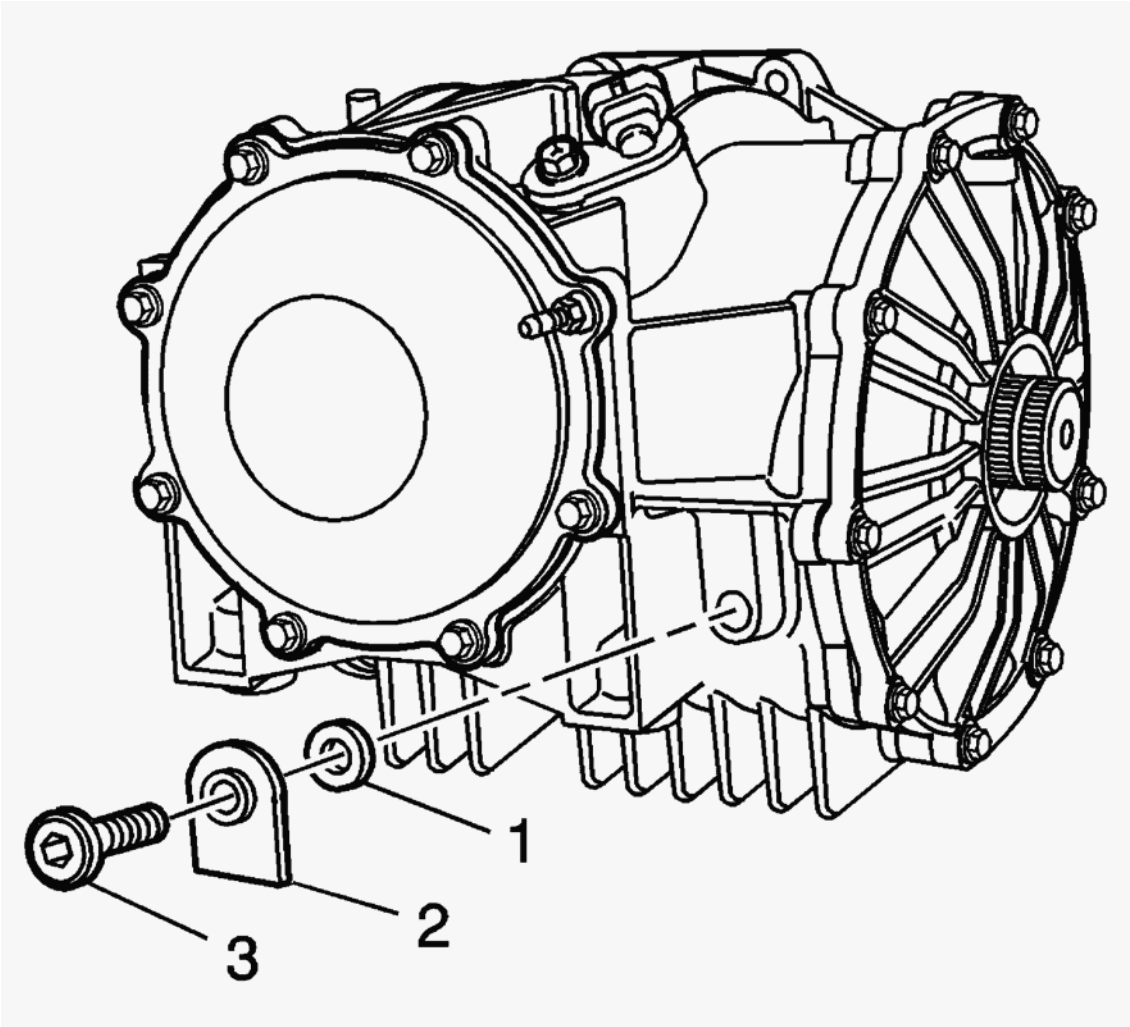

Fig. 265: Fill Plug, Lubricant Tag & Washer
Courtesy of GENERAL MOTORS CORP.

27. Install the fill plug (3), lubricant tag (2), and washer (1).

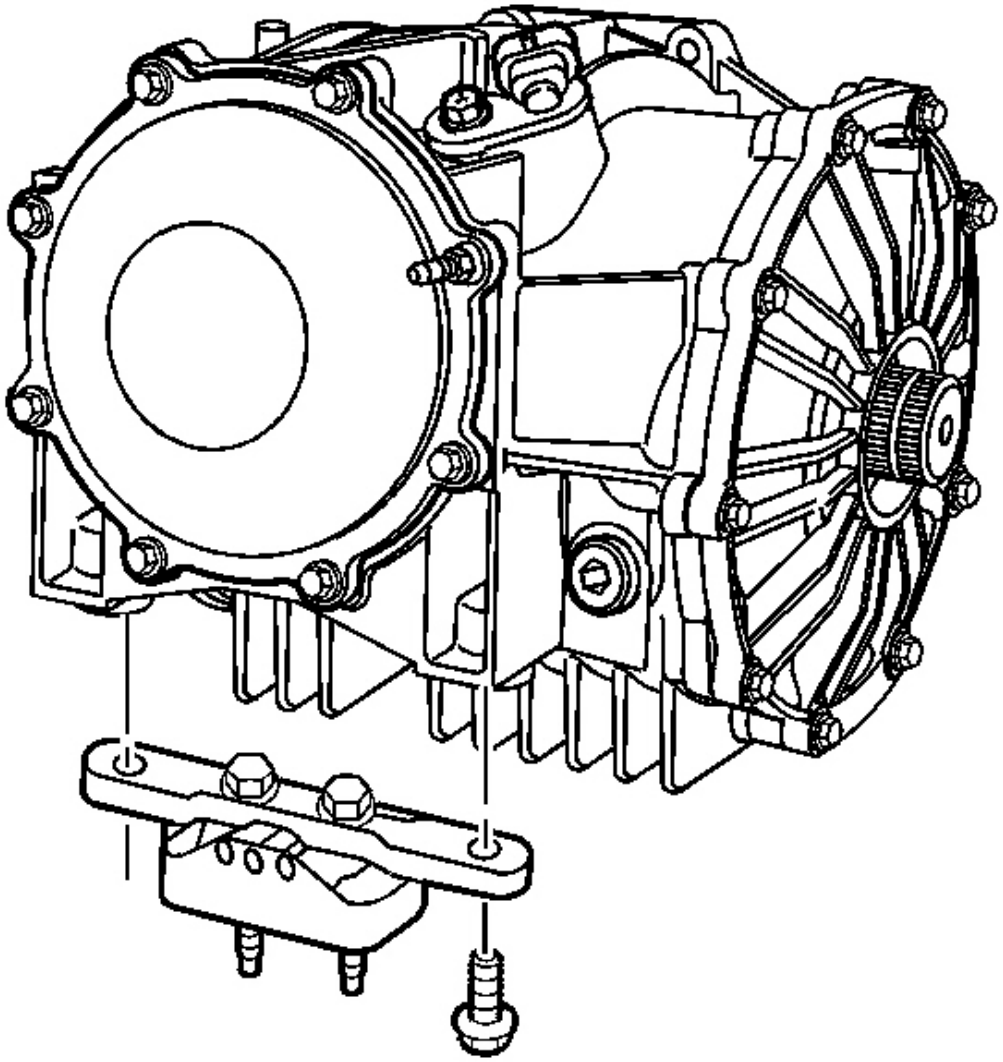

Fig. 266: Transaxle Mount Bracket & Differential Bolts
Courtesy of GENERAL MOTORS CORP.

28. Install the transmission mount and bolts.

    Tighten: Tighten the bolts to 50 N.m (37 lb ft).

DESCRIPTION AND OPERATION

REAR DRIVE AXLE DESCRIPTION AND OPERATION

Getrag Differential

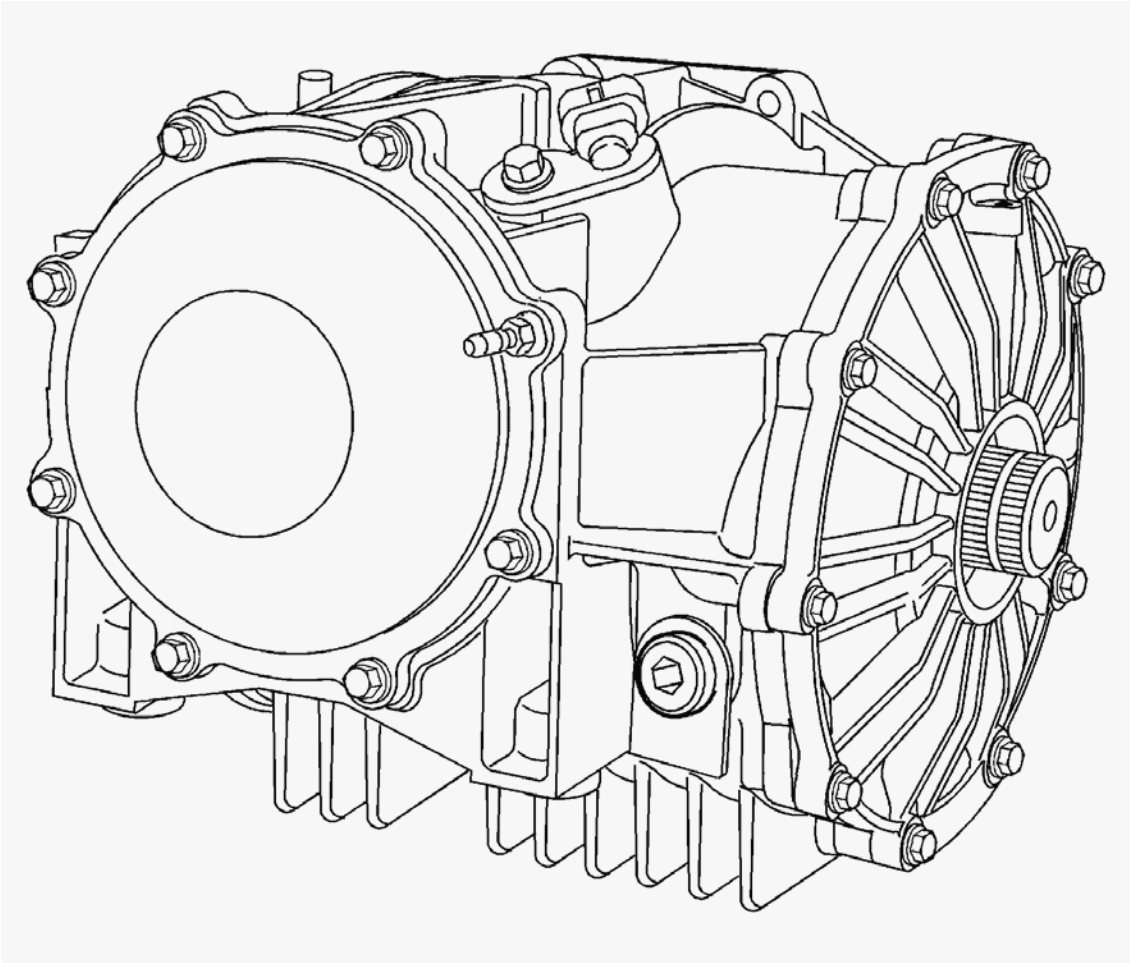

Fig. 267: Rear Drive Axle
Courtesy of GENERAL MOTORS CORP.

The vehicle is powered by either the LS1 or LS6 5.7 liter V-8 engine, VIN G or S. Motion is transferred from the engine crankshaft/flywheel through the driveline support, propeller shaft, assembly to either the 4L60-E (M30) automatic transmission or the ZF (MM6) 6-speed manual transmission. The splined output shaft of the transmission drives the pinion, which in turn, rotates the ring gear and differential case assembly. The limited slip differential distributes torque/power to the rear wheels via individual axle shaft assemblies. The limited-slip differential is of a conventional separator plate and friction disc type design.

The differential housing, side covers, pinion housing, and differential case halves are constructed of cast aluminum. The internal components incorporate a hypoid gear set, ring and pinion, carrier assembly, and pinion housing assembly. The pinion is supported in a pinion housing by tapered roller bearings. The pinion is positioned rearward of the ring gear centerline.

Pinion position, ring gear position, and carrier bearing preload are determined by shimming procedures.

All models have a 7 5/8 inch ring gear. Each ring gear has specific setup dimensions, A1 and A2 values, stamped onto the side area of the gear. The A1 and A2 values are unique to each ring gear/pinion and are determined during the manufacturers gear/pinion noise and vibration setup and testing. The vehicle speed sensor reluctor ring is incorporated into the outside area of the ring gear. The vehicle speed sensor detects the rotational pulses produced by the reluctor ring and send the signal to the vehicle control module (VCM).

The differential assembly is available in three gear ratios. The 3.42 ratio axle is used in all manual transmission applications. The 2.73 ratio axle is standard equipment for automatic transmission applications with an optional 3.15 ratio axle available.

SPECIAL TOOLS AND EQUIPMENT

SPECIAL TOOLS

Special Tools

Illustration	Tool Number/Description
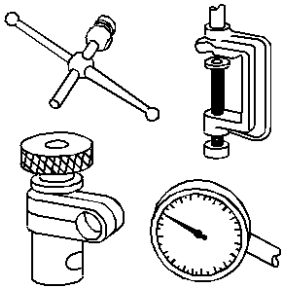	J 8001 Dial Indicator Set
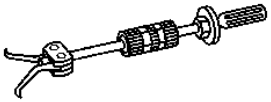	J 23907 Slide Hammer
	J 25070 Heat Gun

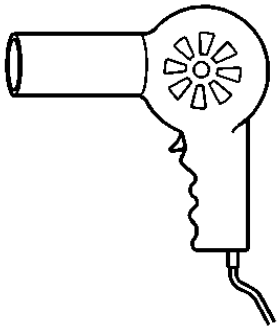	
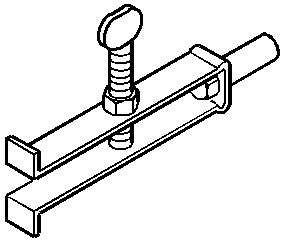	J 29369-2 Bushing and Bearing Remover - 2-3 in
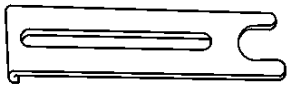	J 36221 Hydraulic Line Clutch Separator
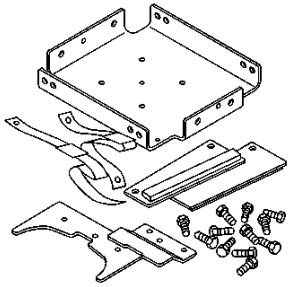	J 42055 Transmission Support Fixture
	J 42155

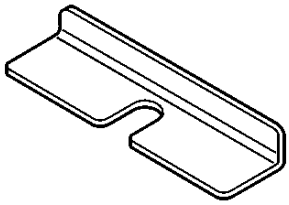	Differential Lifting Tool
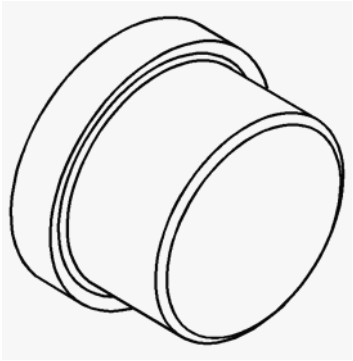	J 42157 Left Output Shaft Bearing Installer
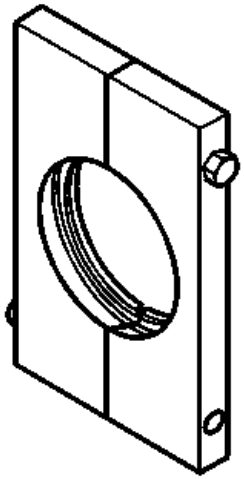	J 42159 Differential Side Bearing Remover
	J 42162 Side Gear Compressor

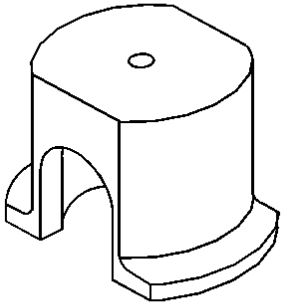	
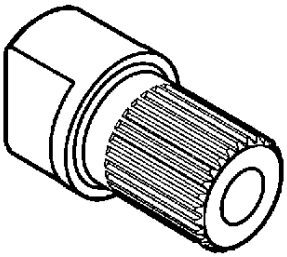	J 42164 Pinion Gear Holder
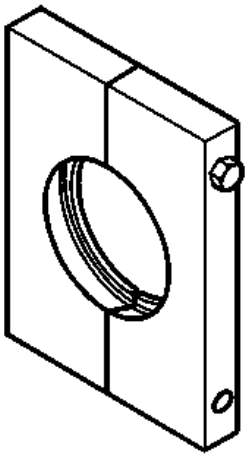	J 42166 Front Pinion Bearing Remover

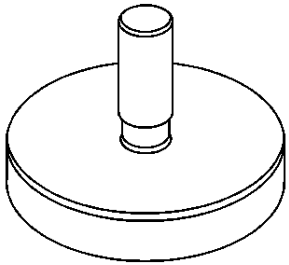	J 42168-1 Differential Centerline Cylinder
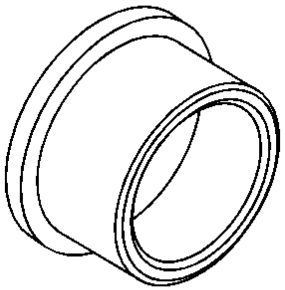	J 42168-11 Pinion Housing Centering Spacer
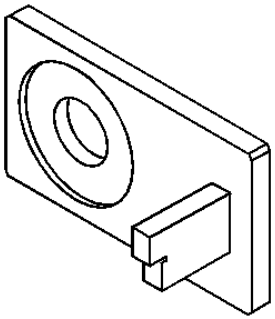	J 42168-13 Gage Plate Assembly
	J 42168-15 Side Bearing Shim Selector

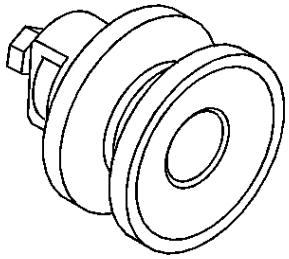	
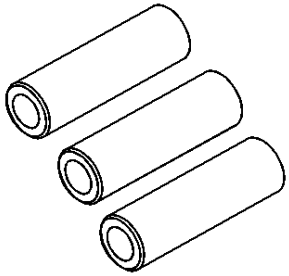	J 42168-16 Spacers
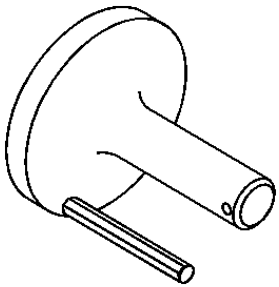	J 42168-2 Shim Gage Assembly
	J 42168-7 Depth Gage

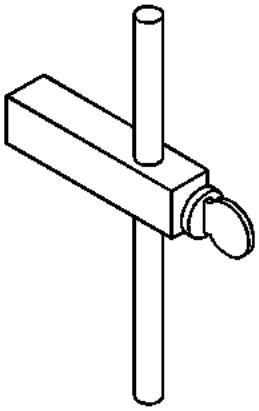	
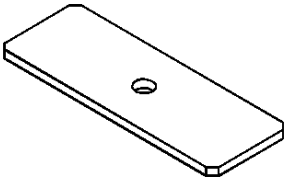	J 42168-9 Holding Strap
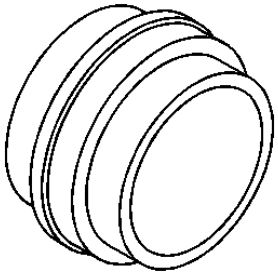	J 42170 Bearing and Race Installer
	J 42172 Bearing Race Installer/Spanner Wrench

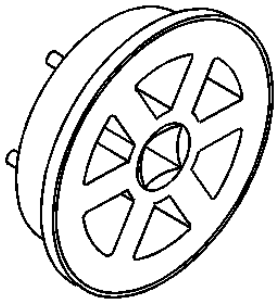	
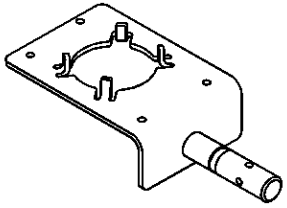	J 42173 Differential Holding Fixture
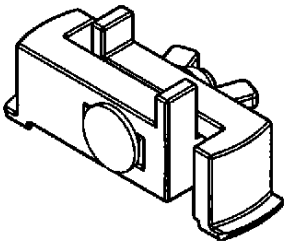	J 42194 Bearing Race Remover
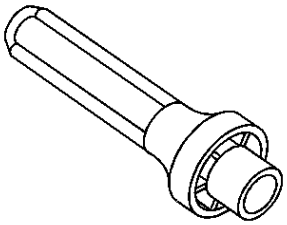	J 46405 Output Shaft Seal Installer